Dist	COUNTY	ROUTE	POST MILES TOTAL PROJECT	SHEET No.	TOTAL SHEETS
07	LA	10	33.2/37.2	101	1475

REGISTERED CIVIL ENGINEER 4-17-12 DATE

6-10-13
PLANS APPROVAL DATE

REGISTERED PROFESSIONAL ENGINEER MOHAMED GHANNOUM No. 72051 Exp. 6-30-14 CIVIL STATE OF CALIFORNIA

THE STATE OF CALIFORNIA OR ITS OFFICERS OR AGENTS SHALL NOT BE RESPONSIBLE FOR THE ACCURACY OR COMPLETENESS OF SCANNED COPIES OF THIS PLAN SHEET.

CURVE DATA

No. ⊛	R	Δ	T	L
1	97.20′	40°38′36″	36.00′	68.97′
2	107.00′	18°24′05″	17.33′	34.36′

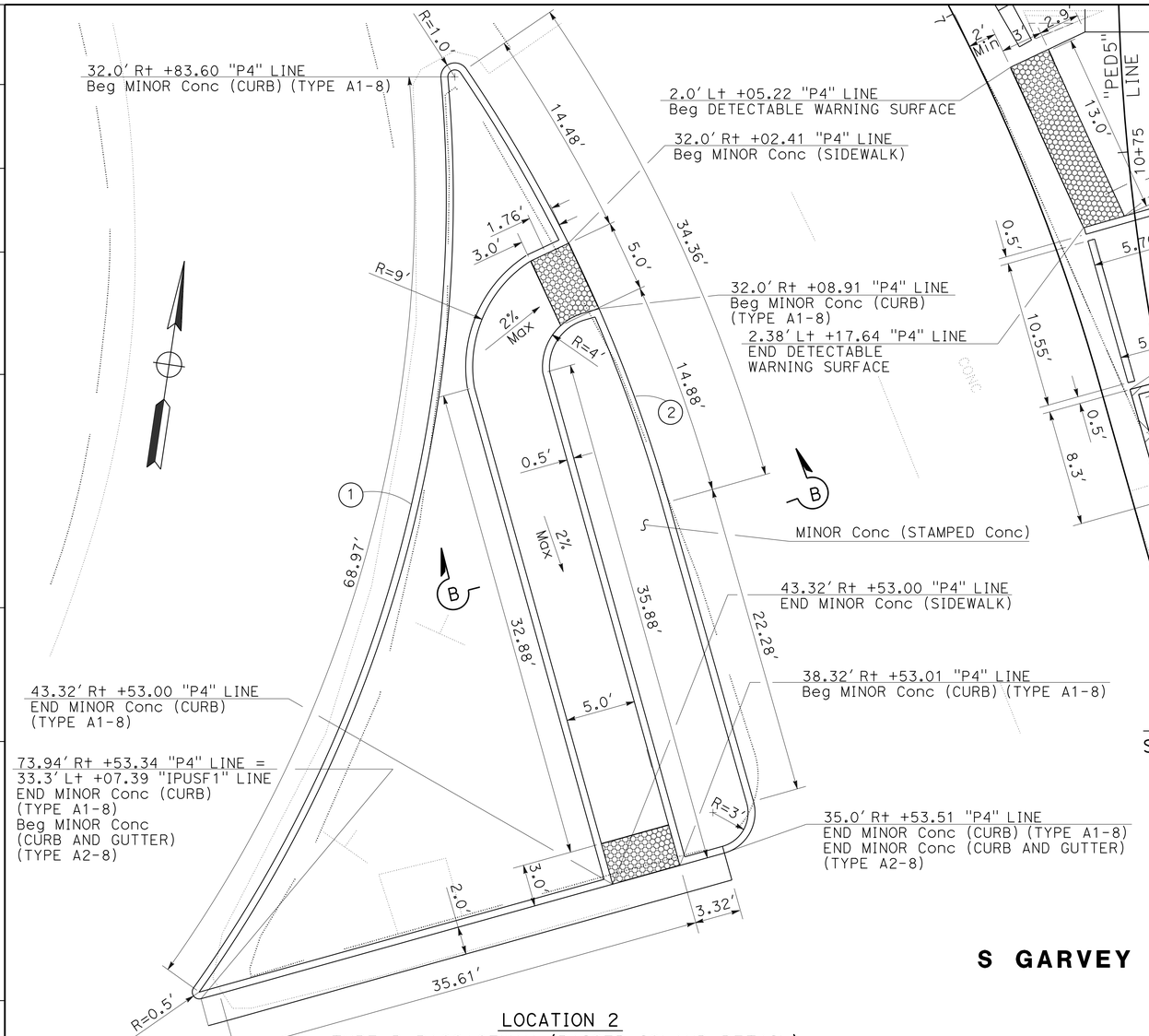

LOCATION 2
TYPE B PASSAGEWAY (RAISED ISLAND DETAIL)
SCALE: 1" = 10′

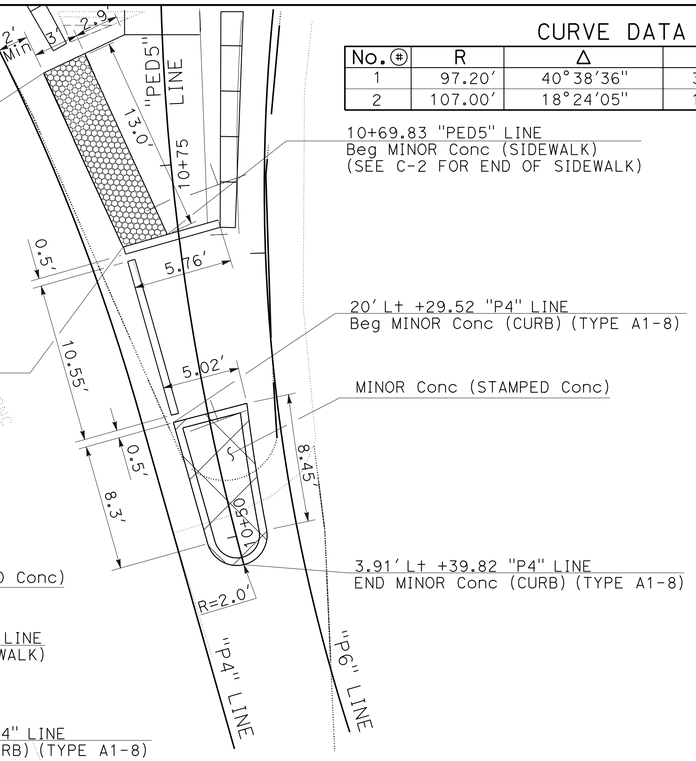

LOCATION 1
SCALE: 1" = 10′

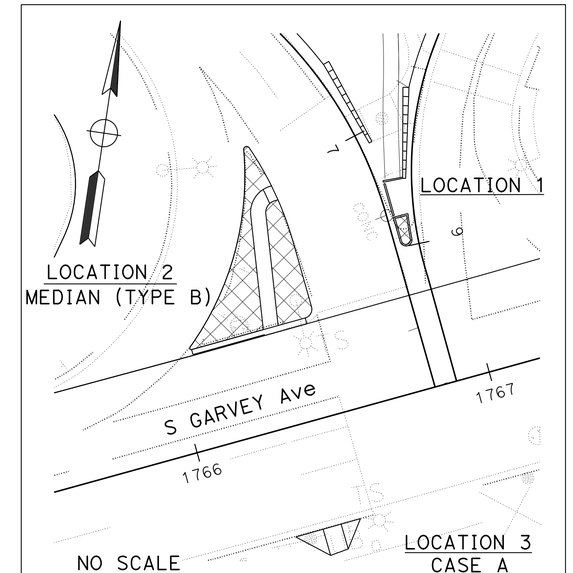

S GARVEY OFF-RAMP (SOUTH SIDE OF ROUTE 10)

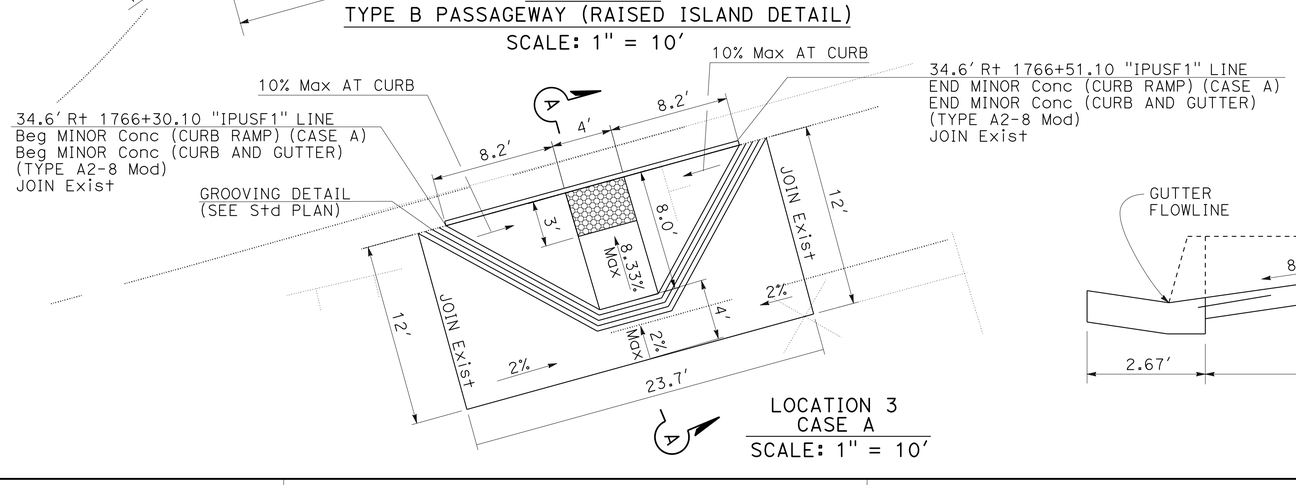

LOCATION 3
CASE A
SCALE: 1" = 10′

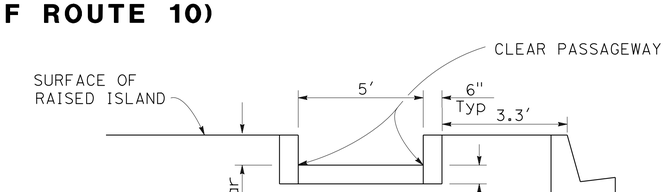

SECTION B-B
NO SCALE

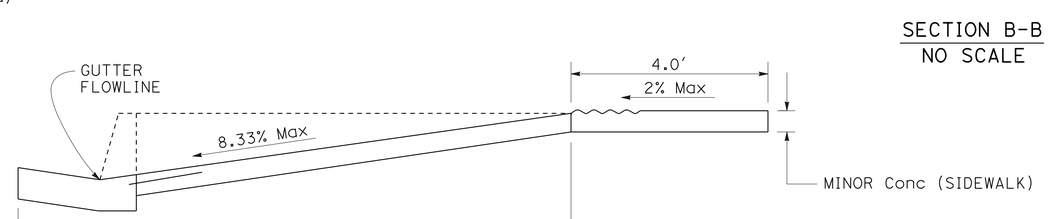

SECTION A-A
NO SCALE

CONSTRUCTION DETAILS

SCALE AS SHOWN

C-3

REVISED BY	DATE REVISED
ANH VU	MOHAMED GHANNOUM

CALCULATED-DESIGNED BY | CHECKED BY

FUNCTIONAL SUPERVISOR: NADER GOBRAN

STATE OF CALIFORNIA - DEPARTMENT OF TRANSPORTATION
Caltrans OFFICE OF DESIGN D

LAST REVISION 06-10-12 | DATE PLOTTED => 12-JUN-2013 | TIME PLOTTED => 17:31

Dist	COUNTY	ROUTE	POST MILES TOTAL PROJECT	SHEET No.	TOTAL SHEETS
07	LA	10	33.2/37.2	102	1475

REGISTERED CIVIL ENGINEER 4-17-12 DATE

6-10-13
PLANS APPROVAL DATE

REGISTERED PROFESSIONAL ENGINEER MOHAMED GHANNOUM No. C72051 Exp. 6-30-14 CIVIL STATE OF CALIFORNIA

THE STATE OF CALIFORNIA OR ITS OFFICERS OR AGENTS SHALL NOT BE RESPONSIBLE FOR THE ACCURACY OR COMPLETENESS OF SCANNED COPIES OF THIS PLAN SHEET.

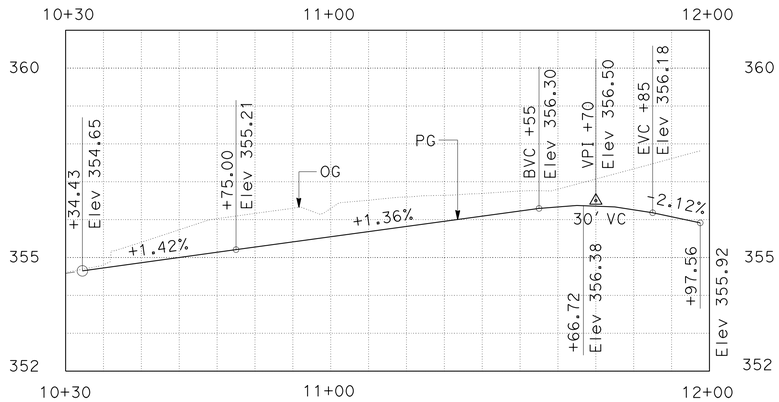

"PED1" LINE PROFILE

SCALE: Horiz 1" = 20'
Vert 1" = 2'

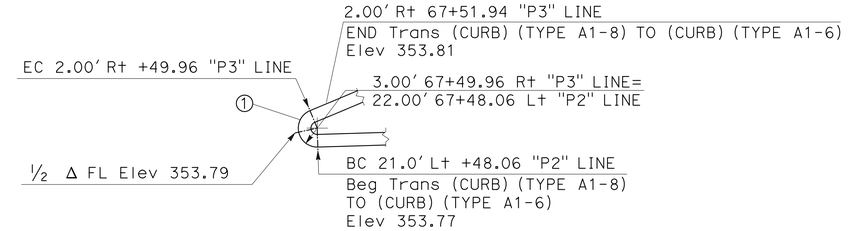

DETAIL 'A'

NO SCALE

CURVE DATA

No. (#)	R	Δ	T	L
1	1'	159°13'22"	5.45'	2.78'

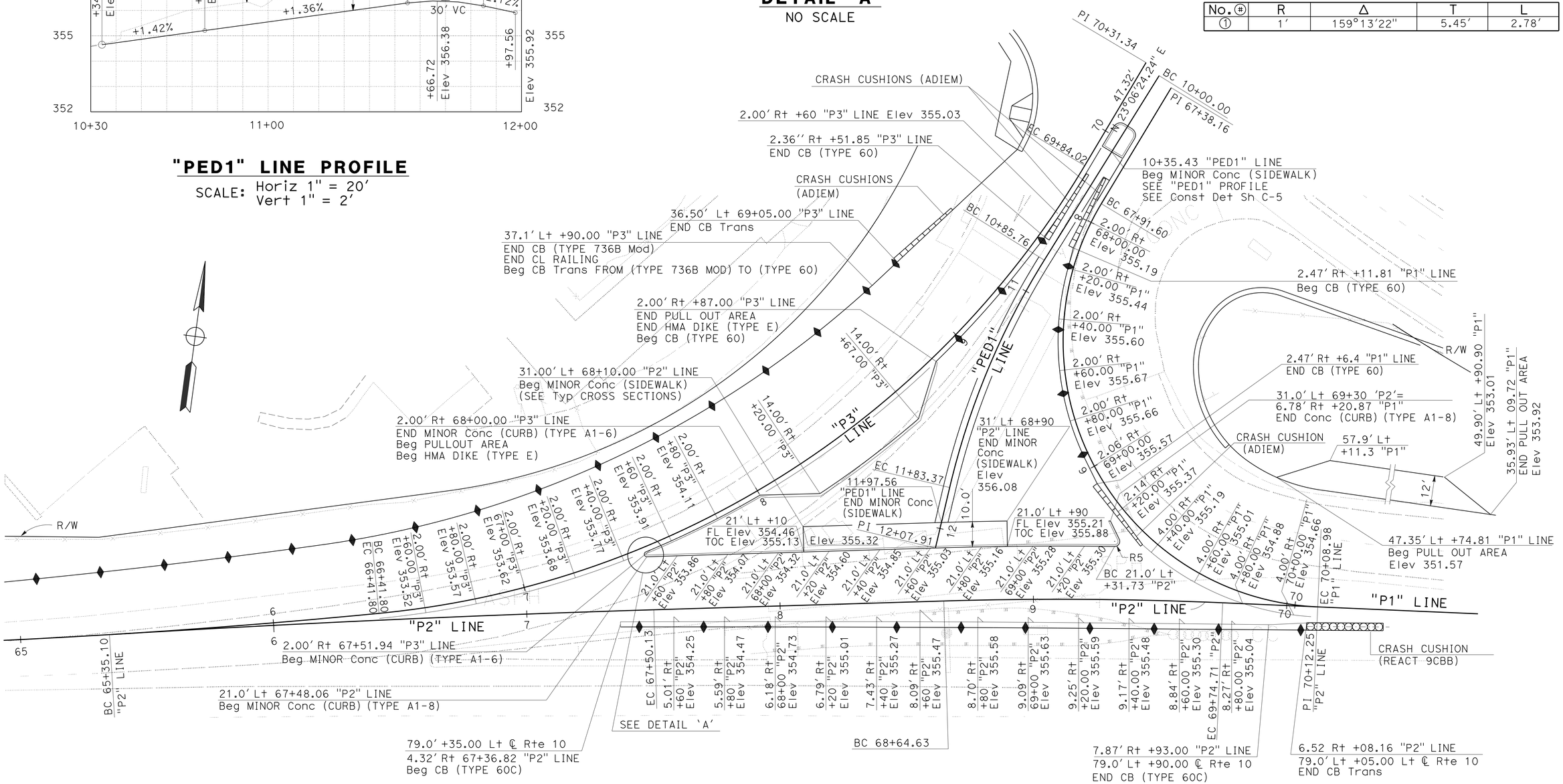

WB Rte 10 AT PUENTE Ave: RAMPS "P1", "P2", "P3" DETAILS

SCALE: 1" = 20'

CONSTRUCTION DETAILS

SCALE AS SHOWN

C-4

STATE OF CALIFORNIA - DEPARTMENT OF TRANSPORTATION
Caltrans® OFFICE OF DESIGN D

FUNCTIONAL SUPERVISOR: NADER GOBRAN
CALCULATED-DESIGNED BY: GUILLERMO NAVARRO
CHECKED BY: MOHAMED GHANNOUM
REVISED BY
DATE REVISED

LAST REVISION 06-10-12
DATE PLOTTED => 18-JUN-2013
TIME PLOTTED => 06:51

Dist	COUNTY	ROUTE	POST MILES TOTAL PROJECT	SHEET No.	TOTAL SHEETS
07	LA	10	33.2/37.2	103	1475

REGISTERED CIVIL ENGINEER 4-17-12 DATE

6-10-13
PLANS APPROVAL DATE

REGISTERED PROFESSIONAL ENGINEER MOHAMED GHANNOUM No. 72051 Exp. 6-30-14 CIVIL STATE OF CALIFORNIA

THE STATE OF CALIFORNIA OR ITS OFFICERS OR AGENTS SHALL NOT BE RESPONSIBLE FOR THE ACCURACY OR COMPLETENESS OF SCANNED COPIES OF THIS PLAN SHEET.

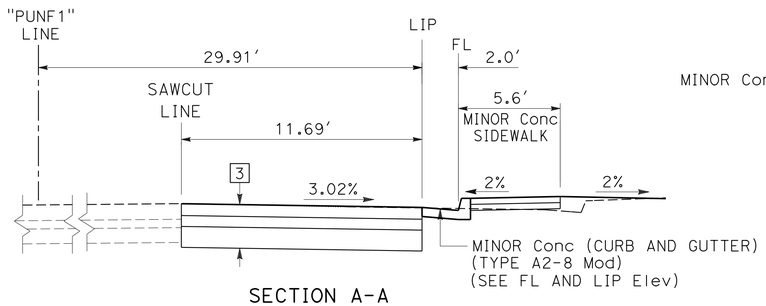

SECTION A-A
NO SCALE

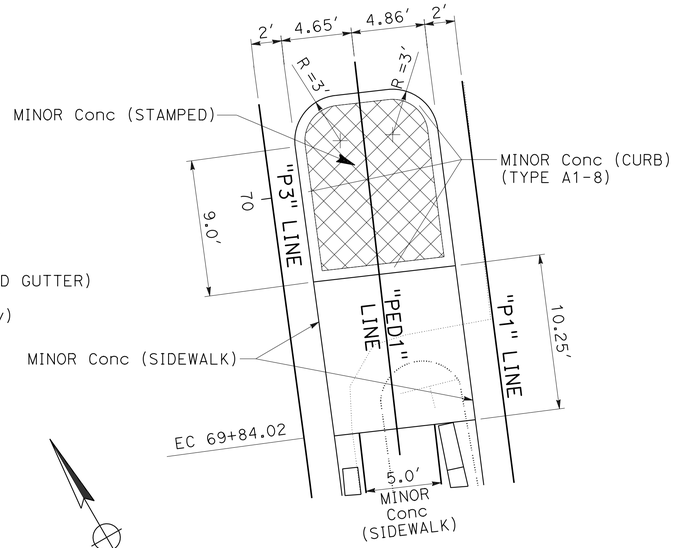

DETAIL 1 (RAISED ISLAND)
NO SCALE

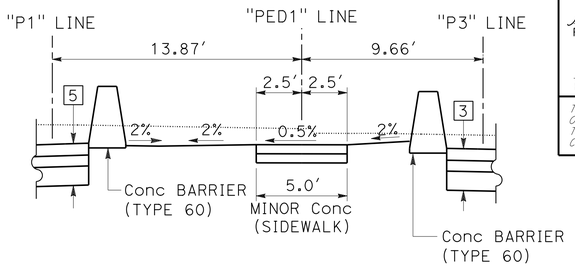

SECTION B-B
NO SCALE

CURVE DATA

No. ⊕	R	Δ	T	L
1	38.00'	72°48'41.79"	28.02'	48.29'
2	46.00'	55°13'57.32"	24.06'	44.34'
3	32.00'	38°55'31.92"	11.31'	21.74'
4	23.00'	71°27'6.85"	16.54'	28.68'

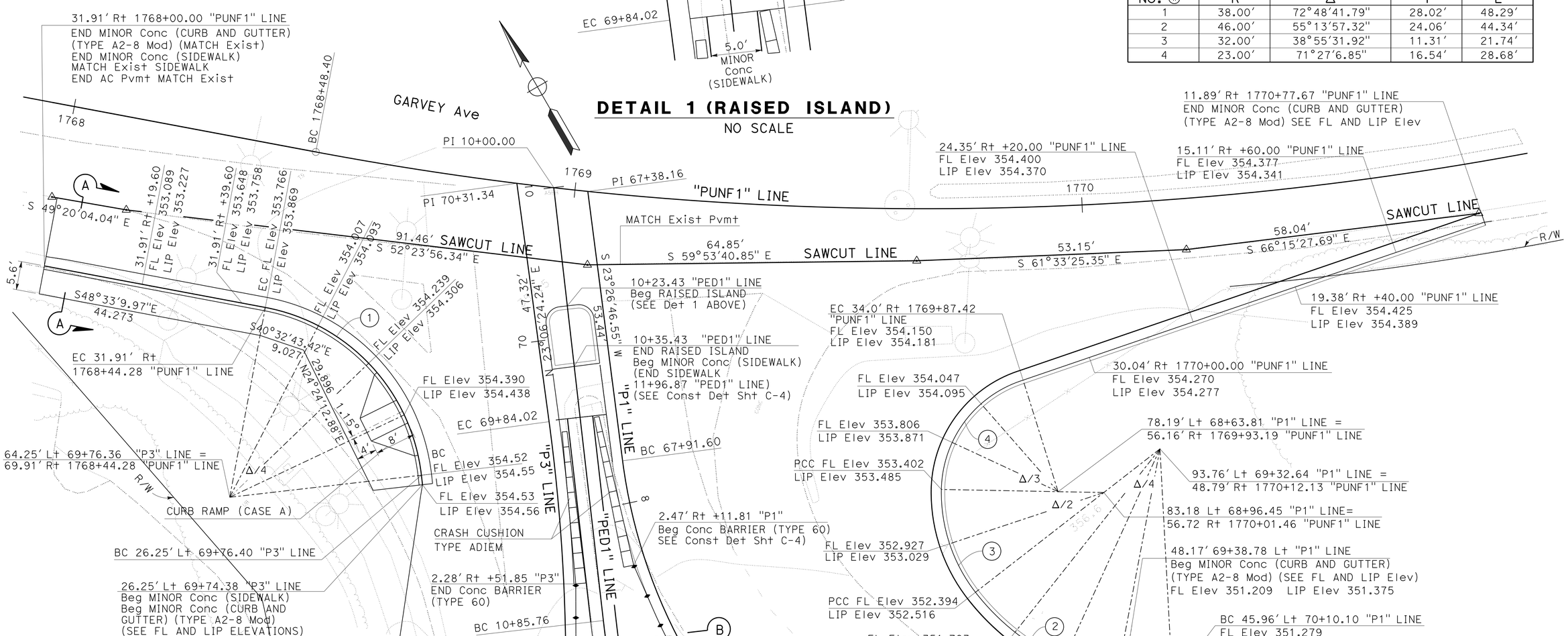

WB Rte 10 AT PUENTE Ave: RAMPS "P1", AND "P3" DETAILS
SCALE: 1" = 20'

CONSTRUCTION DETAILS
SCALE AS SHOWN

C-5

STATE OF CALIFORNIA - DEPARTMENT OF TRANSPORTATION
Caltrans® OFFICE OF DESIGN D

FUNCTIONAL SUPERVISOR: NADER GOBRAN
CALCULATED-DESIGNED BY: GUILLERMO NAVARRO
CHECKED BY: MOHAMED GHANNOUM
REVISED BY
DATE REVISED

LAST REVISION 06-10-12
DATE PLOTTED => 12-JUN-2013
TIME PLOTTED => 17:31

Dist	COUNTY	ROUTE	POST MILES TOTAL PROJECT	SHEET No.	TOTAL SHEETS
07	LA	10	33.2/37.2	104	1475

REGISTERED CIVIL ENGINEER 4-17-12 DATE

6-10-13
PLANS APPROVAL DATE

REGISTERED PROFESSIONAL ENGINEER MOHAMED GHANNOUM No. 72051 Exp. 6-30-14 CIVIL STATE OF CALIFORNIA

THE STATE OF CALIFORNIA OR ITS OFFICERS OR AGENTS SHALL NOT BE RESPONSIBLE FOR THE ACCURACY OR COMPLETENESS OF SCANNED COPIES OF THIS PLAN SHEET.

CURVE DATA

No. ⊕	R	Δ	T	L
1	35.00′	86°37′59″	33.00′	52.92′
2	30.00′	91°58′36″	31.05′	48.16′
3	30.00′	88°14′59″	29.10′	46.21′

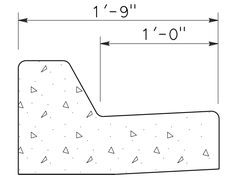

CURB (TYPE B2-6 Mod)

NO SCALE

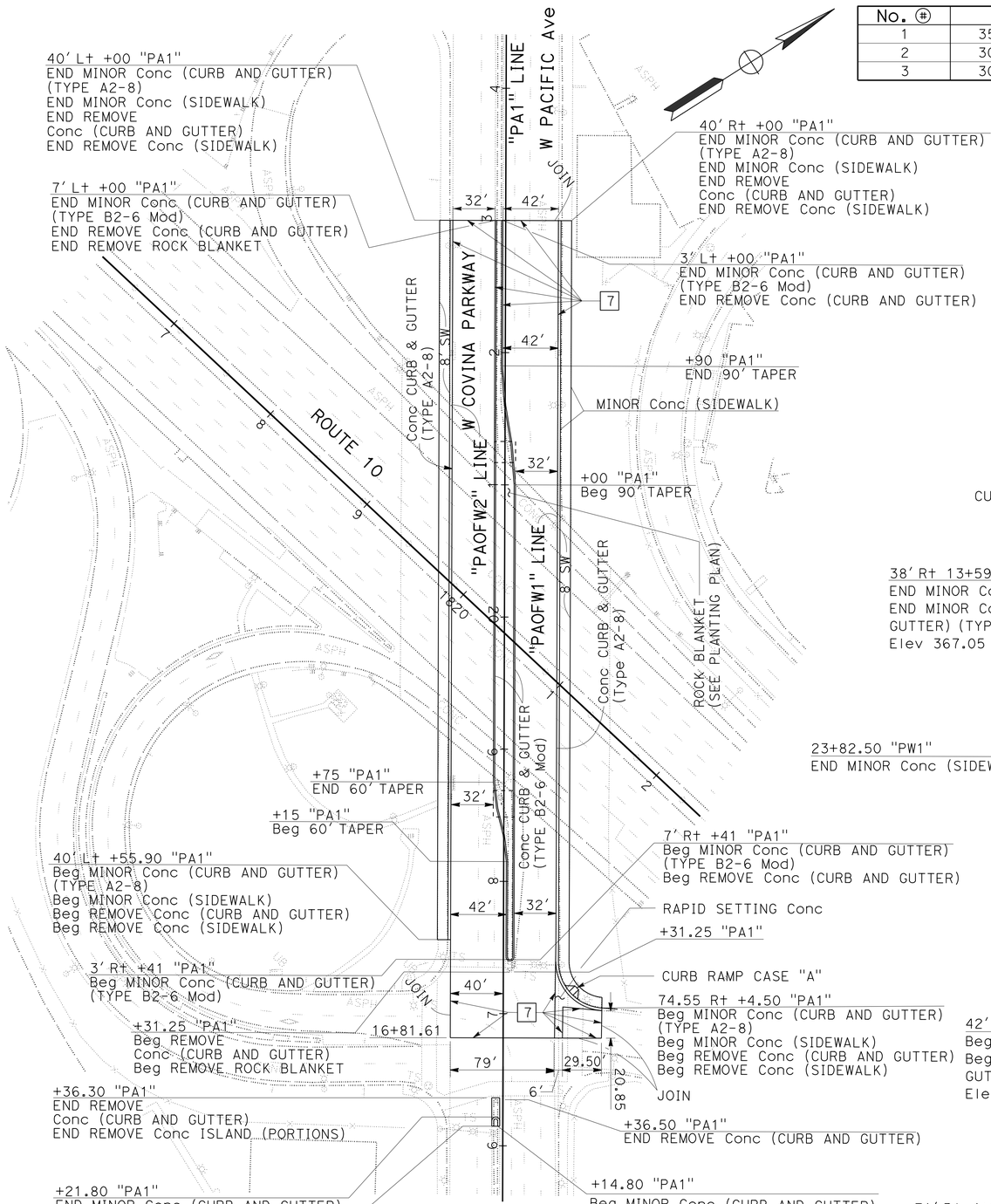

SCALE: 1" = 50′

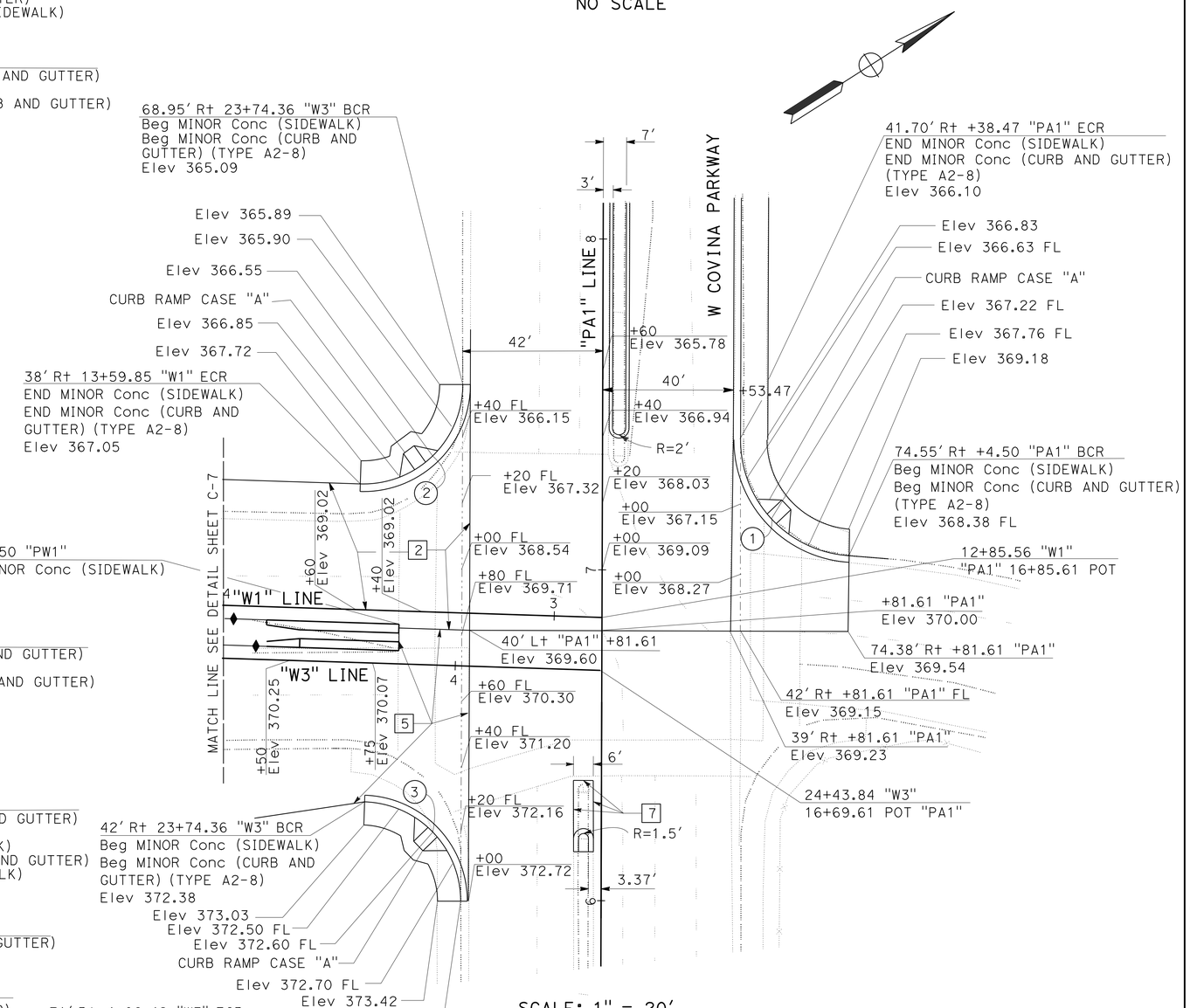

SCALE: 1" = 20′

PACIFIC Ave/W COVINA PARKWAY LOWERING

CONSTRUCTION DETAILS

SCALE AS SHOWN

C-6

STATE OF CALIFORNIA - DEPARTMENT OF TRANSPORTATION
OFFICE OF DESIGN D

FUNCTIONAL SUPERVISOR: NADER GOBRAN
CALCULATED-DESIGNED BY: JEROME ARABE
CHECKED BY: MOHAMED GHANNOUM
REVISED BY / DATE REVISED

LAST REVISION 06-10-12
DATE PLOTTED => 12-JUN-2013
TIME PLOTTED => 17:31

Dist	COUNTY	ROUTE	POST MILES TOTAL PROJECT	SHEET No.	TOTAL SHEETS
07	LA	10	33.2/37.2	105	1475

REGISTERED CIVIL ENGINEER 4-17-12 DATE

6-10-13
PLANS APPROVAL DATE

REGISTERED PROFESSIONAL ENGINEER MOHAMED GHANNOUM No. 72051 Exp. 6-30-14 CIVIL STATE OF CALIFORNIA

THE STATE OF CALIFORNIA OR ITS OFFICERS OR AGENTS SHALL NOT BE RESPONSIBLE FOR THE ACCURACY OR COMPLETENESS OF SCANNED COPIES OF THIS PLAN SHEET.

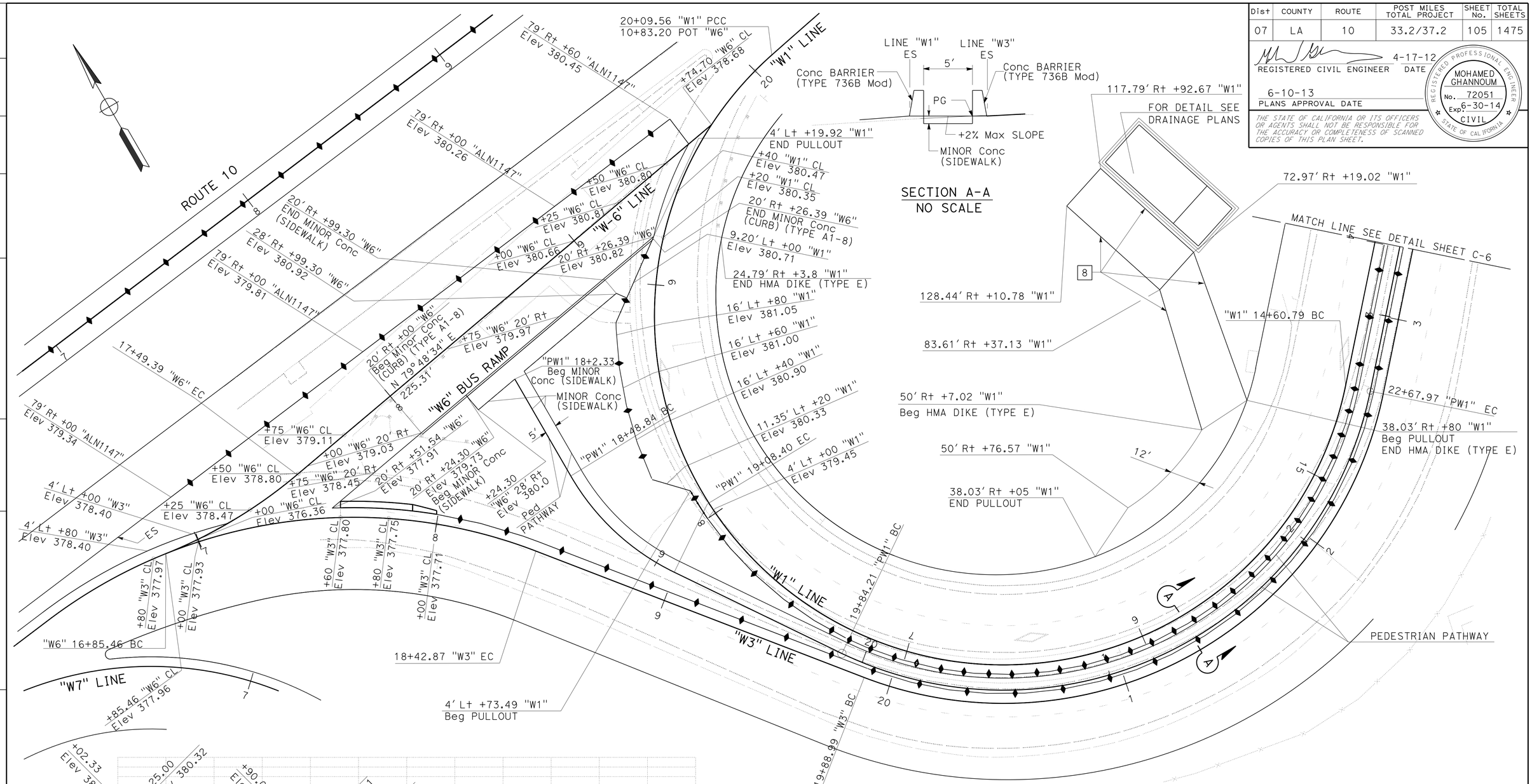

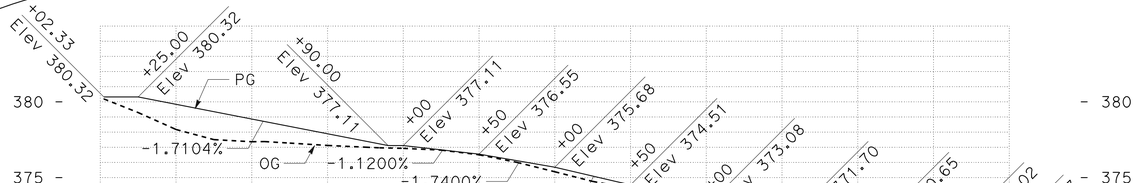

PROFILE "PW1"

SCALE: Horiz 1" = 50'
Vert 1" = 5'

PEDESTRIAN PATHWAY AT W COVINA PARKWAY/PACIFIC Ave

SCALE: 1" = 20'

CONSTRUCTION DETAILS

SCALE AS SHOWN

C-7

STATE OF CALIFORNIA - DEPARTMENT OF TRANSPORTATION
Caltrans OFFICE OF DESIGN D

FUNCTIONAL SUPERVISOR: NADER GOBRAN
CALCULATED-DESIGNED BY: JEROME G ARABE
CHECKED BY: MOHAMED GHANNOUM
REVISED BY
DATE REVISED

LAST REVISION 06-10-12 | DATE PLOTTED => 18-JUN-2013 | TIME PLOTTED => 06:51

Dist	COUNTY	ROUTE	POST MILES TOTAL PROJECT	SHEET No.	TOTAL SHEETS
07	LA	10	33.2/37.2	106	1475

REGISTERED CIVIL ENGINEER 4-17-12 DATE

6-10-13
PLANS APPROVAL DATE

REGISTERED PROFESSIONAL ENGINEER MOHAMED GHANNOUM No. C72051 Exp. 6/30/14 CIVIL STATE OF CALIFORNIA

THE STATE OF CALIFORNIA OR ITS OFFICERS OR AGENTS SHALL NOT BE RESPONSIBLE FOR THE ACCURACY OR COMPLETENESS OF SCANNED COPIES OF THIS PLAN SHEET.

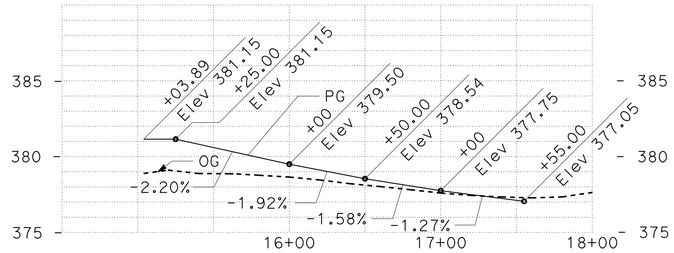

PROFILE "PW2"

SCALE: Horiz 1" = 20'
Vert 1" = 5'

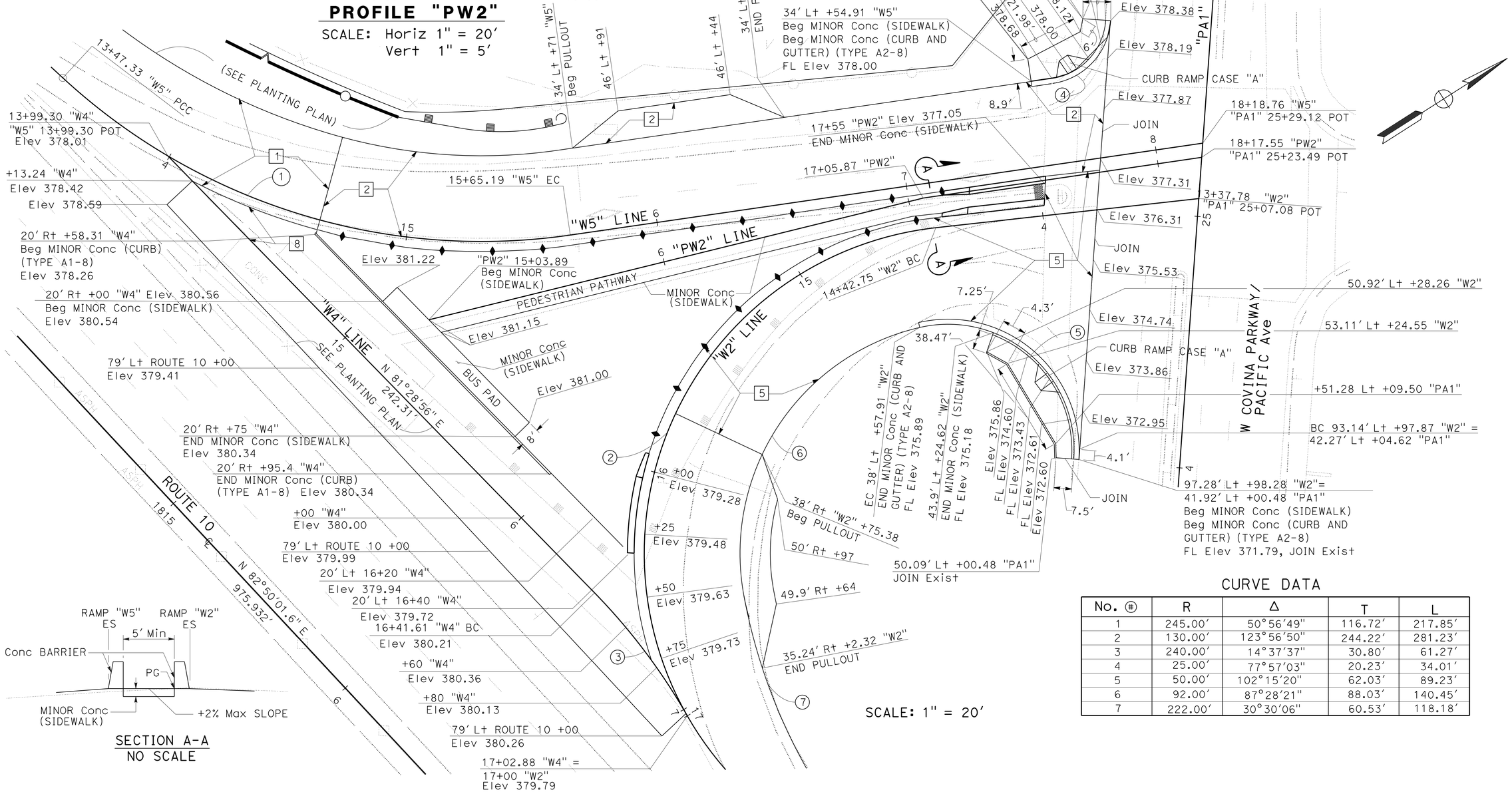

CURVE DATA

No. ⊛	R	Δ	T	L
1	245.00'	50°56'49"	116.72'	217.85'
2	130.00'	123°56'50"	244.22'	281.23'
3	240.00'	14°37'37"	30.80'	61.27'
4	25.00'	77°57'03"	20.23'	34.01'
5	50.00'	102°15'20"	62.03'	89.23'
6	92.00'	87°28'21"	88.03'	140.45'
7	222.00'	30°30'06"	60.53'	118.18'

W2, W4, W5 RAMPS AND PW2 PEDESTRIAN PATHWAY

CONSTRUCTION DETAILS

SCALE AS SHOWN

C-8

STATE OF CALIFORNIA - DEPARTMENT OF TRANSPORTATION
Caltrans® OFFICE OF DESIGN D

FUNCTIONAL SUPERVISOR: NADER GOBRAN
CALCULATED-DESIGNED BY: JEROME ARABE
CHECKED BY: MOHAMED GHANNOUM
REVISED BY
DATE REVISED

LAST REVISION 00-00-00
DATE PLOTTED => 12-JUN-2013
TIME PLOTTED => 17:31

Dist	COUNTY	ROUTE	POST MILES TOTAL PROJECT	SHEET No.	TOTAL SHEETS
07	LA	10	33.2/37.2	107	1475

REGISTERED CIVIL ENGINEER 4-17-12 DATE

6-10-13
PLANS APPROVAL DATE

REGISTERED PROFESSIONAL ENGINEER MOHAMED GHANNOUM No. 72051 Exp. 6-30-14 CIVIL STATE OF CALIFORNIA

THE STATE OF CALIFORNIA OR ITS OFFICERS OR AGENTS SHALL NOT BE RESPONSIBLE FOR THE ACCURACY OR COMPLETENESS OF SCANNED COPIES OF THIS PLAN SHEET.

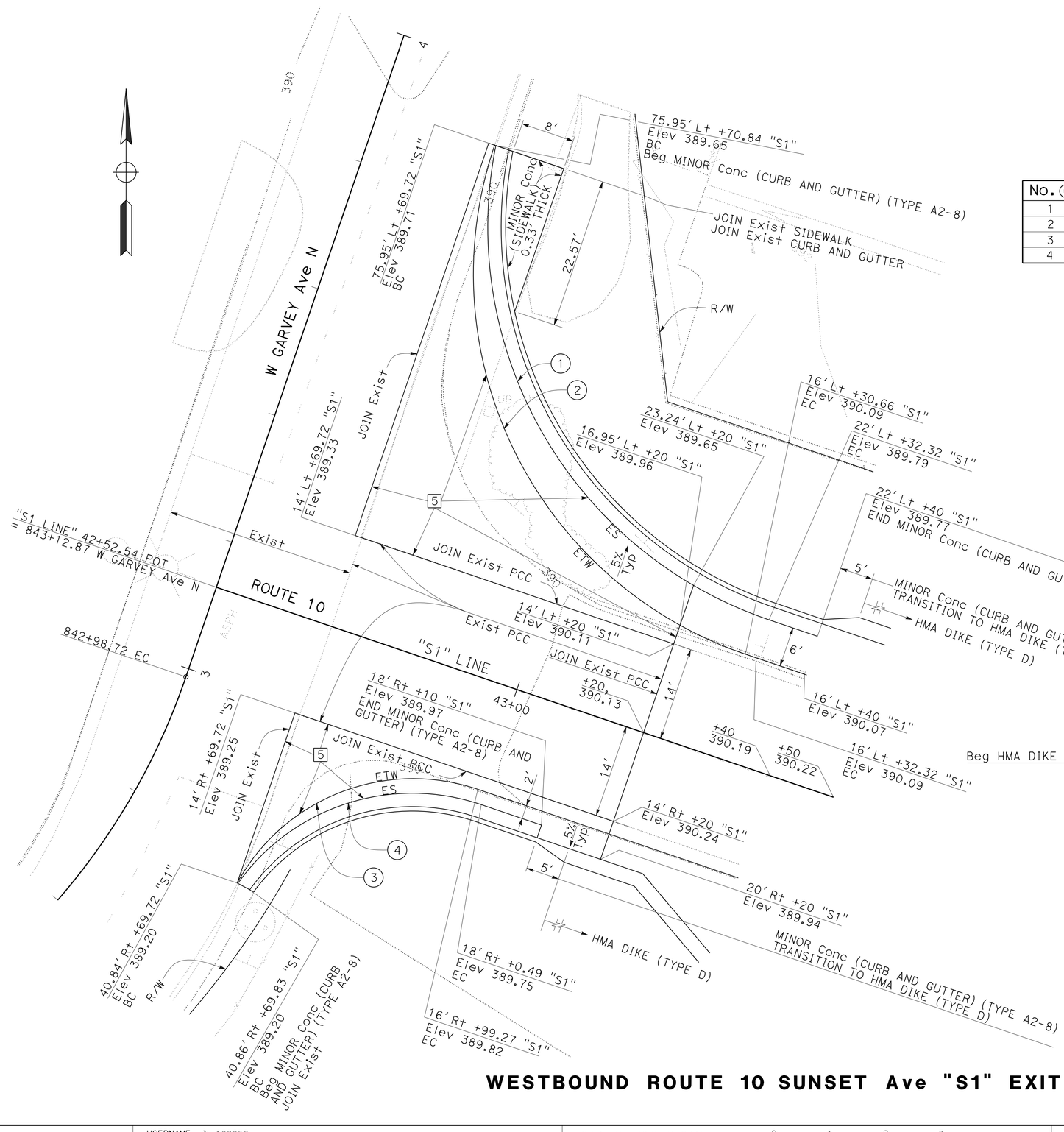

WESTBOUND ROUTE 10 SUNSET Ave "S1" EXIT RAMP

CURVE DATA

No. (#)	R	Δ	T	L
1	62'	82°32'31"	54.41'	89.32'
2	60'	89°57'16"	59.95'	94.20'
3	30'	80°06'9.4"	25.22'	41.94'
4	32'	73°24'26"	23.86'	41.00'

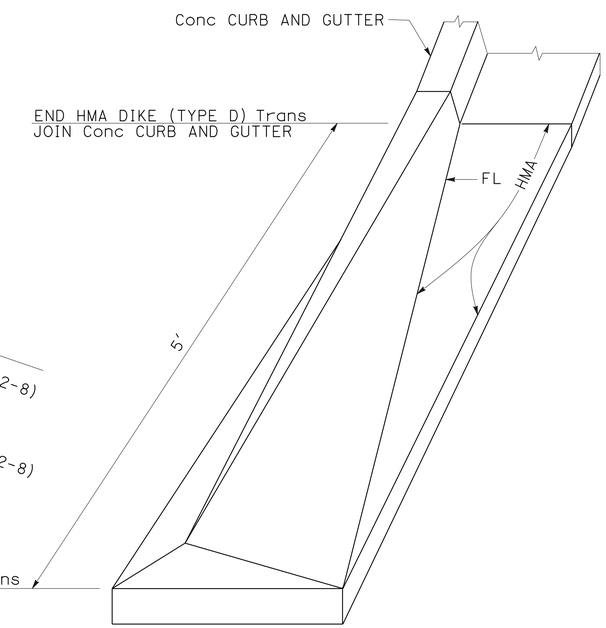

HMA DIKE (TYPE D) TRANSITION TO Conc CURB AND GUTTER

CONSTRUCTION DETAILS

NO SCALE

C-9

STATE OF CALIFORNIA - DEPARTMENT OF TRANSPORTATION
Caltrans® OFFICE OF DESIGN D

FUNCTIONAL SUPERVISOR: NADER GOBRAN
CALCULATED-DESIGNED BY: MINH TU
CHECKED BY: MOHAMED GHANNOUM
REVISED BY
DATE REVISED

LAST REVISION 04-28-12
DATE PLOTTED => 12-JUN-2013
TIME PLOTTED => 17:31

Dist	COUNTY	ROUTE	POST MILES TOTAL PROJECT	SHEET No.	TOTAL SHEETS
07	LA	10	33.2/37.2	108	1475

4-17-12
REGISTERED CIVIL ENGINEER DATE

6-10-13
PLANS APPROVAL DATE

REGISTERED PROFESSIONAL ENGINEER
MOHAMED GHANNOUM
No. 72051
Exp. 6-30-14
CIVIL
STATE OF CALIFORNIA

THE STATE OF CALIFORNIA OR ITS OFFICERS OR AGENTS SHALL NOT BE RESPONSIBLE FOR THE ACCURACY OR COMPLETENESS OF SCANNED COPIES OF THIS PLAN SHEET.

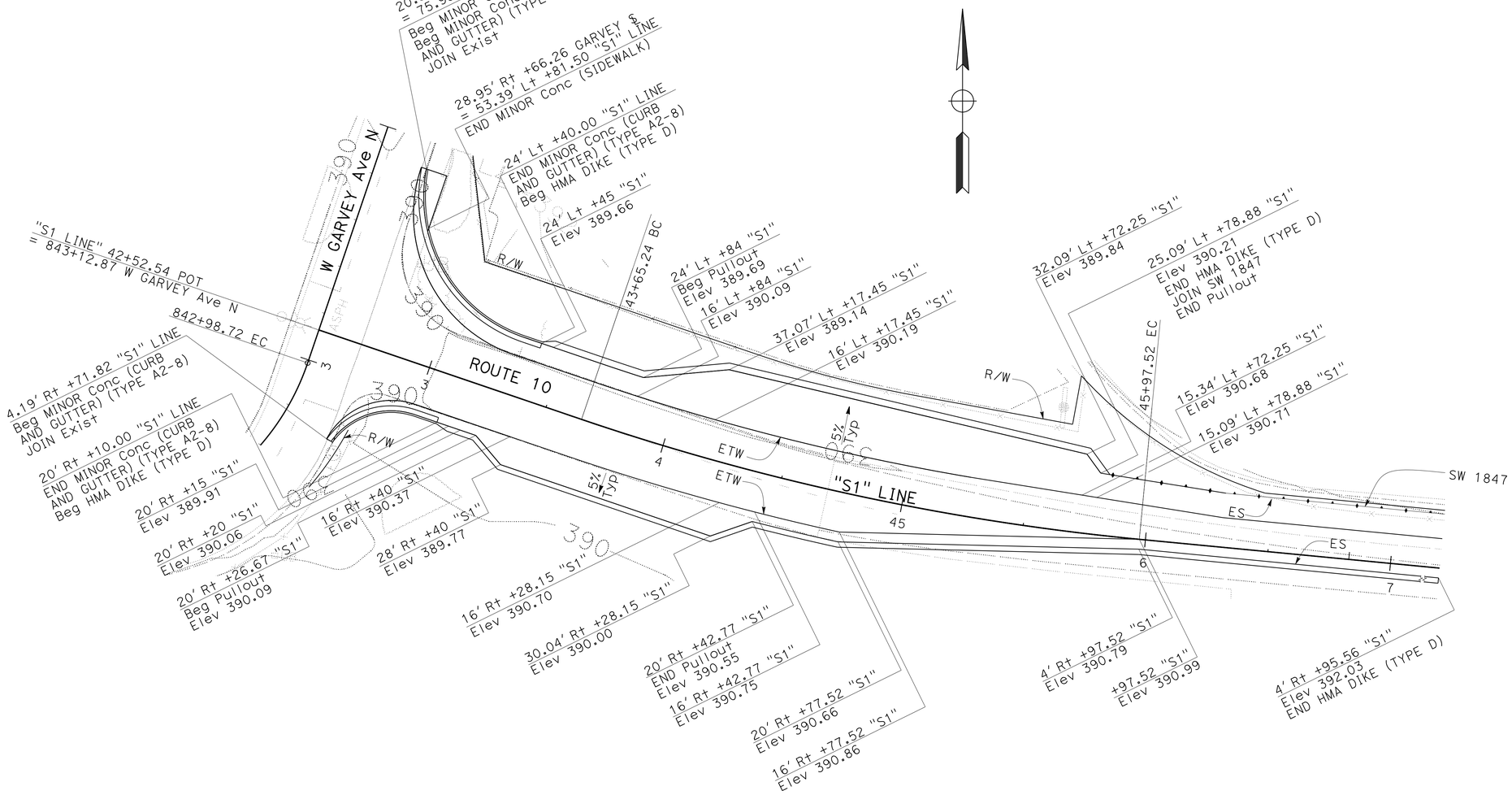

WESTBOUND ROUTE 10 SUNSET Ave "S1" EXIT RAMP

CONSTRUCTION DETAILS

SCALE: 1" = 20'

C-10

REVISED BY	DATE REVISED

CALCULATED-DESIGNED BY: MINH TU
CHECKED BY: MOHAMED GHANNOUM
FUNCTIONAL SUPERVISOR: NADER GOBRAN

STATE OF CALIFORNIA - DEPARTMENT OF TRANSPORTATION
Caltrans® OFFICE OF DESIGN D

LAST REVISION 04-28-12
DATE PLOTTED => 12-JUN-2013
TIME PLOTTED => 17:31

Dist	COUNTY	ROUTE	POST MILES TOTAL PROJECT	SHEET No.	TOTAL SHEETS
07	LA	10	33.2/37.2	109	1475

REGISTERED CIVIL ENGINEER 4-17-12 DATE

6-10-13
PLANS APPROVAL DATE

REGISTERED PROFESSIONAL ENGINEER MOHAMED GHANNOUM No. C72051 Exp. 6/30/14 CIVIL STATE OF CALIFORNIA

THE STATE OF CALIFORNIA OR ITS OFFICERS OR AGENTS SHALL NOT BE RESPONSIBLE FOR THE ACCURACY OR COMPLETENESS OF SCANNED COPIES OF THIS PLAN SHEET.

NOTE:

FOR ACCURATE RIGHT OF WAY DATA, CONTACT RIGHT OF WAY ENGINEERING AT THE DISTRICT OFFICE.

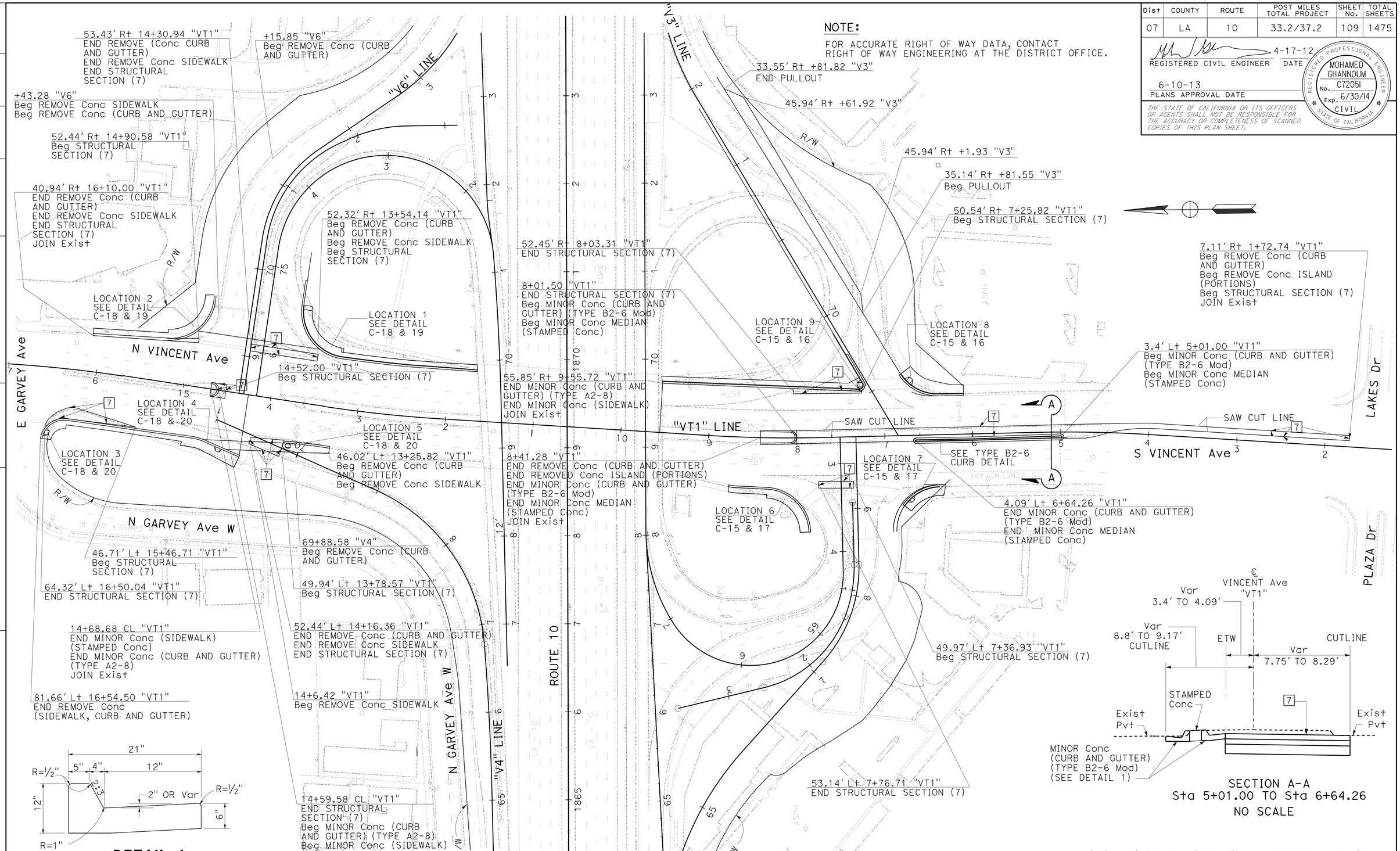

DETAIL 1

MINOR Conc (CURB AND GUTTER) (TYPE B2-6 Mod)

Sta 5+01.00 TO Sta 6+64.26

NO SCALE

SECTION A-A

Sta 5+01.00 TO Sta 6+64.26

NO SCALE

CONSTRUCTION DETAILS

VINCENT AVENUE UNDERCROSSING

SCALE: 1" = 50'

C-11

STATE OF CALIFORNIA - DEPARTMENT OF TRANSPORTATION
Caltrans® OFFICE OF DESIGN D

FUNCTIONAL SUPERVISOR: NADER GOBRAN
CALCULATED-DESIGNED BY: DARRYL MAYS
CHECKED BY: MOHAMED GHANNOUM
REVISED BY / DATE REVISED

LAST REVISION 00-00-00
DATE PLOTTED => 12-JUN-2013
TIME PLOTTED => 17:31

Dist	COUNTY	ROUTE	POST MILES TOTAL PROJECT	SHEET No.	TOTAL SHEETS
07	LA	10	33.2/37.2	110	1475

REGISTERED CIVIL ENGINEER 4-17-12 DATE

6-10-13
PLANS APPROVAL DATE

REGISTERED PROFESSIONAL ENGINEER MOHAMED GHANNOUM No. 72051 Exp. 6/30/14 CIVIL STATE OF CALIFORNIA

THE STATE OF CALIFORNIA OR ITS OFFICERS OR AGENTS SHALL NOT BE RESPONSIBLE FOR THE ACCURACY OR COMPLETENESS OF SCANNED COPIES OF THIS PLAN SHEET.

NOTE:
FOR ACCURATE RIGHT OF WAY DATA, CONTACT RIGHT OF WAY ENGINEERING AT THE DISTRICT OFFICE.

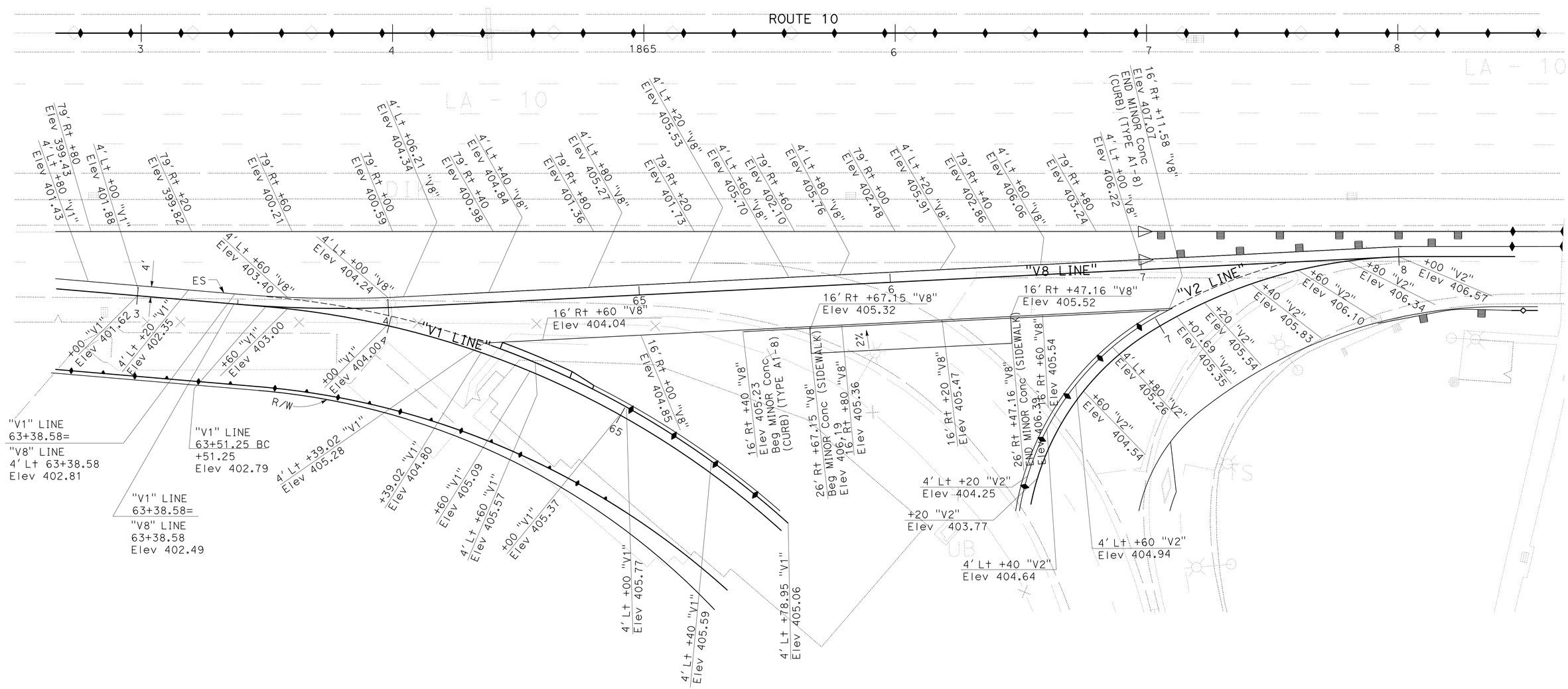

"V8" BUS RAMP
EASTBOUND ROUTE 10 AT VINCENT Ave

CONSTRUCTION DETAILS
SCALE: 1" = 20'

C-12

STATE OF CALIFORNIA - DEPARTMENT OF TRANSPORTATION
Caltrans® OFFICE OF DESIGN D

FUNCTIONAL SUPERVISOR: NADER GOBRAN
CALCULATED-DESIGNED BY: DARRYL MAYS
CHECKED BY: MOHAMED GHANNOUM
REVISED BY
DATE REVISED

LAST REVISION 00-00-00
DATE PLOTTED => 12-JUN-2013
TIME PLOTTED => 17:31

Dist	COUNTY	ROUTE	POST MILES TOTAL PROJECT	SHEET No.	TOTAL SHEETS
07	LA	10	33.2/37.2	111	1475

REGISTERED CIVIL ENGINEER 4-17-12 DATE

6-10-13
PLANS APPROVAL DATE

REGISTERED PROFESSIONAL ENGINEER MOHAMED GHANNOUM No. C72051 Exp. 6/30/14 CIVIL STATE OF CALIFORNIA

THE STATE OF CALIFORNIA OR ITS OFFICERS OR AGENTS SHALL NOT BE RESPONSIBLE FOR THE ACCURACY OR COMPLETENESS OF SCANNED COPIES OF THIS PLAN SHEET.

NOTE:

FOR ACCURATE RIGHT OF WAY DATA, CONTACT RIGHT OF WAY ENGINEERING AT THE DISTRICT OFFICE.

CURVE DATA

No. (#)	R	Δ	T	L
37	300.00′	5°40′26″	14.87′	29.71′
38	123.00′	92°12′32″	127.84′	197.95′
39	224.00′	12°2′26″	23.62′	47.07′
40	230.00′	54°29′59″	118.46′	218.78′

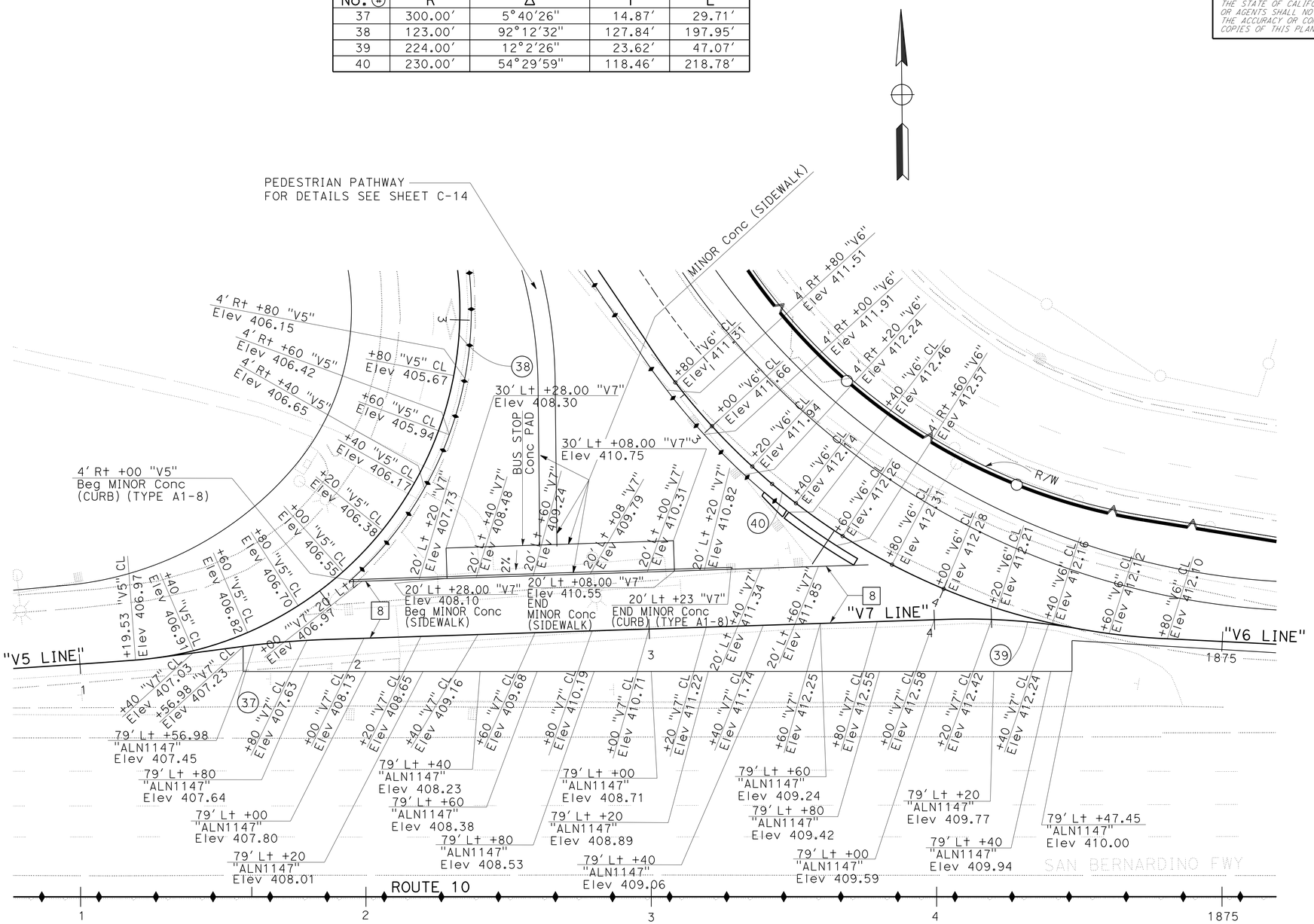

"V7" BUS RAMP
WESTBOUND ROUTE 10 AT VINCENT Ave

CONSTRUCTION DETAILS
SCALE: 1" = 20′

C-13

STATE OF CALIFORNIA - DEPARTMENT OF TRANSPORTATION
Caltrans® OFFICE OF DESIGN D

FUNCTIONAL SUPERVISOR: NADER GOBRAN
CALCULATED-DESIGNED BY: DARRYL MAYS
CHECKED BY: MOHAMED GHANNOUM
REVISED BY
DATE REVISED

LAST REVISION 00-00-00
DATE PLOTTED => 12-JUN-2013
TIME PLOTTED => 17:31

Dist	COUNTY	ROUTE	POST MILES TOTAL PROJECT	SHEET No.	TOTAL SHEETS
07	LA	10	33.2/37.2	112	1475

REGISTERED CIVIL ENGINEER 4-17-12 DATE

6-10-13
PLANS APPROVAL DATE

REGISTERED PROFESSIONAL ENGINEER MOHAMED GHANNOUM No. C72051 Exp. 6/30/14 CIVIL STATE OF CALIFORNIA

THE STATE OF CALIFORNIA OR ITS OFFICERS OR AGENTS SHALL NOT BE RESPONSIBLE FOR THE ACCURACY OR COMPLETENESS OF SCANNED COPIES OF THIS PLAN SHEET.

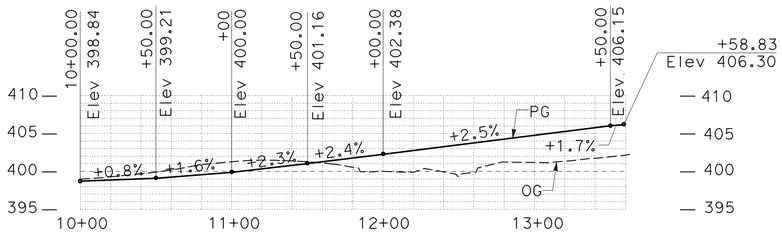

PROFILE "PV1"

SCALE: Horiz 1" = 50'
Vert 1" = 10'

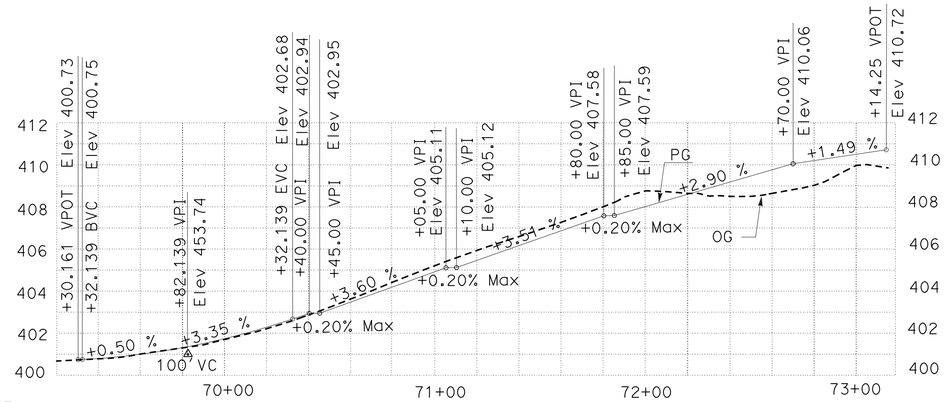

PROFILE "PV7"

SCALE: Horiz 1" = 50'
Vert 1" = 5'

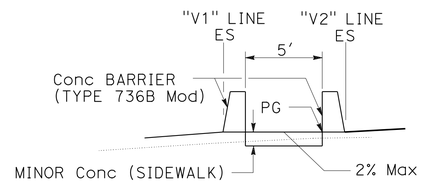

SECTION A-A
NO SCALE

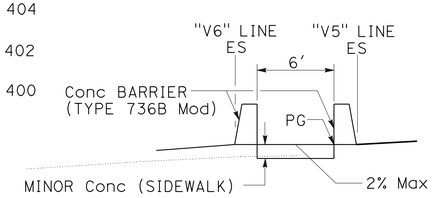

SECTION B-B
NO SCALE

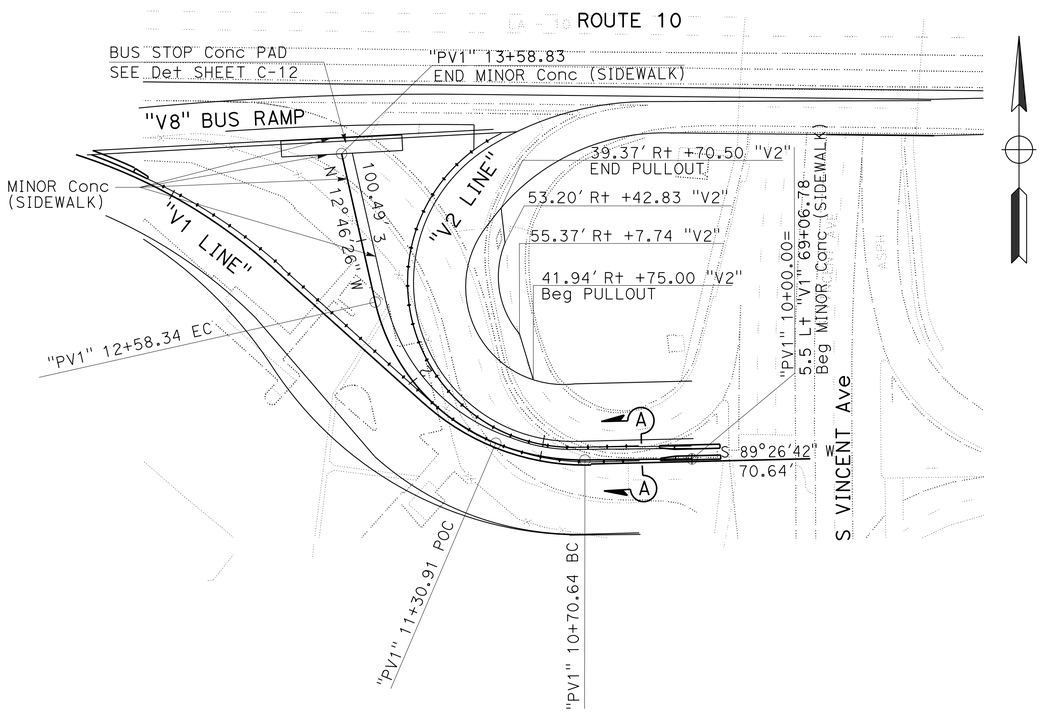

"PV1" PEDESTRIAN PATHWAY AT EASTBOUND ROUTE 10 AND VINCENT Ave

SCALE: 1" = 50'

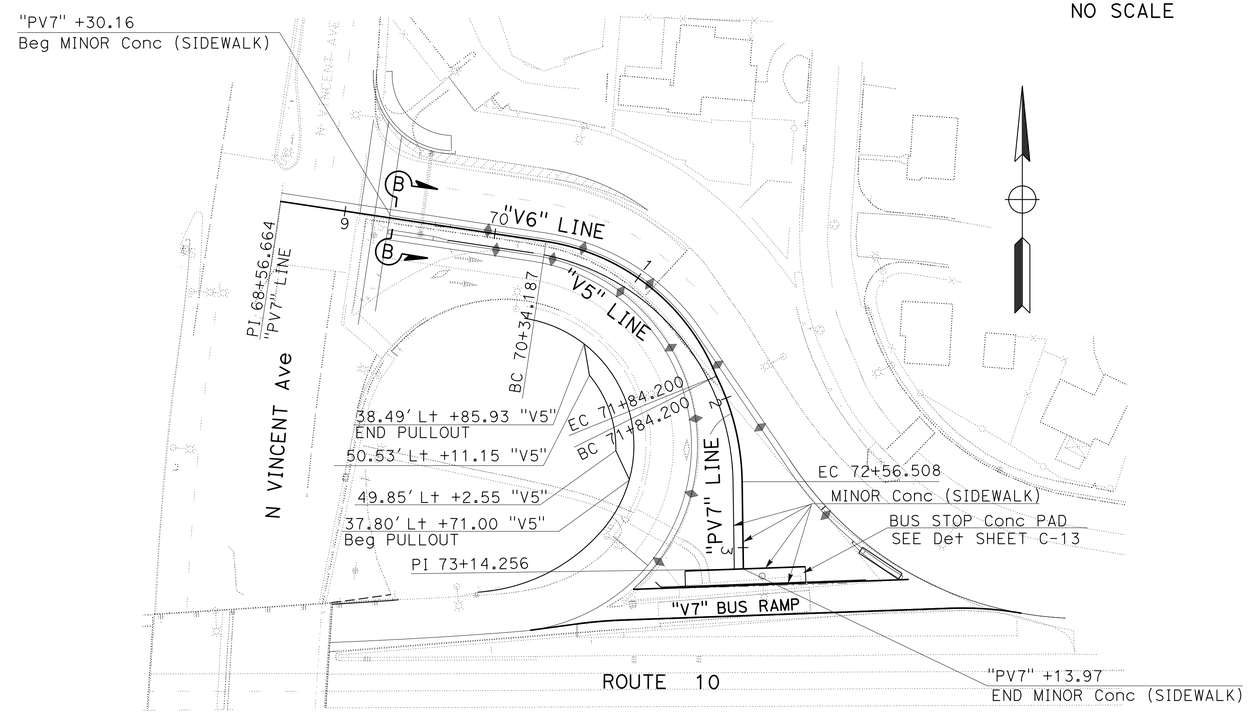

"PV7" PEDESTRIAN PATHWAY AT WESTBOUND ROUTE 10 AND VINCENT Ave

SCALE: 1" = 50'

CONSTRUCTION DETAILS

SCALE AS SHOWN

C-14

STATE OF CALIFORNIA - DEPARTMENT OF TRANSPORTATION
Caltrans® OFFICE OF DESIGN D

FUNCTIONAL SUPERVISOR: NADER GOBRAN
CALCULATED-DESIGNED BY: BOJAN MISIC/MAJA KORZENIOWSKA
CHECKED BY: MOHAMED GHANNOUM
REVISED BY
DATE REVISED

LAST REVISION 00-00-00
DATE PLOTTED => 12-JUN-2013
TIME PLOTTED => 17:31

Dist	COUNTY	ROUTE	POST MILES TOTAL PROJECT	SHEET No.	TOTAL SHEETS
07	LA	10	33.2/37.2	113	1475

4-17-12
REGISTERED CIVIL ENGINEER DATE

6-10-13
PLANS APPROVAL DATE

REGISTERED PROFESSIONAL ENGINEER
MOHAMED GHANNOUM
No. C72051
Exp. 6/30/14
CIVIL
STATE OF CALIFORNIA

THE STATE OF CALIFORNIA OR ITS OFFICERS OR AGENTS SHALL NOT BE RESPONSIBLE FOR THE ACCURACY OR COMPLETENESS OF SCANNED COPIES OF THIS PLAN SHEET.

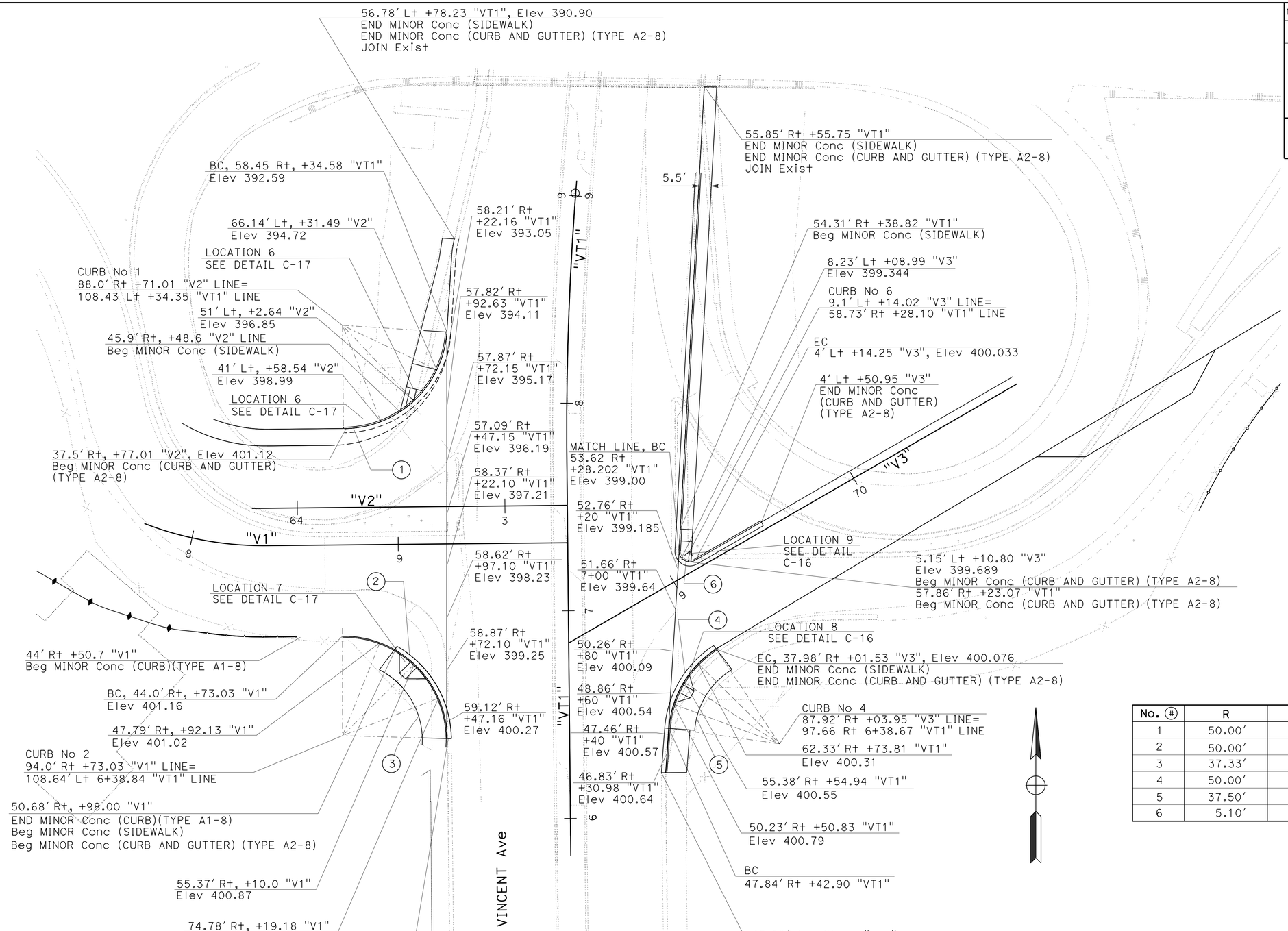

CURVE DATA

No. (#)	R	Δ	T	L
1	50.00'	85°47'53"	46.46'	74.87'
2	50.00'	89°51'20"	49.87'	78.41'
3	37.33'	59°53'22"	21.50'	39.02'
4	50.00'	52°55'14"	24.89'	46.18'
5	37.50'	54°27'15"	19.29'	35.64'
6	5.10'	123°34'24"	9.51'	11.00'

CONSTRUCTION DETAILS

SCALE: 1" = 20'

VINCENT AVENUE UNDERCROSSING (SOUTH SIDE OF ROUTE 10)
LOCATIONS 6, 7, 8 & 9

C-15

REVISED BY | DATE REVISED
ANH VU | MOHAMED GHANNOUM
CALCULATED-DESIGNED BY | CHECKED BY
FUNCTIONAL SUPERVISOR | NADER GOBRAN

STATE OF CALIFORNIA - DEPARTMENT OF TRANSPORTATION
Caltrans® OFFICE OF DESIGN D

LAST REVISION 00-00-00 | DATE PLOTTED => 12-JUN-2013 | TIME PLOTTED => 17:31

Dist	COUNTY	ROUTE	POST MILES TOTAL PROJECT	SHEET No.	TOTAL SHEETS
07	LA	10	33.2/37.2	114	1475

REGISTERED CIVIL ENGINEER 4-17-12 DATE

6-10-13
PLANS APPROVAL DATE

REGISTERED PROFESSIONAL ENGINEER MOHAMED GHANNOUM No. C72051 Exp. 6/30/14 CIVIL STATE OF CALIFORNIA

THE STATE OF CALIFORNIA OR ITS OFFICERS OR AGENTS SHALL NOT BE RESPONSIBLE FOR THE ACCURACY OR COMPLETENESS OF SCANNED COPIES OF THIS PLAN SHEET.

CURVE DATA

No. (#)	R	Δ	T	L
1	37.50′	54°27′15″	19.29′	35.64′
2	50.00′	52°44′17″	25.78′	47.86′
3	50.00′	125°7′54″	9.83′	11.14′

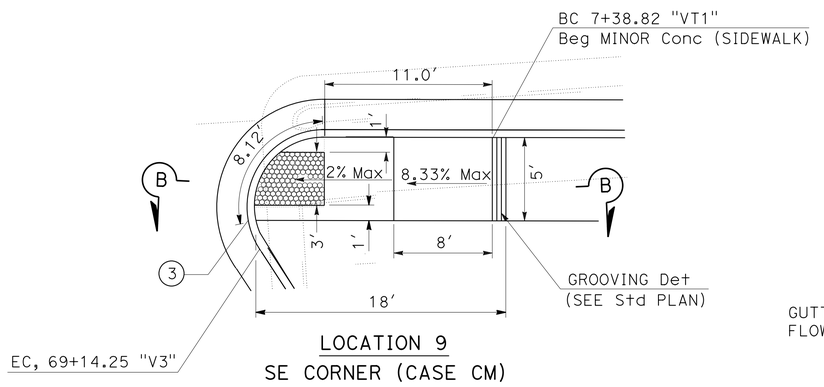

LOCATION 9
SE CORNER (CASE CM)

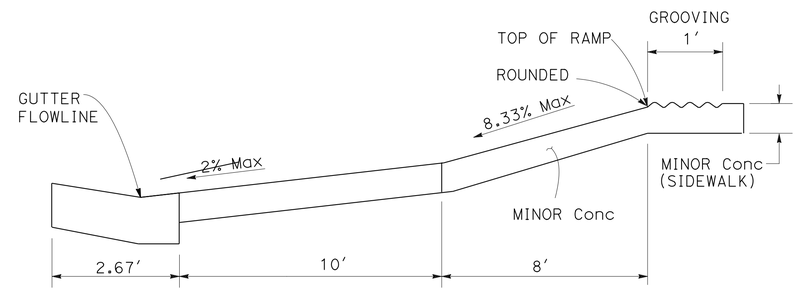

SECTION B-B

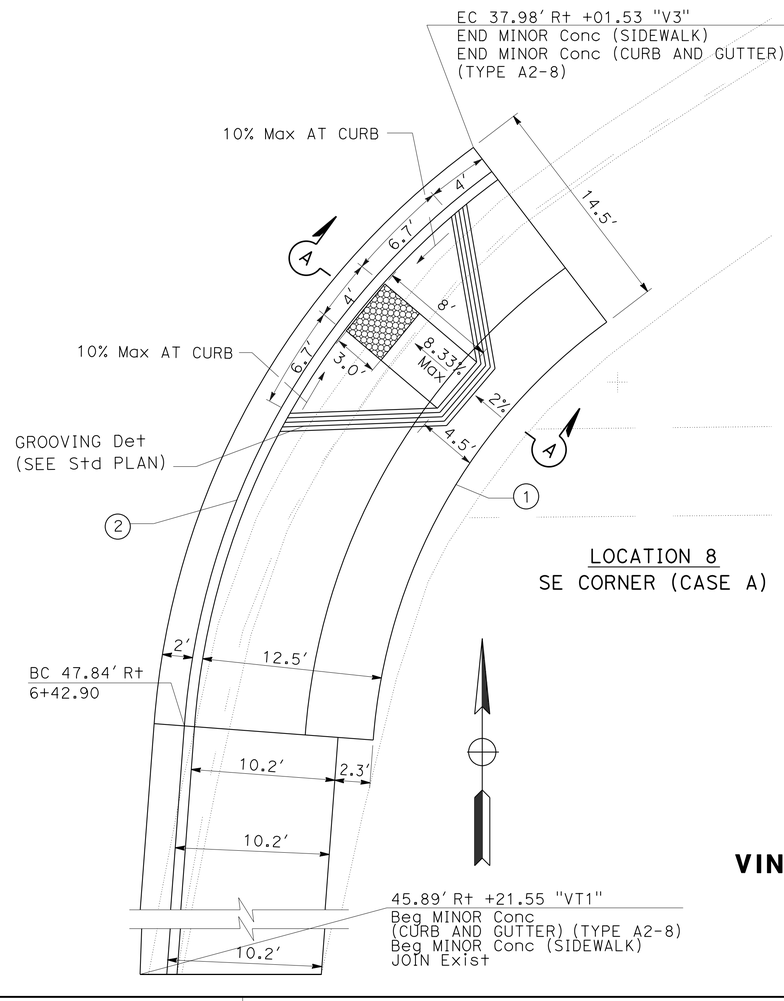

LOCATION 8
SE CORNER (CASE A)

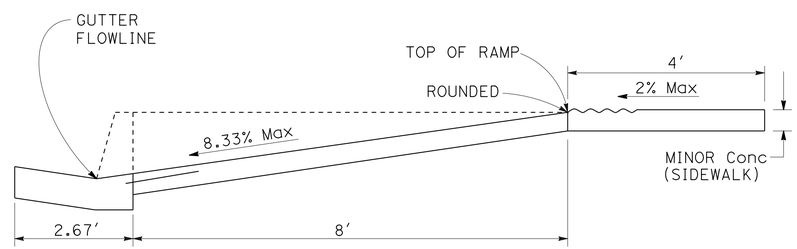

SECTION A-A

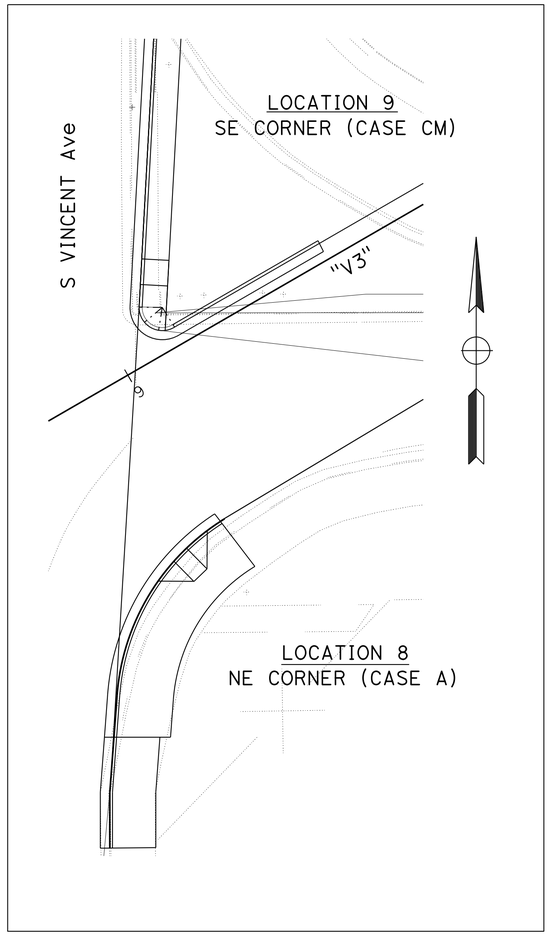

VINCENT AVENUE UNDERCROSSING (SE CORNER)
LOCATIONS 8 & 9

CONSTRUCTION DETAILS

NO SCALE

C-16

STATE OF CALIFORNIA - DEPARTMENT OF TRANSPORTATION
Caltrans® OFFICE OF DESIGN D

FUNCTIONAL SUPERVISOR: NADER GOBRAN
CALCULATED-DESIGNED BY: ANH VU
CHECKED BY: MOHAMED GHANNOUM
REVISED BY
DATE REVISED

LAST REVISION 00-00-00
DATE PLOTTED => 18-JUN-2013
TIME PLOTTED => 06:51

Dist	COUNTY	ROUTE	POST MILES TOTAL PROJECT	SHEET No.	TOTAL SHEETS
07	LA	10	33.2/37.2	115	1475

REGISTERED CIVIL ENGINEER 4-17-12 DATE

6-10-13
PLANS APPROVAL DATE

REGISTERED PROFESSIONAL ENGINEER MOHAMED GHANNOUM No. C72051 Exp. 6/30/14 CIVIL STATE OF CALIFORNIA

THE STATE OF CALIFORNIA OR ITS OFFICERS OR AGENTS SHALL NOT BE RESPONSIBLE FOR THE ACCURACY OR COMPLETENESS OF SCANNED COPIES OF THIS PLAN SHEET.

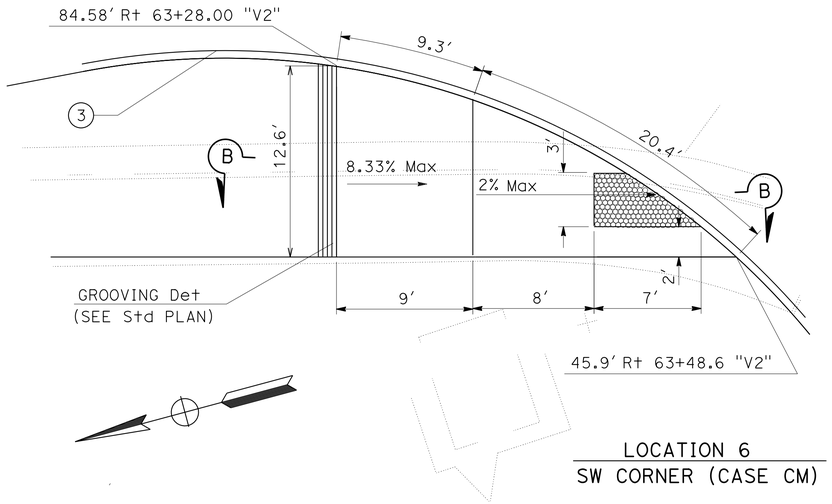

LOCATION 6
SW CORNER (CASE CM)

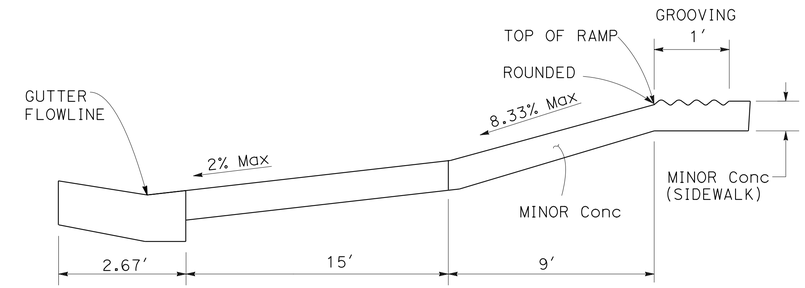

SECTION B-B

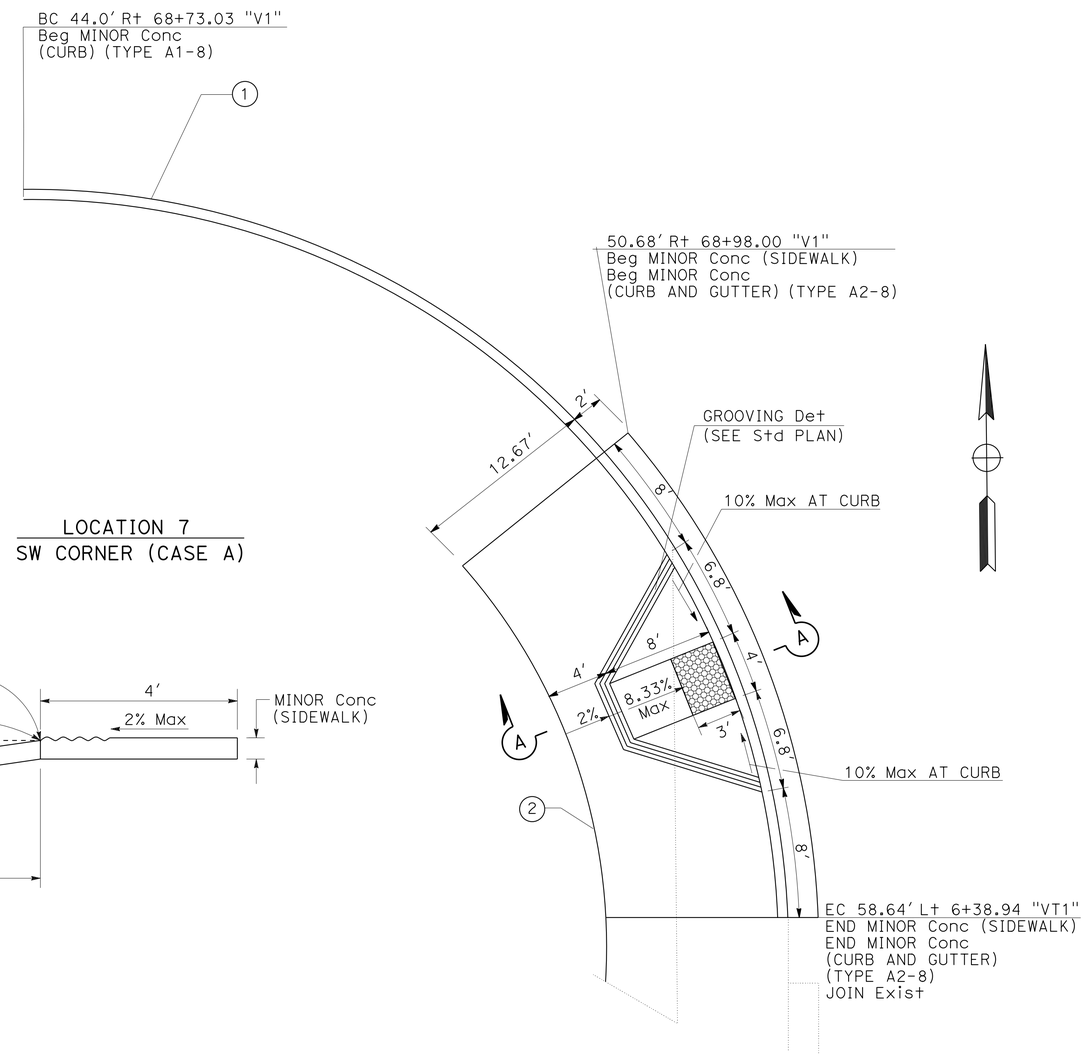

LOCATION 7
SW CORNER (CASE A)

CURVE DATA

No. (#)	R	Δ	T	L
1	50.00'	89°51'20"	49.87'	78.41'
2	37.33'	58°53'22"	21.50'	39.02'
3	50.00'	61°19'40"	29.65'	53.52'

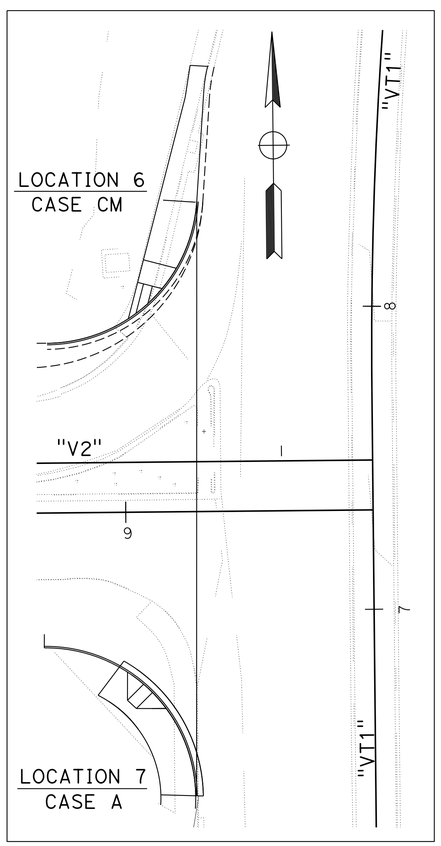

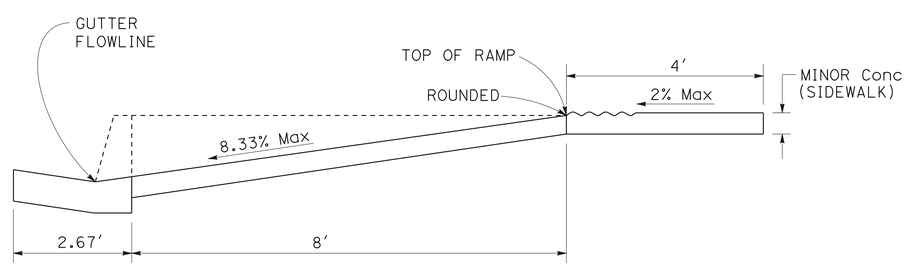

SECTION A-A

VINCENT AVENUE UNDERCROSSING (SW CORNER)
LOCATIONS 6 & 7

CONSTRUCTION DETAILS
NO SCALE

C-17

STATE OF CALIFORNIA - DEPARTMENT OF TRANSPORTATION
Caltrans® OFFICE OF DESIGN D

FUNCTIONAL SUPERVISOR: NADER GOBRAN
CALCULATED-DESIGNED BY: ANH VU
CHECKED BY: MOHAMED GHANNOUM
REVISED BY
DATE REVISED

LAST REVISION 00-00-00
DATE PLOTTED => 03-JUL-2013
TIME PLOTTED => 08:55

Dist	COUNTY	ROUTE	POST MILES TOTAL PROJECT	SHEET No.	TOTAL SHEETS
07	LA	10	33.2/37.2	116	1475

REGISTERED CIVIL ENGINEER 4-17-12 DATE

6-10-13
PLANS APPROVAL DATE

REGISTERED PROFESSIONAL ENGINEER MOHAMED GHANNOUM No. C72051 Exp. 6/30/14 CIVIL STATE OF CALIFORNIA

THE STATE OF CALIFORNIA OR ITS OFFICERS OR AGENTS SHALL NOT BE RESPONSIBLE FOR THE ACCURACY OR COMPLETENESS OF SCANNED COPIES OF THIS PLAN SHEET.

CURVE DATA

No. (#)	R	Δ	T	L
1	3.17′	179°59′06"	24337.02′	9.96′
2	39.33′	90°21′12"	39.57′	62.02′
3	52.00′	90°25′01"	52.38′	82.06′
4	37.35′	92°33′55"	39.06′	60.35′
5	50.02′	93°0′11"	52.72′	81.20′
6	25.00′	89°8′47"	24.63′	38.90′
7	12.33′	87°6′22"	11.72′	18.75′
8	49.16′	15°2′54"	6.49′	12.91′

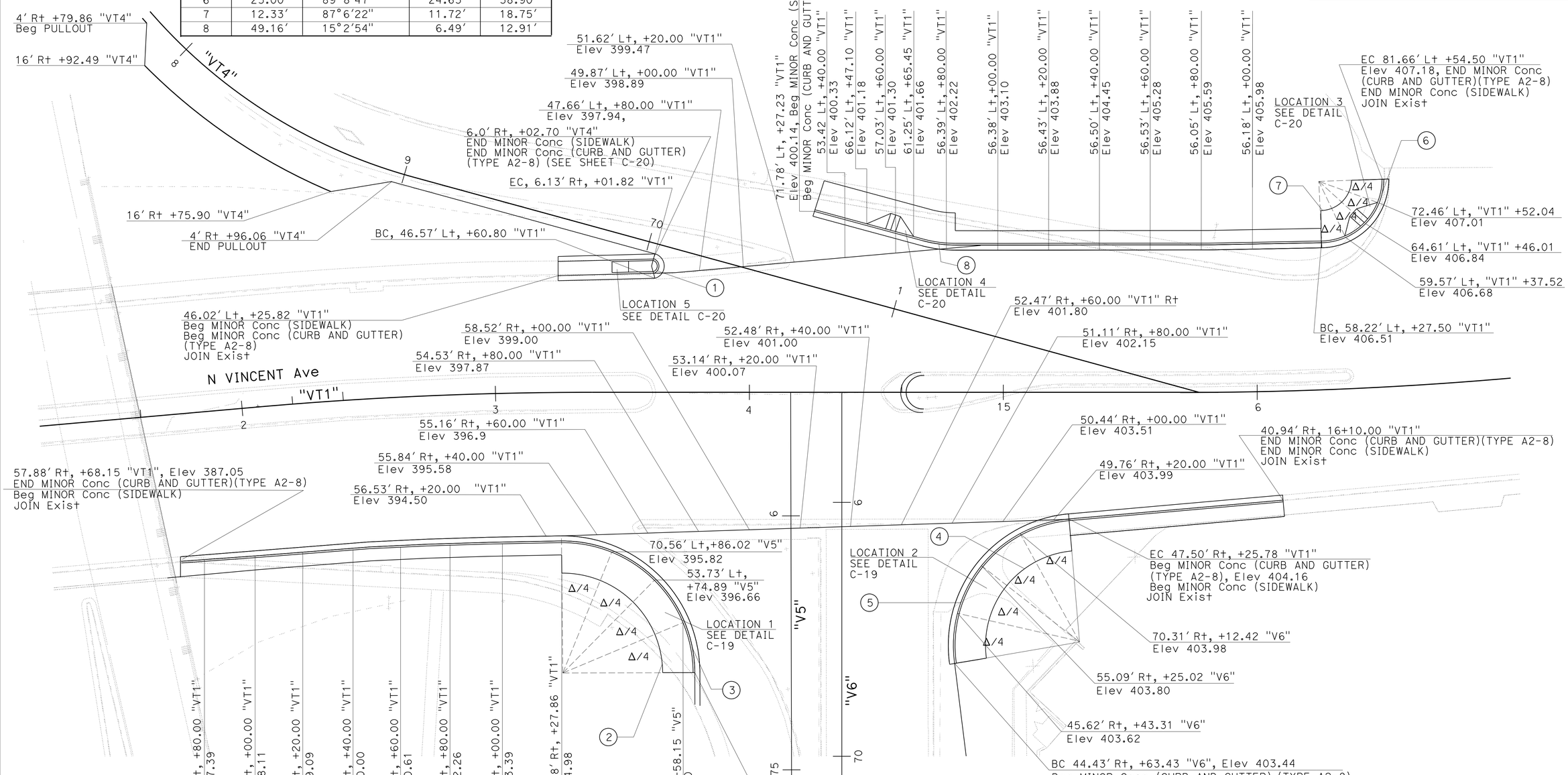

VINCENT AVENUE UNDERCROSSING (NORTH SIDE)
LOCATION 3, 4 & 5

CONSTRUCTION DETAILS

SCALE: 1" = 20′

C-18

STATE OF CALIFORNIA - DEPARTMENT OF TRANSPORTATION
Caltrans® OFFICE OF DESIGN D

FUNCTIONAL SUPERVISOR: NADER GOBRAN
CALCULATED-DESIGNED BY: DARRYL MAYS
CHECKED BY: MOHAMED GHANNOUM
REVISED BY / DATE REVISED

LAST REVISION 00-00-00 | DATE PLOTTED => 18-JUN-2013 | TIME PLOTTED => 06:51

Dist	COUNTY	ROUTE	POST MILES TOTAL PROJECT	SHEET No.	TOTAL SHEETS
07	LA	10	33.2/37.2	117	1475

REGISTERED CIVIL ENGINEER 4-17-12 DATE

6-10-13
PLANS APPROVAL DATE

REGISTERED PROFESSIONAL ENGINEER MOHAMED GHANNOUM No. C72051 Exp. 6/30/14 CIVIL STATE OF CALIFORNIA

THE STATE OF CALIFORNIA OR ITS OFFICERS OR AGENTS SHALL NOT BE RESPONSIBLE FOR THE ACCURACY OR COMPLETENESS OF SCANNED COPIES OF THIS PLAN SHEET.

CURVE DATA

No. (#)	R	Δ	T	L
1	52.00′	93°7′00"	54.91′	84.51′
2	50.00′	92°9′49"	51.92′	80.43′
3	37.33′	91°54′35"	38.60′	59.88′
4	54.00′	88°23′47"	52.51′	83.31′
5	52.00′	29°53′27"	13.88′	27.13′
6	41.33′	87°50′50"	39.81′	63.37′
7	40.30′	26°27′35"	9.47′	18.61′

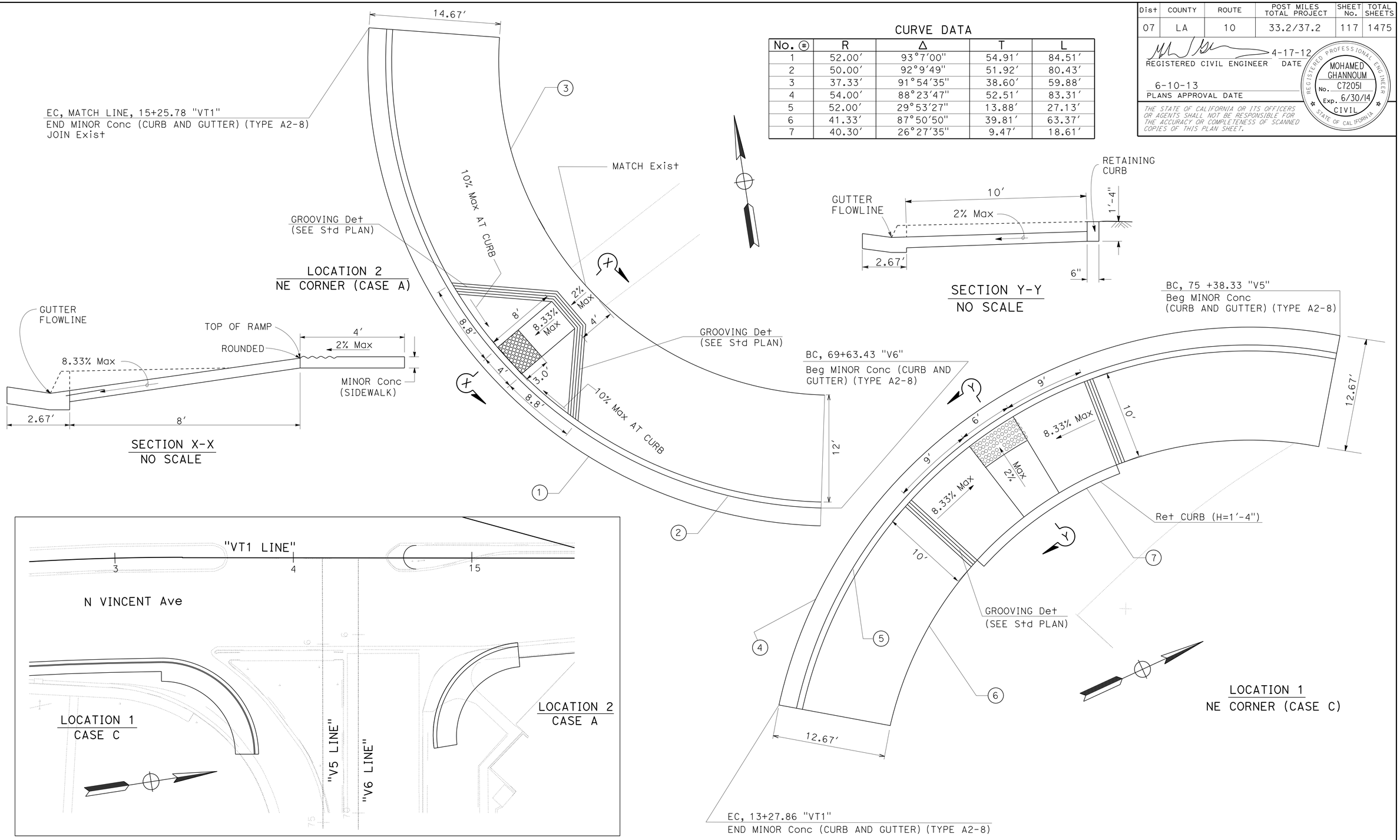

VINCENT AVENUE UNDERCROSSING (NE CORNER)
LOCATIONS 1 & 2

CONSTRUCTION DETAILS
NO SCALE

C-19

REVISED BY	DATE REVISED
ANH VU	MOHAMED GHANNOUM

CALCULATED-DESIGNED BY / CHECKED BY

FUNCTIONAL SUPERVISOR: NADER GOBRAN

STATE OF CALIFORNIA - DEPARTMENT OF TRANSPORTATION
Caltrans OFFICE OF DESIGN D

LAST REVISION 00-00-00 | DATE PLOTTED => 12-JUN-2013 | TIME PLOTTED => 17:32

Dist	COUNTY	ROUTE	POST MILES TOTAL PROJECT	SHEET No.	TOTAL SHEETS
07	LA	10	33.2/37.2	118	1475

REGISTERED CIVIL ENGINEER 4-17-12 DATE

6-10-13
PLANS APPROVAL DATE

REGISTERED PROFESSIONAL ENGINEER MOHAMED GHANNOUM No. C72051 Exp. 6/30/14 CIVIL STATE OF CALIFORNIA

THE STATE OF CALIFORNIA OR ITS OFFICERS OR AGENTS SHALL NOT BE RESPONSIBLE FOR THE ACCURACY OR COMPLETENESS OF SCANNED COPIES OF THIS PLAN SHEET.

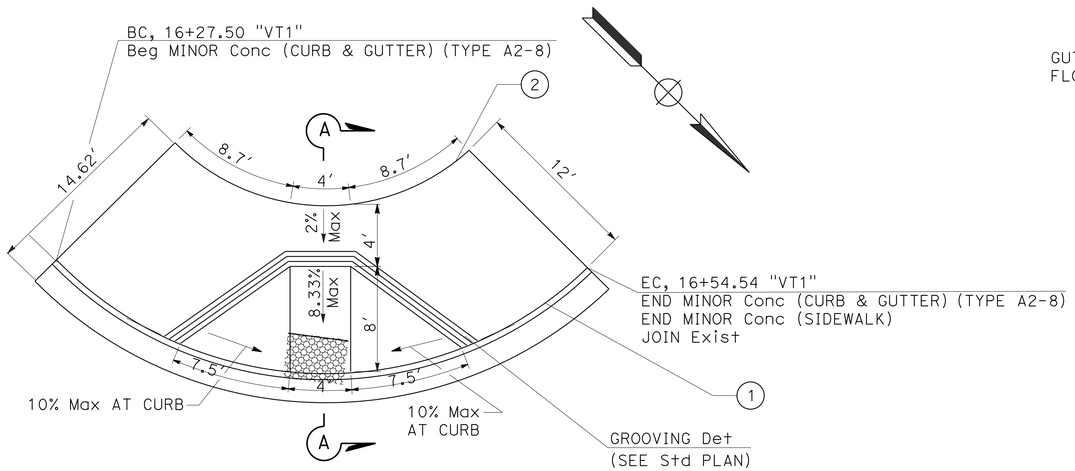

LOCATION 3
NW CORNER (CASE A)

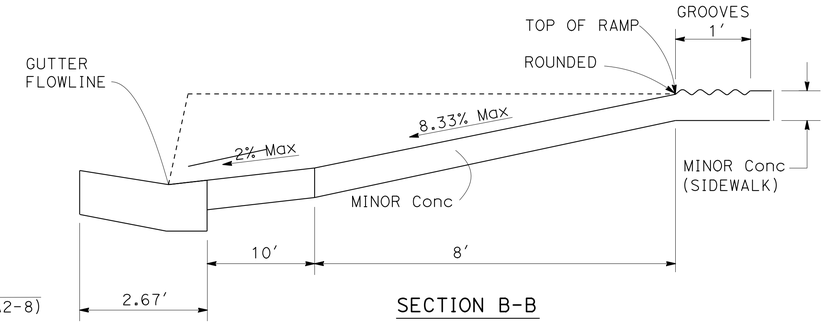

SECTION B-B

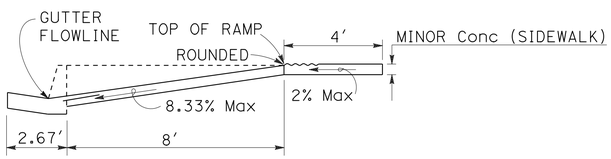

SECTION A-A

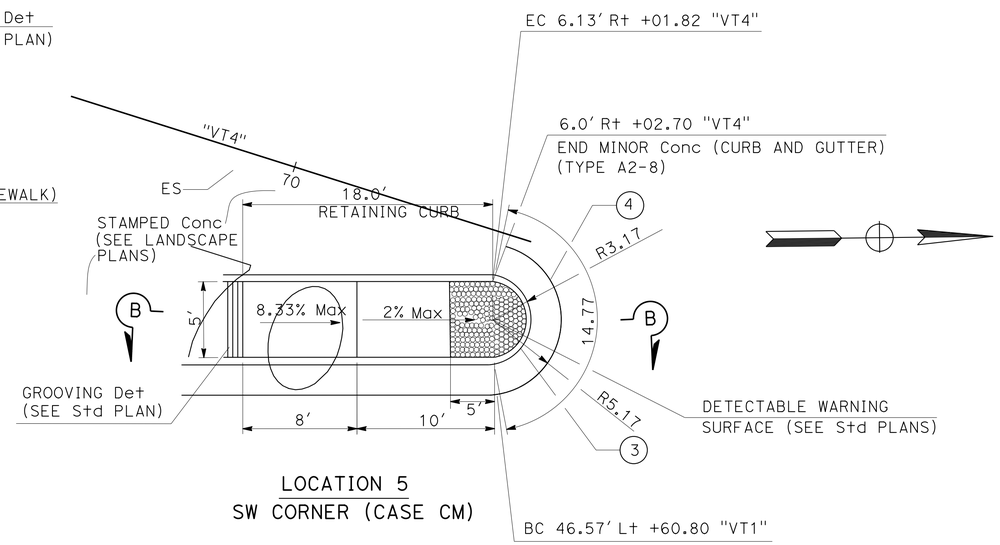

LOCATION 5
SW CORNER (CASE CM)

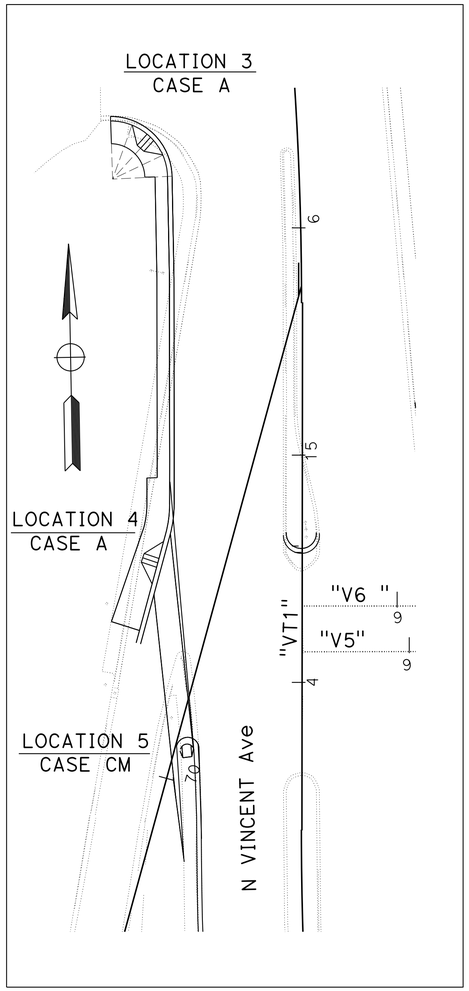

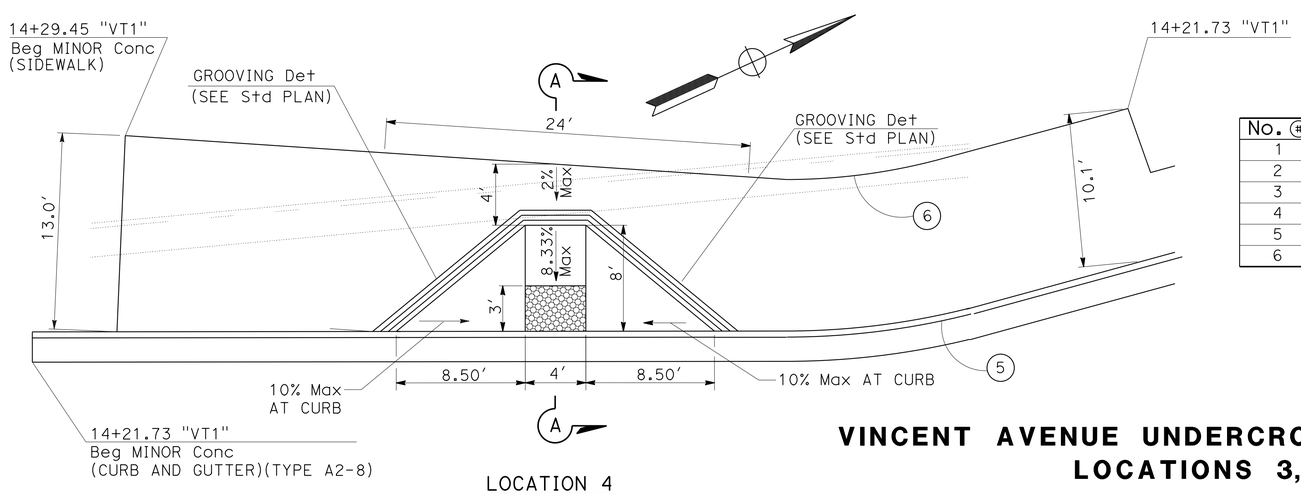

LOCATION 4
NW CORNER (CASE A)

CURVE DATA

No. ⊕	R	Δ	T	L
1	24.80'	89°55'38"	24.77'	38.92'
2	14.00'	35°36'37"	4.50'	8.70'
3	3.17'	179°59'06"	24337.02'	9.96'
4	5.17'	163°43'44"	36.17'	14.77'
5	49.16'	15°02'54"	6.49'	12.91'
6	36.49'	15°02'54"	4.82'	9.58'

VINCENT AVENUE UNDERCROSSING (NW CORNER)
LOCATIONS 3, 4 & 5

CONSTRUCTION DETAILS

NO SCALE

C-20

STATE OF CALIFORNIA - DEPARTMENT OF TRANSPORTATION
Caltrans® OFFICE OF DESIGN D

FUNCTIONAL SUPERVISOR: NADER GOBRAN
CALCULATED-DESIGNED BY: ANH VU
CHECKED BY: MOHAMED GHANNOUM
REVISED BY
DATE REVISED

LAST REVISION 00-00-00
DATE PLOTTED => 12-JUN-2013
TIME PLOTTED => 17:32

Dist	COUNTY	ROUTE	POST MILES TOTAL PROJECT	SHEET No.	TOTAL SHEETS
07	LA	10	33.2/37.2	119	1475

REGISTERED CIVIL ENGINEER 4-17-12 DATE

6-10-13
PLANS APPROVAL DATE

REGISTERED PROFESSIONAL ENGINEER MOHAMED GHANNOUM No. 72051 Exp. 6/30/14 CIVIL STATE OF CALIFORNIA

THE STATE OF CALIFORNIA OR ITS OFFICERS OR AGENTS SHALL NOT BE RESPONSIBLE FOR THE ACCURACY OR COMPLETENESS OF SCANNED COPIES OF THIS PLAN SHEET.

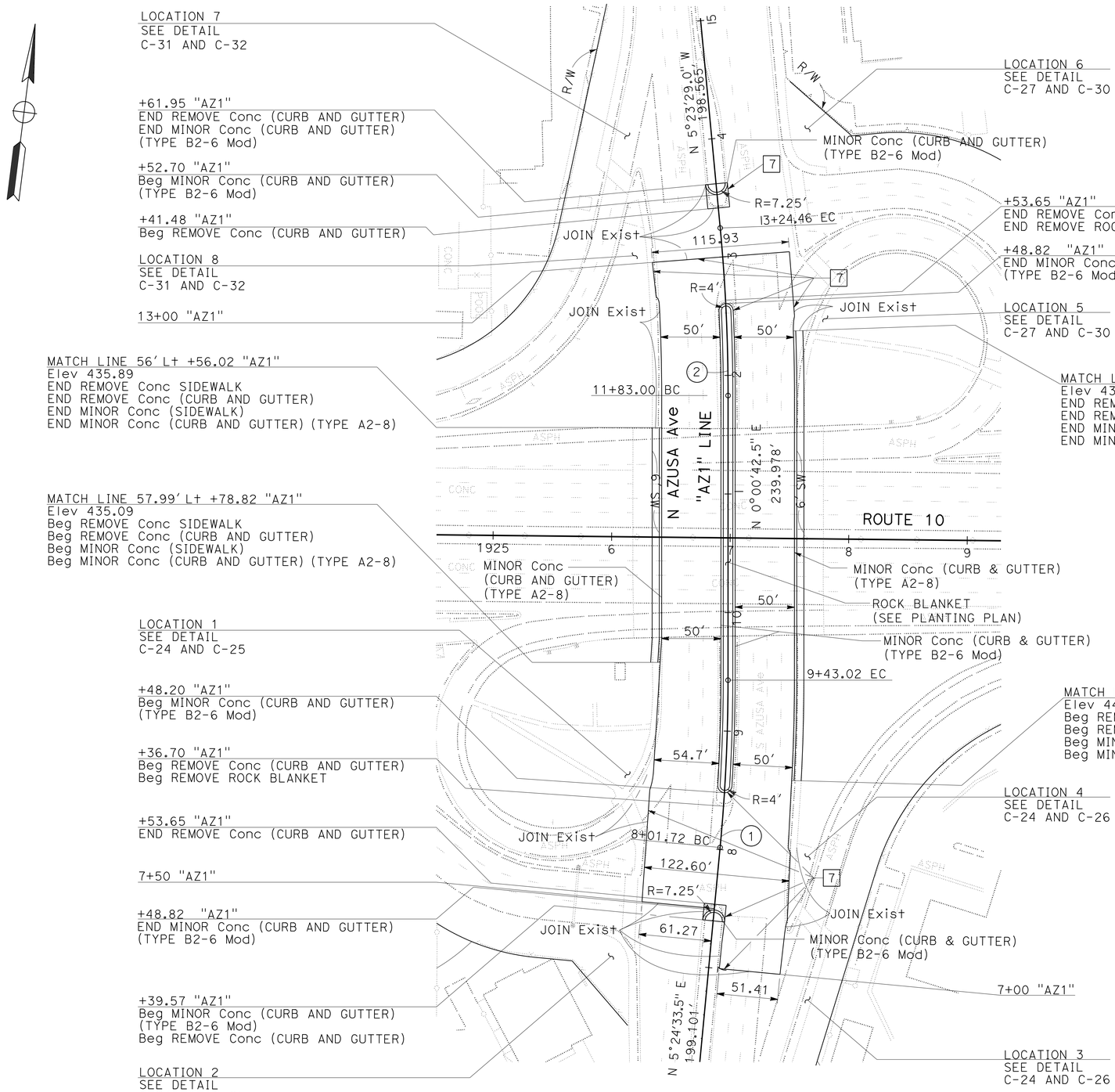

AZUSA AVENUE LOWERING

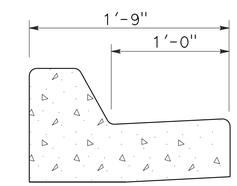

CURB (TYPE B2-6 Mod)

NO SCALE

CURVE DATA

No. (#)	R	Δ	T	L
1	1500'	5°23'51"	70.71'	141.31'
2	1500'	5°24'12"	70.78'	141.46'

CONSTRUCTION DETAILS

SCALE: 1" = 50'

C-21

STATE OF CALIFORNIA - DEPARTMENT OF TRANSPORTATION
OFFICE OF DESIGN D

FUNCTIONAL SUPERVISOR: NADER GOBRAN
CALCULATED-DESIGNED BY: AVERY CHAN
CHECKED BY: JEROME ARABE
REVISED BY
DATE REVISED

LAST REVISION 00-00-00
DATE PLOTTED => 12-JUN-2013
TIME PLOTTED => 17:32

Dist	COUNTY	ROUTE	POST MILES TOTAL PROJECT	SHEET No.	TOTAL SHEETS
07	LA	10	33.2/37.2	120	1475

REGISTERED CIVIL ENGINEER 4-17-12 DATE

6-10-13
PLANS APPROVAL DATE

REGISTERED PROFESSIONAL ENGINEER MOHAMED GHANNOUM No. 72051 Exp. 6/30/14 CIVIL STATE OF CALIFORNIA

THE STATE OF CALIFORNIA OR ITS OFFICERS OR AGENTS SHALL NOT BE RESPONSIBLE FOR THE ACCURACY OR COMPLETENESS OF SCANNED COPIES OF THIS PLAN SHEET.

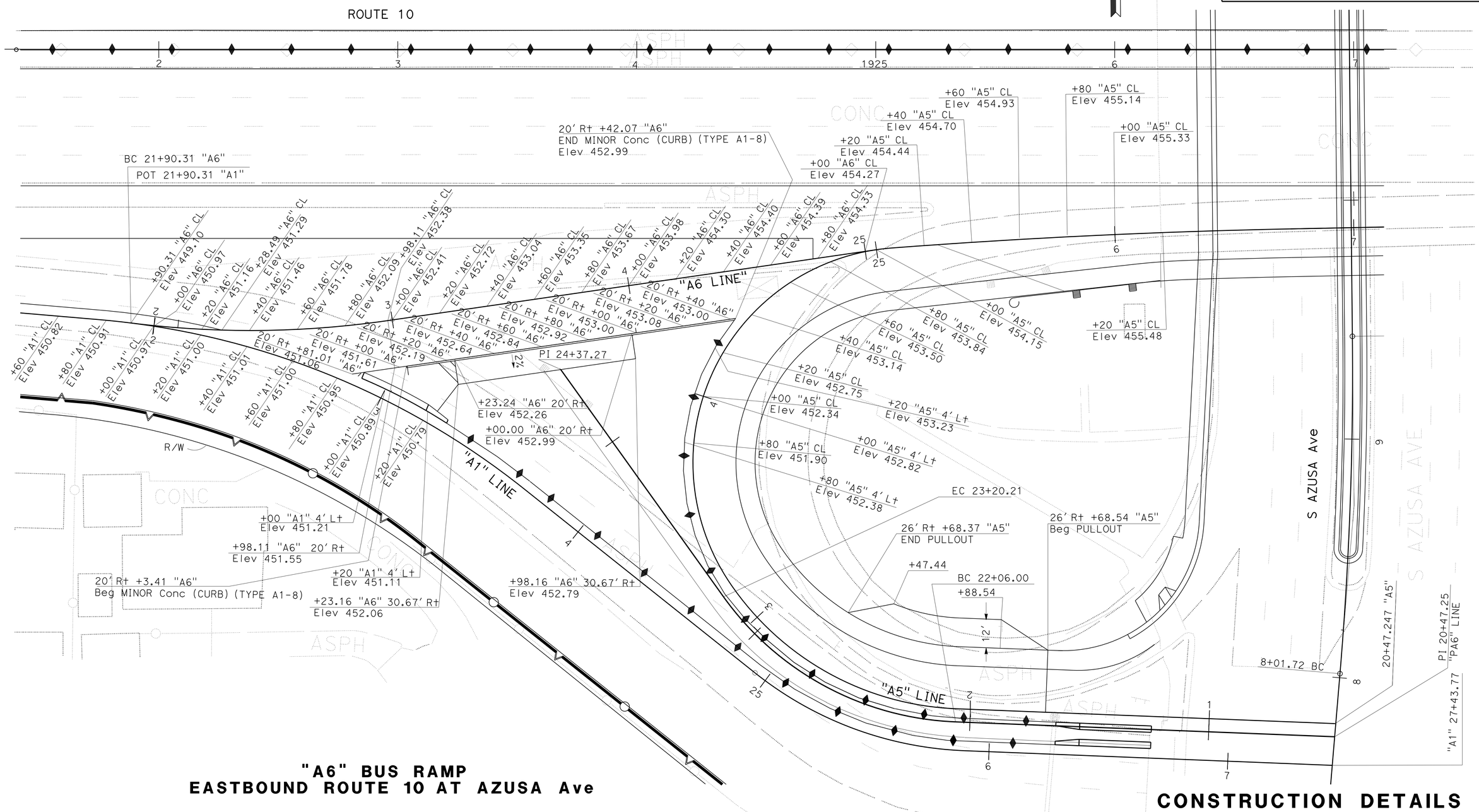

"A6" BUS RAMP
EASTBOUND ROUTE 10 AT AZUSA Ave

CONSTRUCTION DETAILS

SCALE: 1" = 20'

C-22

STATE OF CALIFORNIA - DEPARTMENT OF TRANSPORTATION
Caltrans OFFICE OF DESIGN D

FUNCTIONAL SUPERVISOR: NADER GOBRAN
CALCULATED-DESIGNED BY: DARRYL MAYS
CHECKED BY: MOHAMED GHANNOUM
REVISED BY
DATE REVISED

LAST REVISION 00-00-00
DATE PLOTTED => 12-JUN-2013
TIME PLOTTED => 17:32

Dist	COUNTY	ROUTE	POST MILES TOTAL PROJECT	SHEET No.	TOTAL SHEETS
07	LA	10	33.2/37.2	121	1475

REGISTERED CIVIL ENGINEER 4-17-12 DATE

6-10-13
PLANS APPROVAL DATE

REGISTERED PROFESSIONAL ENGINEER MOHAMED GHANNOUM No. 72051 Exp. 6/30/14 CIVIL STATE OF CALIFORNIA

THE STATE OF CALIFORNIA OR ITS OFFICERS OR AGENTS SHALL NOT BE RESPONSIBLE FOR THE ACCURACY OR COMPLETENESS OF SCANNED COPIES OF THIS PLAN SHEET.

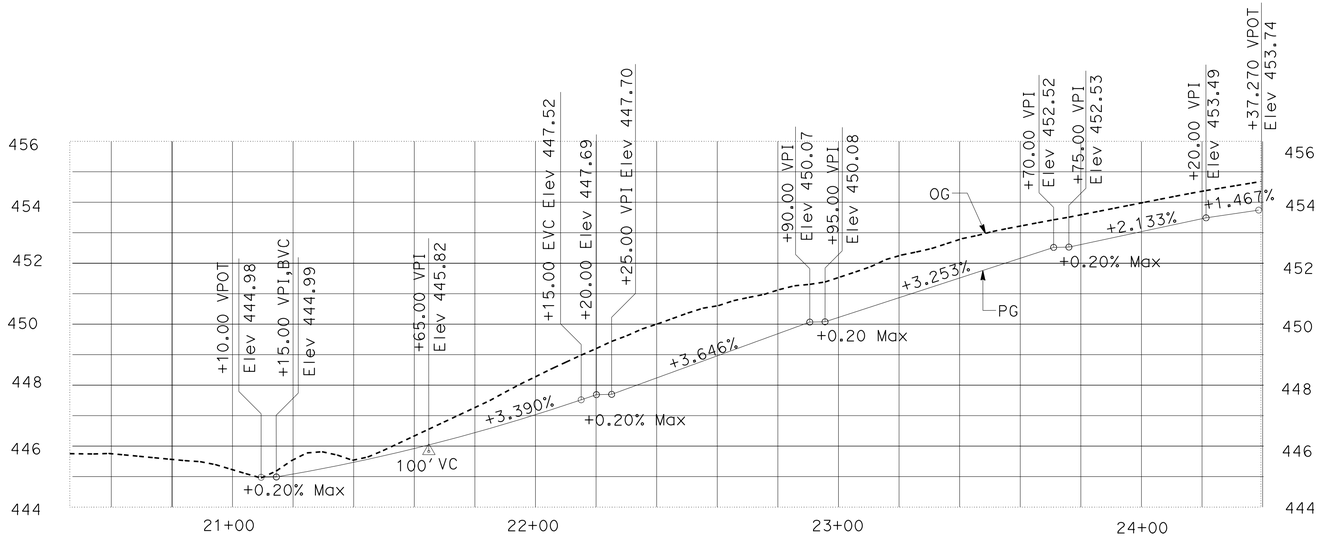

PROFILE

SCALE: Horiz 1" = 50'
Vert 1" = 5'

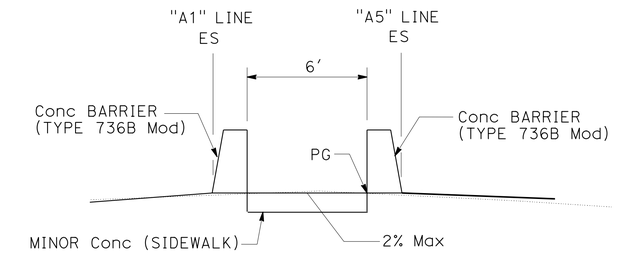

SECTION A-A

NO SCALE

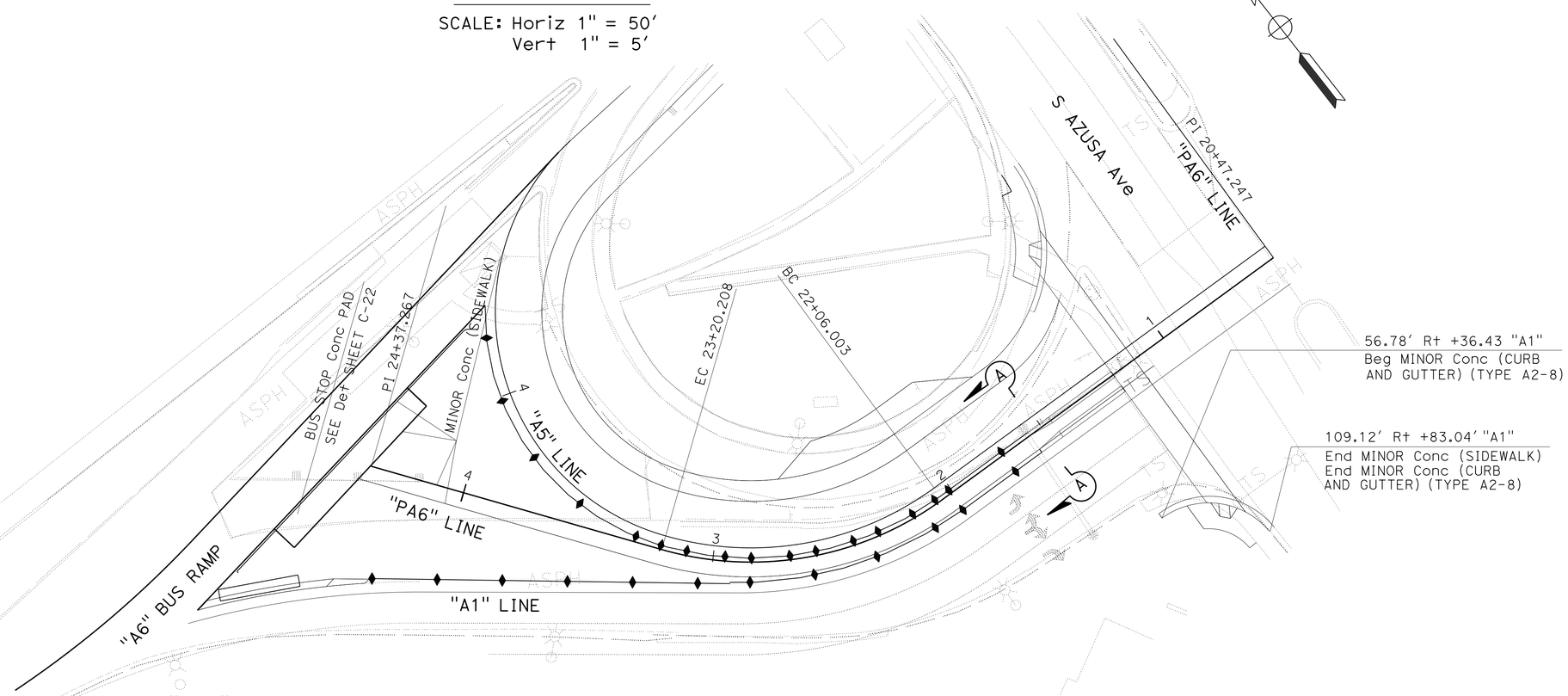

"A6" PEDESTRIAN PATHWAY AT EASTBOUND ROUTE 10 AND AZUSA Ave

PLAN
SCALE: 1" = 50'

CONSTRUCTION DETAIL

SCALE AS SHOWN

C-23

STATE OF CALIFORNIA - DEPARTMENT OF TRANSPORTATION
Caltrans® OFFICE OF DESIGN D

FUNCTIONAL SUPERVISOR: NADER GOBRAN
CALCULATED-DESIGNED BY: MAJA KORZENIOWSKA
CHECKED BY: MOHAMED GHANNOUM
REVISED BY
DATE REVISED

LAST REVISION 00-00-00
DATE PLOTTED => 12-JUN-2013
TIME PLOTTED => 17:32

Dist	COUNTY	ROUTE	POST MILES TOTAL PROJECT	SHEET No.	TOTAL SHEETS
07	LA	10	33.2/37.2	122	1475

REGISTERED CIVIL ENGINEER 4-17-12 DATE

6-10-13
PLANS APPROVAL DATE

REGISTERED PROFESSIONAL ENGINEER MOHAMED GHANNOUM No. 72051 Exp. 6/30/14 CIVIL STATE OF CALIFORNIA

THE STATE OF CALIFORNIA OR ITS OFFICERS OR AGENTS SHALL NOT BE RESPONSIBLE FOR THE ACCURACY OR COMPLETENESS OF SCANNED COPIES OF THIS PLAN SHEET.

CURVE DATA

No. (#)	R	Δ	T	L
1	55.51′	81°57′50"	48.22′	79.40′
2	40′	52°19′16"	19.65′	36.53′
3	80′	36°21′13"	26.27′	50.76′
4	7′	140°54′25"	19.72′	17.22′
5	59′	58°53′41"	33.31′	60.65′
6	47′	38°56′35"	16.62′	31.95′

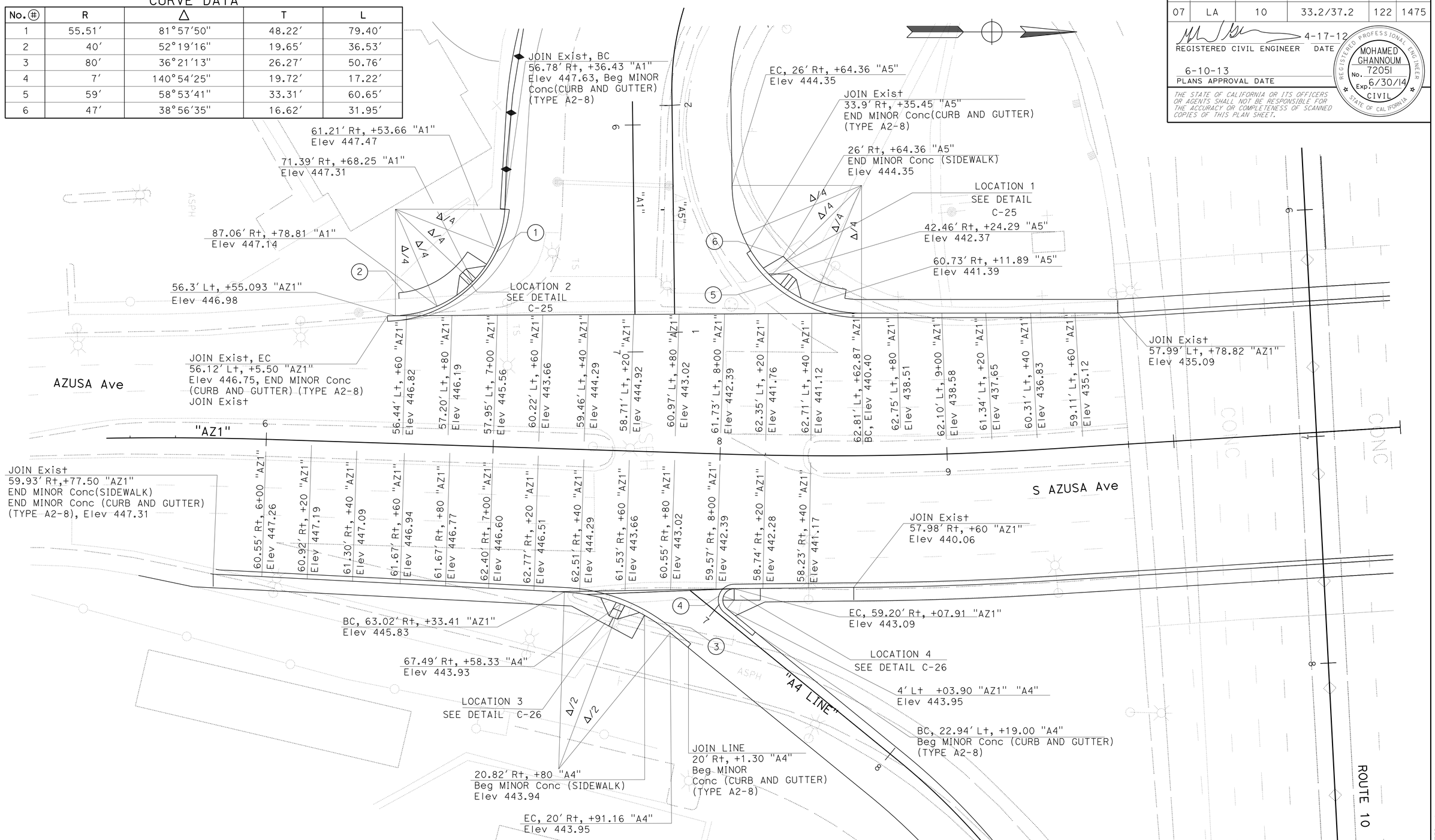

AZUSA AVENUE UNDERCROSSING (SOUTH SIDE OF ROUTE 10) LOCATION 1, 2, 3 AND 4

CONSTRUCTION DETAILS

SCALE: 1" = 20′

C-24

STATE OF CALIFORNIA - DEPARTMENT OF TRANSPORTATION
Caltrans® OFFICE OF DESIGN D

FUNCTIONAL SUPERVISOR: NADER GOBRAN
CALCULATED-DESIGNED BY: ANH VU
CHECKED BY: MOHAMED GHANNOUM
REVISED BY / DATE REVISED

LAST REVISION 00-00-00
DATE PLOTTED => 12-JUN-2013
TIME PLOTTED => 17:32

Dist	COUNTY	ROUTE	POST MILES TOTAL PROJECT	SHEET No.	TOTAL SHEETS
07	LA	10	33.2/37.2	123	1475

4-17-12
REGISTERED CIVIL ENGINEER DATE

6-10-13
PLANS APPROVAL DATE

REGISTERED PROFESSIONAL ENGINEER MOHAMED GHANNOUM No. 72051 Exp. 6/30/14 CIVIL STATE OF CALIFORNIA

THE STATE OF CALIFORNIA OR ITS OFFICERS OR AGENTS SHALL NOT BE RESPONSIBLE FOR THE ACCURACY OR COMPLETENESS OF SCANNED COPIES OF THIS PLAN SHEET.

CURVE DATA

No. ⊕	R	Δ	T	L
1	50.00′	82°52′33"	44.14′	72.32′
2	40.00′	52°19′16"	19.65′	36.53′
3	57.00′	89°20′02"	56.34′	88.87′
4	46.97′	38°56′35"	16.61′	31.93′

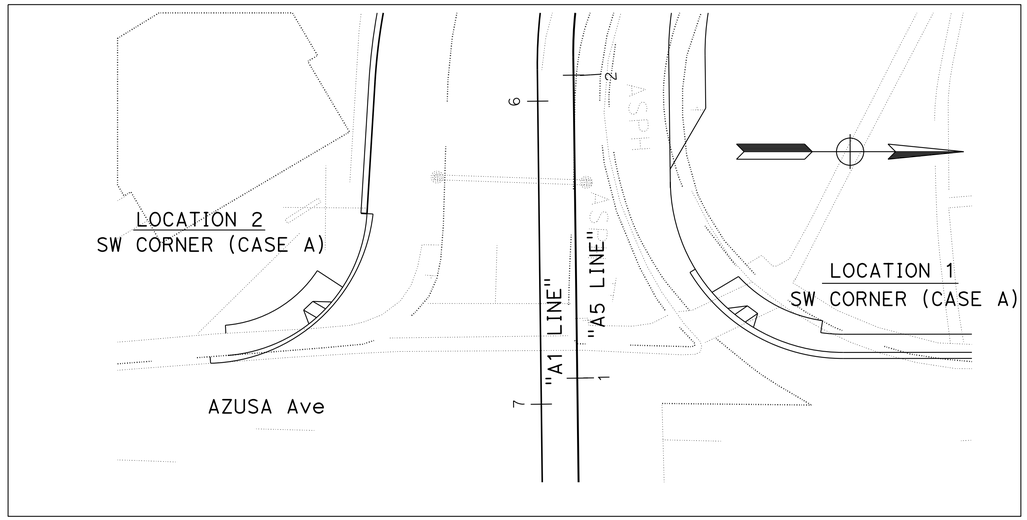

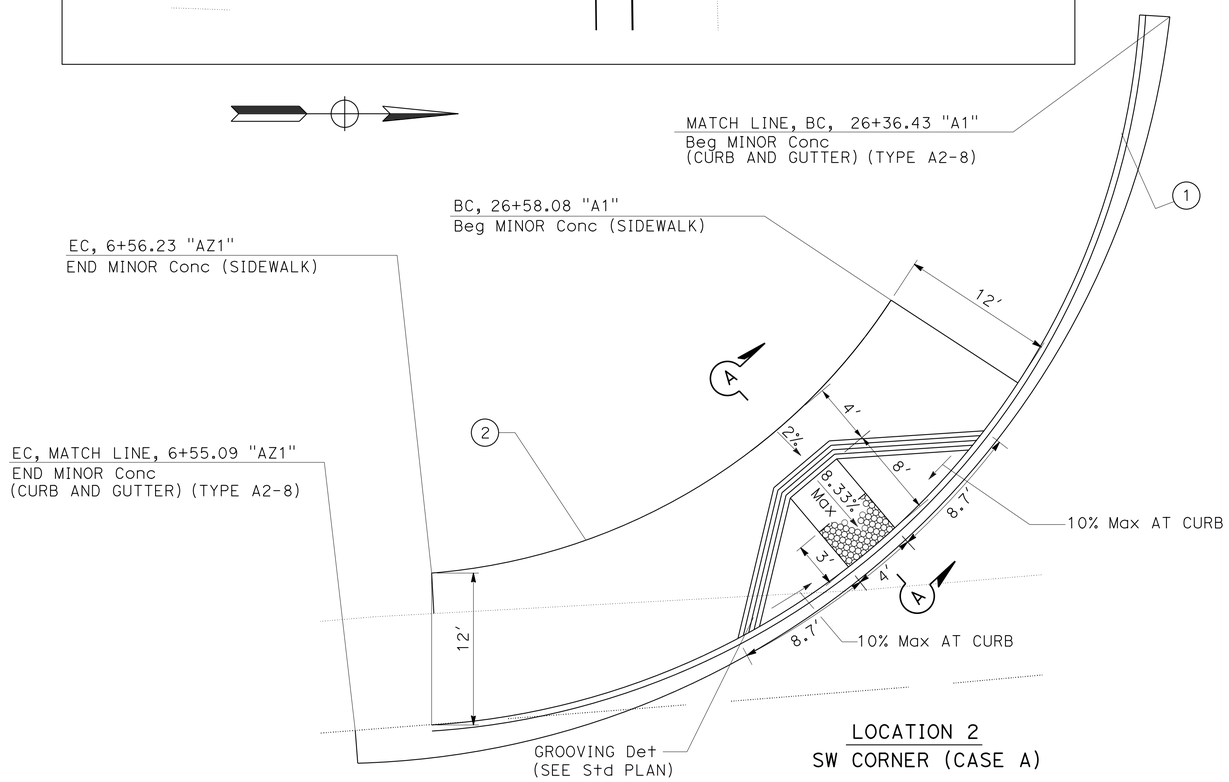

LOCATION 2
SW CORNER (CASE A)

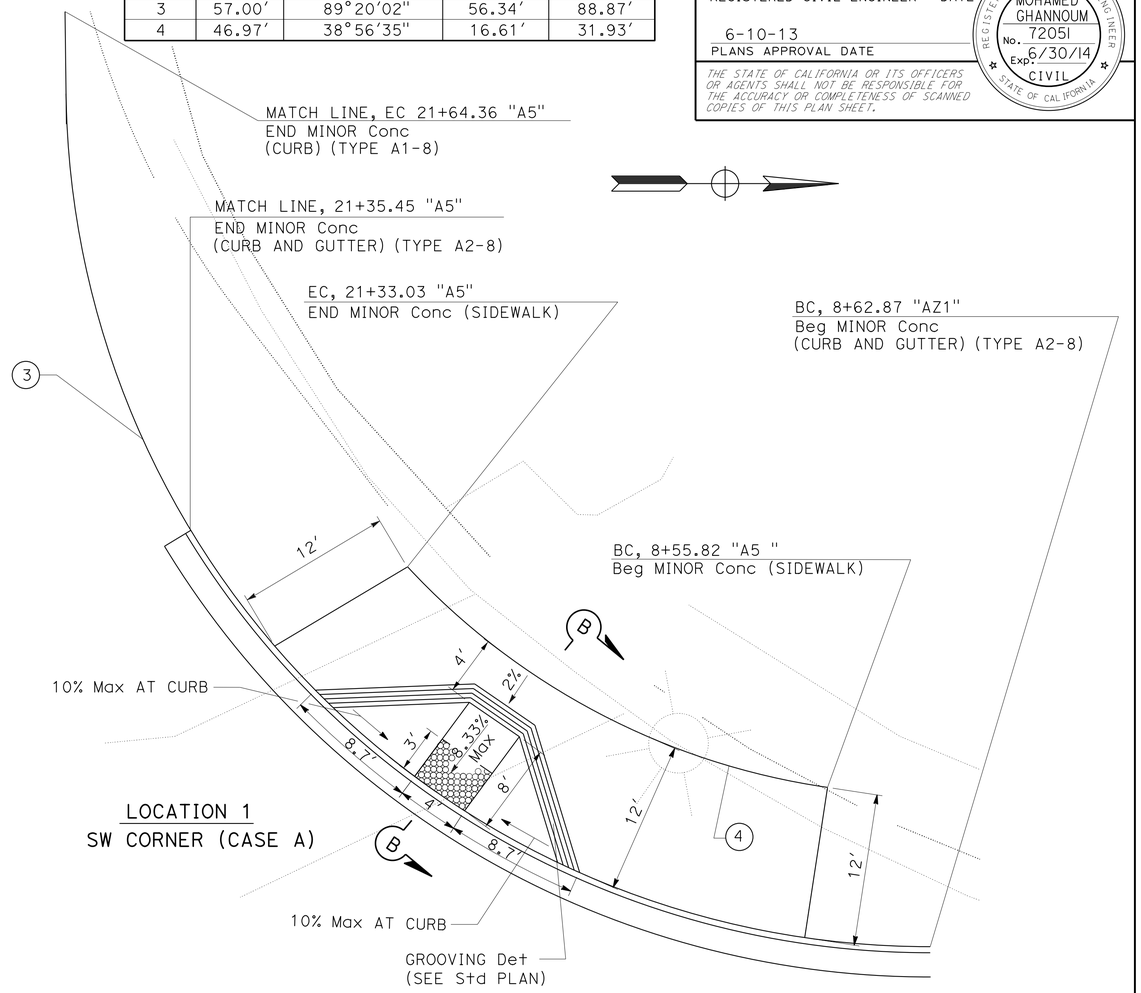

LOCATION 1
SW CORNER (CASE A)

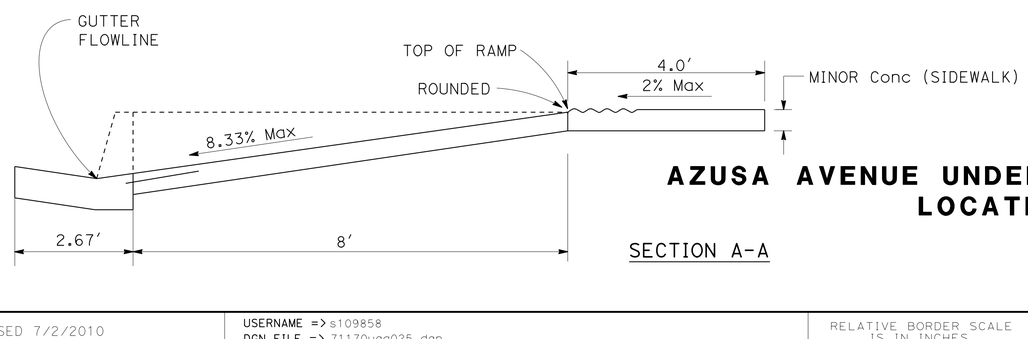

SECTION A-A

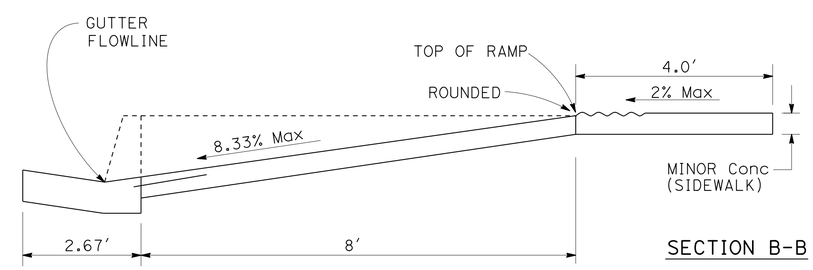

SECTION B-B

AZUSA AVENUE UNDERCROSSING (SW CORNER) LOCATIONS 1 & 2

CONSTRUCTION DETAILS

NO SCALE

C-25

STATE OF CALIFORNIA - DEPARTMENT OF TRANSPORTATION
Caltrans® OFFICE OF DESIGN D

FUNCTIONAL SUPERVISOR: NADER GOBRAN
CALCULATED-DESIGNED BY: ANH VU
CHECKED BY: MOHAMED GHANNOUM
REVISED BY
DATE REVISED

LAST REVISION 00-00-00
DATE PLOTTED => 12-JUN-2013
TIME PLOTTED => 17:32

Dist	COUNTY	ROUTE	POST MILES TOTAL PROJECT	SHEET No.	TOTAL SHEETS
07	LA	10	33.2/37.2	124	1475

REGISTERED CIVIL ENGINEER 4-17-12 DATE

6-10-13
PLANS APPROVAL DATE

REGISTERED PROFESSIONAL ENGINEER MOHAMED GHANNOUM No. 72051 Exp. 6/30/14 CIVIL STATE OF CALIFORNIA

THE STATE OF CALIFORNIA OR ITS OFFICERS OR AGENTS SHALL NOT BE RESPONSIBLE FOR THE ACCURACY OR COMPLETENESS OF SCANNED COPIES OF THIS PLAN SHEET.

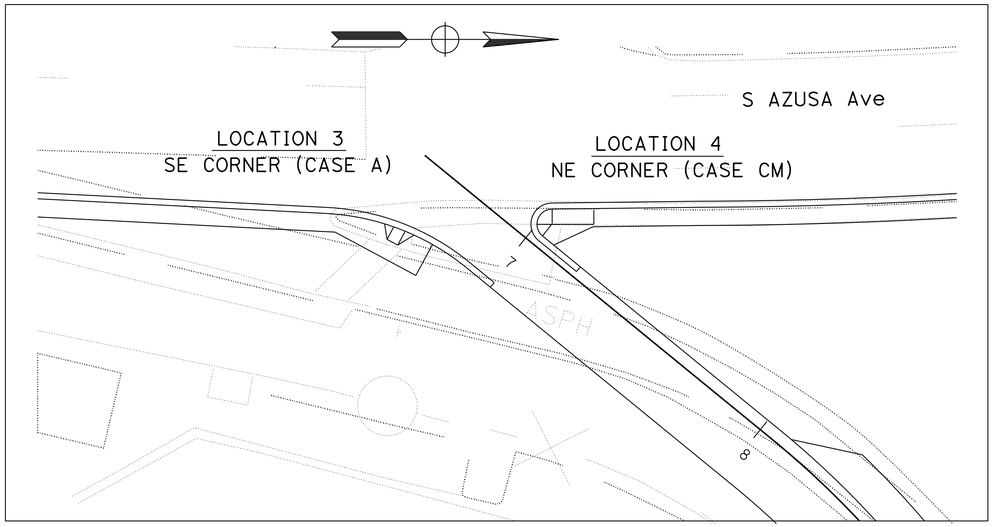

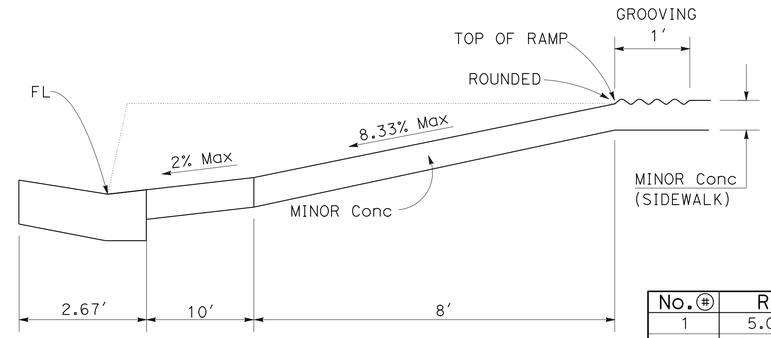

SECTION B-B

CURVE DATA

No. ⊕	R	Δ	T	L
1	5.00'	140°54'25"	14.08'	12.30'
2	80.00'	36°21'13"	26.27'	50.76'

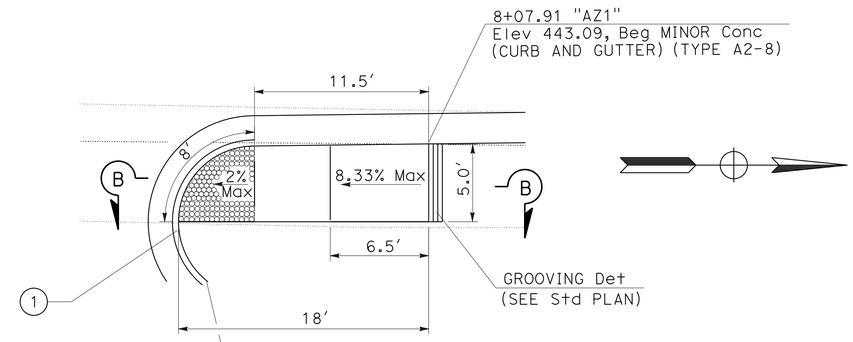

LOCATION 4
NE CORNER (CASE CM)

AZUSA AVENUE UNDERCROSSING (SE CORNER)
LOCATIONS 3 & 4

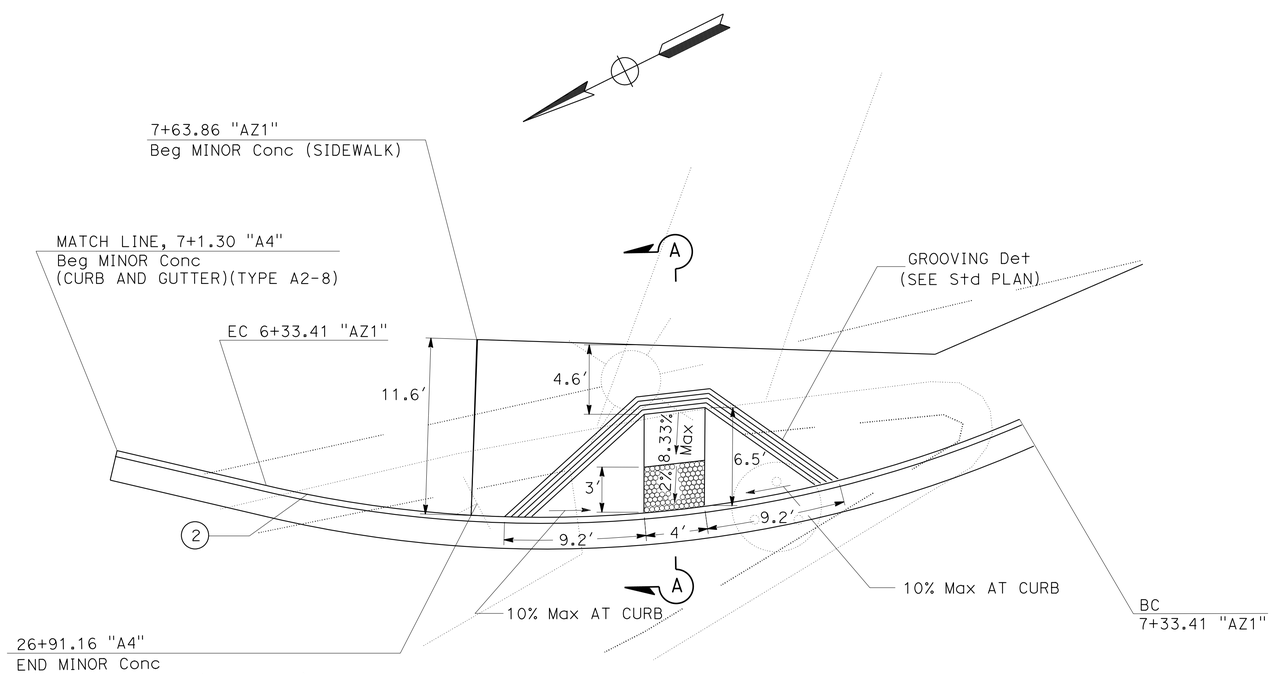

LOCATION 3
SE CORNER (CASE A)

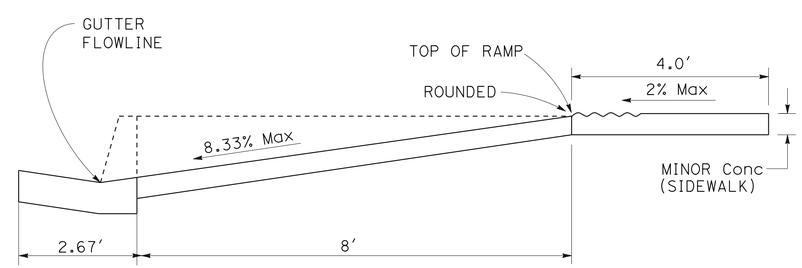

SECTION A-A

CONSTRUCTION DETAILS

NO SCALE

C-26

STATE OF CALIFORNIA - DEPARTMENT OF TRANSPORTATION
Caltrans® OFFICE OF DESIGN D

FUNCTIONAL SUPERVISOR: NADER GOBRAN
CALCULATED-DESIGNED BY: ANH VU
CHECKED BY: MOHAMED GHANNOUM
REVISED BY
DATE REVISED

LAST REVISION 00-00-00
DATE PLOTTED => 18-JUN-2013
TIME PLOTTED => 06:51

Dist	COUNTY	ROUTE	POST MILES TOTAL PROJECT	SHEET No.	TOTAL SHEETS
07	LA	10	33.2/37.2	125	1475

4-17-12
REGISTERED CIVIL ENGINEER DATE

6-10-13
PLANS APPROVAL DATE

REGISTERED PROFESSIONAL ENGINEER
MOHAMED GHANNOUM
No. 72051
Exp. 6/30/14
CIVIL
STATE OF CALIFORNIA

THE STATE OF CALIFORNIA OR ITS OFFICERS OR AGENTS SHALL NOT BE RESPONSIBLE FOR THE ACCURACY OR COMPLETENESS OF SCANNED COPIES OF THIS PLAN SHEET.

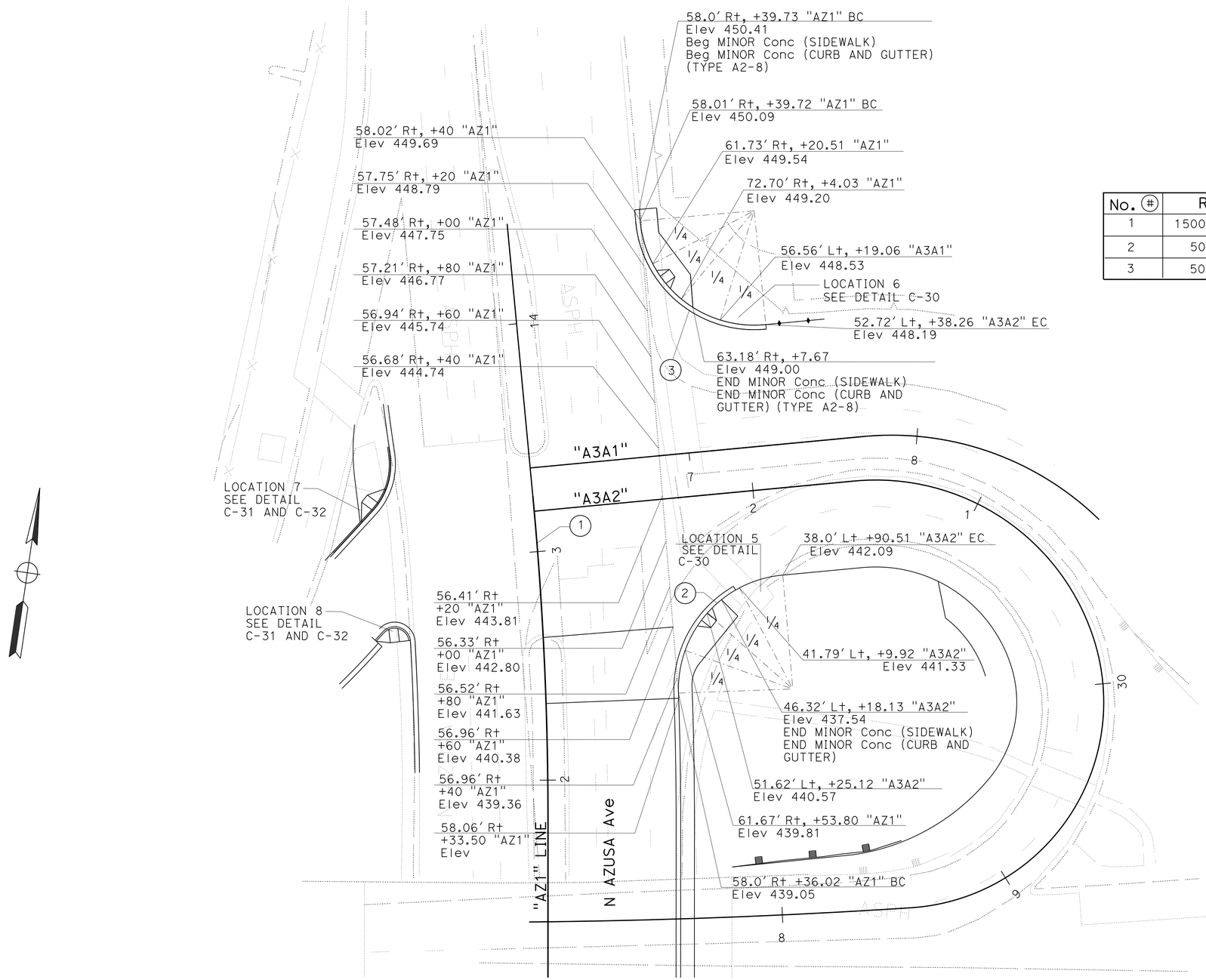

CURVE DATA

No. (#)	R	Δ	T	L
1	1500.00′	-5°24′12"	70.78′	141.46′
2	50.00′	86°58′43"	47.43′	75.90′
3	50.00′	114°35′30"	50.28′	78.82′

AZUSA AVENUE UNDERCROSSING (NORTH SIDE)

CONSTRUCTION DETAILS

SCALE: 1" = 50′

C-27

REVISED BY	DATE REVISED

CALCULATED-DESIGNED BY	CHECKED BY
BOJAN MISIC	MOHAMED GHANNOUM

FUNCTIONAL SUPERVISOR: NADER GOBRAN

STATE OF CALIFORNIA - DEPARTMENT OF TRANSPORTATION
Caltrans® OFFICE OF DESIGN D

LAST REVISION 00-00-00 | DATE PLOTTED => 12-JUN-2013 | TIME PLOTTED => 17:32

Dist	COUNTY	ROUTE	POST MILES TOTAL PROJECT	SHEET No.	TOTAL SHEETS
07	LA	10	33.2/37.2	126	1475

REGISTERED CIVIL ENGINEER 4-17-12 DATE

6-10-13
PLANS APPROVAL DATE

REGISTERED PROFESSIONAL ENGINEER MOHAMED GHANNOUM No. C72051 Exp 6/30/14 CIVIL STATE OF CALIFORNIA

THE STATE OF CALIFORNIA OR ITS OFFICERS OR AGENTS SHALL NOT BE RESPONSIBLE FOR THE ACCURACY OR COMPLETENESS OF SCANNED COPIES OF THIS PLAN SHEET.

CURVE DATA

No. ⊕	R	Δ	T	L
45	90.00′	102°49′48"	112.80′	161.52′
47	200.00′	9°12′22"	16.10′	32.14′
49	300.00′	-38°47′22"	105.62′	203.10′

NOTE:

FOR ACCURATE RIGHT OF WAY DATA, CONTACT RIGHT OF WAY ENGINEERING AT THE DISTRICT OFFICE.

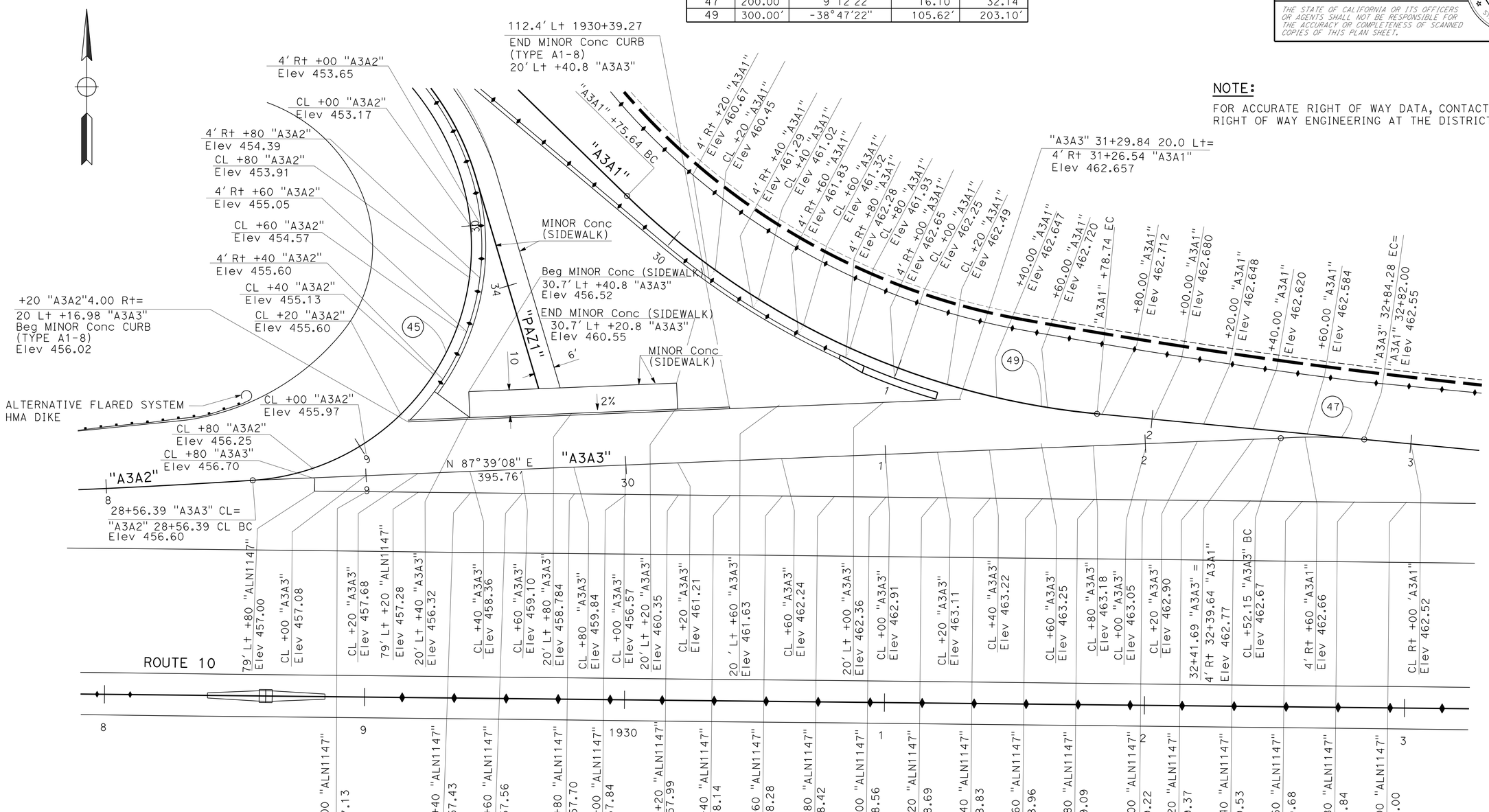

"A3A3" BUS RAMP
WESTBOUND ROUTE 10 AT AZUSA Ave

CONSTRUCTION DETAIL

SCALE: 1" = 20′

C-28

STATE OF CALIFORNIA - DEPARTMENT OF TRANSPORTATION
Caltrans® OFFICE OF DESIGN D

FUNCTIONAL SUPERVISOR: NADER GOBRAN
CALCULATED-DESIGNED BY: DARRYL MAYS
CHECKED BY: MOHAMED GHANNOUM
REVISED BY / DATE REVISED

LAST REVISION 00-00-00
DATE PLOTTED => 12-JUN-2013
TIME PLOTTED => 17:32

Dist	COUNTY	ROUTE	POST MILES TOTAL PROJECT	SHEET No.	TOTAL SHEETS
07	LA	10	33.2/37.2	127	1475

REGISTERED CIVIL ENGINEER 4/17/12 DATE

6-10-13
PLANS APPROVAL DATE

REGISTERED PROFESSIONAL ENGINEER MOHAMED GHANNOUM No. C72051 Exp. 6/30/14 CIVIL STATE OF CALIFORNIA

THE STATE OF CALIFORNIA OR ITS OFFICERS OR AGENTS SHALL NOT BE RESPONSIBLE FOR THE ACCURACY OR COMPLETENESS OF SCANNED COPIES OF THIS PLAN SHEET.

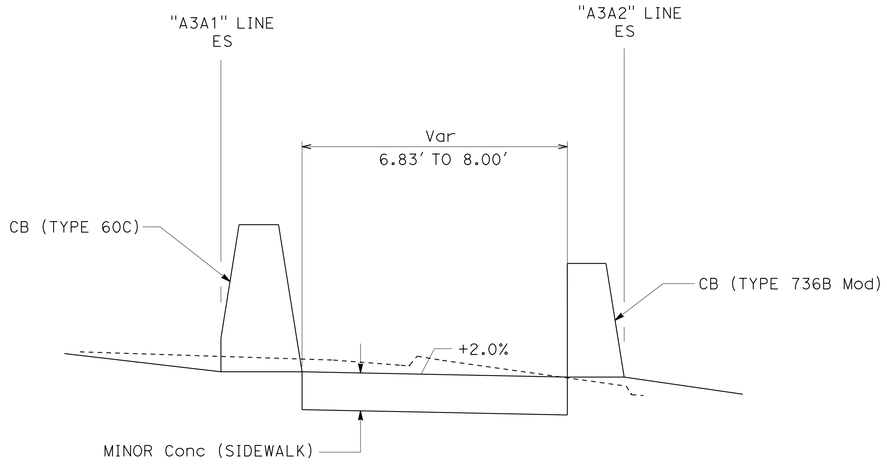

SECTION A-A
NO SCALE

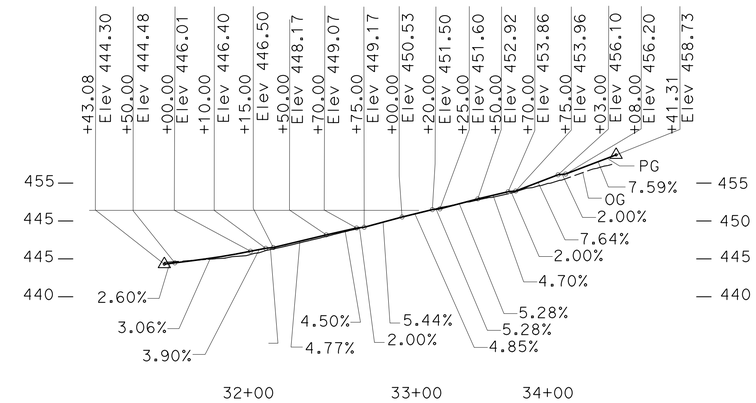

PROFILE "PAZ1"

SCALE: Horiz 1" = 50'
Vert 1" = 5'

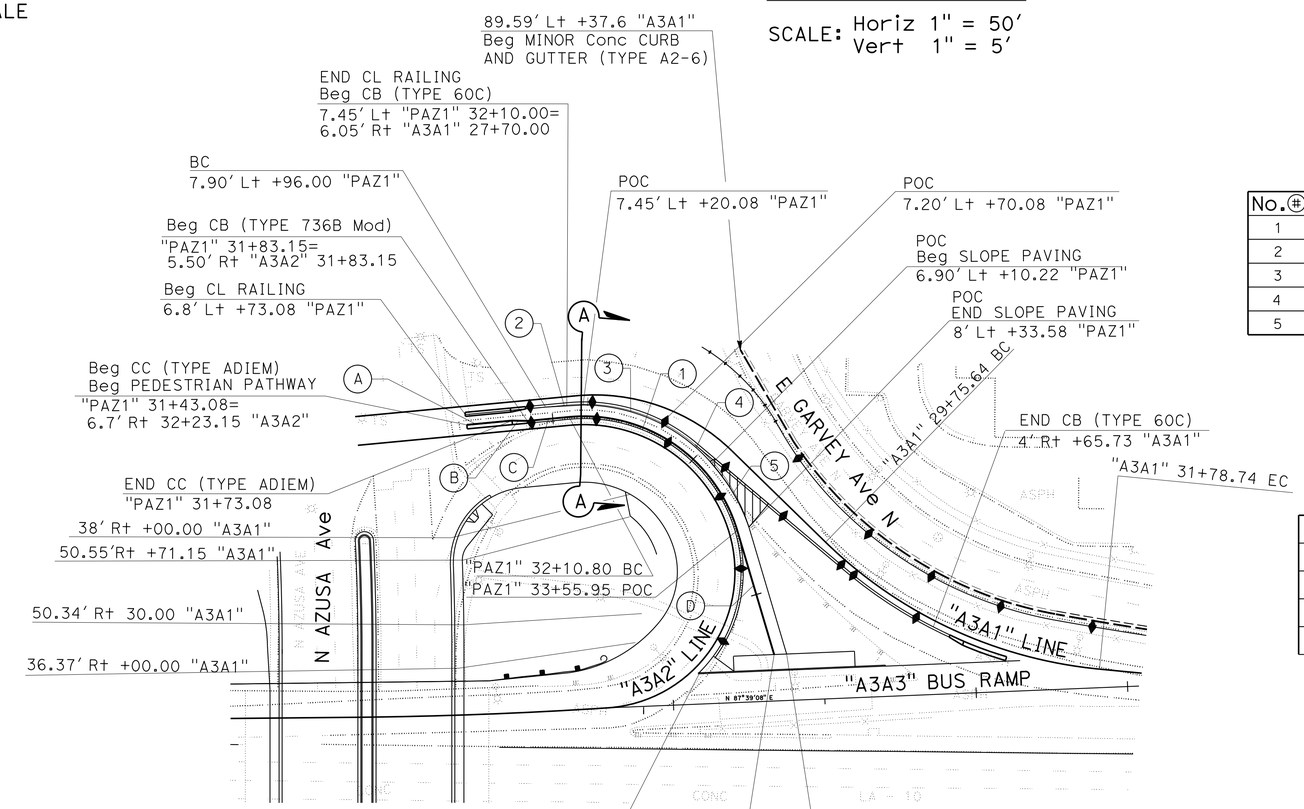

PLAN
SCALE: 1" = 50'

CURVE DATA

No.	R	Δ	T	L
1	105.50'	78°49'47"	86.70'	145.15'
2	5000.00'	0°17'01"	12.37'	24.74'
3	113.33'	26°57'15"	27.23'	53.46'
4	110.00'	22°18'31"	21.69'	42.83'
5	125.13'	22°24'23"	24.78'	48.93'

ALIGNMENT DATA

No.	BEARING	L
A	N 84°36'32" E	30.00'
B	S 88°44'06" E	10.07'
C	N 84°36'32" E	27.65'
D	S 16°33'41" E	85.36'

CONSTRUCTION DETAILS

"PAZ1" PEDESTRIAN PATHWAY AT AZUSA Ave

SCALE AS SHOWN

C-29

STATE OF CALIFORNIA - DEPARTMENT OF TRANSPORTATION
Caltrans OFFICE OF DESIGN D

FUNCTIONAL SUPERVISOR: NADER GOBRAN
CALCULATED-DESIGNED BY: BOJAN MISIC
CHECKED BY: MOHAMED GHANNOUM
REVISED BY / DATE REVISED

LAST REVISION 00-00-00 | DATE PLOTTED => 13-JUN-2013 | TIME PLOTTED => 09:19

Dist	COUNTY	ROUTE	POST MILES TOTAL PROJECT	SHEET No.	TOTAL SHEETS
07	LA	10	33.2/37.2	128	1475

4/17/12
REGISTERED CIVIL ENGINEER DATE

6-10-13
PLANS APPROVAL DATE

REGISTERED PROFESSIONAL ENGINEER MOHAMED GHANNOUM No. 72051 Exp. 6/30/14 CIVIL STATE OF CALIFORNIA

THE STATE OF CALIFORNIA OR ITS OFFICERS OR AGENTS SHALL NOT BE RESPONSIBLE FOR THE ACCURACY OR COMPLETENESS OF SCANNED COPIES OF THIS PLAN SHEET.

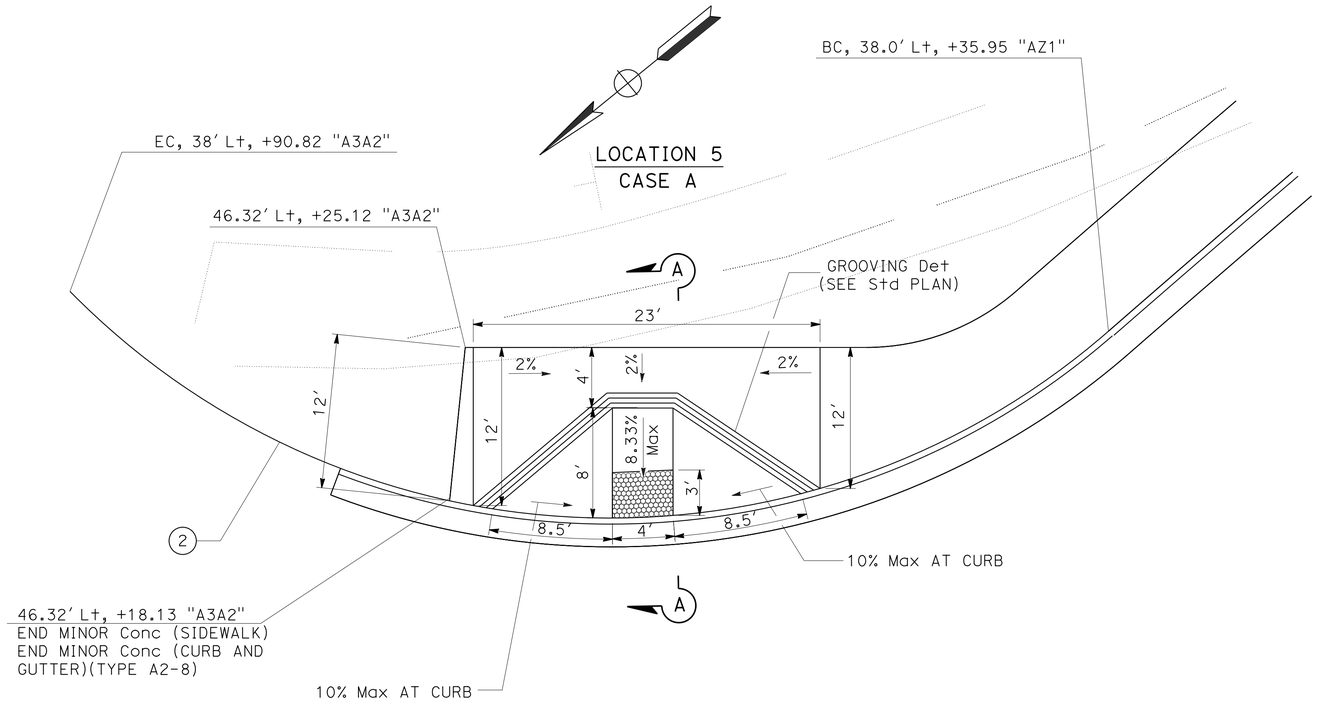

CURVE DATA

No. (#)	R	Δ	T	L
1	50′	90°49′53"	50.73′	79.27′
2	50′	86°37′20"	47.14′	75.59′

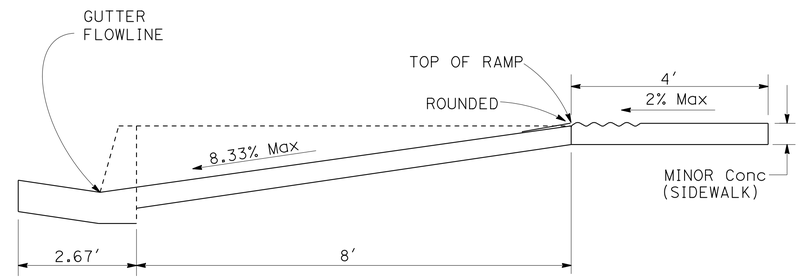

SECTION B-B

AZUSA AVENUE UNDERCROSSING NORTH SIDE OF ROUTE 10
LOCATIONS 5 & 6

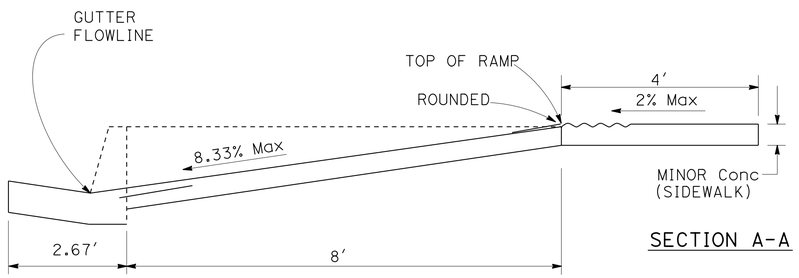

SECTION A-A

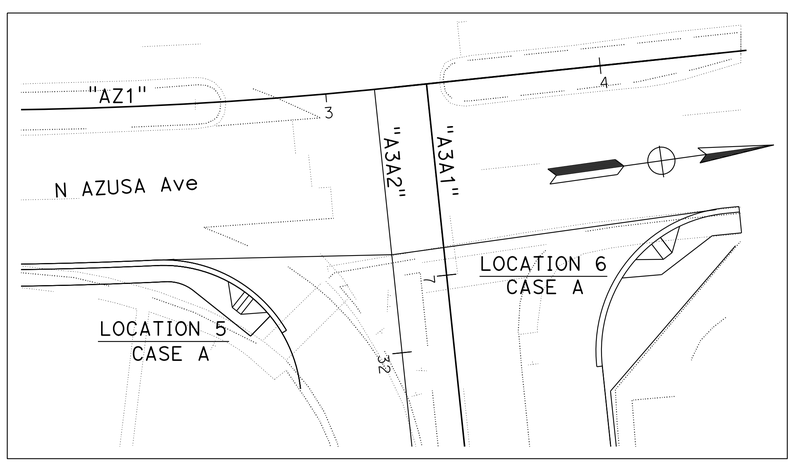

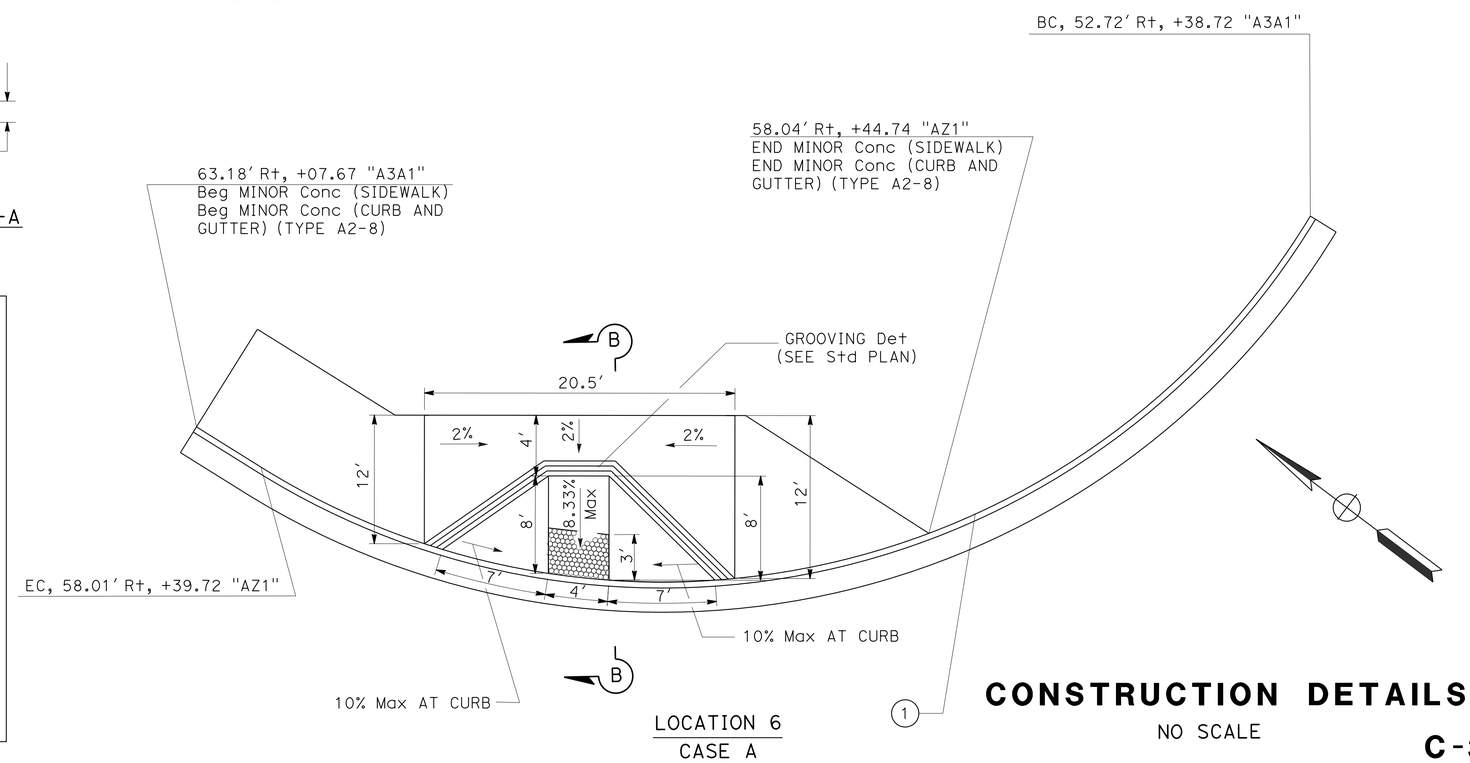

LOCATION 6
CASE A

CONSTRUCTION DETAILS
NO SCALE

C-30

STATE OF CALIFORNIA - DEPARTMENT OF TRANSPORTATION
Caltrans® OFFICE OF DESIGN D

FUNCTIONAL SUPERVISOR: NADER GOBRAN
CALCULATED-DESIGNED BY: ANH VU
CHECKED BY: MOHAMED GHANNOUM
REVISED BY
DATE REVISED

LAST REVISION 00-00-00
DATE PLOTTED => 12-JUN-2013
TIME PLOTTED => 17:32

Dist	COUNTY	ROUTE	POST MILES TOTAL PROJECT	SHEET No.	TOTAL SHEETS
07	LA	10	33.2/37.2	129	1475

REGISTERED CIVIL ENGINEER 4-17-12 DATE

6-10-13
PLANS APPROVAL DATE

REGISTERED PROFESSIONAL ENGINEER MOHAMED GHANNOUM No. C72051 Exp. 6/30/14 CIVIL STATE OF CALIFORNIA

THE STATE OF CALIFORNIA OR ITS OFFICERS OR AGENTS SHALL NOT BE RESPONSIBLE FOR THE ACCURACY OR COMPLETENESS OF SCANNED COPIES OF THIS PLAN SHEET.

CURVE DATA

No. #	R	Δ	T	L
1	1000′	8°32′00"	74.61′	148.94′
2	32′	50°47′54"	15.19′	28.37′
3	265′	12°30′49"	29.05′	57.88′
4	9′	134°19′29"	21.37′	21.10′
5	1443.38′	3°04′48"	38.80′	77.59′
6	1009.67′	6°20′14"	55.90′	111.68′
7	100′	10°56′02"	9.57′	19.08′
8	100′	12°31′60"	10.98′	21.87′
9	304′	30°40′10"	83.36′	162.73′
10	100′	14°02′10"	12.31′	24.50′
11	100′	14°02′10"	12.31′	24.50′

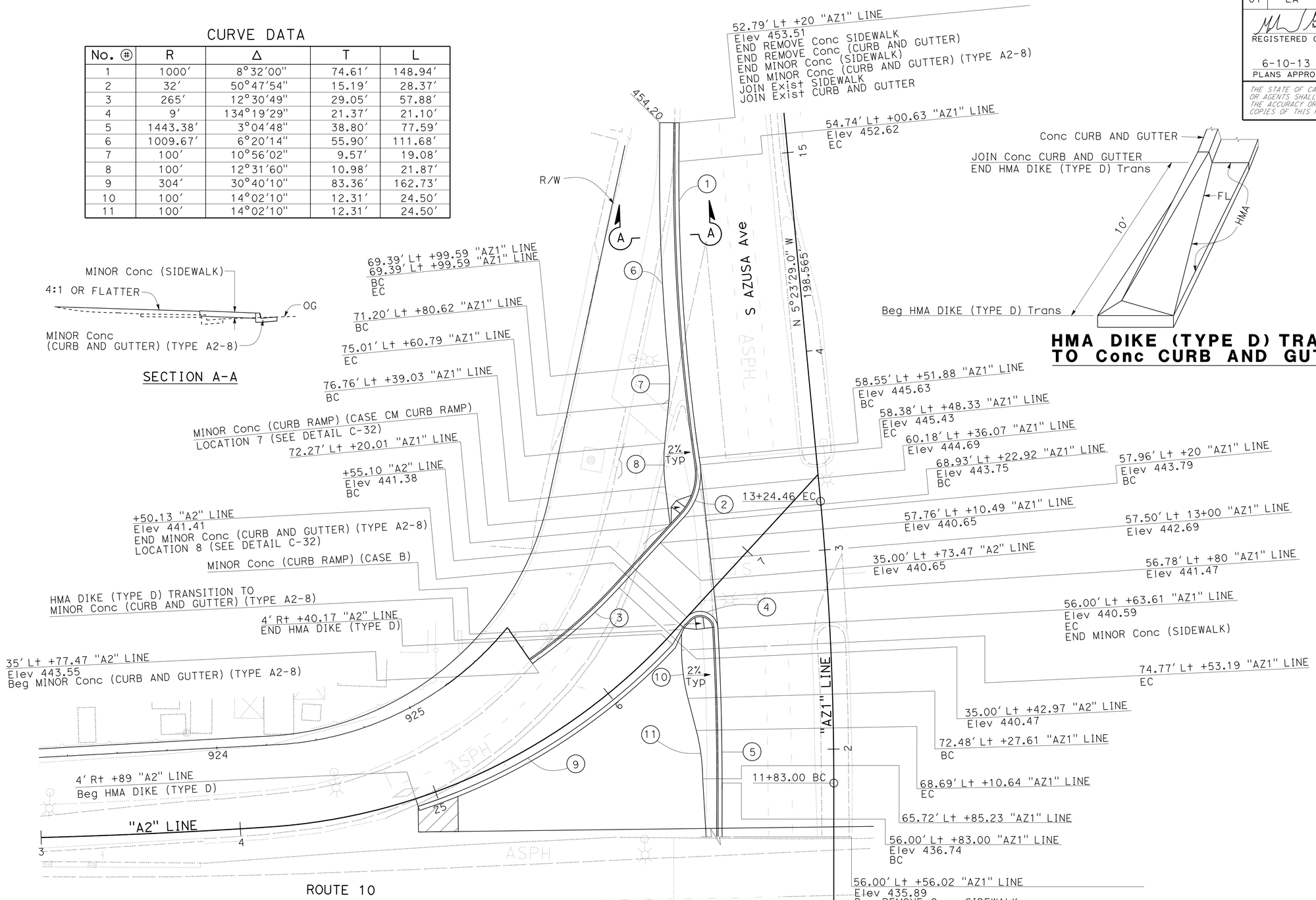

HMA DIKE (TYPE D) TRANSITION TO Conc CURB AND GUTTER

CONSTRUCTION DETAILS

NO SCALE

C-31

STATE OF CALIFORNIA - DEPARTMENT OF TRANSPORTATION
Caltrans OFFICE OF DESIGN D

FUNCTIONAL SUPERVISOR: NADER GOBRAN
CALCULATED-DESIGNED BY: MINH TU
CHECKED BY: JEROME ARABE
REVISED BY
DATE REVISED

LAST REVISION 00-00-00
DATE PLOTTED => 12-JUN-2013
TIME PLOTTED => 17:32

Dist	COUNTY	ROUTE	POST MILES TOTAL PROJECT	SHEET No.	TOTAL SHEETS
07	LA	10	33.2/37.2	130	1475

4-17-12
REGISTERED CIVIL ENGINEER DATE

6-10-13
PLANS APPROVAL DATE

REGISTERED PROFESSIONAL ENGINEER
MOHAMED GHANNOUM
No. C72051
Exp. 6/30/14
CIVIL
STATE OF CALIFORNIA

THE STATE OF CALIFORNIA OR ITS OFFICERS OR AGENTS SHALL NOT BE RESPONSIBLE FOR THE ACCURACY OR COMPLETENESS OF SCANNED COPIES OF THIS PLAN SHEET.

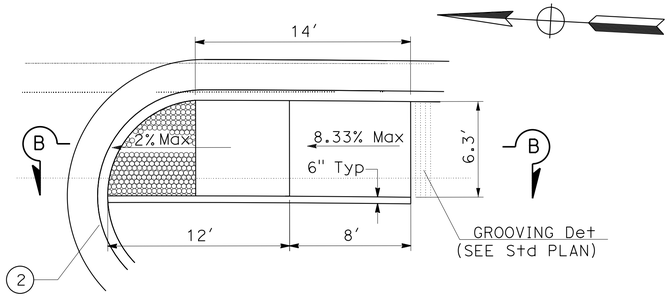

LOCATION 8
CASE CM

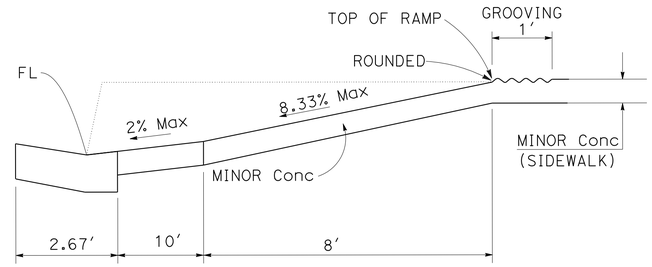

SECTION B-B

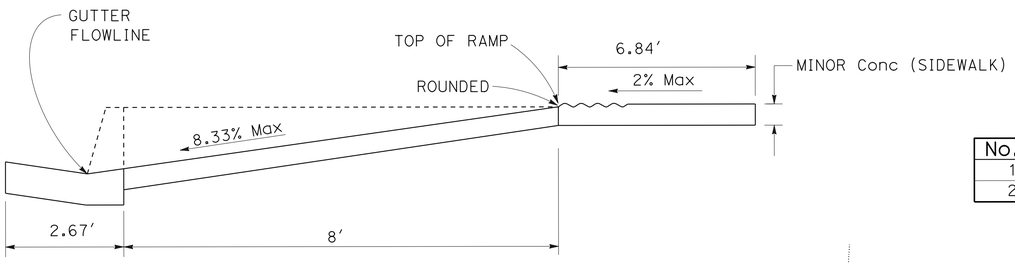

SECTION A-A

CURVE DATA

No. ⊕	R	Δ	T	L
1	30.00'	50°47'52"	14.24'	26.60'
2	7.00'	134°18'34"	16.62'	16.41'

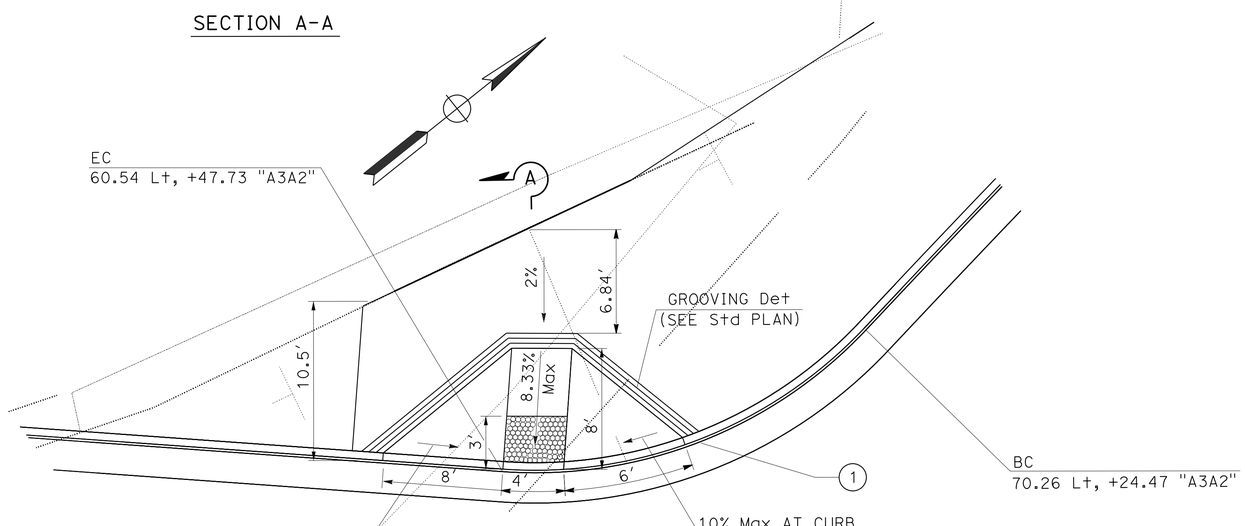

LOCATION 7
CASE A

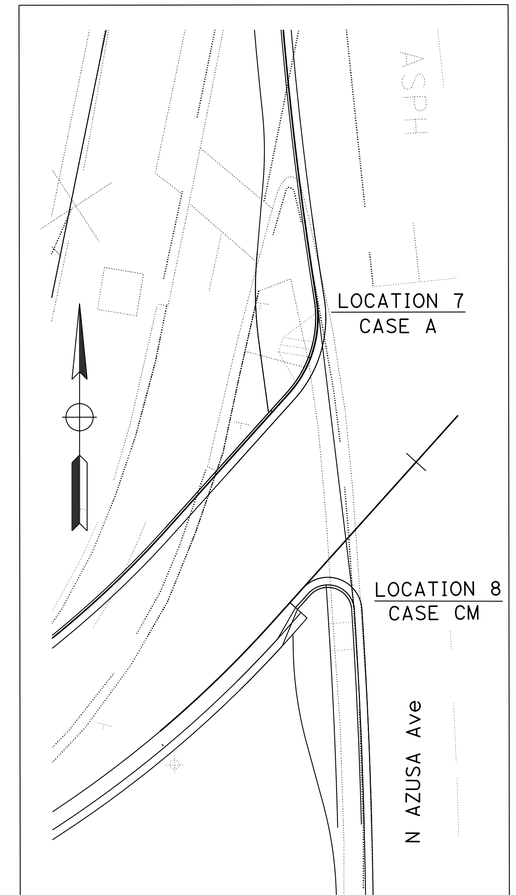

AZUSA AVENUE UNDERCROSSING (NORTH SIDE)
LOCATIONS 7 AND 8

CONSTRUCTION DETAILS

C-32

REVISED BY | DATE REVISED
ANH VU | MOHAMED GHANNOUM
CALCULATED-DESIGNED BY | CHECKED BY
FUNCTIONAL SUPERVISOR | NADER GOBRAN
STATE OF CALIFORNIA - DEPARTMENT OF TRANSPORTATION
Caltrans OFFICE OF DESIGN D

LAST REVISION 00-00-00 | DATE PLOTTED => 18-JUN-2013 | TIME PLOTTED => 06:52

Dist	COUNTY	ROUTE	POST MILES TOTAL PROJECT	SHEET No.	TOTAL SHEETS
07	LA	10	33.2/37.2	131	1475

LICENSED LANDSCAPE ARCHITECT

6-10-13
PLANS APPROVAL DATE

LICENSED LANDSCAPE ARCHITECT GENE KIMMEL No. 5704 Signature 10/31/12 Renewal Date Date STATE OF CALIFORNIA

THE STATE OF CALIFORNIA OR ITS OFFICERS OR AGENTS SHALL NOT BE RESPONSIBLE FOR THE ACCURACY OR COMPLETENESS OF SCANNED COPIES OF THIS PLAN SHEET.

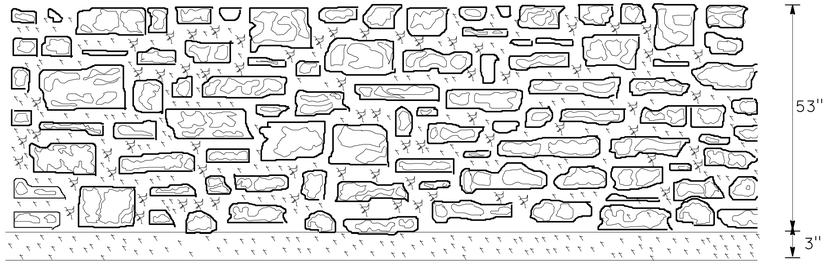

ELEVATION

ARCHITECTURAL SURFACE TREATMENT (RANCHO WALL PATTERN)

NOTES:
1. PATTERN REPEATS AS SHOWN.
2.GROUT JOINTS ARE VARIABLE RANDOM 1",1½" AND 2".
3.ROCK SIZES VARY SEE SCHEDULE.
4.PRIMARY BARRIER COLOR SHALL BE FEDERAL #20372

ROCK SCHEDULE

* ** ROCK SHAPE	DIMENSIONS (approximate)	
	12"X 8"	
	12"X 4.5"	
	15"X 3.5"	
	10"X 8"	
	12"X 8"	
	3"X 3"	
	12"X 8"	
	12"X 8"	
	5"X 3"	
	12"X 8"	

* NOT ALL WALL PATTERN ROCK SHAPES SHOWN.
** ROCK SHAPE SHOWN TO ESTABLISH GENERAL WALL CHARACTER.

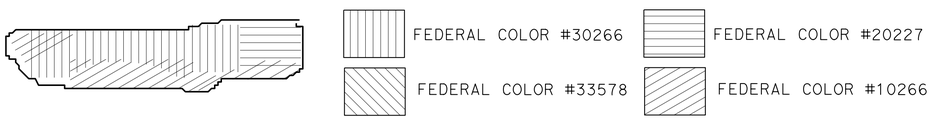

NOTES:

1.ROCK SURFACE SHALL BE STAINED (COLOR) TO GIVE A NATURAL APPEARANCE.
2.STAINS (COLOR) MAY OVERLAP TO DEVELOP A MORE NATURAL WEATHER APPEARANCE.

ROCK

ARCHITECTURAL SURFACE TREATMENT (COLOR STAIN)

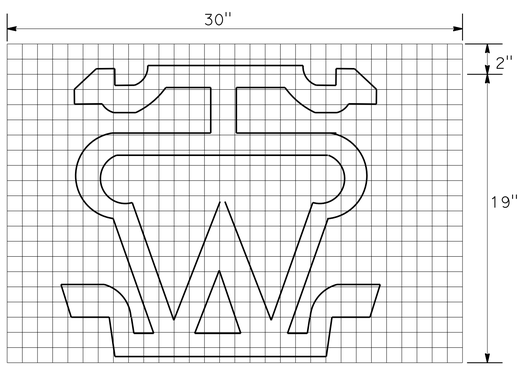

STENCIL PATTERN

ARCHITECTURAL SURFACE TREATMENT (CATTLE BRAND PATTERN)

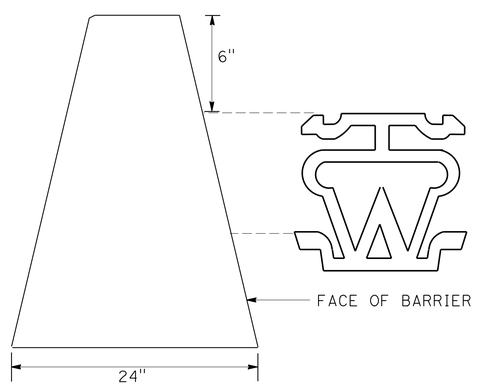

TYPICAL SECTION

STENCIL PLACEMENT

NOTES:
1.STENCIL PATTERN TO BE PLACED @ 415' O/C BOTH SIDES OF BARRIER.
2.PATTERN SHALL BE SAND BLASTED AND STAINED.
3.STENCIL STAINING SHALL BE FEDERAL COLOR 30155.

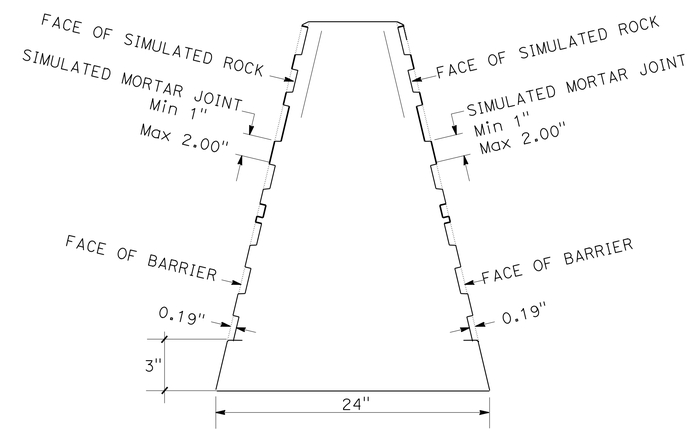

TYPICAL SECTION

ROCK FACE DIFFERENTIAL

CONCRETE BARRIER TYPE 60G & 60GA ARCHITECTURAL SURFACE TREATMENT

NO SCALE

C-33

REVISED BY | DATE REVISED
RICH KESTER | JENNIFER TAIRA
CALCULATED-DESIGNED BY | CHECKED BY
SENIOR LANDSCAPE ARCHITECT | JENNIFER TAIRA
STATE OF CALIFORNIA - DEPARTMENT OF TRANSPORTATION
Caltrans® LANDSCAPE ARCHITECTURE

LAST REVISION 00-00-00 | DATE PLOTTED => 12-JUN-2013 | TIME PLOTTED => 17:32

Dist	COUNTY	ROUTE	POST MILES TOTAL PROJECT	SHEET No.	TOTAL SHEETS
07	LA	10	33.2/37.2	132	1475

LICENSED LANDSCAPE ARCHITECT

6-10-13
PLANS APPROVAL DATE

LICENSED LANDSCAPE ARCHITECT
GENE KIMMEL
No. 5104
Signature
10/31/12
Renewal Date
Date
STATE OF CALIFORNIA

THE STATE OF CALIFORNIA OR ITS OFFICERS OR AGENTS SHALL NOT BE RESPONSIBLE FOR THE ACCURACY OR COMPLETENESS OF SCANNED COPIES OF THIS PLAN SHEET.

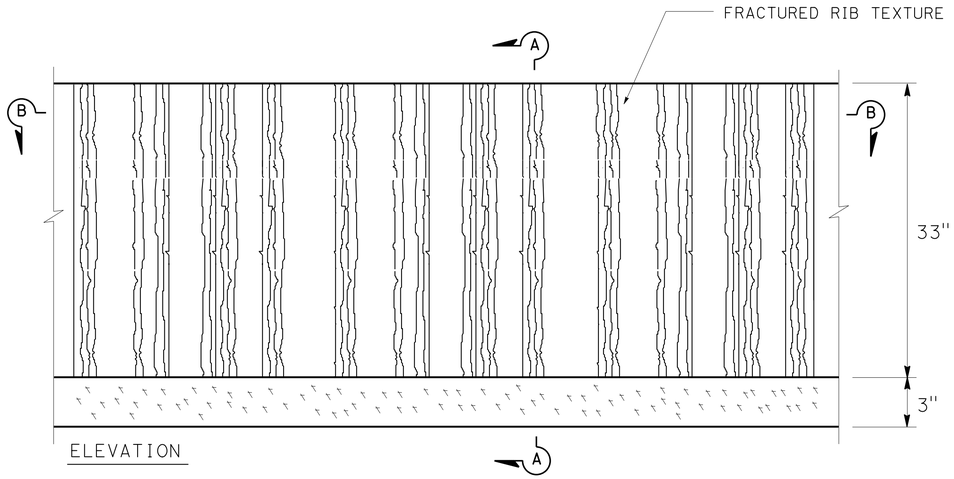

CONCRETE BARRIER 736B MODIFY

ARCHITECTURAL SURFACE TREATMENT
(FRACTURED RIB PATTERN)

NOTES:

1. PATTERN REPEATS AS SHOWN.

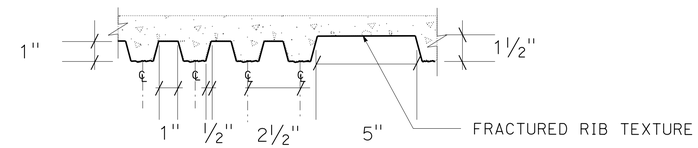

SECTION B-B

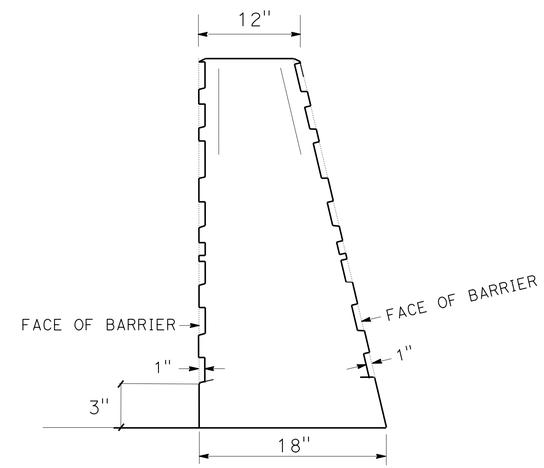

SECTION A-A

CONCRETE BARRIER (TYPE 736B MODIFIED) PEDESTRIAN WALKWAYS TO BUS STOPS ARCHITECTURAL SURFACE TREATMENT

NO SCALE

C-34

REVISED BY | DATE REVISED
RICH KESTER | JENNIFER TAIRA
CALCULATED-DESIGNED BY | CHECKED BY
SENIOR LANDSCAPE ARCHITECT | JENNIFER TAIRA
STATE OF CALIFORNIA - DEPARTMENT OF TRANSPORTATION
Caltrans® LANDSCAPE ARCHITECTURE

LAST REVISION 00-00-00 | DATE PLOTTED => 12-JUN-2013 | TIME PLOTTED => 17:32

Dist	COUNTY	ROUTE	POST MILES TOTAL PROJECT	SHEET No.	TOTAL SHEETS
07	LA	10	33.2/37.2	133	1475

REGISTERED CIVIL ENGINEER 4/17/12 DATE

6-10-13
PLANS APPROVAL DATE

REGISTERED PROFESSIONAL ENGINEER MOHAMED GHANNOUM No. 72051 Exp. 6/30/14 CIVIL STATE OF CALIFORNIA

THE STATE OF CALIFORNIA OR ITS OFFICERS OR AGENTS SHALL NOT BE RESPONSIBLE FOR THE ACCURACY OR COMPLETENESS OF SCANNED COPIES OF THIS PLAN SHEET.

NOTE:

1. FOR DETAILS NOT SHOWN SEE "TYPICAL GUTTER DETAIL" IN STANDARD PLAN B3-9.

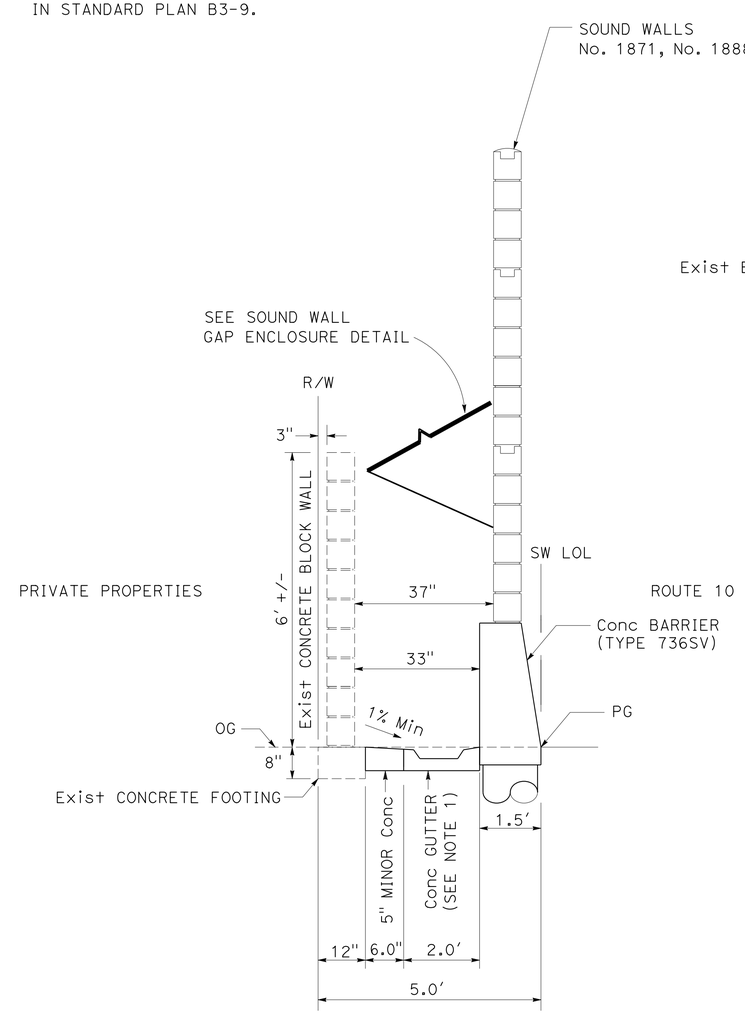

TYPICAL SECTION 1

"SW 1871 LOL"
FROM Sta 884+57.47 TO 886+18.01

"SW 1888 LOL"
FROM Sta 1887+70 TO 1922+57.00

"SW 1899 LOL"
FROM Sta 904+60.85 TO 924+98.00

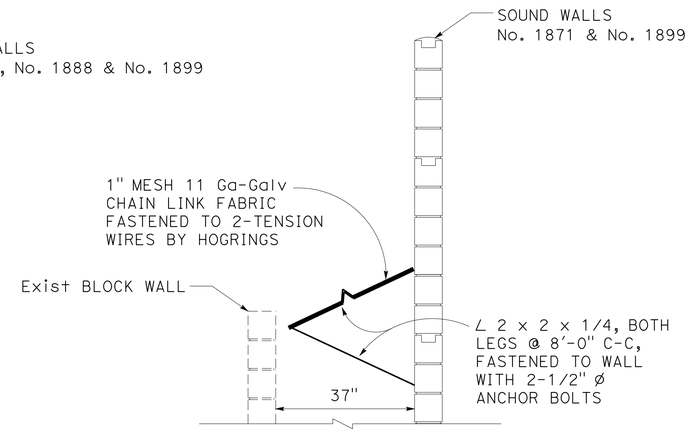

SOUND WALL GAP ENCLOSURE DETAIL

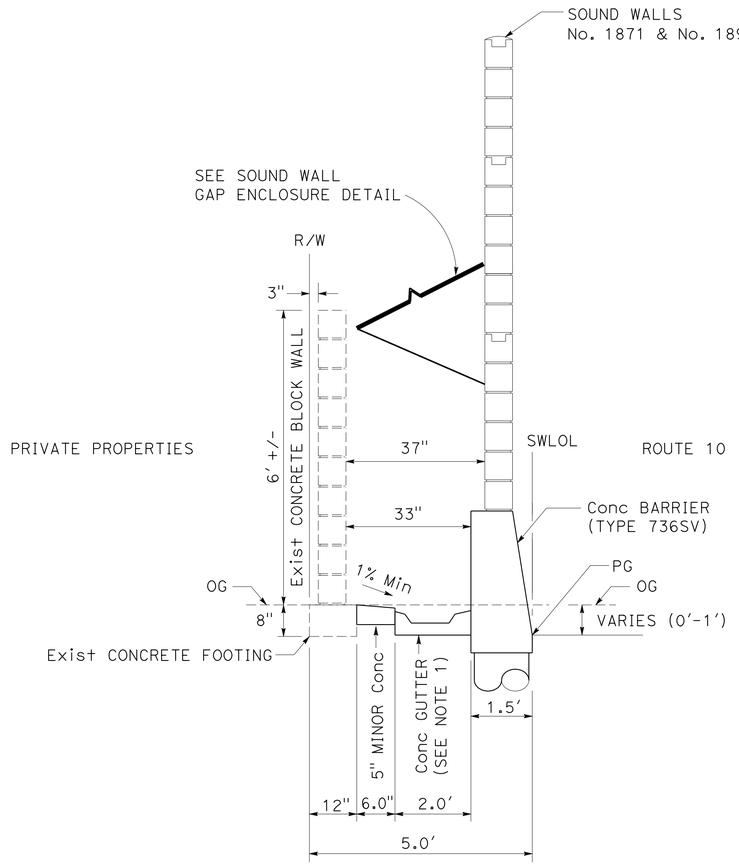

TYPICAL SECTION 2

"SW 1871 LOL"
FROM Sta 886+18.01 TO 890+15.17

CONSTRUCTION DETAIL

NO SCALE

C-35

STATE OF CALIFORNIA - DEPARTMENT OF TRANSPORTATION
Caltrans OFFICE OF DESIGN D

FUNCTIONAL SUPERVISOR: NADAR GOBRAN
CALCULATED-DESIGNED BY: NEIL LIANG
CHECKED BY: MOHAMED GHANNOUM
REVISED BY
DATE REVISED

LAST REVISION 00-00-00
DATE PLOTTED => 12-JUN-2013
TIME PLOTTED => 17:32

Dist	COUNTY	ROUTE	POST MILES TOTAL PROJECT	SHEET No.	TOTAL SHEETS
07	LA	10	33.2/37.2	134	1475

REGISTERED CIVIL ENGINEER 4-17-12 DATE

6-10-13
PLANS APPROVAL DATE

REGISTERED PROFESSIONAL ENGINEER MOHAMED GHANNOUM No. C72051 Exp. 6/30/14 CIVIL STATE OF CALIFORNIA

THE STATE OF CALIFORNIA OR ITS OFFICERS OR AGENTS SHALL NOT BE RESPONSIBLE FOR THE ACCURACY OR COMPLETENESS OF SCANNED COPIES OF THIS PLAN SHEET.

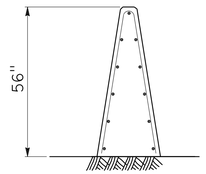

SECTION A-A

CONCRETE BARRIER TYPE 60G

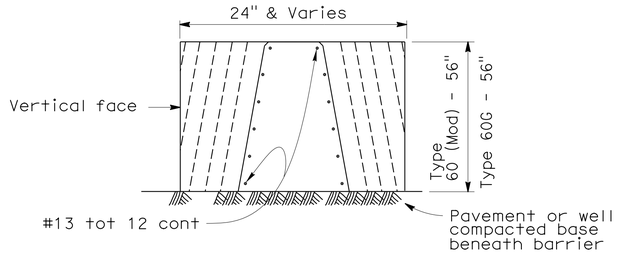

SECTION B-B

CONCRETE BARRIER TYPE 60 (Mod)

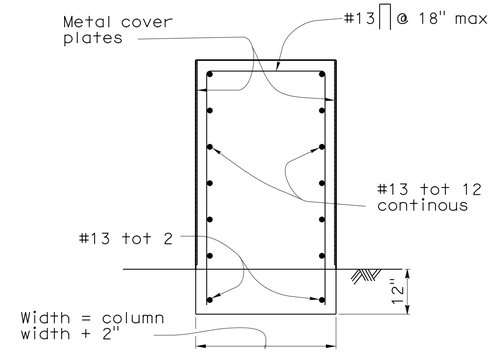

SECTION C-C

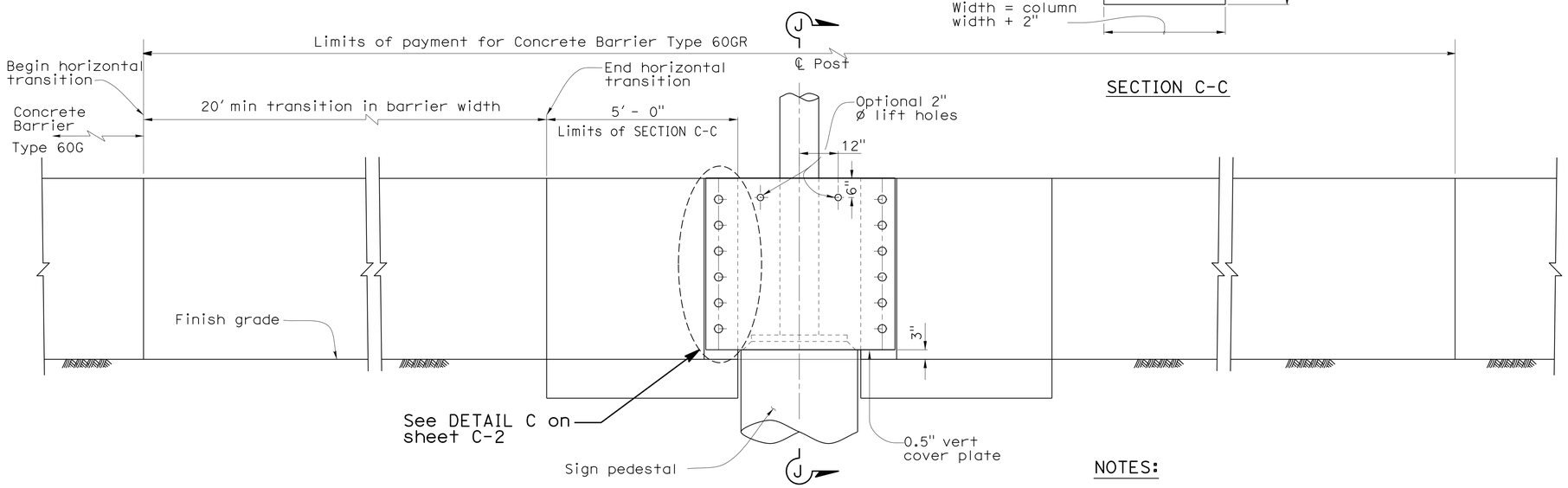

ELEVATION

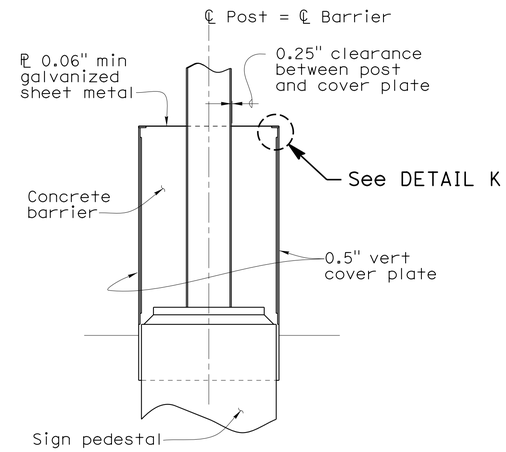

SECTION J-J

NOTES:

1. 0.6" ø sleeve nut anchorage, (see DETAIL E) or resin capsule anchorage, (see ALTERNATIVE ANCHORAGE).
2. All metal plates to be galvanized after fabrication. Hardware to be galvanized or non-corrosive.
3. Barrier on both sides of sign post similar.
4. For Details not shown see STANDARD PLANS and sheet C-2.

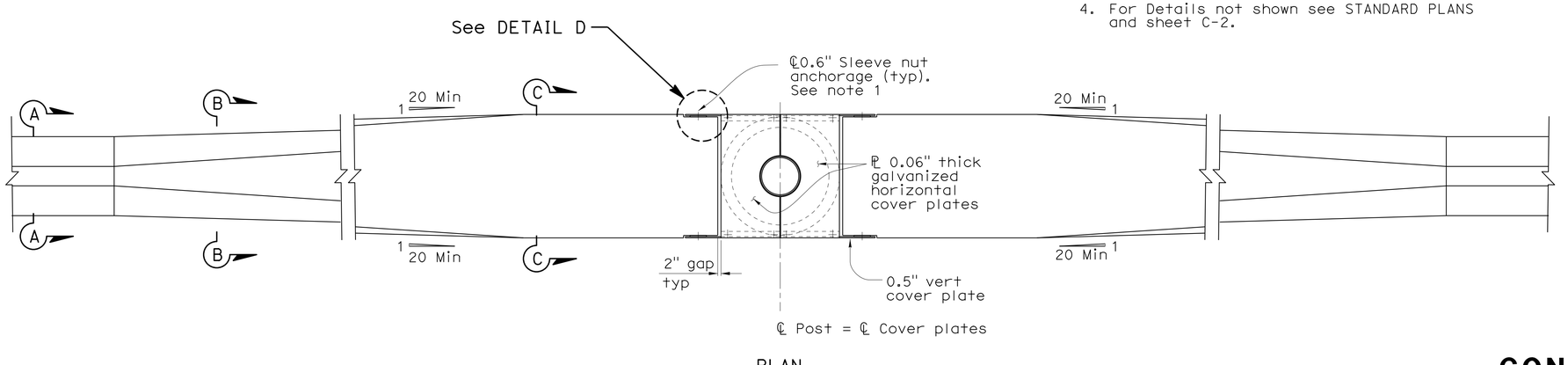

PLAN

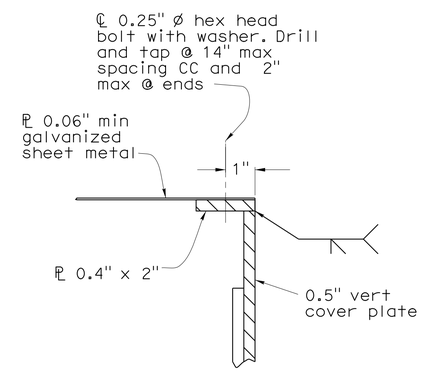

DETAIL K

CONSTRUCTION DETAILS
CONCRETE BARRIER TYPE 60 (Mod)
TRANSITION AT SIGN POST

NO SCALE

C-36

STATE OF CALIFORNIA - DEPARTMENT OF TRANSPORTATION
Caltrans® OFFICE OF DESIGN D

FUNCTIONAL SUPERVISOR: NADER GOBRAN
CALCULATED-DESIGNED BY: JEROME G. ARABE
CHECKED BY: MOHAMED GHANNOUM
REVISED BY / DATE REVISED

LAST REVISION 00-00-00 | DATE PLOTTED => 12-JUN-2013 | TIME PLOTTED => 17:32

Dist	COUNTY	ROUTE	POST MILES TOTAL PROJECT	SHEET No.	TOTAL SHEETS
07	LA	10	33.2/37.2	135	1475

REGISTERED CIVIL ENGINEER 4-17-12 DATE

6-10-13
PLANS APPROVAL DATE

REGISTERED PROFESSIONAL ENGINEER MOHAMED GHANNOUM No. 72051 Exp. 6/30/14 CIVIL STATE OF CALIFORNIA

THE STATE OF CALIFORNIA OR ITS OFFICERS OR AGENTS SHALL NOT BE RESPONSIBLE FOR THE ACCURACY OR COMPLETENESS OF SCANNED COPIES OF THIS PLAN SHEET.

NOTES:

1. THESE DETAILS ARE TO BE COMBINED WITH "CONCRETE BARRIER TYPE 60GR" SHEET No. 1. DETAILS NOT INDICATED ARE SIMILAR TO THE DETAILS SHOWN ELSEWHERE ON SAID SHEET.
2. METAL PLATE DETAILS AT COLUMNS SHOWN ON CONCRETE BARRIER TYPE 60GR SHEET No. 1.

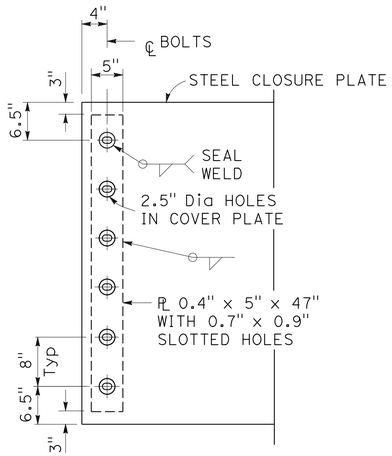

DETAIL C

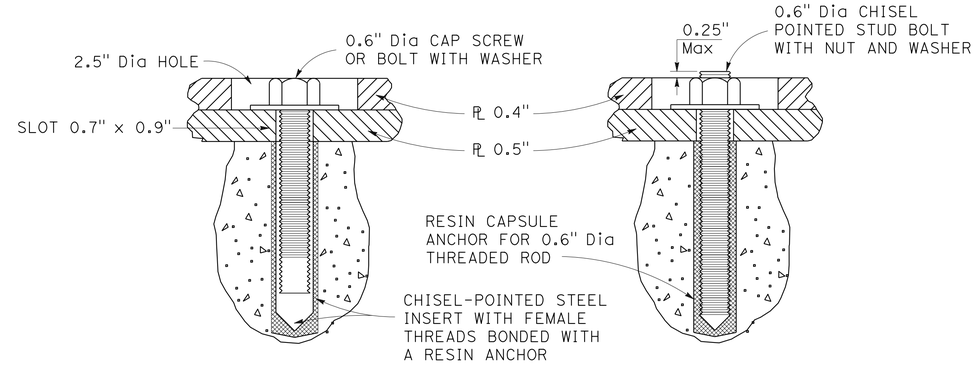

DETAIL A **DETAIL B**

ALTERNATIVE ANCHORAGE

NOTES:
1) RESIN CAPSULE ANCHORAGE IS SUBJECT TO APPROVAL OF THE ENGINEER. INSTALLATION PROCEDURES MUST COMPLY WITH MANUFACTURER'S INSTRUCTIONS.
2) DETAIL B SIMILAR TO DETAIL A EXCEPT FOR ANCHORAGE DEVICES.

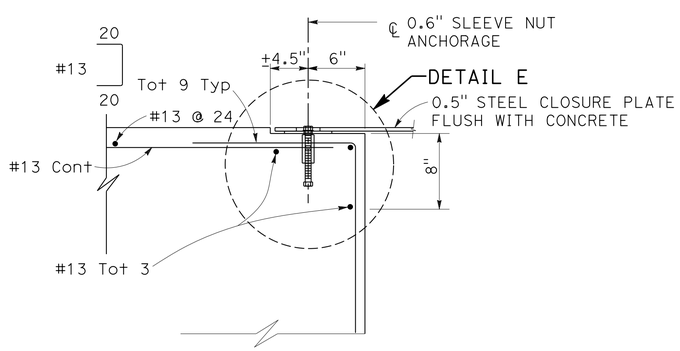

DETAIL D

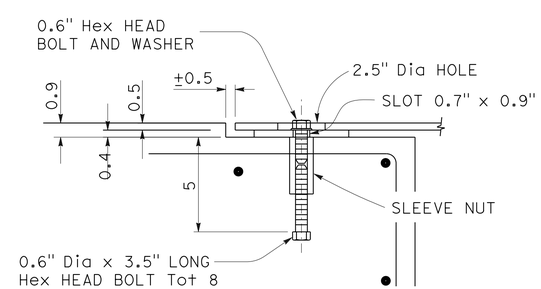

DETAIL E

CONSTRUCTION DETAILS
CONCRETE BARRIER TYPE 60 (Mod)
TRANSITION AT SIGN POST

NO SCALE

C-37

STATE OF CALIFORNIA - DEPARTMENT OF TRANSPORTATION
Caltrans® OFFICE OF DESIGN D

FUNCTIONAL SUPERVISOR: NADER GOBRAN
CALCULATED-DESIGNED BY: JEROME G. ARABE
CHECKED BY: MOHAMED GHANNOUM
REVISED BY
DATE REVISED

LAST REVISION 00-00-00
DATE PLOTTED => 12-JUN-2013
TIME PLOTTED => 17:32

Dist	COUNTY	ROUTE	POST MILES TOTAL PROJECT	SHEET No.	TOTAL SHEETS
07	LA	10	33.2/37.2	136	1475

Sushil N. Chaudhari 4-17-12
REGISTERED CIVIL ENGINEER DATE

6-10-13
PLANS APPROVAL DATE

REGISTERED PROFESSIONAL ENGINEER SUSHIL N. CHAUDHARI No. 60659 Exp. 12/31/12 CIVIL STATE OF CALIFORNIA

THE STATE OF CALIFORNIA OR ITS OFFICERS OR AGENTS SHALL NOT BE RESPONSIBLE FOR THE ACCURACY OR COMPLETENESS OF SCANNED COPIES OF THIS PLAN SHEET.

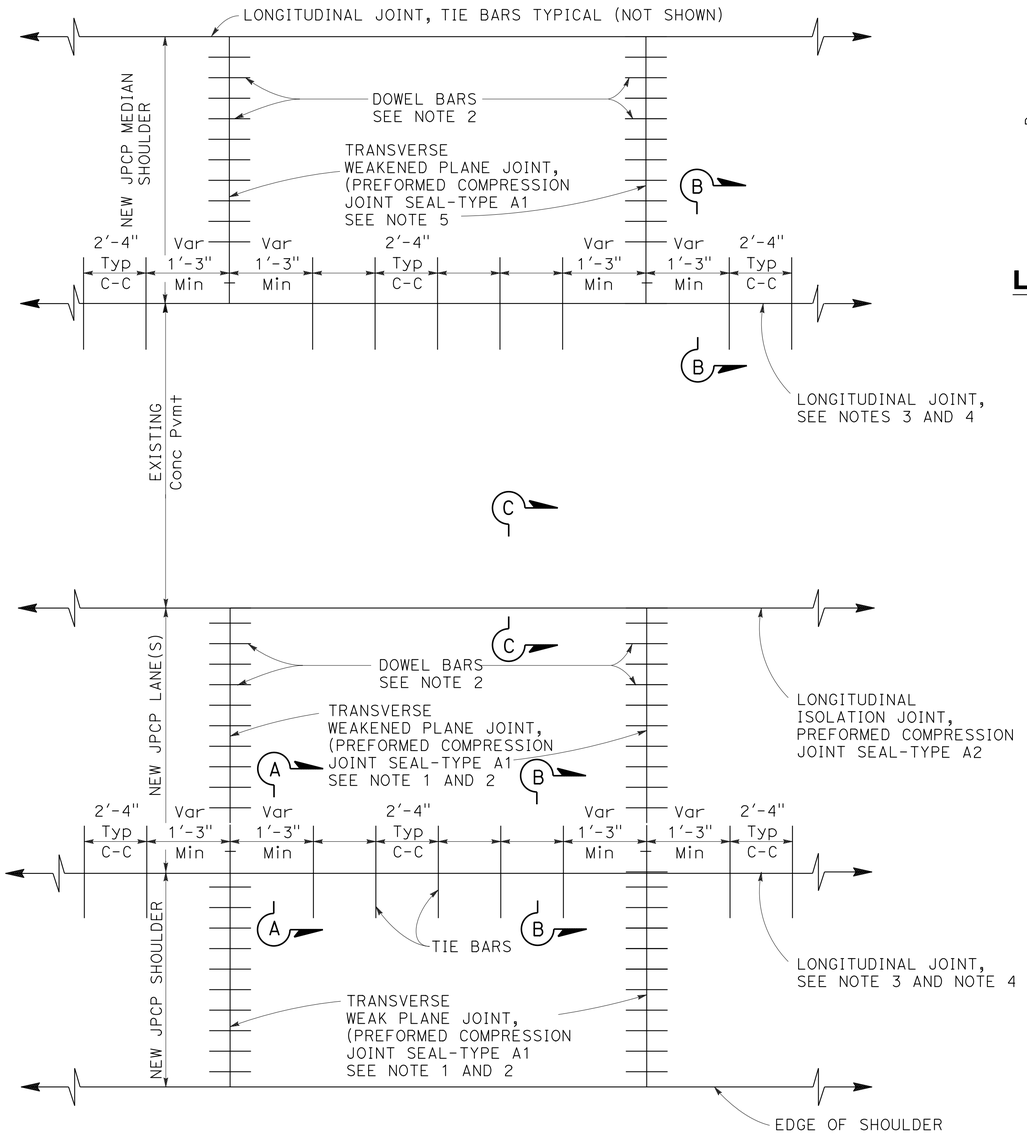

PLAN

LANE/SHOULDER ADDITION OR RECONSTRUCTION

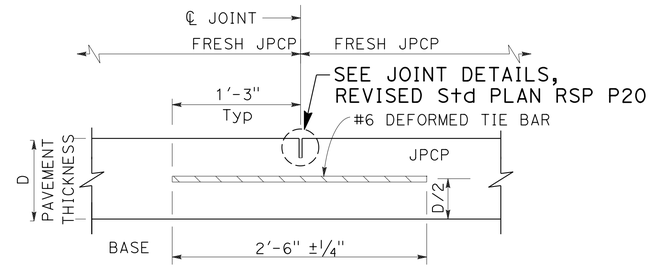

SECTION A-A

LONGITUDINAL CONTRACTION JOINT

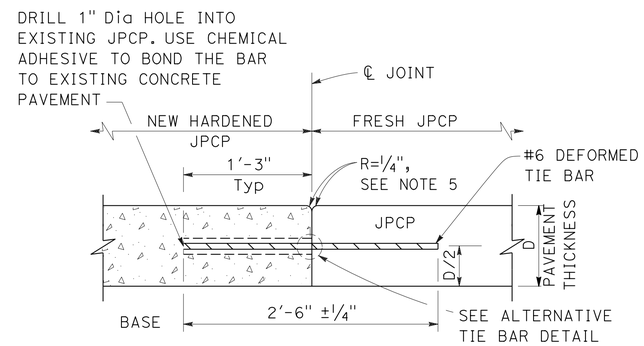

SECTION B-B

LONGITUDINAL CONSTRUCTION JOINT

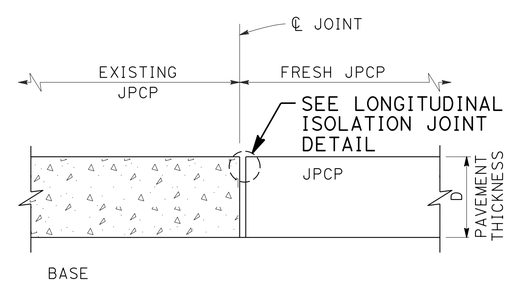

SECTION C-C

LONGITUDINAL ISOLATION JOINT

NOTES:

1. TRANSVERSE JOINTS SHALL BE CONSTRUCTED AT RIGHT ANGLES TO THE LONGITUDINAL PAVEMENT JOINTS IN NEW JOINTED PLAIN CONCRETE PAVEMENT AND SPACED AT SUCCESSIVE REPEATED INTERVALS OF 12', 15', 13' AND 14'.
2. FOR TRANSVERSE JOINT AND DOWEL BAR DETAILS NOT SHOWN, SEE REVISED STANDARD PLAN RSP P10.
3. CONSTRUCT LONGITUDINAL CONTRACTION JOINTS AS SHOWN IN SECTION A-A WHEN MORE THAN ONE LANE OR SHOULDER WIDTHS ARE PLACED AT ONE TIME. IF CONSTRUCTING ONE LANE AT A TIME, USE LONGITUDINAL CONSTRUCTION JOINT, AS SHOWN IN SECTION B-B.
4. FOR ADDITIONAL LONGITUDINAL JOINT DETAILS, SEE REVISED STANDARD PLAN RSP P18.
5. TRANSVERSE JOINTS TO MATCH EXISTING JOINT SPACING IN EXISTING CONCRETE PAVEMENT.

CONSTRUCTION DETAILS

NO SCALE

C-38

STATE OF CALIFORNIA - DEPARTMENT OF TRANSPORTATION
Caltrans® OFFICE OF DESIGN D

FUNCTIONAL SUPERVISOR: NADER GOBRAN
CALCULATED-DESIGNED BY: SUSHIL CHAUDHARI
CHECKED BY: MOHAMED GHANNOUM
REVISED BY
DATE REVISED

LAST REVISION 00-00-00 | DATE PLOTTED => 12-JUN-2013 | TIME PLOTTED => 17:32

Dist	COUNTY	ROUTE	POST MILES TOTAL PROJECT	SHEET No.	TOTAL SHEETS
07	LA	10	33.2/37.2	137	1475

Sushil N. Chaudhari 4-17-12
REGISTERED CIVIL ENGINEER DATE

6-10-13
PLANS APPROVAL DATE

REGISTERED PROFESSIONAL ENGINEER
SUSHIL N. CHAUDHARI
No. 60659
Exp. 12/31/12
CIVIL
STATE OF CALIFORNIA

THE STATE OF CALIFORNIA OR ITS OFFICERS OR AGENTS SHALL NOT BE RESPONSIBLE FOR THE ACCURACY OR COMPLETENESS OF SCANNED COPIES OF THIS PLAN SHEET.

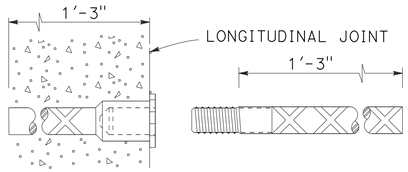

ALTERNATIVE TIE BAR SPLICE DETAIL

(SPLICE COUPLER)

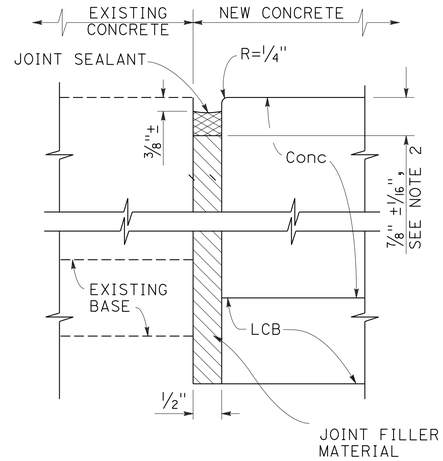

LONGITUDINAL ISOLATION JOINT DETAIL

NOTES:

1. REPAIR VOID IN EXISTING BASE AT TRANSVERSE LONGITUDINAL AND LONGITUDINAL ISOLATION JOINTS WITH LEAN CONCRETE BASE OR LEAN CONCRETE BASE RAPID SETTING PRIOR TO PLACING JOINT FILLER MATERIAL AND NEW TREATED BASE.
2. USE 5/8" ±1/16" DIMENSION FOR SILICONE SEALANT.
3. "D" - PAVEMENT THICKNESS

REPAIR UNDERLYING BASE

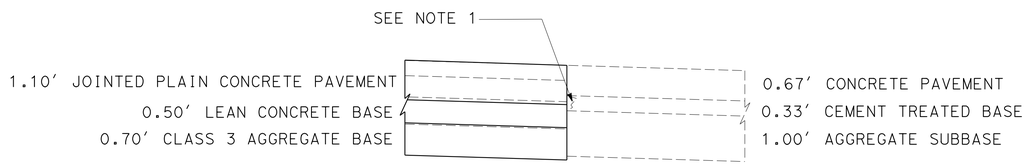

MEDIAN SHOULDER

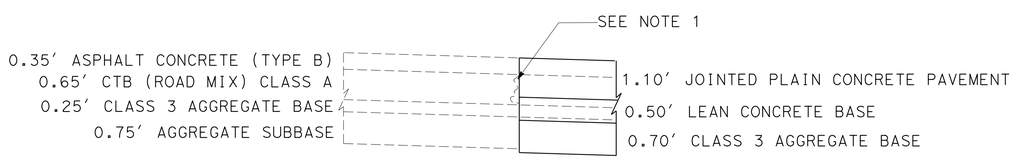

OUTSIDE WIDENING

REPAIR SPALLED JOINTS (POLYESTER GROUT)

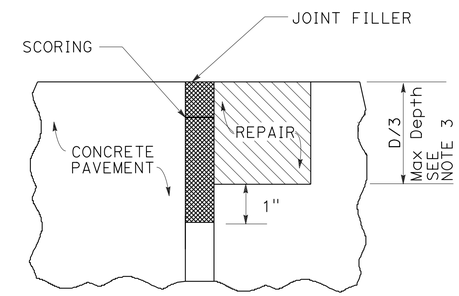

PROFILE

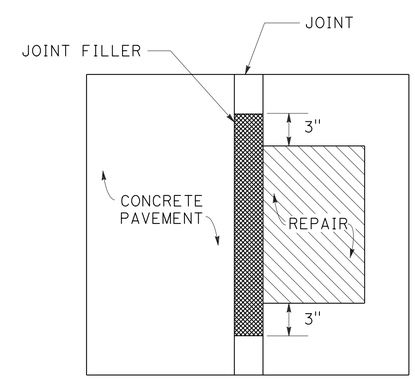

PLAN

CONSTRUCTION DETAILS

NO SCALE

C-39

STATE OF CALIFORNIA - DEPARTMENT OF TRANSPORTATION
Caltrans® OFFICE OF DESIGN D

FUNCTIONAL SUPERVISOR: NADER GOBRAN
CALCULATED-DESIGNED BY: SUSHIL CHAUDHARI
CHECKED BY: MOHAMED GHANNOUM
REVISED BY
DATE REVISED

LAST REVISION 00-00-00
DATE PLOTTED => 12-JUN-2013
TIME PLOTTED => 17:32

Dist	COUNTY	ROUTE	POST MILES TOTAL PROJECT	SHEET No.	TOTAL SHEETS
07	LA	10	33.2/37.2	138	1475

4-17-12
REGISTERED CIVIL ENGINEER DATE

6-10-13
PLANS APPROVAL DATE

REGISTERED PROFESSIONAL ENGINEER
MOHAMED GHANNOUM
No. C72051
Exp. 6/30/14
CIVIL
STATE OF CALIFORNIA

THE STATE OF CALIFORNIA OR ITS OFFICERS OR AGENTS SHALL NOT BE RESPONSIBLE FOR THE ACCURACY OR COMPLETENESS OF SCANNED COPIES OF THIS PLAN SHEET.

RIGID BUS PAD

TYPICAL PLAN

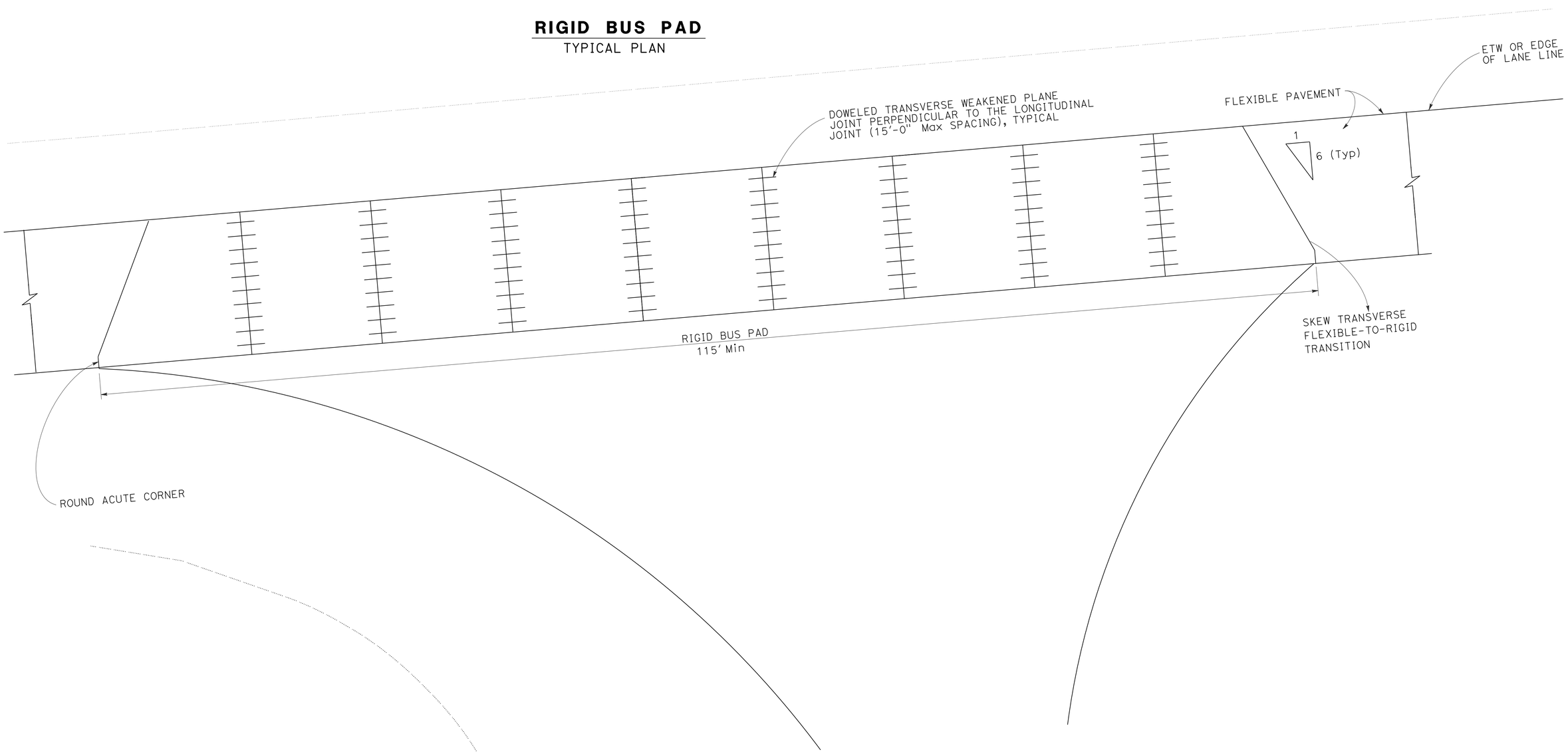

CONSTRUCTION DETAILS

NO SCALE

C-40

REVISED BY | DATE REVISED

SUSHIL CHAUDHARI | MOHAMED GHANNOUM

CALCULATED-DESIGNED BY | CHECKED BY

FUNCTIONAL SUPERVISOR

NADER GOBRAN

STATE OF CALIFORNIA - DEPARTMENT OF TRANSPORTATION

Caltrans® OFFICE OF DESIGN D

LAST REVISION 00-00-00 | DATE PLOTTED => 12-JUN-2013 | TIME PLOTTED => 17:32

Dist	COUNTY	ROUTE	POST MILES TOTAL PROJECT	SHEET No.	TOTAL SHEETS
07	LA	10	33.2/37.2	139	1475

Sushil N. Chaudhari 4-17-12
REGISTERED CIVIL ENGINEER DATE

6-10-13
PLANS APPROVAL DATE

REGISTERED PROFESSIONAL ENGINEER SUSHIL N. CHAUDHARI No. 60659 Exp. 12/31/12 CIVIL STATE OF CALIFORNIA

THE STATE OF CALIFORNIA OR ITS OFFICERS OR AGENTS SHALL NOT BE RESPONSIBLE FOR THE ACCURACY OR COMPLETENESS OF SCANNED COPIES OF THIS PLAN SHEET.

NOTES:

1. INSTALL MEDIAN MILAGE PANEL HORIZONTALLY FACING EP ON BOTH SIDES OF BARRIER AT 1056 FEET INTERVALS AS LOCATED BY THE ENGINEER. MEDIAN MILEAGE PANEL LEGEND SHALL BE IN 0.2 MILE INCREMENTS AS DIRECTED BY THE ENGINEER.
2. LETTERS AND NUMERALS SHALL BE 6" SERIES D DIE CUT NON-REFLECTIVE PRESSURE SENSITIVE BLACK VINYL FROM AN APPROVED MANUFACTURER.
3. NUTS BOLTS WASHERS, ETC ON PANEL FACE SHALL BE NEATLY PAINTED IN APPROPRIATE COLOR.
4. RESIN CAPSULE ANCHORAGE IS SUBJECT TO APPROVAL OF THE ENGINEER. INSTALLATION PROCEDURES SHALL COMPLY WITH MANUFACTURER'S INSTRUCTIONS.
5. CONTRACTOR SHALL PROVIDE ANCHOR BOLT LAYOUT BEFORE ANCHOR BOLTS ARE PLACED.

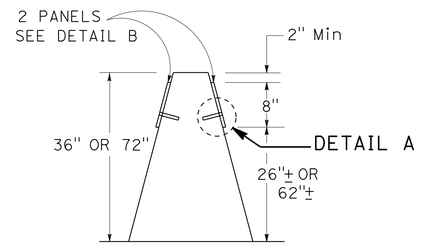

CONCRETE BARRIER

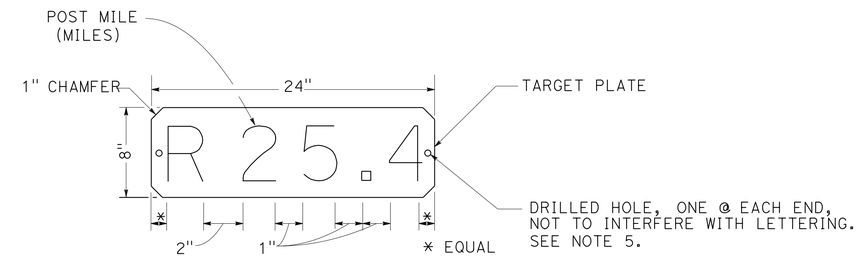

TYPICAL MEDIAN MILEAGE PANEL
WHITE BACKGROUND WITH BLACK LETTERS

DETAIL "B"
NO SCALE

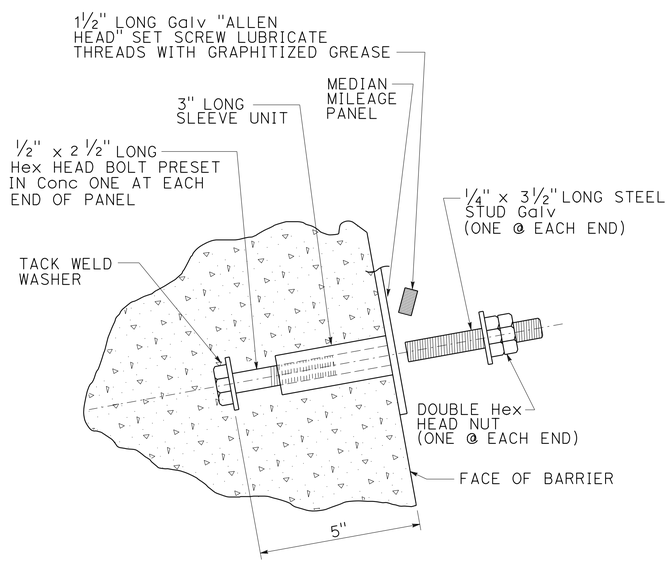

CLIP BOLT ANCHORAGE

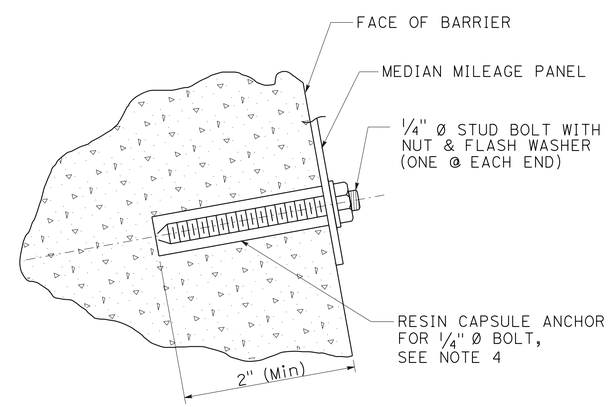

ALTERNATIVE RESIN CAPSULE ANCHORAGE

DETAIL "A"
NO SCALE

MEDIAN MILEAGE PANEL AND INSTALLATION DETAILS

CONSTRUCTION DETAILS
NO SCALE

C-41

STATE OF CALIFORNIA - DEPARTMENT OF TRANSPORTATION
Caltrans® OFFICE OF DESIGN D

FUNCTIONAL SUPERVISOR: NADER GOBRAN
CALCULATED-DESIGNED BY: SUSHIL CHAUDHARI
CHECKED BY: MOHAMED GHANNOUM
REVISED BY
DATE REVISED

LAST REVISION 00-00-00
DATE PLOTTED => 12-JUN-2013
TIME PLOTTED => 17:32

Dist	COUNTY	ROUTE	POST MILES TOTAL PROJECT	SHEET No.	TOTAL SHEETS
07	LA	10	33.2/37.2	140	1475

REGISTERED CIVIL ENGINEER 4-17-12 DATE

6-10-13
PLANS APPROVAL DATE

REGISTERED PROFESSIONAL ENGINEER MOHAMED GHANNOUM No. C72051 Exp. 6/30/14 CIVIL STATE OF CALIFORNIA

THE STATE OF CALIFORNIA OR ITS OFFICERS OR AGENTS SHALL NOT BE RESPONSIBLE FOR THE ACCURACY OR COMPLETENESS OF SCANNED COPIES OF THIS PLAN SHEET.

NOTES:

1. RAILING ASSEMBLY EXCEPT CHAIN LINK FABRIC MUST BE GALVANIZED AFTER FABRICATION.
2. PEEN BOLT THREADS.
3. RAILING SHALL CONFORM TO HORIZONTAL AND VERTICAL ALIGNMENT. POSTS SHALL BE VERTICAL. TOP AND BOTTOM PIPES SHALL BE BENT IF RADIUS IS 148'-0" OR LESS; MAY BE ON 8'-0" CHORDS IF RADIUS IS OVER 148'-0".
4. WHEN RAILING IS ON SLOPE, 3'-0" CHAIN LINK FABRIC SHALL BE PLACED PARALLEL TO SLOPE.
5. FOR DETAILS AND REINFORCEMENT NOT SHOWN SEE STANDARD PLAN B11-56.
6. SEE PROJECT PLANS FOR LIMITS OF CHAIN LINK RAILING (Mod).

CHAIN LINK RAILING (Mod)

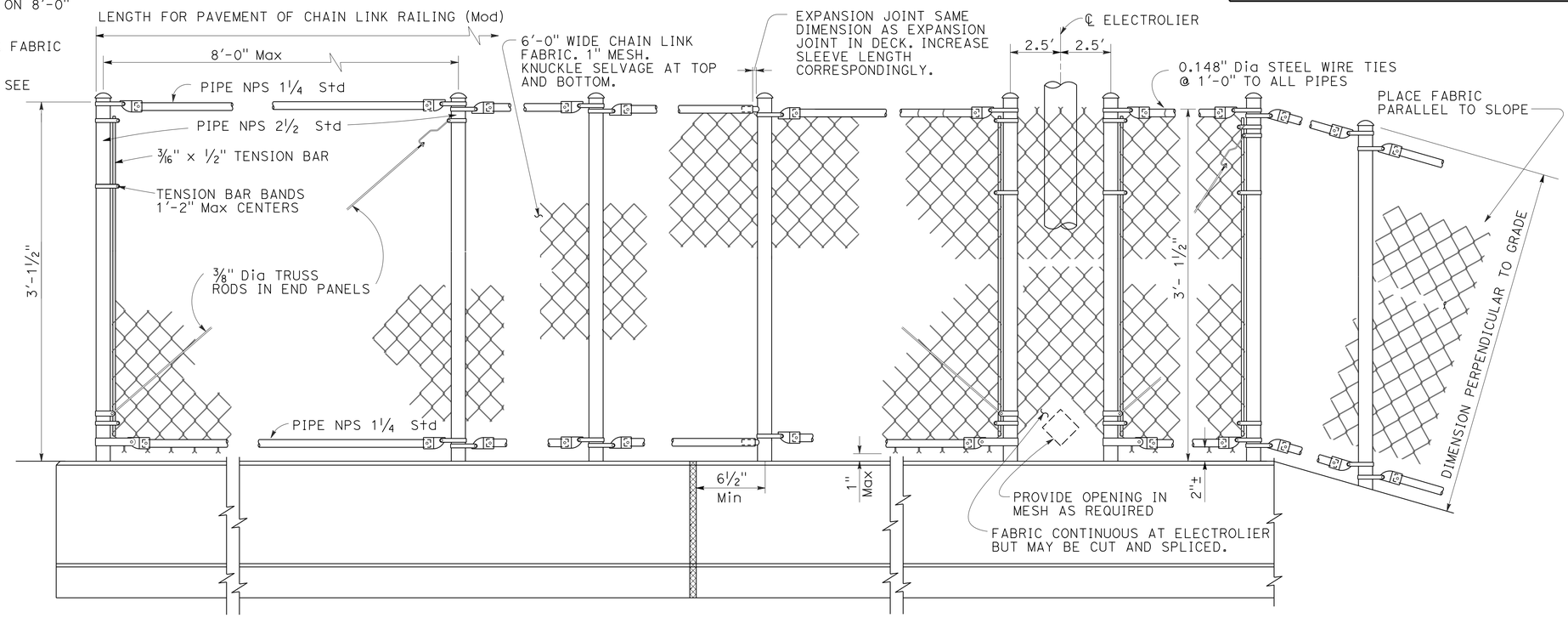

END POST | INTERMEDIATE POSTS | AT DECK EXPANSION JOINTS | AT ELECTROLIER | ON SLOPES

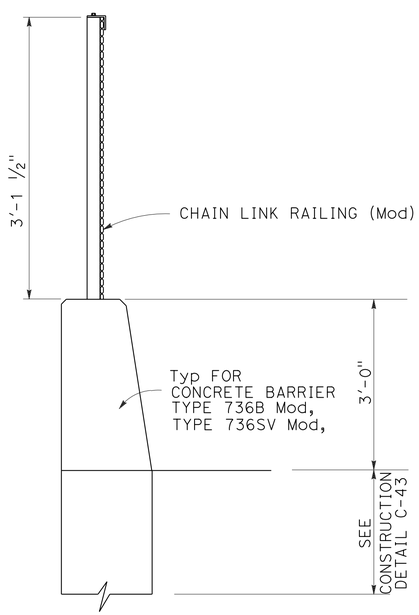

TYPICAL SECTION

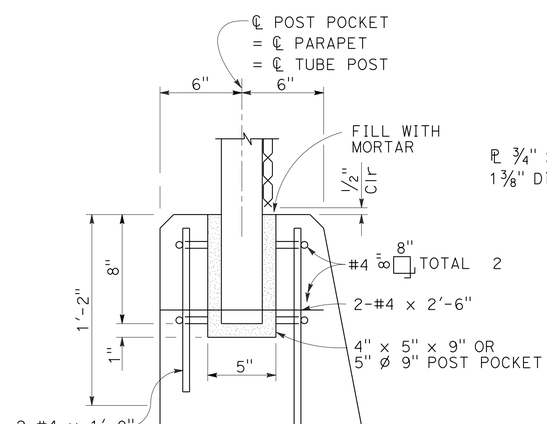

TYPICAL POST ANCHORAGE DETAIL

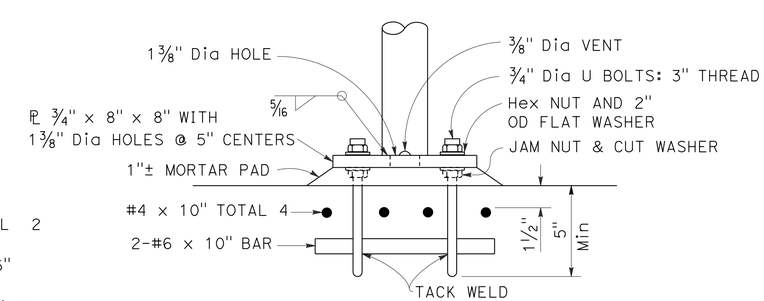

ALTERNATIVE ANCHORAGE DETAIL

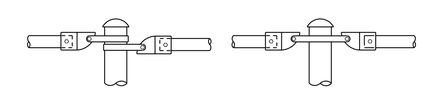

ALTERNATIVE DETAILS

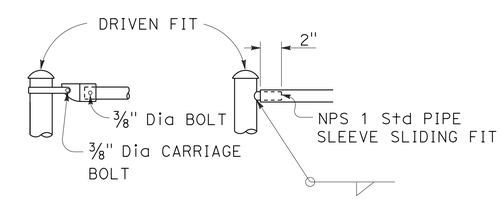

TYPICAL CONNECTION DETAILS

CONSTRUCTION DETAILS

NO SCALE

C-42

STATE OF CALIFORNIA - DEPARTMENT OF TRANSPORTATION
Caltrans® OFFICE OF DESIGN D

FUNCTIONAL SUPERVISOR: NADER GOBRAN
CALCULATED-DESIGNED BY: SUSHIL CHAUDHARI
CHECKED BY: MOHAMED GHANNOUM
REVISED BY
DATE REVISED

LAST REVISION 00-00-00
DATE PLOTTED => 12-JUN-2013
TIME PLOTTED => 17:32

Dist	COUNTY	ROUTE	POST MILES TOTAL PROJECT	SHEET No.	TOTAL SHEETS
07	LA	10	33.2/37.2	141	1475

REGISTERED CIVIL ENGINEER 4-17-12 DATE

6-10-13
PLANS APPROVAL DATE

REGISTERED PROFESSIONAL ENGINEER MOHAMED GHANNOUM No. C72051 Exp. 6/30/14 CIVIL STATE OF CALIFORNIA

THE STATE OF CALIFORNIA OR ITS OFFICERS OR AGENTS SHALL NOT BE RESPONSIBLE FOR THE ACCURACY OR COMPLETENESS OF SCANNED COPIES OF THIS PLAN SHEET.

NOTES:

1. DIMENSIONS MAY VARY WITH ROADWAY CROSS SLOPE AND WITH CERTAIN THICKNESS OF SURFACING. SEE PROJECT PLANS.
2. FOR ELECTRICAL AND IRRIGATION CONDUIT DETAILS, SEE ELECTRICAL PLANS.

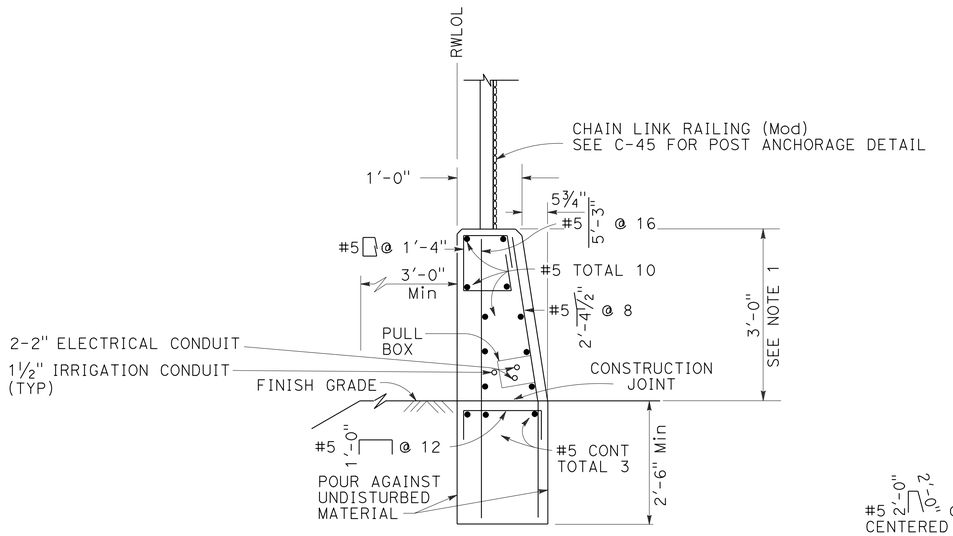

Conc BARRIER (TYPE 736B Mod)

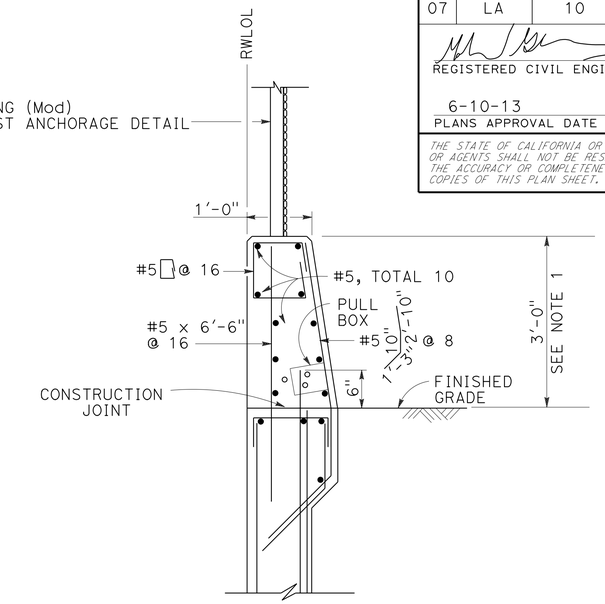

Conc BARRIER (TYPE 736A Mod)

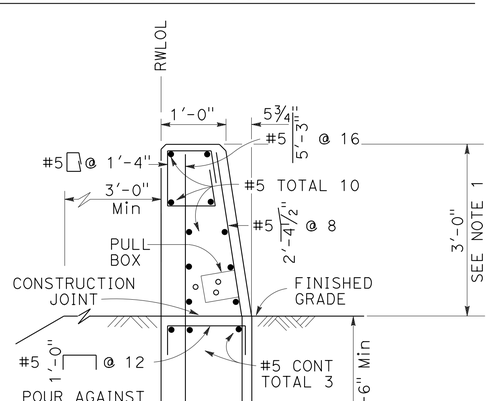

Conc BARRIER (TYPE 736C Mod)

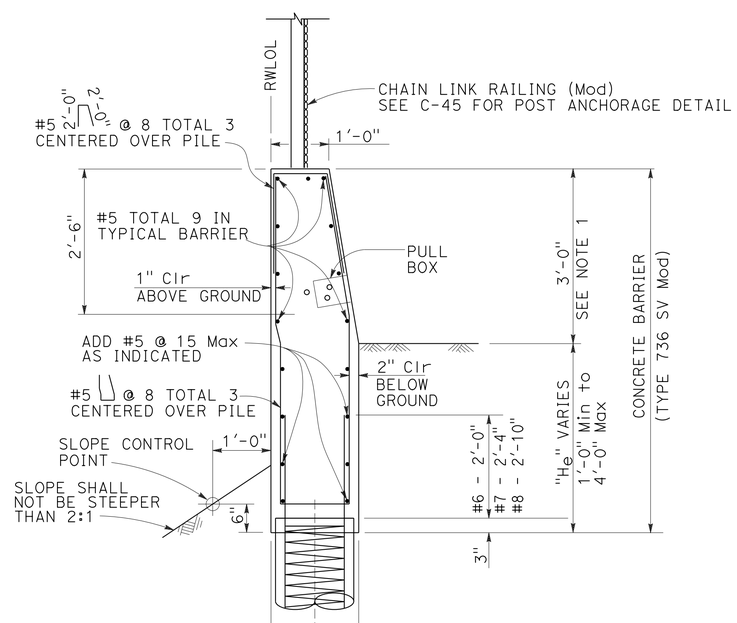

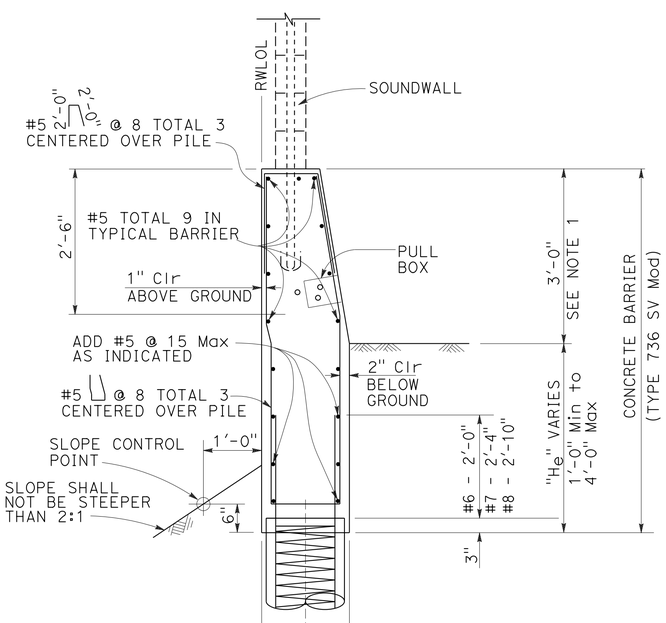

Conc BARRIER (TYPE 736SV Mod)

CONSTRUCTION DETAILS

NO SCALE

C-43

STATE OF CALIFORNIA - DEPARTMENT OF TRANSPORTATION
Caltrans® OFFICE OF DESIGN D

FUNCTIONAL SUPERVISOR: NADER GOBRAN
CALCULATED-DESIGNED BY: SUSHIL CHAUDHARI
CHECKED BY: MOHAMED GHANNOUM
REVISED BY
DATE REVISED

LAST REVISION 00-00-00
DATE PLOTTED => 13-JUN-2013
TIME PLOTTED => 06:51

Dist	COUNTY	ROUTE	POST MILES TOTAL PROJECT	SHEET No.	TOTAL SHEETS
07	LA	10	33.2/37.2	142	1475

4-17-12
REGISTERED CIVIL ENGINEER DATE

6-10-13
PLANS APPROVAL DATE

REGISTERED PROFESSIONAL ENGINEER
MOHAMED GHANNOUM
No. 72051
Exp. 6-30-14
CIVIL
STATE OF CALIFORNIA

THE STATE OF CALIFORNIA OR ITS OFFICERS OR AGENTS SHALL NOT BE RESPONSIBLE FOR THE ACCURACY OR COMPLETENESS OF SCANNED COPIES OF THIS PLAN SHEET.

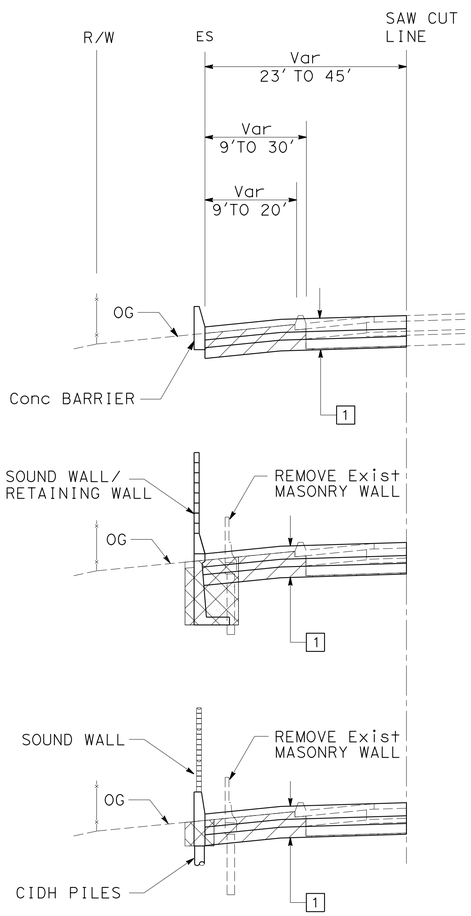

Sta 1756+20.00 TO Sta 1963+00

WESTBOUND ROUTE 10

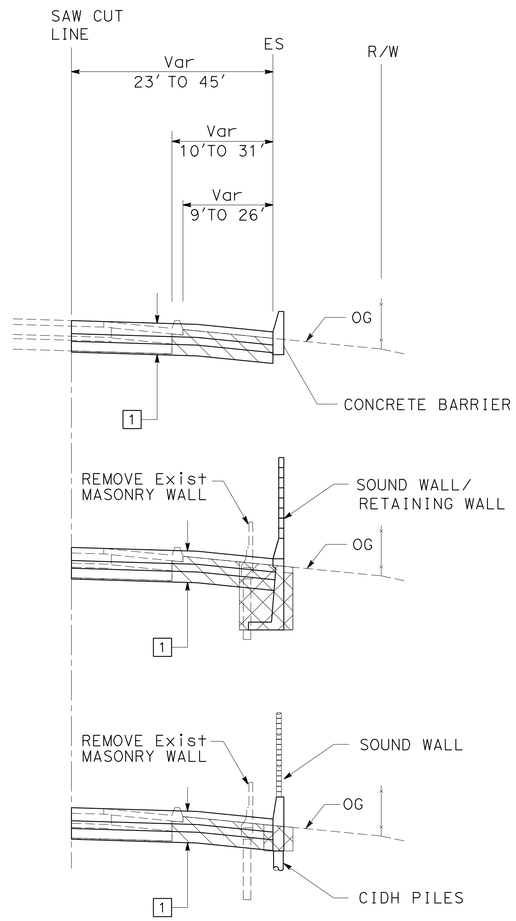

Sta 1756+20.00 TO Sta 1963+00

EASTBOUND ROUTE 10

NOTE:

1. EXCESS MATERIALS NOT REUSED ON SITE WILL BE MEASURED AS ROADWAY EXCAVATION (TYPE Z-2) (AERIALLY DEPOSITED LEAD) OR STRUCTURE EXCAVATION (TYPE Z-2) (AERIALLY DEPOSITED LEAD).

LEGEND:

- ROADWAY EXCAVATON (TYPE Y-1) (AERIALLY DEPOSITED LEAD)
- STRUCTURE EXCAVATION (TYPE Y-1) (AERIALLY DEPOSITED LEAD)
- AREA AVAILABLE FOR BACKFILLING WITH EXCAVATION (TYPE Y-1) (AERIALLY DEPOSITED LEAD)

CONSTRUCTION DETAILS

TYPICAL CROSS SECTION EXCAVATION (AERIALLY DEPOSITED LEAD)

NO SCALE

C-44

REVISED BY	DATE REVISED

CALCULATED-DESIGNED BY	CHECKED BY
AVERY CHAN	MOHAMED GHANNOUM

FUNCTIONAL SUPERVISOR: NADER GOBRAN

STATE OF CALIFORNIA - DEPARTMENT OF TRANSPORTATION
Caltrans® OFFICE OF DESIGN D

LAST REVISION 00-00-00
DATE PLOTTED => 12-JUN-2013
TIME PLOTTED => 17:32

Dist	COUNTY	ROUTE	POST MILES TOTAL PROJECT	SHEET No.	TOTAL SHEETS
07	LA	10	33.2/37.2	143	1475

REGISTERED CIVIL ENGINEER 4-17-12 DATE

6-10-13
PLANS APPROVAL DATE

REGISTERED PROFESSIONAL ENGINEER MOHAMED GHANNOUM No. 72051 Exp. 6-30-14 CIVIL STATE OF CALIFORNIA

THE STATE OF CALIFORNIA OR ITS OFFICERS OR AGENTS SHALL NOT BE RESPONSIBLE FOR THE ACCURACY OR COMPLETENESS OF SCANNED COPIES OF THIS PLAN SHEET.

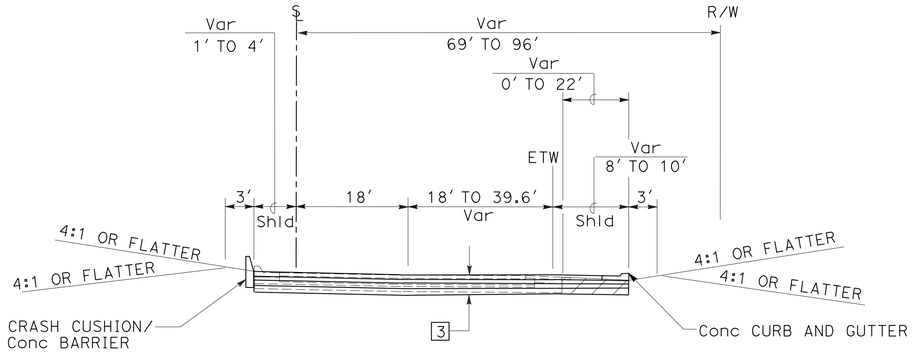

Sta 66+23.00 TO Sta 67+55.00
"P4" LINE

Sta 65+88.94 TO Sta 67+00.00
"P6" LINE

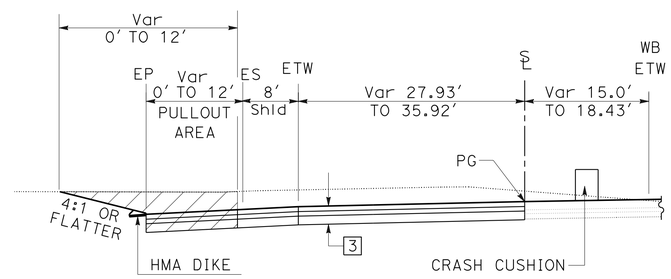

Sta 70+29.96 TO Sta 71+09.72
"P1" RAMP

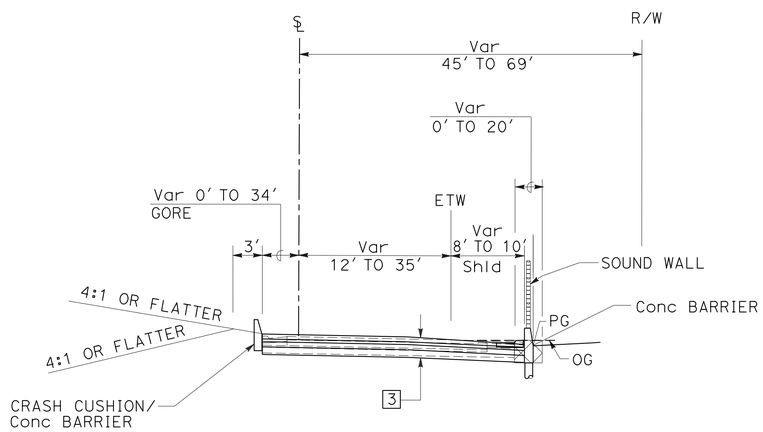

Sta 59+88.79 TO Sta 66+23.00
"P4" LINE

Sta 67+00.00 TO Sta 72+69.03
"P6" LINE

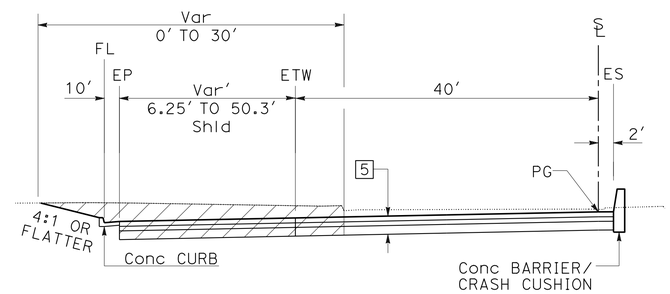

Sta 67+81.88 TO Sta 69+30.70
"P1" RAMP

CONSTRUCTION DETAILS

TYPICAL CROSS SECTION
EXCAVATION (AERIALLY DEPOSITED LEAD)

NO SCALE

C-45

STATE OF CALIFORNIA - DEPARTMENT OF TRANSPORTATION
Caltrans® OFFICE OF DESIGN D

FUNCTIONAL SUPERVISOR: NADER GOBRAN
CALCULATED-DESIGNED BY: GUILLERMO NAVARRO
CHECKED BY: MOHAMED GHANNOUM
REVISED BY / DATE REVISED

LAST REVISION 00-00-00
DATE PLOTTED => 12-JUN-2013
TIME PLOTTED => 17:32

Dist	COUNTY	ROUTE	POST MILES TOTAL PROJECT	SHEET No.	TOTAL SHEETS
07	LA	10	33.2/37.2	144	1475

REGISTERED CIVIL ENGINEER 4-17-12 DATE

6-10-13
PLANS APPROVAL DATE

REGISTERED PROFESSIONAL ENGINEER
MOHAMED GHANNOUM
No. 72051
Exp. 6-30-14
CIVIL
STATE OF CALIFORNIA

THE STATE OF CALIFORNIA OR ITS OFFICERS OR AGENTS SHALL NOT BE RESPONSIBLE FOR THE ACCURACY OR COMPLETENESS OF SCANNED COPIES OF THIS PLAN SHEET.

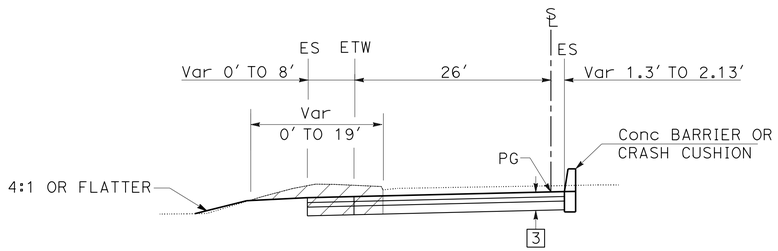

Sta 69+00.00 TO Sta 69+71.61
"P3" RAMP

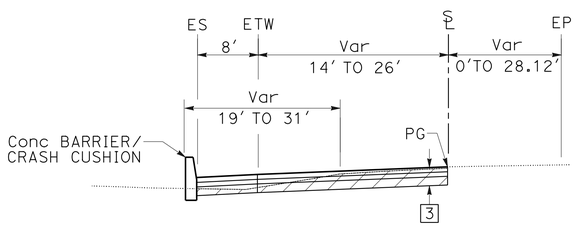

Sta 63+80.00 TO Sta 69+00.00
"P3" RAMP

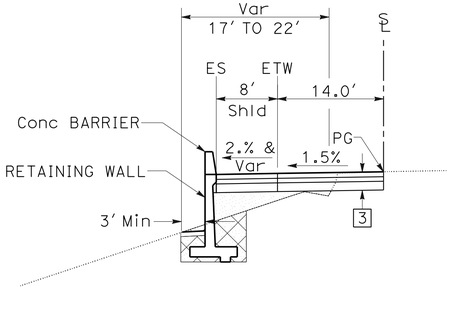

Sta 63+49.53 TO Sta 63+80.00
"P3" RAMP

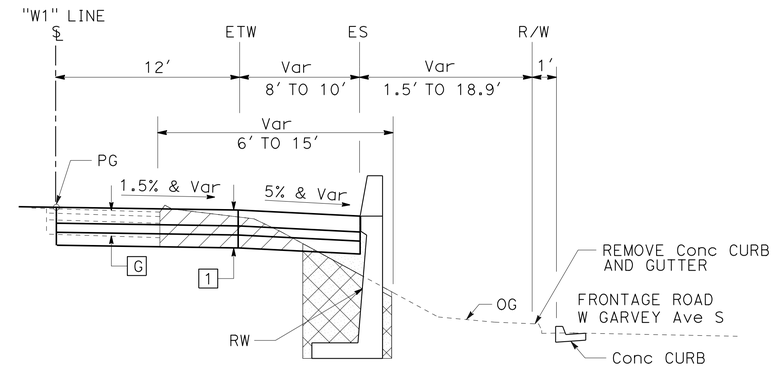

"W1" 23+50 TO "W1" 24+81.63
"WI" RAMP

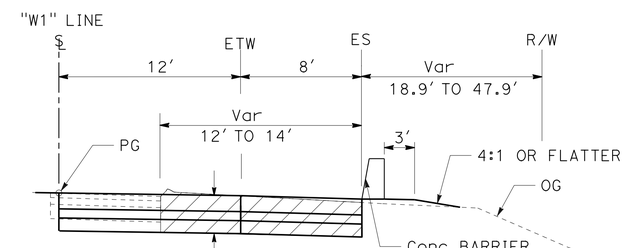

"W1" 22+77.60 TO "W1" 23+50
"WI" RAMP

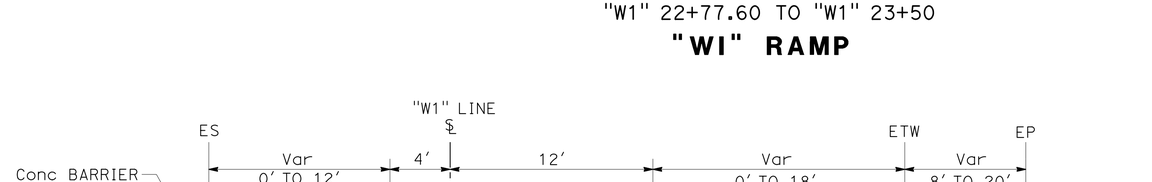

"W1" 13+25.00 TO "W1" 19+62.08
"W1" RAMP

CONSTRUCTION DETAILS

TYPICAL CROSS SECTION
EXCAVATION (AERIALLY DEPOSITED LEAD)

NO SCALE

C-46

STATE OF CALIFORNIA - DEPARTMENT OF TRANSPORTATION
Caltrans® OFFICE OF DESIGN D

FUNCTIONAL SUPERVISOR: NADER GOBRAN
CALCULATED-DESIGNED BY: JEROME G ARABE
CHECKED BY: MOHAMED GHANNOUM
REVISED BY
DATE REVISED

LAST REVISION 00-00-00
DATE PLOTTED => 12-JUN-2013
TIME PLOTTED => 17:32

Dist	COUNTY	ROUTE	POST MILES TOTAL PROJECT	SHEET No.	TOTAL SHEETS
07	LA	10	33.2/37.2	145	1475

4-17-12
REGISTERED CIVIL ENGINEER DATE

6-10-13
PLANS APPROVAL DATE

REGISTERED PROFESSIONAL ENGINEER
MOHAMED GHANNOUM
No. 72051
Exp. 6-30-14
CIVIL
STATE OF CALIFORNIA

THE STATE OF CALIFORNIA OR ITS OFFICERS OR AGENTS SHALL NOT BE RESPONSIBLE FOR THE ACCURACY OR COMPLETENESS OF SCANNED COPIES OF THIS PLAN SHEET.

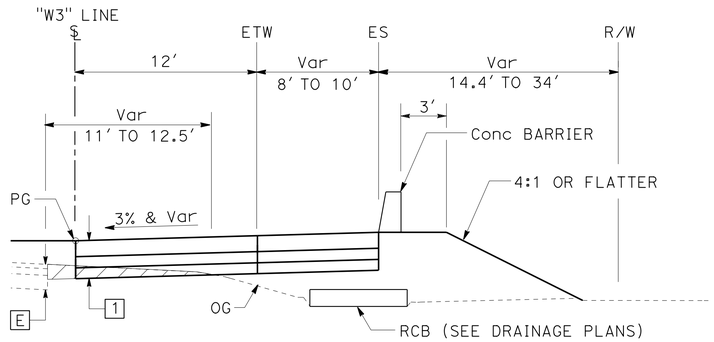

"W3" 6+00 TO "W3" 6+30
"W3" RAMP

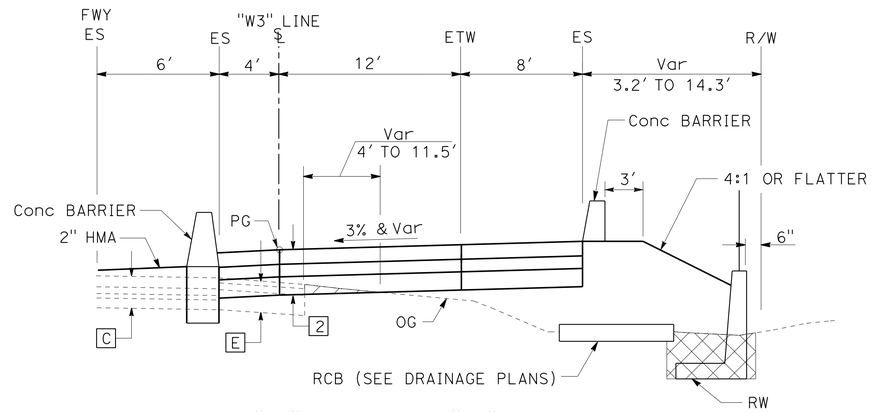

"W3" 6+73.58 TO "W3" 9+50
"W3" RAMP

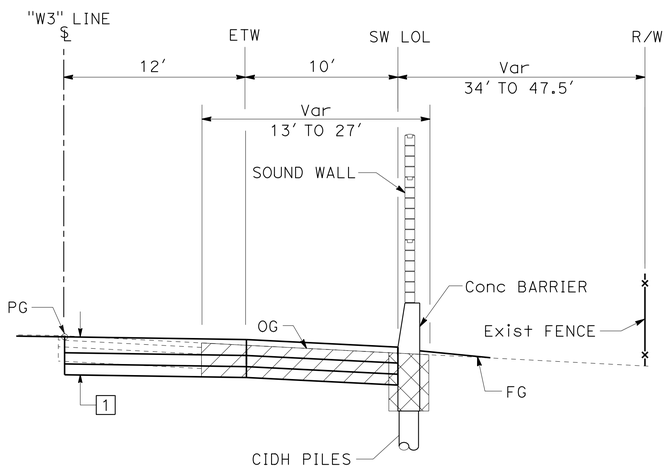

"W3" 3+31.15 TO "W3" 6+00
"W3" RAMP

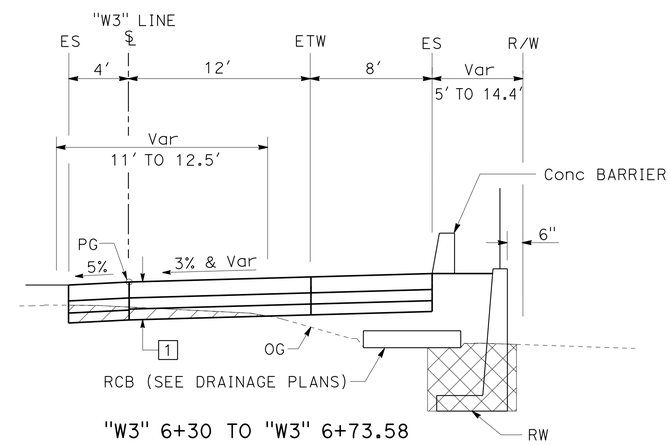

"W3" 6+30 TO "W3" 6+73.58
"W3" RAMP

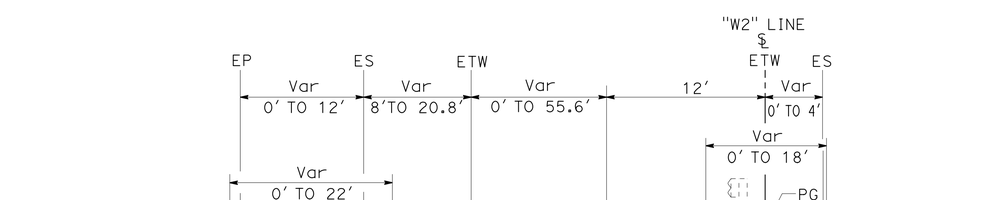

"W2" 13+80 TO "W2" 22+80.68
"W2" RAMP

CONSTRUCTION DETAILS

TYPICAL CROSS SECTION
EXCAVATION (AERIALLY DEPOSITED LEAD)

NO SCALE

C-47

STATE OF CALIFORNIA - DEPARTMENT OF TRANSPORTATION
Caltrans® OFFICE OF DESIGN D

FUNCTIONAL SUPERVISOR: NADER GOBRAN
CALCULATED-DESIGNED BY: JEROME G ARABE
CHECKED BY: MOHAMED GHANNOUM
REVISED BY
DATE REVISED

LAST REVISION 00-00-00
DATE PLOTTED => 12-JUN-2013
TIME PLOTTED => 17:32

Dist	COUNTY	ROUTE	POST MILES TOTAL PROJECT	SHEET No.	TOTAL SHEETS
07	LA	10	33.2/37.2	146	1475

4-17-12
REGISTERED CIVIL ENGINEER DATE

6-10-13
PLANS APPROVAL DATE

REGISTERED PROFESSIONAL ENGINEER
MOHAMED GHANNOUM
No. 72051
Exp. 6-30-14
CIVIL
STATE OF CALIFORNIA

THE STATE OF CALIFORNIA OR ITS OFFICERS OR AGENTS SHALL NOT BE RESPONSIBLE FOR THE ACCURACY OR COMPLETENESS OF SCANNED COPIES OF THIS PLAN SHEET.

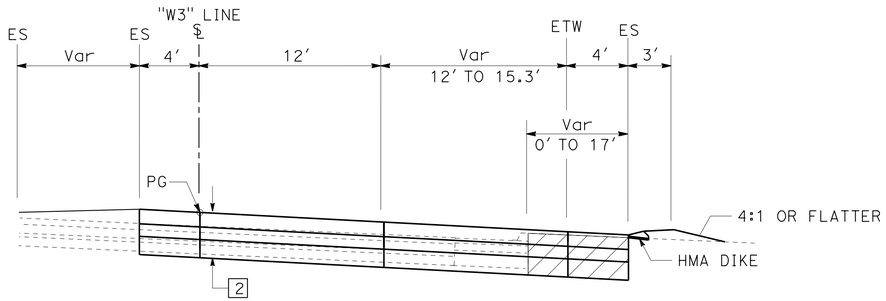

"W3" 15+65.22 TO "W3" 19+33.71

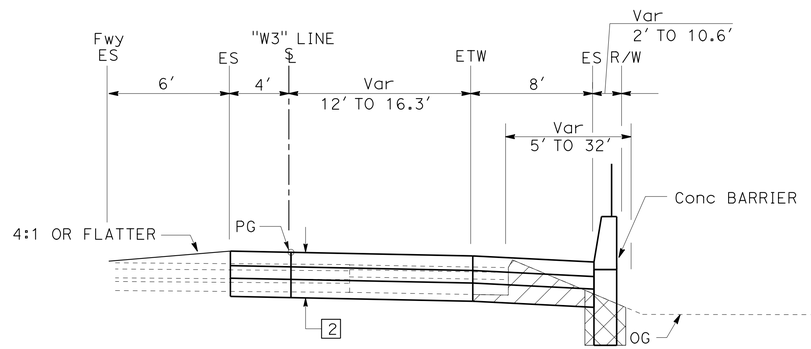

"W3" 11+63.77 TO "W3" 15+65.22

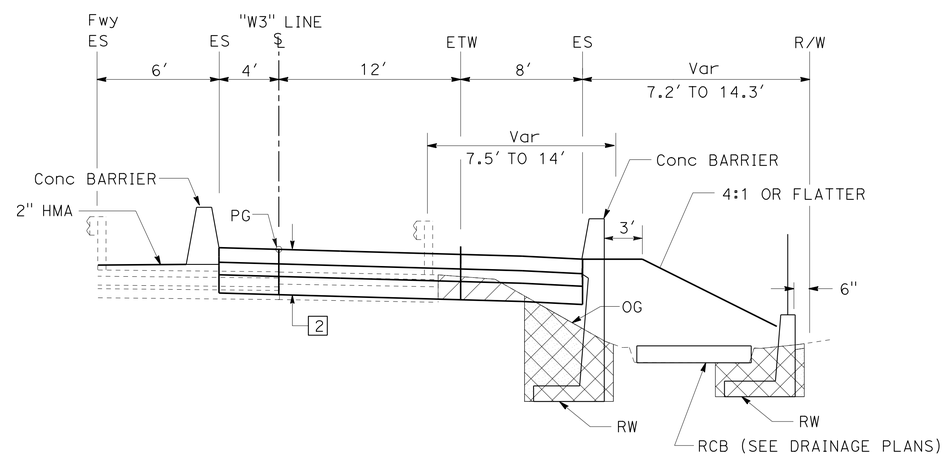

"W3" 9+50 TO "W3" 10+25.80

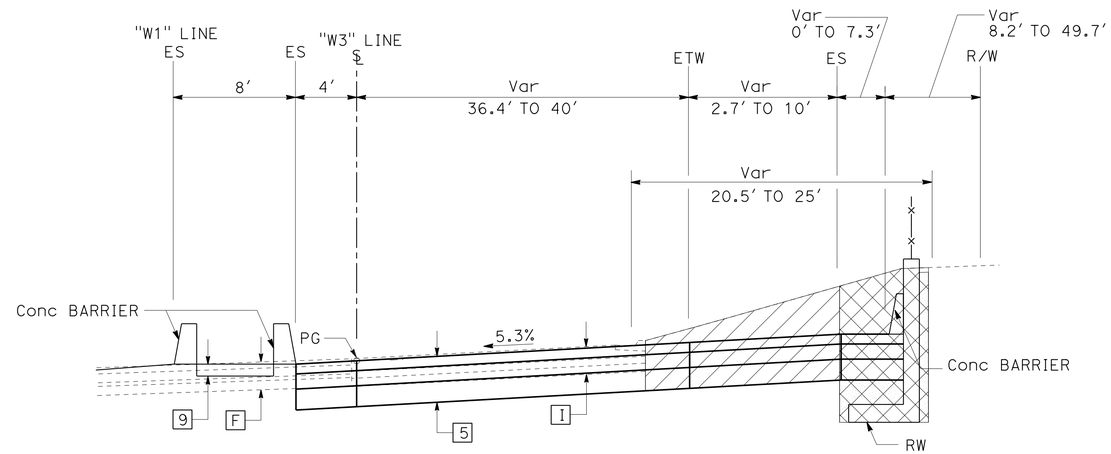

"W3" 22+30 TO "W3" 23+70

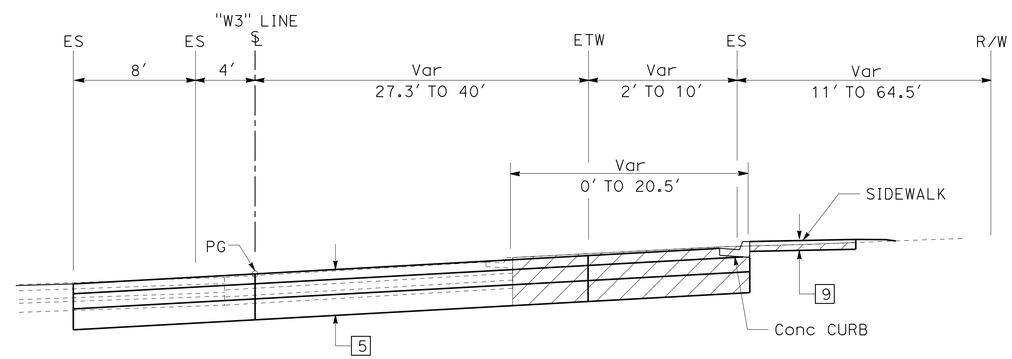

"W3" 23+82 TO "W3" 24+04
"W3" 19+34 TO "W3" 22+30

"W3" RAMP

CONSTRUCTION DETAILS

TYPICAL CROSS SECTION
EXCAVATION (AERIALLY DEPOSITED LEAD)

NO SCALE

C-48

STATE OF CALIFORNIA - DEPARTMENT OF TRANSPORTATION
Caltrans® OFFICE OF DESIGN D

FUNCTIONAL SUPERVISOR: NADER GOBRAN
CALCULATED-DESIGNED BY: NADER GOBRAN
CHECKED BY: MOHAMED GHANNOUM
REVISED BY
DATE REVISED

LAST REVISION 00-00-00
DATE PLOTTED => 12-JUN-2013
TIME PLOTTED => 17:32

Dist	COUNTY	ROUTE	POST MILES TOTAL PROJECT	SHEET No.	TOTAL SHEETS
07	LA	10	33.2/37.2	147	1475

4-17-12
REGISTERED CIVIL ENGINEER DATE

6-10-13
PLANS APPROVAL DATE

REGISTERED PROFESSIONAL ENGINEER
MOHAMED GHANNOUM
No. 72051
Exp. 6-30-14
CIVIL
STATE OF CALIFORNIA

THE STATE OF CALIFORNIA OR ITS OFFICERS OR AGENTS SHALL NOT BE RESPONSIBLE FOR THE ACCURACY OR COMPLETENESS OF SCANNED COPIES OF THIS PLAN SHEET.

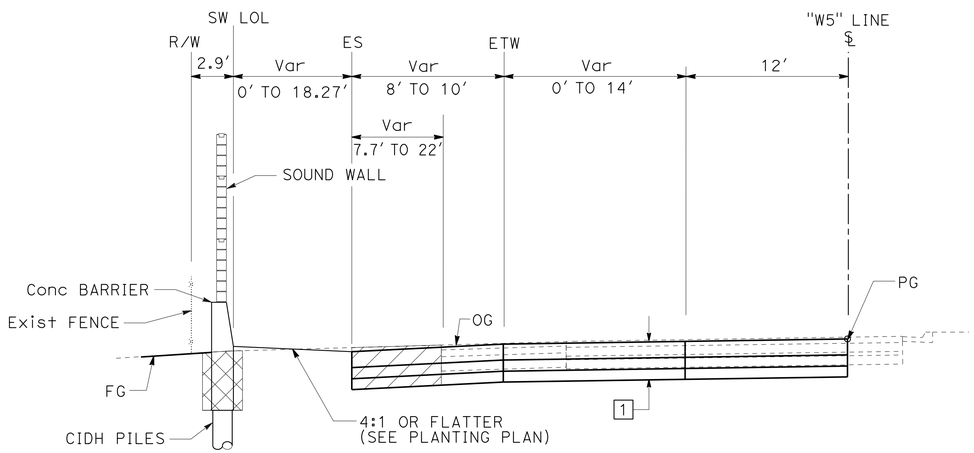

"W5" 11+80.00 TO "W5" 14+89.04

"W5" RAMP

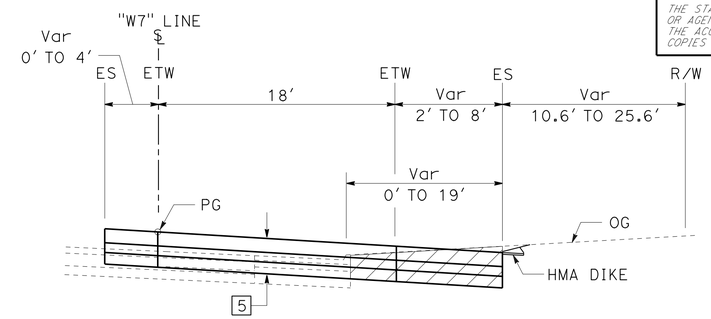

"W7" 15+65.22 TO "W7" 19+20

"W7" RAMP

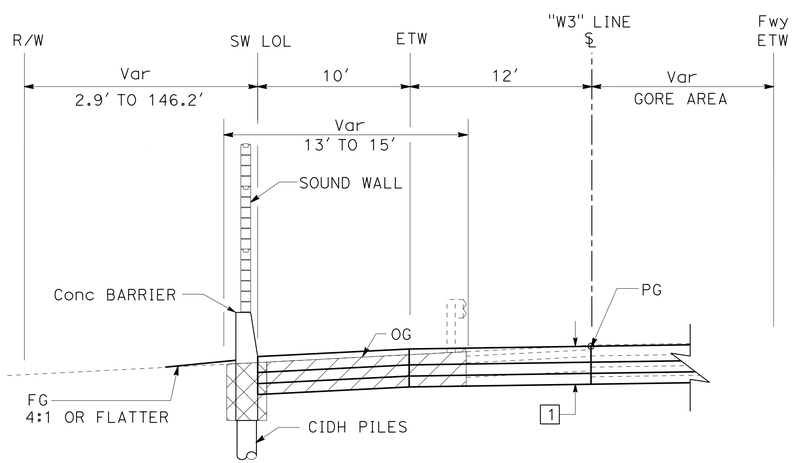

"W5" 11+20 TO "W5" 11+80
"W5" 8+79.95 TO "W5" 9+71.61

"W5" RAMP

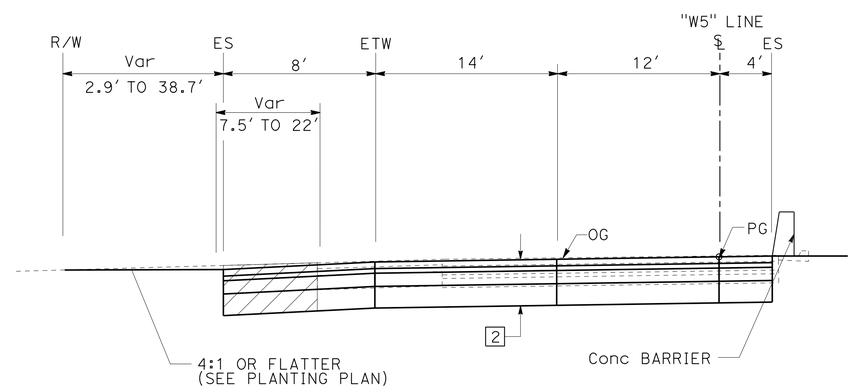

"W5" 14+89.04 TO "W5" 17+54.93

"W5" RAMP

CONSTRUCTION DETAILS

TYPICAL CROSS SECTION
EXCAVATION (AERIALLY DEPOSITED LEAD)

NO SCALE

C-49

STATE OF CALIFORNIA - DEPARTMENT OF TRANSPORTATION
Caltrans® OFFICE OF DESIGN D

FUNCTIONAL SUPERVISOR: NADER GOBRAN
CALCULATED-DESIGNED BY: JEROME G. ARABE
CHECKED BY: MOHAMED GHANNOUM
REVISED BY
DATE REVISED

LAST REVISION 00-00-00
DATE PLOTTED => 12-JUN-2013
TIME PLOTTED => 17:32

Dist	COUNTY	ROUTE	POST MILES TOTAL PROJECT	SHEET No.	TOTAL SHEETS
07	LA	10	33.2/37.2	148	1475

4-17-12
REGISTERED CIVIL ENGINEER DATE

6-10-13
PLANS APPROVAL DATE

REGISTERED PROFESSIONAL ENGINEER
MOHAMED GHANNOUM
No. 72051
Exp. 6-30-14
CIVIL
STATE OF CALIFORNIA

THE STATE OF CALIFORNIA OR ITS OFFICERS OR AGENTS SHALL NOT BE RESPONSIBLE FOR THE ACCURACY OR COMPLETENESS OF SCANNED COPIES OF THIS PLAN SHEET.

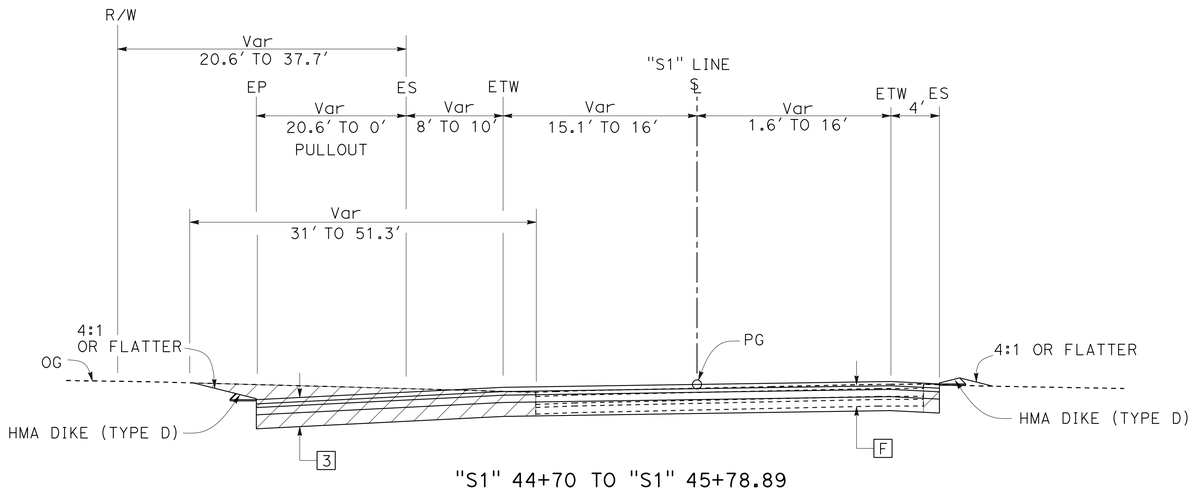

"S1" 44+70 TO "S1" 45+78.89

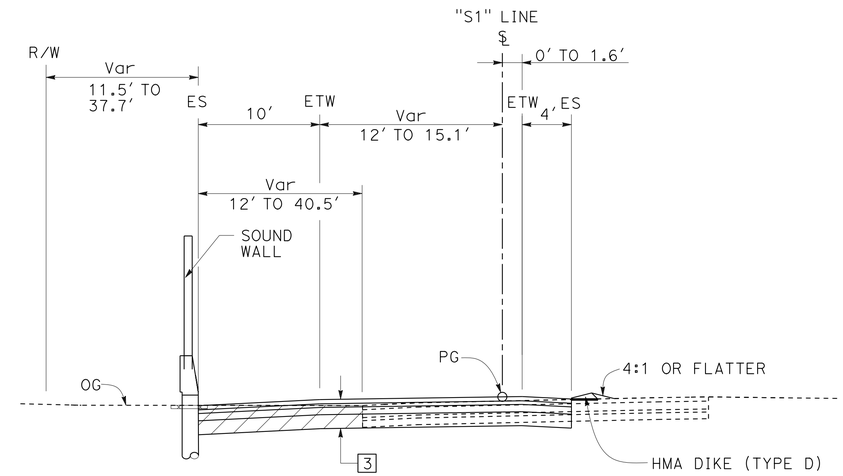

"S1" 45+78.89 TO "S1" 49+95.56

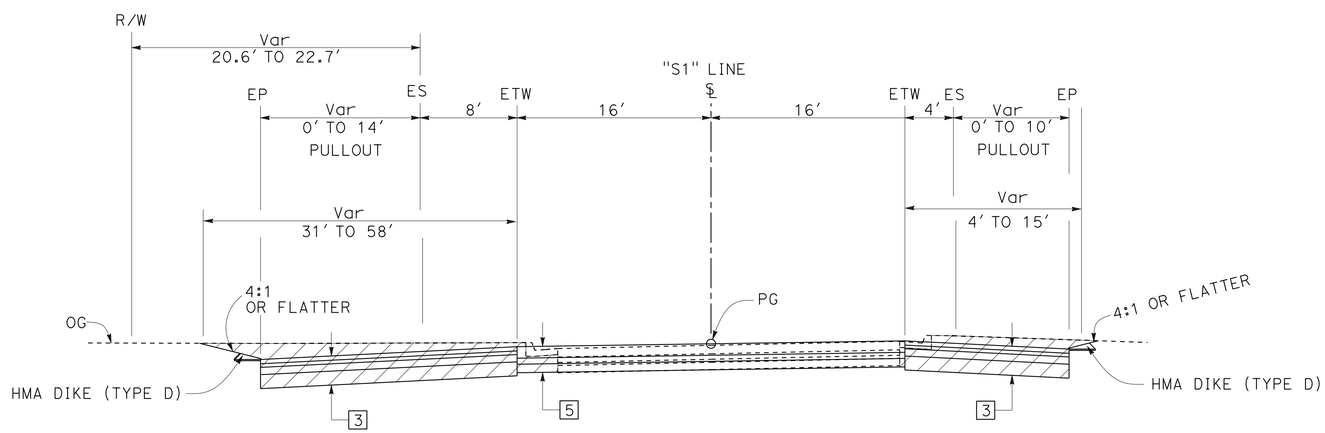

"S1" 43+20 TO "S1" 44+70

"S1" RAMP

CONSTRUCTION DETAILS

TYPICAL CROSS SECTION
EXCAVATION (AERIALLY DEPOSITED LEAD)

NO SCALE

C-50

STATE OF CALIFORNIA - DEPARTMENT OF TRANSPORTATION
Caltrans® OFFICE OF DESIGN D

FUNCTIONAL SUPERVISOR: NADER GOBRAN
CALCULATED-DESIGNED BY: MINH TU
CHECKED BY: MOHAMED GHANNOUM
REVISED BY
DATE REVISED

LAST REVISION 00-00-00
DATE PLOTTED => 12-JUN-2013
TIME PLOTTED => 17:32

Dist	COUNTY	ROUTE	POST MILES TOTAL PROJECT	SHEET No.	TOTAL SHEETS
07	LA	10	33.2/37.2	149	1475

REGISTERED CIVIL ENGINEER 4-17-12 DATE

6-10-13
PLANS APPROVAL DATE

REGISTERED PROFESSIONAL ENGINEER MOHAMED GHANNOUM No. 72051 Exp. 6-30-14 CIVIL STATE OF CALIFORNIA

THE STATE OF CALIFORNIA OR ITS OFFICERS OR AGENTS SHALL NOT BE RESPONSIBLE FOR THE ACCURACY OR COMPLETENESS OF SCANNED COPIES OF THIS PLAN SHEET.

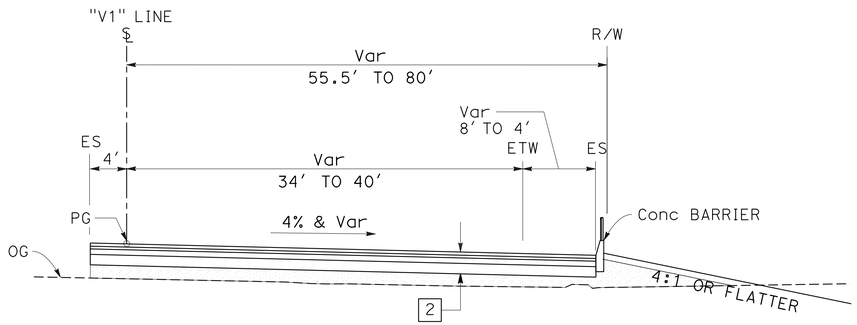

"V1" 66+14.29 TO "V1" 67+35

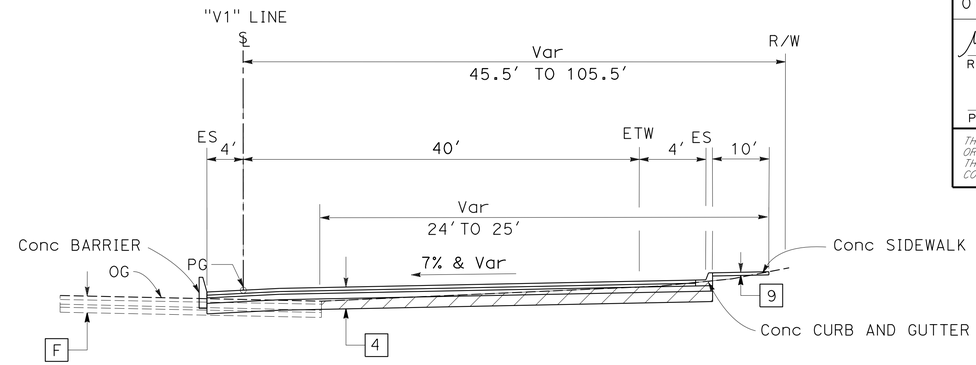

"V1" 68+40.32 TO "V1" 69+23.00

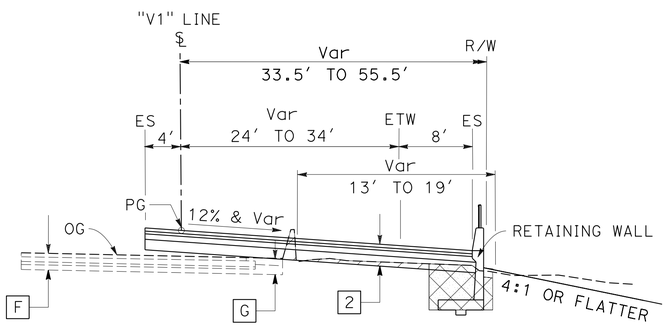

"V1" 61+99.19 TO "V1" 66+14.29

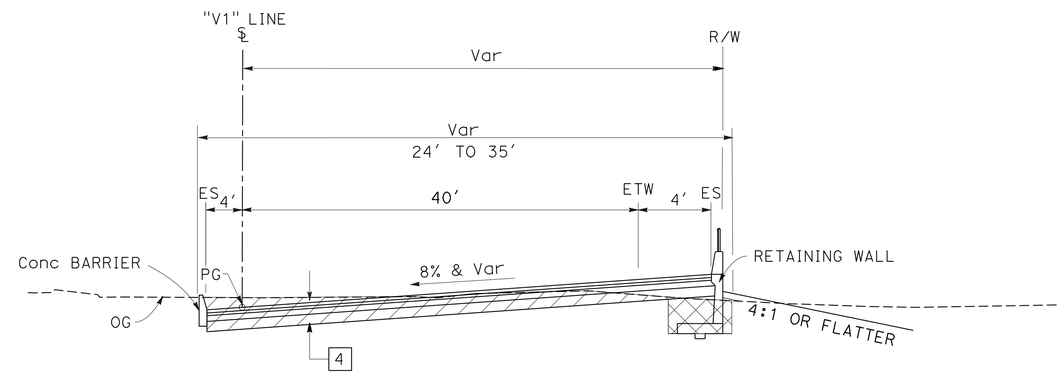

"V1" 68+10.00 TO "V1" 68+40.32

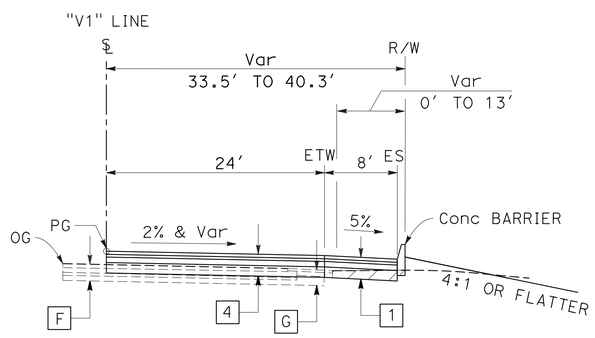

"V1" 58+81.25 TO "V1" 61+99.19

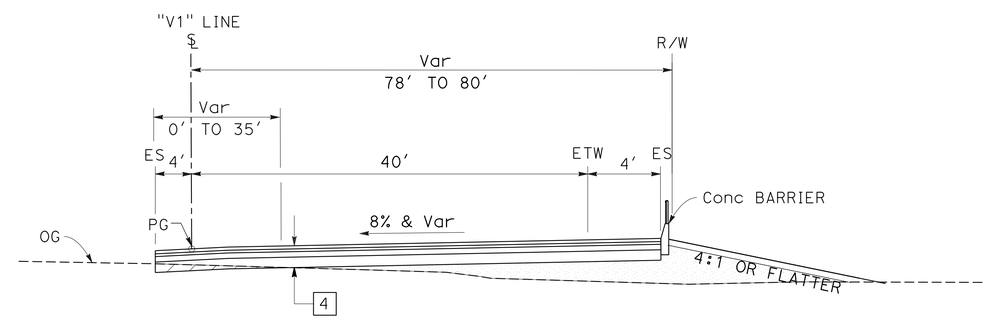

"V1"67+35 TO "V1" 68+10.00

"V1" RAMP

CONSTRUCTION DETAILS

TYPICAL CROSS SECTION
EXCAVATION (AERIALLY DEPOSITED LEAD)

NO SCALE

C-51

STATE OF CALIFORNIA - DEPARTMENT OF TRANSPORTATION
Caltrans® OFFICE OF DESIGN D

FUNCTIONAL SUPERVISOR: NADER GOBRAN
CALCULATED-DESIGNED BY: AVERY CHAN
CHECKED BY: MOHAMED GHANNOUM
REVISED BY
DATE REVISED

LAST REVISION 00-00-00
DATE PLOTTED => 12-JUN-2013
TIME PLOTTED => 17:32

Dist	COUNTY	ROUTE	POST MILES TOTAL PROJECT	SHEET No.	TOTAL SHEETS
07	LA	10	33.2/37.2	150	1475

REGISTERED CIVIL ENGINEER 4-17-12 DATE

6-10-13
PLANS APPROVAL DATE

REGISTERED PROFESSIONAL ENGINEER MOHAMED GHANNOUM No. 72051 Exp. 6-30-14 CIVIL STATE OF CALIFORNIA

THE STATE OF CALIFORNIA OR ITS OFFICERS OR AGENTS SHALL NOT BE RESPONSIBLE FOR THE ACCURACY OR COMPLETENESS OF SCANNED COPIES OF THIS PLAN SHEET.

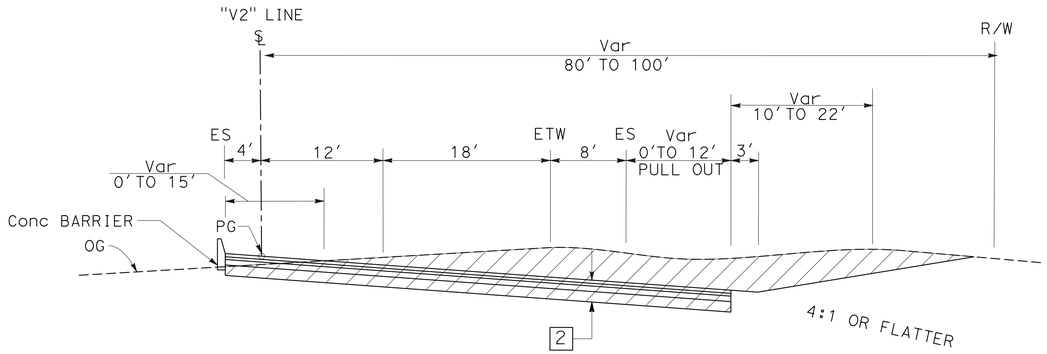

"V2" 64+73.87 TO "V2" 67+02.61

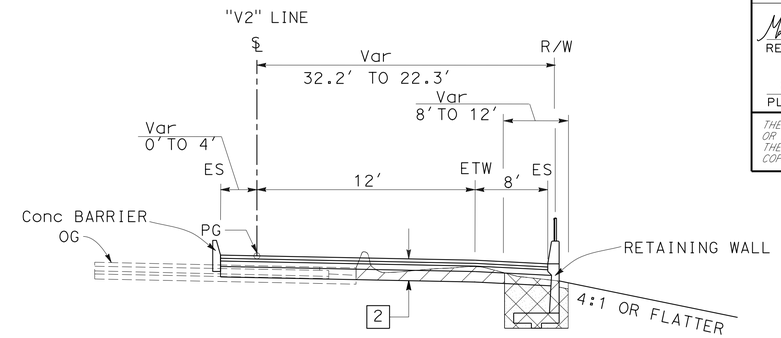

"V2" 76+47.28 TO "V2" 83+14.41

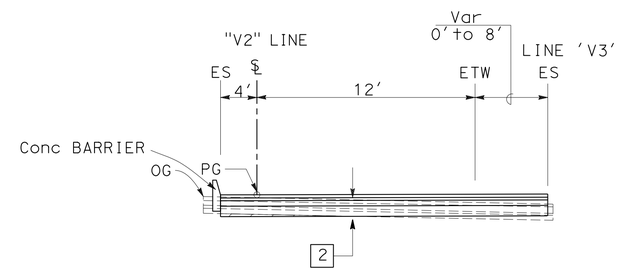

"V2" 73+78.73 TO "V2" 76+47.28

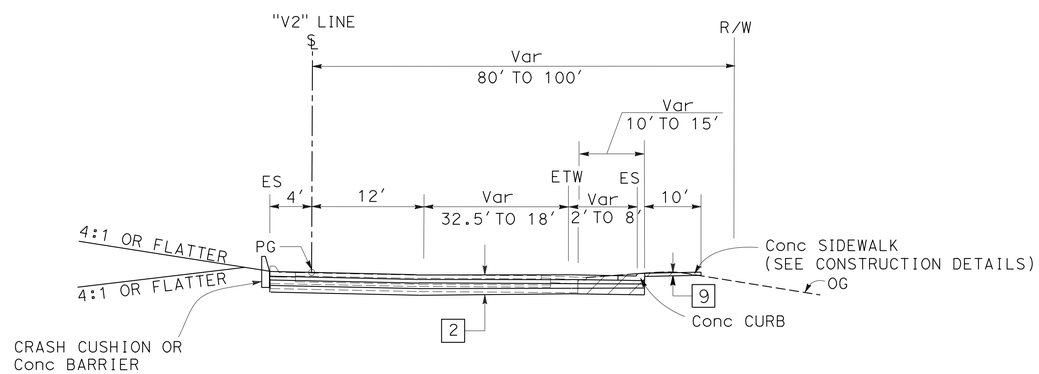

"V2" 63+44.61 TO "V2" 64+73.87

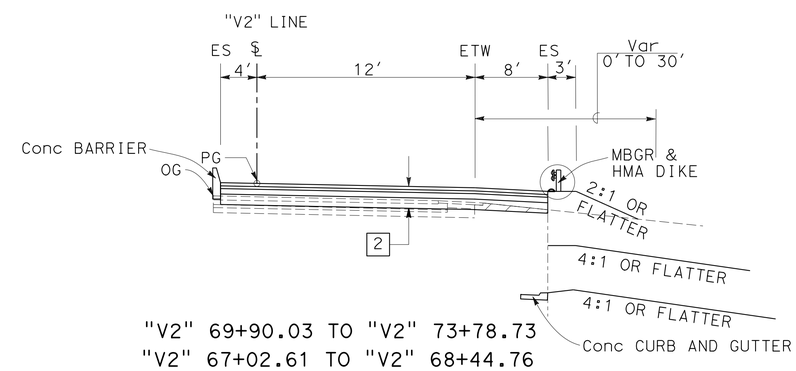

"V2" 69+90.03 TO "V2" 73+78.73
"V2" 67+02.61 TO "V2" 68+44.76

"V2" RAMP

CONSTRUCTION DETAILS

TYPICAL CROSS SECTION
EXCAVATION (AERIALLY DEPOSITED LEAD)

NO SCALE

C-52

STATE OF CALIFORNIA - DEPARTMENT OF TRANSPORTATION
Caltrans® OFFICE OF DESIGN D

FUNCTIONAL SUPERVISOR: NADER GOBRAN
CALCULATED-DESIGNED BY: AVERY CHAN
CHECKED BY: MOHAMED GHANNOUM
REVISED BY
DATE REVISED

LAST REVISION 00-00-00
DATE PLOTTED => 12-JUN-2013
TIME PLOTTED => 17:32

Dist	COUNTY	ROUTE	POST MILES TOTAL PROJECT	SHEET No.	TOTAL SHEETS
07	LA	10	33.2/37.2	151	1475

REGISTERED CIVIL ENGINEER 4-17-12 DATE

6-10-13
PLANS APPROVAL DATE

REGISTERED PROFESSIONAL ENGINEER MOHAMED GHANNOUM No. 72051 Exp. 6-30-14 CIVIL STATE OF CALIFORNIA

THE STATE OF CALIFORNIA OR ITS OFFICERS OR AGENTS SHALL NOT BE RESPONSIBLE FOR THE ACCURACY OR COMPLETENESS OF SCANNED COPIES OF THIS PLAN SHEET.

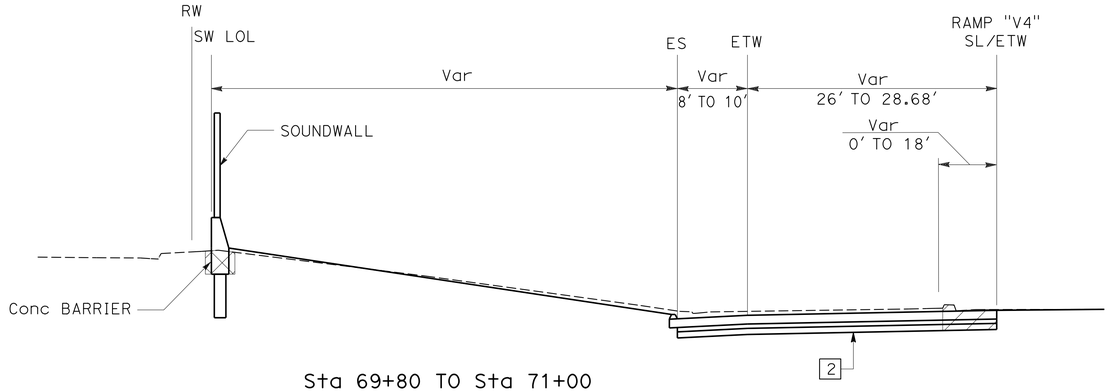

Sta 69+80 TO Sta 71+00

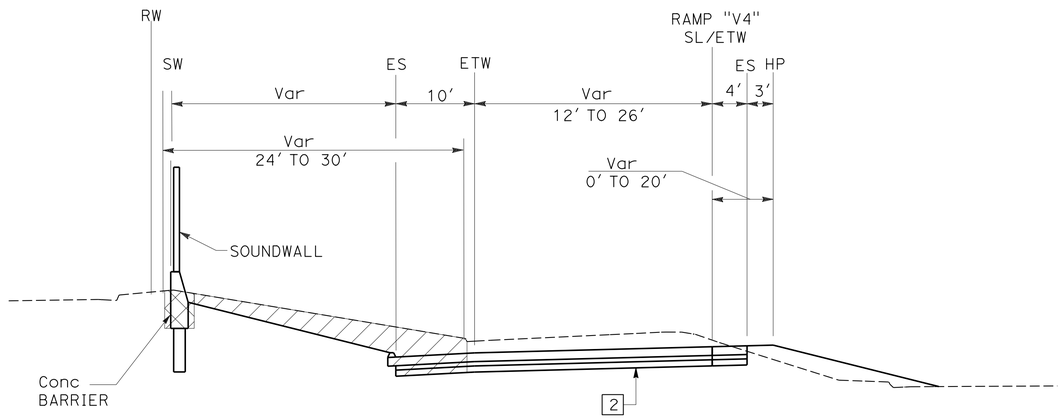

Sta 69+03 TO Sta 69+80

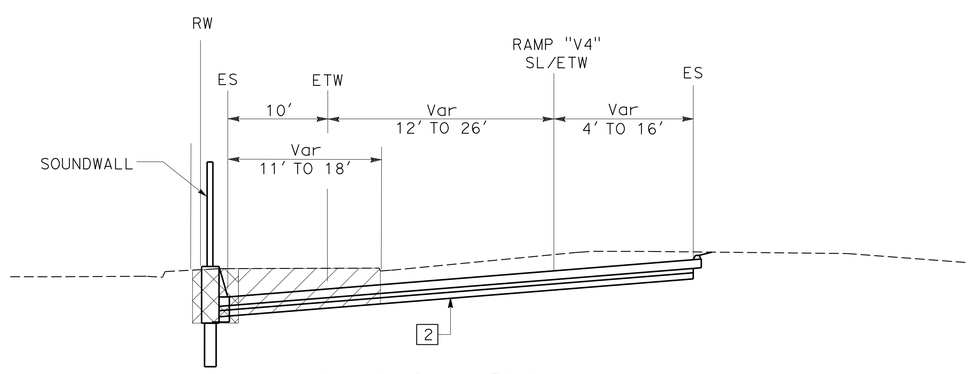

Sta 62+10.25 TO Sta 69+03

"V4" RAMP

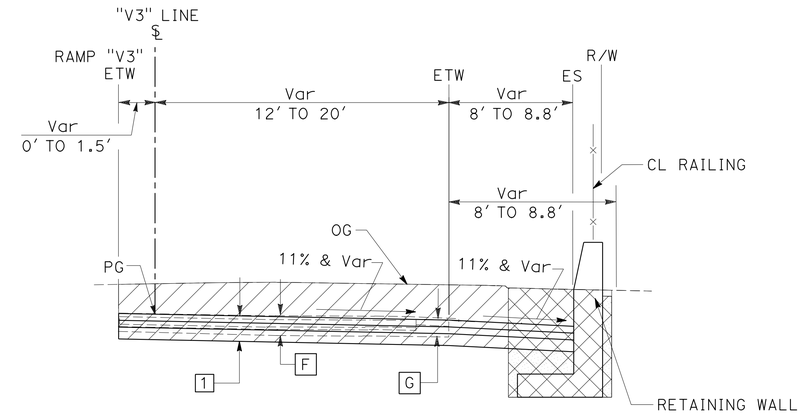

"V3" 74+00 TO "V3" 76+47

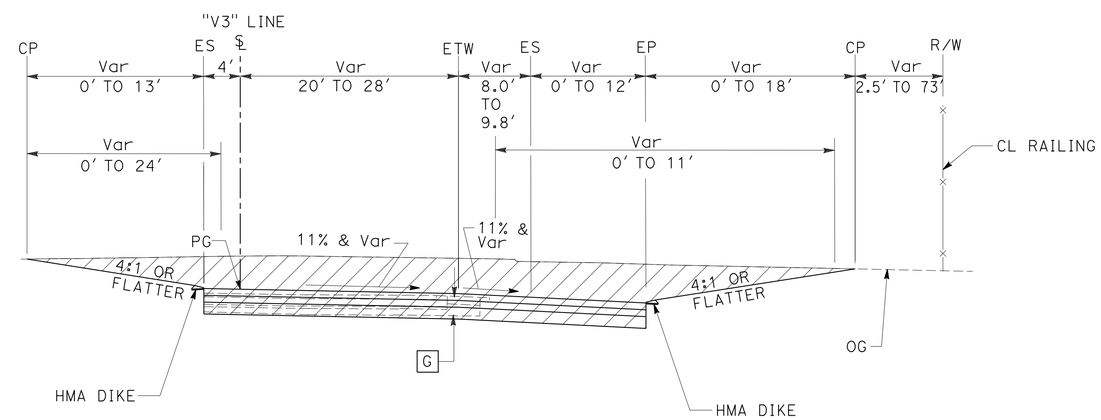

"V3" 69+20 TO "V3" 74+00

"V3" RAMP

CONSTRUCTION DETAILS

TYPICAL CROSS SECTION
EXCAVATION (AERIALLY DEPOSITED LEAD)

NO SCALE

C-53

STATE OF CALIFORNIA - DEPARTMENT OF TRANSPORTATION
Caltrans® OFFICE OF DESIGN D

FUNCTIONAL SUPERVISOR: NADER GOBRAN
CALCULATED-DESIGNED BY: BOJAN MISIC
CHECKED BY: MOHAMED GHANNOUM
REVISED BY
DATE REVISED

LAST REVISION 00-00-00
DATE PLOTTED => 12-JUN-2013
TIME PLOTTED => 17:32

Dist	COUNTY	ROUTE	POST MILES TOTAL PROJECT	SHEET No.	TOTAL SHEETS
07	LA	10	33.2/37.2	152	1475

4-17-12
REGISTERED CIVIL ENGINEER DATE

6-10-13
PLANS APPROVAL DATE

REGISTERED PROFESSIONAL ENGINEER
MOHAMED GHANNOUM
No. 72051
Exp. 6-30-14
CIVIL
STATE OF CALIFORNIA

THE STATE OF CALIFORNIA OR ITS OFFICERS OR AGENTS SHALL NOT BE RESPONSIBLE FOR THE ACCURACY OR COMPLETENESS OF SCANNED COPIES OF THIS PLAN SHEET.

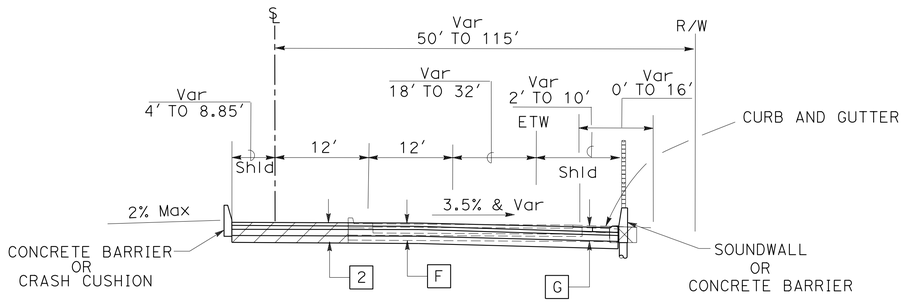

"A1"24+70.85 TO "A1"26+83.00

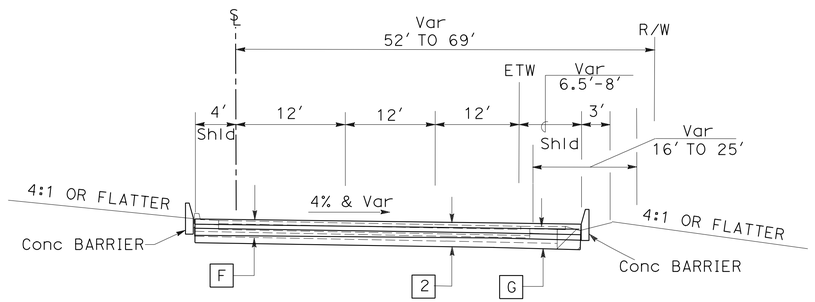

"A1" 24+00.00 TO "A1" 24+70.85

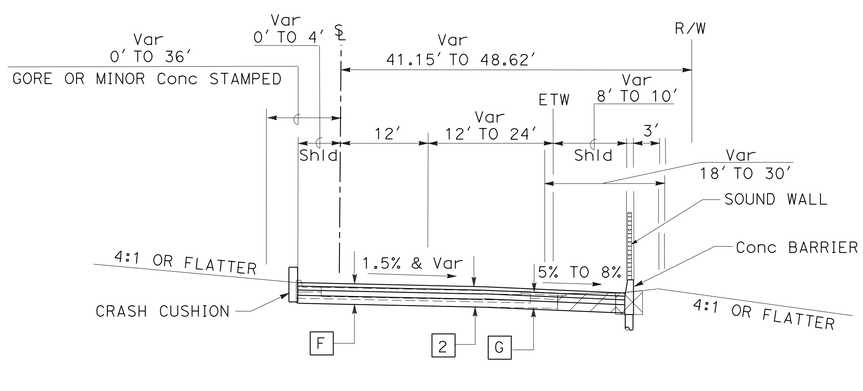

"A1" 16+58.72 TO "A1" 24+00

"A1" RAMP

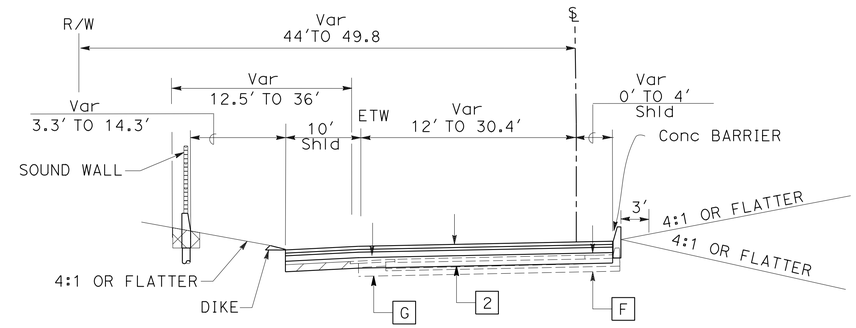

"V6" 70+67.00 TO "V6" 79+07.227

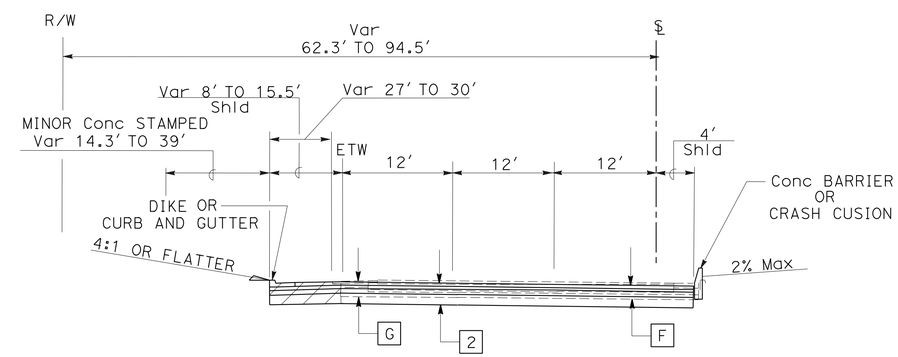

"V6" 69+05.25 TO "V6" 70+67.00

"V6" RAMP

CONSTRUCTION DETAILS

TYPICAL CROSS SECTION
EXCAVATION (AERIALLY DEPOSITED LEAD)

NO SCALE

C-54

STATE OF CALIFORNIA - DEPARTMENT OF TRANSPORTATION
Caltrans® OFFICE OF DESIGN D

FUNCTIONAL SUPERVISOR: NADER GOBRAN
CALCULATED-DESIGNED BY: MAJA KORZENIOWSKA
CHECKED BY: MOHAMED GHANNOUM
REVISED BY
DATE REVISED

LAST REVISION 00-00-00
DATE PLOTTED => 12-JUN-2013
TIME PLOTTED => 17:32

Dist	COUNTY	ROUTE	POST MILES TOTAL PROJECT	SHEET No.	TOTAL SHEETS
07	LA	10	33.2/37.2	153	1475

4-17-12
REGISTERED CIVIL ENGINEER DATE

6-10-13
PLANS APPROVAL DATE

REGISTERED PROFESSIONAL ENGINEER
MOHAMED GHANNOUM
No. 72051
Exp. 6-30-14
CIVIL
STATE OF CALIFORNIA

THE STATE OF CALIFORNIA OR ITS OFFICERS OR AGENTS SHALL NOT BE RESPONSIBLE FOR THE ACCURACY OR COMPLETENESS OF SCANNED COPIES OF THIS PLAN SHEET.

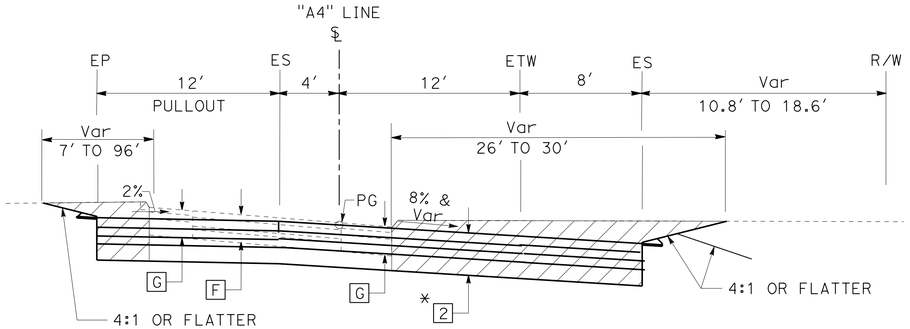

"A4" 28+10.0 TO "A4" 30+28.57
* 2 → 1 AT 29+45.0

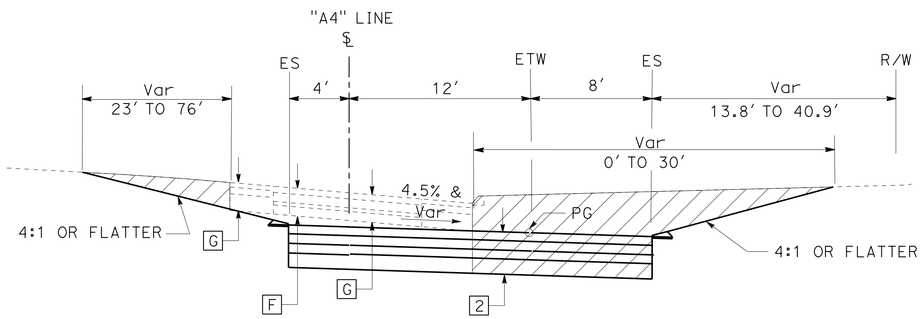

"A4" 27+20.0 TO "A4" 28+10.0

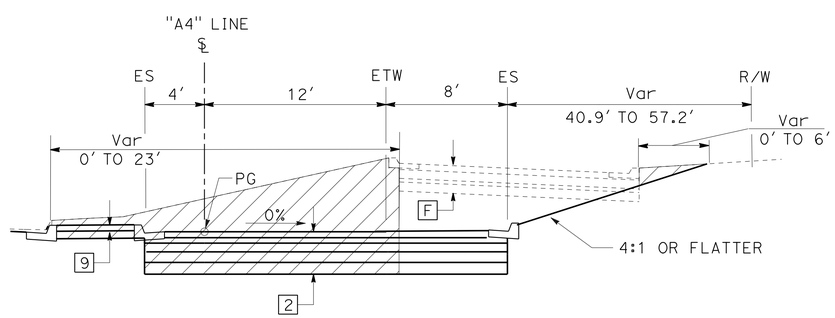

"A4" 26+86.2 TO "A4" 27+20.0

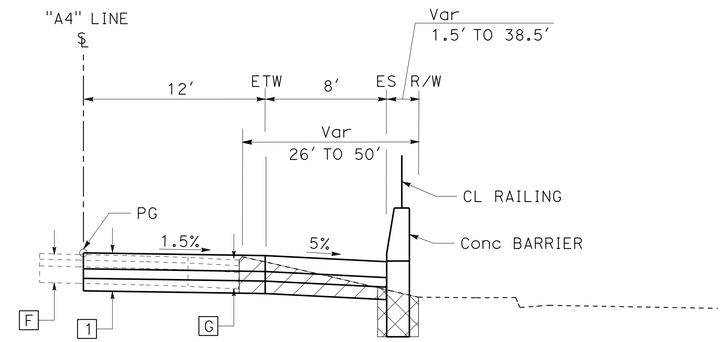

"A4" 32+32.5 TO "A4" 39+34.5

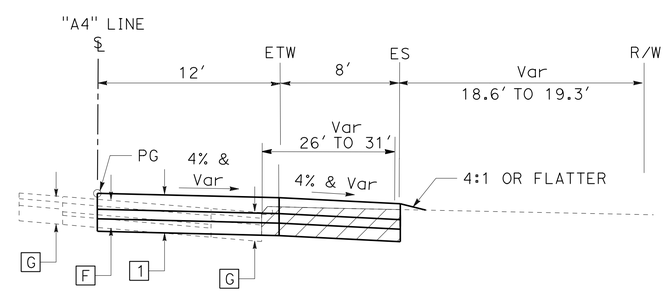

"A4" 30+28.57 TO "A4" 32+32.50

"A4" RAMP

CONSTRUCTION DETAILS

TYPICAL CROSS SECTION
EXCAVATION (AERIALLY DEPOSITED LEAD)

NO SCALE

C-55

STATE OF CALIFORNIA - DEPARTMENT OF TRANSPORTATION
Caltrans® OFFICE OF DESIGN D

FUNCTIONAL SUPERVISOR: NADER GOBRAN
CALCULATED-DESIGNED BY: MAJA KORZENIOWSKA
CHECKED BY: MOHAMED GHANNOUM
REVISED BY
DATE REVISED

LAST REVISION 00-00-00
DATE PLOTTED => 12-JUN-2013
TIME PLOTTED => 17:32

Dist	COUNTY	ROUTE	POST MILES TOTAL PROJECT	SHEET No.	TOTAL SHEETS
07	LA	10	33.2/37.2	154	1475

4-17-12
REGISTERED CIVIL ENGINEER DATE

6-10-13
PLANS APPROVAL DATE

REGISTERED PROFESSIONAL ENGINEER
MOHAMED GHANNOUM
No. 72051
Exp. 6-30-14
CIVIL
STATE OF CALIFORNIA

THE STATE OF CALIFORNIA OR ITS OFFICERS OR AGENTS SHALL NOT BE RESPONSIBLE FOR THE ACCURACY OR COMPLETENESS OF SCANNED COPIES OF THIS PLAN SHEET.

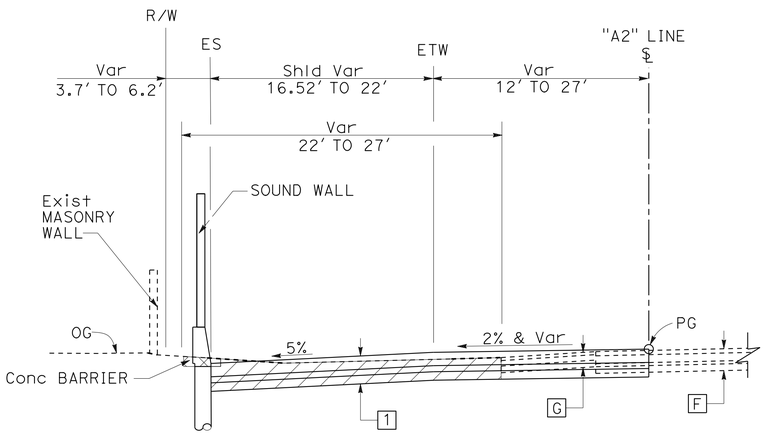

"A2" 19+47 TO "A2" 24+88

"A2" RAMP

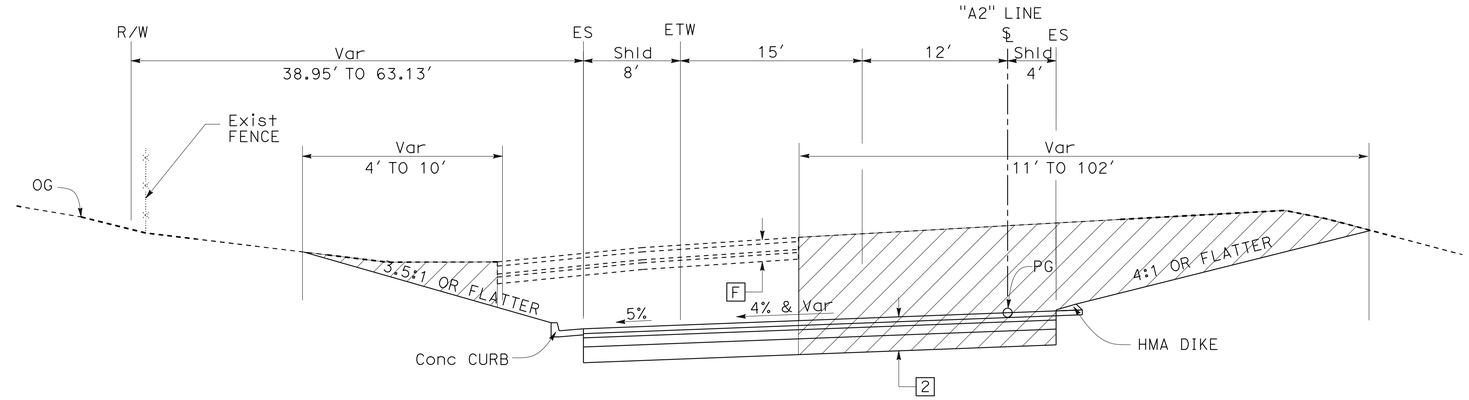

"A2" 25+77.47 TO "A2" 26+73.47

"A2" RAMP

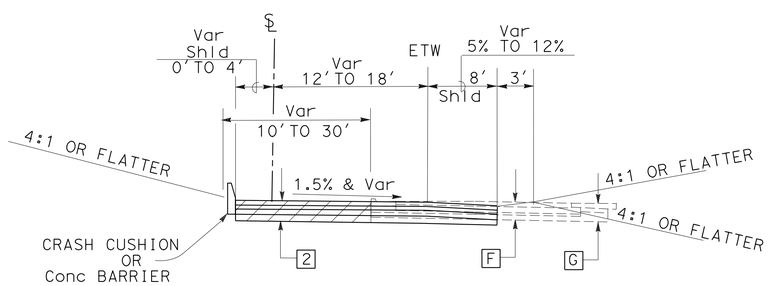

"A5" 21+24.00 TO "A5" 29+73.56

"A5" RAMP

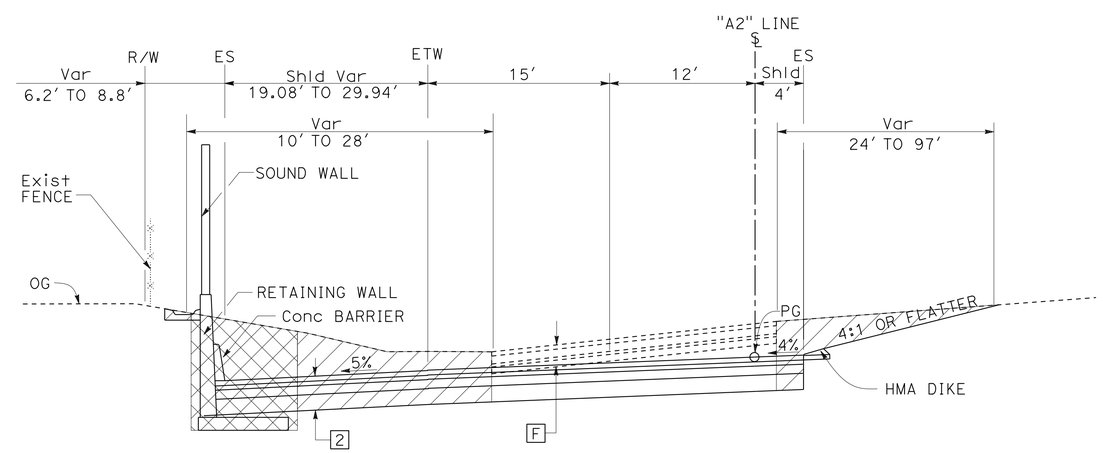

"A2" 24+88 TO "A2" 25+77.47

"A2" RAMP

CONSTRUCTION DETAILS

TYPICAL CROSS SECTION
EXCAVATION (AERIALLY DEPOSITED LEAD)

NO SCALE

C-56

STATE OF CALIFORNIA - DEPARTMENT OF TRANSPORTATION
Caltrans® OFFICE OF DESIGN D

FUNCTIONAL SUPERVISOR: NADER GOBRAN
CALCULATED-DESIGNED BY: MINH TU
CHECKED BY: MOHAMED GHANNOUM
REVISED BY
DATE REVISED

LAST REVISION 00-00-00
DATE PLOTTED => 12-JUN-2013
TIME PLOTTED => 17:32

Dist	COUNTY	ROUTE	POST MILES TOTAL PROJECT	SHEET No.	TOTAL SHEETS
07	LA	10	33.2/37.2	155	1475

4-17-12
REGISTERED CIVIL ENGINEER DATE

6-10-13
PLANS APPROVAL DATE

REGISTERED PROFESSIONAL ENGINEER
MOHAMED GHANNOUM
No. 72051
Exp. 6-30-14
CIVIL
STATE OF CALIFORNIA

THE STATE OF CALIFORNIA OR ITS OFFICERS OR AGENTS SHALL NOT BE RESPONSIBLE FOR THE ACCURACY OR COMPLETENESS OF SCANNED COPIES OF THIS PLAN SHEET.

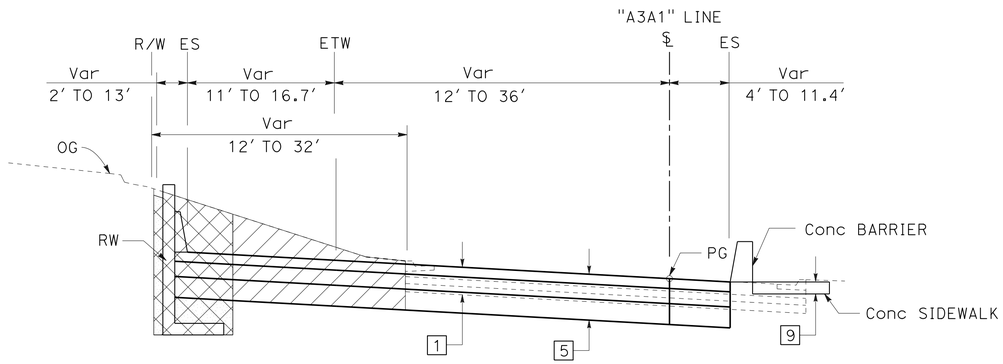

"A3A1" 27+40 TO "A3A1" 29+00

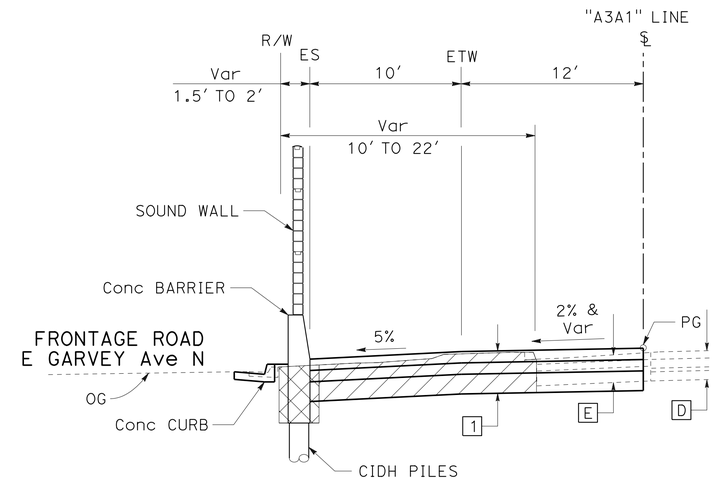

"A3A1" 34+13.62 TO "A3A1" 36+84.28

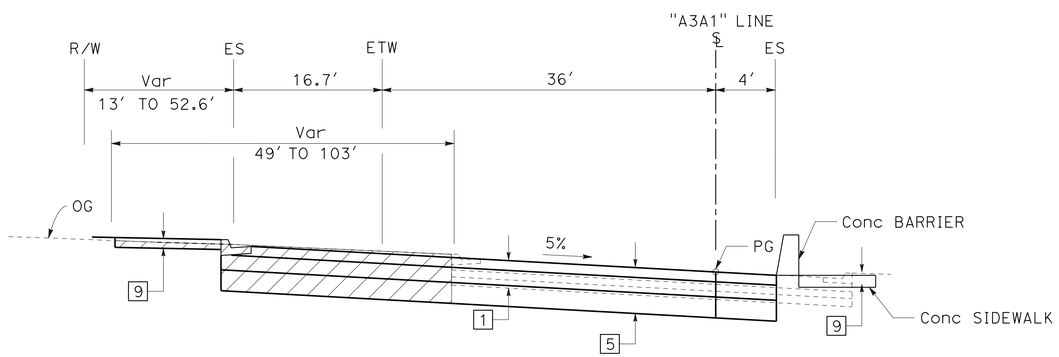

"A3A1" 16+86.30 TO "A3A1" 27+40

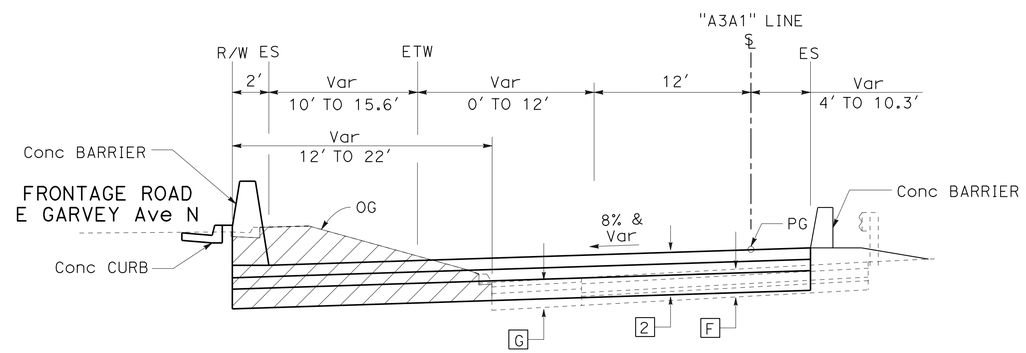

"A3A1" 29+00 TO "A3A1" 34+13.62

"A3A1" RAMP

CONSTRUCTION DETAILS

TYPICAL CROSS SECTION
EXCAVATION (AERIALLY DEPOSITED LEAD)

NO SCALE

C-57

STATE OF CALIFORNIA - DEPARTMENT OF TRANSPORTATION
Caltrans® OFFICE OF DESIGN D

FUNCTIONAL SUPERVISOR: NADER GOBRAN
CALCULATED-DESIGNED BY: JEROME G ARABE
CHECKED BY: MOHAMED GHANNOUM
REVISED BY
DATE REVISED

LAST REVISION 00-00-00
DATE PLOTTED => 12-JUN-2013
TIME PLOTTED => 17:32

Dist	COUNTY	ROUTE	POST MILES TOTAL PROJECT	SHEET No.	TOTAL SHEETS
07	LA	10	33.2/37.2	156	1475

4-17-12
REGISTERED CIVIL ENGINEER DATE

6-10-13
PLANS APPROVAL DATE

REGISTERED PROFESSIONAL ENGINEER
MOHAMED GHANNOUM
No. 72051
Exp. 6-30-14
CIVIL
STATE OF CALIFORNIA

THE STATE OF CALIFORNIA OR ITS OFFICERS OR AGENTS SHALL NOT BE RESPONSIBLE FOR THE ACCURACY OR COMPLETENESS OF SCANNED COPIES OF THIS PLAN SHEET.

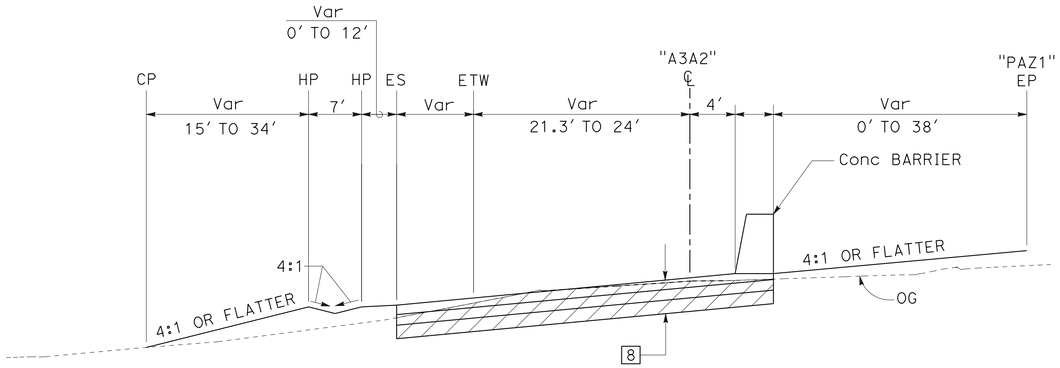

Sta 28+56 TO Sta 32+00

WB LOOP ON-RAMP "A3A2"

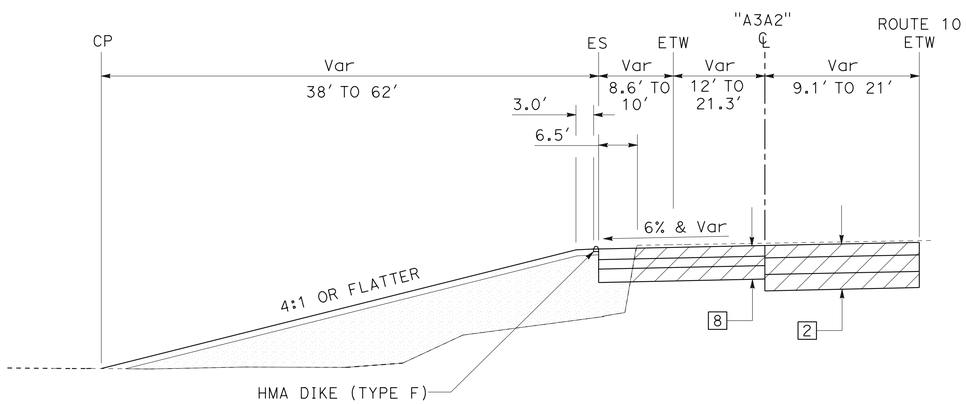

Sta 27+80 TO Sta 28+56

WB LOOP ON-RAMP "A3A2"

"A3A2" RAMP

CONSTRUCTION DETAILS

TYPICAL CROSS SECTION
EXCAVATION (AERIALLY DEPOSITED LEAD)

NO SCALE

C-58

STATE OF CALIFORNIA - DEPARTMENT OF TRANSPORTATION
Caltrans® OFFICE OF DESIGN D

FUNCTIONAL SUPERVISOR: NADER GOBRAN
CALCULATED-DESIGNED BY: BOJAN MISC
CHECKED BY: MOHAMED GHANNOUM
REVISED BY
DATE REVISED

LAST REVISION 00-00-00
DATE PLOTTED => 12-JUN-2013
TIME PLOTTED => 17:32

Dist	COUNTY	ROUTE	POST MILES TOTAL PROJECT	SHEET No.	TOTAL SHEETS
07	LA	10	33.2/37.2	157	1475

4-17-12
REGISTERED CIVIL ENGINEER DATE

6-10-13
PLANS APPROVAL DATE

REGISTERED PROFESSIONAL ENGINEER
MOHAMED GHANNOUM
No. 72051
Exp. 06/30/14
CIVIL
STATE OF CALIFORNIA

THE STATE OF CALIFORNIA OR ITS OFFICERS OR AGENTS SHALL NOT BE RESPONSIBLE FOR THE ACCURACY OR COMPLETENESS OF SCANNED COPIES OF THIS PLAN SHEET.

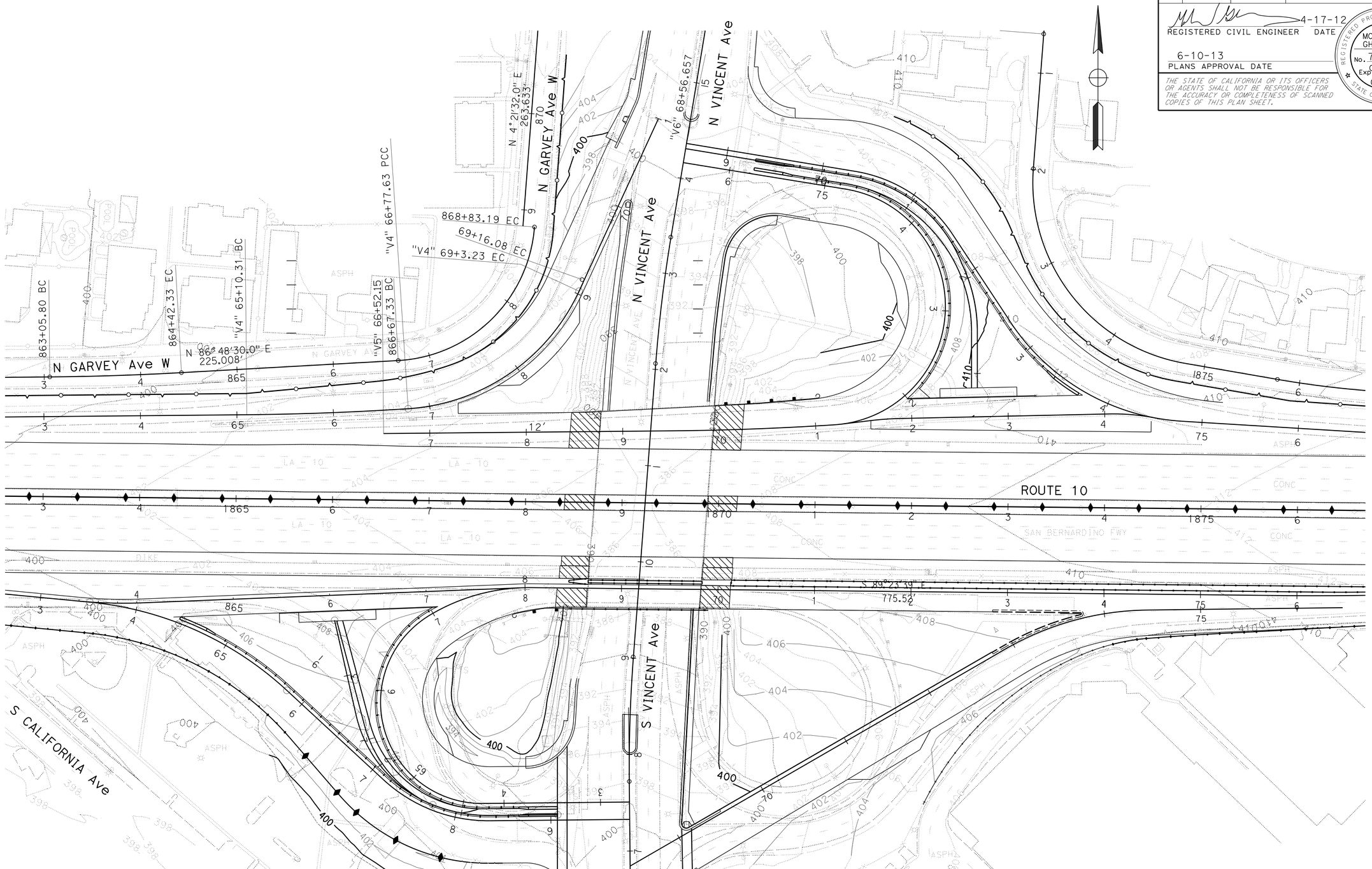

CONTOUR GRADING
VINCENT AVENUE UNDERCROSSING

NO SCALE

G-1

APPROVED FOR CONTOUR GRADING WORK ONLY

STATE OF CALIFORNIA - DEPARTMENT OF TRANSPORTATION
Caltrans® OFFICE OF DESIGN D

FUNCTIONAL SUPERVISOR: NADER GOBRAN

CALCULATED-DESIGNED BY: MOHAMED GHANNOUM
CHECKED BY: JEROME ARABE

REVISED BY
DATE REVISED

LAST REVISION 00-00-00
DATE PLOTTED => 12-JUN-2013
TIME PLOTTED => 17:32

Dist	COUNTY	ROUTE	POST MILES TOTAL PROJECT	SHEET No.	TOTAL SHEETS
07	LA	10	33.2/37.2	158	1475

4-17-12
REGISTERED CIVIL ENGINEER DATE

6-10-13
PLANS APPROVAL DATE

REGISTERED PROFESSIONAL ENGINEER
MOHAMED GHANNOUM
No. 72051
Exp. 06/30/14
CIVIL
STATE OF CALIFORNIA

THE STATE OF CALIFORNIA OR ITS OFFICERS OR AGENTS SHALL NOT BE RESPONSIBLE FOR THE ACCURACY OR COMPLETENESS OF SCANNED COPIES OF THIS PLAN SHEET.

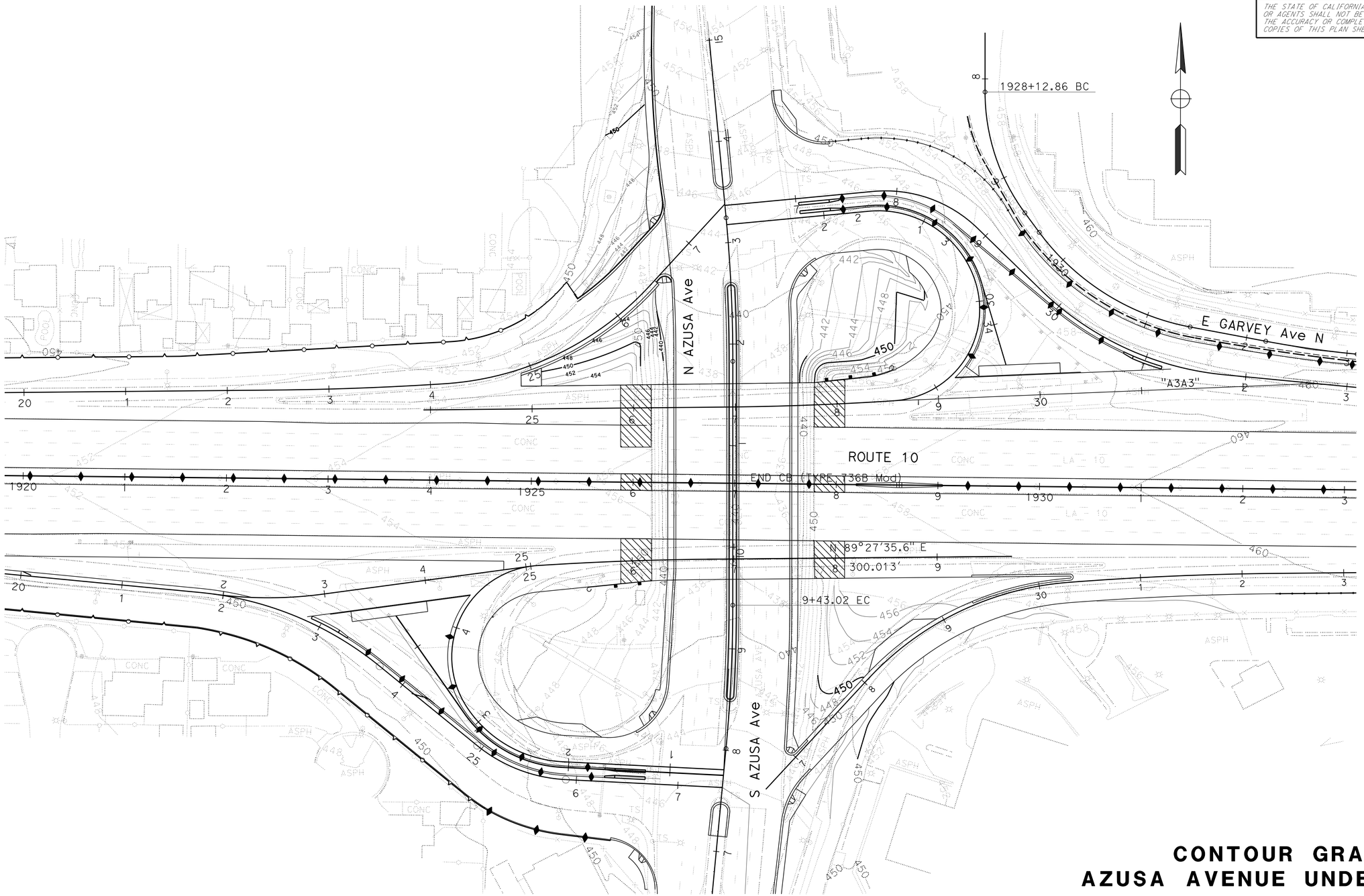

CONTOUR GRADING
AZUSA AVENUE UNDERCROSSING

NO SCALE

G-2

APPROVED FOR CONTOUR GRADING WORK ONLY

STATE OF CALIFORNIA - DEPARTMENT OF TRANSPORTATION
Caltrans® OFFICE OF DESIGN D

FUNCTIONAL SUPERVISOR: NADER GOBRAN
CALCULATED-DESIGNED BY: AVERY CHAN
CHECKED BY: MOHAMED GHANNOUM
REVISED BY
DATE REVISED

LAST REVISION 00-00-00
DATE PLOTTED => 12-JUN-2013
TIME PLOTTED => 17:32

Dist	COUNTY	ROUTE	POST MILES TOTAL PROJECT	SHEET No.	TOTAL SHEETS
07	LA	10	33.2/37.2	159	1475

REGISTERED CIVIL ENGINEER 4-17-12 DATE

6-10-13
PLANS APPROVAL DATE

REGISTERED PROFESSIONAL ENGINEER DAVE BHALLA No. 34350 Exp. 9/30/13 CIVIL STATE OF CALIFORNIA

THE STATE OF CALIFORNIA OR ITS OFFICERS OR AGENTS SHALL NOT BE RESPONSIBLE FOR THE ACCURACY OR COMPLETENESS OF SCANNED COPIES OF THIS PLAN SHEET.

NOTES:

1. FOR ACCURATE RIGHT OF WAY DATA, CONTACT RIGHT OF WAY ENGINEERING AT THE DISTRICT OFFICE.
2. THE CONTRACTOR SHALL VERIFY LOCATIONS AND ELEVATIONS OF EXISTING AND PROPOSED DRAINAGE SYSTEMS BEFORE COMMENCEMENT OF WORK.

LEGEND:

(No.) DRAINAGE SYSTEM NUMBER

(xx) DRAINAGE ITEM

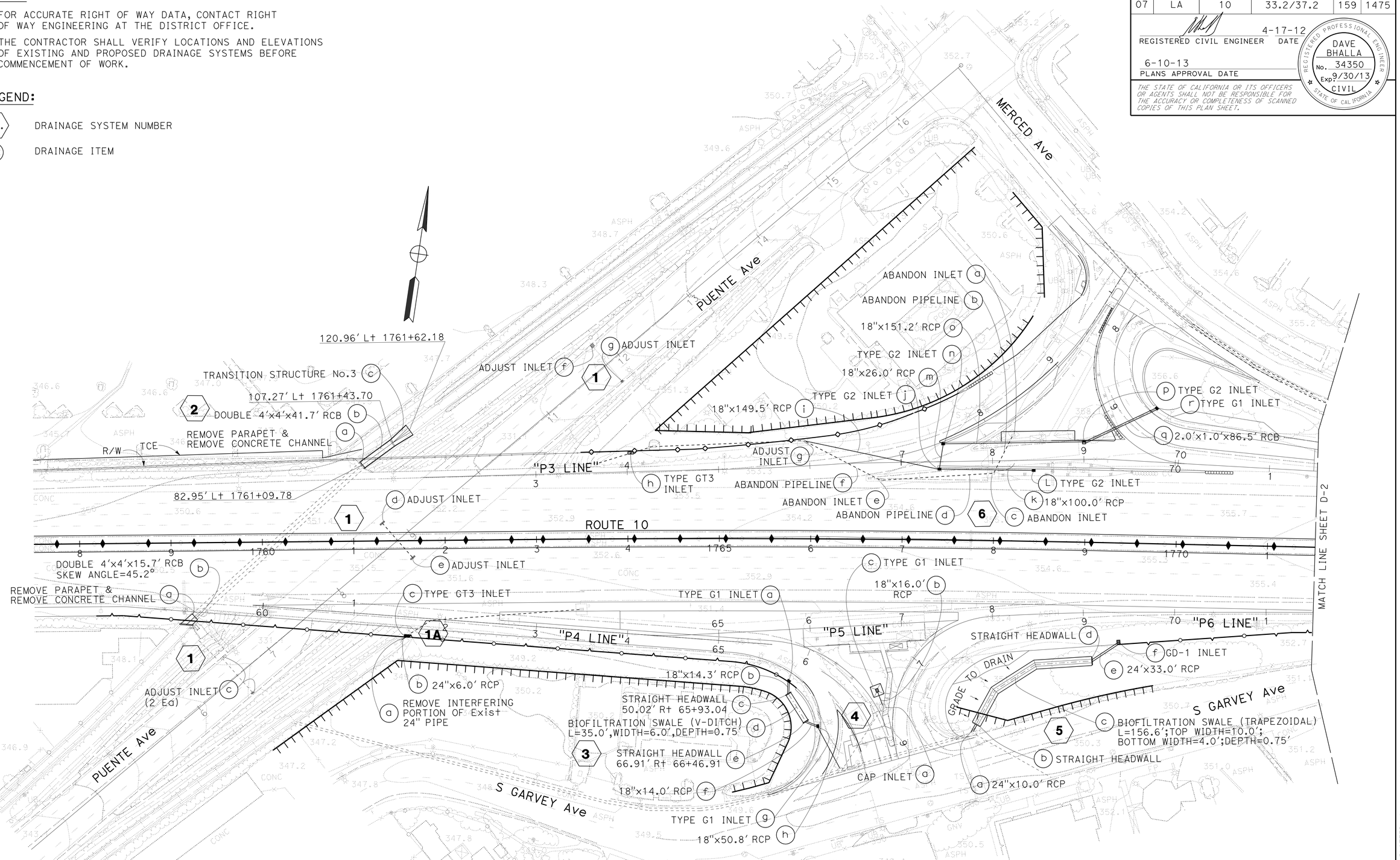

DRAINAGE PLAN

SCALE: 1" = 50'

D-1

APPROVED FOR DRAINAGE WORK ONLY

STATE OF CALIFORNIA - DEPARTMENT OF TRANSPORTATION
Caltrans
HYDRAULICS

FUNCTIONAL SUPERVISOR: DAVE BHALLA
CALCULATED-DESIGNED BY: C. P. NGUYEN
CHECKED BY: D. BHALLA
REVISED BY
DATE REVISED

LAST REVISION 06-09-12
DATE PLOTTED => 13-JUN-2013
TIME PLOTTED => 09:16

Dist	COUNTY	ROUTE	POST MILES TOTAL PROJECT	SHEET No.	TOTAL SHEETS
07	LA	10	33.2/37.2	160	1475

REGISTERED CIVIL ENGINEER 4-17-12 DATE

6-10-13
PLANS APPROVAL DATE

REGISTERED PROFESSIONAL ENGINEER DAVE BHALLA No. 34350 Exp. 9/30/13 CIVIL STATE OF CALIFORNIA

THE STATE OF CALIFORNIA OR ITS OFFICERS OR AGENTS SHALL NOT BE RESPONSIBLE FOR THE ACCURACY OR COMPLETENESS OF SCANNED COPIES OF THIS PLAN SHEET.

NOTE:

FOR ACCURATE RIGHT OF WAY DATA,
CONTACT RIGHT OF WAY ENGINEERING AT THE DISTRICT OFFICE.

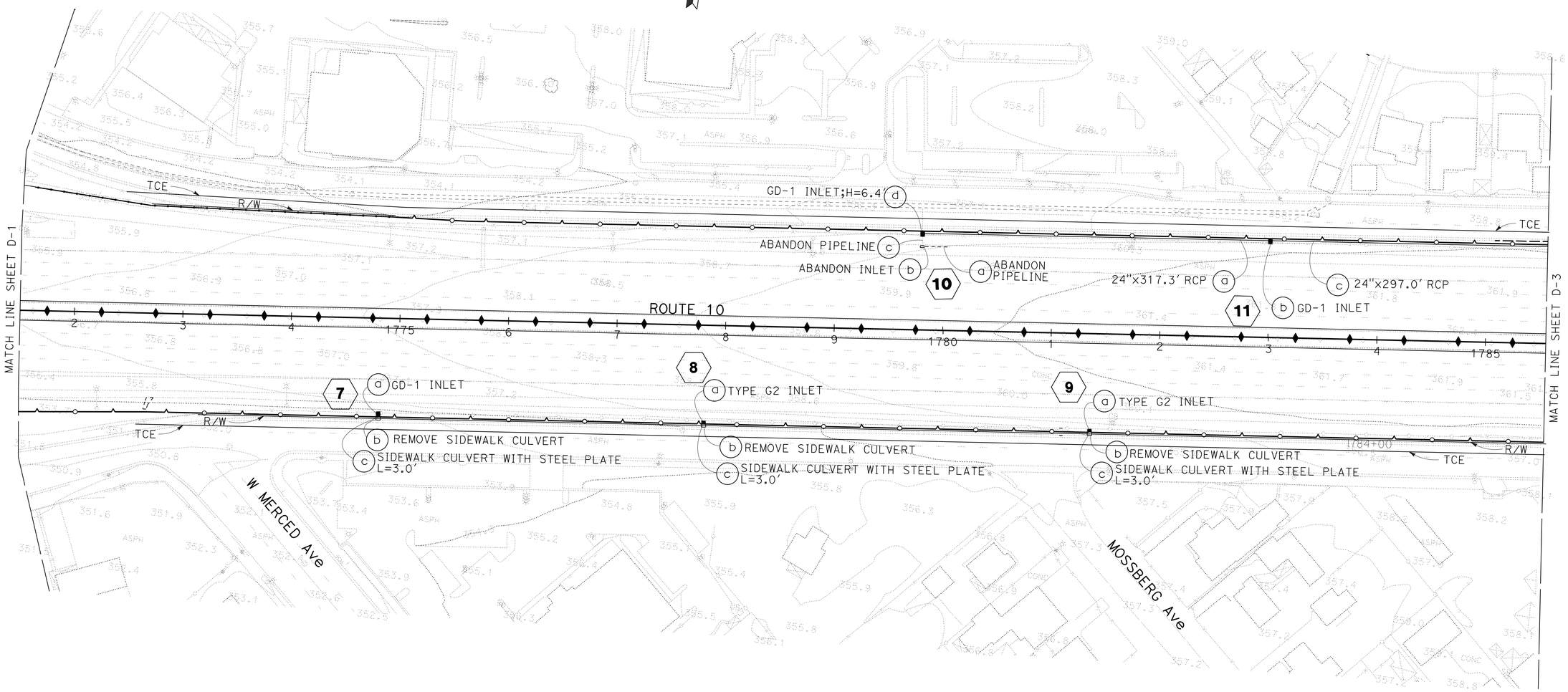

DRAINAGE PLAN

SCALE: 1" = 50'

D-2

APPROVED FOR DRAINAGE WORK ONLY

STATE OF CALIFORNIA - DEPARTMENT OF TRANSPORTATION
Caltrans
HYDRAULICS

FUNCTIONAL SUPERVISOR: DAVE BHALLA
CALCULATED-DESIGNED BY: C. P. NGUYEN
CHECKED BY: D. BHALLA
REVISED BY
DATE REVISED

LAST REVISION 06-09-12
DATE PLOTTED => 12-JUN-2013
TIME PLOTTED => 17:32

Dist	COUNTY	ROUTE	POST MILES TOTAL PROJECT	SHEET No.	TOTAL SHEETS
07	LA	10	33.2/37.2	161	1475

REGISTERED CIVIL ENGINEER 4-17-12 DATE

6-10-13
PLANS APPROVAL DATE

REGISTERED PROFESSIONAL ENGINEER
DAVE BHALLA
No. 34350
Exp. 9/30/13
CIVIL
STATE OF CALIFORNIA

THE STATE OF CALIFORNIA OR ITS OFFICERS OR AGENTS SHALL NOT BE RESPONSIBLE FOR THE ACCURACY OR COMPLETENESS OF SCANNED COPIES OF THIS PLAN SHEET.

NOTE:
FOR ACCURATE RIGHT OF WAY DATA,
CONTACT RIGHT OF WAY ENGINEERING AT THE DISTRICT OFFICE.

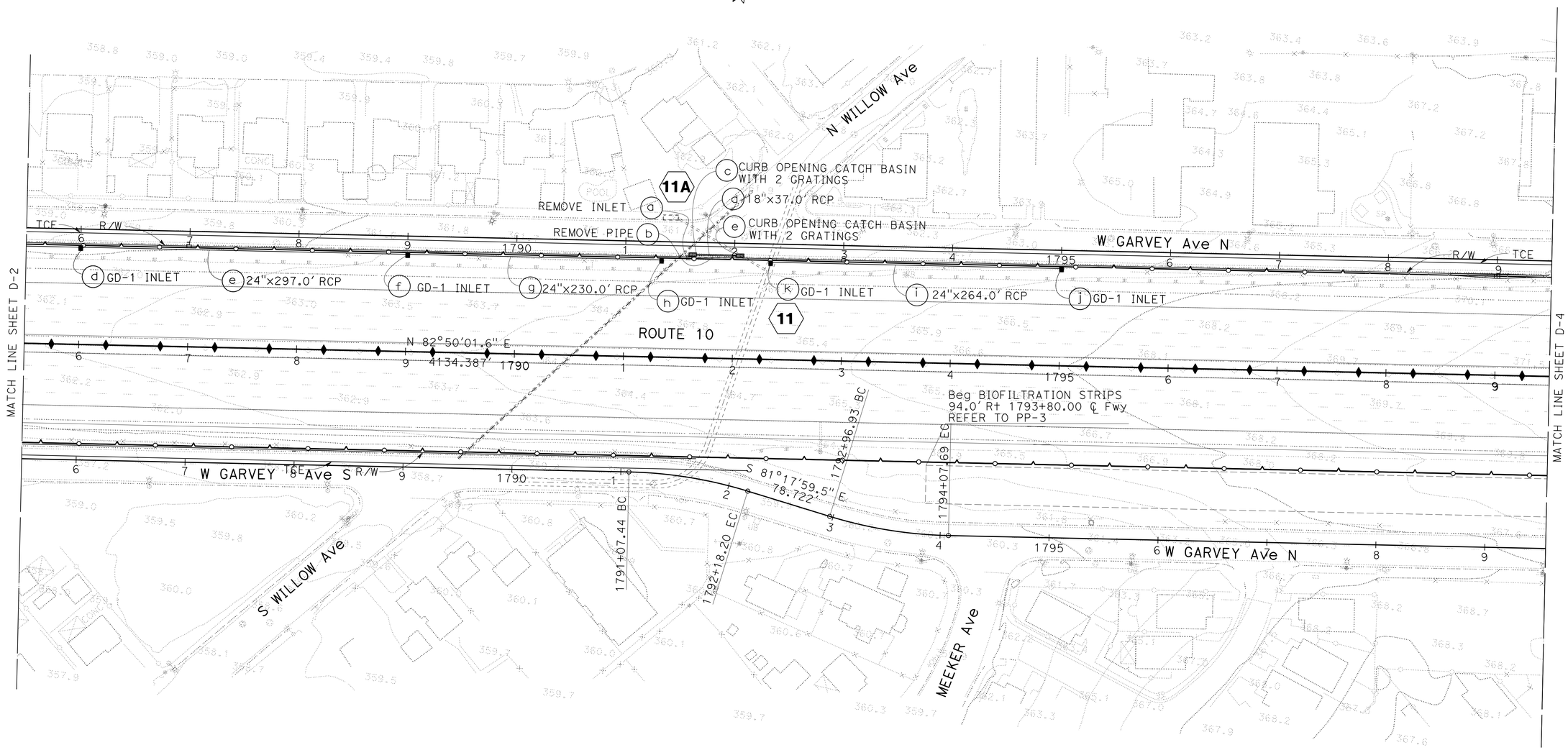

DRAINAGE PLAN

SCALE: 1" = 50'

D-3

APPROVED FOR DRAINAGE WORK ONLY

STATE OF CALIFORNIA - DEPARTMENT OF TRANSPORTATION
Caltrans
HYDRAULICS

FUNCTIONAL SUPERVISOR: DAVE BHALLA
CALCULATED-DESIGNED BY: C. P. NGUYEN
CHECKED BY: D. BHALLA
REVISED BY
DATE REVISED

LAST REVISION 06-09-12
DATE PLOTTED => 12-JUN-2013
TIME PLOTTED => 17:32

Dist	COUNTY	ROUTE	POST MILES TOTAL PROJECT	SHEET No.	TOTAL SHEETS
07	LA	10	33.2/37.2	162	1475

REGISTERED CIVIL ENGINEER 4-17-12 DATE

6-10-13
PLANS APPROVAL DATE

REGISTERED PROFESSIONAL ENGINEER DAVE BHALLA No. 34350 Exp. 9/30/13 CIVIL STATE OF CALIFORNIA

THE STATE OF CALIFORNIA OR ITS OFFICERS OR AGENTS SHALL NOT BE RESPONSIBLE FOR THE ACCURACY OR COMPLETENESS OF SCANNED COPIES OF THIS PLAN SHEET.

NOTE:
FOR ACCURATE RIGHT OF WAY DATA,
CONTACT RIGHT OF WAY ENGINEERING AT THE DISTRICT OFFICE.

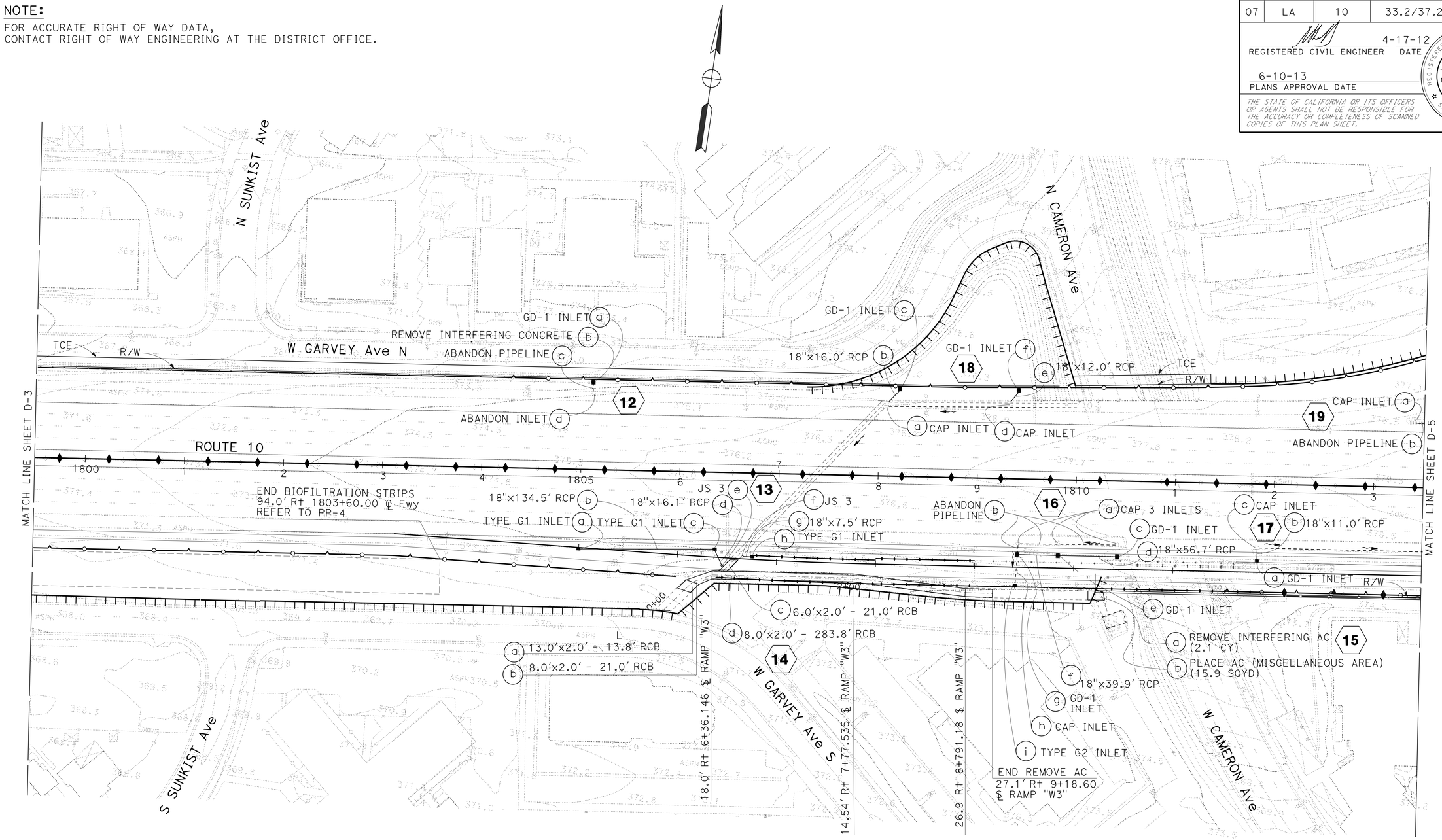

DRAINAGE PLAN

SCALE: 1" = 50'

D-4

APPROVED FOR DRAINAGE WORK ONLY

STATE OF CALIFORNIA - DEPARTMENT OF TRANSPORTATION
Caltrans
HYDRAULICS

FUNCTIONAL SUPERVISOR: DAVE BHALLA
CALCULATED-DESIGNED BY: C. P. NGUYEN
CHECKED BY: D. BHALLA
REVISED BY
DATE REVISED

LAST REVISION 06-09-12
DATE PLOTTED => 12-JUN-2013
TIME PLOTTED => 17:32

Dist	COUNTY	ROUTE	POST MILES TOTAL PROJECT	SHEET No.	TOTAL SHEETS
07	LA	10	33.2/37.2	163	1475

REGISTERED CIVIL ENGINEER 4-17-12 DATE

6-10-13
PLANS APPROVAL DATE

REGISTERED PROFESSIONAL ENGINEER DAVE BHALLA No. 34350 Exp. 9/30/13 CIVIL STATE OF CALIFORNIA

THE STATE OF CALIFORNIA OR ITS OFFICERS OR AGENTS SHALL NOT BE RESPONSIBLE FOR THE ACCURACY OR COMPLETENESS OF SCANNED COPIES OF THIS PLAN SHEET.

NOTE:

FOR ACCURATE RIGHT OF WAY DATA,
CONTACT RIGHT OF WAY ENGINEERING AT THE DISTRICT OFFICE.

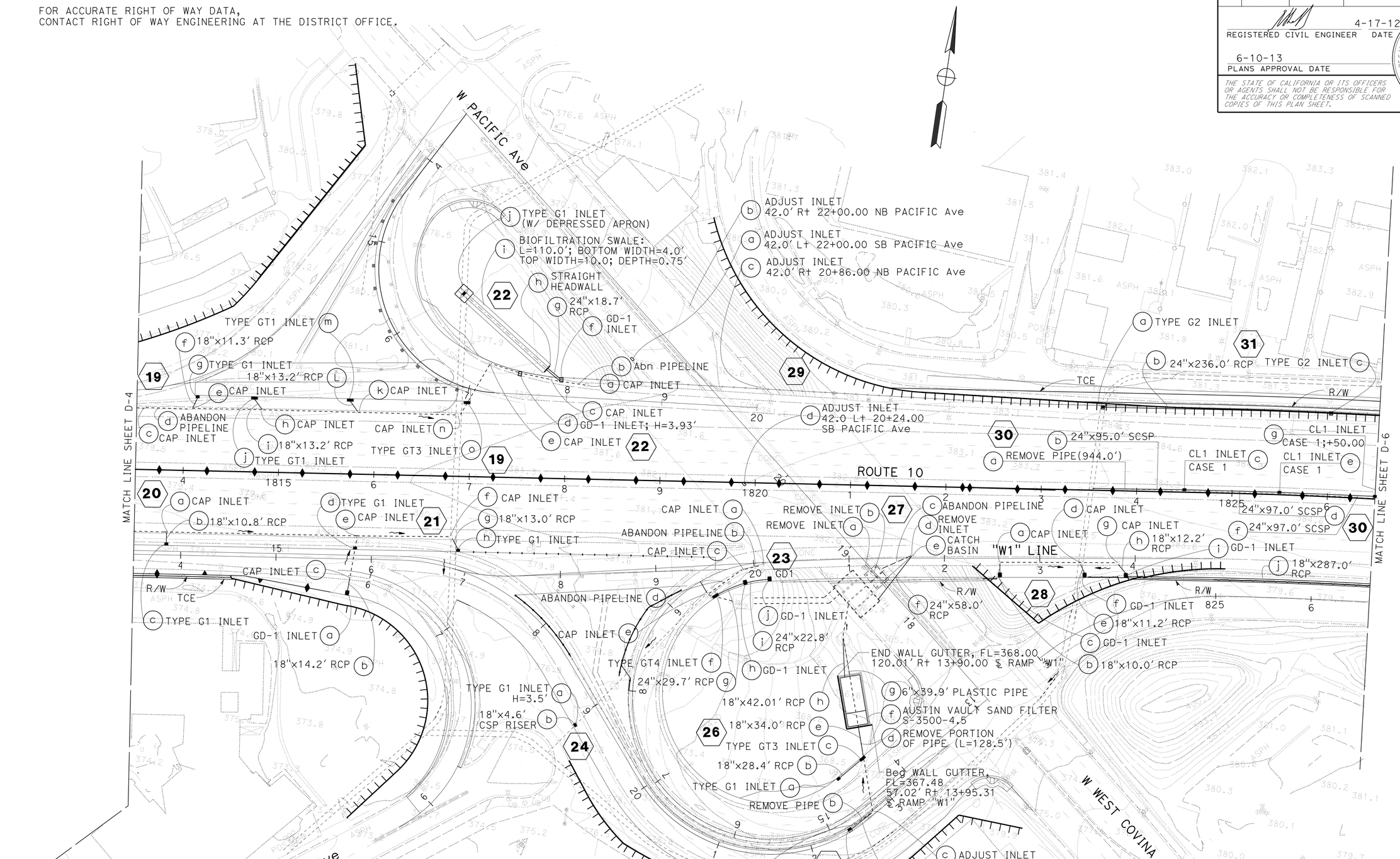

DRAINAGE PLAN

SCALE: 1" = 50'

D-5

APPROVED FOR DRAINAGE WORK ONLY

STATE OF CALIFORNIA - DEPARTMENT OF TRANSPORTATION
Caltrans
HYDRAULICS

FUNCTIONAL SUPERVISOR: DAVE BHALLA
CALCULATED-DESIGNED BY: C. P. NGUYEN
CHECKED BY: D. BHALLA
REVISED BY
DATE REVISED

LAST REVISION 06-09-12
DATE PLOTTED => 12-JUN-2013
TIME PLOTTED => 17:32

Dist	COUNTY	ROUTE	POST MILES TOTAL PROJECT	SHEET No.	TOTAL SHEETS
07	LA	10	33.2/37.2	164	1475

REGISTERED CIVIL ENGINEER 4-17-12 DATE

6-10-13
PLANS APPROVAL DATE

REGISTERED PROFESSIONAL ENGINEER DAVE BHALLA No. 34350 Exp. 9/30/13 CIVIL STATE OF CALIFORNIA

THE STATE OF CALIFORNIA OR ITS OFFICERS OR AGENTS SHALL NOT BE RESPONSIBLE FOR THE ACCURACY OR COMPLETENESS OF SCANNED COPIES OF THIS PLAN SHEET.

NOTE:

FOR ACCURATE RIGHT OF WAY DATA,
CONTACT RIGHT OF WAY ENGINEERING AT THE DISTRICT OFFICE.

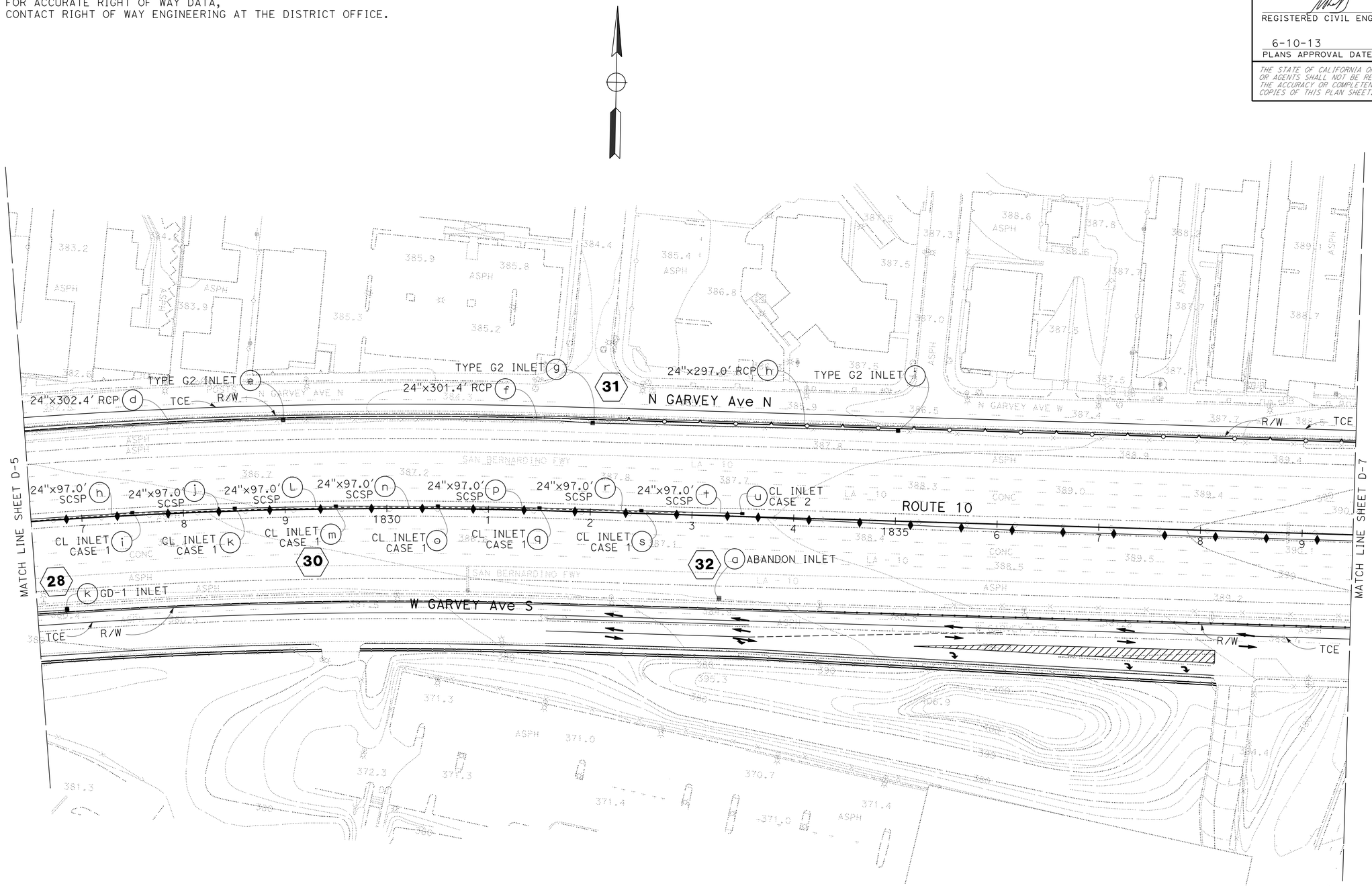

DRAINAGE PLAN

SCALE: 1" = 50'

D-6

APPROVED FOR DRAINAGE WORK ONLY

STATE OF CALIFORNIA - DEPARTMENT OF TRANSPORTATION
Caltrans
HYDRAULICS

FUNCTIONAL SUPERVISOR: DAVE BHALLA
CALCULATED-DESIGNED BY: C. P. NGUYEN
CHECKED BY: D. BHALLA
REVISED BY
DATE REVISED

LAST REVISION 06-13-12
DATE PLOTTED => 12-JUN-2013
TIME PLOTTED => 17:32

BORDER LAST REVISED 7/2/2010
USERNAME => s109858
DGN FILE => 71170uia006.dgn
RELATIVE BORDER SCALE IS IN INCHES 0 1 2 3
UNIT 1837
PROJECT NUMBER & PHASE 07000000851

Dist	COUNTY	ROUTE	POST MILES TOTAL PROJECT	SHEET No.	TOTAL SHEETS
07	LA	10	33.2/37.2	165	1475

REGISTERED CIVIL ENGINEER 4-17-12 DATE

6-10-13
PLANS APPROVAL DATE

REGISTERED PROFESSIONAL ENGINEER DAVE BHALLA No. 34350 Exp. 9/30/13 CIVIL STATE OF CALIFORNIA

THE STATE OF CALIFORNIA OR ITS OFFICERS OR AGENTS SHALL NOT BE RESPONSIBLE FOR THE ACCURACY OR COMPLETENESS OF SCANNED COPIES OF THIS PLAN SHEET.

NOTE:

FOR ACCURATE RIGHT OF WAY DATA,
CONTACT RIGHT OF WAY ENGINEERING AT THE DISTRICT OFFICE.

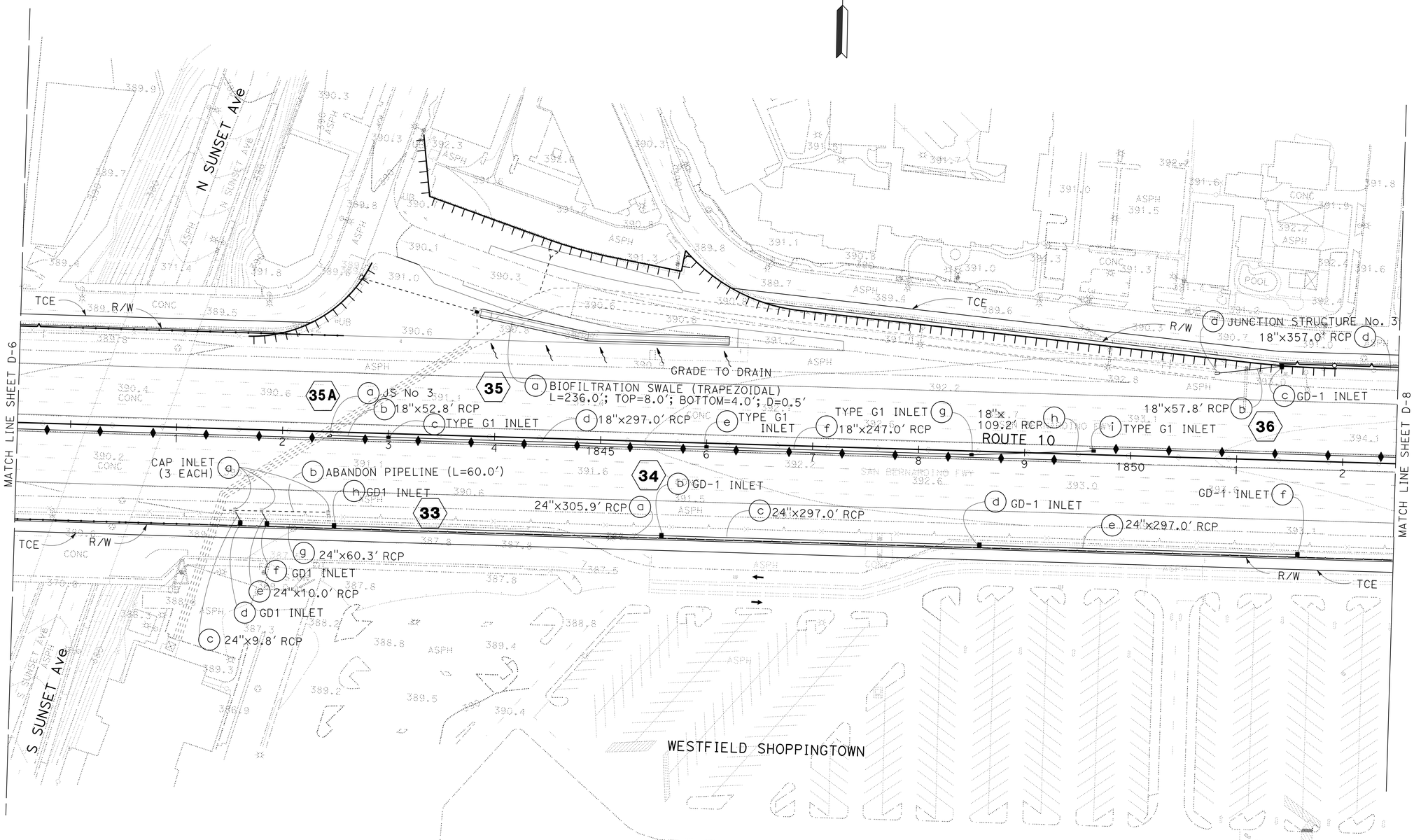

DRAINAGE PLAN

SCALE: 1" = 50'

D-7

APPROVED FOR DRAINAGE WORK ONLY

STATE OF CALIFORNIA - DEPARTMENT OF TRANSPORTATION

Caltrans

HYDRAULICS

FUNCTIONAL SUPERVISOR: DAVE BHALLA

CALCULATED-DESIGNED BY: C. P. NGUYEN

CHECKED BY: D. BHALLA

REVISED BY

DATE REVISED

LAST REVISION 06-13-12

DATE PLOTTED => 12-JUN-2013
TIME PLOTTED => 17:32

Dist	COUNTY	ROUTE	POST MILES TOTAL PROJECT	SHEET No.	TOTAL SHEETS
07	LA	10	33.2/37.2	166	1475

REGISTERED CIVIL ENGINEER 4-17-12 DATE

6-10-13
PLANS APPROVAL DATE

REGISTERED PROFESSIONAL ENGINEER SA K. THAI No. 71390 Exp. 12/31/13 CIVIL STATE OF CALIFORNIA

THE STATE OF CALIFORNIA OR ITS OFFICERS OR AGENTS SHALL NOT BE RESPONSIBLE FOR THE ACCURACY OR COMPLETENESS OF SCANNED COPIES OF THIS PLAN SHEET.

NOTE:

FOR ACCURATE RIGHT OF WAY DATA,
CONTACT RIGHT OF WAY ENGINEERING AT THE DISTRICT OFFICE.

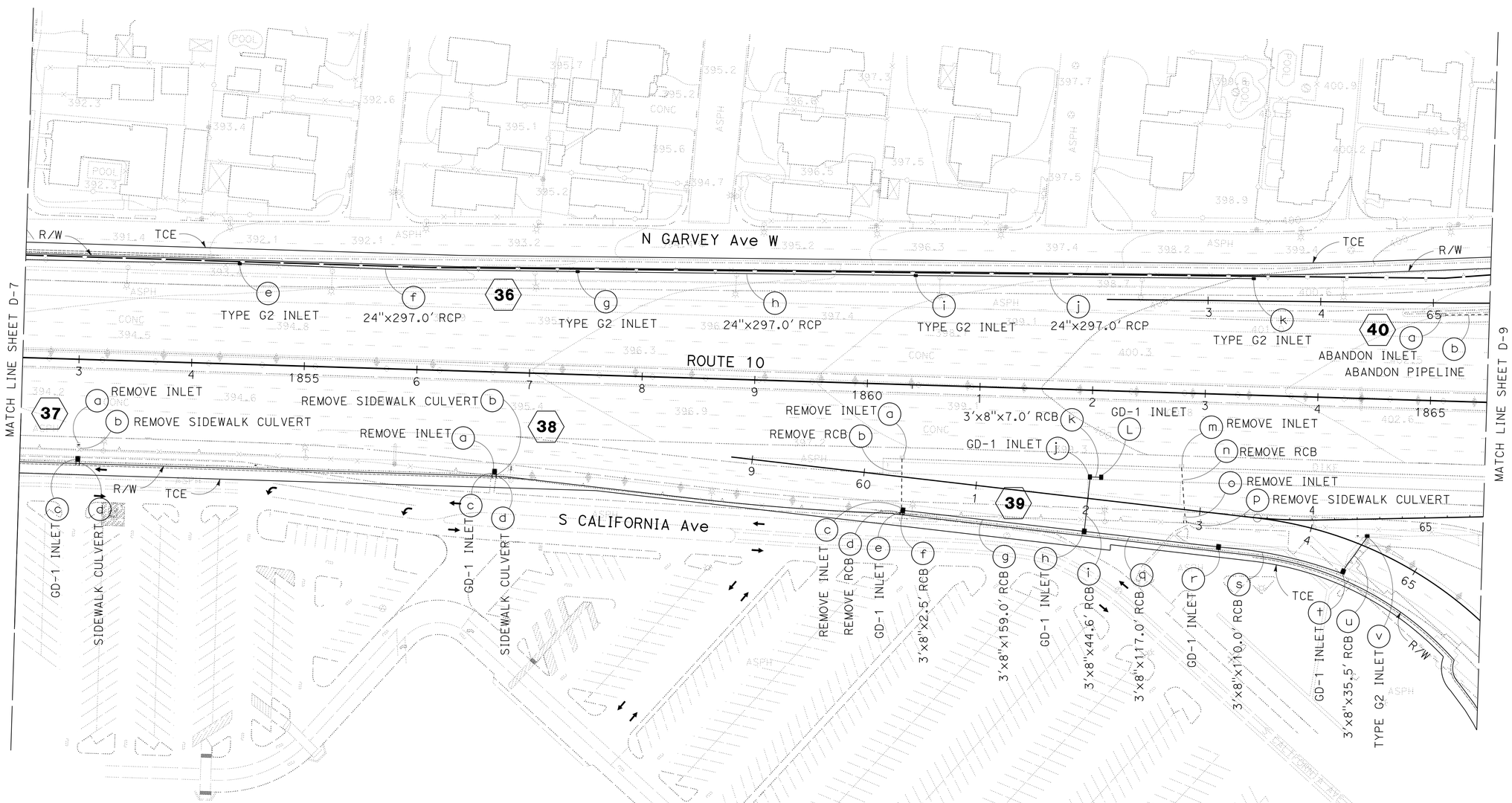

DRAINAGE PLAN

SCALE: 1" = 50'

D-8

APPROVED FOR DRAINAGE WORK ONLY

STATE OF CALIFORNIA - DEPARTMENT OF TRANSPORTATION
Caltrans HYDRAULICS

FUNCTIONAL SUPERVISOR: DAVE BHALLA

CALCULATED-DESIGNED BY: S. THAI
CHECKED BY: D. BHALLA

REVISED BY
DATE REVISED

LAST REVISION 06-09-12
DATE PLOTTED => 12-JUN-2013
TIME PLOTTED => 17:32

Dist	COUNTY	ROUTE	POST MILES TOTAL PROJECT	SHEET No.	TOTAL SHEETS
07	LA	10	33.2/37.2	167	1475

REGISTERED CIVIL ENGINEER 4-17-12 DATE

6-10-13
PLANS APPROVAL DATE

REGISTERED PROFESSIONAL ENGINEER SA K. THAI No. 71390 Exp. 12/31/13 CIVIL STATE OF CALIFORNIA

THE STATE OF CALIFORNIA OR ITS OFFICERS OR AGENTS SHALL NOT BE RESPONSIBLE FOR THE ACCURACY OR COMPLETENESS OF SCANNED COPIES OF THIS PLAN SHEET.

NOTE:

FOR ACCURATE RIGHT OF WAY DATA,
CONTACT RIGHT OF WAY ENGINEERING AT THE DISTRICT OFFICE.

41 (g) 18"x79.6' RCP

44 (a) ROCK SLOPE PROTECTION (FACING, METHOD B) WIDTH=8', LENGTH=15', DEPTH=2'
(b) BIOFILTRATION SWALE
(c) TRANSITION STRUCTURE No. 4
(d) 18"x20.3' RCP
(e) JUNCTION STRUCTURE No. 1

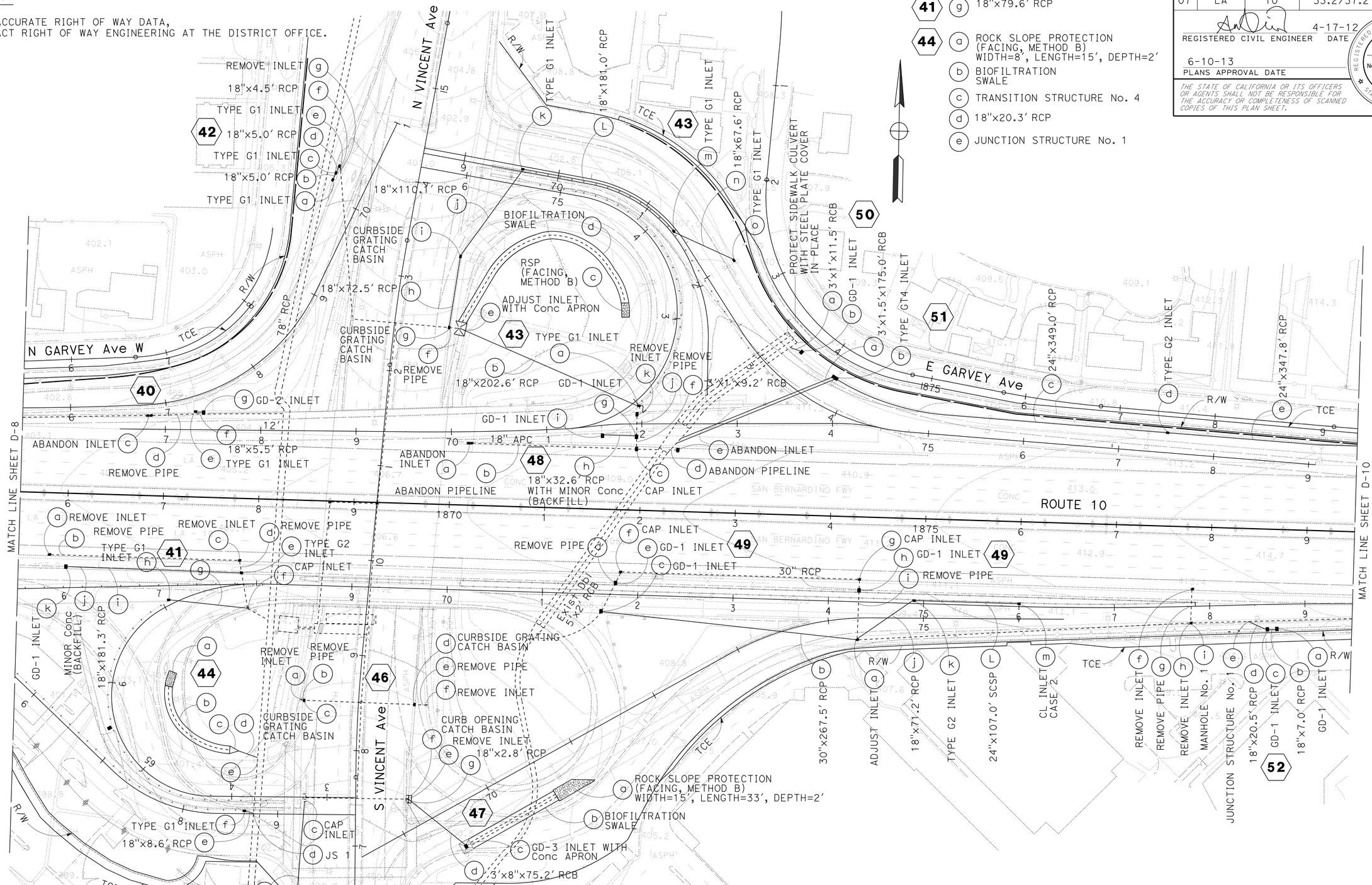

DRAINAGE PLAN

SCALE: 1" = 50'

D-9

APPROVED FOR DRAINAGE WORK ONLY

STATE OF CALIFORNIA - DEPARTMENT OF TRANSPORTATION
Caltrans
HYDRAULICS

FUNCTIONAL SUPERVISOR: DAVE BHALLA
CALCULATED-DESIGNED BY: S. THAI
CHECKED BY: D. BHALLA
REVISED BY
DATE REVISED

LAST REVISION 06-13-12
DATE PLOTTED => 12-JUN-2013
TIME PLOTTED => 17:32

Dist	COUNTY	ROUTE	POST MILES TOTAL PROJECT	SHEET No.	TOTAL SHEETS
07	LA	10	33.2/37.2	168	1475

REGISTERED CIVIL ENGINEER 4-17-12 DATE

6-10-13
PLANS APPROVAL DATE

REGISTERED PROFESSIONAL ENGINEER SA K. THAI No. 71390 Exp. 12/31/13 CIVIL STATE OF CALIFORNIA

THE STATE OF CALIFORNIA OR ITS OFFICERS OR AGENTS SHALL NOT BE RESPONSIBLE FOR THE ACCURACY OR COMPLETENESS OF SCANNED COPIES OF THIS PLAN SHEET.

NOTE:

FOR ACCURATE RIGHT OF WAY DATA,
CONTACT RIGHT OF WAY ENGINEERING AT THE DISTRICT OFFICE.

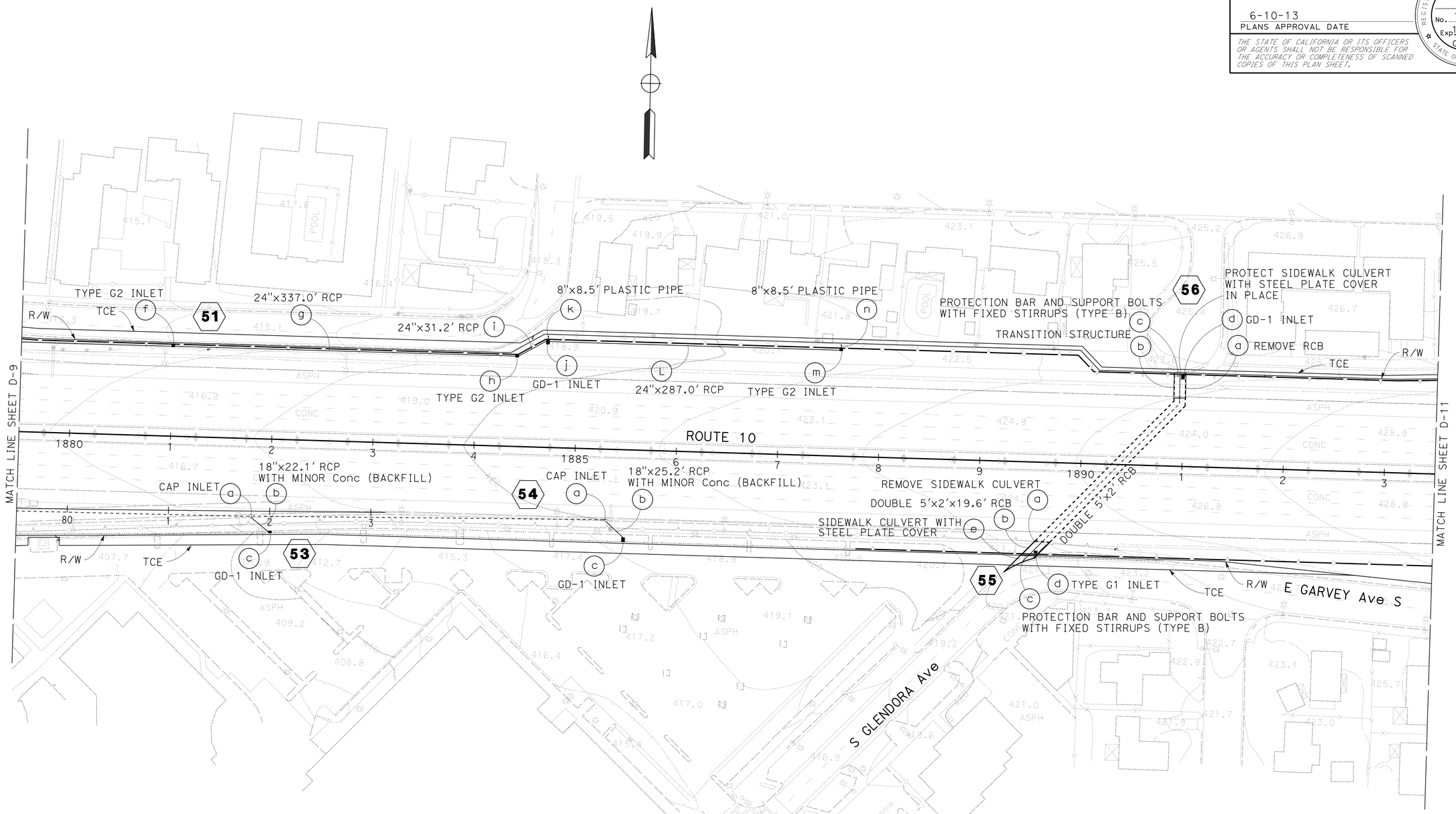

DRAINAGE PLAN

SCALE: 1" = 50'

D-10

APPROVED FOR DRAINAGE WORK ONLY

STATE OF CALIFORNIA - DEPARTMENT OF TRANSPORTATION
Caltrans
HYDRAULICS

FUNCTIONAL SUPERVISOR: DAVE BHALLA
CALCULATED-DESIGNED BY: S. THAI
CHECKED BY: D. BHALLA
REVISED BY
DATE REVISED

LAST REVISION 06-09-12
DATE PLOTTED => 12-JUN-2013
TIME PLOTTED => 17:33

Dist	COUNTY	ROUTE	POST MILES TOTAL PROJECT	SHEET No.	TOTAL SHEETS
07	LA	10	33.2/37.2	169	1475

REGISTERED CIVIL ENGINEER 4-17-12 DATE

6-10-13
PLANS APPROVAL DATE

REGISTERED PROFESSIONAL ENGINEER SA K. THAI No. 71390 Exp. 12/31/13 CIVIL STATE OF CALIFORNIA

THE STATE OF CALIFORNIA OR ITS OFFICERS OR AGENTS SHALL NOT BE RESPONSIBLE FOR THE ACCURACY OR COMPLETENESS OF SCANNED COPIES OF THIS PLAN SHEET.

NOTE:

FOR ACCURATE RIGHT OF WAY DATA,
CONTACT RIGHT OF WAY ENGINEERING AT THE DISTRICT OFFICE.

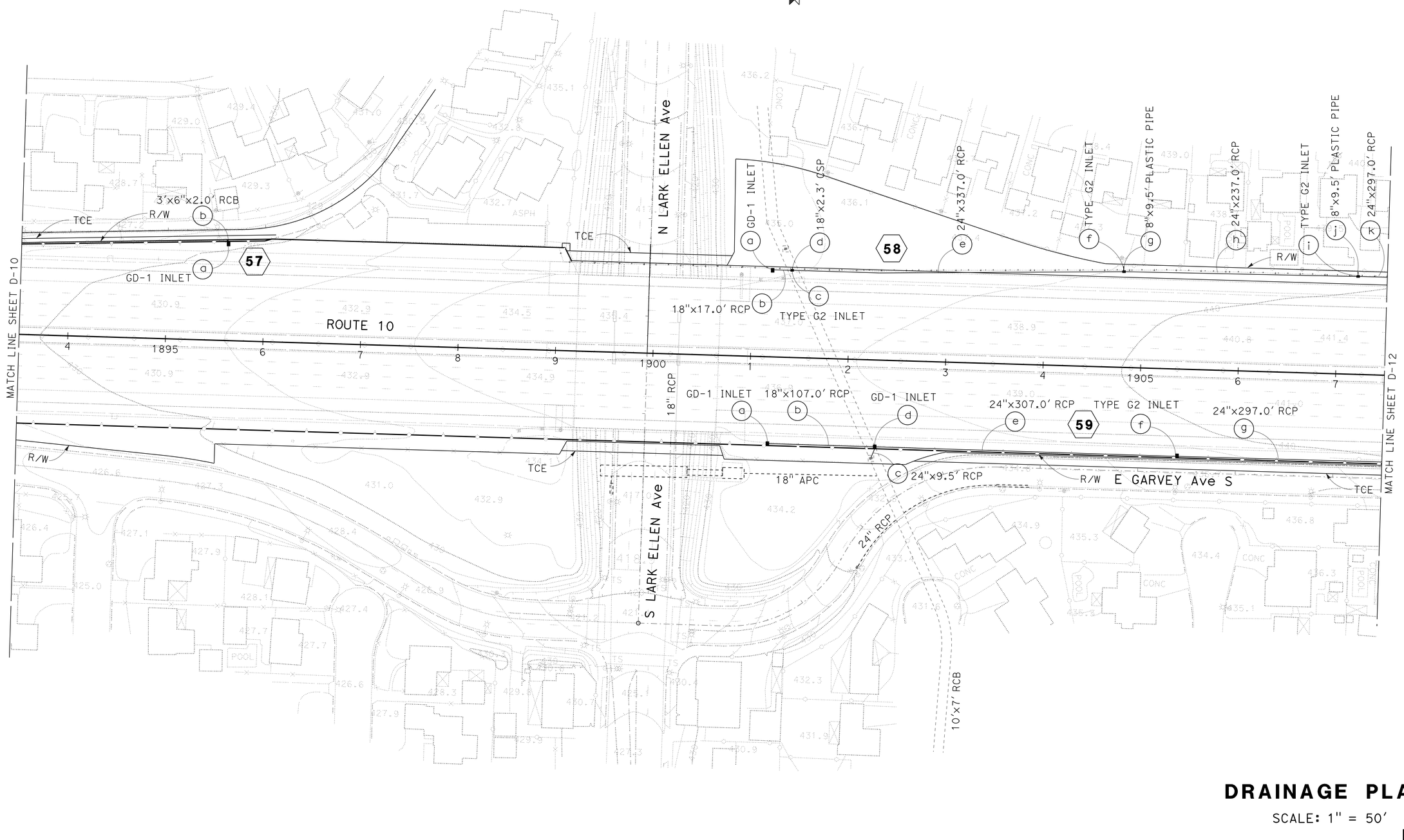

DRAINAGE PLAN

SCALE: 1" = 50'

D-11

APPROVED FOR DRAINAGE WORK ONLY

STATE OF CALIFORNIA - DEPARTMENT OF TRANSPORTATION
Caltrans
HYDRAULICS

FUNCTIONAL SUPERVISOR: DAVE BHALLA
CALCULATED-DESIGNED BY: S. THAI
CHECKED BY: D. BHALLA
REVISED BY
DATE REVISED

LAST REVISION 06-09-12
DATE PLOTTED => 12-JUN-2013
TIME PLOTTED => 17:33

Dist	COUNTY	ROUTE	POST MILES TOTAL PROJECT	SHEET No.	TOTAL SHEETS
07	LA	10	33.2/37.2	170	1475

REGISTERED CIVIL ENGINEER 4-17-12 DATE

6-10-13
PLANS APPROVAL DATE

REGISTERED PROFESSIONAL ENGINEER SA K. THAI No. 71390 Exp. 12/31/13 CIVIL STATE OF CALIFORNIA

THE STATE OF CALIFORNIA OR ITS OFFICERS OR AGENTS SHALL NOT BE RESPONSIBLE FOR THE ACCURACY OR COMPLETENESS OF SCANNED COPIES OF THIS PLAN SHEET.

NOTE:

FOR ACCURATE RIGHT OF WAY DATA,
CONTACT RIGHT OF WAY ENGINEERING AT THE DISTRICT OFFICE.

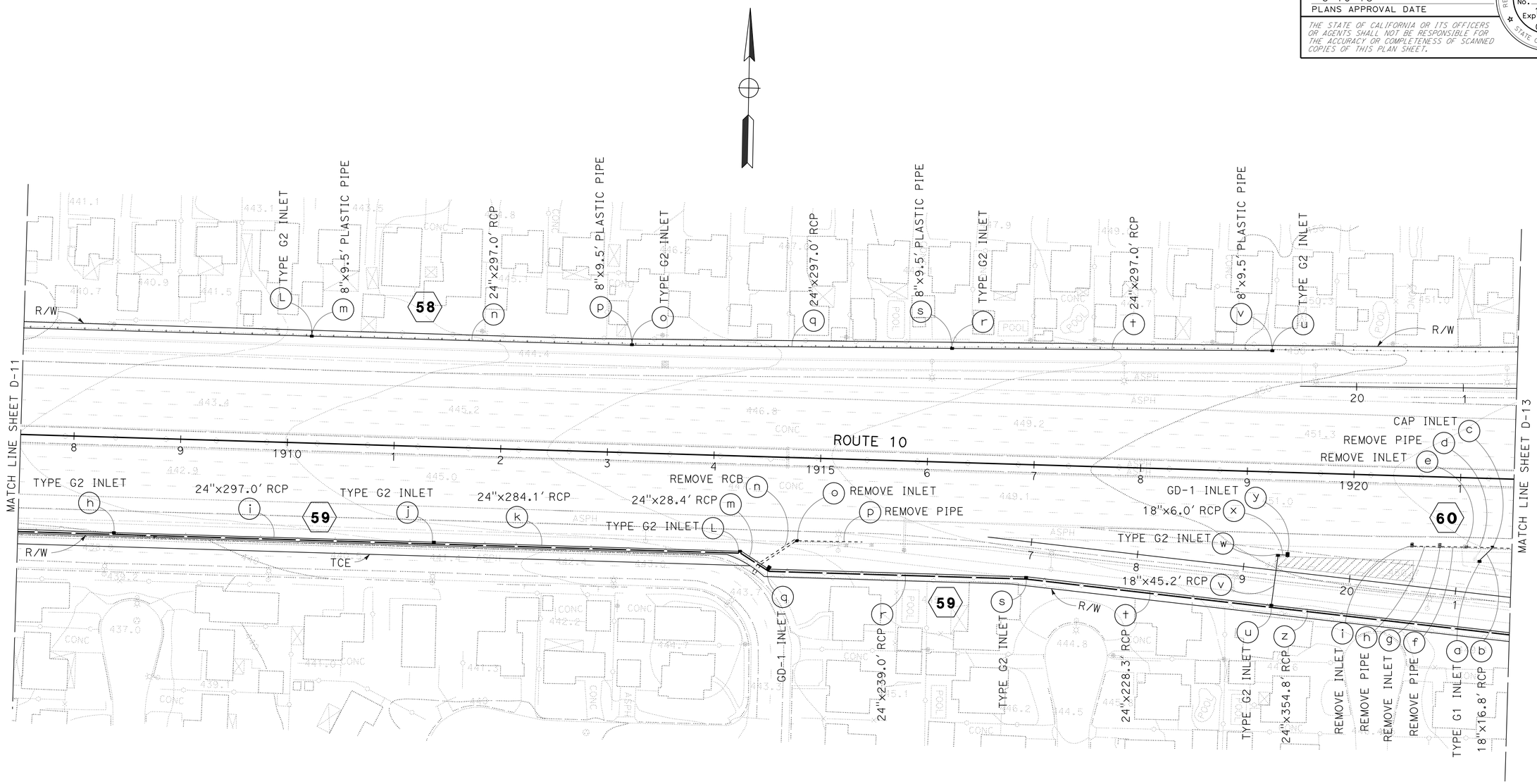

DRAINAGE PLAN

SCALE 1" = 50'

D-12

APPROVED FOR DRAINAGE WORK ONLY

STATE OF CALIFORNIA - DEPARTMENT OF TRANSPORTATION
Caltrans
HYDRAULICS

FUNCTIONAL SUPERVISOR: DAVE BHALLA
CALCULATED-DESIGNED BY: D. BHALLA
CHECKED BY: S. THAI
REVISED BY
DATE REVISED

LAST REVISION 06-09-12
DATE PLOTTED => 12-JUN-2013
TIME PLOTTED => 17:33

Dist	COUNTY	ROUTE	POST MILES TOTAL PROJECT	SHEET No.	TOTAL SHEETS
07	LA	10	33.2/37.2	171	1475

REGISTERED CIVIL ENGINEER 4-17-12 DATE

6-10-13
PLANS APPROVAL DATE

REGISTERED PROFESSIONAL ENGINEER SA K. THAI No. 71390 Exp. 12/31/13 CIVIL STATE OF CALIFORNIA

THE STATE OF CALIFORNIA OR ITS OFFICERS OR AGENTS SHALL NOT BE RESPONSIBLE FOR THE ACCURACY OR COMPLETENESS OF SCANNED COPIES OF THIS PLAN SHEET.

NOTE:

FOR ACCURATE RIGHT OF WAY DATA,
CONTACT RIGHT OF WAY ENGINEERING AT THE DISTRICT OFFICE.

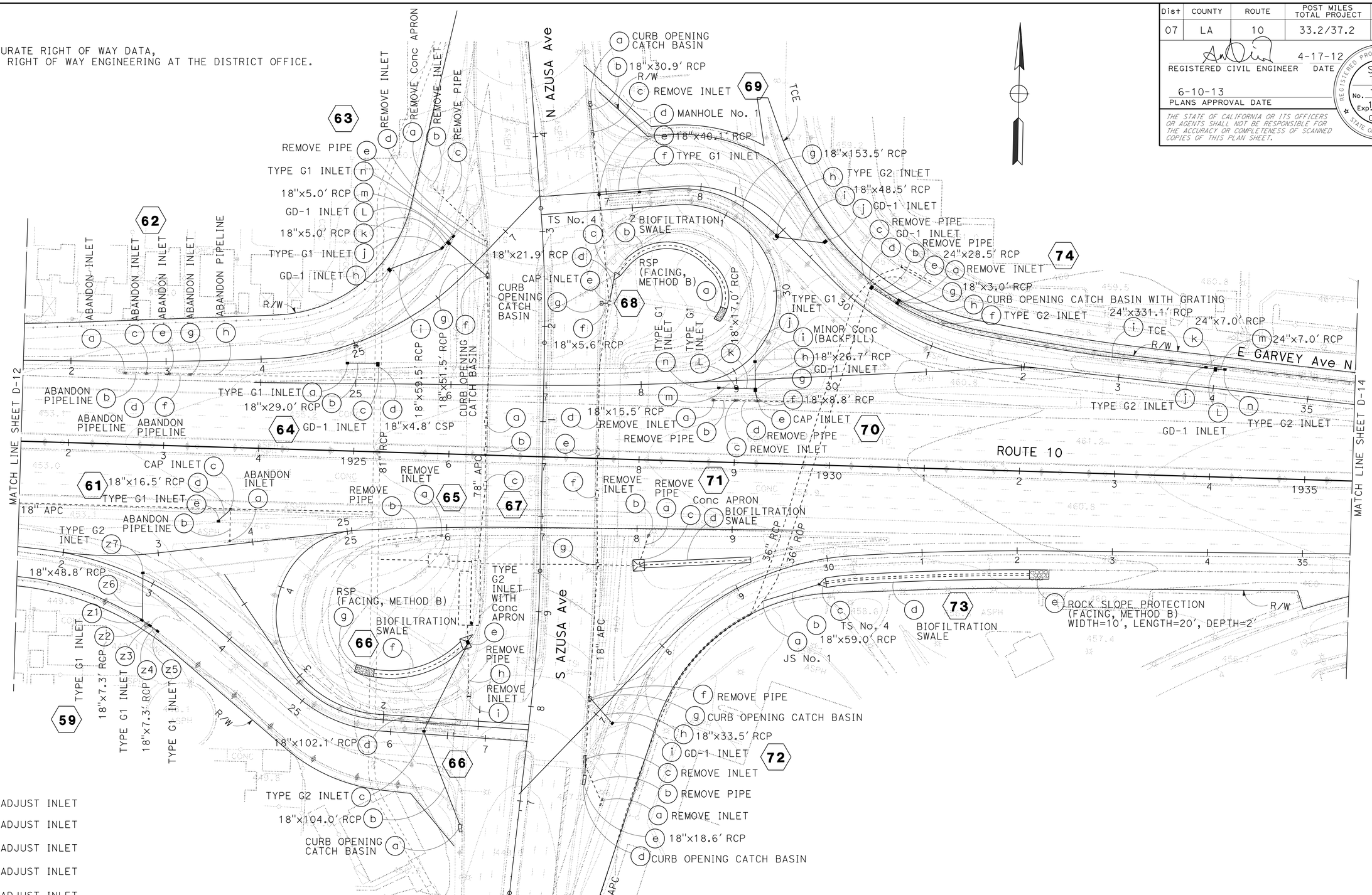

67
- a ADJUST INLET
- b ADJUST INLET
- c ADJUST INLET
- d ADJUST INLET
- e ADJUST INLET
- f ADJUST INLET
- g ADJUST INLET

APPROVED FOR DRAINAGE WORK ONLY

DRAINAGE PLAN

SCALE: 1" = 50'

D-13

STATE OF CALIFORNIA - DEPARTMENT OF TRANSPORTATION
Caltrans
HYDRAULICS

FUNCTIONAL SUPERVISOR: DAVE BHALLA
CALCULATED-DESIGNED BY: S. THAI
CHECKED BY: D. BHALLA
REVISED BY
DATE REVISED

LAST REVISION 06-09-12
DATE PLOTTED => 12-JUN-2013
TIME PLOTTED => 17:33

Dist	COUNTY	ROUTE	POST MILES TOTAL PROJECT	SHEET No.	TOTAL SHEETS
07	LA	10	33.2/37.2	172	1475

REGISTERED CIVIL ENGINEER 4-17-12 DATE

6-10-13
PLANS APPROVAL DATE

REGISTERED PROFESSIONAL ENGINEER SA K. THAI No. 71390 Exp. 12/31/13 CIVIL STATE OF CALIFORNIA

THE STATE OF CALIFORNIA OR ITS OFFICERS OR AGENTS SHALL NOT BE RESPONSIBLE FOR THE ACCURACY OR COMPLETENESS OF SCANNED COPIES OF THIS PLAN SHEET.

NOTE:

FOR ACCURATE RIGHT OF WAY DATA,
CONTACT RIGHT OF WAY ENGINEERING AT THE DISTRICT OFFICE.

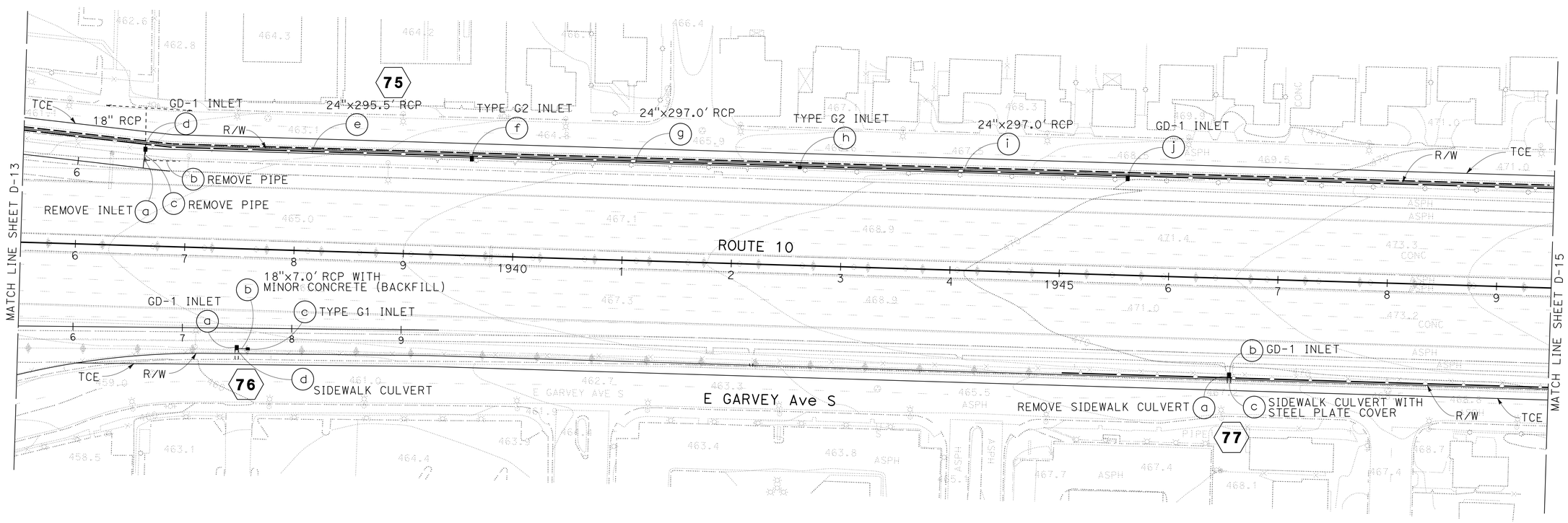

DRAINAGE PLAN

SCALE: 1" = 50'

D-14

APPROVED FOR DRAINAGE WORK ONLY

STATE OF CALIFORNIA - DEPARTMENT OF TRANSPORTATION
Caltrans
HYDRAULICS

FUNCTIONAL SUPERVISOR: DAVE BHALLA
CALCULATED-DESIGNED BY: S. THAI
CHECKED BY: D. BHALLA
REVISED BY
DATE REVISED

LAST REVISION 06-09-12
DATE PLOTTED => 12-JUN-2013
TIME PLOTTED => 17:33

Dist	COUNTY	ROUTE	POST MILES TOTAL PROJECT	SHEET No.	TOTAL SHEETS
07	LA	10	33.2/37.2	173	1475

REGISTERED CIVIL ENGINEER 4-17-12 DATE

6-10-13
PLANS APPROVAL DATE

REGISTERED PROFESSIONAL ENGINEER SA K. THAI No. 71390 Exp. 12/31/13 CIVIL STATE OF CALIFORNIA

THE STATE OF CALIFORNIA OR ITS OFFICERS OR AGENTS SHALL NOT BE RESPONSIBLE FOR THE ACCURACY OR COMPLETENESS OF SCANNED COPIES OF THIS PLAN SHEET.

NOTE:

FOR ACCURATE RIGHT OF WAY DATA,
CONTACT RIGHT OF WAY ENGINEERING AT THE DISTRICT OFFICE.

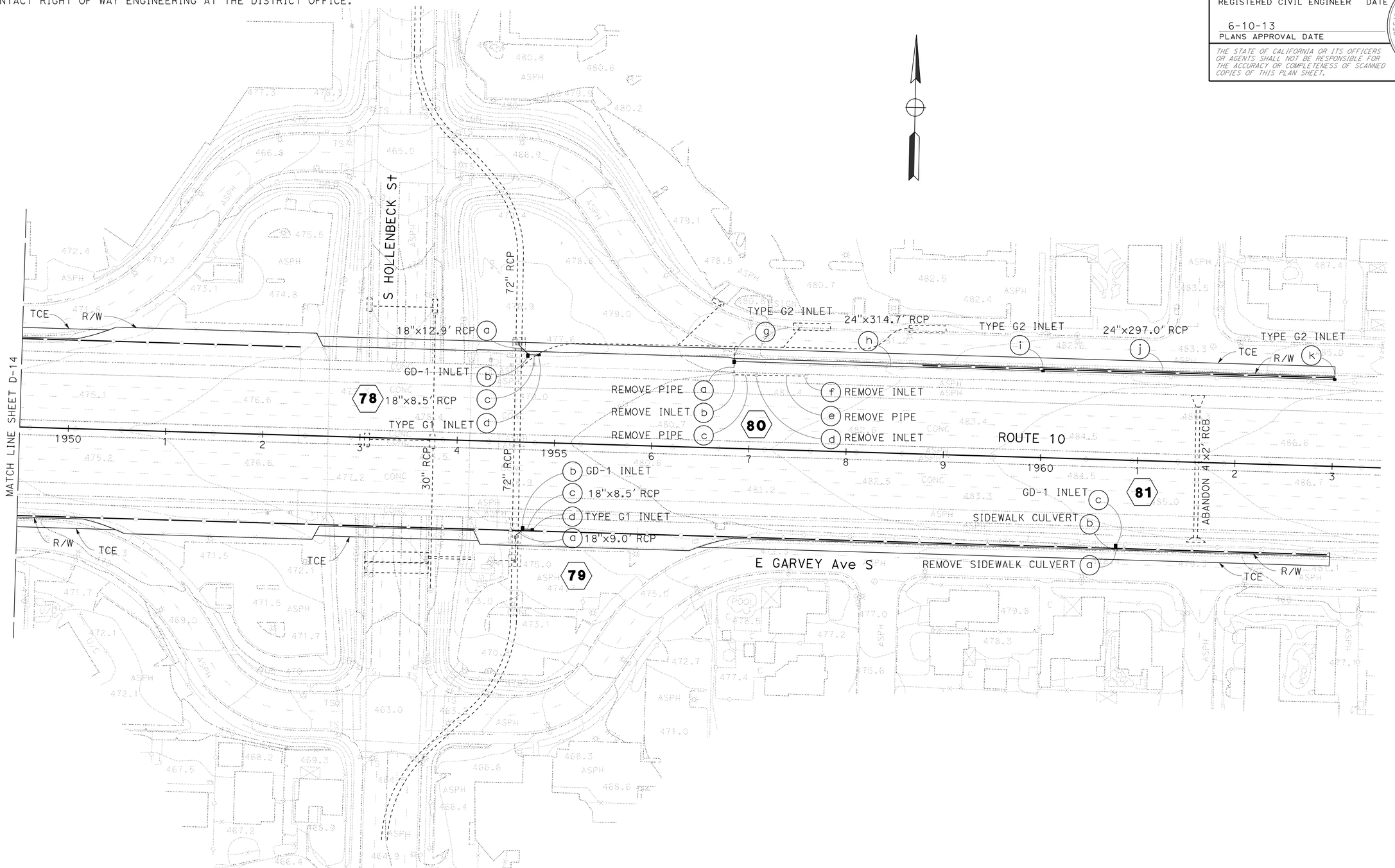

DRAINAGE PLAN

SCALE: 1" = 50'

D-15

APPROVED FOR DRAINAGE WORK ONLY

STATE OF CALIFORNIA - DEPARTMENT OF TRANSPORTATION
Caltrans
HYDRAULICS

FUNCTIONAL SUPERVISOR: DAVE BHALLA
CALCULATED-DESIGNED BY: S. THAI
CHECKED BY: D. BHALLA
REVISED BY
DATE REVISED

LAST REVISION 06-09-12
DATE PLOTTED => 12-JUN-2013
TIME PLOTTED => 17:33

Dist	COUNTY	ROUTE	POST MILES TOTAL PROJECT	SHEET No.	TOTAL SHEETS
07	LA	10	33.2/37.2	174	1475

REGISTERED CIVIL ENGINEER 4-17-12 DATE

6-10-13
PLANS APPROVAL DATE

REGISTERED PROFESSIONAL ENGINEER DAVE BHALLA No. 34350 Exp. 9/30/13 CIVIL STATE OF CALIFORNIA

THE STATE OF CALIFORNIA OR ITS OFFICERS OR AGENTS SHALL NOT BE RESPONSIBLE FOR THE ACCURACY OR COMPLETENESS OF SCANNED COPIES OF THIS PLAN SHEET.

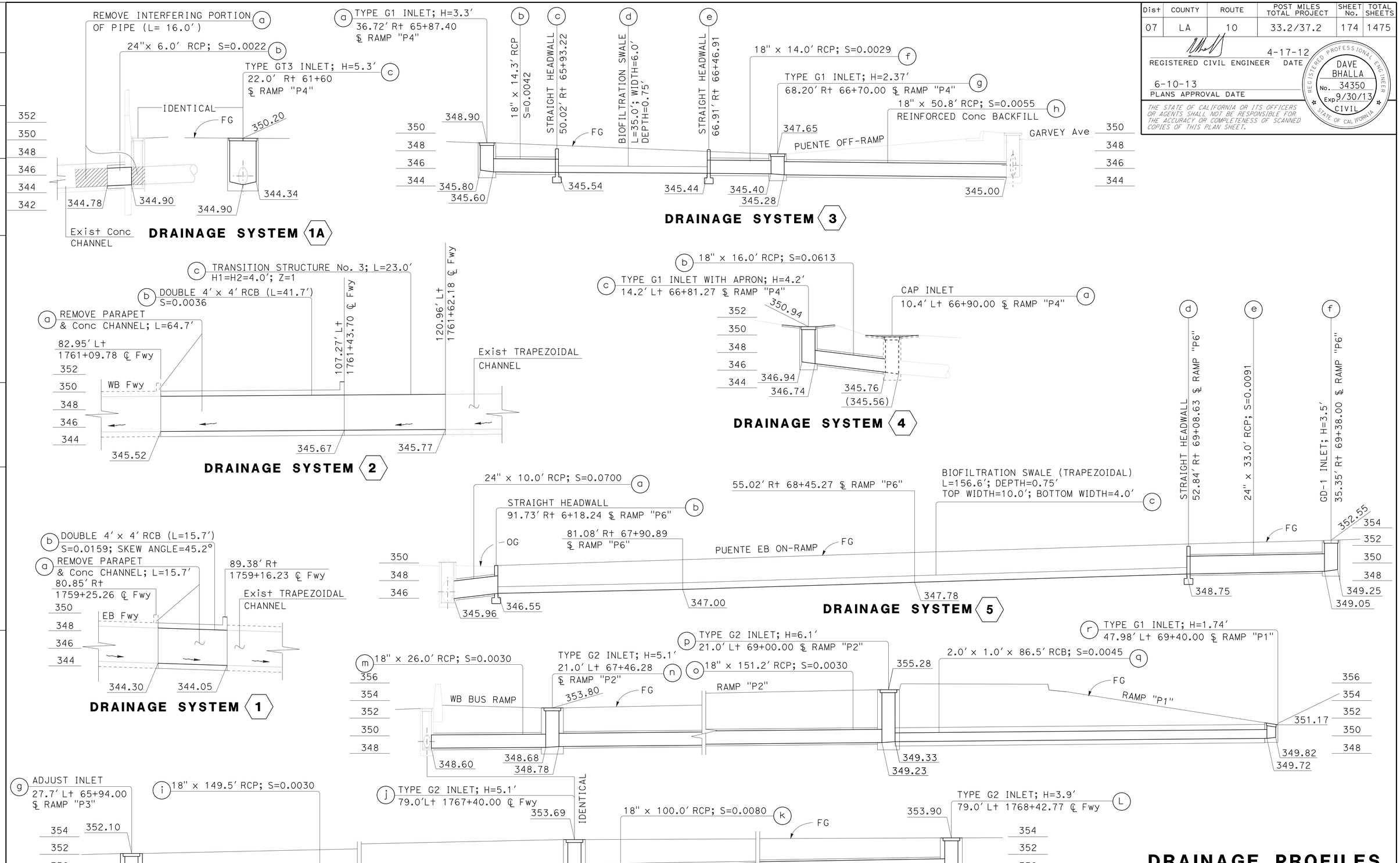

DRAINAGE PROFILES

SCALE: Horiz 1" = 10'
Vert 1" = 5'

DP-1

STATE OF CALIFORNIA - DEPARTMENT OF TRANSPORTATION
HYDRAULICS
Caltrans

FUNCTIONAL SUPERVISOR: DAVE BHALLA
CALCULATED-DESIGNED BY: C. P. NGUYEN
CHECKED BY: D. BHALLA
REVISED BY
DATE REVISED

LAST REVISION 06-09-12
DATE PLOTTED => 12-JUN-2013
TIME PLOTTED => 17:33

Dist	COUNTY	ROUTE	POST MILES TOTAL PROJECT	SHEET No.	TOTAL SHEETS
07	LA	10	33.2/37.2	175	1475

REGISTERED CIVIL ENGINEER 4-17-12 DATE

6-10-13
PLANS APPROVAL DATE

REGISTERED PROFESSIONAL ENGINEER DAVE BHALLA No. 34350 Exp. 9/30/13 CIVIL STATE OF CALIFORNIA

THE STATE OF CALIFORNIA OR ITS OFFICERS OR AGENTS SHALL NOT BE RESPONSIBLE FOR THE ACCURACY OR COMPLETENESS OF SCANNED COPIES OF THIS PLAN SHEET.

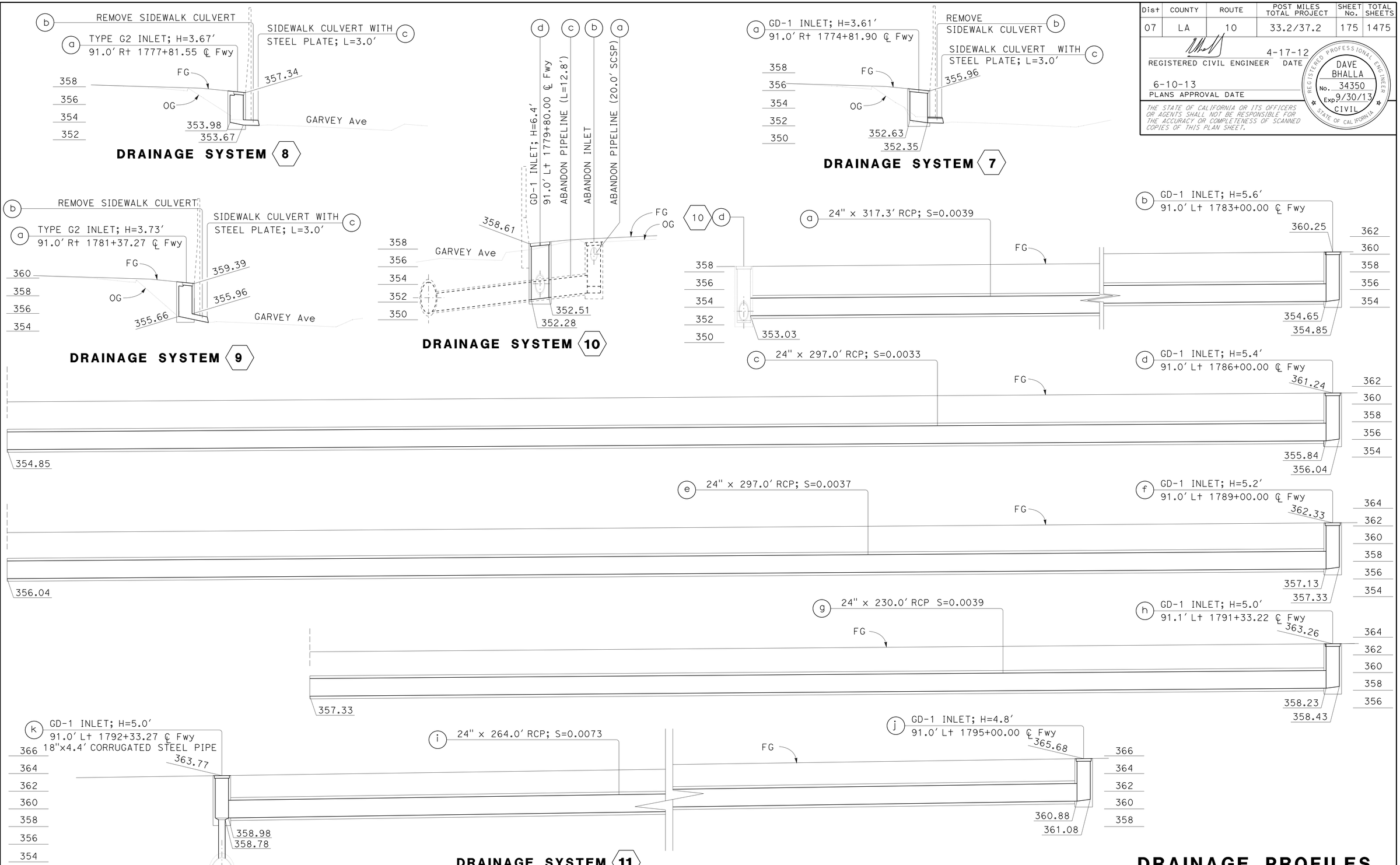

DRAINAGE PROFILES

SCALE: Horiz 1" = 10′
Vert 1" = 5′

DP-2

STATE OF CALIFORNIA - DEPARTMENT OF TRANSPORTATION
HYDRAULICS
Caltrans

FUNCTIONAL SUPERVISOR: DAVE BHALLA
CALCULATED-DESIGNED BY: D. BHALLA
CHECKED BY: C. P. NGUYEN
REVISED BY
DATE REVISED

LAST REVISION 06-09-12
DATE PLOTTED => 12-JUN-2013
TIME PLOTTED => 17:33

Dist	COUNTY	ROUTE	POST MILES TOTAL PROJECT	SHEET No.	TOTAL SHEETS
07	LA	10	33.2/37.2	176	1475

REGISTERED CIVIL ENGINEER 4-17-12 DATE

6-10-13
PLANS APPROVAL DATE

REGISTERED PROFESSIONAL ENGINEER DAVE BHALLA No. 34350 Exp. 9/30/13 CIVIL STATE OF CALIFORNIA

THE STATE OF CALIFORNIA OR ITS OFFICERS OR AGENTS SHALL NOT BE RESPONSIBLE FOR THE ACCURACY OR COMPLETENESS OF SCANNED COPIES OF THIS PLAN SHEET.

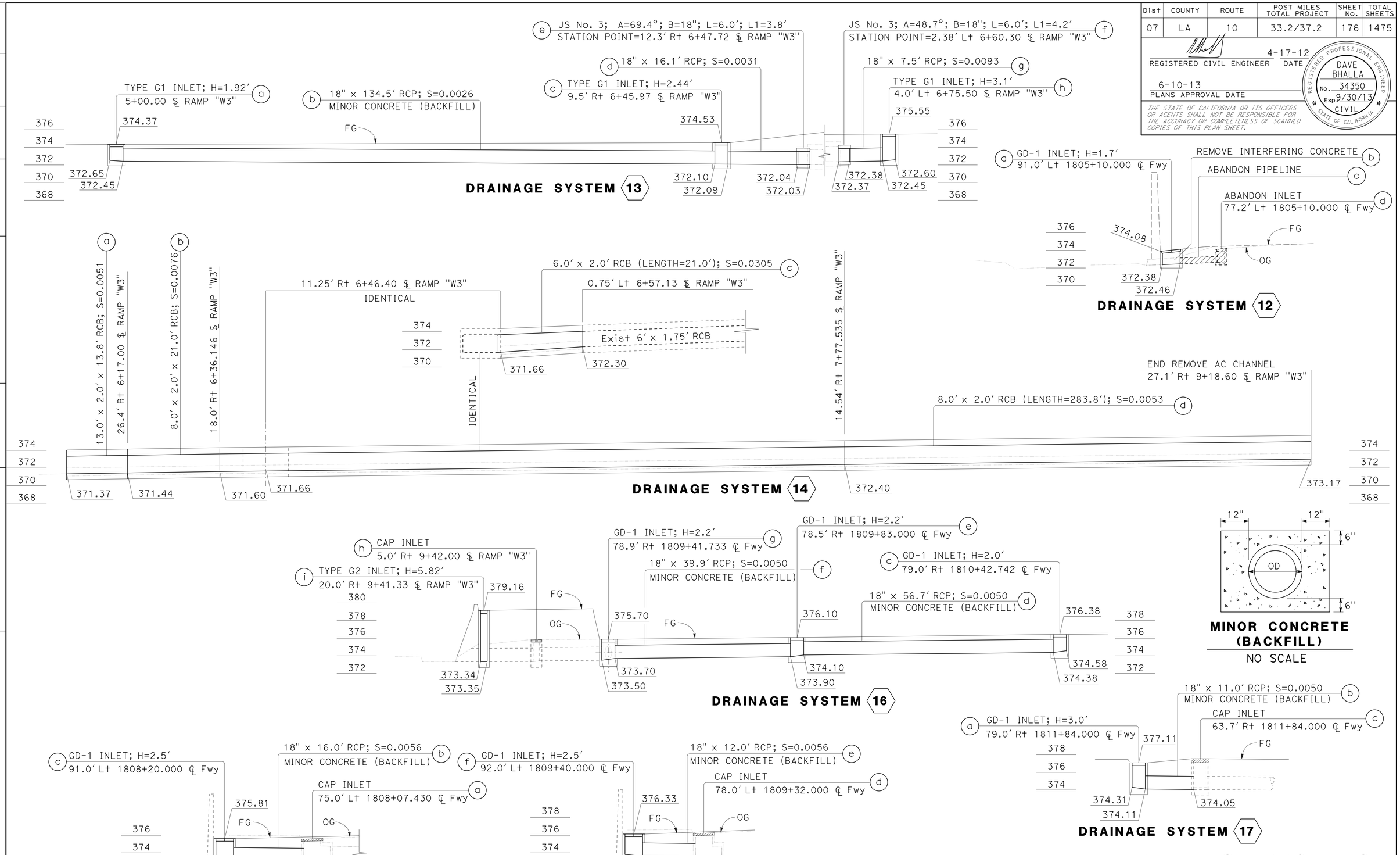

DRAINAGE PROFILES

SCALE: Horiz 1" = 10′
Vert 1" = 5′

DP-3

STATE OF CALIFORNIA - DEPARTMENT OF TRANSPORTATION
Caltrans® HYDRAULICS

FUNCTIONAL SUPERVISOR: DAVE BHALLA
CALCULATED-DESIGNED BY: C. P. NGUYEN
CHECKED BY: D. BHALLA
REVISED BY / DATE REVISED

LAST REVISION: DATE PLOTTED => 12-JUN-2013 TIME PLOTTED => 14:45
06-09-12

Dist	COUNTY	ROUTE	POST MILES TOTAL PROJECT	SHEET No.	TOTAL SHEETS
07	LA	10	33.2/37.2	177	1475

REGISTERED CIVIL ENGINEER 4-17-12 DATE

6-10-13
PLANS APPROVAL DATE

REGISTERED PROFESSIONAL ENGINEER DAVE BHALLA No. 34350 Exp. 9/30/13 CIVIL STATE OF CALIFORNIA

THE STATE OF CALIFORNIA OR ITS OFFICERS OR AGENTS SHALL NOT BE RESPONSIBLE FOR THE ACCURACY OR COMPLETENESS OF SCANNED COPIES OF THIS PLAN SHEET.

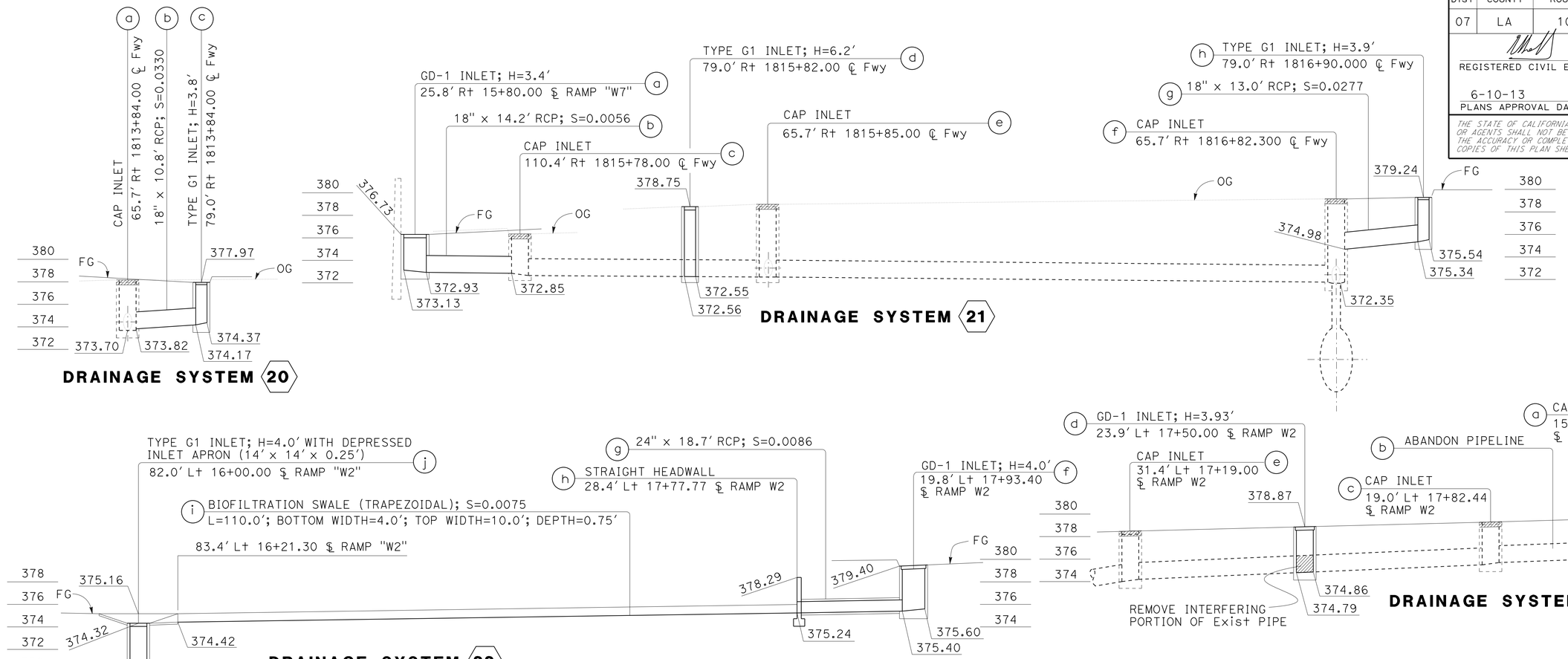

DRAINAGE PROFILES

SCALE: Horiz 1" = 10'
Vert 1" = 5'

DP-4

STATE OF CALIFORNIA - DEPARTMENT OF TRANSPORTATION
Caltrans® HYDRAULICS

FUNCTIONAL SUPERVISOR: DAVE BHALLA
CALCULATED-DESIGNED BY: C. P. NGUYEN
CHECKED BY: D. BHALLA
REVISED BY
DATE REVISED

LAST REVISION 06-09-12
DATE PLOTTED => 12-JUN-2013
TIME PLOTTED => 14:45

Dist	COUNTY	ROUTE	POST MILES TOTAL PROJECT	SHEET No.	TOTAL SHEETS
07	LA	10	33.2/37.2	178	1475

REGISTERED CIVIL ENGINEER 4-17-12 DATE

6-10-13
PLANS APPROVAL DATE

REGISTERED PROFESSIONAL ENGINEER DAVE BHALLA No. 34350 Exp. 9/30/13 CIVIL STATE OF CALIFORNIA

THE STATE OF CALIFORNIA OR ITS OFFICERS OR AGENTS SHALL NOT BE RESPONSIBLE FOR THE ACCURACY OR COMPLETENESS OF SCANNED COPIES OF THIS PLAN SHEET.

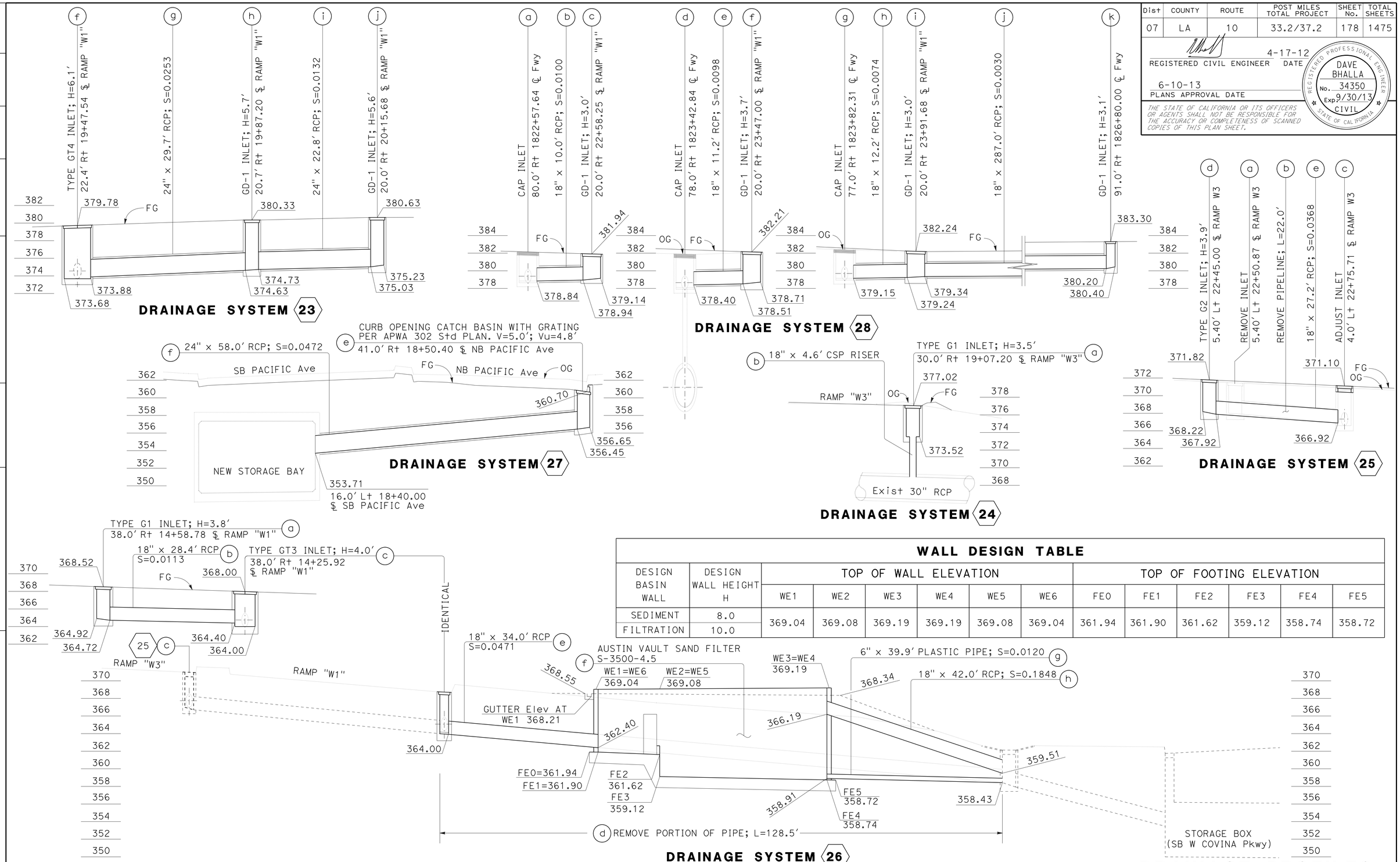

WALL DESIGN TABLE

DESIGN BASIN WALL	DESIGN WALL HEIGHT H	TOP OF WALL ELEVATION						TOP OF FOOTING ELEVATION					
		WE1	WE2	WE3	WE4	WE5	WE6	FE0	FE1	FE2	FE3	FE4	FE5
SEDIMENT	8.0	369.04	369.08	369.19	369.19	369.08	369.04	361.94	361.90	361.62	359.12	358.74	358.72
FILTRATION	10.0												

DRAINAGE PROFILES

SCALE: Horiz 1" = 10′
Vert 1" = 5′

DP-5

STATE OF CALIFORNIA - DEPARTMENT OF TRANSPORTATION
Caltrans
HYDRAULICS

FUNCTIONAL SUPERVISOR: DAVE BHALLA
CALCULATED-DESIGNED BY: C. P. NGUYEN
CHECKED BY: D. BHALLA
REVISED BY
DATE REVISED

LAST REVISION 08-17-11
DATE PLOTTED => 12-JUN-2013
TIME PLOTTED => 14:45

Dist	COUNTY	ROUTE	POST MILES TOTAL PROJECT	SHEET No.	TOTAL SHEETS
07	LA	10	33.2/37.2	179	1475

REGISTERED CIVIL ENGINEER 4-17-12 DATE

6-10-13
PLANS APPROVAL DATE

REGISTERED PROFESSIONAL ENGINEER DAVE BHALLA No. 34350 Exp. 9/30/13 CIVIL STATE OF CALIFORNIA

THE STATE OF CALIFORNIA OR ITS OFFICERS OR AGENTS SHALL NOT BE RESPONSIBLE FOR THE ACCURACY OR COMPLETENESS OF SCANNED COPIES OF THIS PLAN SHEET.

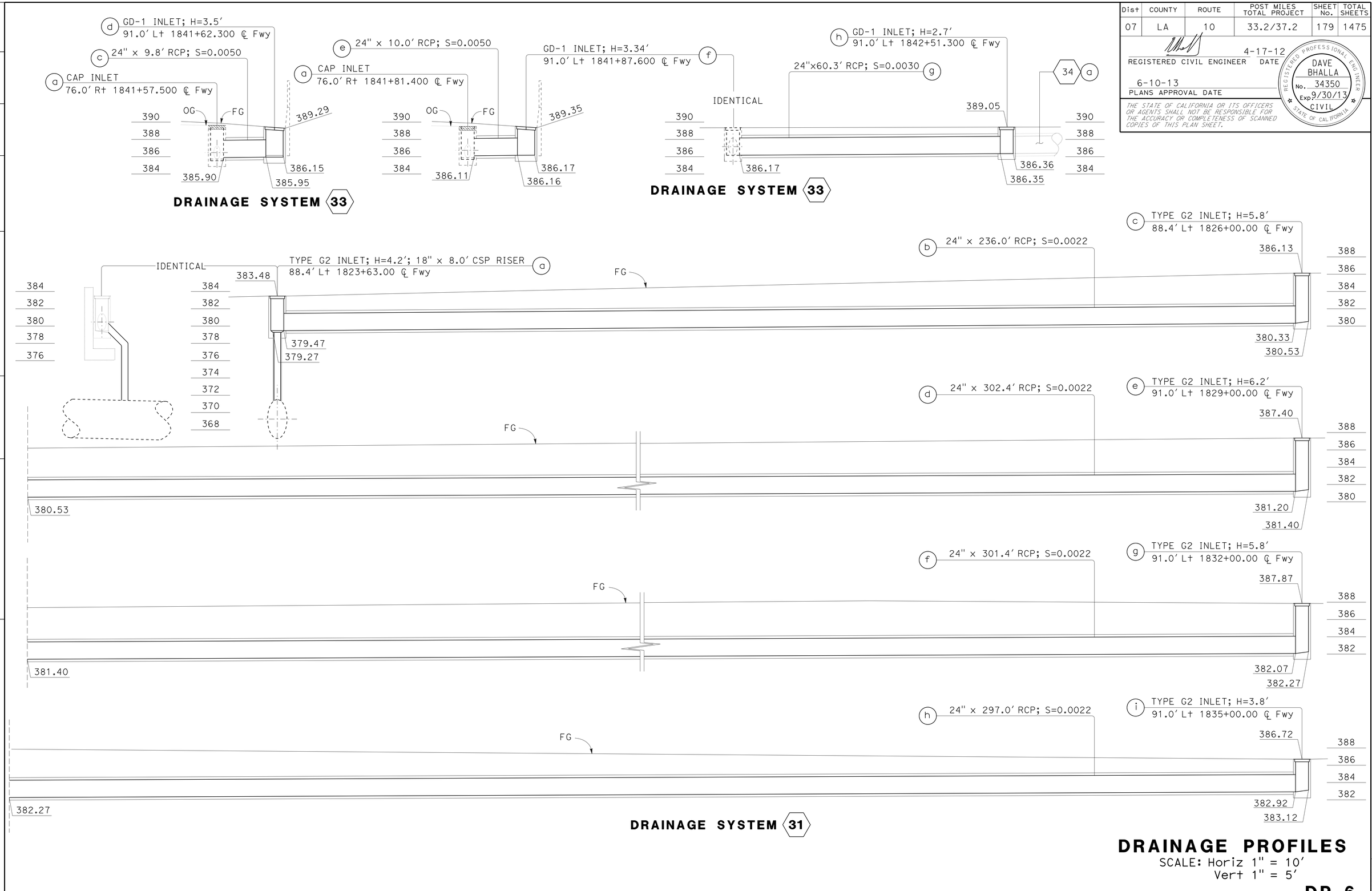

DRAINAGE PROFILES

SCALE: Horiz 1" = 10′
Vert 1" = 5′

DP-6

STATE OF CALIFORNIA - DEPARTMENT OF TRANSPORTATION
Caltrans
HYDRAULICS

FUNCTIONAL SUPERVISOR: DAVE BHALLA
CALCULATED-DESIGNED BY: C. P. NGUYEN
CHECKED BY: D. BHALLA
REVISED BY
DATE REVISED

LAST REVISION
DATE PLOTTED => 12-JUN-2013
TIME PLOTTED => 14:45

Dist	COUNTY	ROUTE	POST MILES TOTAL PROJECT	SHEET No.	TOTAL SHEETS
07	LA	10	33.2/37.2	180	1475

REGISTERED CIVIL ENGINEER 4-17-12 DATE

6-10-13
PLANS APPROVAL DATE

REGISTERED PROFESSIONAL ENGINEER DAVE BHALLA No. 34350 Exp. 9/30/13 CIVIL STATE OF CALIFORNIA

THE STATE OF CALIFORNIA OR ITS OFFICERS OR AGENTS SHALL NOT BE RESPONSIBLE FOR THE ACCURACY OR COMPLETENESS OF SCANNED COPIES OF THIS PLAN SHEET.

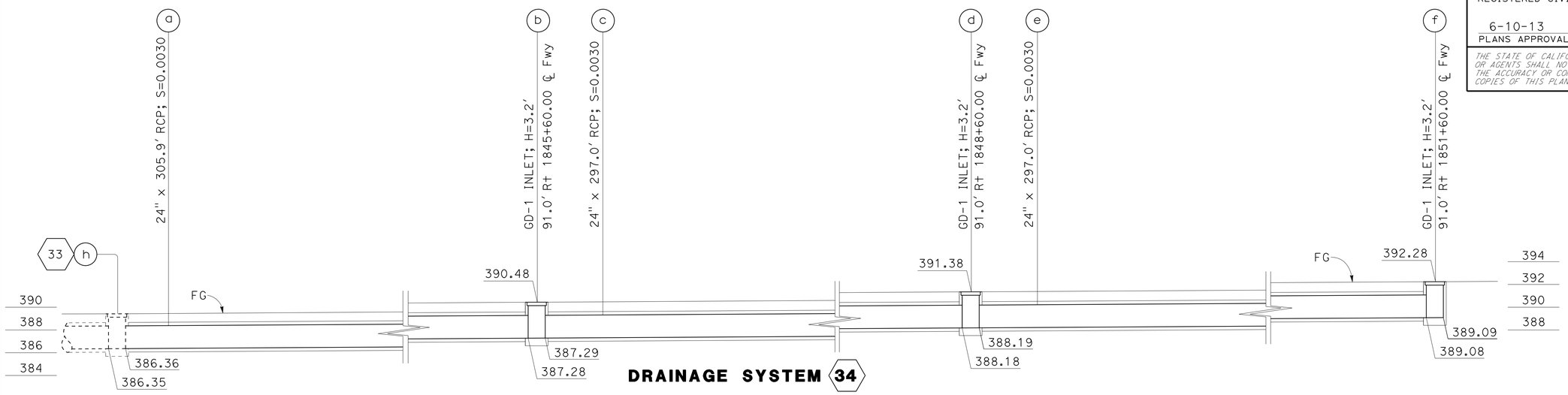

DRAINAGE SYSTEM 34

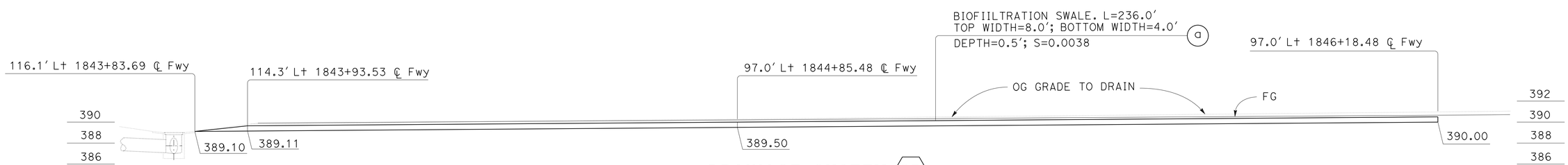

DRAINAGE SYSTEM 35

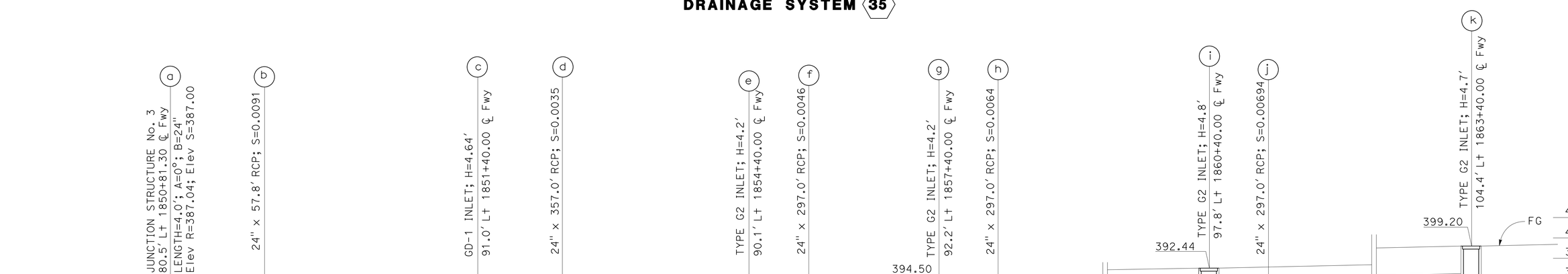

DRAINAGE SYSTEM 36

DRAINAGE PROFILES

SCALE: Horiz 1" = 10'
Vert 1" = 5'

DP-7

STATE OF CALIFORNIA - DEPARTMENT OF TRANSPORTATION
HYDRAULICS
Caltrans

FUNCTIONAL SUPERVISOR: DAVE BHALLA
CALCULATED-DESIGNED BY: D. BHALLA
CHECKED BY: C. P. NGUYEN
REVISED BY
DATE REVISED

LAST REVISION 06-09-12
DATE PLOTTED => 12-JUN-2013
TIME PLOTTED => 14:45

Dist	COUNTY	ROUTE	POST MILES TOTAL PROJECT	SHEET No.	TOTAL SHEETS
07	LA	10	33.2/37.2	181	1475

REGISTERED CIVIL ENGINEER 4-17-12 DATE

6-10-13
PLANS APPROVAL DATE

REGISTERED PROFESSIONAL ENGINEER SA K. THAI No. 71390 Exp. 12/31/13 CIVIL STATE OF CALIFORNIA

THE STATE OF CALIFORNIA OR ITS OFFICERS OR AGENTS SHALL NOT BE RESPONSIBLE FOR THE ACCURACY OR COMPLETENESS OF SCANNED COPIES OF THIS PLAN SHEET.

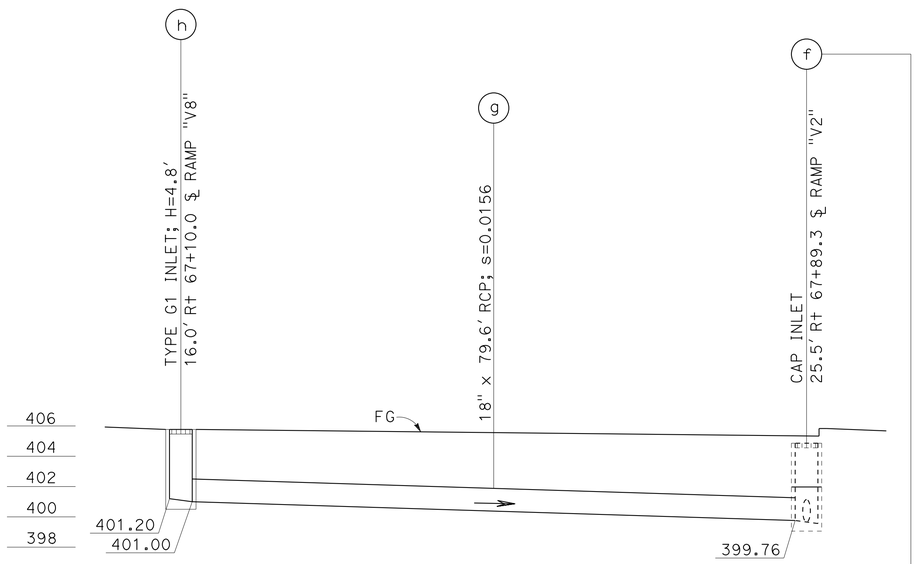

DRAINAGE SYSTEM 41
SCALE: Horiz 1" = 10′
Vert 1" = 5′

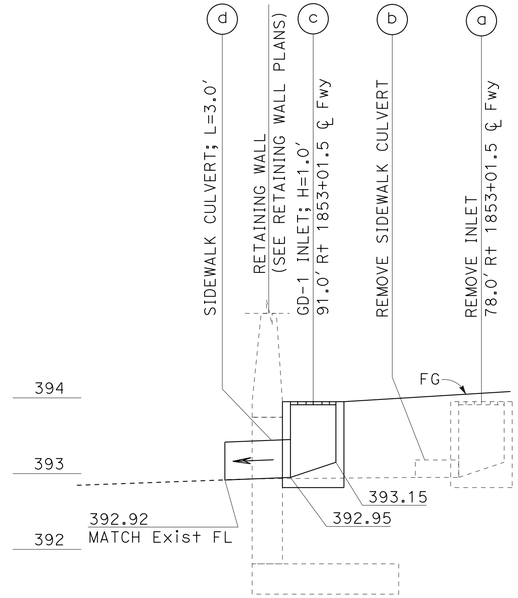

DRAINAGE SYSTEM 37
SCALE: Horiz 1" = 5′
Vert 1" = 1′

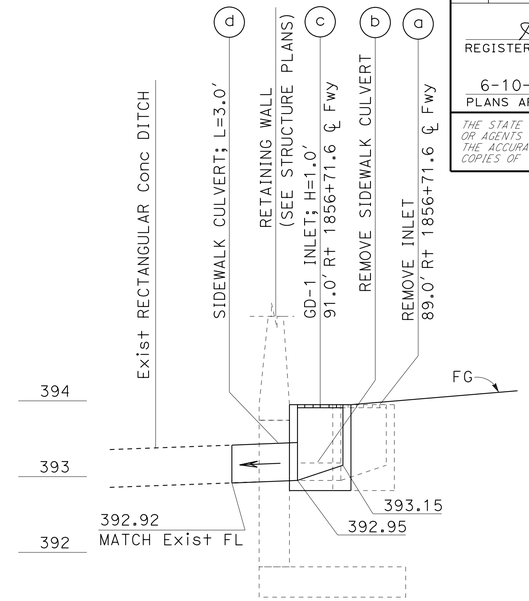

DRAINAGE SYSTEM 38
SCALE: Horiz 1" = 5′
Vert 1" = 1′

IDENTICAL

IDENTICAL

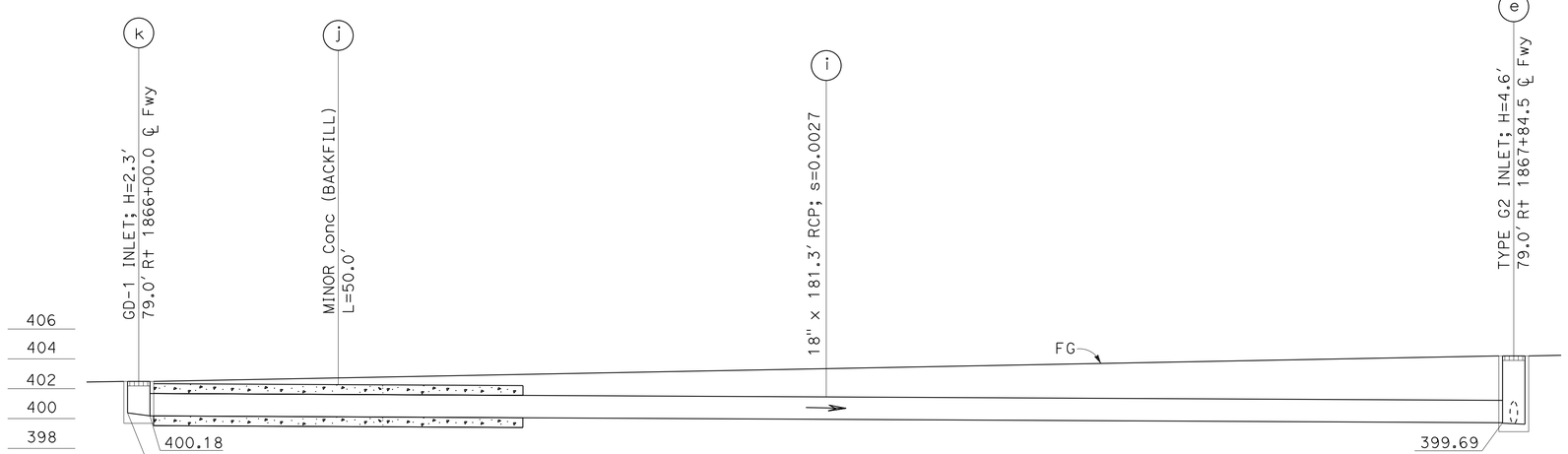

DRAINAGE SYSTEM 41
SCALE: Horiz 1" = 10′
Vert 1" = 5′

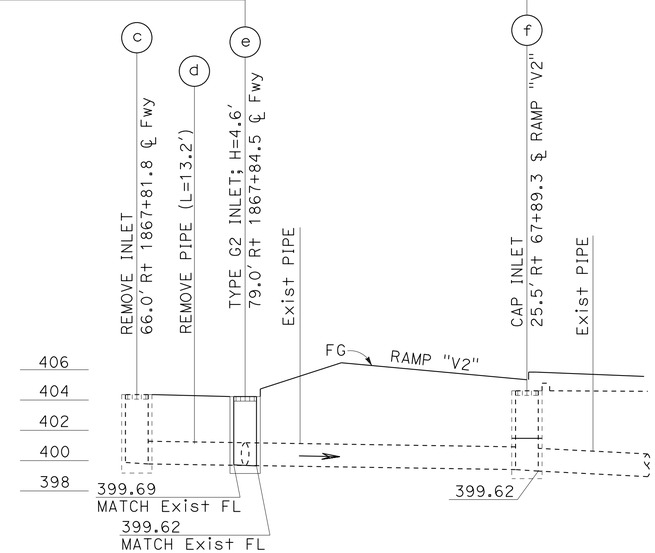

DRAINAGE PROFILES
SCALE AS SHOWN

DP-8

STATE OF CALIFORNIA - DEPARTMENT OF TRANSPORTATION
Caltrans
HYDRAULICS

FUNCTIONAL SUPERVISOR: DAVE BHALLA
CALCULATED-DESIGNED BY: S. THAI
CHECKED BY: D. BHALLA
REVISED BY
DATE REVISED

LAST REVISION 06-09-12
DATE PLOTTED => 12-JUN-2013
TIME PLOTTED => 14:45

Dist	COUNTY	ROUTE	POST MILES TOTAL PROJECT	SHEET No.	TOTAL SHEETS
07	LA	10	33.2/37.2	182	1475

REGISTERED CIVIL ENGINEER 4-17-12 DATE

6-10-13
PLANS APPROVAL DATE

REGISTERED PROFESSIONAL ENGINEER SA K. THAI No. 71390 Exp. 12/31/13 CIVIL STATE OF CALIFORNIA

THE STATE OF CALIFORNIA OR ITS OFFICERS OR AGENTS SHALL NOT BE RESPONSIBLE FOR THE ACCURACY OR COMPLETENESS OF SCANNED COPIES OF THIS PLAN SHEET.

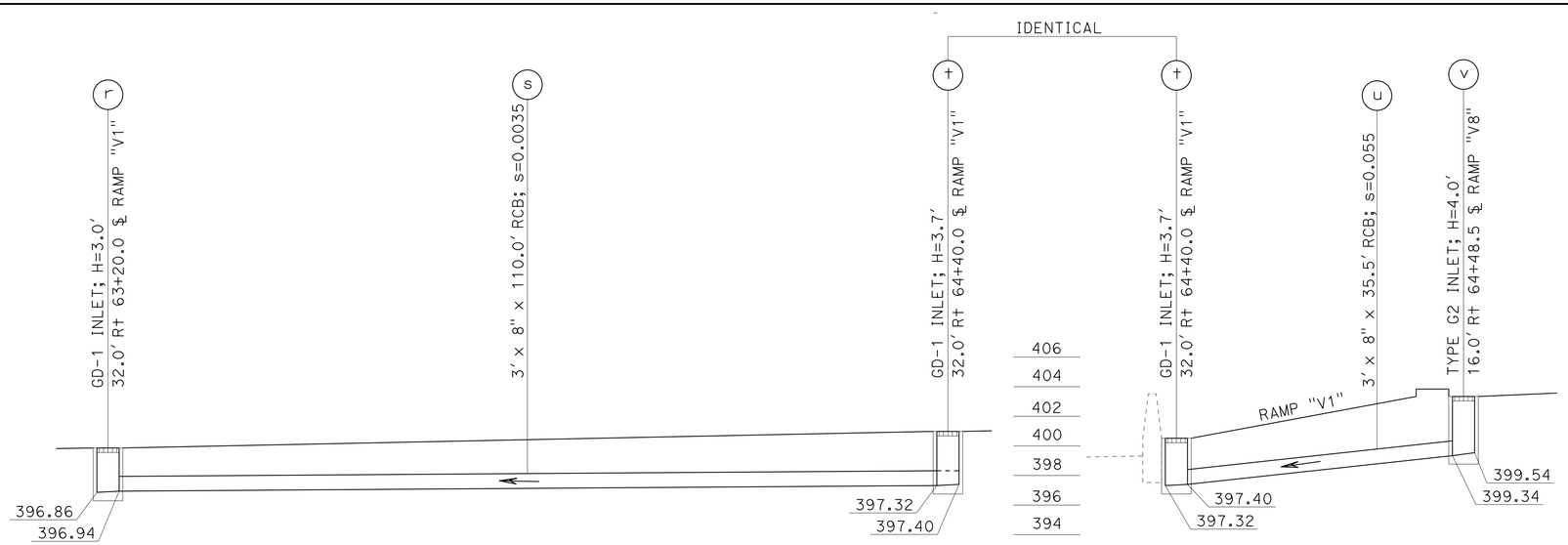

DRAINAGE SYSTEM 39

SCALE: Horiz 1" = 5′
Vert 1" = 1′

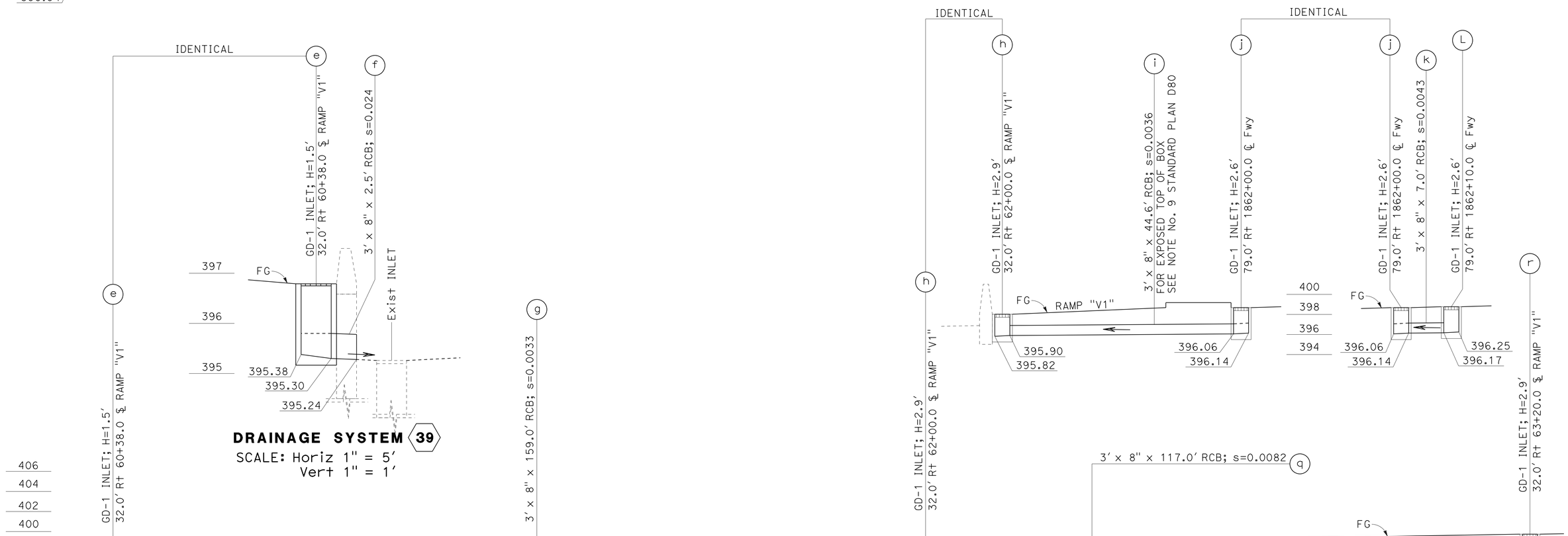

DRAINAGE SYSTEM 39

DRAINAGE PROFILES

SCALE: Horiz 1" = 10′
Vert 1" = 5′

DP-9

STATE OF CALIFORNIA - DEPARTMENT OF TRANSPORTATION
Caltrans
HYDRAULICS

FUNCTIONAL SUPERVISOR: DAVE BHALLA
CALCULATED-DESIGNED BY: S. THAI
CHECKED BY: D. BHALLA
REVISED BY
DATE REVISED

LAST REVISION 06-09-12
DATE PLOTTED => 12-JUN-2013
TIME PLOTTED => 14:45

Dist	COUNTY	ROUTE	POST MILES TOTAL PROJECT	SHEET No.	TOTAL SHEETS
07	LA	10	33.2/37.2	183	1475

REGISTERED CIVIL ENGINEER 4-17-12 DATE

6-10-13
PLANS APPROVAL DATE

REGISTERED PROFESSIONAL ENGINEER SA K. THAI No. 71390 Exp. 12/31/13 CIVIL STATE OF CALIFORNIA

THE STATE OF CALIFORNIA OR ITS OFFICERS OR AGENTS SHALL NOT BE RESPONSIBLE FOR THE ACCURACY OR COMPLETENESS OF SCANNED COPIES OF THIS PLAN SHEET.

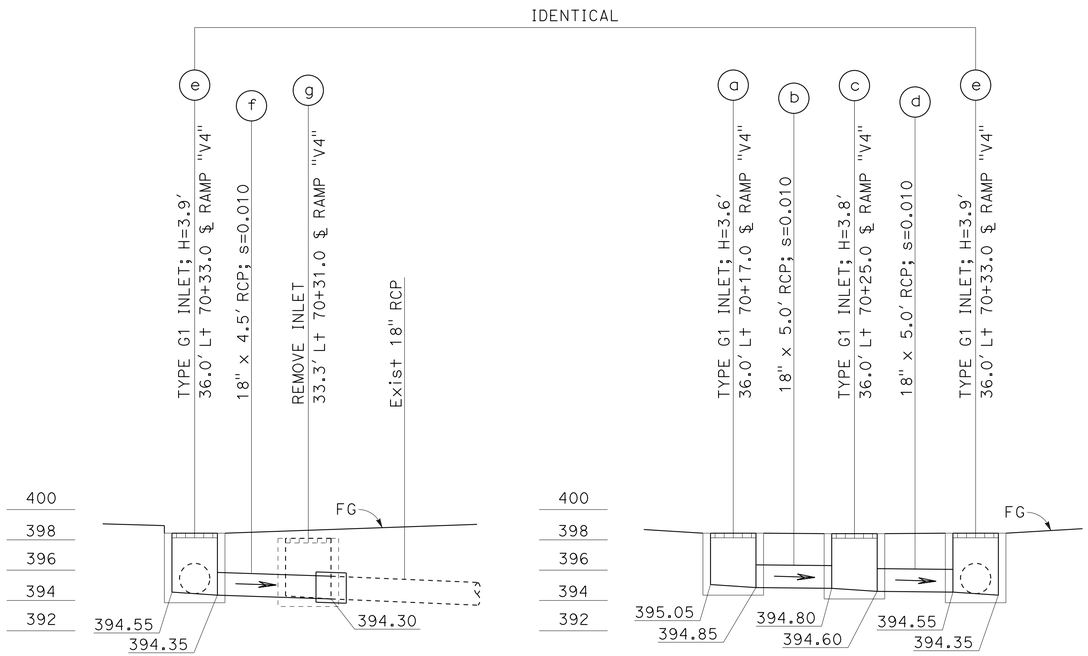

DRAINAGE SYSTEM 42
SCALE: Horiz 1" = 5′
Vert 1" = 5′

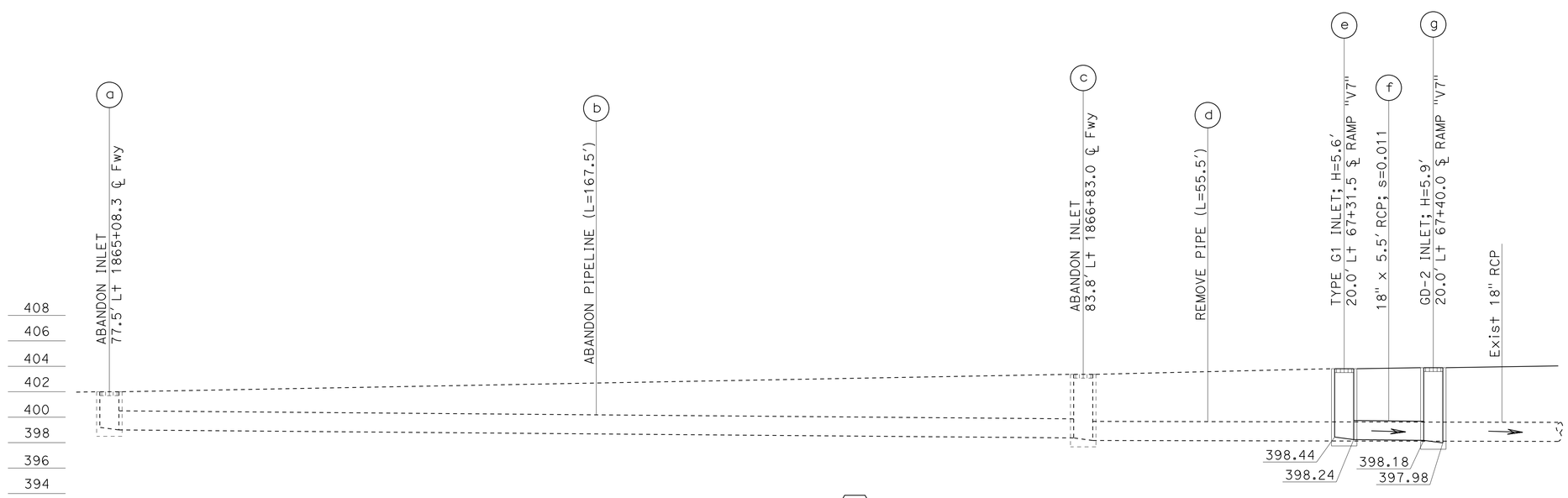

DRAINAGE SYSTEM 40
SCALE: Horiz 1" = 10′
Vert 1" = 5′

DRAINAGE PROFILES
SCALE AS SHOWN

DP-10

STATE OF CALIFORNIA - DEPARTMENT OF TRANSPORTATION
Caltrans
HYDRAULICS
FUNCTIONAL SUPERVISOR: DAVE BHALLA
CALCULATED-DESIGNED BY: S. THAI
CHECKED BY: D. BHALLA
REVISED BY
DATE REVISED

LAST REVISION 06-09-12
DATE PLOTTED => 12-JUN-2013
TIME PLOTTED => 14:45

Dist	COUNTY	ROUTE	POST MILES TOTAL PROJECT	SHEET No.	TOTAL SHEETS
07	LA	10	33.2/37.2	184	1475

REGISTERED CIVIL ENGINEER 4-17-12 DATE

6-10-13
PLANS APPROVAL DATE

REGISTERED PROFESSIONAL ENGINEER SA K. THAI No. 71390 Exp 12/31/13 CIVIL STATE OF CALIFORNIA

THE STATE OF CALIFORNIA OR ITS OFFICERS OR AGENTS SHALL NOT BE RESPONSIBLE FOR THE ACCURACY OR COMPLETENESS OF SCANNED COPIES OF THIS PLAN SHEET.

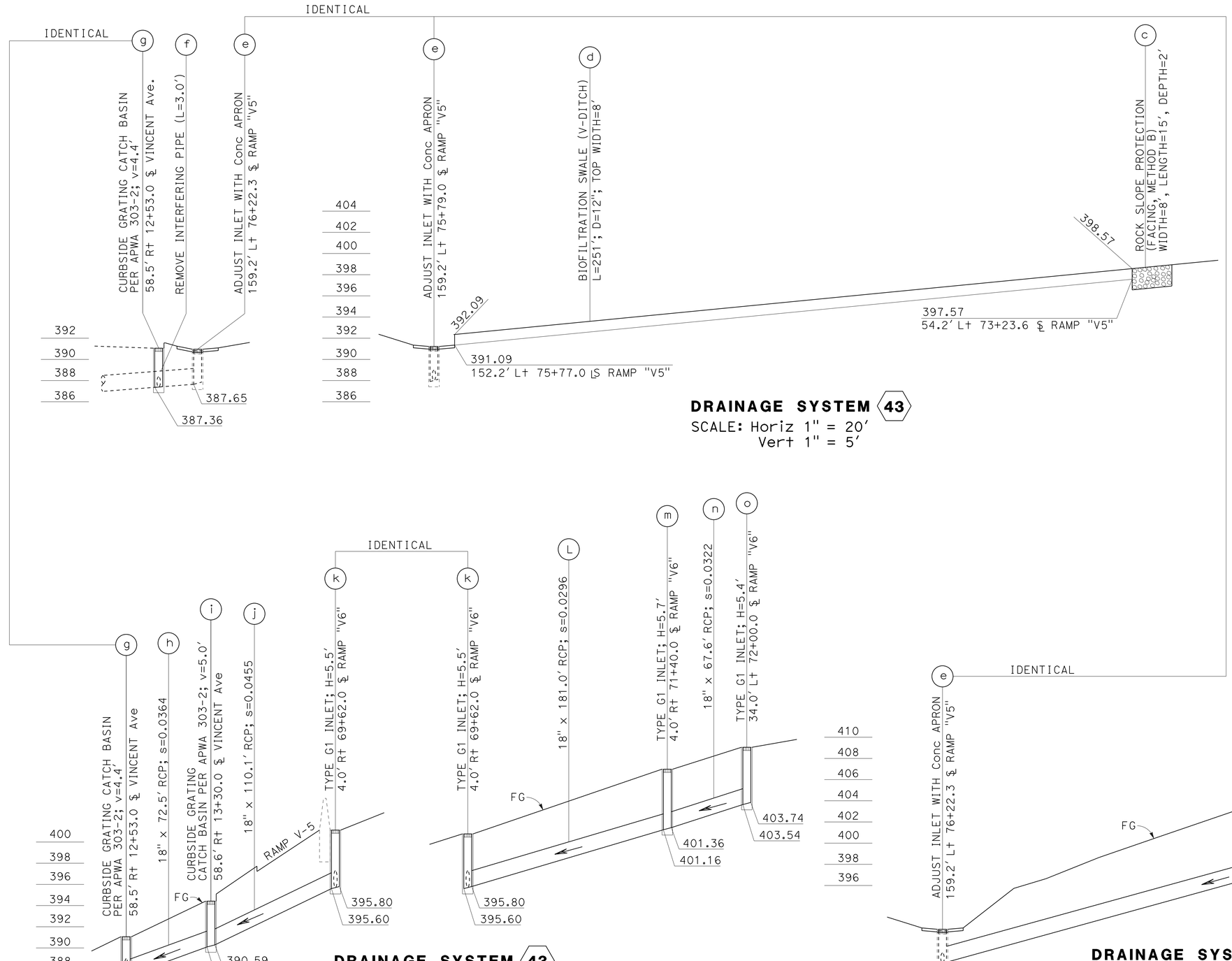

DRAINAGE SYSTEM 43
SCALE: Horiz 1" = 20′
Vert 1" = 5′

DRAINAGE SYSTEM 43
SCALE: Horiz 1" = 50′
Vert 1" = 5′

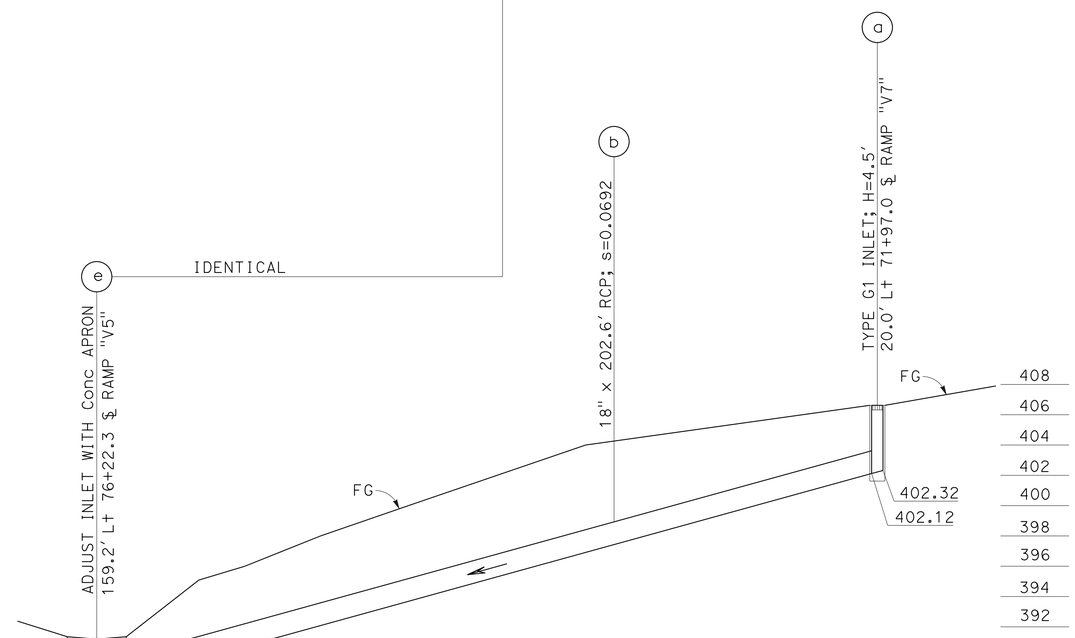

DRAINAGE SYSTEM 43
SCALE: Horiz 1" = 20′
Vert 1" = 5′

DRAINAGE PROFILES
SCALE AS SHOWN

DP-11

STATE OF CALIFORNIA - DEPARTMENT OF TRANSPORTATION
Caltrans®
HYDRAULICS

FUNCTIONAL SUPERVISOR: DAVE BHALLA
CALCULATED-DESIGNED BY: S. THAI
CHECKED BY: D. BHALLA
REVISED BY
DATE REVISED

LAST REVISION 06-09-12
DATE PLOTTED => 12-JUN-2013
TIME PLOTTED => 14:45

Dist	COUNTY	ROUTE	POST MILES TOTAL PROJECT	SHEET No.	TOTAL SHEETS
07	LA	10	33.2/37.2	185	1475

REGISTERED CIVIL ENGINEER 4-17-12 DATE

6-10-13
PLANS APPROVAL DATE

REGISTERED PROFESSIONAL ENGINEER SA K. THAI No. 71390 Exp. 12/31/13 CIVIL STATE OF CALIFORNIA

THE STATE OF CALIFORNIA OR ITS OFFICERS OR AGENTS SHALL NOT BE RESPONSIBLE FOR THE ACCURACY OR COMPLETENESS OF SCANNED COPIES OF THIS PLAN SHEET.

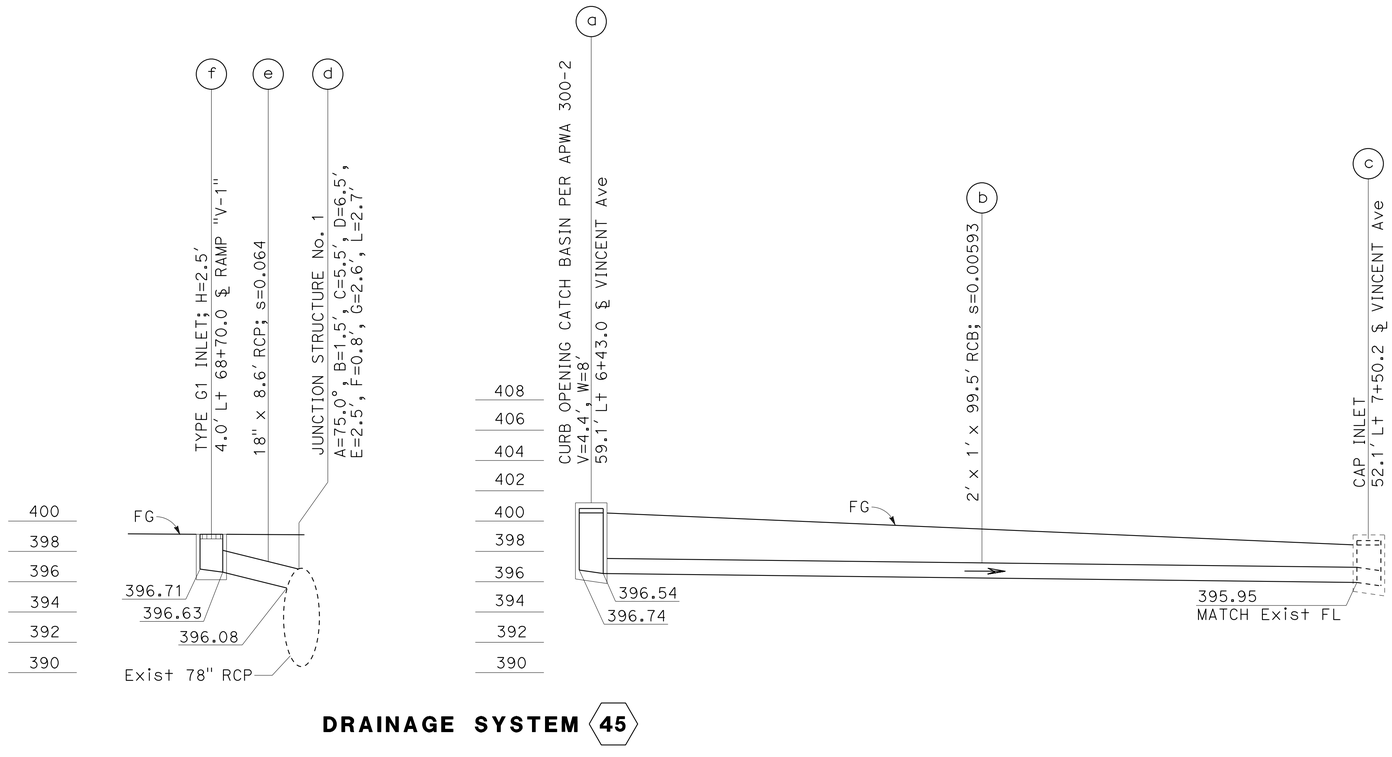

DRAINAGE SYSTEM 45

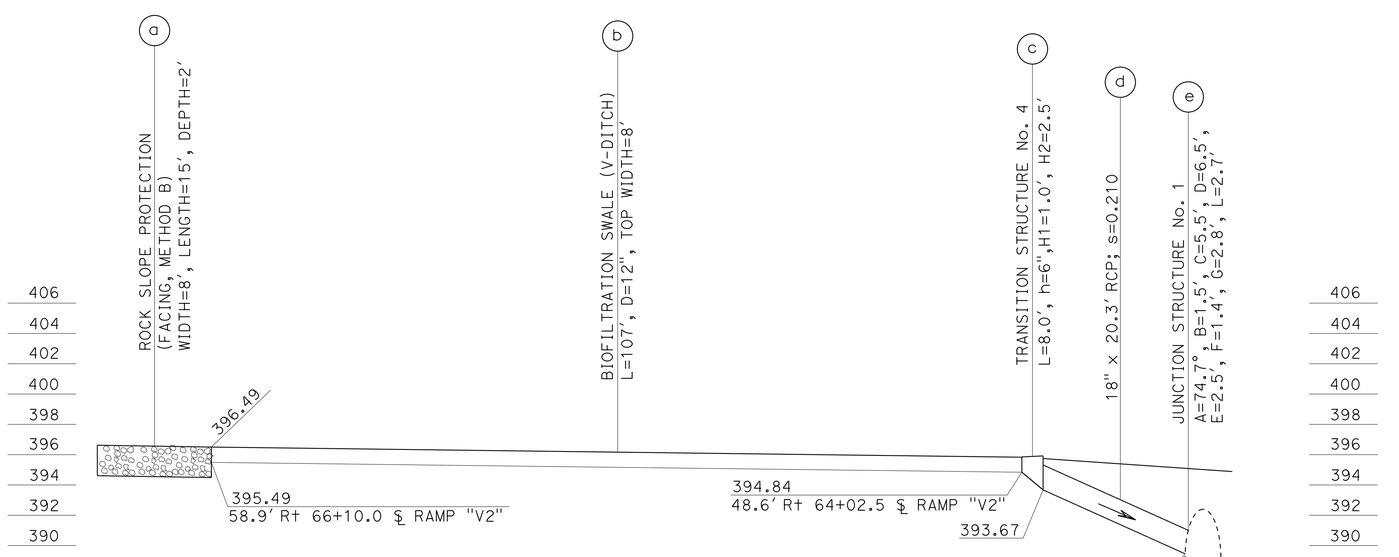

DRAINAGE SYSTEM 44

DRAINAGE PROFILES

SCALE: Horiz 1" = 10'
Vert 1" = 5'

DP-12

STATE OF CALIFORNIA - DEPARTMENT OF TRANSPORTATION
Caltrans
HYDRAULICS

CALCULATED-DESIGNED BY	S. THAI	REVISED BY	
CHECKED BY	D. BHALLA	DATE REVISED	
FUNCTIONAL SUPERVISOR	DAVE BHALLA		

LAST REVISION 06-13-12 | DATE PLOTTED => 12-JUN-2013 | TIME PLOTTED => 14:14

Dist	COUNTY	ROUTE	POST MILES TOTAL PROJECT	SHEET No.	TOTAL SHEETS
07	LA	10	33.2/37.2	186	1475

REGISTERED CIVIL ENGINEER 4-17-12 DATE

6-10-13
PLANS APPROVAL DATE

REGISTERED PROFESSIONAL ENGINEER SA K. THAI No. 71390 Exp. 12/31/13 CIVIL STATE OF CALIFORNIA

THE STATE OF CALIFORNIA OR ITS OFFICERS OR AGENTS SHALL NOT BE RESPONSIBLE FOR THE ACCURACY OR COMPLETENESS OF SCANNED COPIES OF THIS PLAN SHEET.

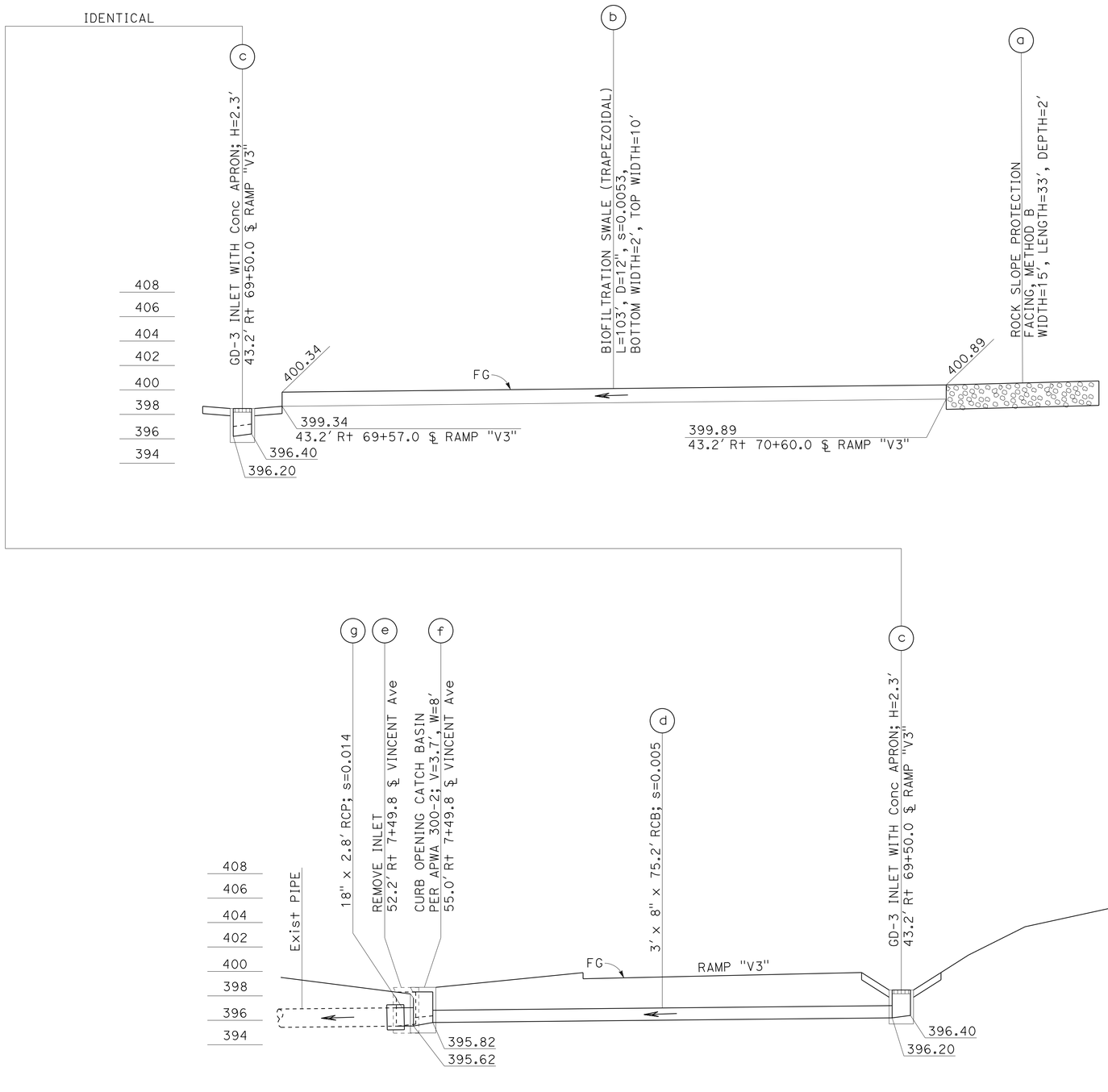

DRAINAGE SYSTEM 47

DRAINAGE PROFILES

SCALE: Horiz 1" = 10'
Vert 1" = 5'

DP-13

STATE OF CALIFORNIA - DEPARTMENT OF TRANSPORTATION
Caltrans®
HYDRAULICS

FUNCTIONAL SUPERVISOR: DAVE BHALLA
CALCULATED-DESIGNED BY: S. THAI
CHECKED BY: D. BHALLA
REVISED BY
DATE REVISED

LAST REVISION 06-09-12
DATE PLOTTED => 12-JUN-2013
TIME PLOTTED => 14:14

Dist	COUNTY	ROUTE	POST MILES TOTAL PROJECT	SHEET No.	TOTAL SHEETS
07	LA	10	33.2/37.2	187	1475

REGISTERED CIVIL ENGINEER 4-17-12 DATE

6-10-13
PLANS APPROVAL DATE

REGISTERED PROFESSIONAL ENGINEER SA K. THAI No. 71390 Exp 12/31/13 CIVIL STATE OF CALIFORNIA

THE STATE OF CALIFORNIA OR ITS OFFICERS OR AGENTS SHALL NOT BE RESPONSIBLE FOR THE ACCURACY OR COMPLETENESS OF SCANNED COPIES OF THIS PLAN SHEET.

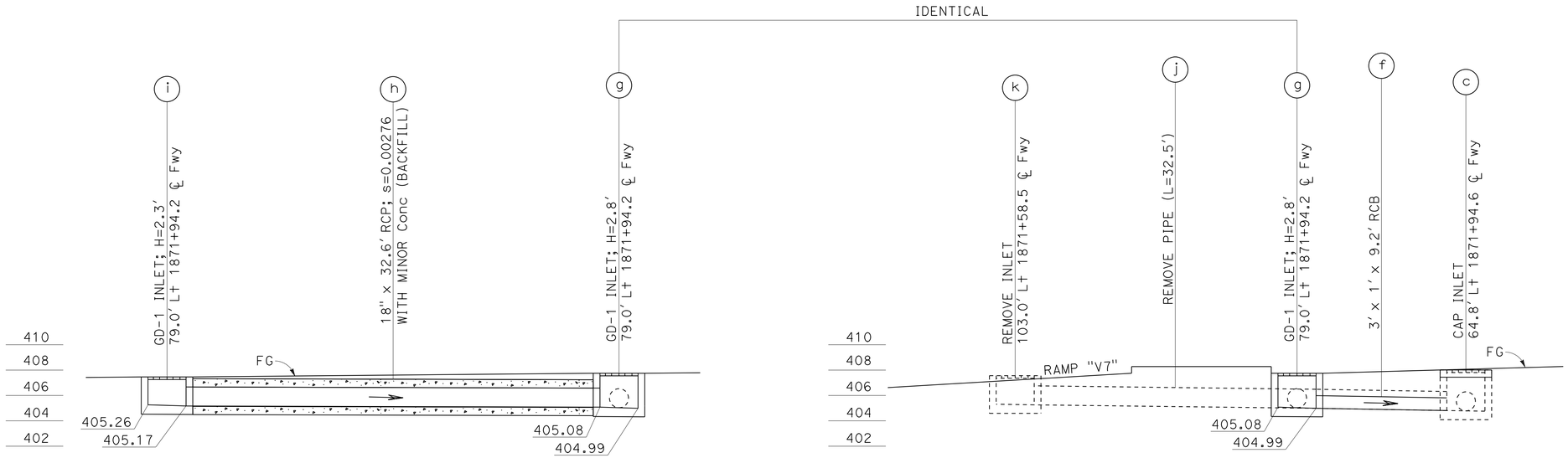

DRAINAGE SYSTEM 48

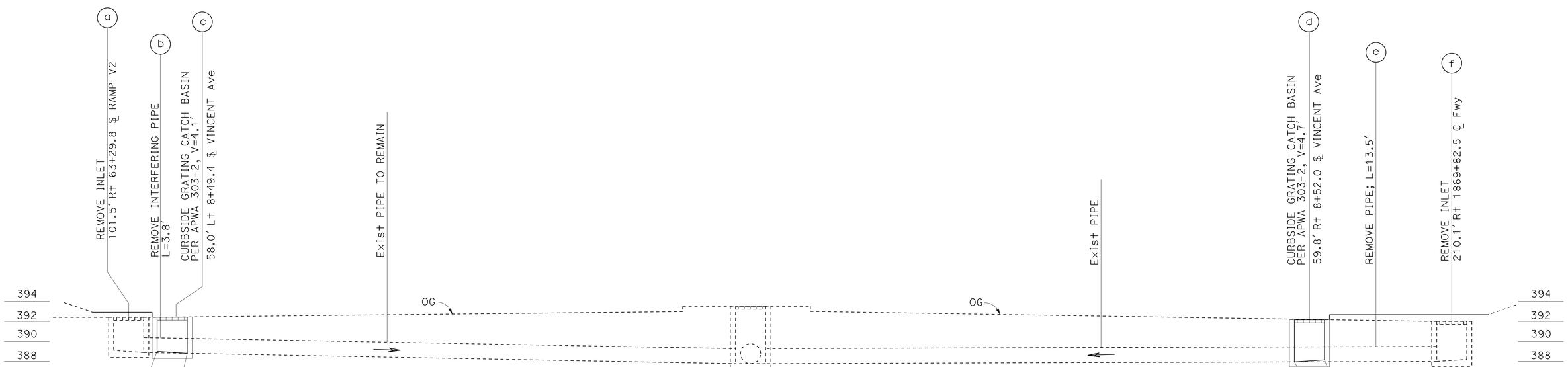

DRAINAGE SYSTEM 46

DRAINAGE PROFILES

SCALE: Horiz 1" = 5′
Vert 1" = 5′

DP-14

STATE OF CALIFORNIA - DEPARTMENT OF TRANSPORTATION
Caltrans® HYDRAULICS

FUNCTIONAL SUPERVISOR: DAVE BHALLA
CALCULATED-DESIGNED BY: S. THAI
CHECKED BY: D. BHALLA
REVISED BY / DATE REVISED

LAST REVISION 06-09-12
DATE PLOTTED => 12-JUN-2013
TIME PLOTTED => 14:14

Dist	COUNTY	ROUTE	POST MILES TOTAL PROJECT	SHEET No.	TOTAL SHEETS
07	LA	10	33.2/37.2	188	1475

REGISTERED CIVIL ENGINEER 4-17-12 DATE

6-10-13
PLANS APPROVAL DATE

REGISTERED PROFESSIONAL ENGINEER SA K. THAI No. 71390 Exp. 12/31/13 CIVIL STATE OF CALIFORNIA

THE STATE OF CALIFORNIA OR ITS OFFICERS OR AGENTS SHALL NOT BE RESPONSIBLE FOR THE ACCURACY OR COMPLETENESS OF SCANNED COPIES OF THIS PLAN SHEET.

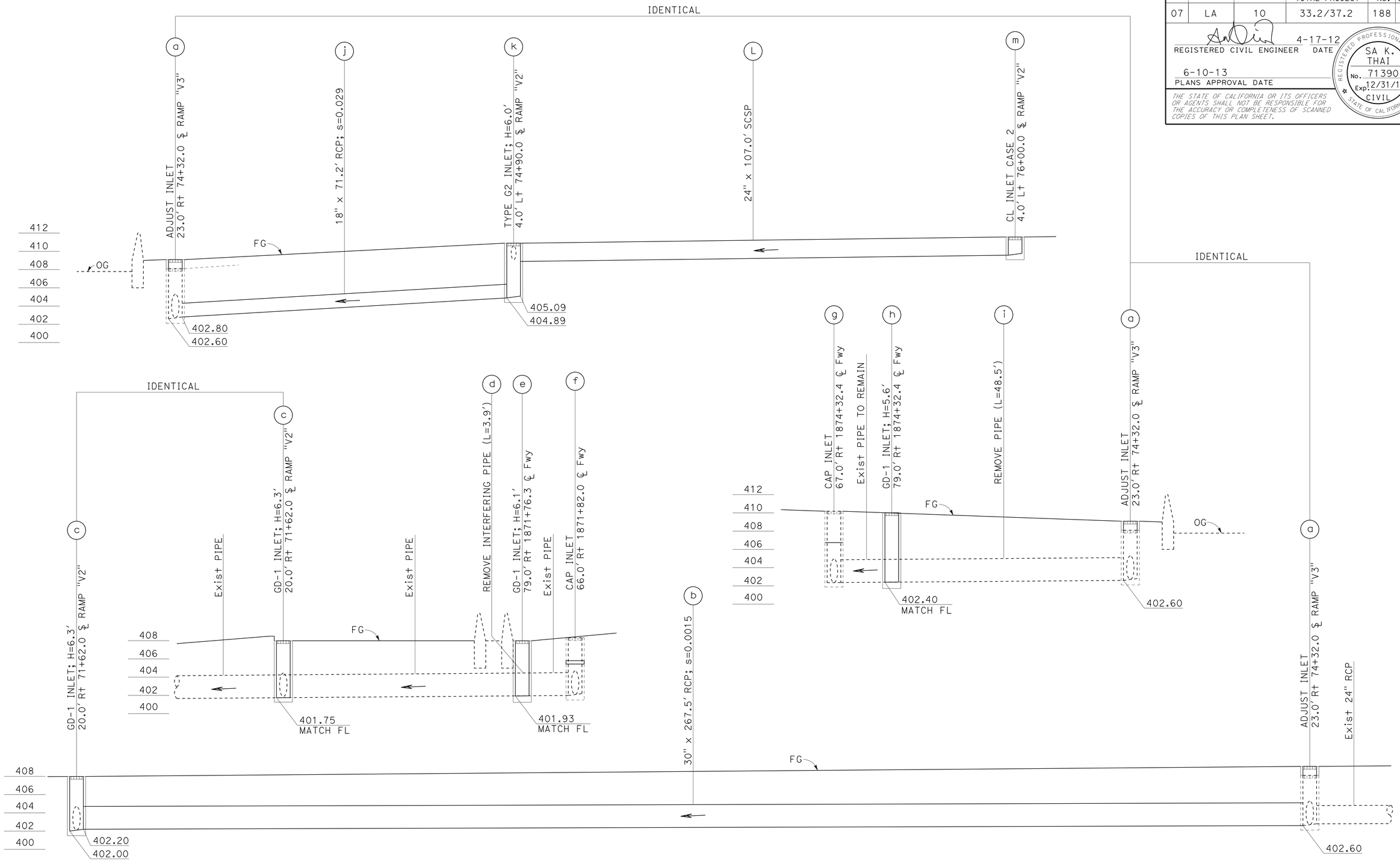

DRAINAGE SYSTEM 49

DRAINAGE PROFILES

SCALE: Horiz 1" = 10'
Vert 1" = 5'

DP-15

STATE OF CALIFORNIA - DEPARTMENT OF TRANSPORTATION
Caltrans® HYDRAULICS

FUNCTIONAL SUPERVISOR: DAVE BHALLA
CALCULATED-DESIGNED BY: S. THAI
CHECKED BY: D. BHALLA
REVISED BY
DATE REVISED

LAST REVISION 06-09-12
DATE PLOTTED => 12-JUN-2013
TIME PLOTTED => 14:14

BORDER LAST REVISED 7/2/2010
USERNAME => s117606
DGN FILE => 71170uib015.dgn
RELATIVE BORDER SCALE IS IN INCHES 0 1 2 3
UNIT 1837
PROJECT NUMBER & PHASE 07000000851

Dist	COUNTY	ROUTE	POST MILES TOTAL PROJECT	SHEET No.	TOTAL SHEETS
07	LA	10	33.2/37.2	189	1475

REGISTERED CIVIL ENGINEER 4-17-12 DATE

6-10-13
PLANS APPROVAL DATE

REGISTERED PROFESSIONAL ENGINEER SA K. THAI No. 71390 Exp. 12/31/13 CIVIL STATE OF CALIFORNIA

THE STATE OF CALIFORNIA OR ITS OFFICERS OR AGENTS SHALL NOT BE RESPONSIBLE FOR THE ACCURACY OR COMPLETENESS OF SCANNED COPIES OF THIS PLAN SHEET.

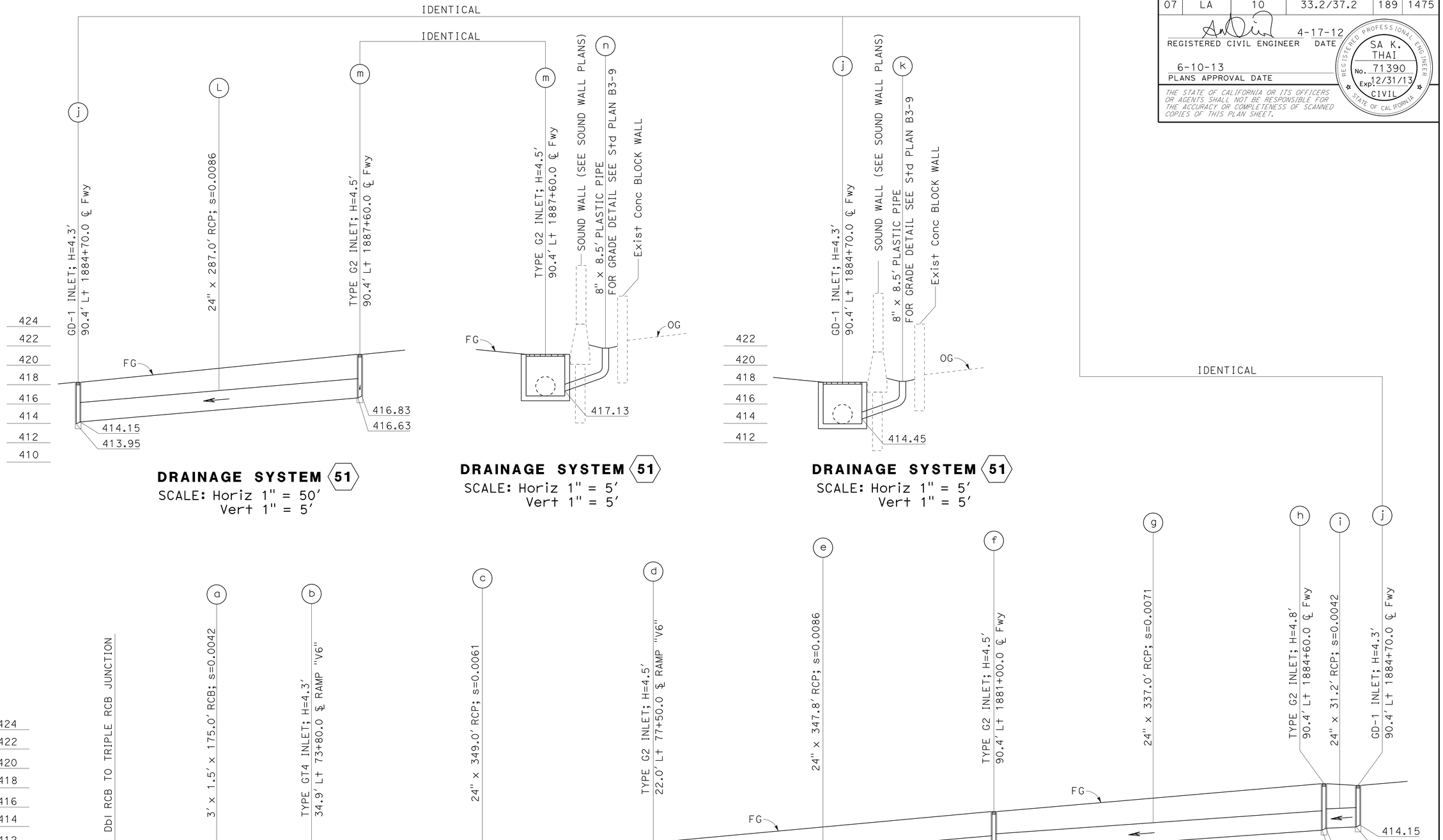

DRAINAGE PROFILES

SCALE AS SHOWN

DP-16

STATE OF CALIFORNIA - DEPARTMENT OF TRANSPORTATION
Caltrans HYDRAULICS

FUNCTIONAL SUPERVISOR: DAVE BHALLA

CALCULATED-DESIGNED BY: S. THAI
CHECKED BY: D. BHALLA
REVISED BY
DATE REVISED

LAST REVISION 06-09-12
DATE PLOTTED => 12-JUN-2013
TIME PLOTTED => 14:14

Dist	COUNTY	ROUTE	POST MILES TOTAL PROJECT	SHEET No.	TOTAL SHEETS
07	LA	10	33.2/37.2	190	1475

REGISTERED CIVIL ENGINEER 4-17-12 DATE

6-10-13
PLANS APPROVAL DATE

REGISTERED PROFESSIONAL ENGINEER SA K. THAI No. 71390 Exp. 12/31/13 CIVIL STATE OF CALIFORNIA

THE STATE OF CALIFORNIA OR ITS OFFICERS OR AGENTS SHALL NOT BE RESPONSIBLE FOR THE ACCURACY OR COMPLETENESS OF SCANNED COPIES OF THIS PLAN SHEET.

NOTE:

PROVIDE CLEARANCE OF 0.25" MINIMUM BETWEEN TOP OF RCB AND BOTTOM OF SOUND WALL BEAM STRUCTURE (SEE STRUCTURE PLANS)

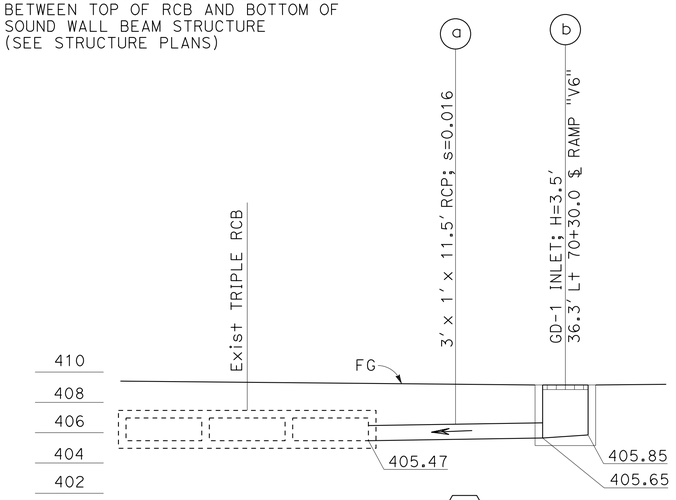

DRAINAGE SYSTEM 50
SCALE: Horiz 1" = 5'
Vert 1" = 5'

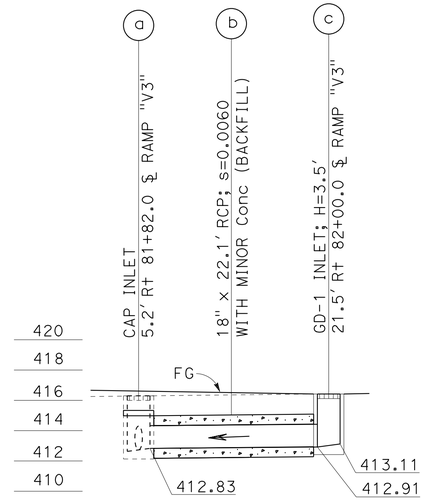

DRAINAGE SYSTEM 53
SCALE: Horiz 1" = 10'
Vert 1" = 5'

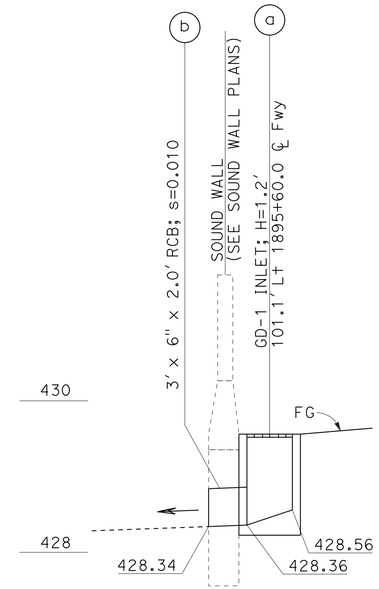

DRAINAGE SYSTEM 57
SCALE: Horiz 1" = 5'
Vert 1" = 1'

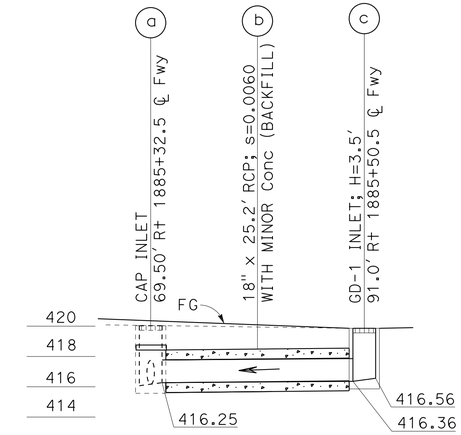

DRAINAGE SYSTEM 54
SCALE: Horiz 1" = 10'
Vert 1" = 5'

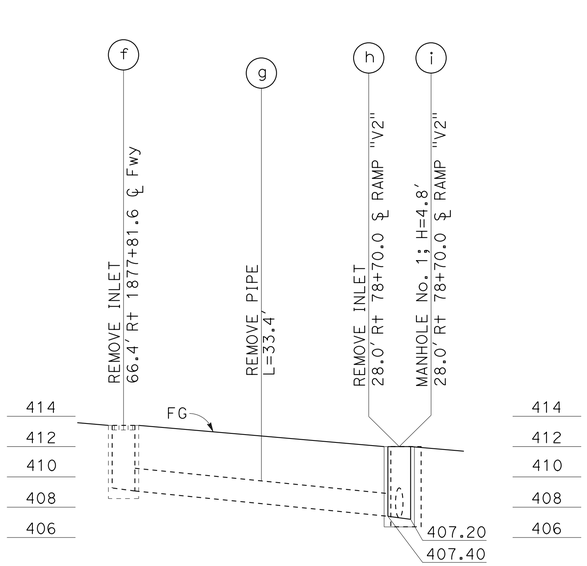

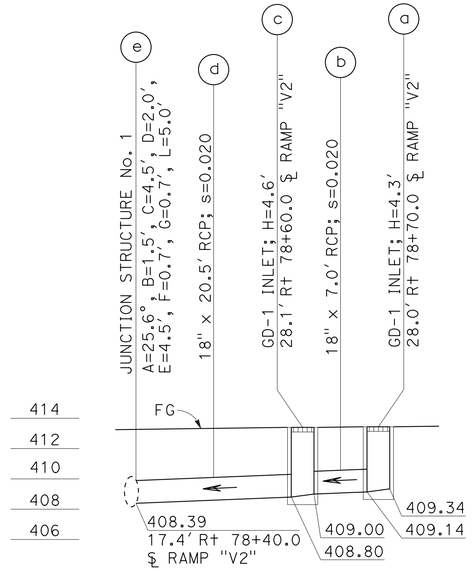

DRAINAGE SYSTEM 52
SCALE: Horiz 1" = 10'
Vert 1" = 5'

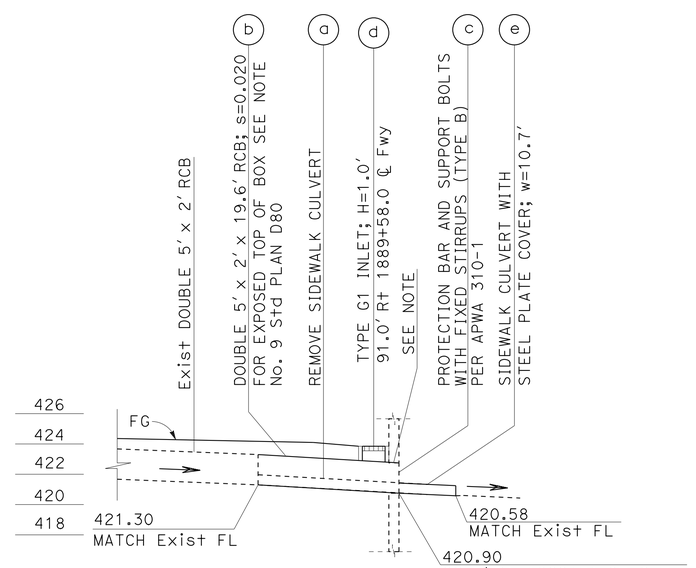

DRAINAGE SYSTEM 55
SCALE: Horiz 1" = 10'
Vert 1" = 5'

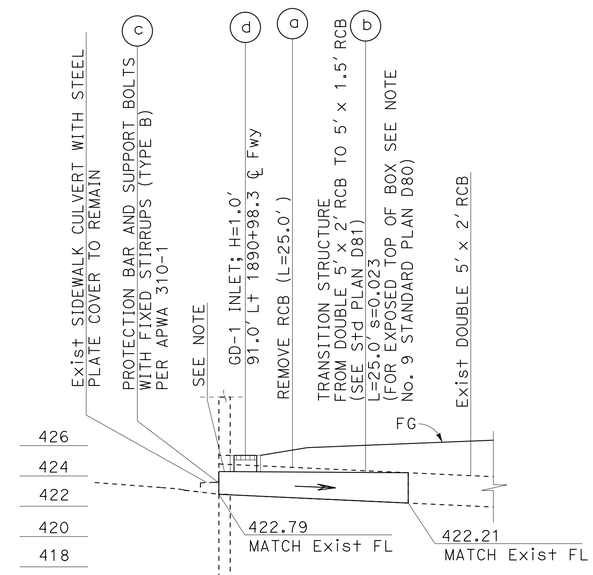

DRAINAGE SYSTEM 56
SCALE: Horiz 1" = 10'
Vert 1" = 5'

DRAINAGE PROFILES

SCALE AS SHOWN

DP-17

REVISED BY	DATE REVISED
S. THAI	D. BHALLA
CALCULATED-DESIGNED BY	CHECKED BY
FUNCTIONAL SUPERVISOR	DAVE BHALLA

STATE OF CALIFORNIA - DEPARTMENT OF TRANSPORTATION
Caltrans
HYDRAULICS

LAST REVISION 06-09-12 | DATE PLOTTED => 12-JUN-2013 | TIME PLOTTED => 14:14

Dist	COUNTY	ROUTE	POST MILES TOTAL PROJECT	SHEET No.	TOTAL SHEETS
07	LA	10	33.2/37.2	191	1475

REGISTERED CIVIL ENGINEER 4-17-12 DATE

6-10-13
PLANS APPROVAL DATE

REGISTERED PROFESSIONAL ENGINEER SA K. THAI No. 71390 Exp. 12/31/13 CIVIL STATE OF CALIFORNIA

THE STATE OF CALIFORNIA OR ITS OFFICERS OR AGENTS SHALL NOT BE RESPONSIBLE FOR THE ACCURACY OR COMPLETENESS OF SCANNED COPIES OF THIS PLAN SHEET.

DRAINAGE PROFILES

SCALE AS SHOWN

DP-18

STATE OF CALIFORNIA - DEPARTMENT OF TRANSPORTATION

Caltrans HYDRAULICS

FUNCTIONAL SUPERVISOR: DAVE BHALLA

CALCULATED-DESIGNED BY: S. THAI

CHECKED BY: D. BHALLA

REVISED BY | DATE REVISED

LAST REVISION 06-09-12 | DATE PLOTTED => 12-JUN-2013 | TIME PLOTTED => 14:14

Dist	COUNTY	ROUTE	POST MILES TOTAL PROJECT	SHEET No.	TOTAL SHEETS
07	LA	10	33.2/37.2	192	1475

REGISTERED CIVIL ENGINEER 4-17-12 DATE

6-10-13
PLANS APPROVAL DATE

REGISTERED PROFESSIONAL ENGINEER SA K. THAI No. 71390 Exp. 12/31/13 CIVIL STATE OF CALIFORNIA

THE STATE OF CALIFORNIA OR ITS OFFICERS OR AGENTS SHALL NOT BE RESPONSIBLE FOR THE ACCURACY OR COMPLETENESS OF SCANNED COPIES OF THIS PLAN SHEET.

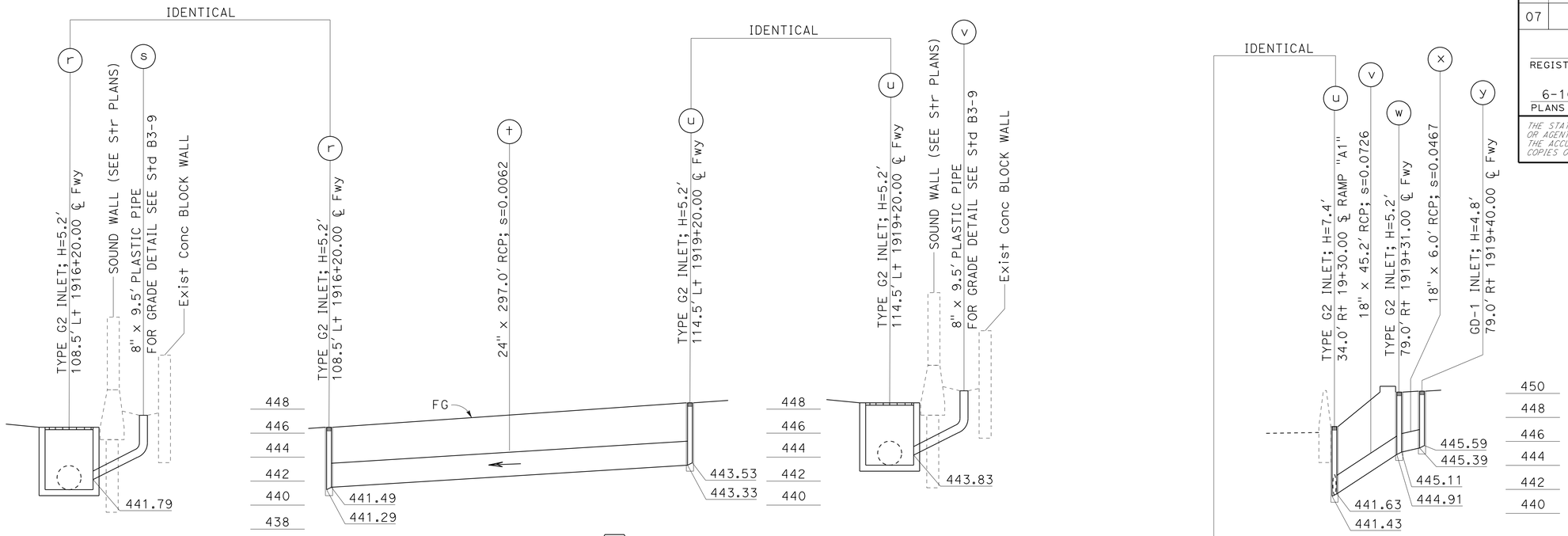

DRAINAGE SYSTEM 58
SCALE: Horiz 1″ = 5′
Vert 1″ = 5′

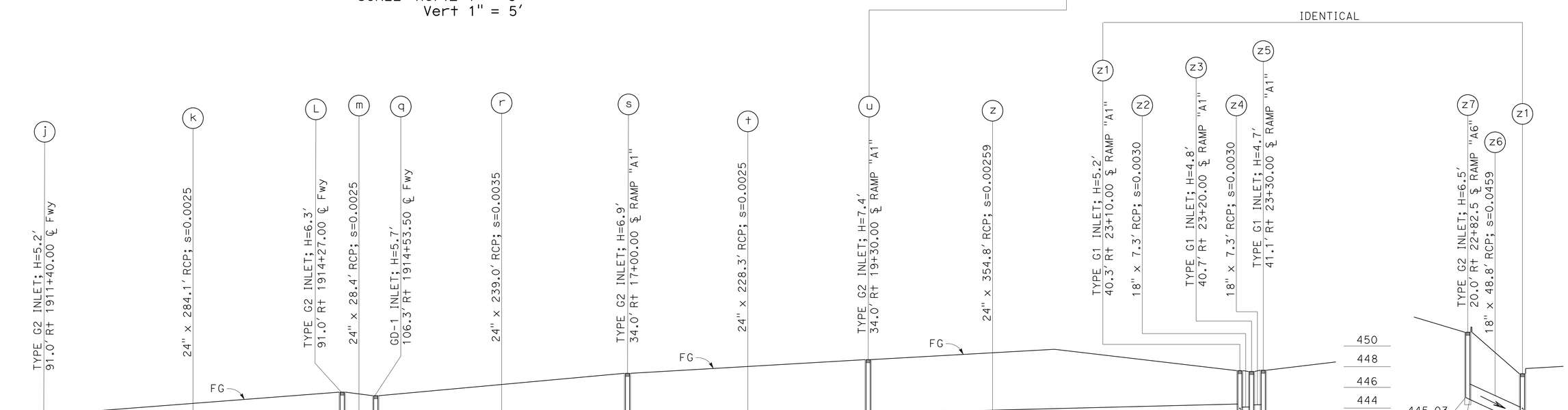

DRAINAGE SYSTEM 59
SCALE: Horiz 1″ = 50′
Vert 1″ = 5′

DRAINAGE PROFILES
SCALE AS SHOWN

DP-19

STATE OF CALIFORNIA - DEPARTMENT OF TRANSPORTATION
Caltrans®
HYDRAULICS

FUNCTIONAL SUPERVISOR: DAVE BHALLA
CALCULATED-DESIGNED BY: S. THAI
CHECKED BY: D. BHALLA
REVISED BY
DATE REVISED

LAST REVISION 06-09-12
DATE PLOTTED => 12-JUN-2013
TIME PLOTTED => 14:14

Dist	COUNTY	ROUTE	POST MILES TOTAL PROJECT	SHEET No.	TOTAL SHEETS
07	LA	10	33.2/37.2	193	1475

REGISTERED CIVIL ENGINEER 4-17-12 DATE

6-10-13
PLANS APPROVAL DATE

REGISTERED PROFESSIONAL ENGINEER SA K. THAI No. 71390 Exp. 12/31/13 CIVIL STATE OF CALIFORNIA

THE STATE OF CALIFORNIA OR ITS OFFICERS OR AGENTS SHALL NOT BE RESPONSIBLE FOR THE ACCURACY OR COMPLETENESS OF SCANNED COPIES OF THIS PLAN SHEET.

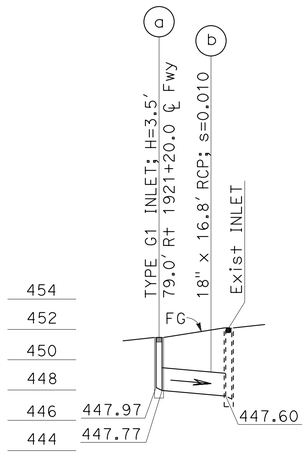

DRAINAGE SYSTEM 60
SCALE: Horiz 1" = 20'
Vert 1" = 5'

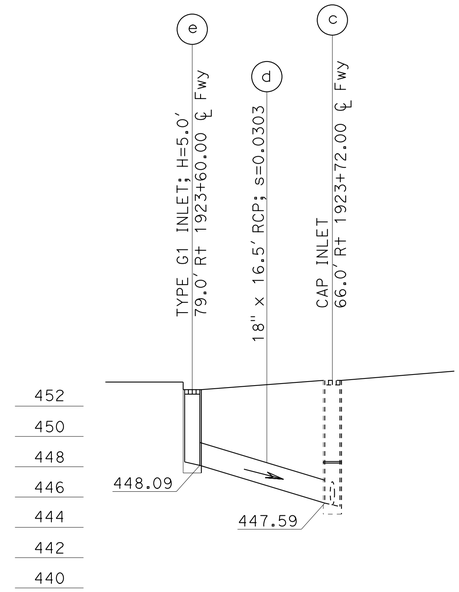

DRAINAGE SYSTEM 61
SCALE: Horiz 1" = 10'
Vert 1" = 5'

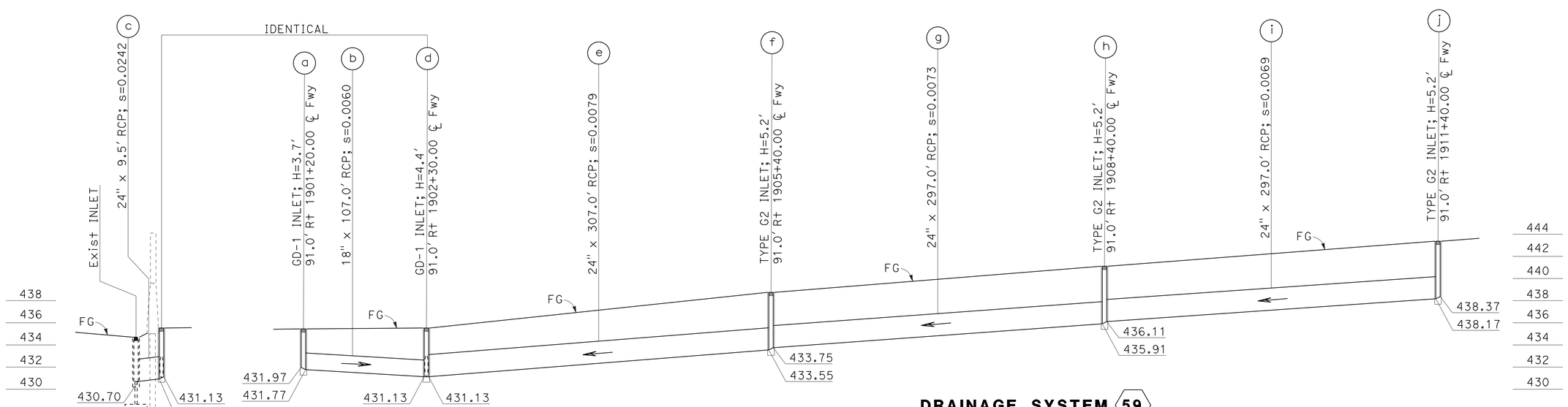

DRAINAGE SYSTEM 59
SCALE: Horiz 1" = 50'
Vert 1" = 5'

DRAINAGE PROFILES
SCALE AS SHOWN
DP-20

STATE OF CALIFORNIA - DEPARTMENT OF TRANSPORTATION
Caltrans
HYDRAULICS

FUNCTIONAL SUPERVISOR: DAVE BHALLA
CALCULATED-DESIGNED BY: S. THAI
CHECKED BY: D. BHALLA
REVISED BY
DATE REVISED

LAST REVISION 06-09-12
DATE PLOTTED => 12-JUN-2013
TIME PLOTTED => 14:15

Dist	COUNTY	ROUTE	POST MILES TOTAL PROJECT	SHEET No.	TOTAL SHEETS
07	LA	10	33.2/37.2	194	1475

REGISTERED CIVIL ENGINEER 4-17-12 DATE

6-10-13
PLANS APPROVAL DATE

REGISTERED PROFESSIONAL ENGINEER SA K. THAI No. 71390 Exp. 12/31/13 CIVIL STATE OF CALIFORNIA

THE STATE OF CALIFORNIA OR ITS OFFICERS OR AGENTS SHALL NOT BE RESPONSIBLE FOR THE ACCURACY OR COMPLETENESS OF SCANNED COPIES OF THIS PLAN SHEET.

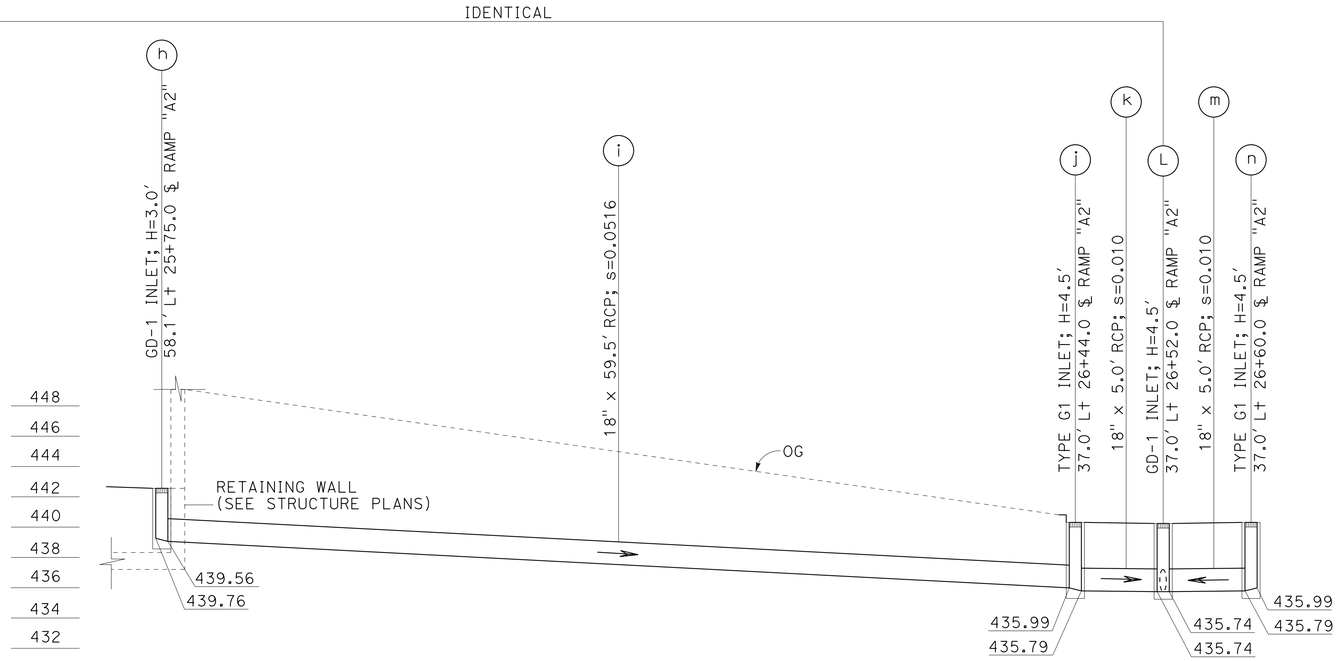

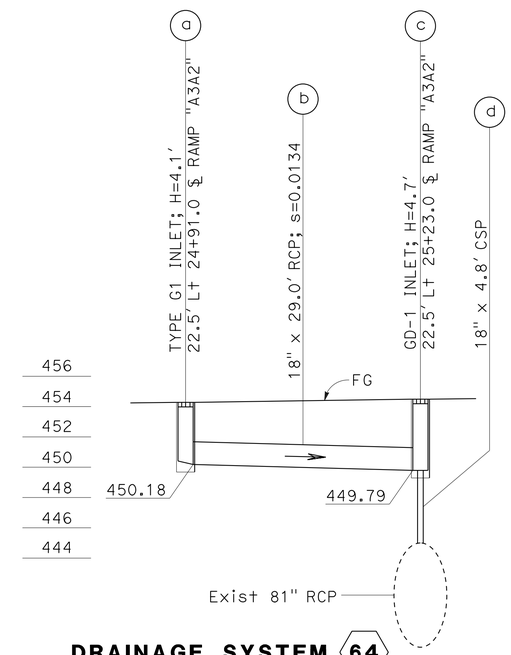

DRAINAGE SYSTEM 64
SCALE: Horiz 1" = 10'
Vert 1" = 5'

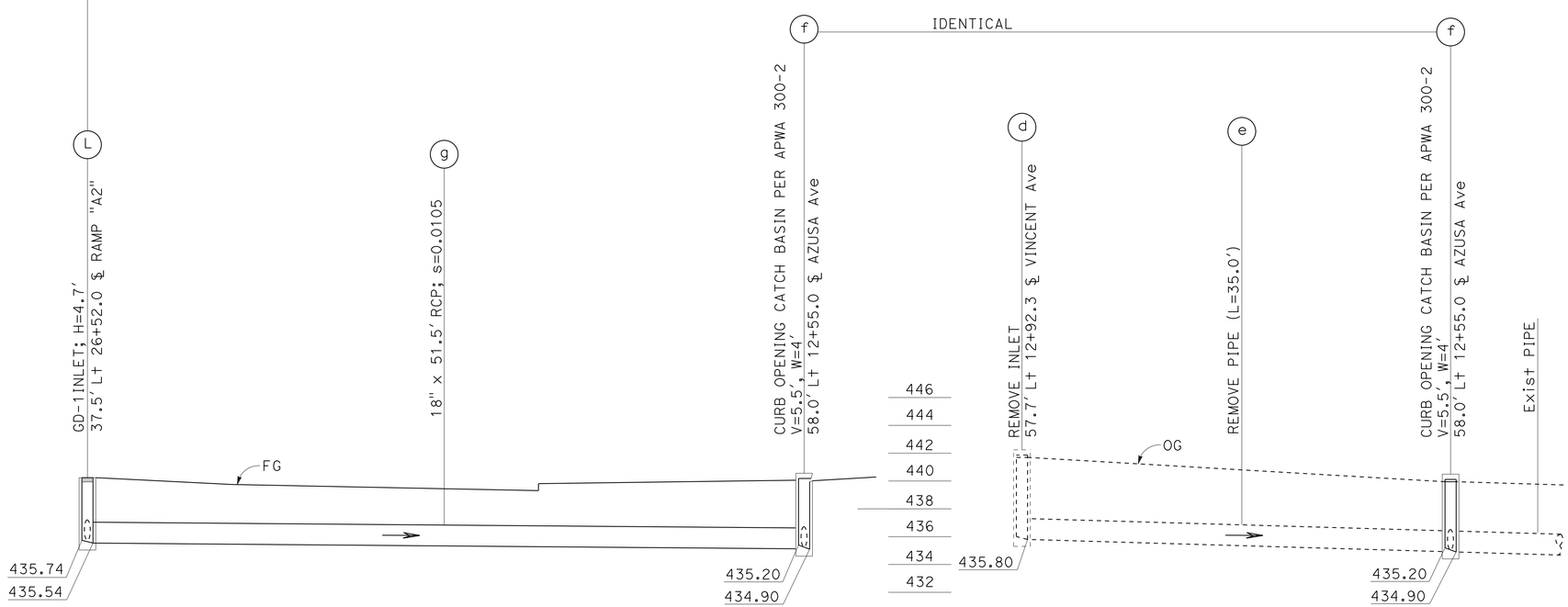

DRAINAGE SYSTEM 63
SCALE: Horiz 1" = 5'
Vert 1" = 5'

DRAINAGE PROFILES
SCALE AS SHOWN

DP-21

STATE OF CALIFORNIA - DEPARTMENT OF TRANSPORTATION
Caltrans
HYDRAULICS

FUNCTIONAL SUPERVISOR: DAVE BHALLA
CALCULATED-DESIGNED BY: S. THAI
CHECKED BY: D. BHALLA
REVISED BY
DATE REVISED

LAST REVISION 06-09-12
DATE PLOTTED => 12-JUN-2013
TIME PLOTTED => 14:15

Dist	COUNTY	ROUTE	POST MILES TOTAL PROJECT	SHEET No.	TOTAL SHEETS
07	LA	10	33.2/37.2	195	1475

REGISTERED CIVIL ENGINEER 4-17-12 DATE

6-10-13
PLANS APPROVAL DATE

REGISTERED PROFESSIONAL ENGINEER SA K. THAI No. 71390 Exp 12/31/13 CIVIL STATE OF CALIFORNIA

THE STATE OF CALIFORNIA OR ITS OFFICERS OR AGENTS SHALL NOT BE RESPONSIBLE FOR THE ACCURACY OR COMPLETENESS OF SCANNED COPIES OF THIS PLAN SHEET.

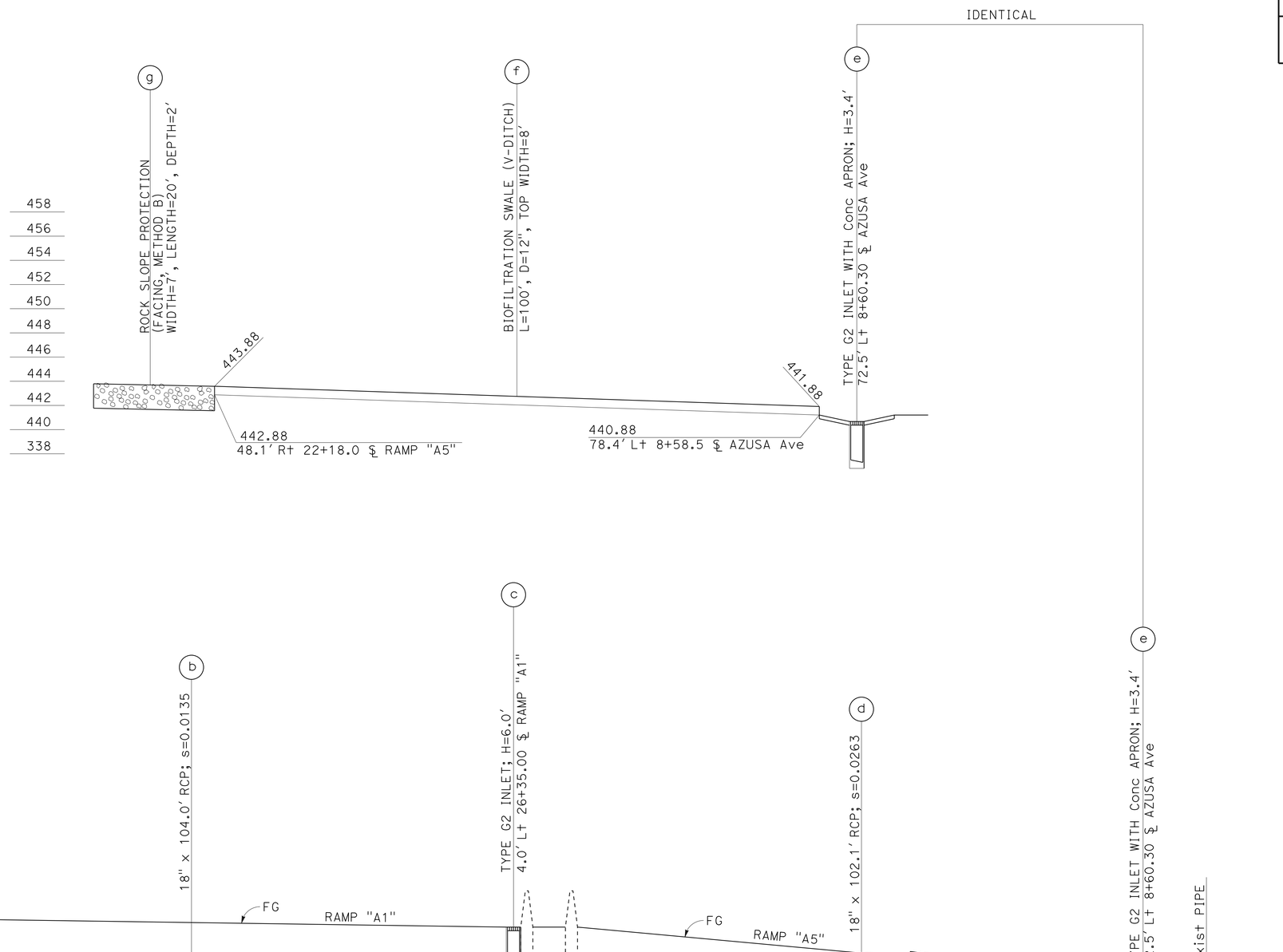

DRAINAGE SYSTEM 66

DRAINAGE PROFILES

SCALE: Horiz 1" = 10'
Vert 1" = 5'

DP-22

STATE OF CALIFORNIA - DEPARTMENT OF TRANSPORTATION
Caltrans® HYDRAULICS

FUNCTIONAL SUPERVISOR: DAVE BHALLA
CALCULATED-DESIGNED BY: S. THAI
CHECKED BY: D. BHALLA
REVISED BY
DATE REVISED

LAST REVISION 06-09-12
DATE PLOTTED => 12-JUN-2013
TIME PLOTTED => 14:15

Dist	COUNTY	ROUTE	POST MILES TOTAL PROJECT	SHEET No.	TOTAL SHEETS
07	LA	10	33.2/37.2	196	1475

REGISTERED CIVIL ENGINEER 4-17-12 DATE

6-10-13
PLANS APPROVAL DATE

REGISTERED PROFESSIONAL ENGINEER SA K. THAI No. 71390 Exp. 12/31/13 CIVIL STATE OF CALIFORNIA

THE STATE OF CALIFORNIA OR ITS OFFICERS OR AGENTS SHALL NOT BE RESPONSIBLE FOR THE ACCURACY OR COMPLETENESS OF SCANNED COPIES OF THIS PLAN SHEET.

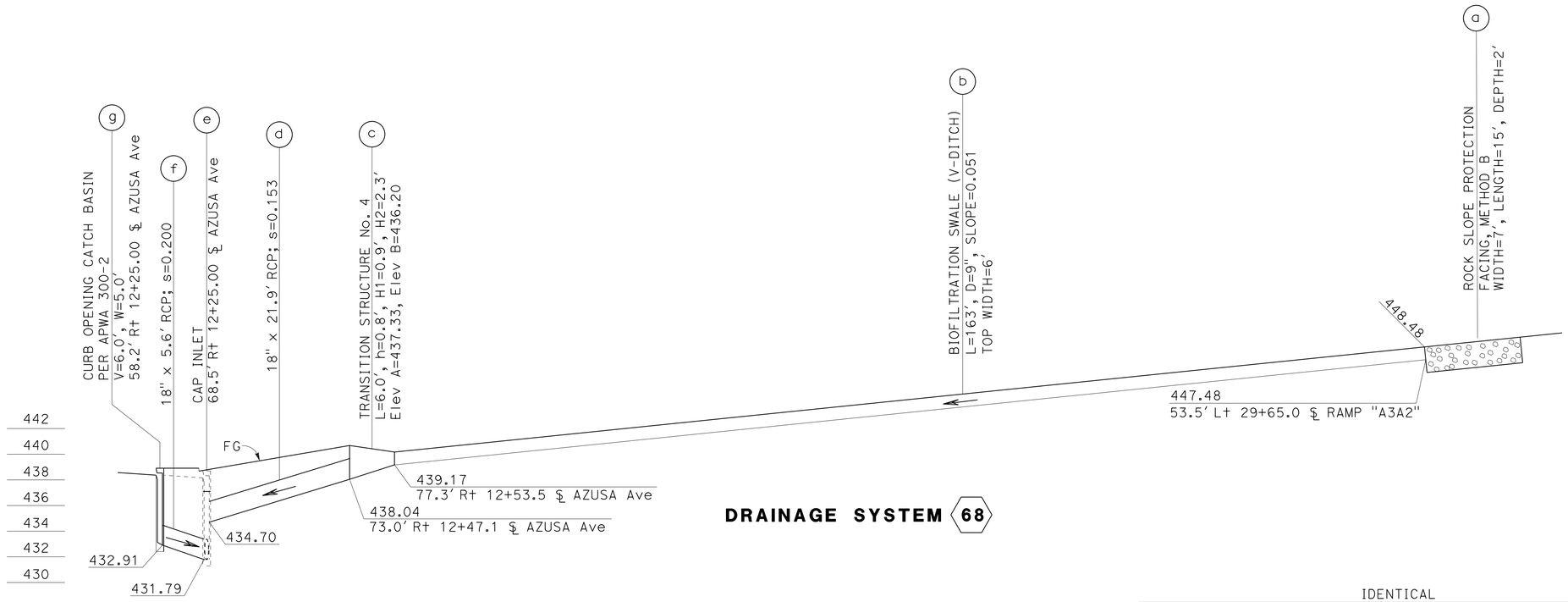

DRAINAGE SYSTEM 68

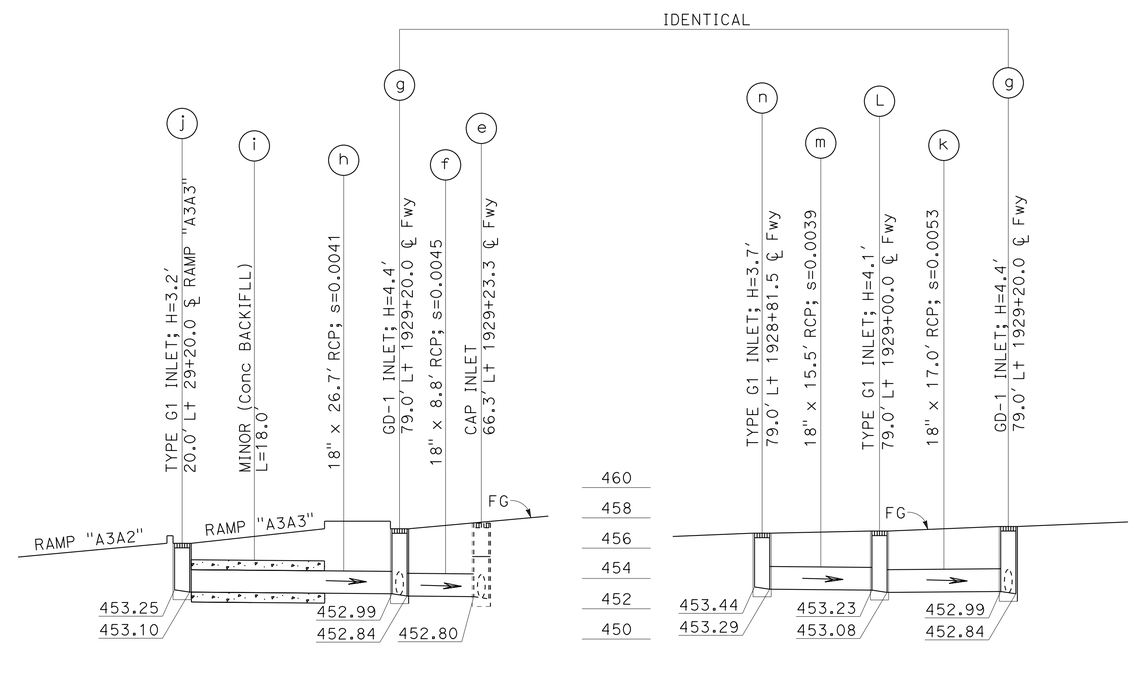

DRAINAGE SYSTEM 70

DRAINAGE PROFILES

SCALE: Horiz 1" = 10'
Vert 1" = 5'

DP-23

STATE OF CALIFORNIA - DEPARTMENT OF TRANSPORTATION
Caltrans
HYDRAULICS

FUNCTIONAL SUPERVISOR: DAVE BHALLA
CALCULATED-DESIGNED BY: S. THAI
CHECKED BY: D. BHALLA
REVISED BY
DATE REVISED

LAST REVISION 06-09-12
DATE PLOTTED => 12-JUN-2013
TIME PLOTTED => 14:15

Dist	COUNTY	ROUTE	POST MILES TOTAL PROJECT	SHEET No.	TOTAL SHEETS
07	LA	10	33.2/37.2	197	1475

REGISTERED CIVIL ENGINEER 4-17-12 DATE

6-10-13
PLANS APPROVAL DATE

REGISTERED PROFESSIONAL ENGINEER SA K. THAI No. 71390 Exp 12/31/13 CIVIL STATE OF CALIFORNIA

THE STATE OF CALIFORNIA OR ITS OFFICERS OR AGENTS SHALL NOT BE RESPONSIBLE FOR THE ACCURACY OR COMPLETENESS OF SCANNED COPIES OF THIS PLAN SHEET.

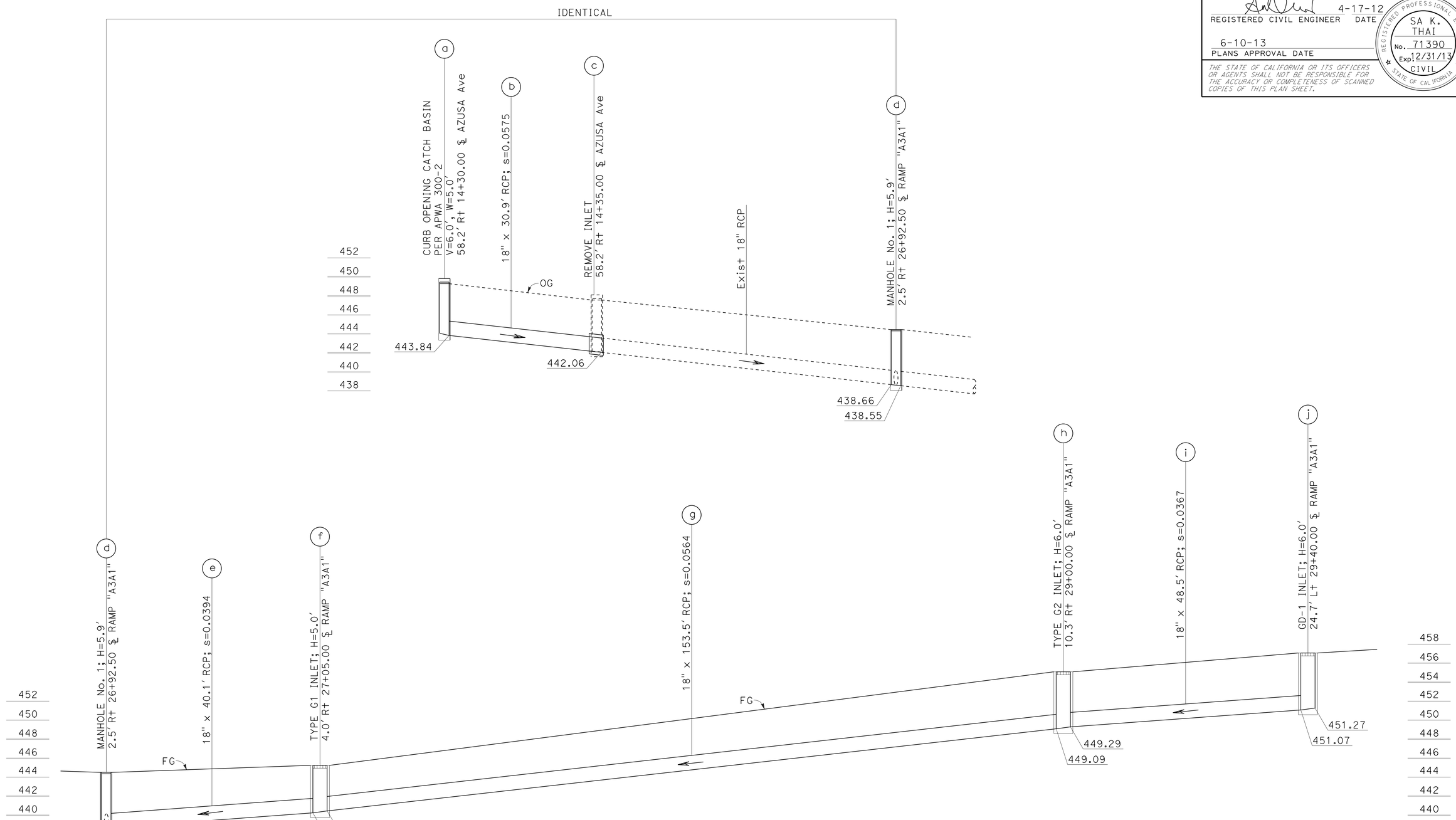

DRAINAGE SYSTEM 69

DRAINAGE PROFILES

SCALE: Horiz 1" = 10'
Vert 1" = 5'

DP-24

STATE OF CALIFORNIA - DEPARTMENT OF TRANSPORTATION
Caltrans
HYDRAULICS

FUNCTIONAL SUPERVISOR: DAVE BHALLA
CALCULATED-DESIGNED BY: S. THAI
CHECKED BY: D. BHALLA
REVISED BY
DATE REVISED

LAST REVISION 06-09-12
DATE PLOTTED => 12-JUN-2013
TIME PLOTTED => 14:15

Dist	COUNTY	ROUTE	POST MILES TOTAL PROJECT	SHEET No.	TOTAL SHEETS
07	LA	10	33.2/37.2	198	1475

REGISTERED CIVIL ENGINEER 4-17-12 DATE

6-10-13
PLANS APPROVAL DATE

REGISTERED PROFESSIONAL ENGINEER SA K. THAI No. 71390 Exp. 12/31/13 CIVIL STATE OF CALIFORNIA

THE STATE OF CALIFORNIA OR ITS OFFICERS OR AGENTS SHALL NOT BE RESPONSIBLE FOR THE ACCURACY OR COMPLETENESS OF SCANNED COPIES OF THIS PLAN SHEET.

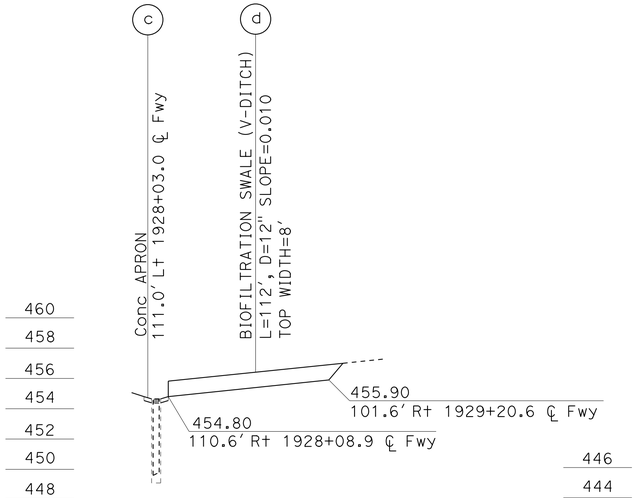

DRAINAGE SYSTEM 71
SCALE: Horiz 1" = 50'
Vert 1" = 5'

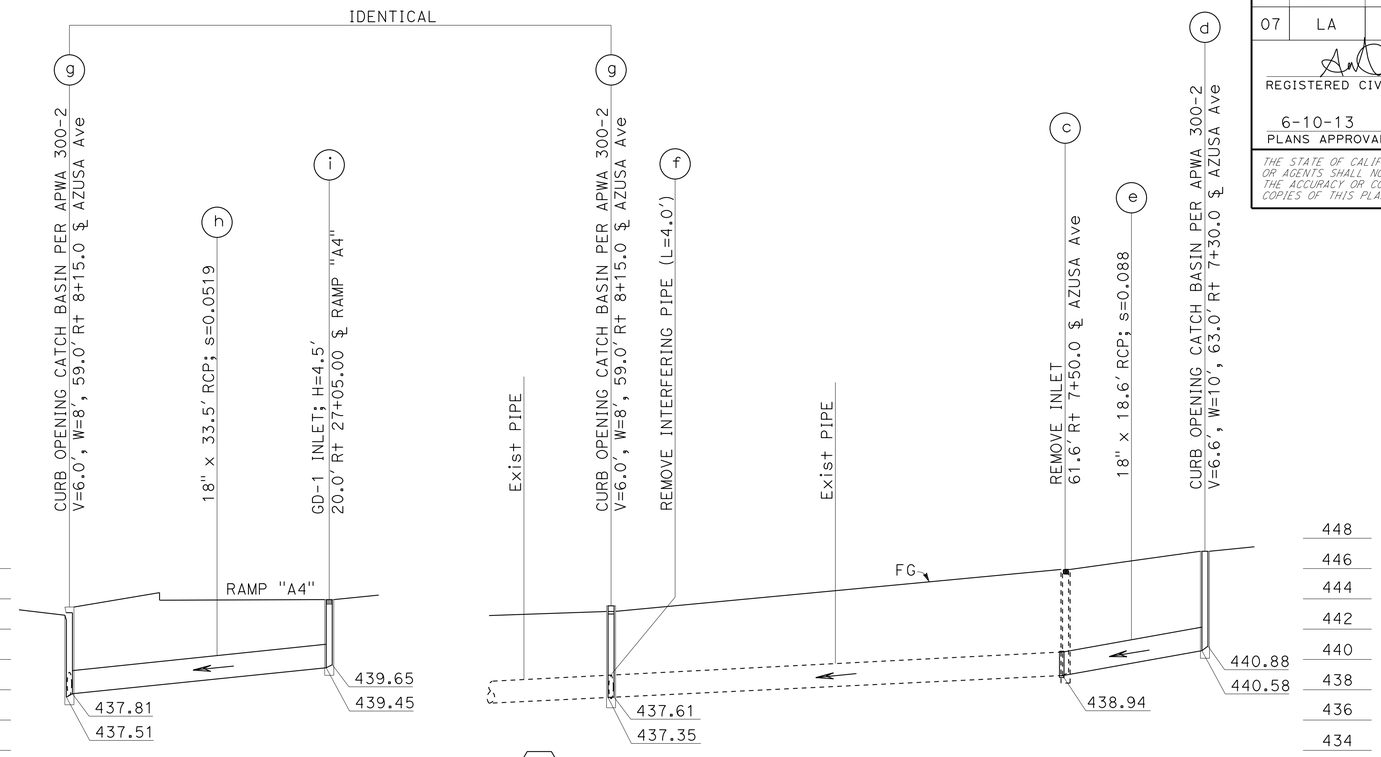

DRAINAGE SYSTEM 72
SCALE: Horiz 1" = 10'
Vert 1" = 5'

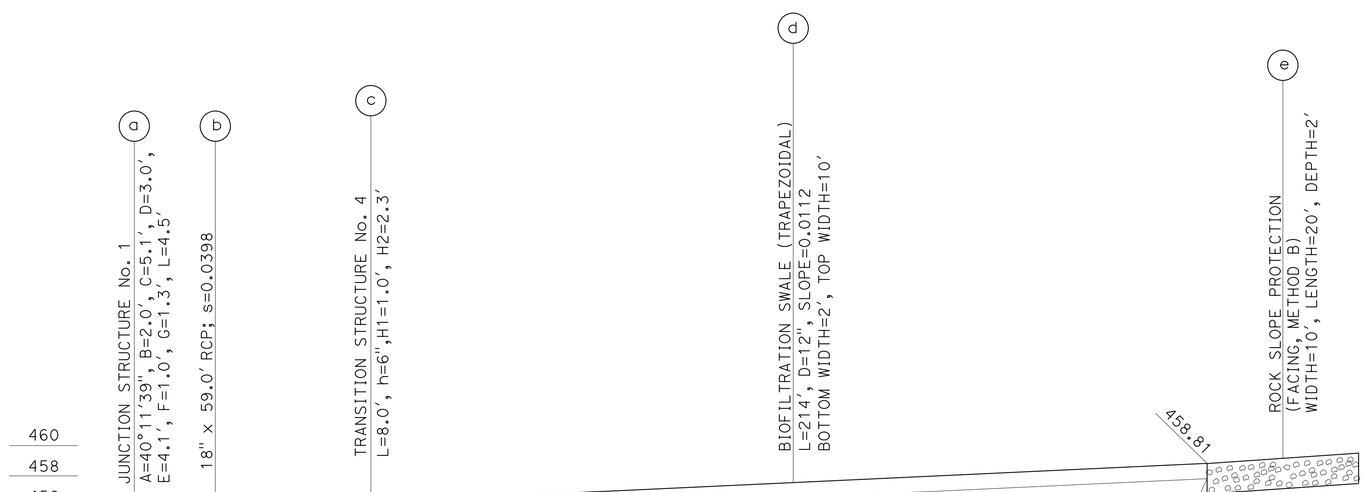

DRAINAGE SYSTEM 73
SCALE: Horiz 1" = 20'
Vert 1" = 5'

DRAINAGE PROFILES
SCALE AS SHOWN
DP-25

STATE OF CALIFORNIA - DEPARTMENT OF TRANSPORTATION
Caltrans® HYDRAULICS

FUNCTIONAL SUPERVISOR: DAVE BHALLA
CALCULATED-DESIGNED BY: S. THAI
CHECKED BY: D. BHALLA
REVISED BY
DATE REVISED

LAST REVISION 06-09-12
DATE PLOTTED => 12-JUN-2013
TIME PLOTTED => 14:15

Dist	COUNTY	ROUTE	POST MILES TOTAL PROJECT	SHEET No.	TOTAL SHEETS
07	LA	10	33.2/37.2	199	1475

REGISTERED CIVIL ENGINEER 4-17-12 DATE

6-10-13
PLANS APPROVAL DATE

REGISTERED PROFESSIONAL ENGINEER SA K. THAI No. 71390 Exp. 12/31/13 CIVIL STATE OF CALIFORNIA

THE STATE OF CALIFORNIA OR ITS OFFICERS OR AGENTS SHALL NOT BE RESPONSIBLE FOR THE ACCURACY OR COMPLETENESS OF SCANNED COPIES OF THIS PLAN SHEET.

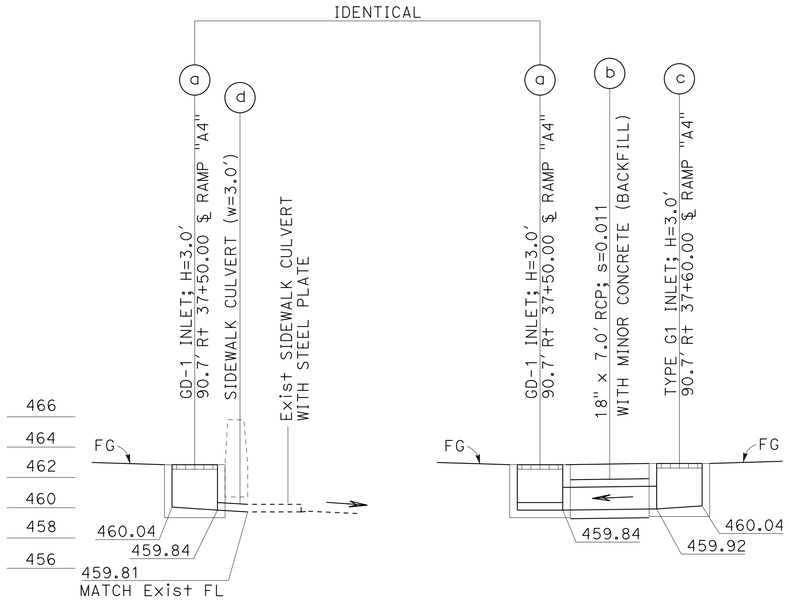

DRAINAGE SYSTEM 76
SCALE: Horiz 1" = 5′
Vert 1" = 5′

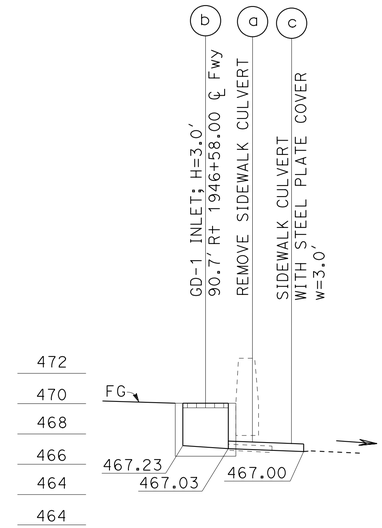

DRAINAGE SYSTEM 77
SCALE: Horiz 1" = 5′
Vert 1" = 5′

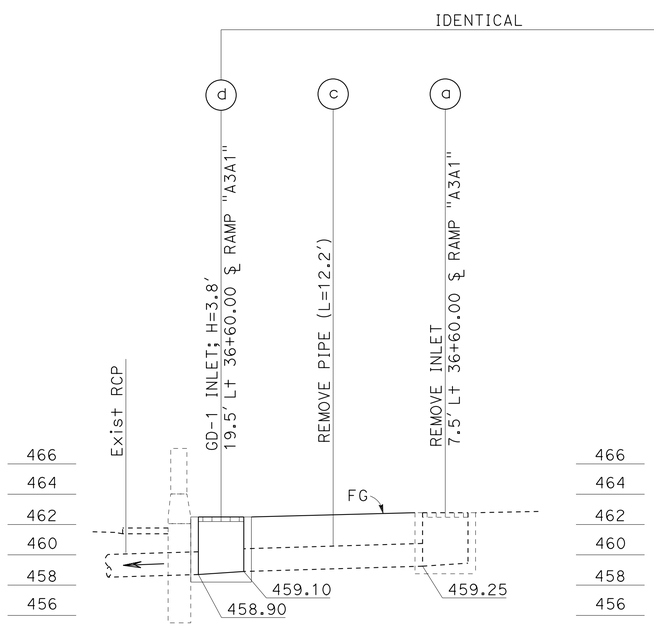

DRAINAGE SYSTEM 75
SCALE: Horiz 1" = 5′
Vert 1" = 5′

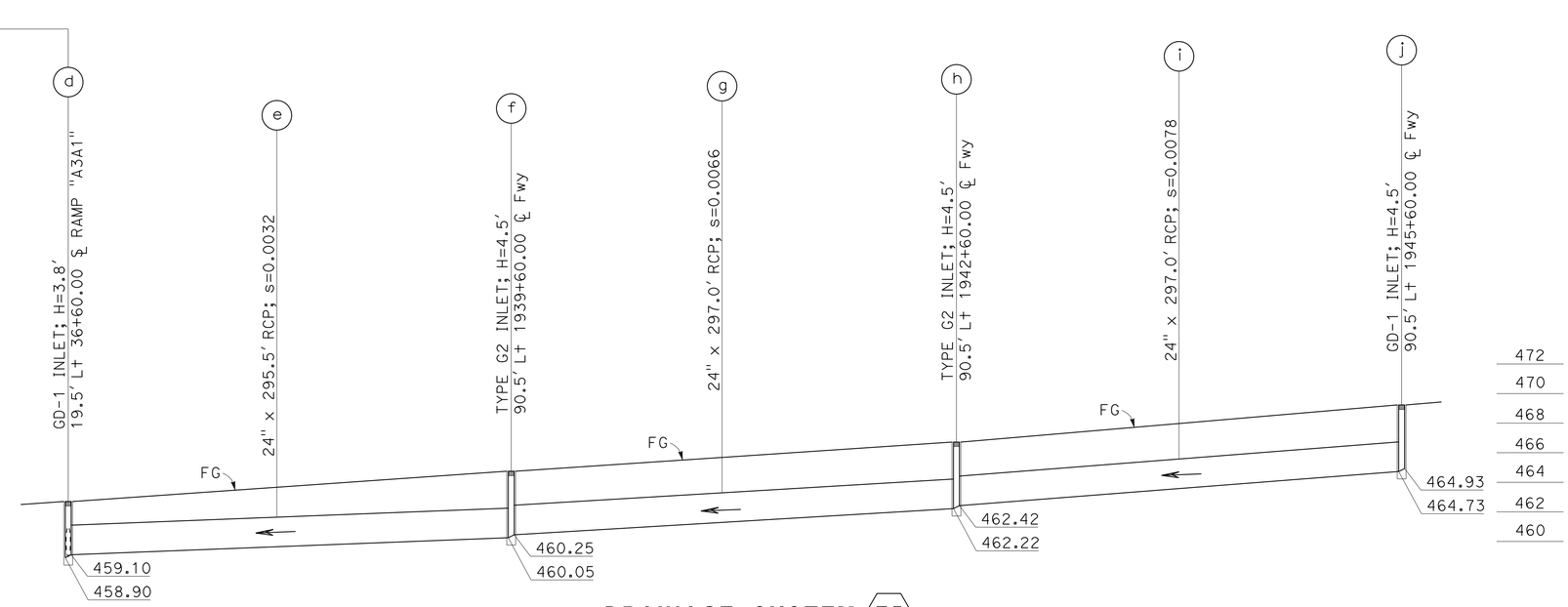

DRAINAGE SYSTEM 75
SCALE: Horiz 1" = 50′
Vert 1" = 5′

DRAINAGE PROFILES
SCALE AS SHOWN

DP-26

STATE OF CALIFORNIA - DEPARTMENT OF TRANSPORTATION
Caltrans
HYDRAULICS

FUNCTIONAL SUPERVISOR: DAVE BHALLA
CALCULATED-DESIGNED BY: S. THAI
CHECKED BY: D. BHALLA
REVISED BY
DATE REVISED

LAST REVISION 06-09-12
DATE PLOTTED => 12-JUN-2013
TIME PLOTTED => 14:15

Dist	COUNTY	ROUTE	POST MILES TOTAL PROJECT	SHEET No.	TOTAL SHEETS
07	LA	10	33.2/37.2	200	1475

REGISTERED CIVIL ENGINEER 4-17-12 DATE

6-10-13
PLANS APPROVAL DATE

REGISTERED PROFESSIONAL ENGINEER SA K. THAI No. 71390 Exp. 12/31/13 CIVIL STATE OF CALIFORNIA

THE STATE OF CALIFORNIA OR ITS OFFICERS OR AGENTS SHALL NOT BE RESPONSIBLE FOR THE ACCURACY OR COMPLETENESS OF SCANNED COPIES OF THIS PLAN SHEET.

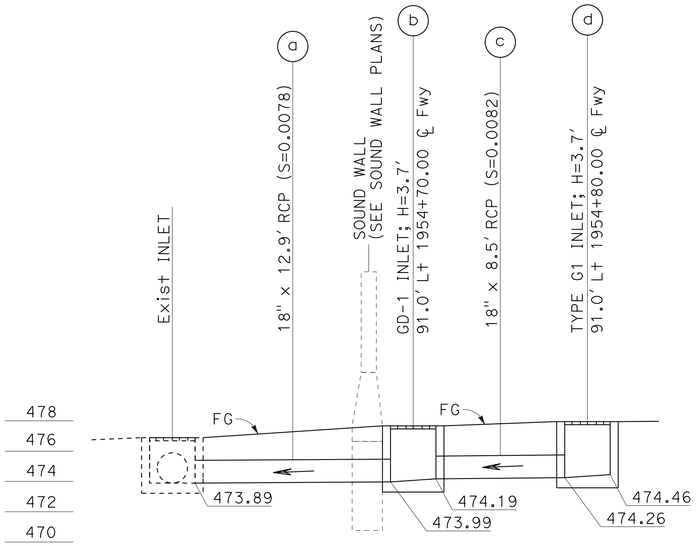

DRAINAGE SYSTEM 78
SCALE: Horiz 1" = 5'
Vert 1" = 5'

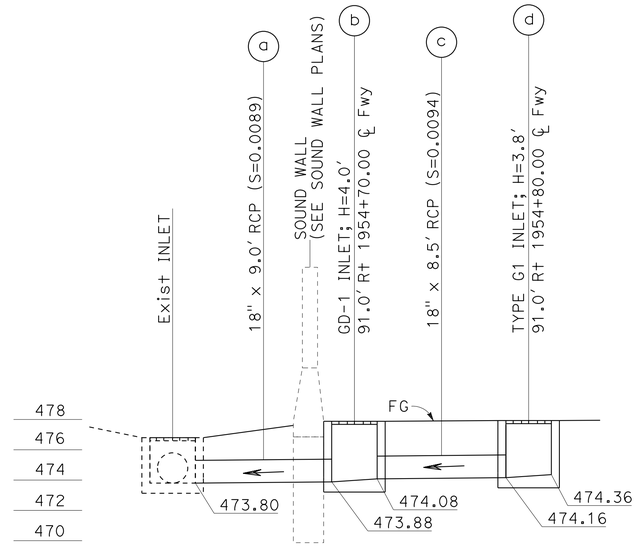

DRAINAGE SYSTEM 79
SCALE: Horiz 1" = 5'
Vert 1" = 5'

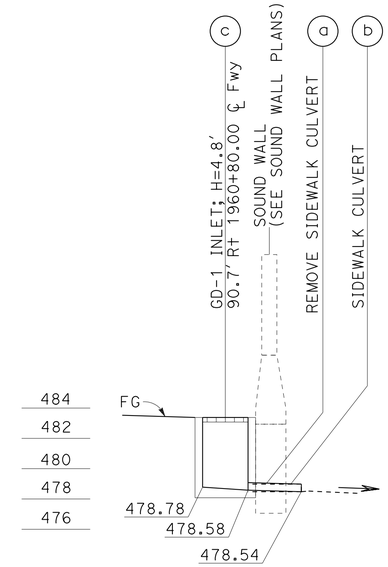

DRAINAGE SYSTEM 81
SCALE: Horiz 1" = 5'
Vert 1" = 5'

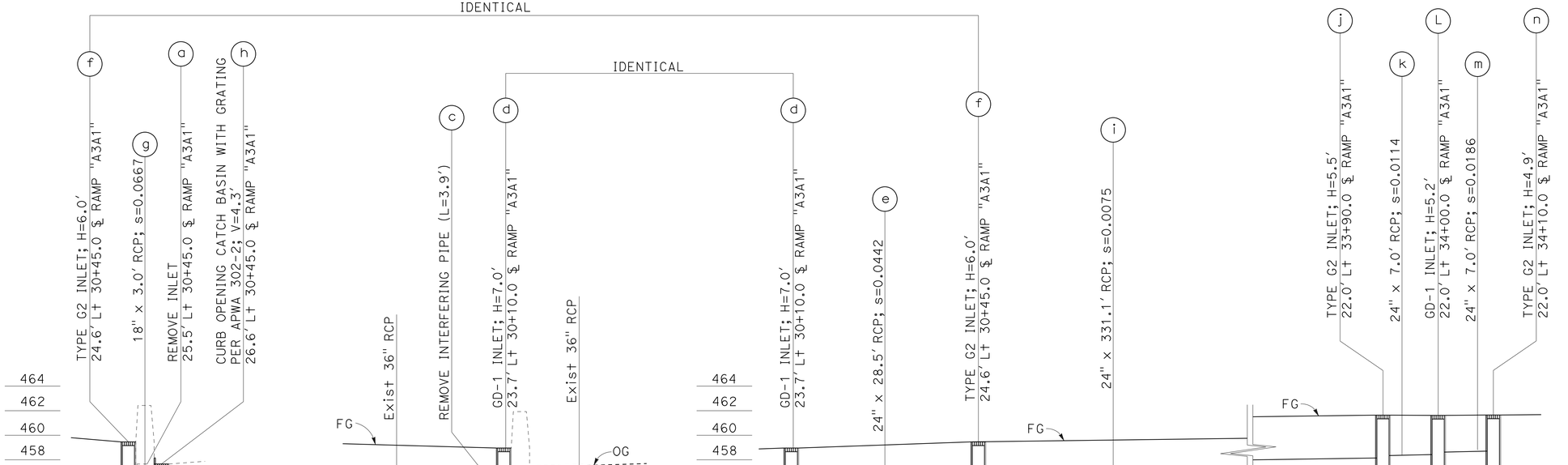

DRAINAGE SYSTEM 74
SCALE: Horiz 1" = 10'
Vert 1" = 5'

DRAINAGE PROFILES

SCALE AS SHOWN

DP-27

REVISED BY	DATE REVISED

CALCULATED-DESIGNED BY: S. THAI
CHECKED BY: D. BHALLA
FUNCTIONAL SUPERVISOR: DAVE BHALLA

STATE OF CALIFORNIA - DEPARTMENT OF TRANSPORTATION
Caltrans
HYDRAULICS

LAST REVISION 06-09-12 | DATE PLOTTED => 12-JUN-2013 | TIME PLOTTED => 14:15