Dist	COUNTY	LOCATION CODE	POST MILES TOTAL PROJECT	SHEET No.	TOTAL SHEETS
07	LA	5719		1	5

INDEX OF PLANS

SHEET No.	DESCRIPTION
1	TITLE AND LOCATION MAP
STRUCTURE PLANS	
2	GENERAL PLAN AND LEGEND
3-5	ELECTRICAL PLANS

THE STANDARD PLANS LIST APPLICABLE TO THIS CONTRACT IS INCLUDED IN THE NOTICE TO BIDDERS AND SPECIAL PROVISIONS BOOK.

STATE OF CALIFORNIA

DEPARTMENT OF TRANSPORTATION

PROJECT PLANS FOR BUILDING CONSTRUCTION

IN LOS ANGELES COUNTY
IN LONG BEACH
AT THE
LONG BEACH MAINTENANCE STATION
AT 22101 SOUTH SANTA FE AVENUE

TO BE SUPPLEMENTED BY STANDARD PLANS DATED MAY 2006

CALIFORNIA STATE FIRE MARSHAL APPROVED

Approval of this plan does not authorize or approve any omission or deviation from applicable regulations. Final approval is subject to field inspection. One set of approved plans shall be available on the project site at all times.

Reviewed by: JASON D. DeWITT

Approval date: 07-29-10

PHOTOVOLTAIC SYSTEMS

CSFM FILE #01-19-11-0105

LOCATION OF CONSTRUCTION

LONG BEACH MAINTENANCE STATION
LOCATION CODE No. 5719

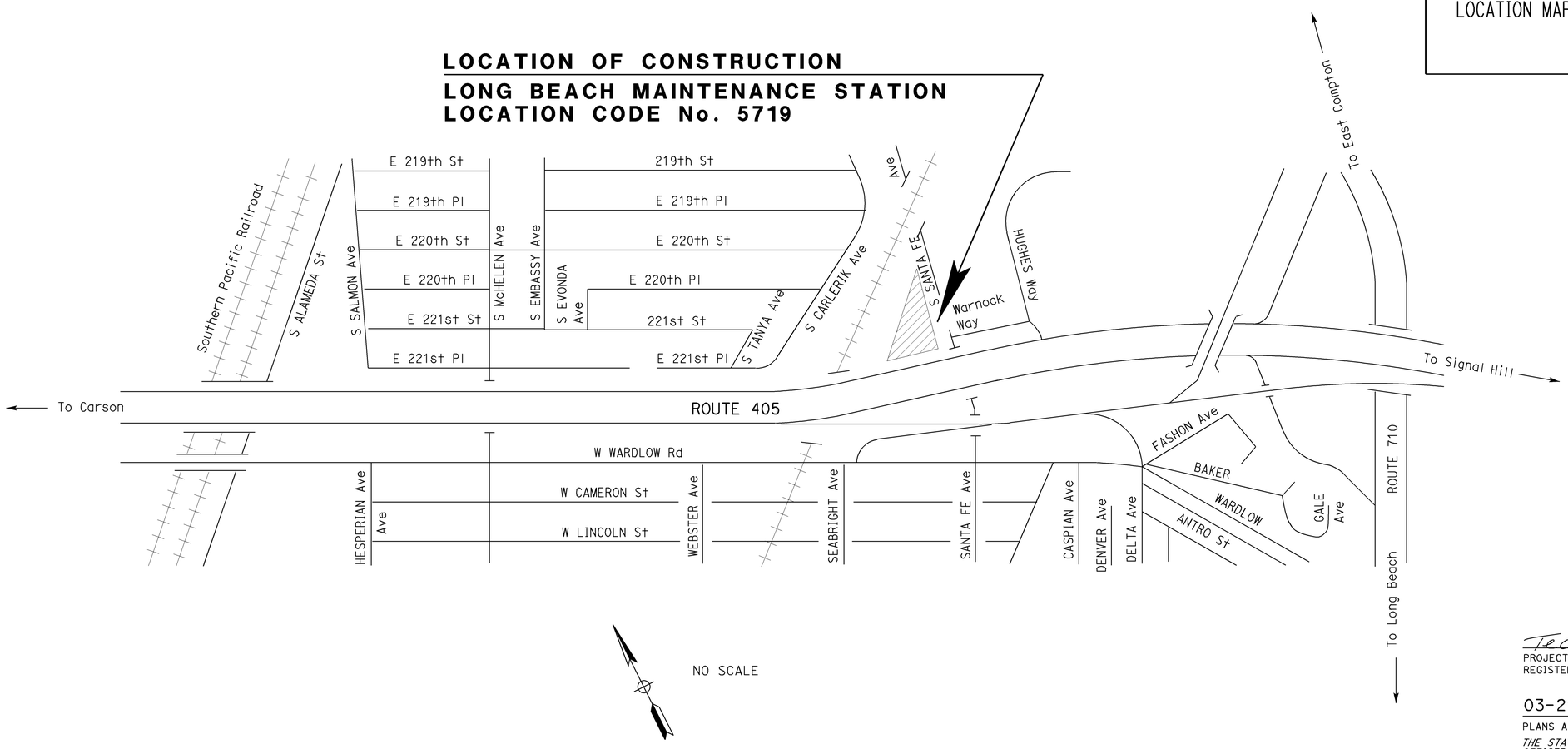

NO SCALE

PROJECT MANAGER: DANA HENDRIX

DESIGN ENGINEER: TECH NGOV

3-29-11

PROJECT ENGINEER REGISTERED ELECTRICAL ENGINEER — DATE

REGISTERED PROFESSIONAL ENGINEER — TECH NGOV — No. E 14521 — Exp. 6-30-12 — ELEC — STATE OF CALIFORNIA

03-29-11

PLANS APPROVAL DATE

THE STATE OF CALIFORNIA OR ITS OFFICERS OR AGENTS SHALL NOT BE RESPONSIBLE FOR THE ACCURACY OR COMPLETENESS OF SCANNED COPIES OF THIS PLAN SHEET.

THE CONTRACTOR SHALL POSSESS THE CLASS (OR CLASSES) OF LICENSE AS SPECIFIED IN THE "NOTICE TO BIDDERS."

CONTRACT No.	07-0AA074
PROJECT ID	0700020872

LAST REVISION 11-15-10

DATE PLOTTED => 05-APR-2011
TIME PLOTTED => 10:44

DIST.	COUNTY	LOCATION CODE	POST MILES TOTAL PROJECT	SHEET NO.	TOTAL SHEETS
07	LA	5719		2	5

Techngov
REGISTERED ELECTRICAL ENGINEER — 3-29-11 DATE

REGISTERED PROFESSIONAL ENGINEER — TECH NGOV — No. E 14521 — Exp. 6-30-12 — ELEC — STATE OF CALIFORNIA

3-29-11
PLANS APPROVAL DATE

The State of California or its officers or agents shall not be responsible for the accuracy or completeness of electronic copies of this plan sheet.

INDEX OF SHEETS

SHEET No.	DESCRIPTION
GP	GENERAL PLAN AND LEGEND
ELECTRICAL	
EE-1	ROOF PLAN AND DETAILS
EE-2	SINGLE LINE DIAGRAM GRID-TIED PV SYSTEM
EE-3	ELEVATION AND DETAILS

APPLICABLE CODES

2010 California Building Code (CBC) Title 24, Part 2 CCR
2010 California Electrical Code (CEC) Title 24, Part 3 CCR
2010 California Fire Code (CEC) Title 24, Part 9 CCR

OFFICE/EQUIPMENT STORAGE BUILDING
Built in = Late 1960's
Construction Type = VB

Office
Occupancy Group = B
Actual SF = 4150
Allowable SF = 9000
Roof Data - Steel frame, steel deck and built-up roofing

Equipment Storage
Occupancy Group = S1
Actual SF = 4960
Allowable SF = 9000
Roof Data - Steel frame, steel deck and built-up roofing

CALIFORNIA STATE FIRE MARSHAL APPROVED
Approval of this plan does not authorize or approve any omission or deviation from applicable regulations. Final approval is subject to field inspection. One set of approved plans shall be available on the project site at all times.
Reviewed by: JASON D. DeWITT
Approval date: 07-29-10

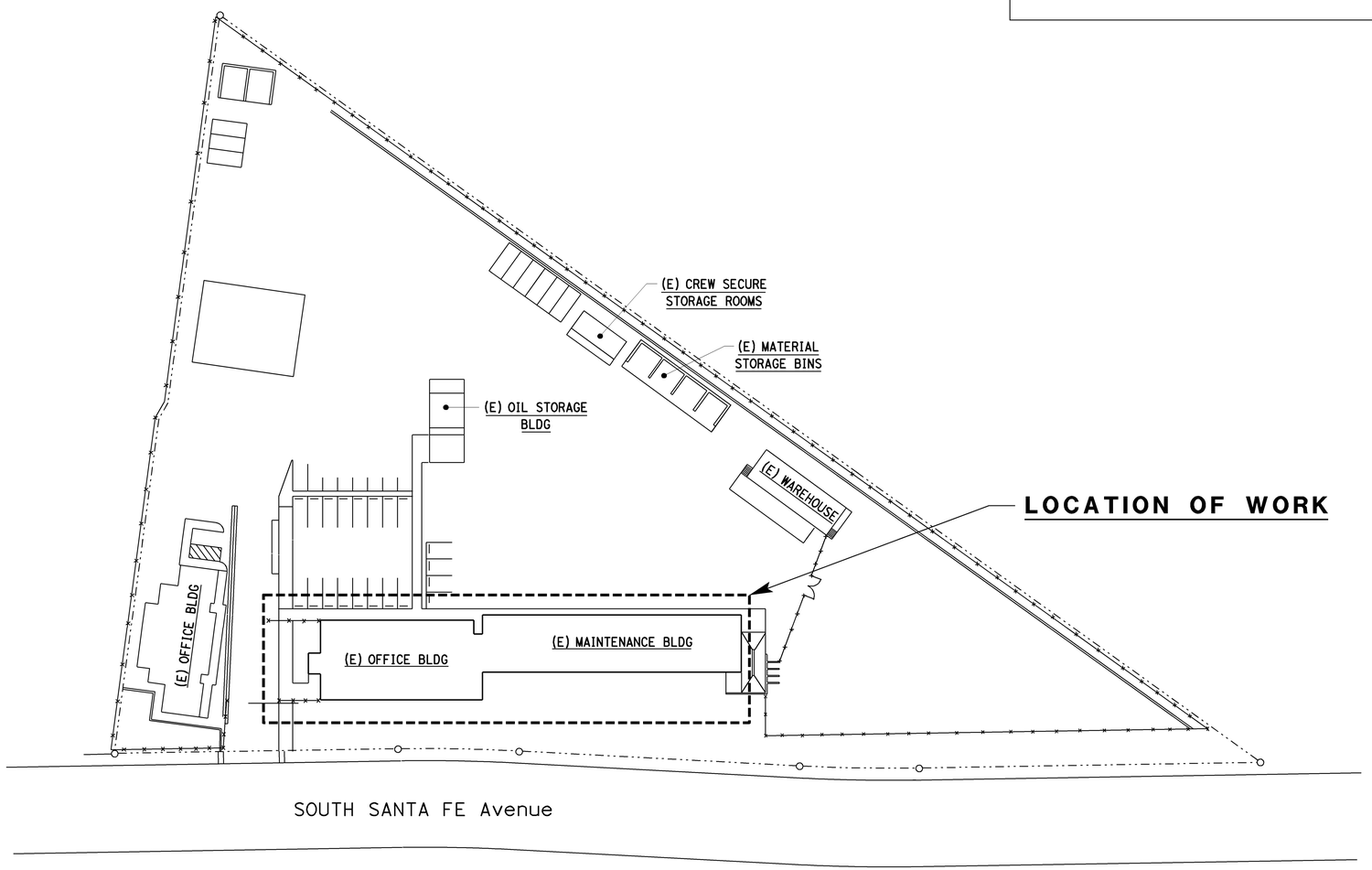

SITE PLAN
SCALE 1" = 40'-0"

THIS DRAWING ACCURATE FOR ELECTRICAL WORK ONLY.

LEGEND

- CONDUIT EXPOSED
- MC — CONDUIT, METALLIC UNDERGROUND
- PVC — CONDUIT, POLYVINYL CHLORIDE, UNDERGROUND
- CONDUIT, FLEXIBLE
- CONDUIT, TURN UP
- CONDUIT, TURN DOWN
- CIRCUIT BREAKER
- GROUNDING ELECTRODE
- ENCLOSURE BOND
- ADAPTER, ONE TYPE CONDUIT TO ANOTHER
- (J) EXISTING JUNCTION BOX
- EXISTING UNDERGROUND CONDUIT AND CONDUCTORS-REMOVE
- --E----E-- EXISTING CONDUIT AND CONDUCTORS-TO REMAIN UNLESS OTHERWISE NOTED
- A / EE-2 — SECTION/ELEVATION LETTER — SHEET NUMBER
- 1 / EE-2 — DETAIL NUMBER — SHEET NUMBER

ABBREVIATIONS

Ø	PHASE
A	AMPERE
AC	ALTERNATING CURRENT
Ah	AMPERES - HOUR
AL	ALUMINUM
BC	BATTERY CHARGER
BLDG	BUILDING
C	CONDUIT
CB	CIRCUIT BREAKER
CKT	CIRCUIT
DC	DIRECT CURRENT
DP	DUPLEX RECEPTACLE
(E)	EXISTING
EO	ELECTRICALLY OPERATED
G	GROUND
JB	JUNCTION BOX
kW	KILOWATT
MB	MAIN BREAKER
MC	METALLIC CONDUIT
MDP	MAIN DISTRIBUTION PANEL
MIN	MINIMUM
MT	EMPTY CONDUIT
(N)	NEW
P	POLE
PB	PULL BOX
PTC	PV USA TEST CONDITIONS
PV	PHOTOVOLTAIC
STC	STANDARD TEST CONDITIONS
TYP	TYPICAL
V	VOLTS

DESIGN SUPERVISOR: Jude Schoff
DESIGN ENGINEER: Mark Cheap

	BY	CHECKED
DESIGN	Tech Ngov	Mark Cheap
DETAILS	Kathi Andreasen	Tech Ngov
QUANTITIES	Tech Ngov	Mark Cheap

STATE OF CALIFORNIA
DEPARTMENT OF TRANSPORTATION

DIVISION OF ENGINEERING SERVICES
ELECTRICAL-MECHANICAL-WATER AND WASTEWATER DESIGN

BRIDGE NO. 53M5719
POST MILE

LONG BEACH MAINTENANCE STATION PHOTOVOLTAIC SYSTEM
GENERAL PLAN AND LEGEND

SHEET GP

TAEMWW Imperial Rev. 7/10

ORIGINAL SCALE IN INCHES FOR REDUCED PLANS 0 1 2 3

UNIT 3614
PROJECT NUMBER & PHASE 07000208721
EA 0AA071

DISREGARD PRINTS BEARING EARLIER REVISION DATES → 5/18/10 7/28/10

REVISION DATES (PRELIMINARY STAGE ONLY) SHEET OF

05-APR-2011 10:33
gp.dgn
V1=1

DIST.	COUNTY	LOCATION CODE	POST MILES TOTAL PROJECT	SHEET NO.	TOTAL SHEETS
07	LA	5719		3	5

Techngov
REGISTERED ELECTRICAL ENGINEER — 3-29-11 DATE

REGISTERED PROFESSIONAL ENGINEER — TECH NGOV — No. E 14521 — Exp. 6-30-12 — ELEC — STATE OF CALIFORNIA

3-29-11
PLANS APPROVAL DATE

The State of California or its officers or agents shall not be responsible for the accuracy or completeness of electronic copies of this plan sheet.

CALIFORNIA STATE FIRE MARSHAL APPROVED
Approval of this plan does not authorize or approve any omission or deviation from applicable regulations. Final approval is subject to field inspection. One set of approved plans shall be available on the project site at all times.
Reviewed by: JASON D. DeWITT
Approval date: 07-29-10

General Notes:

A. Provide and install approved conduit support on top of the roof to support conduit system and junction boxes. Conduit support shall be one-piece and non metallic type. For conduit support details, see Detail 1 on sheet EE-4.

B. All exposed conduits shall be galvanized rigid steel with minimum size ¾" and weatherproof hubs at both ends, unless otherwise noted on the plans.

C. No DC wiring except at the module connector shall be exposed.

D. Use Type CGB connectors at conduit terminations to exposed conductors.

E. DC conduit/conductors, between PV modules and PV Array Circuit Combiner Boxes, are not shown.

F. Existing Office Building height from ground to the the roof is approximately 16'.

G. For graphic symbols and abbreviations, see sheet GP.

H. For PV self ballasting rack mounting, see Detail 1 on sheet EE-3.

Notes:

1. This equipment is at ground level.
2. 2"C, MC, with DC conductors and equipment grounding conductor, to Utility Interactive Control Cabinet.
3. Existing main switchboard is Square D, Speed D switchboard 240/120 V, 3-phase, 4-wire and 600 A main circuit breaker disconnect.
   -Install 125-ampere, 3-pole, FA type circuit breaker in the avaible space at the bottom space of the switchboard and label "PV System".
   -Coordinate with Southern California Edison for replacement of existing watthour meter with new net watthour meter.
4. 2"C, 4#1/0, 1#6G. Terminate the conductors on the new 125 A circuit breaker in the main switchboard.
5. Existing telephone terminal board is located inside the room below location shown. Install ¾"C with cat-6 telephone cable to interactive control cabinet.

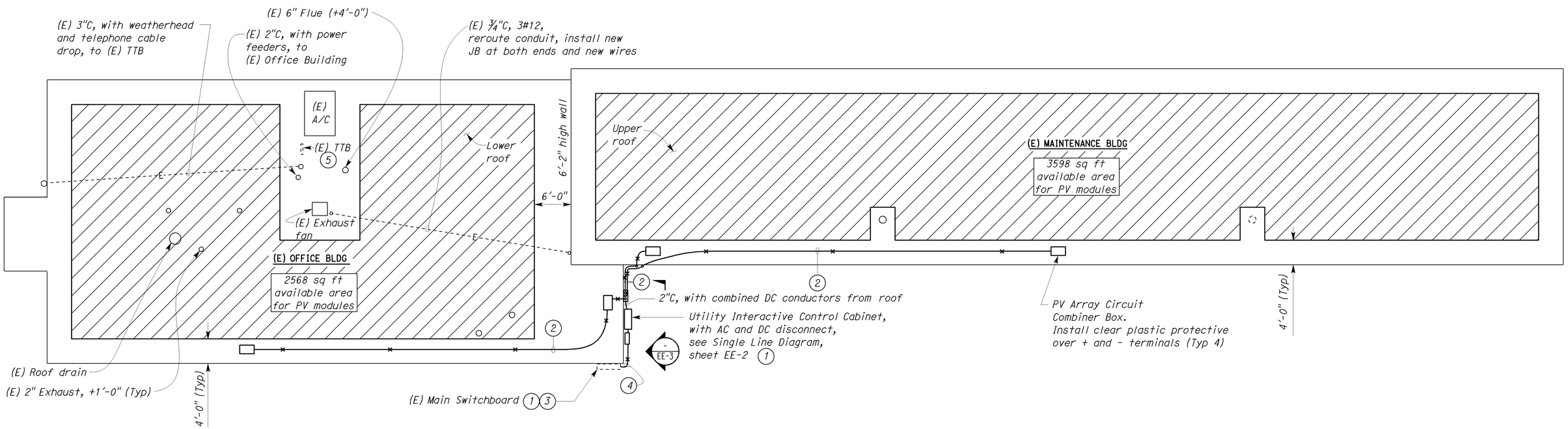

ROOF PLAN

SCALE 1/8" = 1'-0"

THIS DRAWING ACCURATE FOR ELECTRICAL WORK ONLY.

	BY	CHECKED
DESIGN	Tech Ngov	Mark Cheap
DETAILS	Kathi Andreasen	Tech Ngov
QUANTITIES	Tech Ngov	Mark Cheap

STATE OF CALIFORNIA
DEPARTMENT OF TRANSPORTATION

DIVISION OF ENGINEERING SERVICES
ELECTRICAL-MECHANICAL-WATER AND WASTEWATER DESIGN

BRIDGE NO. 53M5719
POST MILE

LONG BEACH MAINTENANCE STATION PHOTOVOLTAIC SYSTEM
ROOF PLAN AND DETAILS

SHEET **EE-1**

TAEMWW Imperial Rev. 7/10

ORIGINAL SCALE IN INCHES FOR REDUCED PLANS 0 1 2 3

UNIT 3614
PROJECT NUMBER & PHASE 07000208721
EA 0AA071

DISREGARD PRINTS BEARING EARLIER REVISION DATES → 5/18/10 5/26/10 7/28/10

REVISION DATES (PRELIMINARY STAGE ONLY) SHEET OF

05-APR-2011 10:33
ee_01.dgn

DIST.	COUNTY	LOCATION CODE	POST MILES TOTAL PROJECT	SHEET NO.	TOTAL SHEETS
07	LA	5719		4	5

CALIFORNIA STATE FIRE MARSHAL APPROVED
Approval of this plan does not authorize or approve any omission or deviation from applicable regulations. Final approval is subject to field inspection. One set of approved plans shall be available on the project site at all times.
Reviewed by: JASON D. DeWITT
Approval date: 07-29-10

Technguv
REGISTERED ELECTRICAL ENGINEER — 3-29-11 DATE

REGISTERED PROFESSIONAL ENGINEER — TECH NGOV — No. E 14521 — Exp. 6-30-12 — ELEC — STATE OF CALIFORNIA

3-29-11
PLANS APPROVAL DATE

The State of California or its officers or agents shall not be responsible for the accuracy or completeness of electronic copies of this plan sheet.

Photovoltaic Module

PV modules shall be minimum 230 (STC) watt, polycrystalline silicon cell type module with interconnection connectors rated for 90°C. PV modules shall be UL 1703 listed with a maximum system voltage of 600 VDC. PV module manufacturer shall be one of those manufacturers listed as eligible California Solar Initiative (CSI) PV module manufacturer.

Photovoltaic Array Circuit Combiner Box

PV array circuit combiner box shall be factory assembled, 600 VDC rated combiner box with fused input circuits, two isolated DC bus bars, ground bus bar, all enclosed inside NEMA 3R lockable hinged cover enclosure. The combiner box shall be UL 1741 listed.

PV array circuit combiner box shall have the following components:
- DIN Rail mounted touch safe fuse holders with fuse.
- Positive DC bus bar, Negative DC bus bar and ground bus bar.
- DIN rail mounted Grid-Tie surge arrestor: .The surge arrestor shall be rated to withstand 40 kA (8/20 micro second) induced transient surge type and compatible to use with grounded PV arrays.

Communication Device

Data acquisition system shall be in NEMA 1 enclosure and it consists of the following equipment:
-main and I/O processors,
-32MB RAM and 16MB flash
-2x16 character LCD
-LAN/modem communications
-Protocols:Modbus/RTU, Modbus/TCP, TCP/IP
-Serial port with RS-485 Modbus
-Inputs with multiple modes: voltage, current, resistance, pulse and status
-120 VAC input
-Approved for California Solar Initiative (CSI) data monitoring/reporting system

Utility-Interactive Control Cabinet

Utility Interactive Control Cabinet shall be outdoor type, factory assembled system consisting of the following equipment:
- NEMA 3R Enclosure.
- DC/AC Inverter, rated at maximum continuous output power of 50 kW, 240 VAC, 3-phase, 4-wire at a power factor of 0.99 or greater, efficiency 95.5%, with input operating voltage range between 315 to 600 VDC and maximum DC Input current of 331 A.
  Inverter shall be capable of operating at ambient temperature range (Full power) of -4°F to +122°F. DC/AC inverter manufacturer shall be one of those manufacturers listed as eligible California Solar Initiative (CSI) DC/AC inverter manufacturer..
- Fused Sub-array Combiner with minimum of 4 array inputs for positive DC, negative DC, and DC ground bus bars. Positive array inputs fuse size to match loading.
- Built-in DC and AC disconnect switches size to match loading.
- Integrated output Isolation type transformer.
- Ground Fault Protection.
- Integrated AC and DC Surge Protections.
- Integrated AC and DC contactors.
- Pre-charge circuit.
- Current and potential transformers
- Human Machine interface (HMI). AC/DC inverter's HMI shall be equipped with LCD and keypad displaying main menu. HMI main menu shall display system monitoring, status and faults and operation. Monitoring menu shall display system status, metering, daily, weekly and monthly energy production. Status and faults menu shall display status messages, system output, and number of faults. Operation menu shall display control and settings.
- Communication Gateway with datalogging and communications for remote monitoring system with internet connectivity (TCP/IP). Communication gateway shall be UL listed.
- Sub-array monitoring
- AC Ground bus bars.

Enclosure shall be NEMA 3R, 14-Gauge, and powder-coated standard factory finish steel enclosure. All screws, latches, hinge pins and similar hardware shall be stainless steel. HMI, AC and DC disconnect switches, and equipment rating labels shall be mounted on the exterior door. Exterior door shall have interlock switch and be lockable with a padlock. The cabinet shall have MEV13 rated filtered, top entry forced air cooling system with one fan, sloped roof, and shall be suitable for seismic zone 4 compliance.

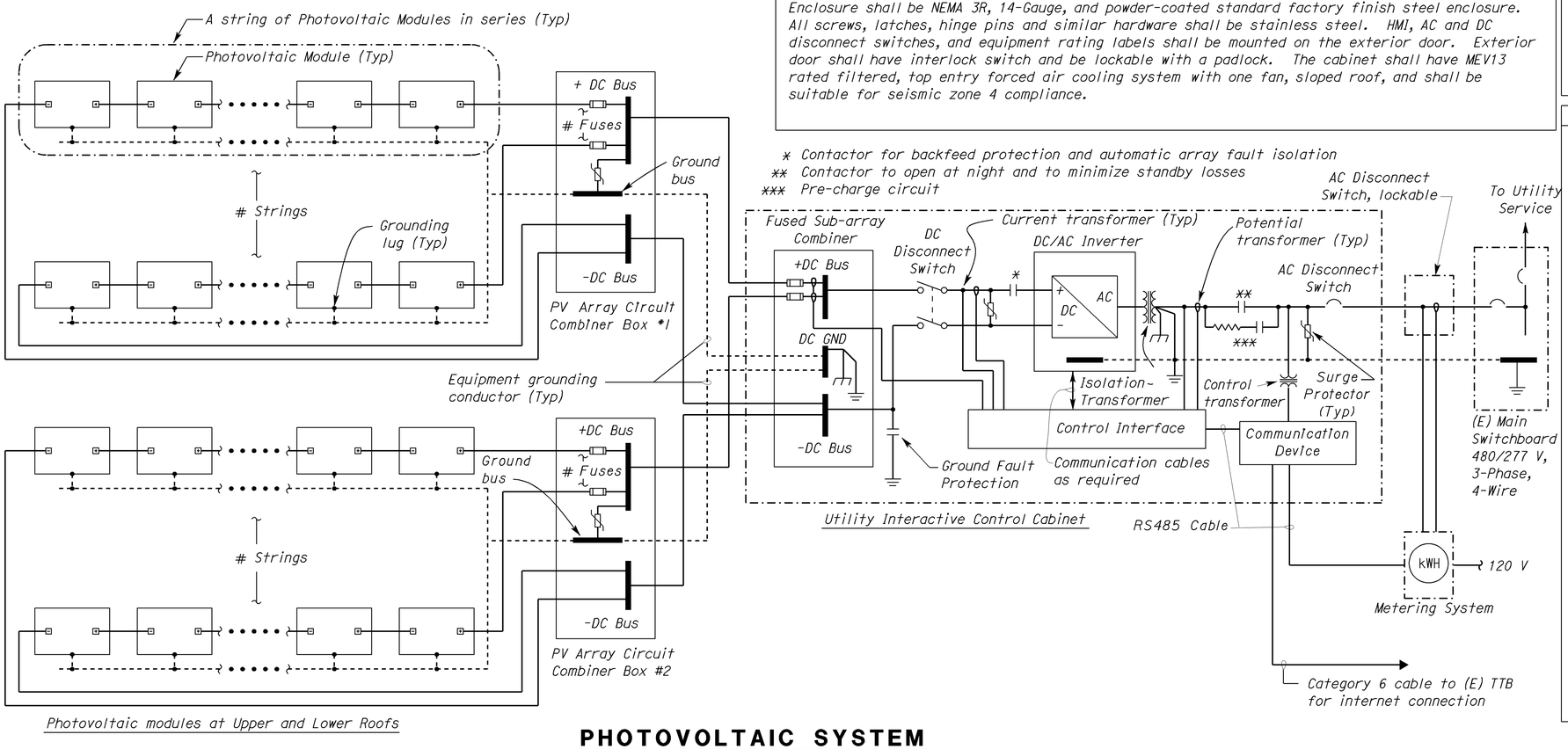

General Notes:

A. Provide and install all necessary warning labels/markings per Article 690 of California Electrical Code (CEC) and the State Fire Marshal's guideline for solar PV installation.

B. Solar PV installation shall comply with the latest guideline from California Department of Forestry & Fire Protection, Office of the State Fire Marshal and latest Program Handbook from California Solar Initiative (CSI).

C. For graphic symbols and abbreviations, see GP.

Metering System

Metering system shall be outdoor type, factory assembled metering system with CSI approved System Performance and consisting of the following equipment:
- Revenue Grade Production Meter with accuracy of ANSI C12.1 (+/- 2%)
- Power supply
- RS485 Surge Suppressor
- NEMA 3R Enclosure, exterior door shall be lockable with a padlock.

Photovoltaic System Requirements

Photovoltaic System complete design and installation details inclusive of all Engineering calculations shall be signed by an Professional Engineer of the respective field (both Electrical and Civil Engineering) in the State of California shall be submitted for approval by the Contractor. The PV design shall meet or exceed the following requirements:

1) Total designed capacity of photovoltaic system shall be minimum 45.15 kW of the CEC-AC rating.
   Number of PV module per string shall be arranged in a manner to meet or exceed the following:
   -Maximum system voltage based on lowest excepted ambient temperature at the site (Voc maximum on coldest day) shall be no less than 1% of the inverter's maximum input DC voltage range.
   -Maximum system power voltage based on average high ambient temperature at the site (Vmp on warmest day) shall be 20% greater than the inverter's minimum input DC voltage range.

2) Photovoltaic system module row spacing shall be designed to prevent shading from adjacent module.

3) All wiring except at module interconnection shall be concealed inside conduit system.

4) Photovoltaic system modules structural support system shall be designed to withstand wind forces of 85-mile per hour.

5) Photovoltaic system wiring and protective devices shall meet or exceed the requirements of all applicable codes.

6) PV Array Circuit Combiner Boxes locations as shown are arbitrary only. Contractor shall install the combiner boxes at locations that best suit the photovoltaic system strings layout.

7) PV modules installed on different slopes and/or orientation shall not be part of the same string except PV modules installed on flat roof.

PHOTOVOLTAIC SYSTEM

	BY	CHECKED
DESIGN	Tech Ngov	Mark Cheap
DETAILS	Kathi Andreasen	Tech Ngov
QUANTITIES	Tech Ngov	Mark Cheap

STATE OF CALIFORNIA
DEPARTMENT OF TRANSPORTATION

DIVISION OF ENGINEERING SERVICES
ELECTRICAL-MECHANICAL-WATER AND WASTEWATER DESIGN

BRIDGE NO. 53M5719
POST MILE

LONG BEACH MAINTENANCE STATION
PHOTOVOLTAIC SYSTEM
SINGLE LINE DIAGRAM
GRID-TIED PV SYSTEM

SHEET EE-2

TAEMWW Imperial Rev. 7/10

ORIGINAL SCALE IN INCHES FOR REDUCED PLANS 0 1 2 3

UNIT 3614
PROJECT NUMBER & PHASE 07000208721
EA 0AA071

DISREGARD PRINTS BEARING EARLIER REVISION DATES → 5/19/10 5/25/10 7/28/10

REVISION DATES (PRELIMINARY STAGE ONLY) SHEET OF

05-APR-2011 10:34
ee_02.dgn

DIST.	COUNTY	LOCATION CODE	POST MILES TOTAL PROJECT	SHEET NO.	TOTAL SHEETS
07	LA	5719		5	5

CALIFORNIA STATE FIRE MARSHAL APPROVED
Approval of this plan does not authorize or approve any omission or deviation from applicable regulations. Final approval is subject to field inspection. One set of approved plans shall be available on the project site at all times.
Reviewed by: JASON D. DeWITT
Approval date: 07-29-10

Tech Ngov
REGISTERED ELECTRICAL ENGINEER — 3-29-11 DATE

REGISTERED PROFESSIONAL ENGINEER — TECH NGOV — No. E 14521 — Exp. 6-30-12 — ELEC — STATE OF CALIFORNIA

3-29-11
PLANS APPROVAL DATE

The State of California or its officers or agents shall not be responsible for the accuracy or completeness of electronic copies of this plan sheet.

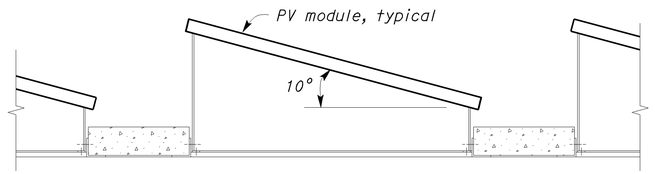

1 SELF-BALLASTED PANEL DETAIL

NO SCALE

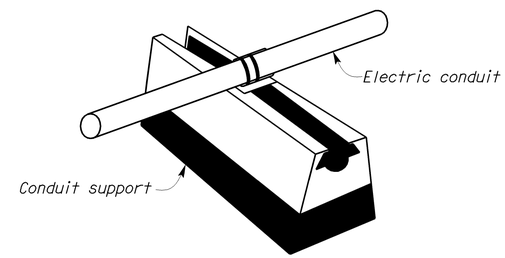

2 ROOF EXPOSED CONDUIT SUPPORT

NO SCALE

General Note:

All conduits are rigid galvanized steel conduits.

Notes:

1. 2"C, RSC, with DC conductors and equipment grounding conductor, from PV Array Circuit Combiner Box on the roof.
2. 2"C, 3#1/0, 1#6G, to Main Switchboard.
3. ¾"C, RSC, Category 6 cable, to existing TTB inside the building.
4. 2"C, conductors as required.
5. ½"C, 2#12, 1#12G to 120 V panel inside the building.
6. ¾"C, one RS-485 Modbus cable.
7. 2"C, combined DC conductors from roofs.

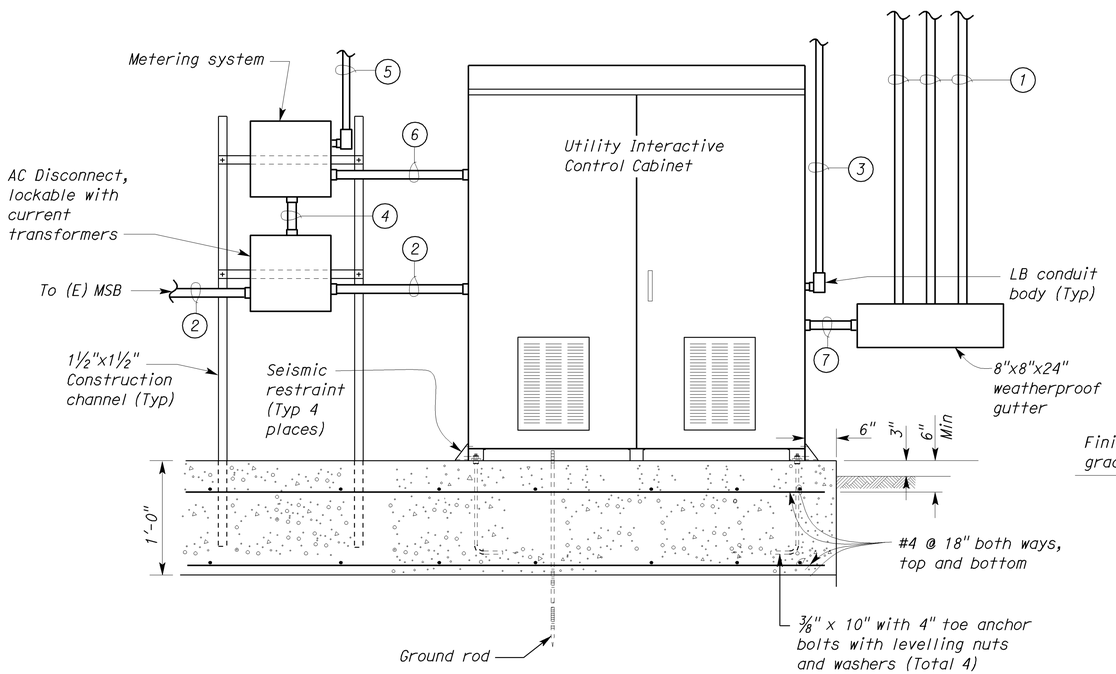

ELEVATION

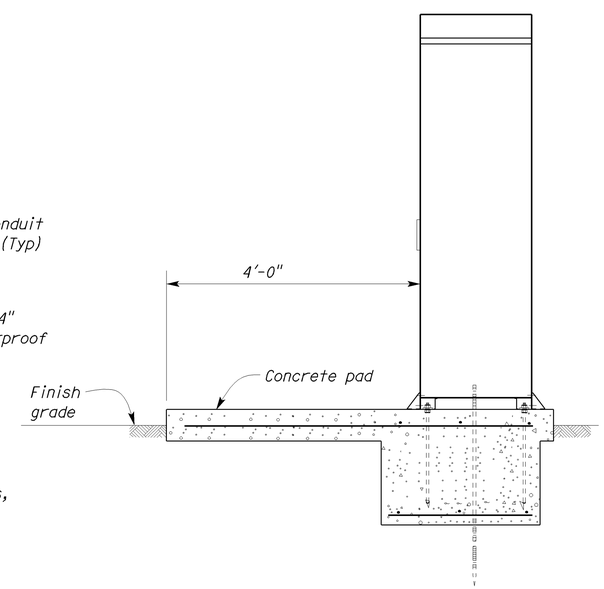

SIDE VIEW

A UTILITY INTERACTIVE INVERTER CABINET

NO SCALE

THIS DRAWING ACCURATE FOR ELECTRICAL WORK ONLY.

	BY	CHECKED
DESIGN	Tech Ngov	Mark Cheap
DETAILS	Andreasen/Ngov	Tech Ngov
QUANTITIES	Tech Ngov	Mark Cheap

STATE OF CALIFORNIA DEPARTMENT OF TRANSPORTATION

DIVISION OF ENGINEERING SERVICES
ELECTRICAL-MECHANICAL-WATER AND WASTEWATER DESIGN

BRIDGE NO. 53M5719
POST MILE

LONG BEACH MAINTENANCE STATION PHOTOVOLTAIC SYSTEM

ELEVATIONS AND DETAILS

SHEET **EE-3**

TAEMWW Imperial Rev. 7/10

ORIGINAL SCALE IN INCHES FOR REDUCED PLANS 0 1 2 3

UNIT 3614
PROJECT NUMBER & PHASE 07000208721
EA 0AA071

DISREGARD PRINTS BEARING EARLIER REVISION DATES → 5/18/10 5/26/10 7/28/10

REVISION DATES (PRELIMINARY STAGE ONLY) SHEET OF

05-APR-2011 10:34
ee_03.dgn