ACNHP-P198(062)E

Dist	COUNTY	ROUTE	POST MILES TOTAL PROJECT	SHEET No.	TOTAL SHEETS
06	Kin	198	R16.5/R17.2	1	247

STATE OF CALIFORNIA

DEPARTMENT OF TRANSPORTATION

PROJECT PLANS FOR CONSTRUCTION ON

STATE HIGHWAY

IN KINGS COUNTY
IN HANFORD
FROM 0.4 MILE WEST OF 12th AVENUE OVERCROSSING
TO 0.3 MILE EAST OF 12th AVENUE OVERCROSSING

TO BE SUPPLEMENTED BY STANDARD PLANS DATED 2010

INDEX OF PLANS

SHEET No.	DESCRIPTION
1	TITLE AND LOCATION MAP
2-10	TYPICAL CROSS SECTIONS
11-15	LAYOUTS
16-23	PROFILES
24-27	SUPERELEVATION DIAGRAMS
28-50	CONSTRUCTION DETAILS
51-55	TEMPORARY WATER POLLUTION CONTROL PLANS, DETAILS AND QUANTITIES
56-61	EROSION CONTROL LEGEND, PLANS, DETAILS AND QUANTITIES
62-98	DRAINAGE PLANS, PROFILES, DETAILS AND PLANS, QUANTITIES
99-104	UTILITY PLANS AND DETAILS
105-110	TRAFFIC HANDLING PLANS AND QUANTITIES
111	CONSTRUCTION AREA SIGNS
112-117	PAVEMENT DELINEATION PLANS, DETAILS AND QUANTITIES
118-125	SUMMARY OF QUANTITIES
126-136	SIGN PLANS, DETAILS AND QUANTITIES
137-141A	IRRIGATION REMOVAL PLANS 1
142-155	ELECTRICAL PLANS
156-214	REVISED STANDARD PLANS

STRUCTURE PLANS

215-234	12th AVENUE OC Br No. 45-0099
235-247	12th AVENUE OC RETAINING WALL

THE STANDARD PLANS LIST APPLICABLE TO THIS CONTRACT IS INCLUDED IN THE NOTICE TO BIDDERS AND SPECIAL PROVISIONS BOOK.

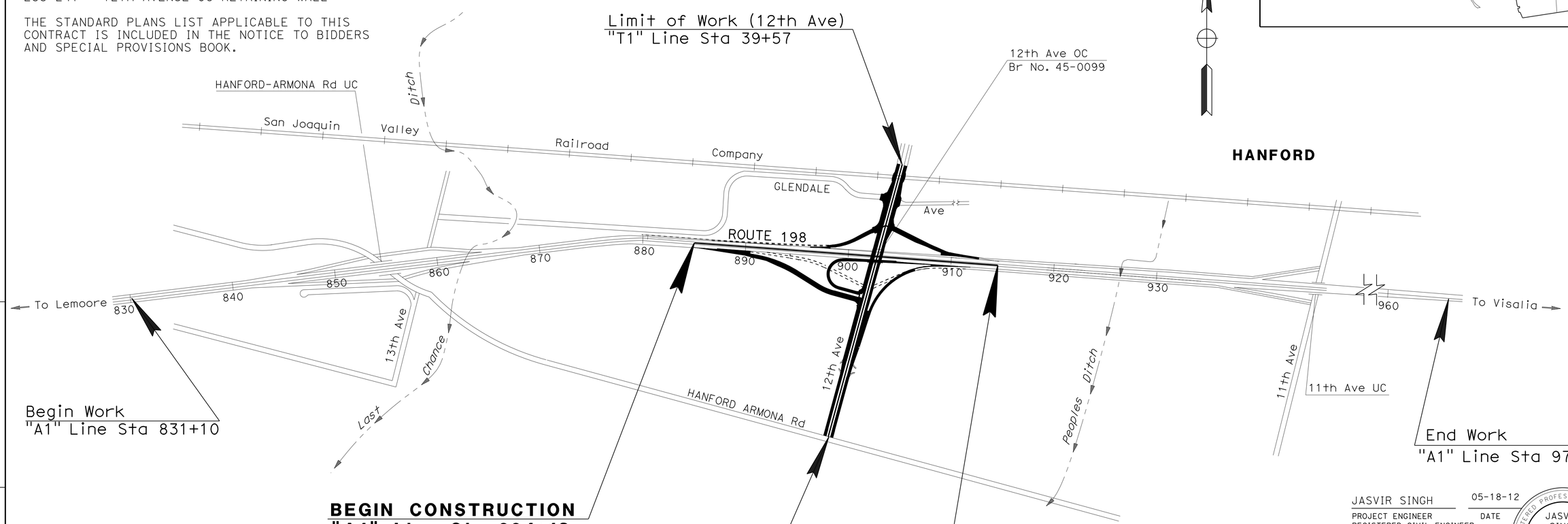

LOCATION MAP

THE CONTRACTOR SHALL POSSESS THE CLASS (OR CLASSES) OF LICENSE AS SPECIFIED IN THE "NOTICE TO BIDDERS."

NO SCALE

1 REPLACED PER ADDENDUM No. 1 DATED MARCH 4, 2014

JASVIR SINGH 05-18-12
PROJECT ENGINEER DATE
REGISTERED CIVIL ENGINEER

November 12, 2013
PLANS APPROVAL DATE

REGISTERED PROFESSIONAL ENGINEER JASVIR SINGH No. 52803 Exp. 12/31/12 CIVIL STATE OF CALIFORNIA

THE STATE OF CALIFORNIA OR ITS OFFICERS OR AGENTS SHALL NOT BE RESPONSIBLE FOR THE ACCURACY OR COMPLETENESS OF SCANNED COPIES OF THIS PLAN SHEET.

CONTRACT No.	06-487504
PROJECT ID	0600000488

PROJECT MANAGER JIM HEINEN
DESIGN ENGINEER ALI ALQATAMI

LAST REVISION 05-23-12
DATE PLOTTED => 04-MAR-2014
TIME PLOTTED => 09:07

Dist	COUNTY	ROUTE	POST MILES TOTAL PROJECT	SHEET No.	TOTAL SHEETS
06	Kin	198	R16.5/R17.2	131	247

Hassan Taha 05-03-12
REGISTERED CIVIL ENGINEER DATE

11-12-13
PLANS APPROVAL DATE

REGISTERED PROFESSIONAL ENGINEER HASSAN M. TAHA No. 60130 Exp. 06/30/12 CIVIL STATE OF CALIFORNIA

THE STATE OF CALIFORNIA OR ITS OFFICERS OR AGENTS SHALL NOT BE RESPONSIBLE FOR THE ACCURACY OR COMPLETENESS OF SCANNED COPIES OF THIS PLAN SHEET.

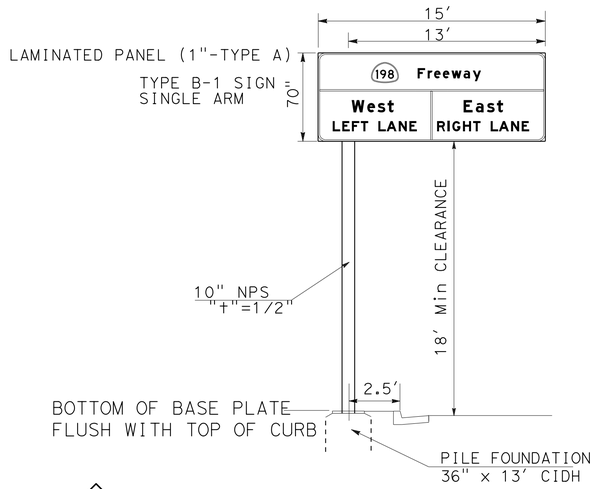

G S-3 INSTALL LIGHTWEIGHT SIGN STRUCTURE
FNBT ON AVENUE 12 AT Sta 15+00
(ILLUMINATION REQUIRED)

SEE Std PLANS FOR ADDITIONAL DETAILS

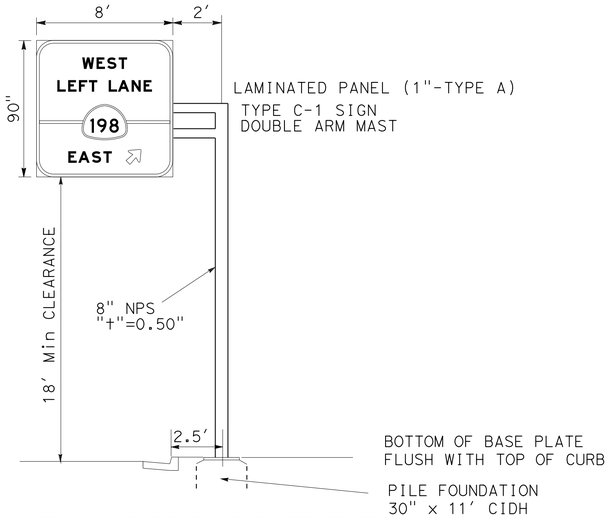

H S-3 INSTALL LIGHTWEIGHT SIGN STRUCTURE
FNBT ON AVENUE 12 AT Sta 19+25
(ILLUMINATION REQUIRED)

SEE Std PLANS FOR ADDITIONAL DETAILS

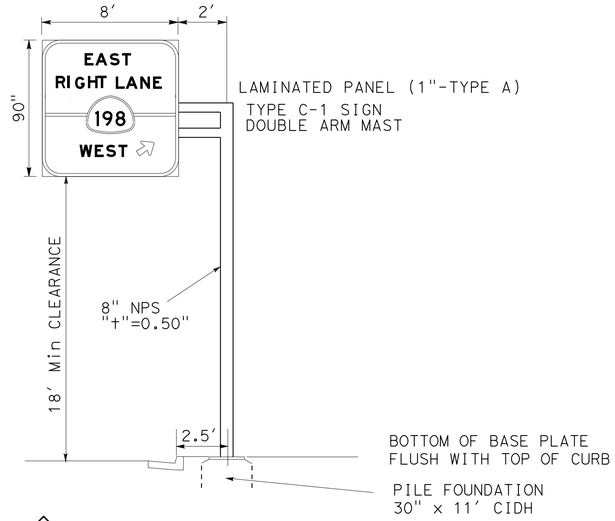

I S-4 INSTALL LIGHTWEIGHT SIGN STRUCTURE
FSBT ON AVENUE 12 AT Sta 35+00
(ILLUMINATION REQUIRED)

SEE Std PLANS FOR ADDITIONAL DETAILS

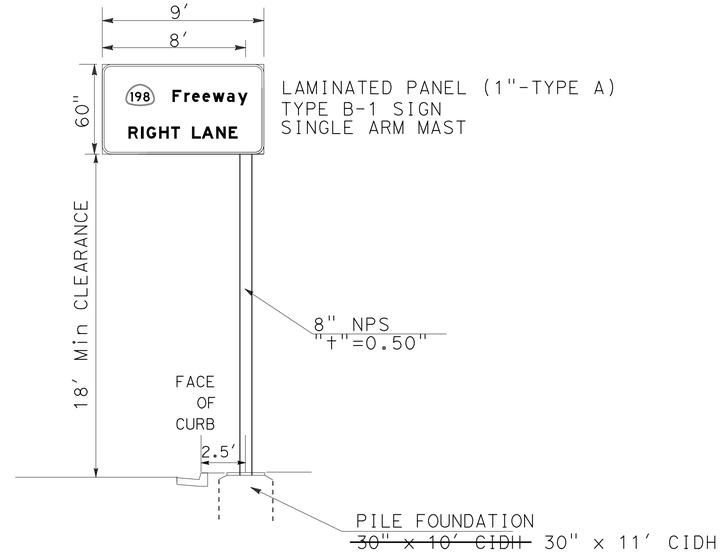

J S-4 INSTALL LIGHTWEIGHT SIGN STRUCTURE
FSBT ON AVENUE 12 AT Sta 39+50
(ILLUMINATION REQUIRED)

SEE Std PLANS FOR ADDITIONAL DETAILS

1 REPLACED PER ADDENDUM No. 1 DATED MARCH 4, 2014

APPROVED FOR SIGN WORK ONLY

SIGN DETAILS

NO SCALE

SD-2

STATE OF CALIFORNIA - DEPARTMENT OF TRANSPORTATION
Caltrans
TRAFFIC DESIGN

FUNCTIONAL SUPERVISOR: MOHAMMED QATAMI
CALCULATED-DESIGNED BY: KEVIN N NGUYEN
CHECKED BY: HASSAN TAHA
REVISED BY
DATE REVISED

LAST REVISION 05-03-12
DATE PLOTTED => 04-MAR-2014
TIME PLOTTED => 09:07

Dist	COUNTY	ROUTE	POST MILES TOTAL PROJECT	SHEET No.	TOTAL SHEETS
06	Kin	198	R16.5/R17.2	136	247

Hassan Taha 05-03-12
REGISTERED CIVIL ENGINEER DATE

11-12-13
PLANS APPROVAL DATE

REGISTERED PROFESSIONAL ENGINEER HASSAN M. TAHA No. 60130 Exp. 06/30/12 CIVIL STATE OF CALIFORNIA

THE STATE OF CALIFORNIA OR ITS OFFICERS OR AGENTS SHALL NOT BE RESPONSIBLE FOR THE ACCURACY OR COMPLETENESS OF SCANNED COPIES OF THIS PLAN SHEET.

OVERHEAD SIGN STRUCTURE QUANTITIES

SHEET No.	SIGN NUMBER (No.)	SIGN CODE	LOCATION	SIGN MESSAGE/ DESCRIPTION	PANEL SIZE L x D	OVERHEAD SIGN PANEL BACKGROUND SHEETING COLOR	BACKGROUND RETRO-REFLECTIVE ASTM TYPE	LEGEND SHEETING COLOR	LEGEND RETRO-REFLECTIVE ASTM TYPE	GRAFFITI FLOW PREMIUM	FURNISH LAMINATED PANEL SIGN (1"-TYPE A) SQFT	FURNISH SIGN STRUCTURE (LIGHTWEIGHT) LB	INSTALL SIGN STRUCTURE (LIGHTWEIGHT) LB	30" CAST-IN-DRILLED-HOLE CONCRETE PILE (SIGN FOUNDATION) LF	36" CAST-IN-DRILLED-HOLE CONCRETE PILE (SIGN FOUNDATION) LF	FURNISH SIGN STRUCTURE (TRUSS) LB	INSTALL SIGN STRUCTURE (TRUSS) LB	54" CAST-IN-DRILLED-HOLE CONCRETE PILE (SIGN FOUNDATION) LF	FURNISH SIGN STRUCTURE (BRIDGE MOUNTED WITHOUT WALKWAY) LB	INSTALL SIGN STRUCTURE (BRIDGE MOUNTED WITHOUT WALKWAY) LB
S-1	A	G85-1(CA)	STA 885+00 ROUTE 198 FEBT	EXIT 85 / 12th Ave	15′ x 80″	GREEN	IV	WHITE	IV	X	100.00					13,620	13,620	19		
S-2	B	G85-1(CA)	STA 922+25 ROUTE 198 FWBT	EXIT 85 / 12th Ave	15′ x 80″	GREEN	IV	WHITE	IV	X	100.00					13,620	13,620	19		
	C	G78-1(CA)	STA 28+00 AVE 12 FSBT	198 EAST	6′ x 60″	GREEN	IV	WHITE	IV	X	30.00	1,072	1,072	10						
	D	G78-1(CA)	STA 27+50 AVE 12 FNBT	198 WEST	6′ x 60″	GREEN	IV	WHITE	IV	X	30.00	1,072	1,072	10						
	E	G83-5(CA)	BRIDGE MOUNTED FWBT	EXIT 84 / 13th Ave / 1 MILE	14′ x 100″	GREEN	IV	WHITE	IV	X	116.67								1317	1317
	F	G83-5(CA)	BRIDGE MOUNTED FEBT	EXIT 86 / 11th Ave / ¾ MILE	14′ x 100″	GREEN	IV	WHITE	IV	X	116.67								1317	1317
S-3	G	G21-1(CA)	STA 15+00 AVE 12 FNBT	198 Freeway / WEST LEFT LANE / EAST RIGHT LANE	15′ x 70″	GREEN	IV	WHITE	IV	X	87.50	2,332	2,332		13					
	H	G21-1(CA)	STA 19+25 AVE 12 FNBT	WEST LEFT LANE / 198 / EAST	8′ x 90″	GREEN	IV	WHITE	IV	X	60.00	2,096	2,096	11	~~13~~					
S-4	I	G21-1(CA)	STA 35+00 AVE 12 FSBT	EAST RIGHT LANE / 198 / WEST	8′ x 90″	GREEN	IV	WHITE	IV	X	60.00	2,096	2,096	11	~~13~~					
	J	G20-5(CA)	STA 39+50 AVE 12 FSBT	198 Freeway / RIGHT LANE	9′ x 60″	GREEN	IV	WHITE	IV	X	45.00	1,579	1,579	~~10~~ 11						
	CHANGEABLE MESSAGE SIGN															14,152	14,152			
										TOTAL	745.84	10,247	10,247	~~30~~ 53	~~39~~ 13	41,392	41,392	38	2634	2634

1

1 REPLACED PER ADDENDUM No. 1 DATED MARCH 4, 2014

SIGN QUANTITIES

SQ-4

STATE OF CALIFORNIA - DEPARTMENT OF TRANSPORTATION
Caltrans TRAFFIC DESIGN

FUNCTIONAL SUPERVISOR: MOHAMMED QATAMI
CALCULATED-DESIGNED BY: KEVIN N NGUYEN
CHECKED BY: HASSAN TAHA
REVISED BY
DATE REVISED

LAST REVISION 05-03-12
DATE PLOTTED => 04-MAR-2014
TIME PLOTTED => 09:07

Dist	COUNTY	ROUTE	POST MILES TOTAL PROJECT	SHEET No.	TOTAL SHEETS
06	Kin	198	R16.5/R17.2	141A	247

LICENSED LANDSCAPE ARCHITECT

11-12-13
PLANS APPROVAL DATE

THE STATE OF CALIFORNIA OR ITS OFFICERS OR AGENTS SHALL NOT BE RESPONSIBLE FOR THE ACCURACY OR COMPLETENESS OF SCANNED COPIES OF THIS PLAN SHEET.

LICENSED LANDSCAPE ARCHITECT
DAVID R. MARTIN #5094
03/31/15
02/24/14
STATE OF CALIFORNIA

1

NOTE:

FOR ACCURATE RIGHT OF WAY DATA,
CONTACT RIGHT OF WAY ENGINEERING AT THE DISTRICT OFFICE.

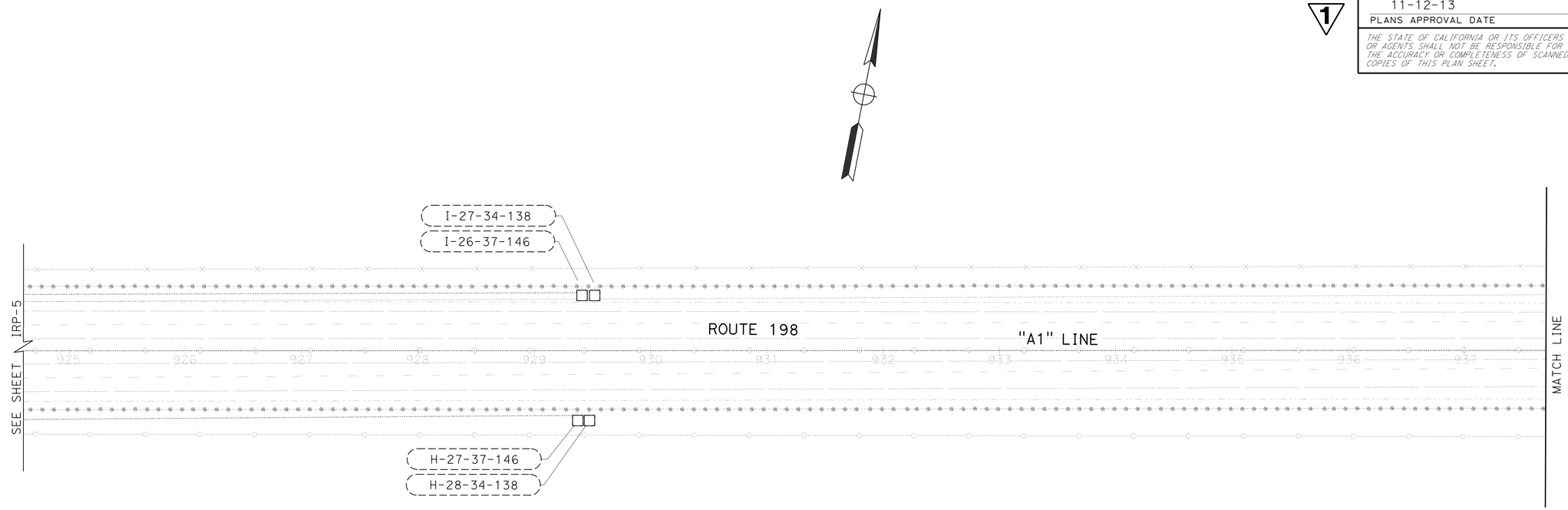

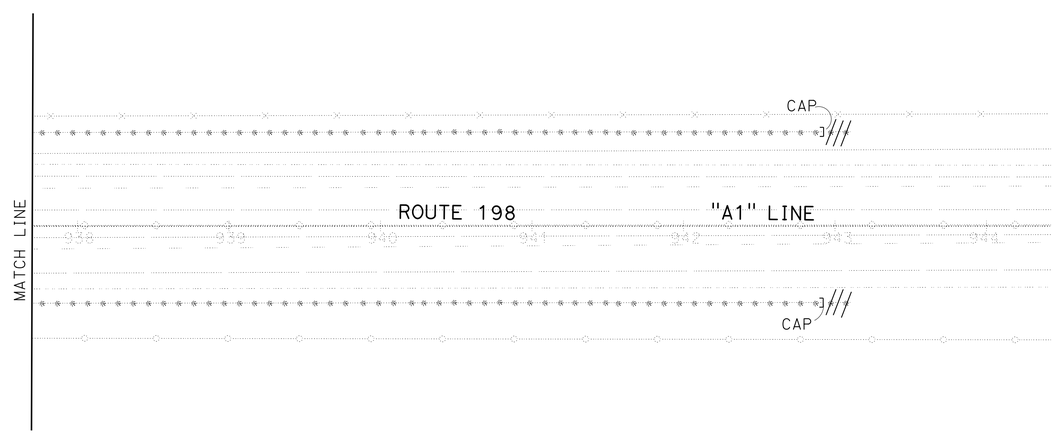

1 **ADDED PER ADDENDUM No. 1 DATED MARCH 4, 2014**

APPROVED FOR IRRIGATION REMOVAL WORK ONLY

IRRIGATION REMOVAL PLAN
IRP-6

SCALE: 1" = 50'

STATE OF CALIFORNIA - DEPARTMENT OF TRANSPORTATION
Caltrans® LANDSCAPE ARCHITECTURE

SENIOR LANDSCAPE ARCHITECT: BRAD COLE
CALCULATED-DESIGNED BY: DAVID MARTIN
CHECKED BY: BRAD COLE
REVISED BY
DATE REVISED

LAST REVISION 02-24-14
DATE PLOTTED => 04-MAR-2014
TIME PLOTTED => 09:07