Dist	COUNTY	LOCATION CODE	KILOMETER POST TOTAL PROJECT	SHEET No.	TOTAL SHEETS
06	Ker	5722		1	178

STATE OF CALIFORNIA

DEPARTMENT OF TRANSPORTATION

PROJECT PLANS FOR BUILDING CONSTRUCTION ON AND ADJACENT TO STATE HIGHWAY

IN KERN COUNTY NEAR TAFT AT THE TAFT MAINTENANCE STATION AT 27450 HIGHWAY 33

TO BE SUPPLEMENTED BY STANDARD PLANS DATED JULY 2004

INDEX OF SHEETS

SHEET No.	DESCRIPTION
1	TITLE AND LOCATION MAP
2-3	TYPICAL CROSS SECTIONS
4-5	LAYOUTS
6-9	CONSTRUCTION DETAILS
10	CONTOUR GRADING
11-15	DRAINAGE PLANS, PROFILES, DETAILS AND QUANTITIES
16-21	UTILITY PLAN, DETAILS AND QUANTITIES
22	CONSTRUCTION AREA SIGNS
23	PAVEMENT DELINEATION PLAN AND QUANTITIES
24	SUMMARY OF QUANTITIES
25-29	LANDSCAPE PLANS
30-41	REVISED STANDARD PLANS

BUILDING PLANS

42-47	GENERAL PLANS
48-83	ARCHITECTURAL PLANS
84-127	STRUCTURAL PLANS
128-150	MECHANICAL PLANS
151-168	ELECTRICAL PLANS
169-178	SANITARY PLANS

THE STANDARD PLANS LIST APPLICABLE TO THIS CONTRACT IS INCLUDED IN THE NOTICE TO BIDDERS AND SPECIAL PROVISIONS BOOK.

LOCATION MAP

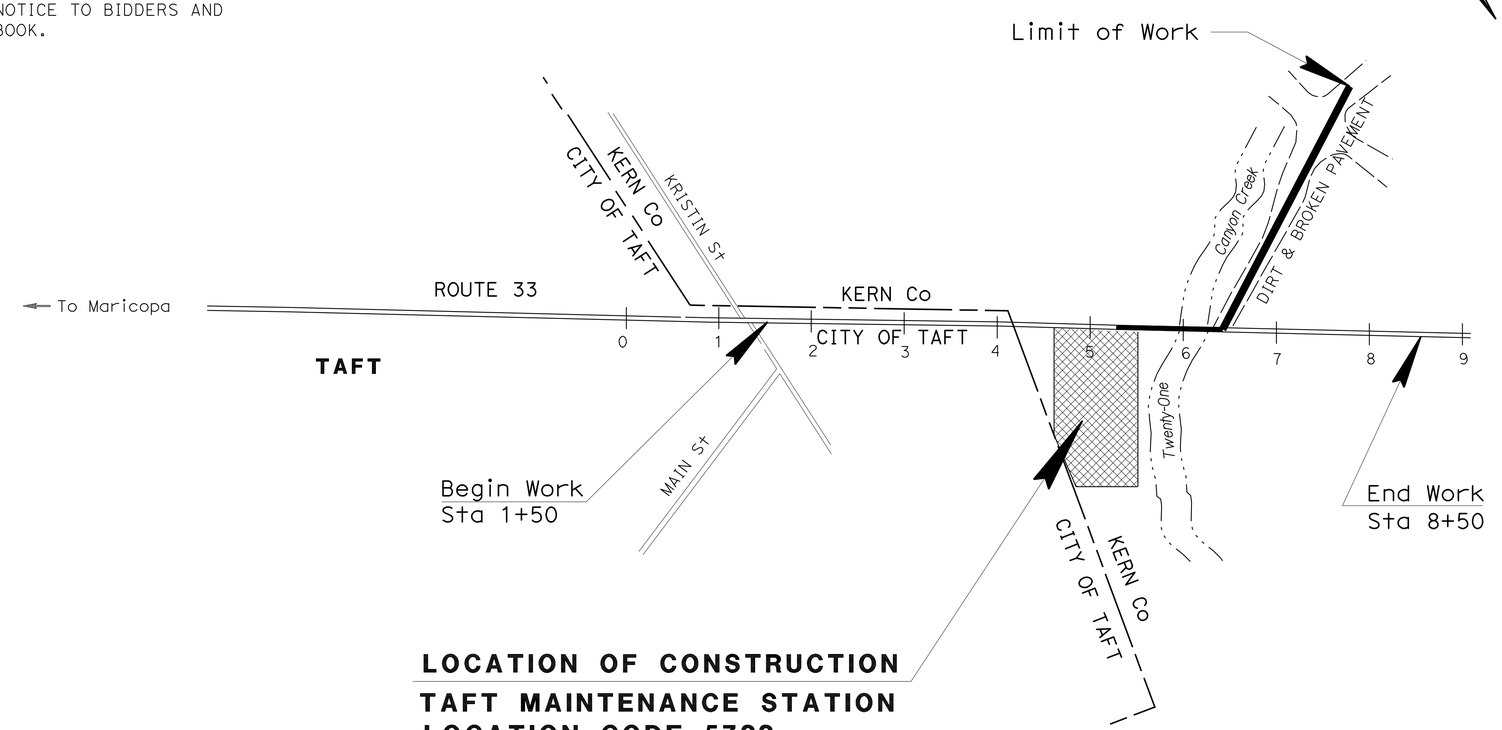

LOCATION OF CONSTRUCTION
TAFT MAINTENANCE STATION
LOCATION CODE 5722

NO SCALE

IDENTIFICATION STAMP
DIV. OF THE STATE ARCHITECT
SACRAMENTO REGIONAL OFFICE
02 108714
AC
DATE 04-23-07

Fire Marshal Stamp

CALIFORNIA STATE FIRE MARSHAL
APPROVED
Approval of this plan does not authorize or approve any omission or deviation from applicable regulations. Final approval is subject to field inspection. One set of approved plans shall be available on the project site at all times.
Reviewed by: JEFFERY SCHWARTZ
Approval date: 03/08/10

CSFM FILE NUMBER 01-15-11-0012

PROJECT MANAGER JUDY AGUILAR
DESIGN ENGINEER DAVID SANGHA

02-04-09
PROJECT ENGINEER DATE
REGISTERED CIVIL ENGINEER

REGISTERED PROFESSIONAL ENGINEER
ANTON A. KISMETIAN
No. 64466
Exp 06/30/09
CIVIL
STATE OF CALIFORNIA

March 8, 2010
PLANS APPROVAL DATE

THE STATE OF CALIFORNIA OR ITS OFFICERS OR AGENTS SHALL NOT BE RESPONSIBLE FOR THE ACCURACY OR COMPLETENESS OF ELECTRONIC COPIES OF THIS PLAN SHEET.

THE CONTRACTOR SHALL POSSESS THE CLASS (OR CLASSES) OF LICENSE AS SPECIFIED IN THE "NOTICE TO BIDDERS."

LAST REVISION 02-04-09 DATE PLOTTED => 23-MAR-2010 TIME PLOTTED => 05:40

CONTRACT No. **06-483404**

Dist	COUNTY	LOCATION CODE	KILOMETER POST TOTAL PROJECT	SHEET No.	TOTAL SHEETS
06	Ker	5722		2	178

REGISTERED CIVIL ENGINEER 02-04-09 DATE

3-8-10
PLANS APPROVAL DATE

REGISTERED PROFESSIONAL ENGINEER ANTON A. KISMETIAN No. 64466 Exp 06/30/09 CIVIL STATE OF CALIFORNIA

THE STATE OF CALIFORNIA OR ITS OFFICERS OR AGENTS SHALL NOT BE RESPONSIBLE FOR THE ACCURACY OR COMPLETENESS OF ELECTRONIC COPIES OF THIS PLAN SHEET.

Caltrans Metric

NOTES:
1. DIMENSIONS OF STRUCTURAL SECTIONS ARE SUBJECT TO TOLERANCES SPECIFIED IN THE STANDARD SPECIFICATIONS.
2. SUPERELEVATION AS SHOWN OR AS DIRECTED BY ENGINEER.

LEGEND:

Cold Plane AC Pavement Area

ABBREVIATION:

HMA Hot Mix Asphalt

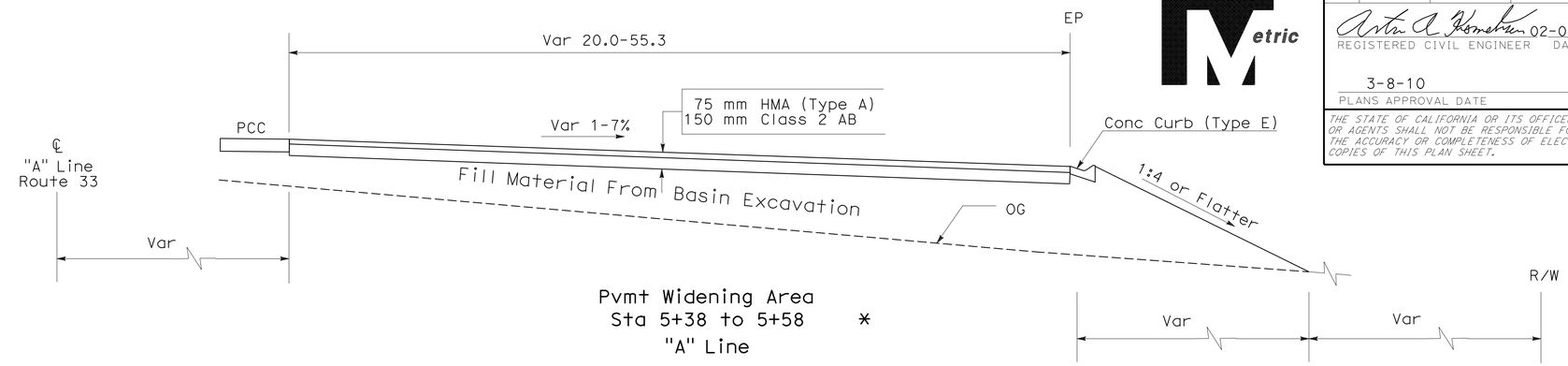

Pvmt Widening Area
Sta 5+38 to 5+58 *
"A" Line

* Earthen Area Between Sta 5+58 and Sta 5+78 Will Remain Unpaved.

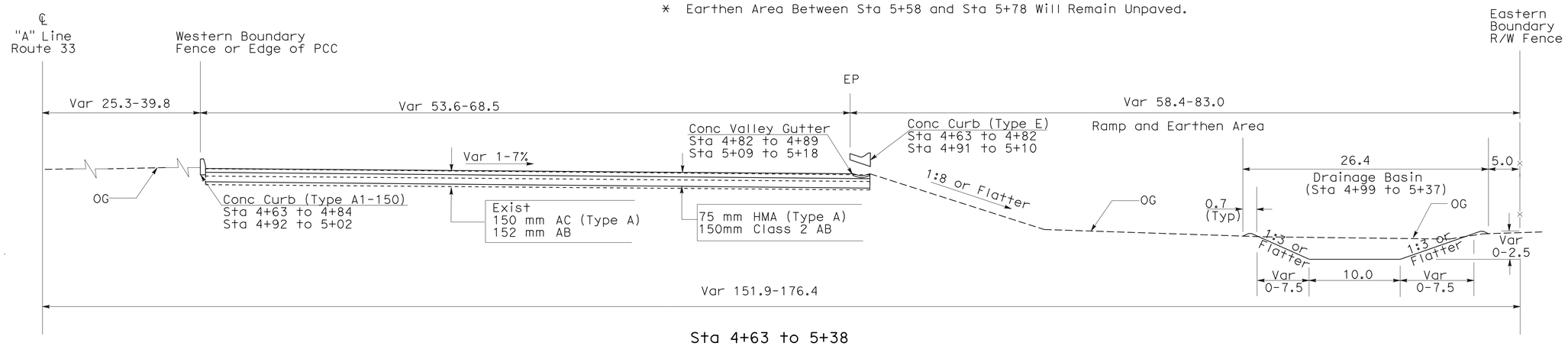

Sta 4+63 to 5+38
"A" Line

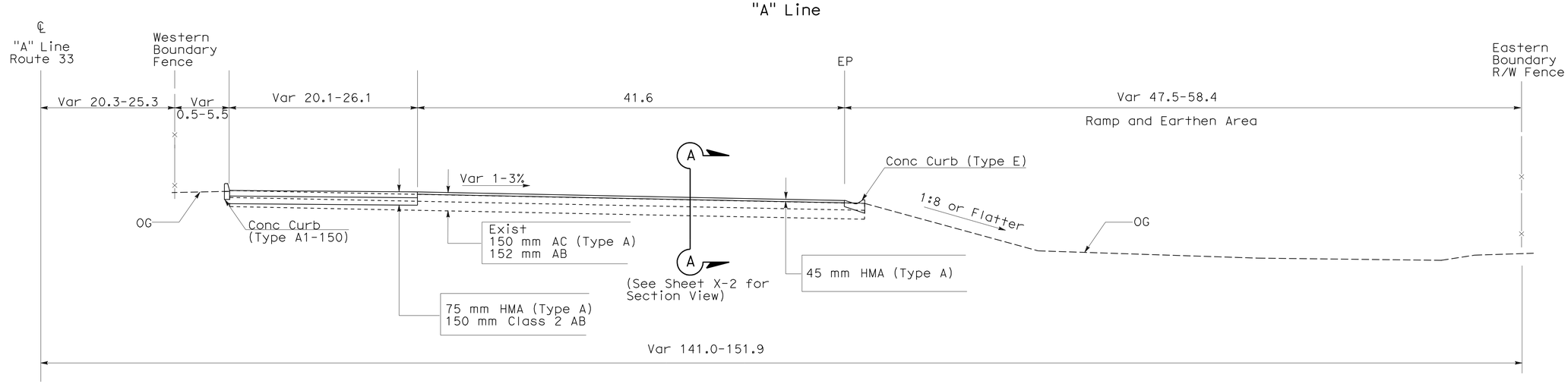

Sta 4+56 to 4+63
"A" Line

TYPICAL CROSS SECTIONS
X-1

ALL DIMENSIONS ARE IN METERS UNLESS OTHERWISE SHOWN

NO SCALE

STATE OF CALIFORNIA - DEPARTMENT OF TRANSPORTATION
Caltrans PROJECT DEVELOPMENT

FUNCTIONAL SUPERVISOR DAVID SANGHA
CALCULATED-DESIGNED BY LARRY CAO
CHECKED BY ANTON KISMETIAN
REVISED BY
DATE REVISED

LAST REVISION 02-03-09
DATE PLOTTED => 23-MAR-2010
TIME PLOTTED => 05:40

Dist	COUNTY	LOCATION CODE	KILOMETER POST TOTAL PROJECT	SHEET No.	TOTAL SHEETS
06	Ker	5722		3	178

REGISTERED CIVIL ENGINEER 02-04-09 DATE

3-8-10
PLANS APPROVAL DATE

REGISTERED PROFESSIONAL ENGINEER ANTON A. KISMETIAN No. 64466 Exp 06/30/09 CIVIL STATE OF CALIFORNIA

THE STATE OF CALIFORNIA OR ITS OFFICERS OR AGENTS SHALL NOT BE RESPONSIBLE FOR THE ACCURACY OR COMPLETENESS OF ELECTRONIC COPIES OF THIS PLAN SHEET.

Caltrans Metric

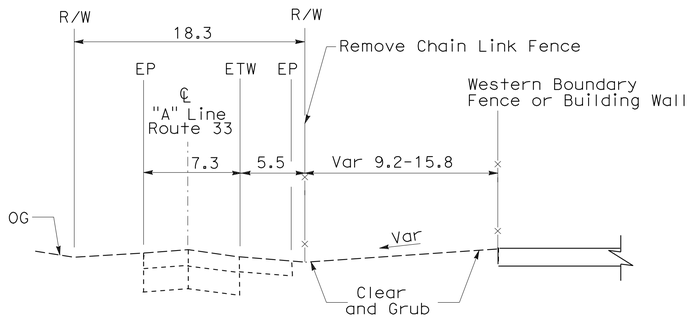

EXISTING LANDSCAPED AREAS

Sta 4+55.0 to 4+58.7
Sta 5+02.3 to 5+78.0
"A" Line

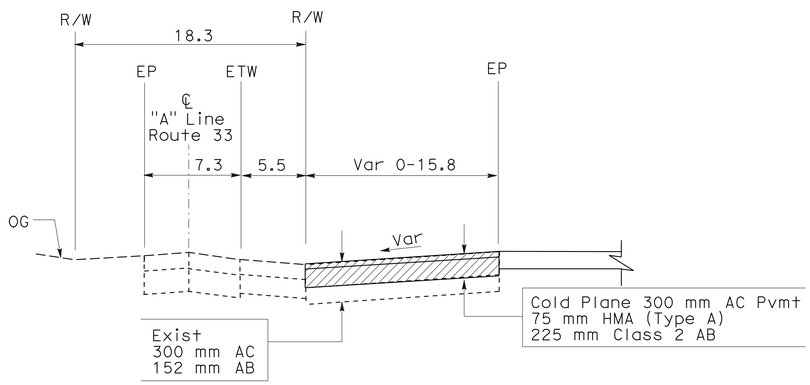

ENTRANCE DRIVE WAY
Sta 4+78.3 to 5+02.3
"A" Line

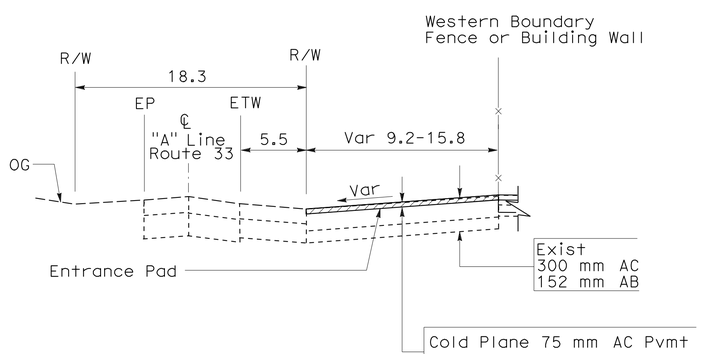

ENTRANCE DRIVE WAY
Sta 4+58.8 to 4+78.3
"A" Line

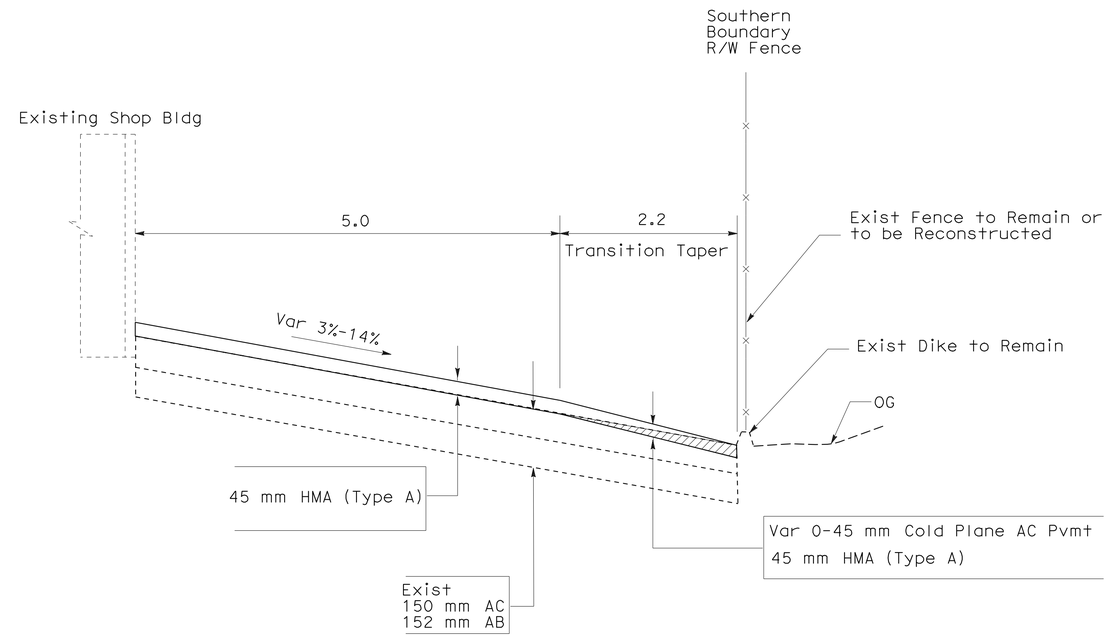

Section A-A (from Sheet X-1)

ALL DIMENSIONS ARE IN
METERS UNLESS OTHERWISE SHOWN

NO SCALE

TYPICAL CROSS SECTIONS

X-2

STATE OF CALIFORNIA - DEPARTMENT OF TRANSPORTATION
Caltrans PROJECT DEVELOPMENT

FUNCTIONAL SUPERVISOR DAVID SANGHA
CALCULATED-DESIGNED BY LARRY. CAO
CHECKED BY ANTON KISMETIAN
REVISED BY
DATE REVISED

LAST REVISION 02-03-09 DATE PLOTTED => 23-MAR-2010 TIME PLOTTED => 05:40

Dist	COUNTY	LOCATION CODE	KILOMETER POST TOTAL PROJECT	SHEET No.	TOTAL SHEETS
06	Ker	5722		4	178

REGISTERED CIVIL ENGINEER 02-04-09 DATE

3-8-10
PLANS APPROVAL DATE

REGISTERED PROFESSIONAL ENGINEER ANTON A. KISMETIAN No. 64466 Exp. 06/30/09 CIVIL STATE OF CALIFORNIA

THE STATE OF CALIFORNIA OR ITS OFFICERS OR AGENTS SHALL NOT BE RESPONSIBLE FOR THE ACCURACY OR COMPLETENESS OF ELECTRONIC COPIES OF THIS PLAN SHEET.

Caltrans Metric

NOTES:

1. For complete R/W Data, see R/W Record Maps at the District office.
2. See Architectural, Structural, Mechanical, Electrical, and Sanitary plans for building and facility details.
3. See Construction detail sheets for concrete curbs, AC pavement, Basin, and GPS monument details.
4. See Drainage plans for Concrete Valley Gutter and Drainage details.
5. See Utility and Utility detail plans for Water, Gas, Electric, and Telephone Utility information.
6. See Highway planting plans for planting and Irrigation details.
7. Coordinate values shown are CCS83 Zone 5W.
8. Some buildings and facilities not shown.

LEGEND:

Cold Plane AC Pavement Area

ABBREVIATIONS:

GPS Global Positioning System
CVSRN Central Valley Spatial Reference Network
WKWD West Kern Water District
PERM Permanent

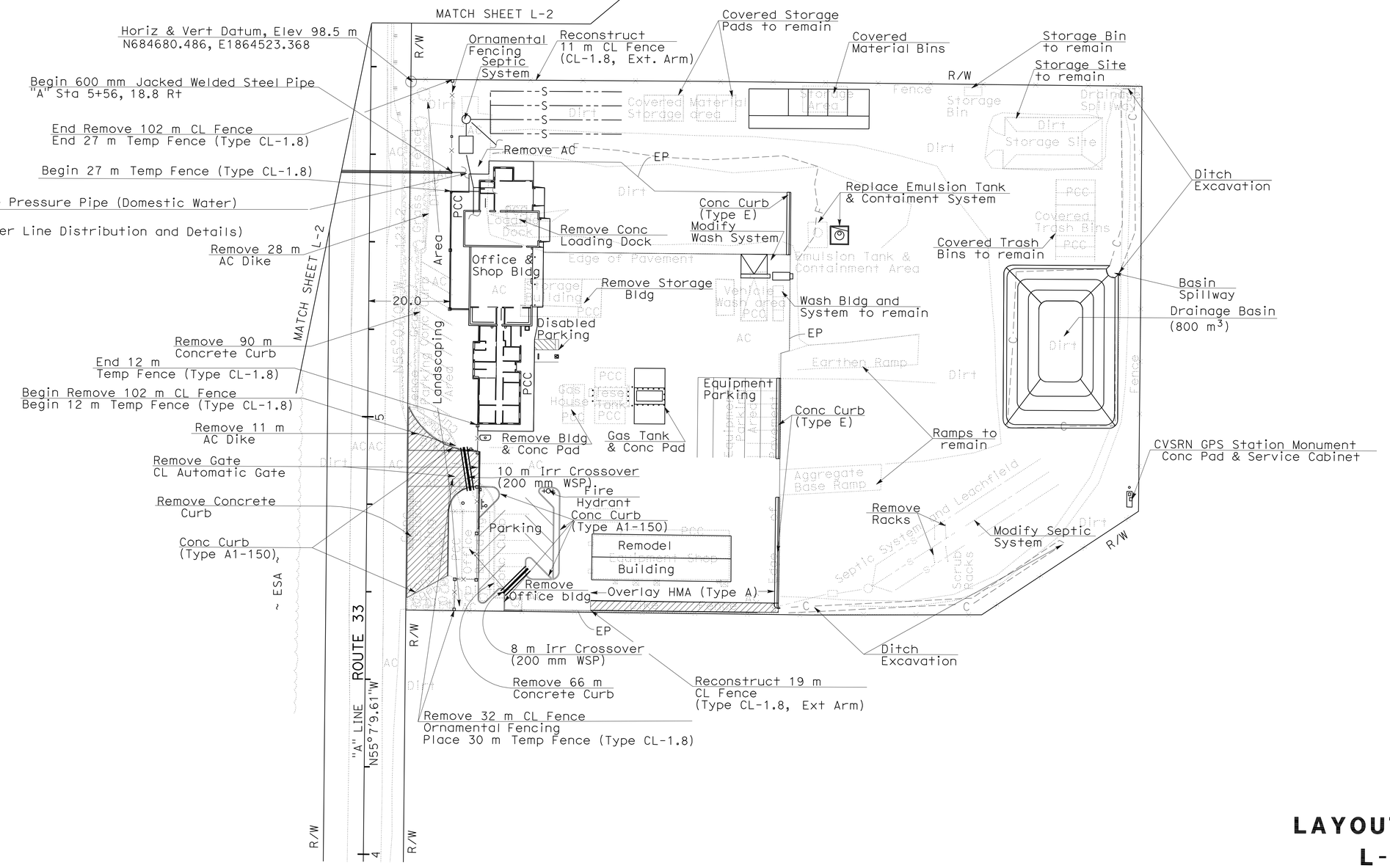

ALL DIMENSIONS ARE IN METERS UNLESS OTHERWISE SHOWN

SCALE 1:500

LAYOUT L-1

STATE OF CALIFORNIA - DEPARTMENT OF TRANSPORTATION
Caltrans PROJECT DEVELOPMENT

FUNCTIONAL SUPERVISOR DAVID SANGHA
CALCULATED-DESIGNED BY LARRY. CAO
CHECKED BY ANTON KISMETIAN
REVISED BY
DATE REVISED

LAST REVISION 02-03-09
DATE PLOTTED => 23-MAR-2010
TIME PLOTTED => 05:40

Dist	COUNTY	LOCATION CODE	KILOMETER POST TOTAL PROJECT	SHEET No.	TOTAL SHEETS
06	Ker	5722		5	178

REGISTERED CIVIL ENGINEER 02-04-09 DATE

3-8-10
PLANS APPROVAL DATE

REGISTERED PROFESSIONAL ENGINEER ANTON A. KISMETIAN No. 64466 Exp. 06/30/09 CIVIL STATE OF CALIFORNIA

THE STATE OF CALIFORNIA OR ITS OFFICERS OR AGENTS SHALL NOT BE RESPONSIBLE FOR THE ACCURACY OR COMPLETENESS OF ELECTRONIC COPIES OF THIS PLAN SHEET.

Caltrans Metric

NOTES:

1. For complete R/W Data, see R/W Record Maps at the District office.

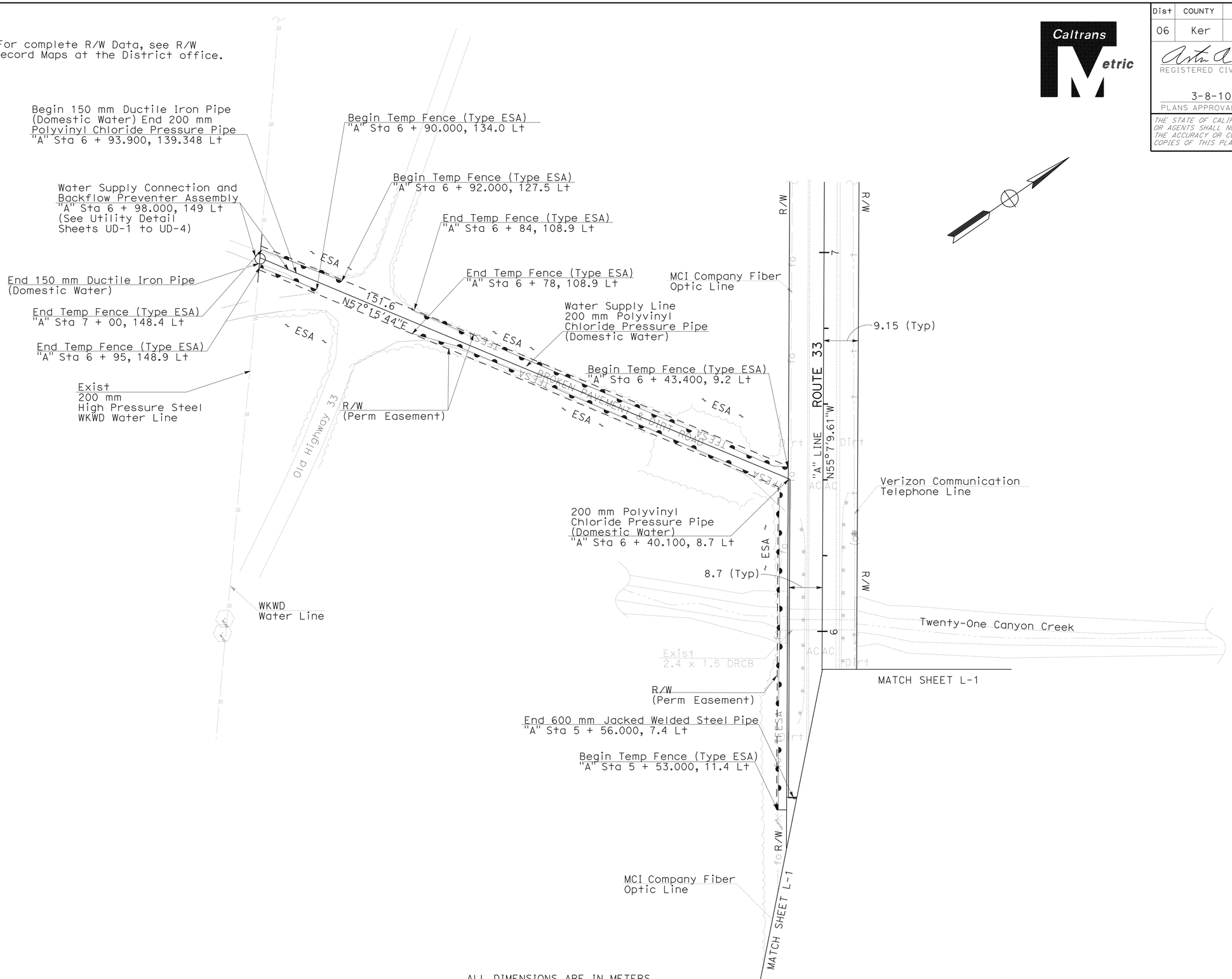

ALL DIMENSIONS ARE IN METERS UNLESS OTHERWISE SHOWN

SCALE 1:500

LAYOUT L-2

STATE OF CALIFORNIA - DEPARTMENT OF TRANSPORTATION
Caltrans PROJECT DEVELOPMENT

FUNCTIONAL SUPERVISOR: DAVID SANGHA
CALCULATED-DESIGNED BY: LARRY. CAO
CHECKED BY: ANTON KISMETIAN
REVISED BY / DATE REVISED

LAST REVISION 02-04-09 | DATE PLOTTED => 23-MAR-2010 | TIME PLOTTED => 05:40

Dist	COUNTY	LOCATION CODE	KILOMETER POST TOTAL PROJECT	SHEET No.	TOTAL SHEETS
06	Ker	5722		6	178

REGISTERED CIVIL ENGINEER 02-04-09 DATE

3-8-10
PLANS APPROVAL DATE

REGISTERED PROFESSIONAL ENGINEER ANTON A. KISMETIAN No. 64466 Exp. 06/30/09 CIVIL STATE OF CALIFORNIA

THE STATE OF CALIFORNIA OR ITS OFFICERS OR AGENTS SHALL NOT BE RESPONSIBLE FOR THE ACCURACY OR COMPLETENESS OF ELECTRONIC COPIES OF THIS PLAN SHEET.

Caltrans Metric

CURB DATA AND CURVE/BEARING DATA

CURB	UNIT	STATION	OFFSET	ELEVATION	R	Δ	T	L	BEARING	L
#1	a	5+02.325	9.370	322.361	-	-	-	-	-	-
	1	-	-	-	17.000	65°44′57"	10.987	19.508	-	-
	b	4+92.307	24.869	322.460	-	-	-	-	-	-
#2	c	4+63.867	18.594	322.050	-	-	-	-	-	-
	2	-	-	-	-	-	-	-	N55°7′9.610"W	14.500
	d	4+78.255	18.593	322.200	-	-	-	-	-	-
	3	-	-	-	5.96	90°19′18"	5.99	9.4	-	-
	e	4+84.309	24.870	322.460	-	-	-	-	-	-
#3	f	4+84.309	25.785	322.460	-	-	-	-	-	-
	4	-	-	-	-	-	-	-	N34°50′49.619"E	2.713
	g	4+84.309	28.575	322.363	-	-	-	-	-	-
	5	-	-	-	1.83	134°44′38"	4.39	4.30	-	-
	h	4+81.194	29.799	322.259	-	-	-	-	-	-
	6	-	-	-	-	-	-	-	N10°24′24.424"W	5.596
	i	4+77.172	25.818	322.400	-	-	-	-	-	-
#4	j	4+74.575	25.770	322.375	-	-	-	-	-	-
	7	-	-	-	-	-	-	-	N55°7′9.610"W	15.896
	k	4+58.678	25.770	322.216	-	-	-	-	-	-
	8	-	-	-	0.92	135°17′15"	2.24	2.17	-	-
	l	4+58.031	27.344	322.116	-	-	-	-	-	-
	9	-	-	-	-	-	-	-	N10°24′24.424"W	4.10
	m	4+60.874	30.159	322.000	-	-	-	-	-	-
	10	-	-	-	0.92	135°00′02"	2.22	2.17	-	-
	n	4+60.231	31.732	322.890	-	-	-	-	-	-
	11	-	-	-	-	-	-	-	N55°7′9.610"W	4.228
	o	4+56.193	31.732	321.700	-	-	-	-	-	-
	12	-	-	-	-	-	-	-	N34°54′8.184"E	3.982
	p	4+56.191	35.715	321.600	-	-	-	-	-	-
#5	q	4+63.177	42.419	321.400	-	-	-	-	-	-
	13	-	-	-	-	-	-	-	N34°52′52.751"E	4.650
	r	4+63.177	38.156	321.570	-	-	-	-	-	-
	14	-	-	-	1.83	90°00′00"	1.83	2.87	-	-
	s	4+64.968	36.326	321.680	-	-	-	-	-	-
	15	-	-	-	-	-	-	-	N55°7′9.610"W	2.530
	t	4+67.498	36.326	321.680	-	-	-	-	-	-
	16	-	-	-	0.92	125°04′52"	1.77	2.01	-	-
	u	4+67.998	37.880	321.680	-	-	-	-	-	-
	17	-	-	-	-	-	-	-	N79°35′35.576"E	6.385
	v	4+63.506	42.417	321.600	-	-	-	-	-	-
#6	w	4+63.162	42.630	321.440	-	-	-	-	-	-
	18	-	-	-	-	-	-	-	N55°7′9.610"W	16.190
	x	4+79.353	42.630	321.380	-	-	-	-	-	-
	19	-	-	-	0.92	37°26′51"	0.31	0.60	-	-
	y	4+80.119	42.366	321.682	-	-	-	-	-	-
	20	-	-	-	-	-	-	-	N79°35′35.576"E	4.57
	z	4+82.736	39.483	321.900	-	-	-	-	-	-
	21	-	-	-	0.92	135°17′15"	2.24	2.17	-	-
	aa	4+84.309	40.130	321.960	-	-	-	-	-	-
	22	-	-	-	-	-	-	-	N34°52′50.39"E	2.201
	bb	4+84.309	42.331	321.863	-	-	-	-	-	-
	23	-	-	-	1.83	90°00′00"	1.83	2.87	-	-
	cc	4+82.479	44.161	321.581	-	-	-	-	-	-
	24	-	-	-	-	-	-	-	N55°7′9.610"W	17.647
	dd	4+64.968	44.161	321.511	-	-	-	-	-	-
	25	-	-	-	1.83	80°35′47"	1.55	2.57	-	-

ABBREVIATIONS:

CVG - Concrete Valley Gutter
GPS - Global Positioning System
CVSRN - Central Valley Spatial Reference Network
ESA - Environmentally Sensitive Area

NOTE:
CONCRETE CURB (A1-150)

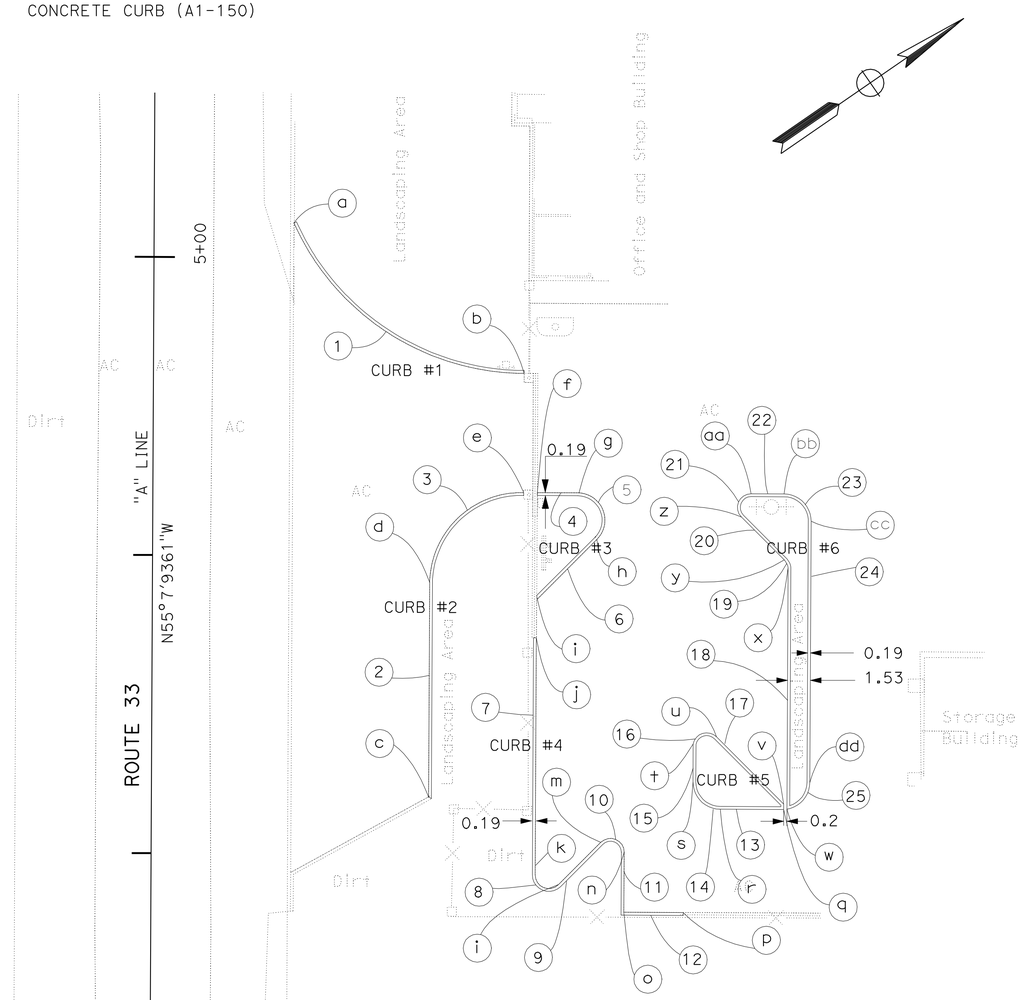

ALL DIMENSIONS ARE IN METERS UNLESS OTHERWISE SHOWN

SCALE 1:200

CONSTRUCTION DETAILS (CONCRETE CURBS)

C-1

STATE OF CALIFORNIA - DEPARTMENT OF TRANSPORTATION
Caltrans PROJECT DEVELOPMENT
FUNCTIONAL SUPERVISOR DAVID SANGHA
CALCULATED-DESIGNED BY LARRY. CAO
CHECKED BY ANTON KISMETIAN
REVISED BY
DATE REVISED

LAST REVISION 02-04-09 DATE PLOTTED => 23-MAR-2010 TIME PLOTTED => 05:40

Dist	COUNTY	LOCATION CODE	KILOMETER POST TOTAL PROJECT	SHEET No.	TOTAL SHEETS
06	Ker	5722		7	178

REGISTERED CIVIL ENGINEER 02-04-09 DATE

3-8-10
PLANS APPROVAL DATE

REGISTERED PROFESSIONAL ENGINEER ANTON A. KISMETIAN No. 64466 Exp. 06/30/09 CIVIL STATE OF CALIFORNIA

THE STATE OF CALIFORNIA OR ITS OFFICERS OR AGENTS SHALL NOT BE RESPONSIBLE FOR THE ACCURACY OR COMPLETENESS OF ELECTRONIC COPIES OF THIS PLAN SHEET.

Caltrans Metric

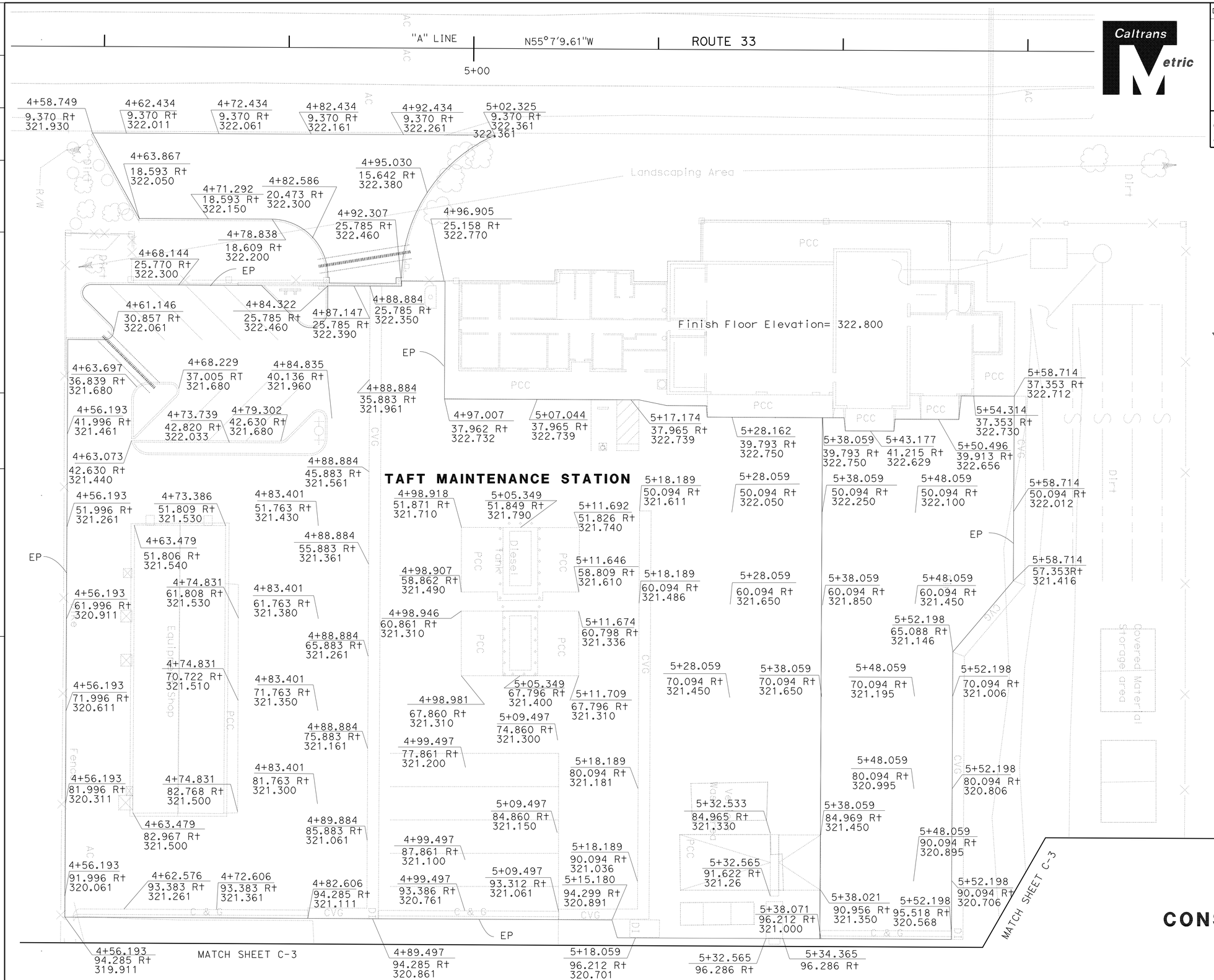

LEGEND:

STATION X+XX.XXX
"A" LINE OFFSET XX.XXX
Elev XXX.XXX

ALL DIMENSIONS ARE IN METERS UNLESS OTHERWISE SHOWN

CONSTRUCTION DETAILS
C-2

SCALE 1:200

STATE OF CALIFORNIA - DEPARTMENT OF TRANSPORTATION
Caltrans PROJECT DEVELOPMENT

FUNCTIONAL SUPERVISOR: DAVID SANGHA
CALCULATED-DESIGNED BY: LARRY. CAO
CHECKED BY: ANTON KISMETIAN
REVISED BY / DATE REVISED

LAST REVISION 02-04-09
DATE PLOTTED => 23-MAR-2010
TIME PLOTTED => 09:40

Dist	COUNTY	LOCATION CODE	KILOMETER POST TOTAL PROJECT	SHEET No.	TOTAL SHEETS
06	Ker	5722		8	178

Caltrans Metric

REGISTERED CIVIL ENGINEER 02-04-09 DATE

3-8-10
PLANS APPROVAL DATE

REGISTERED PROFESSIONAL ENGINEER ANTON A. KISMETIAN No. 64466 Exp. 06/30/09 CIVIL STATE OF CALIFORNIA

THE STATE OF CALIFORNIA OR ITS OFFICERS OR AGENTS SHALL NOT BE RESPONSIBLE FOR THE ACCURACY OR COMPLETENESS OF ELECTRONIC COPIES OF THIS PLAN SHEET.

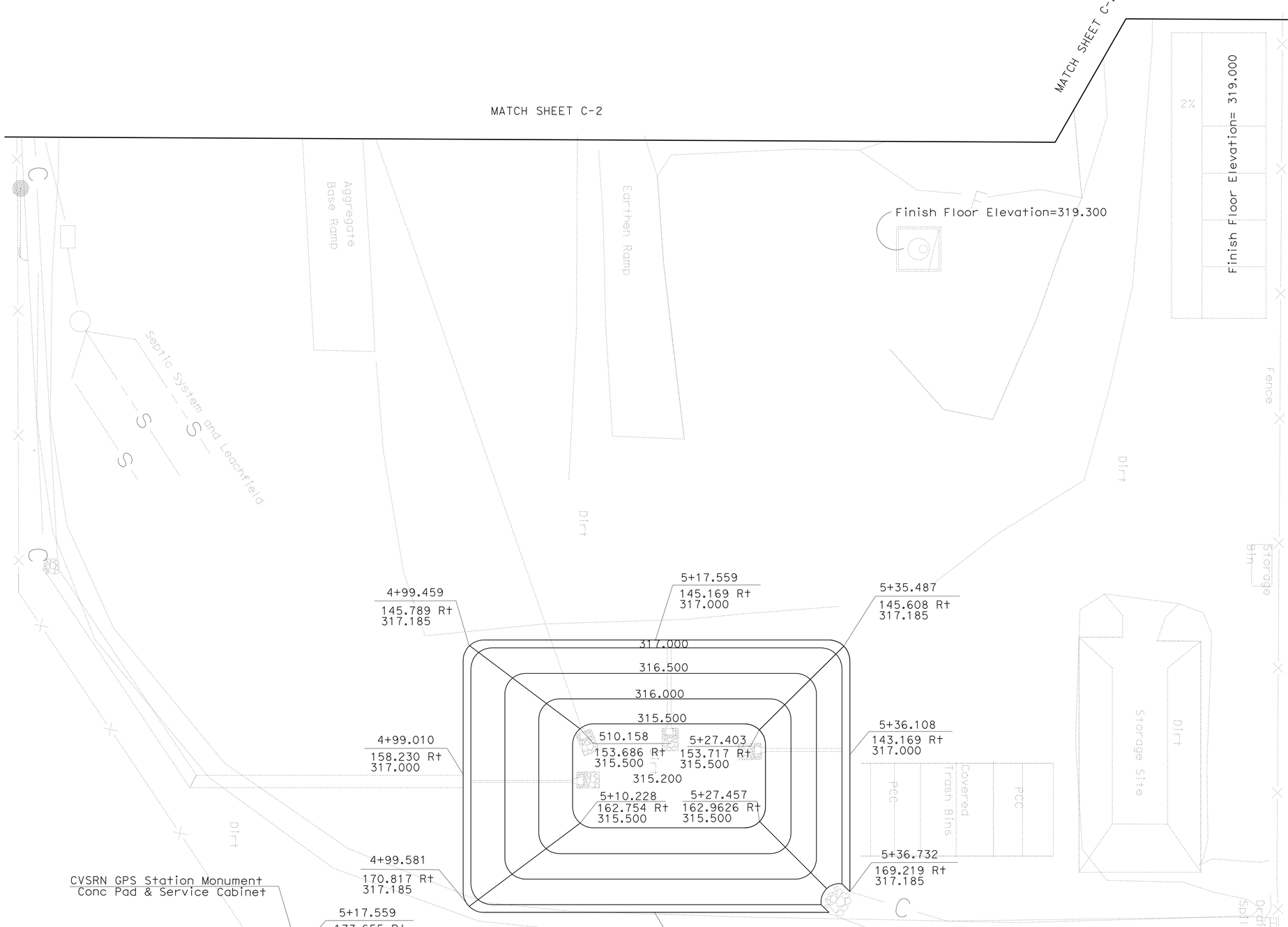

ALL DIMENSIONS ARE IN METERS
UNLESS OTHERWISE SHOWN

CONSTRUCTION DETAILS
C-3

SCALE 1:200

STATE OF CALIFORNIA - DEPARTMENT OF TRANSPORTATION
Caltrans PROJECT DEVELOPMENT

FUNCTIONAL SUPERVISOR: DAVID SANGHA

CALCULATED-DESIGNED BY: LARRY. CAO
CHECKED BY: ANTON KISMETIAN

REVISED BY | DATE REVISED

LAST REVISION 02-04-09 | DATE PLOTTED => 23-MAR-2010 | TIME PLOTTED => 05:40

Dist	COUNTY	LOCATION CODE	KILOMETER POST TOTAL PROJECT	SHEET No.	TOTAL SHEETS
06	Ker	5722		9	178

REGISTERED CIVIL ENGINEER 02-04-09 DATE

3-8-10
PLANS APPROVAL DATE

REGISTERED PROFESSIONAL ENGINEER ANTON A. KISMETIAN No. 64466 Exp. 06/30/09 CIVIL STATE OF CALIFORNIA

THE STATE OF CALIFORNIA OR ITS OFFICERS OR AGENTS SHALL NOT BE RESPONSIBLE FOR THE ACCURACY OR COMPLETENESS OF ELECTRONIC COPIES OF THIS PLAN SHEET.

Caltrans Metric

NOTES:

1. See Building Electrical Sheets for conduit and pull box details.

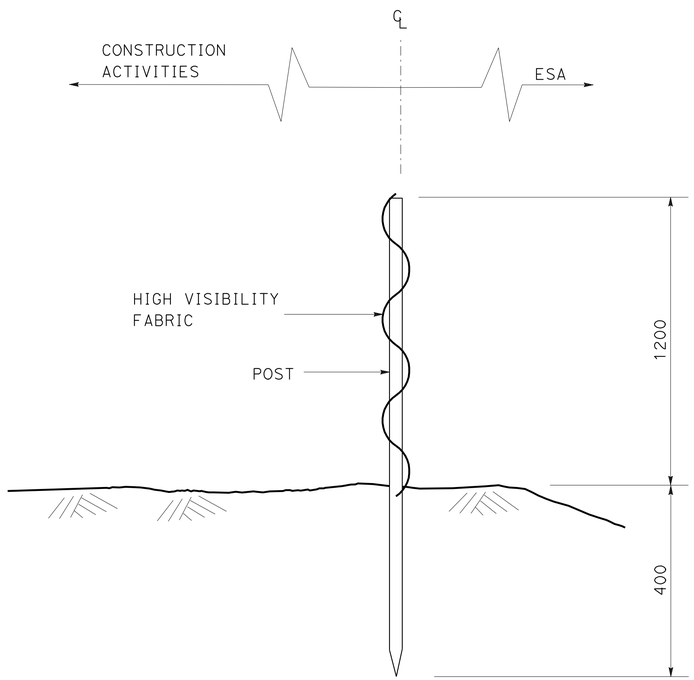

SECTION

TEMPORARY FENCE (TYPE ESA)

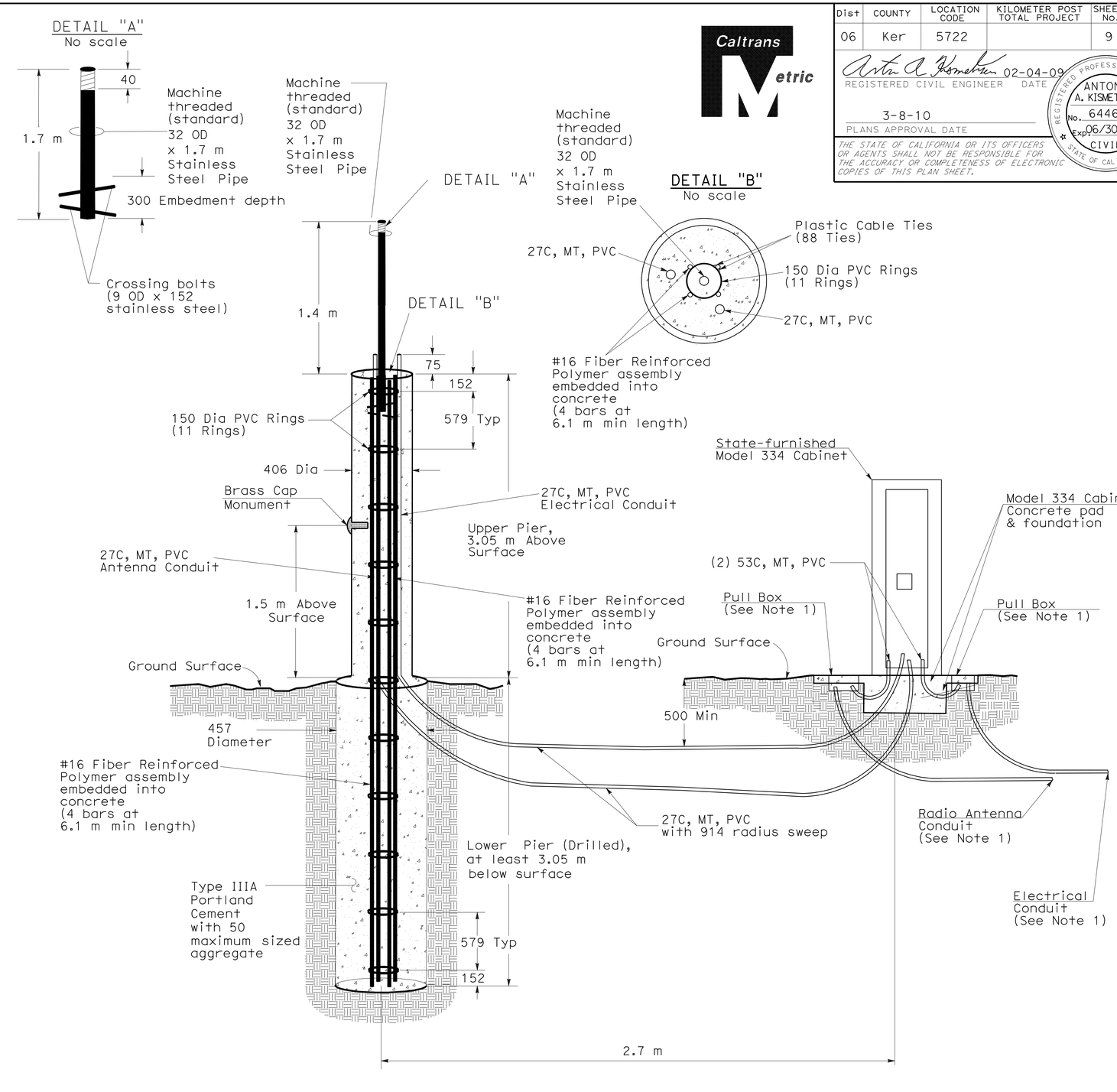

MONUMENT

ALL DIMENSIONS ARE IN MILLIMETERS UNLESS OTHERWISE SHOWN

NO SCALE

CONSTRUCTION DETAIL

C-4

STATE OF CALIFORNIA - DEPARTMENT OF TRANSPORTATION
Caltrans PROJECT DEVELOPMENT

FUNCTIONAL SUPERVISOR: DAVID SANGHA
CALCULATED-DESIGNED BY: ANTON KISMETIAN
CHECKED BY: DAVID SANGHA
REVISED BY / DATE REVISED

LAST REVISION 02-04-09
DATE PLOTTED => 23-MAR-2010
TIME PLOTTED => 09:41

Dist	COUNTY	LOCATION CODE	KILOMETER POST TOTAL PROJECT	SHEET No.	TOTAL SHEETS
06	Ker	5722		10	178

REGISTERED CIVIL ENGINEER 02-04-09 DATE

3-8-10
PLANS APPROVAL DATE

REGISTERED PROFESSIONAL ENGINEER ANTON A. KISMETIAN No. 64466 Exp. 06/30/09 CIVIL STATE OF CALIFORNIA

THE STATE OF CALIFORNIA OR ITS OFFICERS OR AGENTS SHALL NOT BE RESPONSIBLE FOR THE ACCURACY OR COMPLETENESS OF ELECTRONIC COPIES OF THIS PLAN SHEET.

Caltrans Metric

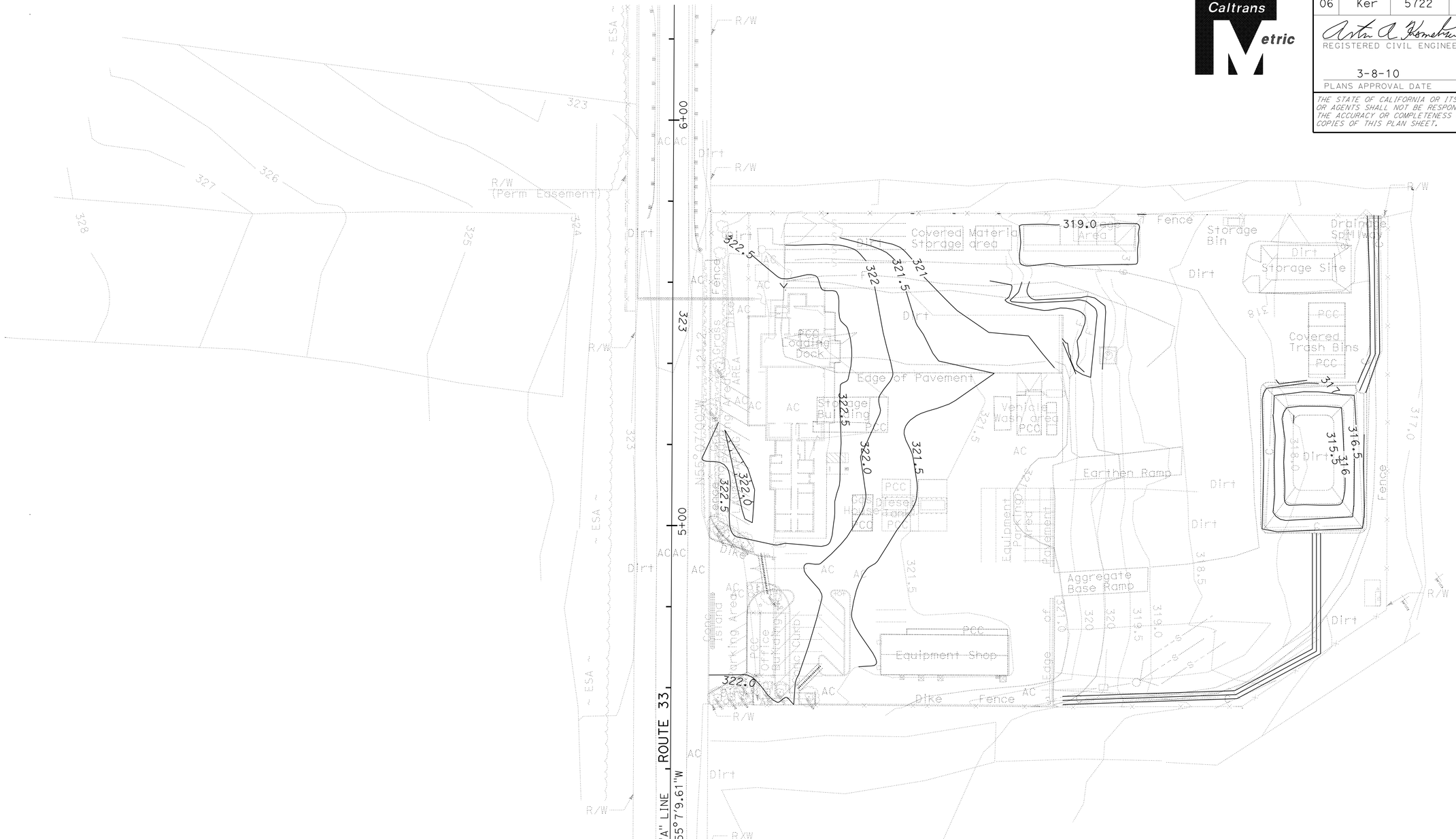

ALL DIMENSIONS ARE IN METERS UNLESS OTHERWISE SHOWN

THIS PLAN ACCURATE FOR CONTOUR GRADING ONLY

CONTOUR GRADING

G-1

SCALE 1:500

STATE OF CALIFORNIA - DEPARTMENT OF TRANSPORTATION
Caltrans PROJECT DEVELOPMENT

FUNCTIONAL SUPERVISOR DAVID SANGHA
CALCULATED-DESIGNED BY LARRY. CAO
CHECKED BY ANTON KISMETIAN
REVISED BY
DATE REVISED

LAST REVISION 02-04-09
DATE PLOTTED => 23-MAR-2010
TIME PLOTTED => 05:41

Dist	COUNTY	LOCATION CODE	KILOMETER POST TOTAL PROJECT	SHEET No.	TOTAL SHEETS
06	Ker	5722		11	178

REGISTERED CIVIL ENGINEER 02-04-09 DATE

3-8-10
PLANS APPROVAL DATE

REGISTERED PROFESSIONAL ENGINEER ANTON A. KISMETIAN No. 64466 Exp. 06/30/09 CIVIL STATE OF CALIFORNIA

THE STATE OF CALIFORNIA OR ITS OFFICERS OR AGENTS SHALL NOT BE RESPONSIBLE FOR THE ACCURACY OR COMPLETENESS OF ELECTRONIC COPIES OF THIS PLAN SHEET.

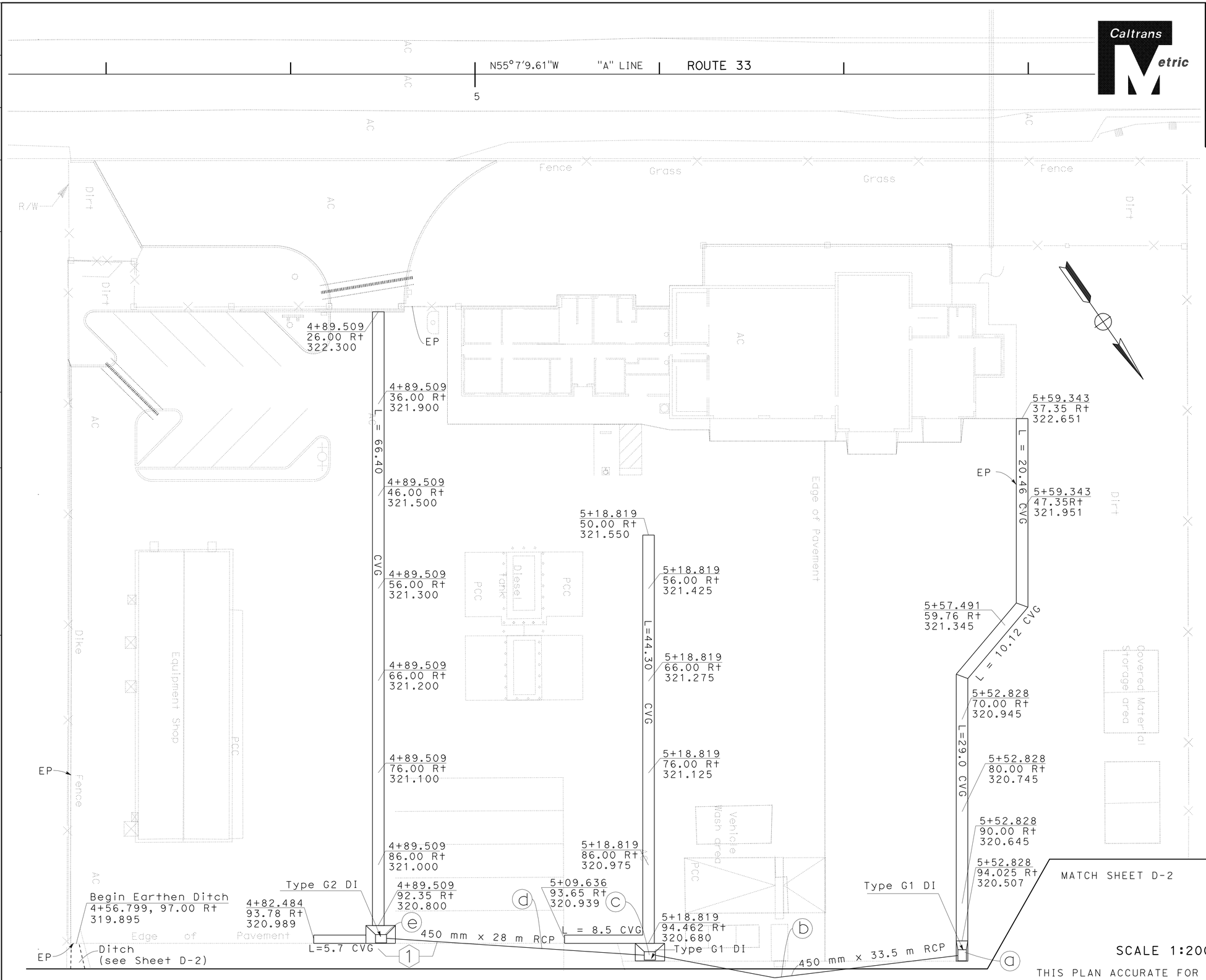

NOTES:

1. CONCRETE VALLEY GUTTER (SEE DRAINAGE DETAILS).
2. ALL ELEVATIONS ARE FLOW LINES UNLESS OTHERWISE INDICATED.
3. SEE CONSTRUCTION DETAILS FOR AC PAVEMENT ELEVATIONS.

LEGEND

(X) : DRAINAGE SYSTEM No.

(a) : DRAINAGE UNIT No.

: RSP

ABBREVIATIONS

CVG - CONCRETE VALLEY GUTTER
RSP - ROCK SLOPE PROTECTION

ALL DIMENSIONS ARE IN METERS UNLESS OTHERWISE SHOWN

DRAINAGE PLAN D-1

SCALE 1:200

THIS PLAN ACCURATE FOR DRAINAGE WORK ONLY

STATE OF CALIFORNIA - DEPARTMENT OF TRANSPORTATION
Caltrans PROJECT DEVELOPMENT

FUNCTIONAL SUPERVISOR DAVID SANGHA
CALCULATED-DESIGNED BY LARRY. CAO
CHECKED BY ANTON KISMETIAN
REVISED BY
DATE REVISED

LAST REVISION 02-04-09
DATE PLOTTED => 23-MAR-2010
TIME PLOTTED => 09:41

Dist	COUNTY	LOCATION CODE	KILOMETER POST TOTAL PROJECT	SHEET No.	TOTAL SHEETS
06	Ker	5722		12	178

Caltrans Metric

REGISTERED CIVIL ENGINEER 02-04-09 DATE

3-8-10
PLANS APPROVAL DATE

REGISTERED PROFESSIONAL ENGINEER ANTON A. KISMETIAN No. 64466 Exp. 06/30/09 CIVIL STATE OF CALIFORNIA

THE STATE OF CALIFORNIA OR ITS OFFICERS OR AGENTS SHALL NOT BE RESPONSIBLE FOR THE ACCURACY OR COMPLETENESS OF ELECTRONIC COPIES OF THIS PLAN SHEET.

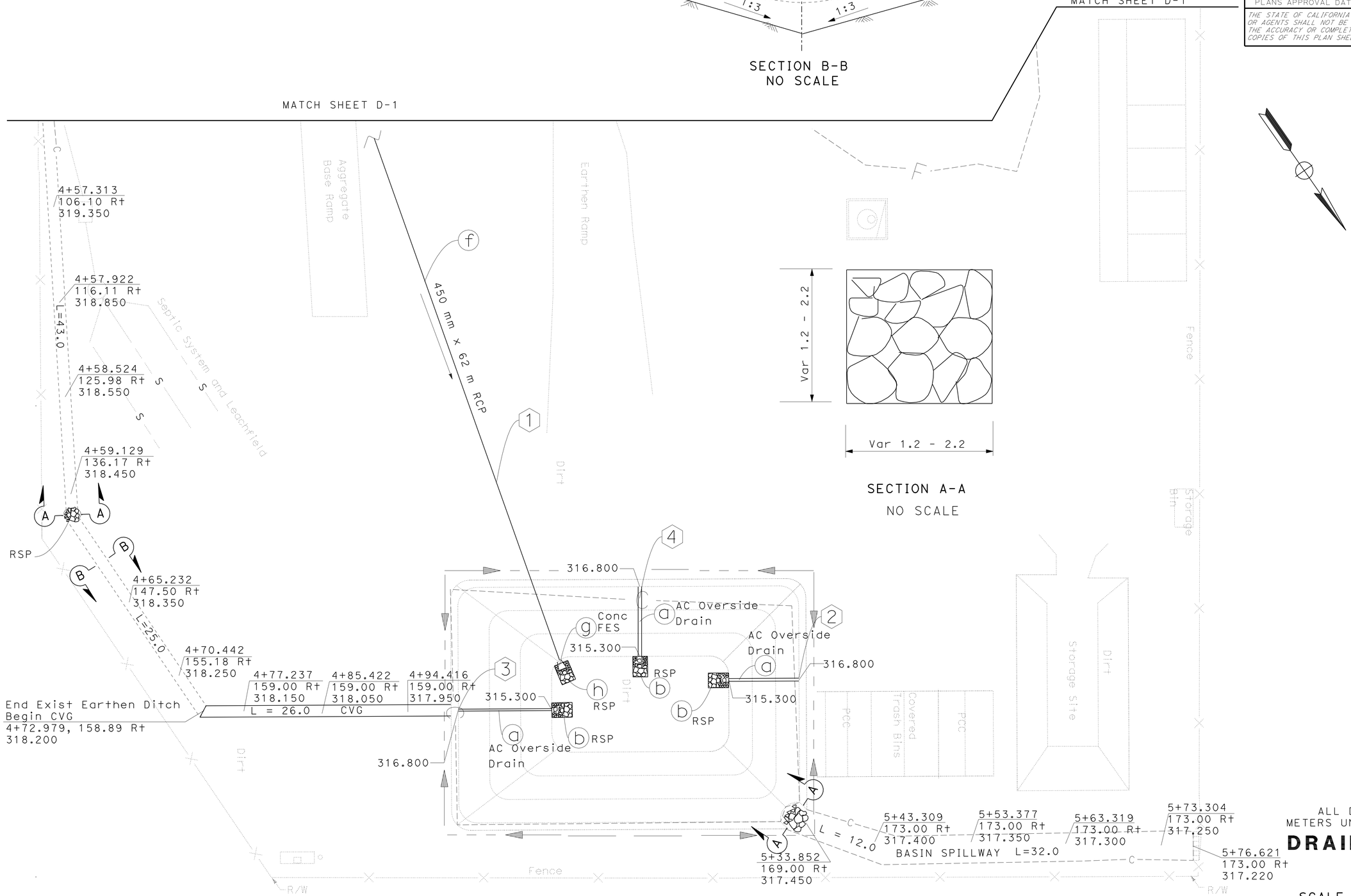

ALL DIMENSIONS ARE IN METERS UNLESS OTHERWISE SHOWN

DRAINAGE PLAN D-2

SCALE 1:200

THIS PLAN ACCURATE FOR DRAINAGE WORK ONLY

STATE OF CALIFORNIA - DEPARTMENT OF TRANSPORTATION
Caltrans PROJECT DEVELOPMENT

FUNCTIONAL SUPERVISOR DAVID SANGHA
CALCULATED-DESIGNED BY LARRY. CAO
CHECKED BY ANTON KISMETIAN
REVISED BY
DATE REVISED

LAST REVISION 02-04-09 DATE PLOTTED => 23-MAR-2010 TIME PLOTTED => 05:41

BORDER LAST REVISED 3/1/2007
RELATIVE BORDER SCALE IS IN MILLIMETERS 0 20 40 60 80
USERNAME => trmikesl
DGN FILE => 6483401a002.dgn
CU 06257
EA 483401

Dist	COUNTY	LOCATION CODE	KILOMETER POST TOTAL PROJECT	SHEET No.	TOTAL SHEETS
06	Ker	5722		13	178

REGISTERED CIVIL ENGINEER 02-04-09 DATE

3-8-10
PLANS APPROVAL DATE

REGISTERED PROFESSIONAL ENGINEER ANTON A. KISMETIAN No. 64466 Exp. 06/30/09 CIVIL STATE OF CALIFORNIA

THE STATE OF CALIFORNIA OR ITS OFFICERS OR AGENTS SHALL NOT BE RESPONSIBLE FOR THE ACCURACY OR COMPLETENESS OF ELECTRONIC COPIES OF THIS PLAN SHEET.

Caltrans Metric

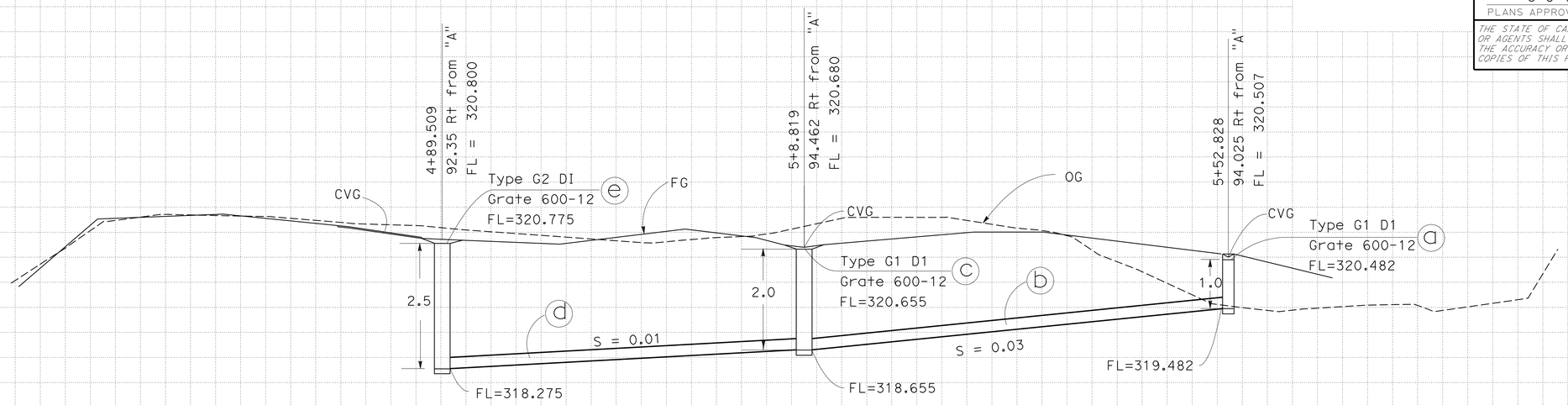

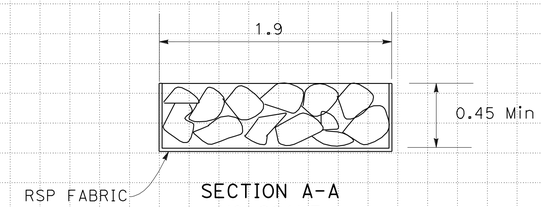

SECTION A-A
NO SCALE

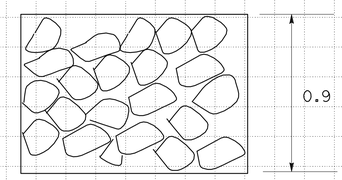

PLAN VIEW
NO SCALE

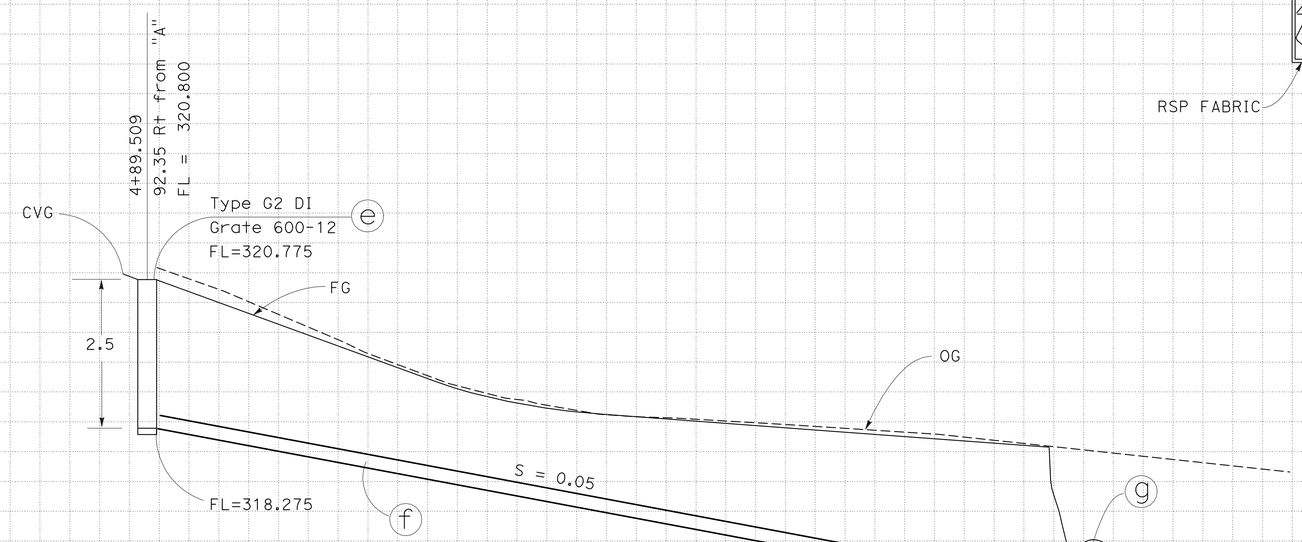

ALL DIMENSIONS ARE IN METERS UNLESS OTHERWISE SHOWN

DRAINAGE SYSTEM No. 1

DRAINAGE PROFILES

SCALE 1:200

DP-1

Station		
m^3	Exc	
	Emb	

STATE OF CALIFORNIA - DEPARTMENT OF TRANSPORTATION
Caltrans PROJECT DEVELOPMENT

FUNCTIONAL SUPERVISOR DAVID SANGHA
CALCULATED-DESIGNED BY LARRY. CAO
CHECKED BY ANTON KISMETIAN
REVISED BY
DATE REVISED

LAST REVISION 02-04-09
DATE PLOTTED => 23-MAR-2010
TIME PLOTTED => 0541

Dist	COUNTY	LOCATION CODE	KILOMETER POST TOTAL PROJECT	SHEET No.	TOTAL SHEETS
06	Ker	5722		14	178

REGISTERED CIVIL ENGINEER 02-04-09 DATE

3-8-10
PLANS APPROVAL DATE

REGISTERED PROFESSIONAL ENGINEER ANTON A. KISMETIAN No. 64466 Exp. 06/30/09 CIVIL STATE OF CALIFORNIA

THE STATE OF CALIFORNIA OR ITS OFFICERS OR AGENTS SHALL NOT BE RESPONSIBLE FOR THE ACCURACY OR COMPLETENESS OF ELECTRONIC COPIES OF THIS PLAN SHEET.

Caltrans Metric

NOTES:

1. Cross section of Overside Drain may be semicircular, vee or trapezoidal.

ABBREVIATIONS

CVG - CONCRETE VALLEY GUTTER

RSP - ROCK SLOPE PROTECTION

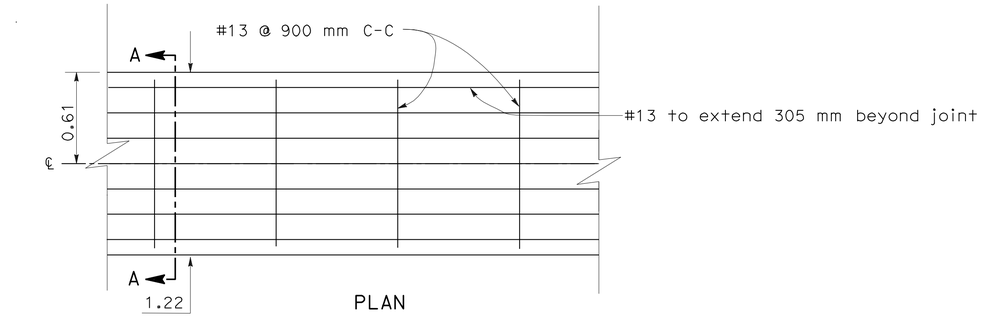

PLAN

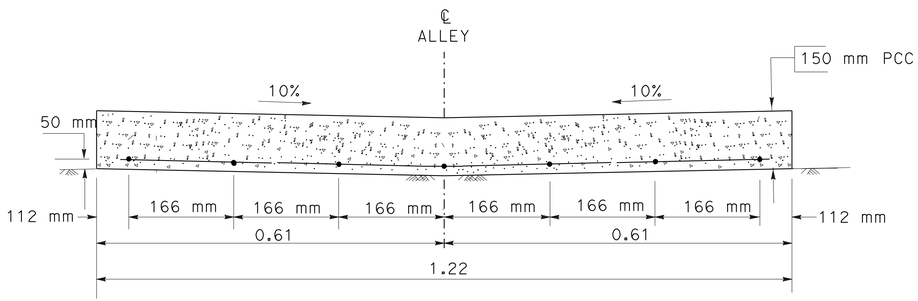

CONCRETE VALLEY GUTTER

SECTION A-A

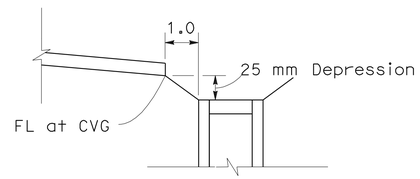

INLET DEPRESSION

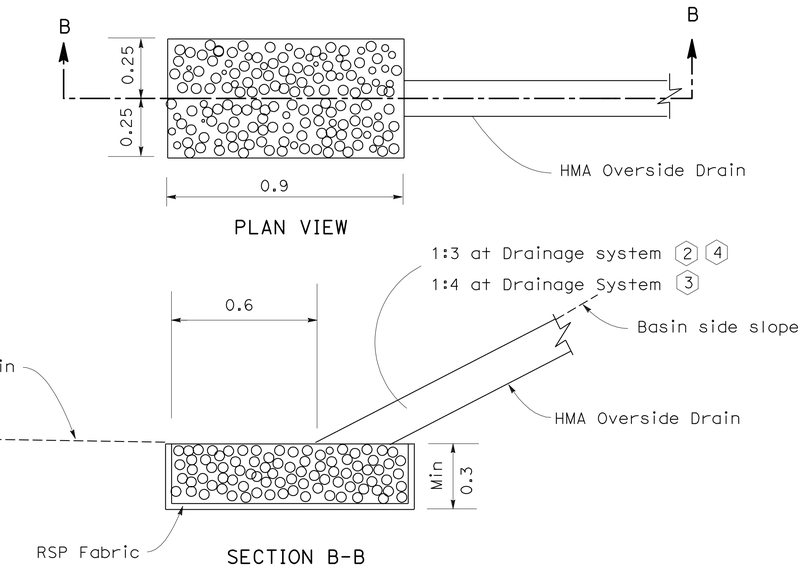

ROCK SLOPE PROTECTION

FOR DRAINAGE SYSTEM 2 3 4

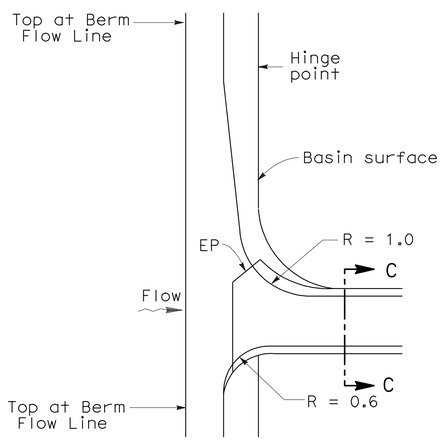

PLAN

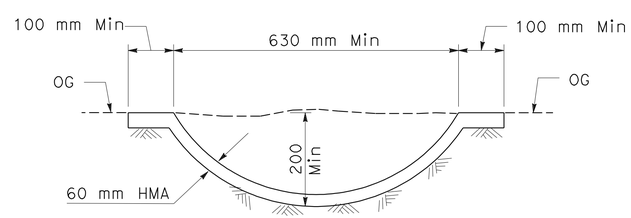

SECTION C-C

ASPHALT CONCRETE OVERSIDE DRAIN

FOR DRAINAGE SYSTEM 2 3 4

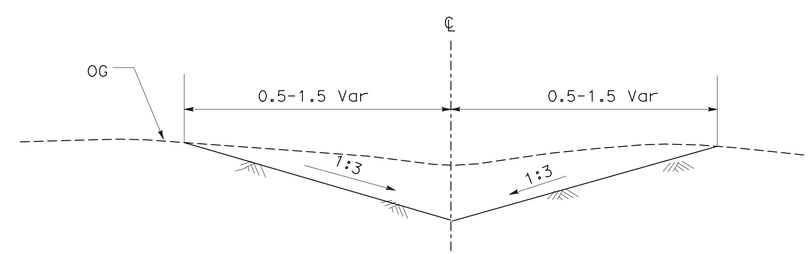

BASIN SPILLWAY CROSS SECTION

ALL DIMENSIONS ARE IN METERS UNLESS OTHERWISE SHOWN

DRAINAGE DETAILS

DD-1

NO SCALE

STATE OF CALIFORNIA - DEPARTMENT OF TRANSPORTATION
Caltrans PROJECT DEVELOPMENT

FUNCTIONAL SUPERVISOR DAVID SANGHA

CALCULATED-DESIGNED BY LARRY. CAO
CHECKED BY ANTON KISMETIAN

REVISED BY | DATE REVISED

LAST REVISION 02-04-09 | DATE PLOTTED => 23-MAR-2010 | TIME PLOTTED => 0541

Dist	COUNTY	LOCATION CODE	KILOMETER POST TOTAL PROJECT	SHEET No.	TOTAL SHEETS
06	Ker	5722		15	178

REGISTERED CIVIL ENGINEER 02-04-09 DATE

3-8-10
PLANS APPROVAL DATE

REGISTERED PROFESSIONAL ENGINEER ANTON A. KISMETIAN No. 64466 Exp. 06/30/09 CIVIL STATE OF CALIFORNIA

THE STATE OF CALIFORNIA OR ITS OFFICERS OR AGENTS SHALL NOT BE RESPONSIBLE FOR THE ACCURACY OR COMPLETENESS OF ELECTRONIC COPIES OF THIS PLAN SHEET.

Caltrans Metric

ABBREVIATIONS

RSP - ROCK SLOPE PROTECTION
OSD - OVERSIDE DRAIN
HMA - HOT MIX ASPHALT

DRAINAGE QUANTITIES

DRAINAGE SYSTEM No. ⬡	DRAINAGE UNIT No. ○	DRAINAGE INLET: MINOR CONCRETE (MINOR STRUCTURE)	DRAINAGE INLET: MISCELLANEOUS IRON AND STEEL	DRAINAGE INLET: (N) HEIGHT "H"	ROCK SLOPE PROTECTION: FACING, METHOD B	ROCK SLOPE PROTECTION: FABRIC	HMA OSD: HMA (Misc. AREA)	(*) HMA (TYPE A)	450 mm CONCRETE FES	450 mm REINFORCED CONCRETE PIPE	DESCRIPTION	STATION	DRAINAGE PLAN OR LAYOUT SHEET No.	DRAINAGE SYSTEM No. ⬡	DRAINAGE UNIT No. ○
		m^3	kg	m	m^3	m^2	m^2	TONNE	EA	m					
1	a	0.7	148	1.0							G1 D1 W/ 600-12 Frame and Grate	96.105 m Rt "A" 5+53.064	D-1	1	a
	b									33.5	450 mm x 33.5 m RCP		D-1	1	b
	c	1.3	148	2.0							G1 D1 W/ 600-12 Frame and Grate	96.030 m Rt "A" 5+18.433	D-1	1	c
	d									28.0	450 mm x 28 m RCP		D-1	1	d
	e	1.6	148	2.5							G2 D1 W/ 600-12 Frame and Grate	94.326 m Rt "A" 4+89.175	D-1	1	e
	f									62.0	450 mm x 62 m RCP		D-2	1	f
	g								1		Conc Flared End Section	153.625 m Rt "A" 5+9.550	D-2	1	g
	h				1.1	4.5					RSP and Fabric		D-2	1	h
2	a						8	1.2			AC Overside Drain	155.122 m Rt "A" 5+27.227	D-2	2	a
	b				0.4	1.3					RSP and Fabric		D-2		b
3	a						10	1.6			AC Overside Drain	158.215 m Rt "A" 5+8.682	D-2	3	a
	b				0.4	1.3					RSP and Fabric		D-2		b
4	a						8	1.2			AC Overside Drain	153.159 m Rt "A" 5+18.086	D-2	4	a
	b				0.4	1.3					RSP and Fabric		D-2		b
					3.8						Misc Area				
TOTAL		3.6	444		6.1	8.4	26	4.0	1	123.5					

(N) NOT A SEPARATE PAY ITEM, FOR INFORMATION ONLY.

* Quantity included on Sheet Q-1

ALL DIMENSIONS ARE IN METERS UNLESS OTHERWISE SHOWN

DRAINAGE QUANTITIES
DQ-1

REVISED BY | DATE REVISED

LARRY. CAO | ANTON KISMETIAN
CALCULATED-DESIGNED BY | CHECKED BY

FUNCTIONAL SUPERVISOR
DAVID SANGHA

STATE OF CALIFORNIA - DEPARTMENT OF TRANSPORTATION
Caltrans PROJECT DEVELOPMENT

LAST REVISION 02-04-09 | DATE PLOTTED => 23-MAR-2010 | TIME PLOTTED => 05:41

Dist	COUNTY	LOCATION CODE	KILOMETER POST TOTAL PROJECT	SHEET No.	TOTAL SHEETS
06	Ker	5722		16	178

REGISTERED CIVIL ENGINEER 02-04-09 DATE

3-8-10
PLANS APPROVAL DATE

REGISTERED PROFESSIONAL ENGINEER ANTON A. KISMETIAN No. 64466 Exp. 06/30/09 CIVIL STATE OF CALIFORNIA

THE STATE OF CALIFORNIA OR ITS OFFICERS OR AGENTS SHALL NOT BE RESPONSIBLE FOR THE ACCURACY OR COMPLETENESS OF ELECTRONIC COPIES OF THIS PLAN SHEET.

Caltrans Metric

NOTES:

1. All utility depths are from ground surface to top of pipe.
2. See Mechanical Sheets M1-1 and M1-2.

LEGEND

● - Telephone Pole

ABBREVIATIONS

WKWD - West Kern Water District
PG&E - Pacific Gas and Electric Company

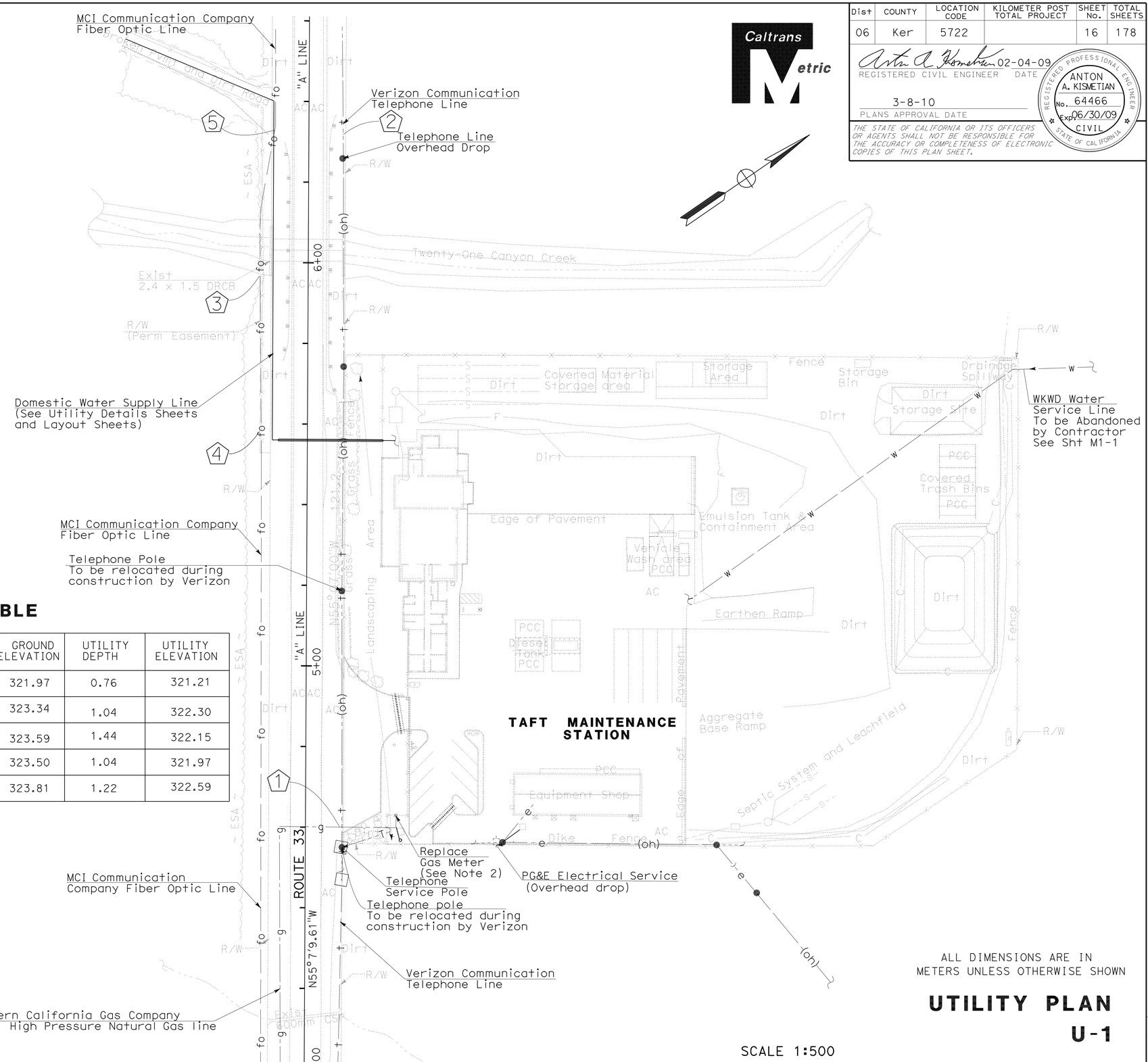

POTHOLE LOCATION TABLE

LOCATION No.	TYPE OF UTILITY	UTILITY COMPANY	STATION & OFFSET	GROUND ELEVATION	UTILITY DEPTH	UTILITY ELEVATION
1	30 mm Plastic Natural Gas	Southern California Gas	"A" 4+60.00, 9.2 Rt	321.97	0.76	321.21
2	30 mm Steel Telephone	Verizon Communication	"A" 6+31.53, 8.0 Rt	323.34	1.04	322.30
3	52 mm Steel Fiber Optic	MCI Communication	"A" 5+96.82, 12.0 Lt	323.59	1.44	322.15
4	52 mm Steel Fiber Optic	MCI Communication	"A" 5+58.24, 12.0 Lt	323.50	1.04	321.97
5	52 mm Steel Fiber Optic	MCI Communication	"A" 6+33.20, 8.5 Lt	323.81	1.22	322.59

THIS PLAN ACCURATE FOR UTILITIES ONLY.

ALL DIMENSIONS ARE IN METERS UNLESS OTHERWISE SHOWN

SCALE 1:500

UTILITY PLAN
U-1

STATE OF CALIFORNIA - DEPARTMENT OF TRANSPORTATION
Caltrans PROJECT DEVELOPMENT
FUNCTIONAL SUPERVISOR DAVID SANGHA
CALCULATED-DESIGNED BY LARRY. CAO
CHECKED BY ANTON KISMETIAN
REVISED BY DATE REVISED

LAST REVISION 02-04-09 DATE PLOTTED => 23-MAR-2010 TIME PLOTTED => 05:41

Dist	COUNTY	LOCATION CODE	KILOMETER POST TOTAL PROJECT	SHEET No.	TOTAL SHEETS
06	Ker	5722		17	178

Caltrans Metric

REGISTERED CIVIL ENGINEER 02-04-09 DATE

3-8-10
PLANS APPROVAL DATE

REGISTERED PROFESSIONAL ENGINEER ANTON A. KISMETIAN No. 64466 Exp. 06/30/09 CIVIL STATE OF CALIFORNIA

THE STATE OF CALIFORNIA OR ITS OFFICERS OR AGENTS SHALL NOT BE RESPONSIBLE FOR THE ACCURACY OR COMPLETENESS OF ELECTRONIC COPIES OF THIS PLAN SHEET.

Notes:
1. Water line minimum backfill depth is 1.22 m except between the connection and backflow assembly and where minor concrete (backfill) is used above box culvert.
2. For the layout of the Water Line See Sheet L-2.
3. The vertical clearance from the bottom of the fiber optic conduit to the top of the water line shall be 0.915 m Min.
4. Water connection, gate valve, and meter are to be provided by and installed by West Kern Water District.
5. Thrust Blocks shall be placed at all bends, see sheet UD-2 for details.

LEGEND

Minor Concrete (Backfill)

(X) Reference Point

ABBREVIATIONS

WKWD - West Kern Water District

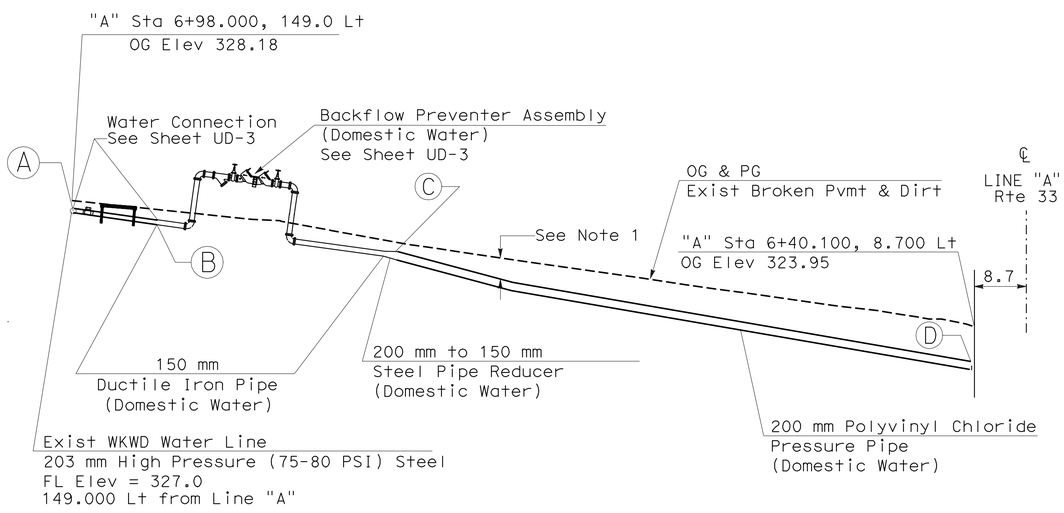

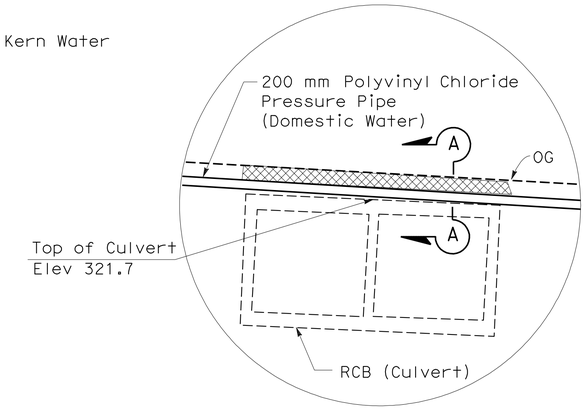

DETAIL A
NO SCALE

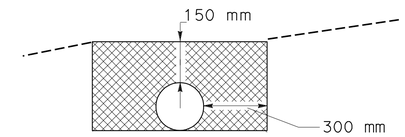

SECTION A-A
NO SCALE

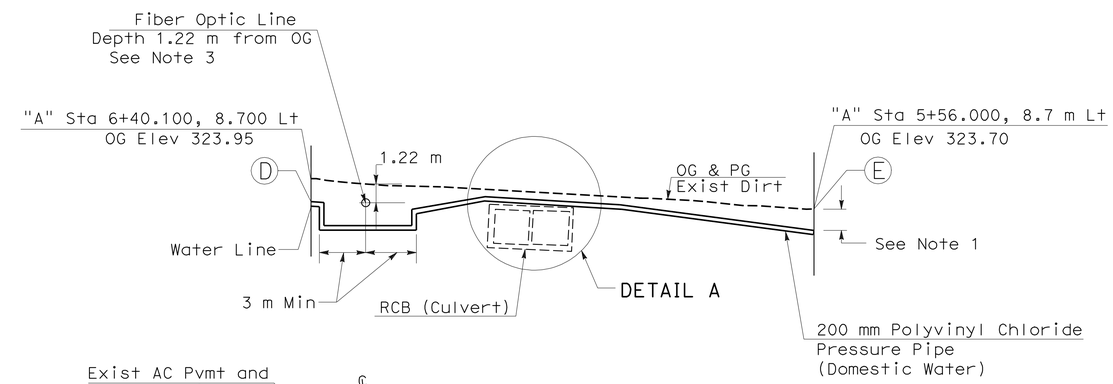

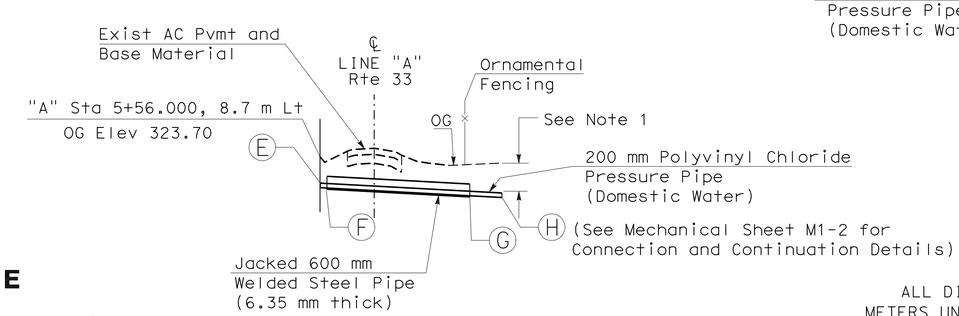

WATER LINE
PROFILE DETAILS

ALL DIMENSIONS ARE IN METERS UNLESS OTHERWISE SHOWN

UTILITY DETAILS
(DOMESTIC WATER)
UD-1

NO SACLE

STATE OF CALIFORNIA - DEPARTMENT OF TRANSPORTATION
Caltrans PROJECT DEVELOPMENT

FUNCTIONAL SUPERVISOR DAVID SANGHA
CALCULATED-DESIGNED BY LARRY. CAO
CHECKED BY ANTON KISMETIAN
REVISED BY DATE REVISED

LAST REVISION 02-04-09
DATE PLOTTED => 23-MAR-2010
TIME PLOTTED => 05:41

Dist	COUNTY	LOCATION CODE	KILOMETER POST TOTAL PROJECT	SHEET No.	TOTAL SHEETS
06	Ker	5722		18	178

REGISTERED CIVIL ENGINEER 02-04-09 DATE

3-8-10
PLANS APPROVAL DATE

REGISTERED PROFESSIONAL ENGINEER ANTON A. KISMETIAN No. 64466 Exp. 06/30/09 CIVIL STATE OF CALIFORNIA

THE STATE OF CALIFORNIA OR ITS OFFICERS OR AGENTS SHALL NOT BE RESPONSIBLE FOR THE ACCURACY OR COMPLETENESS OF ELECTRONIC COPIES OF THIS PLAN SHEET.

Caltrans Metric

NOTES:

1. All thrust blocks shall be poured on undisturbed soil.
2. Thrust blocks shall be placed at all bends and locations determined by the engineer.

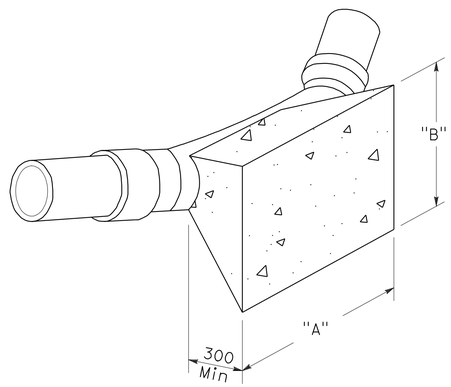

TYPICAL THRUST BLOCK BEND

THRUST BLOCK AREA REQUIRED		
FITTINGS	ALLOWABLE SOIL BEARING VALUE 47.88 kPa	
200 mm LINE	"A"	"B"
11.25° Bend	600 mm	600 mm
22.50° Bend	600 mm	600 mm
45° Bend	900 mm	750 mm
90° Bend	1200 mm	900 mm

THRUST BLOCK DETAILS

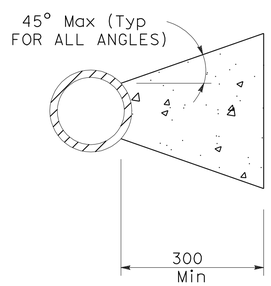

TYPICAL SECTION THRU THRUST BLOCK

ALL DIMENSIONS ARE IN MILLIMETERS UNLESS OTHERWISE SHOWN

UTILITY DETAILS (DOMESTIC WATER)

NO SCALE

UD-2

STATE OF CALIFORNIA - DEPARTMENT OF TRANSPORTATION
Caltrans PROJECT DEVELOPMENT

FUNCTIONAL SUPERVISOR: DAVID SANGHA
CALCULATED-DESIGNED BY: LARRY. CAO
CHECKED BY: ANTON KISMETIAN
REVISED BY / DATE REVISED

LAST REVISION 02-04-09 DATE PLOTTED => 23-MAR-2010 TIME PLOTTED => 08:42

Dist	COUNTY	LOCATION CODE	KILOMETER POST TOTAL PROJECT	SHEET No.	TOTAL SHEETS
06	Ker	5722		19	178

Caltrans Metric

REGISTERED CIVIL ENGINEER 02-04-09 DATE

3-8-10
PLANS APPROVAL DATE

REGISTERED PROFESSIONAL ENGINEER ANTON A. KISMETIAN No. 64466 Exp. 06/30/09 CIVIL STATE OF CALIFORNIA

THE STATE OF CALIFORNIA OR ITS OFFICERS OR AGENTS SHALL NOT BE RESPONSIBLE FOR THE ACCURACY OR COMPLETENESS OF ELECTRONIC COPIES OF THIS PLAN SHEET.

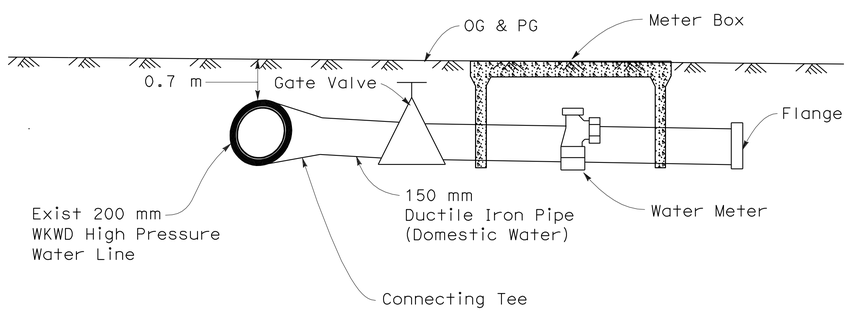

WATER SERVICE CONNECTION & METER

(To be provided and installed by West Kern Water District)

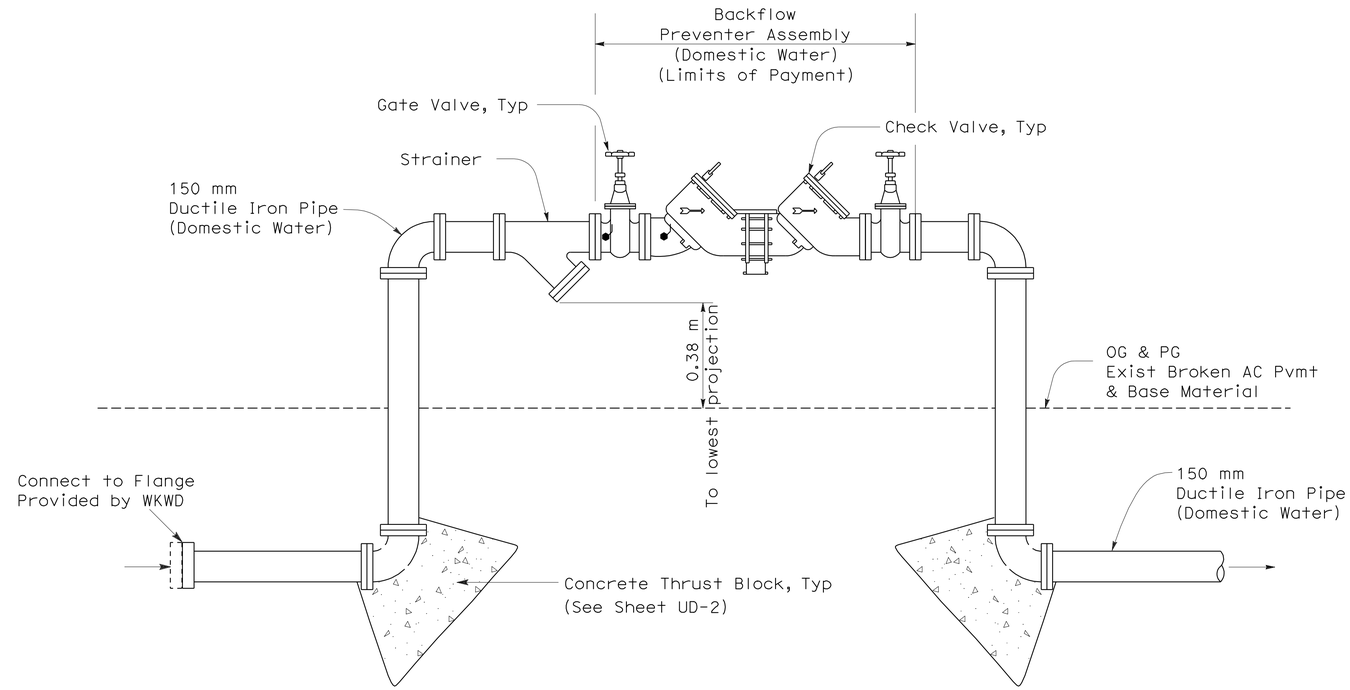

BACKFLOW PREVENTER ASSEMBLY & PIPELINE CONNECTION

ALL DIMENSIONS ARE IN
MILLIMETERS UNLESS OTHERWISE SHOWN

UTILITY DETAILS
(DOMESTIC WATER)
UD-3

NO SCALE

STATE OF CALIFORNIA - DEPARTMENT OF TRANSPORTATION
Caltrans PROJECT DEVELOPMENT

FUNCTIONAL SUPERVISOR DAVID SANGHA
CALCULATED-DESIGNED BY LARRY. CAO
CHECKED BY ANTON KISMETIAN
REVISED BY
DATE REVISED

LAST REVISION 02-04-09
DATE PLOTTED => 23-MAR-2010
TIME PLOTTED => 08:42

Dist	COUNTY	LOCATION CODE	KILOMETER POST TOTAL PROJECT	SHEET No.	TOTAL SHEETS
06	Ker	5722		20	178

Caltrans Metric

REGISTERED CIVIL ENGINEER 02-04-09 DATE

3-8-10
PLANS APPROVAL DATE

REGISTERED PROFESSIONAL ENGINEER ANTON A. KISMETIAN No. 64466 Exp. 06/30/09 CIVIL STATE OF CALIFORNIA

THE STATE OF CALIFORNIA OR ITS OFFICERS OR AGENTS SHALL NOT BE RESPONSIBLE FOR THE ACCURACY OR COMPLETENESS OF ELECTRONIC COPIES OF THIS PLAN SHEET.

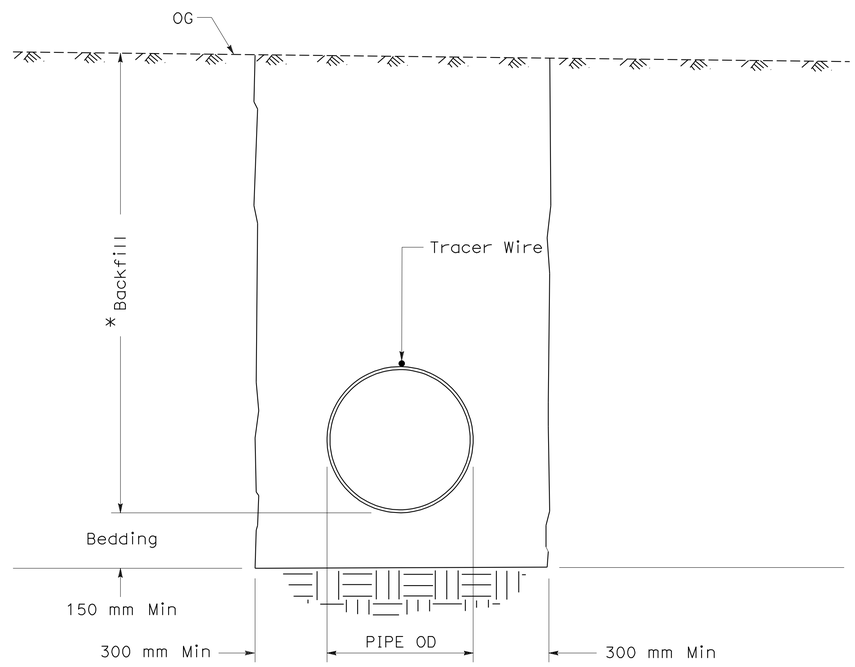

TRENCH DETAIL
*(See Note 1, sheet UD-1)

ALL DIMENSIONS ARE IN METERS UNLESS OTHERWISE SHOWN

NO SCALE

UTILITY DETAILS (DOMESTIC WATER)

UD-4

STATE OF CALIFORNIA - DEPARTMENT OF TRANSPORTATION
Caltrans PROJECT DEVELOPMENT

FUNCTIONAL SUPERVISOR DAVID SANGHA

CALCULATED-DESIGNED BY LARRY. CAO DATE 5-07 REVISED BY
CHECKED BY ANTON KISMETIAN 5-07 DATE REVISED

LAST REVISION 02-04-09 DATE PLOTTED => 23-MAR-2010 TIME PLOTTED => 05:42

Dist	COUNTY	LOCATION CODE	KILOMETER POST TOTAL PROJECT	SHEET No.	TOTAL SHEETS
06	Ker	5722		21	178

Caltrans Metric

REGISTERED CIVIL ENGINEER 02-04-09 DATE

3-8-10
PLANS APPROVAL DATE

REGISTERED PROFESSIONAL ENGINEER ANTON A. KISMETIAN No. 64466 Exp. 06/30/09 CIVIL STATE OF CALIFORNIA

THE STATE OF CALIFORNIA OR ITS OFFICERS OR AGENTS SHALL NOT BE RESPONSIBLE FOR THE ACCURACY OR COMPLETENESS OF ELECTRONIC COPIES OF THIS PLAN SHEET.

DOMESTIC WATER SUPPLY SYSTEM ITEMS

PIPE SEGMENT (SEE SHEET UD-1)	150 mm DUCTILE IRON PIPE (DOMESTIC WATER)	BACKFLOW PREVENTER ASSEMBLY (DOMESTIC WATER)	200 mm POLYVINYL CHLORIDE PRESSURE PIPE (DOMESTIC WATER)	MINOR CONCRETE (BACKFILL)	JACKED 600 mm WELDED STEEL PIPE (6.35 mm THICK)	200 mm to 150 mm STEEL REDUCER
	m	EA	m	m^3	m	EA (N)
Segment B-C	10	1				1
Segment C-D			145.5			
Segment D-E			87.4	4.0		
Segment E-H			30.5		26.2	
TOTAL	10.0	1	263.4	4.0	26.2	

(N) NOT A SEPARATE PAY ITEM, FOR INFORMATION ONLY.

UTILITY QUANTITIES

UQ-1

STATE OF CALIFORNIA - DEPARTMENT OF TRANSPORTATION
Caltrans PROJECT DEVELOPMENT

FUNCTIONAL SUPERVISOR DAVID SANGHA
CALCULATED-DESIGNED BY LARRY. CAO
CHECKED BY ANTON KISMETIAN
REVISED BY
DATE REVISED

LAST REVISION 02-04-09
DATE PLOTTED => 23-MAR-2010
TIME PLOTTED => 05:42

Dist	COUNTY	LOCATION CODE	KILOMETER POST TOTAL PROJECT	SHEET No.	TOTAL SHEETS
06	Ker	5722		22	178

REGISTERED CIVIL ENGINEER 02-04-09 DATE

3-8-10
PLANS APPROVAL DATE

REGISTERED PROFESSIONAL ENGINEER ANTON A. KISMETIAN No. 64466 Exp. 06/30/09 CIVIL STATE OF CALIFORNIA

THE STATE OF CALIFORNIA OR ITS OFFICERS OR AGENTS SHALL NOT BE RESPONSIBLE FOR THE ACCURACY OR COMPLETENESS OF ELECTRONIC COPIES OF THIS PLAN SHEET.

Caltrans Metric

STATIONARY MOUNTED CONSTRUCTION AREA SIGNS

SIGN No.	TYPE	PANEL SIZE mm x mm	SIGN MESSAGE	No. OF POST AND SIZE mm x mm	No. OF SIGNS
A	W20-1	1200 x 1200	ROAD WORK AHEAD	1 - 140 x 140	2
B	G20-2	900 x 450	END WORK AHEAD	1 - 89 x 89	2

NOTE: SIGN LOCATIONS SHOWN ARE APPROXIMATE ONLY. EXACT LOCATIONS TO BE DETERMINED BY THE ENGINEER.

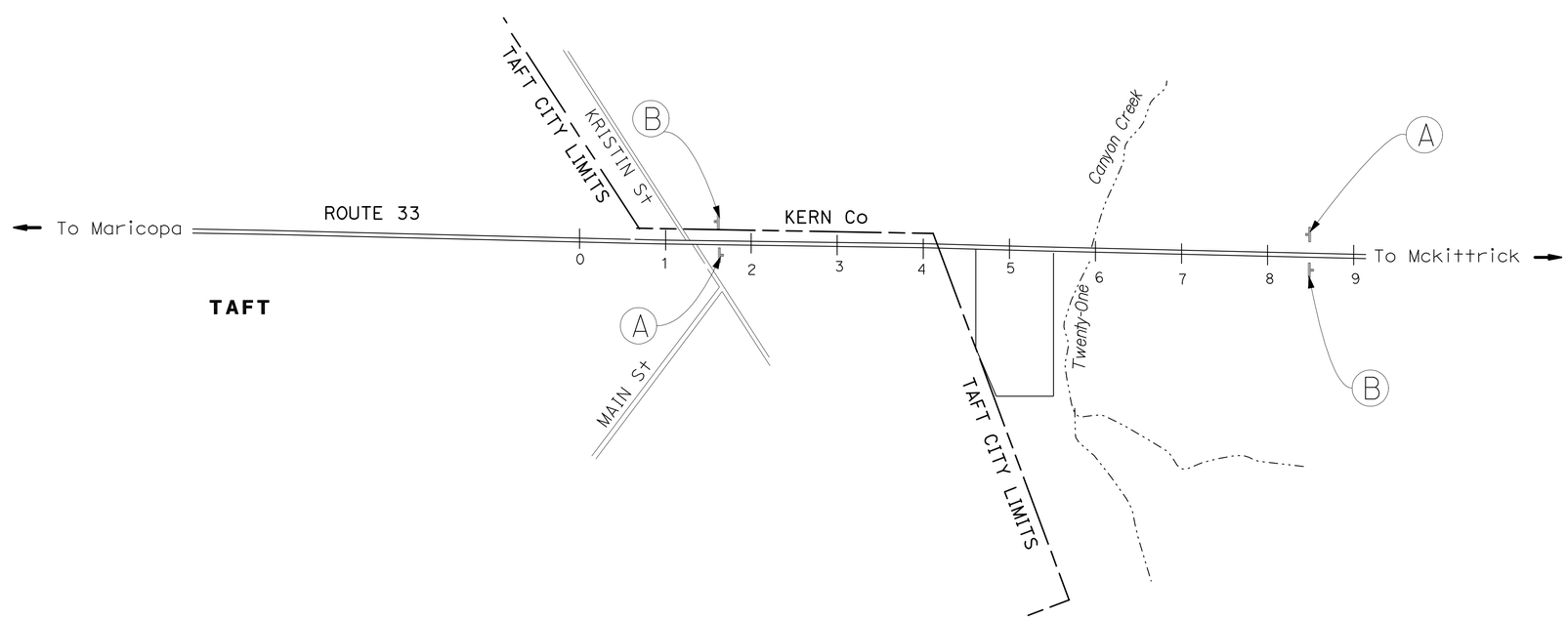

THIS PLAN ACCURATE FOR CONSTRUCTION AREA SIGN ONLY.

NO SCALE

CONSTRUCTION AREA SIGNS
CS-1

STATE OF CALIFORNIA - DEPARTMENT OF TRANSPORTATION
Caltrans PROJECT DEVELOPMENT

FUNCTIONAL SUPERVISOR: DAVID SANGHA
CALCULATED-DESIGNED BY: LARRY. CAO
CHECKED BY: ANTON KISMETIAN
REVISED BY / DATE REVISED

LAST REVISION 02-04-09 | DATE PLOTTED => 23-MAR-2010 | TIME PLOTTED => 05:42

Dist	COUNTY	LOCATION CODE	KILOMETER POST TOTAL PROJECT	SHEET No.	TOTAL SHEETS
06	Ker	5722		23	178

REGISTERED CIVIL ENGINEER 02-04-09 DATE

3-8-10
PLANS APPROVAL DATE

REGISTERED PROFESSIONAL ENGINEER ANTON A. KISMETIAN No. 64466 Exp. 06/30/09 CIVIL STATE OF CALIFORNIA

THE STATE OF CALIFORNIA OR ITS OFFICERS OR AGENTS SHALL NOT BE RESPONSIBLE FOR THE ACCURACY OR COMPLETENESS OF ELECTRONIC COPIES OF THIS PLAN SHEET.

Caltrans Metric

NOTE:

1. SEE SHEET A0-2 FOR DISABLED PARKING STALL AND SIGN DETAILS.

ABBREVIATION

ISA - International Symbol of Accessibility

RELOCATE ROADSIDE SIGN TWO-POST

DESCRIPTION	EA
MAINTENANCE STATION SIGN	1

PAVEMENT DELINEATION

Location	Paint Traffic Stripe (2-Coat) (100 mm)	Paint Pavement Marking (2-Coat)	
	m		m^2
		ISA White Pavement Markings	0.82
100 mm White	172.5	ISA Blue Pavement Markings	1.32
100 mm Blue	25.0	"No Parking" Pavement Marking	0.21
Total	197.5		2.35

THIS SHEET ACCURATE FOR PAVEMENT DELINEATION AND SIGN WORK ONLY

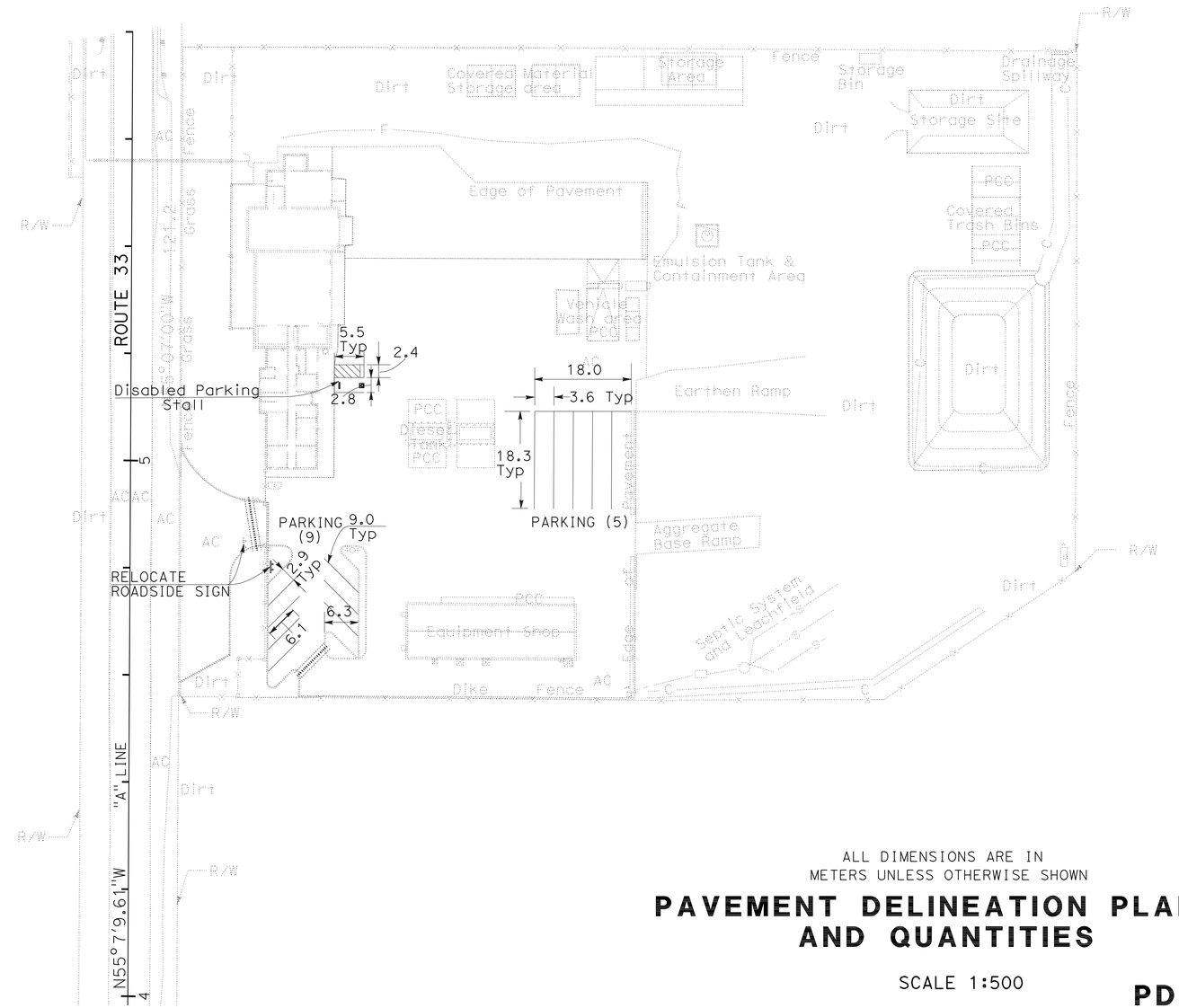

ALL DIMENSIONS ARE IN METERS UNLESS OTHERWISE SHOWN

PAVEMENT DELINEATION PLAN AND QUANTITIES

SCALE 1:500

PD-1

LAST REVISION 02-04-09 DATE PLOTTED => 23-MAR-2010 TIME PLOTTED => 05:42

STATE OF CALIFORNIA - DEPARTMENT OF TRANSPORTATION
Caltrans PROJECT DEVELOPMENT

FUNCTIONAL SUPERVISOR DAVID SANGHA
CALCULATED-DESIGNED BY ANTON KISMETIAN
CHECKED BY LARRY. CAO
REVISED BY
DATE REVISED

Dist	COUNTY	LOCATION CODE	KILOMETER POST TOTAL PROJECT	SHEET No.	TOTAL SHEETS
06	Ker	5722		24	178

REGISTERED CIVIL ENGINEER 02-04-09 DATE

3-8-10
PLANS APPROVAL DATE

REGISTERED PROFESSIONAL ENGINEER ANTON A. KISMETIAN No. 64466 Exp. 06/30/09 CIVIL STATE OF CALIFORNIA

THE STATE OF CALIFORNIA OR ITS OFFICERS OR AGENTS SHALL NOT BE RESPONSIBLE FOR THE ACCURACY OR COMPLETENESS OF ELECTRONIC COPIES OF THIS PLAN SHEET.

Caltrans Metric

TEMPORARY FENCE

	(TYPE ESA)	(TYPE CL-1.8)
"A" Line Sta, Offset	m	
5+53, 11.4 Lt TO 6+78, 108.9 Lt	191.0	
6+43, 9.2 Lt TO 6+84, 108.9 Lt	108.0	
6+90, 134.0 Lt TO 6+95, 148.9 Lt	16.0	
6+92, 127.5 Lt TO 7+00, 148.4 Lt	22.4	
5+50, 19.0 Rt TO 5+77, 19.0 Rt		27.0
4+94, 19.5 Rt TO 4+98, 25.4 Rt		12.0
4+56, 20.2 Rt TO 4+86, 19.5 Rt		30.0
Total	337.4	69.0

EARTHWORK

Location	"A" Line Station		Ditch Excavation	Roadway Excavation	Embankment (N)
	From	To	m^3	m^3	m^3
Southeast Ditch	4+55.43	4+57.00	23		
Northern Ditch	5+35.33	5+77.18	27		
Basin	4+98.14	5+35.33		790	
Paved Maint Sta	4+55.19	5+72.00		1530	1100
Total			50	2320	

EROSION CONTROL

LOCATION	AREA (N)	(Type D)
	HA	m^2
Maint Sta - 4+55.000 TO 5+80.000	0.094	940
TOTAL		940

(N) NOT A SEPARATE PAY ITEM, FOR INFORMATION ONLY.

MINOR CONCRETE (Misc CONSTRUCTION)

LOCATION / DESCRIPTION	(N) Length m	m^3
Paved Area Edge of Pvmt / Conc Curb Type E	58	10
Entrance Area / Conc Curb Type A1-150	156	10
Paved Area / Conc Valley Gutters	185	34
Unpaved Area / Conc Valley Gutter	26	4
TOTAL		58

ROADWAY QUANTITIES

"A" Line Station		Cold Plane AC Pvmt	HMA (Type A)	Class 2 Aggregate Base	Remove Concrete Curb	Remove Asphalt Concrete Dike	Tack Coat * *
From	To	m^2	tonne	m^3	m	m	tonne
4+56	5+73	417	977	731	156	39	20
Place HMA (Misc Area) *			4				
Total		417	981	731	156	39	20

* Quantity from DQ-1

* * Tack Coat Being Used with HMA (Misc Area) is included

200 mm WELDED STEEL PIPE CONDUIT (6.35 mm THICK) (IRRIGATION CROSSOVER)

"A" Line Sta, Offset	m
4+62, 22.7 Rt	8
4+90, 31.7 Rt	10
Total	18

FENCE AND GATE

"A" Line Sta, Offset	Remove Fence	Remove Gate	Reconstruct Chain Link Fence
	m	EA	m
5+77, 18.6 Rt TO 5+77, 28.6 Rt			11
4+94, 20.2 Rt TO 5+77, 18.6 Rt	102		
4+86, 19.5 Rt TO 4+94, 20.2 Rt		1	
4+78, 18.8 Rt TO 4+86, 19.5 Rt	11		
4+56, 9.2 Rt TO 4+63, 22.0 Rt	21		
4+56, 20.2 Rt TO 4+56, 40.2 Rt			19
TOTAL	134	1	30

SUMMARY OF QUANTITIES
Q-1

STATE OF CALIFORNIA - DEPARTMENT OF TRANSPORTATION
Caltrans PROJECT DEVELOPMENT

FUNCTIONAL SUPERVISOR DAVID SANGHA
CALCULATED-DESIGNED BY ANTON KISMETIAN
CHECKED BY DAVID SANGHA
REVISED BY
DATE REVISED

LAST REVISION 02-04-09
DATE PLOTTED => 23-MAR-2010
TIME PLOTTED => 05:42

Dist	COUNTY	LOCATION CODE	KILOMETER POST TOTAL PROJECT	SHEET No.	TOTAL SHEETS
06	Ker	5722		25	178

LICENSED LANDSCAPE ARCHITECT

3-8-10
PLANS APPROVAL DATE

LICENSED LANDSCAPE ARCHITECT DAVID R. MARTIN #3058 Signature 3/31/11 Renewal Date 2/02/09 Date STATE OF CALIFORNIA

THE STATE OF CALIFORNIA OR ITS OFFICERS OR AGENTS SHALL NOT BE RESPONSIBLE FOR THE ACCURACY OR COMPLETENESS OF ELECTRONIC COPIES OF THIS PLAN SHEET.

Caltrans Metric

ABBREVIATIONS

AMEND = AMENDMENT
B & B = BALLED AND BURLAPPED
Dia = DIAMETER
EA = EACH
g = GRAM
kg = KILOGRAM
L = LITER
m = METER
m^2 = SQUARE METER
m^3 = CUBIC METER
ha = HECTARE
Max = MAXIMUM
Min = MINIMUM
mm = MILLIMETER
No. = NUMBER
PLT ESTB = PLANT ESTABLISHMENT
Pvmt = PAVEMENT
R/W = RIGHT OF WAY
SF = STATE FURNISHED
PKT = PACKET(S)
TRVD = TRAVELED

PLANT LIST AND PLANTING SPECIFICATIONS

PLANT GROUP	PLANT No.	SYMBOL	BOTANICAL NAME	COMMON NAME	SIZE	QUANTITY EACH	HOLE SIZE (mm) Dia	HOLE SIZE (mm) DEPTH	BASIN TYPE	IRON SULFATE (1)	SOIL AMEND (m^3) (1)	COMMERCIAL FERTILIZER (1) PLANTING	COMMERCIAL FERTILIZER (1) PLT ESTB	BASIN MULCH (m^3) (1)	STAKING	PLANTING LIMITS MINIMUM DISTANCE (m) FROM TRVD WAY	PVMT	FENCE	WALL	PAVED DITCH	EARTH DITCH	ON CENTER (m)	REMARKS
A	1		ARCTOSTAPHLOS D. 'HOWARD MCMINN'	HOWARD MCMINN MANZANITA	No. 1	27	(8)	(2)	I	—	0.01 m^3	1 PKT	115 g	0.02	—	—	—	—	—	—	—	(4)	SHRUB
	2		CHILOPSIS LINEARIS 'BURGUNDY'	BURGUNDY DESERT WILLOW	No. 1	2	(8)	(2)	I	—	0.01 m^3	1 PKT	115 g	0.02	—	—	—	—	—	—	—	(4)	SHRUB
	3		CISTUS SALVIFOLIUS	SAGELEAF ROCKROSE	No. 1	52	(8)	(2)	I	—	0.01 m^3	1 PKT	115 g	0.02	—	—	—	—	—	—	—	2.0	SHRUB
	4		DIETES BICOLOR	YELLOW FORTNIGHT LILY	No. 1	84	(8)	(2)	I	—	0.01 m^3	1 PKT	115 g	0.02	—	—	—	—	—	—	—	(4)	SHRUB
	5		LEUCOPHYLLUM FRUTESCENS	TEXAS RANGER	No. 1	5	(8)	(2)	I	—	0.01 m^3	1 PKT	115 g	0.02	—	—	—	—	—	—	—	(4)	SHRUB
	6		NERIUM OLEANDER	TURNER'S SHARI-D OLEANDER	No. 1	29	(8)	(2)	I	—	0.01 m^3	1 PKT	115 g	0.02	—	—	—	—	—	—	—	(4)	SHRUB
	7		RHAPIOLEPIS INDICA 'SPRINGTIME'	SPRINGTIME INDIAN HAWTHORNE	No. 1	7	(8)	(2)	I	—	0.01 m^3	1 PKT	115 g	0.02	—	—	—	—	—	—	—	(4)	SHRUB
	8		ROSA MEIDILAND 'MEIPSIDUE'	FIRE MEIDILAND ROSE	No. 1	23	(8)	(2)	I	—	0.01 m^3	1 PKT	115 g	0.02	—	—	—	—	—	—	—	(4)	SHRUB
	9		ROSMARINUS O. 'TUSCAN BLUE'	TUSCAN BLUE ROSEMARY	No. 1	11	(8)	(2)	I	—	0.01 m^3	1 PKT	115 g	0.02	—	—	—	—	—	—	—	(4)	SHRUB
	10		SALVIA LEUCANTHA	MEXICAN BUSH SAGE	No. 1	9	(8)	(2)	I	—	0.01 m^3	1 PKT	115 g	0.02	—	—	—	—	—	—	—	(4)	SHRUB
	11		VITEX AGNUS-CASTUS	CHASTE TREE	No. 1	4	(8)	(2)	I	—	0.01 m^3	1 PKT	115 g	0.02	—	—	—	—	—	—	—	(4)	SHRUB
F	12		DROSANTHEMUM FLORIBUNDUM	ROSEA ICEPLANT	IN FLATS	2820	—	—	—	—	0.05m^3/m^2	7.3 kg/ 100 m^2	7.3 kg/ 100 m^2	—	—	—	0.3	—	—	—	—	0.3	GROUNDCOVER
	13		LANTANA MONTEVIDENSIS	PURPLE LANTANA	IN FLATS	1334	—	—	—	—	0.05m^3/m^2	7.3 kg/ 100 m^2	7.3 kg/ 100 m^2	—	—	—	0.3	—	—	—	—	0.3	GROUNDCOVER
U	14		CELTIS OCCIDENTALIS	COMMON HACKBERRY	No. 15	9	(8)	(2)	I	—	0.06 m^3	9 PKT	230 g	0.04	(7)	12.5	—	—	—	—	—	(4)	TREE
	15		FRAXINUS AMERICANA 'AUTUMN APPLAUSE'	WHITE ASH	No. 15	4	(8)	(2)	I	—	0.06 m^3	9 PKT	230 g	0.04	(7)	12.5	—	—	—	—	—	(4)	TREE
	16		LAGERSTROEMIA INDICA 'PURPLE'	PURPLE CRAPE MYRTLE	No. 15	5	(8)	(2)	I	—	0.06 m^3	9 PKT	230 g	0.04	(7)	12.5	—	—	—	—	—	(4)	TREE

APPLICABLE WHEN CIRCLED:

(1) - QUANTITIES SHOWN ARE "PER PLANT" UNLESS SHOWN AS m^2 APPLICATION RATES.
(2) - SUFFICIENT TO RECEIVE ROOT BALL.
3 - DOES NOT APPLY TO MULCH AREAS.
(4) - AS SHOWN ON PLANS.
5 - UNLESS OTHERWISE SHOWN ON PLANS.
6 - SEE DETAIL.
(7) - SEE STANDARD DETAIL.
(8) - TWICE THE ROOTBALL DIAMETER.
9 - FOR TREES IN PAVED AREAS, SEE ROOT BARRIER AND IRRIGATION DETAIL.

NOTE:

UNDERLINED PORTIONS OF BOTANICAL NAME INDICATE ABBREVIATIONS USED ON PLANTING PLANS.

NO SCALE

PLANT LIST PL-1

REVISED BY | DATE REVISED
DAVID MARTIN | RICHARD COLE
CALCULATED-DESIGNED BY | CHECKED BY
SENIOR LANDSCAPE ARCHITECT ELBERT COX
STATE OF CALIFORNIA - DEPARTMENT OF TRANSPORTATION
Caltrans LANDSCAPE ARCHITECTURE

LAST REVISION 02-02-09 | DATE PLOTTED => 23-MAR-2010 | TIME PLOTTED => 06:10

Dist	COUNTY	LOCATION CODE	KILOMETER POST TOTAL PROJECT	SHEET No.	TOTAL SHEETS
06	Ker	5722		26	178

LICENSED LANDSCAPE ARCHITECT

3-8-10
PLANS APPROVAL DATE

LICENSED LANDSCAPE ARCHITECT DAVID R. MARTIN #3089 SIGNATURE 3/31/11 APPROVAL DATE 2/02/09 DATE STATE OF CALIFORNIA

THE STATE OF CALIFORNIA OR ITS OFFICERS OR AGENTS SHALL NOT BE RESPONSIBLE FOR THE ACCURACY OR COMPLETENESS OF ELECTRONIC COPIES OF THIS PLAN SHEET.

Caltrans Metric

NOTE: FOR COMPLETE RIGHT OF WAY AND ACCURATE ACCESS DATA, SEE RIGHT OF WAY RECORD MAPS AT DISTRICT OFFICE.

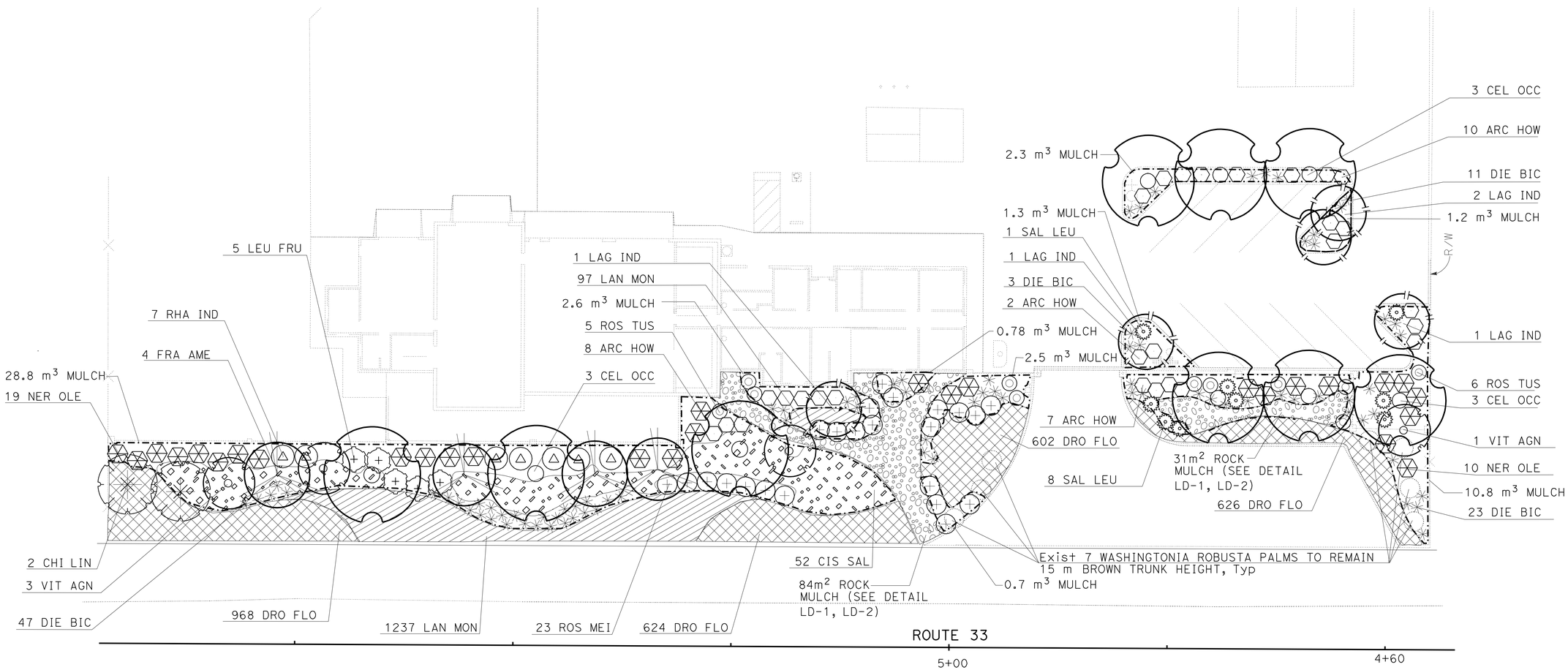

ALL DIMENSIONS ARE IN METERS UNLESS OTHERWISE SHOWN

PLANTING PLAN

SCALE 1:200

PP-1

THIS PLAN ACCURATE FOR PLANTING WORK ONLY

STATE OF CALIFORNIA - DEPARTMENT OF TRANSPORTATION
Caltrans LANDSCAPE ARCHITECTURE

SENIOR LANDSCAPE ARCHITECT: ELBERT COX

CALCULATED-DESIGNED BY: DAVID MARTIN
CHECKED BY: RICHARD COLE

REVISED BY
DATE REVISED

LAST REVISION 02-02-09
DATE PLOTTED => 23-MAR-2010
TIME PLOTTED => 06:10

Dist	COUNTY	LOCATION CODE	KILOMETER POST TOTAL PROJECT	SHEET No.	TOTAL SHEETS
06	Ker	5722		27	178

LICENSED LANDSCAPE ARCHITECT

3-8-10
PLANS APPROVAL DATE

LICENSED LANDSCAPE ARCHITECT DAVID R. MARTIN #3089 STATE OF CALIFORNIA
3/31/11 Renewal Date
2/02/09 Date

THE STATE OF CALIFORNIA OR ITS OFFICERS OR AGENTS SHALL NOT BE RESPONSIBLE FOR THE ACCURACY OR COMPLETENESS OF ELECTRONIC COPIES OF THIS PLAN SHEET.

Caltrans Metric

NOTE: FOR COMPLETE RIGHT OF WAY AND ACCURATE ACCESS DATA, SEE RIGHT OF WAY RECORD MAPS AT DISTRICT OFFICE.

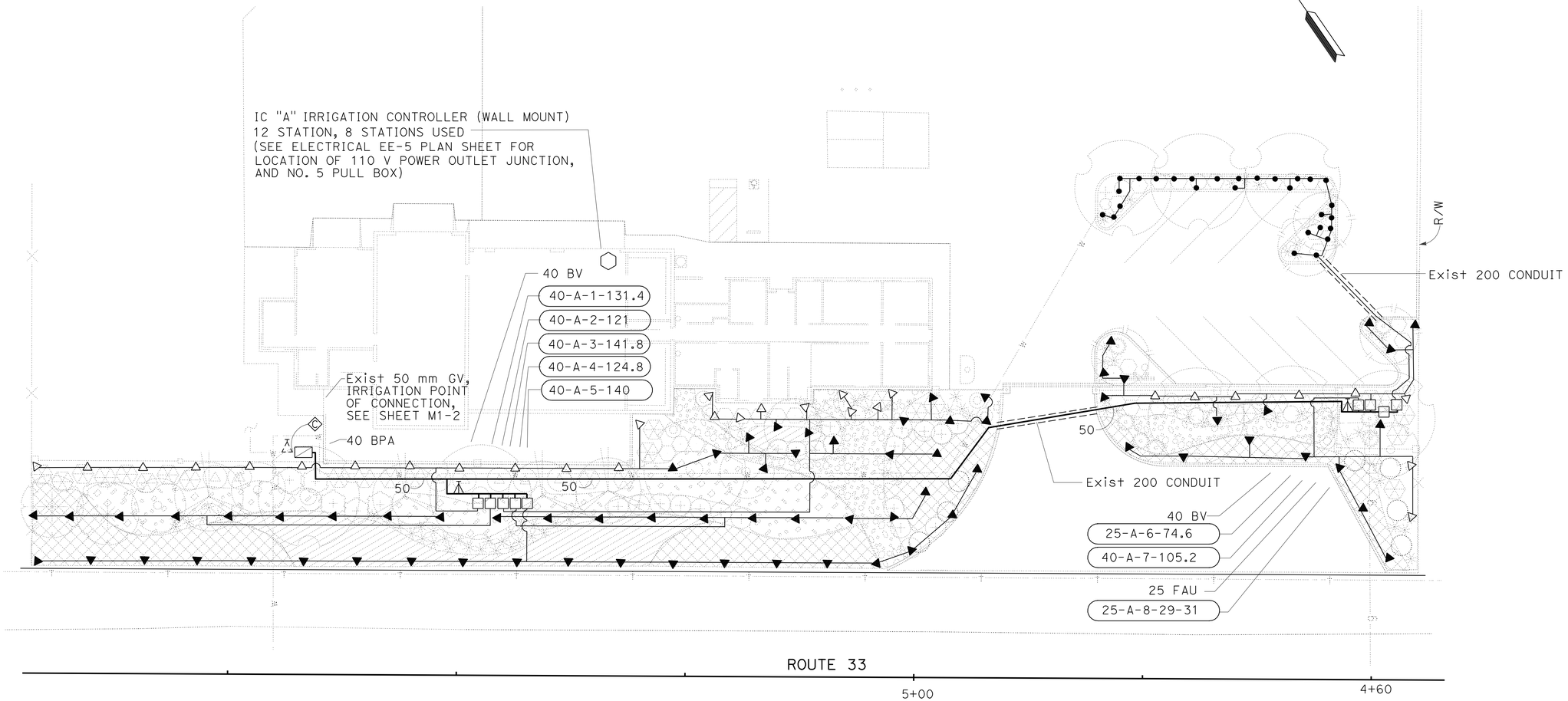

IRRIGATION PLAN

SCALE 1:200

IP-1

THIS PLAN ACCURATE FOR IRRIGATION WORK ONLY

ALL IRRIGATION EQUIPMENT SIZES ARE SHOWN IN MILLIMETERS (DIAMETER NOMINAL) UNLESS OTHERWISE NOTED

STATE OF CALIFORNIA - DEPARTMENT OF TRANSPORTATION
Caltrans LANDSCAPE ARCHITECTURE

SENIOR LANDSCAPE ARCHITECT: ELBERT COX

CALCULATED-DESIGNED BY: DAVID MARTIN
CHECKED BY: RICHARD COLE

REVISED BY
DATE REVISED

LAST REVISION 02-02-09
DATE PLOTTED => 23-MAR-2010
TIME PLOTTED => 05:43

Dist	COUNTY	LOCATION CODE	KILOMETER POST TOTAL PROJECT	SHEET No.	TOTAL SHEETS
06	Ker	5722		28	178

LICENSED LANDSCAPE ARCHITECT

3-8-10
PLANS APPROVAL DATE

LICENSED LANDSCAPE ARCHITECT DAVID R. MARTIN #5059 SIGNATURE 3/31/11 REVISED DATE 2/02/09 DATE STATE OF CALIFORNIA

THE STATE OF CALIFORNIA OR ITS OFFICERS OR AGENTS SHALL NOT BE RESPONSIBLE FOR THE ACCURACY OR COMPLETENESS OF ELECTRONIC COPIES OF THIS PLAN SHEET.

Caltrans Metric

SPRINKLER SCHEDULE

SYMBOL	TYPE	DESCRIPTION	SPRAY PATTERN	OPERATING PRESSURE (KILOPASCAL)(kPa)	PRESSURE COMPENSATING	PLUS / MINUS 5% ② DISCHARGE: LITERS PER SECOND L/s	LITERS PER MINUTE L/min	LITERS PER HOUR L/h	RADIUS (IN METERS)(m)	WIDTH x LENGTH (IN METERS)(m)	MATERIAL	NOZZLE SIZE IN MILLIMETERS (mm)	INLET CONNECTION (NPT) (DN IN MILLIMETERS)(mm)	③ POSITIVE-LOCKING ADJ ARC STOP	BACKSPLASH PREVENTER	DIFFUSER PIN	DISTANCE CONTROL FLAP	ADJ DISCHARGE	RISER: TYPE	RISER MATERIAL: PLASTIC	RISER MATERIAL: GALVANIZED	RISER: SIZE (IPS) (IN MILLIMETERS)(mm)	RISER: HEIGHT (IN MILLIMETERS)(mm)	RISER: FLOW SHUTOFF DEVICE	⑤ SWING JOINT (TYPE)	RISER SUPPORT	SPRINKLER PROTECTOR (TYPE)	REMARKS
△	B-1	SPRAY	F	207	X	—	13.8	—	4.6	—	PL	—	15	—	—	—	—	X	I	X	—	15	300	—	1	—	—	② ⑦
△	B-1	SPRAY	Q/H	207	X	—	3.2/7.2	—	4.6	—	PL	—	15	—	—	—	—	X	I	X	—	15	300	—	1	—	—	② ⑦
▲	B-2	SPRAY	F	207	X	—	13.8	—	4.6	—	PL	—	15	—	—	—	—	X	I	X	—	15	50	—	1	—	—	② ⑦ 150 mm POP-UP
▲	B-2	SPRAY	Q/H	207	X	—	3.2/7.2	—	4.6	—	PL	—	15	—	—	—	—	X	I	X	—	15	50	—	1	—	—	② ⑦ 150 mm POP-UP
●	C-3	SPRAY	Q	207	X	—	0.95	—	1.5	—	PL	—	15	—	—	—	—	X	VII	X	—	15	100	—	1	—	—	②

APPLICABLE WHEN CIRCLED BELOW:

X IN BOX DENOTES REQUIREMENT

1 - See Special Provisions.
② - If a pressure compensating device is specified, the discharge and radii shown reflect its use.
3 - Arc Stop shall be fitted with a nut and bolt.
4 - Vinyl-coated cast iron housing.
⑤ - Required adjacent to shoulders, curbs, sidewalks, and dikes.
6 - Unless otherwise shown on plans.
⑦ - Matched precipitation rate nozzles.

ABBREVIATIONS

ADJ — adjustable
B/B — brass/bronze
B/B/PL — brass/bronze/plastic
B/PL — brass/plastic
CST — center strip
DN — diameter nominal
EST — end strip
F — full circle
F/P — full/part circle
H — half circle
IPS — iron pipe size
kPa — kilopascal
L/h — liters per hour
L/min — liters per minute
L/s — liters per second
m — meters
mm — millimeters
NPT — national pipe thread
P — part circle
PL — plastic
Q — quarter circle
SST — side strip
T — third circle
TQ — three quarter circle
TT — two thirds circle

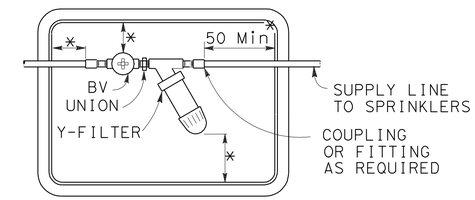

*50 mm Min CLEARANCE

PLAN VIEW

FILTER ASSEMBLY UNIT

LATERAL PIPE SIZING CHART				
No. of Heads by Type				Pipe Size
B-1&2 (QUARTER)	B-1&2 (HALF)	B-1&2 (FULL)	C-3	
≤9	≤4	≤2	≤16	20 mm
≤18	≤8	≤4	≤36	25 mm
≤29	≤13	≤6	≤64	32 mm
≤36	≤16	≤8	≤96	40 mm
≤60	≤27	≤13	≤160	50 mm

ROCK MULCH				
LOCATION	tonne (N) LEACH LINE ROCK	tonne (N) 100 mm COBBLE MULCH	tonne (N) 150 mm COBBLE MULCH	m2 HERBICIDAL FABRIC
4+65 to 4+82	6.5	1.5	1	31
5+00 to 5+22	11.5	2.5	2	84
TOTAL				115

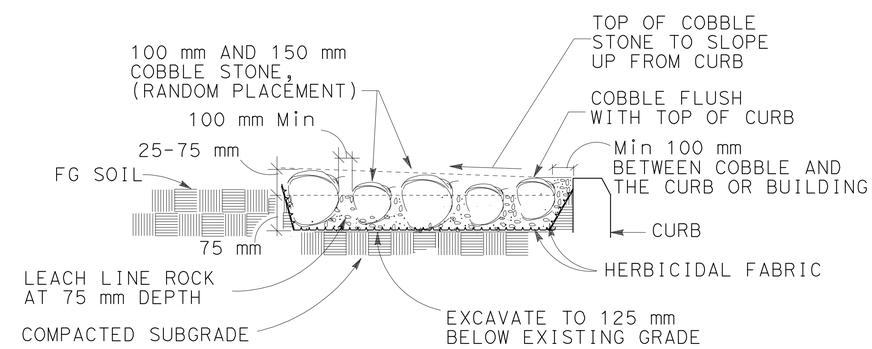

SECTION

ROCK MULCH DETAIL

LANDSCAPE DETAILS
NO SCALE
LD-1

STATE OF CALIFORNIA - DEPARTMENT OF TRANSPORTATION
Caltrans LANDSCAPE ARCHITECTURE
SENIOR LANDSCAPE ARCHITECT ELBERT COX
CALCULATED-DESIGNED BY DAVID MARTIN
CHECKED BY RICHARD COLE
REVISED BY
DATE REVISED

LAST REVISION 02-02-09 DATE PLOTTED => 23-MAR-2010 TIME PLOTTED => 05:43

Dist	COUNTY	LOCATION CODE	KILOMETER POST TOTAL PROJECT	SHEET No.	TOTAL SHEETS
06	Ker	5722		29	178

LICENSED LANDSCAPE ARCHITECT

3-8-10
PLANS APPROVAL DATE

LICENSED LANDSCAPE ARCHITECT
DAVID R. MARTIN #3039
3/31/11
REGISTRATION EXPIRES
2/02/09
DATE
STATE OF CALIFORNIA

THE STATE OF CALIFORNIA OR ITS OFFICERS OR AGENTS SHALL NOT BE RESPONSIBLE FOR THE ACCURACY OR COMPLETENESS OF ELECTRONIC COPIES OF THIS PLAN SHEET.

Caltrans Metric

NOTE: FOR COMPLETE RIGHT OF WAY AND ACCURATE ACCESS DATA, SEE RIGHT OF WAY RECORD MAPS AT DISTRICT OFFICE.

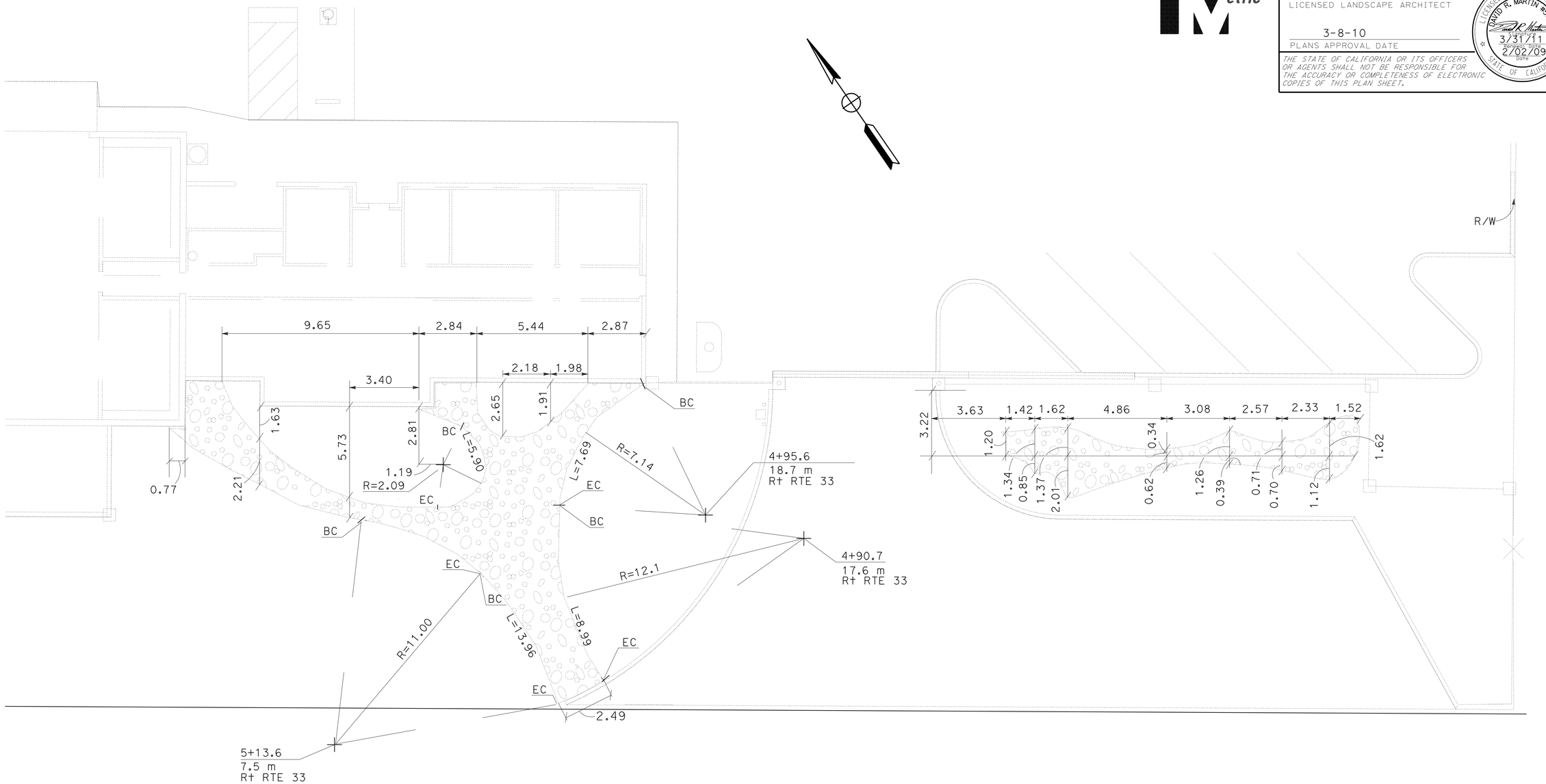

ROCK MULCH LAYOUT DETAIL

THIS PLAN ACCURATE FOR ROCK MULCH LAYOUT WORK ONLY

ALL DIMENSIONS ARE IN METERS UNLESS OTHERWISE SHOWN

LANDSCAPE DETAILS

SCALE 1:100

LD-2

DAVID MARTIN	REVISED BY
RICHARD COLE	DATE REVISED
CALCULATED-DESIGNED BY	
CHECKED BY	
SENIOR LANDSCAPE ARCHITECT	
ELBERT COX	

STATE OF CALIFORNIA - DEPARTMENT OF TRANSPORTATION
Caltrans LANDSCAPE ARCHITECTURE

LAST REVISION 02-02-09
DATE PLOTTED => 23-MAR-2010
TIME PLOTTED => 05:43

DIST	COUNTY	LOCATION CODE	KILOMETER POST TOTAL PROJECT	SHEET No.	TOTAL SHEETS
06	Ker	5722		30	178

Caltrans Metric

REGISTERED CIVIL ENGINEER

November 17, 2006
PLANS APPROVAL DATE

REGISTERED PROFESSIONAL ENGINEER Michael Janzen No. 44788 Exp. 03-31-08 CIVIL STATE OF CALIFORNIA

The State of California or its officers or agents shall not be responsible for the accuracy or completeness of electronic copies of this plan sheet.

To get to the Caltrans web site, go to: http://www.dot.ca.gov

To accompany plans dated 3-8-10

2004 REVISED Std PLAN RSP A87A

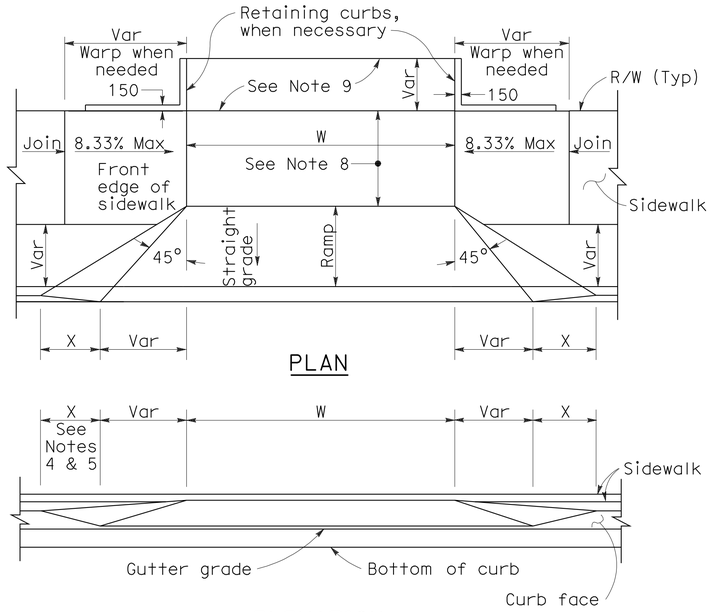

PLAN

ELEVATION

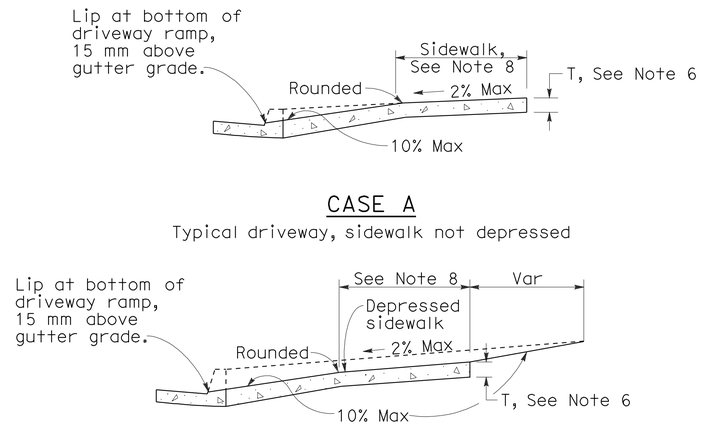

CASE A

Typical driveway, sidewalk not depressed

CASE B

Driveway with depressed sidewalk

SECTIONS

DRIVEWAYS

CURB QUANTITIES

TYPE	CUBIC METERS PER METER
A1-150	0.064
A1-200	0.075
A2-150	0.144
A2-200	0.155
A3-150	0.025
A3-200	0.035
B1-100	0.056
B1-150	0.073
B2-100	0.137
B2-150	0.152
B3-100	0.017
B3-150	0.027
B4	0.142
D-100	0.100
D-150	0.162
E	0.161

TABLE A

CURB TYPE	DIMENSIONS "H1"	"H2"	"W1"	"W2"
A1-150	350	150	190	40
A1-200	400	200	200	50
A2-150	300	150	790	40
A2-200	350	200	800	50
A3-150	150	130	185	35
A3-200	200	180	198	48
B1-100	300	100	200	70
B1-150	350	150	230	100
B2-100	250	100	800	70
B2-150	300	150	830	100
B3-100	100	80	185	55
B3-150	150	130	217	87
D-100	250	100	452	322
D-150	300	150	652	522

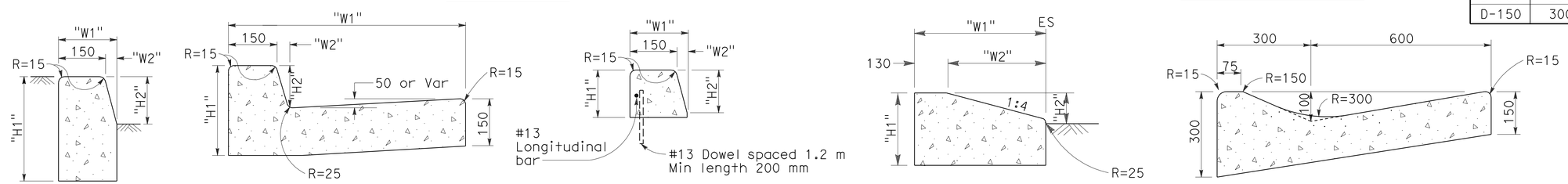

TYPE A1 CURBS
See Table A

TYPE A2 CURBS
See Table A

TYPE A3 CURBS
Superimposed on existing pavement
See Table A

TYPE D CURBS
See Table A

TYPE E CURB

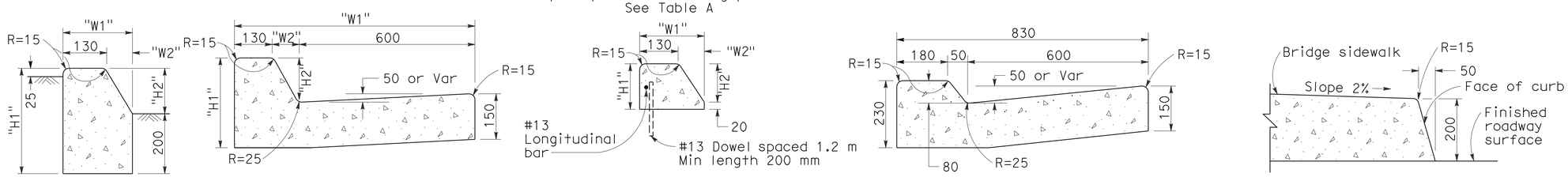

TYPE B1 CURBS
See Table A

TYPE B2 CURBS
See Table A

TYPE B3 CURBS
Superimposed on existing pavement
See Table A

TYPE B4 CURBS

TYPE H CURB
On Bridges

CURBS

NOTES

1. Case A driveway section typically applies.
2. Use Case B driveway section when ramp slopes would exceed 10% in Case A.
3. Use Case B driveway section when sidewalk cross slope would exceed 2% in Case A.
4. X=900 mm except for curb heights over 250 mm where 1:4 slopes shall be used on curb slope.
5. X is a variable when sidewalk is located where wheelchairs may traverse the surface. Slopes shall not exceed 8.33%.
6. Sidewalk and ramp thickness ``T'' at driveway shall be 100 mm for residental and 150 mm for commercial.
7. Difference in slope of the driveway ramp and the slope of a line between the gutter and a point on the roadway 1.5 meters from gutter line shall not exceed 15%. Reduce driveway ramp slope, not gutter slope, where required.
8. Minimum width of clear passageway for sidewalk shall be 1.22 meters.
9. Retaining curbs and acquisition of construction easement may be necessary for narrow sidewalks or curb heights in excess of 150 mm.
10. Across the pedestrian route at curb ramp locations, the gutter pan slope shall not exceed 25 mm of depth for each 600 mm of width.

STATE OF CALIFORNIA
DEPARTMENT OF TRANSPORTATION

CURBS AND DRIVEWAYS

NO SCALE

ALL DIMENSIONS ARE IN MILLIMETERS UNLESS OTHERWISE SHOWN

RSP A87A DATED NOVEMBER 17, 2006 SUPERSEDES STANDARD PLAN A87A DATED JULY 1, 2004-PAGE 115 OF THE STANDARD PLANS BOOK DATED JULY 2004.

REVISED STANDARD PLAN RSP A87A

10-25-06

DIST	COUNTY	LOCATION CODE	KILOMETER POST TOTAL PROJECT	SHEET No.	TOTAL SHEETS
06	Ker	5722		31	178

Caltrans Metric

Raymond Don Tsztoo
REGISTERED CIVIL ENGINEER

January 18, 2008
PLANS APPROVAL DATE

REGISTERED PROFESSIONAL ENGINEER Raymond Don Tsztoo No. C37332 Exp. 6-30-08 CIVIL STATE OF CALIFORNIA

The State of California or its officers or agents shall not be responsible for the accuracy or completeness of electronic copies of this plan sheet.

To get to the Caltrans web site, go to: http://www.dot.ca.gov

To accompany plans dated 3-8-10

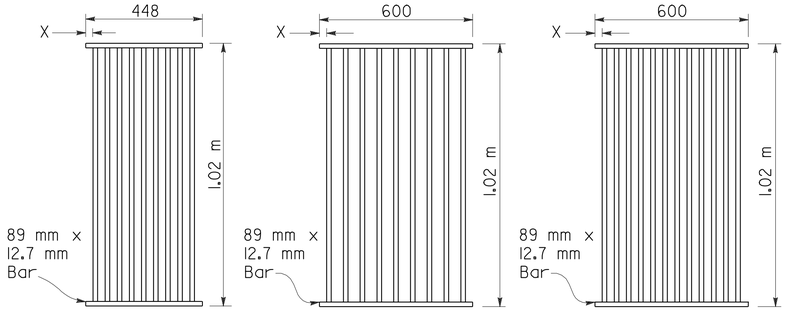

TYPE 450-9

35 mm Clear spacing. Use within the roadbed on highways where bicycles and pedestrians are excluded.

TYPE 600-9

51 mm Clear spacing. Use in locations off the roadbed on all types of highways.

TYPE 600-12

35 mm Clear spacing. Use within the roadbed on highways where bicycles and pedestrians are excluded.

RECTANGULAR GRATE DETAILS

(See table below)

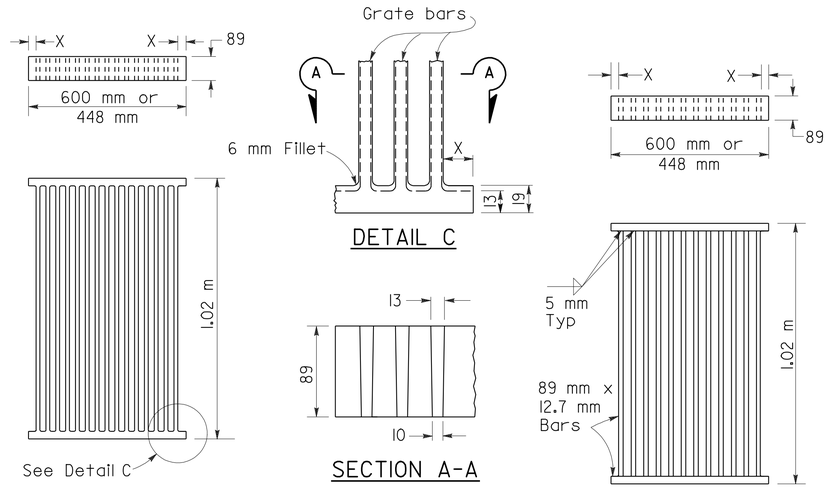

DETAIL C

SECTION A-A

ALTERNATIVE CAST NODULAR IRON GRATE OR CAST STEEL GRATE

ALTERNATIVE WELDED GRATE

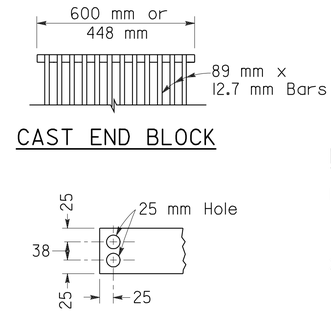

CAST END BLOCK

END OF BAR

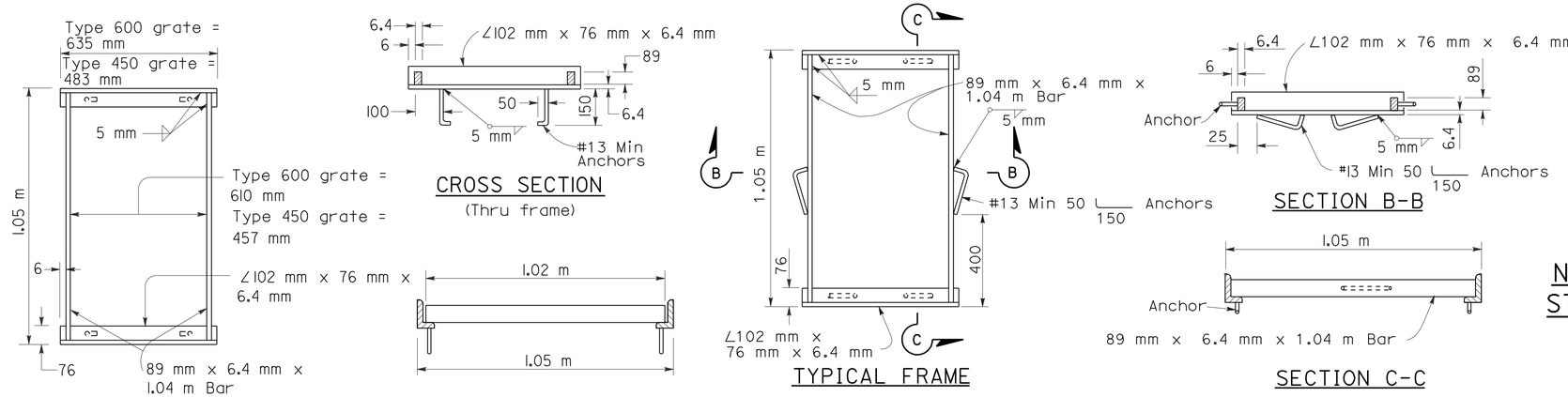

TYPICAL FRAME

CROSS SECTION

(Thru frame)

LONGITUDINAL SECTION

(Thru frame and grate)

TYPICAL FRAME

SECTION B-B

SECTION C-C

ALTERNATIVE ANCHOR FOR RECTANGULAR FRAME

(For details not shown, See Rectangular Frame Details)

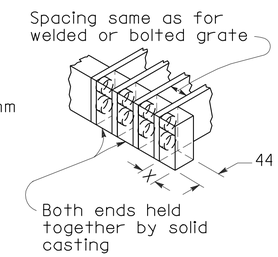

ALTERNATIVE CAST NODULAR IRON OR CAST STEEL END BLOCK GRATE

RECTANGULAR FRAME DETAILS

(For all rectangular grates)

NOTES

1. Grate type numbers refer to approximate width of grate in millimeters and number of bars, respectively.
2. Contractor has the option of using cast nodular iron, cast steel, welded, bolted, or cast end block grate.
3. See Special Provisions for requirements pertaining to galvanizing or asphalt dipping of grates and frames.
4. Rounded top of bars optional on all grates.
5. Pipe inlets with a grate shall be placed so that bars parallel direction of principle surface flow.
6. Full penetration butt welds may be substituted for the fillet welds on all anchors.
7. Standard square, hexagon, round or equivalent headed anchors may be substituted for the right angle hooks on the anchors shown on this plan.
8. Grate and frame weights are based on welded grates (weights of face angles, steps, protection bars, etc. are not included).

GRATE BAR SPACING TABLE

TYPE	No. OF BARS	CLEAR BAR SPACING (mm)	X (mm)
450-9	9	35	27
600-9	9	51	40
600-12	12	35	32

INLET TYPE	COVER TYPE	MASS (kg)
OS	PLATE	79
OL-2.1	PLATE	77
OL-3.0	PLATE	77
OL-4.3	PLATE	77
OL-6.4	PLATE	77
OCP	PLATE	51
OCPI	PLATE	51
OCPI	REDWOOD	19
OMP	PLATE	80
OMPI	PLATE	80

INLET TYPE	GRATE TYPE	No. OF GRATES	MASS (kg)
GDO	600-12	2	288
GOL-2.1	600-12	1	148
GOL-3.0	600-12	1	148
G0,G1,G2,G3,G4(TYPE 600)	600-9	1	119
	600-12	1	148
G4(TYPE 450),G5,G6	450-9	1	113
GT-1	450-9	2	226
GT-2	450-9	2	226
GT-3	600-12	2	296
GT-4	600-12	2	296
TRASH RACK			10

BASIS FOR MISC IRON & STEEL FINAL PAY MASSES FOR DRAINAGE INLETS

(See General Notes, No. 8)

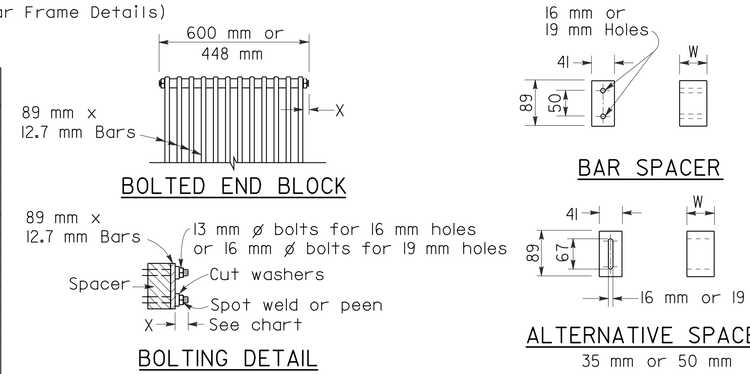

BOLTED END BLOCK

BOLTING DETAIL

BAR SPACER

ALTERNATIVE SPACER

35 mm or 50 mm

ALTERNATIVE BOLTED GRATE

STATE OF CALIFORNIA
DEPARTMENT OF TRANSPORTATION

GRATE DETAILS

NO SCALE

ALL DIMENSIONS ARE IN MILLIMETERS UNLESS OTHERWISE SHOWN

RSP D77A DATED JANUARY 18, 2008 SUPERSEDES STANDARD PLAN D77A DATED JULY 1, 2004 - PAGE 155 OF THE STANDARD PLANS BOOK DATED JULY 2004.

REVISED STANDARD PLAN RSP D77A

2004 REVISED Std PLAN RSP D77A

DIST	COUNTY	LOCATION CODE	KILOMETER POST TOTAL PROJECT	SHEET No.	TOTAL SHEETS
06	Ker	5722		32	178

Caltrans Metric

LICENSED LANDSCAPE ARCHITECT

March 7, 2008
PLANS APPROVAL DATE

LICENSED LANDSCAPE ARCHITECT Gregory A. Balzer 2516 Signature 02-28-2009 Renewal Date 02-21-08 Date STATE OF CALIFORNIA

The State of California or its officers or agents shall not be responsible for the accuracy or completeness of electronic copies of this plan sheet.

To get to the Caltrans web site, go to: http://www.dot.ca.gov

To accompany plans dated 3-8-10

EXISTING	PROPOSED	ITEM DESCRIPTION
		WATER METER (WM)
		BACKFLOW PREVENTER ASSEMBLY (BPA)
		BACKFLOW PREVENTER ASSEMBLY IN ENCLOSURE (BPAE)
		BACKFLOW PREVENTER ENCLOSURE (BPE)
		BOOSTER PUMP (BP)
		TRUCK LOADING STANDPIPE (TLS)
fs	FS	FLOW SENSOR (FS)
		MASTER IRRIGATION CONTROLLER (MIC)
		AUXILIARY IRRIGATION CONTROLLER (AIC)
		IRRIGATION CONTROLLER (IC)/ IRRIGATION CONTROLLER (IC) (BATTERY)
		IRRIGATION CONTROLLER(S) IN CONTROLLER ENCLOSURE CABINET (ICC)
		CONTROL AND NEUTRAL CONDUCTORS (CNC)
scc	SCC	SPRINKLER CONTROL CONDUIT (SCC)
		CONDUIT (COND)
		IRRIGATION SLEEVE
dip	DIP	DUCTILE IRON PIPE (SUPPLY LINE) (MAIN) (DIP)
		GALVANIZED STEEL PIPE (SUPPLY LINE) (MAIN) (GSP)
		GALVANIZED STEEL PIPE (SUPPLY LINE) (LATERAL) (GSP)
		PLASTIC PIPE (PR 200) (SUPPLY LINE) (MAIN)
		PLASTIC PIPE (PR 200) (SUPPLY LINE) (LATERAL)
		PLASTIC PIPE (IRRIGATION LINE)
		REMOTE CONTROL VALVE (RCV) REMOTE CONTROL VALVE (MASTER) (RCVM)
		MANUAL CONTROL VALVE (MCV)
		VALVE ASSEMBLY UNIT (VAU)
		WYE STRAINER (WS)
		FILTER ASSEMBLY UNIT (FAU)
		GATE VALVE (GV)
		BALL VALVE (BV)

EXISTING	PROPOSED	ITEM DESCRIPTION
		QUICK COUPLING VALVE (QCV)
		CAM COUPLING ASSEMBLY (CCA)
		PRESSURE REDUCING VALVE (PRV)
		PRESSURE RELIEF VALVE (PRLV)
		FLOW CONTROL VALVE (FCV)
		COMBINATION AIR RELEASE VALVE (CARV)
		CHECK VALVE (CV)
		FLUSH VALVE (FV)
		NOZZLE LINE W/TURNING UNION
		IRRIGATION SYSTEM
		IRRIGATION SYSTEM TO BE REMOVED
		CHAIN LINK GATE
		QUICK COUPLING VALVE W/SPRINKLER PROTECTOR
3	3	SPRINKLER W/SPRINKLER PROTECTOR
		CONNECT TO EXISTING SYSTEM
		CAP
		CAP EXISTING

VALVE CODE

RCV SIZE (mm)
IRRIGATION CONTROLLER
CONTROLLER STATION
VALVE IN PARALLEL (IF APPLICABLE)
L/min
QUANTITY OF SPRINKLERS (WHEN SHOWN)

* 63.5-A-2b-151.4-60

MCV SIZE (mm)
VALVE NUMBER
L/min
QUANTITY OF TYPE SPRINKLERS (WHEN SHOWN)

* 50.8-3-113.5-50

* VALVE CODES FOR EXISTING VALVES ARE SHOWN IN A DASHED ENCLOSURE.

STATE OF CALIFORNIA
DEPARTMENT OF TRANSPORTATION

PLANTING AND IRRIGATION SYMBOLS

NO SCALE

ALL DIMENSIONS ARE IN MILLIMETERS UNLESS OTHERWISE SHOWN

RSP H2 DATED MARCH 7, 2008 SUPERSEDES STANDARD PLAN H2 DATED JULY 1, 2004 - PAGE 202 OF THE STANDARD PLANS BOOK DATED JULY 2004.

REVISED STANDARD PLAN RSP H2

2004 REVISED Std PLAN RSP H2

2-20-08

DIST	COUNTY	LOCATION CODE	KILOMETER POST TOTAL PROJECT	SHEET No.	TOTAL SHEETS
06	Ker	5722		33	178

Caltrans Metric

Randell D. Hiatt
REGISTERED CIVIL ENGINEER

June 6, 2008
PLANS APPROVAL DATE

REGISTERED PROFESSIONAL ENGINEER
Randell D. Hiatt
No. C50200
Exp. 6-30-09
CIVIL
STATE OF CALIFORNIA

The State of California or its officers or agents shall not be responsible for the accuracy or completeness of electronic copies of this plan sheet.

To get to the Caltrans web site, go to: http://www.dot.ca.gov

To accompany plans dated 3-8-10

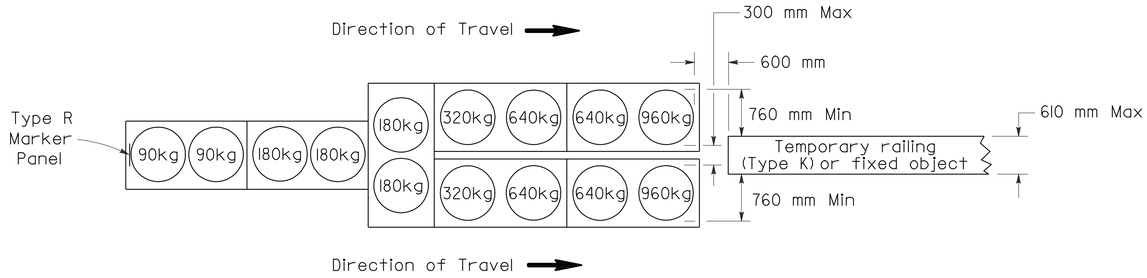

ARRAY 'TU14'

Approach speed 70 km/h or more

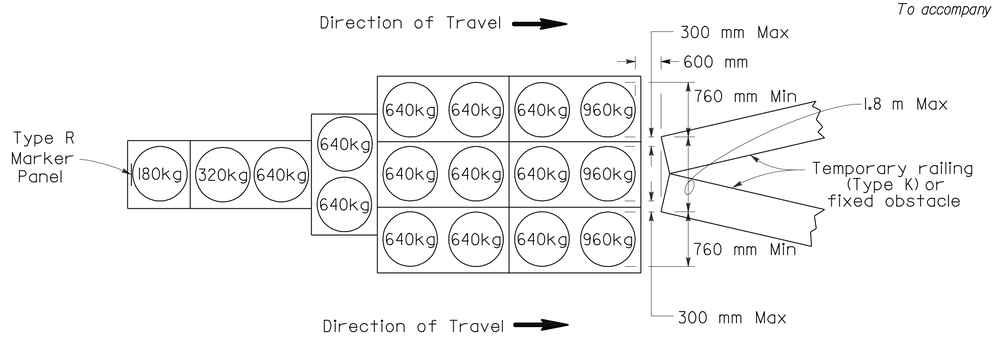

ARRAY 'TU17'

Approach speed less than 70 km/h

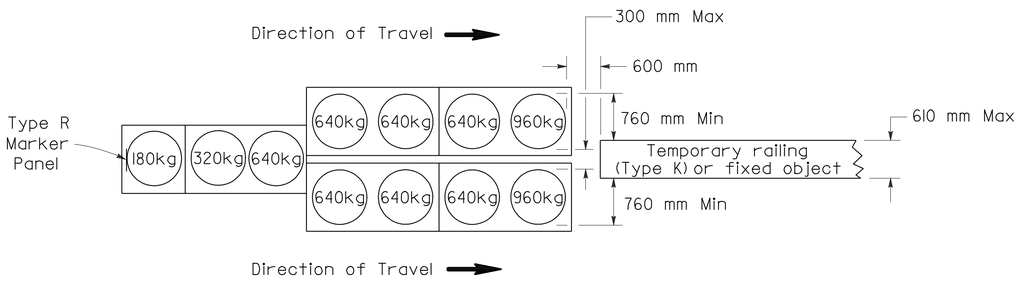

ARRAY 'TU11'

Approach speed less than 70 km/h

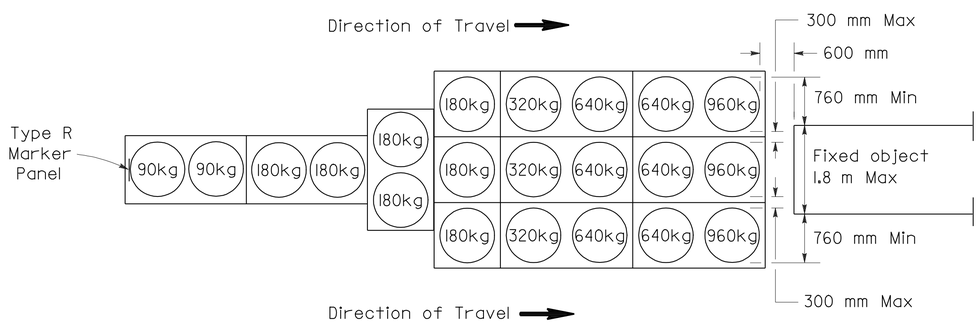

ARRAY 'TU21'

Approach speed 70 km/h or more

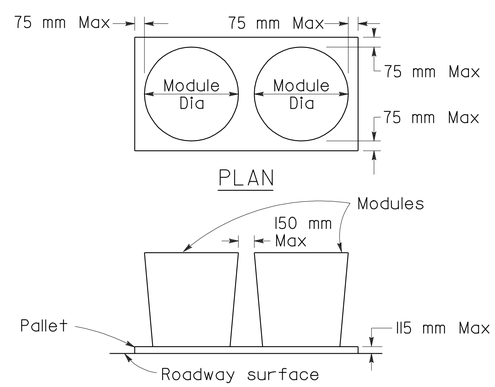

CRASH CUSHION PALLET DETAIL

See Note 7

NOTES

1. (XXX) Indicates sand filled module location and mass of sand in kilograms for each module. Module spacing is based on the greater diameter of the module.
2. All sand masses are nominal.
3. Temporary crash cushion arrays shall not encroach on the traveled way.
4. Place the top of Type R marker panel 25 mm below the module lid.
5. Refer to Standard Plan A73B for marker details.
6. Approach speeds indicated conform to NCHRP 350 Report criteria.
7. Use of Pallets is optional.

STATE OF CALIFORNIA
DEPARTMENT OF TRANSPORTATION

TEMPORARY CRASH CUSHION, SAND FILLED (UNIDIRECTIONAL)

NO SCALE

ALL DIMENSIONS ARE IN MILLIMETERS UNLESS OTHERWISE SHOWN

RSP T1A DATED JUNE 6, 2008 SUPERSEDES STANDARD PLAN T1A
DATED July 1, 2004 - PAGE 211 OF THE STANDARD PLANS BOOK DATED July 2004.

REVISED STANDARD PLAN RSP T1A

2004 REVISED Std PLAN RSP T1A

5-16-08

DIST	COUNTY	LOCATION CODE	KILOMETER POST TOTAL PROJECT	SHEET No.	TOTAL SHEETS
06	Ker	5722		34	178

Caltrans Metric

Randell D. Hiatt
REGISTERED CIVIL ENGINEER

June 6, 2008
PLANS APPROVAL DATE

REGISTERED PROFESSIONAL ENGINEER
Randell D. Hiatt
No. C50200
Exp. 6-30-09
CIVIL
STATE OF CALIFORNIA

The State of California or its officers or agents shall not be responsible for the accuracy or completeness of electronic copies of this plan sheet.

To get to the Caltrans web site, go to: http://www.dot.ca.gov

To accompany plans dated 3-8-10

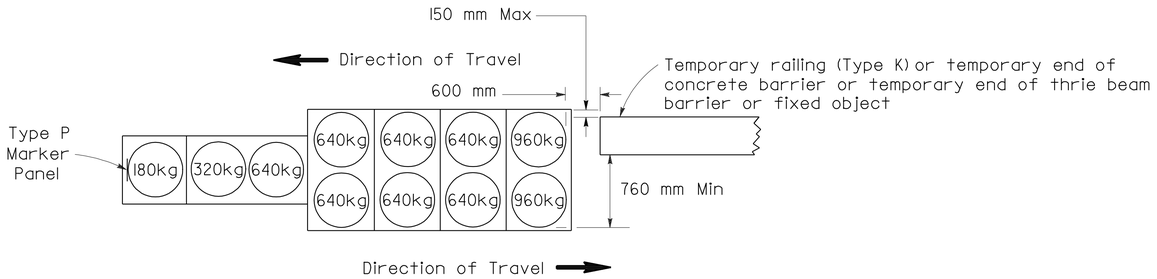

ARRAY 'TBI1'

Approach speed less than 70 km/h

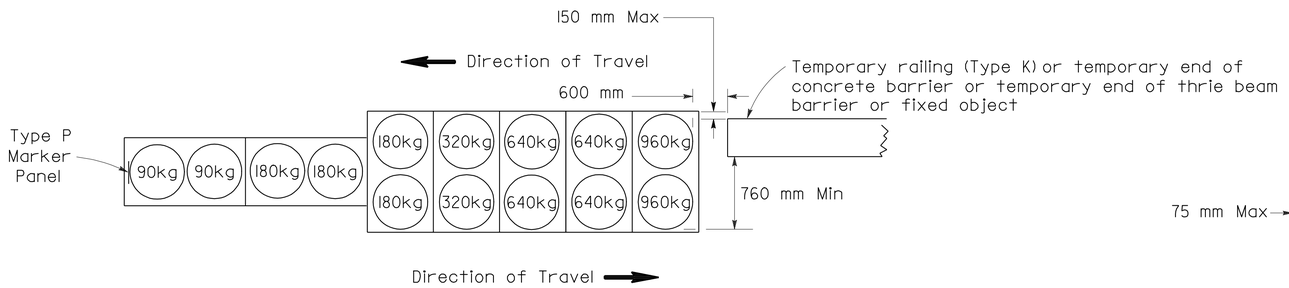

ARRAY 'TBI4'

Approach speed 70 km/h or more

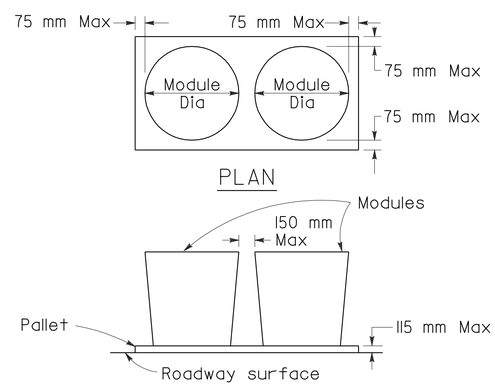

CRASH CUSHION PALLET DETAIL

See Note 7

NOTES

1. (XXX) Indicates sand filled module location and mass of sand in kilograms for each module. Module spacing is based on the greater diameter of the module.
2. All sand masses are nominal.
3. Temporary crash cushion arrays shall not encroach on the traveled way.
4. Place the Type P marker panel so that the bottom of the panel rests upon the pallet.
5. Refer to Standard Plan A73B for marker details.
6. Approach speeds indicated conform to NCHRP 350 Report criteria.
7. Use of Pallets is optional.

STATE OF CALIFORNIA
DEPARTMENT OF TRANSPORTATION

TEMPORARY CRASH CUSHION, SAND FILLED (BIDIRECTIONAL)

NO SCALE

ALL DIMENSIONS ARE IN MILLIMETERS UNLESS OTHERWISE SHOWN

RSP T1B DATED JUNE 6, 2008 SUPERSEDES STANDARD PLAN T1B DATED July 1, 2004 - PAGE 212 OF THE STANDARD PLANS BOOK DATED July 2004.

REVISED STANDARD PLAN RSP T1B

2004 REVISED Std PLAN RSP T1B

5-16-08

DIST	COUNTY	LOCATION CODE	KILOMETER POST TOTAL PROJECT	SHEET No.	TOTAL SHEETS
06	Ker	5722		35	178

Caltrans Metric

Randell D. Hiatt
REGISTERED CIVIL ENGINEER

June 6, 2008
PLANS APPROVAL DATE

REGISTERED PROFESSIONAL ENGINEER
Randell D. Hiatt
No. C50200
Exp. 6-30-09
CIVIL
STATE OF CALIFORNIA

The State of California or its officers or agents shall not be responsible for the accuracy or completeness of electronic copies of this plan sheet.

To get to the Caltrans web site, go to: http://www.dot.ca.gov

To accompany plans dated 3-8-10

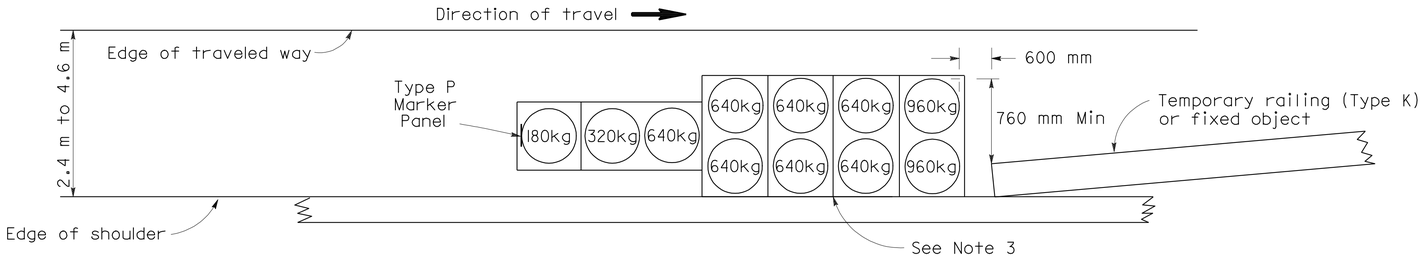

ARRAY 'TSI1'

Approach speed less than 70 km/h
See Note 9

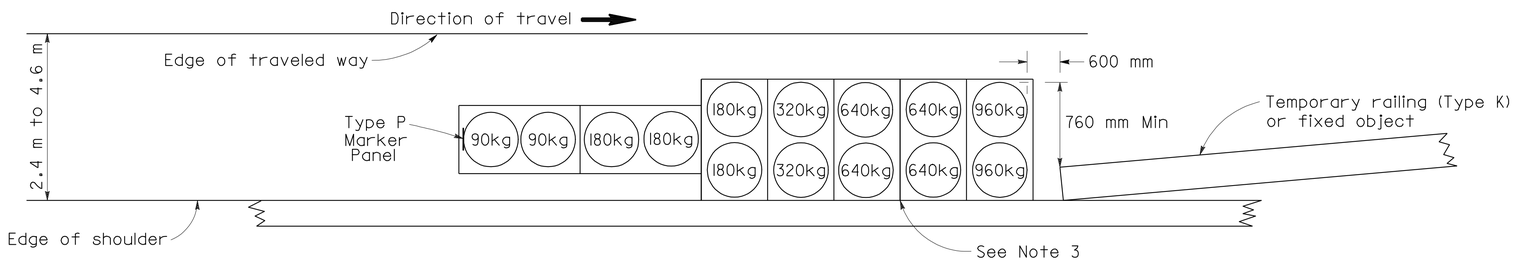

ARRAY 'TSI4'

Approach speed 70 km/h or more
See Note 9

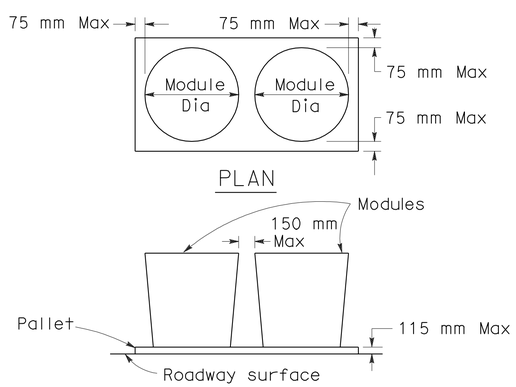

CRASH CUSHION PALLET DETAIL

See Note 11

NOTES

1. (XXX) Indicates sand filled module location and mass of sand in kilograms for each module. Module spacing is based on the greater diameter of the module.
2. All sand masses are nominal.
3. The temporary crash cushion arrays shown on this plan shall be used only in locations where there will be traffic on one side of the temporary crash cushion array.
4. If the fixed object or approach end of the temporary railing is less than 4.60 meters from the edge of traveled way, a temporary crash cushion is required.
5. Temporary crash cushion arrays shall not encroach on the traveled way.
6. Arrays for median shoulders shall conform to details shown on this plan for outside shoulders.
7. Place the Type P marker panel so that the bottom of the panel rest upon the pallet and faces traffic.
8. Refer to Standard Plan A73B for marker details.
9. For shoulder widths less than 2.4 m, appropriate approved crash cushion protection, other than sand filled modules, shall be provided at fixed objects and at approach ends of temporary railing. The specific type of crash cushion shall be as shown on the project plans or as specified in the Special Provisions, or if not shown on the project plans or specified in the Special Provisions, shall be as approved by the Engineer.
10. Approach speeds indicated conform to NCHRP 350 Report criteria.
11. Use of Pallets is optional.

STATE OF CALIFORNIA
DEPARTMENT OF TRANSPORTATION

TEMPORARY CRASH CUSHION, SAND FILLED (SHOULDER INSTALLATIONS)

NO SCALE

ALL DIMENSIONS ARE IN MILLIMETERS UNLESS OTHERWISE SHOWN

RSP T2 DATED JUNE 6, 2008 SUPERSEDES STANDARD PLAN T2
DATED July 1, 2004 - PAGE 213 OF THE STANDARD PLANS BOOK DATED July 2004.

REVISED STANDARD PLAN RSP T2

2004 REVISED Std PLAN RSP T2

5-16-08

DIST	COUNTY	LOCATION CODE	KILOMETER POST TOTAL PROJECT	SHEET No.	TOTAL SHEETS
06	Ker	5722		36	178

Caltrans Metric

REGISTERED CIVIL ENGINEER

April 28, 2005
PLANS APPROVAL DATE

REGISTERED PROFESSIONAL ENGINEER G.W. Edwards No. C36386 Exp. 6-30-06 CIVIL STATE OF CALIFORNIA

The State of California or its officers or agents shall not be responsible for the accuracy or completeness of electronic copies of this plan sheet.

To get to the Caltrans web site, go to: http://www.dot.ca.gov

To accompany plans dated 3-8-10

2004 REVISED Std PLAN RSP T13

NOTES

Unless otherwise specified in the special provisions, all temporary warning signs shall have black legend on orange background.

California code are designated by (CA). Otherwise, Federal codes are shown.

TYPICAL LANE CLOSURE WITH REVERSIBLE CONTROL

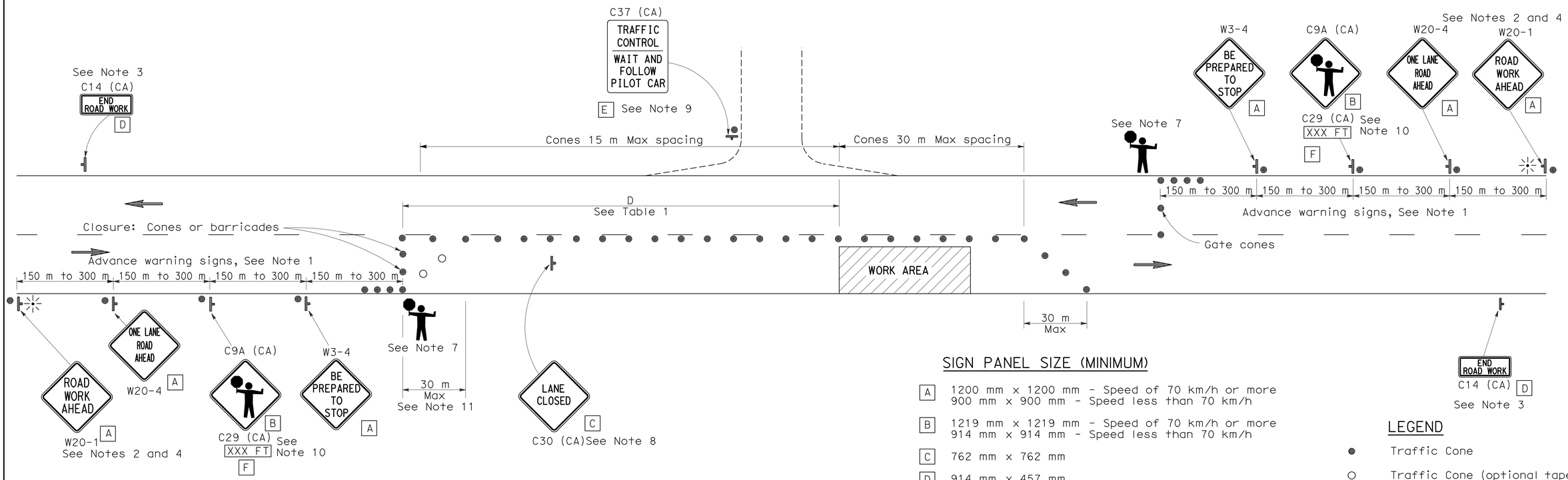

SIGN PANEL SIZE (MINIMUM)

- A — 1200 mm x 1200 mm - Speed of 70 km/h or more; 900 mm x 900 mm - Speed less than 70 km/h
- B — 1219 mm x 1219 mm - Speed of 70 km/h or more; 914 mm x 914 mm - Speed less than 70 km/h
- C — 762 mm x 762 mm
- D — 914 mm x 457 mm
- E — 914 mm x 1067 mm
- F — 914 mm x 229 mm

LEGEND

- Traffic Cone
- Traffic Cone (optional taper)
- Temporary Sign
- Direction of Travel
- Portable Flashing Beacon
- Flagger

NOTES

1. Where approach speeds are low, advance warning signs may be placed at 90 m spacing, and closer in urban areas.
2. Each advance warning sign in each direction of travel shall be equipped with at least two flags for daytime closure. Each flag shall be at least 400 mm x 400 mm in size and shall be orange or fluorescent red-orange in color. Flashing beacons shall be placed at the locations indicated for lane closure during hours of darkness.
3. A C14 (CA) "END ROAD WORK" sign, as appropriate, shall be placed at the end of the lane control unless the end of work area is obvious, or ends within a larger project's limits.
4. If the W20-1 sign would follow within 600 m of a stationary W20-1 or C11 (CA) "ROAD WORK NEXT_____ MILES", use a C16 (CA) sign for the first advance warning sign.
5. All cones used for lane closures during the hours of darkness shall be fitted with retroreflective bands (or sleeves) as specified in the specifications.
6. Portable delineators, placed at one-half the spacing indicated for traffic cones, may be used instead of cones for daytime closures only.
7. Additional advance flaggers may be required. Flagger should stand in a conspicuous place, be visible to approaching traffic as well as approaching vehicles after the first vehicle has stopped. During the hours of darkness, the flagging-station and flagger shall be illuminated and clearly visible to approaching traffic. The illumination footprint of the lighting on the ground shall be at least 6 m in diameter. Place a minimum of four cones at 15 m intervals in advance of flagger station as shown.
8. Place C30 (CA) "LANE CLOSED" sign at 150 to 300 m intervals throughout extended work areas. They are optional if the work area is visible from the flagger station.
9. When a pilot car is used, place a C37 (CA) "TRAFFIC CONTROL-WAIT AND FOLLOW PILOT CAR" sign at all intersections within traffic control area. Signs shall be clean and visible at all times.
10. An optional C29 (CA) sign may be placed below the C9A (CA) sign.
11. Traffic cones or barricades may be placed on the optional taper as shown, barricades shall be Type I, II, or III.

TABLE I

Approach Speed	Minimum D	Downgrade Minimum D *
km/h	m	m
30	60	72
40	60	72
50	60	72
60	90	108
70	90	108
80	150	180
90	150	180
100	150	180
110	170	204

* Use on substained downgrade steeper than -3 percent and longer than 1.6 km.

STATE OF CALIFORNIA
DEPARTMENT OF TRANSPORTATION

TRAFFIC CONTROL SYSTEM FOR LANE CLOSURE ON TWO LANE CONVENTIONAL HIGHWAYS

NO SCALE

ALL DIMENSIONS ARE IN MILLIMETERS UNLESS OTHERWISE SHOWN

RSP T13 DATED APRIL 28, 2005 SUPERSEDES STANDARD PLAN T13 DATED JULY 1, 2004-PAGE 222 OF THE STANDARD PLANS BOOK DATED JULY 2004.

REVISED STANDARD PLAN RSP T13

DIST	COUNTY	LOCATION CODE	KILOMETER POST TOTAL PROJECT	SHEET No.	TOTAL SHEETS
06	Ker	5722		37	178

Caltrans Metric

Jeffery G. McRae
REGISTERED ELECTRICAL ENGINEER

October 5, 2007
PLANS APPROVAL DATE

REGISTERED PROFESSIONAL ENGINEER Jeffery G. McRae No. E14512 Exp. 6-30-08 ELECTRICAL STATE OF CALIFORNIA

The State of California or its officers or agents shall not be responsible for the accuracy or completeness of electronic copies of this plan sheet.

To get to the Caltrans web site, go to: http://www.dot.ca.gov

To accompany plans dated 3-8-10

NOTES - CONTROLLER CABINETS

1. Cabinet dimensions are nominal.
2. Foundations shall be located to provide 600 mm minimum clearance between face of curb and any portion of cabinet.
3. Type G, M, P, R, S and Model 336 cabinets shall be installed with the back toward the nearest lane of traffic.
4. The controller cabinet ground bus shall be bonded to the controller equipment enclosure.
5. In unpaved areas, a raised portland cement concrete pad shall be constructed in front of each controller cabinet. Pad shall be 900 mm x 900 mm x 100 mm for Type G cabinets and shall be 900 mm x 100 mm thick x width of foundation for Types M, P, R, S and Model 336 cabinets.
6. In unpaved areas, the top of foundation for Type G, P, R and S cabinets shall be 150 mm above surrounding grade. Top of foundation for Type M or Model 336 cabinet shall be 460 mm above surrounding grade.
7. In sidewalks and other paved areas, top of foundation for Type G cabinet shall be level with surrounding grade. Top of foundation for Type P, R and S cabinets shall be 90 mm above surrounding grade.
8. The steel pedestal, base plate, bolt circle and foundation for Type G cabinet shall be the same as that shown for a Type 1-C Standard. Pedestal shall be 640 mm - 760 mm in length. Anchor bolts shall be 19 mm ø x 460 mm with a 50 mm - 90° bend. Four bolts required per cabinet.
9. Type G cabinet shall be provided with a slipfitter to permit mounting an 114 mm outside diameter pedestal. Slipfitter shall be bolted to bottom of the cabinet.
10. Type G cabinet shall be provided with 8 screened, raintight holes, 13 mm diameter or larger, in the bottom of the cabinet.
11. A 25 mm drain shall be provided through the foundation of a Type M or Model 336 cabinet. Drain pipe shall be screened.
12. See Table for cabinet and foundation dimensions; "D" = Depth, "H" = Height and "W" = Width.
13. Cabinet shelves shall be adjustable for vertical spacing and shall be removable. Type M, P, R and S cabinets shall be provided with a minimum of two shelves.
14. Anchor bolts for Type M, P, R, S and Model 336 cabinets shall be 19 mm ø x 460 mm with a 50 mm - 90° bend.
15. An approved mastic or caulking compound shall be placed on the foundation prior to placing the cabinet to seal openings between bottom of cabinet and foundation.
16. Controller units, plug-mounted equipment, shelf-mounted equipment and wall-mounted equipment shall be located to permit safe and easy removal or replacement without removing any other piece of equipment.
17. Cabinet fan may be installed at an alternate location near the top of the cabinet when approved by the Engineer.
18. Where telephone interconnect is required, a minimum of 130 mm clear vertical space shall be provided inside the cabinet for the equipment.
19. Telephone interconnect conductors shall be enclosed in a 21C or larger conduit through the foundation. Type 4 metal conduit shall be used to separate telephone and power conductors in cabinets and pedestals.
20. For Model 332, 334 and 336 cabinet details, see "Traffic signal controller equipment specifications".

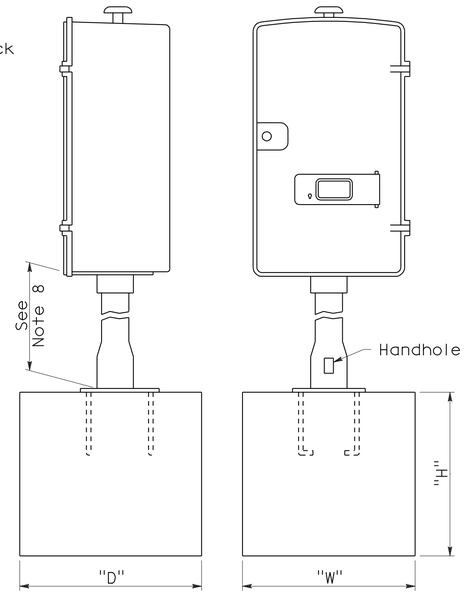

FOUNDATION FOR TYPE G CABINET

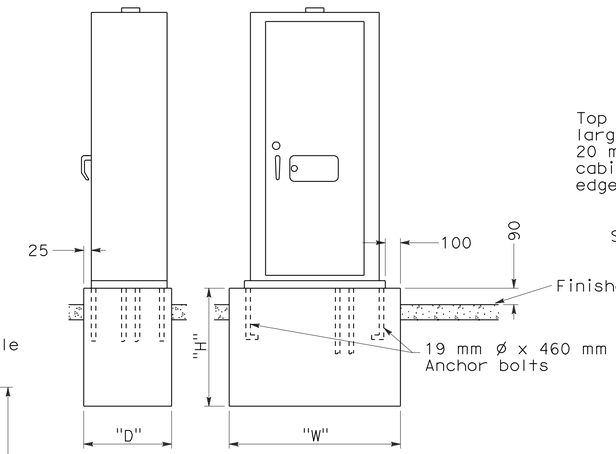

FOUNDATION FOR TYPE P, R AND S CABINETS

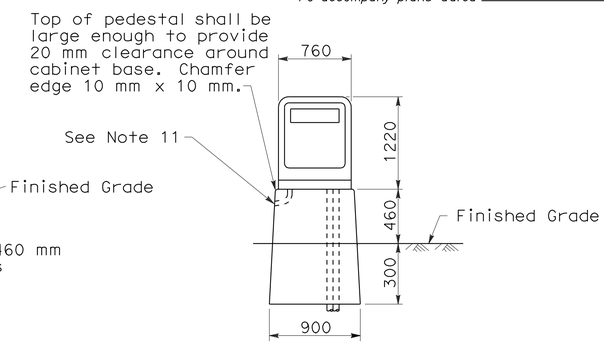

PEDESTAL FOUNDATION FOR TYPE M OR MODEL 336 CABINET

CABINET	FOUNDATION		
TYPE/ MODEL	H (mm)	W (mm)	D (mm)
G	900	600	600
M 336	760	900	560
P	460	1330	710
R	460	1330	710
S	460	1820	710

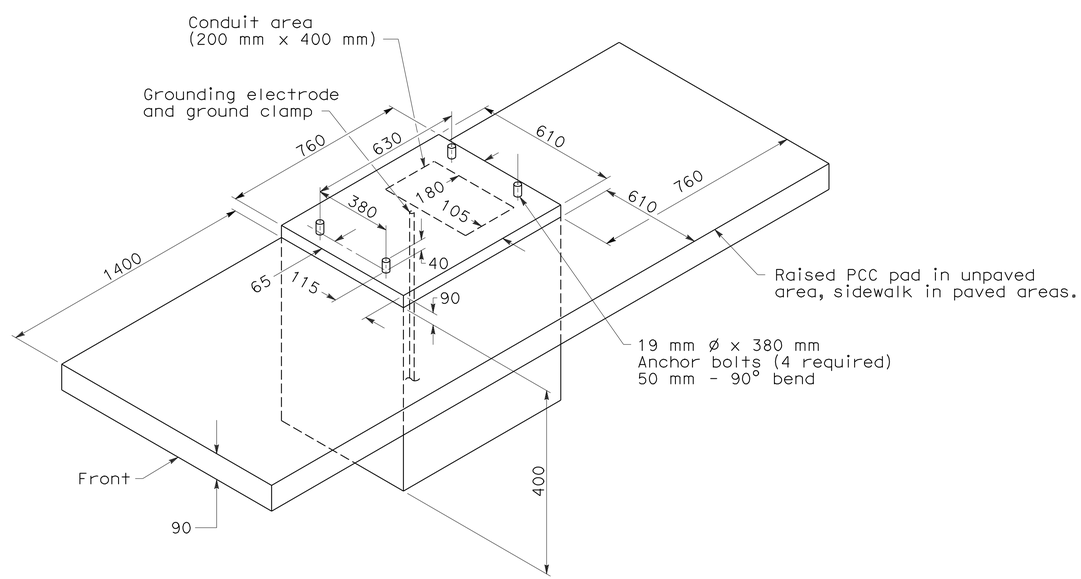

FOUNDATION DETAILS
For Model 332 and 334 cabinets

STATE OF CALIFORNIA
DEPARTMENT OF TRANSPORTATION

ELECTRICAL SYSTEMS (CONTROLLER CABINET DETAILS)

NO SCALE

ALL DIMENSIONS ARE IN MILLIMETERS UNLESS OTHERWISE SHOWN

RSP ES-3C DATED OCTOBER 5, 2007 SUPERSEDES STANDARD PLAN ES-3C DATED JULY 1, 2004-PAGE 425 OF THE STANDARD PLANS BOOK DATED JULY 2004.

REVISED STANDARD PLAN RSP ES-3C

2004 REVISED Std PLAN RSP ES-3C

6-27-07

DIST	COUNTY	LOCATION CODE	KILOMETER POST TOTAL PROJECT	SHEET No.	TOTAL SHEETS
06	Ker	5722		38	178

Jeffery G. McRae
REGISTERED ELECTRICAL ENGINEER

October 5, 2007
PLANS APPROVAL DATE

REGISTERED PROFESSIONAL ENGINEER Jeffery G. McRae No. E14512 Exp. 6-30-08 ELECTRICAL STATE OF CALIFORNIA

The State of California or its officers or agents shall not be responsible for the accuracy or completeness of electronic copies of this plan sheet.

To get to the Caltrans web site, go to: http://www.dot.ca.gov

To accompany plans dated 3-8-10

Caltrans Metric

LOOP INSTALLATION PROCEDURE

1. Loops shall be centered in lanes.
2. Saw slots in pavement for loop conductors as shown in details.
3. Distance between side of loop and a lead-in saw cut from adjacent detectors shall be 600 mm minimum. Distance between lead-in saw cuts shall be 150 mm minimum.
4. Bottom of saw slot shall be smooth with no sharp edges.
5. Slots shall be washed until clean, blown out and thoroughly dried before installing loop conductors.
6. Adjacent loops on the same sensor unit channel shall be wound in opposite directions.
7. Identify and tag loop circuit pairs in the pull box with loop number, start (S) and finish (F) of conductor. Identify and tag lead-in-cable with sensor number and phase.
8. Install loop conductor in slot using a 5 mm to 6 mm thick wood paddle. Hold loop conductors with wood paddles (at the bottom of the sawed slot) during sealant placement.
9. No more than 2 twisted pairs shall be installed in one sawed slot.
10. Allow additional 1.5 m of slack length of conductor for the lead-in run to pull box.
11. The additional length of each conductor for each loop shall be twisted together into a pair (6 turns per meter minimum) before being placed in the slot and conduit leading to pull box.
12. Test each loop circuit for continuity, circuit resistance and insulation resistance at the pull box before filling slots.
13. Fill slots as shown in details.
14. Splice loop conductors to lead-in cable. Splices shall be soldered.
15. End of lead-in-cable and Type 2 loop conductor shall be waterproofed prior to installing in conduit to prevent moisture from entering the cable.
16. Lead-in-cable shall not be spliced between the pull box and the controller cabinet terminals.
17. Test each loop circuit for continuity, circuit resistance and insulation resistance at the controller cabinet location.
18. Where loop conductors are not to be spliced to a lead-in-cable, the ends of the conductors shall be taped and waterproofed with electrical insulating coating.

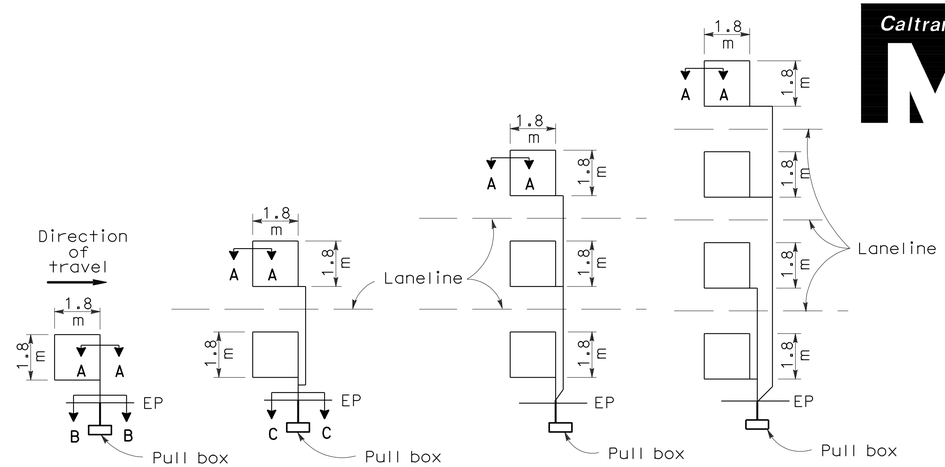

TYPE 1A INSTALLATION | TYPE 2A INSTALLATION | TYPE 3A INSTALLATION | TYPE 4A INSTALLATION

SAWCUT DETAILS

(Type A loop detector configurations illustrated)

1. 1A thru 4A = 1 Type A loop configuration in each lane.
2. 1B thru 4B = 1 Type B loop configuration in each lane.
3. 1C = 1 Type C loop configuration entering lanes as required.
4. 1D thru 4D = 1 Type D loop configuration in each lane.
5. 1E thru 4E = 1 Type E loop configuration in each lane.
6. 1Q thru 4Q = 1 Type Q loop configuration in each lane.
   (Use Type A, B, C, D, E or Q loop detector configurations only when specified or shown on plans)

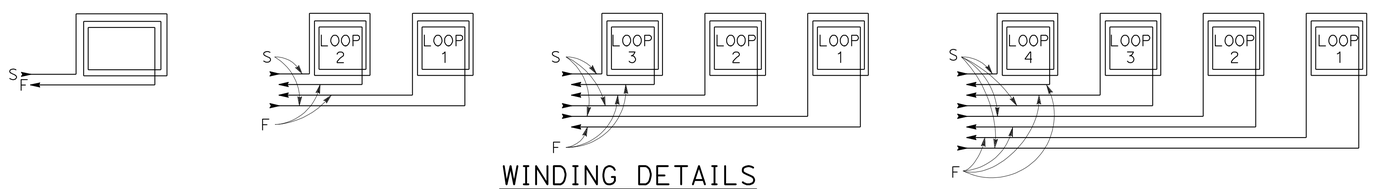

WINDING DETAILS

See Notes 6 and 7

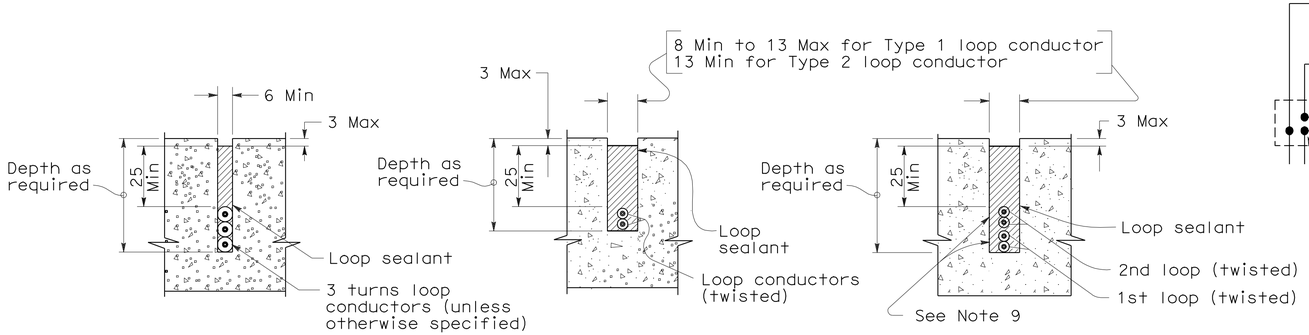

SECTION A-A | SECTION B-B | SECTION C-C

SLOT DETAILS - TYPE 1 AND TYPE 2 LOOP CONDUCTOR

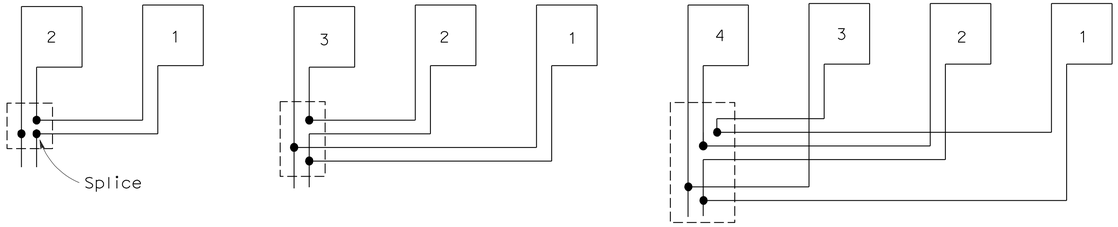

TYPICAL LOOP CONNECTIONS

(Dashed lines represent the pull box)

STATE OF CALIFORNIA
DEPARTMENT OF TRANSPORTATION

ELECTRICAL SYSTEMS (DETECTORS)

NO SCALE

ALL DIMENSIONS ARE IN MILLIMETERS UNLESS OTHERWISE SHOWN

RSP ES-5A DATED OCTOBER 5, 2007 SUPERSEDES STANDARD PLAN ES-5A DATED JULY 1, 2004-PAGE 436 OF THE STANDARD PLANS BOOK DATED JULY 2004.

REVISED STANDARD PLAN RSP ES-5A

2004 REVISED Std PLAN RSP ES-5A

8-9-07

DIST	COUNTY	LOCATION CODE	KILOMETER POST TOTAL PROJECT	SHEET No.	TOTAL SHEETS
06	Ker	5722		39	178

REGISTERED CIVIL ENGINEER

October 5, 2007
PLANS APPROVAL DATE

REGISTERED PROFESSIONAL ENGINEER
Stanley P. Johnson
No. C57793
Exp. 03-31-08
CIVIL
STATE OF CALIFORNIA

The State of California or its officers or agents shall not be responsible for the accuracy or completeness of electronic copies of this plan sheet.

To get to the Caltrans web site, go to: http://www.dot.ca.gov

To accompany plans dated 3-8-10

2004 REVISED Std PLAN RSP ES-6A

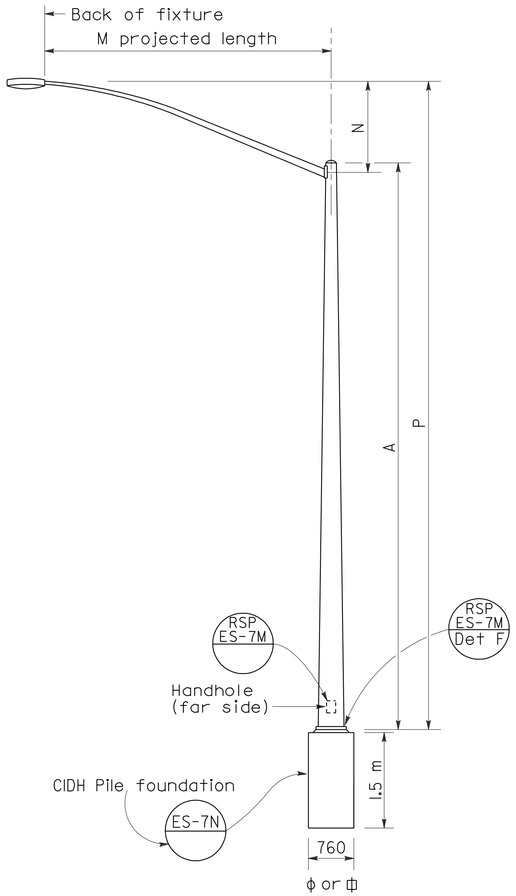

ELEVATION
TYPE 15 AND TYPE 21

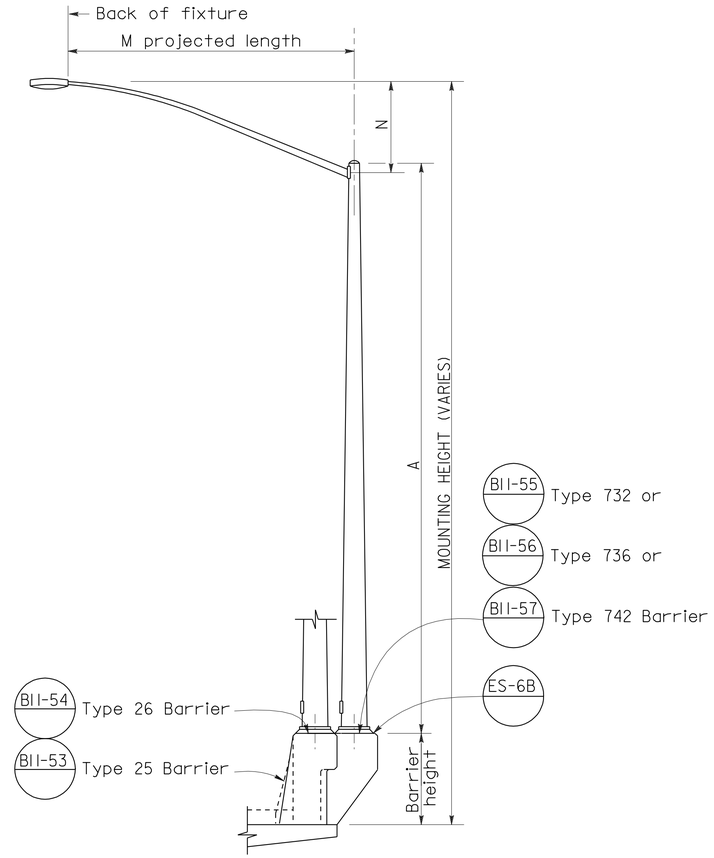

ELEVATION
TYPE 15 AND TYPE 21 BARRIER RAIL MOUNTED

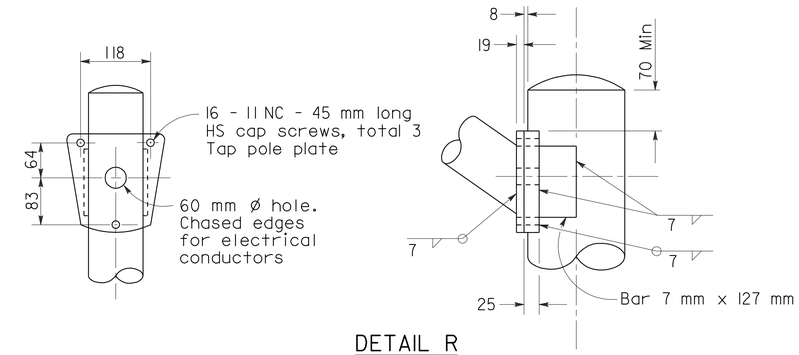

DETAIL R
LUMINAIRE ARM CONNECTION

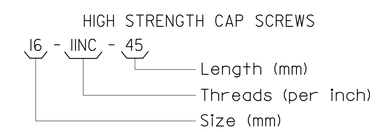

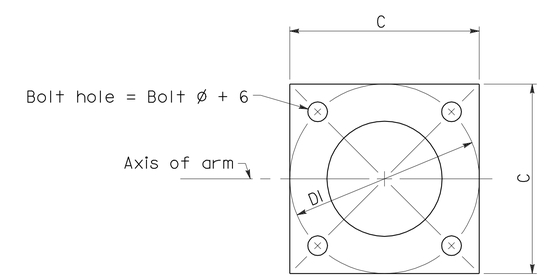

BASE PLATE

POLE TYPE	POLE DATA				BASE PLATE DATA				LUMINAIRE ARM
	A Height	Min OD Base	Min OD Top	Wall Thickness	C	DI Bolt Circle	Thick-ness	Anchor Bolts Size	
	m	mm	mm	mm	mm				m
15	9.1	203	98	3.04	305	305	25	25 ø x 915 x 102*	1.8-4.6 [3.7]
21	10.7	219	98	3.04	305	305	25	See ES-6B	1.8-4.6 [3.7]

*For barrier rail bolts, see Standard Plan ES-6B.

LUMINAIRE ARM DATA					
M Projected Length	N Rise	Min OD At Pole	Nominal Thickness	P Type 15	P Type 21
m	mm	mm	mm	m	m
1.8	610±	83	3.04	9.5±	11.2±
2.4	760±	89	3.04	9.7±	11.3±
3.1	990±	98	3.04	9.9±	11.5±
3.7	1290±	98	3.04	10.2±	11.8±
4.6	1450±	108	3.04	10.3±	11.9±

NOTES:

1. ☐ Indicates arm length to be used unless otherwise noted on the plans.
2. For Type 15-SB, use Type 15 standard with Type 30 base plate details, see Standard Plan ES-6F.
3. For additional notes, see Revised Standard Plan RSP ES-7M and ES-7N.

STATE OF CALIFORNIA
DEPARTMENT OF TRANSPORTATION

ELECTRICAL SYSTEMS (LIGHTING STANDARD TYPES 15 AND 21)

NO SCALE

ALL DIMENSIONS ARE IN MILLIMETERS UNLESS OTHERWISE SHOWN

RSP ES-6A DATED OCTOBER 5, 2007 SUPERSEDES STANDARD PLAN ES-6A DATED JULY 1, 2004-PAGE 440 OF THE STANDARD PLANS BOOK DATED JULY 2004.

REVISED STANDARD PLAN RSP ES-6A

6-20-07

DIST	COUNTY	LOCATION CODE	KILOMETER POST TOTAL PROJECT	SHEET No.	TOTAL SHEETS
06	Ker	5722		40	178

Caltrans Metric

REGISTERED CIVIL ENGINEER

October 5, 2007
PLANS APPROVAL DATE

REGISTERED PROFESSIONAL ENGINEER Stanley P. Johnson No. C57793 Exp. 03-31-08 CIVIL STATE OF CALIFORNIA

The State of California or its officers or agents shall not be responsible for the accuracy or completeness of electronic copies of this plan sheet.

To get to the Caltrans web site, go to: http://www.dot.ca.gov

To accompany plans dated 3-8-10

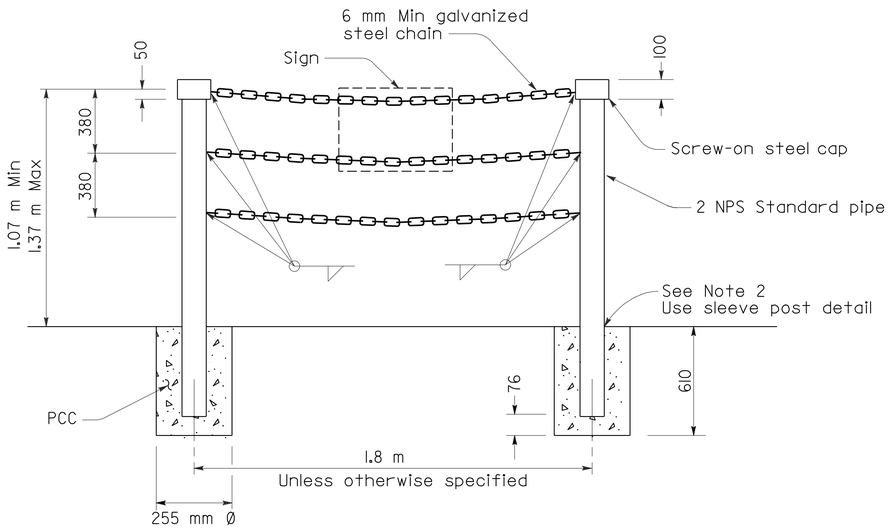

TYPE II

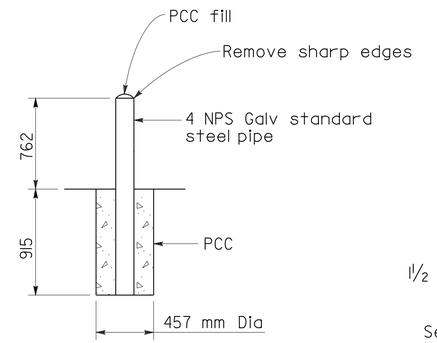

GUARD POST

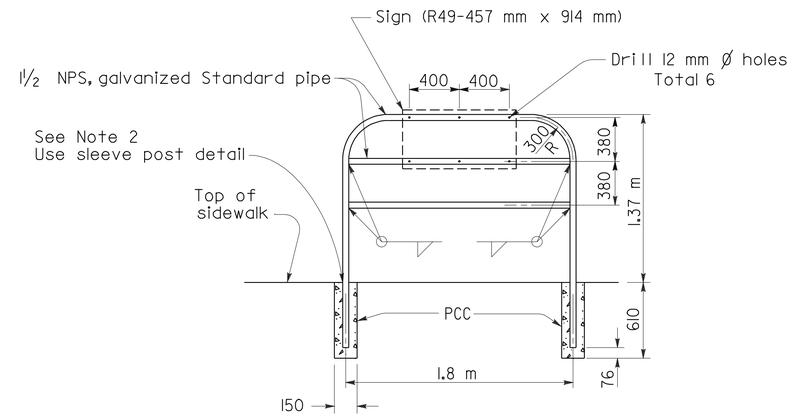

TYPE I

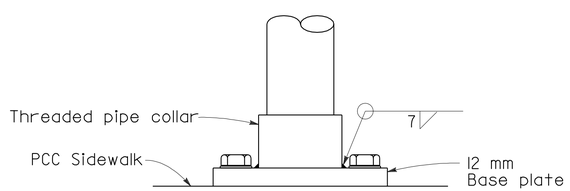

ELEVATION

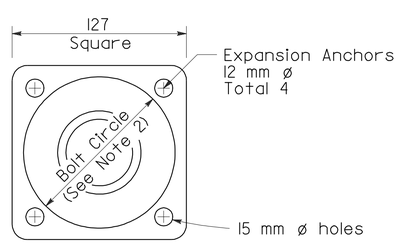

PLAN

POST ANCHORAGE DETAIL

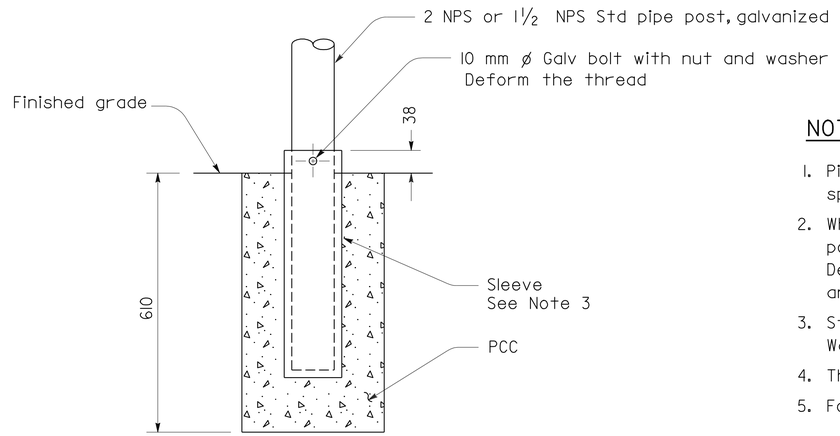

SLEEVE POST DETAIL

Use unless otherwise specified or shown on plans

NOTES:

1. Pipe post to be set 460 mm back from face of curb unless otherwise specified.
2. Where barricade posts are installed in existing concrete sidewalk, the post may be anchored to the sidewalk as shown in the "Post Anchorage Detail". Bolt circle diameter shall be 102 mm minimum for Type I barricade and 127 mm minimum for Type II barricade.
3. Steel sleeve to be constructed with a diameter 2.5 mm larger than post. Wall thickness of sleeve to be same as post or larger.
4. The Contractor may submit alternative details for approval by the Engineer.
5. For minimum pipe diameters and wall thickness refer to ASTM A6M.

STATE OF CALIFORNIA
DEPARTMENT OF TRANSPORTATION

ELECTRICAL SYSTEMS (PEDESTRIAN BARRICADES)

NO SCALE

ALL DIMENSIONS ARE IN MILLIMETERS UNLESS OTHERWISE SHOWN

RSP ES-7P DATED OCTOBER 5, 2007 SUPERSEDES STANDARD PLAN ES-7P DATED JULY 1, 2004-PAGE 466 OF THE STANDARD PLANS BOOK DATED JULY 2004.

REVISED STANDARD PLAN RSP ES-7P

2004 REVISED Std PLAN RSP ES-7P

6-12-07

DIST	COUNTY	LOCATION CODE	KILOMETER POST TOTAL PROJECT	SHEET No.	TOTAL SHEETS
06	Ker	5722		41	178

REGISTERED ELECTRICAL ENGINEER

October 5, 2007
PLANS APPROVAL DATE

REGISTERED PROFESSIONAL ENGINEER Jeffery G. McRae No. E14512 Exp. 6-30-08 ELECTRICAL STATE OF CALIFORNIA

The State of California or its officers or agents shall not be responsible for the accuracy or completeness of electronic copies of this plan sheet.

To get to the Caltrans web site, go to: http://www.dot.ca.gov

To accompany plans dated 3-8-10

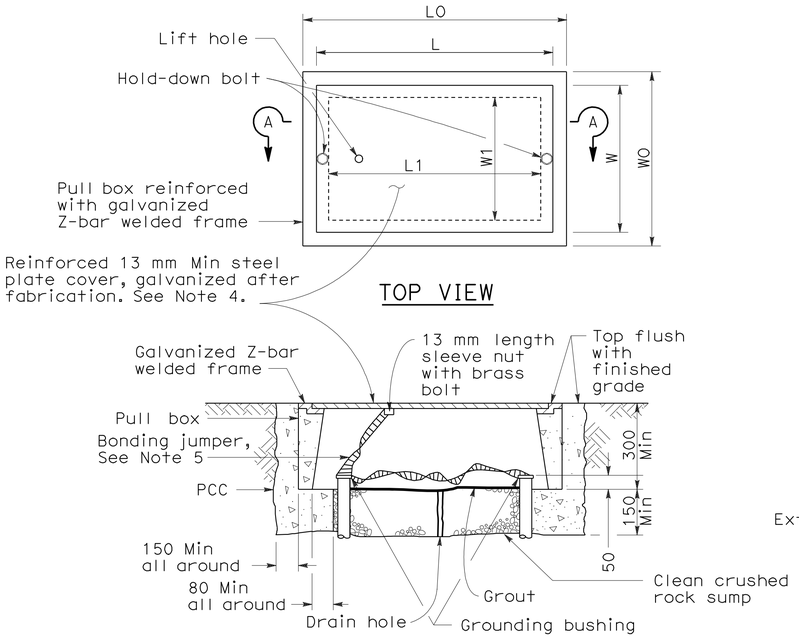

SECTION A-A

No. 3½(T), No. 5(T) AND No. 6(T) TRAFFIC PULL BOX

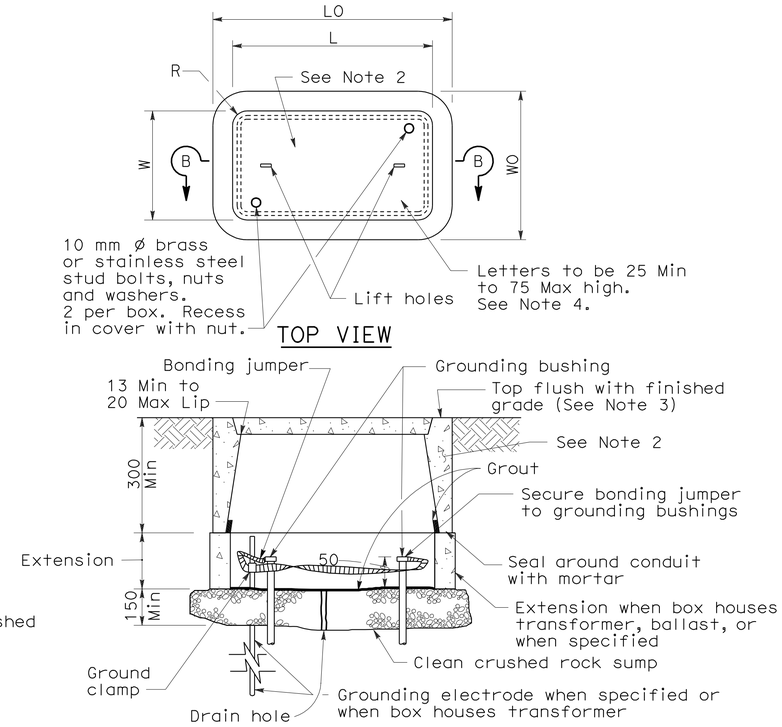

SECTION B-B

INSTALLATION DETAILS

DIMENSION TABLE

PULL BOX	CONCRETE BOX				NON-PCC BOX		CONCRETE OR NON-PCC COVERS				
	Minimum * Thickness	Minimum Depth Box and Extension	LO (mm)	WO (mm)	Minimum ** Thickness	Minimum Depth Box and Extension	L ** (mm)	W ** (mm)	R (mm)	Edge Thickness	Edge Taper
No. 3½	25 mm	No Extension	457	330	8 mm	No Extension	390	260	27	45 mm	3 mm
No. 5	25 mm	560 mm	666	425	8 mm	510 mm	590	350	32	50 mm	3 mm
No. 6	40 mm	610 mm	854	524	10 mm	510 mm	775	444	32	50 mm	3 mm

* Excluding conduit web ** Top dimension

DIMENSION TABLE

PULL BOX	CONCRETE BOX						NON-PCC BOX		CONCRETE OR NON-PCC COVERS				
	Minimum * Thickness	Minimum Depth Box and Extension	LO (mm)	WO (mm)	L1 (mm)	W1 (mm)	Minimum ** Thickness	Minimum Depth Box and Extension	L ** (mm)	W ** (mm)	R (mm)	Edge Thickness	Edge Taper
No. 3½(T)	40 mm	305 mm	530 ±	430 ± 25	370 ±	270 ± 25	Does Not Apply		510 ±	350 ±	0	13 mm	None
No. 5(T)	45 mm	305 mm	750 ±	600 ± 25	480 ±	330 ± 25	Does Not Apply		690 ±	410 ±	0	13 mm	None
No. 6(T)	50 mm	305 mm	900 ±	760 ± 25	600 ±	430 ± 25	Does Not Apply		840 ±	510 ±	0	13 mm	None

* Excluding conduit web ** Top dimension

NOTES ON PULL BOXES:

1. Traffic pull box shall be provided with steel cover and special concrete footing. Steel cover shall have embossed non-skid pattern.

2. Steel reinforcing shall be as regularly used in the standard products of the respective manufacturer.

3. Top of pull boxes shall be flush with surrounding grade or top of adjacent curb, except that in unpaved areas where pull box is not immediately adjacent to and protected by a concrete foundation, pole or other protective construction, the box shall be placed with its top 30 mm above surrounding grade. Where practicable, pull boxes shown in the vicinity of curbs shall be placed adjacent to the back of curb, and pull boxes shown adjacent to standards shall be placed on side of foundation facing away from traffic, unless otherwise noted. When pull box is installed in sidewalk area, the depth of the pull box shall be adjusted so that the top of the pull box is flush with the sidewalk.

4. Pull box covers shall be marked as follows: "SERVICE" Service circuits between service point and service disconnect; "SPRINKLER-CONTROL" Sprinkler control circuits, 50 V or less; "CALTRANS" On all pull boxes, except pull boxes marked "SPRINKLER-CONTROL"; and "TELEPHONE" Telephone service.

   a) No. 3½ pull box.

      1) "SIGNAL" Traffic signal circuits with or without street or sign lighting circuits.

      2) "ST LIGHTING" Street or sign lighting circuits where voltage is under 600 V.

   b) No. 5, 6, 9 or 9A pull box.

      1) "TRAFFIC SIGNAL" Traffic signal circuits with or without street or sign lighting circuits.

      2) "STREET LIGHTING" Street or sign lighting circuits where voltage is under 600 V.

      3) "STREET LIGHTING-HIGH VOLTAGE" Street or sign lighting circuits where voltage is above 600 V.

      4) "IRRIGATION" Circuits to irrigation controller 120 V or more.

      5) "RAMP METER" Ramp meter circuits.

      6) "COUNT STATION" Count or speed monitor circuits.

      7) "COMMUNICATION" Communication circuits.

      8) "TOS COMMUNICATIONS" TOS communications line.

      9) "TOS POWER" TOS power.

      10) "TDC POWER" Telephone demarcation cabinet power.

      11) "CCTV" Closed circuit television circuits.

      12) "TMS" Traffic monitoring station circuits.

      13) "CMS" Changeable message sign circuits.

      14) "HAR" Highway advisory radio circuits.

5. Bonding jumper for metal covers shall be 1 m long, minimum.

6. The nominal dimensions of the opening in which the cover sets shall be the same as the cover dimensions except the length and width dimensions shall be 3 mm greater.

7. Covers and boxes shall be interchangeable with California standard male and female gages. When interchanged with a standard male or female gage, the top surfaces shall be flush within 3 mm. Top outside edge of concrete covers and pull boxes shall have a 6 mm minimum radius.

8. Pull box shall not be installed within the boundaries of new or existing curb ramps.

9. Pull boxes for electroliers, post and signal standards shall be located ± 1.5 m from the station of the adjacent electrolier, post or signal standard. Pull boxes shall be placed adjacent to back of curb or edge of shoulder except where this is impractical, a box may be placed in another suitable protected and accessible location.

STATE OF CALIFORNIA
DEPARTMENT OF TRANSPORTATION

ELECTRICAL SYSTEMS (PULL BOX DETAILS)

NO SCALE

ALL DIMENSIONS ARE IN MILLIMETERS UNLESS OTHERWISE SHOWN

RSP ES-8 DATED OCTOBER 5, 2007 SUPERSEDES STANDARD PLAN ES-8 DATED JULY 1, 2004-PAGE 467 OF THE STANDARD PLANS BOOK DATED JULY 2004.

REVISED STANDARD PLAN RSP ES-8

2004 REVISED Std PLAN RSP ES-8

7-3-07

DIST.	COUNTY	LOCATION CODE	KILOMETER POST TOTAL PROJECT	SHEET NO.	TOTAL SHEETS
06	Ker	5722		42	178

LICENSED ARCHITECT — DATE

3-8-10
PLANS APPROVAL DATE

LICENSED ARCHITECT WARREN LAI No. 17122 Exp. 6/30/09 STATE OF CALIFORNIA

The State of California or its officers or agents shall not be responsible for the accuracy or completeness of electronic copies of this plan sheet.

LIST OF 2007 CALIFORNIA CODE OF REGULATION (CCR)

2007 BUILDING STANDARD ADMINISTRATIVE CODE : PART 1, TITLE 24 CCR
2007 CALIFORNIA BUILDING CODE, PART 2, TITLE 24 CCR
2007 CALIFORNIA ELECTRICAL CODE, PART 3, TITLE 24 CCR
2007 CALIFORNIA MECHANICAL CODE, PART 4 , TITLE 24 CCR
2007 CALIFORNIA PLUMBING CODE, PART 5, TITLE 24 CCR
2007 CALIFORNIA FIRE CODE, PART 9 , TITLE 24 , CCR
2007 CALIFORNIA REFERENCED STANDARDS CODE , PART 12 , TITLE 24 , CCR
TITLE 19, CCR , PUBLIC SAFETY,STATE FIRE MARSHAL REGULATIONS
2007 CALIFORNIA ENERGY CODE, PART 6, TITLE 24 , CCR
CURRENT EDITION OF AMERICANS WITH DISABILITIES ACT

INDEX TO DRAWINGS

SHEET No. — SHEET TITLE

ARCHITECTURAL

GP-1 — INDEX SHEET
GP-2 — REMOVAL PLAN
GP-3 — GENERAL PLAN
GP-4 — GATE, FENCE PLAN, ELEVATION AND DETAIL
GP-5 — GATE, FENCE ELEVATIONS AND DETAILS
GP-6 — PROJECT DATA AND FLAG POLE
A0-1 — ARCHITECTURAL ABBREVIATIONS AND SYMBOLS
A0-2 — PROJECT SITE ACCESSIBILITY DETAILS
A0-3 — BUILDING INTERIOR ACCESSIBILITY DETAILS
A0-4 — BUILDING INTERIOR ACCESSIBILITY DETAILS
A0-5 — TITLE 24 ENERGY COMPLIANCE FORMS
A0-6 — TITLE 24 ENERGY COMPLIANCE FORMS

CREW/EQUIPMENT BLDG.

A1-1 — FLOOR PLAN
A1-2 — PARTIAL FLOOR PLAN 1
A1-3 — PARTIAL FLOOR PLAN 2
A1-4 — REFLECTED CEILING PLAN
A1-5 — ROOF PLAN AND DETAILS
A1-6 — EXTERIOR ELEVATIONS
A1-7 — ROOM FINISH SCHEDULE
A1-8 — FINISH SCHEDULE
A1-9 — DOOR & WINDOW SCHEDULES
A1-10 — BUILDING SECTIONS
A1-11 — ENTRANCE CANOPY SECTION AND DETAILS
A1-12 — INTERIOR ELEVATIONS
A1-13 — INTERIOR ELEVATIONS
A1-14 — INTERIOR ELEVATIONS
A1-15 — INTERIOR ELEVATIONS
A1-16 — INTERIOR ELEVATIONS
A1-17 — INTERIOR SECTIONAL ELEVATIONS
A1-18 — INTERIOR SECTIONAL ELEVATIONS
A1-19 — INTERIOR SECTIONAL ELEVATIONS
A1-20 — DOOR DETAILS
A1-21 — WINDOW & GLASS BLOCK DETAILS
A1-22 — ROOF AND MISCELLANEOUS DETAILS
A1-23 — EAVE DETAILS
A1-24 — MISCELLANEOUS DETAILS
A1-25 — LOUVER AND MISCELLANOUS DETAILS
A1-26 — CEILING AND WALL DETAILS

COVERED STORAGE BINS

A2-1 — PLAN, SECTION AND DETAILS
A2-2 — EXTERIOR ELEVATIONS
A2-3 — EXTERIOR ELEVATIONS, COLOR AND FINISH NOTES

REMODELLED STORAGE BUILDING

A3-1 — REMOVAL PLAN, EXTERIOR ELEVATIONS AND PARTIAL FLOOR PLAN

STRUCTURAL

STANDARD

ST-1 — LEGEND
ST-1A — WOOD FRAMING STANDARD - NOTES
ST-1B — WOOD FRAMING STANDARD - DETAILS
ST-2 — CONCRETE STANDARD
ST-3 — CONCRETE MASONRY UNIT STANDARD
ST-4 — CONCRETE MASONRY UNIT DETAILS
ST-5 — METAL STUD FRAMING DETAILS

CREW/EQUIPMENT BLDG.

ST1-1 — KEY PLAN
ST1-2 — FOUNDATION PLAN 1
ST1-3 — FOUNDATION PLAN 2
ST1-4 — ROOF PLAN 1
ST1-5 — ROOF PLAN 2
ST1-6 — LONGITUDINAL AND CROSS SECTIONS
ST1-7 — CROSS SECTIONS
ST1-8 — CEILING FRAMING PLAN
ST1-9 — FOUNDATION DETAILS
ST1-10 — FOUNDATION DETAILS
ST1-11 — WALL DETAILS/CEILING FRAME DETAILS
ST1-12 — WALL DETAILS
ST1-13 — ROOF FRAMING DETAILS
ST1-14 — ROOF FRAMING DETAILS
ST1-15 — ROOF FRAMING DETAILS
ST1-16 — ROOF FRAMING DETAILS
ST1-17 — EVAPORATIVE COOLER PLATFORM PLANS
ST1-18 — EVAPORATIVE COOLER PLATFORM PLANS

COVERED MATERIAL STORAGE BIN

ST2-1 — FOUNDATION PLAN
ST2-2 — ROOF FRAMING PLAN
ST2-3 — ELEVATIONS
ST2-4 — WALL AND SLAB SECTIONS
ST2-5 — CANOPY FOOTING DETAILS
ST2-6 — CANOPY SECTION AND DETAILS
ST2-7 — CANOPY DETAILS 1
ST2-8 — CANOPY DETAILS 2
ST2-9 — CANOPY DETAILS 3

REMODELLED STORAGE BUILDING

ST3-1 — (E) PLAN/(E) VEHICLE HOIST REMOVAL

EMULSION TANK

ST4-1 — PLANS
ST4-2 — ELEVATIONS AND SECTION
ST4-3 — DETAILS
ST4-4 — LADDER DETAILS

RINSE PAD

ST5-1 — FOUNDATION PLANS
ST5-2 — SECTIONS
ST5-3 — DETAILS

FUEL TANK ISLAND

ST6-1 — FUEL TANK ISLAND PLAN AND SECTION

ST7-1 — LOG OF TEST BORINGS

PARTIAL PLUMBING PLAN NO. 1

MECHANICAL

MI-0 — ABBREVIATION AND LEGEND
MI-1 — EXISTING SITE PLAN
MI-2 — MODIFIED SITE PLAN
MI-3 — PARTIAL HVAC PLAN NO. 1
MI-4 — PARTIAL HVAC PLAN NO. 2
MI-5 — PARTIAL PLUMBING PLAN NO. 1
MI-6 — PARTIAL PLUMBING PLAN NO. 2
MI-7 — PARTIAL SEWER PLAN NO. 1
MI-8 — PARTIAL SEWER PLAN NO. 2
MI-9 — PLUMBING ISOMETRIC
MI-10 — SEWER ISOMETRIC
MI-11 — FUEL TANK AND DISPENSER
MI-12 — MECHANICAL DETAILS NO. 1
MI-13 — MECHANICAL DETAILS NO. 2
MI-14 — MECHANICAL DETAILS NO. 3
MI-15 — MECHANICAL DETAILS NO. 4
MI-16 — MECHANICAL DETAILS NO. 5
MI-17 — MECHANICAL DETAILS NO. 6
MI-18 — MECHANICAL DETAILS NO. 7
MI-19 — MECHANICAL DETAILS NO. 8
MI-20 — MECHANICAL EQUIPMENT SCHEDULE
MI-21 — MECHANICAL DETAIL NO. 9
M3-1 — EXISTING STORAGE BLDG

ELECTRICAL

EE- 0 — LEGEND
EE- 1 — EXISTING SITE PLAN
EE- 2 — MODIFIED SITE PLAN
EE- 3 — SINGLE LINE DIAGRAM AND SWITCHBOARD DETAILS
EE- 4 — PARTIAL POWER PLAN No.1 (CREW/EQUIPMENT BUILDING)
EE- 5 — PARTIAL POWER PLAN No.2 (CREW/EQUIPMENT BUILDING)
EE-6 — PARTIAL LIGHTING PLAN No.1 (CREW/EQUIPMENT BUILDING)
EE-7 — PARTIAL LIGHTING PLAN No.2 (CREW/EQUIPMENT BUILDING)
EE-8 — PARTIAL COMMUNICATION PLAN No. 1 (CREW/EQUIPMENT BUILDING)
EE-9 — PARTIAL COMMUNICATION PLAN No. 2 (CREW/EQUIPMENT BUILDING)
EE-10 — PARTIAL INTRUSION ALARM PLAN No. 1 (CREW/EQUIPMENT BUILDING)
EE-11 — PARTIAL INTRUSION ALARM PLAN No. 2 (CREW/EQUIPMENT BUILDING)
EE-12 — PANEL SCHEDULE AND DETAILS 1
EE-13 — PANEL SCHEDULE AND DETAILS 2
EE-14 — MODIFIED EQUIPMENT SHOP PLAN
EE-15 — LIGHTING PLAN (MATERIAL BIN)
EE-16 — PANEL SCHEDULE AND DETAILS 3
EE-17 — EMULSION TANK CONTROL PANEL

SANITARY

SS-0 — NOTES, LEGEND AND ABBREVIATIONS
SS-1 — EXISTING SITE PLAN
SS-2 — MODIFIED SITE PLAN
SS-3 — WASH RACK AND CLARIFIER PLAN
SS-4 — SEPTIC TANK DETAILS
SS-5 — DETAILS - 1
SS-6 — DETAILS - 2
SS-7 — DETAILS - 3
SS-8 — CLARIFIER TANK DETAILS
SS-9 — MANHOLE DETAILS

NOTE The Contractor shall verify all controlling field dimensions before ordering or fabricating any material.

CALIFORNIA STATE FIRE MARSHAL APPROVED
Approval of this plan does not authorize or approve any omission or deviation from applicable regulations. Final approval is subject to field inspection. One set of approved plans shall be available on the project site at all times.
Reviewed by: JEFFERY SCHWARTZ
Approval date: 03/08/10

IDENTIFICATION STAMP
DIV. OF THE STATE ARCHITECT
SACRAMENTO REGIONAL OFFICE
02 108714
AC
DATE 04-23-07

USERNAME => trmikesl DATE PLOTTED => 23-MAR-2010 TIME PLOTTED => 05:45

R E Travis — DESIGN SUPERVISOR	DESIGNER TONY CHUN	CHECKED BY: C FAUST	
Warren Lai — DESIGN ARCHITECT	DRAWN BY TONY CHUN	STRUCTURAL REVIEW	
DS OSD metric (1/96)			

SHEET LEGEND
A-1 ARCHITECTURAL — EE-1 ELECTRICAL
ST-1 STRUCTURAL — M-1 MECHANICAL
C-1 CIVIL — SS-1 SANITARY
L-1 LANDSCAPE

ORIGINAL SCALE IN MILLIMETERS FOR REDUCED PLANS 0 10 20 30 40 50 60 70 80 90 100

STATE OF CALIFORNIA
DEPARTMENT OF TRANSPORTATION

DIVISION OF ENGINEERING SERVICES
ARCHITECTURAL AND STRUCTURAL DESIGN

CU 06257
EA 48340I

BRIDGE NO. 50M5722
KM POST 32.66/33.30

TAFT MAINTENANCE STATION
INDEX SHEET

SHEET GP-1

DISREGARD PRINTS BEARING EARLIER REVISION DATES → REVISION DATES (PRELIMINARY STAGE ONLY) 8-1-06 11/17/06 12/17/06 2/1/07 5/11/07 — SHEET 1 OF 2

FILE => a0_01_gp_indexsht.dgn
DATE PLOTTED => 23-MAR-2010 TIME PLOTTED => 05:45

All dimensions shown in millimeters unless noted otherwise.

Caltrans Metric

DIST	COUNTY	LOCATION CODE	KILOMETER POST TOTAL PROJECT	SHEET No.	TOTAL SHEETS
06	Ker	5722		43	178

LICENSED ARCHITECT

3-8-10
PLANS APPROVAL DATE

LICENSED ARCHITECT WARREN LAI No. C-17122 Ren. 06-30-09 STATE OF CALIFORNIA

The State of California or its officers or agents shall not be responsible for the accuracy or completeness of electronic copies of this plan sheet.

REMOVAL NOTES

1. (E) OFFICE BLDG (15240 X 6096 X 3048 HIGH) W/STUD WALLS - STUCCO AT EXTERIOR AND PLYWOOD AT INTERIOR AND CONC APRONS AT EXTERIOR
2. (E) GAS HOUSE BLDG - PRE-ENGINEERED METAL BLDG (4270 X 5490 X2440 HIGH) AND CONC SLAB
3. (E) STORAGE BLDG (12200 X 6100 X 3050 HIGH) PRE-ENGINEERED METAL BLDG AND CONC PLATFORM (7322 X 8540 X 1170 HIGH), SEE 1/1
4. (E) LOADING DOCK (22 sq m)
5. (E) 11356 LITER EMULSION TANK AND CONTAINMENT SYSTEM
6. (E) GROUND VEHICLE HOIST - SHT A3-1
7. (E) CURB ISLAND - SEE CIVIL SHTS
8. (E) AC PAVING AND BASE MATERIAL - SEE CIVIL SHEETS
9. (E) R/W FENCE (76200) AND (E) GATES CONC CURB AND DIKE - SEE CIVIL SHEETS
10. PORTION OF (E) LEACH LINES - 30480 FROM NEW DRAINAGE BASIN - SEE SHT SS-1
11. (E) SCRUBBING RACKS (TOT. 4)
12. 3 - GUARD POSTS AT EAST SIDE OF (E) DIESEL TANK
13. (E) RADIO ANTENNA
14. (E) FLAG POLE
15. (E) DRAIN SCREEN

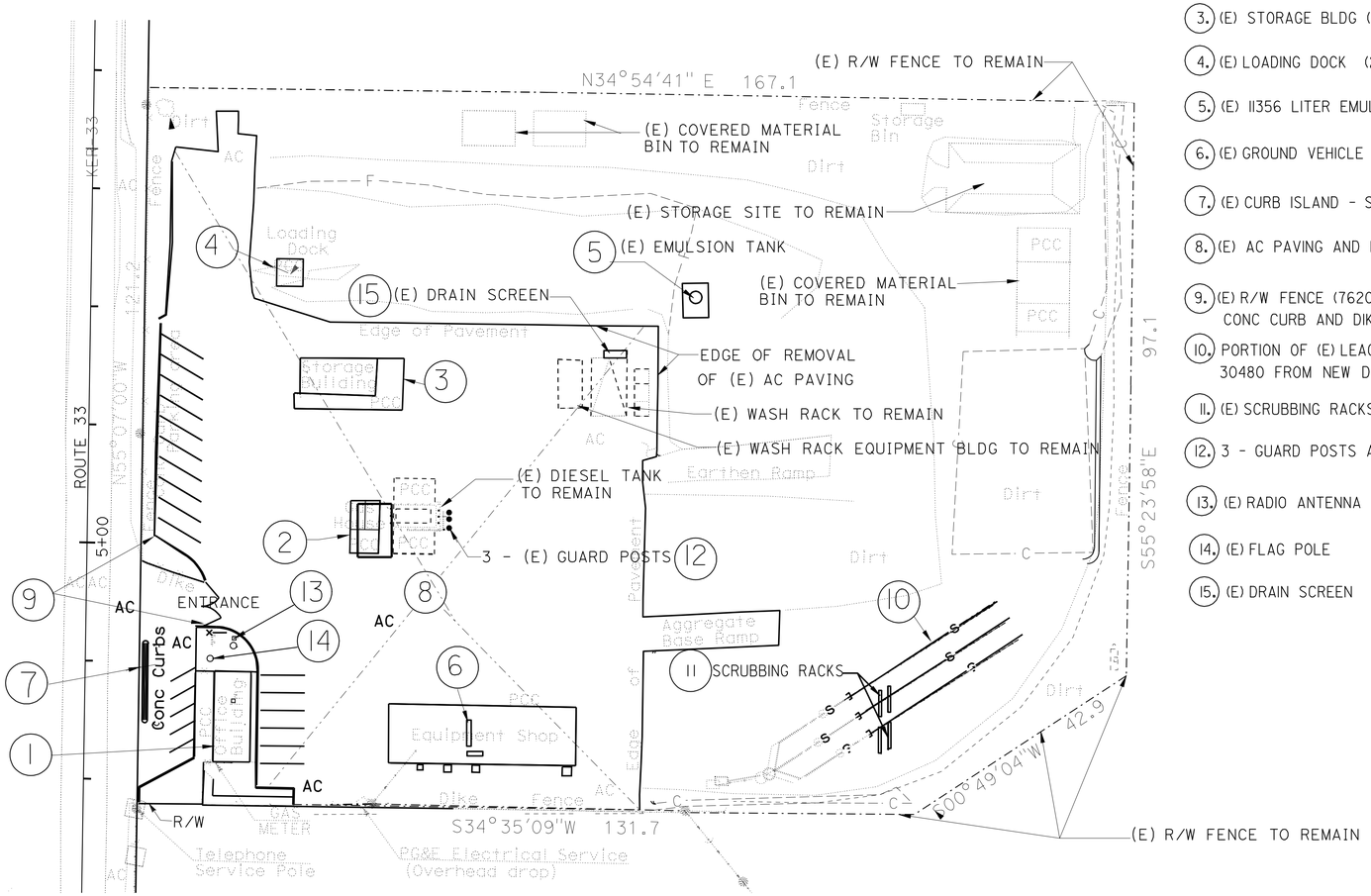

REMOVAL PLAN

NO SCALE

TRUE NORTH

NOTES,

1. SEE CIVIL SHEETS FOR SITE REMOVAL AND REGRADING DETAILS
2. SEE ELECTRICAL, MECHANICAL, AND SANITARY SHEETS FOR MORE REMOVAL DETAILS

IDENTIFICATION STAMP
DIV. OF THE STATE ARCHITECT
SACRAMENTO REGIONAL OFFICE
02 108714
AC
DATE 04-23-07

CALIFORNIA STATE FIRE MARSHAL
APPROVED
Approval of this plan does not authorize or approve any omission or deviation from applicable regulations. Final approval is subject to field inspection. One set of approved plans shall be available on the project site at all times.
Reviewed by: JEFFERY SCHWARTZ
Approval date: 03/08/10

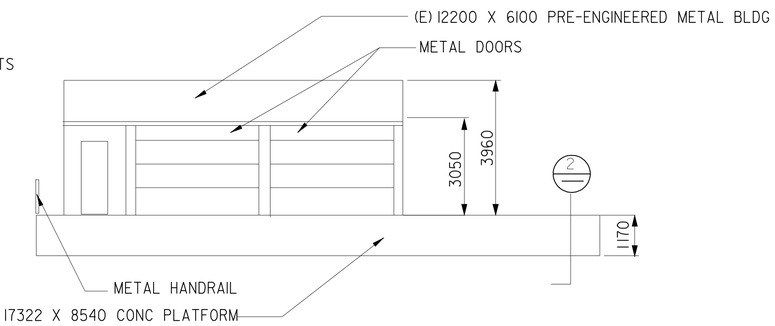

SOUTH ELEVATION

1 (E) STORAGE BUILDING TO BE REMOVED

NO SCALE

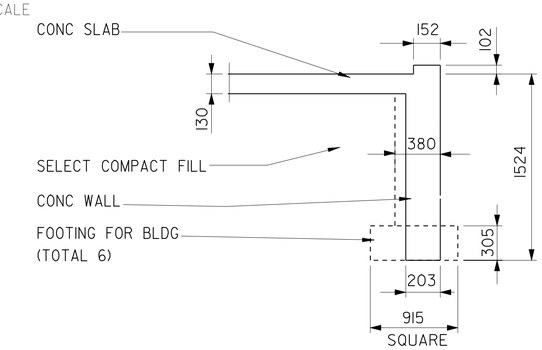

2 WALL SECTION AT CONC PLATFORM TO BE REMOVED

NO SCALE

DESIGN SUPERVISOR / DESIGN ARCHITECT	DESIGNER TONY CHUN / DRAWN BY TONY CHUN	CHECKED BY: C. FAUST / STRUCTURAL REVIEW	SHEET LEGEND: A-1 ARCHITECTURAL, ST-1 STRUCTURAL, M-1 MECHANICAL, EE-1 ELECTRICAL, WATER SUPPLY, SS-1 SANITARY	STATE OF CALIFORNIA DEPARTMENT OF TRANSPORTATION	DIVISION OF ENGINEERING SERVICES ARCHITECTURAL AND STRUCTURAL DESIGN	BRIDGE NO. 50M5722 / KM POST 3266/33.30	TAFT MAINTENANCE STATION / REMOVAL PLAN	SHEET GP-2

DS OSD 2180 (08/92) FILE => a0_02_gp_removpln.dgn DATE PLOTTED => 23-MAR-2010 TIME PLOTTED => 05:45

ORIGINAL SCALE IN MILLIMETERS FOR REDUCED PLANS 0 10 20 30 40 50 60 70 80 90 100

CU 06257 EA 483401

DISREGARD PRINTS BEARING EARLIER REVISION DATES → REVISION DATES (PRELIMINARY STAGE ONLY) 4/1/06 8/4/06 2/1/07 4/27/07

USERNAME => trmikesi

ALL DIMENSIONS ARE IN MILLI-METERS UNLESS OTHERWISE SHOWN

Caltrans Metric

DIST	COUNTY	LOCATION CODE	KILOMETER POST TOTAL PROJECT	SHEET No.	TOTAL SHEETS
06	Ker	5722		44	178

LICENSED ARCHITECT

3-8-10
PLANS APPROVAL DATE

LICENSED ARCHITECT WARREN LAI No. C-17122 Ren. 06-30-09 STATE OF CALIFORNIA

The State of California or its officers or agents shall not be responsible for the accuracy or completeness of electronic copies of this plan sheet.

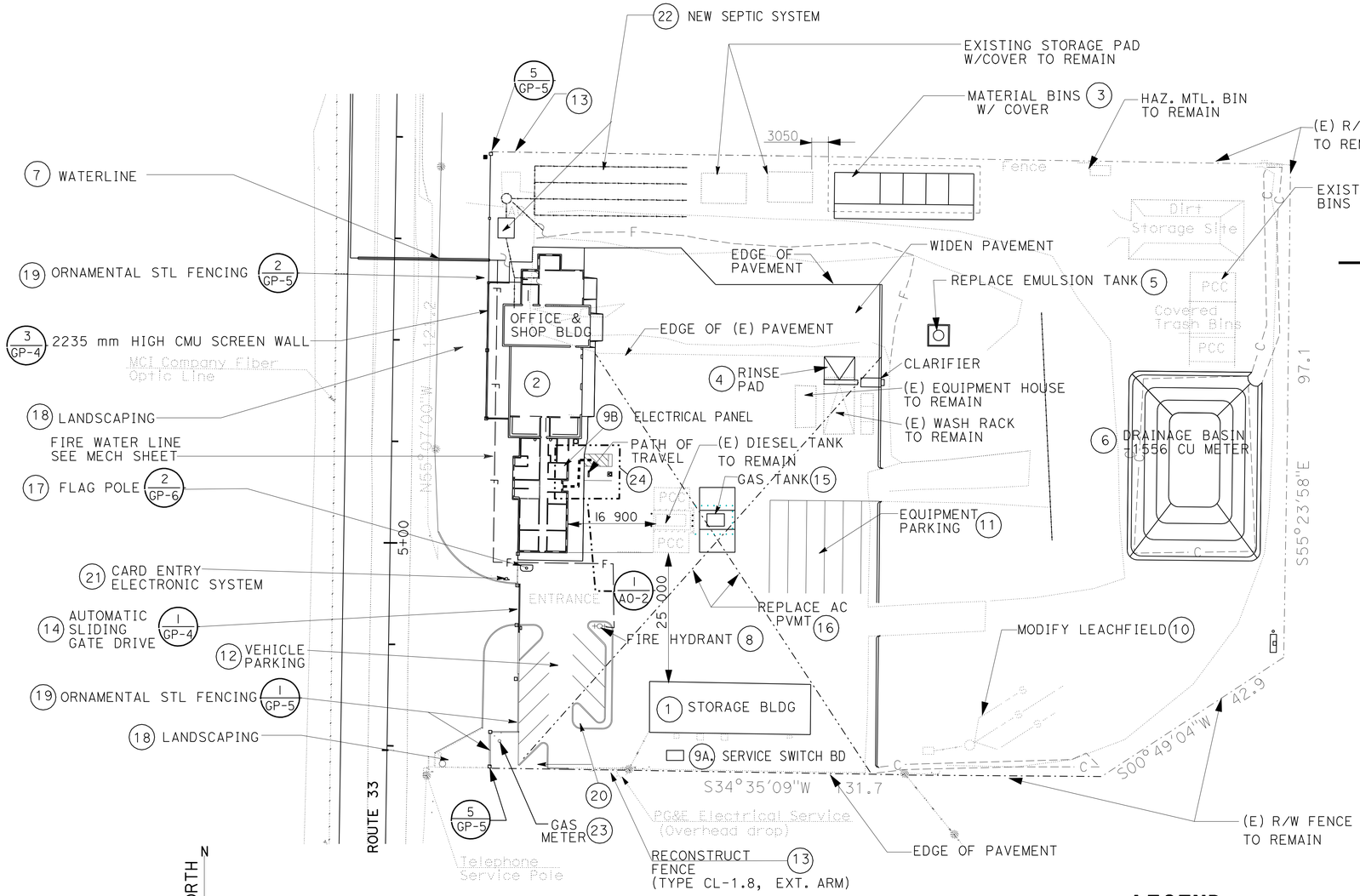

SITE PLAN

SCALE 1:500

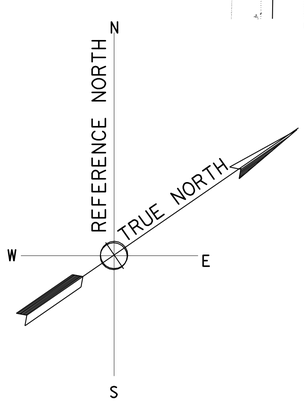

NOTES:

1. FOR COMPLETE R/W DATA, SEE R/W RECORD DATA AT THE R/W OFFICE.
2. SEE CIVIL SHEETS FOR GRADING AND SITE CONSTRUCTION DETAILS.
3. SEE CONSTRUCTION DETAIL SHEETS FOR CL AUTOMATIC DRIVE GATE, CONCRETE CURBS, AC PAVEMENT AND WATER SUPPLY LINE DETAILS.
4. SEE DRAINAGE PLANS FOR DRAINAGE DETAILS.
5. COORDINATE VALUES SHOWN ARE CCS83 ZONE 5W.

LEGEND

= NEW CONSTRUCTION

= (E) FACILITY

SCOPE OF WORK

1. MODIFY (E) EQUIPMENT BLDG TO A STORAGE BLDG AND SPRAY POLYURETHANE FOAM ROOFING OV/ (E) METAL ROOFING
2. CONSTRUCT CREW AND EQUIPMENT SHOP BLDG
3. CONSTRUCT MATERIAL STORAGE BIN AND STORAGE PAD W/ CANOPY
4. CONSTRUCT RINSE PAD AND MODIFY OIL/SEDIMENT/WATER SEPARATOR AT (E) WASH RACK - SEE SANITARY SHTS
5. REPLACE - 11,356 LITER EMULSION TANK SYSTEM - SEE MECH SHTS
6. CONSTRUCT DRAINAGE BASIN - SEE CIVIL SHTS
7. WATERLINE - SEE CIVIL SHTS
8. INSTALL FIRE HYDRANT - SEE MECH SHTS

9A SERVICE SWITCH BOARD - SEE ELEC SHTS 9B ELECTRICAL PANEL - SEE ELEC SHTS

10. CAP (E) LEACH LINES AT 30480 MM FROM NEW DRANAGE BASIN - SEE SANITARY SHTS
11. STRIPE EQUIPMENT PARKING STALLS - SEE CIVIL SHTS
12. STRIPE VEHICLE PARKING STALLS - SEE CIVIL SHTS
13. RECONSTRUCT CHAINLINK FENCE - SEE CIVIL SHTS
14. PROVIDE AUTOMATIC SLIDING GATES - SEE ELEC SHTS
15. GAS TANK - SEE MECH SHTS
16. REPLACE AC PAVING - SEE CIVIL SHTS
17. FLAG POLE
18. LANDSCAPING - SEE CIVIL SHTS
19. ORNAMENTAL STL FENCING W/CMU PILASTER - SEE SHT GP-4 AND GP-5
20. LANDSCAPE ISLAND W/CONC CURB SEE CIVIL SHTS
21. CARD ENTRY - ELECTRONIC SYSTEM - SEE ELEC SHTS
22. NEW SEPTIC SYSTEM - SEE SANITARY SHTS
23. GAS METER - SEE MECH SHTS
24. DISABLED ACCESSIBLE PARKING STALL- SEE DET 1 SHT A0-2

IDENTIFICATION STAMP
DIV. OF THE STATE ARCHITECT
SACRAMENTO REGIONAL OFFICE
02 108714
AC
DATE 04-23-07

CALIFORNIA STATE FIRE MARSHAL APPROVED
Approval of this plan does not authorize or approve any omission or deviation from applicable regulations. Final approval is subject to field inspection. One set of approved plans shall be available on the project site at all times.
Reviewed by: JEFFERY SCHWARTZ
Approval date: 03/08/10

DESIGN SUPERVISOR
DESIGN ARCHITECT

DESIGNER	TONY CHUN
DRAWN BY	TONY CHUN
CHECKED BY:	C. FAUST
STRUCTURAL REVIEW	

SHEET LEGEND
A-1 ARCHITECTURAL ST-1 STRUCTURAL
M-1 MECHANICAL EE-1 ELECTRICAL
WATER SUPPLY SS-1 SANITARY

STATE OF CALIFORNIA DEPARTMENT OF TRANSPORTATION

DIVISION OF ENGINEERING SERVICES ARCHITECTURAL AND STRUCTURAL DESIGN

BRIDGE NO. 50M5722
KM POST 32.66/33.30

TAFT MAINTENANCE STATION
GENERAL PLAN

SHEET GP-3

DS OSD 2180 (08/92)

ORIGINAL SCALE IN MILLIMETERS FOR REDUCED PLANS 0 10 20 30 40 50 60 70 80 90 100

CU 06257
EA 483401

DISREGARD PRINTS BEARING EARLIER REVISION DATES

REVISION DATES (PRELIMINARY STAGE ONLY) 4/1/06 8/1/06 11/1/06 12/1/06 2/1/07 5/11/07

USERNAME => trmikesl
DGN FILE => a0_03_gp_sitepl.dgn

DATE PLOTTED => 23-MAR-2010 05:45

DIST.	COUNTY	LOCATION CODE	KILOMETER POST TOTAL PROJECT	SHEET NO.	TOTAL SHEETS
06	Ker	5722		45	178

Caltrans Metric

LICENSED ARCHITECT — DATE

LICENSED ARCHITECT WARREN LAI No. C-17122 Exp. 6/30/09 STATE OF CALIFORNIA

3-8-10
PLANS APPROVAL DATE

The State of California or its officers or agents shall not be responsible for the accuracy or completeness of electronic copies of this plan sheet.

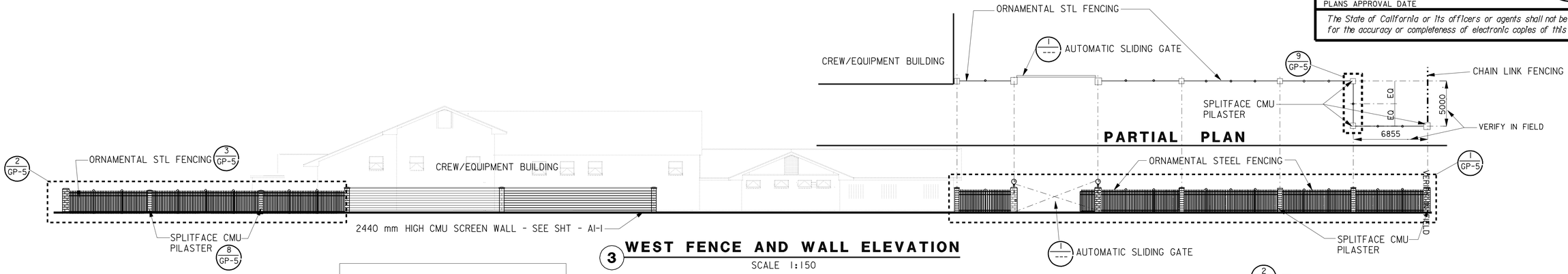

3 WEST FENCE AND WALL ELEVATION

SCALE 1:150

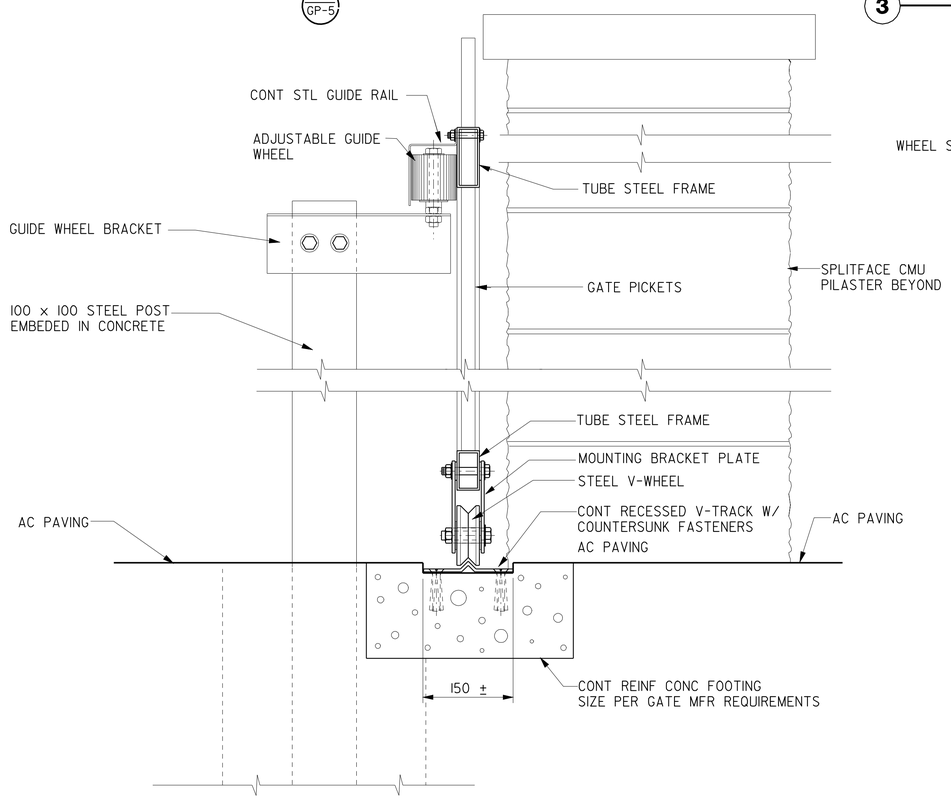

2 GATE SECTION

SCALE 1:5

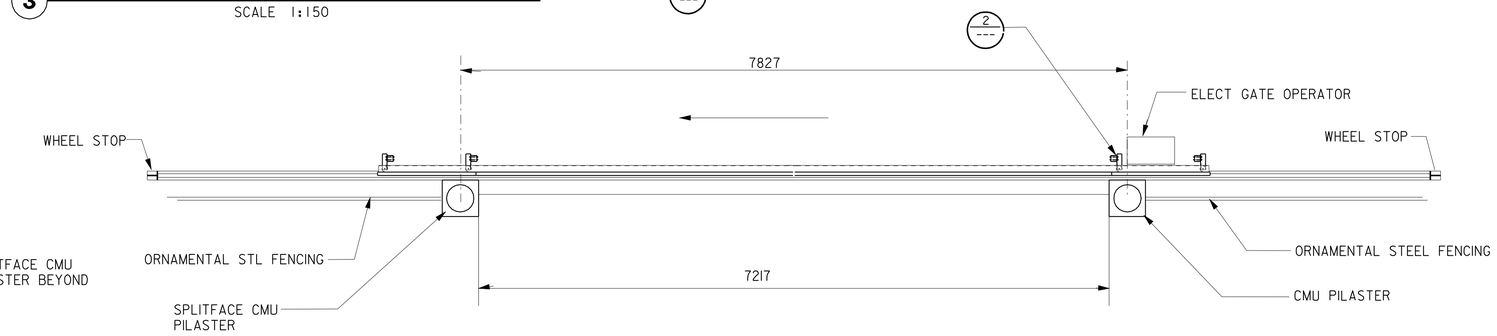

1 PLAN AT AUTOMATIC SLIDING GATE

SCALE 1:10

ALL DIMENSIONS ARE IN MILLIMETERS UNLESS OTHERWISE SHOWN.

IDENTIFICATION STAMP
DIV. OF THE STATE ARCHITECT
SACRAMENTO REGIONAL OFFICE
02 108714
AC
DATE 04-23-07

CALIFORNIA STATE FIRE MARSHAL APPROVED
Approval of this plan does not authorize or approve any omission or deviation from applicable regulations. Final approval is subject to field inspection. One set of approved plans shall be available on the project site at all times.
Reviewed by: JEFFERY SCHWARTZ
Approval date: 03/08/10

NOTE *The Contractor shall verify all controlling field dimensions before ordering or fabricating any material.*

	BY		CHECKED
DESIGN	TONY CHUN		Cecilia Faust
DETAILS	TONY CHUN		
QUANTITIES			

STATE OF CALIFORNIA
DEPARTMENT OF TRANSPORTATION

DIVISION OF ENGINEERING SERVICES
ARCHITECTURAL AND STRUCTURAL DESIGN

BRIDGE NO. 50M5722
KM POST 32.66/33.30

TAFT MAINTENANCE STATION

GATE, FENCE PLAN, ELEVATION & DETAIL

SHEET GP-4

a0_04_gp_fenc.dgn
DS OSD metric Rev. 9/02 23-MAR-2010 05:45

SCALE: ALL DIMENSIONS ARE IN MILLIMETERS UNLESS OTHERWISE NOTED.

ORIGINAL SCALE IN MILLIMETERS FOR REDUCED PLANS 0 10 20 30 40 50 60 70 80 90 100

CU 06257
EA 483401

DISREGARD PRINTS BEARING EARLIER REVISION DATES → 8/17/06 11/17/06 12/17/06 5/11/07

REVISION DATES (PRELIMINARY STAGE ONLY) SHEET OF

23-MAR-2010 05:45
a0_04_gp_fenc.dgn

ALL DIMENSIONS ARE IN MILLIMETERS UNLESS OTHERWISE SHOWN.

Caltrans Metric

DIST.	COUNTY	LOCATION CODE	KILOMETER POST TOTAL PROJECT	SHEET NO.	TOTAL SHEETS
06	Ker	5722		46	178

LICENSED ARCHITECT — DATE

LICENSED ARCHITECT WARREN LAI No. C-17122 Exp. 6/30/09 STATE OF CALIFORNIA

3-8-10
PLANS APPROVAL DATE

The State of California or its officers or agents shall not be responsible for the accuracy or completeness of electronic copies of this plan sheet.

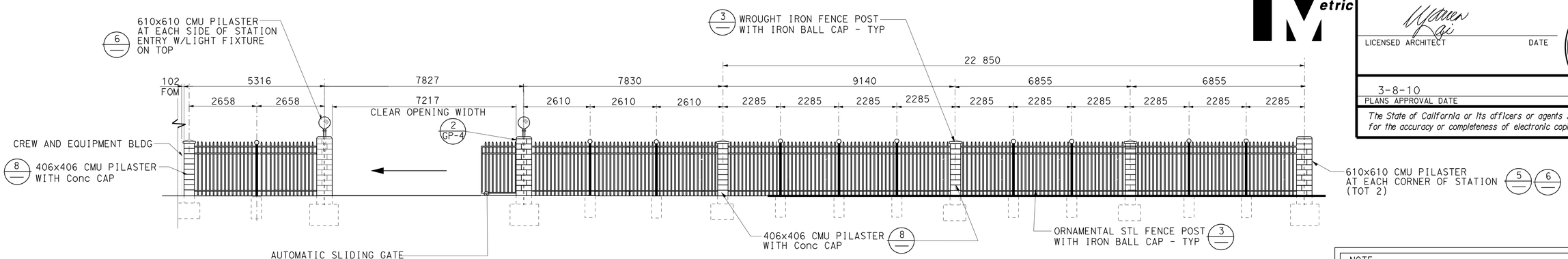

1 WEST ELEVATION AT ENTRY GATE

SCALE 1:80 (VERIFY ALL DIMENSIONS IN FIELD)

NOTE:
FOR RETAINING WALL AND PILASTER DESIGN NOTES AND DETAILS SEE STRUCTURAL SHT STI-10

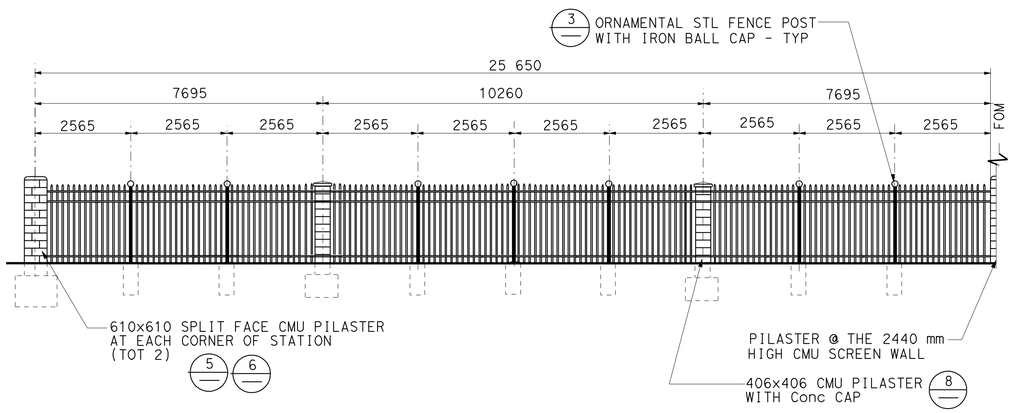

2 NORTH WEST ELEVATION

SCALE 1:80 (VERIFY ALL DIMENSIONS IN FIELD)

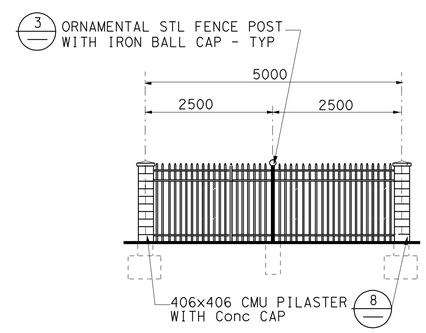

9 SOUTH ELEVATION

SCALE 1:80 (VERIFY ALL DIMENSIONS IN FIELD)

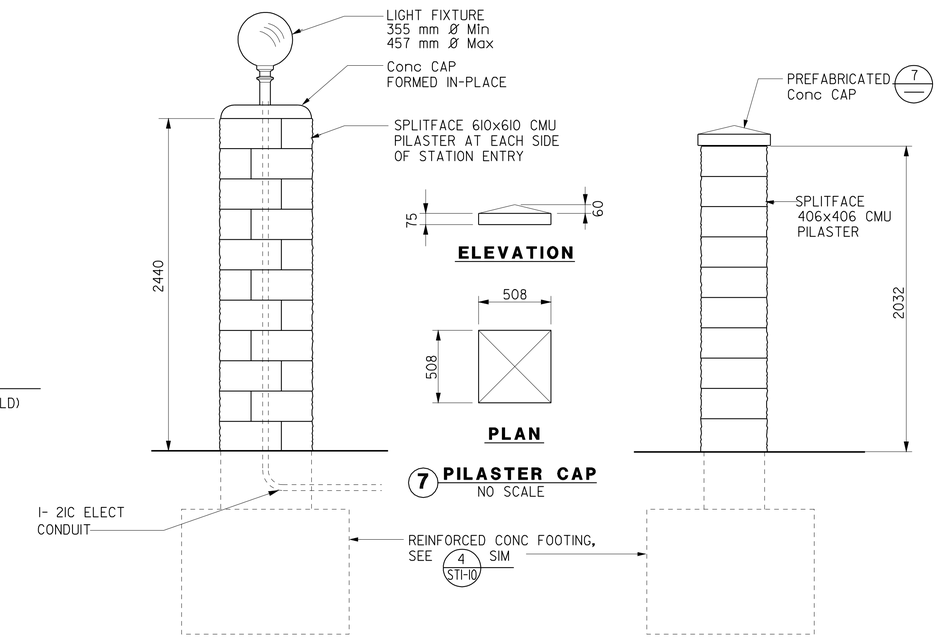

7 PILASTER CAP

NO SCALE

6 CMU PILASTER AT NORTH ENTRY

NO SCALE

8 TYPICAL CMU PILASTER

NO SCALE

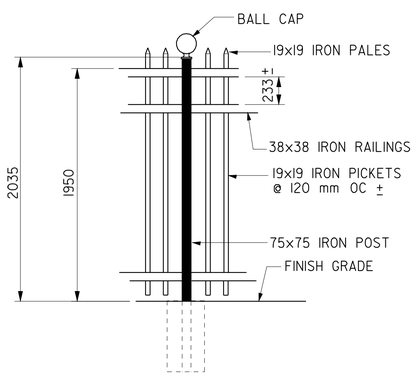

3 ORNAMENTAL STEEL FENCE

NO SCALE

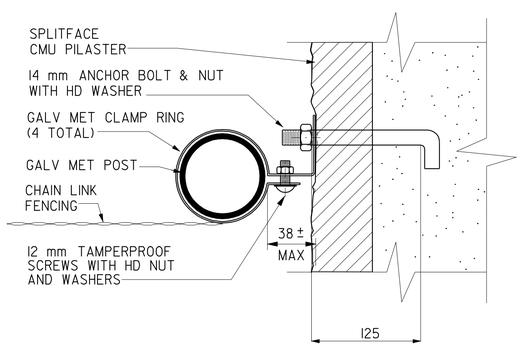

4 CHAIN LINK FENCE AT CMU CORNER PILASTER

SCALE 1:2

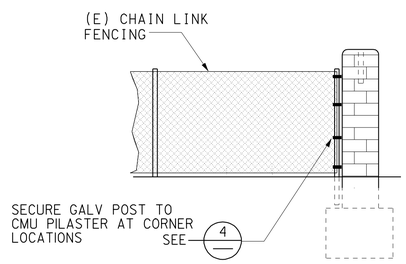

5 PILASTER AT NORTH AND SOUTH CORNERS

SCALE 1:50

IDENTIFICATION STAMP
DIV. OF THE STATE ARCHITECT
SACRAMENTO REGIONAL OFFICE
02 108714
AC
DATE 04-23-07

CALIFORNIA STATE FIRE MARSHAL APPROVED
Approval of this plan does not authorize or approve any omission or deviation from applicable regulations. Final approval is subject to field inspection. One set of approved plans shall be available on the project site at all times.
Reviewed by: JEFFERY SCHWARTZ
Approval date: 03/08/10

NOTE The Contractor shall verify all controlling field dimensions before ordering or fabricating any material.

DESIGN	BY TONY CHUN	CHECKED C. FAUST	
DETAILS	BY TONY CHUN	CHECKED	
QUANTITIES	BY	CHECKED	

STATE OF CALIFORNIA DEPARTMENT OF TRANSPORTATION

DIVISION OF ENGINEERING SERVICES ARCHITECTURAL AND STRUCTURAL DESIGN

BRIDGE NO. 50M5722
KM POST 32.66/33.30

TAFT MAINTENANCE STATION

GATE, FENCE ELEVATIONS AND DETAILS

SHEET GP-5

a0_05_gp_fenc.dgn
DS OSD metric Rev. 9/02 23-MAR-2010 05:45

SCALE: ALL DIMENSIONS ARE IN MILLIMETERS UNLESS OTHERWISE NOTED.

ORIGINAL SCALE IN MILLIMETERS FOR REDUCED PLANS 0 10 20 30 40 50 60 70 80 90 100

CU 06257
EA 483401

DISREGARD PRINTS BEARING EARLIER REVISION DATES

REVISION DATES (PRELIMINARY STAGE ONLY) 8/17/06 11/1/06 12/1/06 2/1/07 5/11/07 SHEET OF

23-MAR-2010 05:45

a0_05_gp_fenc.dgn

BUILDINGS DATA - CODE ANALYSIS

2007 EDITION CBC

DIST.	COUNTY	LOCATION CODE	KILOMETER POST TOTAL PROJECT	SHEET NO.	TOTAL SHEETS
06	Ker	5722		47	178

Caltrans Metric

LICENSED ARCHITECT — DATE

3-8-10
PLANS APPROVAL DATE

LICENSED ARCHITECT WARREN LAI No. 17122 Ren. 6/30/11 STATE OF CALIFORNIA

The State of California or its officers or agents shall not be responsible for the accuracy or completeness of electronic copies of this plan sheet.

Caltrans now has a web site! To get to the web site, go to: http://www.dot.ca.gov/

CREW / EQUIPMENT BUILDING

Room Areas & Occupancy Groups

Rm. No.	ROOM NAME	S.M. S.F.	Occ Grp
1	ENTRY	6.75 sm = 72 sf	B
2	HALLWAY	34.25 sm = 368 sf	
3	SUPERVISOR 1	14.76 sm = 158 sf	
4	SUPERVISOR 2	14.79 sm = 159 sf	
5	CREW ROOM 1	22.16 sm = 283 sf	
6	CREW ROOM 2	18.52 sm = 199 sf	
7	WOMEN'S	17.55 sm = 189 sf	
8	MEN'S	34.95 sm = 376 sf	
9	KITCHEN	8.15 sm = 87 sf	
10	COMMUNICATIONS ROOM	11.54 sm = 124 sf	
11	JANITOR	7.60 sm = 82 sf	
12	HVAC ROOM	9.92 sm = 106 sf	
13	VESTIBULE	11.21 sm = 120 sf	S-1
14	CREW STORAGE 1	22.24 sm =239 sf	
15	CREW STORAGE 2	22.32 sm = 240 sf	
16	EQUIPMENT BAY	224.34 sm = 2630 sf	
17	MECHANIC'S BAY	6.9 sm = 74 sf	
18	TRUCK BAY	57.55 sm = 619 sf	
19	UTILITY ROOM	12.51 sm = 134 sf	
20	RESTROOM	12.95 sm = 139 sf	
21	MECHANIC'S OFFICE	11.38 sm = 122 sf	

MIXED OCCUPANCIES

TOTAL B AREA = 200.85 sm (2,162 sf)
TOTAL S-1 AREA = 357.02 sm (3,843 sf)

B S-1

$$\frac{2,162\ sf}{9,000\ sf} + \frac{3,843\ sf}{9,000\ sf} = 0.24 + 0.42 = 0.66 < 1$$

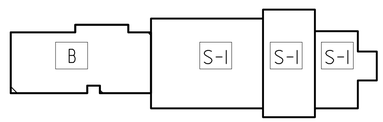

- OCCUPANCY GROUP : S-1 / B
- TYPE OF CONSTRUCTION : VB
- NUMBER OF STORIES : 1 STORY
- BUILDING HEIGHT : 5123 mm
- ALLOWABLE BUILDING HEIGHT : 12,192 mm (TABLE 503)
- OCCUPANCY 'B' BUILDING AREA : 200.94 sm = 2162 sf
- OCCUPANCY S-1 BUILDING AREA : 357.07 sm = 3843.5 sf
- ALLOWABLE AREA PER SECTION 503.1.2 TABLE 503
  B OCCUPANCY : 9,000 sf (836 sm)
  S-1 OCCUPANCY : 9,000 sf (836 sf)
- ALLOWABLE AREA FOR MIXED USE OCCUPANCY, NONSEPARATED :
  9,000 sf (PER SECTION 508.3.2) TABLE 503
- FIRE SPRINKLERED : NO
- FIRE ALARM : NO
- OTHER FIRE PROTECTION : NO
- SMOKE CONTROL : NO
- OCCUPANCY LOAD (PER TABLE 1004.1.1) : 29
- B OCCUPANCY : 9,000 sf (836 sm)
- MAX ALLOWABLE NUMBER OF PERSONS FOR THE NUMBER OF EXITS COMPLIES
- S-1 OCCUPANCY : 9,000 sf (836 sm)
- MAX ALLOWABLE NUMBER OF PERSONS FOR THE NUMBER OF EXITS COMPLIES

COVERED MATERIAL STORAGE BIN

- TYPE OF CONSTRUCTION : TYPE VB
- GROUP S-1 OCCUPANCY
- NUMBER OF STORIES : 1 STORY
- BUILDING HEIGHT : 4880 mm
- ALLOWABLE BUILDING HEIGHT : 12,192 mm (TABLE 503)
- ACTUAL AREA 1744 sf (162 sm)
- 2 - ADJACENT (E) COVERED STORAGE BINS 350 sf + 350 sf = 700 sf (65 sm)
- TOTAL AREA 1744 sf (162 sm) + 700 sf (65 sm) = 2,444 sf (227 sm)
- ALLOWABLE AREA 9,000 sf (743 sm)
  SECTION 503 .1.2 (TABLE 503)
- 9,000 sf (743 sm) > 2,444 sf (227 sm) AREA COMPLIED
- FIRE SPRINKLERED : NO
- FIRE ALARM : NO
- OTHER FIRE PROTECTION : NO
- SMOKE CONTROL : NO

(E) STORAGE BUILDING

- TYPE OF CONSTRUCTION : TYPE VB
- GROUP S-1 OCCUPANCY
- NUMBER OF STORIES : 1 STORY
- ACTUAL BUILDING HEIGHT : 9,144mm (TABLE 503)
- ALLOWABLE BUILDING HEIGHT : 12,192 mm (TABLE 503)
- ACTUAL AREA 3260 sf (303 sm)
- ALLOWABLE AREA 9,000 sf (743 sm)
  SECTION 503 .1.2 (TABLE 503)
- FIRE SPRINKLERED : NO
- FIRE ALARM : NO
- OTHER FIRE PROTECTION : NO
- SMOKE CONTROL : NO

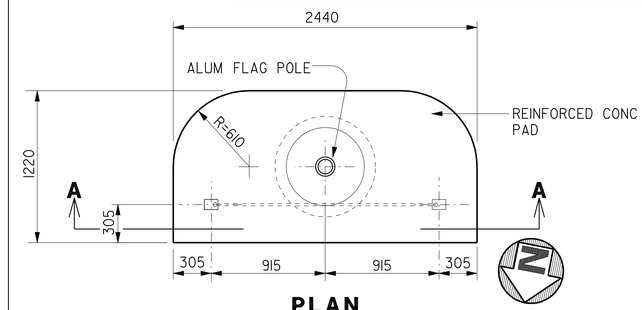

PLAN

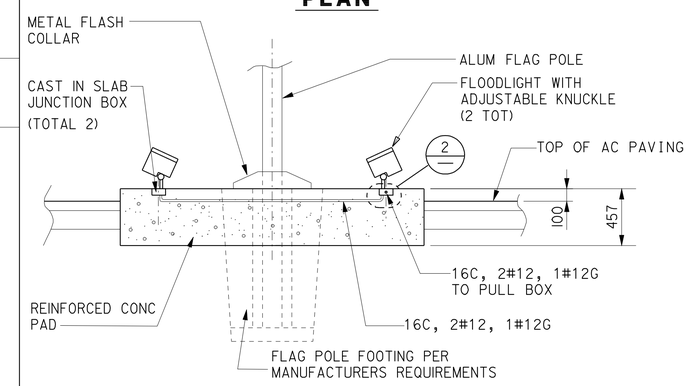

SECTION A-A

LIGHTED FLAG POLE DETAILS

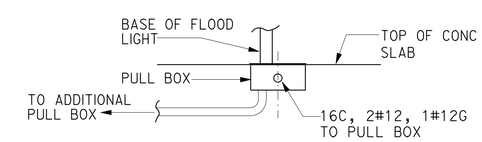

2 DETAIL AT PULL BOX

NOT TO SCALE

NOTE: ALL DIMENSIONS ARE IN MILLIMETERS UNLESS OTHERWISE SHOWN

IDENTIFICATION STAMP
DIV. OF THE STATE ARCHITECT
SACRAMENTO REGIONAL OFFICE
02 108714
DATE 04-23-07

CALIFORNIA STATE FIRE MARSHAL APPROVED
Approval of this plan does not authorize or approve any omission or deviation from applicable regulations. Final approval is subject to field inspection. One set of approved plans shall be available on the project site at all times.
Reviewed by: JEFFERY SCHWARTZ
Approval date: 03/08/10

NOTE *The Contractor shall verify all controlling field dimensions before ordering or fabricating any material.*

DESIGN	TONY CHUN	CHECKED	C. FAUST
DRAWN BY	TONY CHUN	STRUCTURAL REVIEW	

STATE OF CALIFORNIA
DEPARTMENT OF TRANSPORTATION

DIVISION OF STRUCTURE DESIGN
OFFICE OF TRANSPORTATION ARCHITECTURE

BRIDGE NO. 50M5722
km POST 32.66/33.30

CREW AND EQUIP. BUILDING

TAFT MAINTENANCE STATION

BUILDINGS DATA AND FLAG POLE DETAILS

SHEET **GP-6**

DS OSD 001M (1/96)

ORIGINAL SCALE IN MILLIMETERS FOR REDUCED PLANS 0 10 20 30 40 50 60 70 80 90 100

CU 06257
EA 48340I

DISREGARD PRINTS BEARING EARLIER REVISION DATES → 4/1/06 8/1/06 8/11/06 12/1/06 2/1/07 5/11/07

REVISION DATES (PRELIMINARY STAGE ONLY) SHEET 6 OF

FILE => a_gp6.dgn
DATE PLOTTED => 23-MAR-2010 TIME PLOTTED => 05:46

TIME PLOTTED => 05:46
USERNAME => tmilkes1 DATE PLOTTED =>

ARCHITECTURAL ABBREVIATIONS

&	AND
∟	ANGLE
℄	CENTER LINE
ϕ	DIAMETER OR ROUND
□	SQUARE
d	PENNY
25°	DEGREE
AFF	ABOVE FINISH FLOOR
APL	ASSUMED PROPERTY LINE
A/C	AIR CONDITIONING
AC	ASPHALT CONCRETE
AB	ANCHOR BOLT
ABV	ABOVE
ACOUS	ACOUSTICAL
ADJ	ADJUSTABLE
ALT	ALTERNATE
ALUM	ALUMINUM
APA	AMERICAN PLYWOOD ASSOCIATION
APPROX	APPROXIMATE
ARCH	ARCHITECTURAL, ARCHITECT
ASPH	ASPHALT
BD	BOARD
BIT	BITUMINOUS
BLDG	BUILDING
BLK	BLOCK
BLKG	BLOCKING
BM	BEAM
BN	BOUNDARY NAILING
BOT	BOTTOM
BR	BRIDGE
BTWN	BETWEEN
BUR	BUILT-UP-ROOFING
CJ	CONTROL JOINT
CL	CHAIN LINK
CAB	CABINET
CB	CATCH BASIN
CEM	CEMENT
CER	CERAMIC
CIP	CAST IN PLACE
CKBD	CHALKBOARD
CLG	CEILING
CMU	CONCRETE MASONRY UNIT
CLO	CLOSET
CLR	CLEAR
COL	COLUMN
CPTD	COMBINATION PAPER TOWEL DISPENSER & RECEPTACLE
CONC	CONCRETE
CONN	CONNECTION
CONST	CONSTRUCTION
CONT	CONTINUOUS
CORR	CORRIDOR
CPT	CARPET
CT	CERAMIC TILE
CTR	CENTER
CTSK	COUNTERSUNK
CY	CUBIC YARD
DBL	DOUBLE
DEPT	DEPARTMENT
DET	DETAIL
DF	DOUGLAS FIR
DIA	DIAMETER
DIM	DIMENSION
DN	DOWN
DP	DEEP
DR	DOOR
DS	DOWNSPOUT
D.I.	DRAINAGE INLET
DWG	DRAWING
DWR	DRAWER
(E)	EXISTING
E	EAST
EA	EACH
EHD	ELECTRIC HAND DRYER
EJ	EXPANSION JOINT
EL	ELEVATION (HEIGHT)
ELECT	ELECTRICAL
ELEV	ELEVATION (VIEW)
ELVR	ELEVATOR
EMER	EMERGENCY
ENCL	ENCLOSURE
EQ	EQUAL
EPB	ELECTRICAL PANELBOARD
EQUIP	EQUIPMENT
ESCL	ESCALATOR
EWC	ELECTRIC WATER COOLER
EXP	EXPANSION
EXPO	EXPOSED, EXPOSURE
EXT	EXTERIOR
EVAC	EVACUATION
FD	FLOOR DRAIN
FDN	FOUNDATION
F	FIRE EXTINGUISHER
FEC	FIRE EXTINGUISHER CABINET
FG	FINISH GRADE
FH	FIRE HYDRANT
FHC	FIRE HOSE CABINET
FHMS	FLATHEAD METAL SCREW
FHWS	FLATHEAD WOOD SCREW
FIN	FINISH
FJ	FLOOR JOIST
FLASH	FLASHING
FLR	FLOOR
FLUOR	FLUORESCENT
FOC	FACE OF CONCRETE
FOF	FACE OF FINISH
FOM	FACE OF MASONRY
FOS	FACE OF STUD
FRP	FIBERGLASS REINFORCED POLYESTER
FT	FEET, FOOT
FTG	FOOTING
FURR	FURRING
FWY	FREEWAY
GA	GAUGE
GAL	GALLON
GALV	GALVANIZED
GB	GRAB BAR
GI	GALVANIZED IRON
GL	GLASS
GLM	GLUE LAMINATED MEMBER
GLZ	GLAZING
GR	GRADE
GSM	GALVANIZED SHEET METAL
GYBD	GYPSUM BOARD
GYP SHTG	GYPSUM SHEATHING
HB	HOSE BIB
HC	HOLLOW CORE
HD	HEAD, HOLD DOWN
HDR	HEADER
HDWD	HARDWOOD
HDWR	HARDWARE
HEX	HEXAGONAL
HF	HEMLOCK-FIR
HG	HALF GLASS
HGR	HANGER
HM	HOLLOW METAL
HORIZ	HORIZONTAL
HP	HIGH POINT
HR	HOUR
HSB	HIGH STRENGTH BOLT
HT	HEIGHT
HVAC	HEATING,VENTILATING, AIR CONDITIONING
HWY	HIGHWAY
HL	COMPINATION LIGHT & HEAT UNIT
HMB	HORIZONTAL MINI BLINDS
HSS	HOLLOW STRUCTURAL SECTION
ID	INSIDE DIAMETER
IN	INCH
INSUL	INSULATION
INT	INTERIOR
JAN	JANITOR
JB	JUNCTION BOX
JH	JOIST HANGER
JST	JOIST
JT	JOINT
KIT	KITCHEN
LAB	LABORATORY
LAV	LAVATORY
LBS	POUNDS
LF	LINEAR FEET
LKR	LOCKER
LPG	LIQUIFIED PETROLEUM GAS
LS	LAG SCREW
M	METER
MAT	MATERIAL
MAX	MAXIMUM
MB	MACHINE BOLT
MBR	MEMBER
MECH	MECHANICAL
MEMB	MEMBRANE
MET	METAL
MFR	MANUFACTURER
MH	MAN HOLE
MIN	MINIMUM
MIR	MIRROR
MISC	MISCELLANEOUS
MIW	MALLEABLE IRON WASHER
MM	MILLIMETER
MO	MASONRY OPENING
MTD	MOUNTED
MUL	MULLION
N	NORTH
NIC	NOT IN CONTRACT
NO	NUMBER
NOM	NOMINAL
NTS	NOT TO SCALE
OBSC	OBSCURE
OC	ON CENTER
OD	OUTSIDE DIAMETER
OFF	OFFICE
OH	OPPOSITE HAND
OHD	OVERHEAD
OHWS	OVALHEAD WOOD SCREW
OPNG	OPENING
OPP	OPPOSITE
OPT	OPTION, OPTIONAL
OV/	OVER
P	PITCH
PB	POST BASE
PC	POST CAP
PCC	PORTLAND CEMENT CONCRETE
PCD	PAPER CUP DISPENSER
PT	POINT
PRTN	PARTITION
PR	PAIR
PMF	PRESSED METAL FRAME
PLWD	PLYWOOD
PLAS	PLASTER
PLAM	PLASTIC LAMINATE
PL	PLATE
PH	PHILLIPS HEAD
PSD	POWDER SOAP DISPENSER
PVC	POLYVINYL CHLORIDE
PWB	PREFABRICATED WOOD I BEAM
PREFAB	PREFABRICATED
QT	QUARRY TILE
(R)	RELOCATED
R	RADIUS, RISER
R/W	RIGHT OF WAY
RD	ROOF DRAIN
RDWD	REDWOOD
REF	REFERENCE
REFG	REFRIGERATOR
REINF	REINFORCED(ING)
REQ	REQUIRED
RFG	ROOFING
RFSWN	ROUGHSAWN
RH	ROUND HEAD
RHWS	ROUND HEAD WOOD SCREW
RJ	ROOF JOIST
RM	ROOM
RO	ROUGH OPENING
RSWN	RESAWN
RTE	ROUTE
RWL	RAINWATER LEADER
S	SOUTH
SC	SOLID CORE
SCHED	SCHEDULE
SD	SOAP DISPENSER OR SELF DRILLING
ST	SELF TAPPING
SF	SQUARE FEET
SH	SHELF
SHWR	SHOWER
SHT	SHEET
SHTG	SHEATHING
SIM	SIMILAR
SMS	SHEET METAL SCREW
SOHD	SECTIONAL OVERHEAD DOOR
SNR	SANITARY NAPKIN RESEPTACLE
SPEC	SPECIFICATION
SPS	STRUCTURAL PLYWOOD SHEATHING
SQ	SQUARE
SRRA	SAFETY ROADSIDE REST AREA
SS	SERVICE SINK
SST	STAINLESS STEEL
STA	STATION
STAG	STAGGER
STD	STANDARD
STL	STEEL
STOR	STORAGE
STRUC	STRUCTURAL
SUSP	SUSPENDED
SCW	SOLID CORE WOOD DOOR
SDS	SELF DRILLING SCREW
T	TREAD
T&G	TONGUE & GROOVE
TB	TOLL BOOTH
TEL	TELEPHONE
TEMP	TEMPORARY
TER	TERRAZZO
THK	THICK
THLD	THRESHOLD
TJ	TOOLED JOINT
TKBD	TACKBOARD
TN	TOE NAIL
TOC	TOP OF CURB OR CONCRETE
TOP	TOP OF PAVEMENT
TOS	TOE OF SLOPE
TOT	TOTAL
TOW	TOP OF WALL
TS	TUBULAR STEEL
TSCD	TOILET SEAT COVER DISPENSER
TTD	TOILET TISSUE DISPENSER
TYP	TYPICAL
UNF	UNFINISHED
UON	UNLESS OTHERWISE NOTED
UR	URINAL
VAR	VARIES
VCT	VINYL COMPOSITION TILE
VERT	VERTICAL
VEST	VESTIBULE
VR	VENT RISER
VTR	VENT THROUGH ROOF
V.B.	VENETIAN BLIND
W	WEST
W/	WITH
W/O	WITHOUT
WB	WATER BOTTLE
WC	WATER CLOSET
WD	WOOD
WDW	WINDOW
WH	WATER HEATER
WP	WORKING POINT
WR	WATER RESISTANT
WSCT	WAINSCOT
WT	WEIGHT
WTPR	WATERPROOFING
WWF	WELDED WIRE FABRIC
YD	YARD

SYMBOLS

- EARTH
- AC PAVING
- PARTITION
- CONCRETE
- CONCRETE MASONRY UNITS
- STEEL
- SAND/MORTAR/PLASTER
- BATT INSULATION
- RIGID INSULATION
- EXPANSION JOINT FILLER
- PLYWOOD
- GYPSUM BOARD
- CONTINUOUS WOOD FRAMING
- WOOD BLOCKING
- FINISH WOOD
- 102 — ROOM DESIGNATION
- 3 — DOOR DESIGNATION
- A — WINDOW DESIGNATION
- L2 — LOUVER DESIGNATION
- WORKING POINT
- 2 / A14 — ELEVATION INDENTIFICATION; SHEET NUMBER
- C / A12 — SECTION LETTER; SHEET NUMBER
- 2 / A21 — DETAIL NUMBER; SHEET NUMBER
- 2 / — DETAIL NUMBER; SAME SHEET
- A / 1 — GRID LINE (LETTER IN ONE DIRECTION, NUMBERS IN OTHER DIRECTION)

Caltrans Metric

DIST.	COUNTY	LOCATION CODE	KILOMETER POST TOTAL PROJECT	SHEET NO.	TOTAL SHEETS
06	Ker	5722		48	178

LICENSED ARCHITECT — DATE

3-8-10
PLANS APPROVAL DATE

LICENSED ARCHITECT WARREN LAI No. 17122 Ren. 6/30/09 STATE OF CALIFORNIA

The State of California or its officers or agents shall not be responsible for the accuracy or completeness of electronic copies of this plan sheet.

DESIGN CRITERIA

THE BUILDING WORK ON THIS PROJECT HAS BEEN DESIGNED TO CONFORM TO THE 2001 CALIFORNIA BUILDING CODE.

IDENTIFICATION STAMP
DIV. OF THE STATE ARCHITECT
SACRAMENTO REGIONAL OFFICE
02 108714
AC
DATE 04-23-07

CALIFORNIA STATE FIRE MARSHAL
APPROVED
Approval of this plan does not authorize or approve any omission or deviation from applicable regulations. Final approval is subject to field inspection. One set of approved plans shall be available on the project site at all times.
Reviewed by: JEFFERY SCHWARTZ
Approval date: 03/08/10

ALL DIMENSIONS ARE IN MILLIMETERS UNLESS OTHERWISE SHOWN.

NOTE
The Contractor shall verify all controlling field dimensions before ordering or fabricating any material.

DESIGN	TONY CHUN	CHECKED	C. FAUST
DRAWN BY	TONY CHUN	STRUCTURAL REVIEW	

STATE OF CALIFORNIA
DEPARTMENT OF TRANSPORTATION

DIVISION OF ENGINEERING SERVICES
ARCHITECTURAL AND STRUCTURAL DESIGN

BRIDGE NO. 50M5722
km POST 32.66/33.30

TAFT MAINTENANCE STATION
ARCHITECTURAL ABBREVIATIONS AND SYMBOLS

SHEET **A0-1**

DS OSD 001M (1/96)

ORIGINAL SCALE IN MILLIMETERS FOR REDUCED PLANS 0 10 20 30 40 50 60 70 80 90 100

CU 06257
EA 483401

DISREGARD PRINTS BEARING EARLIER REVISION DATES →
REVISION DATES (PRELIMINARY STAGE ONLY) 11/1/06 11/1/06 12/1/06 2/1/07 5/11/07 SHEET OF

FILE => a0_1_abbrev.dgn TIME PLOTTED => 05:46 DATE PLOTTED => 23-MAR-2010

TIME PLOTTED => 05:46 DATE PLOTTED => 23-MAR-2010 USERNAME => trmikesl

DIST.	COUNTY	LOCATION CODE	KILOMETER POST TOTAL PROJECT	SHEET NO.	TOTAL SHEETS
06	Ker	5722		49	178

Caltrans Metric

LICENSED ARCHITECT — DATE

3-8-10
PLANS APPROVAL DATE

LICENSED ARCHITECT WARREN LAI No. 17122 Ren. 6/30/09 STATE OF CALIFORNIA

The State of California or its officers or agents shall not be responsible for the accuracy or completeness of electronic copies of this plan sheet.

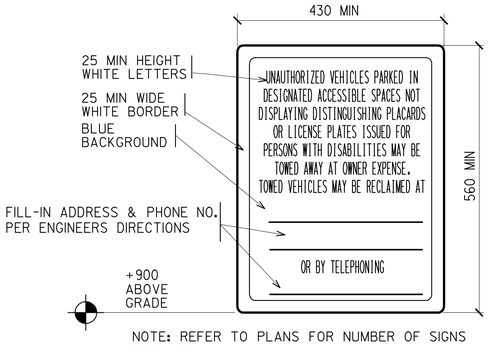

NOTE: REFER TO PLANS FOR NUMBER OF SIGNS REQUIRED

2 UNAUTHORIZED VEHICLES/PARKING AREA SIGN

NTS

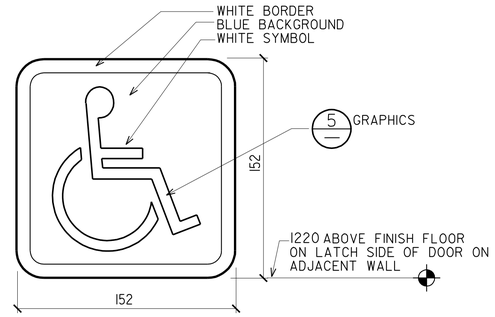

3 ACCESSIBLE BUILDING SIGN

NTS

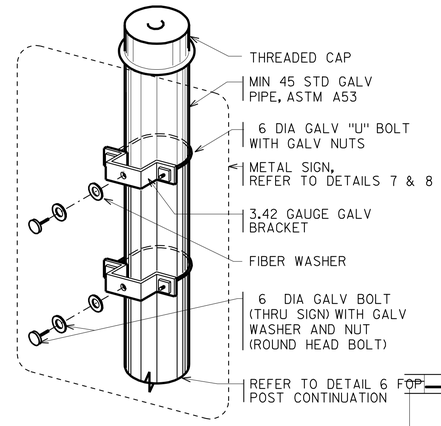

4 SIGN CONNECTION

NTS

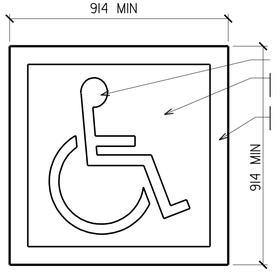

NOTE: REFER TO DETAIL 1 FOR TYPICAL PLACEMENT REFER TO SITE PLAN(S) FOR EXACT LOCATION(S)

5 PROPORTIONAL DATA PARKING STALL IDENTIFICATION SIGN

NTS

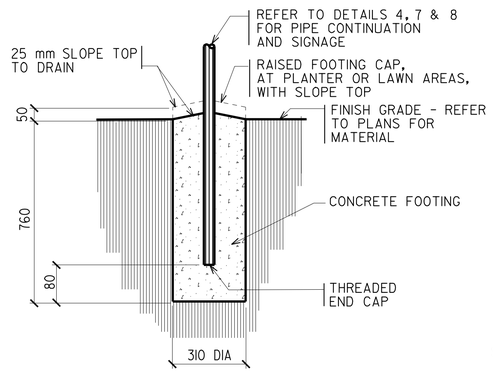

6 SIGN POST FOOTING DETAIL

NTS

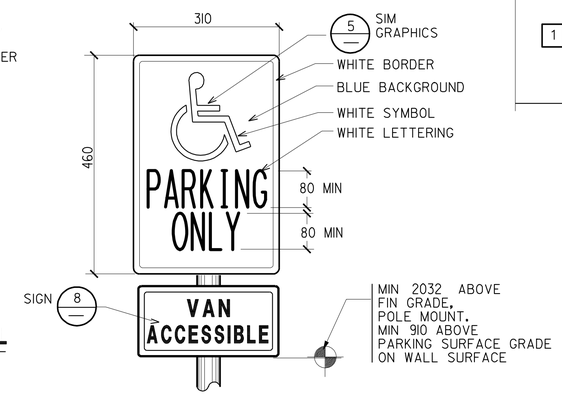

7 DISABLED PARKING STALL IDENTIFICATION SIGN

NTS

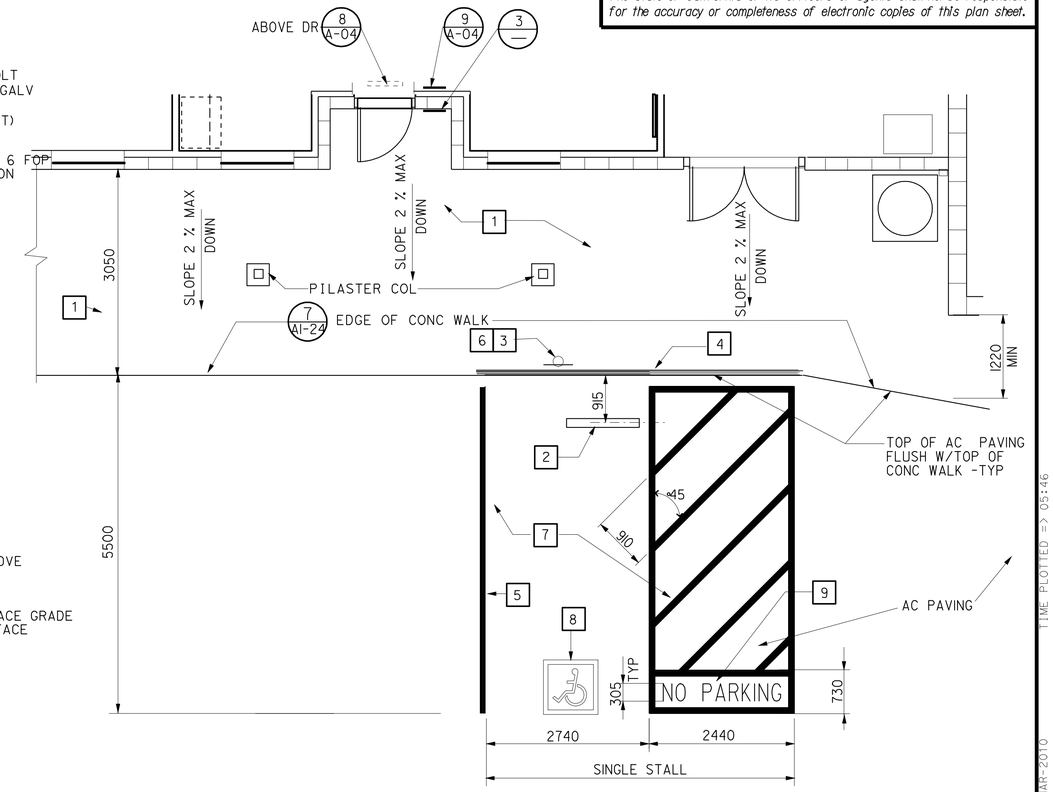

1 DISABLED ACCESSIBLE PARKING STALL LAYOUT

SCALE 1:50

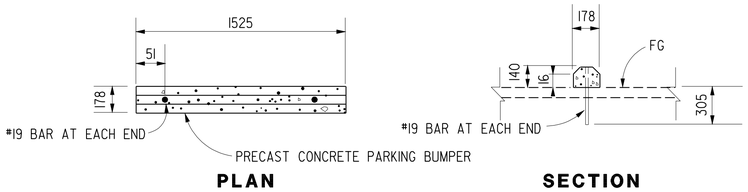

PLAN — SECTION

8 PARKING BUMPER (PRECAST CONCRETE)

NTS

KEYED NOTE LEGEND

THESE KEY NOTES PERTAIN TO THE ABOVE DETAIL ONLY.

1. CONCRETE WALK (WHERE OCCURS)-SEE PLANS FOR WIDTH, LAYOUT, FINISH, JOINTS, AND ELEVATIONS.
2. 1525 LONG PARKING BUMPER.
3. DISABLED PARKING SPACE SIGNAGE. REFER TO DETAIL 4 & 7 ON THIS SHEET.
4. 100 WIDE BLUE STRIPE AT END OF STALL ON PAVEMENT PARALLEL WITH CONC WALK.
5. 100 WIDE BLUE PARKING STALL DESIGNATION STRIPE. SEE SITE PLAN(S) FOR ADDITIONAL STALL STRIPING. SEE SPECIFICATIONS FOR PAINTING.
6. VAN ACCESSIBLE SIGNAGE, REFER TO DETAIL 7 THIS SHEET.
7. MAXIMUM SLOPE ON PARKING STALL PAVED AREA TO BE 2%.
8. INTERNATIONAL SYMBOL OF ACCESSIBILITY PAINTED ON ASPHALT CONCRETE. REFER TO DETAIL 5 ON THIS SHEET.
9. 300 MM HIGH LETTERS DESIGNATING "NO PARKING" IN THIS AREA. PAINT LETTERS WHITE.

IDENTIFICATION STAMP
DIV. OF THE STATE ARCHITECT
SACRAMENTO REGIONAL OFFICE
02 108714
AC
DATE 04-23-07

CALIFORNIA STATE FIRE MARSHAL APPROVED
Approval of this plan does not authorize or approve any omission or deviation from applicable regulations. Final approval is subject to field inspection. One set of approved plans shall be available on the project site at all times.
Reviewed by: JEFFERY SCHWARTZ
Approval date: 03/08/10

ALL DIMENSIONS ARE IN MILLIMETERS UNLESS OTHERWISE SHOWN.

NOTE: SPECIFIC DETAILS OR NOTES ON OTHER SHEETS SHALL PREVAIL OVER STANDARD DETAILS AND NOTES ON THIS SHEET

NOTE
The Contractor shall verify all controlling field dimensions before ordering or fabricating any material.

DESIGN	TONY CHUN	CHECKED	C. FAUST
DRAWN BY	TONY CHUN	STRUCTURAL REVIEW	

STATE OF CALIFORNIA DEPARTMENT OF TRANSPORTATION

DIVISION OF ENGINEERING SERVICES ARCHITECTURAL AND STRUCTURAL DESIGN

BRIDGE NO. 50M5722
Km POST 32.66/33.30

TAFT MAINTENANCE STATION

PROJECT SITE ACCESSIBILITY DETAILS

SHEET **A0-2**

DS OSD 001M (1/96)

ORIGINAL SCALE IN MILLIMETERS FOR REDUCED PLANS 0 10 20 30 40 50 60 70 80 90 100

CU 06257
EA 48340I

DISREGARD PRINTS BEARING EARLIER REVISION DATES → REVISION DATES (PRELIMINARY STAGE ONLY) 8/17/06 11/1/06 12/1/06 2/1/07 5/11/07 SHEET OF

FILE => a0_2_ada1.dgn TIME PLOTTED => 05:46 DATE PLOTTED => 23-MAR-2010

USERNAME => trmikes1 TIME PLOTTED => 05:46 DATE PLOTTED => 23-MAR-2010

DIST.	COUNTY	LOCATION CODE	KILOMETER POST TOTAL PROJECT	SHEET NO.	TOTAL SHEETS
06	Ker	5722		50	178

Caltrans Metric

LICENSED ARCHITECT — DATE

3-8-10
PLANS APPROVAL DATE

LICENSED ARCHITECT WARREN LAI No. 17122 Ren. 6/30/09 STATE OF CALIFORNIA

The State of California or its officers or agents shall not be responsible for the accuracy or completeness of electronic copies of this plan sheet.

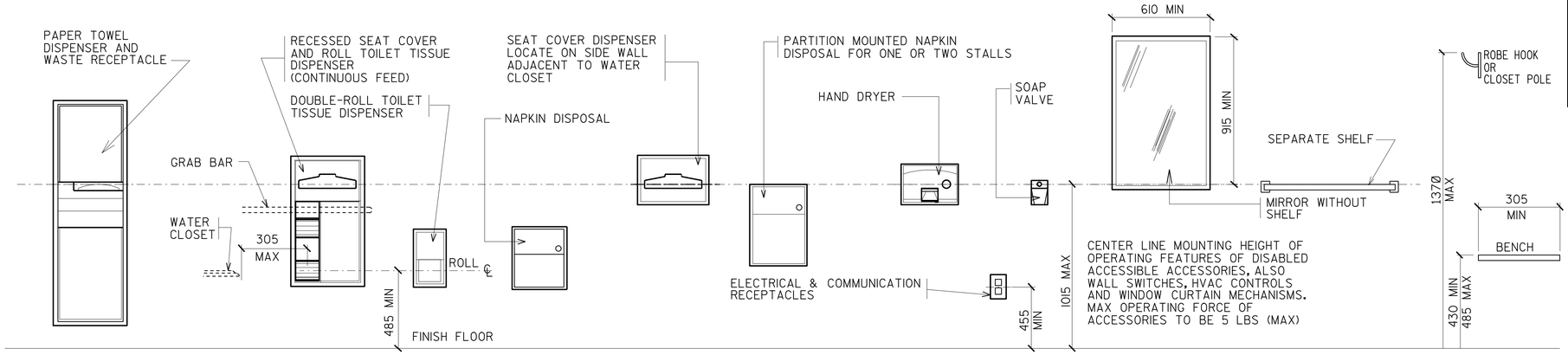

1 TOILET ACCESSORIES MOUNTING HEIGHTS OF ACCESSORIES FOR DISABLED ACCESSIBILITY

NTS

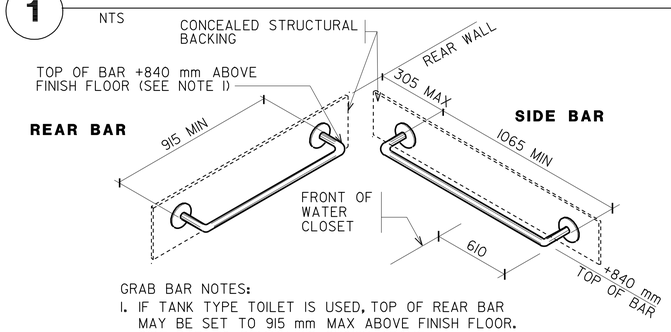

GRAB BAR NOTES:

1. IF TANK TYPE TOILET IS USED, TOP OF REAR BAR MAY BE SET TO 915 mm MAX ABOVE FINISH FLOOR. SIDE BAR TO REMAIN AS SHOWN ABOVE.
2. GRAB BARS TO BE 40 mm DIAMETER WITH CLEAR SPACE OF 40 mm TO SMOOTH SURFACE

2 GRAB BARS

NTS

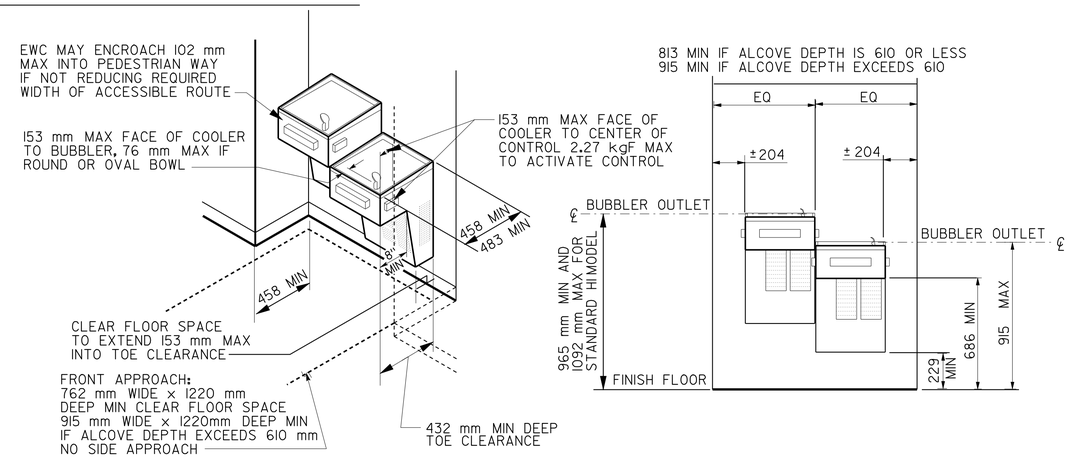

4 ALCOVE ELECTRIC WATER COOLER

NTS

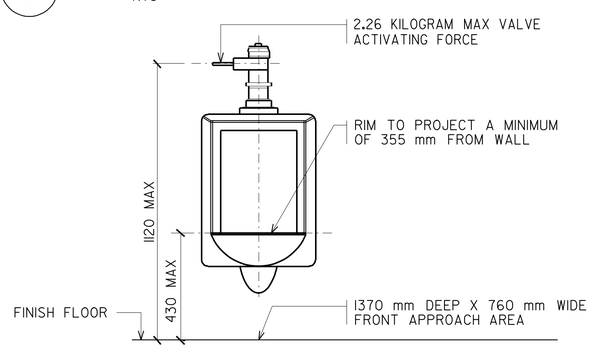

3 URINAL

NTS

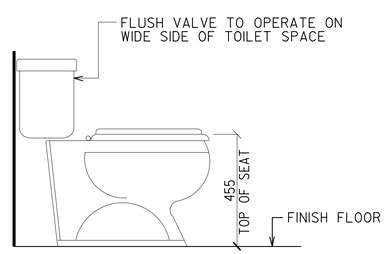

5 WATER CLOSET

NTS

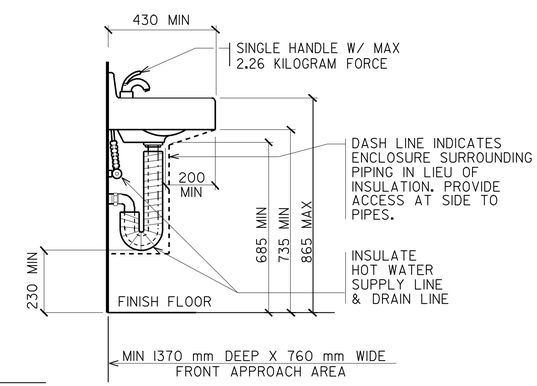

6 LAVATORY CLEARANCES

NTS

IDENTIFICATION STAMP
DIV. OF THE STATE ARCHITECT
SACRAMENTO REGIONAL OFFICE
02 108714
AC
DATE 04-23-07

CALIFORNIA STATE FIRE MARSHAL APPROVED
Approval of this plan does not authorize or approve any omission or deviation from applicable regulations. Final approval is subject to field inspection. One set of approved plans shall be available on the project site at all times.
Reviewed by: JEFFERY SCHWARTZ
Approval date: 03/08/10

ALL DIMENSIONS ARE IN MILLIMETERS UNLESS OTHERWISE SHOWN.

NOTE: SPECIFIC DETAILS OR NOTES ON OTHER SHEETS SHALL PREVAIL OVER STANDARD DETAILS AND NOTES ON THIS SHEET

NOTE
The Contractor shall verify all controlling field dimensions before ordering or fabricating any material.

DESIGN	TONY CHUN	CHECKED	C. FAUST
DRAWN BY	TONY CHUN	STRUCTURAL REVIEW	

STATE OF CALIFORNIA
DEPARTMENT OF TRANSPORTATION

DIVISION OF ENGINEERING SERVICES
ARCHITECTURAL AND STRUCTURAL DESIGN

BRIDGE NO. 50M5722
km POST 32.66/33.30

TAFT MAINTENANCE STATION
BUILDING INTERIOR ACCESSIBILITY DETAILS

SHEET A0-3

DS OSD 001M (1/96)

ORIGINAL SCALE IN MILLIMETERS FOR REDUCED PLANS 0 10 20 30 40 50 60 70 80 90 100

CU 06257
EA 483401

DISREGARD PRINTS BEARING EARLIER REVISION DATES → 2/13/07 5/11/07

REVISION DATES (PRELIMINARY STAGE ONLY) SHEET OF

FILE => a0_3ada2.dgn DATE PLOTTED => 23-MAR-2010 TIME PLOTTED => 05:46

USERNAME => tzmikes1 DATE PLOTTED => 23-MAR-2010 TIME PLOTTED => 05:46

DIST.	COUNTY	LOCATION CODE	KILOMETER POST TOTAL PROJECT	SHEET NO.	TOTAL SHEETS
06	Ker	5722		51	178

Caltrans Metric

LICENSED ARCHITECT — DATE

LICENSED ARCHITECT WARREN LAI No. 17122 Ren. 6/30/09 STATE OF CALIFORNIA

3-8-10
PLANS APPROVAL DATE

The State of California or its officers or agents shall not be responsible for the accuracy or completeness of electronic copies of this plan sheet.

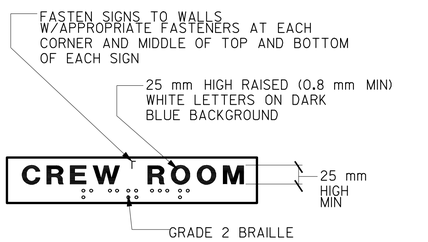

1 PERMANENT ROOM IDENTIFICATION SIGN

NTS

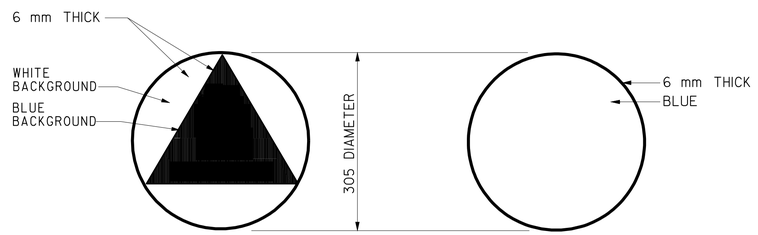

2 UNISEX RESTROOM SIGN

PROVIDE ADDITIONAL SIGN PER DETAIL 1, INSTALLED PER DETAIL 5 NOTE #1.

3 WOMEN'S RESTROOM SIGN

PROVIDE ADDITIONAL SIGN PER DETAIL 1, INSTALLED PER DETAIL 5 NOTE #1.

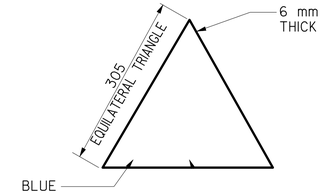

4 MEN'S RESTROOM SIGN

PROVIDE ADDITIONAL SIGN PER DETAIL 1, INSTALLED PER DETAIL 5 NOTE #1.

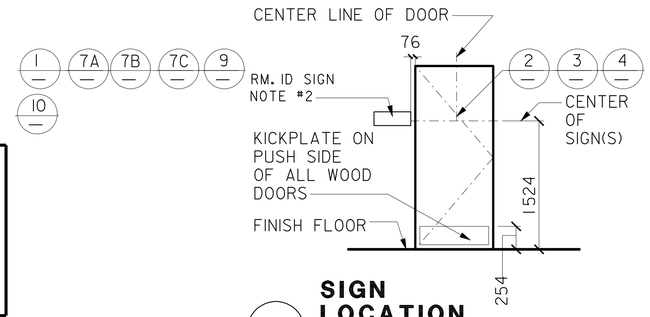

5 SIGN LOCATION

REFER TO "SIGNAGE NOTES" FOR ADDITIONAL INFORMATION

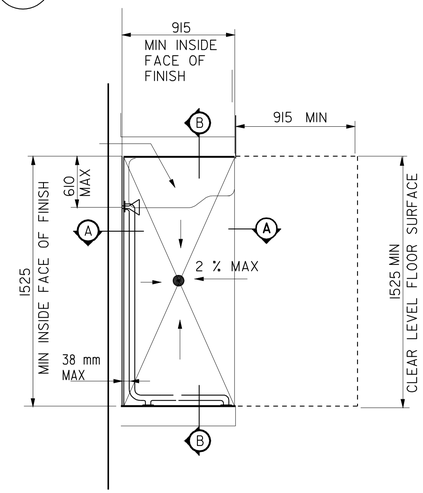

PLAN VIEW

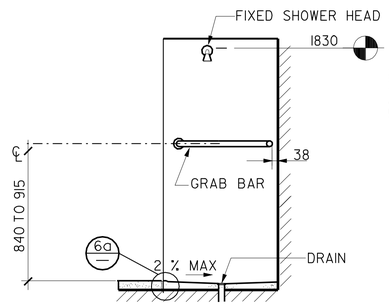

SECTION A-A

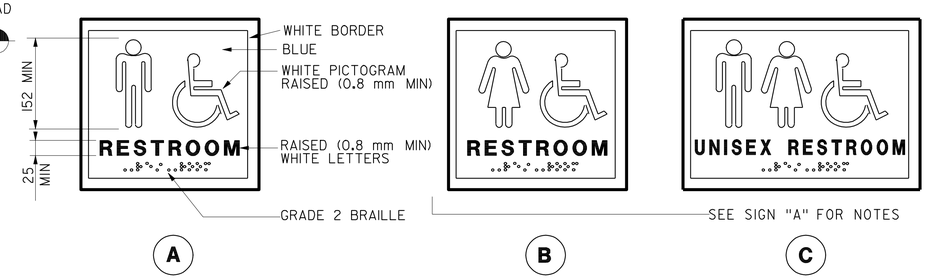

7 PERMANENT RESTROOM SIGN

NTS INSTALL PER DETAIL 5, NOTE #2

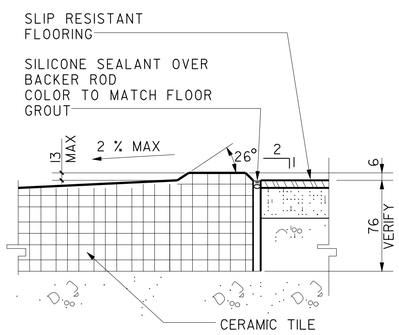

6a DETAIL

NTS

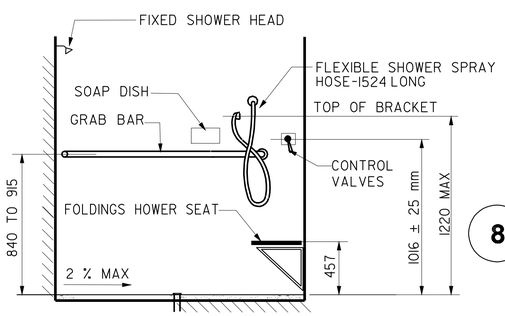

SECTION B-B

6 SHOWER STALL

NTS

SIGN GRAPHICS SHALL CONFORM TO CBC SECTION 1003.2.8.3

PROVIDE SELF-LUMINOUS EXIT SIGNS AT EXIT DOOR LOCATIONS. EXIT SIGN ILLUMINATION SHALL CONFORM TO CBC SECTION 1003.2.8.4

MOUNT SIGN ABOVE EXIT DOOR

8 SELF-LUMINOUS EXIT SIGN

NTS

CHARACTERS SHALL CONFORM TO CBC SECTION 1117B.5.3 AND 1117B.5.4

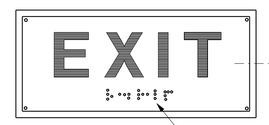

GRADE 2 BRAILLE WITH DOTS RAISED .635 mm ABOVE THE BACKGROUND

SIGN SHALL HAVE A NON-GLARE FINISH

CHARACTERS AND SYMBOLS SHALL CONTRAST WITH THEIR BACKGROUND

MOUNT SIGN ON WALL AT LATCH SIDE OF DOOR

9 TACTILE EXIT SIGN

NTS

SEE DETAIL 8 & 9 FOR ADDITIONAL NOTES

TECTILE EXIT SIGNAGE APPLIED AT ALL EXITS LEADING INTO CORRIDORS

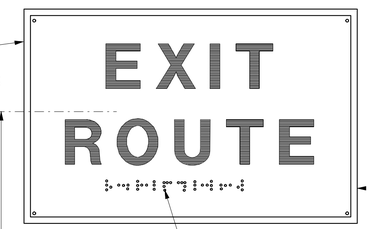

10 EXIT SIGN

NTS

NOTE:

SPECIFIC DETAILS OR NOTES ON OTHER SHEETS SHALL PREVAIL OVER STANDARD DETAILS AND NOTES ON THIS SHEET

SIGNAGE NOTES:

1. DOOR COLOR TO DISTINCTLY CONTRAST WITH COLOR OF SIGNS INDICATED IN DETAIL 2.
2. LOCATE ROOM IDENTIFICATION SIGNS ON WALL ADJACENT TO DOOR, ON EXTERIOR LATCH SIDE.
3. REFER TO SPECIFICATIONS FOR COLORS AND MATERIALS FOR SIGNS INDICATED IN DETAILS 1 AND 2.
4. PROVIDE SIGNAGE WHERE INDICATED SYMBOLS IN THE FLOOR PLANS

2 SYMBOLS FOR SIGNAGE

IDENTIFICATION STAMP
DIV. OF THE STATE ARCHITECT
SACRAMENTO REGIONAL OFFICE
02 108714
AC
DATE 04-23-07

CALIFORNIA STATE FIRE MARSHAL APPROVED
Approval of this plan does not authorize or approve any omission or deviation from applicable regulations. Final approval is subject to field inspection. One set of approved plans shall be available on the project site at all times.
Reviewed by: JEFFERY SCHWARTZ
Approval date: 03/08/10

All dimensions shown in millimeters unless noted otherwise.

NOTE: SPECIFIC DETAILS OR NOTES ON OTHER SHEETS SHALL PREVAIL OVER STANDARD DETAILS AND NOTES ON THIS SHEET

NOTE
The Contractor shall verify all controlling field dimensions before ordering or fabricating any material.

DESIGN	TONY CHUN	CHECKED	C. FAUST
DRAWN BY	TONY CHUN	STRUCTURAL REVIEW	

STATE OF CALIFORNIA DEPARTMENT OF TRANSPORTATION

DIVISION OF ENGINEERING SERVICES ARCHITECTURAL AND STRUCTURAL DESIGN

BRIDGE NO. 50M5722
km POST 32.66/33.30

TAFT MAINTENANCE STATION
BUILDING INTERIOR ACCESSIBILITY DETAILS

SHEET A0-4

DS OSD 001M (1/96)

ORIGINAL SCALE IN MILLIMETERS FOR REDUCED PLANS 0 10 20 30 40 50 60 70 80 90 100

CU 06257
EA 483401

DISREGARD PRINTS BEARING EARLIER REVISION DATES → 2/21/07 4/27/07

REVISION DATES (PRELIMINARY STAGE ONLY) SHEET OF

FILE => a0_4ada3.dgn
DATE PLOTTED => 23-MAR-2010 TIME PLOTTED => 05:47

TIME PLOTTED => DATE PLOTTED => 23-MAR-2010 USERNAME => trmikesl

DIST.	COUNTY	LOCATION CODE	KILOMETER POST TOTAL PROJECT	SHEET NO.	TOTAL SHEETS
06	Ker	5722		52	178

Caltrans Metric

LICENSED ARCHITECT — DATE

3-8-10
PLANS APPROVAL DATE

LICENSED ARCHITECT WARREN LAI No. 17122 Exp. 6/30/09 STATE OF CALIFORNIA

The State of California or its officers or agents shall not be responsible for the accuracy or completeness of electronic copies of this plan sheet.

CERTIFICATE OF COMPLIANCE (Part 1 of 3) MECH-1-C

PROJECT NAME CREW AND EQUIPMENT BLDG AT TAFT MAINTENANCE STATION		DATE 4 - 1- 2007
PROJECT ADDRESS 27450 HIGHWAY 33 AT TAFT MAINTENANCE STATION		N/A Building Permit #
PRINCIPAL DESIGNER-MECHANICAL MICHAEL S SLAVENSKY	TELEPHONE (916) 227-8202	N/A Checked by/Date Enforcement Agency Use
DOCUMENTATION AUTHOR MICHAEL S SLAVENSKY	TELEPHONE (916) 227-8202	

GENERAL INFORMATION

DATE OF PLANS	BUILDING CONDITIONED FLOOR AREA	CLIMATE ZONE 13

BUILDING TYPE ☒ NONRESIDENTIAL ☐ HIGH RISE RESIDENTIAL ☐ HOTEL/MOTEL GUEST ROOM

PHASE OF CONSTRUCTION ☒ NEW CONSTRUCTION ☐ ADDITION ☐ ALTERATION ☐ UNCONDITIONED (File affidavit)

PHASE OF ENVELOPE COMPLIANCE ☐ PREVIOUS ENVELOPE PERMIT ☒ ENVELOPE COMPLIANCE ATTACHED

STATEMENT OF COMPLIANCE

This Certificate of Compliance lists the building features and performance specifications needed to comply with Title 24, Parts 1 and 6 of the California Code of Regulations. This certificate applies only to building mechanical requirements.

The documentation preparer hereby certifies that the documentation is accurate and complete.

DOCUMENTATION AUTHOR	SIGNATURE	DATE
MICHAEL S SLAVENSKY	Michael Slavensky	MARCH 27, 2006

The Principal Mechanical Designer hereby certifies that the proposed building design represented in this set of construction documents is consistent with the other compliance forms and worksheets, with the specifications, and with any other calculations submitted with this permit application. The proposed building has been designed to meet the mechanical requirements contained in the applicable parts of Sections 100, 101, 102, 110 through 115, 120 through 125, 142, 144 and 145.

✓
☒ The plans & specifications meet the requirements of Part 6 (Sections 10-103a).

☒ The installation certificates meet the requirements of Part 6 (10-103a 3).

☒ The operation & maintenance information meets the requirements of Part 6 (10-103c).

(This section of the Business and Professions Code is printed in full in the Nonresidential Manual.)

☒ I hereby affirm that I am eligible under the provisions of Division 3 of the Business and Professions Code to sign this document as the person responsible for its preparation; and that I am licensed in the State of California as a civil engineer or mechanical engineer, or I am a licensed architect.

PRINCIPAL MECHANICAL DESIGNER-NAME	SIGNATURE	DATE	LIC.#
MICHAEL S SLAVENSKY	Michael Slavensky	MARCH 27, 2006	M28530

MECHANICAL MANDATORY MEASURES

☐ Indicate location on plans of Note Block for Mandatory Measures _____

INSTRUCTIONS TO APPLICANT MECHANICAL COMPLIANCE & WORKSHEETS (Check box if worksheet is included)

☒	MECH-1-C	Certificate of Compliance. Part 1 of 3, 2 of 3, 3 of 3 are required on plans for all submittals.
☒	MECH-2-C	Certificate of Compliance. Part 1 of 3, 2 of 3, 3 of 3 are required for all submittals, but may be on plans.
☒	MECH-3-C	Certificate of Compliance are required for all submittals with mechanical ventilation, but may be on plans.
☐	MECH-4-C	Certificate of Compliance are required for all prescriptive submittals, but may be on plans.

2005 Nonresidential Compliance Forms ***April 2005***

CERTIFICATE OF COMPLIANCE (Part 1 of 2) ENV-1-C

PROJECT NAME CREW AND EQUIPMENT BLDG AT TAFT MAINTENANCE STATION		DATE 4 - 1- 2007
PROJECT ADDRESS 27450 HIGHWAY 33 AT TAFT MAINTENANCE STATION		N/A Building Permit #
PRINCIPAL DESIGNER-ENVELOPE WARREN LAI	TELEPHONE 916-227-8289	N/A Checked by/Date Enforcement Agency Use
DOCUMENTATION AUTHOR ANTHONY A CHUN	TELEPHONE 916-227-8293	

GENERAL INFORMATION

DATE OF PLANS	MARCH 23, 2005	BUILDING CONDITIONED FLOOR AREA 756 SQUARE METERS	CLIMATE ZONE 13

BUILDING TYPE ☒ NONRESIDENTIAL ☐ HIGH RISE RESIDENTIAL ☐ HOTEL/MOTEL GUEST ROOM

☐ RELOCATABLE - Indicate: ☐ Specific climate - list _____, or ☐ all climates

PHASE OF CONSTRUCTION ☒ NEW CONSTRUCTION ☐ ADDITION ☐ ALTERATION ☐ UNCONDITIONED (File affidavit)

METHOD OF ENVELOPE COMPLIANCE ☐ COMPONENT ☐ OVERALL ENVELOPE ☒ PERFORMANCE

SUPPORTING FORMS SUBMITTED ☐ ENV-2-C (Component) ☐ ENV-3-C (Overall Envelope) ☐ ENV-4-C (Skylight Worksheet)

STATEMENT OF COMPLIANCE

This Certificate of Compliance lists the building features and performance specifications needed to comply with Title 24, Parts 1 and 6 of the California Code of Regulations. This certificate applies only to building envelope requirements.

The documentation preparer hereby certifies that the documentation is accurate and complete.

DOCUMENTATION AUTHOR	SIGNATURE	DATE
WARREN LAI	Warren Lai	MARCH 23, 2005

The Principal Envelope Designer hereby certifies that the proposed building design represented in this set of construction documents is consistent with the other compliance forms and worksheets, with the specifications, and with any other calculations submitted with this permit application. The proposed building has been designed to meet the envelope requirements contained in Sections 110, 116 through 118, and 140, 142, 143 or 149 of Title 24, Part 6.

(This section of the Business and Professions Code is printed in full in the Nonresidential Manual.)

☐ I hereby affirm that I am eligible under the provisions of Division 3 of the Business and Professions Code to sign this document as the person responsible for its preparation; and that I am licensed in the State of California as a civil engineer or mechanical engineer, or I am a licensed architect.

PRINCIPAL ENVELOPE DESIGNER-NAME	SIGNATURE	DATE	LIC.#
WARREN LAI	Warren Lai	MARCH 23, 2005	C-17122

ENVELOPE MANDATORY MEASURES

☐ Indicate location on plans of Note Block for Mandatory Measures _____

INSTRUCTIONS TO APPLICANT ENVELOPE COMPLIANCE & WORKSHEETS (Check box if worksheet is included)

For detailed instructions on the use of this and all Energy Efficiency Standards compliance forms, please refer to the Nonresidential Manual published by the California Energy Commission.

☒	ENV-1-C	Certificate of Compliance. Required on plans for all submittals. Part 2 may be incorporated in schedules on plans.
☐	ENV-2-C	Use with the Envelope Component compliance method.
☐	ENV-3-C	Use with the Overall Envelope compliance method.
☐	ENV-4-C	Optional. Use for the minimum skylight requirements for large enclosed spaces.

2005 Nonresidential Compliance Forms ***April 2005***

IDENTIFICATION STAMP
DIV. OF THE STATE ARCHITECT
SACRAMENTO REGIONAL OFFICE
02 108714
AC _____
DATE 04-23-07

CALIFORNIA STATE FIRE MARSHAL APPROVED
Approval of this plan does not authorize or approve any omission or deviation from applicable regulations. Final approval is subject to field inspection. One set of approved plans shall be available on the project site at all times.
Reviewed by: JEFFERY SCHWARTZ
Approval date: 03/08/10

ALL DIMENSIONS ARE IN MILLIMETERS UNLESS OTHERWISE SHOWN.

NOTE The Contractor shall verify all controlling field dimensions before ordering or fabricating any material.

DESIGN TONY CHUN	CHECKED C. FAUST	STATE OF CALIFORNIA DEPARTMENT OF TRANSPORTATION	DIVISION OF ENGINEERING SERVICES ARCHITECTURAL AND STRUCTURAL DESIGN
DRAWN BY TONY CHUN	STRUCTURAL REVIEW		

BRIDGE NO. 50M5722 — KM POST 32.66/33.30

TAFT MAINTENANCE STATION

CREW AND EQUIP. BUILDING — TITLE 24 ENERGY COMPLIANCE FORMS

SHEET **AO-5**

DS OSD metric (1/96) — SCALE: ALL DIMENSIONS ARE IN MILLIMETERS UNLESS OTHERWISE NOTED. — ORIGINAL SCALE IN MILLIMETERS FOR REDUCED PLANS 0 10 20 30 40 50 60 70 80 90 100

CU 06257
EA 483401

DISREGARD PRINTS BEARING EARLIER REVISION DATES → 4/1/06 5/11/07

REVISION DATES (PRELIMINARY STAGE ONLY) — SHEET — OF

FILE => a0_5title24.dgn DATE PLOTTED => 23-MAR-2010 TIME PLOTTED => 05:47

TIME PLOTTED => 05:47 USERNAME =>

DIST.	COUNTY	LOCATION CODE	KILOMETER POST TOTAL PROJECT	SHEET NO.	TOTAL SHEETS
06	Ker	5722		53	178

Caltrans Metric

LICENSED ARCHITECT — DATE 6/21/06

LICENSED ARCHITECT WARREN LAI No. 17122 Exp. 6/30/07 STATE OF CALIFORNIA

3-8-10
PLANS APPROVAL DATE

The State of California or its officers or agents shall not be responsible for the accuracy or completeness of electronic copies of this plan sheet.

CERTIFICATE OF COMPLIANCE (Part 1 of 4) LTG-1-C

PROJECT NAME CREW AND EQUIPMENT BLDG AT TAFT MAINTENANCE STATION		DATE 4 - 1- 2007
PROJECT ADDRESS 27450 HIGHWAY 33 AT TAFT MAINTENANCE STATION		
PRINCIPAL DESIGNER-LIGHTING CHI WU	TELEPHONE (916) 227-8345	Building Permit #
DOCUMENTATION AUTHOR TECH NGOV	TELEPHONE (916) 227-8529	Checked by/Date Enforcement Agency Use

GENERAL INFORMATION

DATE OF PLANS | BUILDING CONDITIONED FLOOR AREA *1039 Sq Meters* | CLIMATE ZONE *13*

BUILDING TYPE ☑ NONRESIDENTIAL ☐ HIGH RISE RESIDENTIAL ☐ HOTEL/MOTEL GUEST ROOM
☑ CONDITIONED SPACES ☐ UNCONDITIONED SPACES ☐ INDOOR / OUTDOOR SIGNS

PHASE OF CONSTRUCTION ☑ NEW CONSTRUCTION ☐ ADDITION ☐ ALTERATION

METHOD OF COMPLIANCE ☐ PERFORMANCE ☑ COMPLETE BUILDING ☑ AREA CATEGORY
☐ TAILORED ☐ COMMON LIGHTING

STATEMENT OF COMPLIANCE

This Certificate of Compliance lists the building features and performance specifications needed to comply with Title 24, Parts 1 and 6 of the California Code of Regulations. This certificate applies only to building lighting requirements.

The documentation preparer hereby certifies that the documentation is accurate and complete.

DOCUMENTATION AUTHOR	SIGNATURE	DATE
TECH NGOV	Techngov	4 - 1- 2007

The Principal Lighting Designer hereby certifies that the proposed building design represented in this set of construction documents is consistent with the other compliance forms and worksheets, with the specifications, and with any other calculations submitted with this permit application. The proposed building has been designed to meet the lighting requirements contained in the applicable parts of Sections 110, 119, 130-132, 146, 148, & 149 of Title 24, Part 6.

✓
☑ The plans & specifications meet the requirements of Part 6 (Sections 10-103a).

☑ The installation certificates meet the requirements of Part 6 (10-103a 3).

☑ The operation & maintenance information meets the requirements of Part 6 (10-103c).

(This section of the Business and Professions Code is printed in full in the Nonresidential Manual.)
☑ I hereby affirm that I am eligible under the provisions of Division 3 of the Business and Professions Code to sign this document as the person responsible for its preparation; and that I am licensed in the State of California as a civil engineer or electrical engineer, or I am a licensed architect.

PRINCIPAL LIGHTING DESIGNER-NAME	SIGNATURE	DATE	LIC.#
TECH NGOV	Techngov	4 - 1- 2007	E14521

LIGHTING MANDATORY MEASURES

☐ Indicate location on plans of Note Block for Mandatory Measures _____

LIGHTING COMPLIANCE FORMS & WORKSHEETS (Check box if worksheet is included)

☑	LTG-1-C, Parts 1 of 4 and 2 of 4	Certificate of Compliance. Part 1 of 4 and 2 of 4 are required for all submittals.
☐	LTG-1-C, Part 3 of 4	Certificate of Compliance. Part 3 of 4 is required only if Control Credits are claimed.
☐	LTG-1-C, Part 4 of 4	Certificate of Compliance. Part 4 of 4 submittal is required when lighting controls are installed.
☐	LTG-2-C	Interior Lighting Schedule
☐	LTG-3-C	Portable Lighting Worksheet
☐	LTG-4-C	Lighting Controls Credit Worksheet
☐	LTG-5-C	Interior Lighting Power Allowance
☐	LTG-6-C	Tailored Method Worksheet
☐	LTG-7-C	Room Cavity Ratio Worksheet
☐	LTG-8-C	Common Lighting Systems Method Worksheet
☐	LTG-9-C	Line Voltage Track Lighting Worksheet
☐	OLTG-4-C	Signs (See OLTG-4-C Sign Worksheet in Chapter 6, Outdoor Lighting and Signs Chapter)

2005 Nonresidential Compliance Forms ***April 2007***

CERTIFICATE OF COMPLIANCE (Part 1 of 2) OLTG-1-C

PROJECT NAME CREW AND EQUIPMENT BLDG AT TAFT MAINTENANCE STATION		DATE 4 - 1- 2007
PROJECT ADDRESS 27450 HIGHWAY 33 AT TAFT MAINTENANCE STATION		
PRINCIPAL DESIGNER-LIGHTING CHI WU	TELEPHONE (916) 227-8345	Building Permit #
DOCUMENTATION AUTHOR TECH NGOV	TELEPHONE (916) 227-8529	Checked by/Date Enforcement Agency Use

GENERAL INFORMATION

DATE OF PLANS | OUTDOOR LIGHTING ZONE (✓ One) ☐ LZ1 ☑ LZ2 ☐ LZ3 ☐ LZ4

FUNCTION TYPE ☑ OUTDOOR LIGHTING ☐ OUTDOOR SIGNS ☐ INDOOR SIGNS

PHASE OF CONSTRUCTION ☑ NEW CONSTRUCTION ☐ ADDITION ☐ ALTERATION

STATEMENT OF COMPLIANCE

This Certificate of Compliance lists outdoor lighting system specifications needed to comply with Title 24, Parts 1 and 6 of the California Code of Regulations. This certificate applies only to building lighting requirements.

The documentation preparer hereby certifies that the documentation is accurate and complete.

DOCUMENTATION AUTHOR	SIGNATURE	DATE
TECH NGOV	Techngov	4 - 1- 2007

The Principal Lighting Designer hereby certifies that the proposed outdoor lighting and signs design represented in this set of construction documents is consistent with the other compliance forms and worksheets, with the specifications, and with any other calculations submitted with this permit application. The proposed building has been designed to meet the lighting requirements contained in the applicable parts of Sections 110, 119, 130 through 132, 146, & 149 of Title 24, Part 6.

(This section of the Business and Professions Code is printed in full in the Nonresidential Manual.)
☑ I hereby affirm that I am eligible under the provisions of Division 3 of the Business and Professions Code to sign this document as the person responsible for its preparation; and that I am licensed in the State of California as a civil engineer or electrical engineer, or I am a licensed architect.

PRINCIPAL LIGHTING DESIGNER-NAME	SIGNATURE	DATE	LIC.#
TECH NGOV	Techngov	4 - 1- 2007	E14521

INSTRUCTIONS TO APPLICANT OUTDOOR LIGHTING COMPLIANCE & WORKSHEETS (Check box if worksheet is included)

For detailed instructions on the use of this and all Energy Efficiency Standards compliance forms, please refer to the Nonresidential Manual published by the California Energy Commission.

☑	OLTG-1-C	Certificate of Compliance. Required on plans for all submittals for outdoor lighting. Part 2 of 2 may be incorporated in schedules on the plans.
		Either LTG-1-C or OLTG-1-C may be used for signs as follows: 1. Use LTG-1-C if the project consists solely of indoor signs. 2. Use LTG-1-C if the project consists of indoor lighting, and outdoor or indoor signs, but no other outdoor lighting. 3. Use OLTG-1-C if the project consists solely of outdoor signs. 4. Use OLTG-1-C if the project consists of outdoor lighting, and indoor or outdoor signs, but no other indoor lighting.
☐	OLTG-2-C	Lighting Compliance Summary. Applicable parts required for ALL outdoor lighting allowances (Except for signs)
☐	OLTG-3-C	Area Calculations Worksheets. Applicable parts required for all outdoor area calculations
☐	OLTG-4-C	Sign Lighting Compliance. Required for all internally and externally illuminated signs, for both indoor and outdoor signs.

2007 Nonresidential Compliance Forms ***April 2007***

IDENTIFICATION STAMP
DIV. OF THE STATE ARCHITECT
SACRAMENTO REGIONAL OFFICE
02 108714
AC
DATE 04-23-07

CALIFORNIA STATE FIRE MARSHAL APPROVED
Approval of this plan does not authorize or approve any omission or deviation from applicable regulations. Final approval is subject to field inspection. One set of approved plans shall be available on the project site at all times.
Reviewed by: JEFFERY SCHWARTZ
Approval date: 03/08/10

NOTE The Contractor shall verify all controlling field dimensions before ordering or fabricating any material.

DESIGN TONY CHUN	CHECKED	STATE OF CALIFORNIA DEPARTMENT OF TRANSPORTATION
DRAWN BY TONY CHUN	STRUCTURAL REVIEW	DIVISION OF ENGINEERING SERVICES ARCHITECTURAL AND STRUCTURAL DESIGN

BRIDGE NO. 50M5722 — KM POST 32.66/33.30

TAFT MAINTENANCE STATION
CREW AND EQUIP. BUILDING — TITLE 24 ENERGY COMPLIANCE FORMS

SHEET **AO-6**

DS OSD metric (1/96) — SCALE: ALL DIMENSIONS ARE IN MILLIMETERS UNLESS OTHERWISE NOTED. — ORIGINAL SCALE IN MILLIMETERS FOR REDUCED PLANS 0 10 20 30 40 50 60 70 80 90 100

CU 06257
EA 483401

DISREGARD PRINTS BEARING EARLIER REVISION DATES → REVISION DATES (PRELIMINARY STAGE ONLY) 6/21/06 5/11/07

SHEET 9 OF 40

23-MAR-2010 05:47

FILE => a0_6tite24.dgn DATE PLOTTED => 23-MAR-2010 TIME PLOTTED => 05:47

D:\My Documents\district\wkndwgs\projects\3expedite\taff 011509\a0_6tite24.dgn

DOOR SIGNAGE

Numbers are applicable where noted on plans

Number	CBC Section	Signage Text or Content	Detail Sheet
1	1115B.5 1117B.5.1.2	Gender Symbol Rm. ID, pictogramm & ISA	A0-4 Details 2,3,4,7A,7B,7C
2	1003.2.8.6.1.1	"Exit"	A0-4 Detail 9
3	1003.2.8.6.1.3&4	"Exit Route"	A0-4 Detail 10
4	1117B.5.1.2	Room ID	A0-4 Detail 1
5	1117B.5.1.2 1117B.5.8.1	Building Entrance/ Room ID & ISA	A0-2 Detail 3 A0-4 Detail 1

4 = DOOR SIGNAGE IN PLAN

METAL SHELVING SCHEDULE

No.	DESCRIPTION	QUANITY
S1	1220x457x2210 FLOOR MOUNTED METAL SHELVING UNITS WITH 5 SHELVES	14
S2	915x457x2210 FLOOR MOUNTED METAL SHELVING UNITS WITH 5 SHELVES	8

NOTE: ALL METAL SHELVING UNITS SHALL BE ATTACHED TO THE SUPPORTING WALLS PER MANUFACTURERS REQUIREMENTS

IDENTIFICATION STAMP
DIV. OF THE STATE ARCHITECT
SACRAMENTO REGIONAL OFFICE
02 108714
AC
DATE 04-23-07

CALIFORNIA STATE FIRE MARSHAL
APPROVED
Approval of this plan does not authorize or approve any omission or deviation from applicable regulations. Final approval is subject to field inspection. One set of approved plans shall be available on the project site at all times.
Reviewed by: JEFFERY SCHWARTZ
Approval date: 03/08/10

Caltrans Metric

DIST.	COUNTY	LOCATION CODE	KILOMETER POST TOTAL PROJECT	SHEET NO.	TOTAL SHEETS
06	Ker	5722		54	178

LICENSED ARCHITECT — DATE

LICENSED ARCHITECT WARREN LA No. C-17122 Exp. 6/30/09 STATE OF CALIFORNIA

3-8-10
PLANS APPROVAL DATE

The State of California or its officers or agents shall not be responsible for the accuracy or completeness of electronic copies of this plan sheet.

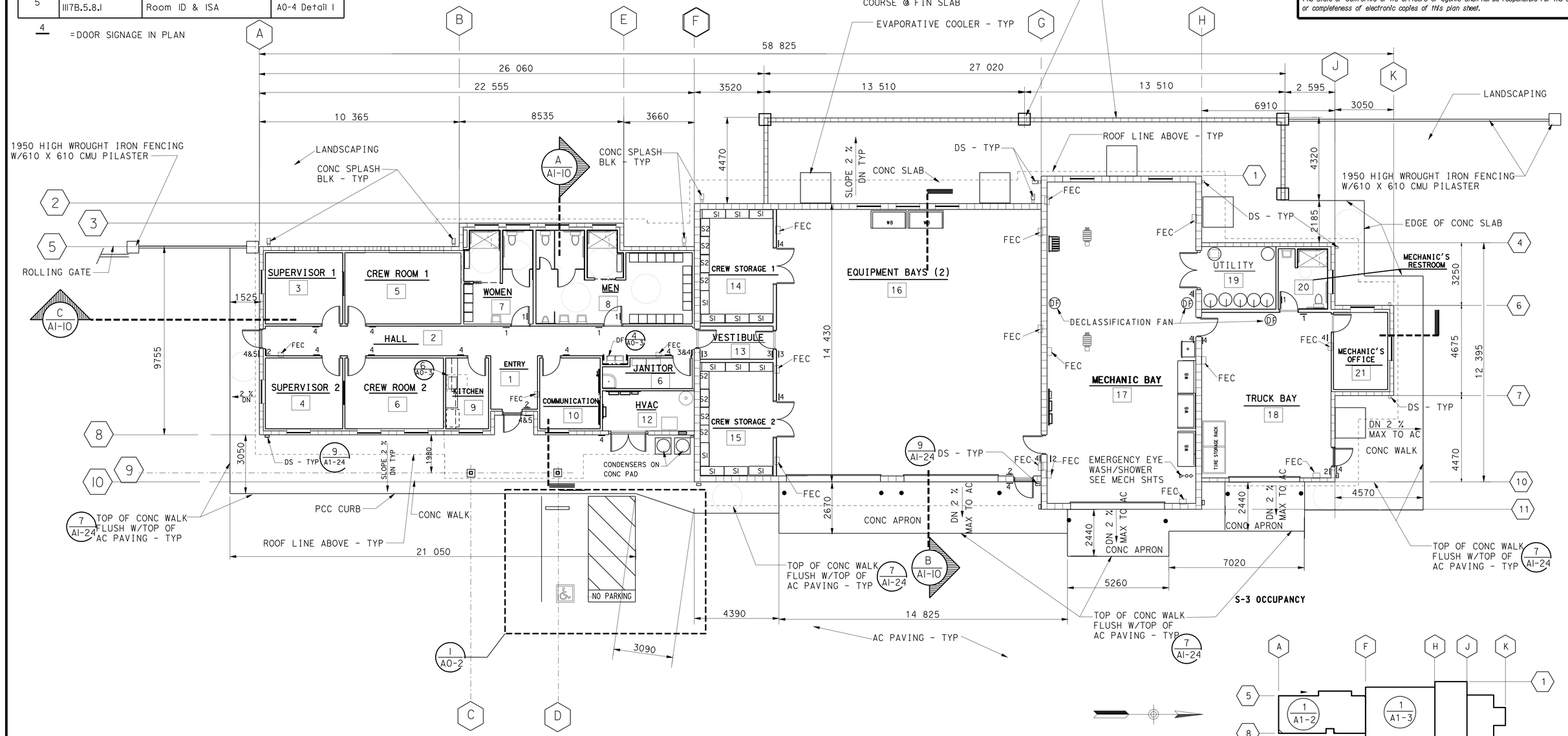

FLOOR PLAN - CREW/EQUIPMENT BUILDING

SCALE 1:100 ELEVATION 322.839 METERS - DATUM 0 mm NOTE : SEE A1 - 2 FOR WALL LEGEND

All dimensions shown in millimeters unless noted otherwise.

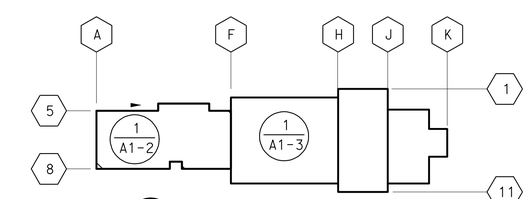

A KEY PLAN
SCALE 1 : 500

DESIGN	BY TONY CHUN	CHECKED C. FAUST	
DETAILS	BY TONY CHUN	CHECKED	
QUANTITIES	BY	CHECKED	

STATE OF CALIFORNIA
DEPARTMENT OF TRANSPORTATION

DIVISION OF ENGINEERING SERVICES
ARCHITECTURAL AND STRUCTURAL DESIGN

BRIDGE NO. 50M5722
KM POST 32.66/33.30

TAFT MAINTENANCE STATION
CREW AND EQUIP. BUILDING
FLOOR PLAN

SHEET A1-1

a1_01csptflplsn0.dgn
DS OSD metric Rev. 9/02 23-MAR-2010 05:47

SCALE: ALL DIMENSIONS ARE IN MILLIMETERS UNLESS OTHERWISE NOTED.

ORIGINAL SCALE IN MILLIMETERS FOR REDUCED PLANS 0 10 20 30 40 50 60 70 80 90 100

CU 06257
EA 483401

DISREGARD PRINTS BEARING EARLIER REVISION DATES

REVISION DATES (PRELIMINARY STAGE ONLY) 10/18/05 8/1/06 11/1/06 12/1/06 2/1/07 5/11/07 SHEET OF

23-MAR-2010 05:47
a1_01csptflplsn0.dgn

DIST.	COUNTY	LOCATION CODE	KILOMETER POST TOTAL PROJECT	SHEET NO.	TOTAL SHEETS
06	Ker	5722		55	178

LICENSED ARCHITECT — DATE

LICENSED ARCHITECT WARREN LAI No. C-17122 Exp. 6/30/09 STATE OF CALIFORNIA

3-8-10
PLANS APPROVAL DATE

The State of California or its officers or agents shall not be responsible for the accuracy or completeness of electronic copies of this plan sheet.

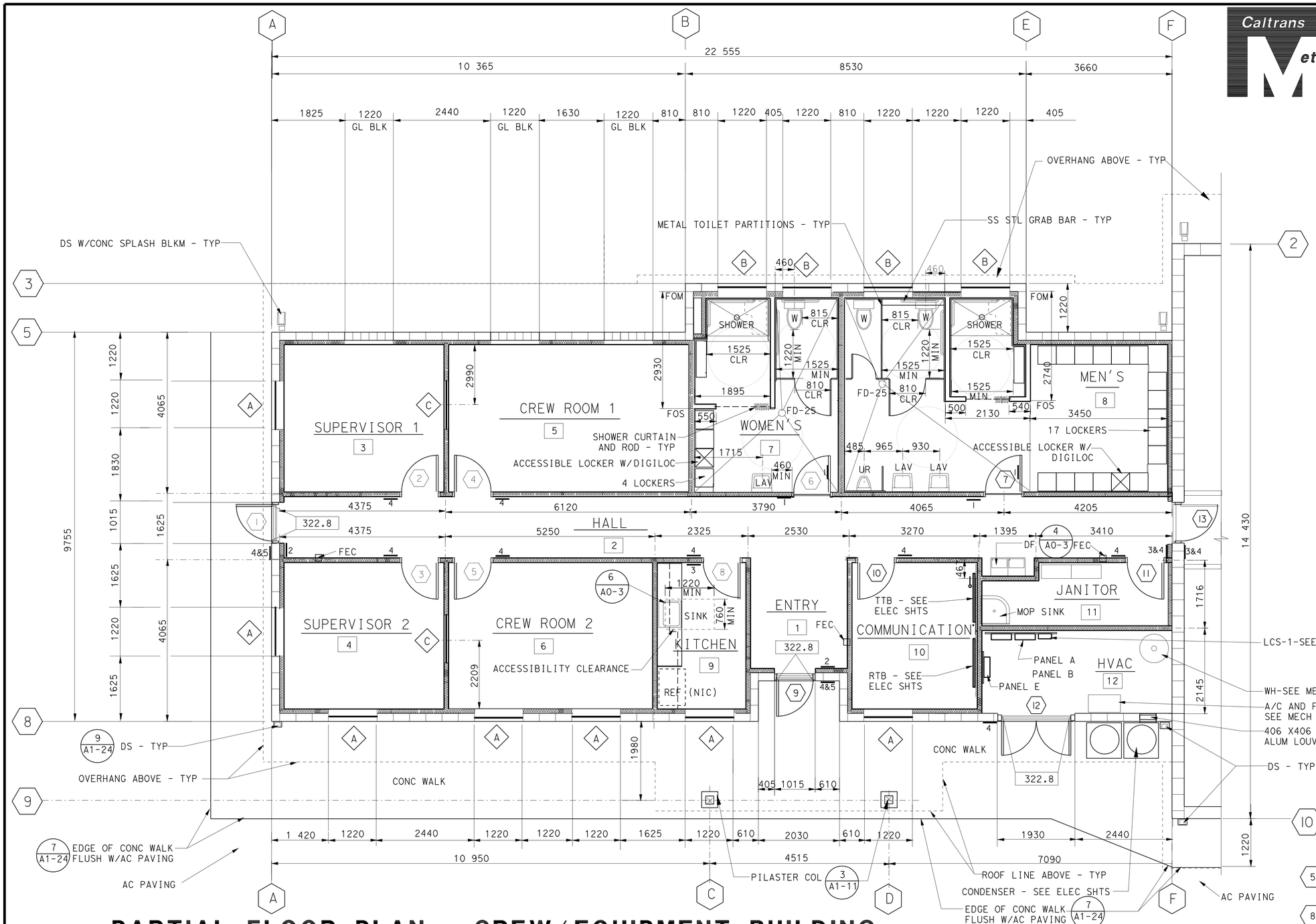

PARTIAL FLOOR PLAN - CREW/EQUIPMENT BUILDING

SCALE 1:50 ELEVATION 322.839 METER - DATUM 0 mm

WALL LEGEND

- 203 X 203 X 406 CMU W/ INSULATED STUD FURRED WALL
- 203 X 305 X 406 CMU WALL
- 203 X 203 X 203 GLASS BLK
- WD STUD WALL W/BATT INSUL
- WD STUD WALL W/O BATT INSUL

SYMBOL LEGEND

WB	WORK BENCH
4	SYMBOL FOR SIGNAGE - SEE DOOR SIGNAGE TABLE AT A1-1

IDENTIFICATION STAMP
DIV. OF THE STATE ARCHITECT
SACRAMENTO REGIONAL OFFICE
02 108714
AC A
DATE 04-23-07

CALIFORNIA STATE FIRE MARSHAL APPROVED
Approval of this plan does not authorize or approve any omission or deviation from applicable regulations. Final approval is subject to field inspection. One set of approved plans shall be available on the project site at all times.
Reviewed by: JEFFERY SCHWARTZ
Approval date: 03/08/10

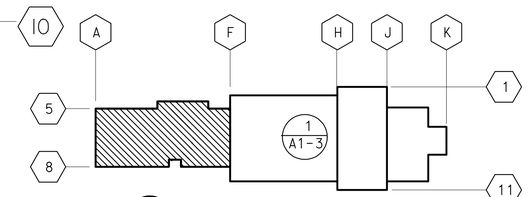

A KEY PLAN
SCALE 1 : 500

	BY		CHECKED	
	BY	TONY CHUN	CHECKED	C. FAUST
DETAILS	BY	TONY CHUN	CHECKED	
QUANTITIES	BY		CHECKED	

STATE OF CALIFORNIA DEPARTMENT OF TRANSPORTATION

DIVISION OF ENGINEERING SERVICES
ARCHITECTURAL AND STRUCTURAL DESIGN

BRIDGE NO. 50M5722
KM POST 32.22/33.30

CU 06600
EA 483401

TAFT MAINTENANCE STATION

CREW AND EQUIP. BUILDING

PARTIAL FLOOR PLAN I

SHEET A1-2

a1_02csptflplsn1.dgn
DS OSD metric Rev. 9/02 23-MAR-2010 05:48

SCALE: ALL DIMENSIONS ARE IN MILLIMETERS UNLESS OTHERWISE NOTED.

ORIGINAL SCALE IN MILLIMETERS FOR REDUCED PLANS 0 10 20 30 40 50 60 70 80 90 100

DISREGARD PRINTS BEARING EARLIER REVISION DATES

REVISION DATES (PRELIMINARY STAGE ONLY) 10/18/05 8/1/06 11/1/06 12/1/06 2/1/07 5/1/07 SHEET OF

23-MAR-2010 05:48

a1_02csptflplsn1.dgn

DIST.	COUNTY	LOCATION CODE	KILOMETER POST TOTAL PROJECT	SHEET NO.	TOTAL SHEETS
06	Ker	5722		56	178

LICENSED ARCHITECT — DATE

LICENSED ARCHITECT WARREN LAI No. C-17122 Exp. 6/30/09 STATE OF CALIFORNIA

3-8-10
PLANS APPROVAL DATE

The State of California or its officers or agents shall not be responsible for the accuracy or completeness of electronic copies of this plan sheet.

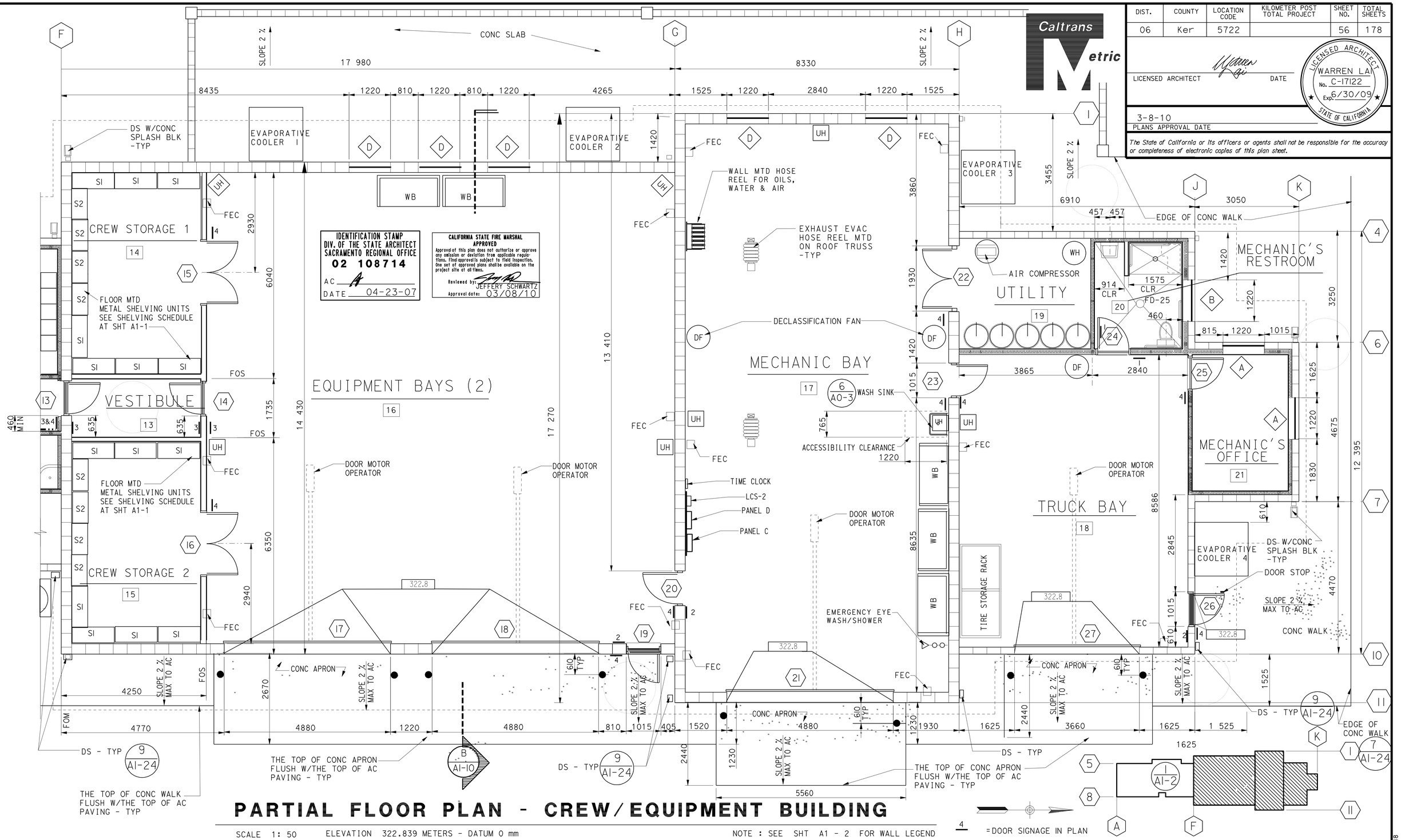

IDENTIFICATION STAMP
DIV. OF THE STATE ARCHITECT
SACRAMENTO REGIONAL OFFICE
02 108714
AC
DATE 04-23-07

CALIFORNIA STATE FIRE MARSHAL APPROVED
Approval of this plan does not authorize or approve any omission or deviation from applicable regulations. Final approval is subject to field inspection. One set of approved plans shall be available on the project site at all times.
Reviewed by: JEFFERY SCHWARTZ
Approval date: 03/08/10

PARTIAL FLOOR PLAN - CREW/EQUIPMENT BUILDING

SCALE 1: 50 ELEVATION 322.839 METERS - DATUM 0 mm

NOTE : SEE SHT A1 - 2 FOR WALL LEGEND

DESIGN	BY TONY CHUN	CHECKED C. FAUST	
DETAILS	BY TONY CHUN	CHECKED	
QUANTITIES	BY	CHECKED	

STATE OF CALIFORNIA DEPARTMENT OF TRANSPORTATION

DIVISION OF ENGINEERING SERVICES ARCHITECTURAL AND STRUCTURAL DESIGN

BRIDGE NO. 50M5722
KM POST 32.66/33.30

TAFT MAINTENANCE STATION
CREW AND EQUIP. BUILDING
PARTIAL FLOOR PLAN 2

SHEET **A1-3**

a1_03csptflplsn2.dgn
DS OSD metric Rev. 9/02 23-MAR-2010 05:48

SCALE: ALL DIMENSIONS ARE IN MILLIMETERS UNLESS OTHERWISE NOTED.

ORIGINAL SCALE IN MILLIMETERS FOR REDUCED PLANS 0 10 20 30 40 50 60 70 80 90 100

CU 06257
EA 483401

DISREGARD PRINTS BEARING EARLIER REVISION DATES →

REVISION DATES (PRELIMINARY STAGE ONLY) 10/18/05 8/1/06 11/1/06 12/1/06 2/1/07 5/11/07 SHEET OF

23-MAR-2010 05:48
a1_03csptflplsn2.dgn

ALL DIMENSIONS ARE IN MILLIMETERS UNLESS OTHERWISE SHOWN.

Caltrans Metric

DIST.	COUNTY	LOCATION CODE	KILOMETER POST TOTAL PROJECT	SHEET NO.	TOTAL SHEETS
06	Ker	5722		57	178

LICENSED ARCHITECT DATE

LICENSED ARCHITECT WARREN LAI No. C-17122 Exp. 6/30/09 STATE OF CALIFORNIA

3-8-10
PLANS APPROVAL DATE

The State of California or its officers or agents shall not be responsible for the accuracy or completeness of electronic copies of this plan sheet.

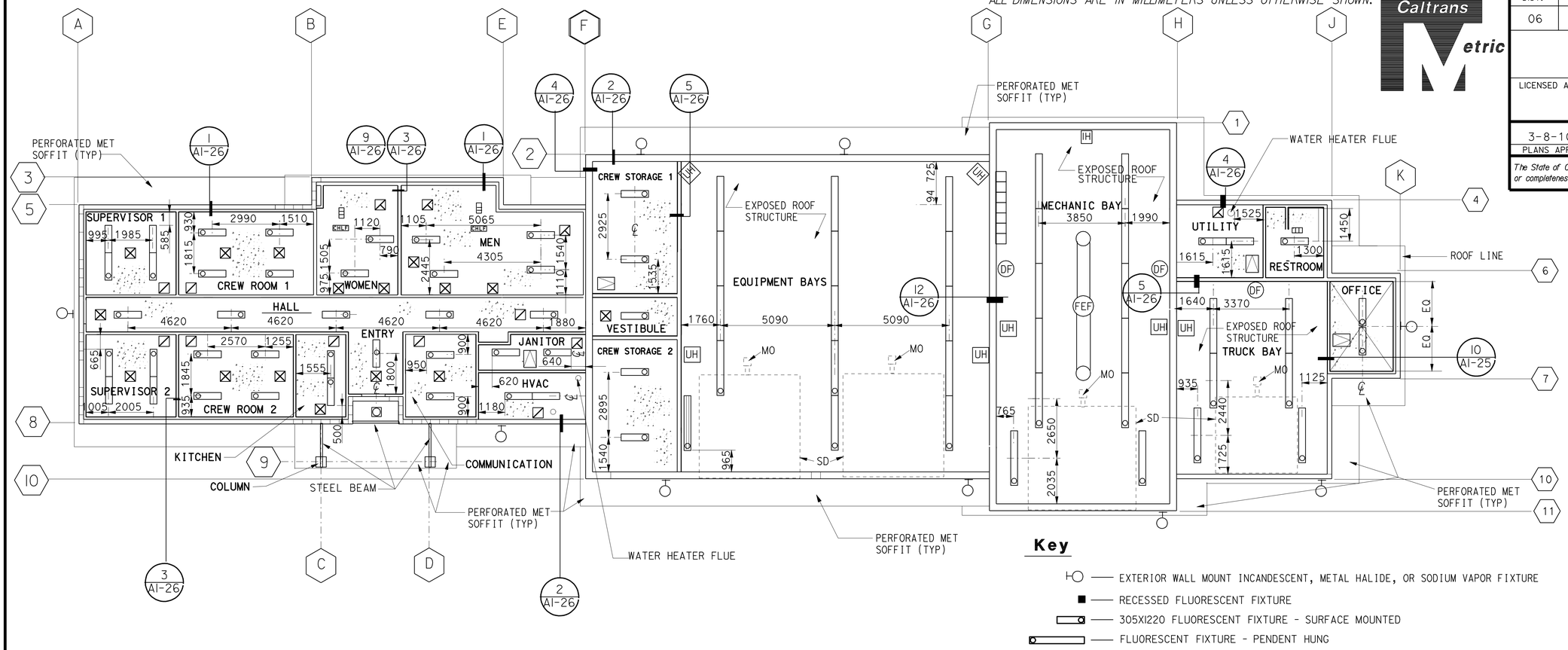

REFLECTED CEILING PLAN - CREW & EQUIPMENT BUILDING

SCALE 1:100

NOTE : SEE ELECTRICAL AND MECHANICAL SHEETS FOR FIXTURES

Key

- EXTERIOR WALL MOUNT INCANDESCENT, METAL HALIDE, OR SODIUM VAPOR FIXTURE
- RECESSED FLUORESCENT FIXTURE
- 305X1220 FLUORESCENT FIXTURE - SURFACE MOUNTED
- FLUORESCENT FIXTURE - PENDENT HUNG
- FLUORESCENT FIXTURE - BRACKET MOUNTED ON WALL
- AIR RETURN REGISTER
- AIR SUPPLY DIFFUSER
- HEAT LAMP, LIGHT, EXHAUST FAN COMBO
- IH — INFRARED HEATER
- MO — MOTOR OPERATOR
- SD — SECTIONAL DOOR
- DF — DECLASSIFICATION FAN
- FEF — FUME EXHAUST FAN
- HEAT LIGHT VENT
- GYP BD CEILING
- 560 X760 CEILING ACCESS PANEL DR (6/A1-26)
- RECESSED INCANDESCENT, METAL HALIDE, OR SODIUM VAPOR FIXTURE
- UH — UNIT HEATER

NOTE
The Contractor shall verify all controlling field dimensions before ordering or fabricating any material.

IDENTIFICATION STAMP
DIV. OF THE STATE ARCHITECT
SACRAMENTO REGIONAL OFFICE
02 108714
A.C. ____
DATE 04-23-07

CALIFORNIA STATE FIRE MARSHAL APPROVED
Approval of this plan does not authorize or approve any omission or deviation from applicable regulations. Final approval is subject to field inspection. One set of approved plans shall be available on the project site at all times.
Reviewed by: JEFFERY SCHWARTZ
Approval date: 03/08/10

	BY		CHECKED
DESIGN	TONY CHUN		C. FAUST
DETAILS	TONY CHUN		
QUANTITIES			

STATE OF CALIFORNIA
DEPARTMENT OF TRANSPORTATION

DIVISION OF ENGINEERING SERVICES
ARCHITECTURAL AND STRUCTURAL DESIGN

BRIDGE NO. 50M5722
KM POST 32.66/33.30

TAFT MAINTENANCE STATION
CREW AND EQUIP. BUILDING
REFLECTED CEILING PLAN

SHEET A1-4

a1_04csfclgpln.dgn
DS OSD metric Rev. 9/02 23-MAR-2010 05:48

SCALE: ALL DIMENSIONS ARE IN MILLIMETERS UNLESS OTHERWISE NOTED.

ORIGINAL SCALE IN MILLIMETERS FOR REDUCED PLANS 0 10 20 30 40 50 60 70 80 90 100

CU 06257
EA 483401

DISREGARD PRINTS BEARING EARLIER REVISION DATES →

REVISION DATES (PRELIMINARY STAGE ONLY) 10/18/05 4/1/06 11/1/06 12/1/06 2/1/07 5/11/07 SHEET OF

23-MAR-2010 05:48
a1_04csfclgpln.dgn

DIST.	COUNTY	LOCATION CODE	KILOMETER POST TOTAL PROJECT	SHEET NO.	TOTAL SHEETS
06	Ker	5722		58	178

LICENSED ARCHITECT — DATE

LICENSED ARCHITECT WARREN LAI No. C-17122 Exp. 6/30/11 STATE OF CALIFORNIA

3-8-10
PLANS APPROVAL DATE

The State of California or its officers or agents shall not be responsible for the accuracy or completeness of electronic copies of this plan sheet.

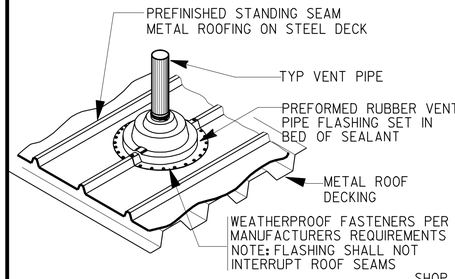

1 ROOF VENT FLASHING
NTS

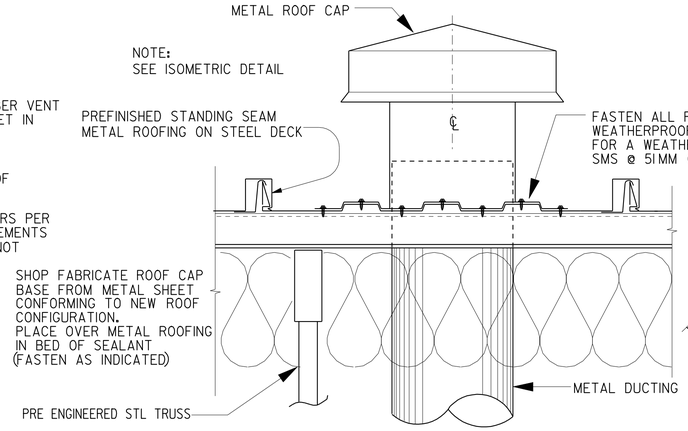

2 EXHAUST FAN ROOF CAP
SCALE 1:5

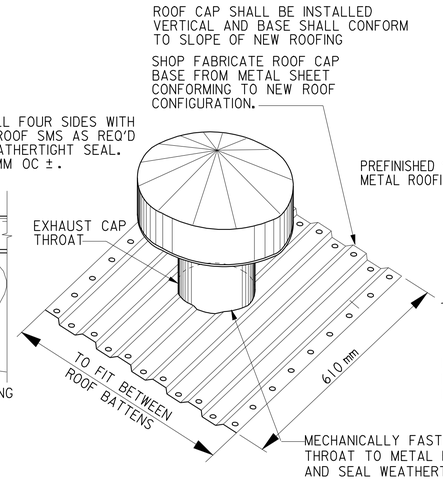

3 ISOMETRIC OF ROOF CAP ASSEMBLY
NTS

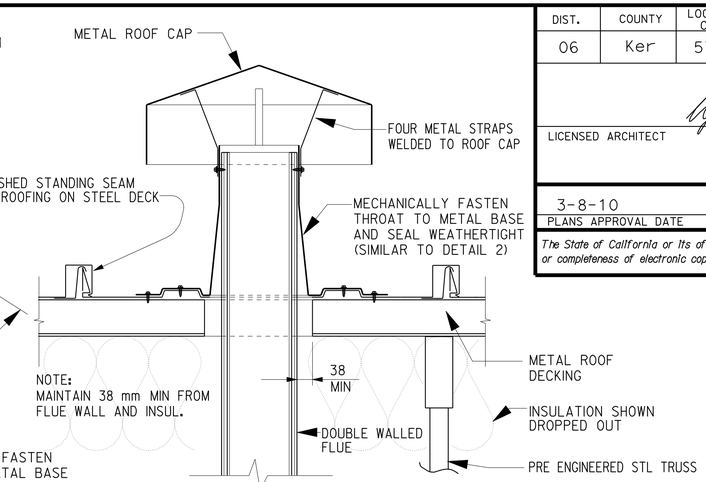

4 WATER HEATER FLUE UNIT HEATER FLUE
NTS

LEGEND

- ● 50 mm VTR / 100 mm VTR / 100 mm VTR — 1 / --
- ○ 100 mm EXHAUST DUCT W/ ROOF CAP — 2 / --
- ◎ WATER HEATER FLUE THRU ROOF — 4 / --
- ◉ UNIT HEATER FLUE THRU ROOF — 4 / --
- ■ LOCATION OF DRAIN TO DOWNSPOUT

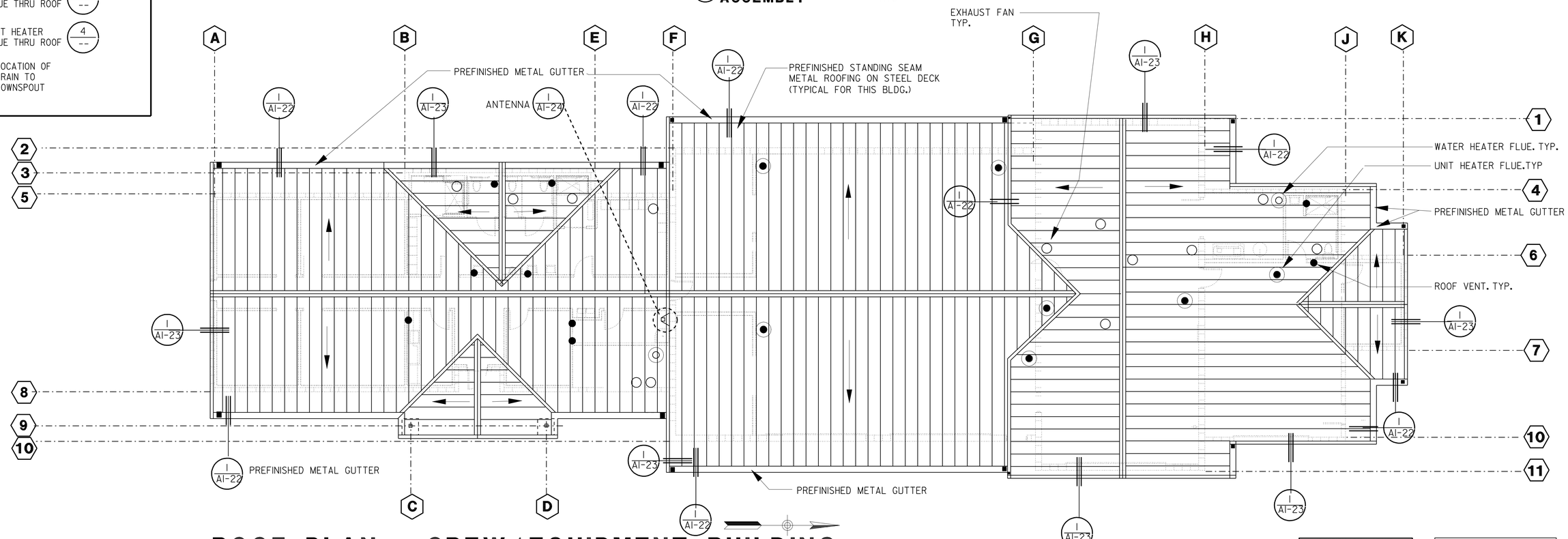

ROOF PLAN - CREW/EQUIPMENT BUILDING

SCALE 1:100

SEE MECH SHTS FOR MORE ROOF PENETRATION DETAILS

NOTE
The Contractor shall verify all controlling field dimensions before ordering or fabricating any material.

ALL DIMENSIONS ARE IN MILLIMETERS UNLESS OTHERWISE SHOWN.

IDENTIFICATION STAMP
DIV. OF THE STATE ARCHITECT
SACRAMENTO REGIONAL OFFICE
02 108714
AC
DATE 04-23-07

CALIFORNIA STATE FIRE MARSHAL
APPROVED
Approval of this plan does not authorize or approve any omission or deviation from applicable regulations. Final approval is subject to field inspection. One set of approved plans shall be available on the project site at all times.
Reviewed by: JEFFERY SCHWARTZ
Approval date: 03/08/10

	BY	CHECKED
	TONY CHUN	C. FAUST
	TONY CHUN	

STATE OF CALIFORNIA
DEPARTMENT OF TRANSPORTATION

DIVISION OF ENGINEERING SERVICES
ARCHITECTURAL AND STRUCTURAL DESIGN

BRIDGE NO. 50M5722
KM POST 32.66/33.30

TAFT MAINTENANCE STATION
CREW AND EQUIP. BUILDING
ROOF PLAN AND DETAILS

SHEET A1-5

a1_05csrooflplan.dgn
DS OSD metric Rev. 9/02 23-MAR-2010 05:48

SCALE: ALL DIMENSIONS ARE IN MILLIMETERS UNLESS OTHERWISE NOTED.

ORIGINAL SCALE IN MILLIMETERS FOR REDUCED PLANS 0 10 20 30 40 50 60 70 80 90 100

CU 06257
EA 483401

DISREGARD PRINTS BEARING EARLIER REVISION DATES → 10/18/05 10/18/06 11/1/06 12/1/06 5/11/07

REVISION DATES (PRELIMINARY STAGE ONLY) SHEET OF

QUANTITIES

23-MAR-2010 05:48

a1_05csrooflplan.dgn

DIST	COUNTY	LOCATION CODE	KILOMETER POST TOTAL PROJECT	SHEET NO.	TOTAL SHEETS
06	Ker	5722		59	178

All dimensions shown in millimeters unless noted otherwise.

Caltrans Metric

LICENSED ARCHITECT

WARREN LAI No. C-17122 Ren.6/30/09 LICENSED ARCHITECT STATE OF CALIFORNIA

3-8-10
PLANS APPROVAL DATE

The State of California or its officers or agents shall not be responsible for the accuracy or completeness of electronic copies of this plan sheet.

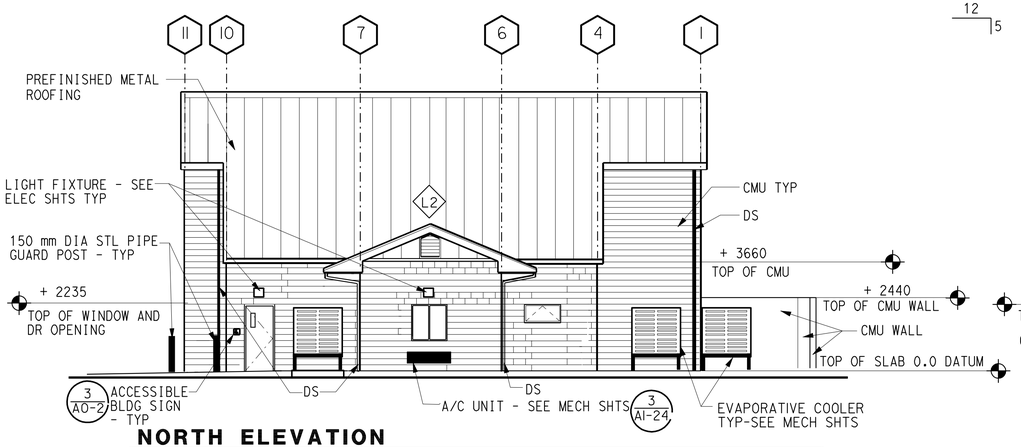

NORTH ELEVATION

SCALE 1:100

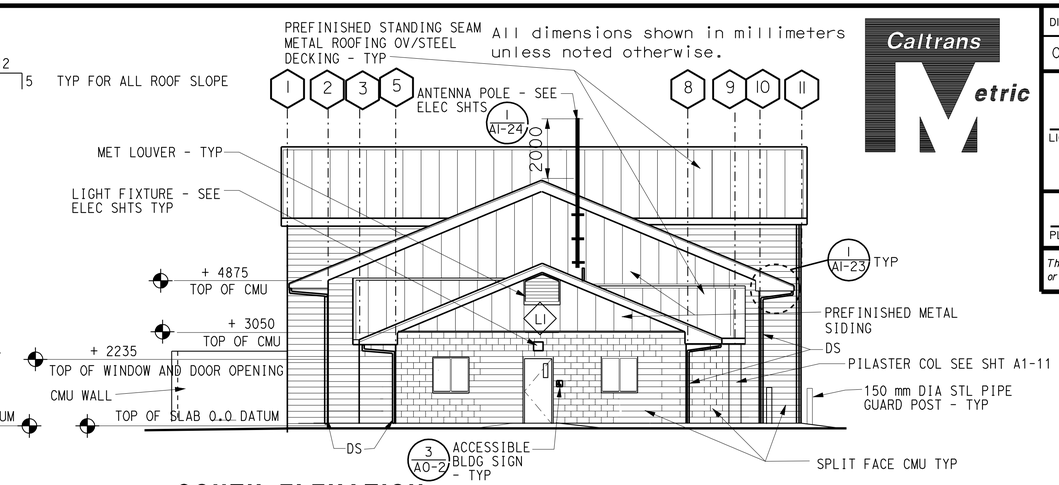

SOUTH ELEVATION

SCALE 1:100

CALIFORNIA STATE FIRE MARSHAL APPROVED

Approval of this plan does not authorize or approve any omission or deviation from applicable regulations. Final approval is subject to field inspection. One set of approved plans shall be available on the project site at all times.

Reviewed by: JEFFERY SCHWARTZ
Approval date: 03/08/10

IDENTIFICATION STAMP
DIV. OF THE STATE ARCHITECT
SACRAMENTO REGIONAL OFFICE
02 108714
AC 4
DATE 04-23-07

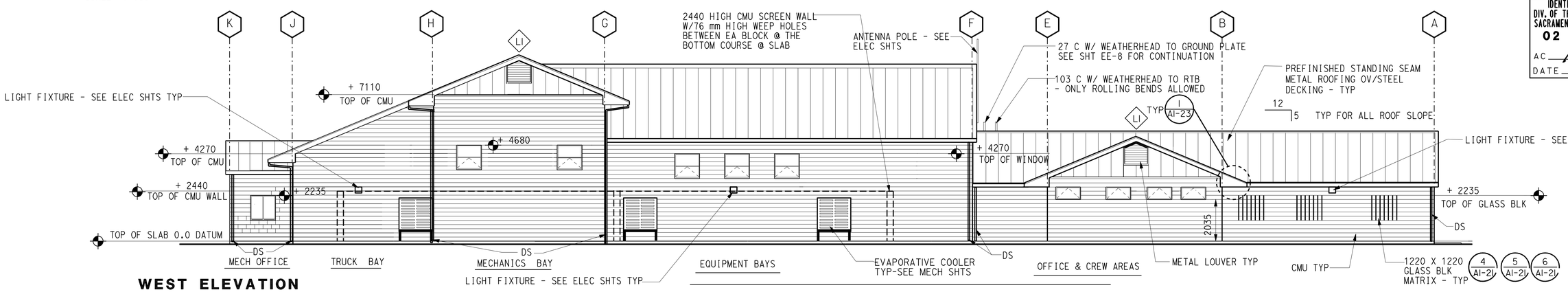

WEST ELEVATION

SCALE 1:100

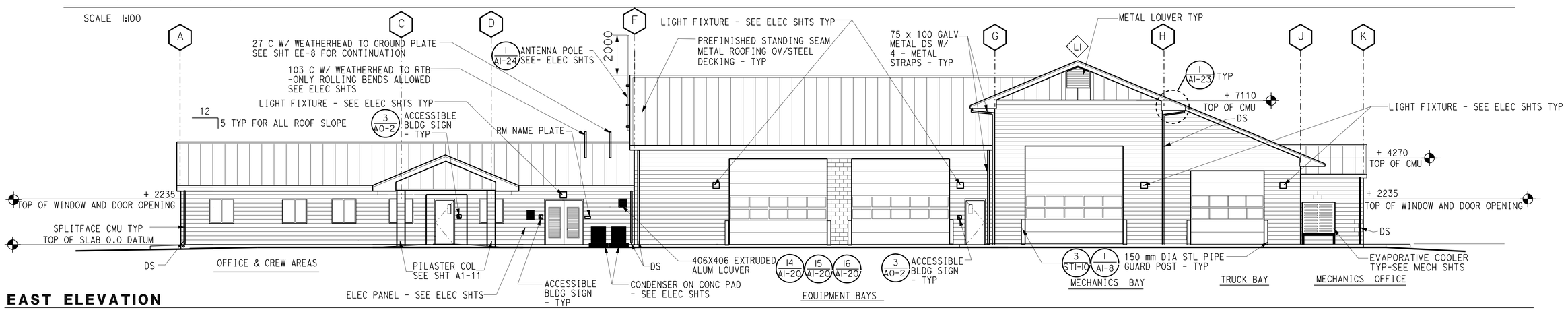

EAST ELEVATION

SCALE 1:100

DATE PLOTTED => 23-MAR-2010
TIME PLOTTED => 05:48

DESIGNER TONY CHUN	CHECKED BY C FAUST	STATE OF CALIFORNIA DEPARTMENT OF TRANSPORTATION	DIVISION OF ENGINEERING SERVICES ARCHITECTURAL AND STRUCTURAL DESIGN	BRIDGE NO. 50M5722	TAFT MAINTENANCE STATION
DRAWN BY TONY CHUN	STRUCTURAL REVIEW			KM POST 32.66/33.30	CREW AND EQUIP. BUILDING — EXTERIOR ELEVATIONS

SHEET A1-6

DS OSD 2180 (08/92) METRIC

ORIGINAL SCALE IN MILLIMETERS FOR REDUCED PLANS 0 10 20 30 40 50 60 70 80 90 100

CU 06257
EA 481301

DISREGARD PRINTS BEARING EARLIER REVISION DATES

REVISION DATES (PRELIMINARY STAGE ONLY): 4/1/06 8/1/06 11/1/06 12/1/06 2/1/07 5/11/07

SHEET OF

USERNAME => trmikesl
DGN FILE => a1_06cselev.dgn

FINISH SCHEDULE

Caltrans Metric

DIST.	COUNTY	LOCATION CODE	KILOMETER POST TOTAL PROJECT	SHEET NO.	TOTAL SHEETS
06	Ker	5722		60	178

LICENSED ARCHITECT — DATE

3-8-10
PLANS APPROVAL DATE

LICENSED ARCHITECT WARREN LAI No. 17122 Ren. 6/30/09 STATE OF CALIFORNIA

The State of California or its officers or agents shall not be responsible for the accuracy or completeness of electronic copies of this plan sheet.

FINISHES
1. PAINT, ACRYLIC SEMIGLOSS
2. NO JOB FINISH
3. FLOOR WAX
4. CONCRETE HARDNER & SEALER
5. CLEAN & POLISH

BUILDING NAME: CREW & EQUIPMENT BUILDING

ROOM NUMBER	ROOM NAME	FLOOR: CERAMIC TILE	FLOOR: VINYL COMPOSITION TILE	FLOOR: SHEET VINYL	FLOOR: CONCRETE	BASE: 100mm RESILIENT BASE	BASE: 100 mm WOOD BASE	BASE: CERAMIC TILE BASE	BASE: VINYL COVE BASE	WALLS: WEST WALL: FRP WALL PANELS	WEST WALL: 13 mm GYP BD	WEST WALL: CERAMIC TILE	WEST WALL: CMU WALL	WEST WALL: PLYWOOD	WEST WALL: 16 mm TYPE X GYP BD	SOUTH WALL: FRP WALL PANELS	SOUTH WALL: 13 mm GYP BD	SOUTH WALL: CERAMIC TILE	SOUTH WALL: CMU WALL	SOUTH WALL: PLYWOOD	SOUTH WALL: 16 mm TYPE X GYP BD	EAST WALL: FRP WALL PANELS	EAST WALL: 13 mm GYP BD	EAST WALL: CERAMIC TILE	EAST WALL: CMU WALL	EAST WALL: PLYWOOD	EAST WALL: 16 mm TYPE X GYP BD	NORTH WALL: FRP WALL PANELS	NORTH WALL: 13 mm GYP BD	NORTH WALL: CERAMIC TILE	NORTH WALL: CMU WALL	NORTH WALL: PLYWOOD	NORTH WALL: 16 mm TYPE X GYP BD	CEILING: 16 mm GYP BD	CEILING: EXPOSED ROOF FRAMING	CEILING: 2-16 mm TYPE 'X' GYP BD	CEILING:	CEILING HEIGHT
1	ENTRY		3			2					N/A						1						1					1					1					2745
2	HALL		3			2					1						1						1					1					1					2745
3	SUPERVISOR 1		3			2					1						1						1					1					1					2745
4	SUPERVISOR 2		3			2					1						1						1					1					1					2745
5	CREW ROOM 1		3			2					1						1						1					1					1					2745
6	CREW ROOM 2		3			2					1						1						1					1					1					2745
7	WOMEN'S	5						5			1	5					1	5						5						5				1				2745
8	MEN'S	5						5			1	5						5					1	5					1				1					2745
9	KITCHEN		3			2					1						1						1									1	1					2745
10	COMMUNICATIONS ROOM		3			2					1						1						1						1				1					2745
11	JANITOR			3					2	2	1					2	1					2	1					2	1				1					2745
12	HVAC ROOM				4	2					1						1								2					2			1					2745
13	VESTIBULE		3			2					1								2				1									1				1		VARIES
14	CREW STORAGE 1				4		1						2						2				1									1				1		VARIES
15	CREW STORAGE 2				4		1				1														2							1				1		VARIES
16	EQUIPMENT BAY				4		1						2							1					2					2				1			VARIES
17	MECHANIC'S BAY				4		N/A						2						2						2					2				1			VARIES
18	TRUCK BAY				4		1						2	1					2						2					2	1	1		1			VARIES
19	UTILITY ROOM				4		1						2						2								1				1					1		VARIES
20	MECHANIC'S RESTROOM	5						5			1	5						5			1			5			1		1	5						1		VARIES
21	MECHANIC'S OFFICE		3			2					1										1		1						1					1				2745
22																																						
23																																						
24																																						
25																																						
26																																						

IDENTIFICATION STAMP
DIV. OF THE STATE ARCHITECT
SACRAMENTO REGIONAL OFFICE
02 108714
AC
DATE 04-23-07

CALIFORNIA STATE FIRE MARSHAL
APPROVED
Approval of this plan does not authorize or approve any omission or deviation from applicable regulations. Final approval is subject to field inspection. One set of approved plans shall be available on the project site at all times.
Reviewed by: JEFFERY SCHWARTZ
Approval date: 03/08/10

NOTE: ALL DIMENSIONS ARE IN MILLIMETERS UNLESS OTHERWISE SHOWN

NOTE *The Contractor shall verify all controlling field dimensions before ordering or fabricating any material.*

DESIGN	TONY CHUN	CHECKED	Cecilia Faust
DRAWN BY	TONY CHUN	STRUCTURAL REVIEW	

STATE OF CALIFORNIA
DEPARTMENT OF TRANSPORTATION

DIVISION OF STRUCTURE DESIGN
OFFICE OF TRANSPORTATION ARCHITECTURE

CU 06257
EA 483401

BRIDGE NO. 50M5722
km POST 32.66/33.30

TAFT MAINTENANCE STATION

CREW & EQUIP. BLDG.

ROOM FINISH SCHEDULE

SHEET A1-7

DS OSD 001M (1/96)

ORIGINAL SCALE IN MILLIMETERS FOR REDUCED PLANS 0 10 20 30 40 50 60 70 80 90 100

DISREGARD PRINTS BEARING EARLIER REVISION DATES

REVISION DATES (PRELIMINARY STAGE ONLY): 4/3/06 8/1/06 11/13/06 12/13/06 2/1/07 5/11/07

SHEET OF

FILE => a1_07csrmsch.dgn
DATE PLOTTED => 23-MAR-2010 TIME PLOTTED => 05:48

USERNAME => trmikest DATE PLOTTED =>

COLORS ARE SELECTED FROM DUNN-EDWARDS PERFECT COLOR PALETTES

COLOR NO.	FACTORY NUMBER & NAME
1	SOFT IVORY #DE 6155
2	GRAHAM CRACKER #DE 6144
3	MATCH ROOF PANEL
4	TANGERINE DREAM #DE 5160
5	MATCH WALL METAL PANEL
6	RADIANT SUNRISE #DE 5397

COATING SYSTEMS

MATERIAL	COLOR No.	COATING SYSTEM
STEEL PIPE GUARD POSTS	4 6	3
GALV METAL GUTTERS	FACTORY FINISH OR 3	3
GALV METAL DOWNSPOUTS	FACTORY FINISH OR 5	3
MISCELLANEOUS EXPOSED STEEL	1	6
GYPSUM BOARD WALLS	1	4
GYPSUM BOARD CEILINGS	1	4
HOLLOW METAL DOORS	1	5
PRESSED METAL FRAMES	1	5
STEEL COLUMNS & BEAMS AT ALL CANOPYS & OPEN EQUIP. BAYS	1	5
STL PLATES, STL BRACES AND FASTENERS AT CANOPYS	1	5
MISCELLANEOUS WOOD TRIM	2	7
PLYWOOD WALLS & CEILINGS	1	7
WOOD WINDOW STOOLS	2	7
SECTIONAL DOORS	5	5
INTERIOR CMU WALLS AT CREW & EQUIPMENT BLDG.	1	2
WOOD BASE	2	7

NOTE: ALL DIMENSIONS ARE IN MILLIMETERS UNLESS OTHERWISE SHOWN

FINISH NOTES

MANUFACTURER'S DESIGNATIONS ARE USED TO INDICATE COLOR, PATTERN, TYPE, CONFIGURATION ETC. AND ARE NOT INTENDED TO SHOW A PREFERENCE FOR A PARTICULAR BRAND.
OTHER PRODUCTS MAY BE SUBMITTED FOR APPROVAL IF EQUAL IN COLOR AND TEXTURE.

METAL FLASHING AND TRIM SHALL BE FACTORY COATED OR SHALL BE FIELD COATED TO MATCH COLOR OF METAL SIDING OR ROOFING.

INTERIOR

1. TOILET PARTITIONS & URINAL SCREEN
   GLOBAL, #2110 CREAM
   SANYMETAL, #67 ALMOND
2. VINYL COMPOSITION TILE FLOORING
   AZROCK, CORTINA COLORS, #V-863, COLOR: SAND DRIFT
   ARMSTRONG, IMPERIAL TEXTURE, #51905, COLOR: HAZELNUT
3. VINYL/RUBBER WALL BASE
   BURKE, #203, BEIGE
   ROPPE, #P171, SANDSTONE
4. FIBERGLASS REINFORCED PLASTIC PANELS
   GLASTEEL, #675 COLONIAL WHITE
   KEMLITE, #83 COLONIAL WHITE
5. CERAMIC FLOOR TILE
   AMERICAN OLEAN, #C-12 PAPYRUS
   DAL-TILE, #DK-335 PORCELAIN
6. CERAMIC WALL AND BASE TILE
   AMERICAN OLEAN, #615 TOFFEE
   DAL-TILE #D-736 FAWN
7. ADJUSTABLE METAL SHELVING
   PENCO, #197035 & #197095
   GLOBAL, #234414 & #234382
8. 457 mm WIDE WARDROBE LOCKERS
   LYON, DESERT TAN #2
   REPUBLIC, ECRU #25
9. FREE-STANDING METAL SHELVING UNITS
   PENCO, #1H7015, #1H7025, #1H7085
   COLOR: 028 GRAY (INCLUDE END BRACING KITS)
   EDSAL, #RS1501, #RS1500, #RS1504
   COLOR: GRAY
10. WORK BENCHES (ADJUSTABLE)
    EDSAL, #1009-M, COLOR: GRAY
    PENCO, #34427, COLOR: GRAY
11. LAMINATED PLASTIC COUNTER & SPLASH
    FORMICA, #915, COLOR: GLOW
    WILSONART, #D308-60, COLOR: IVORY ROSE
12. STEEL ANGLE AT OH DOOR JAMBS :
    FULLER O'BRIEN B-20, NUDE OR DUNN-EDWARDS SOFT IVORY # DE 6155
13. ATTIC ACCESS PANELS :
    FULLER O'BRIEN B-20, NUDE OR DUNN-EDWARDS SOFT IVORY # DE 6155
14. PLUMBING FIXTURES :
    WHITE - FACTORY FINISHED
15. HORIZONTAL BLINDS :
    TO BE SELECTED FROM MFR STD COLORS

COLOR SCHEDULE

EXTERIOR

MANUFACTURERS DESIGNATIONS ARE LISTED TO INDICATE COLOR ONLY AND ARE NOT INTENDED TO SHOW PREFERENCE TO A PARTICULAR BRAND

1. CONCRETE MASONRY UNITS
   CONCRETE MASONRY UNITS AT CREW/EQUIPMENT BUILDING SHALL BE CONSTRUCTED OF SPLITFACE CMU.
   COLOR SHALL CLOSELY MATCH " #215 BUFF " BY ANGELUS BLOCK CO.
2. METAL WALL, SOFFIT PANELS AND TRIM :
   FULLER O'BRIEN B-20, NUDE
3. METAL FASCIA GUTTER :
   AEP, COLONIAL RED
4. METAL ROOF PANELS AND TRIM :
   AEP, COLONIAL RED
5. GROUT :
   CUSTOM BLDG PRODUCTS #9 NATURAL GRAY
6. ROOF PENETRATIONS :
   AEP, COLONIAL RED
7. METAL DOWNSPOUTS AND STRAPS :
   FULLER O'BRIEN B-20, NUDE
8. METAL DOORS : (OVERHEAD AND SWINGING)
   FULLER O'BRIEN B-20, NUDE
9. METAL DOOR FRAMES :
   FULLER O'BRIEN B-20, NUDE
10. ALUMINUM WINDOWS :
    ANODIZED DARK BRONZE - FACTORY FINISHED
11. ALUMINUM LOUVERS:
    ANODIZED DARK BRONZE - FACTORY FINISHED
12. GUARD POSTS :
    DUNN-EDWARDS RADIANT SUNRISE AND TANGERINE DREAM - SEE DET 1/--
13. DECORATIVE STEEL FENCING & GATES
    AMERISTAR, MONTAGE PLUS, GENESIS - COLOR: BLACK
    BUILDERS FENCE CO., ARISTOCRAT, COLOR: BLACK
    FENCE CONFIGURATION TO BE AS SHOWN ON GP-3

Caltrans Metric

DIST.	COUNTY	LOCATION CODE	KILOMETER POST TOTAL PROJECT	SHEET NO.	TOTAL SHEETS
06	Ker	5722		61	178

LICENSED ARCHITECT — DATE
3-8-10
PLANS APPROVAL DATE

LICENSED ARCHITECT WARREN LAI No. 17122 Ren. 6/30/09 STATE OF CALIFORNIA

The State of California or its officers or agents shall not be responsible for the accuracy or completeness of electronic copies of this plan sheet.

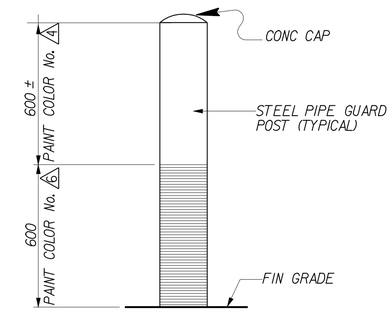

1 GUARD POST FINISH DETAIL
NOT TO SCALE

IDENTIFICATION STAMP
DIV. OF THE STATE ARCHITECT
SACRAMENTO REGIONAL OFFICE
02 108714
AC
DATE 04-23-07

CALIFORNIA STATE FIRE MARSHAL APPROVED
Approval of this plan does not authorize or approve any omission or deviation from applicable regulations. Final approval is subject to field inspection. One set of approved plans shall be available on the project site at all times.
Reviewed by: JEFFERY SCHWARTZ
Approval date: 03/08/10

NOTE *The Contractor shall verify all controlling field dimensions before ordering or fabricating any material.*

DESIGN	TONY CHUN	CHECKED	C. FAUST
DRAWN BY	TONY CHUN	STRUCTURAL REVIEW	

STATE OF CALIFORNIA
DEPARTMENT OF TRANSPORTATION

DIVISION OF STRUCTURE DESIGN
OFFICE OF TRANSPORTATION ARCHITECTURE

BRIDGE NO. 50M5722
km POST 32.66/33.30

TAFT MAINTENANCE STATION

CREW AND EQUIP. BUILDING

FINISH SCHEDULE

SHEET A1-8

DS OSD 001M (1/96)

ORIGINAL SCALE IN MILLIMETERS FOR REDUCED PLANS 0 10 20 30 40 50 60 70 80 90 100

CU 06257
EA 483401

DISREGARD PRINTS BEARING EARLIER REVISION DATES → 4/1/06 8/1/06 11/1/06 12/1/06 2/1/07 5/11/07

SHEET OF

FILE => a1_08cscoint.dgn
DATE PLOTTED => 23-MAR-2010 TIME PLOTTED => 05:49

TIME PLOTTED => 05:49
USERNAME => trmikesl

DOOR SCHEDULE

DOOR No.	NOMINAL DOOR OPENING SIZE WIDTH	HEIGHT	THICK	DOOR TYPE	HDWR GROUP	FR	DOOR MAT	LITE	LOUVER	SIGNAGE SEE SCHEDULE AT A1-1	FRAME MAT	WIDTH	SIZE	DETAILS HEAD	JAMB	SILL	NOTES
1	915	2135	45	A	1		HM	SIDE LITE		EXIT OFFICE AND SHOP	PMF	225	B	1 A1-20	2 A1-20	3 A1-20	
2	915	2135	45	A	4		HM	SIDE LITE		OFFICE 1	PMF	210	A	7 A1-20	8 A1-20	9 A1-20	
3	915	2135	45	A	4		HM	SIDE LITE		OFFICE 2	PMF	210	A	7 A1-20	8 A1-20	9 A1-20	
4	915	2135	45	C	7		HM	HG		CREW ROOM 1	PMF	210	A	7 A1-20	8 A1-20	9 A1-20	
5	915	2135	45	C	7		HM	HG		CREW ROOM 2	PMF	210	A	7 A1-20	8 A1-20	9 A1-20	
6	915	2135	45	D	9		HM			WOMEN	PMF	210	A	7 A1-20	8 A1-20	10 A1-20	
7	915	2135	45	D	9		HM			MEN	PMF	210	A	7 A1-20	8 A1-20	10 A1-20	
8	915	2135	45	A	7		HM	HG		KITCHEN HALL	PMF	210	A	7 A1-20	8 A1-20	9 A1-20	
9	915	2135	45	A	1		HM	SIDE LITE		EXIT OFFICE AND SHOP	PMF	210	B	1 A1-20	2 A1-20	3 A1-20	
10	915	2135	45	D	3		HM		COMMUNICATION		PMF	210	A	7 A1-20	8 A1-20	9 A1-20	
11	915	2135	45	D	8		HM			JANITOR	PMF	210	A	7 A1-20	8 A1-20	9 A1-20	
12	915	2135	45	B	2		HM	LOUVER DOOR		HVAC ROOM	PMF	225	D	4 A1-20	5 A1-20	6 A1-20	PAIR DOORS
13	915	2135	45	A	4		HM	SIDE LITE	EXIT ROUTE EQUIPMENT BAY		PMF	325	B	1 A1-20	2 A1-20	3 A1-20	
14	915	2135	45	A	4		HM	SIDE LITE	EXIT ROUTE EQUIPMENT BAY		PMF	210	A	7 A1-20	8 A1-20	9 A1-20	
15	915	2135	45	D	5		HM			CREW STORAGE	PMF	210	C	7 A1-20	8 A1-20	9 A1-20	PAIR DOORS
16	915	2135	45	D	5		HM			CREW STORAGE	PMF	210	C	7 A1-20	8 A1-20	9 A1-20	PAIR DOORS
17	4880	4270		E1			STEEL	2-610X305 LOUVERS						11 A1-20	12 A1-20	13 A1-20	MET OVERHEAD DOOR
18	4880	4270		E1			STEEL	2-610X305 LOUVERS						11 A1-20	12 A1-20	13 A1-20	MET OVERHEAD DOOR
19	915	2135	45	A	1		HM	SIDE LITE		EXIT EQUIPMENT BAY	PMF	325	B	4 A1-20	5 A1-20	6 A1-20	
20	915	2135	45	A	4		HM	SIDE LITE		EXIT MECHANIC BAY	PMF	325	B	4 A1-20	5 A1-20	6 A1-20	
21	4880	4880		E2			STEEL	2-610X305 LOUVERS						11 A1-20	12 A1-20	13 A1-20	MET OVERHEAD DOOR
22	915	2135	45	D	5		HM			UTILITY ROOM	PMF	325	D	4 A1-20	5 A1-20	6 A1-20	PAIR DOORS
23	915	2135	45	A	4		HM	SIDE LITE		TRUCK BAY MECHANIC BAY	PMF	325	B	4 A1-20	5 A1-20	6 A1-20	
24	915	2135	45	D	6		HM			UNISEX REST RM	PMF	210	A	7 A1-20	8 A1-20	10 A1-20	
25	915	2135	45	A	4		HM	SIDE LITE		MECHANIC'S OFFICE	PMF	210	A	7 A1-20	8 A1-20	9 A1-20	
26	915	2135	45	A	1		HM	SIDE LITE		TRUCK BAY EXIT	PMF	225	B	4 A1-20	5 A1-20	6 A1-20	
27	3660	3660		E3			STEEL	2-610X305 LOUVERS						11 A1-20	12 A1-20	13 A1-20	MET OVERHEAD DOOR

DOOR TYPES

NOT TO SCALE

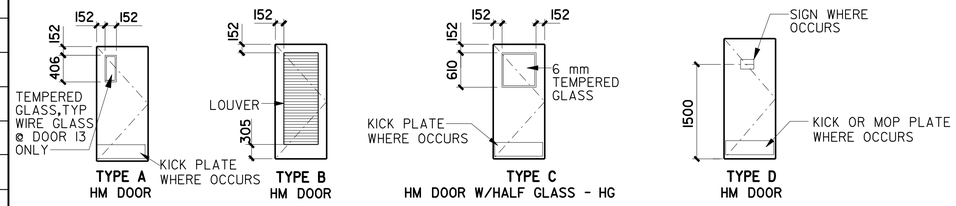

TYPE A HM DOOR — TYPE B HM DOOR — TYPE C HM DOOR W/HALF GLASS - HG — TYPE D HM DOOR

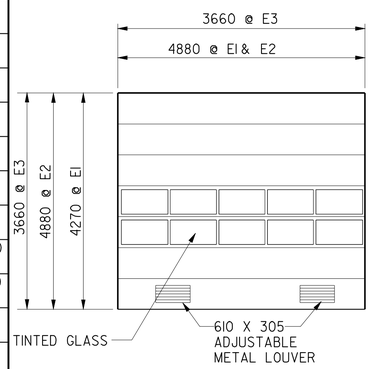

TYPE E1 E2 E3

MOTOR OPERATED, INSULATED, OVERHEAD SECTIONAL DOOR

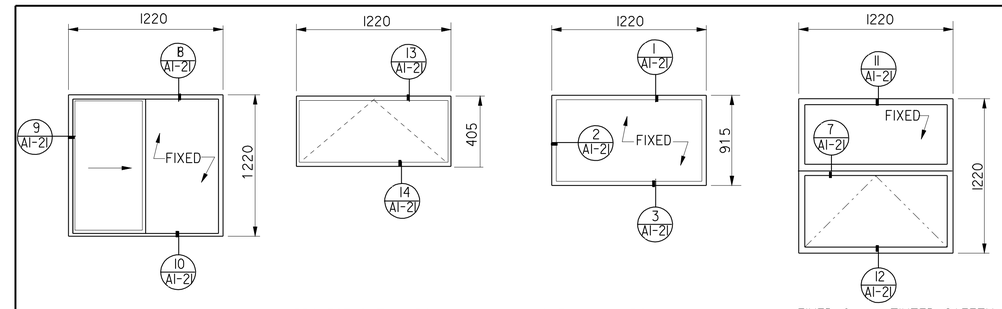

HORIZ SLIDING WINDOW DUAL INSULATED TINTED GL IN ANODIZED DARK BRONZE ALUMINUM FRAME (WITH INSECT SCREEN) — A

PROJECT-OUT WINDOW DUAL INSULATED OBSCURED GL IN ANNODIZED DARK BRONZE ALUMINUM FRAME — B

ONE WAY WINDOW DUAL INSULATED GLASS IN ANODIZED DARK BRONZE ALUMINUM FRAME — C

FIXED, 6 mm TINTED SAFETY GLASS IN ANODIZED DARK BRONZE ALUM FRAME UPPER AND PROJECT-OUT WINDOW W/ 6 mm TINTED SAFETY GL IN ANODIZED DARK BRONZE ALUM FRAME LOWER — D

NOTES:

1. ALL EXTERIOR GLAZING SHALL BE 25mm INSULATED UNIT
2. ALL EXTERIOR WINDOWS SHALL HAVE INSECT SCREENS
3. ALL ALUMINUM WINDOWS' FRAME SECTION TO BE 51X 102 APPROX
4. ALL DIMENSIONS SHOWN ARE ROUGH OPENING DIMENSIONS
5. ALL ALUMINUM WINDOWS AND LOUVERS SHALL BE SUPPLIED PREFINISHED BY MFRS
6. FOR SLIDING DIRECTION OF SLIDER SEE EXTERIOR ELEVATIONS

WINDOW SCHEDULE

NO SCALE

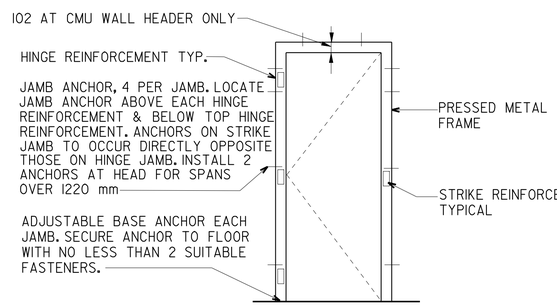

TYPICAL
1 DOOR FRAME ANCHORAGE

NOT TO SCALE

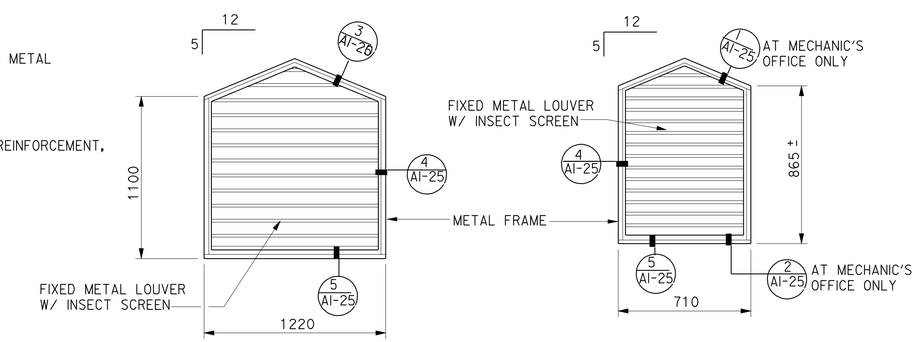

L1 LOUVER AT GABLE ENDS

SCALE 1:5

L2 LOUVER AT GABLE ENDS

SCALE 1:5

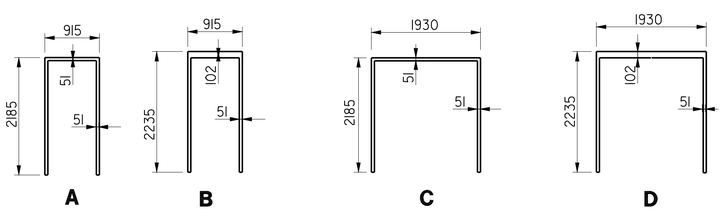

FRAME SIZE SCHEDULE

NOT TO SCALE

ALL DIMENSIONS ARE IN MILLIMETERS UNLESS OTHERWISE SHOWN.

DIST.	COUNTY	LOCATION CODE	KILOMETER POST TOTAL PROJECT	SHEET NO.	TOTAL SHEETS
06	Ker	5722		62	178

Caltrans Metric

LICENSED ARCHITECT — DATE

3-8-10
PLANS APPROVAL DATE

LICENSED ARCHITECT WARREN LAI No. 17122 Exp. 6/30/09 STATE OF CALIFORNIA

The State of California or its officers or agents shall not be responsible for the accuracy or completeness of electronic copies of this plan sheet.

IDENTIFICATION STAMP
DIV. OF THE STATE ARCHITECT
SACRAMENTO REGIONAL OFFICE
02 108714
AC
DATE 04-23-07

CALIFORNIA STATE FIRE MARSHAL APPROVED
Approval of this plan does not authorize or approve any omission or deviation from applicable regulations. Final approval is subject to field inspection. One set of approved plans shall be available on the project site at all times.
Reviewed by: JEFFERY SCHWARTZ
Approval date: 03/08/10

NOTE The Contractor shall verify all controlling field dimensions before ordering or fabricating any material.

DESIGN	TONY CHUN	CHECKED	
DRAWN BY	TONY CHUN	STRUCTURAL REVIEW	

STATE OF CALIFORNIA DEPARTMENT OF TRANSPORTATION

DIVISION OF STRUCTURE DESIGN OFFICE OF TRANSPORTATION ARCHITECTURE

BRIDGE NO. 50M5722 — KM POST 32.66/33.30

TAFT MAINTENANCE STATION

CREW AND EQUIP BUILDING

DOOR & WINDOW SCHEDULES

SHEET A1-9

DS OSD metric (1/96)

SCALE: ALL DIMENSIONS ARE IN MILLIMETERS UNLESS OTHERWISE NOTED.

ORIGINAL SCALE IN MILLIMETERS FOR REDUCED PLANS 0 10 20 30 40 50 60 70 80 90 100

CU 06257
EA 483401

DISREGARD PRINTS BEARING EARLIER REVISION DATES → 4/1/06 8/1/06 11/1/06 12/1/06 2/1/07 5/11/07

REVISION DATES (PRELIMINARY STAGE ONLY) SHEET OF

FILE => a1_09csdwsch.dgn
DATE PLOTTED => 23-MAR-2010 TIME PLOTTED => 05:49

TIME PLOTTED => 05:49
DATE PLOTTED => 23-MAR-2010
USERNAME =>

All dimensions shown in millimeters unless noted otherwise.

Caltrans Metric

DIST	COUNTY	LOCATION CODE	KILOMETER POST TOTAL PROJECT	SHEET NO.	TOTAL SHEETS
06	Ker	5722		63	178

LICENSED ARCHITECT

LICENSED ARCHITECT WARREN LAI No. C-17122 Ren.6/30/09 STATE OF CALIFORNIA

3-8-10
PLANS APPROVAL DATE

The State of California or its officers or agents shall not be responsible for the accuracy or completeness of electronic copies of this plan sheet.

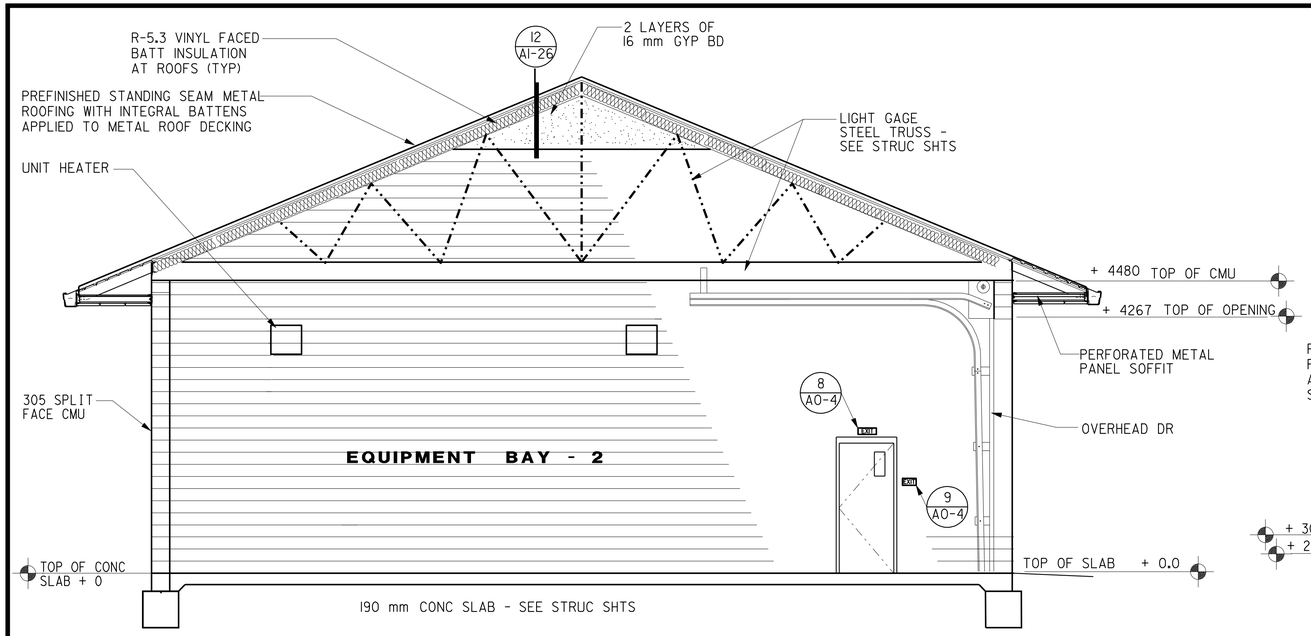

B SECTION B - B
SCALE 1:50

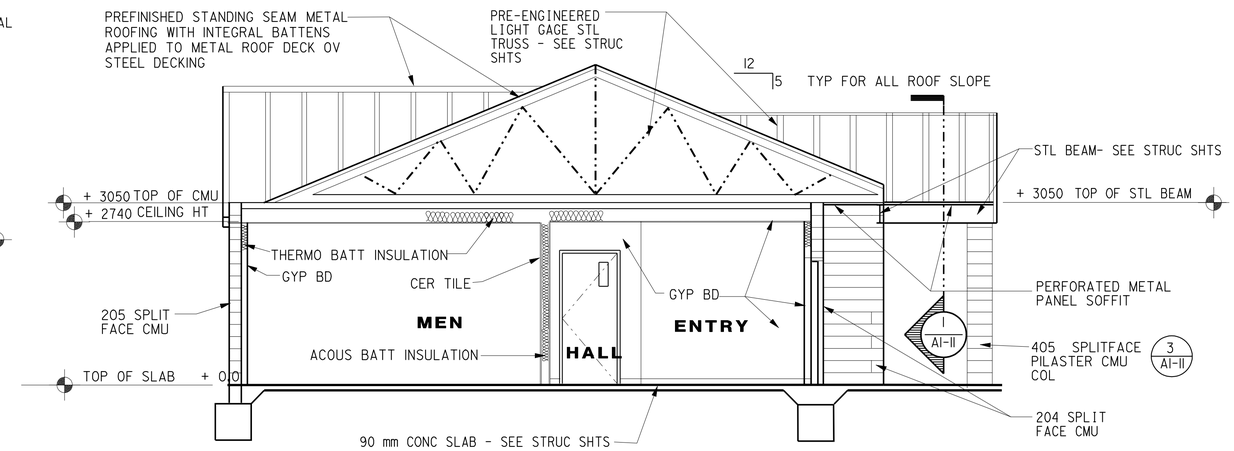

A SECTION
SCALE 1:50

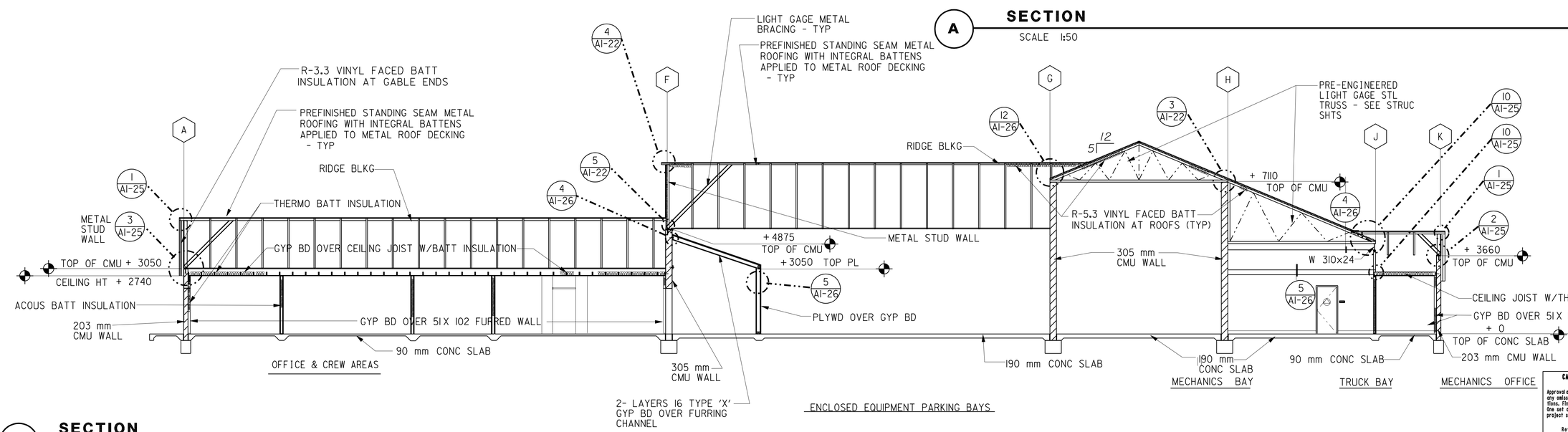

C SECTION
SCALE 1:100

IDENTIFICATION STAMP
DIV. OF THE STATE ARCHITECT
SACRAMENTO REGIONAL OFFICE
02 108714
AC
DATE 04-23-07

CALIFORNIA STATE FIRE MARSHAL APPROVED
Approval of this plan does not authorize or approve any omission or deviation from applicable regulations. Final approval is subject to field inspection. One set of approved plans shall be available on the project site at all times.
Reviewed by: JEFFERY SCHWARTZ
Approval date: 03/08/10

DESIGNER	TONY CHUN	CHECKED BY	C FAUST
DRAWN BY	TONY CHUN	STRUCTURAL REVIEW	

STATE OF CALIFORNIA
DEPARTMENT OF TRANSPORTATION

DIVISION OF ENGINEERING SERVICES
ARCHITECTURAL AND STRUCTURAL DESIGN

BRIDGE NO. 50M5722
KM POST 32.66/33.30

TAFT MAINTENANCE STATION
CREW AND EQUIP. BUILDING
BUILDING SECTIONS

SHEET **A1-10**

DS OSD 2180 (08/92) METRIC

ORIGINAL SCALE IN MILLIMETERS FOR REDUCED PLANS 0 10 20 30 40 50 60 70 80 90 100

CU 06257
EA 481301

DISREGARD PRINTS BEARING EARLIER REVISION DATES

REVISION DATES (PRELIMINARY STAGE ONLY): 10/18/05 4/1/06 8/1/06 12/1/06 2/1/07 5/11/07

SHEET OF

DATE PLOTTED => 23-MAR-2010
TIME PLOTTED => 05:49

USERNAME => trmikesl
DGN FILE => a1_10cssec.dgn

DIST.	COUNTY	LOCATION CODE	KILOMETER POST TOTAL PROJECT	SHEET NO.	TOTAL SHEETS
06	Ker	5722		64	178

LICENSED ARCHITECT — DATE 2/17/06

LICENSED ARCHITECT WARREN LAI No. C-17122 Exp. 6/30/09 STATE OF CALIFORNIA

3-8-10
PLANS APPROVAL DATE

The State of California or its officers or agents shall not be responsible for the accuracy or completeness of electronic copies of this plan sheet.

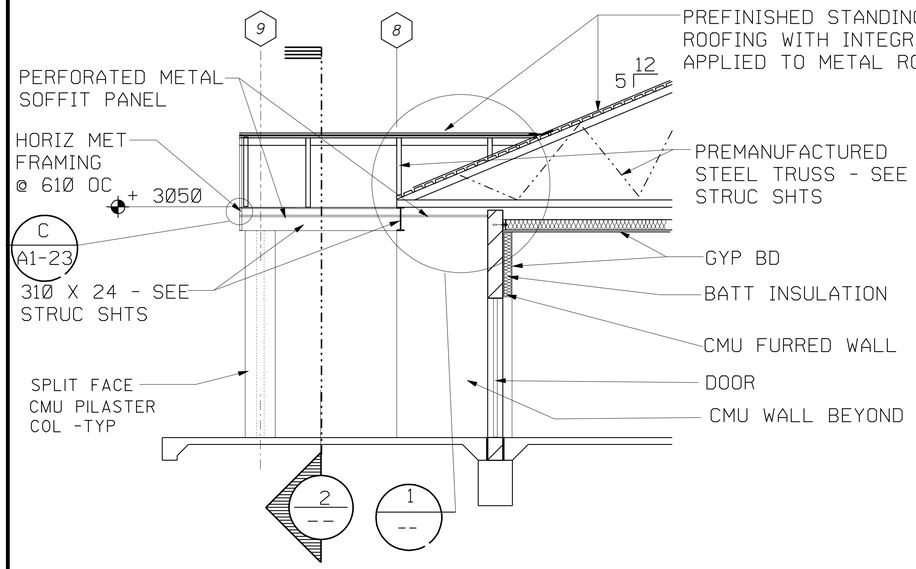

3 ENTRANCE CANOPY SECTION

SCALE 1:40

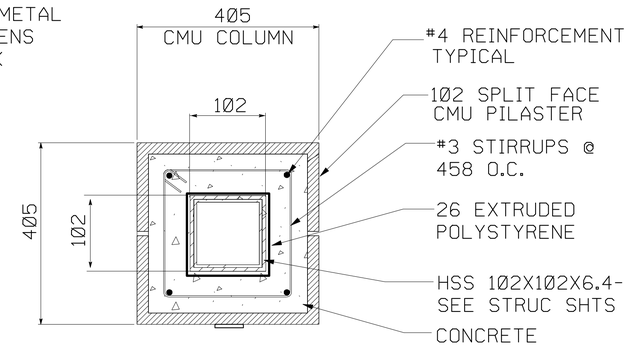

4 PILASTER COLUMN

SCALE 1:10

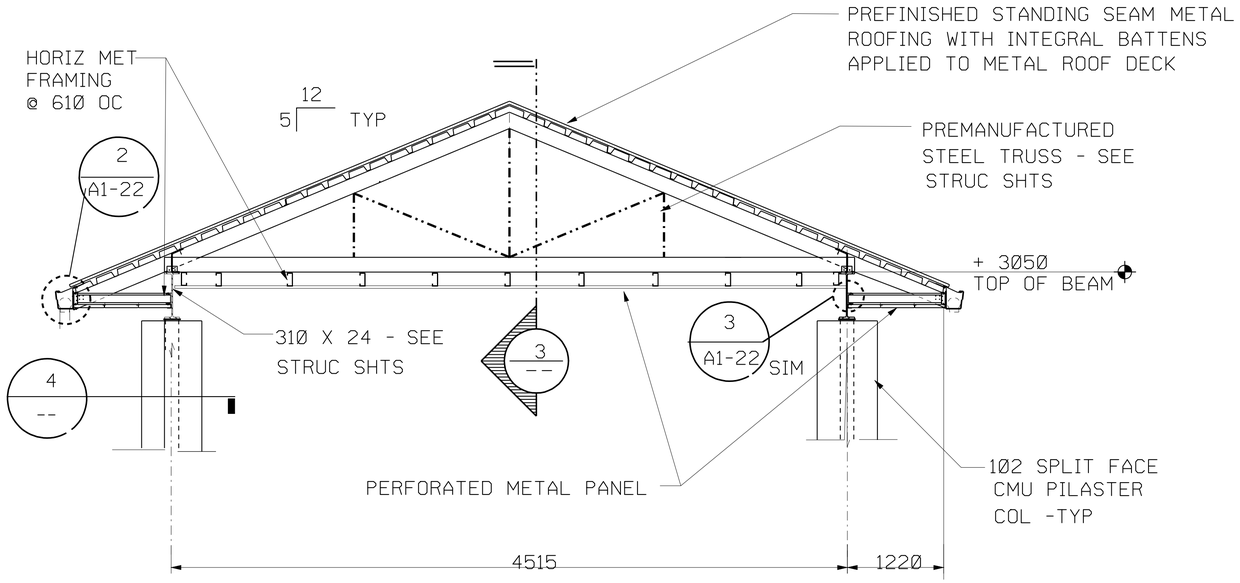

2 ENTRANCE CANOPY SECTION

SCALE 1:25

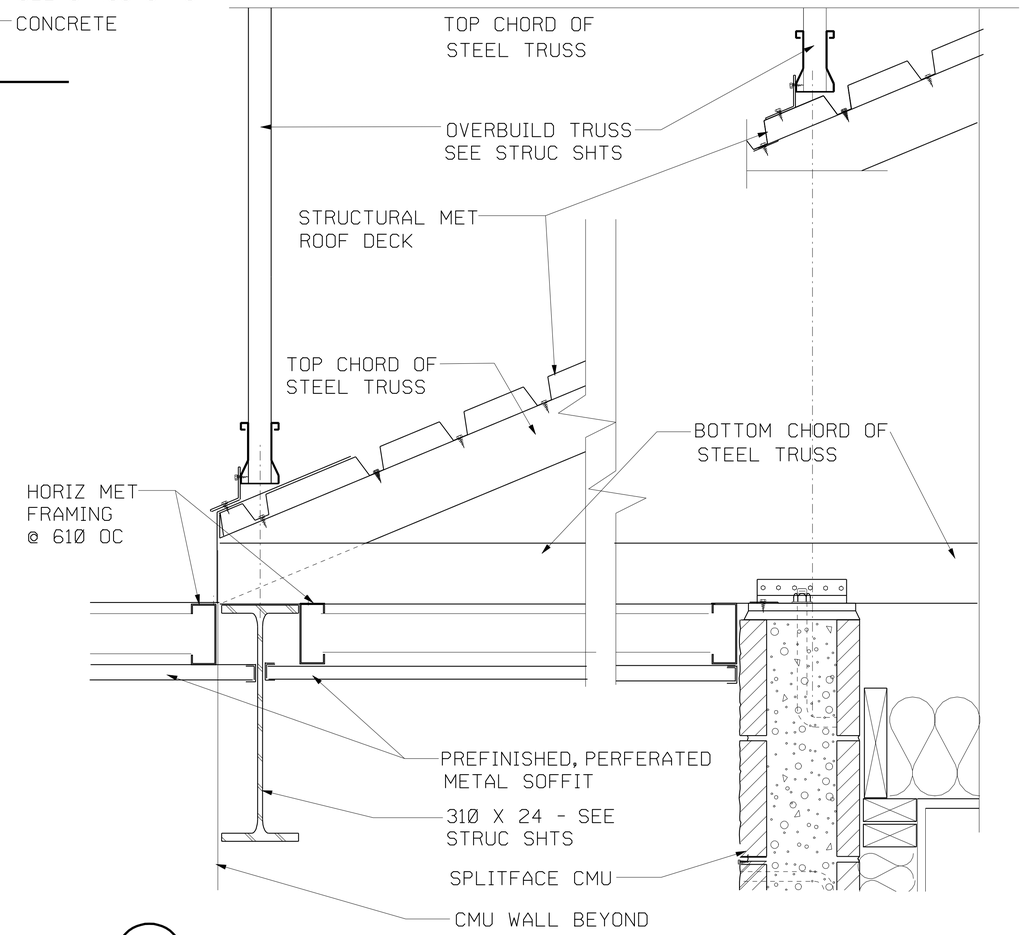

1 SOFFIT AT ENTRYWAY

SCALE 1:20

ALL DIMENSIONS ARE IN MILLIMETERS UNLESS OTHERWISE SHOWN.

IDENTIFICATION STAMP
DIV. OF THE STATE ARCHITECT
SACRAMENTO REGIONAL OFFICE
02 108714
AC
DATE 04-23-07

CALIFORNIA STATE FIRE MARSHAL APPROVED
Approval of this plan does not authorize or approve any omission or deviation from applicable regulations. Final approval is subject to field inspection. One set of approved plans shall be available on the project site at all times.
Reviewed by: JEFFERY SCHWARTZ
Approval date: 03/08/10

NOTE *The Contractor shall verify all controlling field dimensions before ordering or fabricating any material.*

	BY	CHECKED
DETAILS	TONY CHUN	C FAUST
QUANTITIES	TONY CHUN	

STATE OF CALIFORNIA DEPARTMENT OF TRANSPORTATION

DIVISION OF ENGINEERING SERVICES ARCHITECTURAL AND STRUCTURAL DESIGN

BRIDGE NO. 50M5722
KM POST 32.66/33.30

TAFT MAINTENANCE STATION

CREW AND EQUIP. BUILDING

ENTRANCE CANOPY SECTION & DETAILS

SHEET A1-11

a1_11entrsect.dgn
DS OSD metric Rev. 9/02 23-MAR-2010 05:49

SCALE: ALL DIMENSIONS ARE IN MILLIMETERS UNLESS OTHERWISE NOTED.

ORIGINAL SCALE IN MILLIMETERS FOR REDUCED PLANS 0 10 20 30 40 50 60 70 80 90 100

CU 06257
EA 483401

DISREGARD PRINTS BEARING EARLIER REVISION DATES → 8/1/06 11/17/06 2/1/07 5/11/07

REVISION DATES (PRELIMINARY STAGE ONLY) SHEET OF

23-MAR-2010 05:49

a1_11entrsect.dgn

DIST.	COUNTY	LOCATION CODE	KILOMETER POST TOTAL PROJECT	SHEET NO.	TOTAL SHEETS
06	Ker	5722		65	178

Caltrans Metric

ALL DIMENSIONS ARE IN MILLIMETERS UNLESS OTHERWISE SHOWN.

LICENSED ARCHITECT — DATE

LICENSED ARCHITECT WARREN LAI No. C-17122 Exp. 6/30/09 STATE OF CALIFORNIA

3-8-10
PLANS APPROVAL DATE

The State of California or its officers or agents shall not be responsible for the accuracy or completeness of electronic copies of this plan sheet.

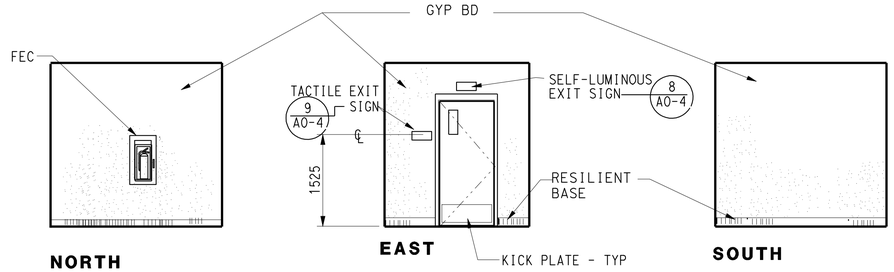

ENTRY 1

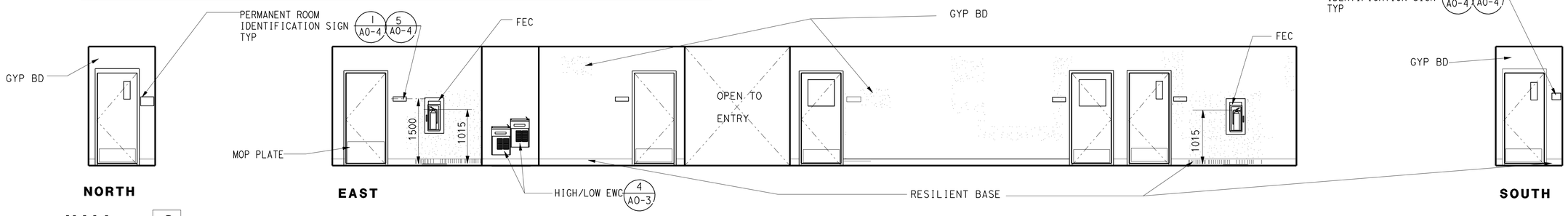

HALL 2

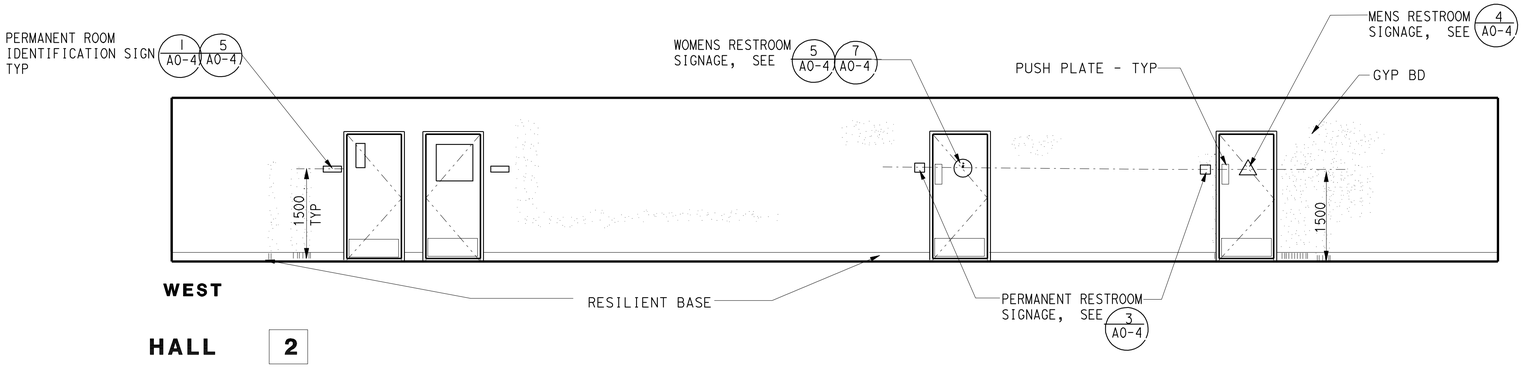

HALL 2

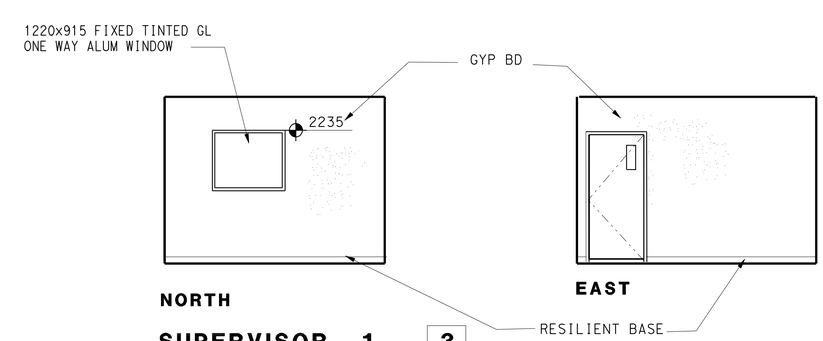

SUPERVISOR 1 3

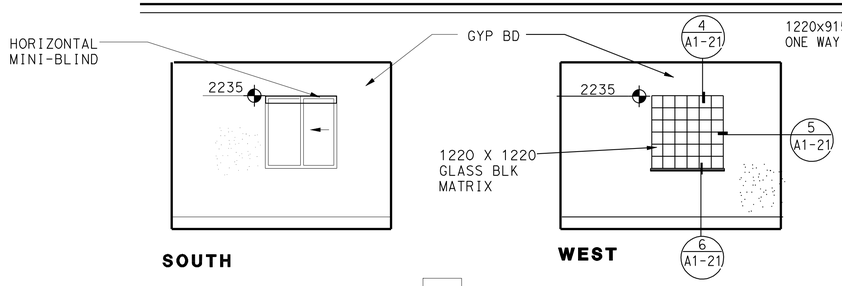

SUPERVISOR 1 3

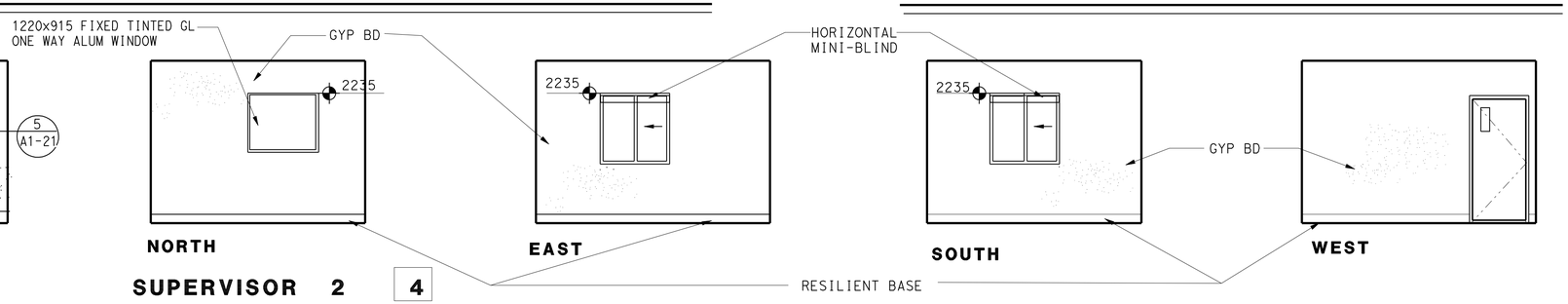

SUPERVISOR 2 4

SCALE 1:50 - TYP UNLESS OTHERWISE NOTED

IDENTIFICATION STAMP
DIV. OF THE STATE ARCHITECT
SACRAMENTO REGIONAL OFFICE
02 108714
AC
DATE 04-23-07

CALIFORNIA STATE FIRE MARSHAL APPROVED
Approval of this plan does not authorize or approve any omission or deviation from applicable regulations. Final approval is subject to field inspection. One set of approved plans shall be available on the project site at all times.
Reviewed by: JEFFERY SCHWARTZ
Approval date: 03/08/10

	BY		CHECKED	
DESIGN	BY	TONY CHUN	CHECKED	C FAUST
DETAILS	BY	TONY CHUN	CHECKED	
QUANTITIES	BY		CHECKED	

STATE OF CALIFORNIA
DEPARTMENT OF TRANSPORTATION

DIVISION OF ENGINEERING SERVICES
ARCHITECTURAL AND STRUCTURAL DESIGN

BRIDGE NO. 50M5722
KM POST 32.66/33.30

TAFT MAINTENANCE STATION

CREW AND EQUIP. BUILDING

INTERIOR ELEVATIONS

SHEET A1-12

a1_12intelev.dgn
DS OSD metric Rev. 9/02 23-MAR-2010 05:49

SCALE: ALL DIMENSIONS ARE IN MILLIMETERS UNLESS OTHERWISE NOTED.

ORIGINAL SCALE IN MILLIMETERS FOR REDUCED PLANS 0 10 20 30 40 50 60 70 80 90 100

CU 06600
EA 483401

DISREGARD PRINTS BEARING EARLIER REVISION DATES → 6/20/06 8/1/06 11/1/06 2/1/07 5/11/07

REVISION DATES (PRELIMINARY STAGE ONLY) SHEET OF

23-MAR-2010 05:49
a1_12intelev.dgn

ALL DIMENSIONS ARE IN MILLIMETERS UNLESS OTHERWISE SHOWN.

Caltrans Metric

DIST.	COUNTY	LOCATION CODE	KILOMETER POST TOTAL PROJECT	SHEET NO.	TOTAL SHEETS
06	Ker	5722		66	178

LICENSED ARCHITECT — DATE

LICENSED ARCHITECT WARREN LAI No. C-17122 Exp. 6/30/09 STATE OF CALIFORNIA

3-8-10
PLANS APPROVAL DATE

The State of California or its officers or agents shall not be responsible for the accuracy or completeness of electronic copies of this plan sheet.

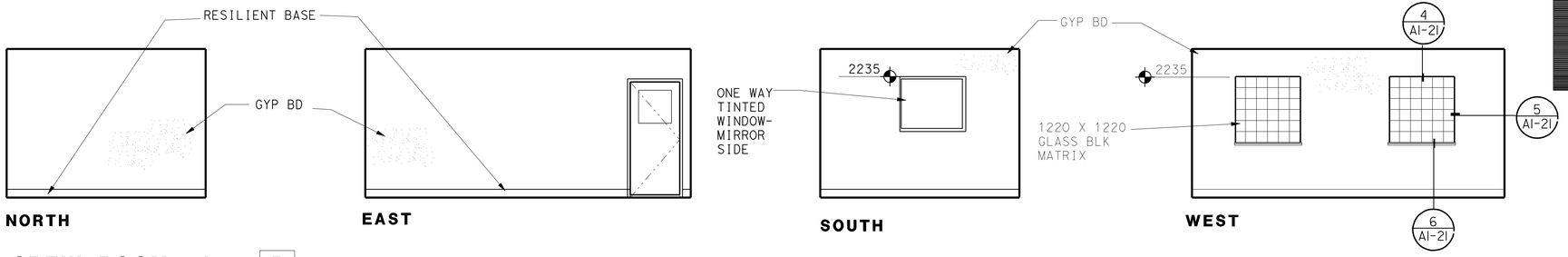

CREW ROOM 1 5

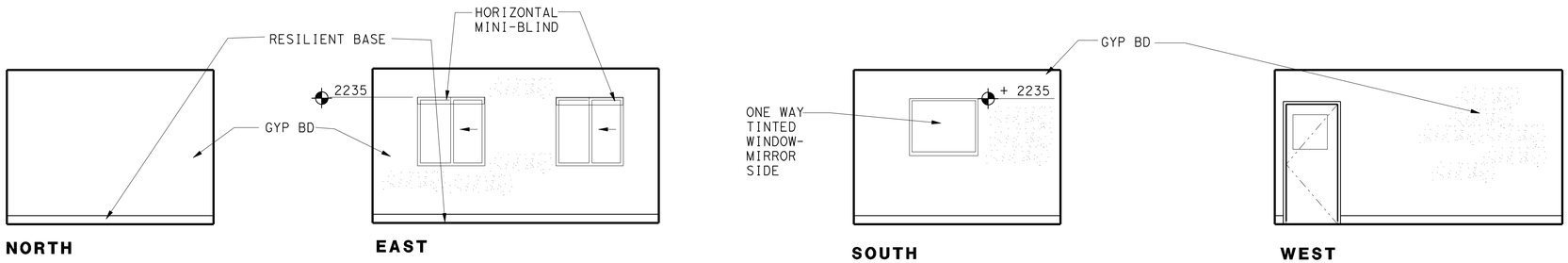

CREW ROOM 2 6

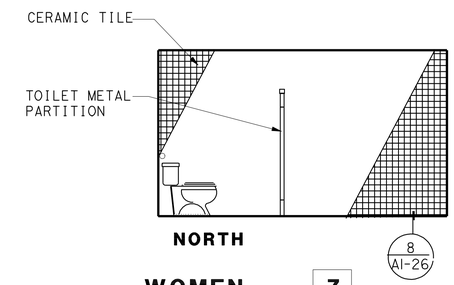

WOMEN 7

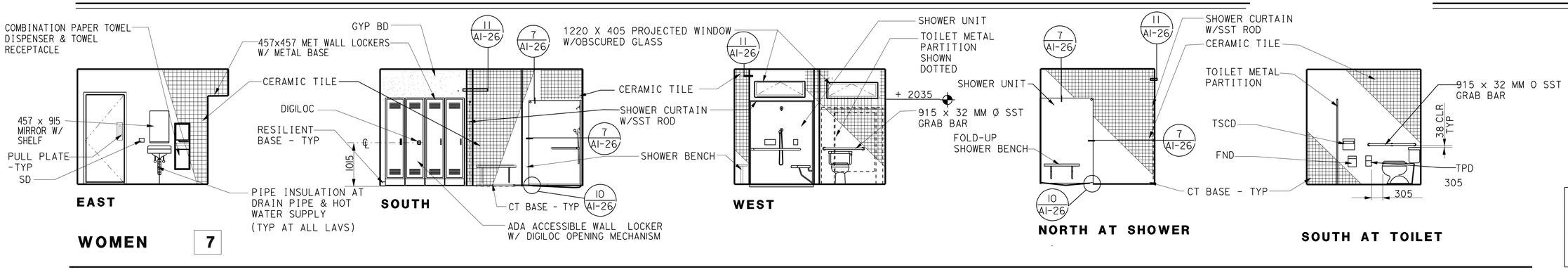

WOMEN 7

IDENTIFICATION STAMP
DIV. OF THE STATE ARCHITECT
SACRAMENTO REGIONAL OFFICE
02 108714
AC
DATE 04-23-07

CALIFORNIA STATE FIRE MARSHAL APPROVED
Approval of this plan does not authorize or approve any omission or deviation from applicable regulations. Final approval is subject to field inspection. One set of approved plans shall be available on the project site at all times.
Reviewed by: JEFFERY SCHWARTZ
Approval date: 03/08/10

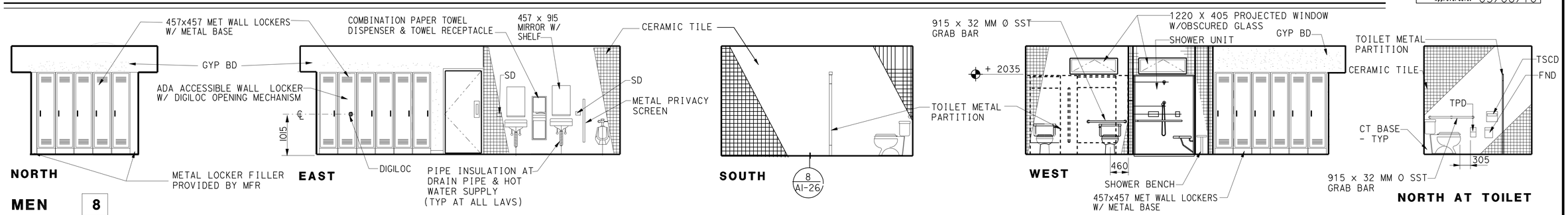

MEN 8

DESIGN	BY TONY CHUN	CHECKED C FAUST	
DETAILS	BY TONY CHUN	CHECKED	
QUANTITIES	BY	CHECKED	

STATE OF CALIFORNIA
DEPARTMENT OF TRANSPORTATION

DIVISION OF ENGINEERING SERVICES
ARCHITECTURAL AND STRUCTURAL DESIGN

BRIDGE NO. 50M5722
KM POST 32.66/33.30

CREW AND EQUIP. BUILDING

TAFT MAINTENANCE STATION
INTERIOR ELEVATIONS

SHEET A1-13

a1_13intelev.dgn
DS OSD metric Rev. 9/02 23-MAR-2010 05:49

SCALE: ALL DIMENSIONS ARE IN MILLIMETERS UNLESS OTHERWISE NOTED.

ORIGINAL SCALE IN MILLIMETERS FOR REDUCED PLANS 0 10 20 30 40 50 60 70 80 90 100

CU 06257
EA 483401

DISREGARD PRINTS BEARING EARLIER REVISION DATES → 6/20/06 8/1/06 11/1/06 12/1/06 2/1/07 5/11/07

REVISION DATES (PRELIMINARY STAGE ONLY) SHEET OF

23-MAR-2010 05:49
a1_13intelev.dgn

ALL DIMENSIONS ARE IN MILLIMETERS UNLESS OTHERWISE SHOWN.

Caltrans Metric

DIST.	COUNTY	LOCATION CODE	KILOMETER POST TOTAL PROJECT	SHEET NO.	TOTAL SHEETS
06	Ker	5722		67	178

LICENSED ARCHITECT DATE

LICENSED ARCHITECT WARREN LAI No. C-17122 Exp. 6/30/09 STATE OF CALIFORNIA

3-8-10
PLANS APPROVAL DATE

The State of California or its officers or agents shall not be responsible for the accuracy or completeness of electronic copies of this plan sheet.

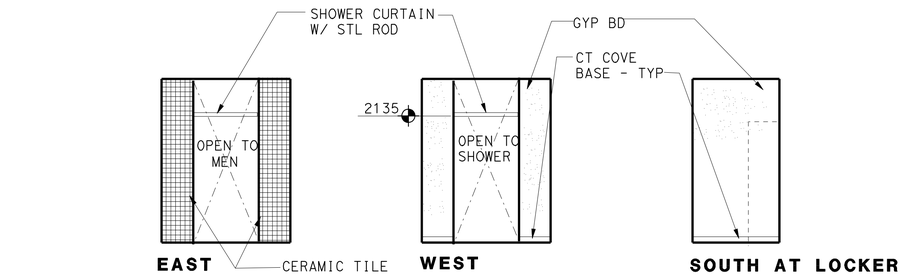

SHOWER MEN 8

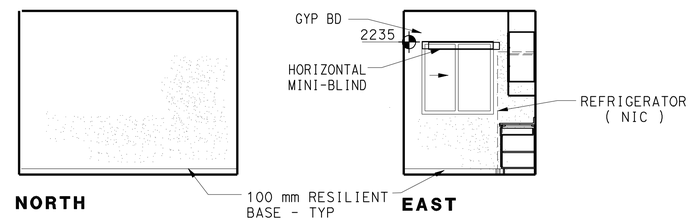

KITCHEN 9

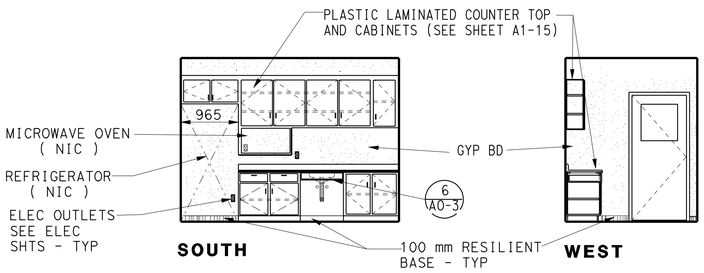

KITCHEN 9

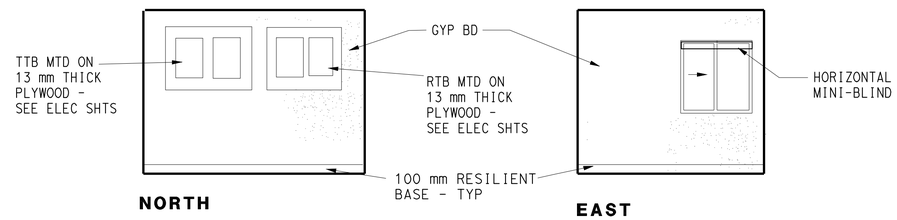

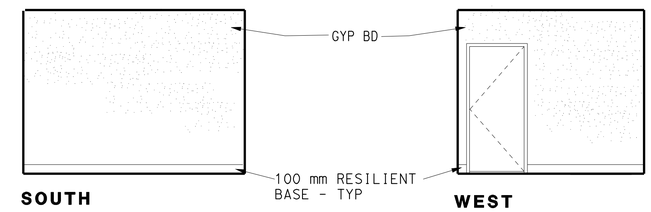

COMMUNICATION 10

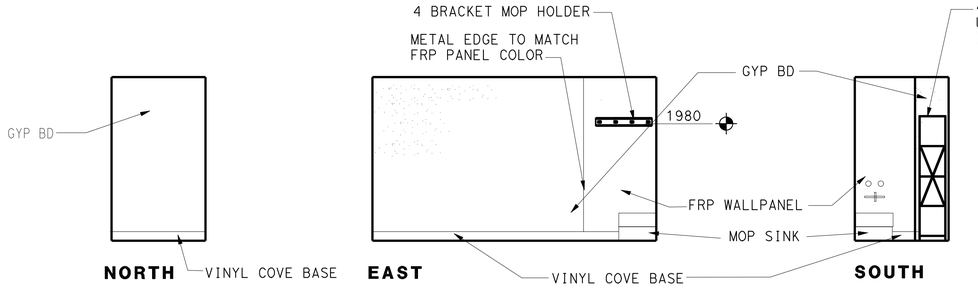

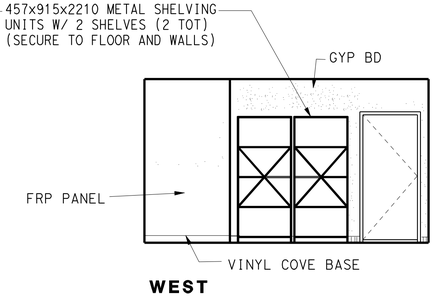

JANITOR 11

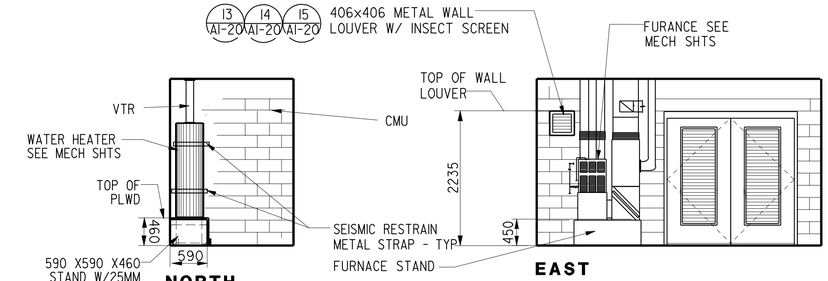

HVAC 12

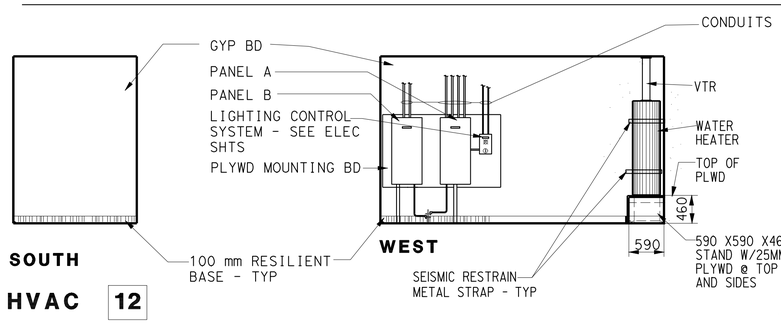

HVAC 12

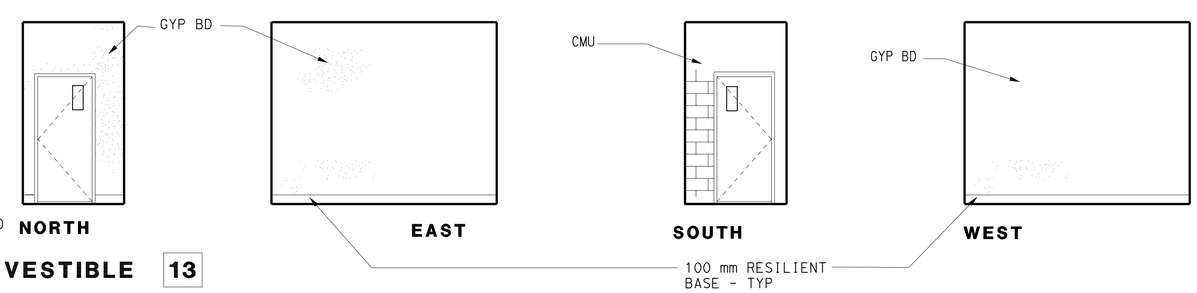

VESTIBLE 13

IDENTIFICATION STAMP
DIV. OF THE STATE ARCHITECT
SACRAMENTO REGIONAL OFFICE
02 108714
AC
DATE 04-23-07

CALIFORNIA STATE FIRE MARSHAL APPROVED
Approval of this plan does not authorize or approve any omission or deviation from applicable regulations. Final approval is subject to field inspection. One set of approved plans shall be available on the project site at all times.
Reviewed by: JEFFERY SCHWARTZ
Approval date: 03/08/10

SCALE 1:50 - TYP UNLESS OTHERWISE NOTED

	BY	CHECKED
DESIGN	TONY CHUN	C FAUST
DETAILS	TONY CHUN	
QUANTITIES		

STATE OF CALIFORNIA DEPARTMENT OF TRANSPORTATION

DIVISION OF ENGINEERING SERVICES ARCHITECTURAL AND STRUCTURAL DESIGN

BRIDGE NO. 50M5722
KM POST 32.66/33.30

TAFT MAINTENANCE STATION

CREW AND EQUIP. BUILDING

INTERIOR ELEVATIONS

SHEET A1-14

a1_14intelev.dgn
DS OSD metric Rev. 9/02 23-MAR-2010 05:50

SCALE: ALL DIMENSIONS ARE IN MILLIMETERS UNLESS OTHERWISE NOTED.

ORIGINAL SCALE IN MILLIMETERS FOR REDUCED PLANS 0 10 20 30 40 50 60 70 80 90 100

CU 06600
EA 483401

DISREGARD PRINTS BEARING EARLIER REVISION DATES → 6/20/06 8/1/06 11/1/06 2/1/07 5/11/07

REVISION DATES (PRELIMINARY STAGE ONLY) SHEET OF

23-MAR-2010 05:50
a1_14intelev.dgn

ALL DIMENSIONS ARE IN MILLIMETERS UNLESS OTHERWISE SHOWN.

Caltrans Metric

DIST.	COUNTY	LOCATION CODE	KILOMETER POST TOTAL PROJECT	SHEET NO.	TOTAL SHEETS
06	Ker	5722		68	178

LICENSED ARCHITECT DATE

LICENSED ARCHITECT WARREN LAI No. C-17122 Exp. 6/30/09 STATE OF CALIFORNIA

3-8-10
PLANS APPROVAL DATE

The State of California or its officers or agents shall not be responsible for the accuracy or completeness of electronic copies of this plan sheet.

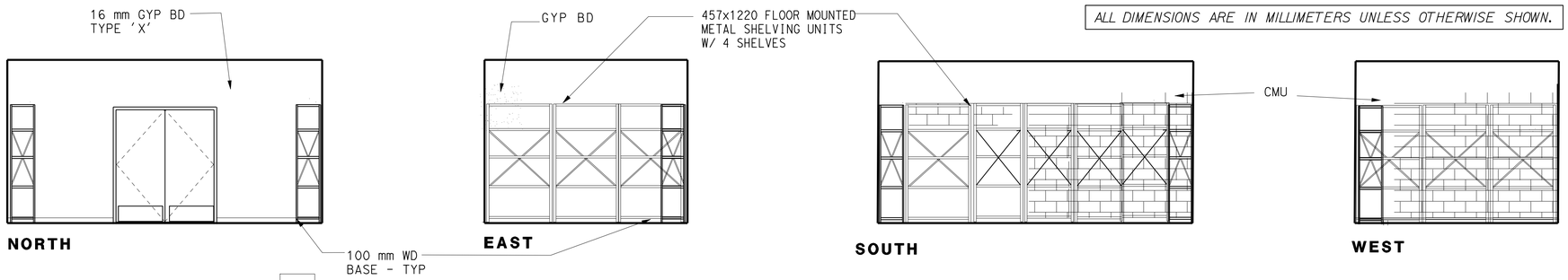

CREW STORAGE 1 14

SCALE 1:50

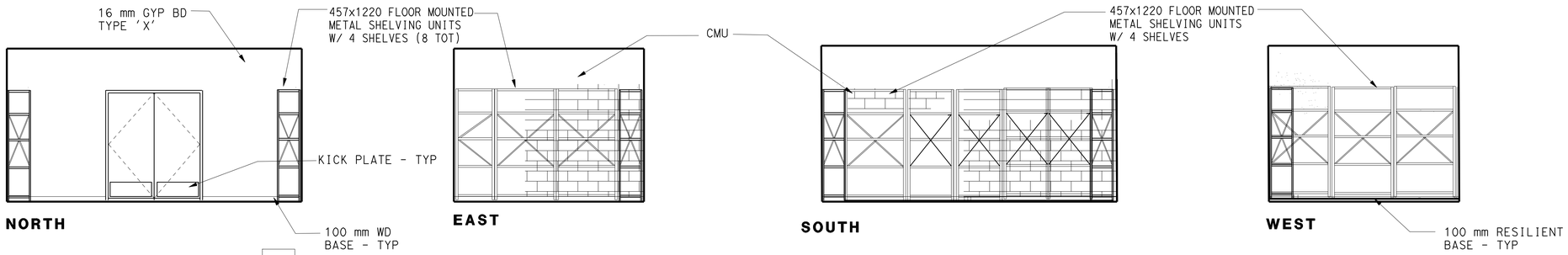

CREW STORAGE 2 15

SCALE 1:50

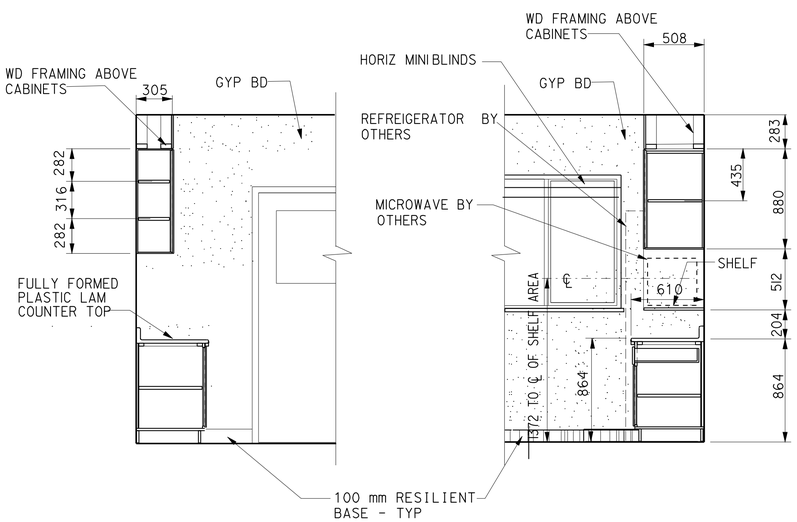

SECTION - A

SCALE 1:25

SECTION - B

SCALE 1:25

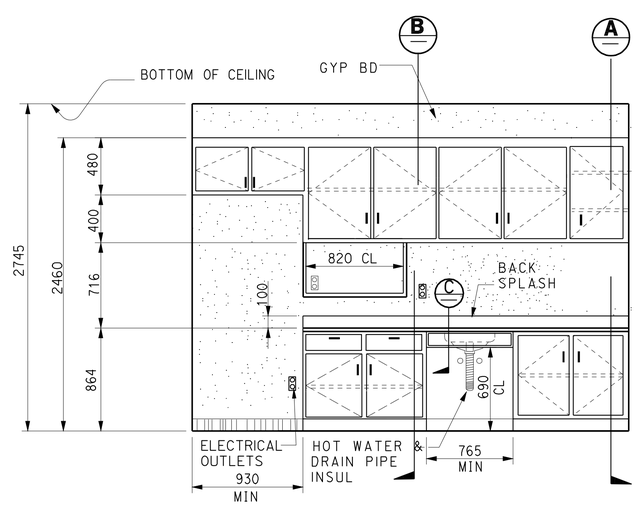

WALL ELEVATION AT KITCHEN

SCALE 1:25

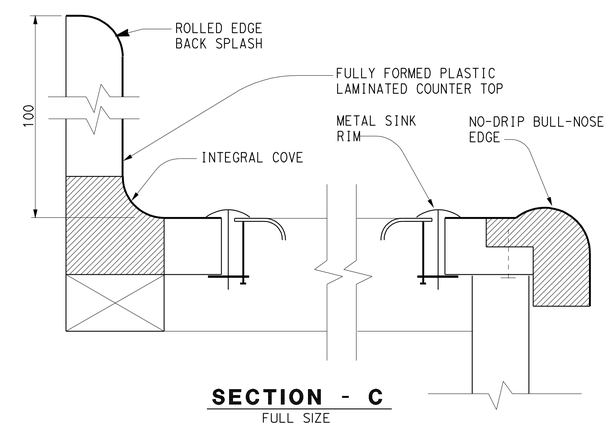

SECTION - C

FULL SIZE

1 CABINET & COUNTER DETAILS

NOTE The Contractor shall verify all controlling field dimensions before ordering or fabricating any material.

IDENTIFICATION STAMP
DIV. OF THE STATE ARCHITECT
SACRAMENTO REGIONAL OFFICE
02 108714
AC
DATE 04-23-07

CALIFORNIA STATE FIRE MARSHAL
APPROVED
Approval of this plan does not authorize or approve any omission or deviation from applicable regulations. Final approval is subject to field inspection. One set of approved plans shall be available on the project site at all times.
Reviewed by: JEFFERY SCHWARTZ
Approval date: 03/08/10

DESIGN	BY TONY CHUN	CHECKED C FAUST	
DETAILS	BY TONY CHUN	CHECKED	
QUANTITIES	BY	CHECKED	

STATE OF CALIFORNIA
DEPARTMENT OF TRANSPORTATION

DIVISION OF ENGINEERING SERVICES
ARCHITECTURAL AND STRUCTURAL DESIGN

BRIDGE NO. 50M5722
KM POST 32.66/33.30

TAFT MAINTENANCE STATION

CREW AND EQUIP. BUILDING

INTERIOR ELEVATIONS

SHEET A1-15

a1_15intelev.dgn
DS OSD metric Rev. 9/02 23-MAR-2010 05:50

SCALE: ALL DIMENSIONS ARE IN MILLIMETERS UNLESS OTHERWISE NOTED.

ORIGINAL SCALE IN MILLIMETERS FOR REDUCED PLANS 0 10 20 30 40 50 60 70 80 90 100

CU 06600
EA 483401

DISREGARD PRINTS BEARING EARLIER REVISION DATES

REVISION DATES (PRELIMINARY STAGE ONLY) 6/20/06 8/1/06 11/1/06 12/1/06 5/1/07 SHEET OF

23-MAR-2010 05:50

a1_15intelev.dgn

ALL DIMENSIONS ARE IN MILLIMETERS UNLESS OTHERWISE SHOWN.

Caltrans Metric

DIST.	COUNTY	LOCATION CODE	KILOMETER POST TOTAL PROJECT	SHEET NO.	TOTAL SHEETS
06	Ker	5722		69	178

LICENSED ARCHITECT — DATE

LICENSED ARCHITECT WARREN LA No. C-17122 Exp. 6/30/09 STATE OF CALIFORNIA

3-8-10
PLANS APPROVAL DATE

The State of California or its officers or agents shall not be responsible for the accuracy or completeness of electronic copies of this plan sheet.

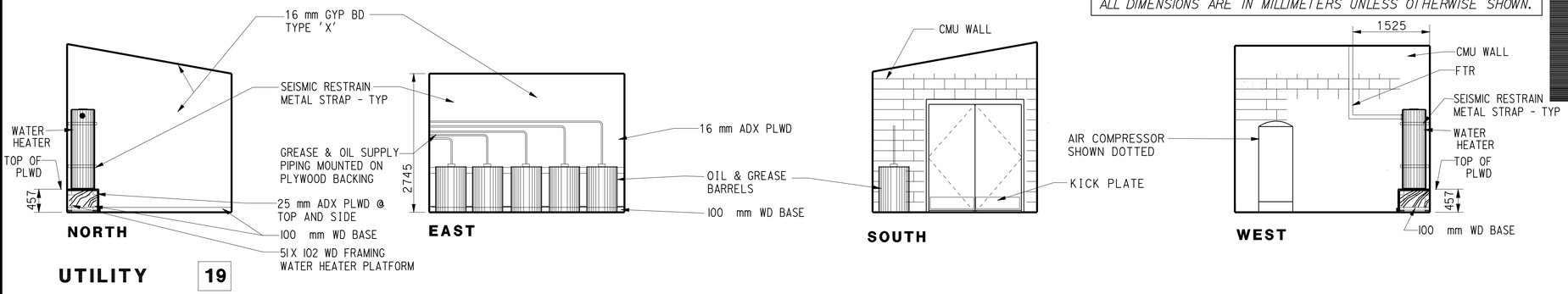

UTILITY 19

SCALE 1 : 50

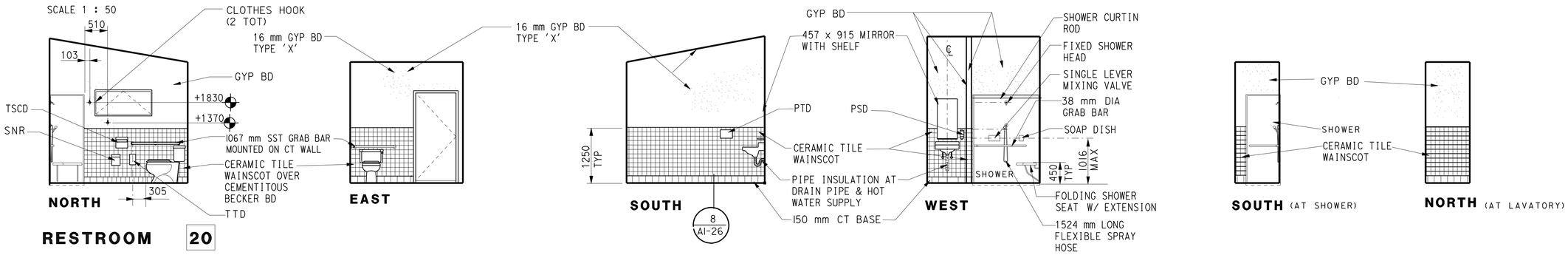

RESTROOM 20

SCALE 1 : 50

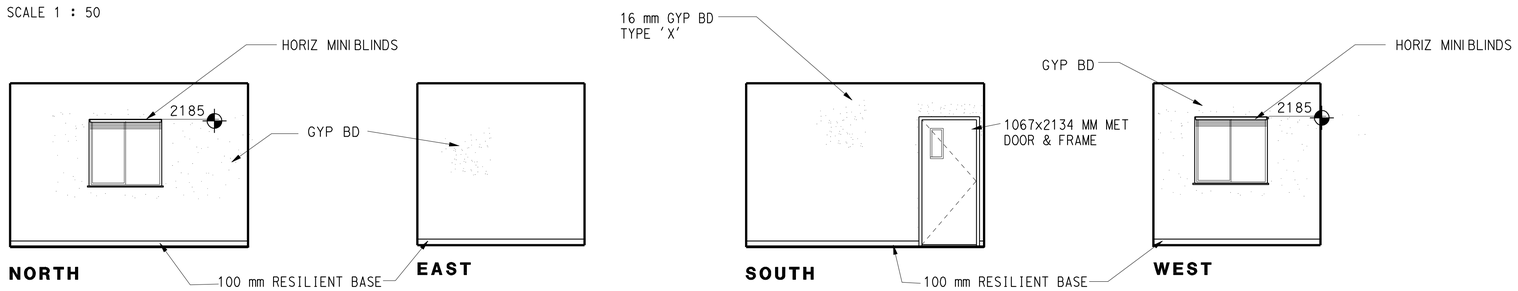

MECHANIC'S OFFICE 21

SCALE 1 : 50

NOTE The Contractor shall verify all controlling field dimensions before ordering or fabricating any material.

IDENTIFICATION STAMP
DIV. OF THE STATE ARCHITECT
SACRAMENTO REGIONAL OFFICE
02 108714
AC A
DATE 04-23-07

CALIFORNIA STATE FIRE MARSHAL APPROVED
Approval of this plan does not authorize or approve any omission or deviation from applicable regulations. Final approval is subject to field inspection. One set of approved plans shall be available on the project site at all times.
Reviewed by: JEFFERY SCHWARTZ
Approval date: 03/08/10

DESIGN	BY TONY CHUN	CHECKED C FAUST	
DETAILS	BY TONY CHUN	CHECKED	
QUANTITIES	BY	CHECKED	

STATE OF CALIFORNIA
DEPARTMENT OF TRANSPORTATION

DIVISION OF ENGINEERING SERVICES
ARCHITECTURAL AND STRUCTURAL DESIGN

BRIDGE NO. 50M5722
KM POST 32.66/33.30

CREW AND EQUIP. BUILDING

TAFT MAINTENANCE STATION
INTERIOR ELEVATIONS

SHEET A1-16

a1_16intelev.dgn
DS OSD metric Rev. 9/02 23-MAR-2010 05:50

SCALE: ALL DIMENSIONS ARE IN MILLIMETERS UNLESS OTHERWISE NOTED.

ORIGINAL SCALE IN MILLIMETERS FOR REDUCED PLANS 0 10 20 30 40 50 60 70 80 90 100

CU 06600
EA 483401

DISREGARD PRINTS BEARING EARLIER REVISION DATES →

REVISION DATES (PRELIMINARY STAGE ONLY) 6/20/06 8/1/06 11/1/06 12/1/06 2/1/07 5/11/07 SHEET OF

23-MAR-2010 05:50
a1_16intelev.dgn

ALL DIMENSIONS ARE IN MILLIMETERS UNLESS OTHERWISE SHOWN.

Caltrans Metric

DIST.	COUNTY	LOCATION CODE	KILOMETER POST TOTAL PROJECT	SHEET NO.	TOTAL SHEETS
06	Ker	5722		70	178

LICENSED ARCHITECT DATE

LICENSED ARCHITECT WARREN LAI No. C-17122 Exp. 6/30/09 STATE OF CALIFORNIA

3-8-10
PLANS APPROVAL DATE

The State of California or its officers or agents shall not be responsible for the accuracy or completeness of electronic copies of this plan sheet.

IDENTIFICATION STAMP
DIV. OF THE STATE ARCHITECT
SACRAMENTO REGIONAL OFFICE
02 108714
AC
DATE 04-23-07

CALIFORNIA STATE FIRE MARSHAL
APPROVED
Approval of this plan does not authorize or approve any omission or deviation from applicable regulations. Final approval is subject to field inspection. One set of approved plans shall be available on the project site at all times.
Reviewed by: JEFFERY SCHWARTZ
Approval date: 03/08/10

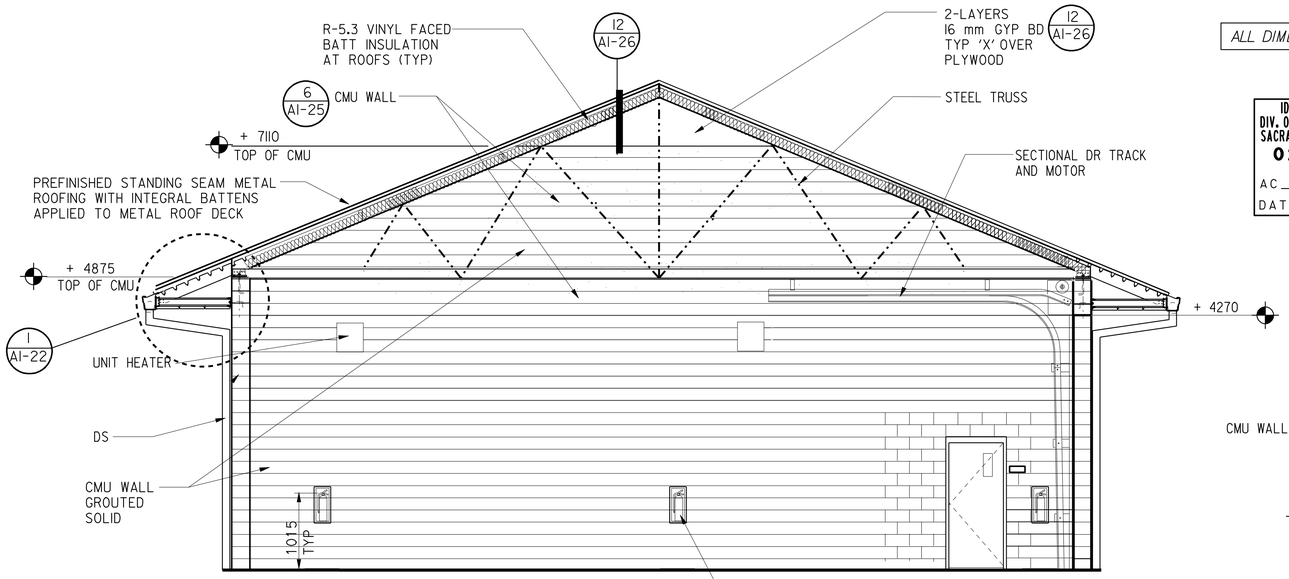

NORTH WALL

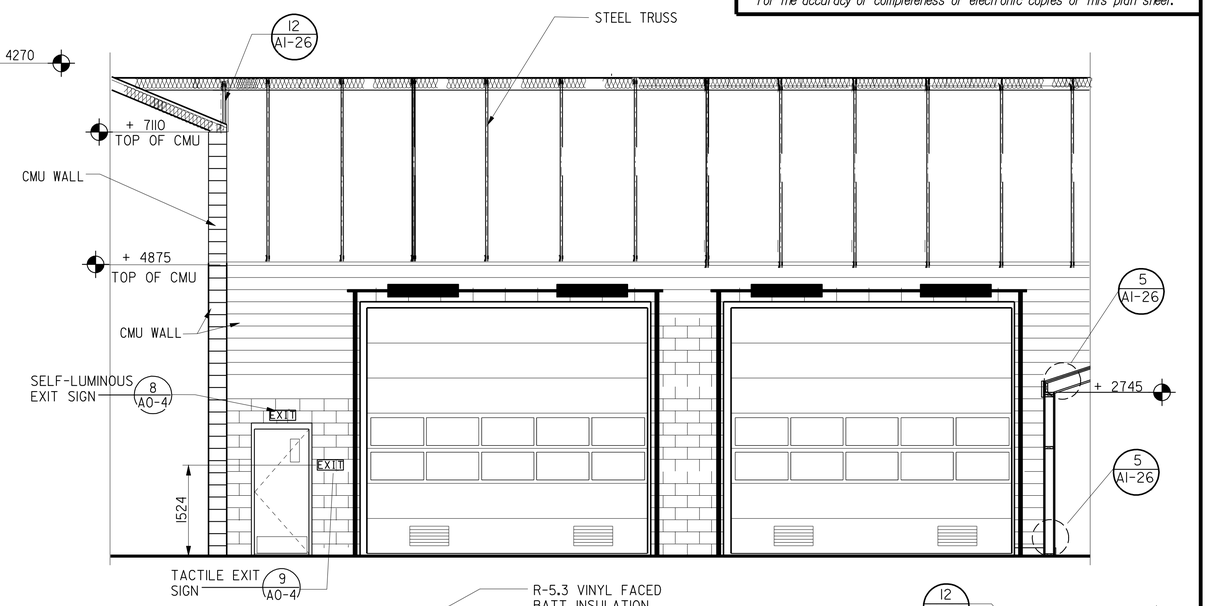

EAST WALL

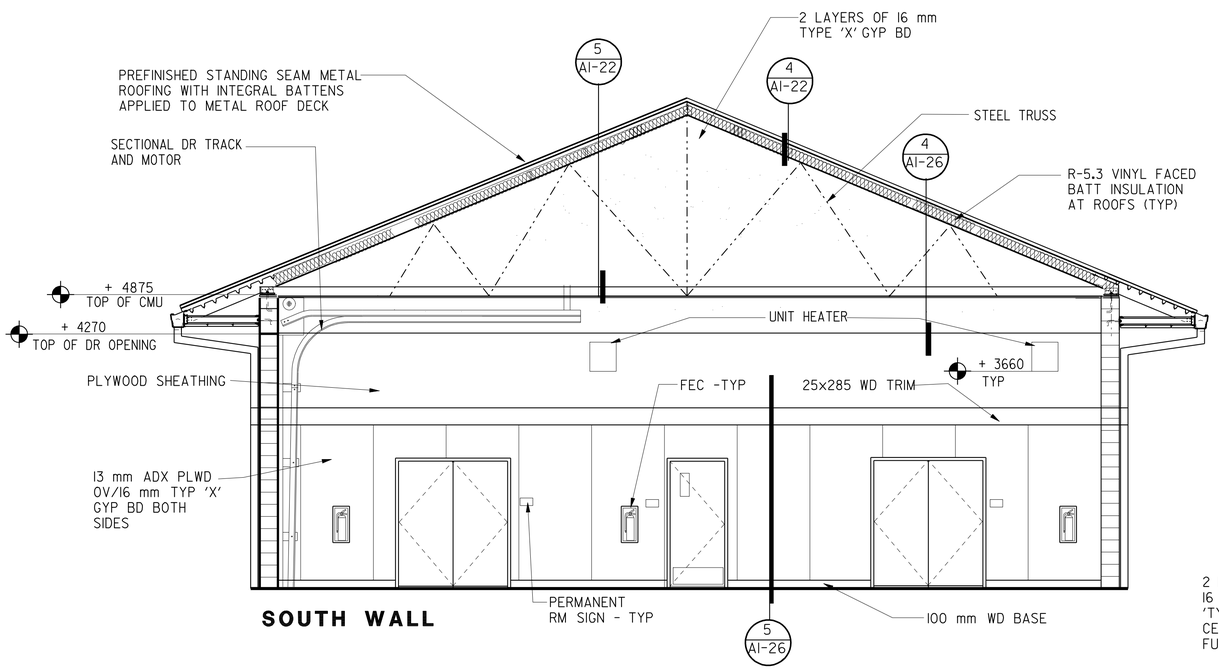

SOUTH WALL

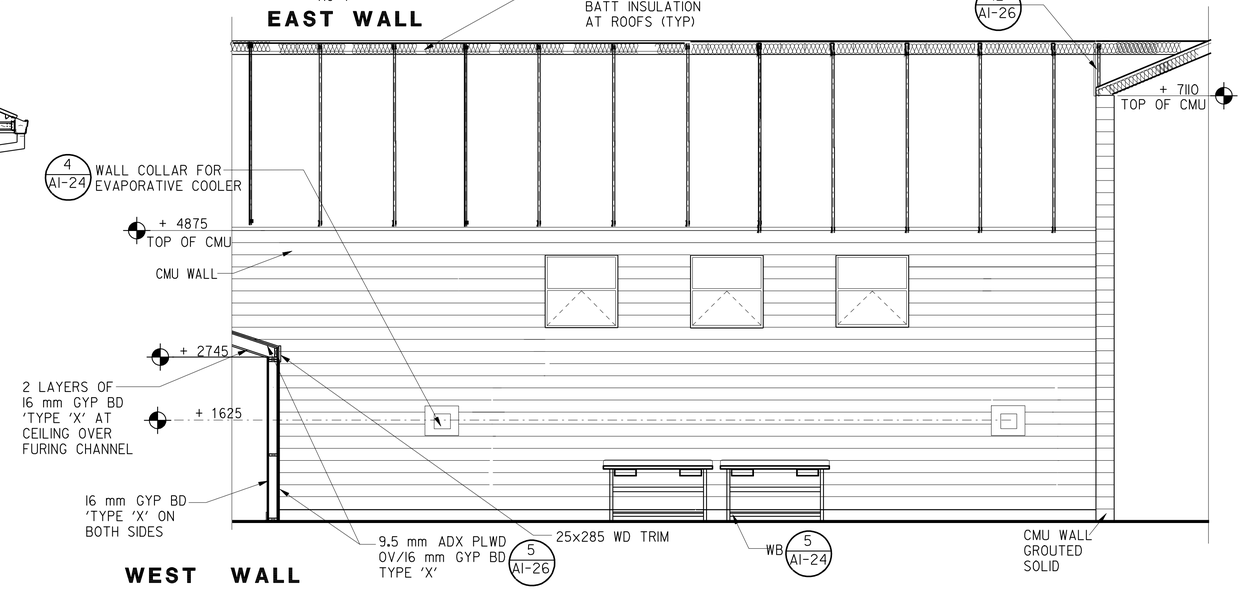

WEST WALL

NOTE The Contractor shall verify all controlling field dimensions before ordering or fabricating any material.

EQUIPMENT BAYS 16

SCALE 1:50 TYP

DESIGN	BY TONY CHUN	C FAUST	
DETAILS	BY TONY CHUN	CHECKED	
QUANTITIES	BY	CHECKED	

STATE OF CALIFORNIA
DEPARTMENT OF TRANSPORTATION

DIVISION OF ENGINEERING SERVICES
ARCHITECTURAL AND STRUCTURAL DESIGN

BRIDGE NO. 50M5722
KM POST 32.66/33.30

TAFT MAINTENANCE STATION
CREW AND EQUIP. BUILDING
INTERIOR SECTIONAL ELEVATIONS

SHEET **A1-17**

a1_17intelev.dgn
DS OSD metric Rev. 9/02 23-MAR-2010 05:50

SCALE: ALL DIMENSIONS ARE IN MILLIMETERS UNLESS OTHERWISE NOTED.

ORIGINAL SCALE IN MILLIMETERS FOR REDUCED PLANS 0 10 20 30 40 50 60 70 80 90 100

CU 06600
EA 483401

DISREGARD PRINTS BEARING EARLIER REVISION DATES → 8/1/06 12/1/06 2/1/07 5/11/07

REVISION DATES (PRELIMINARY STAGE ONLY) SHEET OF

23-MAR-2010 05:50
a1_17intelev.dgn

DIST.	COUNTY	LOCATION CODE	KILOMETER POST TOTAL PROJECT	SHEET NO.	TOTAL SHEETS
06	Ker	5722		71	178

Caltrans Metric

LICENSED ARCHITECT — DATE

LICENSED ARCHITECT WARREN LAI No. C-17122 Exp. 6/30/09 STATE OF CALIFORNIA

3-8-10
PLANS APPROVAL DATE

The State of California or its officers or agents shall not be responsible for the accuracy or completeness of electronic copies of this plan sheet.

ALL DIMENSIONS ARE IN MILLIMETERS UNLESS OTHERWISE SHOWN.

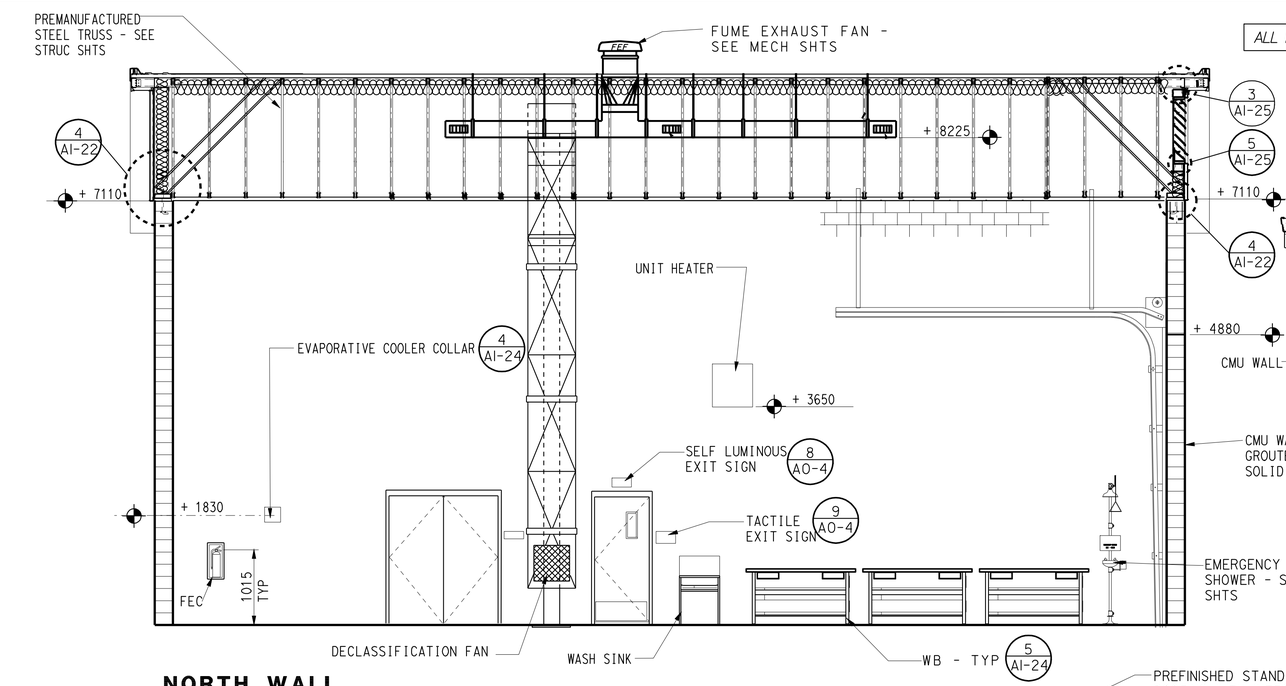

NORTH WALL

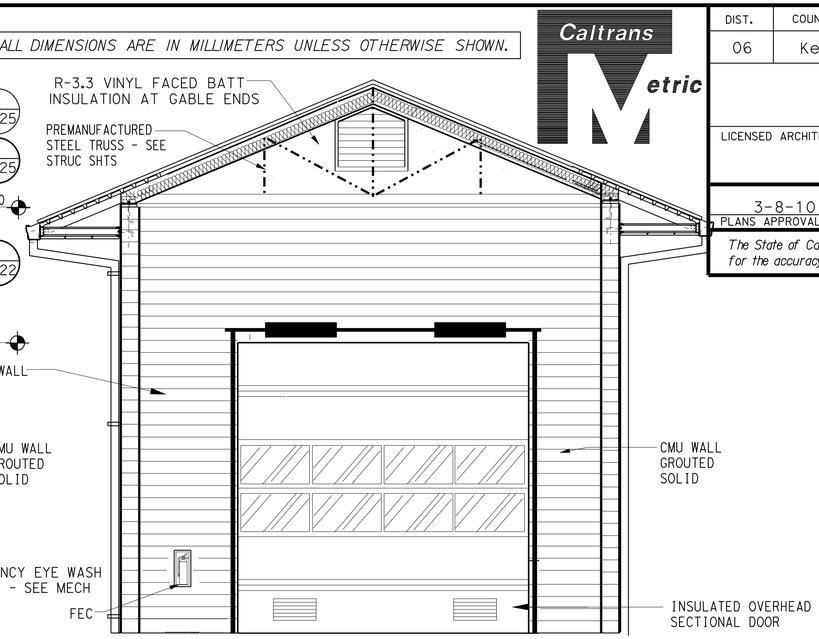

EAST WALL

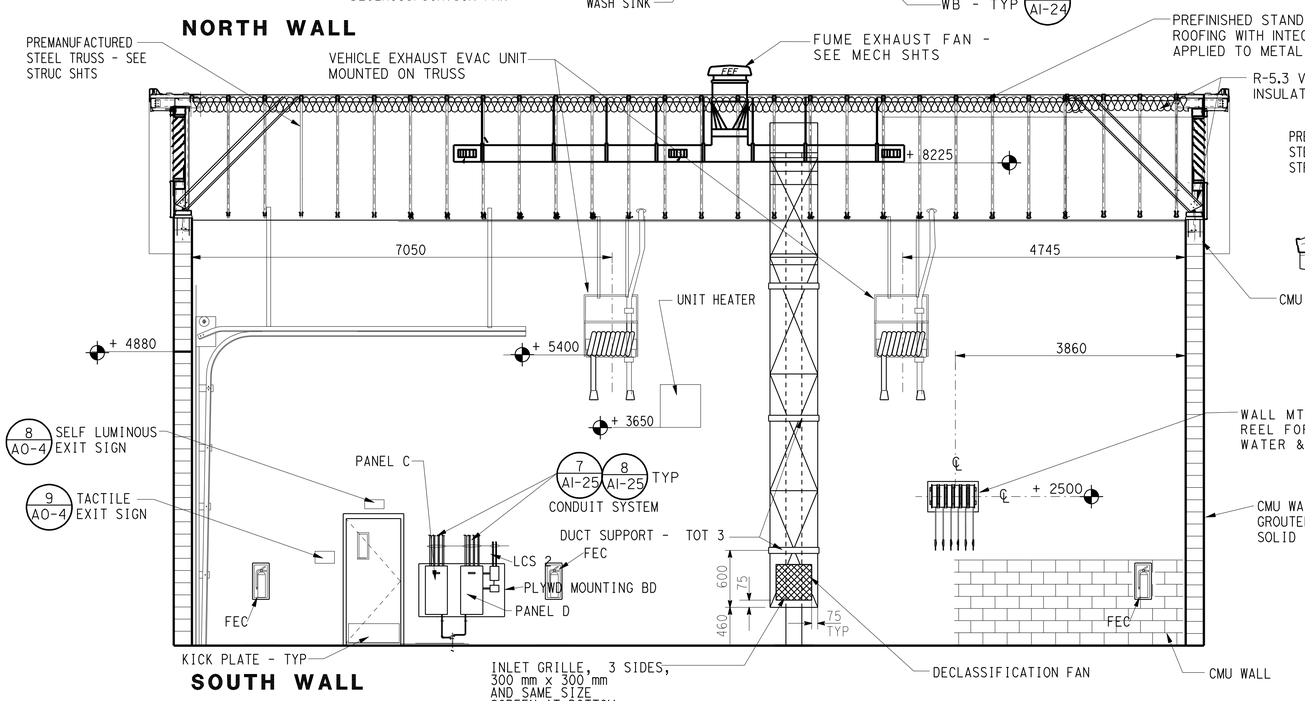

SOUTH WALL

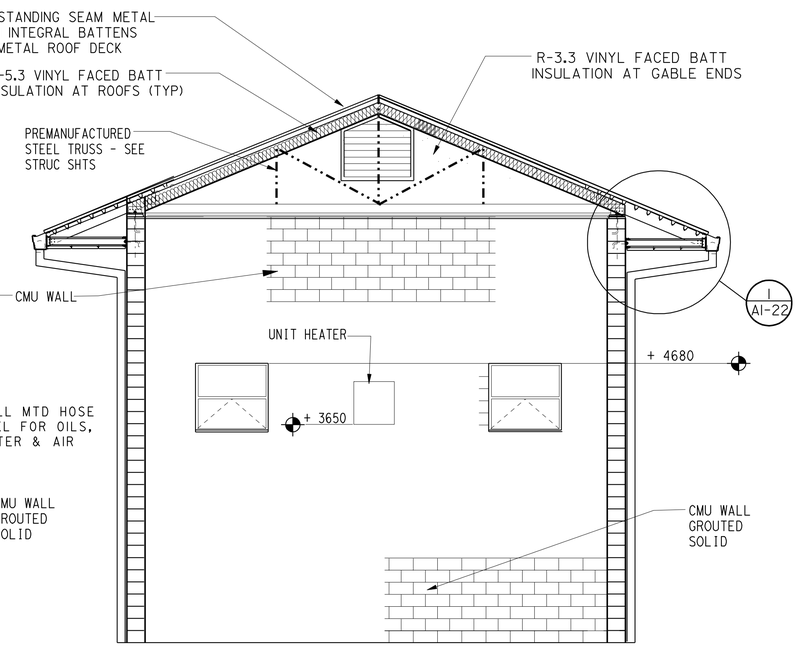

WEST WALL

NOTE *The Contractor shall verify all controlling field dimensions before ordering or fabricating any material.*

MECHANICS BAY 17

SCALE 1:50 NOTE : SEE ELEC AND MECH SHTS FOR INSTALLATION AND MOUNTING OF EQUIPMENTS

IDENTIFICATION STAMP
DIV. OF THE STATE ARCHITECT
SACRAMENTO REGIONAL OFFICE
02 108714
AC
DATE 04-23-07

CALIFORNIA STATE FIRE MARSHAL APPROVED
Approval of this plan does not authorize or approve any omission or deviation from applicable regulations. Final approval is subject to field inspection. One set of approved plans shall be available on the project site at all times.
Reviewed by: JEFFERY SCHWARTZ
Approval date: 03/08/10

DESIGN	BY TONY CHUN	C FAUST	
DETAILS	BY TONY CHUN	CHECKED	
QUANTITIES	BY	CHECKED	

STATE OF CALIFORNIA
DEPARTMENT OF TRANSPORTATION

DIVISION OF ENGINEERING SERVICES
ARCHITECTURAL AND STRUCTURAL DESIGN

BRIDGE NO. 50M5722
KM POST 32.66/33.30

CREW AND EQUIP. BUILDING

TAFT MAINTENANCE STATION
INTERIOR SECTIONAL ELEVATIONS

SHEET A1-18

a1_18intelev.dgn
DS OSD metric Rev. 9/02 23-MAR-2010 05:50

SCALE: ALL DIMENSIONS ARE IN MILLIMETERS UNLESS OTHERWISE NOTED.

ORIGINAL SCALE IN MILLIMETERS FOR REDUCED PLANS 0 10 20 30 40 50 60 70 80 90 100

CU 06600
EA 483401

DISREGARD PRINTS BEARING EARLIER REVISION DATES → 8/1/06 11/1/06 12/1/06 2/1/07 5/11/07

REVISION DATES (PRELIMINARY STAGE ONLY) SHEET OF

23-MAR-2010 05:50

a1_18intelev.dgn

ALL DIMENSIONS ARE IN MILLIMETERS UNLESS OTHERWISE SHOWN.

Caltrans Metric

DIST.	COUNTY	LOCATION CODE	KILOMETER POST TOTAL PROJECT	SHEET NO.	TOTAL SHEETS
06	Ker	5722		72	178

LICENSED ARCHITECT DATE

LICENSED ARCHITECT WARREN LAI No. C-17122 Exp. 6/30/09 STATE OF CALIFORNIA

3-8-10
PLANS APPROVAL DATE

The State of California or its officers or agents shall not be responsible for the accuracy or completeness of electronic copies of this plan sheet.

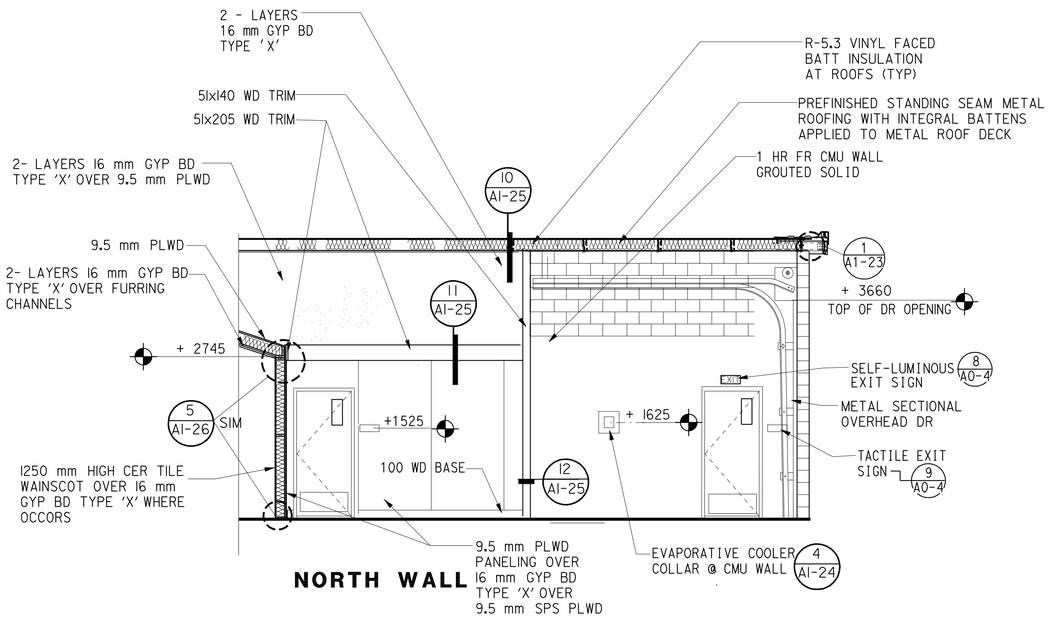

NORTH WALL

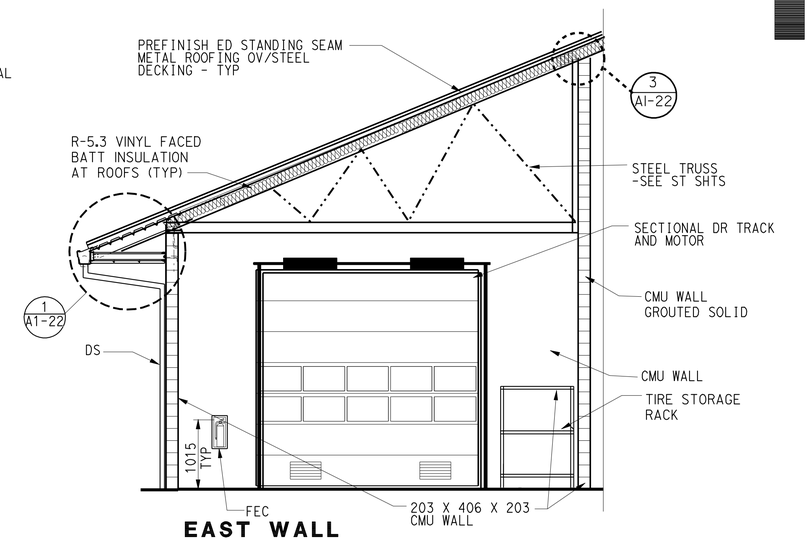

EAST WALL

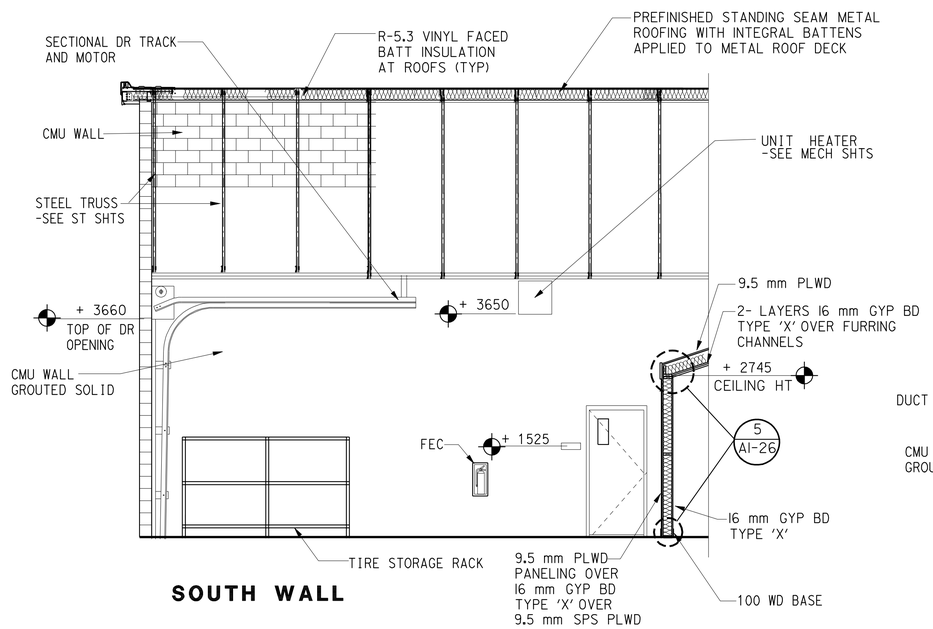

SOUTH WALL

TRUCK BAY 18

SCALE 1:50

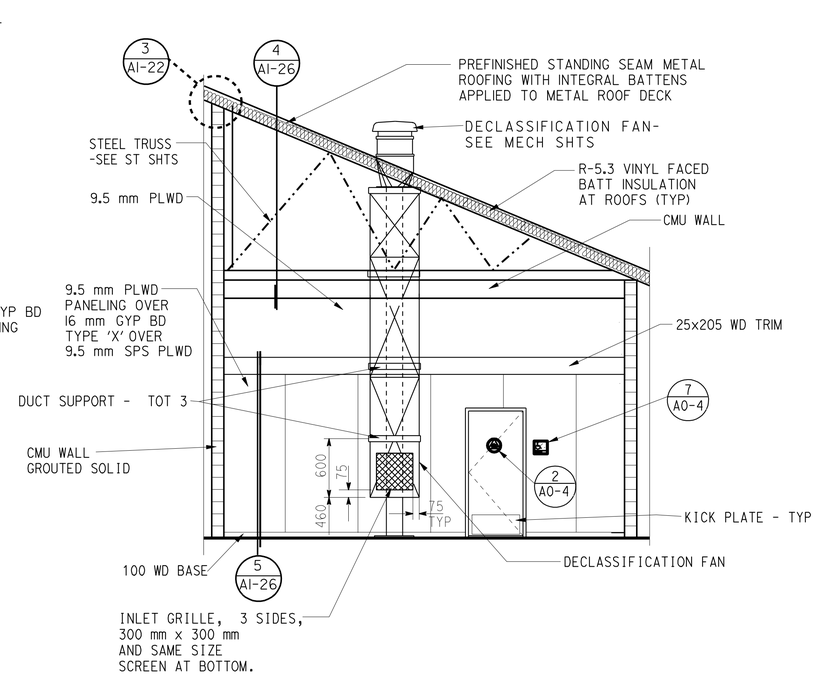

WEST WALL

NOTE *The Contractor shall verify all controlling field dimensions before ordering or fabricating any material.*

IDENTIFICATION STAMP
DIV. OF THE STATE ARCHITECT
SACRAMENTO REGIONAL OFFICE
02 108714
AC
DATE 04-23-07

CALIFORNIA STATE FIRE MARSHAL APPROVED
Approval of this plan does not authorize or approve any omission or deviation from applicable regulations. Final approval is subject to field inspection. One set of approved plans shall be available on the project site at all times.
Reviewed by: JEFFERY SCHWARTZ
Approval date: 03/08/10

CHECKED

DESIGN	BY TONY CHUN	C FAUST	
DETAILS	BY TONY CHUN	CHECKED	
QUANTITIES	BY	CHECKED	

STATE OF CALIFORNIA DEPARTMENT OF TRANSPORTATION

DIVISION OF ENGINEERING SERVICES ARCHITECTURAL AND STRUCTURAL DESIGN

BRIDGE NO. 50M5722
KM POST 32.66/33.30

CREW AND EQUIP. BUILDING

TAFT MAINTENANCE STATION

INTERIOR SECTIONAL ELEVATIONS

SHEET **A1-19**

a1_19intelev.dgn
DS OSD metric Rev. 9/02 23-MAR-2010 05:51

SCALE: ALL DIMENSIONS ARE IN MILLIMETERS UNLESS OTHERWISE NOTED.

ORIGINAL SCALE IN MILLIMETERS FOR REDUCED PLANS 0 10 20 30 40 50 60 70 80 90 100

CU 06600
EA 483401

DISREGARD PRINTS BEARING EARLIER REVISION DATES → 6/20/06 11/1/06 12/1/06 2/1/07 5/11/07

REVISION DATES (PRELIMINARY STAGE ONLY) SHEET OF

23-MAR-2010 05:51

a1_19intelev.dgn

DIST.	COUNTY	LOCATION CODE	KILOMETER POST TOTAL PROJECT	SHEET NO.	TOTAL SHEETS
06	Ker	5722		73	178

Caltrans Metric

LICENSED ARCHITECT — DATE 2/17/06

LICENSED ARCHITECT WARREN LAI No. C-17122 Exp. 6/30/09 STATE OF CALIFORNIA

3-8-10
PLANS APPROVAL DATE

The State of California or its officers or agents shall not be responsible for the accuracy or completeness of electronic copies of this plan sheet.

ALL DIMENSIONS ARE IN MILLIMETERS UNLESS OTHERWISE SHOWN.

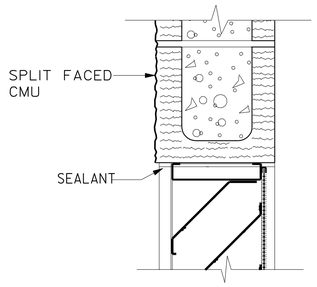

14 HEAD

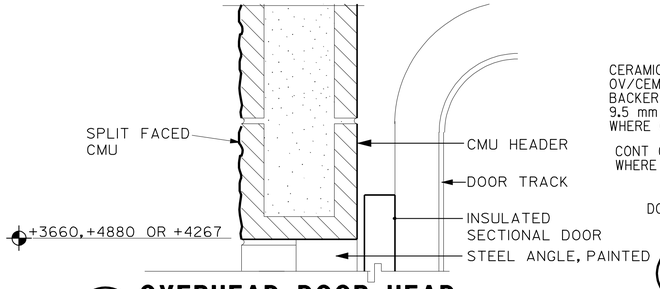

11 OVERHEAD DOOR HEAD

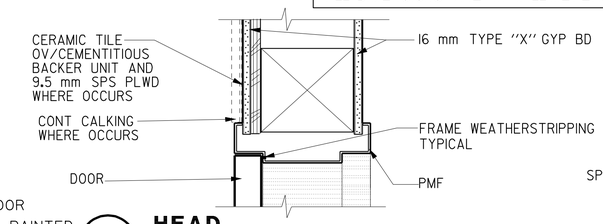

7 HEAD

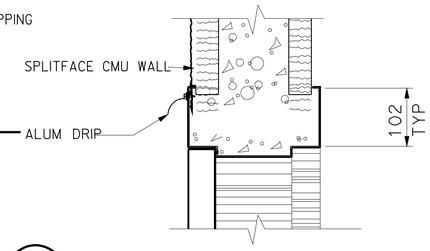

4 HEAD

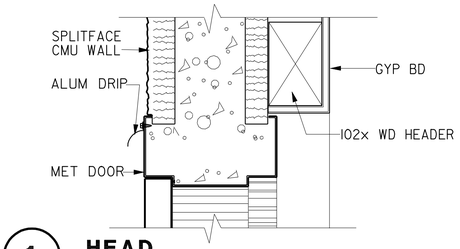

1 HEAD

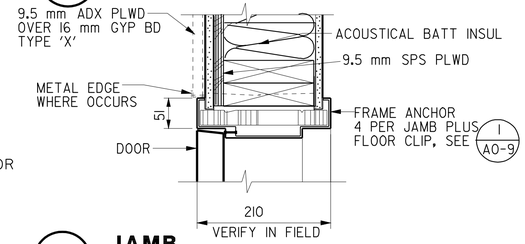

8 JAMB

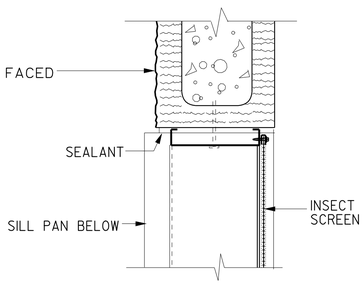

15 JAMB

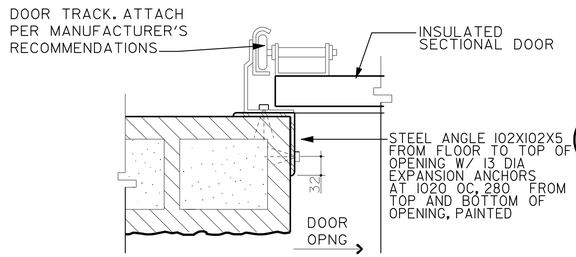

12 OVERHEAD DOOR JAMB

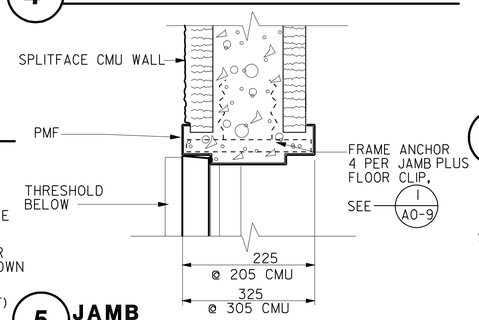

5 JAMB

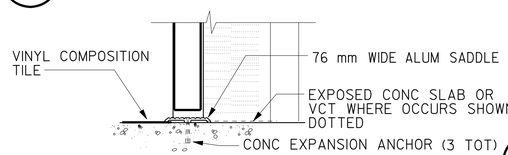

9 SILL AT VCT/CONCRETE FLOOR

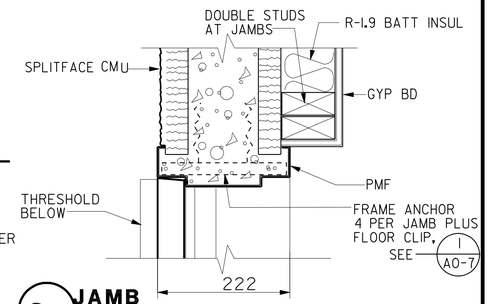

2 JAMB

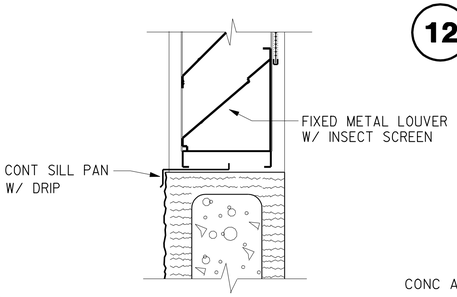

16 SILL

EXTRUDED ALUM LOUVER

SCALE 1:5

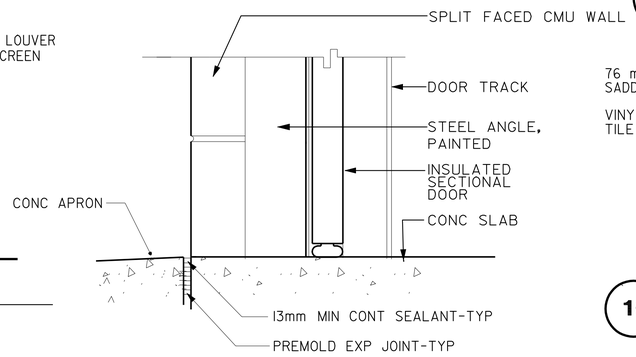

13 OVERHEAD DOOR THRESHOLD

OVERHEAD DOOR DETAILS

SCALE 1:5

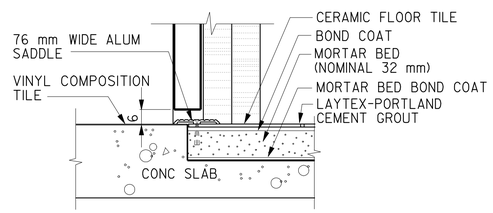

10 SILL AT CERAMIC TILE FLOOR

INTERIOR DOOR DETAILS

SCALE 1:5

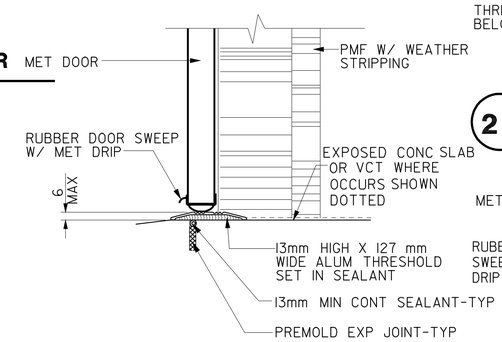

6 SILL

EXTERIOR DOOR DETAILS

SCALE 1:5

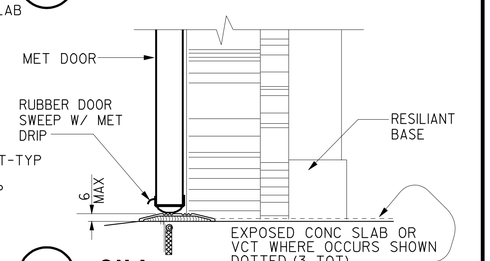

3 SILL

EXTERIOR DOOR DETAILS WITH FURRED STUD WALL SCALE 1:5

IDENTIFICATION STAMP
DIV. OF THE STATE ARCHITECT
SACRAMENTO REGIONAL OFFICE
02 108714
AC
DATE 04-23-07

CALIFORNIA STATE FIRE MARSHAL APPROVED
Approval of this plan does not authorize or approve any omission or deviation from applicable regulations. Final approval is subject to field inspection. One set of approved plans shall be available on the project site at all times.
Reviewed by: JEFFERY SCHWARTZ
Approval date: 03/08/10

NOTE The Contractor shall verify all controlling field dimensions before ordering or fabricating any material.

DESIGN	TONY CHUN	CHECKED	C FAUST
DETAILS	BY TONY CHUN	CHECKED	
QUANTITIES	BY	CHECKED	

STATE OF CALIFORNIA DEPARTMENT OF TRANSPORTATION

DIVISION OF ENGINEERING SERVICES ARCHITECTURAL AND STRUCTURAL DESIGN

BRIDGE NO. 50M5722
KM POST 32.66/33.30

TAFT MAINTENANCE STATION
CREW AND EQUIP. BUILDING
DOOR DETAILS

SHEET **A1-20**

a1_20drdet.dgn
DS OSD metric Rev. 9/02 23-MAR-2010 05:51

SCALE: ALL DIMENSIONS ARE IN MILLIMETERS UNLESS OTHERWISE NOTED.

ORIGINAL SCALE IN MILLIMETERS FOR REDUCED PLANS 0 10 20 30 40 50 60 70 80 90 100

CU 06257
EA 483401

DISREGARD PRINTS BEARING EARLIER REVISION DATES → 8/1/06 11/1/06 2/1/06 5/11/07

REVISION DATES (PRELIMINARY STAGE ONLY) SHEET OF

23-MAR-2010 05:51

a1_20drdet.dgn

DIST.	COUNTY	LOCATION CODE	KILOMETER POST TOTAL PROJECT	SHEET NO.	TOTAL SHEETS
06	Ker	5722		74	178

LICENSED ARCHITECT — DATE 2/17/06

LICENSED ARCHITECT WARREN LAI No. C-17122 Exp. 6/30/09 STATE OF CALIFORNIA

3-8-10
PLANS APPROVAL DATE

The State of California or its officers or agents shall not be responsible for the accuracy or completeness of electronic copies of this plan sheet.

All dimensions shown in millimeters unless noted otherwise.

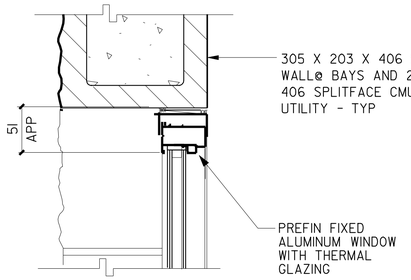

11 HEAD (JAMB - SIM)

SCALE 1:5

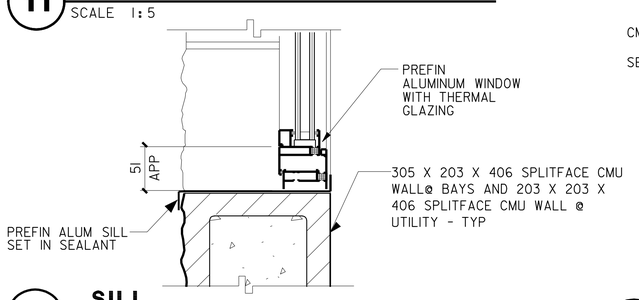

12 SILL

SCALE 1:5

PROJECT-OUT WINDOW @ BAYS

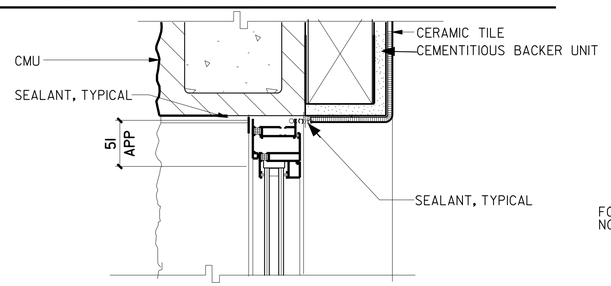

13 HEAD (JAMB SIM)

SCALE 1:4

WALL TILE INSTALLATION METHOD BASED ON TCA HANDBOOK W244-2002

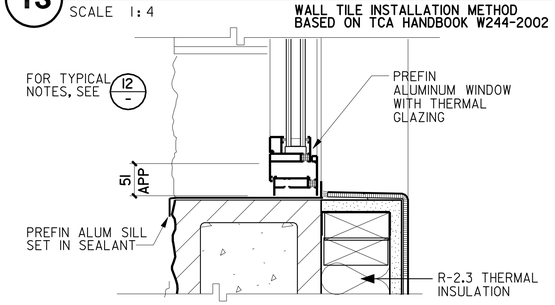

14 SILL

PROJECT-OUT WINDOW @ RESTROOM

SCALE 1:4

WALL TILE INSTALLATION METHOD BASED ON TCA HANDBOOK W244-2002

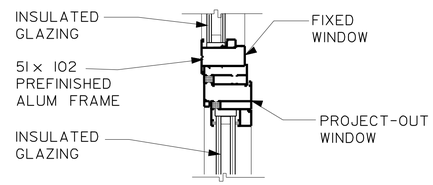

7 HORIZ MULLION GLAZING TO GLAZING

PROJECT-OUT WINDOW @ BAYS & UTILITY

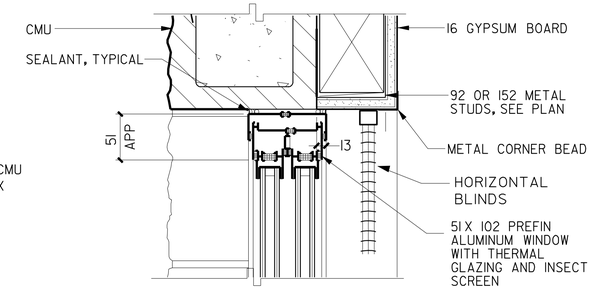

8 HEAD

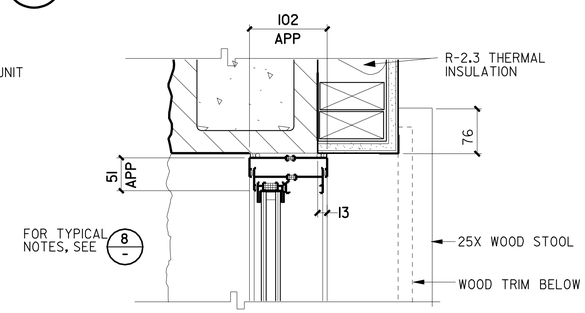

9 JAMB

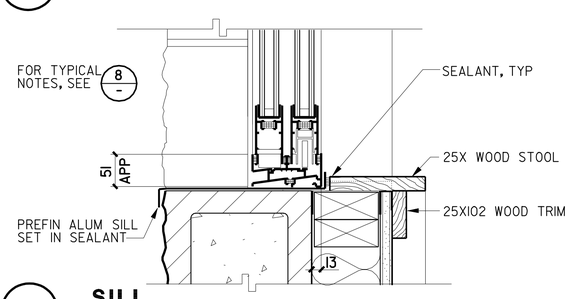

10 SILL

EXTERIOR SLIDING WINDOW, TYP

SCALE 1:4

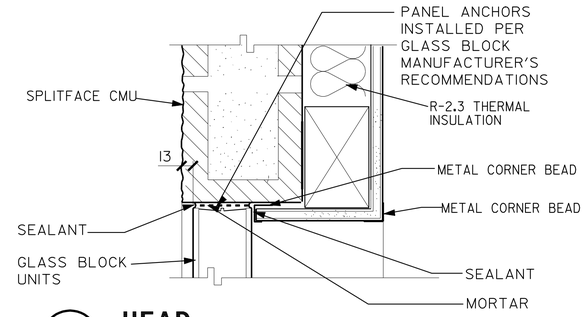

4 HEAD

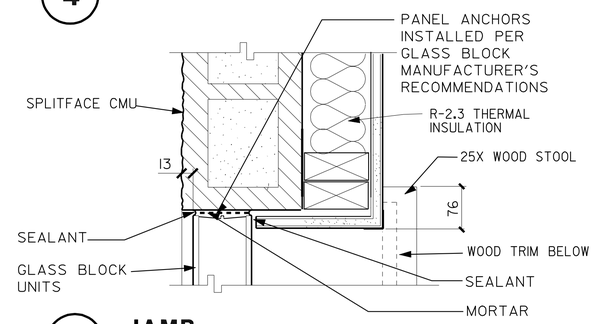

5 JAMB

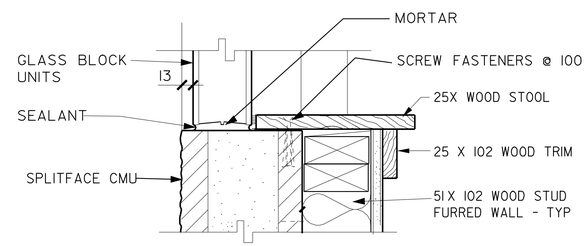

6 SILL

GLASS BLOCK WITH FURRED CMU WALL

SCALE 1:5

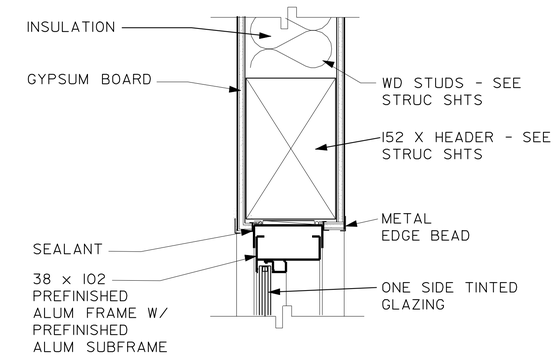

1 HEAD

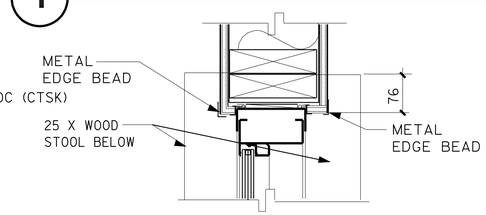

2 JAMB

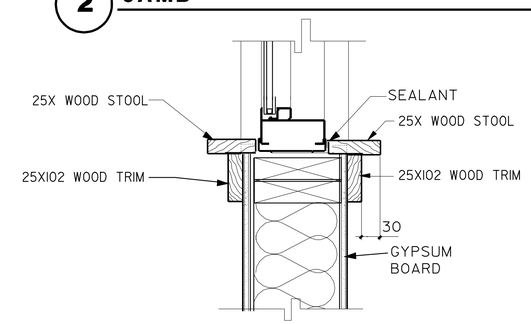

3 SILL

INTERIOR FIXED WINDOW - TYP

SCALE 1:5

IDENTIFICATION STAMP
DIV. OF THE STATE ARCHITECT
SACRAMENTO REGIONAL OFFICE
02 108714
AC
DATE 04-23-07

CALIFORNIA STATE FIRE MARSHAL
APPROVED
Approval of this plan does not authorize or approve any omission or deviation from applicable regulations. Final approval is subject to field inspection. One set of approved plans shall be available on the project site at all times.
Reviewed by: JEFFERY SCHWARTZ
Approval date: 03/08/10

ALL DIMENSIONS ARE IN MILLIMETERS UNLESS OTHERWISE SHOWN.

DESIGNER	TONY CHUN	CHECKED BY	C FAUST
DRAWN BY	TONY CHUN	STRUCTURAL REVIEW	

STATE OF CALIFORNIA
DEPARTMENT OF TRANSPORTATION

DIVISION OF ENGINEERING SERVICES
ARCHITECTURAL AND STRUCTURAL DESIGN

BRIDGE NO. 50M5722
KM POST 32.66/33.30

TAFT MAINTENANCE STATION

CREW AND EQUIP. BUILDING

WINDOW & GLASS BLOCK DETAILS

SHEET A1-21

DS OSD 2180 (08/92)
FILE => a1_21windowdet.dgn
DATE PLOTTED => 23-MAR-2010 TIME PLOTTED => 05:51

ORIGINAL SCALE IN MILLIMETERS FOR REDUCED PLANS 0 10 20 30 40 50 60 70 80 90 100

CU 06257
EA 483401

DISREGARD PRINTS BEARING EARLIER REVISION DATES →

REVISION DATES (PRELIMINARY STAGE ONLY): 8/1/06 1/11/06 2/1/07 5/11/07

SHEET OF

FILE => a1_21windowdet.dgn

USERNAME => trmikesl

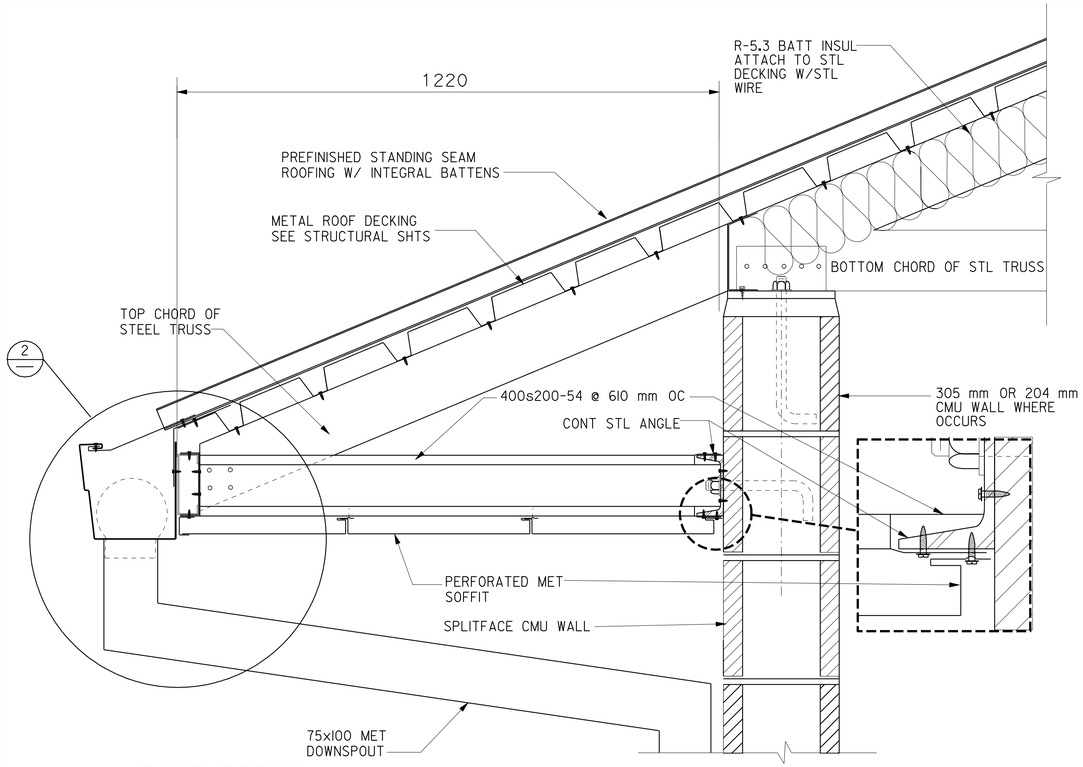

1 EAVE DETAIL

SCALE 1:5

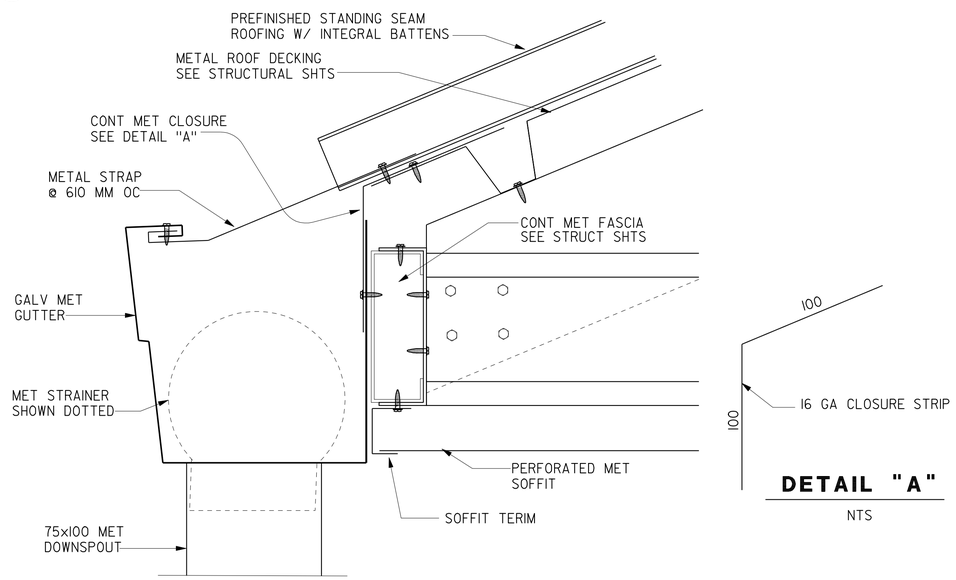

2 FASCIA DETAIL

SCALE 1:2.5

DETAIL "A"

NTS

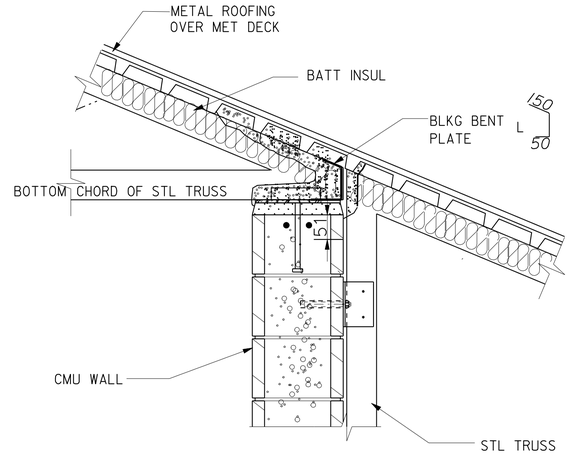

3 FR CMU WALL

SCALE 1:5

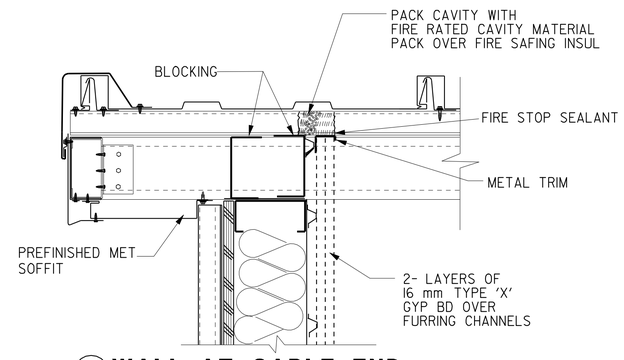

4 WALL AT GABLE END

SCALE 1:5

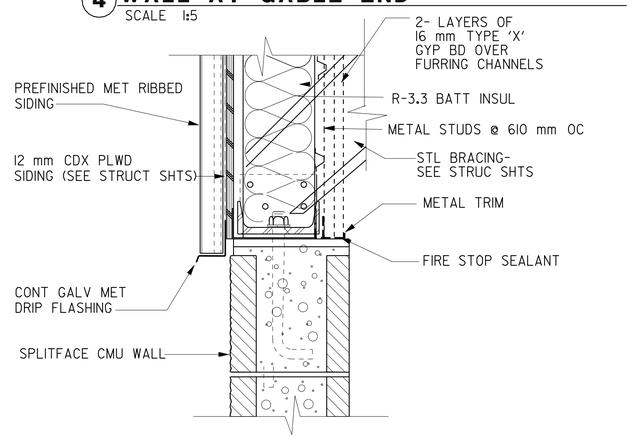

5 WALL AT GABLE END

SCALE 1:5

ALL DIMENSIONS ARE IN MILLIMETERS UNLESS OTHERWISE SHOWN.

Caltrans Metric

DIST.	COUNTY	LOCATION CODE	KILOMETER POST TOTAL PROJECT	SHEET NO.	TOTAL SHEETS
06	Ker	5722		75	178

LICENSED ARCHITECT — DATE 2/17/06

LICENSED ARCHITECT WARREN LAI No. C-17122 Exp. 6/30/09 STATE OF CALIFORNIA

3-8-10
PLANS APPROVAL DATE

The State of California or its officers or agents shall not be responsible for the accuracy or completeness of electronic copies of this plan sheet.

IDENTIFICATION STAMP
DIV. OF THE STATE ARCHITECT
SACRAMENTO REGIONAL OFFICE
02 108714
AC
DATE 04-23-07

CALIFORNIA STATE FIRE MARSHAL APPROVED
Approval of this plan does not authorize or approve any omission or deviation from applicable regulations. Final approval is subject to field inspection. One set of approved plans shall be available on the project site at all times.
Reviewed by: JEFFERY SCHWARTZ
Approval date: 03/08/10

NOTE *The Contractor shall verify all controlling field dimensions before ordering or fabricating any material.*

	BY	CHECKED
DESIGN	TONY CHUN	C FAUST
DETAILS	TONY CHUN	
QUANTITIES		

STATE OF CALIFORNIA DEPARTMENT OF TRANSPORTATION

DIVISION OF ENGINEERING SERVICES ARCHITECTURAL AND STRUCTURAL DESIGN

BRIDGE NO. 50M5722
KM POST 32.66/33.30

TAFT MAINTENANCE STATION

CREW AND EQUIP. BUILDING

ROOF & MISCELLANEOUS DETAILS

SHEET A1-22

a1_22roofdet.dgn
DS OSD metric Rev. 9/02 23-MAR-2010 05:51

SCALE: ALL DIMENSIONS ARE IN MILLIMETERS UNLESS OTHERWISE NOTED.

ORIGINAL SCALE IN MILLIMETERS FOR REDUCED PLANS 0 10 20 30 40 50 60 70 80 90 100

CU 06257
EA 483401

DISREGARD PRINTS BEARING EARLIER REVISION DATES → 11-1-06 12-1-06 2-1-07 5-11-07

REVISION DATES (PRELIMINARY STAGE ONLY) SHEET OF

23-MAR-2010 05:51
a1_22roofdet.dgn

DIST.	COUNTY	LOCATION CODE	KILOMETER POST TOTAL PROJECT	SHEET NO.	TOTAL SHEETS
06	Ker	5722		76	178

Caltrans Metric

LICENSED ARCHITECT — DATE

LICENSED ARCHITECT WARREN LAI No. C-17122 Exp. 6/30/09 STATE OF CALIFORNIA

3-8-10
PLANS APPROVAL DATE

The State of California or its officers or agents shall not be responsible for the accuracy or completeness of electronic copies of this plan sheet.

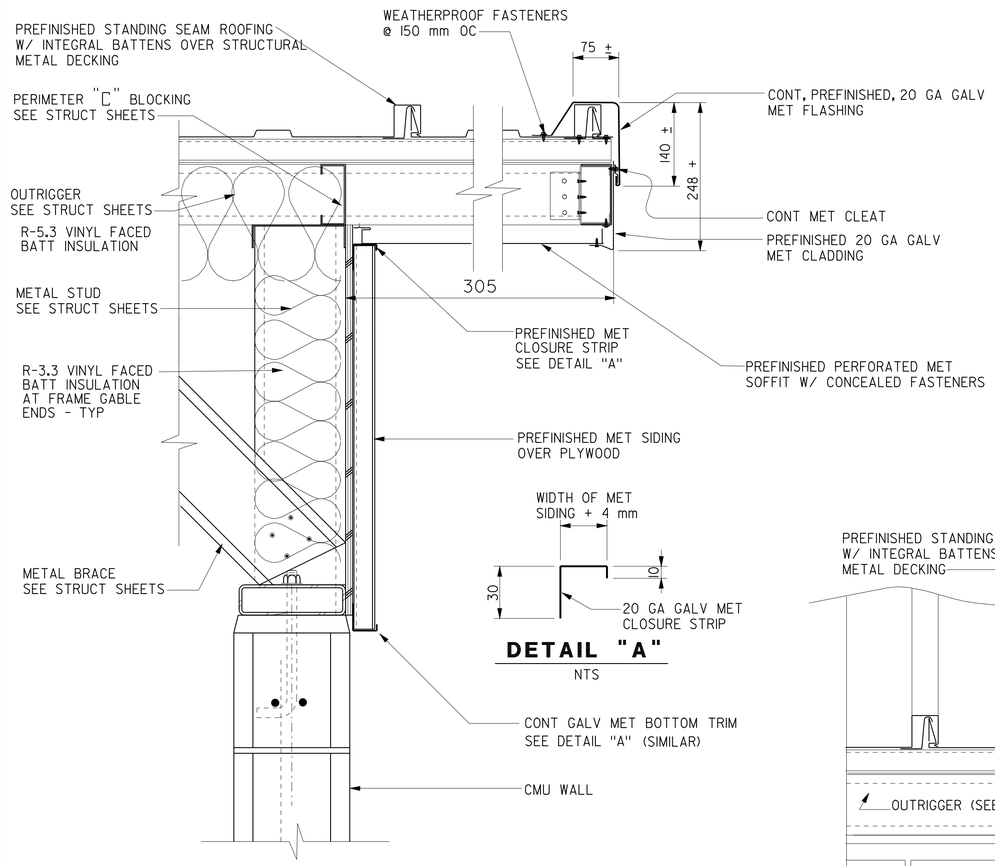

1 **EAVE & WALL DETAIL**
SCALE 1:5

DETAIL "A"
NTS

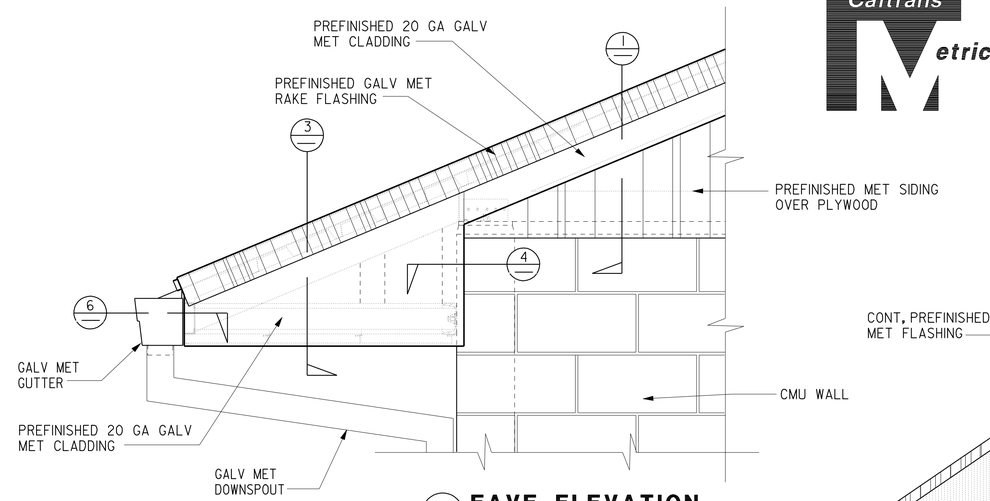

2 **EAVE ELEVATION**
SCALE 1:10

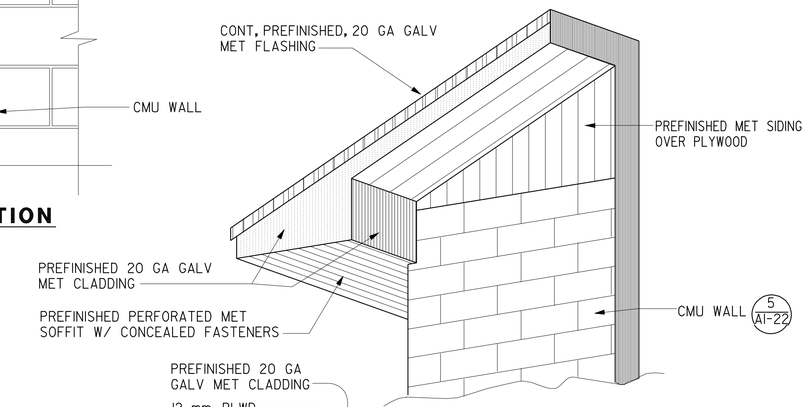

ISOMETRIC VIEW at SOFFIT
NTS

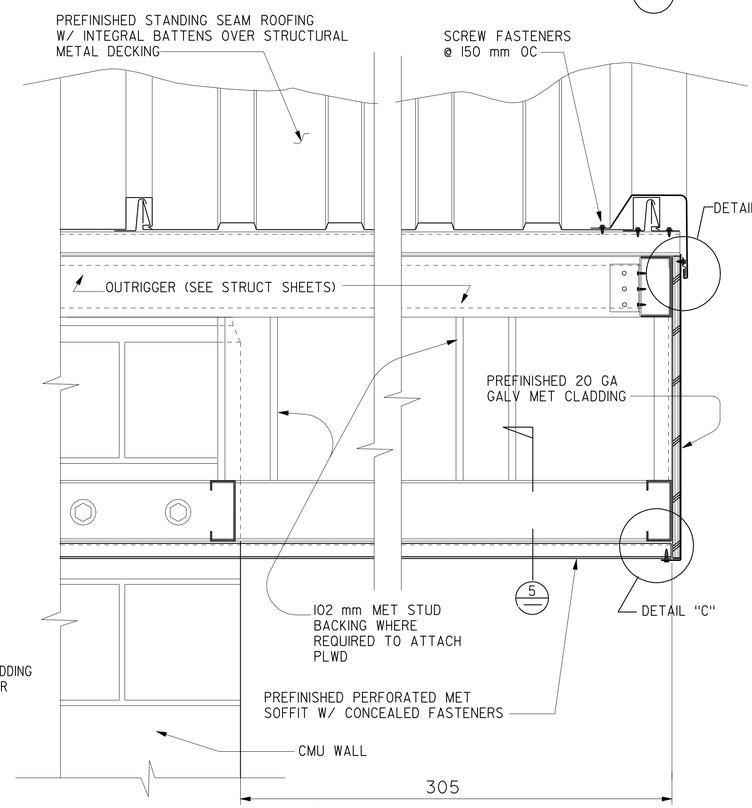

3 **SOFFIT DETAIL**
SCALE 1:5

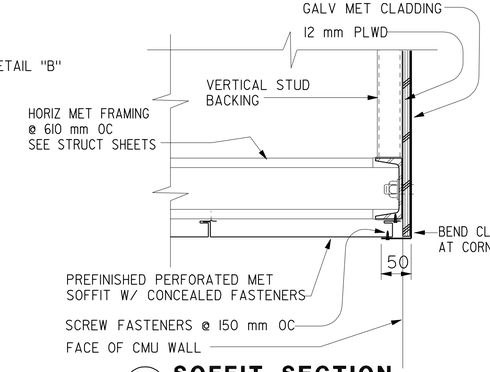

5 **SOFFIT SECTION**
SCALE 1:5

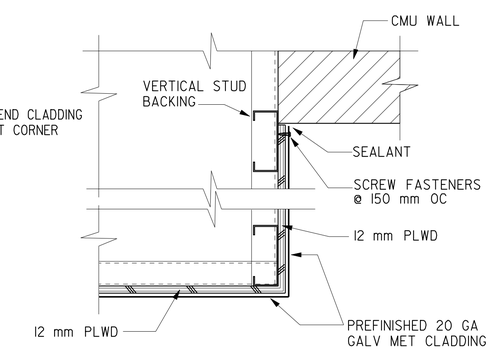

4 **BOXED EAVE DETAIL**
SCALE 1:5

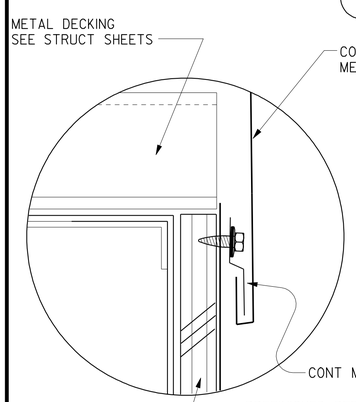

DETAIL "B"
FULL SIZE

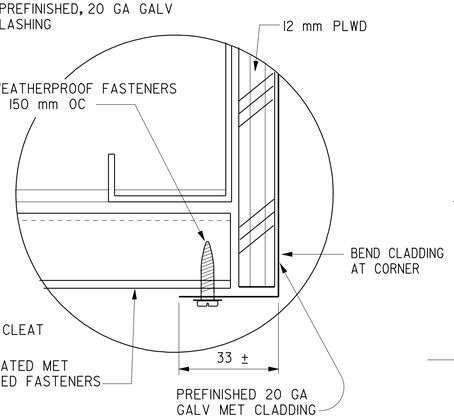

DETAIL "C"
FULL SIZE

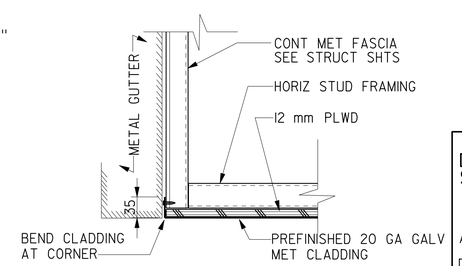

6 **BOXED EAVE END**
SCALE 1:5

IDENTIFICATION STAMP
DIV. OF THE STATE ARCHITECT
SACRAMENTO REGIONAL OFFICE
02 108714
AC
DATE 04-23-07

CALIFORNIA STATE FIRE MARSHAL APPROVED
Approval of this plan does not authorize or approve any omission or deviation from applicable regulations. Final approval is subject to field inspection. One set of approved plans shall be available on the project site at all times.
Reviewed by: JEFFERY SCHWARTZ
Approval date: 03/08/10

ALL DIMENSIONS ARE IN MILLIMETERS UNLESS OTHERWISE SHOWN.

NOTE *The Contractor shall verify all controlling field dimensions before ordering or fabricating any material.*

	BY	CHECKED
DESIGN	TONY CHUN	C FAUST
DETAILS	TONY CHUN	
QUANTITIES		

STATE OF CALIFORNIA DEPARTMENT OF TRANSPORTATION

DIVISION OF ENGINEERING SERVICES
ARCHITECTURAL AND STRUCTURAL DESIGN

BRIDGE NO. 50M5722
KM POST 32.66/33.30

TAFT MAINTENANCE STATION
CREW AND EQUIP. BUILDING
EAVE DETAILS

SHEET **A1-23**

a1_23csevedet.dgn
DS OSD metric Rev. 9/02 23-MAR-2010 05:52

SCALE: ALL DIMENSIONS ARE IN MILLIMETERS UNLESS OTHERWISE NOTED.

ORIGINAL SCALE IN MILLIMETERS FOR REDUCED PLANS 0 10 20 30 40 50 60 70 80 90 100

CU 06257
EA 483401

DISREGARD PRINTS BEARING EARLIER REVISION DATES → 8/17/06 11/27/06 12/27/06 2/1/07 5/11/07

REVISION DATES (PRELIMINARY STAGE ONLY) SHEET OF

23-MAR-2010 05:52

a1_23csevedet.dgn

ALL DIMENSIONS ARE IN MILLIMETERS UNLESS OTHERWISE SHOWN.

Caltrans Metric

DIST.	COUNTY	LOCATION CODE	KILOMETER POST TOTAL PROJECT	SHEET NO.	TOTAL SHEETS
06	Ker	5722		77	178

LICENSED ARCHITECT — DATE 2/17/06

LICENSED ARCHITECT WARREN LAI No. C-17122 Exp. 6/30/09 STATE OF CALIFORNIA

3-8-10
PLANS APPROVAL DATE

The State of California or its officers or agents shall not be responsible for the accuracy or completeness of electronic copies of this plan sheet.

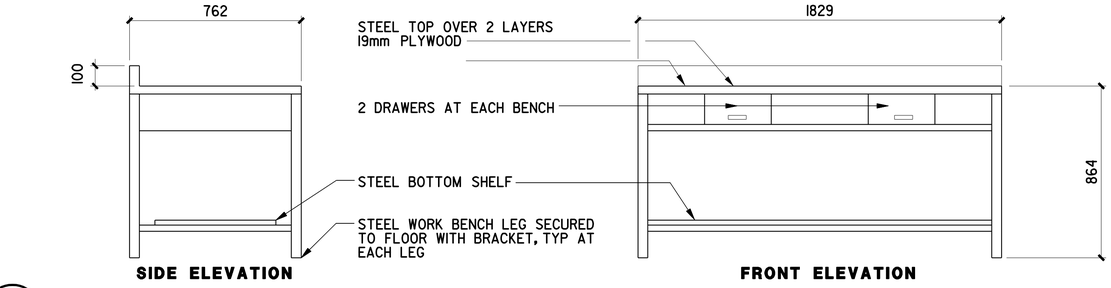

5 WORK BENCH - ELEVATIONS

SCALE 1:15 **TOTAL 5 - 2 IN EQUIPMENT BAY AND 3 IN TRUCK BAY**

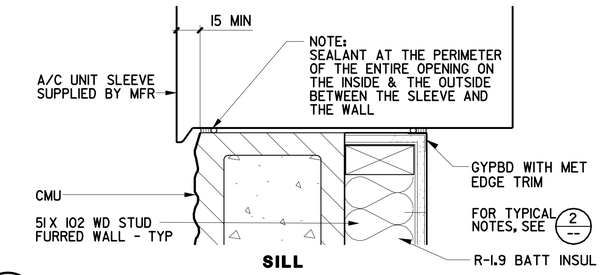

3 THROUGH WALL AIR CONDITIONING UNIT

SCALE 1:4

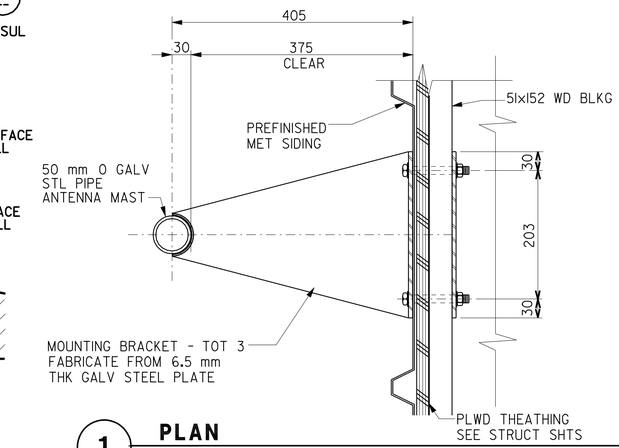

1 PLAN

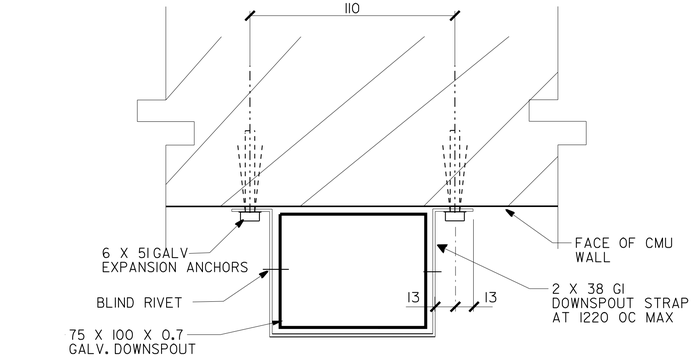

8 RAIN WATER LEADER

SCALE 1:2

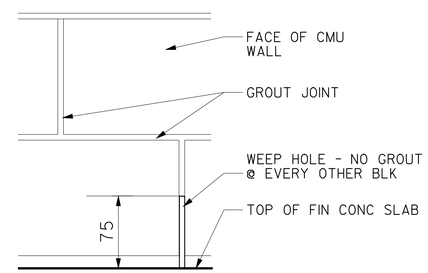

6 WEEP HOLE AT CMU SCREEN WALL

SCALE 1:2

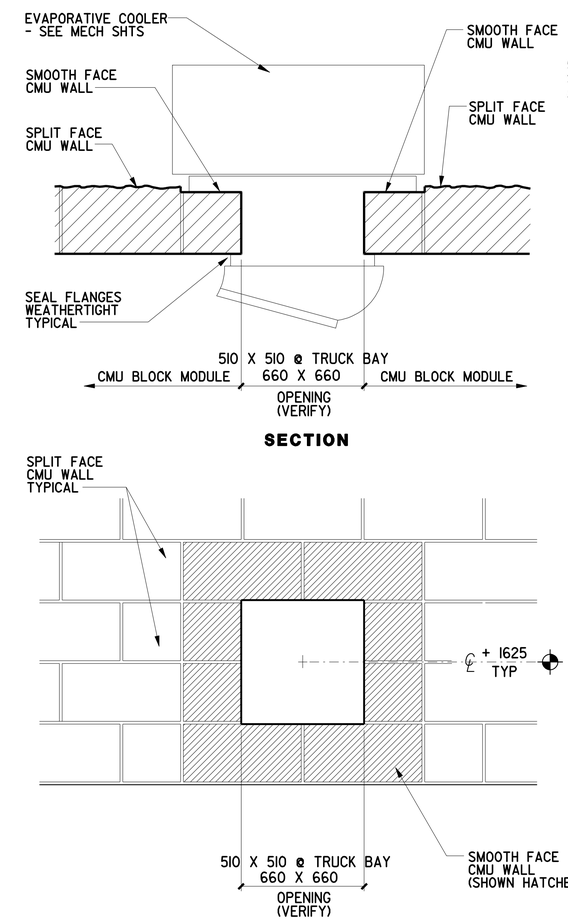

4 EVAPORATIVE COOLER AT CMU WALL

SCALE 1:4

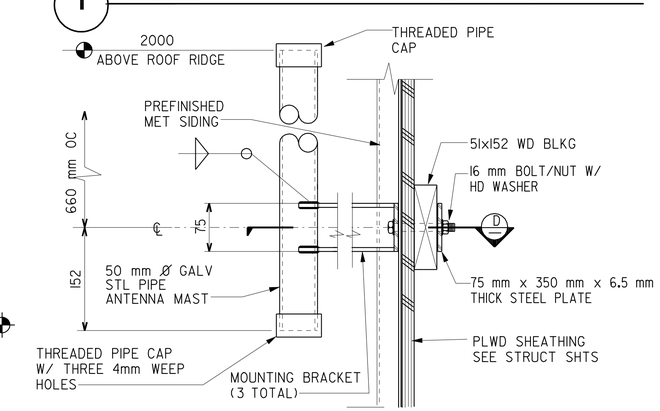

2 ELEVATION

RADIO ANTENNA MOUNTING BRACKET

SCALE 1:5

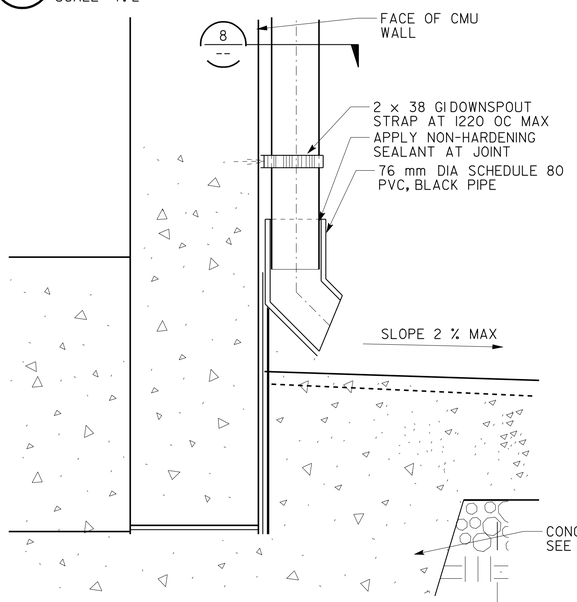

9 DOWNSPOUT AND CONCRETE WALK

SCALE 1:5

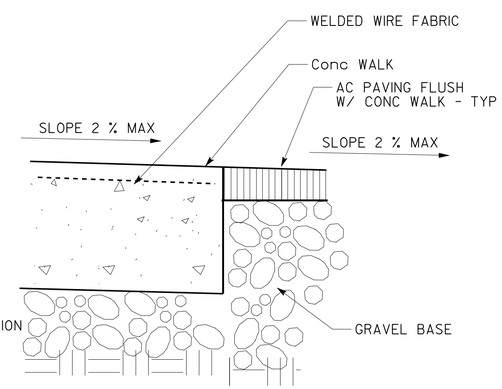

7 CONCRETE WALK AT AC PAVING

SCALE 1:5

IDENTIFICATION STAMP
DIV. OF THE STATE ARCHITECT
SACRAMENTO REGIONAL OFFICE
02 108714
AC
DATE 04-23-07

CALIFORNIA STATE FIRE MARSHAL APPROVED
Approval of this plan does not authorize or approve any omission or deviation from applicable regulations. Final approval is subject to field inspection. One set of approved plans shall be available on the project site at all times.
Reviewed by: JEFFERY SCHWARTZ
Approval date: 03/08/10

NOTE The Contractor shall verify all controlling field dimensions before ordering or fabricating any material.

	BY	CHECKED
DESIGN	TONY CHUN	C FAUST
DETAILS	TONY CHUN	
QUANTITIES		

STATE OF CALIFORNIA DEPARTMENT OF TRANSPORTATION

DIVISION OF ENGINEERING SERVICES ARCHITECTURAL AND STRUCTURAL DESIGN

BRIDGE NO. 50M5722
KM POST 32.66/33.30

TAFT MAINTENANCE STATION

CREW AND EQUIP. BUILDING

MISCELLANEOUS DETAILS

SHEET A1-24

a1_24miscdet.dgn
DS OSD metric Rev. 9/02 23-MAR-2010 05:52

SCALE: ALL DIMENSIONS ARE IN MILLIMETERS UNLESS OTHERWISE NOTED.

ORIGINAL SCALE IN MILLIMETERS FOR REDUCED PLANS 0 10 20 30 40 50 60 70 80 90 100

CU 06257
EA 483401

DISREGARD PRINTS BEARING EARLIER REVISION DATES → 8/1/06 11/1/06 12/1/06 2/1/07 5/11/07

REVISION DATES (PRELIMINARY STAGE ONLY) SHEET OF

23-MAR-2010 05:52

a1_24miscdet.dgn

ALL DIMENSIONS ARE IN MILLIMETERS UNLESS OTHERWISE SHOWN.

Caltrans Metric

DIST.	COUNTY	LOCATION CODE	KILOMETER POST TOTAL PROJECT	SHEET NO.	TOTAL SHEETS
06	Ker	5722		78	178

LICENSED ARCHITECT — DATE 2/17/06

LICENSED ARCHITECT WARREN LAI No. C-17122 Exp. 6/30/09 STATE OF CALIFORNIA

3-8-10
PLANS APPROVAL DATE

The State of California or its officers or agents shall not be responsible for the accuracy or completeness of electronic copies of this plan sheet.

9 NOT USED

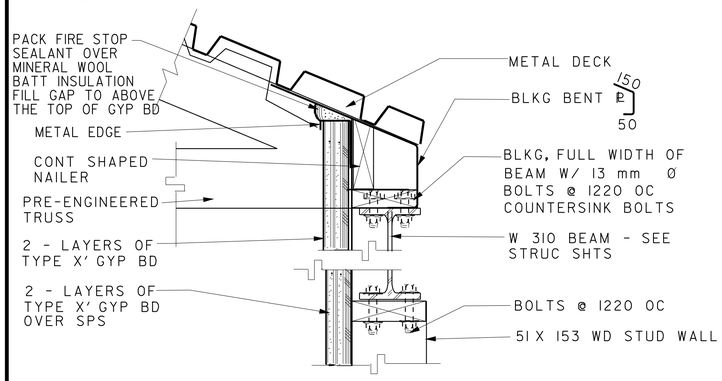

10 WD STUD WALL AT STEEL BEAM

SCALE 1:5

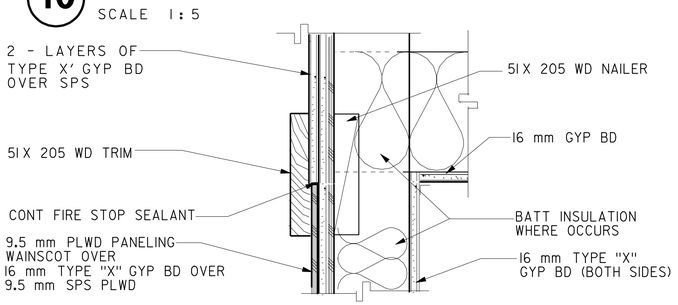

11 WD STUD WALL

SCALE 1:5

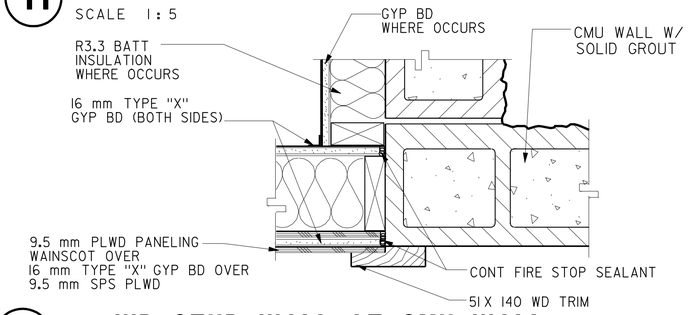

12 WD STUD WALL AT CMU WALL

SCALE 1:5

6 NOT USED

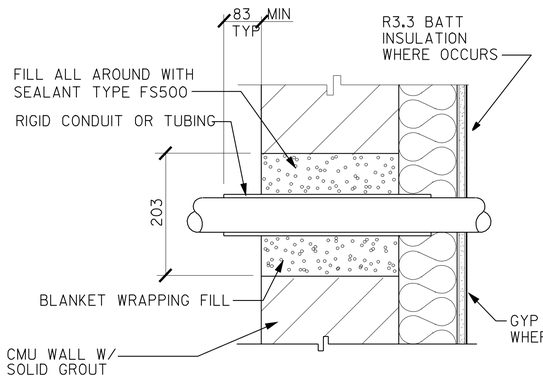

7 CMU WALL PENETRATION

SCALE 1:5

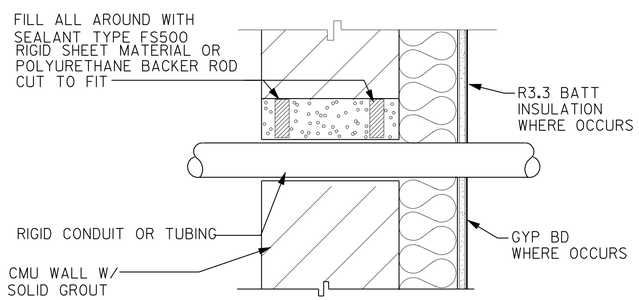

8 CMU WALL PENETRATION

SCALE 1:5

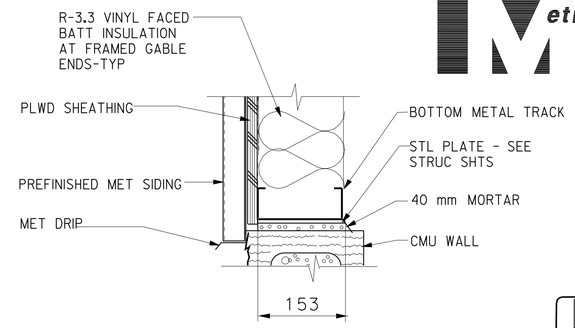

3 SILL AT CMU WALL

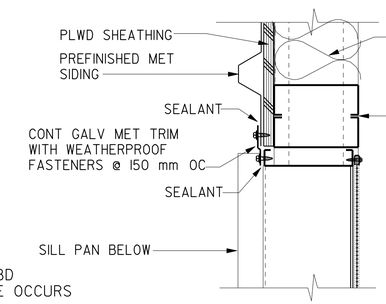

4 JAMB

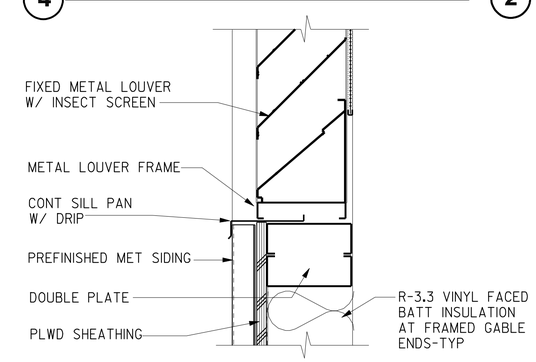

5 SILL

METAL LOUVER DETAILS AT FRAMED GABLE ENDS

SCALE 1:5

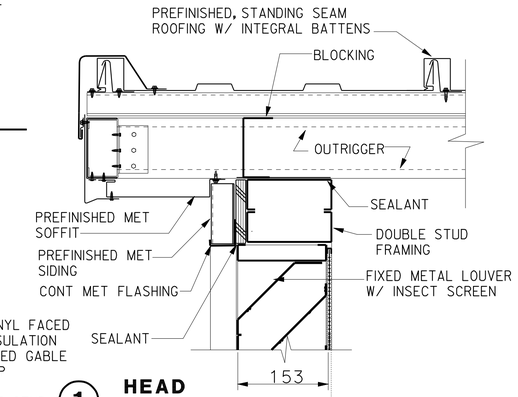

1 HEAD

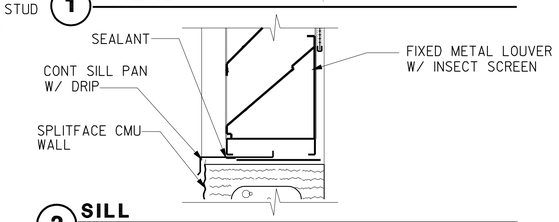

2 SILL

IDENTIFICATION STAMP
DIV. OF THE STATE ARCHITECT
SACRAMENTO REGIONAL OFFICE
02 108714
AC
DATE 04-23-07

CALIFORNIA STATE FIRE MARSHAL APPROVED
Approval of this plan does not authorize or approve any omission or deviation from applicable regulations. Final approval is subject to field inspection. One set of approved plans shall be available on the project site at all times.
Reviewed by: JEFFERY SCHWARTZ
Approval date: 03/08/10

NOTE The Contractor shall verify all controlling field dimensions before ordering or fabricating any material.

	BY	CHECKED
DESIGN	TONY CHUN	C FAUST
DETAILS	TONY CHUN	
QUANTITIES		

STATE OF CALIFORNIA DEPARTMENT OF TRANSPORTATION

DIVISION OF ENGINEERING SERVICES ARCHITECTURAL AND STRUCTURAL DESIGN

BRIDGE NO. 50M5722
KM POST 32.66/33.30

TAFT MAINTENANCE STATION
CREW AND EQUIP. BUILDING
LOUVER AND MISCELLANEOUS DETAILS

SHEET A1-25

a1_251ouverdet.dgn
DS OSD metric Rev. 9/02 23-MAR-2010 05:52

SCALE: ALL DIMENSIONS ARE IN MILLIMETERS UNLESS OTHERWISE NOTED.

ORIGINAL SCALE IN MILLIMETERS FOR REDUCED PLANS 0 10 20 30 40 50 60 70 80 90 100

CU 06257
EA 483401

DISREGARD PRINTS BEARING EARLIER REVISION DATES → 8/1/06 11/1/06 2/1/06 2/1/07 5/11/07

SHEET OF

23-MAR-2010 05:52

a1_251ouverdet.dgn

DIST.	COUNTY	LOCATION CODE	KILOMETER POST TOTAL PROJECT	SHEET NO.	TOTAL SHEETS
06	Ker	5722		79	178

LICENSED ARCHITECT

3-8-10
PLANS APPROVAL DATE

LICENSED ARCHITECT WARREN LAI No. C-17122 Ren. 6-30-09 STATE OF CALIFORNIA

The State of California or its officers or agents shall not be responsible for the accuracy or completeness of electronic copies of this sheet.

All dimensions shown in millimeters unless noted otherwise.

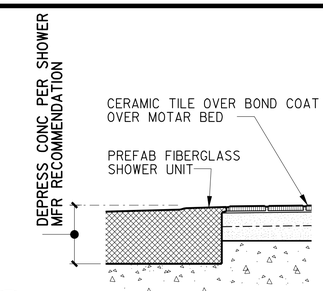

10 FLOORING TRANSITION AT SHOWER

SCALE 1:4 FLOOR TILE INSTALLATION METHOD BASED ON: TCA HANDBOOK F112-2006

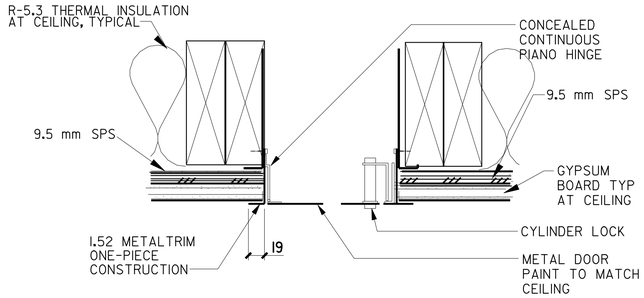

6 ATTIC ACCESS

SCALE 1:5

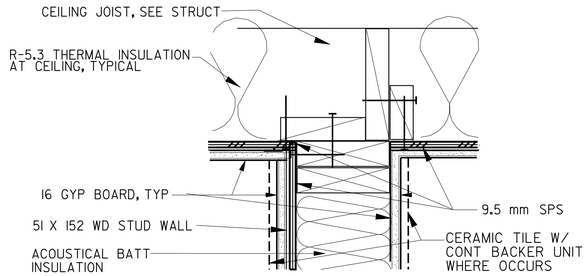

3 CEILING DETAIL

SCALE 1:5

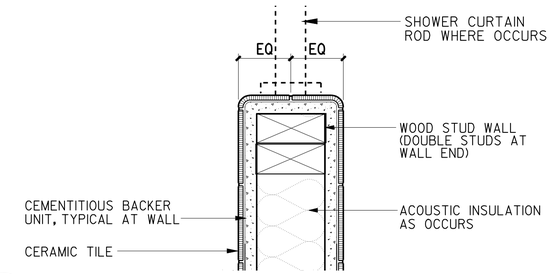

11 WALL PLAN DETAIL

SCALE 1:5 WALL TILE INSTALLATION METHOD BASED ON TCA HANDBOOK W244-2006

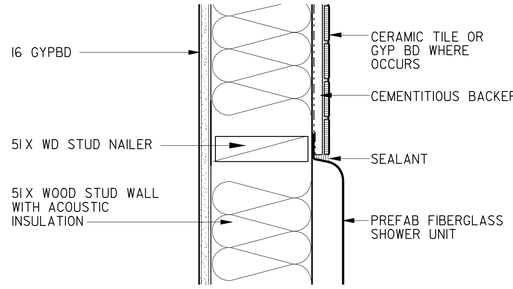

7 WALL AT SHOWER

SCALE 1:4 WALL TILE INSTALLATION METHOD BASED ON: TCA HANDBOOK F112-2006

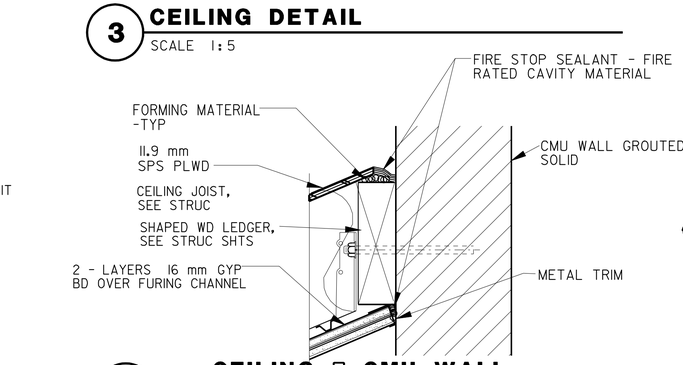

4 CEILING @ CMU WALL

SCALE 1:5

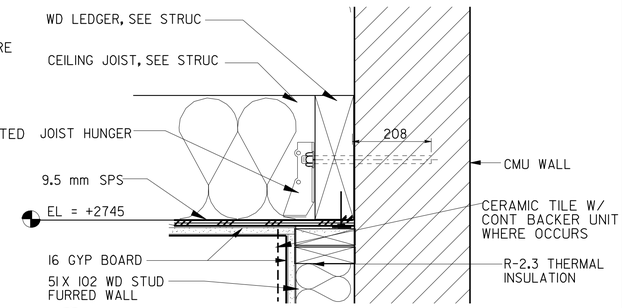

1 CEILING DETAIL

SCALE 1:5

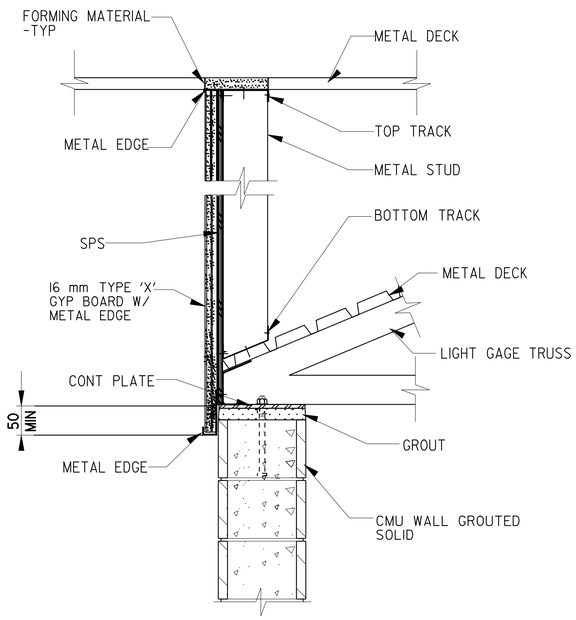

12 1 HOUR FR WALL AT CEILING

SCALE 1:10

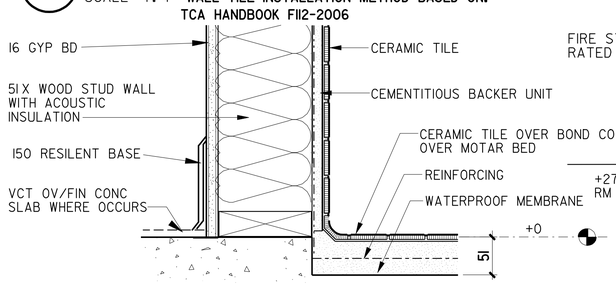

8 BASE AT CERAMIC TILE WALL

SCALE 1:4 FLOOR TILE INSTALLATION METHOD BASED ON: TCA HANDBOOK F112-2006

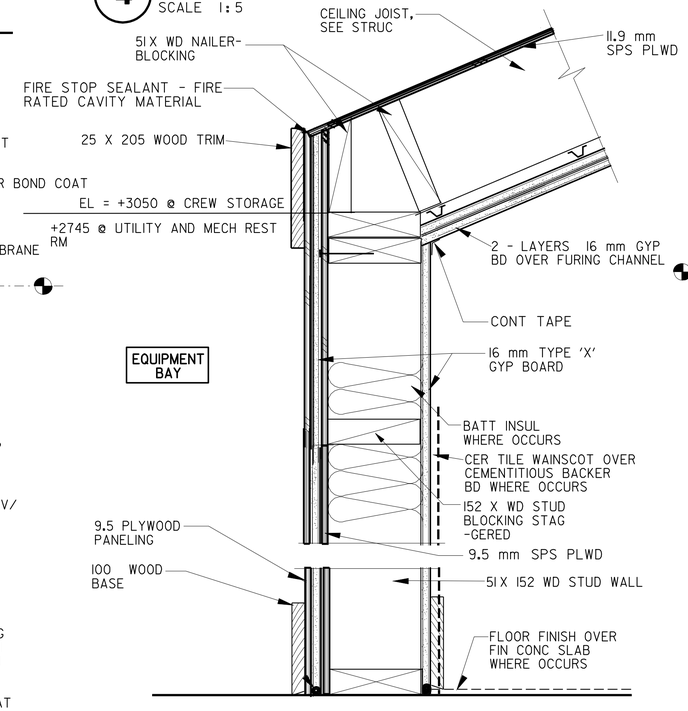

5 1 HOUR FR WALL & CEILING

SCALE 1:5

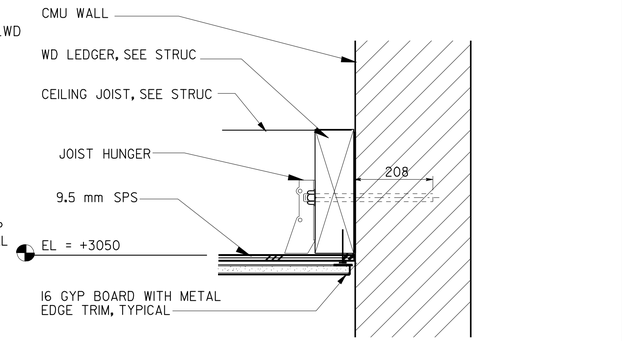

2 CEILING DETAIL

SCALE 1:5

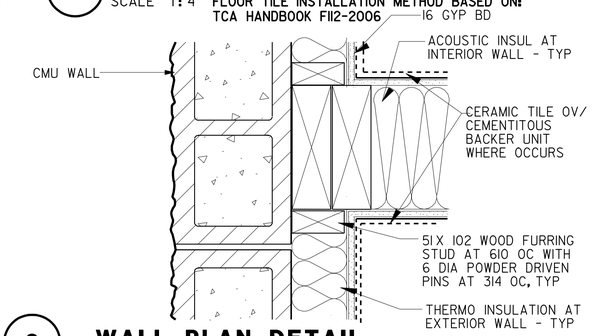

9 WALL PLAN DETAIL

SCALE 1:5

IDENTIFICATION STAMP
DIV. OF THE STATE ARCHITECT
SACRAMENTO REGIONAL OFFICE
02 108714
AC
DATE 04-23-07

CALIFORNIA STATE FIRE MARSHAL APPROVED
Approval of this plan does not authorize or approve any omission or deviation from applicable regulations. Final approval is subject to field inspection. One set of approved plans shall be available on the project site at all times.
Reviewed by: JEFFERY SCHWARTZ
Approval date: 03/08/10

DESIGNER	CHECKED BY
ANTHONY CHUN	C FAUST
DRAWN BY ANTHONY CHUN	STRUCTURAL REVIEW

STATE OF CALIFORNIA
DEPARTMENT OF TRANSPORTATION

DIVISION OF ENGINEERING SERVICES
ARCHITECTURAL AND STRUCTURAL DESIGN

BRIDGE NO. 50M5722
KM POST 32.66/33.30

TAFT MAINTENANCE STATION
CREW AND EQUIP BUILDING
CEILING AND WALL DETAILS

SHEET A1-26

CU 06600
EA 483401

DISREGARD PRINTS BEARING EARLIER REVISION DATES

REVISION DATES (PRELIMINARY STAGE ONLY) 11/17/06 12/17/06 2/1/07 5/11/07

SHEET OF

DS OSD 2180 (08/92)
FILE => a1_26ceilgdet.dgn
DATE PLOTTED => 23-MAR-2010 TIME PLOTTED => 05:52

ORIGINAL SCALE IN MILLIMETERS FOR REDUCED PLANS 0 10 20 30 40 50 60 70 80 90 100

FILE => a1_26ceilgdet.dgn

TIME PLOTTED => 05:52

USERNAME => trmikesi

DIST.	COUNTY	LOCATION CODE	KILOMETER POST TOTAL PROJECT	SHEET NO.	TOTAL SHEETS
06	Ker	5722		80	178

Caltrans Metric

LICENSED ARCHITECT

3-8-10
PLANS APPROVAL DATE

LICENSED ARCHITECT WARREN LAI No. C-17122 Exp. 6/30/09 STATE OF CALIFORNIA

The State of California or its officers or agents shall not be responsible for the accuracy or completeness of electronic copies of this plan sheet.

NOTE: ALL DIMENSIONS ARE IN MILLIMETERS UNLESS OTHERWISE SHOWN

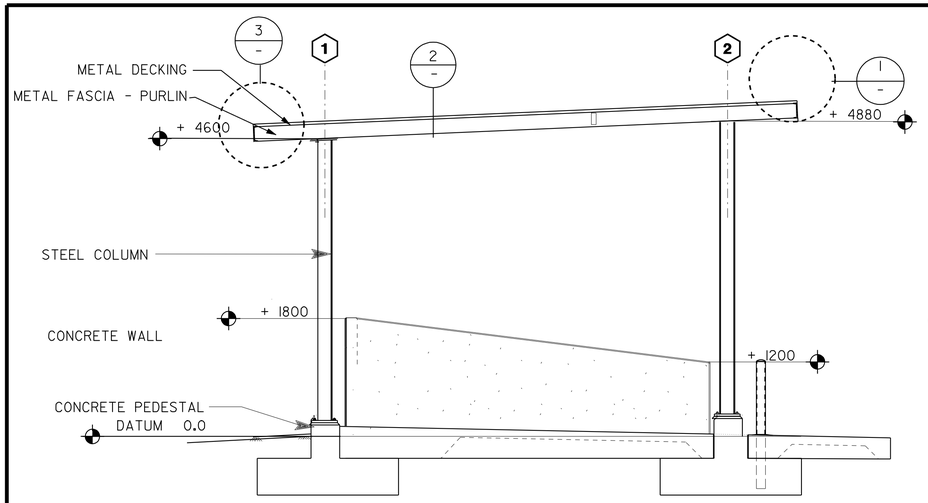

A SECTION
SCALE 1:50

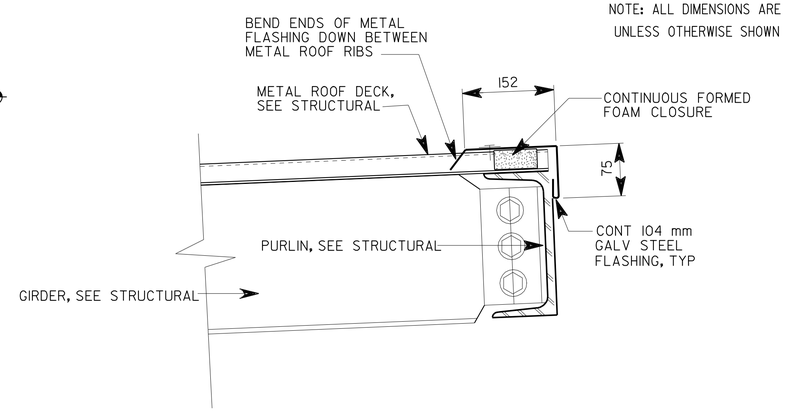

1 HIGH EAVE
SCALE 1:5

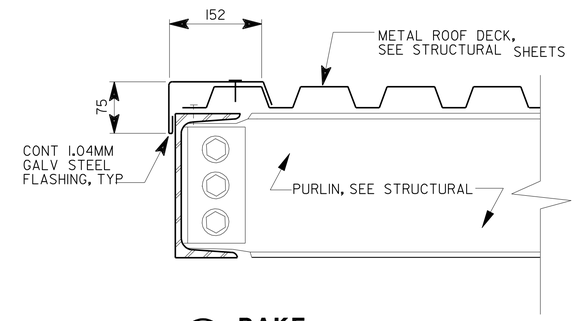

2 RAKE
SCALE 1:5

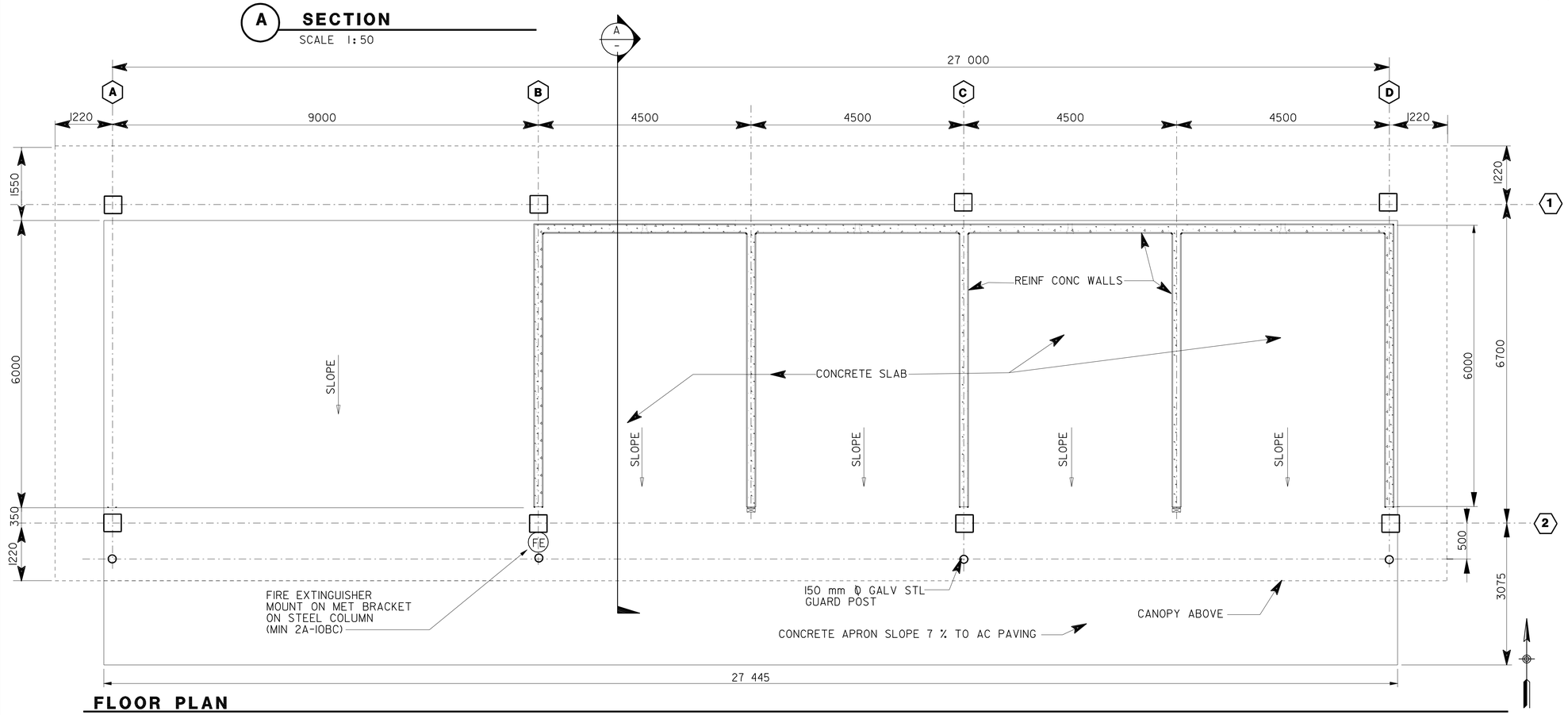

FLOOR PLAN
SCALE 1:50

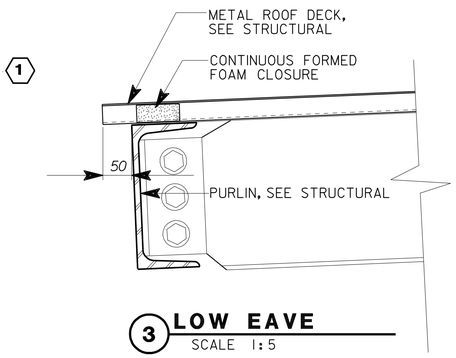

3 LOW EAVE
SCALE 1:5

IDENTIFICATION STAMP
DIV. OF THE STATE ARCHITECT
SACRAMENTO REGIONAL OFFICE
02 108714
AC
DATE 04-23-07

CALIFORNIA STATE FIRE MARSHAL APPROVED
Approval of this plan does not authorize or approve any omission or deviation from applicable regulations. Final approval is subject to field inspection. One set of approved plans shall be available on the project site at all times.
Reviewed by: JEFFERY SCHWARTZ
Approval date: 03/08/10

NOTE *The Contractor shall verify all controlling field dimensions before ordering or fabricating any material.*

DESIGN TONY CHUN	CHECKED BY C. FAUST	STATE OF CALIFORNIA DEPARTMENT OF TRANSPORTATION	DIVISION OF ENGINEERING SERVICES ARCHITECTURAL AND STRUCTURAL DESIGN
DRAWN BY TONY CHUN	STRUCTURAL REVIEW		

BRIDGE NO. 50M5722
KM POST 32.66/33.30
MATERIAL BIN WITH CANOPY

TAFT MAINTENANCE STATION
PLAN, SECTION AND DETAILS

SHEET A2-1

DS OSD metric (1/96)

SCALE: ALL DIMENSIONS ARE IN MILLIMETERS UNLESS OTHERWISE NOTED.

ORIGINAL SCALE IN MILLIMETERS FOR REDUCED PLANS 0 10 20 30 40 50 60 70 80 90 100

CU 06257
EA 483401

DISREGARD PRINTS BEARING EARLIER REVISION DATES

REVISION DATES (PRELIMINARY STAGE ONLY) 4/1/06 11/17/06 2/1/07 5/11/07 SHEET OF

FILE => a2_1mbfpl.dgn
DATE PLOTTED => 23-MAR-2010 TIME PLOTTED => 05:53

USERNAME => trmikesl DATE PLOTTED => 23-MAR-2010 TIME PLOTTED => 05:53

NOTE: ALL DIMENSIONS ARE IN MILLIMETERS
UNLESS OTHERWISE SHOWN

Caltrans Metric

DIST.	COUNTY	LOCATION CODE	KILOMETER POST TOTAL PROJECT	SHEET NO.	TOTAL SHEETS
06	Ker	5722		81	178

LICENSED ARCHITECT

3-8-10
PLANS APPROVAL DATE

LICENSED ARCHITECT WARREN LAI No. C-17122 Exp. 6/30/09 STATE OF CALIFORNIA

The State of California or its officers or agents shall not be responsible for the accuracy or completeness of electronic copies of this plan sheet.

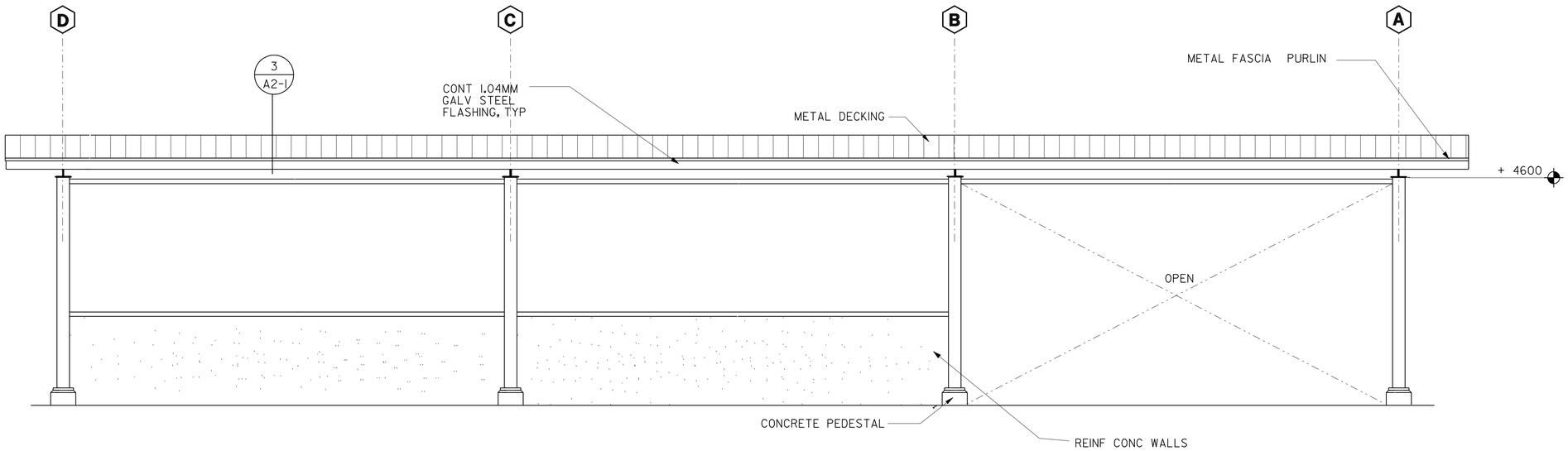

A SOUTH ELEVATION

SCALE 1:50

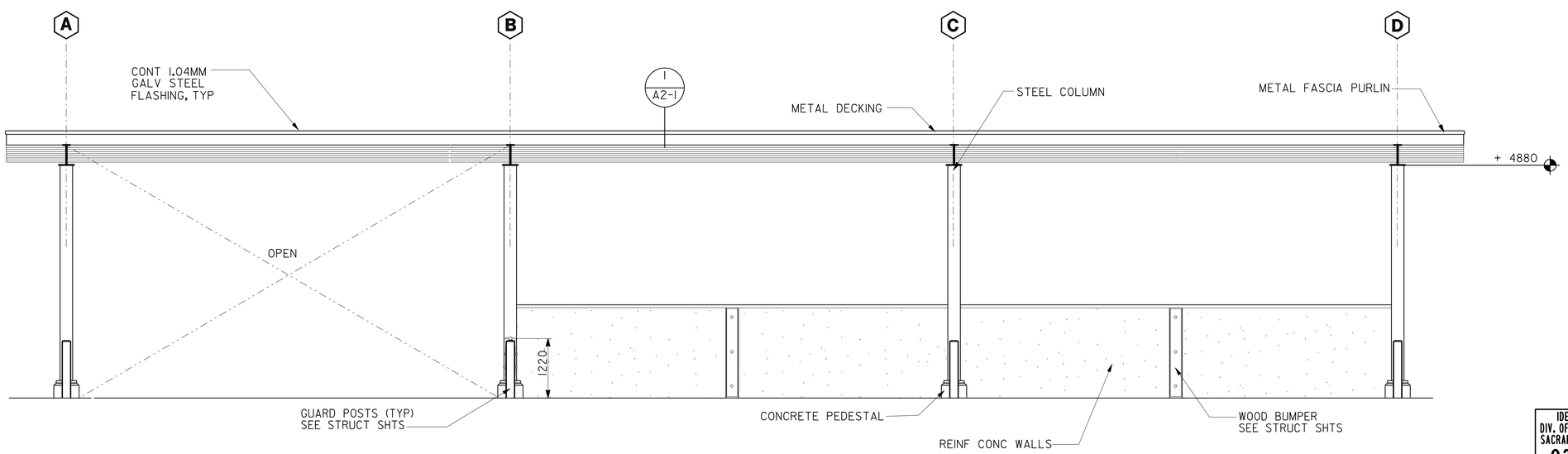

B NORTH ELEVATION

SCALE 1:50

IDENTIFICATION STAMP
DIV. OF THE STATE ARCHITECT
SACRAMENTO REGIONAL OFFICE
02 108714
AC
DATE 04-23-07

CALIFORNIA STATE FIRE MARSHAL
APPROVED
Approval of this plan does not authorize or approve any omission or deviation from applicable regulations. Final approval is subject to field inspection. One set of approved plans shall be available on the project site at all times.
Reviewed by: JEFFERY SCHWARTZ
Approval date: 03/08/10

NOTE *The Contractor shall verify all controlling field dimensions before ordering or fabricating any material.*

DESIGN	TONY CHUN	CHECKED BY	C. FAUST
DRAWN BY	TONY CHUN	STRUCTURAL REVIEW	

STATE OF CALIFORNIA
DEPARTMENT OF TRANSPORTATION

DIVISION OF ENGINEERING SERVICES
ARCHITECTURAL AND STRUCTURAL DESIGN

BRIDGE NO. 50M5722
KM POST 32.66/33.30

TAFT MAINTENANCE STATION

MATERIAL BIN WITH CANOPY

EXTERIOR ELEVATIONS

SHEET **A2-2**

DS OSD metric (1/96)

SCALE: ALL DIMENSIONS ARE IN MILLIMETERS UNLESS OTHERWISE NOTED.

ORIGINAL SCALE IN MILLIMETERS FOR REDUCED PLANS 0 10 20 30 40 50 60 70 80 90 100

CU 06257
EA 483401

DISREGARD PRINTS BEARING EARLIER REVISION DATES →

REVISION DATES (PRELIMINARY STAGE ONLY) 4/1/06 11/17/06 2/13/07 5/11/07 SHEET OF

FILE => a2_2mbelev.dgn
DATE PLOTTED => 23-MAR-2010 TIME PLOTTED => 05:53

USERNAME =>

NOTE: ALL DIMENSIONS ARE IN MILLIMETERS
UNLESS OTHERWISE SHOWN

Caltrans Metric

DIST.	COUNTY	LOCATION CODE	KILOMETER POST TOTAL PROJECT	SHEET NO.	TOTAL SHEETS
06	Ker	5722		82	178

LICENSED ARCHITECT

3-8-10
PLANS APPROVAL DATE

LICENSED ARCHITECT WARREN LAI No. C-17122 Exp. 6/30/09 STATE OF CALIFORNIA

The State of California or its officers or agents shall not be responsible for the accuracy or completeness of electronic copies of this plan sheet.

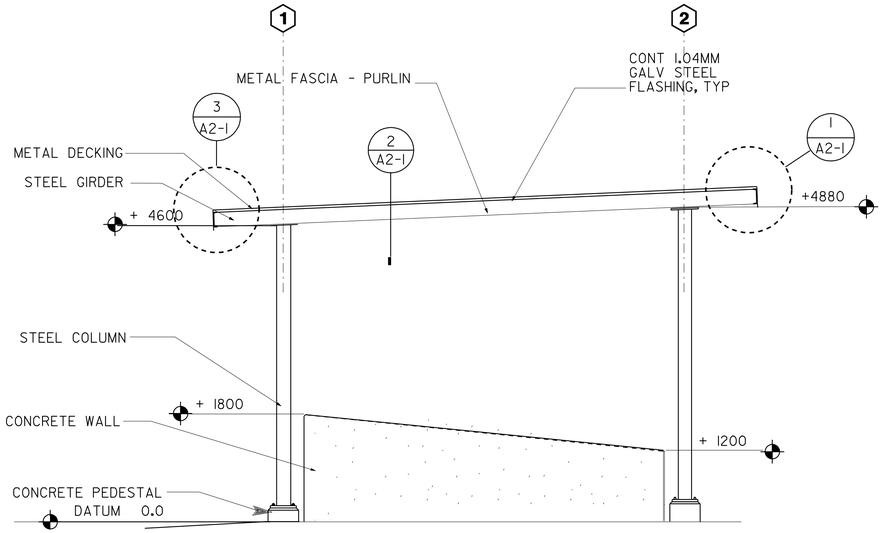

D **WEST ELEVATION**
SCALE 1:50

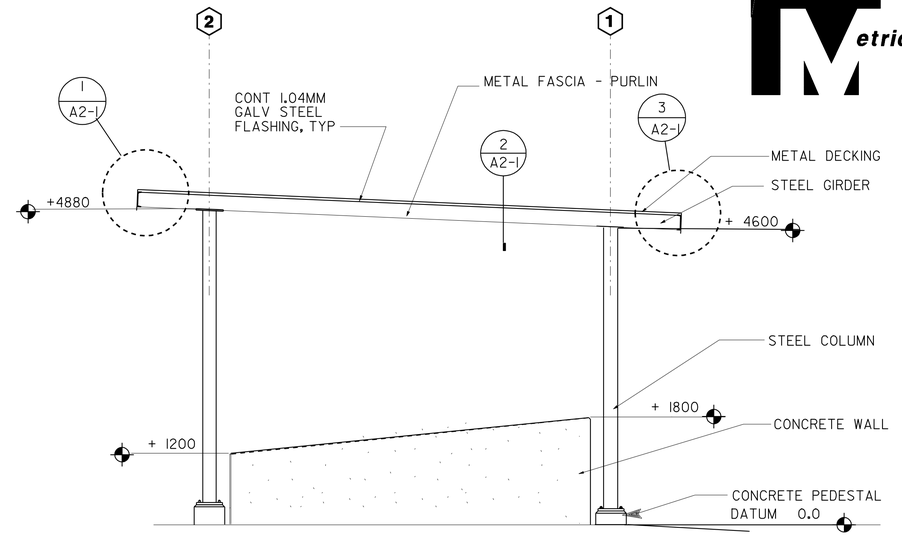

D **EAST ELEVATION**
SCALE 1:50

COLOR AND FINISH NOTES

MANUFACTURER'S DESIGNATIONS ARE USED TO INDICATE COLOR, PATTERN, TYPE, CONFIGURATION ETC. AND ARE NOT INTENDED TO SHOW A PREFERENCE FOR A PARTICULAR BRAND.
OTHER PRODUCTS MAY BE SUBMITTED FOR APPROVAL IF EQUAL IN COLOR AND TEXTURE.
METAL FLASHING AND TRIM SHALL BE FACTORY PRIMED AND SHALL BE FIELD PAINT

EXPOSED STEEL STRUCTURE, CONNECTORS

- FACTORY PRIMED - FIELD PAINT - SEMI-GLOSS ENAMEL - COLOR: MATCH COLOR OF METAL WALL SIDING OF ADACENT CREW AND EQUIPMENT BLDG

TRIMS, METAL FLASHING AND METAL FASCIA - PURLIN

- FACTORY PRIMED - FIELD PAINT - SEMI-GLOSS ENAMEL - COLOR: MATCH COLOR OF METAL ROOFING OF ADACENT CREW AND EQUIPMENT BLDG

GUARD POST

- GALVANIZED - FIELD PAINT - SEMI- GLOSS - COLOR : SEE DETAIL 1 AT SHT A1- 8

IDENTIFICATION STAMP
DIV. OF THE STATE ARCHITECT
SACRAMENTO REGIONAL OFFICE
02 108714
AC
DATE 04-23-07

CALIFORNIA STATE FIRE MARSHAL
APPROVED
Approval of this plan does not authorize or approve any omission or deviation from applicable regulations. Final approval is subject to field inspection. One set of approved plans shall be available on the project site at all times.
Reviewed by: JEFFERY SCHWARTZ
Approval date: 03/08/10

NOTE *The Contractor shall verify all controlling field dimensions before ordering or fabricating any material.*

DESIGN	TONY CHUN	CHECKED BY	C. FAUST
DRAWN BY	TONY CHUN	STRUCTURAL REVIEW	

STATE OF CALIFORNIA
DEPARTMENT OF TRANSPORTATION

DIVISION OF ENGINEERING SERVICES
ARCHITECTURAL AND STRUCTURAL DESIGN

BRIDGE NO. 50M5722
KM POST 32.66/33.30

TAFT MAINTENANCE STATION
MATERIAL BIN WITH CANOPY
EXTERIOR ELEVATIONS, COLOR AND FINISH NOTES

SHEET **A2-3**

DS OSD metric (1/96)

SCALE: ALL DIMENSIONS ARE IN MILLIMETERS UNLESS OTHERWISE NOTED.

ORIGINAL SCALE IN MILLIMETERS FOR REDUCED PLANS 0 10 20 30 40 50 60 70 80 90 100

CU 06257
EA 483401

DISREGARD PRINTS BEARING EARLIER REVISION DATES → 4/1/06 11/1/06 2/1/07 5/11/07

REVISION DATES (PRELIMINARY STAGE ONLY) SHEET OF

FILE => a2_3mbsec.dgn
DATE PLOTTED => 23-MAR-2010 TIME PLOTTED => 05:53

TIME PLOTTED => 05:53
DATE PLOTTED => 23-MAR-2010
USERNAME =>

All dimensions shown in millimeters unless noted otherwise.

Caltrans Metric

DIST	COUNTY	LOCATION CODE	KILOMETER POST TOTAL PROJECT	SHEET NO.	TOTAL SHEETS
06	Ker	5722		83	178

LICENSED ARCHITECT

LICENSED ARCHITECT WARREN LAI No. C-17122 Ren. 6/30/09 STATE OF CALIFORNIA

3-8-10
PLANS APPROVAL DATE

The State of California or its officers or agents shall not be responsible for the accuracy or completeness of electronic copies of this plan sheet.

NOTES

1. REMOVE (E) IN GROUND VEHICLE LIFT AND FILL CAVITIES : PATCH AND REPAIR FLOOR TO MATCH EXISTING ADJACENT - SEE STRUC SHTS
2. SPRAY POLYURETHANE FOAM ROOFING OVER (E) ROOFING COLOR TO MATCH METAL ROOFING OF ADJACENT CREW AND EQUIPMENT BLDG
3. INSTALL ONE AUTOMATIC DOOR OPENNER TO (E) SECTIONAL DOOR AS SHOWN
4. RELOCATE (E) ICE MAKING MACHINE AS SHOWN FROM (E) GAS HOUSE
5. PAINT (E) EXTERIOR METAL SIDING, OVERHEAD DOORS AND EXTERIOR DOOR, EVAPORATIVE COOLERS AND STL PLATFORMS - TOTAL 3 COLOR TO MATCH WALL SIDING PANEL OF ADJACENT CREW AND EQUIPMENT BLDG

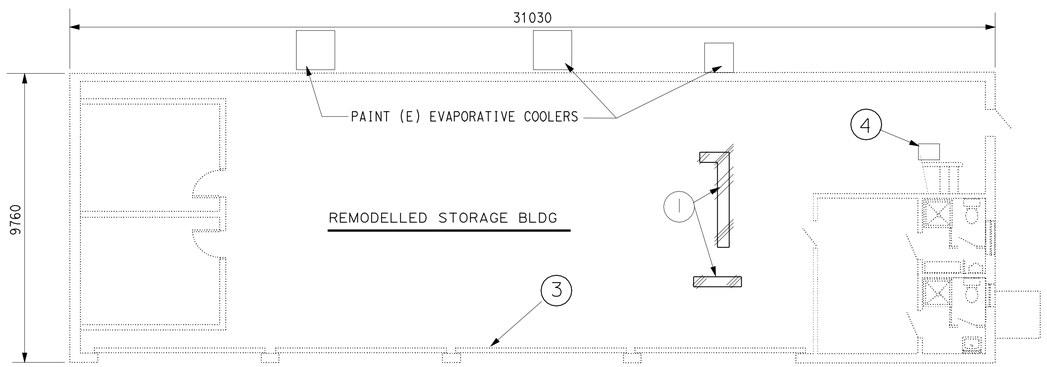

PLAN

SCALE 1:100

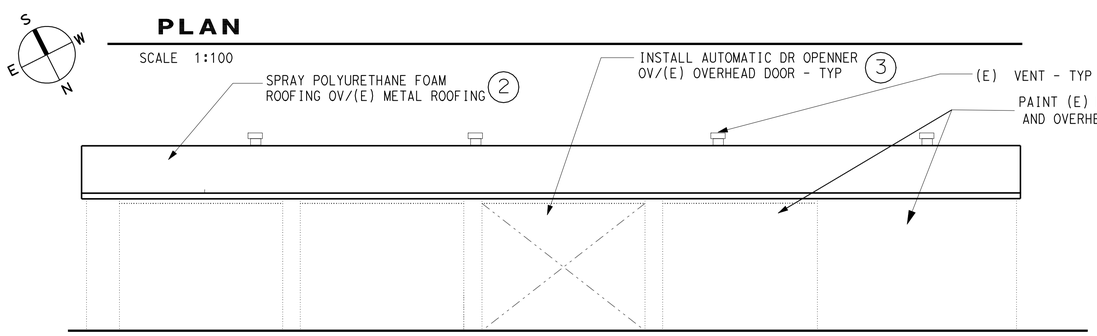

NORTH

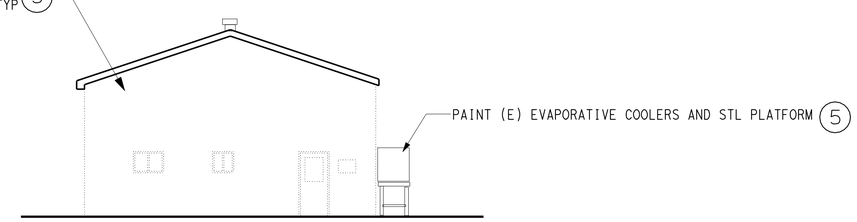

WEST

EXTERIOR ELEVATIONS

SCALE 1:100

PROJECT DATA

- Occupancy Group: S - 2
- Type of Construction: VN

Total floor area = 303 s.m. (3260 s.f.)
Allowable floor area = 743 s.m. (8,000 s.f.) - CBC Table 5 - B

THEREFORE BUILDING AREA DOES COMPLY

IDENTIFICATION STAMP
DIV. OF THE STATE ARCHITECT
SACRAMENTO REGIONAL OFFICE
02 108714
AC A
DATE 04-23-07

CALIFORNIA STATE FIRE MARSHAL APPROVED
Approval of this plan does not authorize or approve any omission or deviation from applicable regulations. Final approval is subject to field inspection. One set of approved plans shall be available on the project site at all times.
Reviewed by: JEFFERY SCHWARTZ
Approval date: 03/08/10

DATE PLOTTED => 23-MAR-2010
TIME PLOTTED => 05:53

DESIGNER TONY CHUN	CHECKED BY C FAUST	STATE OF CALIFORNIA DEPARTMENT OF TRANSPORTATION	DIVISION OF ENGINEERING SERVICES ARCHITECTURAL AND STRUCTURAL DESIGN	BRIDGE NO. 50M5722	TAFT MAINTENANCE STATION
DRAWN BY TONY CHUN	STRUCTURAL REVIEW			KM POST 32.66/33.30	REMODELED STORAGE BLDG — PLAN, EXTERIOR ELEVATIONS AND DETAILS
					SHEET A3-1

DS OSD 2180 (08/92)
METRIC

ORIGINAL SCALE IN MILLIMETERS FOR REDUCED PLANS 0 10 20 30 40 50 60 70 80 90 100

CU 06257
EA 483401

DISREGARD PRINTS BEARING EARLIER REVISION DATES → 8/1/06 11/1/06 12/1/06 2/1/07 5/11/07

REVISION DATES (PRELIMINARY STAGE ONLY) | SHEET | OF

USERNAME => trmikesl
DGN FILE => a3_1sbplan.dgn

DIST.	COUNTY	LOCATION CODE	KILOMETER POST TOTAL PROJECT	SHEET NO.	TOTAL SHEETS
06	Ker	5722		84	178

Caltrans Metric

REGISTERED CIVIL ENGINEER 03-30-07

REGISTERED PROFESSIONAL ENGINEER Edgardo A. Isidro No. 058507 Exp. 12-31-10 CIVIL STATE OF CALIFORNIA

3-8-10
PLANS APPROVAL DATE

The State of California or its officers or agents shall not be responsible for the accuracy or completeness of electronic copies of this plan sheet.

ABBREVIATIONS

AAD	Adhesive Anchorage Device
AB	Anchor Bolt
AC	Asphalt Concrete
Alt	Alternate
APA	American Plywood Association
APC	Alternative Pipe Culvert
Bldg	Building
Blkg	Blocking
BN	Boundary Nailing
Btm	Bottom
CB	Carriage Bolt
CIDH	Cast In Drilled Hole
CJ	Control Joint
Clr	Clear
CMU	Concrete Masonry Unit
Conc	Concrete
Const	Construction
Cont	Continuous
CP	Complete Penetration Weld
Dbl	Double
DF	Douglas Fir
Dia	Diameter
DIP	Ductile Iron Pipe
DN	Diameter Nominal
do	Ditto
(E)	Existing
Ea	Each
EL	Elevation
Elec	Electrical
Embed	Embedment
EN	Edge Nail
Eq	Equal
Exp	Expansion
FDGM	Free Draining Granular Material
FG	Finish Grade
FL	Flow Line
Flr	Floor
FN	Face (Field) Nail
FOC	Face of Concrete
FOM	Face of Masonry
FOS	Face of Stud
Ftg	Footing
Ga	Gage
Galv	Galvanized
GLM	Glue Laminated Member
Gyp Bd	Gypsum Board
HD	Holdown
Hex	Hexagon
Horiz	Horizontal
HSB	High Strength Bolt
HSS	Hollow Structural Section
Jt	Joint
LOL	Layout Line
LVL	Laminated Veneer Lumber
m	Meter
Max	Maximum
MEA	Mechanical Expansion Anchor
Mech	Mechanical
Mfr	Manufacturer
mm	Millimeter
Min	Minimum
MIW	Malleable Iron Washer
OC	On Center
OG	Original Grade
OH	Opposite Hand
Opt	Optional
P	Pitch
PDF	Powder Driven Fastener
Plwd	Plywood
PT	Pressure Treated
PW	Puddle Weld
PWB	Prefabricated Wood I Beam
RCP	Reinforced Concrete Pipe
Reinf	Reinforced, Reinforcing
Req'd	Required
SDSTS	Self Drill, Self Tap Screw
Sim	Similar
SPS	Structural Plywood Sheathing
Sq	Square
Stagg	Staggered
Std	Standard
SW	Stud Weld
Sym	Symmetrical
T&G	Tongue-and-Groove
TN	Toe Nail
TS	Tube Steel
Typ	Typical
UON	Unless Otherwise Noted
Vert	Vertical

SYMBOLS

- Blocking In Section or Elevation
- Continuous Member In Section
- End of Member
- Bearing Wall
- Shear Wall
- X XXXX — Length; Shearwall Schedule Symbol; Reference
- Glue Laminated Member Section
- North Arrow
- X STX-X — Partial Section Cut
- X STX-X — Full Section Cut
- X — Revision Callout
- A — Grid Line Indicator
- ℄ — Center Line
- ⊹ — Station Line
- ℙ — Steel Plate
- Ø — Diameter
- ⌑ — Square
- CMU Wall on Plan Views
- Dropped Slab on Plan Views
- Reinforced Concrete
- Sand
- Structural Backfill
- Structural Excavation
- Original Ground
- Limits of Structural Backfill (shown on plan view)
- Free Draining Granular Material
- X — Bottom of Footing
- Elevation or Working Point
- Existing Features
- Holdown, Typ — Simpson / USP / Equal (Manufacturers are those noted in the order shown.)
- Frame Connector — Simpson / USP / Equal (Manufacturers are those noted in the order shown.)
- 3 5b ST-1 — Detail Number or Note Number; Additional Reference (if required); Sheet Number

NOTE: SPECIFIC DETAILS OR NOTES ON OTHER SHEETS SHALL PREVAIL OVER STANDARD DETAILS AND NOTES ON THIS SHEET

STANDARD DRAWING

FILE NO. XS-25M-0 | DESIGN BY Sean Samuel CHECKED Steve Schafer | APPROVED R.E. Travis
DRAWING DATE 1-04 | DETAILS BY George E. Rowe CHECKED | DESIGN SUPERVISOR
SUBMITTED BY Sean Samuel, DESIGN ENGINEER

STATE OF CALIFORNIA DEPARTMENT OF TRANSPORTATION

DIVISION OF ENGINEERING SERVICES ARCHITECTURAL AND STRUCTURAL DESIGN

BRIDGE NO. 50M5722 | KM POST

TAFT MAINTENANCE STATION

LEGEND

SHEET ST-1

DOES SD metric Rev. 9/02

SCALE: ALL DIMENSIONS ARE IN MILLIMETERS UNLESS OTHERWISE NOTED.

ORIGINAL SCALE IN MILLIMETERS FOR REDUCED PLANS 0 10 20 30 40 50 60 70 80 90 100

CU 06257
EA 483401

DISREGARD PRINTS BEARING EARLIER REVISION DATES → 1-16-04

REVISION DATES (PRELIMINARY STAGE ONLY) | SHEET | OF

23-MAR-2010 05:53

st0_1.dgn

Caltrans Metric

E A Isidro 03-30-07
REGISTERED CIVIL ENGINEER

REGISTERED PROFESSIONAL ENGINEER — Edgardo A. Isidro — No. 058507 — Exp. 12-31-10 — CIVIL — STATE OF CALIFORNIA

3-8-10
PLANS APPROVAL DATE

The State of California or its officers or agents shall not be responsible for the accuracy or completeness of electronic copies of this plan sheet.

(A) FRAMING NOTES

1. Dimensions are typically shown to face of stud for exterior walls, to centerline of stud at interior walls, and to centerline of openings. Vertical dimensions are typically shown from rough floor or slab to top of plate or to underside of lintels. Dimensions shown as "clear" are from surface to surface.
2. Bearing, shear and exterior walls shall be sheathed with 9.5 mm structural plywood sheathing.
3. All roofs shall be sheathed with 15.1 mm structural plywood sheathing.
4. Plywood for floors and roofs shall be placed face grain perpendicular to supports. Where possible, plywood shall be placed in full sheets and staggered one-half sheet length. Any partial plywood sheet shall not be less than 610 mm in length or width unless fully blocked. Plywood for wainscots, siding and wall sheathing may be placed parallel to framing and with the C-C plugged face exposed. See Detail 2, sheet ST-1B.
5. All wood members shall be Douglas Fir-Larch (DF) quality grade stamped. Grade stamps shall indicate compliance with the grading requirements of WWPA, WCLIB or other approved lumber inspection agency.
6. Structural plywood sheathing shall be APA grade stamped plywood conforming to Voluntary Product Standard PS1, Grade C-D, Exposure 1. Thickness and span rating shall be as shown on the plans.
7. Wood grades (unless otherwise noted):
   - A. For horizontal members:
     - Joists & Rafters — Grade #2
     - Beams & Stringers — Grade #1
     - Ledgers — Grade #1
   - B. For vertical members:
     - 51x102 Studs — Construction Grade
     - 51x152 & larger studs — Grade #2
     - Posts & Timbers — Grade #1
   - C. Glue laminated beams:
     - Simple spans — 24F-V4 DF/DF
     - Cantilevers & Continuous — 24F-V8 DF/DF
8. Glue laminated members shall be engineered, stress rated and factory laminated with adhesive for wet use.
9. Exposed members shall be "architectural appearance" grade and non-exposed members shall be "industrial appearance" grade.
10. All wood in direct contact with concrete or masonry shall be pressure treated Douglas Fir-Larch.
11. Joists framed into the side of wood girders shall be supported by joist hangers.
12. Joists shall be supported laterally at the ends and at each support by solid blocking or other approved means except where the ends of joists are nailed to a header, band or rim joist or to an adjoining stud. Solid blocking shall not be less than 51x in thickness and the full depth of the joist.
13. Joists and roof rafters 305 mm or deeper shall have full depth 51x thick solid blocking at 2440 mm maximum spacing.
14. Provide 51x blocking to secure fixtures shown on the project plans.
15. Joists under and parallel to bearing walls shall be doubled.
16. When there are multiple holes and notches in one structural element or when there are holes and notches occurring in more than two consecutive structural elements, the Engineers approval is required, unless the details are shown on plans.
17. Notches or cuts in bearing or shear wall studs may be to a depth not exceeding 25% of its width. Wood studs in non-bearing and non-shear walls supporting only their weight may be notched or cut to a depth not greater than 40% (See note 16 above).
18. Bored hole diameters shall not exceed 40% of the stud width in bearing walls and 60% in non-bearing walls. The top plates may not be bored or cut, without the Engineer's approval. Neither bearing nor shear wall top plates may be bored greater than 40%, unless detailed on the plans. Holes shall not be closer than 15 mm to the edge of the stud. (See note 16 above)
19. When it is necessary to cut the sole plate, sill plate or wood stud for plumbing, heating or other pipes, a 1.47 mm thick x 38 mm wide galvanized metal stud shoe plate shall be fastened w/6-16d to the plate across the opening.
20. Equivalent metal bridging or ties may be submitted to the Engineer for approval.

(B) MINIMUM NAILING SCHEDULE

1. All structural nailing shall be common wire. Alternate fasteners may be substituted as approved by the Engineer.
2. For wood to wood joints, the spacing of nails shall not be less than the required nail penetration. Edge or end distances shall not be less than ½ the required nail penetration. Where pre-drilling is required to avoid splitting of the wood, the hole diameter shall not exceed three-fourths of the nail diameter.
3. Nailing not noted below or on the project plans shall be a minimum of 2 nails at each contact, 8d for 25x members and 16d for 51x members.
4. Joists or Rafters:
   - a. Bearing (sill, girder, top plate) Toe Nail — 3-8d
   - b. Laps (parallel members over walls or beams) Face Nail — 4-16d
     For each additional 76 mm in member depth beyond 152 mm member add — 2-16d
   - c. Rim joist to floor joist, End Nail — 2-16d
     For each additional 102 mm in member depth beyond 203 mm member add — 1-16d
   - d. Rim joist to top plate, Toe Nail — 8d @ 150 mm OC
   - e. Double joists under bearing walls, staggered Face Nail. — 16d @ 300 mm OC
5. Studs:
   - a. Double studs, Face Nail — 16d @ 600 mm OC
   - b. Top plate to stud, End Nail — 2-16d
   - c. Stud to sole plate, Toe Nail — 3-16d or 4-8d
   - d. Sole plate to stud, End Nail — 2-16d
   - e. Stud to continous header, Toe Nail — 3-16d or 4-8d
   - f. Built-up corner studs, Face Nail — 16d @ 600 mm OC
6. Plates:
   - a. Top plate doubled, Face Nail — 16d @ 400 mm OC
   - b. Top plate intersection, Face Nail — 2-16d
   - c. Sole plate to rim joist or blocking, Face Nail — 16d @ 400 mm OC
   - d. Sole plate to floor framing, Face Nail — 16d @ 400 mm OC
7. Blocking:
   - a. To studs, joists or rafters, Toe Nail — 3-16d or 4-8d
     or End Nail — 2-16d
     For each additional 102 mm in member depth beyond 203 mm member add, Toe Nail — 2-8d
     or End Nail — 1-16d
   - b. To plates, Toe Nail — 16d @ 300 mm OC
8. 51 mm Subfloor to each joist or girder one blind and one Face Nail. — 2-16d
9. Structural Plywood Nailing:
   - a. Spacing at subflooring, decking, roof and wall structural plywood sheathing to framing:

LOCATION	9.5 mm Plwd	11.9 mm - 25.4 mm Plwd
At supported edges (edge nailing) & over bearing (beams, girders, walls, etc.)	8d @ 150 mm OC	10d @ 150 mm OC
At intermediate supports (field nailing)	8d @ 150 mm OC	10d @ 300 mm OC
Where bearing is 1220 mm or greater (field nailing)	————	10d @ 150 mm OC

   - b. Structural plywood edge nailing shall be staggered at supports, Detail 2, Sheet ST-1B; at double plates. Detail 3, Sheet ST-1B; and at double studs located at wall intersections and corners, Details 9A and 9B, Sheet ST-1B.
   - c. Decking and Underlayment: — Use deformed shank nail
     (see Sheet ST-1B for nail size and spacing)
   - d. Panel siding to framing: — Use zinc coated nail
     (see Sheet ST-1B for nail size and spacing)
10. Finish Plywood Nailing (non-structural):
    - a. Finish plywood to framing where the thickness is 12.7 mm or less:
      1) Finish nail at supported edges (edge nailing) — 6d @ 150 mm OC
      2) Finish nail at intermediate supports (field nailing) — 6d @ 300 mm OC
11. Gypsum Sheathing (Structural):
    - a. Wall structural gypsum board sheathing to framing where the thickness 15.9 mm or less:
      1) Cooler nail, parker nail or wallboard nail with a flat or concave head and diamond point at all edges and intermediate supports (field nailing) — 6d @ 100 mm OC

(C) MECHANICAL FASTENER NOTES

1. The clearance holes for lag screw shanks shall be the same diameter and depth as the unthreaded shank. The lead hole for the threaded portion shall be of a diameter equal to 60% of the shank diameter for screws up to 13 mm diameter, and 75% of the shank diameter for larger lag screws. The lead hole shall be at least the length of the threaded portion.
2. Lag screws shall be turned into pre-drilled holes and not be driven.
3. All bolts and lag screws shall be tightened and retightened before closing in, or at completion of job.
4. All bolts and lag screws shall be provided with metal washers under heads and nuts which bear on wood.

MINIMUM WASHER FOR BOLTS & LAG SCREWS

Size	Malleable Iron Washer	Steel Plate Washer
12 Ø	64 Ø x 8	51 x 51 x 6
16 Ø	70 Ø x 8	51 x 51 x 6
20 Ø	76 Ø x 11	51 x 51 x 6
22 Ø	84 Ø x 10	76 x 76 x 6
24 Ø	102 Ø x 13	76 x 76 x 6

Place under Bolt Heads & Nuts bearing on Wood

5. Fastener alternatives for non-bearing and non-shear walls:
   Two minimum per member and at 230 mm from ends.
   - a. 3.2 mm Ø Powder driven anchor with 25 mm penetration @ 610 mm OC.
   - b. 6.4 mm Ø expansion anchorage device embedded 35 mm minimum at 610 mm OC.
   - c. 12 mm Ø anchor bolt with 65 mm embedment @ 1220 mm OC.
6. Equivalent mechanical fasteners may be submitted to the Engineer for approval.

NOTE: SPECIFIC DETAILS OR NOTES ON OTHER SHEETS SHALL PREVAIL OVER STANDARD DETAILS AND NOTES ON THIS SHEET

DIST.	COUNTY	LOCATION CODE	KILOMETER POST TOTAL PROJECT	SHEET NO.	TOTAL SHEETS
06	Ker	5722		86	178

Caltrans Metric

REGISTERED CIVIL ENGINEER 03-30-07

REGISTERED PROFESSIONAL ENGINEER Edgardo A. Isidro No. 058507 Exp. 12-31-10 CIVIL STATE OF CALIFORNIA

3-8-10
PLANS APPROVAL DATE

The State of California or its officers or agents shall not be responsible for the accuracy or completeness of electronic copies of this plan sheet.

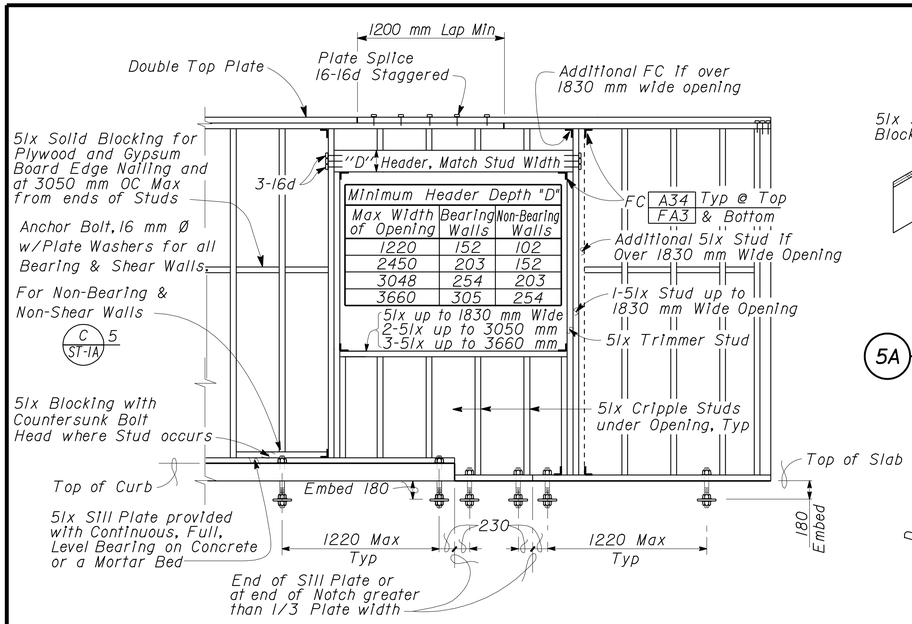

1 TYPICAL WALL AND OPENING FRAMING
No Scale

Notch Rafter If Slope Exceeds 1:15

Plate Size	"X"
51 x 102	50
51 x 152	75
51 x 203	100

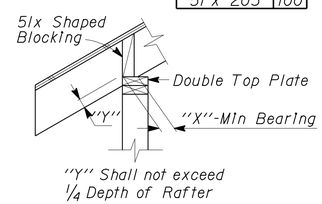

5A RAFTER BEARING

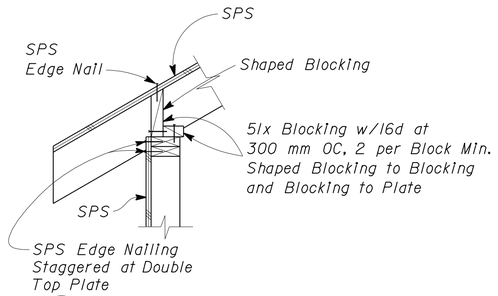

5B SHEAR TRANSFER

5 EXTERIOR WALL TOP PLATE DETAIL
No Scale

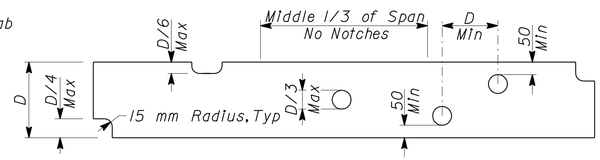

6 NOTCH LIMITS FOR JOISTS AND HEADERS
No Scale

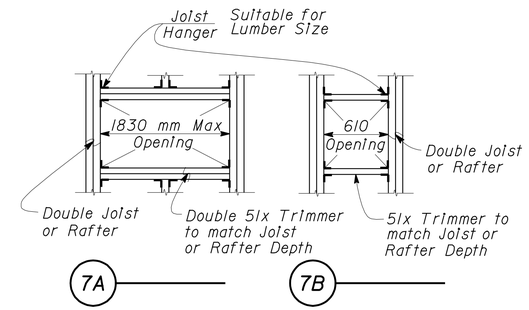

7A 7B

7 FRAMING AT OPENINGS
No Scale

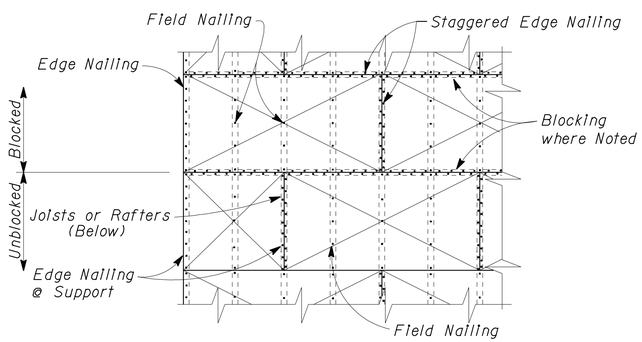

2 STRUCTURAL PLYWOOD LAYOUT
No Scale

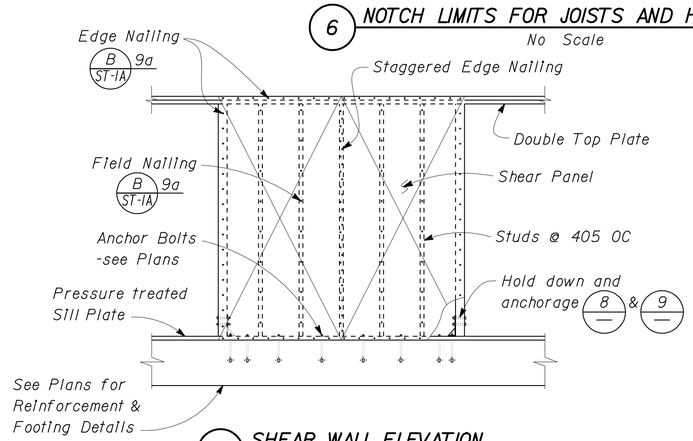

3 SHEAR WALL ELEVATION
No Scale

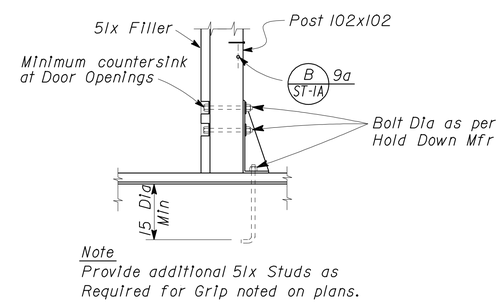

8 INTERIOR HOLD DOWN
No Scale

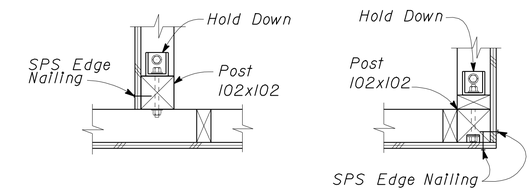

9A INTERSECTION 9B CORNER

Note
Interior Sheathing and attachment not shown for clarity.

9 INTERIOR AND CORNER WALL FRAMING DETAILS
No Scale

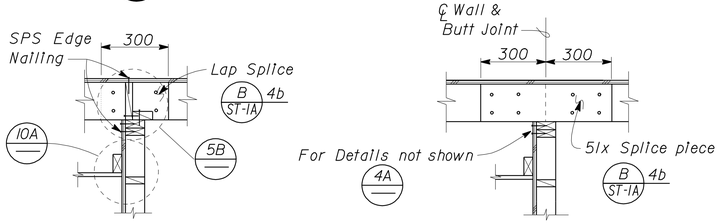

4A LAP SPLICE ACROSS JOISTS 4B BUTT SPLICE ACROSS JOISTS

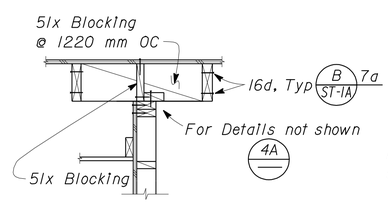

4C JOISTS PARALLEL TO WALL

4 JOIST LAYOUT AT TOP OF BEARING AND SHEAR WALL
No Scale

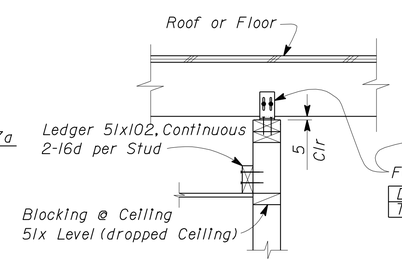

10A ACROSS JOISTS

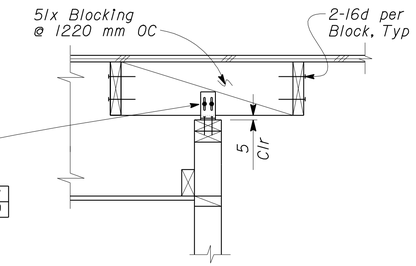

10B PARALLEL TO JOISTS

10 NON-BEARING WALL TOP PLATE CONNECTION
No Scale

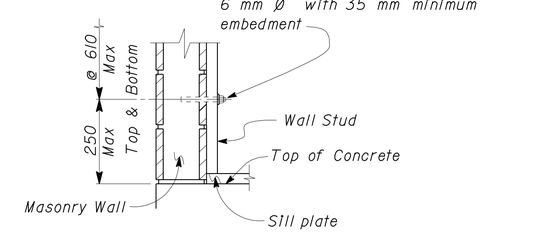

11 STUD ANCHORAGE TO MASONRY
No Scale

NOTE: SPECIFIC DETAILS OR NOTES ON OTHER SHEETS SHALL PREVAIL OVER DETAILS AND NOTES ON THIS SHEET

	BY		CHECKED
DESIGN	Edgardo Isidro		Thomas Tong
DETAILS	Aleksey Serin		Edgardo Isidro
QUANTITIES			

STATE OF CALIFORNIA DEPARTMENT OF TRANSPORTATION

DIVISION OF ENGINEERING SERVICES ARCHITECTURAL AND STRUCTURAL DESIGN

BRIDGE NO. 50M5722
KM POST

TAFT MAINTENANCE STATION

WOOD FRAMING STANDARD - DETAILS

SHEET ST-1B

DOES SD metric Rev. 9/02

SCALE: ALL DIMENSIONS ARE IN MILLIMETERS UNLESS OTHERWISE NOTED.

ORIGINAL SCALE IN MILLIMETERS FOR REDUCED PLANS 0 10 20 30 40 50 60 70 80 90 100

CU 06257
EA 483401

DISREGARD PRINTS BEARING EARLIER REVISION DATES → 02-02-07

REVISION DATES (PRELIMINARY STAGE ONLY) SHEET OF

23-MAR-2010 05:53

st0_1b.dgn

DIST.	COUNTY	LOCATION CODE	KILOMETER POST TOTAL PROJECT	SHEET NO.	TOTAL SHEETS
06	Ker	5722		87	178

Caltrans Metric

REGISTERED CIVIL ENGINEER — 03-30-07

REGISTERED PROFESSIONAL ENGINEER — Edgardo A. Isidro — No. 058507 — Exp. 12-31-10 — CIVIL — STATE OF CALIFORNIA

3-8-10
PLANS APPROVAL DATE

The State of California or its officers or agents shall not be responsible for the accuracy or completeness of electronic copies of this plan sheet.

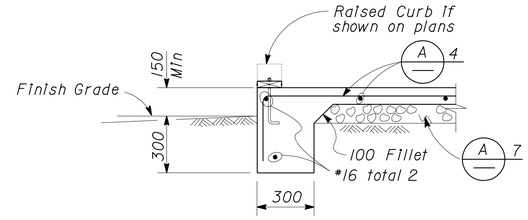

1 EXTERIOR FOOTING
No Scale

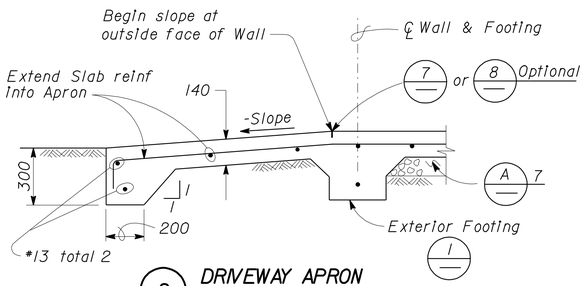

2 DRIVEWAY APRON
No Scale

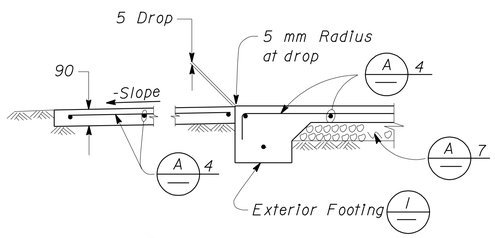

3 WALKWAY APRON
No Scale

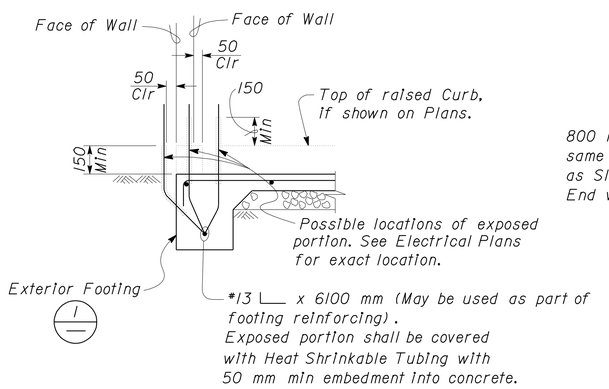

4 GROUND BAR DETAIL
No Scale

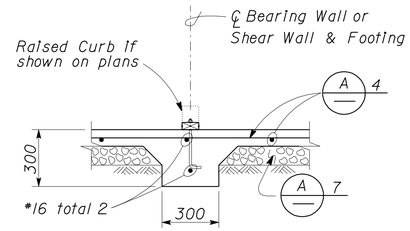

5 INTERIOR FOOTING
No Scale

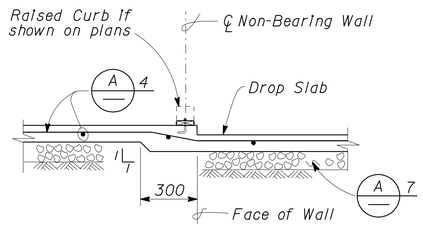

6 DROP SLAB AT NON-BEARING WALL
No Scale

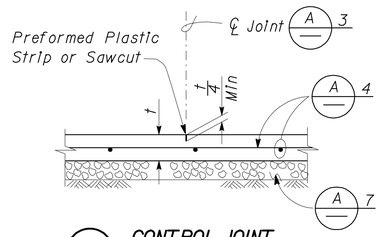

7 CONTROL JOINT
No Scale

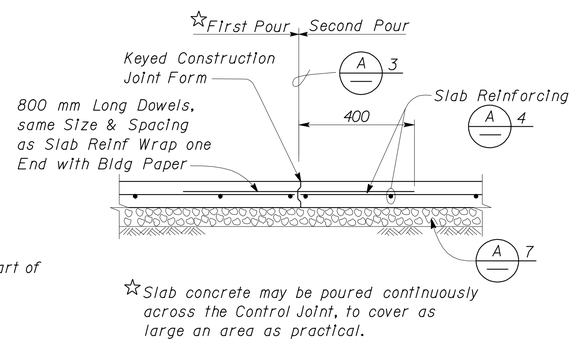

8 CONTRACTION JOINT
No Scale

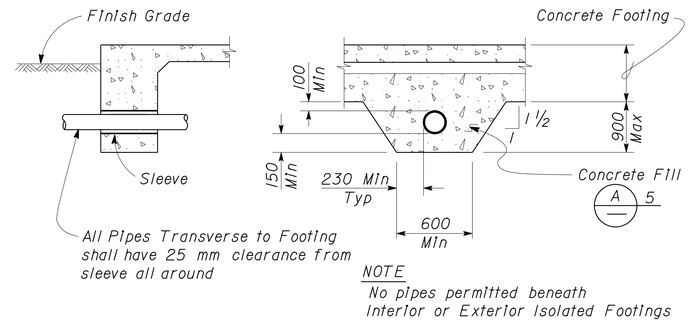

9 PIPE DETAILS THROUGH FOOTING
No Scale

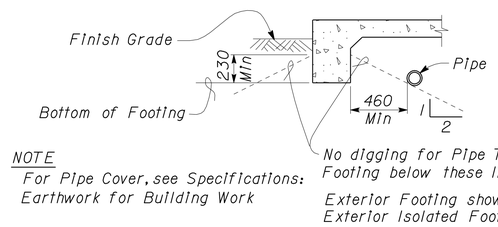

NOTE
For Pipe Cover, see Specifications: Earthwork for Building Work

10 PIPE DETAILS PARALLEL TO FOOTING
No Scale

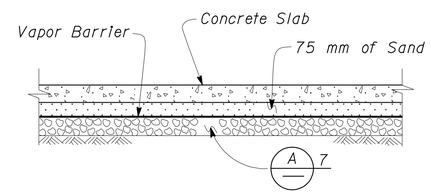

11 MOISTURE BARRIER
No Scale

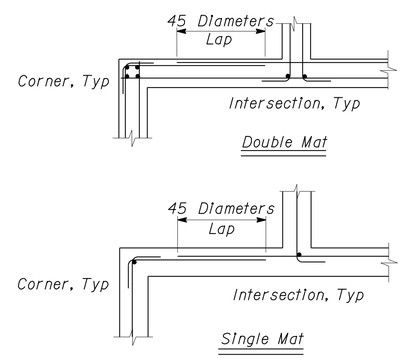

12 CORNER/INTERSECTION REINF SPLICE, TYPICAL
No Scale

A CONCRETE NOTES

1. The following minimum concrete cover shall be provided for reinforcement.

	Minimum Cover
a. Concrete cast against and permanently exposed to earth	75 mm
b. Concrete exposed to earth or weather but cast in forms :	
*19 thru *57 bars	50 mm
*16 bar and smaller, MW200 Wire, and smaller	40 mm
c. Concrete not exposed to weather or in contact with ground : Slabs, Walls and Joists :	
*43 and *57 Bar	40 mm
*36 Bar and smaller	20 mm
Beams and Columns : Primary Reinforcement, Ties, Stirrups and Spirals	40 mm

2. Splices in continuous reinforcement as in Walls, Wall Footings, etc. *25 or smaller shall have a lap of 45 diameters and the splices in adjacent bars shall not be less than 1500 mm apart.

   Continuous Bars in spandrels, Wall Beams, etc. shall lap Top Bars at center of span and Bottom Bars at supports.

3. Contraction Joints and Control Joints shall divide slab into areas not exceeding 21 square meters without reentrant corners and with length to width ratios not exceeding 1.5 to 1. Joint spacing shall not exceed 4500 mm.

4.

Slab Thickness (t)	Reinforcement
90 mm	*10 @ 450 mm Each way, place in center of Slab
140 mm	*13 @ 450 mm Each way, place in center of Slab

5. Concrete fill is to be placed before Footing is poured. Make the same width as the Footing and the full width of the Pipe trench. Concrete fill not required for pipes less than 50 mm diameters for pipes more than 900 mm below bottom of footing.

6. See Mechanical and Architectural Plans for size and locations of pipe, vents, ducts and other similar openings. See Electrical Plans for conduits and outlet boxes in floors, walls, etc.

7. Place 100 mm of free draining granular material under slabs.

NOTE: SPECIFIC DETAILS OR NOTES ON OTHER SHEETS SHALL PREVAIL OVER STANDARD DETAILS AND NOTES ON THIS SHEET

STANDARD DRAWING

FILE NO. XS-25M-1	DESIGN	BY Sean Samuel	CHECKED Lee Sylvester	APPROVED R.E. Travis
DRAWING DATE 1-04	DETAILS	BY Peter F. von Sauger, II	CHECKED	DESIGN SUPERVISOR
	SUBMITTED BY Sean Samuel	, DESIGN ENGINEER		

STATE OF CALIFORNIA DEPARTMENT OF TRANSPORTATION

DIVISION OF ENGINEERING SERVICES ARCHITECTURAL AND STRUCTURAL DESIGN

BRIDGE NO. 50M5722 — KM POST

TAFT MAINTENANCE STATION

CONCRETE STANDARD

SHEET ST-2

DOES SD metric Rev. 9/02

SCALE: ALL DIMENSIONS ARE IN MILLIMETERS UNLESS OTHERWISE NOTED.

ORIGINAL SCALE IN MILLIMETERS FOR REDUCED PLANS 0 10 20 30 40 50 60 70 80 90 100

CU 06257
EA 483401

DISREGARD PRINTS BEARING EARLIER REVISION DATES → 1-16-04

REVISION DATES (PRELIMINARY STAGE ONLY) — SHEET — OF

23-MAR-2010 05:54

st0_2.dgn

DIST.	COUNTY	LOCATION CODE	KILOMETER POST TOTAL PROJECT	SHEET NO.	TOTAL SHEETS
06	Ker	5722		88	178

Caltrans Metric

REGISTERED CIVIL ENGINEER 03-30-07

REGISTERED PROFESSIONAL ENGINEER Edgardo A. Isidro No. 058507 Exp. 12-31-10 CIVIL STATE OF CALIFORNIA

3-8-10
PLANS APPROVAL DATE

The State of California or its officers or agents shall not be responsible for the accuracy or completeness of electronic copies of this plan sheet.

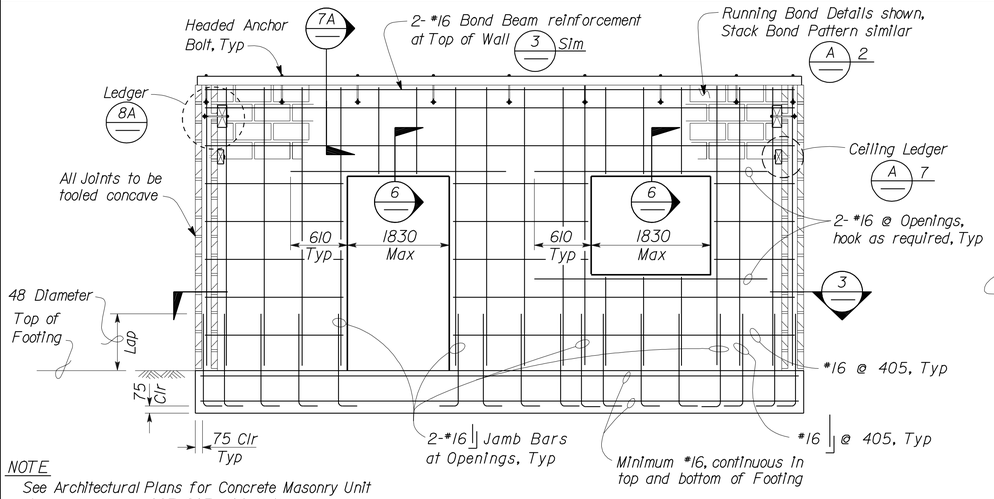

NOTE
See Architectural Plans for Concrete Masonry Unit size and pattern, 203x203x406 Unit shown.

1 WALL ELEVATION
No Scale

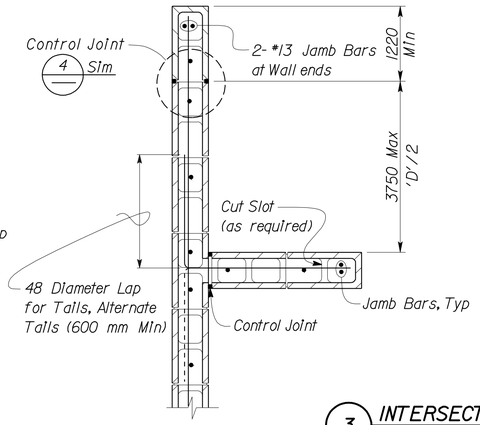

3 INTERSECTING WALL DETAILS
No Scale

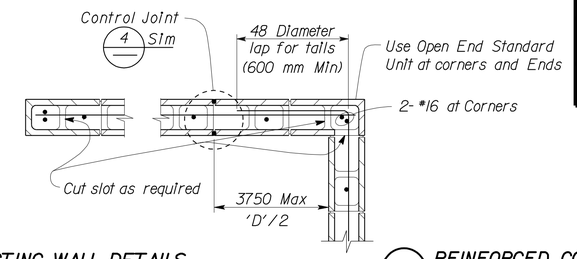

A REINFORCED CONCRETE MASONRY UNIT NOTES

1. All Walls shown on plans shall be solid grout, open end units, UON.
2. Stack Bond requires open end Bond Beam Units throughout.
3. All vertical reinforcement shall be centered in cell, UON. The minimum coverage of other reinforcement from the exposed surface of Concrete Masonry Unit shall be 50 mm.
4. Reinforcement splices shall be as follows:
   a. Length of lap splice for a #22 or smaller bar shall be 48 diameters.
   b. Lintel lap splices, if neccessary, shall be at midspan for top bars and beyond support for bottom bars.
5. There shall be a minimum 200 mm wall return at any Jamb adjacent to a corner.
6. Dowels shall be at least the same size and spacing as wall reinforcement.
7. Ceiling Ledger shall be anchored with 6.4 mm Ø Expansion Anchors installed at 810 mm OC maximum spacing. Expansion Anchors shall have 40 mm minimum distance to any edge of the masonry unit. Minimum embedment measured from the outside face of the unit shall be 50 mm.
8. Pipes shall not be embedded in any Masonry Wall except when shown on plans or as approved by the Engineer.
9. Electrical Conduit, Panels or Fixtures may be placed in cells with the following restrictions:
   a. The Conduits shall not interfere with or displace the reinforcing steel.
   b. Conduits shall not be placed in such a congested manner as to prevent the complete filling of the cells with grout.
   c. Horizontal run of 19 mm maximum size conduit may be placed in a bond beam unit course that does not have horizontal reinforcing steel.
   d. Recesses more than 25 mm deep for Electrical Panels or Fixtures shall be framed and have similar reinforcement as doors and windows.
10. Steel washers shall be provided for all anchor bolts, over-sized holes and high strength bolts.
11. See Architectural and Mechanical Plans for offsets, sizes and locations of ducts, wall openings, vents and other details not shown on Structural sheets.

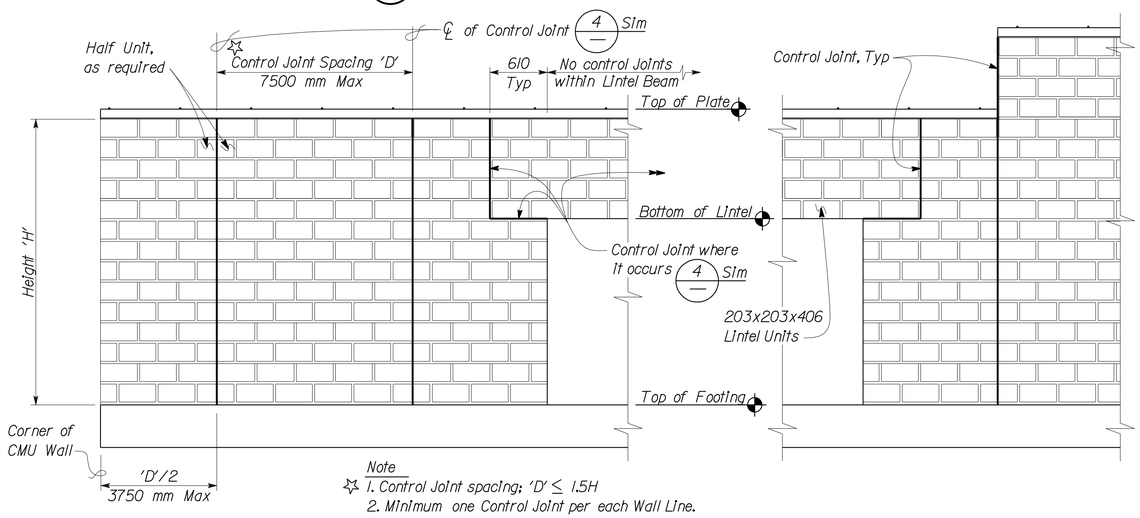

Note
☆ 1. Control Joint spacing; 'D' ≤ 1.5H
2. Minimum one Control Joint per each Wall Line.
3. Location of the Control Joints to be approved by the Engineer.

2 WALL ELEVATION
No Scale

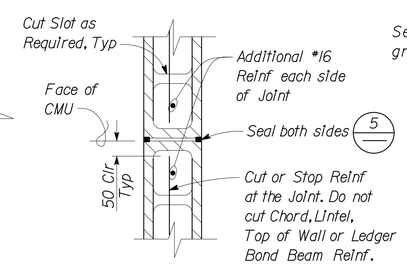

4 CONTROL JOINT DETAIL
Scale 1:10

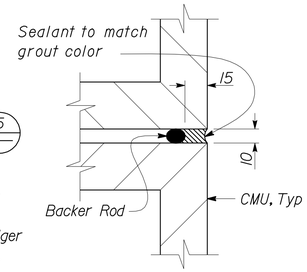

5 JOINT SEAL DETAIL
Scale 1:2

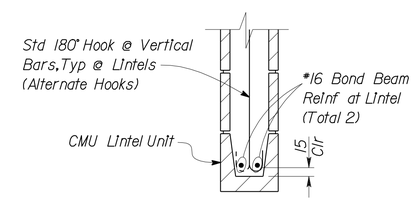

6 LINTEL DETAIL
Scale 1:10

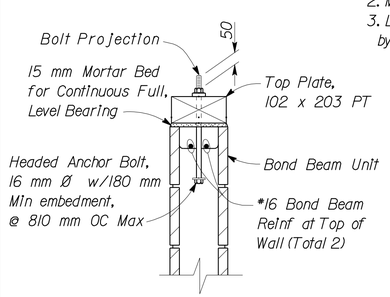

7A WOOD TOP PLATE DETAIL
Scale 1:10

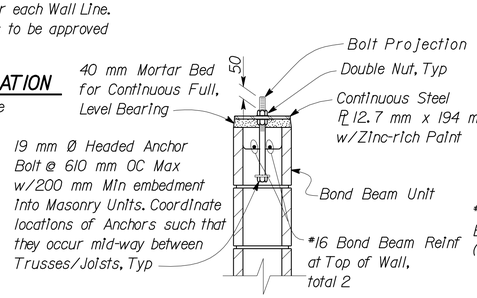

7B STEEL TOP PLATE DETAIL
Scale 1:10

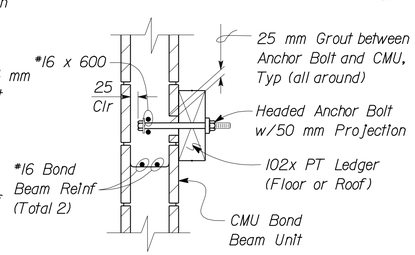

8A WOOD LEDGER DETAIL
Scale 1:10

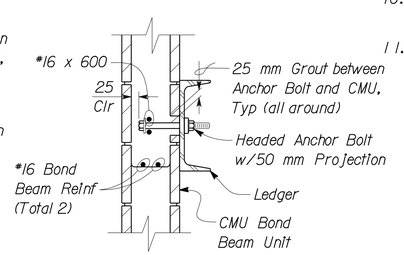

8B STEEL LEDGER DETAIL
Scale 1:10

203 mm CMU

NOTE: SPECIFIC DETAILS OR NOTES ON OTHER SHEETS SHALL PREVAIL OVER DETAILS AND NOTES ON THIS SHEET

	BY		CHECKED
DESIGN	Edgardo Isidro		Thomas Tong
DETAILS	Aleksey Serin		Edgardo Isidro
QUANTITIES			

STATE OF CALIFORNIA DEPARTMENT OF TRANSPORTATION

DIVISION OF ENGINEERING SERVICES ARCHITECTURAL AND STRUCTURAL DESIGN

BRIDGE NO. 50M5722
KM POST

TAFT MAINTENANCE STATION
CONCRETE MASONRY UNIT STANDARD

SHEET ST-3

DOES SD metric Rev. 9/02

SCALE: ALL DIMENSIONS ARE IN MILLIMETERS UNLESS OTHERWISE NOTED.

ORIGINAL SCALE IN MILLIMETERS FOR REDUCED PLANS 0 10 20 30 40 50 60 70 80 90 100

CU 06257
EA 483401

DISREGARD PRINTS BEARING EARLIER REVISION DATES 02-02-07

REVISION DATES (PRELIMINARY STAGE ONLY) SHEET OF

23-MAR-2010 05:54
st0_3.dgn

DIST.	COUNTY	LOCATION CODE	KILOMETER POST TOTAL PROJECT	SHEET NO.	TOTAL SHEETS
06	Ker	5722		89	178

Caltrans Metric

REGISTERED CIVIL ENGINEER 03-30-07

REGISTERED PROFESSIONAL ENGINEER Edgardo A. Isidro No. 058507 Exp. 12-31-10 CIVIL STATE OF CALIFORNIA

3-8-10
PLANS APPROVAL DATE

The State of California or its officers or agents shall not be responsible for the accuracy or completeness of electronic copies of this plan sheet.

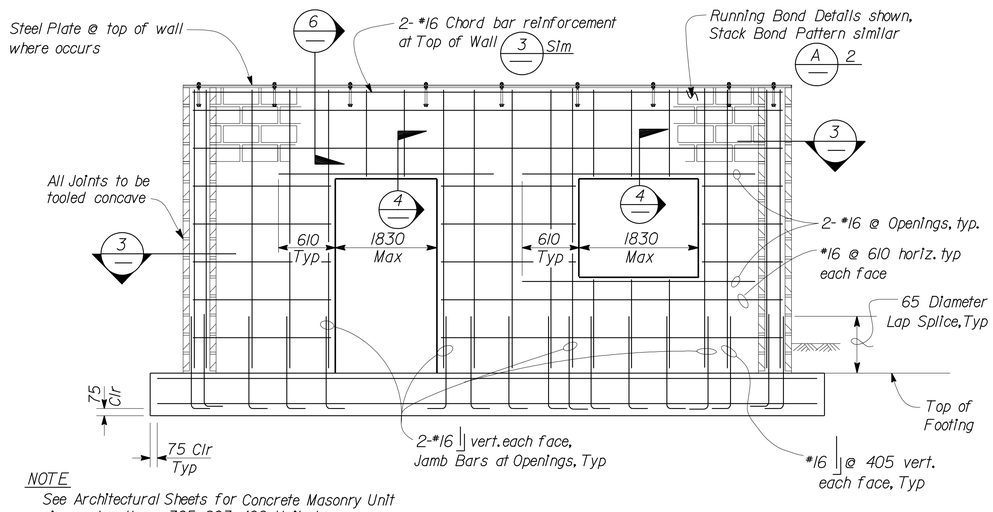

NOTE
See Architectural Sheets for Concrete Masonry Unit size and pattern, 305x203x406 Unit shown.

1 WALL ELEVATION
No Scale

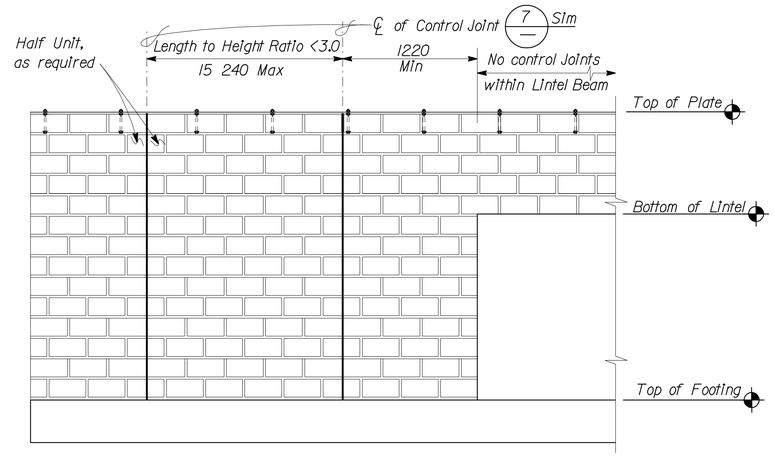

NOTE
For location of Control Joints, see Architectural Sheets

2 WALL ELEVATION
No Scale

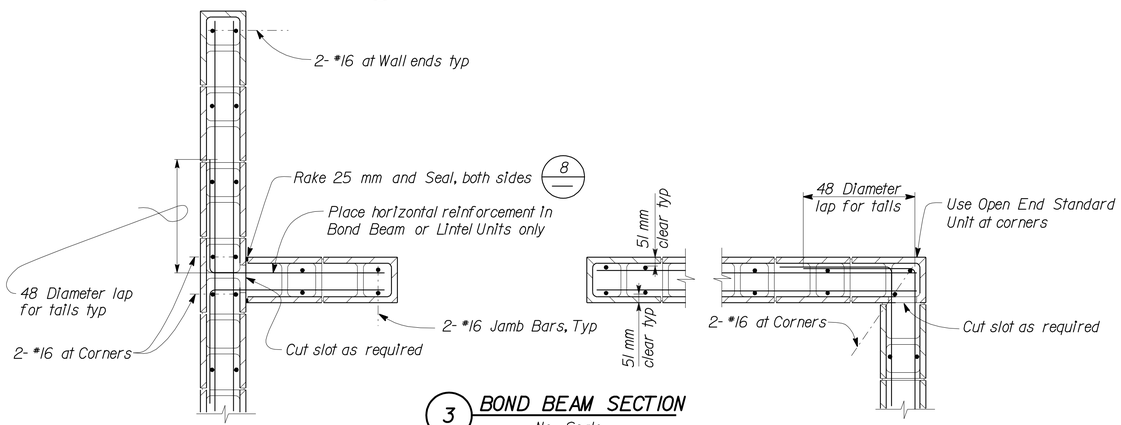

3 BOND BEAM SECTION
No Scale

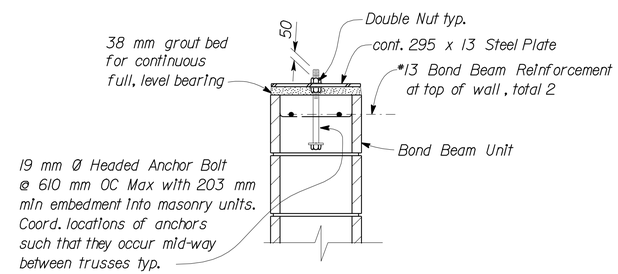

6 PLATE DETAIL
Scale 1:10

A 305 MM REINFORCED CONCRETE MASONRY UNIT NOTES

1. All Walls shown on plans shall be solid grouted.
2. Stack Bond requires open end Bond Beam Units throughout.
3. The minimum coverage of other reinforcement from the exposed surface of Concrete Masonry Unit shall be 51 mm.
4. Reinforcement splices shall be as follows:
   a. Length of a lap splice for a No. 22 or smaller bar shall be 65 bar diameters, typical unless noted otherwise
   b. Lintel lap splices, if neccessary, shall be at midspan for top bars and beyond support for bottom bars.
5. Dowels shall be at least the same size and spacing as wall reinforcement.
6. Pipes shall not be embedded in any Masonry Wall except where shown on plans or as approved by the Engineer.
7. Electrical Conduit, Panels or Fixtures may be placed in cells with the following restrictions:
   a. The Conduits shall not interfere with or displace the reinforcing steel.
   b. Conduits shall not be placed in such a congested manner as to prevent the complete filling of the cells with grout.
   c. Horizontal run of 19 mm maximum size conduit may be placed in a bond beam unit course that does not have horizontal reinforcing steel.
   d. Recesses for Electrical Panels or Fixtures shall be framed and have similar reinforcement as doors and windows.
8. See Architectural and Mechanical drawings for offsets, sizes and locations of ducts, wall openings, vents and other details not shown on Structural sheets.

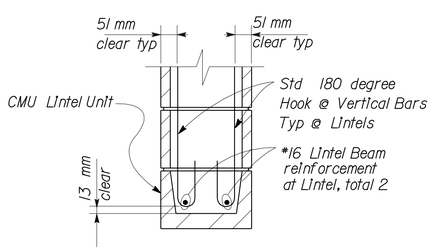

4 LINTEL DETAIL
Scale 1:10

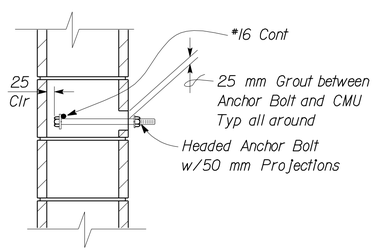

5 ANCHOR BOLT DETAIL
Scale 1:10

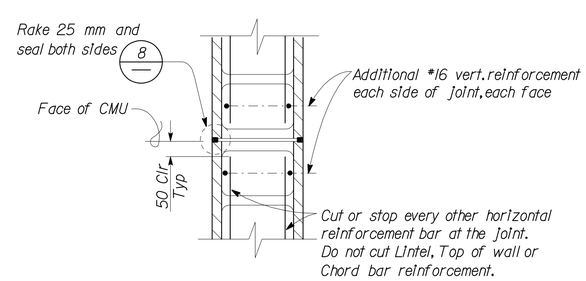

7 CONTROL JOINT DETAIL
Scale 1:10

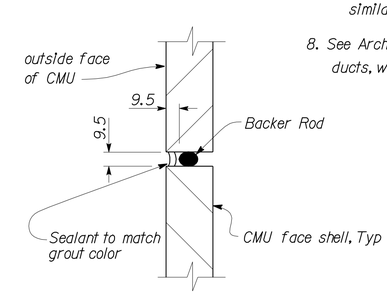

8 JOINT SEAL DETAIL
Scale 1:2

305 mm CMU

NOTE: SPECIFIC DETAILS OR NOTES ON OTHER SHEETS SHALL PREVAIL OVER DETAILS AND NOTES ON THIS SHEET

	BY	CHECKED
DESIGN	Edgardo Isidro	Thomas Tong
DETAILS	Aleksey Serin	Edgardo Isidro
QUANTITIES		

STATE OF CALIFORNIA DEPARTMENT OF TRANSPORTATION

DIVISION OF ENGINEERING SERVICES ARCHITECTURAL AND STRUCTURAL DESIGN

BRIDGE NO. 50M5722
KM POST

TAFT MAINTENANCE STATION

CONCRETE MASONRY UNIT DETAILS

SHEET **ST-4**

DOES SD metric Rev. 9/02

SCALE: ALL DIMENSIONS ARE IN MILLIMETERS UNLESS OTHERWISE NOTED.

ORIGINAL SCALE IN MILLIMETERS FOR REDUCED PLANS 0 10 20 30 40 50 60 70 80 90 100

CU 06257
EA 483401

DISREGARD PRINTS BEARING EARLIER REVISION DATES → 02-02-07

REVISION DATES (PRELIMINARY STAGE ONLY) SHEET OF

23-MAR-2010 05:54

st0_4.dgn

DIST.	COUNTY	LOCATION CODE	KILOMETER POST TOTAL PROJECT	SHEET NO.	TOTAL SHEETS
06	Ker	5722		90	178

Caltrans Metric

REGISTERED CIVIL ENGINEER 03-30-07

REGISTERED PROFESSIONAL ENGINEER Edgardo A. Isidro No. 058507 Exp. 12-31-10 CIVIL STATE OF CALIFORNIA

3-8-10
PLANS APPROVAL DATE

The State of California or its officers or agents shall not be responsible for the accuracy or completeness of electronic copies of this plan sheet.

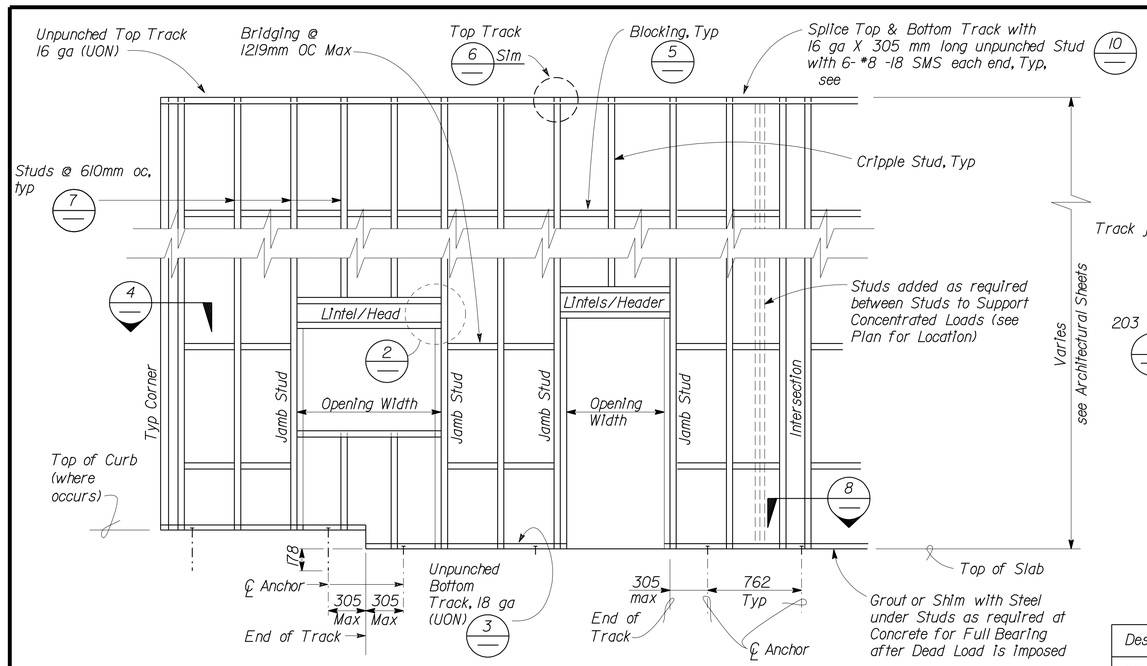

1 TYPICAL WALL AND OPENING FRAMING
No Scale

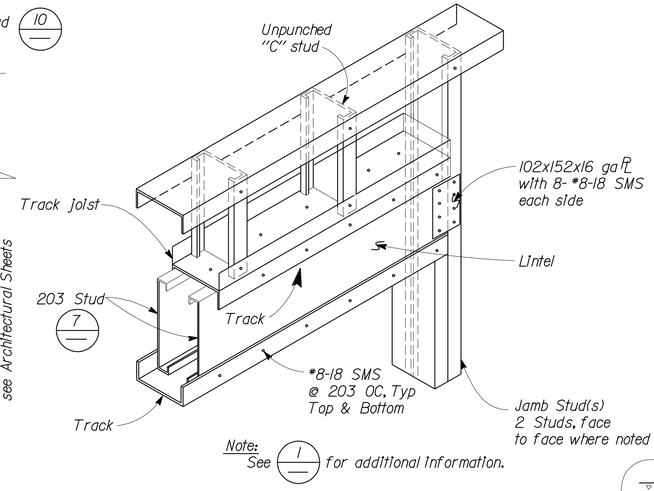

2 LINTEL ISOMETRIC VIEW
No Scale

Designation	Gage	Major Axis		
		I_x	S_x	R_x
400 S 162-54	16 ga.	1499416 mm^4	28656 mm^3	53.5 mm
600 S 162-54	16 ga.	4532387 mm^4	53871 mm^3	72.8 mm
800 S 162-54	16 ga.	7835013 mm^4	75107 mm	74.3 mm

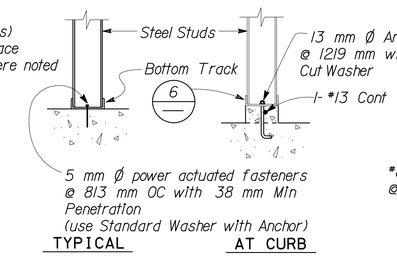

3 BOTTOM TRACK DETAIL
No Scale

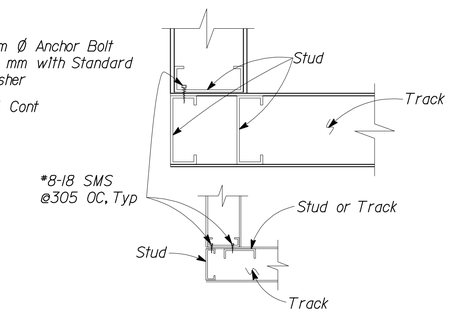

4 CORNER
No Scale

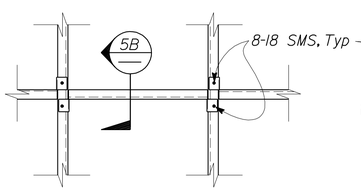

5A ELEVATION
No Scale

5B SECTION
No Scale

NOTE:
Use a piece of Track as Blocking. Cut Flanges of Track and bend Web. Connect with Two No. 8-18 Pan Head Screws to Stud.

5 BLOCKING DETAIL
No Scale

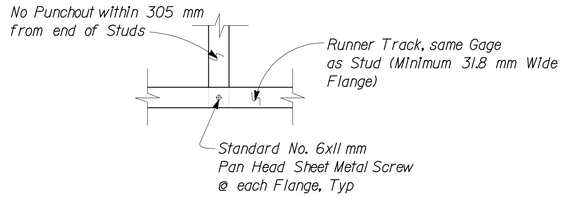

6 BOTTOM/TOP TRACK DETAIL
No Scale

NOTE:

1. F_y = 344 Mpa for 14 and 16 gauge studs, joists, and tracks
2. Metal framing shall have channel type sections with stiffened flanges with section properties shown in table above. Joists shall be unpunched.
3. Metal tracks shall be the same gauge as the framing which it supports, unless noted otherwise, with minimum flange width of 31.8 mm.

7 MINIMUM METAL STUD DESIGN PROPERTIES - U.O.N.
No Scale

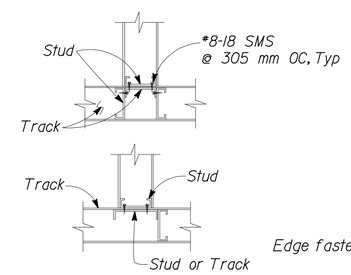

8 INTERSECTION
No Scale

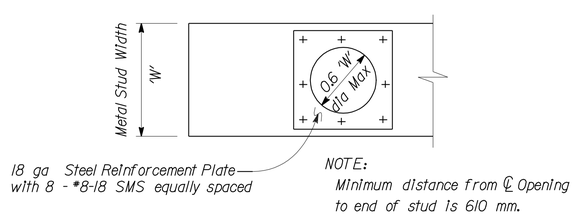

NOTE:
Minimum distance from ℄ Opening to end of stud is 610 mm.

9 TYPICAL PIPE OPENING REINFORCING
No Scale

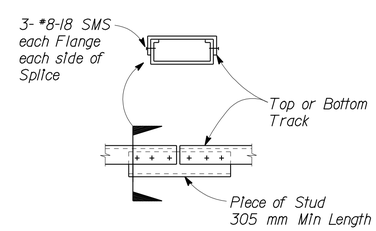

10 METAL TRACK SPLICE
No Scale

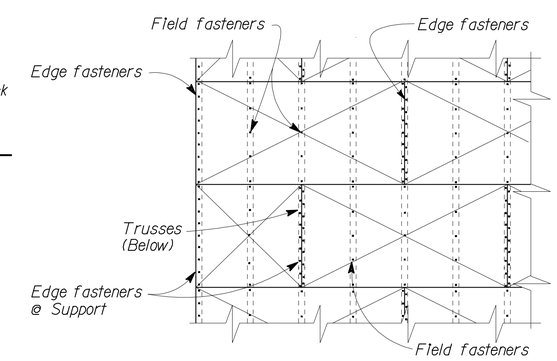

11 STRUCTURAL PLYWOOD LAYOUT
No Scale

NOTE: SPECIFIC DETAILS OR NOTES ON OTHER SHEETS SHALL PREVAIL OVER DETAILS AND NOTES ON THIS SHEET

	BY	CHECKED
DESIGN	Edgardo Isidro	Tomas Tong
DETAILS	Aleksey Serin	Edgardo Isidro
QUANTITIES		

STATE OF CALIFORNIA DEPARTMENT OF TRANSPORTATION

DIVISION OF ENGINEERING SERVICES ARCHITECTURAL AND STRUCTURAL DESIGN

BRIDGE NO. 50M5722
KM POST

TAFT MAINTENANCE STATION
METAL STUD FRAMING DETAILS

SHEET ST-5

DOES SD metric Rev. 9/02

SCALE: ALL DIMENSIONS ARE IN MILLIMETERS UNLESS OTHERWISE NOTED.

ORIGINAL SCALE IN MILLIMETERS FOR REDUCED PLANS 0 10 20 30 40 50 60 70 80 90 100

CU 06257
EA 483401

DISREGARD PRINTS BEARING EARLIER REVISION DATES → 03-28-06

REVISION DATES (PRELIMINARY STAGE ONLY) SHEET OF

23-MAR-2010 05:54

st0_5.dgn

DIST	COUNTY	LOCATION CODE	KILOMETER POST TOTAL PROJECT	SHEET NO.	TOTAL SHEETS
06	Ker	5722		91	178

REGISTERED CIVIL ENGINEER — DATE 03-30-07

REGISTERED PROFESSIONAL ENGINEER — Edgardo A. Isidro — No. 058507 — Exp. 12-31-10 — CIVIL — STATE OF CALIFORNIA

3-8-10
PLANS APPROVAL DATE

The State of California or its officers or agents shall not be responsible for the accuracy or completeness of electronic copies of this plan sheet.

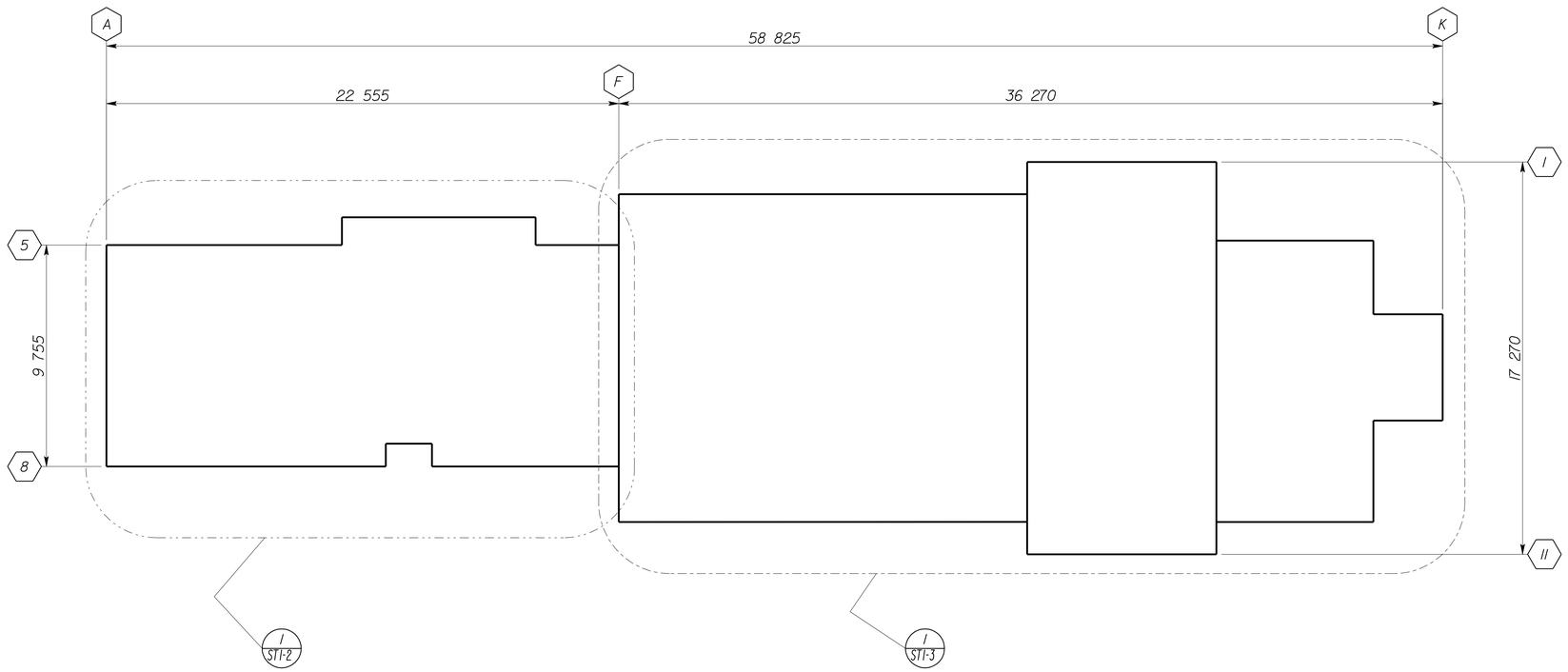

1 KEY PLAN
Scale 1:100

A DESIGN NOTES

1. Design: The building work on this project has been designed to conform to the 2007 California Building Code.

a. Loads :
Live Loads : Roof = 957 Pa
Wind Speed : 129 km/h , Exposure C
Seismic Design Criteria: D

b. Reinforced Concrete (Ultimate Strength Design) :
$f'c$ = 21 MPa
f_y = 420 MPa

c. Structural Steel (Working Stress Design) :
f_y = 250 MPa

d. Reinforced Concrete Masonry Units (Allowable Stress Design) :
Special Inspection Required
$f'm$ =10.3 MPa
f_y = 420 MPa

e. Timber: Sawn Lumber Sheet ST-1A & ST-1B

f. Pre-Engineered Truss Sheets ST1-13

g. Foundation :
Soils report dated: May 16, 2006, with addendum dated January 4, 2007
Allowable Soil Pressure (DL + LL) : 144,000 Pa
For Soil Classification see Log of Test Borings, Sheet ST7-1

2. All Miscellaneous Metal to be hot-dip galvanized after fabrication.

3. Building dimensions are based on CMU block module of 203 mm x 203 mm x 406 mm and 305 mm x 203 mm 406 mm. For CMU vertical contral joint, see 2/ST-3 and 2/ST-4

4. Mechanical Expansion Anchors shall be 16 mm Ø and have 100 mm minimum embedment, 915 mm max spacing and placed 150 mm maximum spacing from ends, two minimum per connection, unless otherwise shown.

DESIGN ENGINEER

DESIGN	BY Edgardo Isidro	CHECKED Thomas Tong	
DETAILS	BY Aleksey Serin	CHECKED Edgardo Isidro	
QUANTITIES	BY	CHECKED	

STATE OF CALIFORNIA
DEPARTMENT OF TRANSPORTATION

DIVISION OF ENGINEERING SERVICES
ARCHITECTURAL AND STRUCTURAL DESIGN

BRIDGE NO. 50M5722
KM POST

TAFT MAINTENANCE STATION
CREW/EQUIPMENT BUILDING
KEY PLAN

SHEET ST1-1

DOES SD metric Rev. 9/02

SCALE: ALL DIMENSIONS ARE IN MILLIMETERS UNLESS OTHERWISE NOTED.

ORIGINAL SCALE IN MILLIMETERS FOR REDUCED PLANS 0 10 20 30 40 50 60 70 80 90 100

CU 06257
EA 483401

DISREGARD PRINTS BEARING EARLIER REVISION DATES → 02-02-06 06-23-06 10-03-06

REVISION DATES (PRELIMINARY STAGE ONLY) SHEET OF

23-MAR-2010 08:55

st1_01.dgn

DIST	COUNTY	LOCATION CODE	KILOMETER POST TOTAL PROJECT	SHEET NO.	TOTAL SHEETS
06	Ker	5722		92	178

Caltrans Metric

REGISTERED CIVIL ENGINEER — DATE 03-30-07

REGISTERED PROFESSIONAL ENGINEER — Edgardo A. Isidro — No. 058507 — Exp. 12-31-10 — CIVIL — STATE OF CALIFORNIA

3-8-10
PLANS APPROVAL DATE

The State of California or its officers or agents shall not be responsible for the accuracy or completeness of electronic copies of this plan sheet.

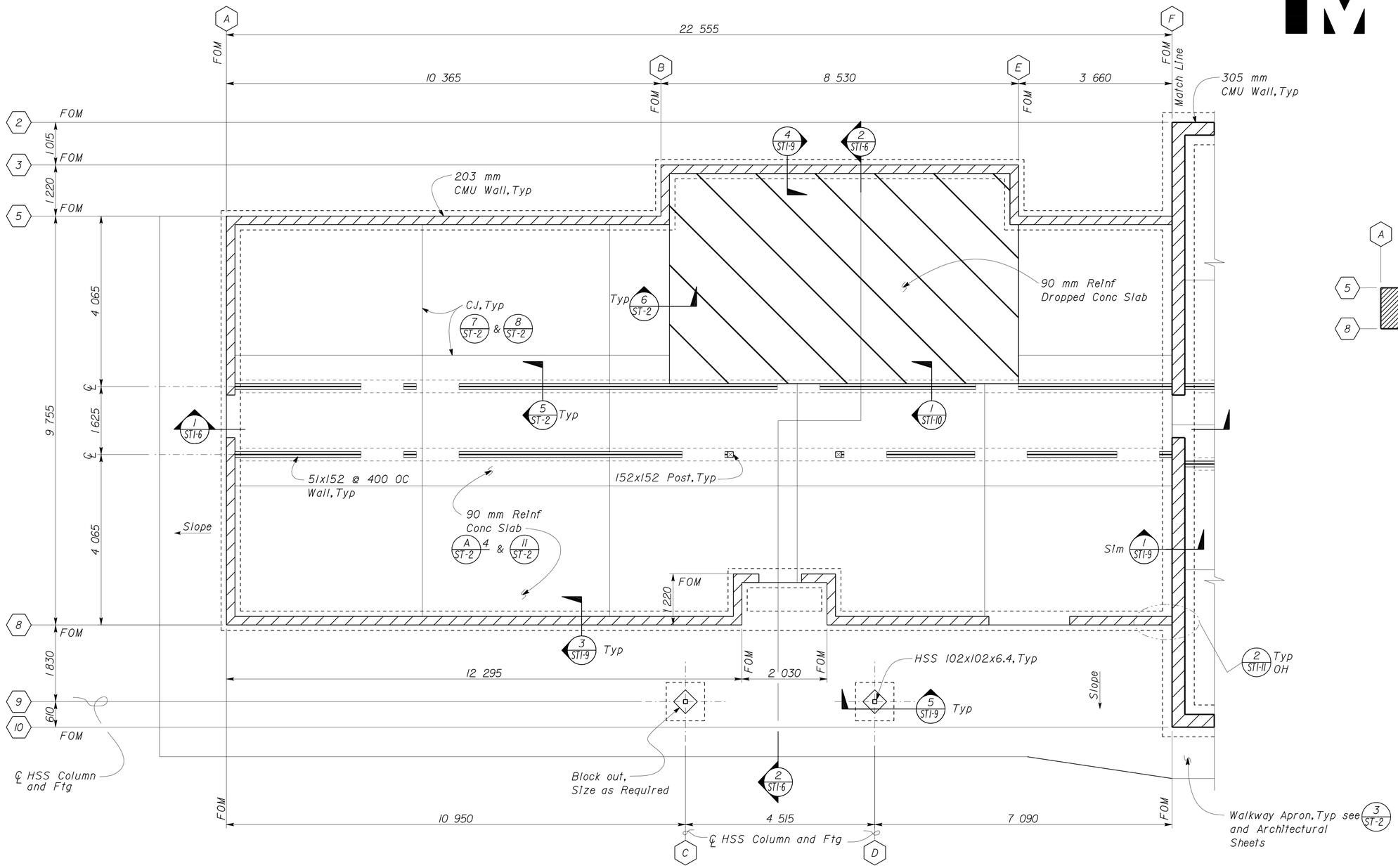

1 PARTIAL FOUNDATION PLAN
Scale 1:50

Elevation 322.80 meters = Datum 0 mm, see Civil Sheets

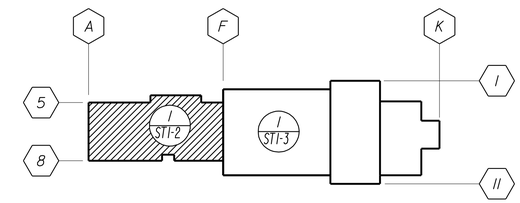

A KEY PLAN
Scale 1:500

DESIGN	BY Edgardo Isidro	CHECKED Thomas Tong	
DETAILS	BY Aleksey Serin	CHECKED Edgardo Isidro	
QUANTITIES	BY	CHECKED	

STATE OF CALIFORNIA
DEPARTMENT OF TRANSPORTATION

DIVISION OF ENGINEERING SERVICES
ARCHITECTURAL AND STRUCTURAL DESIGN

BRIDGE NO. 50M5722
KM POST

CREW/EQUIPMENT BUILDING

TAFT MAINTENANCE STATION

FOUNDATION PLAN 1

SHEET ST1-2

DOES SD metric Rev. 9/02

SCALE: ALL DIMENSIONS ARE IN MILLIMETERS UNLESS OTHERWISE NOTED.

ORIGINAL SCALE IN MILLIMETERS FOR REDUCED PLANS 0 10 20 30 40 50 60 70 80 90 100

CU 06257
EA 483401

DISREGARD PRINTS BEARING EARLIER REVISION DATES

REVISION DATES (PRELIMINARY STAGE ONLY) SHEET OF
03-20-07 06-26-06 07-17-06 07-20-06 07-24-06 10-03-06 01-03-07 02-06-07

23-MAR-2010 05:55

st1_02.dgn

DIST	COUNTY	LOCATION CODE	KILOMETER POST TOTAL PROJECT	SHEET NO.	TOTAL SHEETS
06	Ker	5722		93	178

REGISTERED CIVIL ENGINEER — DATE 03-30-07

Edgardo A. Isidro No. 058507 Exp. 12-31-10 CIVIL — REGISTERED PROFESSIONAL ENGINEER — STATE OF CALIFORNIA

3-8-10
PLANS APPROVAL DATE

The State of California or its officers or agents shall not be responsible for the accuracy or completeness of electronic copies of this plan sheet.

Caltrans Metric

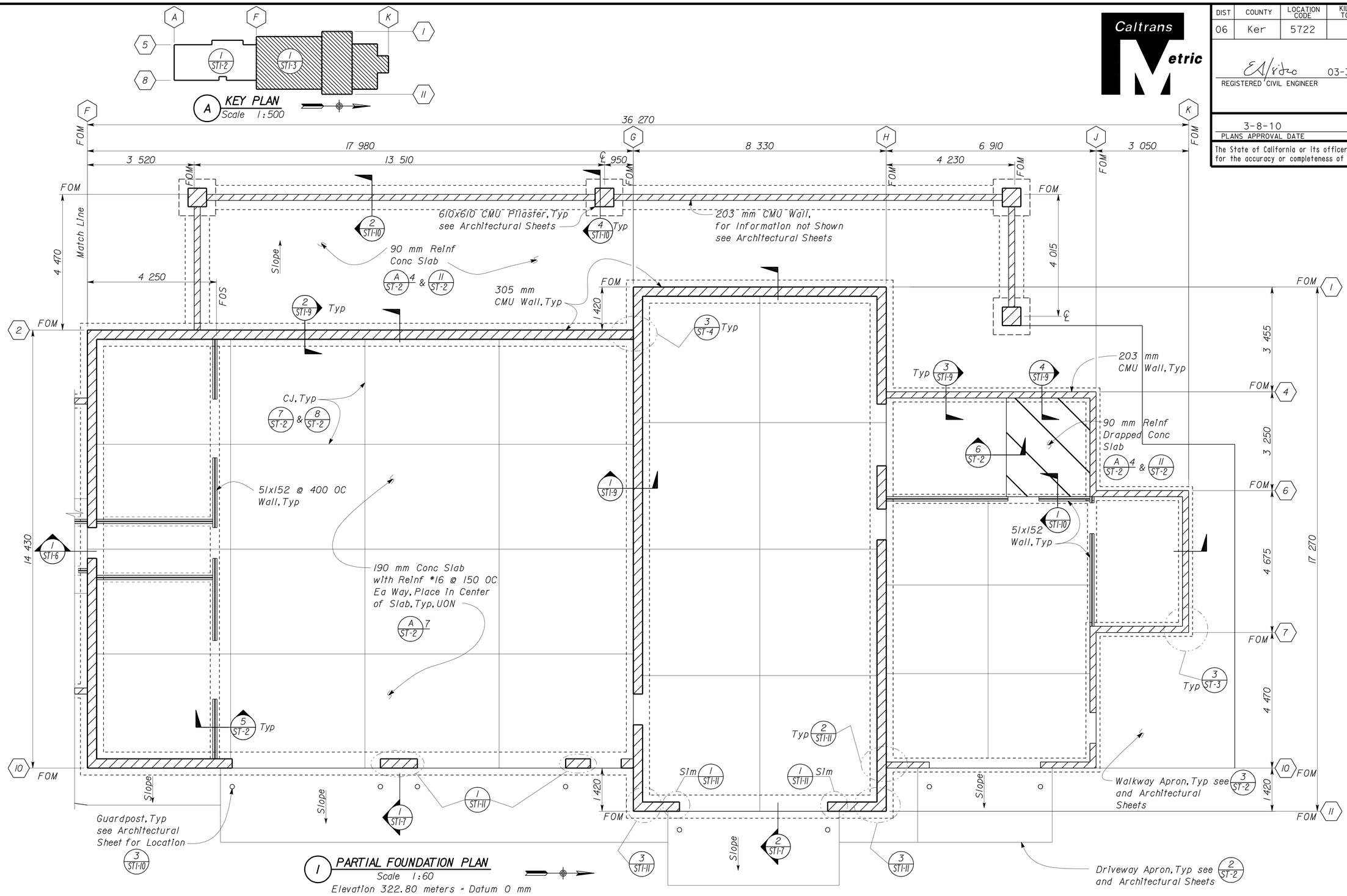

1 PARTIAL FOUNDATION PLAN
Scale 1:60
Elevation 322.80 meters = Datum 0 mm

	BY		CHECKED	
DESIGN	BY	Edgardo Isidro	CHECKED	Thomas Tong
DETAILS	BY	Aleksey Serin	CHECKED	Edgardo Isidro
QUANTITIES	BY		CHECKED	

STATE OF CALIFORNIA
DEPARTMENT OF TRANSPORTATION

DIVISION OF ENGINEERING SERVICES
ARCHITECTURAL AND STRUCTURAL DESIGN

BRIDGE NO. 50M5722
KM POST

CREW/EQUIPMENT BUILDING

TAFT MAINTENANCE STATION

FOUNDATION PLAN 2

SHEET ST1-3

DOES SD metric Rev. 9/02

SCALE: ALL DIMENSIONS ARE IN MILLIMETERS UNLESS OTHERWISE NOTED.

ORIGINAL SCALE IN MILLIMETERS FOR REDUCED PLANS 0 10 20 30 40 50 60 70 80 90 100

CU 06257
EA 483401

DISREGARD PRINTS BEARING EARLIER REVISION DATES

REVISION DATES (PRELIMINARY STAGE ONLY) 02-06-06 03-28-06 06-26-06 07-12-06 07-28-06 10-03-06 01-03-07 02-06-07 03-20-07

SHEET OF

23-MAR-2010 05:55

st1_03.dgn

DIST	COUNTY	LOCATION CODE	KILOMETER POST TOTAL PROJECT	SHEET NO.	TOTAL SHEETS
06	Ker	5722		94	178

REGISTERED CIVIL ENGINEER — DATE 03-30-07

REGISTERED PROFESSIONAL ENGINEER — Edgardo A. Isidro — No. 058507 — Exp. 12-31-10 — CIVIL — STATE OF CALIFORNIA

3-8-10
PLANS APPROVAL DATE

The State of California or its officers or agents shall not be responsible for the accuracy or completeness of electronic copies of this plan sheet.

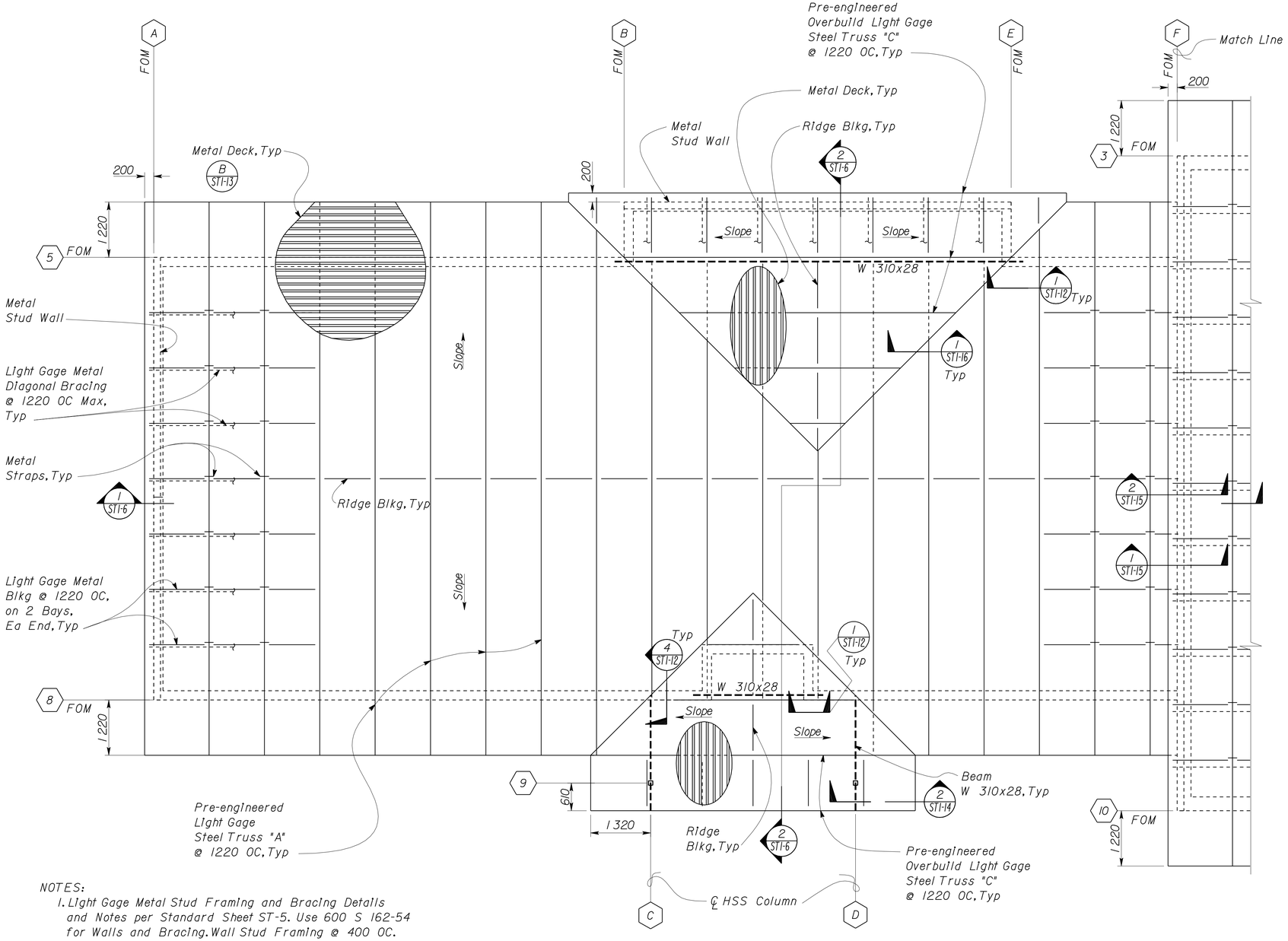

NOTES:

1. Light Gage Metal Stud Framing and Bracing Details and Notes per Standard Sheet ST-5. Use 600 S 162-54 for Walls and Bracing. Wall Stud Framing @ 400 OC.
2. Pre-Engineered Truss Type Profiles per Sheet (--/ST1-13).

1 PARTIAL ROOF PLAN
Scale 1:50

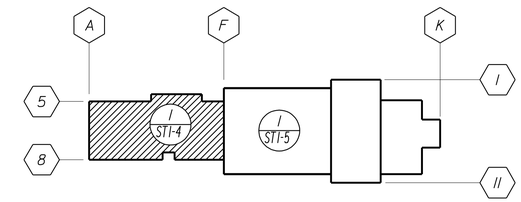

A KEY PLAN
Scale 1:500

DESIGN	BY Edgardo Isidro	CHECKED Thomas Tong	
DETAILS	BY Aleksey Serin	CHECKED Edgardo Isidro	
QUANTITIES	BY	CHECKED	

STATE OF CALIFORNIA
DEPARTMENT OF TRANSPORTATION

DIVISION OF ENGINEERING SERVICES
ARCHITECTURAL AND STRUCTURAL DESIGN

BRIDGE NO. 50M5722
KM POST

TAFT MAINTENANCE STATION

CREW/EQUIPMENT BUILDING

ROOF PLAN 1

SHEET ST1-4

DOES SD metric Rev. 9/02

SCALE: ALL DIMENSIONS ARE IN MILLIMETERS UNLESS OTHERWISE NOTED.

ORIGINAL SCALE IN MILLIMETERS FOR REDUCED PLANS 0 10 20 30 40 50 60 70 80 90 100

CU 06257
EA 483401

DISREGARD PRINTS BEARING EARLIER REVISION DATES

REVISION DATES (PRELIMINARY STAGE ONLY): 02-01-06 03-29-06 04-26-06 06-23-06 07-17-06 07-28-06 10-10-06 10-17-06 01-03-07

SHEET OF

23-MAR-2010 05:55

st1_04.dgn

DIST	COUNTY	LOCATION CODE	KILOMETER POST TOTAL PROJECT	SHEET NO.	TOTAL SHEETS
06	Ker	5722		95	178

REGISTERED CIVIL ENGINEER — DATE 03-30-07

REGISTERED PROFESSIONAL ENGINEER — Edgardo A. Isidro — No. 058507 — Exp. 12-31-10 — CIVIL — STATE OF CALIFORNIA

3-8-10
PLANS APPROVAL DATE

The State of California or its officers or agents shall not be responsible for the accuracy or completeness of electronic copies of this plan sheet.

Caltrans Metric

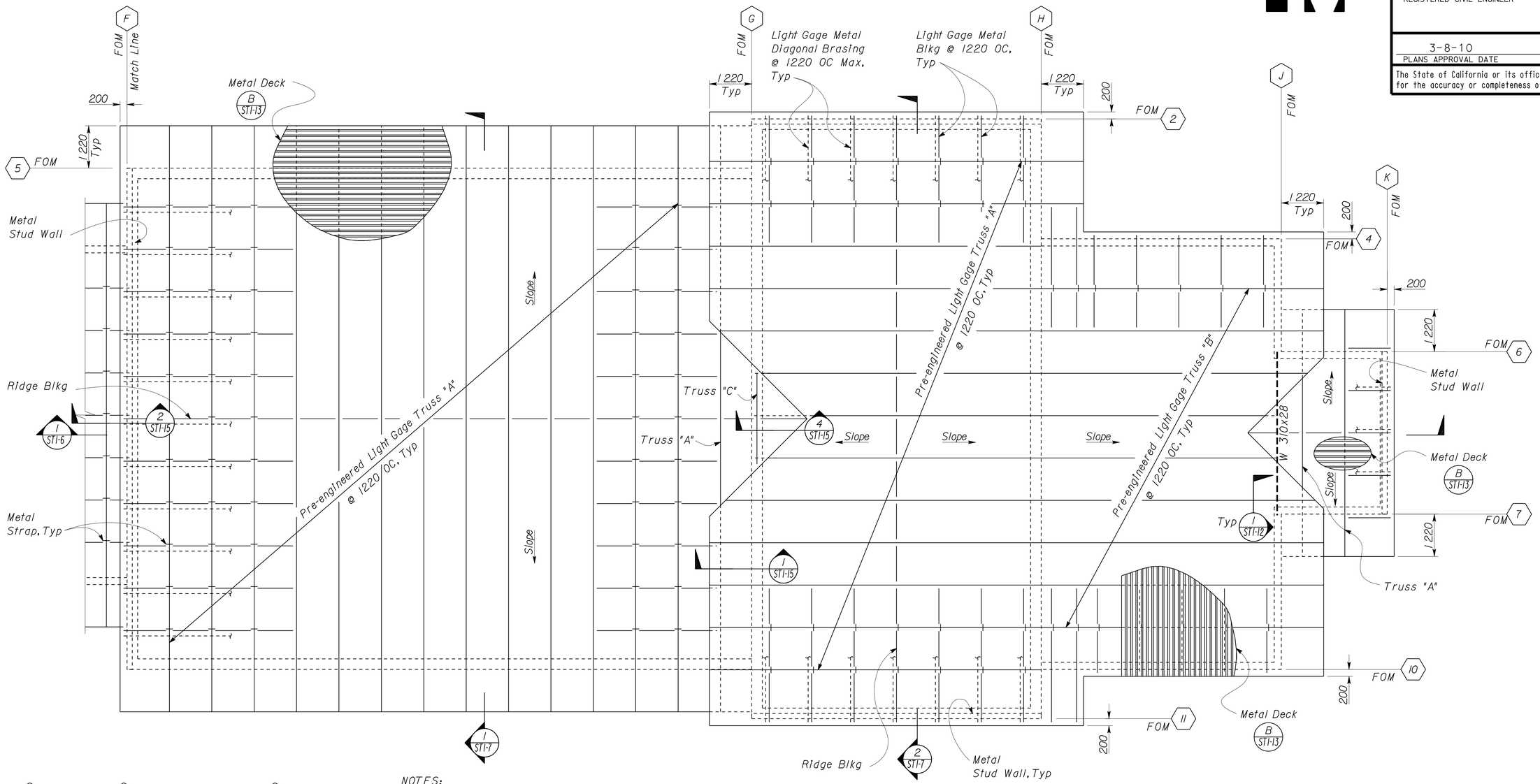

NOTES:

1. Light Gage Metal Stud Framing and Bracing Details and Notes per Standard Sheet ST-5. Use 600 S 162-54 for Walls and Bracing. Wall Stud Framing @ 400 OC.

2. Pre-Engineered Truss Type Profiles per Sheet (—/ST1-13).

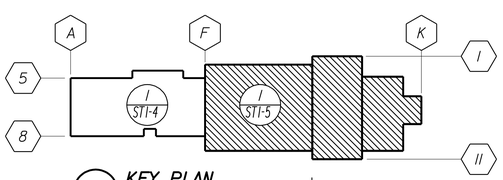

A KEY PLAN
Scale 1:500

1 PARTIAL ROOF PLAN
Scale 1:60

DESIGN	BY Edgardo Isidro	CHECKED Thomas Tong	
DETAILS	BY Aleksey Serin	CHECKED Edgardo Isidro	
QUANTITIES	BY	CHECKED	

STATE OF CALIFORNIA
DEPARTMENT OF TRANSPORTATION

DIVISION OF ENGINEERING SERVICES
ARCHITECTURAL AND STRUCTURAL DESIGN

BRIDGE NO. 50M5722
KM POST

CREW/EQUIPMENT BUILDING

TAFT MAINTENANCE STATION

ROOF PLAN 2

SHEET ST1-5

DOES SD metric Rev. 9/02

SCALE: ALL DIMENSIONS ARE IN MILLIMETERS UNLESS OTHERWISE NOTED.

ORIGINAL SCALE IN MILLIMETERS FOR REDUCED PLANS 0 10 20 30 40 50 60 70 80 90 100

CU 06257
EA 483401

DISREGARD PRINTS BEARING EARLIER REVISION DATES

REVISION DATES (PRELIMINARY STAGE ONLY) 02-07-06 03-20-06 04-26-06 07-20-06 07-24-06 10-18-06 10-17-06 10-30-06 01-03-07 02-06-07

SHEET OF

23-MAR-2010 05:55

st1_05.dgn

DIST	COUNTY	LOCATION CODE	KILOMETER POST TOTAL PROJECT	SHEET NO.	TOTAL SHEETS
06	Ker	5722		96	178

Caltrans Metric

REGISTERED CIVIL ENGINEER — DATE 03-30-07

REGISTERED PROFESSIONAL ENGINEER Edgardo A. Isidro No. 058507 Exp. 12-31-10 CIVIL STATE OF CALIFORNIA

3-8-10
PLANS APPROVAL DATE

The State of California or its officers or agents shall not be responsible for the accuracy or completeness of electronic copies of this plan sheet.

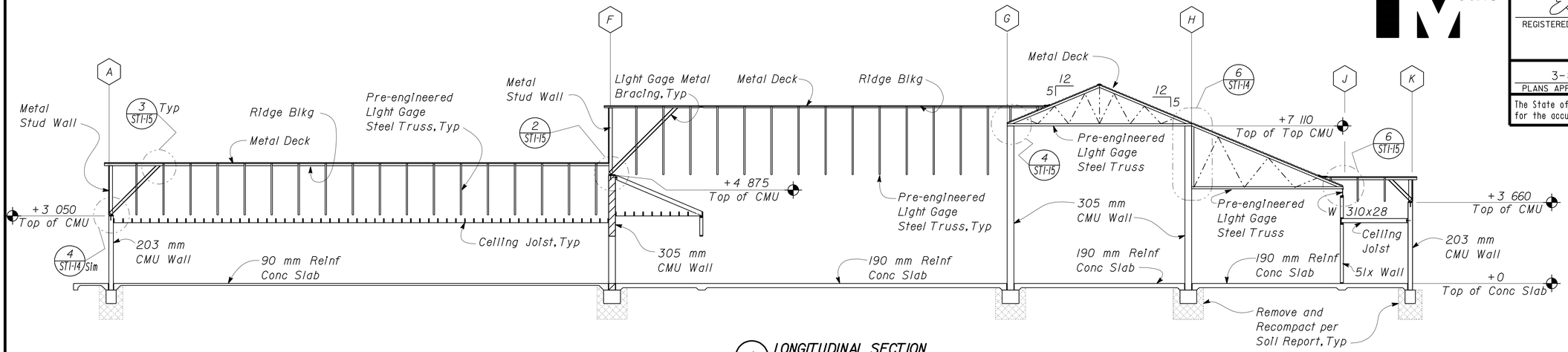

1 LONGITUDINAL SECTION
Scale 1:100

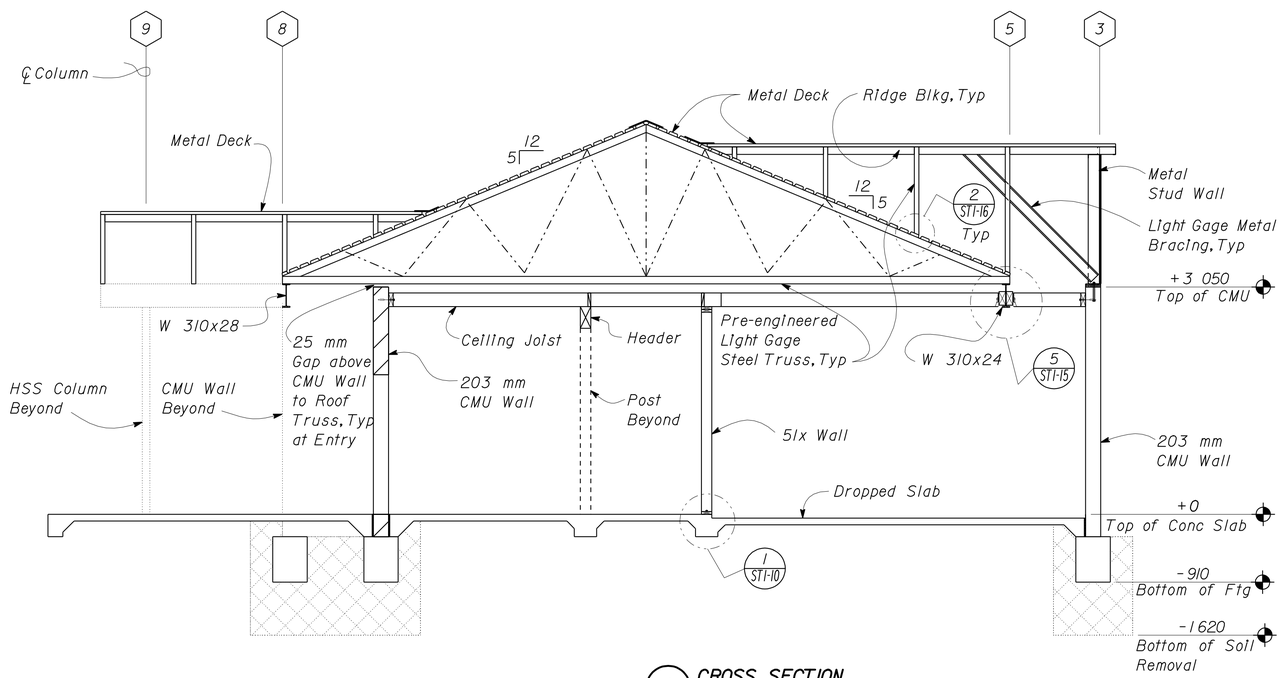

2 CROSS SECTION
Scale 1:40

DESIGN	BY Edgardo Isidro	CHECKED Thomas Tong	
DETAILS	BY Aleksey Serin	CHECKED Edgardo Isidro	
QUANTITIES	BY	CHECKED	

STATE OF CALIFORNIA
DEPARTMENT OF TRANSPORTATION

DIVISION OF ENGINEERING SERVICES
ARCHITECTURAL AND STRUCTURAL DESIGN

BRIDGE NO. 50M5722
KM POST

CREW/EQUIPMENT BUILDING

TAFT MAINTENANCE STATION

LONGITUDINAL & CROSS SECTIONS

SHEET **ST1-6**

DOES SD metric Rev. 9/02

SCALE: ALL DIMENSIONS ARE IN MILLIMETERS UNLESS OTHERWISE NOTED.

ORIGINAL SCALE IN MILLIMETERS FOR REDUCED PLANS 0 10 20 30 40 50 60 70 80 90 100

CU 06257
EA 483401

DISREGARD PRINTS BEARING EARLIER REVISION DATES → 02-08-06 03-28-06 04-27-06 07-24-06 10-19-06 10-17-06 01-03-07 01-19-07 02-08-07

REVISION DATES (PRELIMINARY STAGE ONLY) SHEET OF

23-MAR-2010 05:55

st1_06.dgn

DIST	COUNTY	LOCATION CODE	KILOMETER POST TOTAL PROJECT	SHEET NO.	TOTAL SHEETS
06	Ker	5722		97	178

Caltrans Metric

REGISTERED CIVIL ENGINEER — DATE 03-30-07

REGISTERED PROFESSIONAL ENGINEER — Edgardo A. Isidro — No. 058507 — Exp. 12-31-10 — CIVIL — STATE OF CALIFORNIA

3-8-10
PLANS APPROVAL DATE

The State of California or its officers or agents shall not be responsible for the accuracy or completeness of electronic copies of this plan sheet.

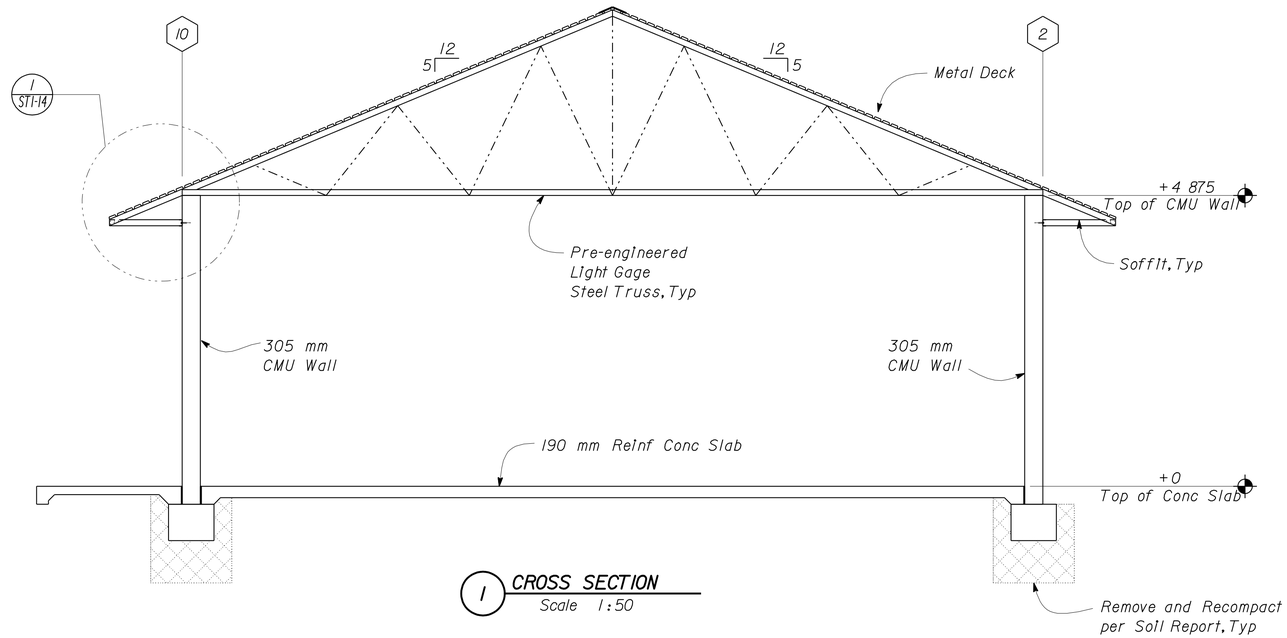

1 CROSS SECTION
Scale 1:50

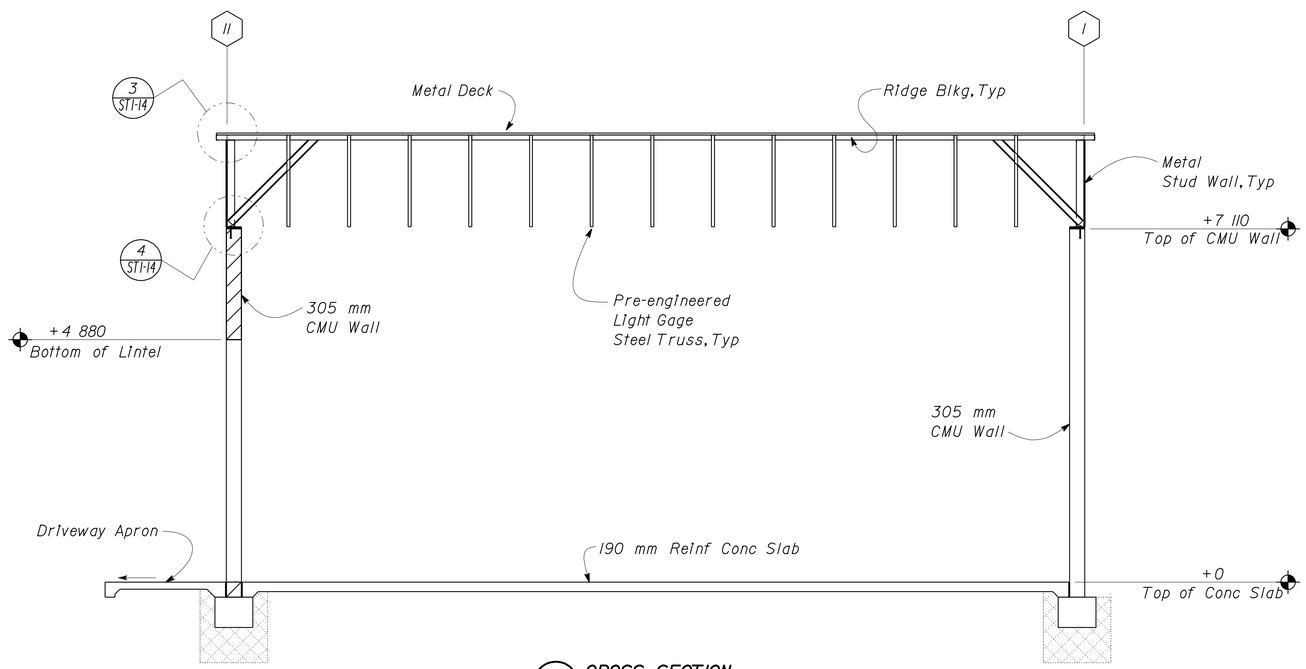

2 CROSS SECTION
Scale 1:60

DESIGN	BY Edgardo Isidro	CHECKED Thomas Tong	
DETAILS	BY Aleksey Serin	CHECKED Edgardo Isidro	
QUANTITIES	BY	CHECKED	

STATE OF CALIFORNIA
DEPARTMENT OF TRANSPORTATION

DIVISION OF ENGINEERING SERVICES
ARCHITECTURAL AND STRUCTURAL DESIGN

BRIDGE NO. 50M5722
KM POST

CREW/EQUIPMENT BUILDING

TAFT MAINTENANCE STATION

CROSS SECTIONS

SHEET ST1-7

DOES SD metric Rev. 9/02

SCALE: ALL DIMENSIONS ARE IN MILLIMETERS UNLESS OTHERWISE NOTED.

ORIGINAL SCALE IN MILLIMETERS FOR REDUCED PLANS 0 10 20 30 40 50 60 70 80 90 100

CU 06257
EA 483401

DISREGARD PRINTS BEARING EARLIER REVISION DATES → 03-21-06 07-20-06 10-19-06 02-08-07

REVISION DATES (PRELIMINARY STAGE ONLY) SHEET OF

23-MAR-2010 08:55

st1_07.dgn

DIST	COUNTY	LOCATION CODE	KILOMETER POST TOTAL PROJECT	SHEET NO.	TOTAL SHEETS
06	Ker	5722		98	178

Caltrans Metric

REGISTERED CIVIL ENGINEER — DATE 03-30-07

REGISTERED PROFESSIONAL ENGINEER Edgardo A. Isidro No. 058507 Exp. 12-31-10 CIVIL STATE OF CALIFORNIA

3-8-10
PLANS APPROVAL DATE

The State of California or its officers or agents shall not be responsible for the accuracy or completeness of electronic copies of this plan sheet.

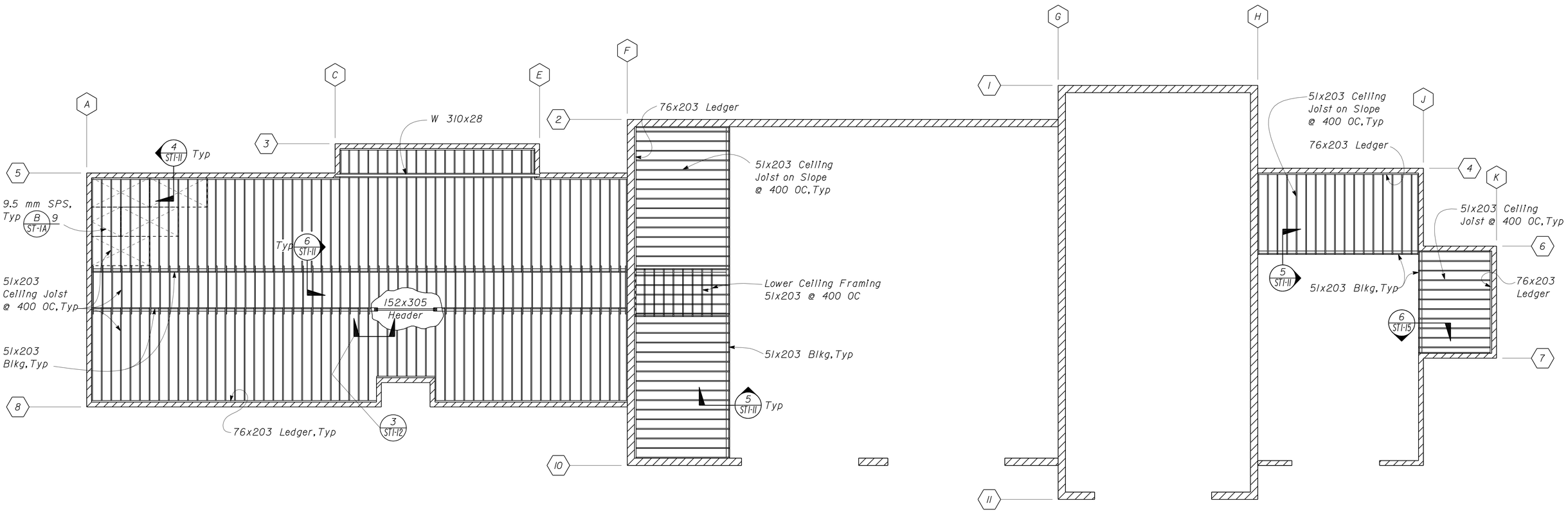

1 CEILING FRAMING PLAN
Scale 1:100

DESIGN	BY Edgardo Isidro	CHECKED Thomas Tong	
DETAILS	BY Aleksey Serin	CHECKED Edgardo Isidro	
QUANTITIES	BY	CHECKED	

STATE OF CALIFORNIA
DEPARTMENT OF TRANSPORTATION

DIVISION OF ENGINEERING SERVICES
ARCHITECTURAL AND STRUCTURAL DESIGN

BRIDGE NO. 50M5722
KM POST

CREW/EQUIPMENT BUILDING

TAFT MAINTENANCE STATION

CEILING FRAME PLAN

SHEET ST1-8

DOES SD metric Rev. 9/02

SCALE: ALL DIMENSIONS ARE IN MILLIMETERS UNLESS OTHERWISE NOTED.

ORIGINAL SCALE IN MILLIMETERS FOR REDUCED PLANS 0 10 20 30 40 50 60 70 80 90 100

CU 06257
EA 483401

DISREGARD PRINTS BEARING EARLIER REVISION DATES → 10-26-06 01-04-07 01-19-07 02-08-07

REVISION DATES (PRELIMINARY STAGE ONLY) SHEET OF

23-MAR-2010 05:55

st1_08.dgn

DIST	COUNTY	LOCATION CODE	KILOMETER POST TOTAL PROJECT	SHEET NO.	TOTAL SHEETS
06	Ker	5722		99	167

Caltrans Metric

REGISTERED CIVIL ENGINEER — DATE 03-30-07

REGISTERED PROFESSIONAL ENGINEER Edgardo A. Isidro No. 058507 Exp. 12-31-10 CIVIL STATE OF CALIFORNIA

3-8-10
PLANS APPROVAL DATE

The State of California or its officers or agents shall not be responsible for the accuracy or completeness of electronic copies of this plan sheet.

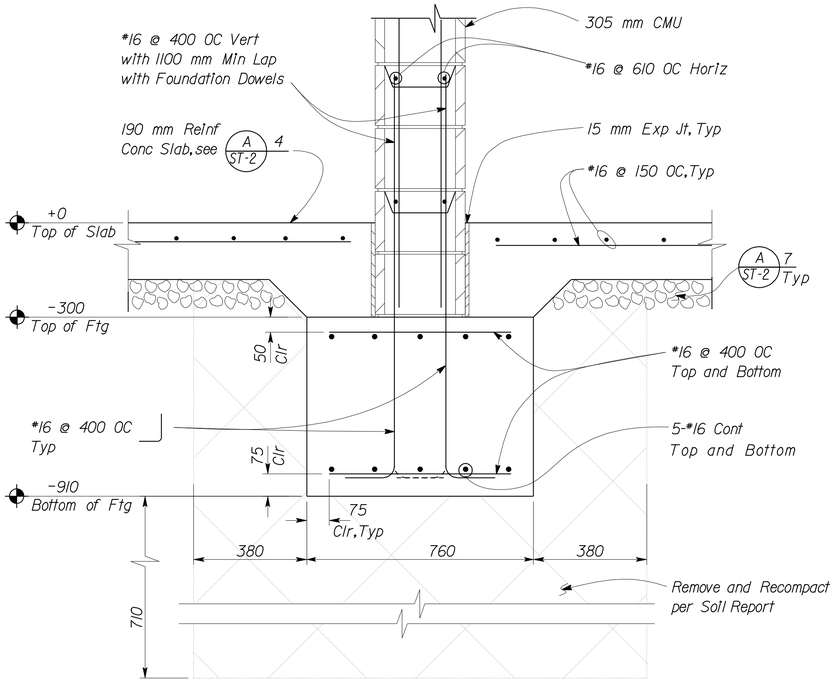

1 DETAIL
Scale 1:10

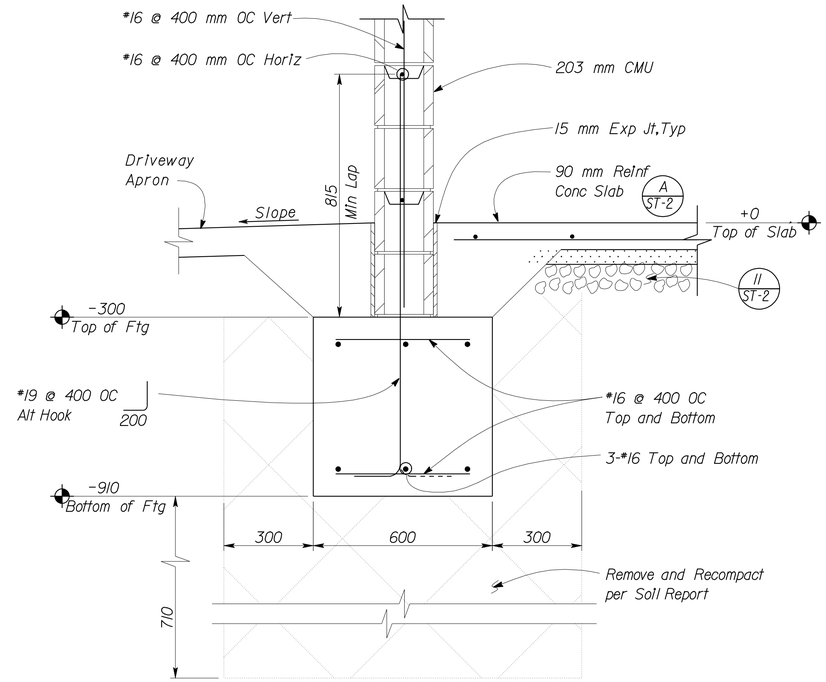

3 DETAIL
Scale 1:10

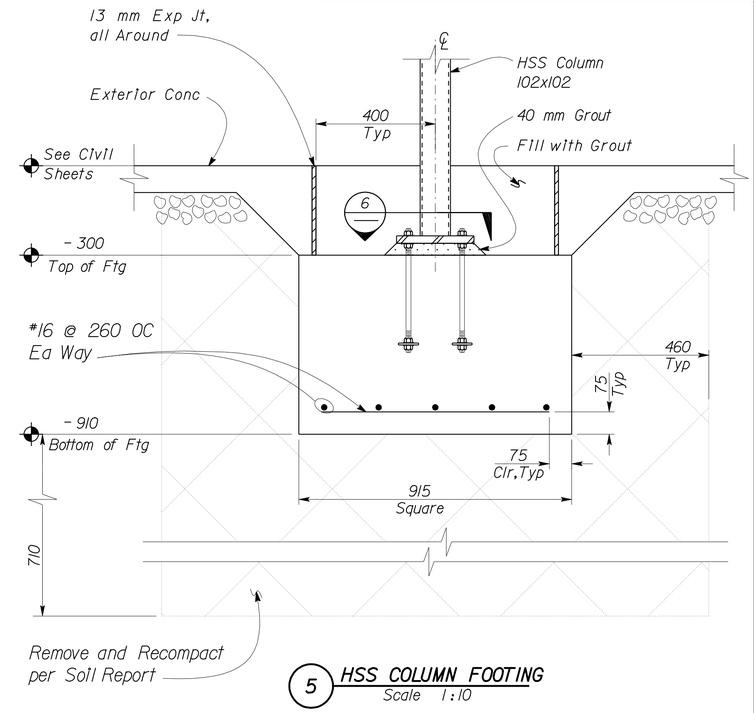

5 HSS COLUMN FOOTING
Scale 1:10

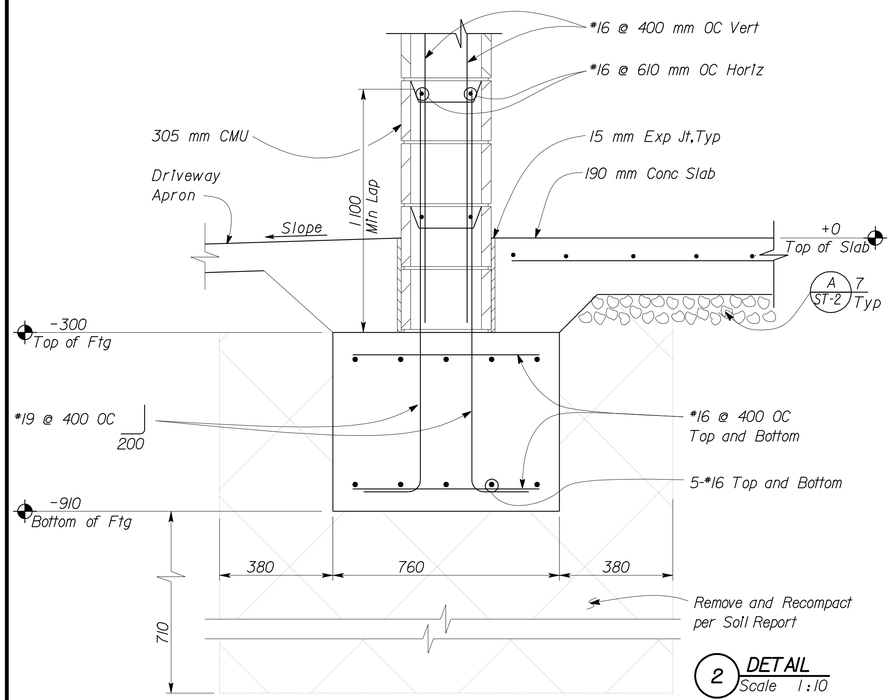

2 DETAIL
Scale 1:10

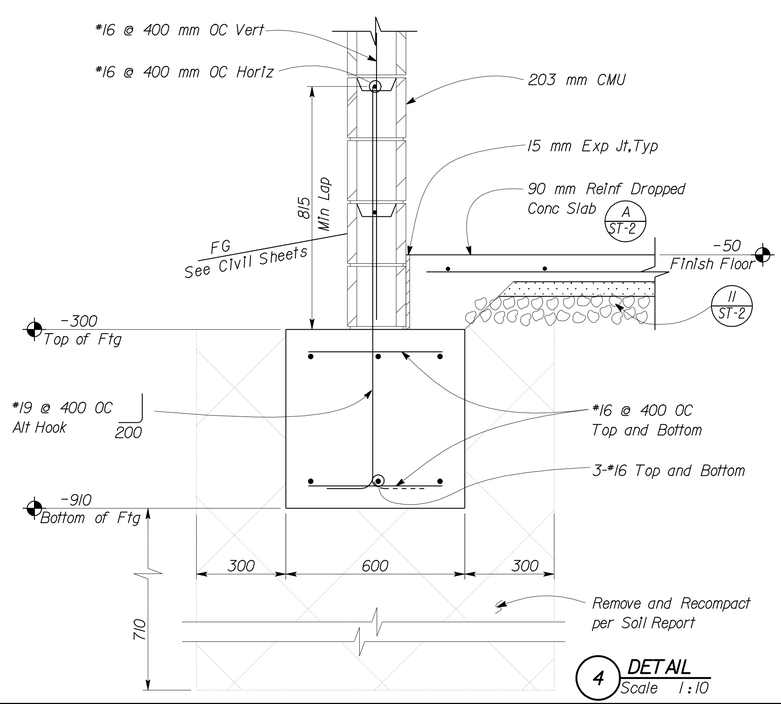

4 DETAIL
Scale 1:10

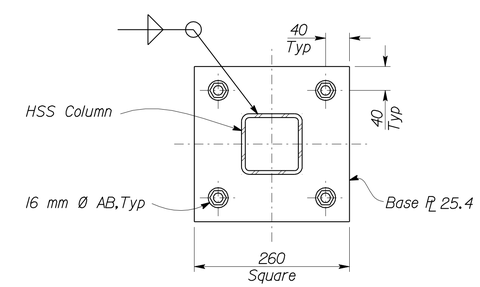

6 BASE PLATE
Scale 1:5

DESIGN	BY Edgardo Isidro	CHECKED Thomas Tong	
DETAILS	BY Aleksey Serin	CHECKED Edgardo Isidro	
QUANTITIES	BY	CHECKED	

STATE OF CALIFORNIA
DEPARTMENT OF TRANSPORTATION

DIVISION OF ENGINEERING SERVICES
ARCHITECTURAL AND STRUCTURAL DESIGN

BRIDGE NO. 50M5722
KM POST

CREW/EQUIPMENT BUILDING

TAFT MAINTENANCE STATION

FOUNDATION DETAILS

SHEET ST1-9

DOES SD metric Rev. 9/02

SCALE: ALL DIMENSIONS ARE IN MILLIMETERS UNLESS OTHERWISE NOTED.

ORIGINAL SCALE IN MILLIMETERS FOR REDUCED PLANS 0 10 20 30 40 50 60 70 80 90 100

CU 06257
EA 483401

DISREGARD PRINTS BEARING EARLIER REVISION DATES → 02-21-06 06-27-06 10-10-06 10-11-06 10-17-06 02-13-07

REVISION DATES (PRELIMINARY STAGE ONLY) SHEET OF

23-MAR-2010 05:36

st1_09.dgn

DIST	COUNTY	LOCATION CODE	KILOMETER POST TOTAL PROJECT	SHEET NO.	TOTAL SHEETS
06	Ker	5722		100	178

REGISTERED CIVIL ENGINEER — DATE 03-30-07

REGISTERED PROFESSIONAL ENGINEER — Edgardo A. Isidro — No. 058507 — Exp. 12-31-10 — CIVIL — STATE OF CALIFORNIA

3-8-10
PLANS APPROVAL DATE

The State of California or its officers or agents shall not be responsible for the accuracy or completeness of electronic copies of this plan sheet.

Caltrans Metric

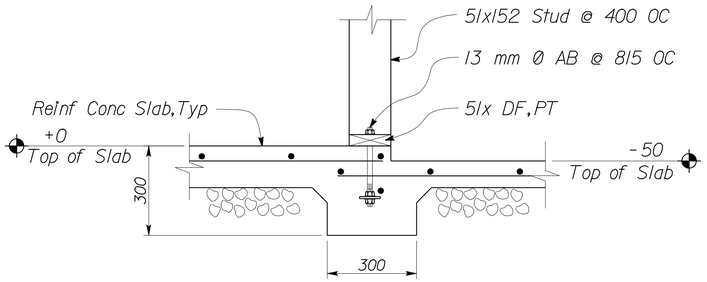

NOTE:
For Information not Shown see 5/ST-2

1 SECTION
Scale 1:10

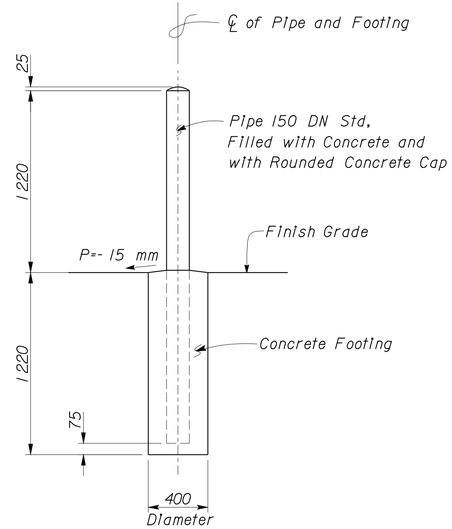

3 PIPE GUARD POST DETAIL
Scale 1:20

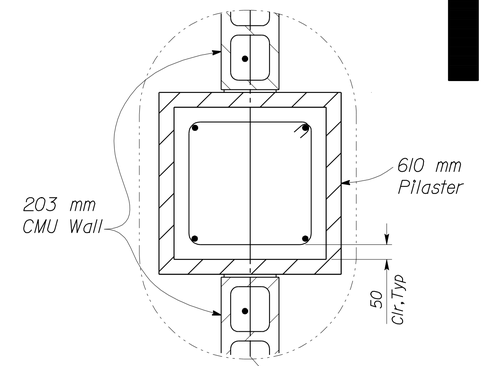

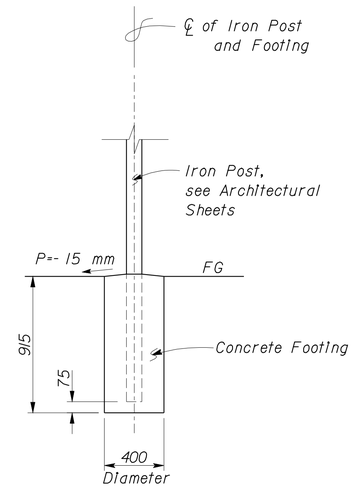

5 IRON POSTS DETAIL
Scale 1:20

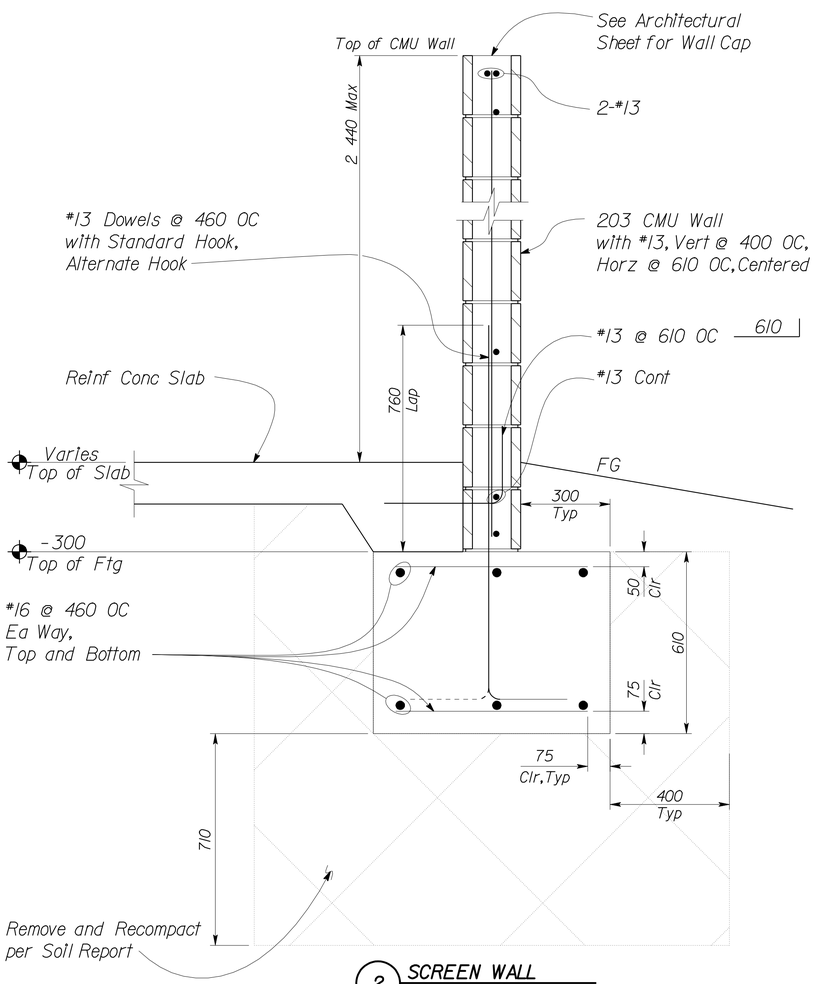

2 SCREEN WALL
Scale 1:10

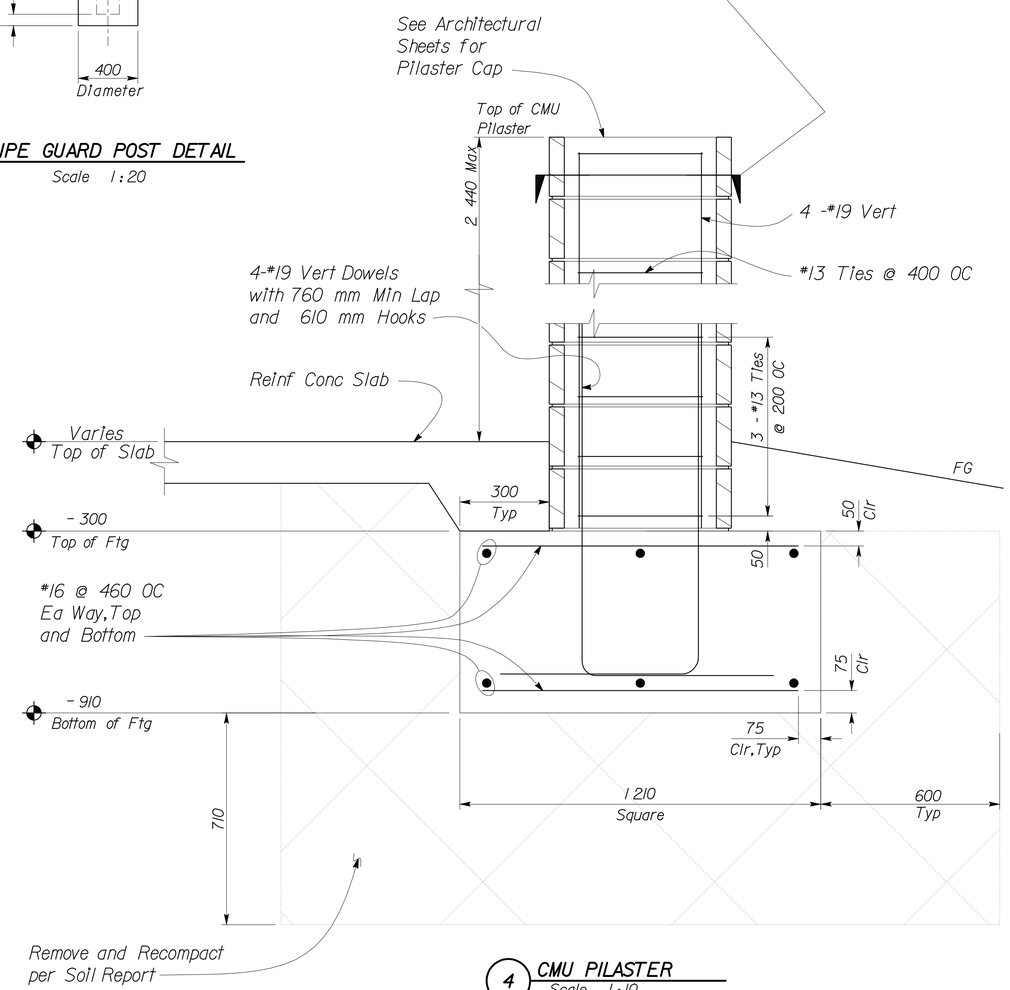

4 CMU PILASTER
Scale 1:10

DESIGN	BY Edgardo Isidro	CHECKED Thomas Tong	
DETAILS	BY Aleksey Serin	CHECKED Edgardo Isidro	
QUANTITIES	BY	CHECKED	

STATE OF CALIFORNIA
DEPARTMENT OF TRANSPORTATION

DIVISION OF ENGINEERING SERVICES
ARCHITECTURAL AND STRUCTURAL DESIGN

BRIDGE NO. 50M5722
KM POST

CREW/EQUIPMENT BUILDING

TAFT MAINTENANCE STATION

FOUNDATION DETAILS

SHEET ST1-10

DOES SD metric Rev. 9/02

SCALE: ALL DIMENSIONS ARE IN MILLIMETERS UNLESS OTHERWISE NOTED.

ORIGINAL SCALE IN MILLIMETERS FOR REDUCED PLANS 0 10 20 30 40 50 60 70 80 90 100

CU 06257
EA 483401

DISREGARD PRINTS BEARING EARLIER REVISION DATES

REVISION DATES (PRELIMINARY STAGE ONLY) 06-28-06 07-24-06 10-11-06 10-19-06 01-04-07 01-19-07 02-07-07 02-27-07

SHEET OF

23-MAR-2010 05:56

st1_10.dgn

DIST	COUNTY	LOCATION CODE	KILOMETER POST TOTAL PROJECT	SHEET NO.	TOTAL SHEETS
06	Ker	5722		101	178

REGISTERED CIVIL ENGINEER — DATE 03-30-07

REGISTERED PROFESSIONAL ENGINEER — Edgardo A. Isidro — No. 058507 — Exp. 12-31-10 — CIVIL — STATE OF CALIFORNIA

3-8-10
PLANS APPROVAL DATE

The State of California or its officers or agents shall not be responsible for the accuracy or completeness of electronic copies of this plan sheet.

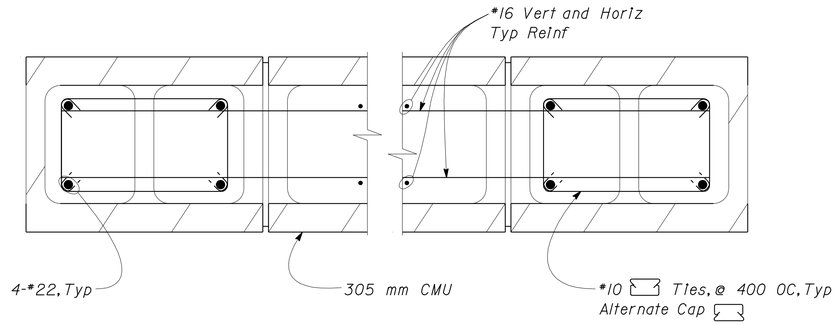

NOTE:
For Reinforcement not Shown see 1/ST-4

1 COLUMN REINFORCEMENT
Scale 1:5

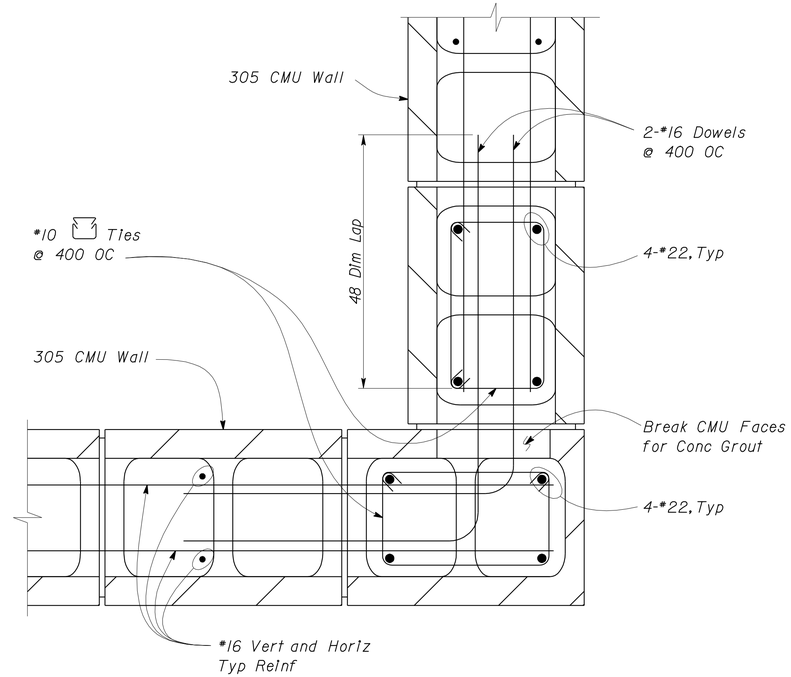

NOTE:
For Reinforcement not Shown see 1/ST-4 3/ST-4 4/ST-4 7/ST-4

3 CORNER CONNECTION DETAIL
Scale 1:5

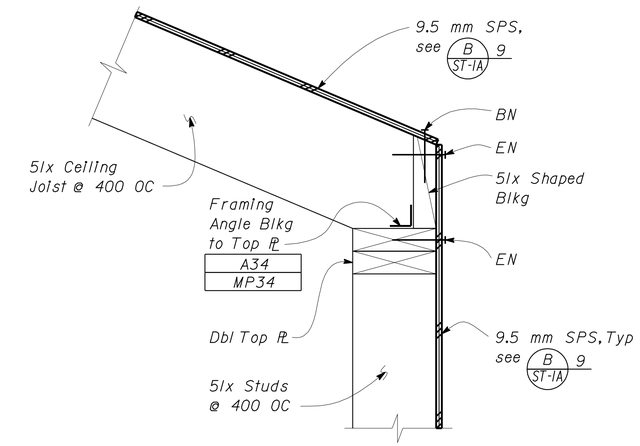

5 CEILING JOIST TO STUD WALL CONNECTION
Scale 1:5

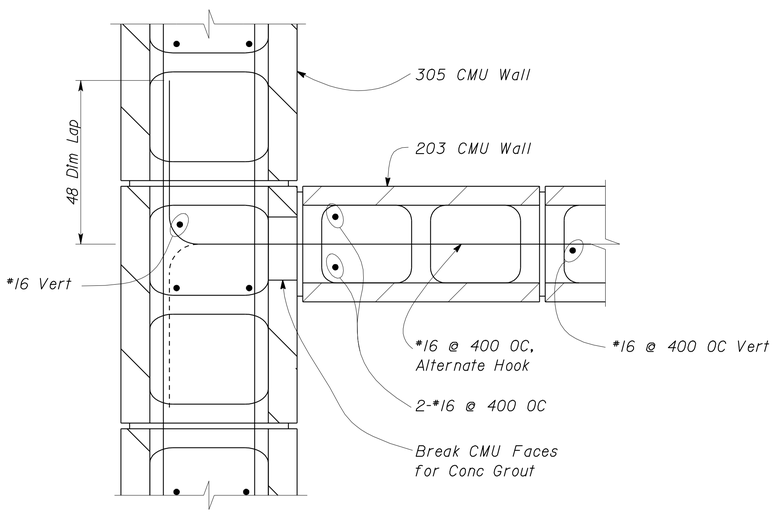

NOTE:
For Reinforcement not Shown see 1/ST-3 3/ST-3 4/ST-4

2 WALL CONNECTION DETAIL
Scale 1:5

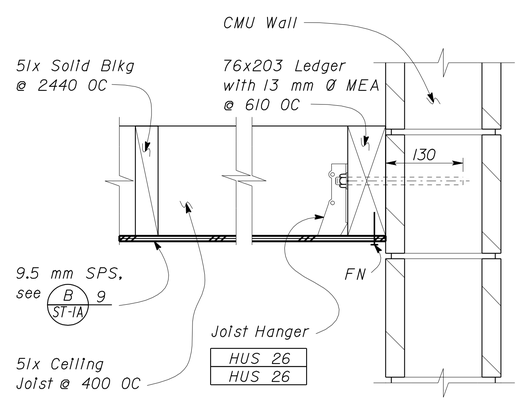

4 CEILING JOIST TO CMU WALL CONNECTION
Scale 1:5

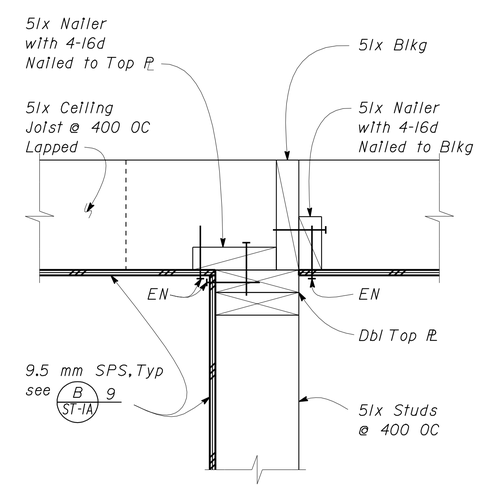

6 CEILING JOIST TO STUD WALL CONNECTION
Scale 1:5

DESIGN	BY Edgardo Isidro	CHECKED Thomas Tong	
DETAILS	BY Aleksey Serin	CHECKED Edgardo Isidro	
QUANTITIES	BY	CHECKED	

STATE OF CALIFORNIA
DEPARTMENT OF TRANSPORTATION

DIVISION OF ENGINEERING SERVICES
ARCHITECTURAL AND STRUCTURAL DESIGN

BRIDGE NO. 50M5722
KM POST

CREW/EQUIPMENT BUILDING

TAFT MAINTENANCE STATION

WALL DETAILS/CEILING FRAME DETAILS

SHEET **ST1-11**

DOES SD metric Rev. 9/02

SCALE: ALL DIMENSIONS ARE IN MILLIMETERS UNLESS OTHERWISE NOTED.

ORIGINAL SCALE IN MILLIMETERS FOR REDUCED PLANS 0 10 20 30 40 50 60 70 80 90 100

CU 06257
EA 483401

DISREGARD PRINTS BEARING EARLIER REVISION DATES

REVISION DATES (PRELIMINARY STAGE ONLY) 05-01-06 07-25-06 10-18-06 10-26-06 01-04-07 01-19-07 02-08-07 — SHEET — OF

23-MAR-2010 05:56

st1_11.dgn

DIST	COUNTY	LOCATION CODE	KILOMETER POST TOTAL PROJECT	SHEET NO.	TOTAL SHEETS
06	Ker	5722		102	178

Caltrans Metric

REGISTERED CIVIL ENGINEER — DATE 03-30-07

REGISTERED PROFESSIONAL ENGINEER — Edgardo A. Isidro — No. 058507 — Exp. 12-31-10 — CIVIL — STATE OF CALIFORNIA

3-8-10
PLANS APPROVAL DATE

The State of California or its officers or agents shall not be responsible for the accuracy or completeness of electronic copies of this plan sheet.

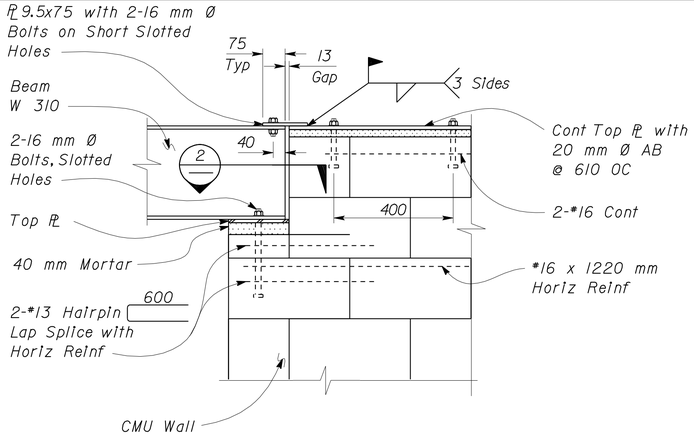

1 WIDE FLANGE BEAM TO WALL CONNECTION
Scale 1:10

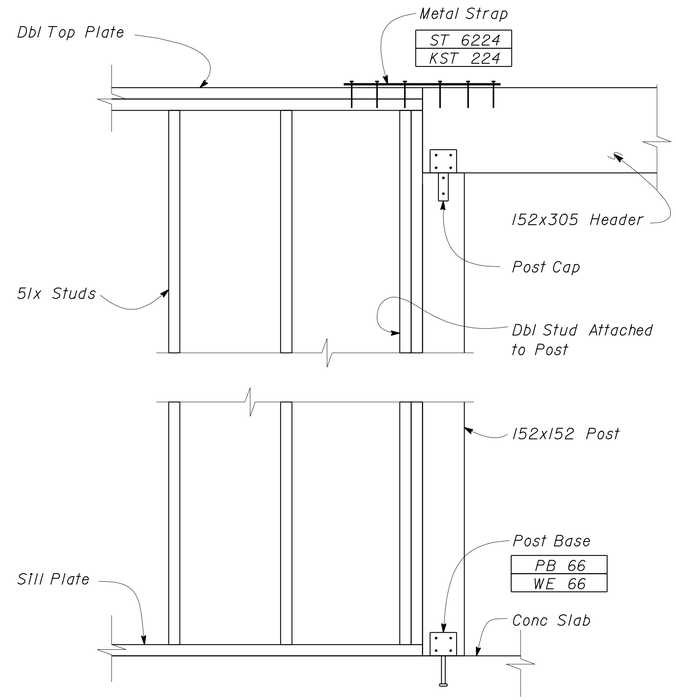

3 BEAM TO POST CONNECTION
Scale 1:10

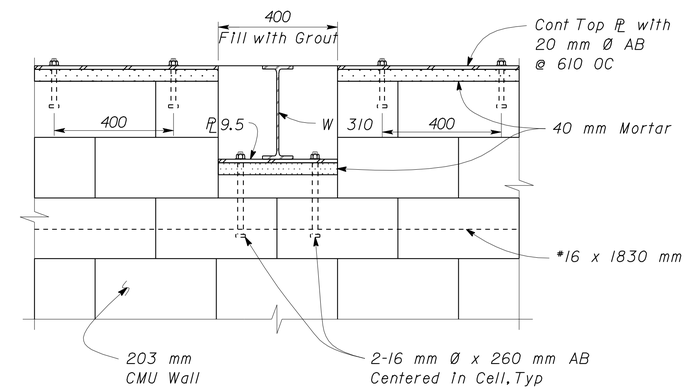

5 SECTION
Scale 1:10

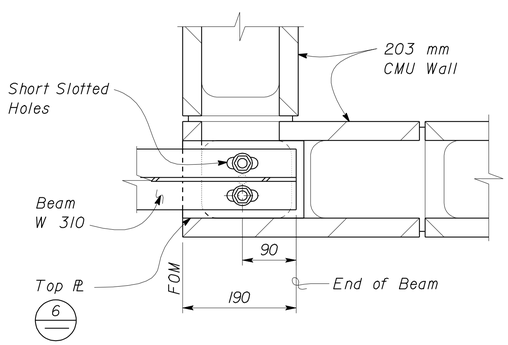

2 SECTION
Scale 1:5

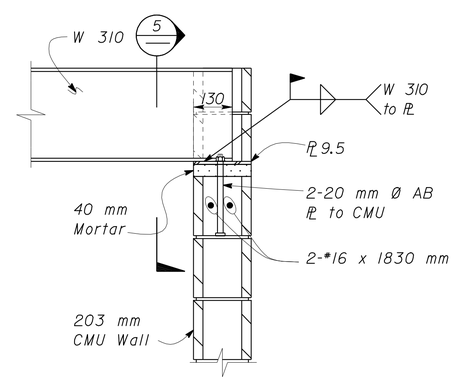

4 W 310 BEAM TO CMU CONNECTION
Scale 1:10

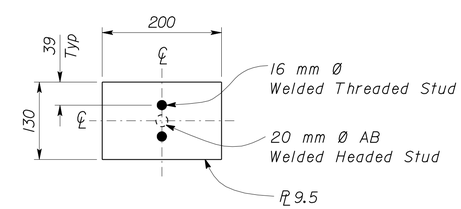

6 TOP PLATE
Scale 1:5

DESIGN	BY Edgardo Isidro	CHECKED Thomas Tong	
DETAILS	BY Aleksey Serin	CHECKED Edgardo Isidro	
QUANTITIES	BY	CHECKED	

STATE OF CALIFORNIA
DEPARTMENT OF TRANSPORTATION

DIVISION OF ENGINEERING SERVICES
ARCHITECTURAL AND STRUCTURAL DESIGN

BRIDGE NO. 50M5722
KM POST

CREW/EQUIPMENT BUILDING

TAFT MAINTENANCE STATION

WALL DETAILS

SHEET **ST1-12**

DOES SD metric Rev. 9/02

SCALE: ALL DIMENSIONS ARE IN MILLIMETERS UNLESS OTHERWISE NOTED.

ORIGINAL SCALE IN MILLIMETERS FOR REDUCED PLANS 0 10 20 30 40 50 60 70 80 90 100

CU 06257
EA 483401

DISREGARD PRINTS BEARING EARLIER REVISION DATES → 03-22-06 07-25-06 10-18-06 01-05-07 01-22-07 02-13-07

REVISION DATES (PRELIMINARY STAGE ONLY) SHEET OF

23-MAR-2010 05:56

st1_12.dgn

DIST	COUNTY	LOCATION CODE	KILOMETER POST TOTAL PROJECT	SHEET NO.	TOTAL SHEETS
06	Ker	5722		103	178

Caltrans Metric

REGISTERED CIVIL ENGINEER — DATE 03-30-07

REGISTERED PROFESSIONAL ENGINEER — Edgardo A. Isidro — No. 058507 — Exp. 12-31-10 — CIVIL — STATE OF CALIFORNIA

3-8-10
PLANS APPROVAL DATE

The State of California or its officers or agents shall not be responsible for the accuracy or completeness of electronic copies of this plan sheet.

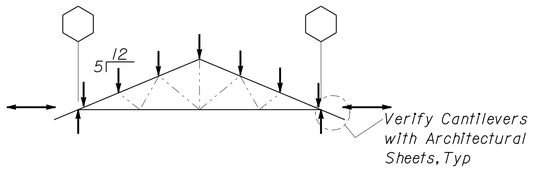

TRUSS "A"

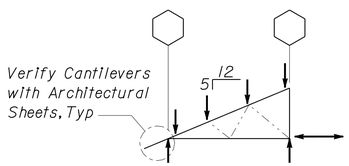

TRUSS "B"

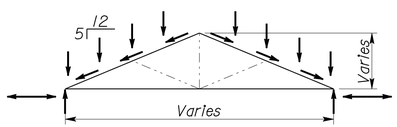

OVERBUILD TRUSS "C"

1 TRUSS PROFILES
No Scale

STEEL DECK MINIMUM SECTION PROPERTIES

Deck Type	Depth & Gage	Moment of Inertia	Positive Section Modulus	Negative Section Modulus	Minimum Yield Strength
Steel Decking	38 mm x 18 Ga	4.12×10^5 mm^4/m	1.7×10^4 mm^3/m	1.8×10^4 mm^3/m	262 MPa

NOTE:
Minimum 3 Span Condition

WELDING SCHEDULE and STEEL DECK PROFILE

Steel Deck Profile	16 mm Diameter Puddle Weld		Stitch Weld	Diaphragm Shear Capacity
	Perpendicular Supports and Panel Ends	Parallel Supports	Side Laps	
914	7-16 mm Ø-Puddle Welds Per Support	16 mm Ø Puddle Welds@ 305 OC	Button Punch @ 305 OC	14.7 kN/m

B STEEL DECKING NOTES

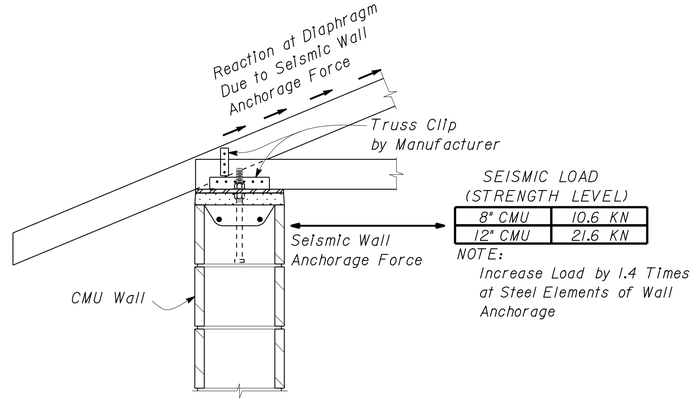

SEISMIC LOAD (STRENGTH LEVEL)

8" CMU	10.6 KN
12" CMU	21.6 KN

NOTE:
Increase Load by 1.4 Times at Steel Elements of Wall Anchorage

2 TYPICAL WALL ANCHORAGE FORCE ON TRUSSES
No Scale

A PRE-ENGINEERED LIGHT GAGE STEEL TRUSS NOTES:

1. Design Loads:
   a.) Top Chord 670 Pa dead load
   960 Pa live load (Reducible)
   b.) Bottom Chord 287 Pa dead load
   479 Pa live load (non-concurrent w/top chord live load)
   c.) Truss designer to calculate point loads from soffit based on a dead load = 192 Pa
2. Wind loads = 129 Pa
   Wind Exposure C
   Net Wind uplift = 479 Pa
   Seismic Design Criteria: D
3. Camber
   Trusses shall be manufactured with camber equal to the 1.5 x dead load deflection.
4. Truss members:
   a.) All trusses shall be prefabricated light gage steel trusses.
   b.) All truss member sections shall have a current ICC Evaluation Report.
   c.) All top chords shall have 1.438 mm minimum thickness.
   d.) Truss member minimum yield strength shall be 379,200 kPa (55 ksi).
5. Deflection Limits
   Span/360 Maximum for live load
   Span/240 Maximum for total load
6. Truss Design
   a.) Trusses to be design per 2007 CBC and AISI "Specification for the Design of Cold Formed Steel Structural Members," latest edition.
   b.) All eccentricities shall be considered in joint and connection design.
   c.) All truss-to-truss connections (jack-to-hip, hip-to-girder, girder-to-girder, etc.) shall be designed and detailed by the truss manufacturer.
   d.) All temporary and permanent bracing required for the stability of the trusses is to be designed and detailed by the truss manufacturer.
   e.) Trusses shall be designed for dead, live, wind and seismic loads in combinations as required by CBC Section 1605.
   f.) All trusses bearing on masonry walls shall be designed for seismic wall anchorage forces as defined per 2/ST1-13
7. Truss web configurations and truss member sizes are diagrammatic only. Actual configurations and sizes are to be determined by the truss manufacturer.
8. Roof Pitch 5 12 UON.

B TRUSS PROFILE NOTES:

1. ↑ Indicates truss bearing locations.
2. ↓ Indicates point loads on truss.
3. ⟷ Seismic Load

DESIGN	BY Edgardo Isidro	CHECKED Thomas Tong	
DETAILS	BY Aleksey Serin	CHECKED Edgardo Isidro	
QUANTITIES	BY	CHECKED	

STATE OF CALIFORNIA
DEPARTMENT OF TRANSPORTATION

DIVISION OF ENGINEERING SERVICES
ARCHITECTURAL AND STRUCTURAL DESIGN

BRIDGE NO. 50M5722
KM POST

TAFT MAINTENANCE STATION
CREW/EQUIPMENT BUILDING
ROOF FRAMING DETAILS

SHEET ST1-13

DOES SD metric Rev. 9/02

SCALE: ALL DIMENSIONS ARE IN MILLIMETERS UNLESS OTHERWISE NOTED.

ORIGINAL SCALE IN MILLIMETERS FOR REDUCED PLANS 0 10 20 30 40 50 60 70 80 90 100

CU 06257
EA 483401

DISREGARD PRINTS BEARING EARLIER REVISION DATES → 10-05-06 10-18-06 01-05-07 01-22-07 02-13-07

REVISION DATES (PRELIMINARY STAGE ONLY) SHEET OF

st1_13.dgn

23-MAR-2010 05:56

DIST	COUNTY	LOCATION CODE	KILOMETER POST TOTAL PROJECT	SHEET NO.	TOTAL SHEETS
06	Ker	5722		104	178

Caltrans Metric

REGISTERED CIVIL ENGINEER — DATE 03-30-07

REGISTERED PROFESSIONAL ENGINEER Edgardo A. Isidro No. 058507 Exp. 12-31-10 CIVIL STATE OF CALIFORNIA

3-8-10
PLANS APPROVAL DATE

The State of California or its officers or agents shall not be responsible for the accuracy or completeness of electronic copies of this plan sheet.

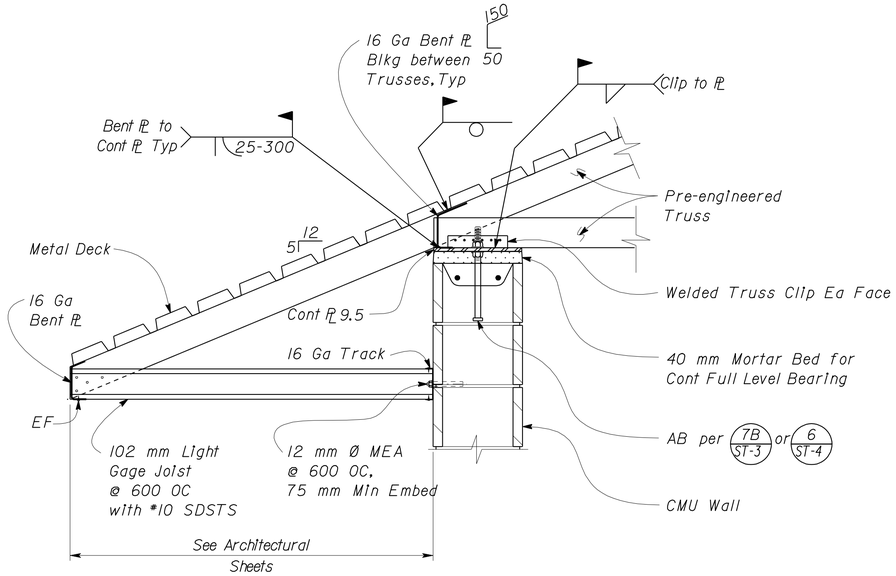

1 TYPICAL TRUSS TO CMU WALL CONNECTION
Scale 1:10

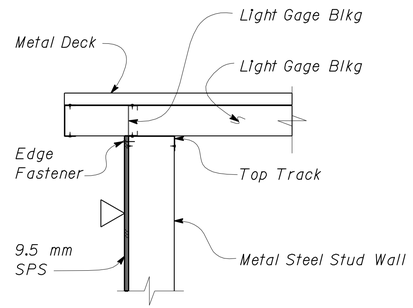

3 BLOCKING TO STUD WALL
Scale 1:10

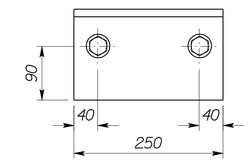

5 ANGLE
Scale 1:5

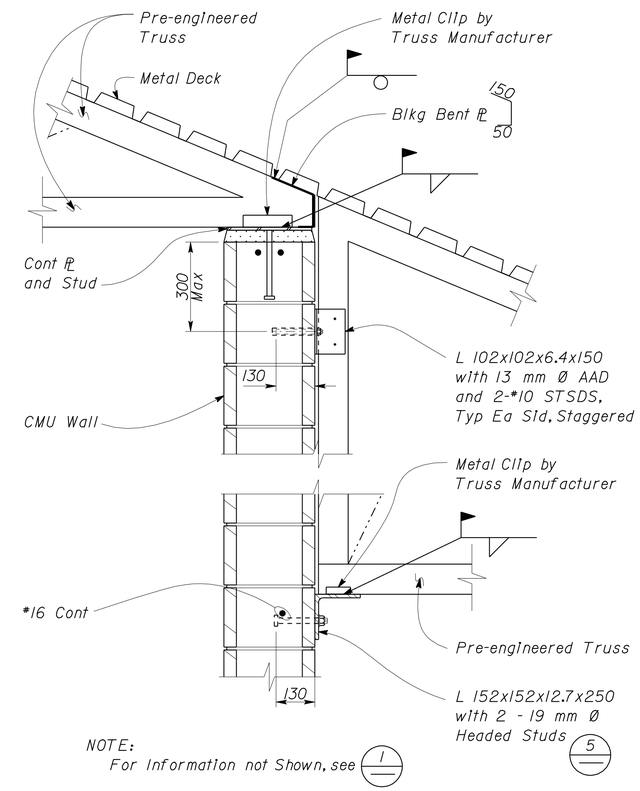

6 TRUSS TO WALL CONNECTION
Scale 1:10

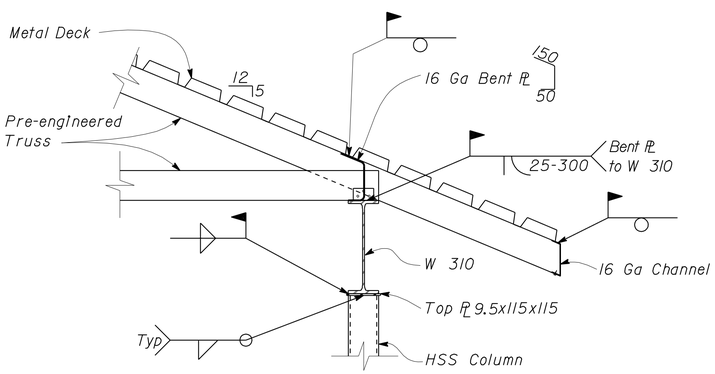

2 TRUSS TO BEAM CONNECTION
Scale 1:10

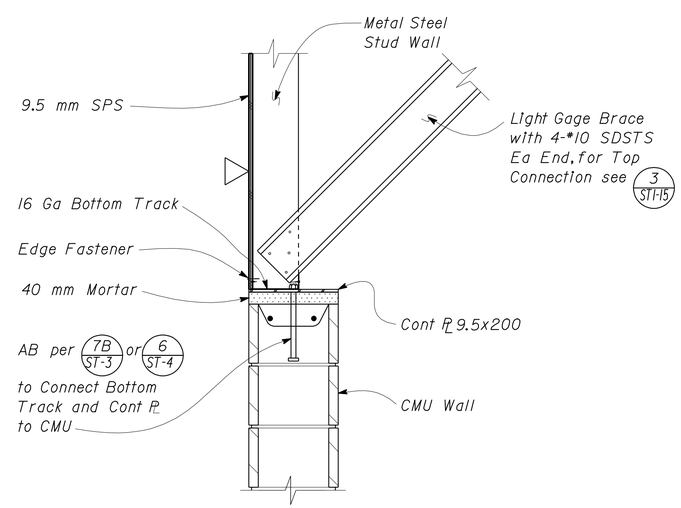

4 STUD WALL TO CMU WALL
Scale 1:10

DESIGN	BY Edgardo Isidro	CHECKED Thomas Tong	
DETAILS	BY Aleksey Serin	CHECKED Edgardo Isidro	
QUANTITIES	BY	CHECKED	

STATE OF CALIFORNIA DEPARTMENT OF TRANSPORTATION

DIVISION OF ENGINEERING SERVICES ARCHITECTURAL AND STRUCTURAL DESIGN

BRIDGE NO. 50M5722
KM POST

CREW/EQUIPMENT BUILDING

TAFT MAINTENANCE STATION

ROOF FRAMING DETAILS

SHEET **ST1-14**

DOES SD metric Rev. 9/02

SCALE: ALL DIMENSIONS ARE IN MILLIMETERS UNLESS OTHERWISE NOTED.

ORIGINAL SCALE IN MILLIMETERS FOR REDUCED PLANS 0 10 20 30 40 50 60 70 80 90 100

CU 06257
EA 483401

DISREGARD PRINTS BEARING EARLIER REVISION DATES → 05-01-06 07-03-06 07-25-06 11-20-06 01-22-07 02-13-07

REVISION DATES (PRELIMINARY STAGE ONLY) SHEET OF

23-MAR-2010 05:56

st1_14.dgn

DIST	COUNTY	LOCATION CODE	KILOMETER POST TOTAL PROJECT	SHEET NO.	TOTAL SHEETS
06	Ker	5722		105	178

Caltrans Metric

REGISTERED CIVIL ENGINEER — DATE 03-30-07

REGISTERED PROFESSIONAL ENGINEER — Edgardo A. Isidro — No. 058507 — Exp. 12-31-10 — CIVIL — STATE OF CALIFORNIA

3-8-10
PLANS APPROVAL DATE

The State of California or its officers or agents shall not be responsible for the accuracy or completeness of electronic copies of this plan sheet.

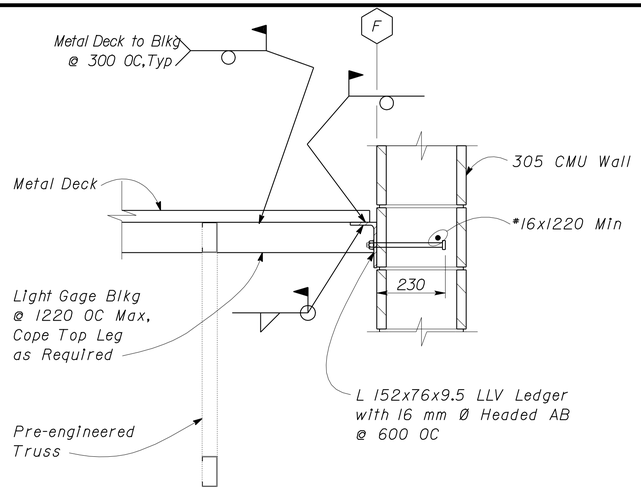

1 SECTION
Scale 1:10

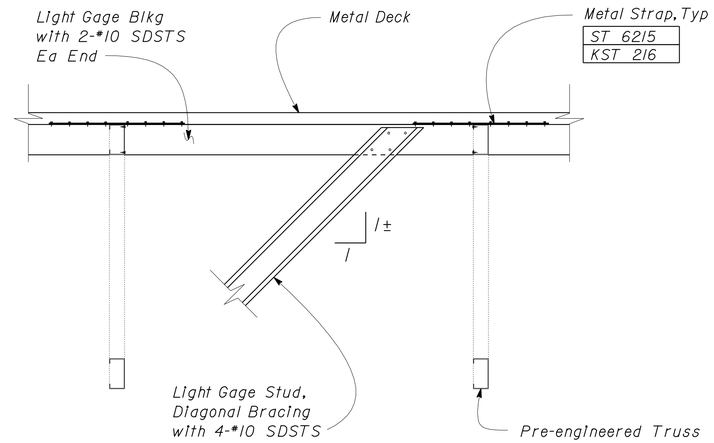

3 SECTION
Scale 1:10

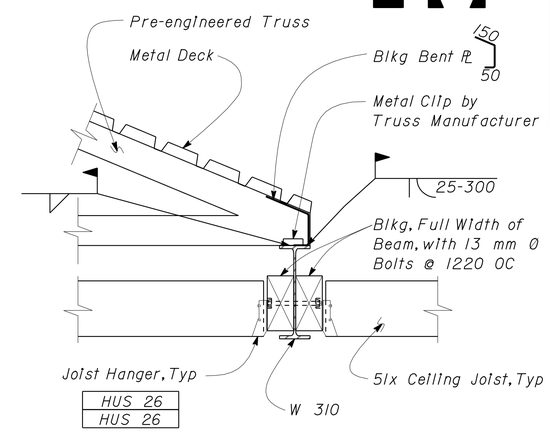

NOTE:
For Information not Shown, see 1/ST1-14

5 SECTION
Scale 1:10

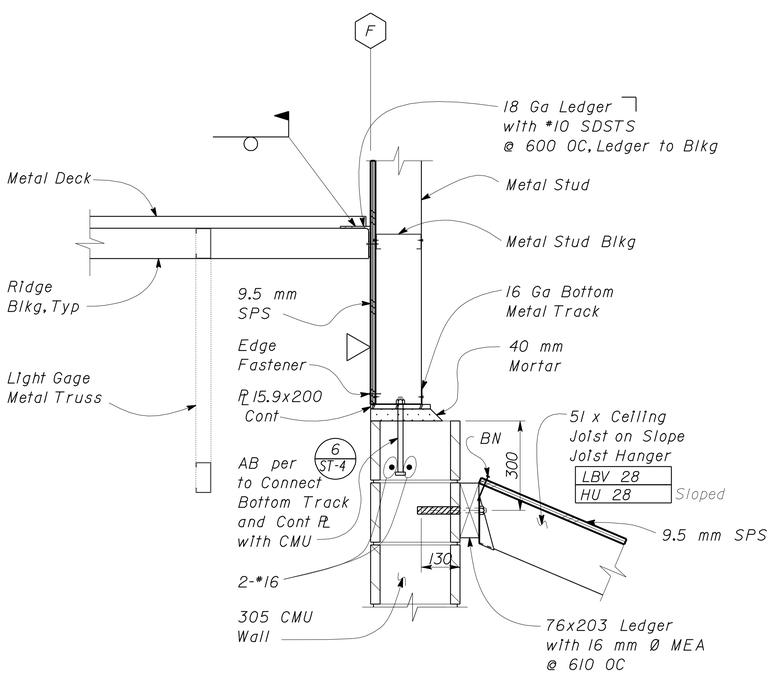

2 SECTION
Scale 1:10

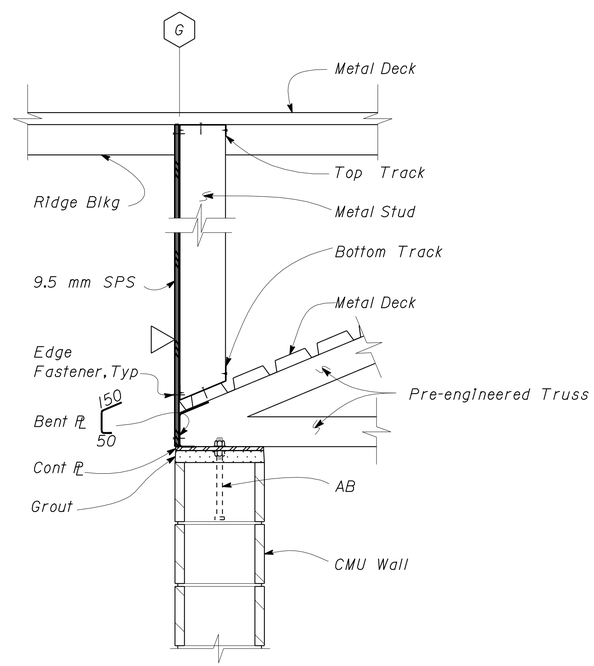

4 SECTION
Scale 1:10

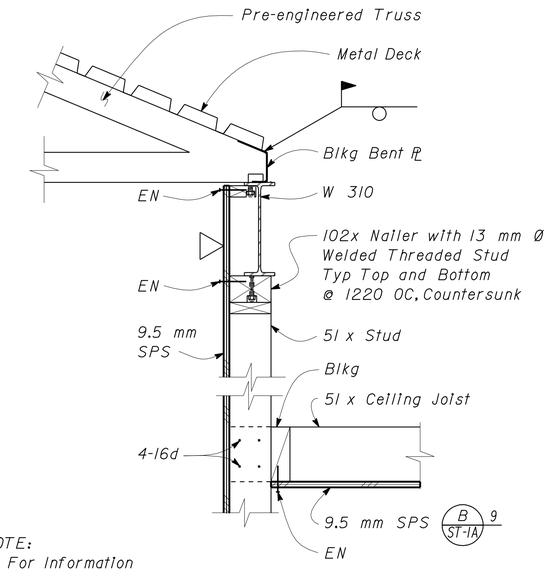

NOTE:
For Information not Shown, see 5

6 SECTION
Scale 1:10

DESIGN	BY Edgardo Isidro	CHECKED Thomas Tong	
DETAILS	BY Aleksey Serin	CHECKED Edgardo Isidro	
QUANTITIES	BY	CHECKED	

STATE OF CALIFORNIA
DEPARTMENT OF TRANSPORTATION

DIVISION OF ENGINEERING SERVICES
ARCHITECTURAL AND STRUCTURAL DESIGN

BRIDGE NO. 50M5722
KM POST

TAFT MAINTENANCE STATION

CREW/EQUIPMENT BUILDING

ROOF FRAMING DETAILS

SHEET **ST1-15**

DOES SD metric Rev. 9/02

SCALE: ALL DIMENSIONS ARE IN MILLIMETERS UNLESS OTHERWISE NOTED.

ORIGINAL SCALE IN MILLIMETERS FOR REDUCED PLANS 0 10 20 30 40 50 60 70 80 90 100

CU 06257
EA 483401

DISREGARD PRINTS BEARING EARLIER REVISION DATES → 07-10-06 07-25-06 10-18-06 11-21-06 01-05-07 01-22-07 02-13-07

SHEET OF

st1_15.dgn

23-MAR-2010 05:56

DIST	COUNTY	LOCATION CODE	KILOMETER POST TOTAL PROJECT	SHEET NO.	TOTAL SHEETS
06	Ker	5722		106	178

Caltrans Metric

REGISTERED CIVIL ENGINEER — DATE 03-30-07

REGISTERED PROFESSIONAL ENGINEER — Edgardo A. Isidro — No. 058507 — Exp. 12-31-10 — CIVIL — STATE OF CALIFORNIA

3-8-10
PLANS APPROVAL DATE

The State of California or its officers or agents shall not be responsible for the accuracy or completeness of electronic copies of this plan sheet.

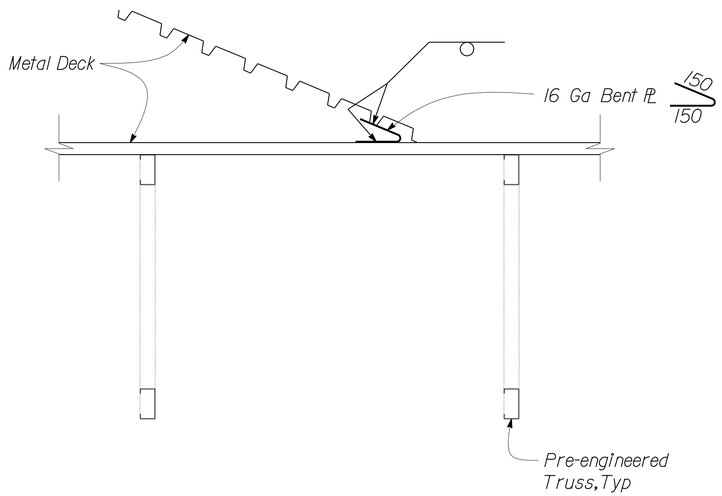

1 METAL DECK TO METAL DECK CONNECTION
Scale 1:10

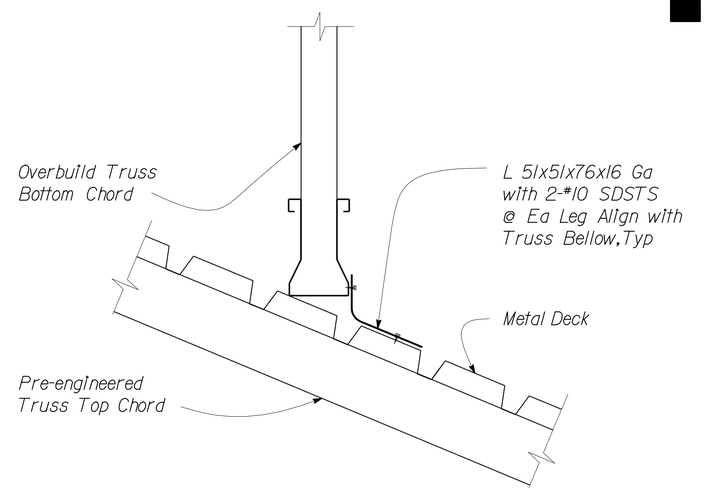

2 CONNECTION DETAIL
Scale 1:5

DESIGN	BY Edgardo Isidro	CHECKED Thomas Tong	
DETAILS	BY Aleksey Serin	CHECKED Edgardo Isidro	
QUANTITIES	BY	CHECKED	

STATE OF CALIFORNIA
DEPARTMENT OF TRANSPORTATION

DIVISION OF ENGINEERING SERVICES
ARCHITECTURAL AND STRUCTURAL DESIGN

BRIDGE NO. 50M5722
KM POST

CREW/EQUIPMENT BUILDING

TAFT MAINTENANCE STATION

ROOF FRAMING DETAILS

SHEET ST1-16

DOES SD metric Rev. 9/02

SCALE: ALL DIMENSIONS ARE IN MILLIMETERS UNLESS OTHERWISE NOTED.

ORIGINAL SCALE IN MILLIMETERS FOR REDUCED PLANS 0 10 20 30 40 50 60 70 80 90 100

CU 06257
EA 483401

DISREGARD PRINTS BEARING EARLIER REVISION DATES → 02-07-07 02-13-07

REVISION DATES (PRELIMINARY STAGE ONLY) SHEET OF

23-MAR-2010 05:56

st1_16.dgn

DIST	COUNTY	LOCATION CODE	KILOMETER POST TOTAL PROJECT	SHEET NO.	TOTAL SHEETS
06	Ker	5722		107	178

REGISTERED CIVIL ENGINEER — DATE 03-30-07

REGISTERED PROFESSIONAL ENGINEER — Edgardo A. Isidro — No. 058507 — Exp. 12-31-10 — CIVIL — STATE OF CALIFORNIA

3-8-10
PLANS APPROVAL DATE

The State of California or its officers or agents shall not be responsible for the accuracy or completeness of electronic copies of this plan sheet.

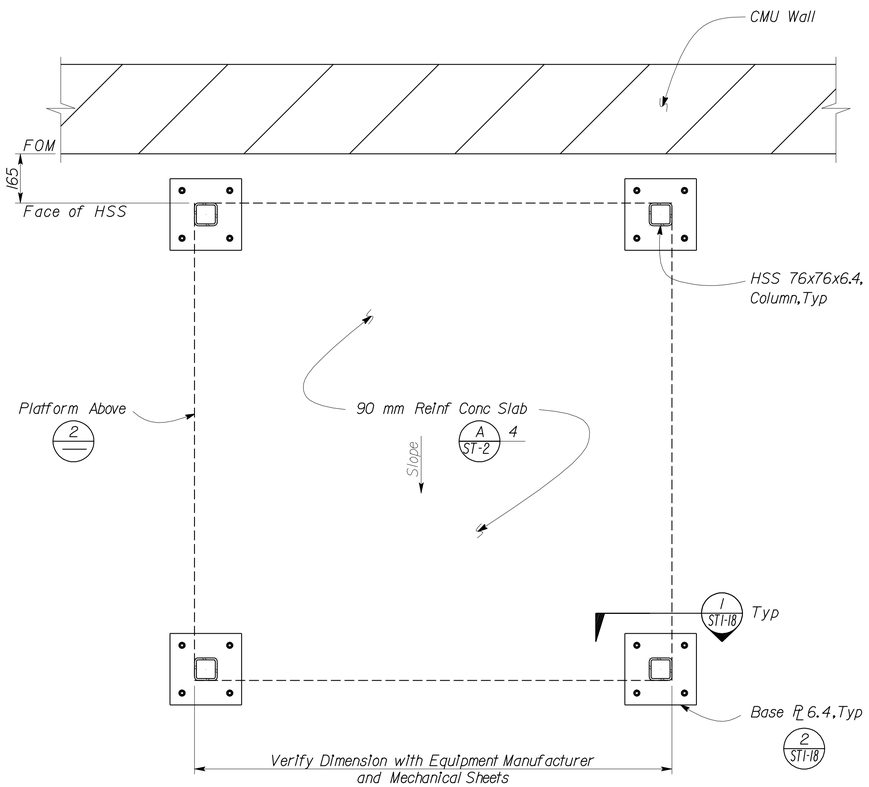

1 EVAPORATIVE COOLER PLATFORM FOUNDATION PLAN
Scale 1:10

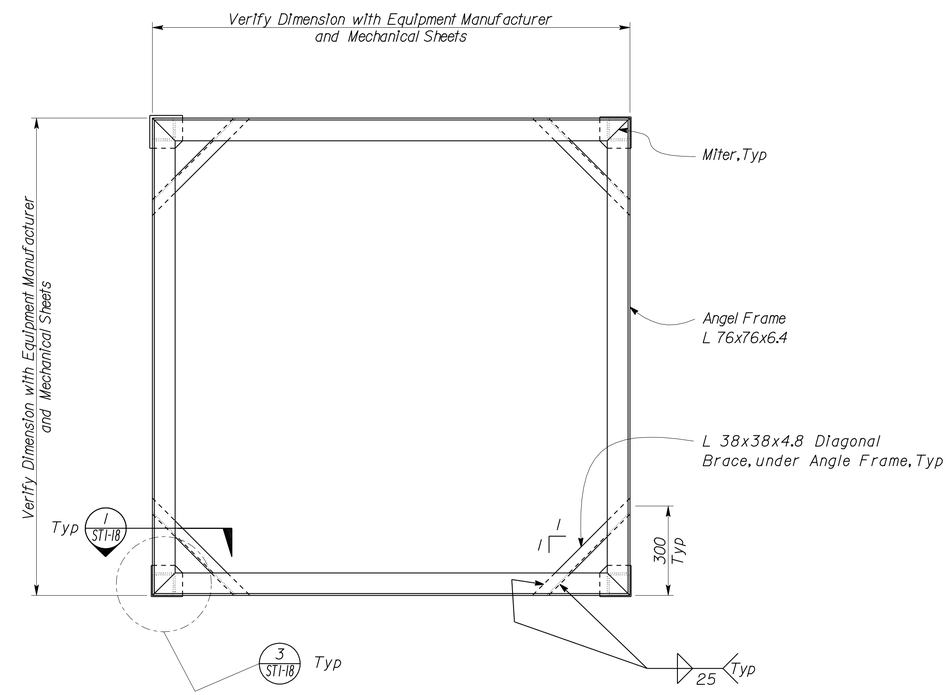

2 EVAPORATIVE COOLER PLATFORM PLAN
Scale 1:10

NOTE: All metal to be hot-dipped galvanized after fabrication

DESIGN	BY Edgardo Isidro	CHECKED Thomas Tong	
DETAILS	BY Aleksey Serin	CHECKED Edgardo Isidro	
QUANTITIES	BY	CHECKED	

STATE OF CALIFORNIA
DEPARTMENT OF TRANSPORTATION

DIVISION OF ENGINEERING SERVICES
ARCHITECTURAL AND STRUCTURAL DESIGN

BRIDGE NO. 50M5722
KM POST

CREW/EQUIPMENT BUILDING

TAFT MAINTENANCE STATION
EVAPORATIVE COOLER PLATFORM PLANS

SHEET ST1-17

DOES SD metric Rev. 9/02

SCALE: ALL DIMENSIONS ARE IN MILLIMETERS UNLESS OTHERWISE NOTED.

ORIGINAL SCALE IN MILLIMETERS FOR REDUCED PLANS 0 10 20 30 40 50 60 70 80 90 100

CU 06257
EA 483401

DISREGARD PRINTS BEARING EARLIER REVISION DATES → 09-27-06 09-29-06

REVISION DATES (PRELIMINARY STAGE ONLY) SHEET OF

23-MAR-2010 05:57

st1_17.dgn

DIST	COUNTY	LOCATION CODE	KILOMETER POST TOTAL PROJECT	SHEET NO.	TOTAL SHEETS
06	Ker	5722		108	178

REGISTERED CIVIL ENGINEER — DATE 03-30-07

REGISTERED PROFESSIONAL ENGINEER — Edgardo A. Isidro — No. 058507 — Exp. 12-31-10 — CIVIL — STATE OF CALIFORNIA

3-8-10
PLANS APPROVAL DATE

The State of California or its officers or agents shall not be responsible for the accuracy or completeness of electronic copies of this plan sheet.

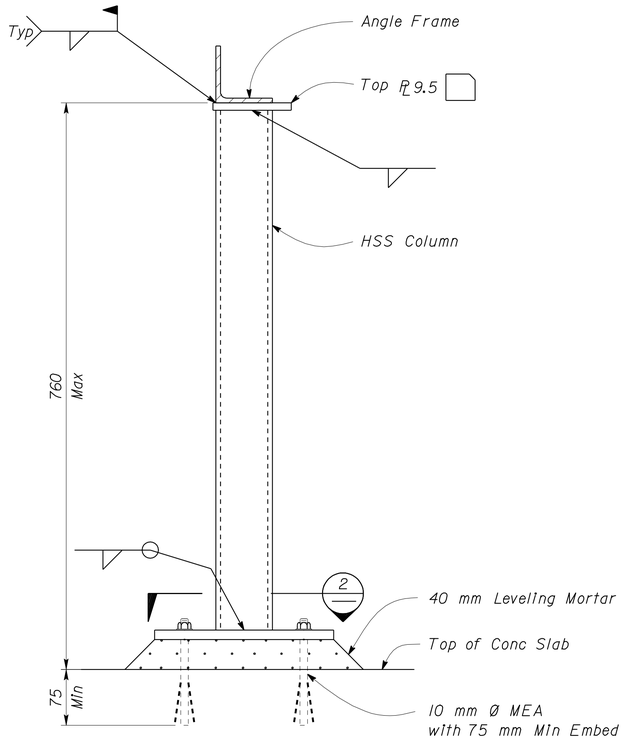

1 HSS COLUMN DETAIL
Scale 1:4

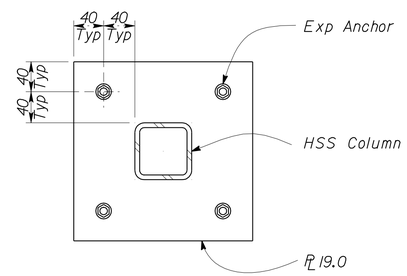

2 BASE PLATE
Scale 1:4

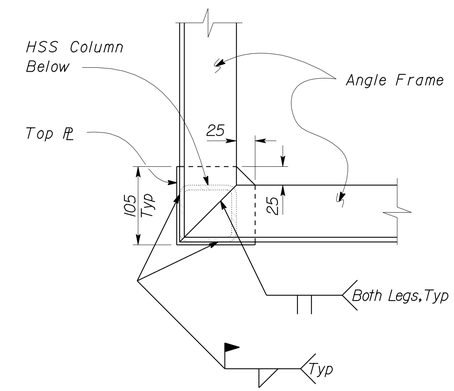

3 FRAME CONNECTION DETAIL
Scale 1:4

DESIGN	BY Edgardo Isidro	CHECKED Thomas Tong	
DETAILS	BY Aleksey Serin	CHECKED Edgardo Isidro	
QUANTITIES	BY	CHECKED	

STATE OF CALIFORNIA
DEPARTMENT OF TRANSPORTATION

DIVISION OF ENGINEERING SERVICES
ARCHITECTURAL AND STRUCTURAL DESIGN

BRIDGE NO. 50M5722
KM POST

CREW/EQUIPMENT BUILDING

TAFT MAINTENANCE STATION

EVAPORATIVE COOLER PLATFORM DETAILS

SHEET **ST1-18**

DOES SD metric Rev. 9/02

SCALE: ALL DIMENSIONS ARE IN MILLIMETERS UNLESS OTHERWISE NOTED.

ORIGINAL SCALE IN MILLIMETERS FOR REDUCED PLANS 0 10 20 30 40 50 60 70 80 90 100

CU 06257
EA 483401

DISREGARD PRINTS BEARING EARLIER REVISION DATES → 09-28-06 09-29-06 02-01-07

REVISION DATES (PRELIMINARY STAGE ONLY) SHEET OF

23-MAR-2010 05:57

st1_18.dgn

DIST.	COUNTY	LOCATION CODE	KILOMETER POST TOTAL PROJECT	SHEET NO.	TOTAL SHEETS
06	Ker	5722		109	178

REGISTERED CIVIL ENGINEER 03-30-07

REGISTERED PROFESSIONAL ENGINEER Edgardo A. Isidro No. 058507 Exp. 12-31-10 CIVIL STATE OF CALIFORNIA

3-8-10
PLANS APPROVAL DATE

The State of California or its officers or agents shall not be responsible for the accuracy or completeness of electronic copies of this plan sheet.

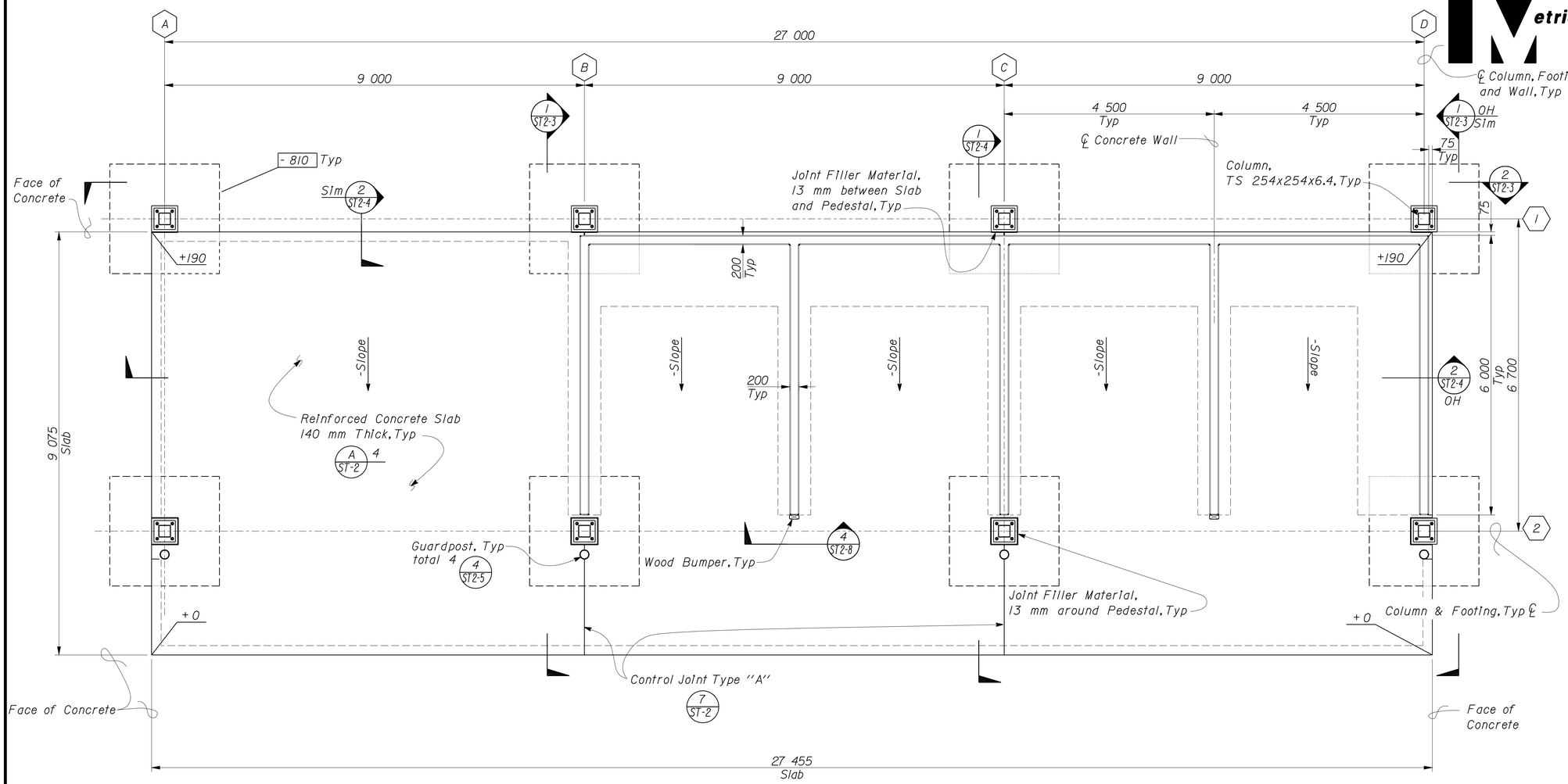

1 STORAGE BIN PLAN
Scale 1:50

Elevation 318.81 meters = Datum 0 mm

A DESIGN NOTES

1. Design: The building work on this project has been designed to conform to the 2007 California Building Code.

a. Loads:
Canopy:
Roof: Live Load = 958 Pa
Wind Speed: 129 km/hr, Exposure C
Seismic Design Criteria: D

Storage Bins:
Equivalent Fluid Pressure =7.9 kN/m³
Stored Material (Gravity) = 21.2 kN/m³

b. Reinforced Concrete:
f'_c = 21 MPa
f_y = 420 MPa

c. Structural Steel (Working Stress Design)
Wide Flange: Fy = 345 MPa
Tube Steel: Fy = 317 MPa

d. Timber: DF No.1 or Better

e. Foundation :
Allowable Soil Pressure (DL + LL) : 144,000 Pa
For Soil Classification see Log of Test Borings, Sheet ST7-1.

B DETAIL NOTES

1. All Miscellaneous Metal shall be hot-dip galvanized after fabrication.
2. All bolts shall be hot dip galvanized, hex head Machine Bolts with helical spring lock washer and hex nut.
3. All bolts for connecting steel to steel shall be High-Strength Machine Bolts conforming to ASTM Designation: A325M.

DESIGN	BY Edgardo Isidro	CHECKED Thomas Tong	
DETAILS	BY Aleksey Serin	CHECKED Edgardo Isidro	
QUANTITIES	BY	CHECKED	

STATE OF CALIFORNIA
DEPARTMENT OF TRANSPORTATION

DIVISION OF ENGINEERING SERVICES
ARCHITECTURAL AND STRUCTURAL DESIGN

BRIDGE NO. 50M5722
KM POST

TAFT MAINTENANCE STATION
MATERIALS STORAGE BIN
FOUNDATION PLAN

SHEET ST2-1

DOES SD metric Rev. 9/02

SCALE: ALL DIMENSIONS ARE IN MILLIMETERS UNLESS OTHERWISE NOTED.

ORIGINAL SCALE IN MILLIMETERS FOR REDUCED PLANS 0 10 20 30 40 50 60 70 80 90 100

CU 06257
EA 483401

DISREGARD PRINTS BEARING EARLIER REVISION DATES → 03-27-06 03-28-06 10-18-06 01-08-07

REVISION DATES (PRELIMINARY STAGE ONLY) SHEET OF

23-MAR-2010 05:57

st2_01.dgn

DIST.	COUNTY	LOCATION CODE	KILOMETER POST TOTAL PROJECT	SHEET NO.	TOTAL SHEETS
06	Ker	5722		110	178

REGISTERED CIVIL ENGINEER 03-30-07

REGISTERED PROFESSIONAL ENGINEER Edgardo A. Isidro No. 058507 Exp. 12-31-10 CIVIL STATE OF CALIFORNIA

3-8-10
PLANS APPROVAL DATE

The State of California or its officers or agents shall not be responsible for the accuracy or completeness of electronic copies of this plan sheet.

Caltrans Metric

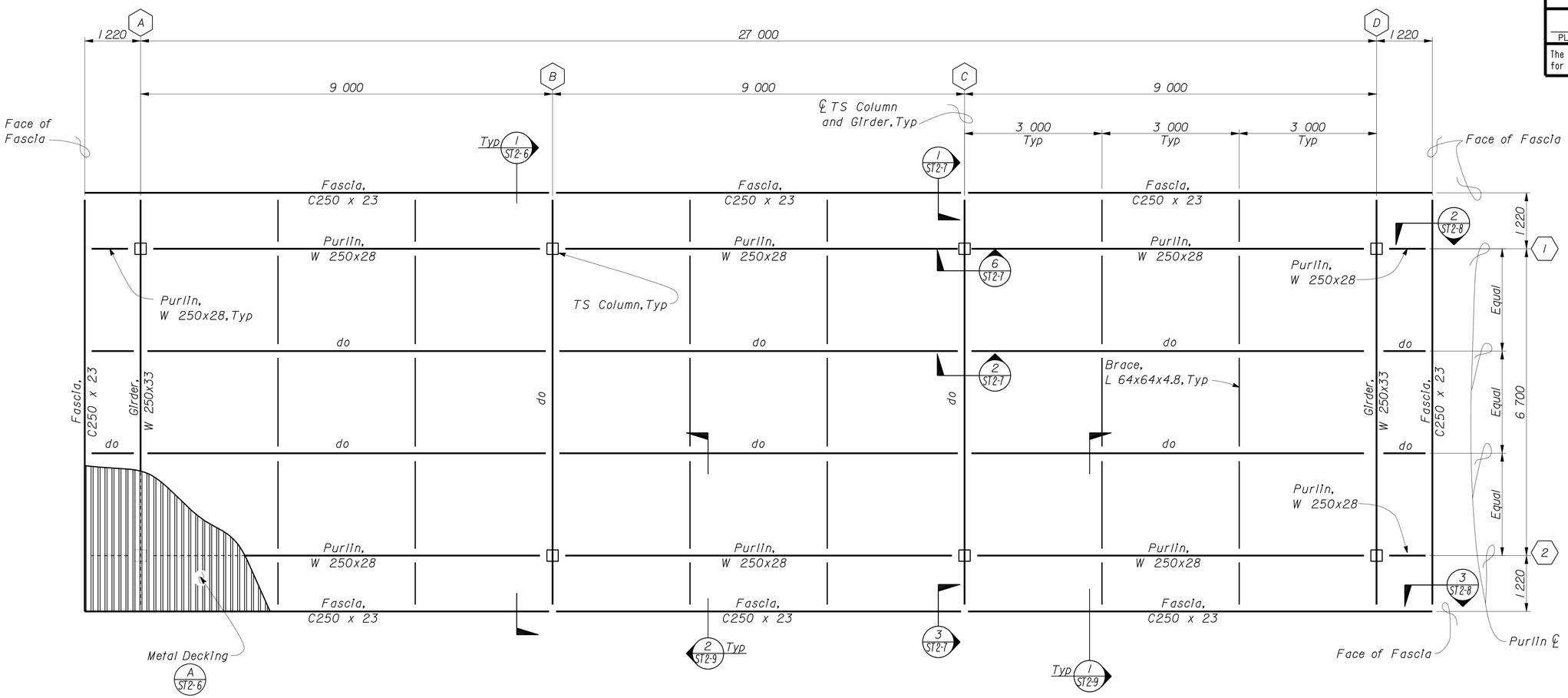

1 ROOF FRAMING PLAN
Scale 1:50

DESIGN	BY Edgardo Isidro	CHECKED Thomas Tong	
DETAILS	BY Aleksey Serin	CHECKED Edgardo Isidro	
QUANTITIES	BY	CHECKED	

STATE OF CALIFORNIA
DEPARTMENT OF TRANSPORTATION

DIVISION OF ENGINEERING SERVICES
ARCHITECTURAL AND STRUCTURAL DESIGN

BRIDGE NO. 50M5722
KM POST

TAFT MAINTENANCE STATION
MATERIALS STORAGE BIN
ROOF FRAMING PLAN

SHEET ST2-2

DOES SD metric Rev. 9/02

SCALE: ALL DIMENSIONS ARE IN MILLIMETERS UNLESS OTHERWISE NOTED.

ORIGINAL SCALE IN MILLIMETERS FOR REDUCED PLANS 0 10 20 30 40 50 60 70 80 90 100

CU 06257
EA 483401

DISREGARD PRINTS BEARING EARLIER REVISION DATES → 03-23-06 01-08-07

REVISION DATES (PRELIMINARY STAGE ONLY) SHEET OF

23-MAR-2010 05:57

st2_02.dgn

DIST.	COUNTY	LOCATION CODE	KILOMETER POST TOTAL PROJECT	SHEET NO.	TOTAL SHEETS
06	Ker	5722		111	178

Caltrans Metric

REGISTERED CIVIL ENGINEER 03-30-07

REGISTERED PROFESSIONAL ENGINEER Edgardo A. Isidro No. 058507 Exp. 12-31-10 CIVIL STATE OF CALIFORNIA

3-8-10
PLANS APPROVAL DATE

The State of California or its officers or agents shall not be responsible for the accuracy or completeness of electronic copies of this plan sheet.

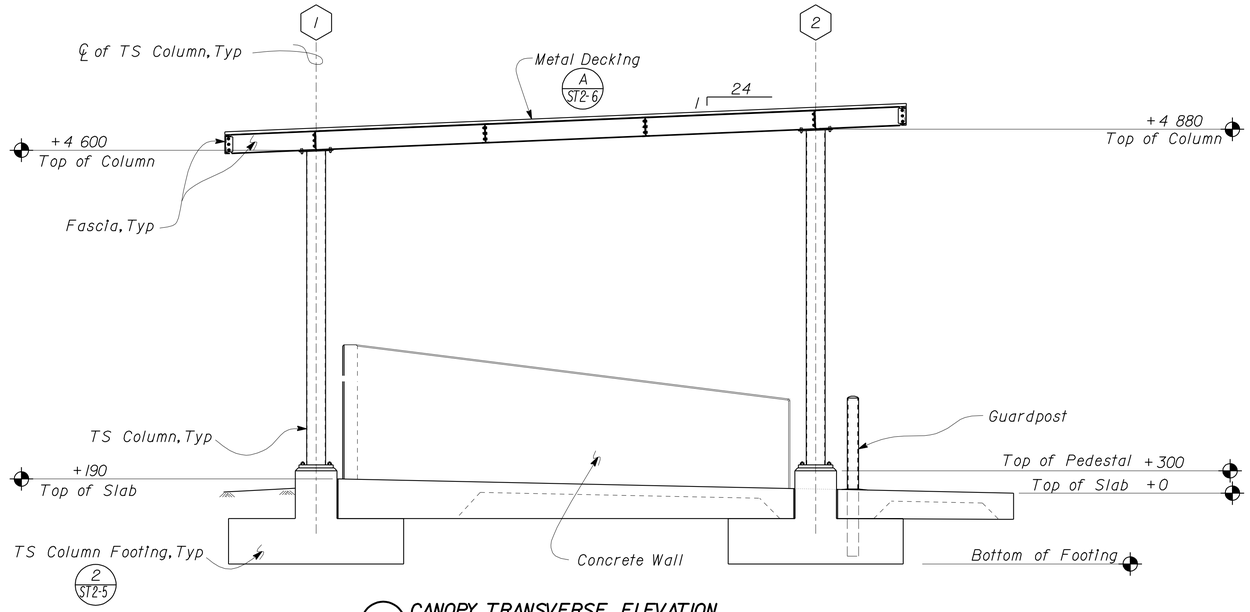

1 CANOPY TRANSVERSE ELEVATION
Scale 1:40

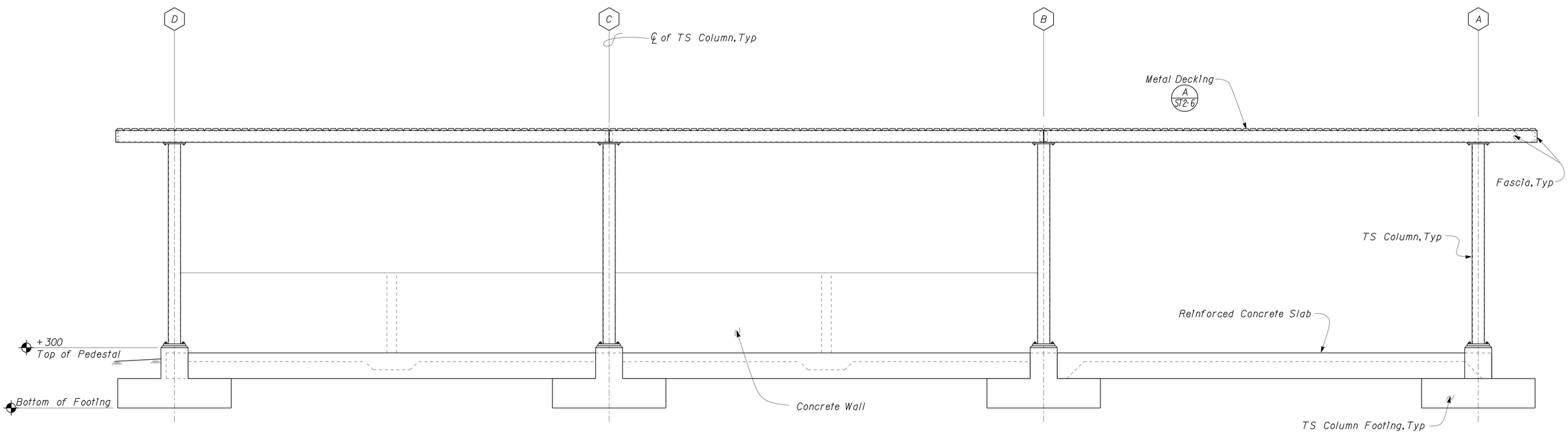

2 CANOPY REAR ELEVATION
Scale 1:40

DESIGN	BY Edgardo Isidro	CHECKED Thomas Tong	
DETAILS	BY Aleksey Serin	CHECKED Edgardo Isidro	
QUANTITIES	BY	CHECKED	

STATE OF CALIFORNIA DEPARTMENT OF TRANSPORTATION

DIVISION OF ENGINEERING SERVICES ARCHITECTURAL AND STRUCTURAL DESIGN

BRIDGE NO. 50M5722
KM POST

TAFT MAINTENANCE STATION
MATERIALS STORAGE BIN
ELEVATIONS

SHEET ST2-3

DOES SD metric Rev. 9/02

SCALE: ALL DIMENSIONS ARE IN MILLIMETERS UNLESS OTHERWISE NOTED.

ORIGINAL SCALE IN MILLIMETERS FOR REDUCED PLANS 0 10 20 30 40 50 60 70 80 90 100

CU 06257
EA 483401

DISREGARD PRINTS BEARING EARLIER REVISION DATES → 03-23-06 07-26-06

REVISION DATES (PRELIMINARY STAGE ONLY) SHEET OF

23-MAR-2010 05:57

st2_03.dgn

DIST.	COUNTY	LOCATION CODE	KILOMETER POST TOTAL PROJECT	SHEET NO.	TOTAL SHEETS
06	Ker	5722		112	178

Caltrans Metric

REGISTERED CIVIL ENGINEER 03-30-07

REGISTERED PROFESSIONAL ENGINEER Edgardo A. Isidro No. 058507 Exp. 12-31-10 CIVIL STATE OF CALIFORNIA

3-8-10
PLANS APPROVAL DATE

The State of California or its officers or agents shall not be responsible for the accuracy or completeness of electronic copies of this plan sheet.

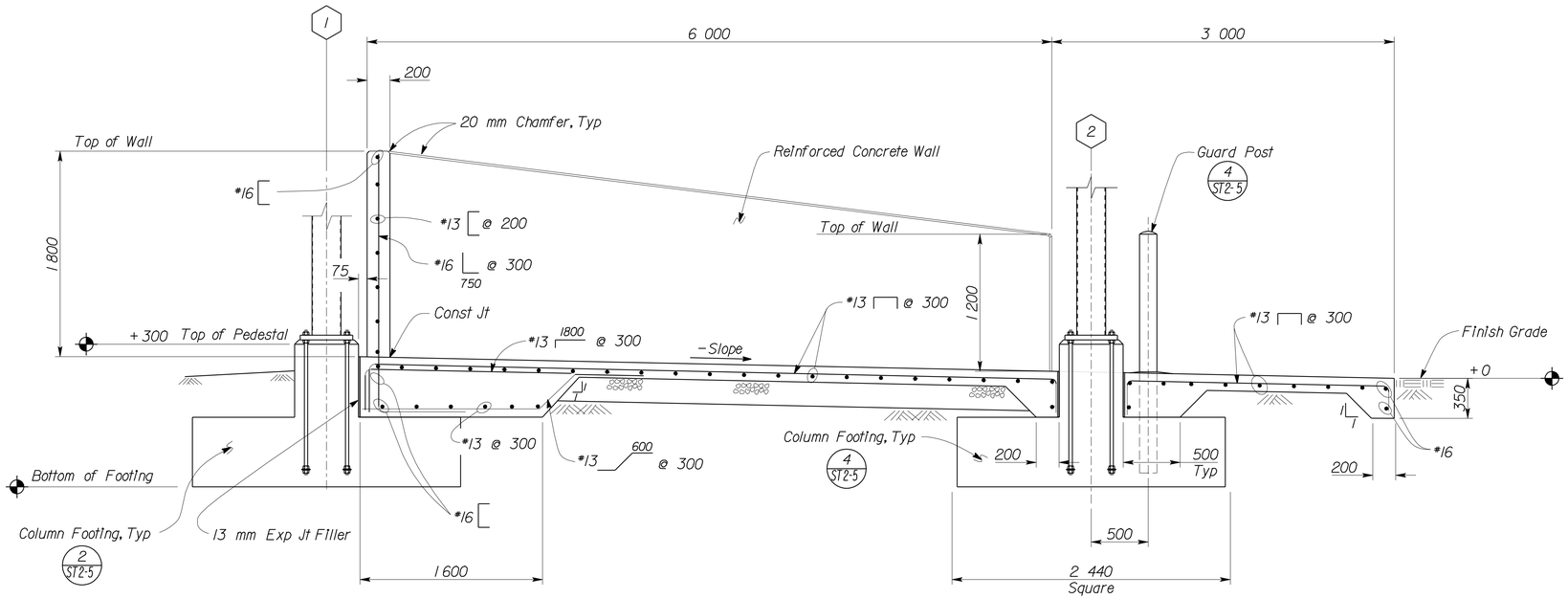

1 TRANSVERSE SECTION
Scale 1:25

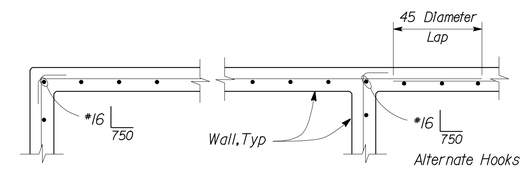

3 BAR ARRANGEMENT DETAIL
Scale 1:25

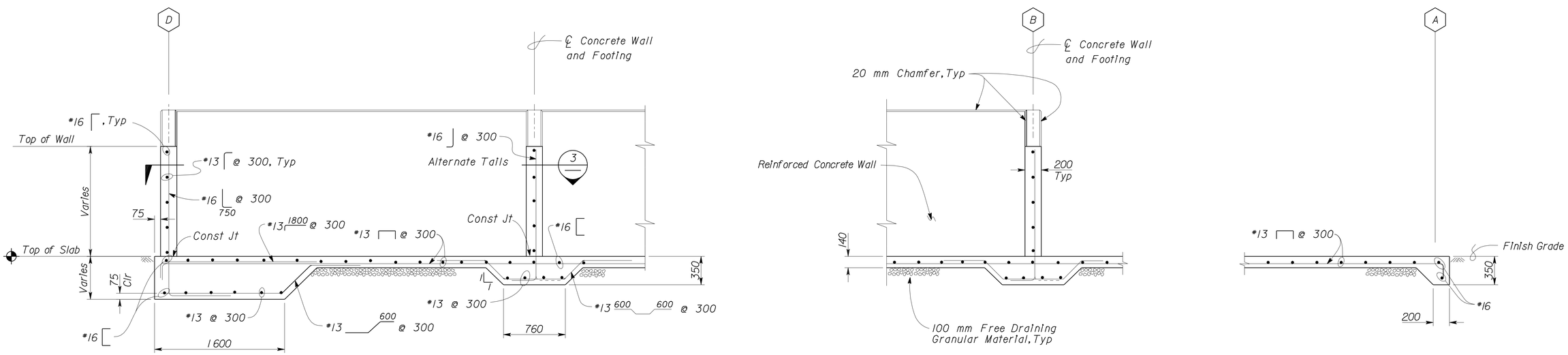

2 PARTIAL LONGITUDINAL SECTION
Scale 1:25

DESIGN	BY Edgardo Isidro	CHECKED Thomas Tong	
DETAILS	BY Aleksey Serin	CHECKED Edgardo Isidro	
QUANTITIES	BY	CHECKED	

STATE OF CALIFORNIA
DEPARTMENT OF TRANSPORTATION

DIVISION OF ENGINEERING SERVICES
ARCHITECTURAL AND STRUCTURAL DESIGN

BRIDGE NO. 50M5722
KM POST

MATERIALS STORAGE BIN

TAFT MAINTENANCE STATION

WALL AND SLAB SECTIONS

SHEET ST2-4

DOES SD metric Rev. 9/02

SCALE: ALL DIMENSIONS ARE IN MILLIMETERS UNLESS OTHERWISE NOTED.

ORIGINAL SCALE IN MILLIMETERS FOR REDUCED PLANS 0 10 20 30 40 50 60 70 80 90 100

CU 06257
EA 483401

DISREGARD PRINTS BEARING EARLIER REVISION DATES → 03-28-06 01-08-07

REVISION DATES (PRELIMINARY STAGE ONLY) SHEET OF

23-MAR-2010 05:57

st2_04.dgn

DIST.	COUNTY	LOCATION CODE	KILOMETER POST TOTAL PROJECT	SHEET NO.	TOTAL SHEETS
06	Ker	5722		113	178

Caltrans Metric

REGISTERED CIVIL ENGINEER 03-30-07

REGISTERED PROFESSIONAL ENGINEER Edgardo A. Isidro No. 058507 Exp. 12-31-10 CIVIL STATE OF CALIFORNIA

3-8-10
PLANS APPROVAL DATE

The State of California or its officers or agents shall not be responsible for the accuracy or completeness of electronic copies of this plan sheet.

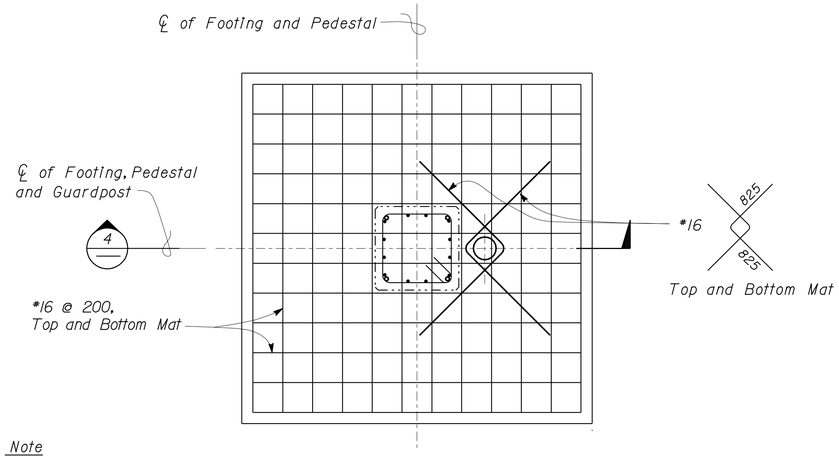

Note
Storage Bin Wall not shown.

1 COLUMN FOOTING AND GUARDPOST PLAN
Scale 1:20

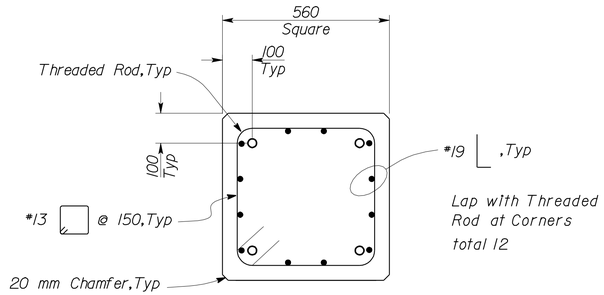

3 COLUMN PEDESTAL SECTION
Scale 1:10

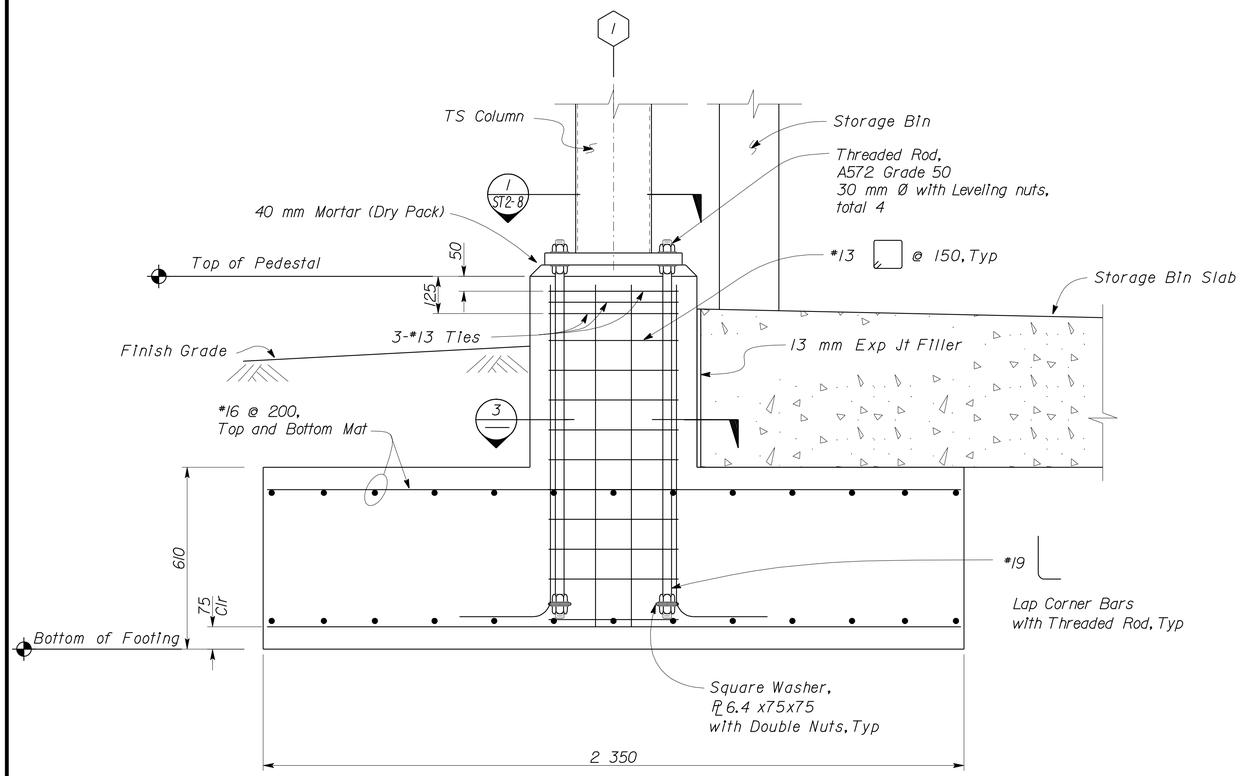

2 COLUMN FOOTING DETAIL
Scale 1:10

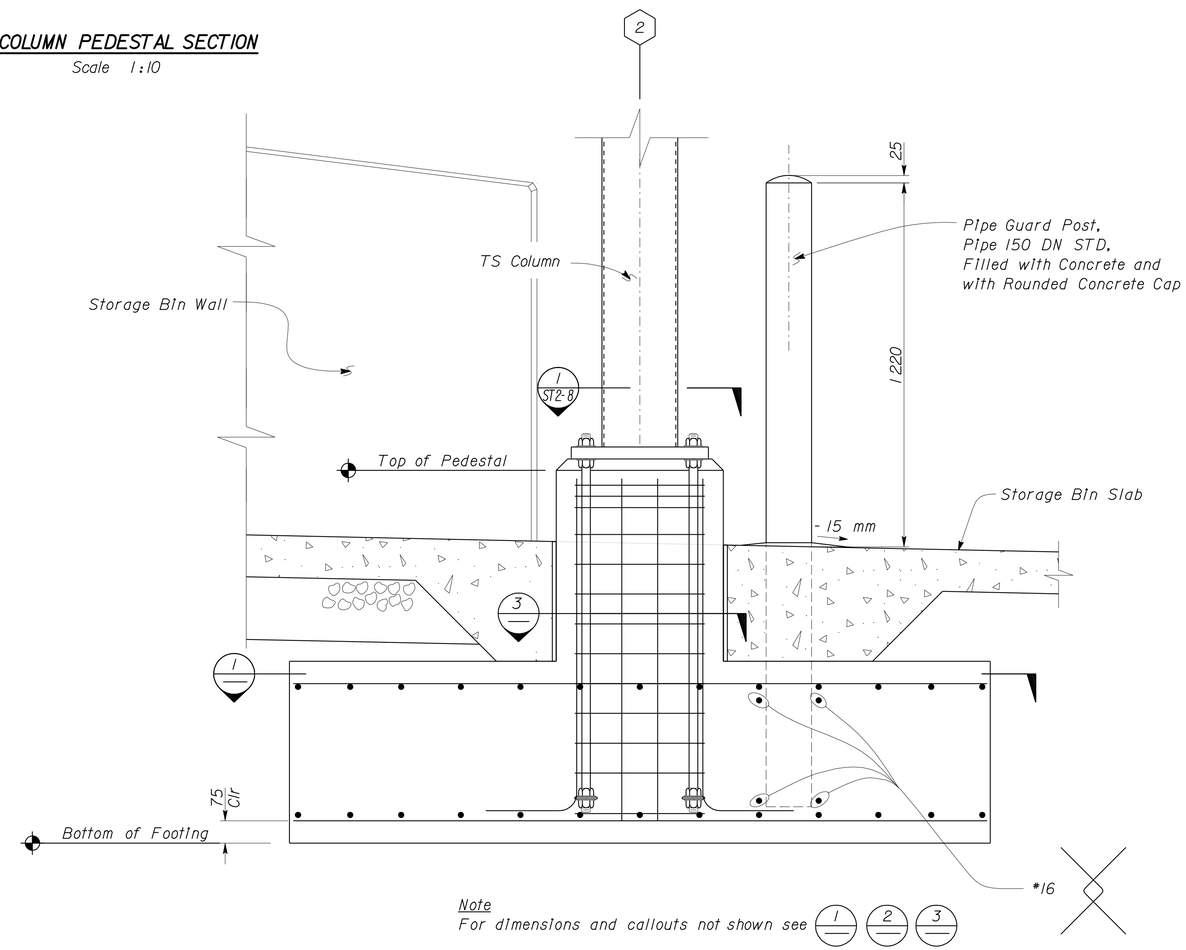

Note
For dimensions and callouts not shown see 1 2 3

4 COLUMN FOOTING AND GUARDPOST DETAIL
Scale 1:10

DESIGN	BY Edgardo Isidro	CHECKED Thomas Tong	
DETAILS	BY Aleksey Serin	CHECKED Edgardo Isidro	
QUANTITIES	BY	CHECKED	

STATE OF CALIFORNIA
DEPARTMENT OF TRANSPORTATION

DIVISION OF ENGINEERING SERVICES
ARCHITECTURAL AND STRUCTURAL DESIGN

BRIDGE NO. 50M5722
KM POST

TAFT MAINTENANCE STATION
MATERIALS STORAGE BIN
CANOPY FOOTING DETAILS

SHEET ST2-5

DOES SD metric Rev. 9/02

SCALE: ALL DIMENSIONS ARE IN MILLIMETERS UNLESS OTHERWISE NOTED.

ORIGINAL SCALE IN MILLIMETERS FOR REDUCED PLANS 0 10 20 30 40 50 60 70 80 90 100

CU 06257
EA 483401

DISREGARD PRINTS BEARING EARLIER REVISION DATES → 03-28-06

REVISION DATES (PRELIMINARY STAGE ONLY) SHEET OF

23-MAR-2010 05:57
st2_05.dgn

DIST.	COUNTY	LOCATION CODE	KILOMETER POST TOTAL PROJECT	SHEET NO.	TOTAL SHEETS
06	Ker	5722		114	178

Caltrans Metric

EA Isidro 03-30-07
REGISTERED CIVIL ENGINEER

REGISTERED PROFESSIONAL ENGINEER
Edgardo A. Isidro
No. 058507
Exp. 12-31-10
CIVIL
STATE OF CALIFORNIA

3-8-10
PLANS APPROVAL DATE

The State of California or its officers or agents shall not be responsible for the accuracy or completeness of electronic copies of this plan sheet.

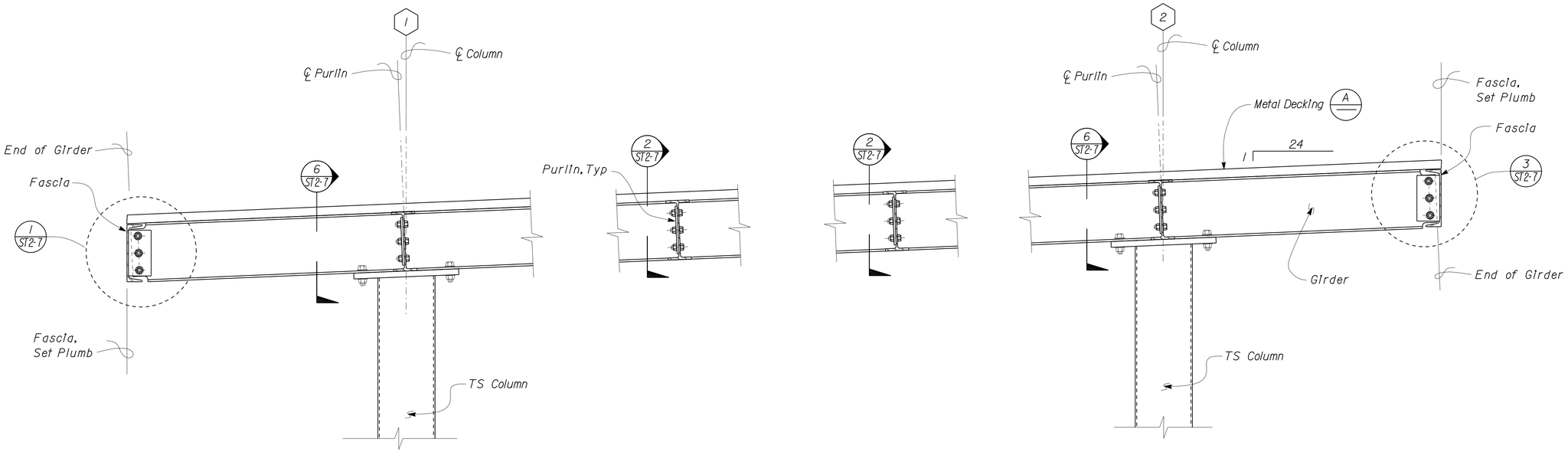

1 PARTIAL ROOF SECTION
Scale 1:10

A1 Section Properties

Deck Type	Depth & Gage	Moment of Inertia	Positive Section Modulus	Negative Section Modulus	Minimum Yield Strength
Metal Decking	38 mm x 22 ga	243 075 mm^4/m	9677 mm^3/m	10 484 mm^3/m	262 MPa

A2 Screw Schedule

Perpendicular Supports And Panel Ends	Parallel Supports	Side Laps	Diaphragm Shear Capacity
4- #12 SDSTS Per Sheet	#12 TEK Screws @ 610 mm OC	#12 TEK Screws @ 610 mm OC	2627 N/m

A3 Metal Deck And Screw Pattern

Profile	TEK Screws per support
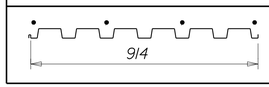	4

A METAL DECKING NOTES

DESIGN	BY Edgardo Isidro	CHECKED Thomas Tong	
DETAILS	BY Aleksey Serin	CHECKED Edgardo Isidro	
QUANTITIES	BY	CHECKED	

STATE OF CALIFORNIA
DEPARTMENT OF TRANSPORTATION

DIVISION OF ENGINEERING SERVICES
ARCHITECTURAL AND STRUCTURAL DESIGN

BRIDGE NO. 50M5722
KM POST

TAFT MAINTENANCE STATION
MATERIALS STORAGE BIN
CANOPY SECTION AND DETAILS

SHEET ST2-6

DOES SD metric Rev. 9/02

SCALE: ALL DIMENSIONS ARE IN MILLIMETERS UNLESS OTHERWISE NOTED.

ORIGINAL SCALE IN MILLIMETERS FOR REDUCED PLANS 0 10 20 30 40 50 60 70 80 90 100

CU 06257
EA 483401

DISREGARD PRINTS BEARING EARLIER REVISION DATES → 03-28-06

REVISION DATES (PRELIMINARY STAGE ONLY) SHEET OF

23-MAR-2010 05:57
st2_06.dgn

DIST.	COUNTY	LOCATION CODE	KILOMETER POST TOTAL PROJECT	SHEET NO.	TOTAL SHEETS
06	Ker	5722		115	178

Caltrans Metric

REGISTERED CIVIL ENGINEER 03-30-07

REGISTERED PROFESSIONAL ENGINEER Edgardo A. Isidro No. 058507 Exp. 12-31-10 CIVIL STATE OF CALIFORNIA

3-8-10
PLANS APPROVAL DATE

The State of California or its officers or agents shall not be responsible for the accuracy or completeness of electronic copies of this plan sheet.

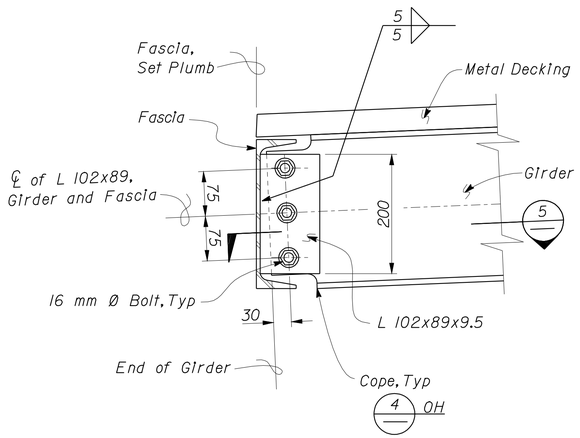

1 GIRDER TO FASCIA CONNECTION
Scale 1:5

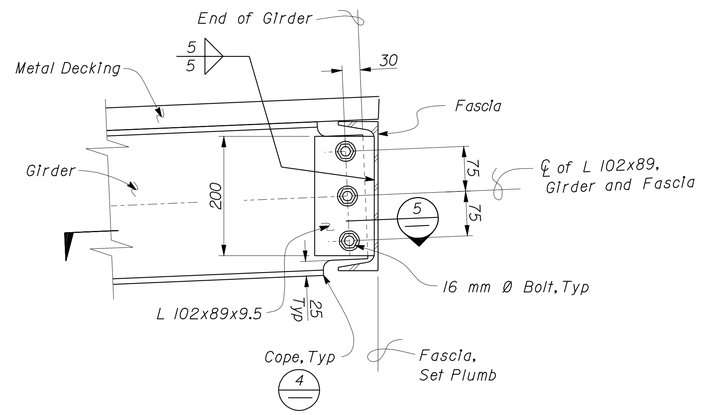

3 GIRDER TO FASCIA CONNECTION
Scale 1:5

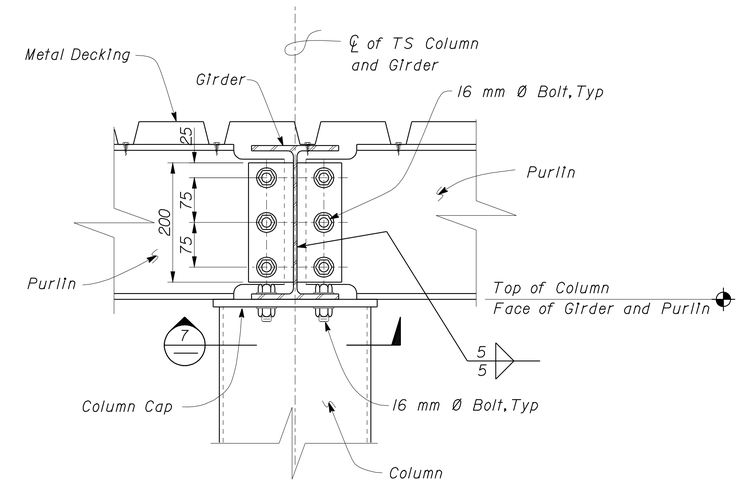

6 GIRDER TO PURLIN CONNECTION
Scale 1:5

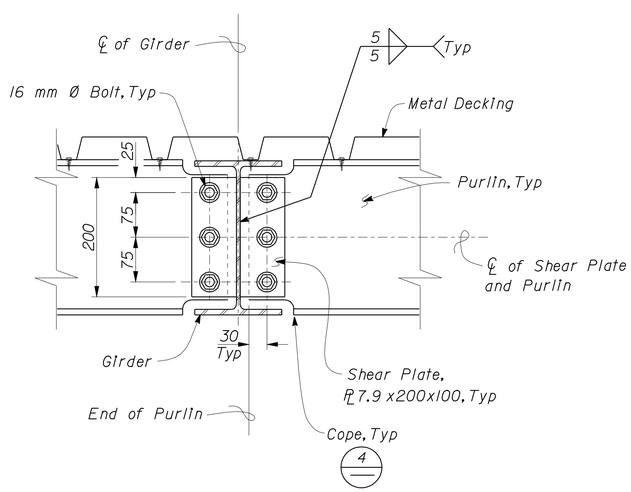

2 PURLIN TO GIRDER CONNECTION
Scale 1:5

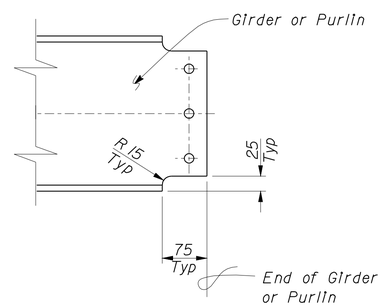

4 GIRDER OR PURLIN COPING DETAIL
Scale 1:5

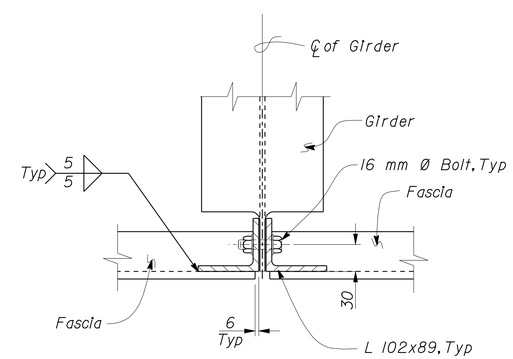

5 GIRDER TO FASCIA CONNECTION
Scale 1:5

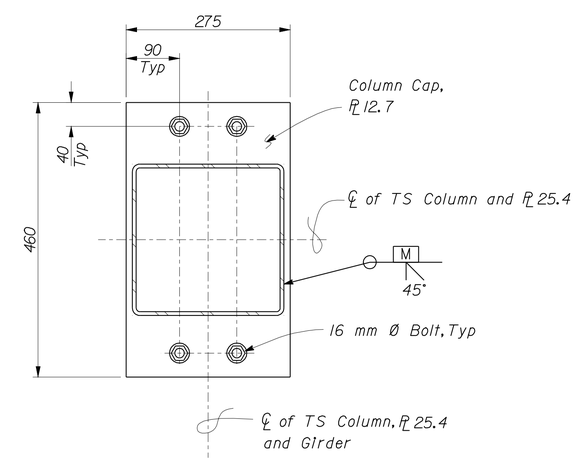

7 COLUMN CAP DETAIL
Scale 1:5

DESIGN	BY Edgardo Isidro	CHECKED Thomas Tong	
DETAILS	BY Aleksey Serin	CHECKED Edgardo Isidro	
QUANTITIES	BY	CHECKED	

STATE OF CALIFORNIA DEPARTMENT OF TRANSPORTATION

DIVISION OF ENGINEERING SERVICES ARCHITECTURAL AND STRUCTURAL DESIGN

BRIDGE NO. 50M5722
KM POST

TAFT MAINTENANCE STATION
MATERIALS STORAGE BIN
CANOPY DETAILS I

SHEET ST2-7

DOES SD metric Rev. 9/02

SCALE: ALL DIMENSIONS ARE IN MILLIMETERS UNLESS OTHERWISE NOTED.

ORIGINAL SCALE IN MILLIMETERS FOR REDUCED PLANS 0 10 20 30 40 50 60 70 80 90 100

CU 06257
EA 483401

DISREGARD PRINTS BEARING EARLIER REVISION DATES → 03-28-06

REVISION DATES (PRELIMINARY STAGE ONLY) SHEET OF

23-MAR-2010 05:57

st2_07.dgn

DIST.	COUNTY	LOCATION CODE	KILOMETER POST TOTAL PROJECT	SHEET NO.	TOTAL SHEETS
06	Ker	5722		116	178

Caltrans Metric

REGISTERED CIVIL ENGINEER 03-30-07

REGISTERED PROFESSIONAL ENGINEER Edgardo A. Isidro No. 058507 Exp. 12-31-10 CIVIL STATE OF CALIFORNIA

3-8-10
PLANS APPROVAL DATE

The State of California or its officers or agents shall not be responsible for the accuracy or completeness of electronic copies of this plan sheet.

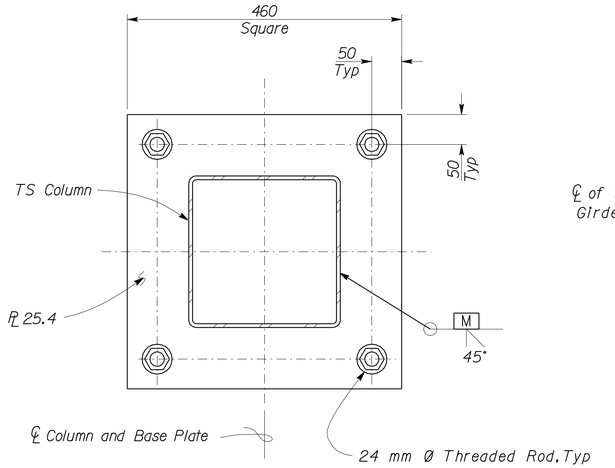

1 TS COLUMN BASE PLATE PLAN
Scale 1:5

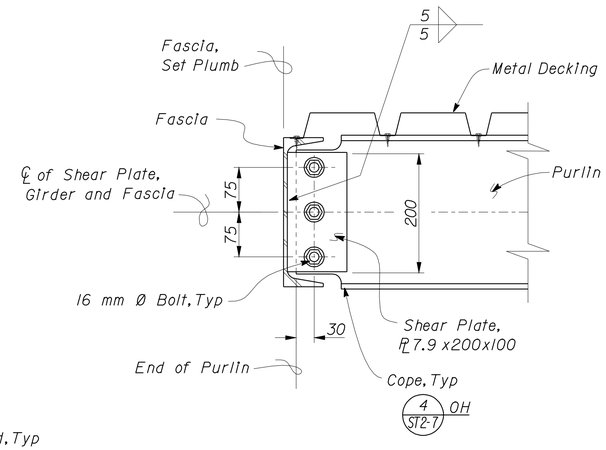

2 PURLIN TO FASCIA CONNECTION
Scale 1:5

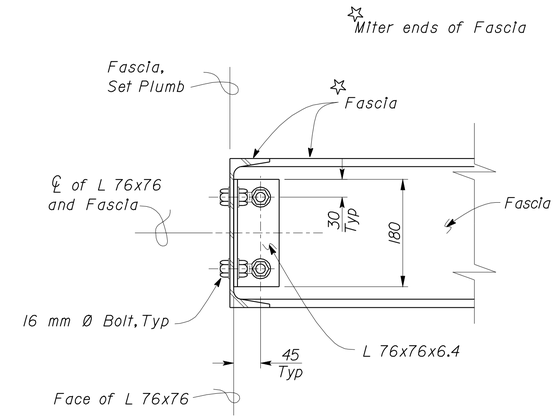

Note
Metal Decking not shown.

3 FASCIA TO FASCIA CONNECTION
Scale 1:5

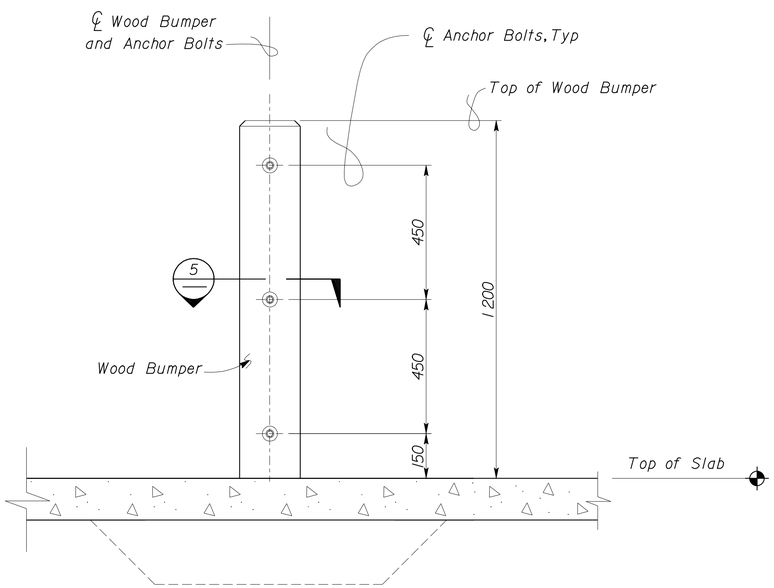

4 WOOD BUMPER DETAIL
Scale 1:10

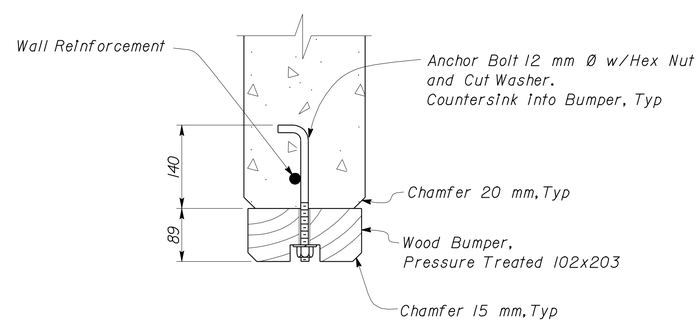

5 WOOD BUMPER SECTION
Scale 1:5

DESIGN	BY Edgardo Isidro	CHECKED Thomas Tong	
DETAILS	BY Aleksey Serin	CHECKED Edgardo Isidro	
QUANTITIES	BY	CHECKED	

STATE OF CALIFORNIA
DEPARTMENT OF TRANSPORTATION

DIVISION OF ENGINEERING SERVICES
ARCHITECTURAL AND STRUCTURAL DESIGN

BRIDGE NO. 50M5722
KM POST

TAFT MAINTENANCE STATION
MATERIALS STORAGE BIN
CANOPY DETAILS 2

SHEET ST2-8

DOES SD metric Rev. 9/02

SCALE: ALL DIMENSIONS ARE IN MILLIMETERS UNLESS OTHERWISE NOTED.

ORIGINAL SCALE IN MILLIMETERS FOR REDUCED PLANS 0 10 20 30 40 50 60 70 80 90 100

CU 06257
EA 483401

DISREGARD PRINTS BEARING EARLIER REVISION DATES → 03-28-06 07-26-06

REVISION DATES (PRELIMINARY STAGE ONLY) SHEET OF

23-MAR-2010 05:58

st2_08.dgn

DIST.	COUNTY	LOCATION CODE	KILOMETER POST TOTAL PROJECT	SHEET NO.	TOTAL SHEETS
06	Ker	5722		117	178

Caltrans Metric

REGISTERED CIVIL ENGINEER 03-30-07

REGISTERED PROFESSIONAL ENGINEER Edgardo A. Isidro No. 058507 Exp. 12-31-10 CIVIL STATE OF CALIFORNIA

3-8-10
PLANS APPROVAL DATE

The State of California or its officers or agents shall not be responsible for the accuracy or completeness of electronic copies of this plan sheet.

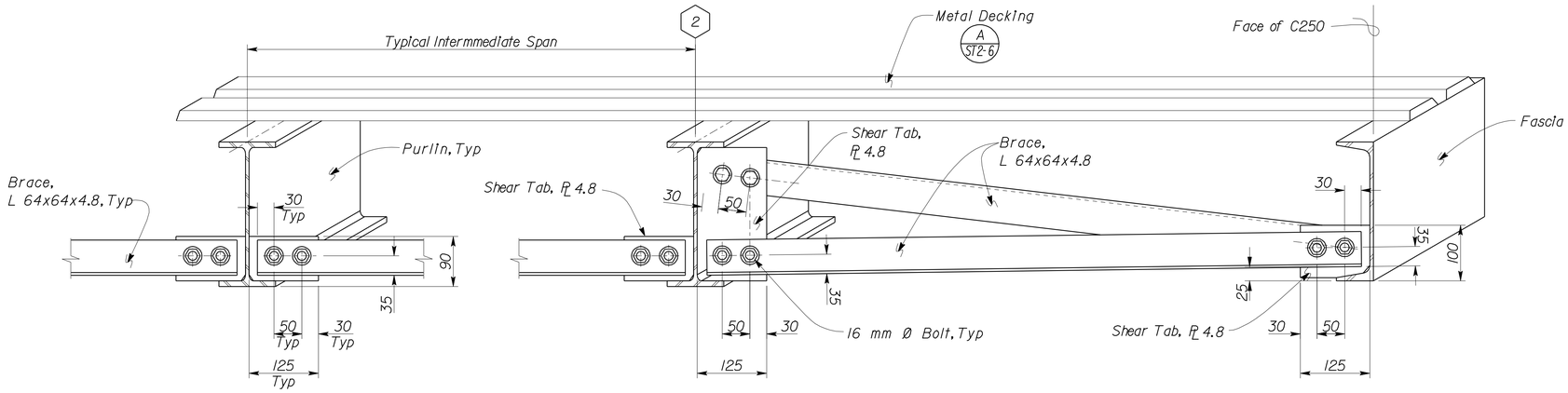

Note
For Welding Details see 2

1 CANOPY BRACE CONNECTION DETAIL

Scale 1:5

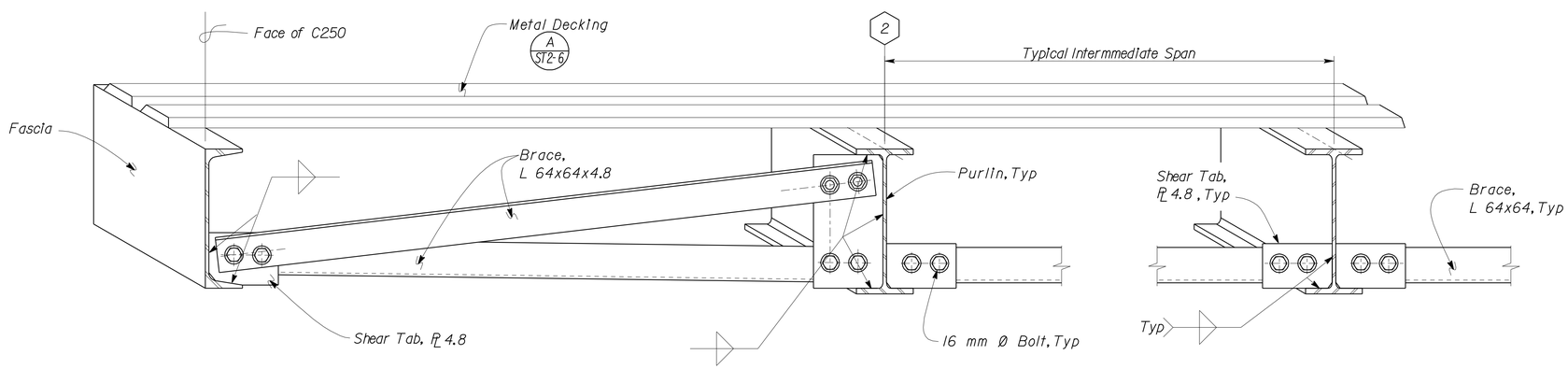

Note
For Dimensions see 1

2 CANOPY BRACE WELDING DETAIL

Scale 1:5

DESIGN	BY Edgardo Isidro	CHECKED Thomas Tong	
DETAILS	BY Aleksey Serin	CHECKED Edgardo Isidro	
QUANTITIES	BY	CHECKED	

STATE OF CALIFORNIA DEPARTMENT OF TRANSPORTATION

DIVISION OF ENGINEERING SERVICES ARCHITECTURAL AND STRUCTURAL DESIGN

BRIDGE NO. 50M5722
KM POST

TAFT MAINTENANCE STATION

MATERIALS STORAGE BIN

CANOPY DETAILS 3

SHEET **ST2-9**

DOES SD metric Rev. 9/02

SCALE: ALL DIMENSIONS ARE IN MILLIMETERS UNLESS OTHERWISE NOTED.

ORIGINAL SCALE IN MILLIMETERS FOR REDUCED PLANS 0 10 20 30 40 50 60 70 80 90 100

CU 06257
EA 483401

DISREGARD PRINTS BEARING EARLIER REVISION DATES → 03-28-06 07-26-06

REVISION DATES (PRELIMINARY STAGE ONLY) SHEET OF

23-MAR-2010 05:58

st2_09.dgn

DIST	COUNTY	LOCATION CODE	KILOMETER POST TOTAL PROJECT	SHEET NO.	TOTAL SHEETS
06	Ker	5722		118	178

Caltrans Metric

REGISTERED CIVIL ENGINEER — DATE 03-30-07

REGISTERED PROFESSIONAL ENGINEER — Edgardo A. Isidro — No. 058507 — Exp. 12-31-10 — CIVIL — STATE OF CALIFORNIA

3-8-10
PLANS APPROVAL DATE

The State of California or its officers or agents shall not be responsible for the accuracy or completeness of electronic copies of this plan sheet.

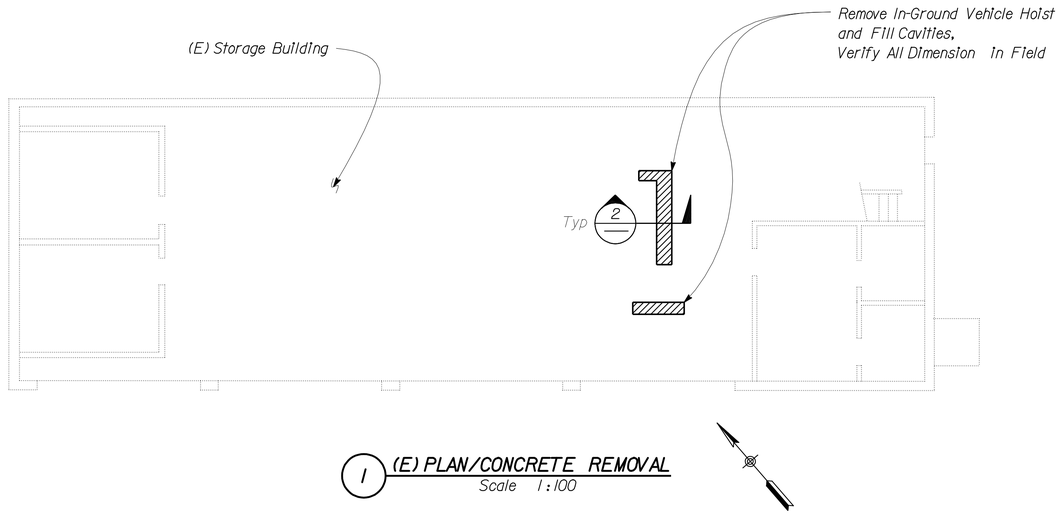

1 (E) PLAN/CONCRETE REMOVAL
Scale 1:100

Conc Removal

Remove and Recompact Soil

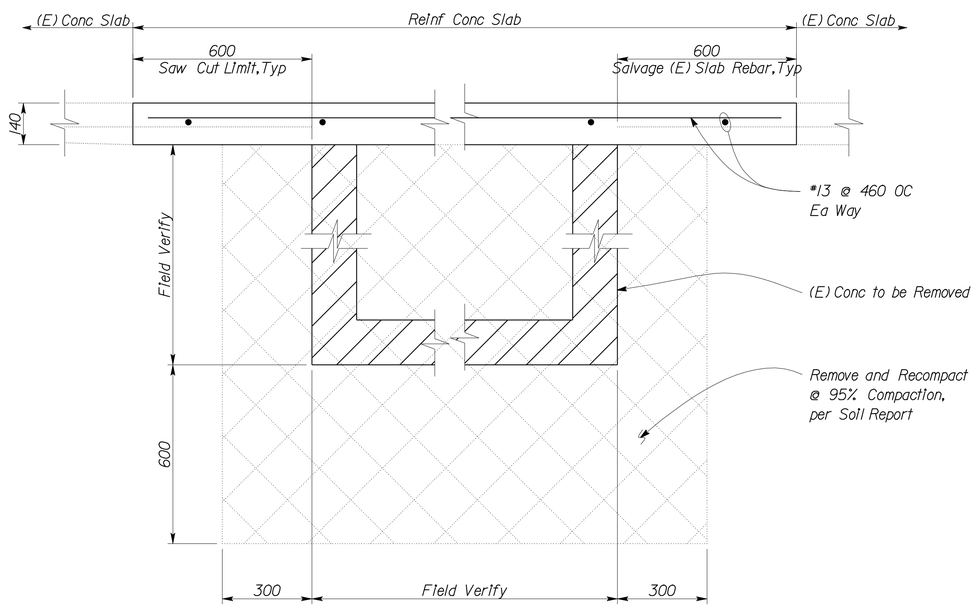

2 SECTION
Scale 1:10

DESIGN	BY Edgardo Isidro	CHECKED Thomas Tong	
DETAILS	BY Aleksey Serin	CHECKED Edgardo Isidro	
QUANTITIES	BY	CHECKED	

STATE OF CALIFORNIA
DEPARTMENT OF TRANSPORTATION

DIVISION OF ENGINEERING SERVICES
ARCHITECTURAL AND STRUCTURAL DESIGN

BRIDGE NO. 50M5722
KM POST

REMODELED STORAGE BUILDING

TAFT MAINTENANCE STATION

(E) PLAN/(E) VEHICLE HOIST REMOVAL

SHEET **ST3-1**

DOES SD metric Rev. 9/02

SCALE: ALL DIMENSIONS ARE IN MILLIMETERS UNLESS OTHERWISE NOTED.

ORIGINAL SCALE IN MILLIMETERS FOR REDUCED PLANS 0 10 20 30 40 50 60 70 80 90 100

CU 06257
EA 483401

DISREGARD PRINTS BEARING EARLIER REVISION DATES → 11-22-06

REVISION DATES (PRELIMINARY STAGE ONLY) | SHEET | OF

23-MAR-2010 05:58

st3_01.dgn

DIST	COUNTY	LOCATION CODE	KILOMETER POST TOTAL PROJECT	SHEET NO.	TOTAL SHEETS
06	Ker	5722		119	178

REGISTERED CIVIL ENGINEER — DATE 03-30-07

REGISTERED PROFESSIONAL ENGINEER — Edgardo A. Isidro — No. 058507 — Exp. 12-31-10 — CIVIL — STATE OF CALIFORNIA

3-8-10
PLANS APPROVAL DATE

The State of California or its officers or agents shall not be responsible for the accuracy or completeness of electronic copies of this plan sheet.

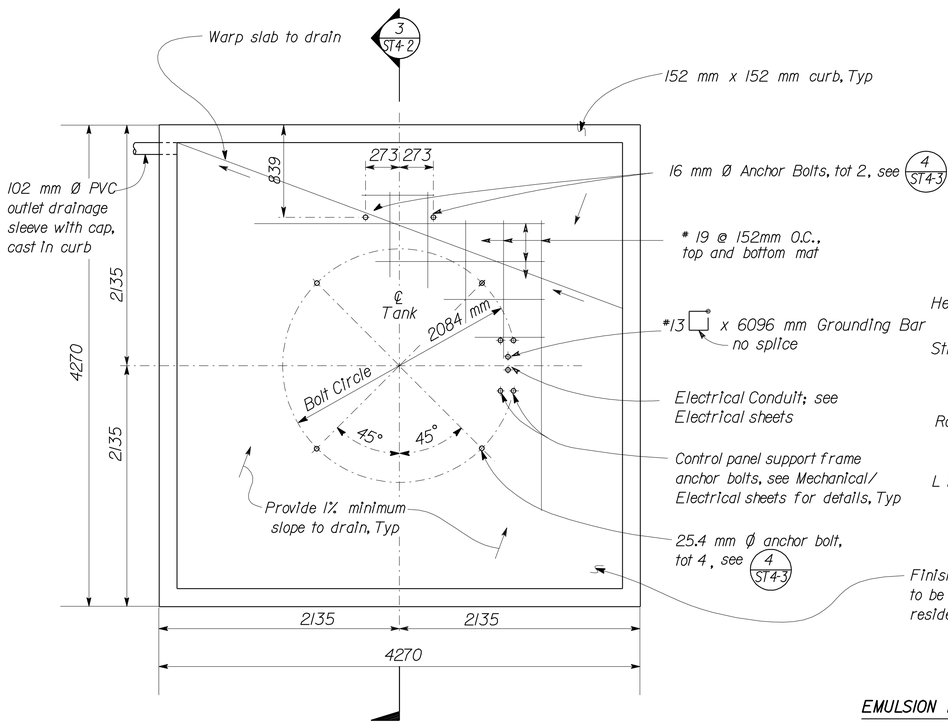

A **FOUNDATION PLAN**
No Scale
(Elevation to be determined by R.E., Reference Finish Floor Elevation=+0)

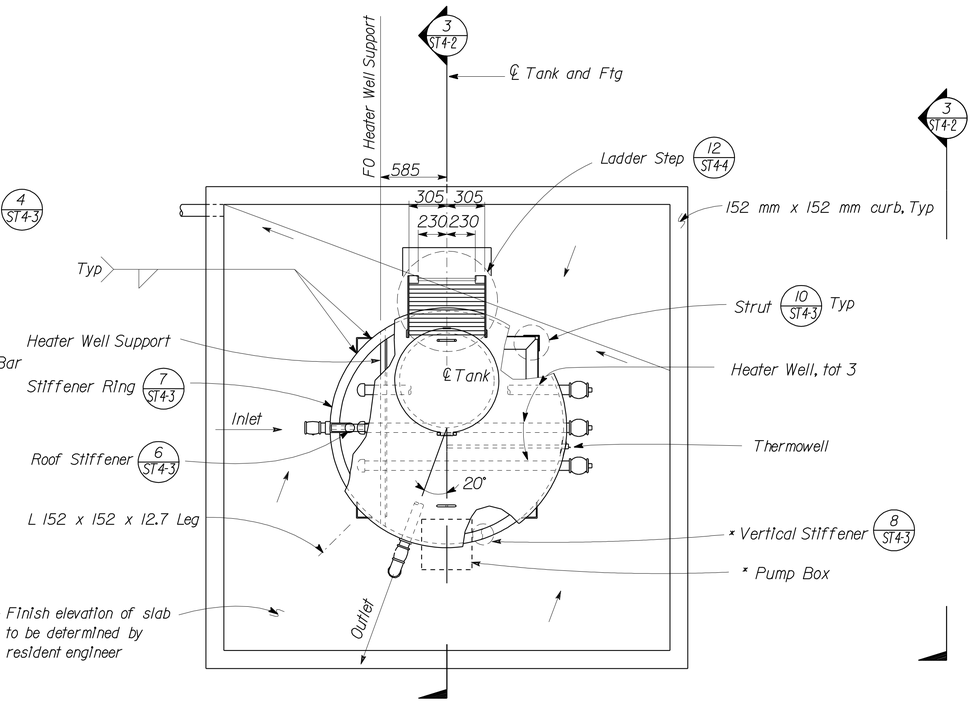

1 **TOP VIEW**
No Scale

EMULSION INLET AND OUTLET

76 mm Half Coupling, Nipple, and Ball Valve with stem turn sideways and long radius welding elbow

1 ST4-2

B **DESIGN NOTES**

1. Design: The building work on this project has been designed to conform to the 2007 California Building Code.

a. Loads :
Dead Loads : (Emulsion) =1150 kg/m ^{3}
Live Loads: Roof = 957 Pa
Wind Speed : 129 km/h , Exposure C
Seismic Design Criteria: D

b. Reinforced Concrete (Ultimate Strength Design) :
$f'c$ = 21 MPa
f_y = 420 MPa

c. Structural Steel (Working Stress Design) :
f_y = 345 MPa

d. Foundation :
Soils report dated: May 16, 2006 with addendum dated January 4, 2007
Allowable Soil Pressure (DL + LL) : 144,000 Pa (Assumed)
For Soil Classification, see Log of Test Borings Sheet: ST7-1

2. All bolts shall be A325 High Strength.

HEATER WELLS

Pipe 102 mm Standard with threaded ends, cap and tee with plug.

THERMOMETER BULB WELL

Pipe 19 mm Standard with exterior collar and plug.

* Required for tanks with pump, See Mechanical Sheets

DESIGN	BY Edgardo Isidro	CHECKED Thomas Tong	
DETAILS	BY Aleksey Serin	CHECKED Edgardo Isidro	
QUANTITIES	BY	CHECKED	

STATE OF CALIFORNIA
DEPARTMENT OF TRANSPORTATION

DIVISION OF ENGINEERING SERVICES
ARCHITECTURAL AND STRUCTURAL DESIGN

BRIDGE NO. 50M5722
KM POST

TAFT MAINTENANCE STATION
11,400 LITER EMULSION TANK
PLANS

SHEET **ST4-1**

DOES SD metric Rev. 9/02

SCALE: ALL DIMENSIONS ARE IN MILLIMETERS UNLESS OTHERWISE NOTED.

ORIGINAL SCALE IN MILLIMETERS FOR REDUCED PLANS 0 10 20 30 40 50 60 70 80 90 100

CU 06257
EA 483401

DISREGARD PRINTS BEARING EARLIER REVISION DATES → 03-29-06 01-08-07

REVISION DATES (PRELIMINARY STAGE ONLY) SHEET OF

23-MAR-2010 05:58
st4_01.dgn

DIST	COUNTY	LOCATION CODE	KILOMETER POST TOTAL PROJECT	SHEET NO.	TOTAL SHEETS
06	Ker	5722		120	178

Caltrans Metric

REGISTERED CIVIL ENGINEER — DATE 03-30-07

REGISTERED PROFESSIONAL ENGINEER — Edgardo A. Isidro — No. 058507 — Exp. 12-31-10 — CIVIL — STATE OF CALIFORNIA

3-8-10
PLANS APPROVAL DATE

The State of California or its officers or agents shall not be responsible for the accuracy or completeness of electronic copies of this plan sheet.

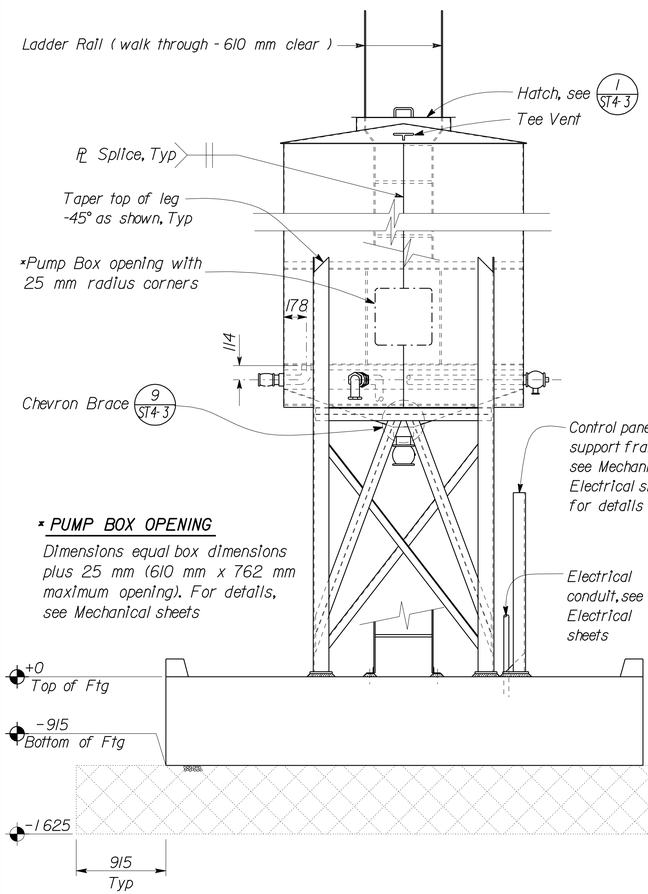

*** PUMP BOX OPENING**

Dimensions equal box dimensions plus 25 mm (610 mm x 762 mm maximum opening). For details, see Mechanical sheets

1 FRONT VIEW
No Scale

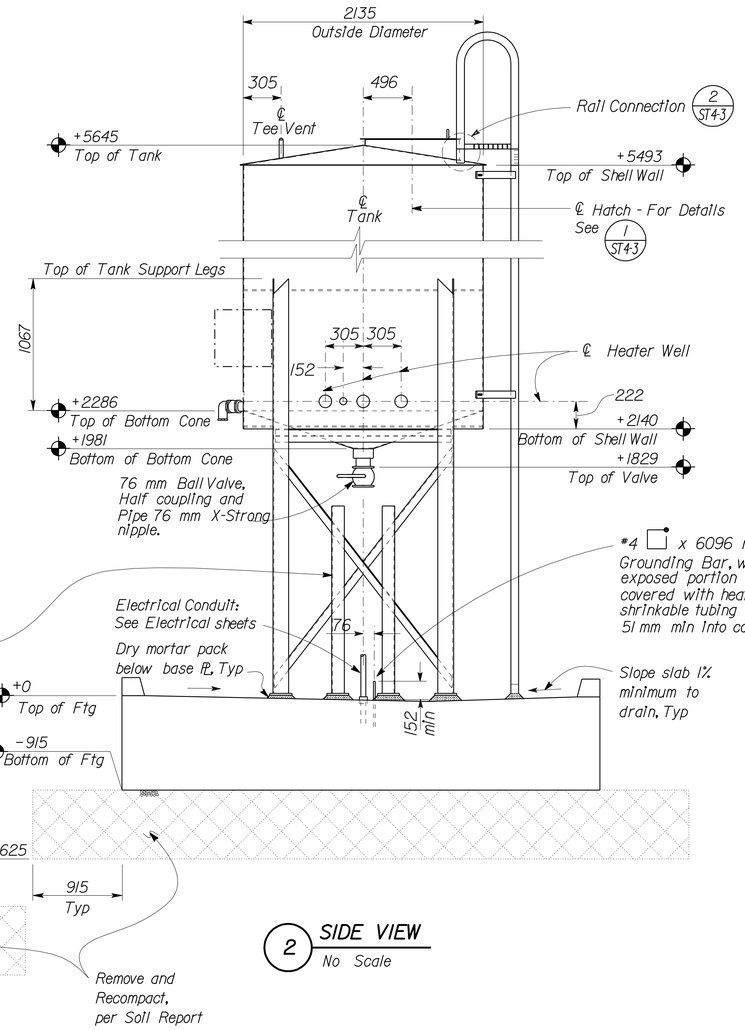

2 SIDE VIEW
No Scale

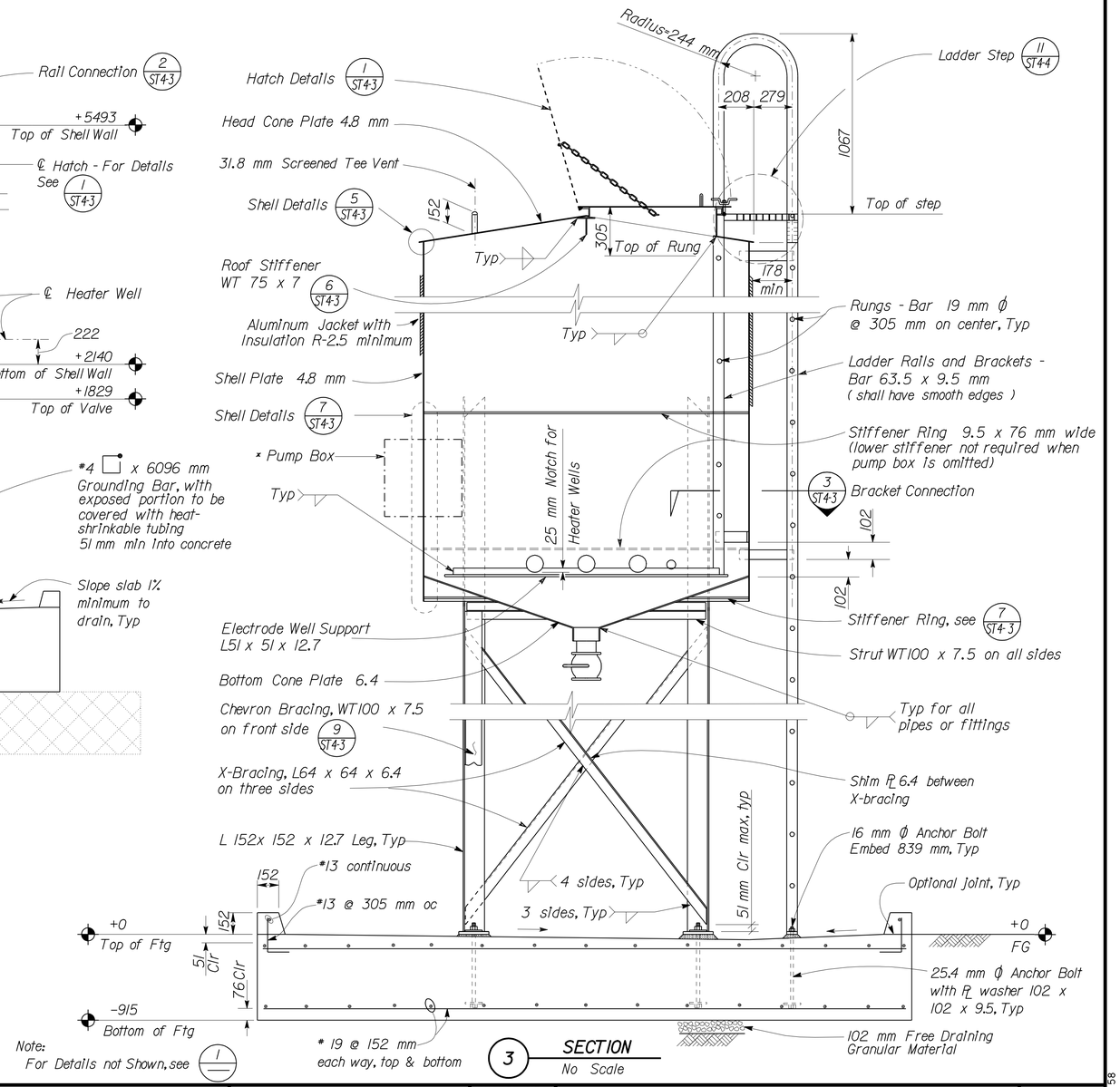

3 SECTION
No Scale

* Required for tanks with pump, see Mechanical sheets

Note: For Details not Shown, see 1/—

	BY		CHECKED
DESIGN	Edgardo Isidro		Thomas Tong
DETAILS	Aleksey Serin		Edgardo Isidro
QUANTITIES			

STATE OF CALIFORNIA
DEPARTMENT OF TRANSPORTATION

DIVISION OF ENGINEERING SERVICES
ARCHITECTURAL AND STRUCTURAL DESIGN

BRIDGE NO. 50M5722
KM POST

11,400 LITER EMULSION TANK

TAFT MAINTENANCE STATION

ELEVATION AND SECTION

SHEET **ST4-2**

DOES SD metric Rev. 9/02

SCALE: ALL DIMENSIONS ARE IN MILLIMETERS UNLESS OTHERWISE NOTED.

ORIGINAL SCALE IN MILLIMETERS FOR REDUCED PLANS 0 10 20 30 40 50 60 70 80 90 100

CU 06257
EA 483401

DISREGARD PRINTS BEARING EARLIER REVISION DATES → 03-29-06 01-08-07

REVISION DATES (PRELIMINARY STAGE ONLY) SHEET OF

23-MAR-2010 05:58

st4_02.dgn

DIST	COUNTY	LOCATION CODE	KILOMETER POST TOTAL PROJECT	SHEET NO.	TOTAL SHEETS
06	Ker	5722		121	178

Caltrans Metric

REGISTERED CIVIL ENGINEER — DATE 03-30-07

REGISTERED PROFESSIONAL ENGINEER — Edgardo A. Isidro — No. 058507 — Exp. 12-31-10 — CIVIL — STATE OF CALIFORNIA

3-8-10
PLANS APPROVAL DATE

The State of California or its officers or agents shall not be responsible for the accuracy or completeness of electronic copies of this plan sheet.

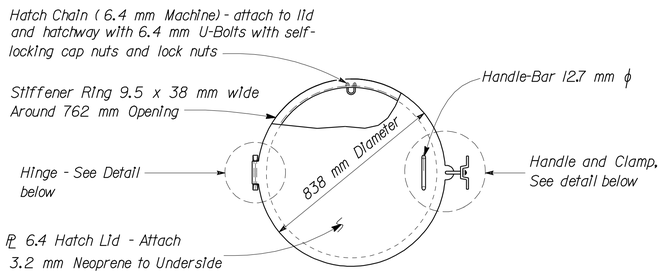

PLAN VIEW

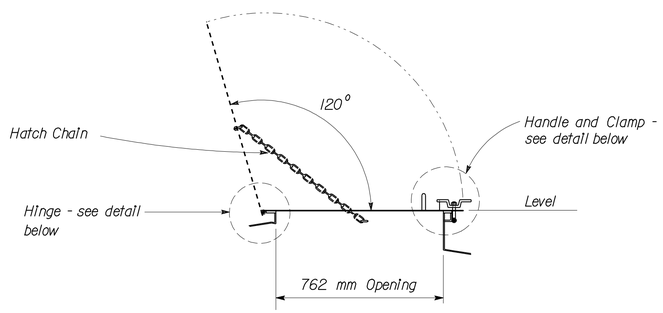

SECTION

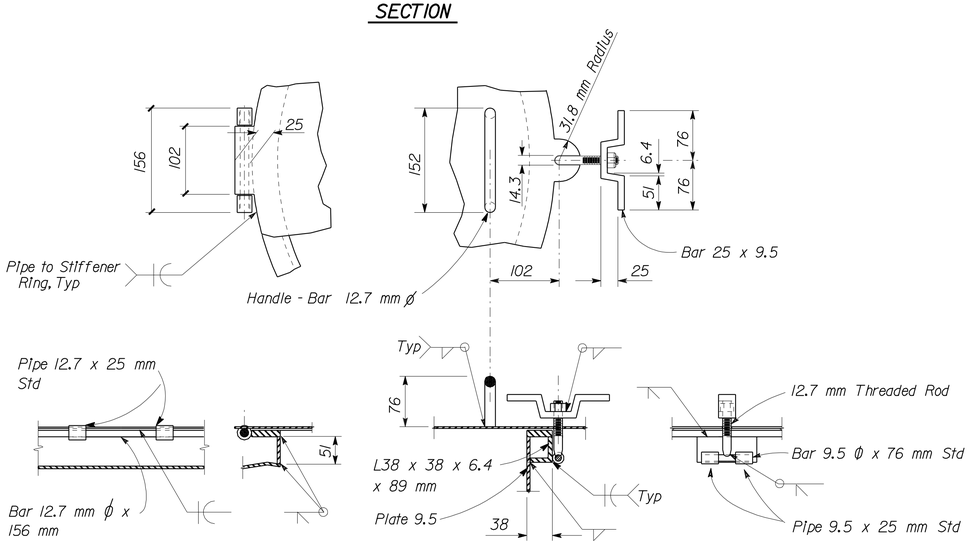

HINGE

HANDLE AND CLAMP

1 HATCH DETAILS
No Scale

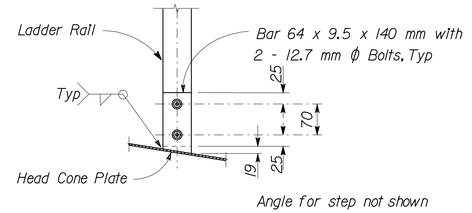

2 RAIL CONNECTION
No Scale

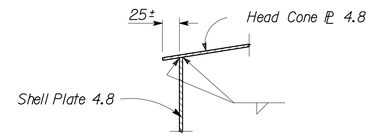

5 SHELL DETAILS
No Scale

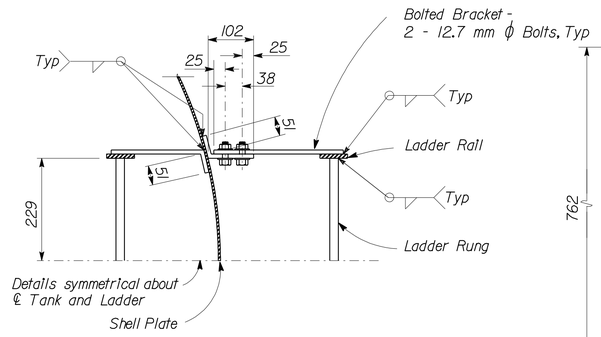

3 BRACKET CONNECTION
No Scale

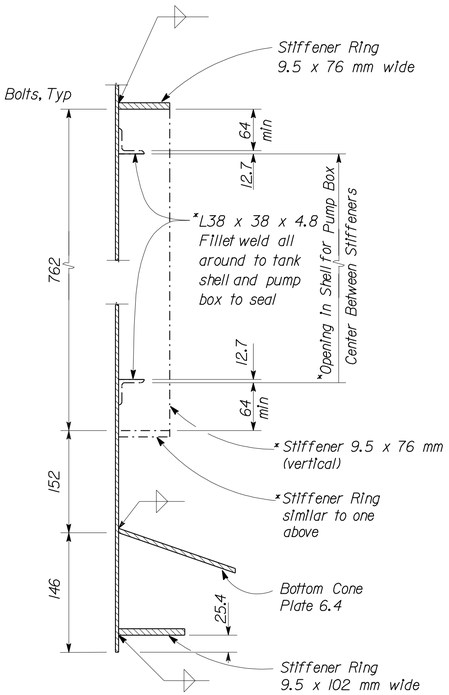

7 SHELL DETAILS
No Scale

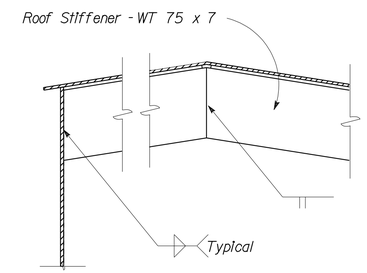

6 ROOF STIFFENER
No Scale

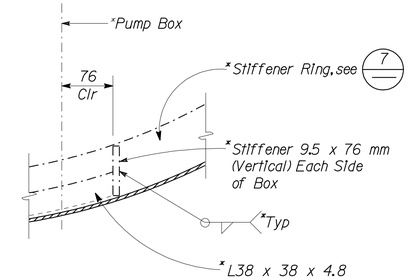

8 *VERTICAL STIFFENER
No Scale

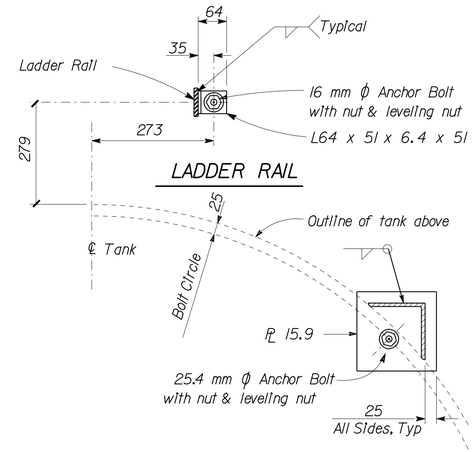

4 BASE DETAILS
No Scale

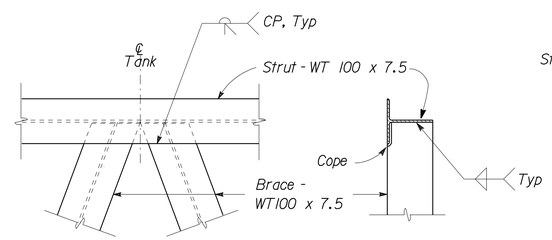

9 Chevron Brace
No Scale

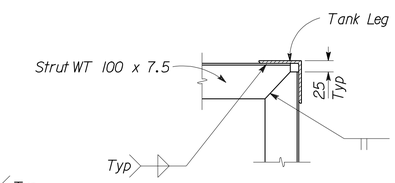

10 STRUT
No Scale

* Required for tanks with pump, see Mechanical Sheets

DESIGN	BY Edgardo Isidro	CHECKED Thomas Tong	
DETAILS	BY Aleksey Serin	CHECKED Edgardo Isidro	
QUANTITIES	BY	CHECKED	

STATE OF CALIFORNIA
DEPARTMENT OF TRANSPORTATION

DIVISION OF ENGINEERING SERVICES
ARCHITECTURAL AND STRUCTURAL DESIGN

BRIDGE NO. 50M5722
KM POST

TAFT MAINTENANCE STATION
11,400 LITER EMULSION TANK
DETAILS

SHEET ST4-3

DOES SD metric Rev. 9/02

SCALE: ALL DIMENSIONS ARE IN MILLIMETERS UNLESS OTHERWISE NOTED.

ORIGINAL SCALE IN MILLIMETERS FOR REDUCED PLANS 0 10 20 30 40 50 60 70 80 90 100

CU 06257
EA 483401

DISREGARD PRINTS BEARING EARLIER REVISION DATES → 03-29-06

REVISION DATES (PRELIMINARY STAGE ONLY) — SHEET — OF

23-MAR-2010 05:58

st4_03.dgn

DIST	COUNTY	LOCATION CODE	KILOMETER POST TOTAL PROJECT	SHEET NO.	TOTAL SHEETS
06	Ker	5722		122	178

Caltrans Metric

REGISTERED CIVIL ENGINEER — DATE 03-30-07

REGISTERED PROFESSIONAL ENGINEER — Edgardo A. Isidro — No. 058507 — Exp. 12-31-10 — CIVIL — STATE OF CALIFORNIA

3-8-10
PLANS APPROVAL DATE

The State of California or its officers or agents shall not be responsible for the accuracy or completeness of electronic copies of this plan sheet.

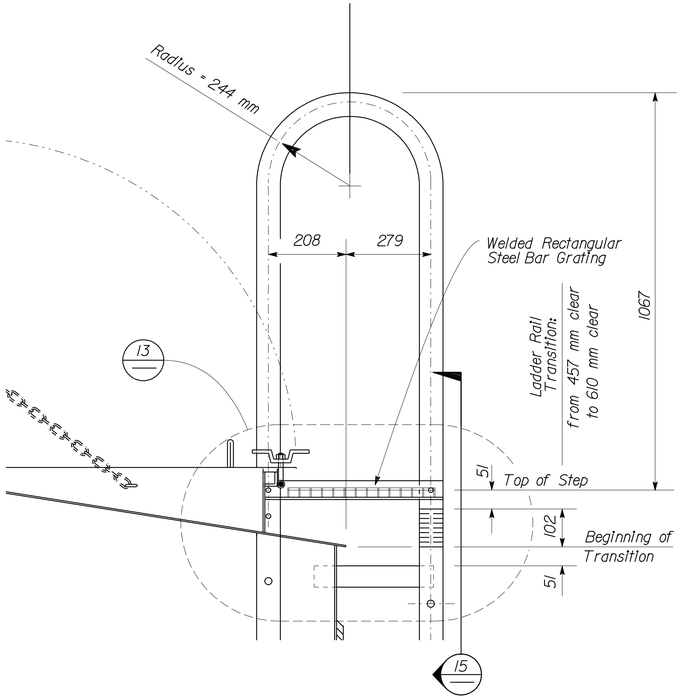

11 LADDER STEP SECTION
No Scale

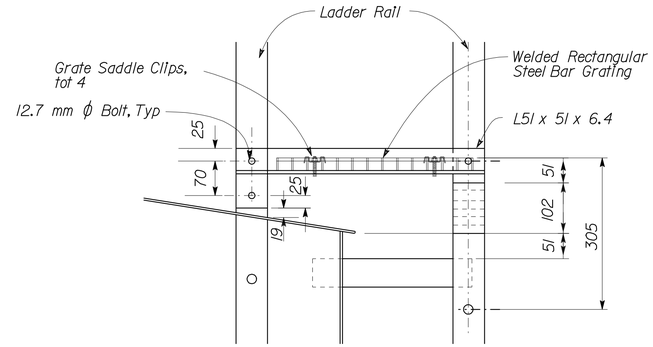

13 LADDER STEP DETAIL
No Scale

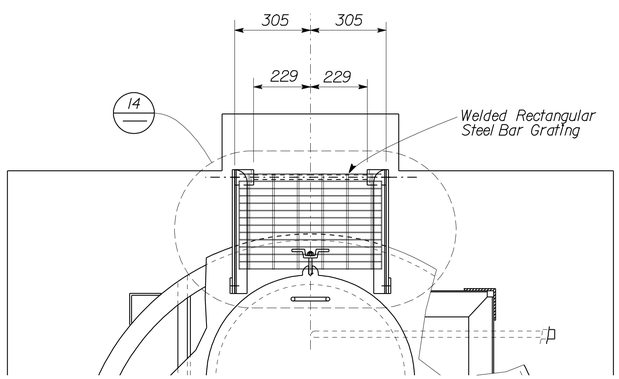

12 LADDER STEP PLAN
No Scale

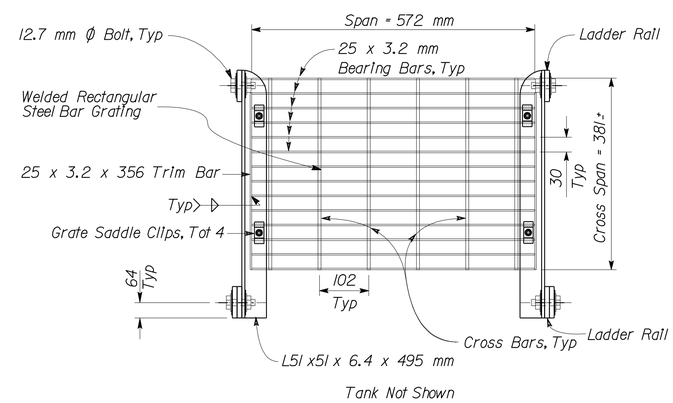

14 STEP & GRATING DETAIL
No Scale

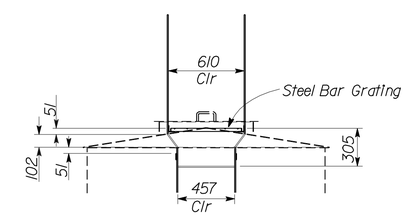

15 LADDER TRANSITION ELEVATION DETAIL
No Scale

DESIGN	BY Edgardo Isidro	CHECKED Thomas Tong	
DETAILS	BY Aleksey Serin	CHECKED Edgardo Isidro	
QUANTITIES	BY	CHECKED	

STATE OF CALIFORNIA
DEPARTMENT OF TRANSPORTATION

DIVISION OF ENGINEERING SERVICES
ARCHITECTURAL AND STRUCTURAL DESIGN

BRIDGE NO. 50M5722
KM POST

TAFT MAINTENANCE STATION
11,400 LITER EMULSION TANK
LADDER DETAILS

SHEET **ST4-4**

DOES SD metric Rev. 9/02

SCALE: ALL DIMENSIONS ARE IN MILLIMETERS UNLESS OTHERWISE NOTED.

ORIGINAL SCALE IN MILLIMETERS FOR REDUCED PLANS 0 10 20 30 40 50 60 70 80 90 100

CU 06257
EA 483401

DISREGARD PRINTS BEARING EARLIER REVISION DATES → 03-29-06

REVISION DATES (PRELIMINARY STAGE ONLY) SHEET OF

23-MAR-2010 05:58

st4_04.dgn

DIST	COUNTY	LOCATION CODE	KILOMETER POST TOTAL PROJECT	SHEET NO.	TOTAL SHEETS
06	Ker	5722		123	178

Caltrans Metric

REGISTERED CIVIL ENGINEER — DATE 03-30-07

REGISTERED PROFESSIONAL ENGINEER — Edgardo A. Isidro — No. 058507 — Exp. 12-31-10 — CIVIL — STATE OF CALIFORNIA

3-8-10
PLANS APPROVAL DATE

The State of California or its officers or agents shall not be responsible for the accuracy or completeness of electronic copies of this plan sheet.

1 (E) FOUNDATION PLAN
Scale 1:40

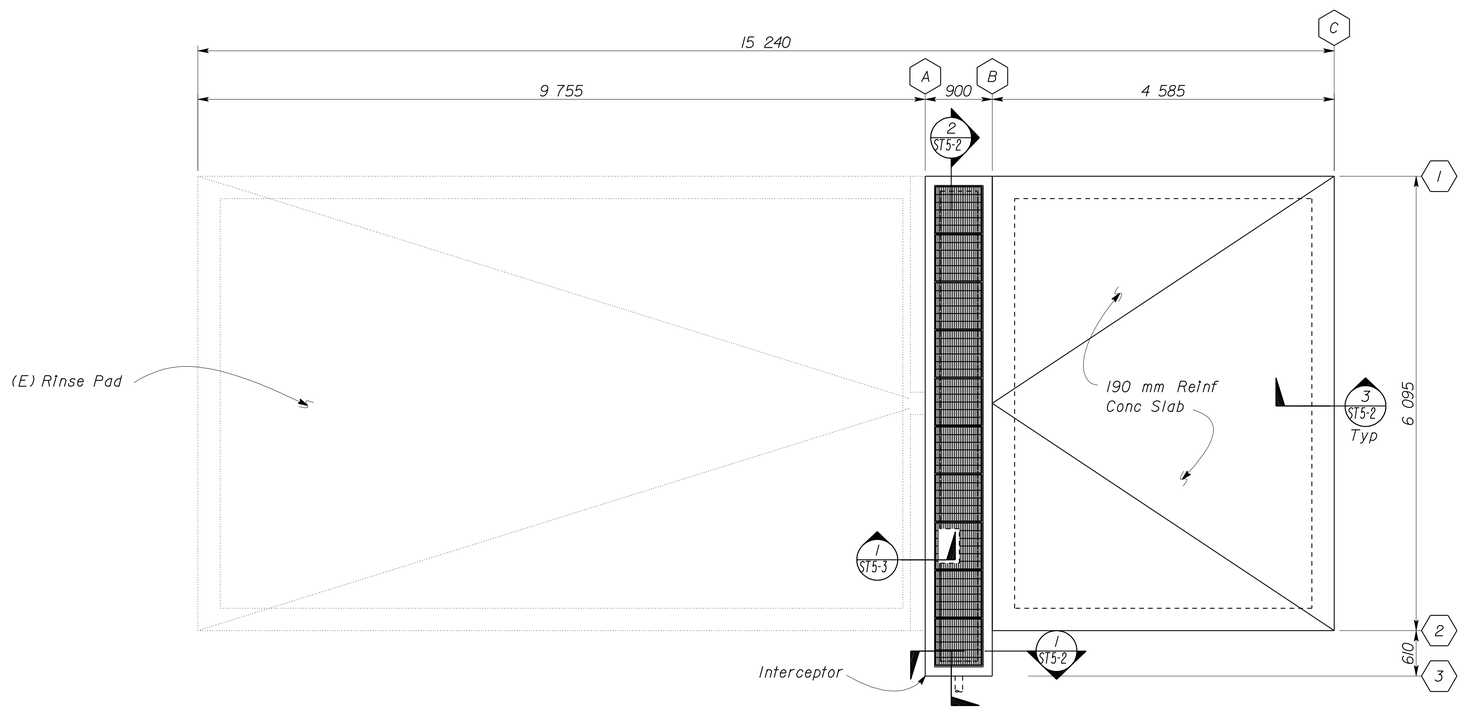

2 NEW FOUNDATION PLAN
Scale 1:40

A DESIGN NOTES

Design: Bridge Design Specifications 2006 AASHTO with Interims and revisions by Caltrans.

1. Loads: Equivalent Fluid Pressure = 4300 Pa
   HS20-44 and Alternative

2. Reinforced Concrete (Ultimate Strength Design)
   f'_c = 20.7 MPa
   f_y = 413.7 MPa

3. Redwood shall be clear heart grade

4. Metal Work Notes:
   All metal work shall be hot-dip galvanized after fabrication.

5. Foundation:
   Allowable Soil Pressure (DL + LL) : 144,000 Pa
   For Soil Classification see Log of Test Borings, Sheet ST7-1.

DESIGN	BY Edgardo Isidro	CHECKED Thomas Tong	
DETAILS	BY Aleksey Serin	CHECKED Edgardo Isidro	
QUANTITIES	BY	CHECKED	

STATE OF CALIFORNIA
DEPARTMENT OF TRANSPORTATION

DIVISION OF ENGINEERING SERVICES
ARCHITECTURAL AND STRUCTURAL DESIGN

BRIDGE NO. 50M5722
KM POST

TAFT MAINTENANCE STATION
RINSE PAD — FOUNDATION PLANS

SHEET **ST5-1**

DOES SD metric Rev. 9/02

SCALE: ALL DIMENSIONS ARE IN MILLIMETERS UNLESS OTHERWISE NOTED.

ORIGINAL SCALE IN MILLIMETERS FOR REDUCED PLANS 0 10 20 30 40 50 60 70 80 90 100

CU 06257
EA 483401

DISREGARD PRINTS BEARING EARLIER REVISION DATES → 06-20-06 08-10-06 08-29-06

REVISION DATES (PRELIMINARY STAGE ONLY) SHEET OF

23-MAR-2010 05:58

st5_01.dgn

DIST	COUNTY	LOCATION CODE	KILOMETER POST TOTAL PROJECT	SHEET NO.	TOTAL SHEETS
06	Ker	5722		124	178

Caltrans Metric

REGISTERED CIVIL ENGINEER — DATE 03-30-07

REGISTERED PROFESSIONAL ENGINEER — Edgardo A. Isidro — No. 058507 — Exp. 12-31-10 — CIVIL — STATE OF CALIFORNIA

3-8-10
PLANS APPROVAL DATE

The State of California or its officers or agents shall not be responsible for the accuracy or completeness of electronic copies of this plan sheet.

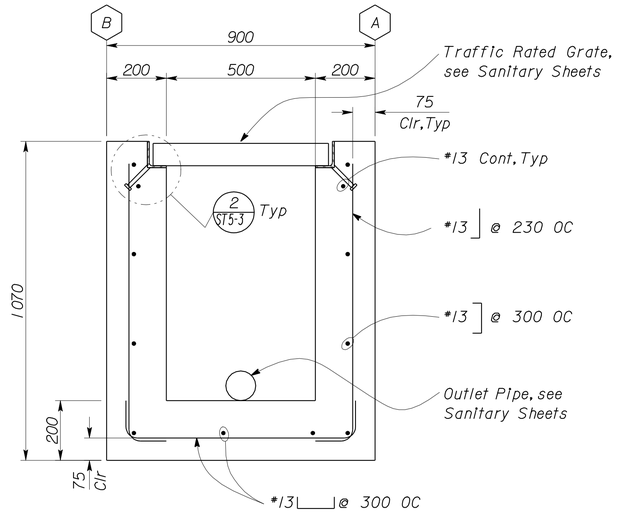

1 INTERCEPTOR CROSS SECTION
Scale 1:10

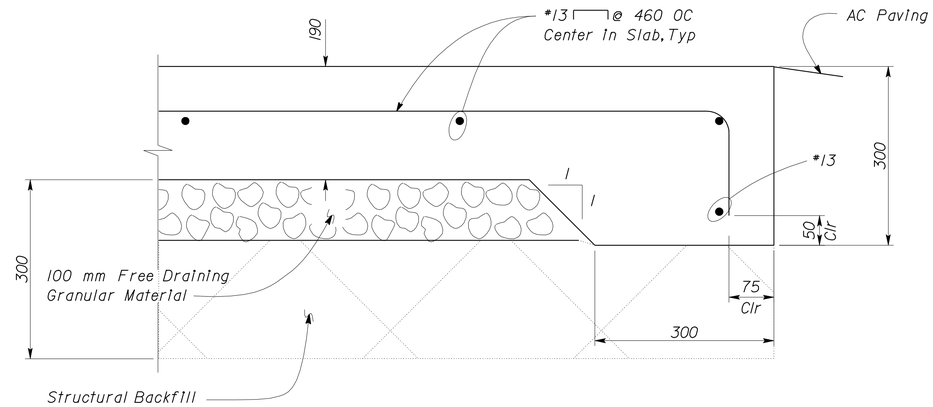

3 CONCRETE SLAB SECTION
Scale 1:5

A NOTE:

1. 95% Compaction for structural backfill.

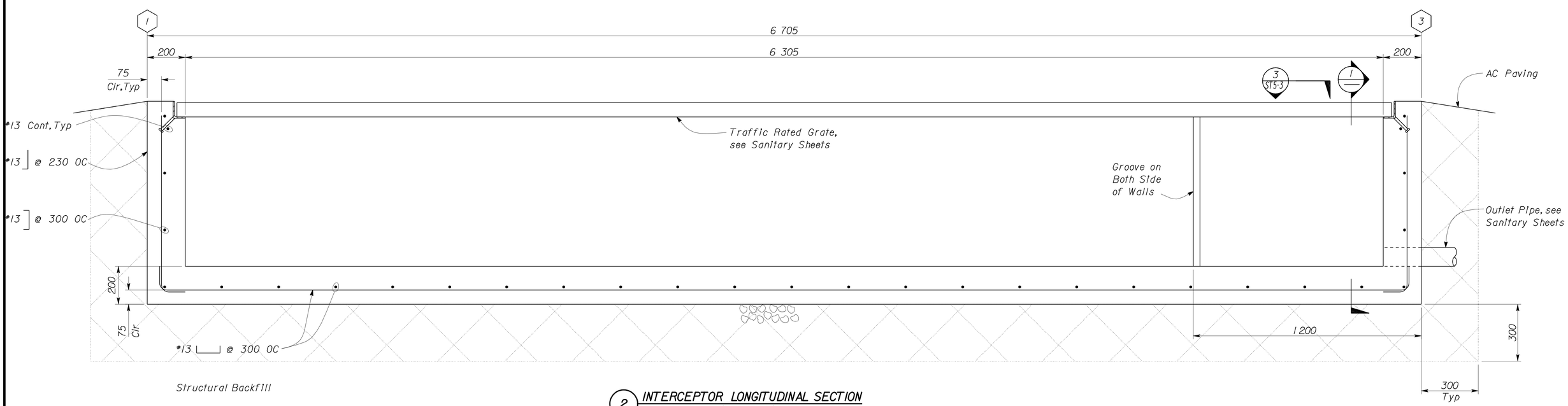

2 INTERCEPTOR LONGITUDINAL SECTION
Scale 1:10

DESIGN	BY Edgardo Isidro	CHECKED Thomas Tong	
DETAILS	BY Aleksey Serin	CHECKED Edgardo Isidro	
QUANTITIES	BY	CHECKED	

STATE OF CALIFORNIA
DEPARTMENT OF TRANSPORTATION

DIVISION OF ENGINEERING SERVICES
ARCHITECTURAL AND STRUCTURAL DESIGN

BRIDGE NO. 50M5722
KM POST

TAFT MAINTENANCE STATION

RINSE PAD

SECTIONS

SHEET ST5-2

DOES SD metric Rev. 9/02

SCALE: ALL DIMENSIONS ARE IN MILLIMETERS UNLESS OTHERWISE NOTED.

ORIGINAL SCALE IN MILLIMETERS FOR REDUCED PLANS 0 10 20 30 40 50 60 70 80 90 100

CU 06257
EA 483401

DISREGARD PRINTS BEARING EARLIER REVISION DATES → 08-10-06 08-29-06 02-01-07 03-05-07

REVISION DATES (PRELIMINARY STAGE ONLY) SHEET OF

23-MAR-2010 05:58

st5_02.dgn

DIST	COUNTY	LOCATION CODE	KILOMETER POST TOTAL PROJECT	SHEET NO.	TOTAL SHEETS
06	Ker	5722		125	178

Caltrans Metric

REGISTERED CIVIL ENGINEER — DATE 03-30-07

REGISTERED PROFESSIONAL ENGINEER Edgardo A. Isidro No. 058507 Exp. 12-31-10 CIVIL STATE OF CALIFORNIA

3-8-10
PLANS APPROVAL DATE

The State of California or its officers or agents shall not be responsible for the accuracy or completeness of electronic copies of this plan sheet.

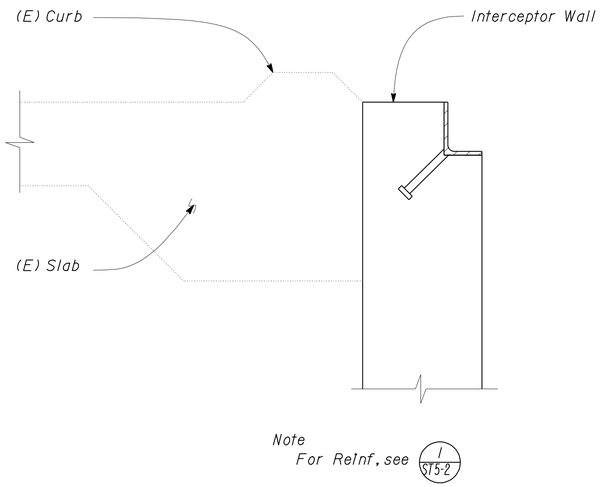

1 (E) SLAB TO TRENCH CONNECTION
Scale 1:5

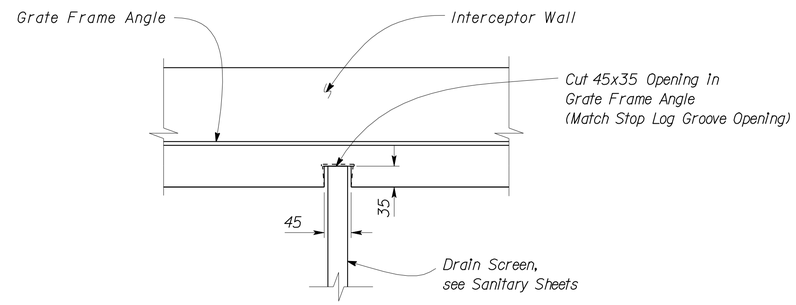

3 DRAIN SCREEN SECTION
Scale 1:5

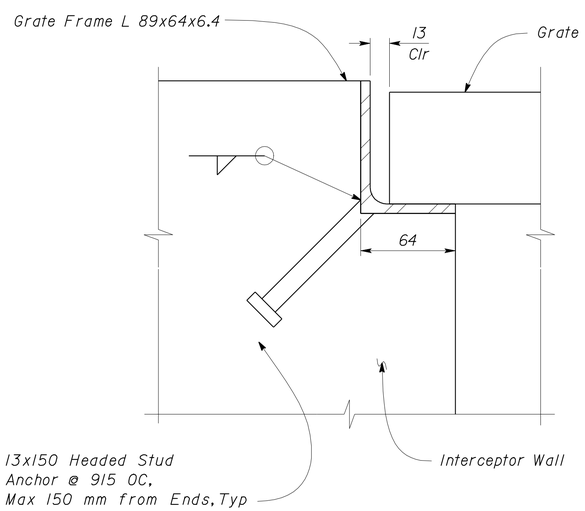

2 GRATE AT ANGLE SEAT
Scale 1:2

DESIGN	BY Edgardo Isidro	CHECKED Thomas Tong	
DETAILS	BY Aleksey Serin	CHECKED Edgardo Isidro	
QUANTITIES	BY	CHECKED	

STATE OF CALIFORNIA
DEPARTMENT OF TRANSPORTATION

DIVISION OF ENGINEERING SERVICES
ARCHITECTURAL AND STRUCTURAL DESIGN

BRIDGE NO. 50M5722
KM POST

TAFT MAINTENANCE STATION

RINSE PAD

DETAILS

SHEET ST5-3

DOES SD metric Rev. 9/02

SCALE: ALL DIMENSIONS ARE IN MILLIMETERS UNLESS OTHERWISE NOTED.

ORIGINAL SCALE IN MILLIMETERS FOR REDUCED PLANS 0 10 20 30 40 50 60 70 80 90 100

CU 06257
EA 483401

DISREGARD PRINTS BEARING EARLIER REVISION DATES → 08-10-06 08-29-06

REVISION DATES (PRELIMINARY STAGE ONLY) SHEET OF

23-MAR-2010 05:58

st5_03.dgn

DIST	COUNTY	LOCATION CODE	KILOMETER POST TOTAL PROJECT	SHEET NO.	TOTAL SHEETS
06	Ker	5722		126	178

REGISTERED CIVIL ENGINEER — DATE 03-30-07

REGISTERED PROFESSIONAL ENGINEER — Edgardo A. Isidro — No. 058507 — Exp. 12-31-10 — CIVIL — STATE OF CALIFORNIA

3-8-10
PLANS APPROVAL DATE

The State of California or its officers or agents shall not be responsible for the accuracy or completeness of electronic copies of this plan sheet.

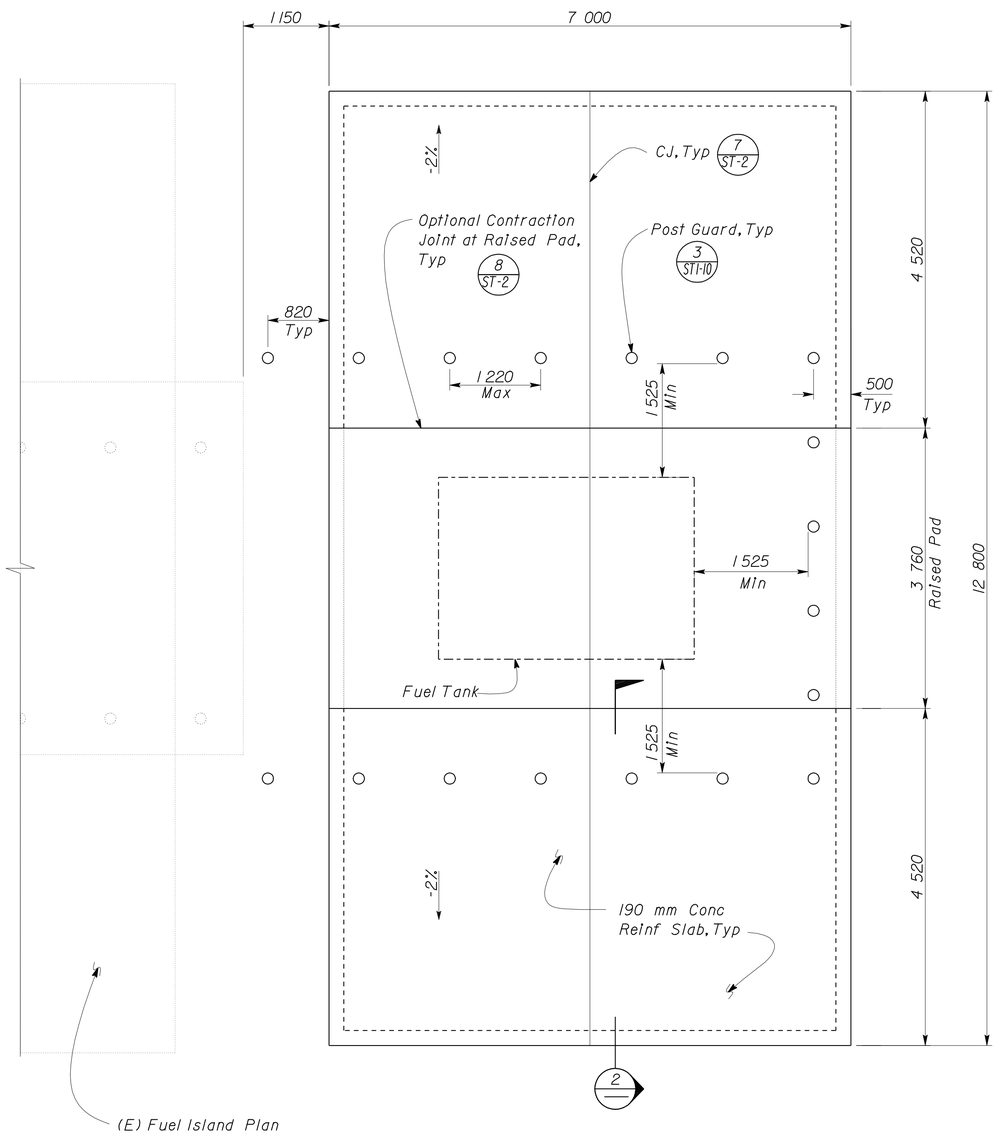

1 FUEL ISLAND PLAN
Scale 1:40

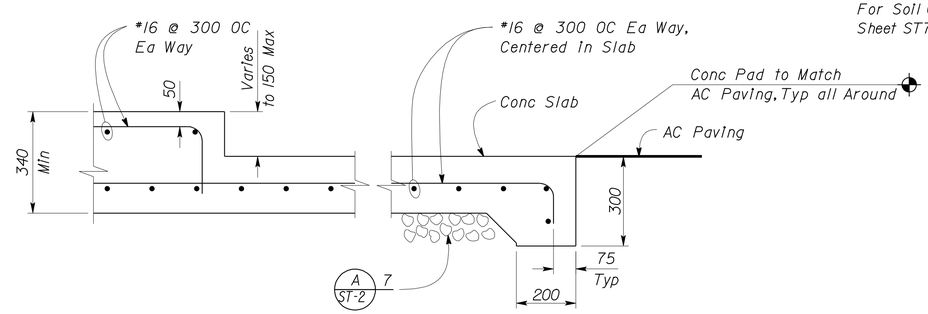

2 SLAB SECTION
Scale 1:10

A DESIGN NOTES

Design: Bridge Design Specifications 2006 AASHTO with Interims and revisions by Caltrans.

1. Reinforced Concrete (Ultimate Strength Design):
   $f'c$ = 21 MPa
   fy = 420 MPa

2. Foundation :
   Allowable Soil Pressure (DL + LL): 144,000 Pa
   For Soil Classification see Log of Test Borings, Sheet ST7-1

DESIGN	BY Edgardo Isidro	CHECKED Thomas Tong	
DETAILS	BY Aleksey Serin	CHECKED Edgardo Isidro	
QUANTITIES	BY	CHECKED	

STATE OF CALIFORNIA
DEPARTMENT OF TRANSPORTATION

DIVISION OF ENGINEERING SERVICES
ARCHITECTURAL AND STRUCTURAL DESIGN

BRIDGE NO. 50M5722
KM POST

TAFT MAINTENANCE STATION
FUEL TANK ISLAND — FUEL TANK ISLAND PLAN AND SECTION

SHEET **ST6-1**

DOES SD metric Rev. 9/02

SCALE: ALL DIMENSIONS ARE IN MILLIMETERS UNLESS OTHERWISE NOTED.

ORIGINAL SCALE IN MILLIMETERS FOR REDUCED PLANS 0 10 20 30 40 50 60 70 80 90 100

CU 06257
EA 483401

DISREGARD PRINTS BEARING EARLIER REVISION DATES → 12-07-06 12-08-06 01-08-07 02-01-07 04-23-07

REVISION DATES (PRELIMINARY STAGE ONLY) — SHEET — OF

23-MAR-2010 05:59

st6_01.dgn

DIST	COUNTY	LOCATION CODE	KILOMETER POST TOTAL PROJECT	SHEET No.	TOTAL SHEETS
06	Ker	5722		127	178

REGISTERED CIVIL ENGINEER 6-1-06

3-8-10
PLANS APPROVAL DATE

REGISTERED PROFESSIONAL ENGINEER Michael J. Engelmann No. C65300 Exp. 9-30-09 CIVIL STATE OF CALIFORNIA

The State of California or its officers or agents shall not be responsible for the accuracy or completeness of electronic copies of this plan sheet.

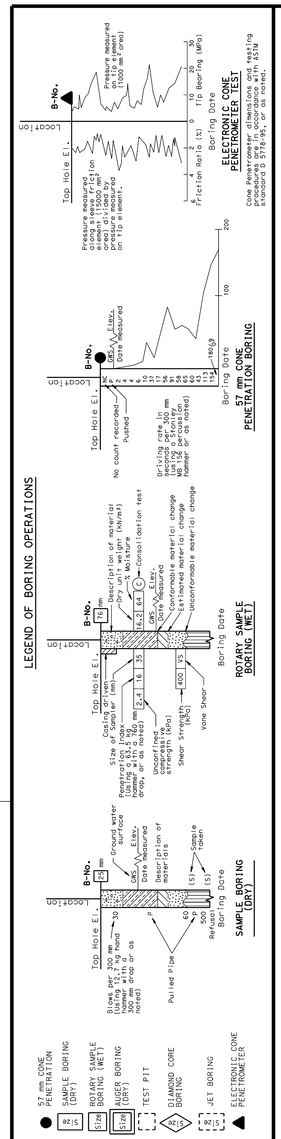

OGS CIVIL LOG OF TEST BORINGS SHEET (METRIC) (REV. 4/04)

BENCH MARK

Boring elevations were approximated using California Department of Transportation surveys and topographic maps dated 6/17/05.

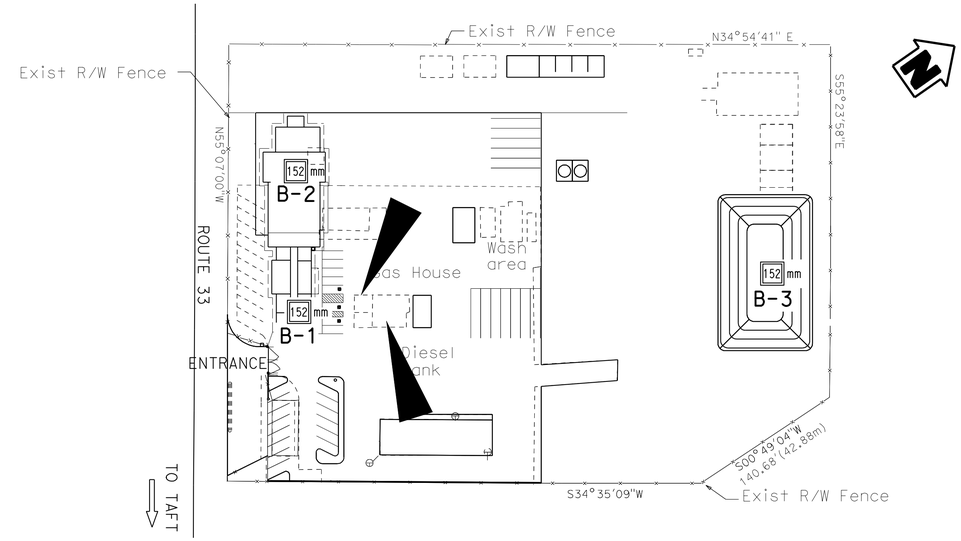

PLAN

Not to scale

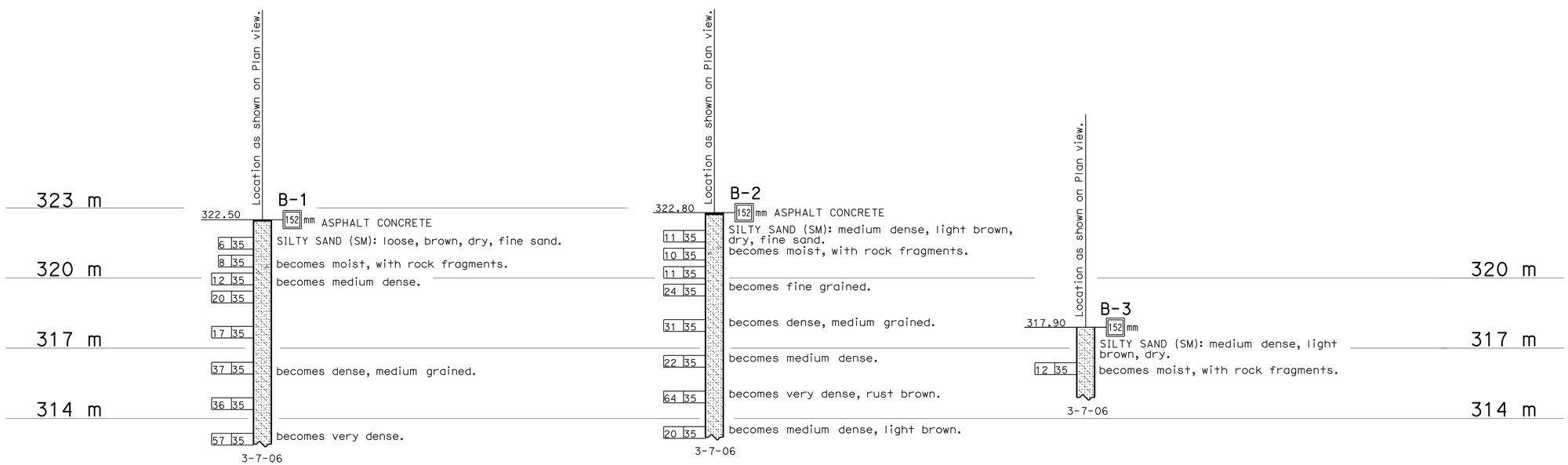

PROFILE

HOR. Not to scale
VER. 1:100

Caltrans Metric	ENGINEERING SERVICES	GEOTECHNICAL SERVICES	FIELD INVESTIGATION BY:	STATE OF CALIFORNIA DEPARTMENT OF TRANSPORTATION	DIVISION OF ENGINEERING SERVICES STRUCTURE DESIGN	BRIDGE NO.	TAFT MAINTENANCE STATION	ST7-1
	DRAWN BY I. G-Remmen 5/06		M. Engelmann		DESIGN BRANCH	KILOMETER POST 20.3/32.7	LOG OF TEST BORINGS	
	CHECKED BY							

ALL DIMENSIONS ARE IN METERS UNLESS OTHERWISE SHOWN

ORIGINAL SCALE IN MILLIMETERS FOR REDUCED PLANS 0 10 20 30 40 50 60 70 80 90 100

CU 06
EA 483401

DISREGARD PRINTS BEARING EARLIER REVISION DATES

REVISION DATES (PRELIMINARY STAGE ONLY) 05-31-06

SHEET OF

FILE => st7_01.dgn

USERNAME => trmikesi DATE PLOTTED => 23-MAR-2010 TIME PLOTTED => 05:59

DIST	COUNTY	LOCATION CODE	KILOMETER POST TOTAL PROJECT	SHEET No.	TOTAL SHEETS
06	Ker	5722		128	178

REGISTERED ENGINEER-MECHANICAL — 00-00-00 DATE

3-8-10
PLANS APPROVAL DATE

REGISTERED PROFESSIONAL ENGINEER — Jack Wheeler — No. M21648 — Exp. 6-30-09 — MECH — STATE OF CALIFORNIA

The State of California or its officers or agents shall not be responsible for the accuracy or completeness of electronic copies of this plan sheet.

Caltrans Metric

CALIFORNIA STATE FIRE MARSHAL APPROVED
Approval of this plan does not authorize or approve any omission or deviation from applicable regulations. Final approval is subject to field inspection. One set of approved plans shall be available on the project site at all times.
Reviewed by: JEFFERY SCHWARTZ
Approval date: 03/08/10

PLUMBING

- Cold Water
- A — Compressed Air
- F — Fire Service Water Line
- G — Gas
- D — Equipment Drain
- RD — Roof Drain
- OD — Overflow Drain
- RWL — Rain Water Leader
- Hot Water
- R — Relief Valve Discharge Pipe
- S — Sewer Line
- Sanitary Sewer (above grade)
- Sewer Line
- Sanitary Sewer Vent
- L — Lube Lines
- LPG — Fuel Lines

PIPE FITTINGS AND VALVES

- Cap, Threaded
- Elbow, Turned Down
- Elbow, Turned Up
- Reducer, Concentric
- Pressure Gauge (with gage cock and Snubber)
- Strainer
- Union
- Union, Insulating
- Valve, Ball
- Valve, Check
- Valve, Gas
- Valve, Gate
- Valve, Safety Relief
- Valve, Pressure Reducing
- Valve, Pressure/Temperature Relief
- Water Hammer Arrestor

HEATING, VENTILATING AND AIR CONDITIONING

- Balance Damper
- Flexible Duct
- EA — Exhaust Air
- RA — Return Air
- SA — Supply Air
- SIZE — Exhaust Register
- or SIZE — Return Register, see note
- or SIZE L/s — Supply Diffuser, see note
- Register/Balance Damper, see note
- Fire Damper
- D — Zone Damper
- T — Thermostat
- TS — Time Switch
- EF — Exhaust Fan
- FE — Fire Extinguisher
- CHL — Combination, Heat and Light

THIS SHEET ACCURATE FOR MECHANICAL WORK ONLY

MISCELLANEOUS

- L — Angle
- ℄ — Centerline
- Ø — Diameter
- Section / Elevation Letter
- Sheet Number
- Detail Number
- Sheet Number

NOTE Ceiling registers and diffusers are identified by duct connection neck size

MECHANICAL ABBREVIATIONS:

AC	Air Compressor
ABS	Acrylonitrile Butadiene Styrene
AC	Air Compressor
AD	Air Drop
AP	Alternative Pipe
ATF	Automatic Transmission Fluid
BFP	Backflow Preventer
BLDG	Building
BV	Balancing Valve
°C	Celsius Temperature
Cap.	Capacity
CHL	Combination Heat / Light
CI	Cast-Iron
CO	Cleanout
COTF	Cleanout Through Floor
COTG	Cleanout Through Grade
COTW	Cleanout To Wall
CPS	Circulation Pump System
CV	Check Valve
CW	Cold Water
D	Zone Damper
DB	Dry Bulb
Dia.	Diameter
DP	Damper
DWV	Drain / Waste / Vent
(E)	Existing
EA	Exhaust Air
EEW	Emergency Eye wash and Shower
EF	Exhaust Fan
EL	Elevation
Elect.	Electrical
ESP	External Static Pressure
EWC	Electric Water Cooler
EWH	Electric Water Heater
FC	Flexible Connection
FDP	Fire Damper
FD	Floor Drain
FE	Fire Extinguisher
FEF	Fume Exhaust Fan
FG	Finish Grade
FL	Flow Line
FM	Force Main
FS	Float Switch
FTR	Flue through roof
FW	Fire Water Supply
GA	Gauge
GALV	Galvanized
GH	Ground Hydrant
GLV	Globe Valve
GSP	Galvanized Steel Pipe
GV	Gate Valve
GWH	Gas Water Heater
GYP	Gypsum
H	Height
HB	Hydrant Box
H/C	Hot Water, High Pressure Cleaner
HF	Hose Faucet
HP	Heat Pump
HVL	Heat, Vent, and Light
HVAC	Heating, Ventilating And Air Conditioning
HW	Hot Water
HZ	Hertz
ID	Inside Diameter
IE	Invert Elevation
KS	Kitchen Sink
kW	Kilowatt
LAV	Lavatory
L/s	Liters per Second
m	Meter
MAN	Manhole
MAX	Maximum
MIN	Minimum
mm	Millimeter
MS	Mop Sink
(N)	New
NIC	Not In Contract
NO	Number
NPS	National Pipe Standard
OA	Outside Air
OC	On Center
OD	Outside Diameter
OG	Original Ground
PH	Phase
POC	Point of Connection
PRV	Pressure Reducing Valve
PVC	Polyvinyl Chloride
RA	Return Air
RE	Refrigerator
RD	Roof Drain
REG	Register
REQ	Required
RH	Radiant Heater
RPM	Revolutions per Minute
RV	Relief Valve
S/S	Service Sink
SA	Supply Air
SCH	Schedule
SHR	Shower
SP	Sewer Pipes
S.P.	Static pressure
SS	Sanitary Sewer
SST	Stainless Steel
TCV	Temperature Control Valve
TP	Trap Primer
TOT	Total
TS	Time Switch
Typ	Typical
UH	Unit Heater
UR	Urinal
V	Vent
VTR	Vent Thru Roof
W	Width
W/	With
W/O	Without
WB	Wet Bulb
WC	Water Closet
WH	Water Heater
W.H.	Wall Hydrant
WHA	Water Hammer Arrestor

ALL DIMENSIONS SHOWN IN MILLIMETERS, EXCEPT AS NOTED

	BY	CHECKED
DESIGN	W. Thomas Hughes	Alvin Kwan
DETAILS	W. Thomas Hughes	Alvin Kwan
QUANTITIES	W. Thomas Hughes	Alvin Kwan

STATE OF CALIFORNIA
DEPARTMENT OF TRANSPORTATION

DIVISION OF ENGINEERING SERVICES
ELECTRICAL-MECHANICAL-WATER AND WASTEWATER DESIGN

BRIDGE NO. 50M5722
KM POST

TAFT MAINTENANCE STATION

ABBREVIATION & LEGEND

SHEET **M1-0**

DOS ELEC (10/98) FILE => m010.dgn
DATE PLOTTED => 23-MAR-2010 TIME PLOTTED => 05:59

ORIGINAL SCALE IN MILLIMETERS FOR REDUCED PLANS 0 10 20 30 40 50 60 70 80 90 100

CU 06257
EA 483401

DISREGARD PRINTS BEARING EARLIER REVISION DATES

REVISION DATES (PRELIMINARY STAGE ONLY) 03-31-06 06-19-06 07-28-06 10-30-06 11-30-06 01-29-07 03-30-07 05-11-07 10-10-08

SHEET OF

FILE => m010.dgn

USERNAME => trmikesl DATE PLOTTED => 23-MAR-2010 TIME PLOTTED => 05:59

V|=|

DIST	COUNTY	LOCATION CODE	KILOMETER POST TOTAL PROJECT	SHEET No.	TOTAL SHEETS
06	Ker	5722		129	178

REGISTERED ENGINEER-MECHANICAL 00-00-00 DATE

3-8-10
PLANS APPROVAL DATE

REGISTERED PROFESSIONAL ENGINEER Jack Wheeler No. M21648 Exp. 6-30-09 MECH STATE OF CALIFORNIA

The State of California or its officers or agents shall not be responsible for the accuracy or completeness of electronic copies of this plan sheet.

CALIFORNIA STATE FIRE MARSHAL APPROVED

Approval of this plan does not authorize or approve any omission or deviation from applicable regulations. Final approval is subject to field inspection. One set of approved plans shall be available on the project site at all times.

Reviewed by: JEFFERY SCHWARTZ

Approval date: 03/08/10

Caltrans Metric

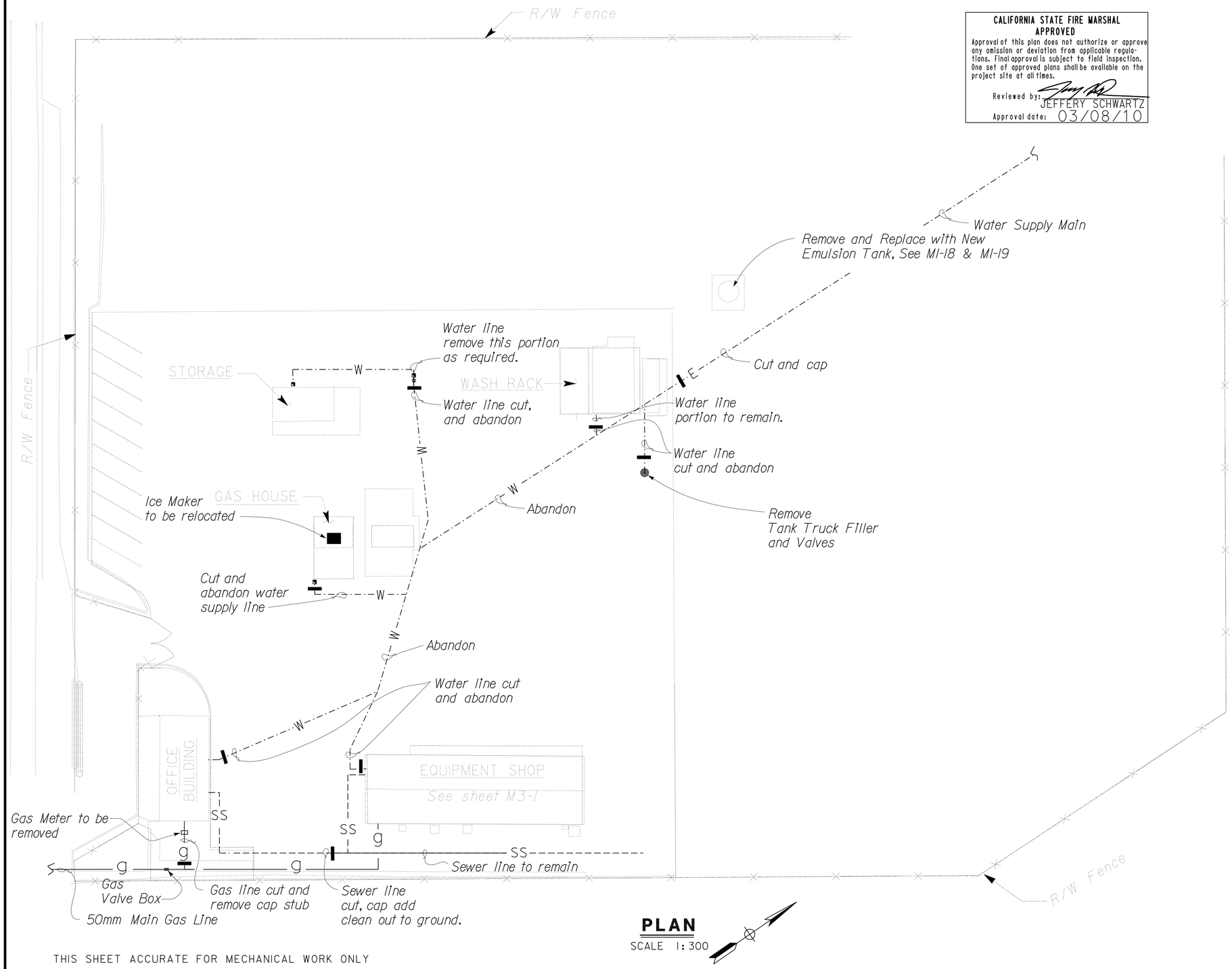

PLAN

SCALE 1:300

Notes:

1. *Storage, gas house and office building to be removed. See GP-2 for information.*
2. *Existing valve, valve box, and Hose faucet shall be remove if attached to an abandon water, gas or sewer line.*

THIS SHEET ACCURATE FOR MECHANICAL WORK ONLY

ALL DIMENSIONS SHOWN IN MILLIMETERS, EXCEPT AS NOTED

DESIGN SUPERVISOR / DESIGN ENGINEER	DESIGN	BY W.Thomas Hughes	CHECKED Alvin Kwan
	DETAILS	BY W.Thomas Hughes	CHECKED Alvin Kwan
	QUANTITIES	BY W.Thomas Hughes	CHECKED Alvin Kwan

STATE OF CALIFORNIA DEPARTMENT OF TRANSPORTATION

DIVISION OF ENGINEERING SERVICES ELECTRICAL-MECHANICAL-WATER AND WASTEWATER DESIGN

BRIDGE NO. 50M5722 KM POST

TAFT MAINTENANCE STATION

EXISTING SITE PLAN

SHEET **M1-1**

DOS ELEC (10/98) FILE => m011.dgn DATE PLOTTED => 23-MAR-2010 TIME PLOTTED => 05:59

ORIGINAL SCALE IN MILLIMETERS FOR REDUCED PLANS 0 10 20 30 40 50 60 70 80 90 100

CU 06257 EA 483401

DISREGARD PRINTS BEARING EARLIER REVISION DATES

REVISION DATES (PRELIMINARY STAGE ONLY) 03-31-06 06-19-06 07-28-06 10-30-06 11-30-06 01-29-07 03-30-07 05-11-07 10-10-08

SHEET OF

FILE => m011.dgn

USERNAME => trmikes1 DATE PLOTTED => 23-MAR-2010 TIME PLOTTED => 05:59

VI=1

DIST	COUNTY	LOCATION CODE	KILOMETER POST TOTAL PROJECT	SHEET No.	TOTAL SHEETS
06	Ker	5722		130	178

REGISTERED ENGINEER-MECHANICAL — 00-00-00 DATE

3-8-10
PLANS APPROVAL DATE

REGISTERED PROFESSIONAL ENGINEER — Jack Wheeler — No. M21648 — Exp. 6-30-09 — MECH — STATE OF CALIFORNIA

The State of California or its officers or agents shall not be responsible for the accuracy or completeness of electronic copies of this plan sheet.

CALIFORNIA STATE FIRE MARSHAL APPROVED

Approval of this plan does not authorize or approve any omission or deviation from applicable regulations. Final approval is subject to field inspection. One set of approved plans shall be available on the project site at all times.

Reviewed by: JEFFERY SCHWARTZ

Approval date: 03/08/10

Caltrans Metric

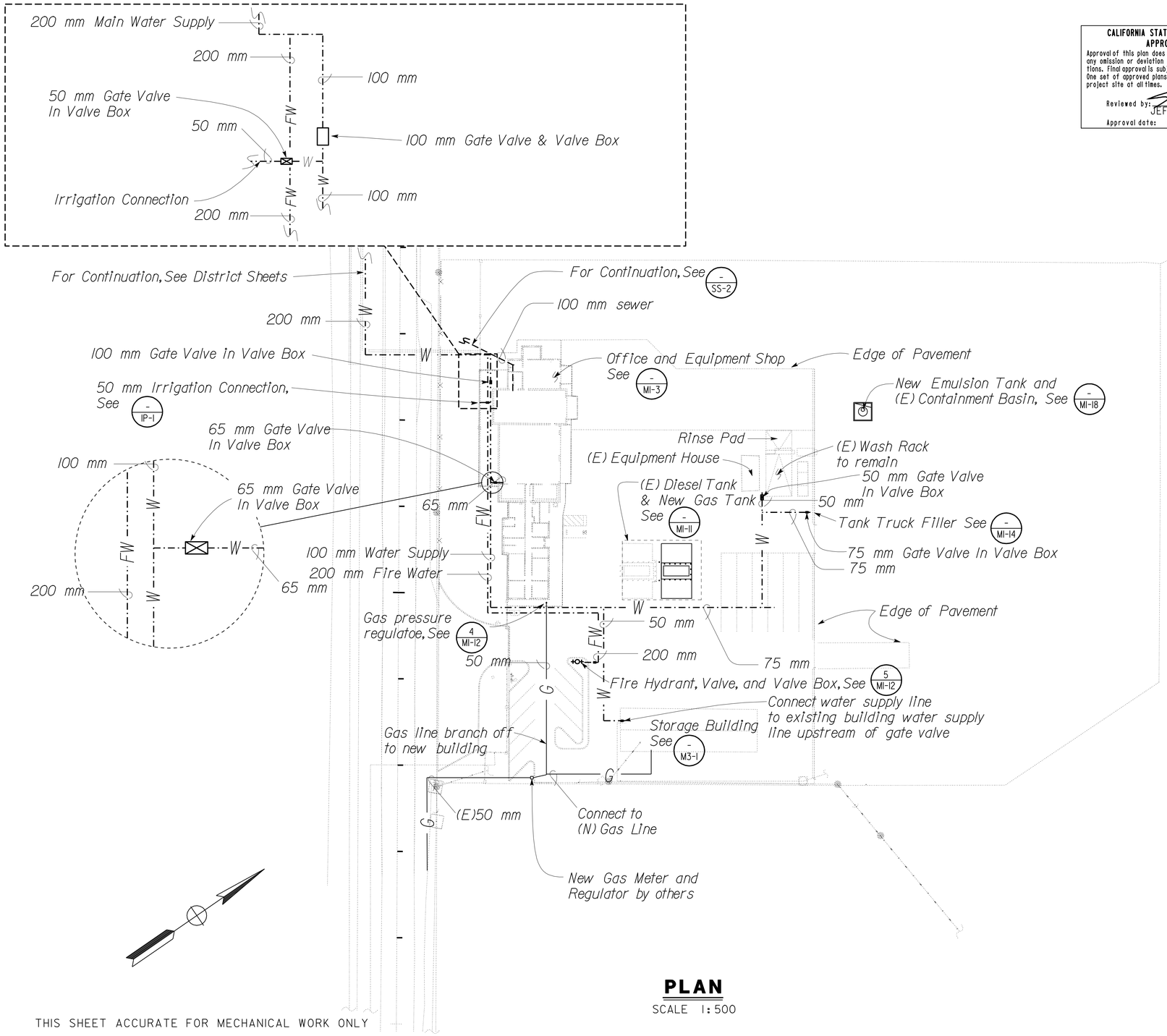

PLAN

SCALE 1:500

THIS SHEET ACCURATE FOR MECHANICAL WORK ONLY

NOTES:

1. Each water line to each building or part of equipment must have a gate valve and valve box.
2. All Water and Fire Water lines shall have thrust blocks with clamps.
3. All Fire Water lines are to be installed per NFPA 24 2007 editions as amended.

REQUIRED THRUST BLOCK BEARING AREA- TOTAL SQUARE METERS

TYPE OF FITTING		90° BEND	45° BEND	11-1/4 BEND 22-1/2 BEND	TEE OR DEAD END
TYPICAL INSTALLATION		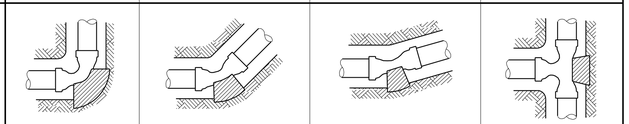			
PIPE SIZE (mm)	100	0.2	0.1	0.1	0.2
	150	0.4	0.2	0.1	0.3
	200	0.7	0.4	0.2	0.5
	250	1.1	0.6	0.3	0.8

ALL DIMENSIONS SHOWN IN MILLIMETERS, EXCEPT AS NOTED

	BY	CHECKED
DESIGN	W.Thomas Hughes	Alvin Kwan
DETAILS	W.Thomas Hughes	Alvin Kwan
QUANTITIES	W.Thomas Hughes	Alvin Kwan

STATE OF CALIFORNIA
DEPARTMENT OF TRANSPORTATION

DIVISION OF ENGINEERING SERVICES
ELECTRICAL-MECHANICAL-WATER AND WASTEWATER DESIGN

BRIDGE NO. 50M5722
KM POST

TAFT MAINTENANCE STATION

MODIFIED SITE PLAN

SHEET **M1-2**

DOS ELEC (10/98) FILE => m012.dgn
DATE PLOTTED => 23-MAR-2010 TIME PLOTTED => 05:59

ORIGINAL SCALE IN MILLIMETERS FOR REDUCED PLANS 0 10 20 30 40 50 60 70 80 90 100

CU 06257
EA 483401

DISREGARD PRINTS BEARING EARLIER REVISION DATES

REVISION DATES (PRELIMINARY STAGE ONLY): 03-31-06 06-19-06 07-28-06 10-30-06 11-30-06 01-29-07 03-30-07 05-11-07 10-10-08

SHEET OF

FILE => m012.dgn

USERNAME => trmikesl DATE PLOTTED => 23-MAR-2010 TIME PLOTTED => 05:59

VI=1

DIST.	COUNTY	LOCATION CODE	KILOMETER POST TOTAL PROJECT	SHEET NO.	TOTAL SHEETS
06	Ker	5722		131	178

REGISTERED ENGINEER-MECHANICAL — DATE 00-00-00

3-8-10
PLANS APPROVAL DATE

REGISTERED PROFESSIONAL ENGINEER — Jack Wheeler — No. M21648 — Exp. 6-30-09 — MECH — STATE OF CALIFORNIA

The State of California or its officers or agents shall not be responsible for the accuracy or completeness of electronic copies of this plan sheet.

CALIFORNIA STATE FIRE MARSHAL APPROVED

Approval of this plan does not authorize or approve any omission or deviation from applicable regulations. Final approval is subject to field inspection. One set of approved plans shall be available on the project site at all times.

Reviewed by: JEFFERY SCHWARTZ

Approval date: 03/08/10

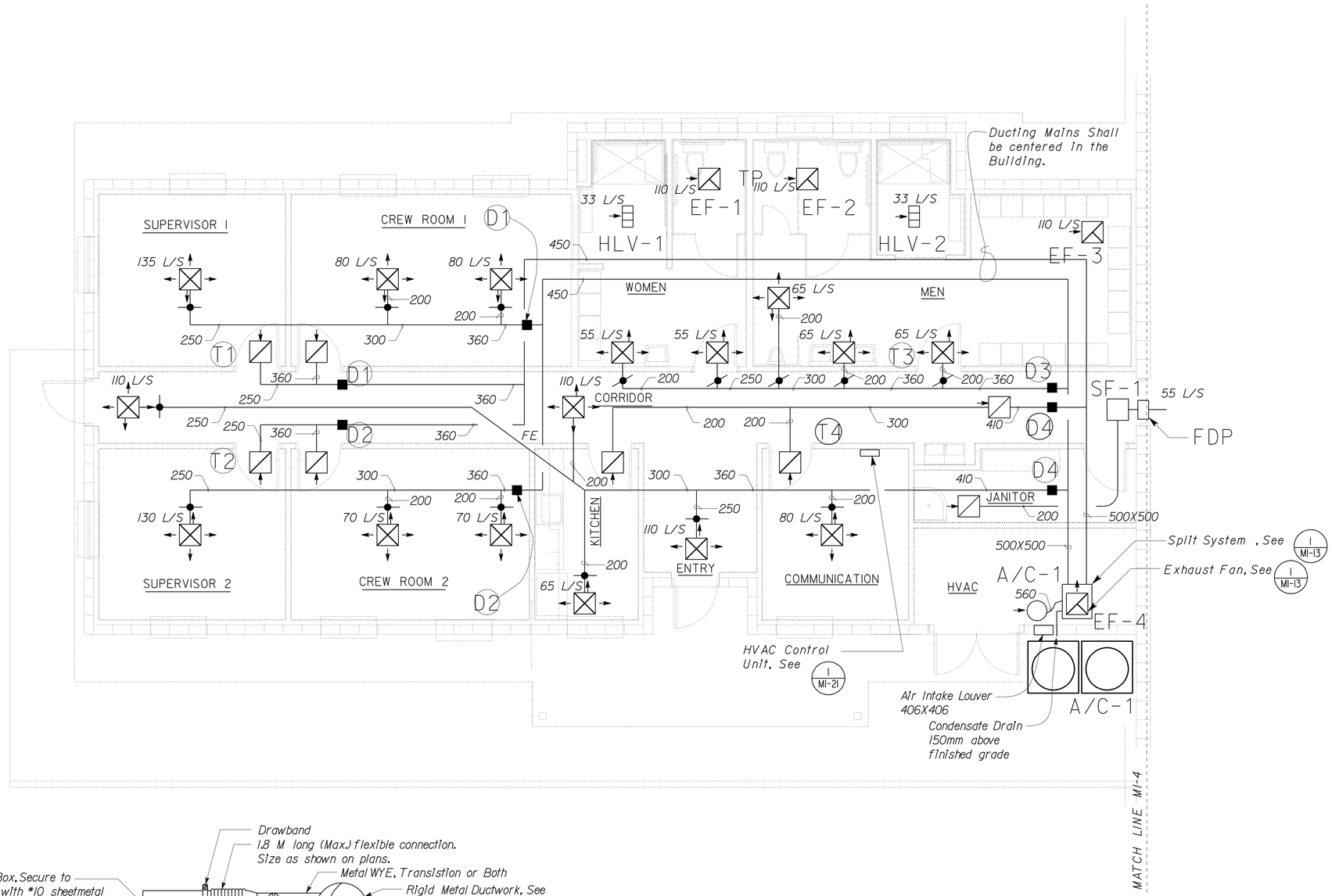

General Notes:

1. *For exact location see Architectural sheets.*
2. *Fire Damper shall be rated for 2 hours.*
3. *See Sheet MI-21 for HVAC Controls*
4. *Fire Extinguisher shall be 2A:10B:C*
5. *For Mechanical equipment schedule, See Mechanical Sheet MI-20.*
6. *Maximum length of flexible duct shall be 1800mm.*
7. *Mount Supply Fan on wooden platform in attic above Janitor room and Corridor.*

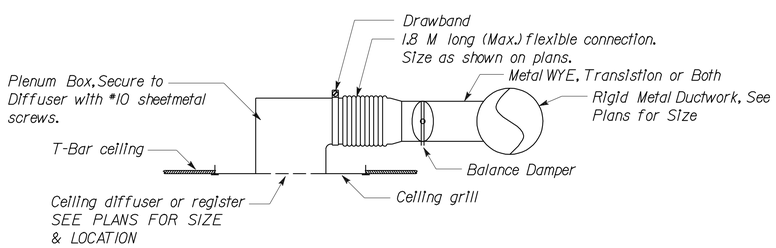

1 CEILING DIFFUSER AND BOOT (TYP.)

NO SCALE

THIS SHEET ACCURATE FOR MECHANICAL WORK ONLY

PARTIAL FLOOR PLAN

SCALE 1:50

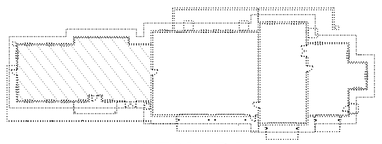

KEY PLAN

ALL DIMENSIONS SHOWN IN MILLIMETERS, EXCEPT AS NOTED

	BY	CHECKED
DESIGN	W.Thomas Hughes	Alvin Kwan
DETAILS	W.Thomas Hughes	Alvin Kwan
QUANTITIES	W.Thomas Hughes	Alvin Kwan

STATE OF CALIFORNIA
DEPARTMENT OF TRANSPORTATION

DIVISION OF ENGINEERING SERVICES
ELECTRICAL-MECHANICAL-WATER AND WASTEWATER DESIGN

BRIDGE NO. 50M5722
KM POST

TAFT MAINTENANCE STATION
CREW AND EQUIPMENT BUILDING
PARTIAL HVAC PLAN NO. 1

SHEET **M1-3**

DOS ELEC (10/98)
FILE => m013.dgn
DATE PLOTTED => 23-MAR-2010 TIME PLOTTED => 05:59

ORIGINAL SCALE IN MILLIMETERS FOR REDUCED PLANS 0 10 20 30 40 50 60 70 80 90 100

CU 06257
EA 483401

DISREGARD PRINTS BEARING EARLIER REVISION DATES

REVISION DATES (PRELIMINARY STAGE ONLY): 03-31-06 06-19-06 07-28-06 10-30-06 11-30-06 01-29-07 03-30-07 05-11-07 10-10-08

SHEET OF

FILE => m013.dgn

USERNAME => trmikesi DATE PLOTTED => 23-MAR-2010 TIME PLOTTED => 05:59

VI=1

DIST.	COUNTY	LOCATION CODE	KILOMETER POST TOTAL PROJECT	SHEET NO.	TOTAL SHEETS
06	Ker	5722		132	178

REGISTERED ENGINEER-MECHANICAL — 00-00-00 DATE

3-8-10
PLANS APPROVAL DATE

REGISTERED PROFESSIONAL ENGINEER — Jack Wheeler — No. M21648 — Exp. 6-30-09 — MECH — STATE OF CALIFORNIA

The State of California or its officers or agents shall not be responsible for the accuracy or completeness of electronic copies of this plan sheet.

CALIFORNIA STATE FIRE MARSHAL APPROVED

Approval of this plan does not authorize or approve any omission or deviation from applicable regulations. Final approval is subject to field inspection. One set of approved plans shall be available on the project site at all times.

Reviewed by: JEFFERY SCHWARTZ
Approval date: 03/08/10

Caltrans Metric

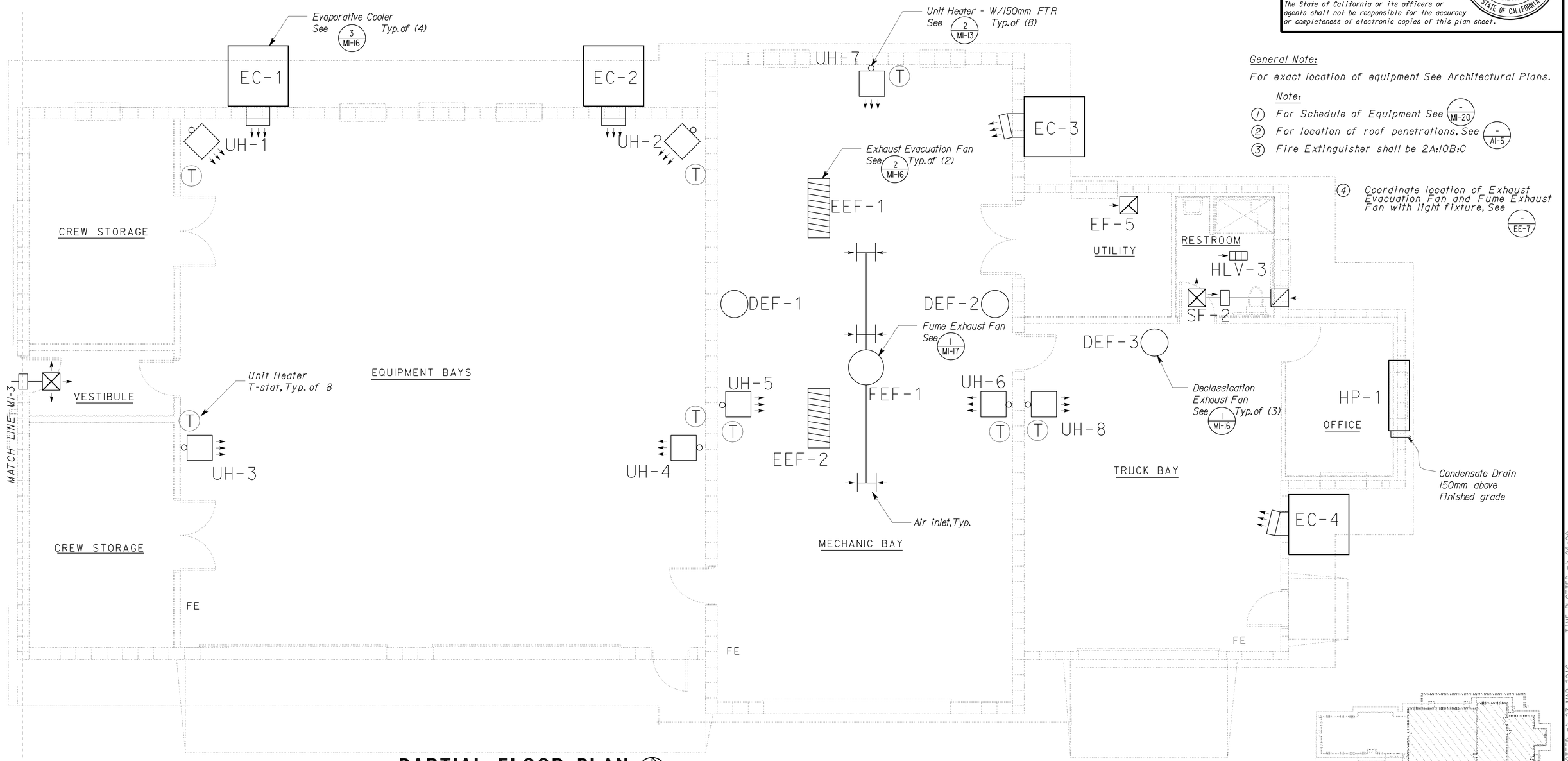

General Note:

For exact location of equipment See Architectural Plans.

Note:

1. *For Schedule of Equipment See - / MI-20*
2. *For location of roof penetrations, See - / AI-5*
3. *Fire Extinguisher shall be 2A:10B:C*
4. *Coordinate location of Exhaust Evacuation Fan and Fume Exhaust Fan with light fixture, See - / EE-7*

PARTIAL FLOOR PLAN

SCALE 1:50

THIS SHEET ACCURATE FOR MECHANICAL WORK ONLY

KEY PLAN

ALL DIMENSIONS SHOWN IN MILLIMETERS, EXCEPT AS NOTED

	BY	CHECKED
DESIGN	W.Thomas Hughes	Alvin Kwan
DETAILS	W.Thomas Hughes	Alvin Kwan
QUANTITIES	W.Thomas Hughes	Alvin Kwan

STATE OF CALIFORNIA
DEPARTMENT OF TRANSPORTATION

DIVISION OF ENGINEERING SERVICES
ELECTRICAL-MECHANICAL-WATER AND WASTEWATER DESIGN

BRIDGE NO. 50M5722
KM POST

TAFT MAINTENANCE STATION

CREW AND EQUIPMENT BUILDING

PARTIAL HVAC PLAN NO. 2

SHEET **M1-4**

DOS ELEC (10/98) FILE => m014.dgn
DATE PLOTTED => 23-MAR-2010 TIME PLOTTED => 06:00

ORIGINAL SCALE IN MILLIMETERS FOR REDUCED PLANS 0 10 20 30 40 50 60 70 80 90 100

CU 06257
EA 483401

FILE => m014.dgn

DISREGARD PRINTS BEARING EARLIER REVISION DATES

REVISION DATES (PRELIMINARY STAGE ONLY) 03-31-06 06-19-06 07-28-06 10-30-06 11-30-06 01-29-07 03-30-07 05-11-07 10-10-08

SHEET OF

USERNAME => trmikesl DATE PLOTTED => 23-MAR-2010 TIME PLOTTED => 06:00

V1=1

DIST.	COUNTY	LOCATION CODE	KILOMETER POST TOTAL PROJECT	SHEET NO.	TOTAL SHEETS
06	Ker	5722		133	178

REGISTERED ENGINEER-MECHANICAL — 00-00-00 DATE

3-8-10
PLANS APPROVAL DATE

REGISTERED PROFESSIONAL ENGINEER — Jack Wheeler — No. M21648 — Exp. 6-30-09 — MECH — STATE OF CALIFORNIA

The State of California or its officers or agents shall not be responsible for the accuracy or completeness of electronic copies of this plan sheet.

CALIFORNIA STATE FIRE MARSHAL APPROVED

Approval of this plan does not authorize or approve any omission or deviation from applicable regulations. Final approval is subject to field inspection. One set of approved plans shall be available on the project site at all times.

Reviewed by: JEFFERY SCHWARTZ
Approval date: 03/08/10

Caltrans Metric

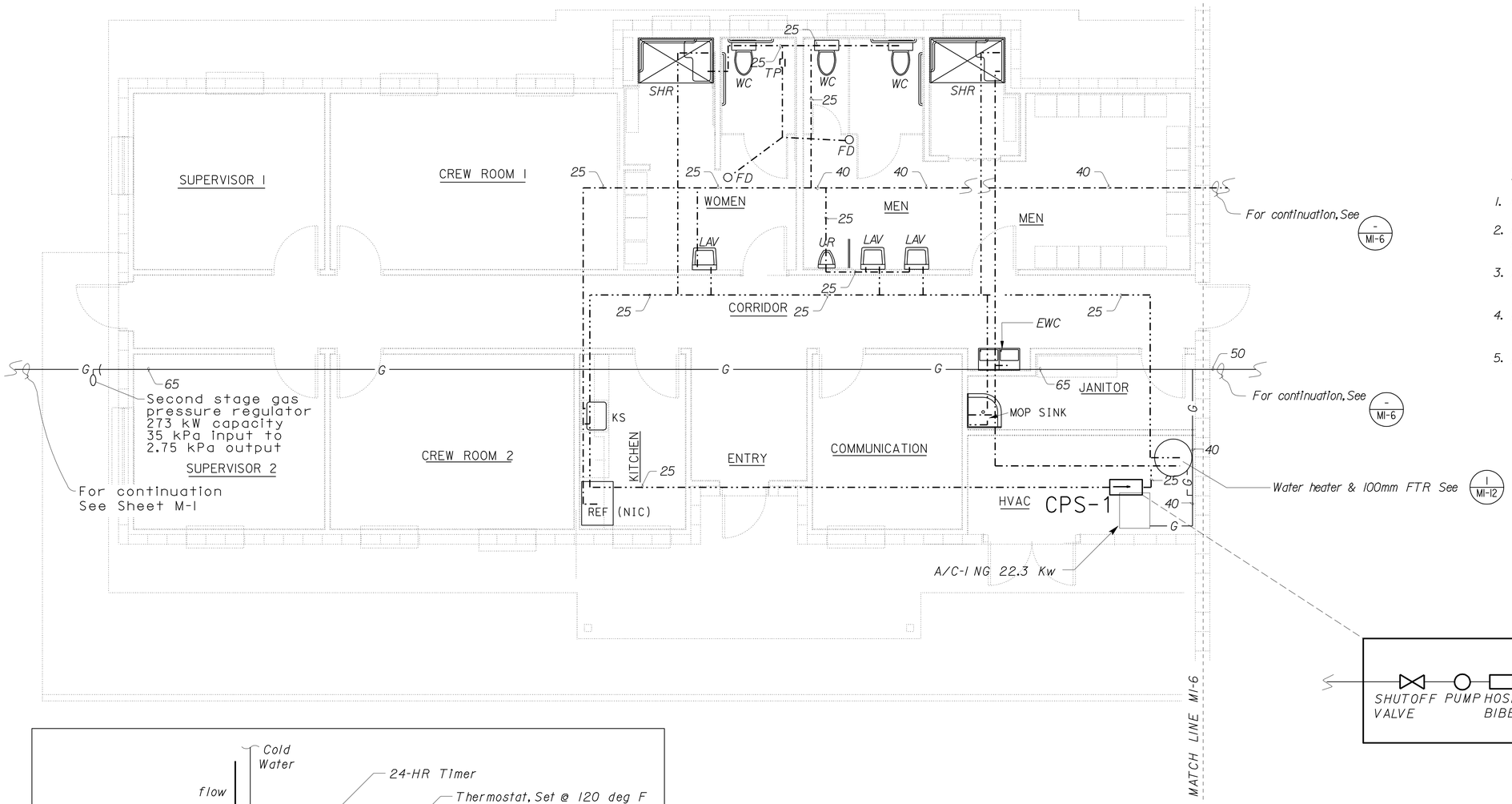

General Notes:

1. For Equipment Schedule, See M1-20.
2. Fire Extinguisher shall be 2A:10B:C. See A1-2 for locations.
3. All penetration through a fire rated wall shall be sealed per local fire code.
4. Install Seismic/Expansion loops on all piping and ducting between Office and Shop building.
5. For Isometric drawing See Sheet M1-9 and M1-10

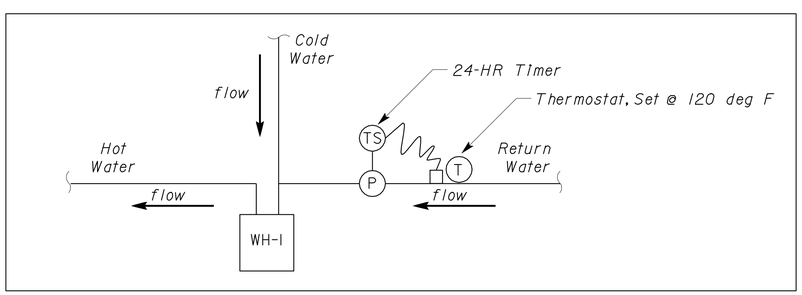

CPS-1 Control Circuit

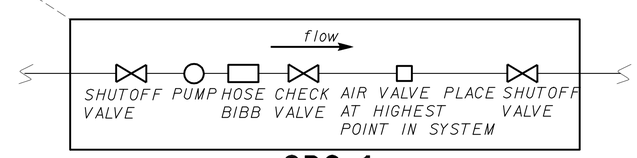

CPS-1

PARTIAL FLOOR PLAN

SCALE 1:50

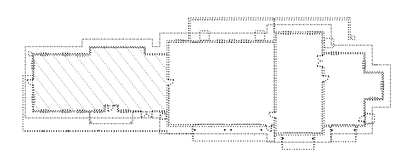

KEY PLAN

THIS SHEET ACCURATE FOR MECHANICAL WORK ONLY

ALL DIMENSIONS SHOWN IN MILLIMETERS, EXCEPT AS NOTED

	BY	CHECKED
DESIGN	W.Thomas Hughes	Alvin Kwan
DETAILS	W.Thomas Hughes	Alvin Kwan
QUANTITIES	W.Thomas Hughes	Alvin Kwan

STATE OF CALIFORNIA DEPARTMENT OF TRANSPORTATION

DIVISION OF ENGINEERING SERVICES
ELECTRICAL-MECHANICAL-WATER AND WASTEWATER DESIGN

BRIDGE NO. 50M5722
KM POST

CREW AND EQUIPMENT BUILDING

TAFT MAINTENANCE STATION

PARTIAL PLUMBING PLAN NO. 1

SHEET **M1-5**

DISREGARD PRINTS BEARING EARLIER REVISION DATES → REVISION DATES (PRELIMINARY STAGE ONLY): 03-31-06 | 06-19-06 | 07-28-06 | 10-30-06 | 11-30-06 | 01-29-07 | 03-30-07 | 05-11-07 | 10-10-08

SHEET OF

DOS ELEC (10/98) FILE => m015.dgn DATE PLOTTED => 23-MAR-2010 TIME PLOTTED => 06:00

ORIGINAL SCALE IN MILLIMETERS FOR REDUCED PLANS 0 10 20 30 40 50 60 70 80 90 100

CU 06257
EA 483401

FILE => m015.dgn

USERNAME => trmikesl DATE PLOTTED => 23-MAR-2010 TIME PLOTTED => 06:00

V1=1

DIST.	COUNTY	LOCATION CODE	KILOMETER POST TOTAL PROJECT	SHEET NO.	TOTAL SHEETS
06	Ker	5722		134	178

REGISTERED ENGINEER-MECHANICAL 00-00-00 DATE

3-8-10
PLANS APPROVAL DATE

REGISTERED PROFESSIONAL ENGINEER Jack Wheeler No. M21648 Exp. 6-30-09 MECH STATE OF CALIFORNIA

The State of California or its officers or agents shall not be responsible for the accuracy or completeness of electronic copies of this plan sheet.

Caltrans Metric

CALIFORNIA STATE FIRE MARSHAL APPROVED

Approval of this plan does not authorize or approve any omission or deviation from applicable regulations. Final approval is subject to field inspection. One set of approved plans shall be available on the project site at all times.

Reviewed by: JEFFERY SCHWARTZ
Approval date: 03/08/10

GENERAL NOTES:

1. For Equipment Schedule, See M1-20.
2. For exact location of equipment see Architectural Plans
3. All Penetration through fire rated walls shall be sealed per California Fire Code and Manufactured listing and recommendations.
4. Install Seismic/Expansion Loops on all piping and ducting between Office and Shop Building.
5. For Isometric drawing See Sheet M1-9 and M1-10

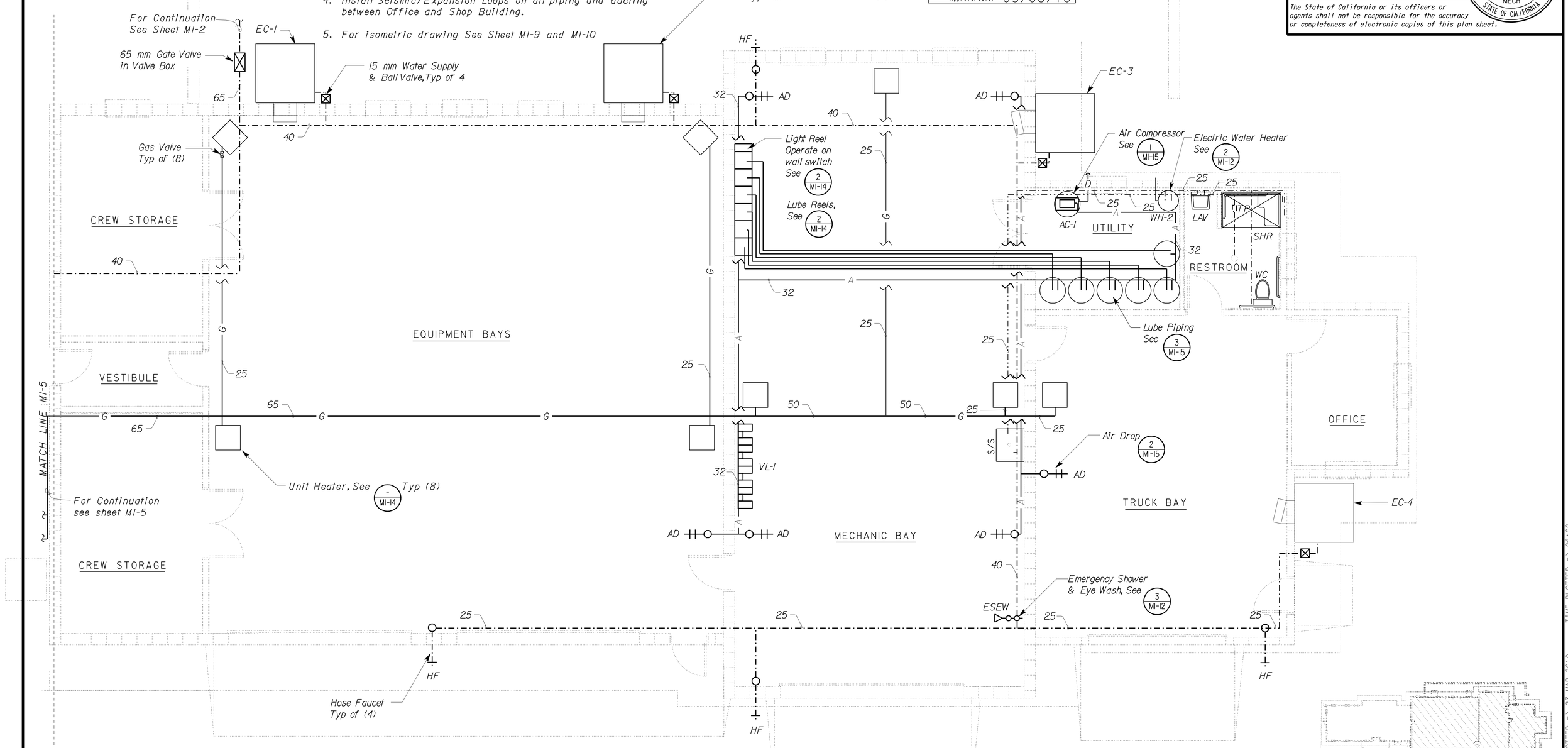

PARTIAL FLOOR PLAN

SCALE 1:50

THIS SHEET ACCURATE FOR MECHANICAL WORK ONLY

KEY PLAN

ALL DIMENSIONS SHOWN IN MILLIMETERS, EXCEPT AS NOTED

	BY	CHECKED
DESIGN	W.Thomas Hughes	Alvin Kwan
DETAILS	W.Thomas Hughes	Alvin Kwan
QUANTITIES	W.Thomas Hughes	Alvin Kwan

STATE OF CALIFORNIA DEPARTMENT OF TRANSPORTATION

DIVISION OF ENGINEERING SERVICES ELECTRICAL-MECHANICAL-WATER AND WASTEWATER DESIGN

BRIDGE NO. 50M5722
KM POST

TAFT MAINTENANCE STATION
CREW AND EQUIPMENT BUILDING
PARTIAL PLUMBING PLAN NO. 2

SHEET **M1-6**

DOS ELEC (10/98) FILE => m016.dgn DATE PLOTTED => 23-MAR-2010 TIME PLOTTED => 06:00

ORIGINAL SCALE IN MILLIMETERS FOR REDUCED PLANS 0 10 20 30 40 50 60 70 80 90 100

CU 06257
EA 483401

DISREGARD PRINTS BEARING EARLIER REVISION DATES

REVISION DATES (PRELIMINARY STAGE ONLY) 03-31-06 06-19-06 07-28-06 10-30-06 11-30-06 01-29-07 03-30-07 05-11-07 10-10-08

SHEET OF

FILE => m016.dgn

USERNAME => trmikesi DATE PLOTTED => 23-MAR-2010 TIME PLOTTED => 06:00

VI=1

DIST.	COUNTY	LOCATION CODE	KILOMETER POST TOTAL PROJECT	SHEET NO.	TOTAL SHEETS
06	Ker	5722		135	178

REGISTERED ENGINEER-MECHANICAL 00-00-00 DATE

3-8-10
PLANS APPROVAL DATE

REGISTERED PROFESSIONAL ENGINEER Jack Wheeler No. M21648 Exp. 6-30-09 MECH STATE OF CALIFORNIA

The State of California or its officers or agents shall not be responsible for the accuracy or completeness of electronic copies of this plan sheet.

CALIFORNIA STATE FIRE MARSHAL APPROVED
Approval of this plan does not authorize or approve any omission or deviation from applicable regulations. Final approval is subject to field inspection. One set of approved plans shall be available on the project site at all times.
Reviewed by: JEFFERY SCHWARTZ
Approval date: 03/08/10

Caltrans Metric

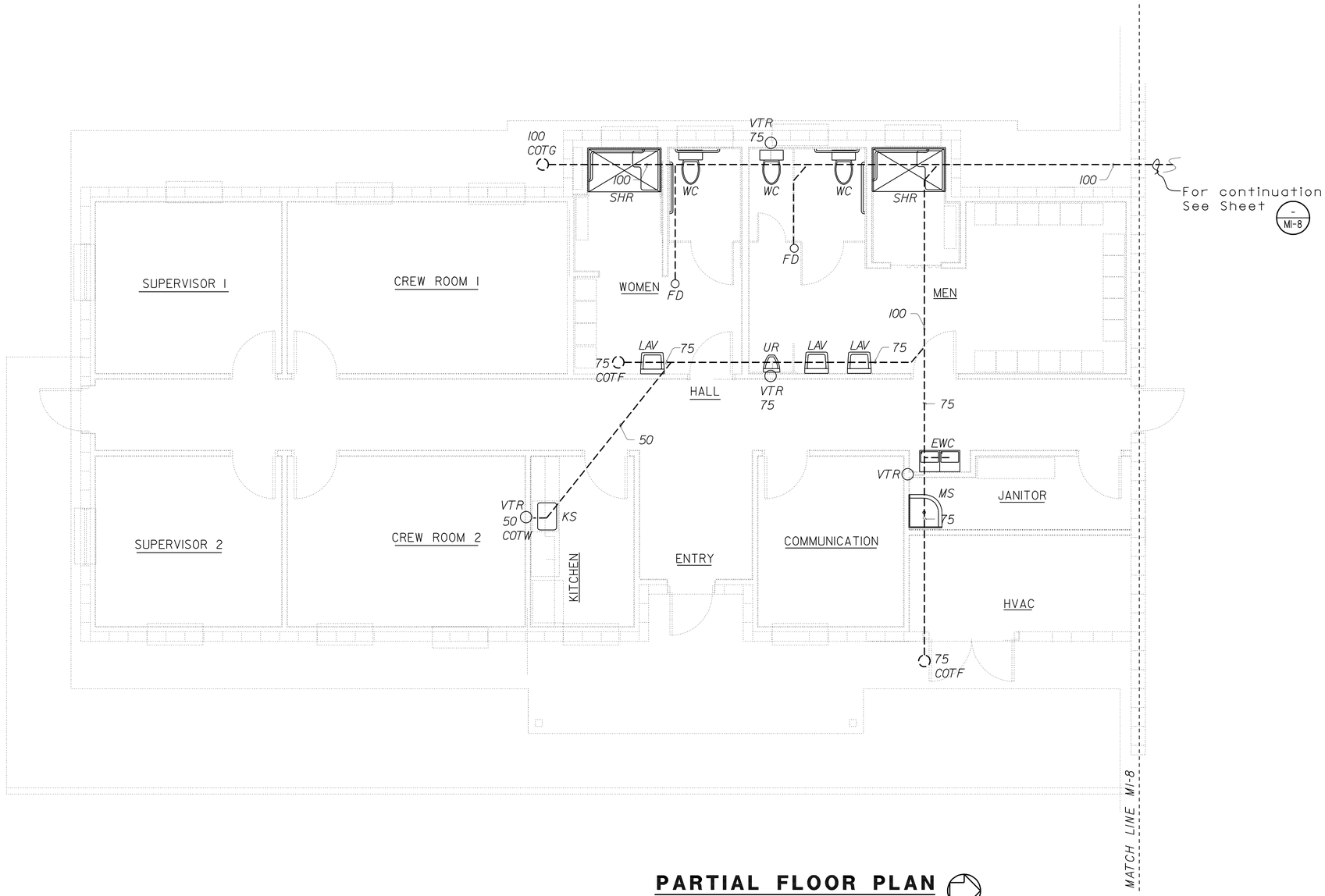

PARTIAL FLOOR PLAN

SCALE 1:50

THIS SHEET ACCURATE FOR MECHANICAL WORK ONLY

General Notes:

1. *All cleanouts to grade shall be located in valve box.*
2. *Urinal and Kitchen Sink shall have COTW*
3. *Floor drains shall have a trap primer.*
4. *Water heater and A/C shall drain to outside of building.*

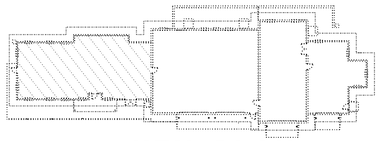

KEY PLAN

ALL DIMENSIONS SHOWN IN MILLIMETERS, EXCEPT AS NOTED

	BY	CHECKED
DESIGN	W.Thomas Hughes	Alvin Kwan
DETAILS	W.Thomas Hughes	Alvin Kwan
QUANTITIES	W.Thomas Hughes	Alvin Kwan

STATE OF CALIFORNIA DEPARTMENT OF TRANSPORTATION

DIVISION OF ENGINEERING SERVICES
ELECTRICAL-MECHANICAL-WATER AND WASTEWATER DESIGN

BRIDGE NO. 50M5722
KM POST

TAFT MAINTENANCE STATION
CREW AND EQUIPMENT BUILDING
PARTIAL SEWER PLAN NO. 1

SHEET **M1-7**

DOS ELEC (10/98)
FILE => m017.dgn
DATE PLOTTED => 23-MAR-2010 TIME PLOTTED => 06:00

ORIGINAL SCALE IN MILLIMETERS FOR REDUCED PLANS 0 10 20 30 40 50 60 70 80 90 100

CU 06257
EA 483401

DISREGARD PRINTS BEARING EARLIER REVISION DATES

REVISION DATES (PRELIMINARY STAGE ONLY) 03-31-06 06-19-06 07-28-06 10-30-06 11-30-06 01-29-07 03-30-07 05-11-07 10-10-08

SHEET OF

FILE => m017.dgn

USERNAME => trmikesl DATE PLOTTED => 23-MAR-2010 TIME PLOTTED => 06:00

VI=I

DIST.	COUNTY	LOCATION CODE	KILOMETER POST TOTAL PROJECT	SHEET NO.	TOTAL SHEETS
06	Ker	5722		136	178

REGISTERED ENGINEER-MECHANICAL 00-00-00 DATE

3-8-10
PLANS APPROVAL DATE

REGISTERED PROFESSIONAL ENGINEER Jack Wheeler No. M21648 Exp. 6-30-09 MECH STATE OF CALIFORNIA

The State of California or its officers or agents shall not be responsible for the accuracy or completeness of electronic copies of this plan sheet.

Caltrans Metric

CALIFORNIA STATE FIRE MARSHAL APPROVED
Approval of this plan does not authorize or approve any omission or deviation from applicable regulations. Final approval is subject to field inspection. One set of approved plans shall be available on the project site at all times.
Reviewed by: JEFFERY SCHWARTZ
Approval date: 03/08/10

General Notes:

1. *All cleanouts to grade shall be located in valve box.*
2. *Floor drains shall have a trap primer.*
3. *Water heater and A/C shall drain to outside of building.*

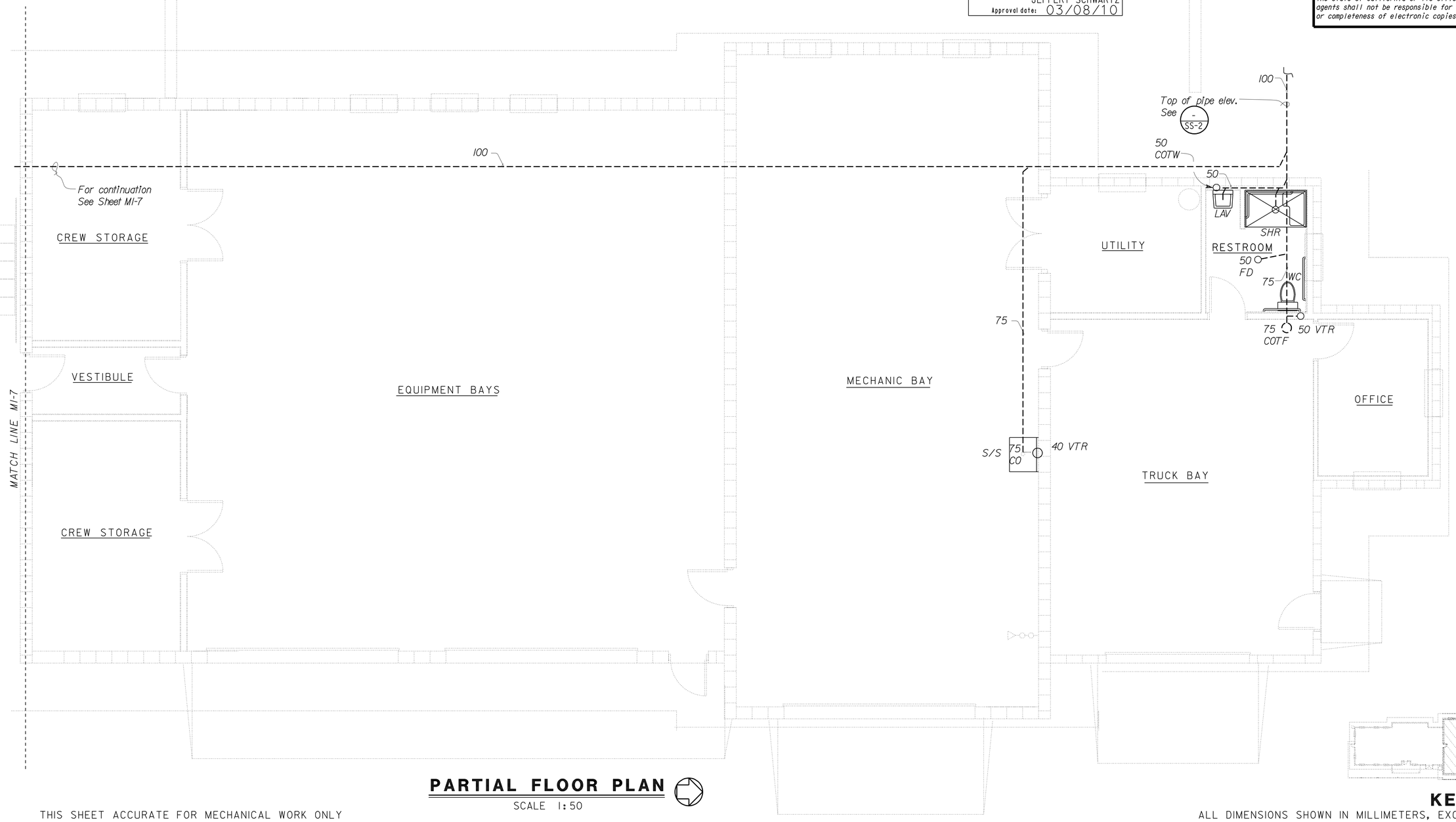

PARTIAL FLOOR PLAN

SCALE 1:50

THIS SHEET ACCURATE FOR MECHANICAL WORK ONLY

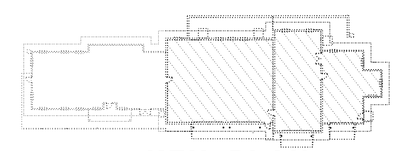

KEY PLAN

ALL DIMENSIONS SHOWN IN MILLIMETERS, EXCEPT AS NOTED

	BY	CHECKED
DESIGN	W.Thomas Hughes	Alvin Kwan
DETAILS	W.Thomas Hughes	Alvin Kwan
QUANTITIES	W.Thomas Hughes	Alvin Kwan

STATE OF CALIFORNIA DEPARTMENT OF TRANSPORTATION

DIVISION OF ENGINEERING SERVICES
ELECTRICAL-MECHANICAL-WATER AND WASTEWATER DESIGN

BRIDGE NO. 50M5722
KM POST

TAFT MAINTENANCE STATION
CREW AND EQUIPMENT BUILDING
PARTIAL SEWER PLAN NO. 2

SHEET **M1-8**

DOS ELEC (10/98)
FILE => m018.dgn
DATE PLOTTED => 23-MAR-2010 TIME PLOTTED => 06:00

ORIGINAL SCALE IN MILLIMETERS FOR REDUCED PLANS 0 10 20 30 40 50 60 70 80 90 100

CU 06257
EA 483401
FILE => m018.dgn

DISREGARD PRINTS BEARING EARLIER REVISION DATES →
REVISION DATES (PRELIMINARY STAGE ONLY): 03-31-06 06-19-06 07-28-06 10-30-06 11-30-06 01-29-07 03-30-07 05-11-07 10-10-08
SHEET OF

USERNAME => trmikesl DATE PLOTTED => 23-MAR-2010 TIME PLOTTED => 06:00

V1=1

DIST.	COUNTY	LOCATION CODE	KILOMETER POST TOTAL PROJECT	SHEET NO.	TOTAL SHEETS
06	Ker	5722		137	178

REGISTERED ENGINEER-MECHANICAL — DATE 00-00-00

3-8-10
PLANS APPROVAL DATE

REGISTERED PROFESSIONAL ENGINEER — Jack Wheeler — No. M21648 — Exp. 6-30-09 — MECH — STATE OF CALIFORNIA

The State of California or its officers or agents shall not be responsible for the accuracy or completeness of electronic copies of this plan sheet.

CALIFORNIA STATE FIRE MARSHAL APPROVED
Approval of this plan does not authorize or approve any omission or deviation from applicable regulations. Final approval is subject to field inspection. One set of approved plans shall be available on the project site at all times.
Reviewed by: JEFFERY SCHWARTZ
Approval date: 03/08/10

Caltrans Metric

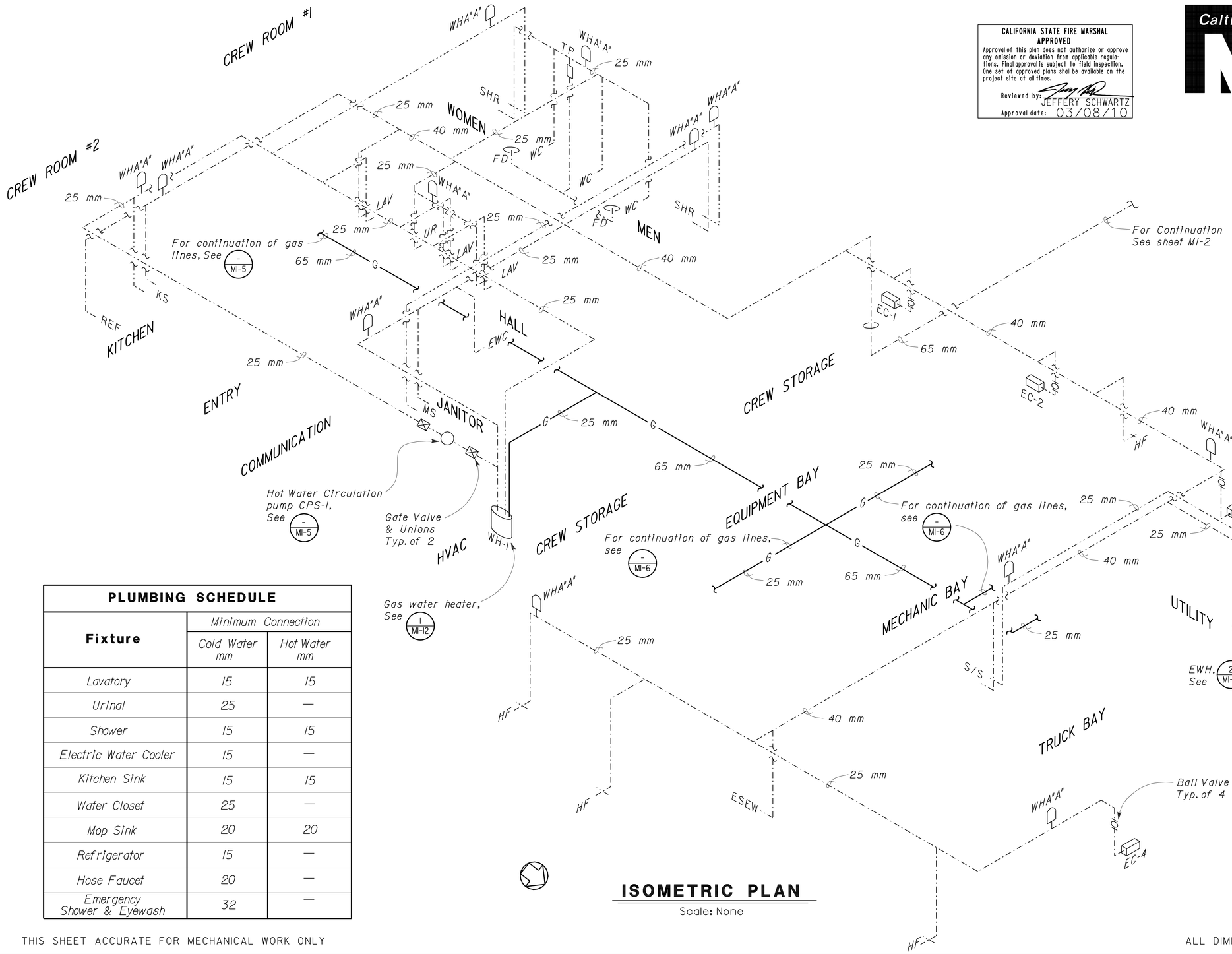

ISOMETRIC PLAN

Scale: None

PLUMBING SCHEDULE		
Fixture	Minimum Connection	
	Cold Water mm	Hot Water mm
Lavatory	15	15
Urinal	25	—
Shower	15	15
Electric Water Cooler	15	—
Kitchen Sink	15	15
Water Closet	25	—
Mop Sink	20	20
Refrigerator	15	—
Hose Faucet	20	—
Emergency Shower & Eyewash	32	—

THIS SHEET ACCURATE FOR MECHANICAL WORK ONLY

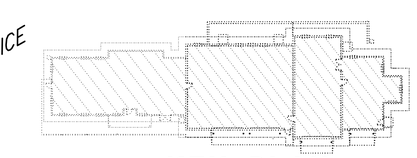

KEY PLAN

ALL DIMENSIONS SHOWN IN MILLIMETERS, EXCEPT AS NOTED

	BY	CHECKED
DESIGN	W. Thomas Hughes	Alvin Kwan
DETAILS	J. R. Stangl	Alvin Kwan
QUANTITIES	W. Thomas Hughes	Alvin Kwan

STATE OF CALIFORNIA
DEPARTMENT OF TRANSPORTATION

DIVISION OF ENGINEERING SERVICES
ELECTRICAL-MECHANICAL-WATER AND WASTEWATER DESIGN

BRIDGE NO. 50M5722
KM POST

TAFT MAINTENANCE STATION
CREW AND EQUIPMENT BUILDING
PLUMBING ISOMETRIC

SHEET **M1-9**

DISREGARD PRINTS BEARING EARLIER REVISION DATES

REVISION DATES (PRELIMINARY STAGE ONLY): 03-31-06 06-19-06 07-28-06 10-26-06 11-29-06 01-29-07 03-30-07 05-14-07 10-10-08

SHEET OF

CU 06257
EA 483401

DOS ELEC (10/98) FILE => m019.dgn
DATE PLOTTED => 23-MAR-2010 TIME PLOTTED => 06:00

ORIGINAL SCALE IN MILLIMETERS FOR REDUCED PLANS 0 10 20 30 40 50 60 70 80 90 100

FILE => m019.dgn

USERNAME => trmikesi DATE PLOTTED => 23-MAR-2010 TIME PLOTTED => 06:00

VI=I

DIST.	COUNTY	LOCATION CODE	KILOMETER POST TOTAL PROJECT	SHEET NO.	TOTAL SHEETS
06	Ker	5722		138	178

REGISTERED ENGINEER-MECHANICAL — 00-00-00 DATE

3-8-10
PLANS APPROVAL DATE

REGISTERED PROFESSIONAL ENGINEER — Jack Wheeler — No. M21648 — Exp. 6-30-09 — MECH — STATE OF CALIFORNIA

The State of California or its officers or agents shall not be responsible for the accuracy or completeness of electronic copies of this plan sheet.

CALIFORNIA STATE FIRE MARSHAL APPROVED
Approval of this plan does not authorize or approve any omission or deviation from applicable regulations. Final approval is subject to field inspection. One set of approved plans shall be available on the project site at all times.
Reviewed by: JEFFERY SCHWARTZ
Approval date: 03/08/10

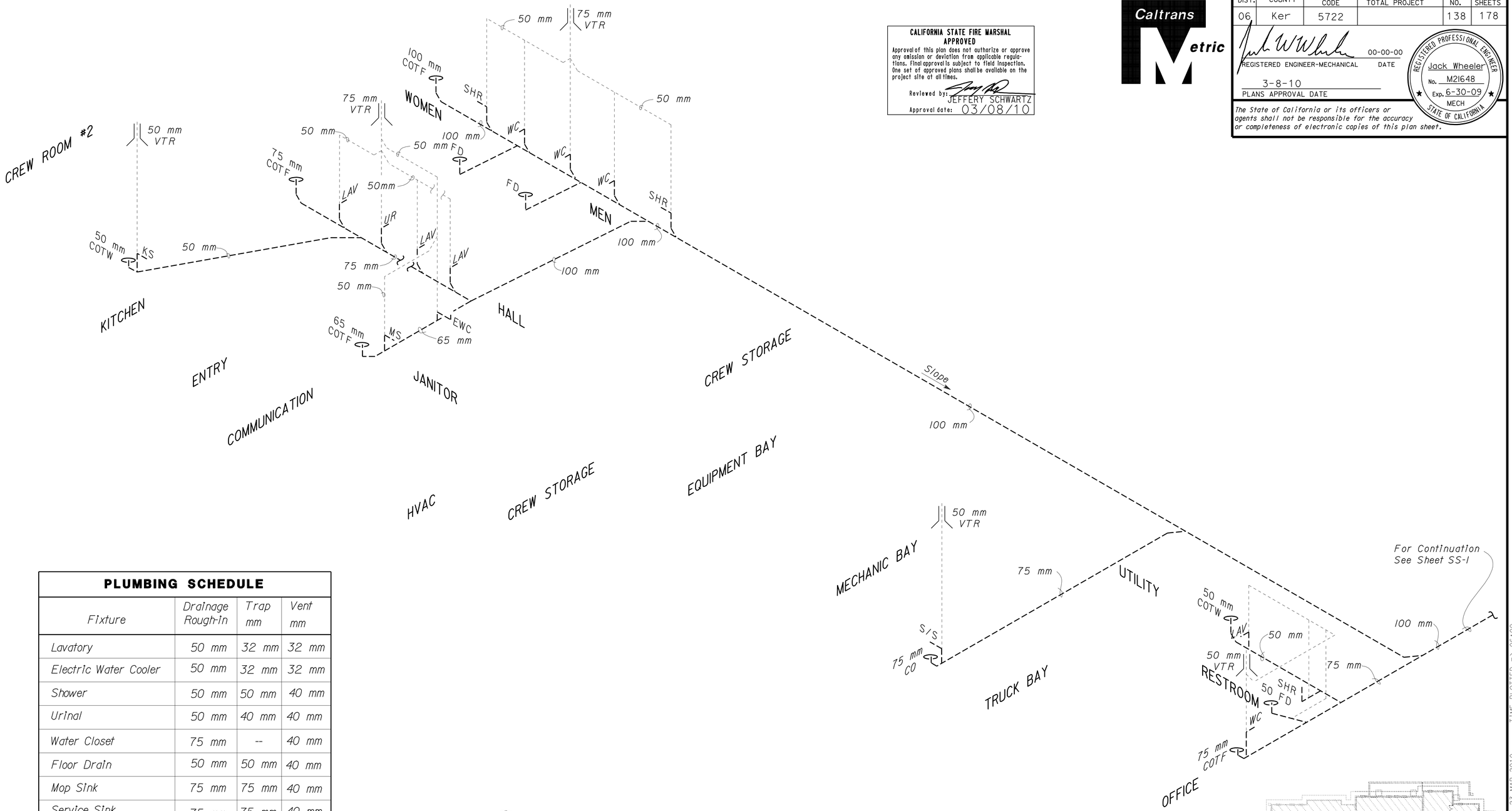

PLUMBING SCHEDULE

Fixture	Drainage Rough-in	Trap mm	Vent mm
Lavatory	50 mm	32 mm	32 mm
Electric Water Cooler	50 mm	32 mm	32 mm
Shower	50 mm	50 mm	40 mm
Urinal	50 mm	40 mm	40 mm
Water Closet	75 mm	--	40 mm
Floor Drain	50 mm	50 mm	40 mm
Mop Sink	75 mm	75 mm	40 mm
Service Sink	75 mm	75 mm	40 mm
Kitchen Sink	50 mm	40 mm	32 mm

ISOMETRIC PLAN
Scale: None

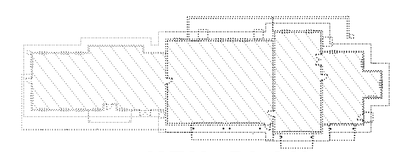

KEY PLAN

THIS SHEET ACCURATE FOR MECHANICAL WORK ONLY

ALL DIMENSIONS SHOWN IN MILLIMETERS, EXCEPT AS NOTED

	BY	CHECKED
DESIGN	W.Thomas Hughes	Alvin Kwan
DETAILS	J.R. Stangl	Alvin Kwan
QUANTITIES	W.Thomas Hughes	Alvin Kwan

STATE OF CALIFORNIA DEPARTMENT OF TRANSPORTATION

DIVISION OF ENGINEERING SERVICES
ELECTRICAL-MECHANICAL-WATER AND WASTEWATER DESIGN

BRIDGE NO. 50M5722
KM POST

CREW AND EQUIPMENT BUILDING

TAFT MAINTENANCE STATION
SEWER ISOMETRIC

SHEET **M1-10**

DOS ELEC (10/98) FILE => m110.dgn
DATE PLOTTED => 23-MAR-2010 TIME PLOTTED => 06:00

ORIGINAL SCALE IN MILLIMETERS FOR REDUCED PLANS 0 10 20 30 40 50 60 70 80 90 100

CU 06257
EA 483401

DISREGARD PRINTS BEARING EARLIER REVISION DATES

REVISION DATES (PRELIMINARY STAGE ONLY) 03-31-06 06-19-06 07-28-06 10-30-06 11-30-06 01-29-07 03-30-07 05-16-07 10-10-08

SHEET OF

FILE => m110.dgn

USERNAME => trmikesl DATE PLOTTED => 23-MAR-2010 TIME PLOTTED => 06:00

V1=1

DIST.	COUNTY	LOCATION CODE	KILOMETER POST TOTAL PROJECT	SHEET NO.	TOTAL SHEETS
06	Ker	5722		139	178

REGISTERED ENGINEER-MECHANICAL — 00-00-00 DATE

3-8-10
PLANS APPROVAL DATE

REGISTERED PROFESSIONAL ENGINEER — Jack Wheeler — No. M21648 — Exp. 6-30-09 — MECH — STATE OF CALIFORNIA

The State of California or its officers or agents shall not be responsible for the accuracy or completeness of electronic copies of this plan sheet.

Caltrans now has a web site! To get to the web site, go to: http://www.dot.ca.gov

CALIFORNIA STATE FIRE MARSHAL APPROVED

Approval of this plan does not authorize or approve any omission or deviation from applicable regulations. Final approval is subject to field inspection. One set of approved plans shall be available on the project site at all times.

Reviewed by: JEFFERY SCHWARTZ

Approval date: 03/08/10

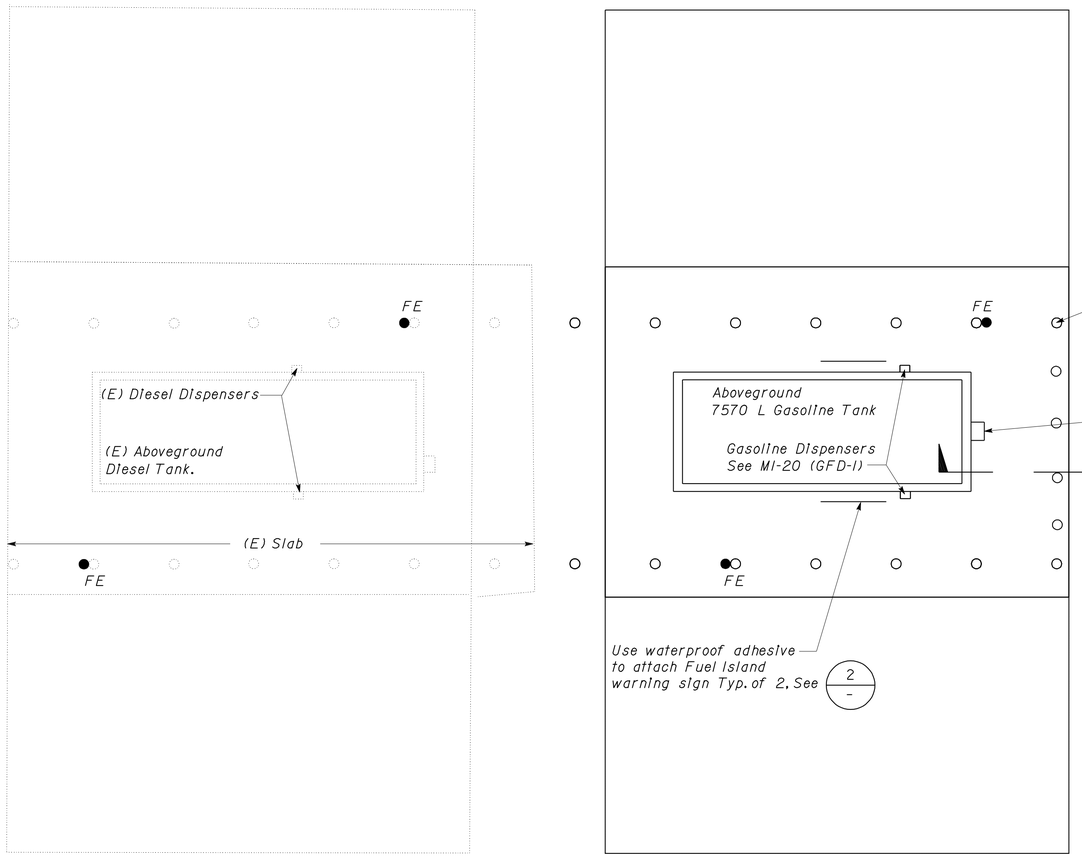

PLAN

NO SCALE

Approximate sign size is 700-mm x 500-mm

50-mm letter height

25-mm letter height

STOP ENGINE

NO SMOKING

WARNING
IT IS UNLAWFUL AND DANGEROUS TO DISPENSE GASOLINE INTO UNAPPROVED CONTAINERS.

13-mm thick white Acrylic Sign

2 FUEL ISLAND WARNING SIGNS

NO SCALE

N O T E S :

1. *Fire Extinguisher shall be 2A:10B:C Strap to bollard at 915 mm above slab.*
2. *All fasteners to concrete shall be expansion anchorage devices with galvanized threaded stud, hex nut and flat washer.*
3. *Required signs shall be posted according to the U.F.C.*
4. *Fuel Tank dispenser conduit shall be metal rigid Type I Sch 40 conduits.*
5. *The distance between the aboveground fuel tanks shall be as shown on sheet ST6-1.*
6. *See structural sheets for slab dimensions, guard post detail and guard post locations.*

1 FUEL ISLAND AND DISPENSER

No Scale

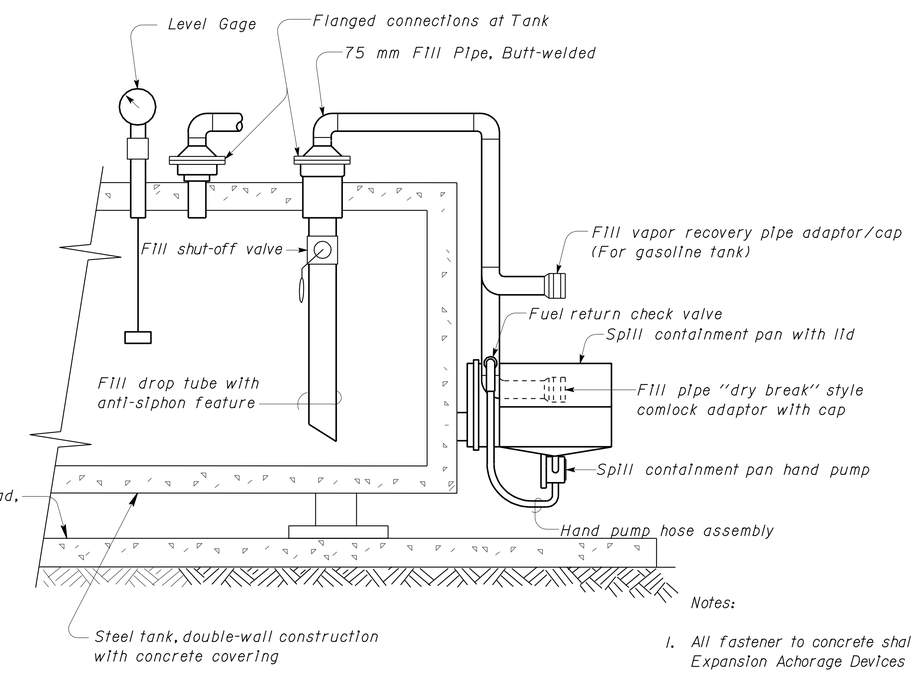

Notes:

1. *All fastener to concrete shall be Expansion Achorage Devices with Galvanized Threaded Stud, Hex Nut and Flat Washer.*

A PARTIAL ELEVATION

ALL DIMENSIONS SHOWN IN MILLIMETERS, EXCEPT AS NOTED

THIS SHEET ACCURATE FOR MECHANICAL WORK ONLY

	BY	CHECKED
DESIGN	W.Thomas Hughes	Alvin Kwan
DETAILS	W.Thomas Hughes	Alvin Kwan
QUANTITIES	W.Thomas Hughes	Alvin Kwan

STATE OF CALIFORNIA
DEPARTMENT OF TRANSPORTATION

DIVISION OF ENGINEERING SERVICES
ELECTRICAL-MECHANICAL-WATER AND WASTEWATER DESIGN

BRIDGE NO. 50M5722
KM POST

TAFT MAINTENANCE STATION

FUEL TANK & DISPENSER

SHEET **M1-11**

DOS ELEC (10/98) FILE => m111.dgn
DATE PLOTTED => 23-MAR-2010 TIME PLOTTED => 06:00

ORIGINAL SCALE IN MILLIMETERS FOR REDUCED PLANS 0 10 20 30 40 50 60 70 80 90 100

CU 06257
EA 483401
FILE => m111.dgn

DISREGARD PRINTS BEARING EARLIER REVISION DATES

REVISION DATES (PRELIMINARY STAGE ONLY): 03-31-06 06-19-06 07-28-06 10-30-06 11-30-06 01-29-07 03-30-07 05-11-07 10-10-08

SHEET OF

USERNAME => trmikes| DATE PLOTTED => 23-MAR-2010 TIME PLOTTED => 06:00

05-11-07 V1=1

DIST.	COUNTY	LOCATION CODE	KILOMETER POST TOTAL PROJECT	SHEET NO.	TOTAL SHEETS
06	Ker	5722		140	178

REGISTERED ENGINEER-MECHANICAL 00-00-00 DATE

3-8-10
PLANS APPROVAL DATE

REGISTERED PROFESSIONAL ENGINEER Jack Wheeler No. M21648 Exp. 6-30-09 MECH STATE OF CALIFORNIA

The State of California or its officers or agents shall not be responsible for the accuracy or completeness of electronic copies of this plan sheet.

CALIFORNIA STATE FIRE MARSHAL APPROVED
Approval of this plan does not authorize or approve any omission or deviation from applicable regulations. Final approval is subject to field inspection. One set of approved plans shall be available on the project site at all times.
Reviewed by: JEFFERY SCHWARTZ
Approval date: 03/08/10

Caltrans Metric

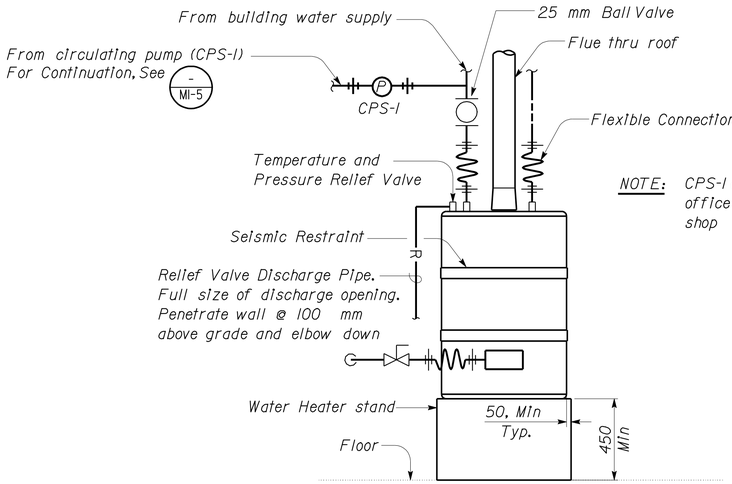

NOTE: CPS-1 applies to office and equipment shop

1 WATER HEATER (GAS)

No Scale

Water Heater Stand shall be 50 mm x 100 mm stud framing. Install 20 mm thick plywood sheet on top plate and Gypsum Board on sides. Finish surfaces to match adjacent walls. Secure bottom plate to floor with 2 power driven anchors. Wrap in an Insulated Blanket (R-11 Insulated blanket not shown)

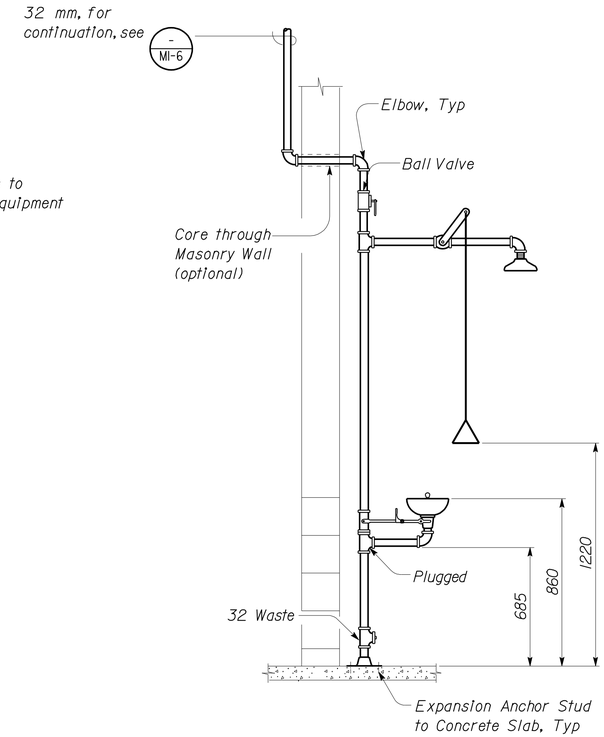

3 EMERGENCY SHOWER AND EYEWASH DETAIL

No Scale

Installation of private fire mains and their appurtenances shall be installed per NFPA 24 2007 edition as amended.

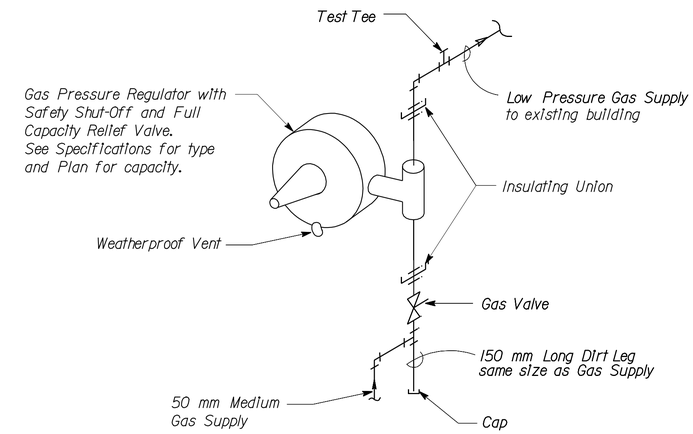

4 GAS PRESSURE REGULATOR

No Scale

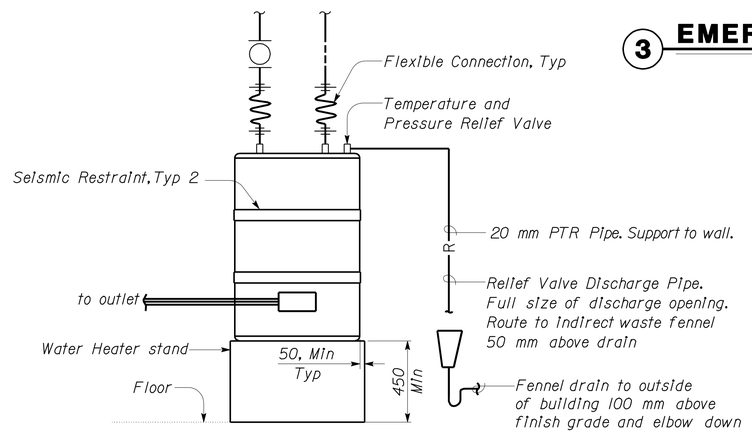

2 WATER HEATER (ELECTRIC)

No Scale

Water Heater Stand shall be 50 mm x 100 mm stud framing. Install 20 mm thick plywood sheet on top plate and Gypsum Board on sides. Finish surfaces to match adjacent walls. Secure bottom plate to floor with 2 power driven anchors. Wrap in Insulated Blanket (R-11 Insulated Blanket not shown).

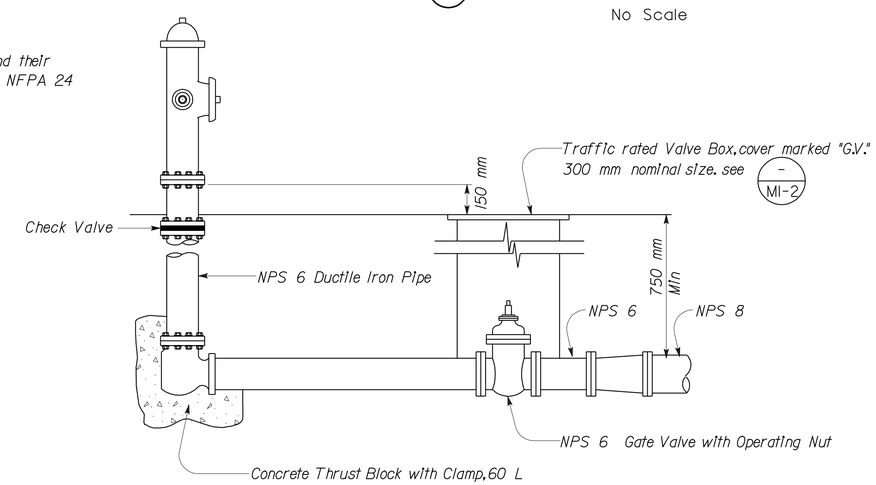

5 FIRE HYDRANT DETAILS

No Scale

THIS SHEET ACCURATE FOR MECHANICAL WORK ONLY

ALL DIMENSIONS SHOWN IN MILLIMETERS, EXCEPT AS NOTED

	BY	CHECKED
DESIGN	W.Thomas Hughes	Alvin Kwan
DETAILS	W.Thomas Hughes	Alvin Kwan
QUANTITIES	W.Thomas Hughes	Alvin Kwan

STATE OF CALIFORNIA DEPARTMENT OF TRANSPORTATION

DIVISION OF ENGINEERING SERVICES
ELECTRICAL-MECHANICAL-WATER AND WASTEWATER DESIGN

BRIDGE NO. 50M5722
KM POST

TAFT MAINTENANCE STATION
MECHANICAL DETAILS NO. 1

SHEET **M1-12**

DOS ELEC (10/98) FILE => m112.dgn
DATE PLOTTED => 23-MAR-2010 TIME PLOTTED => 06:01

ORIGINAL SCALE IN MILLIMETERS FOR REDUCED PLANS 0 10 20 30 40 50 60 70 80 90 100

CU 06257
EA 483401

DISREGARD PRINTS BEARING EARLIER REVISION DATES

REVISION DATES (PRELIMINARY STAGE ONLY) 03-31-06 06-19-06 07-28-06 10-30-06 11-30-06 01-29-07 03-30-07 05-11-07 10-14-08 SHEET OF

FILE => m112.dgn

USERNAME => trmikesl DATE PLOTTED => 23-MAR-2010 TIME PLOTTED => 06:01

V1=1

DIST.	COUNTY	LOCATION CODE	KILOMETER POST TOTAL PROJECT	SHEET NO.	TOTAL SHEETS
06	Ker	5722		141	178

REGISTERED ENGINEER-MECHANICAL 00-00-00 DATE

3-8-10
PLANS APPROVAL DATE

REGISTERED PROFESSIONAL ENGINEER Jack Wheeler No. M21648 Exp. 6-30-09 MECH STATE OF CALIFORNIA

The State of California or its officers or agents shall not be responsible for the accuracy or completeness of electronic copies of this plan sheet.

Caltrans Metric

CALIFORNIA STATE FIRE MARSHAL APPROVED

Approval of this plan does not authorize or approve any omission or deviation from applicable regulations. Final approval is subject to field inspection. One set of approved plans shall be available on the project site at all times.

Reviewed by: JEFFERY SCHWARTZ
Approval date: 03/08/10

GENERAL NOTE:
HVAC:

Air Conditioner shall include two cased evaporative coils, and two matched remote outdoor condensing units.

Furnaces shall include the optional neutralizer kits and condensate pump kits as accessories.

A shutoff for smoke control activated by a smoke detector in the main supply air is required. (CMC Section 608)

NOTES:

1 Outside Air Intake velocity shall not to exceed 25 cm/sec, duct to A/C unit add roof cap and birdscreen.

2 See specifications for the exact filter for this HVAC system.

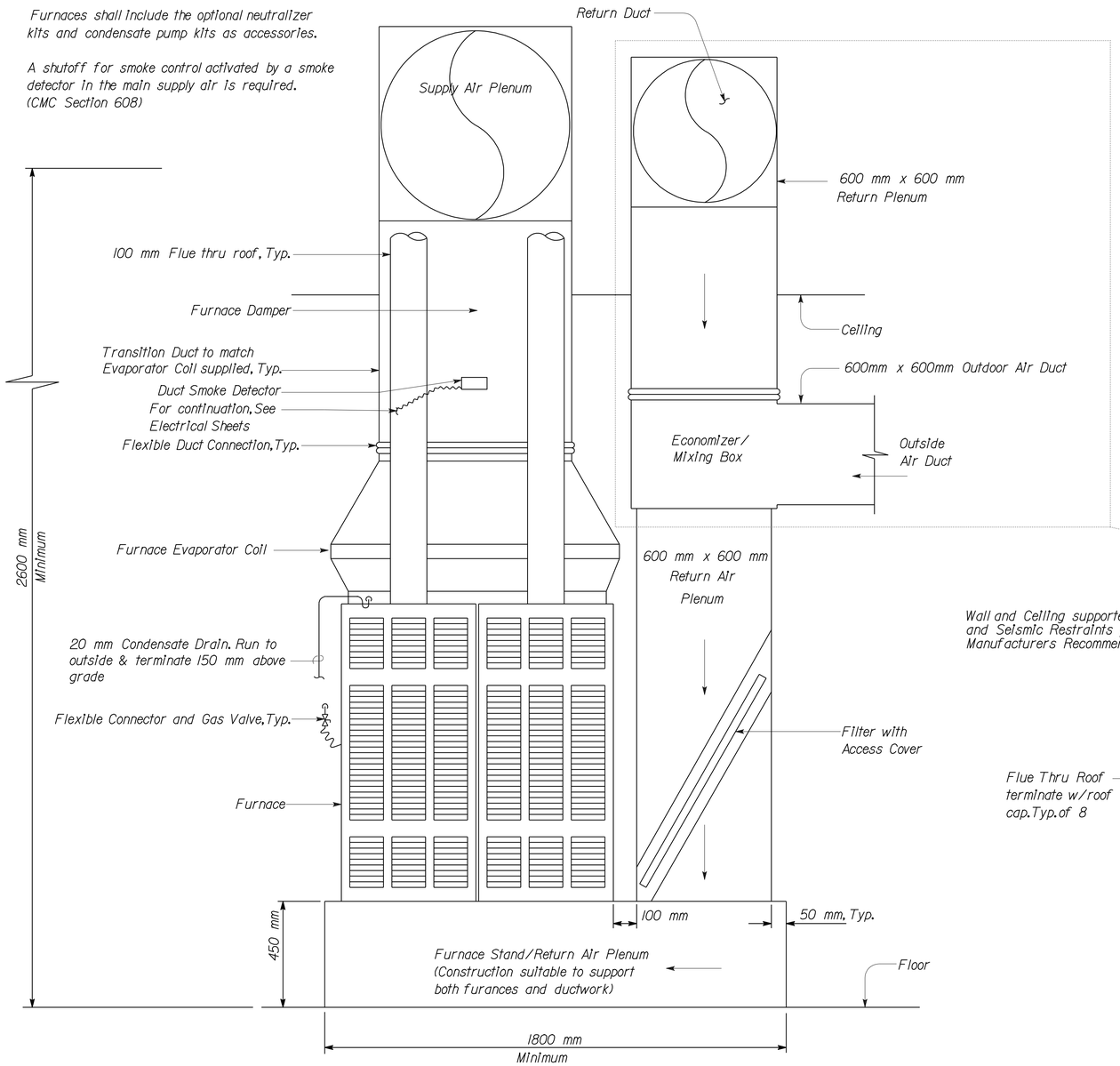

1 SPLIT SYSTEM AIR CONDITIONING WITH FURNACE - ELEVATION

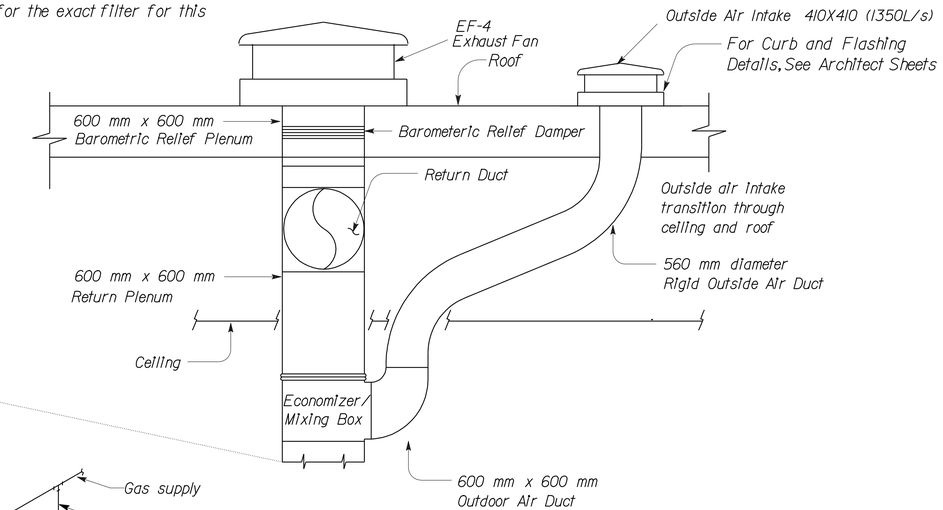

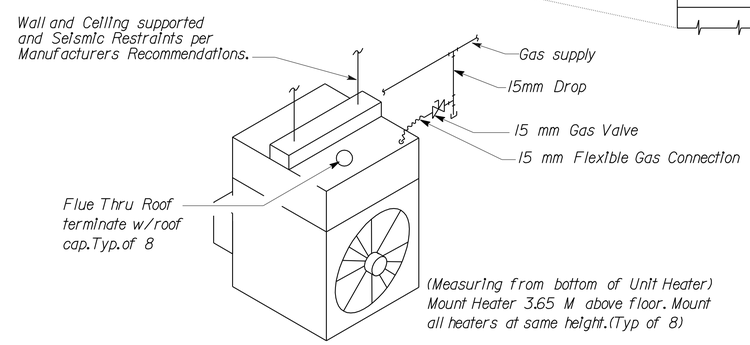

2 UNIT HEATER DETAIL

No Scale

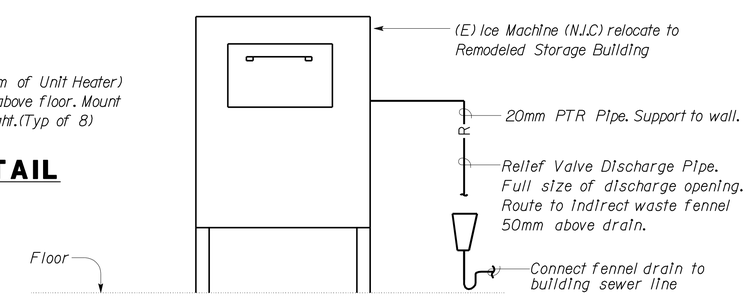

3 ICE MACHINE'S FENNEL DRAIN

No Scale

THIS SHEET ACCURATE FOR MECHANICAL WORK ONLY NO SCALE

ALL DIMENSIONS SHOWN IN MILLIMETERS, EXCEPT AS NOTED

	BY	CHECKED
DESIGN	W. Thomas Hughes	Alvin Kwan
DETAILS	W. Thomas Hughes	Alvin Kwan
QUANTITIES	W. Thomas Hughes	Alvin Kwan

STATE OF CALIFORNIA DEPARTMENT OF TRANSPORTATION

DIVISION OF ENGINEERING SERVICES ELECTRICAL-MECHANICAL-WATER AND WASTEWATER DESIGN

BRIDGE NO. 50M5722
KM POST

TAFT MAINTENANCE STATION

MECHANICAL DETAILS NO. 2

SHEET M1-13

DOS ELEC (10/98) FILE => m113.dgn DATE PLOTTED => 23-MAR-2010 TIME PLOTTED => 06:01

ORIGINAL SCALE IN MILLIMETERS FOR REDUCED PLANS 0 10 20 30 40 50 60 70 80 90 100

CU 06257
EA 483401

DISREGARD PRINTS BEARING EARLIER REVISION DATES

REVISION DATES (PRELIMINARY STAGE ONLY) 03-31-06 06-19-06 07-28-06 10-30-06 11-30-06 01-29-07 03-30-07 05-11-07 10-14-08

SHEET OF

FILE => m113.dgn

USERNAME => trmikesi DATE PLOTTED => 23-MAR-2010 TIME PLOTTED => 06:01

VI=I

DIST.	COUNTY	LOCATION CODE	KILOMETER POST TOTAL PROJECT	SHEET NO.	TOTAL SHEETS
06	Ker	5722		142	178

REGISTERED ENGINEER-MECHANICAL — 00-00-00 DATE

3-8-10
PLANS APPROVAL DATE

REGISTERED PROFESSIONAL ENGINEER — Jack Wheeler — No. M21648 — Exp. 6-30-09 — MECH — STATE OF CALIFORNIA

The State of California or its officers or agents shall not be responsible for the accuracy or completeness of electronic copies of this plan sheet.

CALIFORNIA STATE FIRE MARSHAL APPROVED

Approval of this plan does not authorize or approve any omission or deviation from applicable regulations. Final approval is subject to field inspection. One set of approved plans shall be available on the project site at all times.

Reviewed by: JEFFERY SCHWARTZ
Approval date: 03/08/10

Caltrans Metric

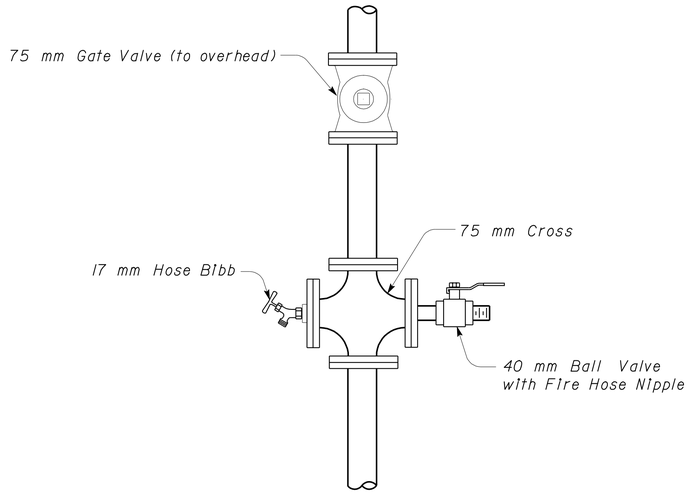

A DETAIL
No Scale

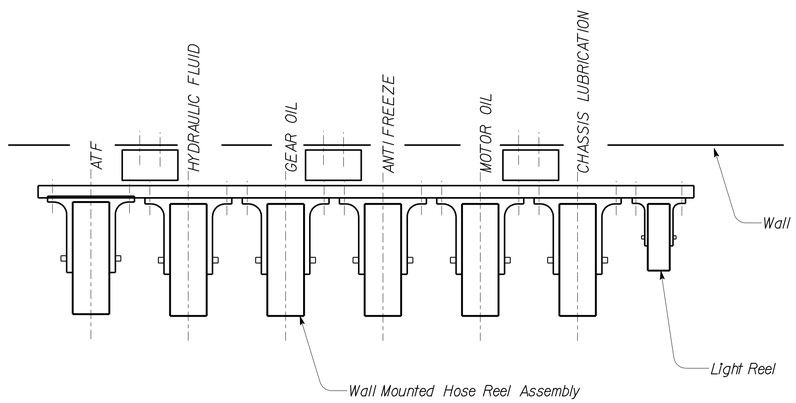

2 REEL MOUNTING FRAME PLAN
No Scale

100 mm Ø GSP, filled with minor concrete. 900 mm embedded in ground. Clamp to 75 mm Ø GSP riser with Anchor Chair Pipe Supports and 100 mm x 200 mm redwood blocking

<u>Note for tank truck filler:</u>

1. Tank truck filler pipes above the ground shall be insulated for freeze protection.

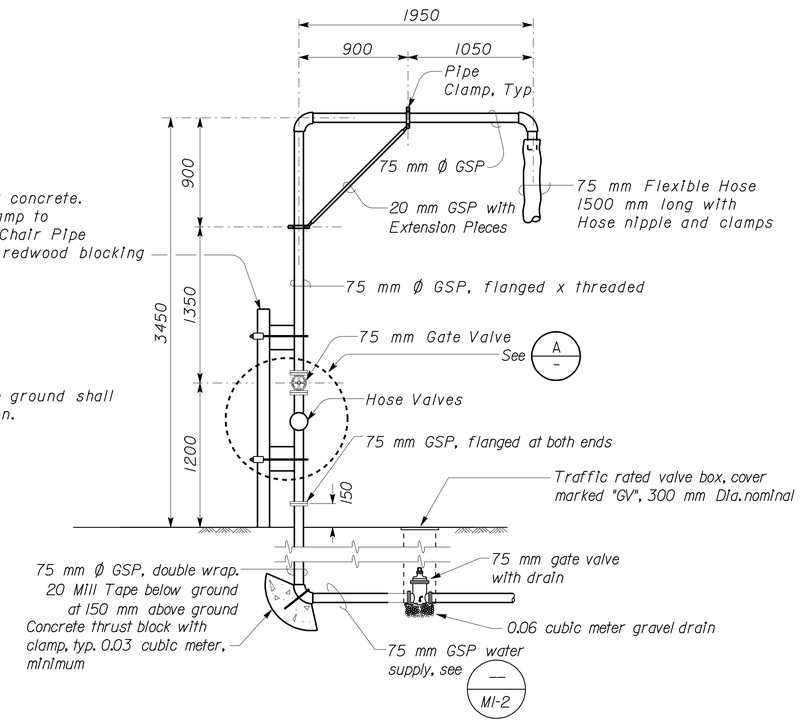

1 TANK TRUCK FILLER
No Scale

THIS SHEET ACCURATE FOR MECHANICAL WORK ONLY

ALL DIMENSIONS SHOWN IN MILLIMETERS, EXCEPT AS NOTED

	BY	CHECKED
DESIGN	W.Thomas Hughes	Alvin Kwan
DETAILS	W.Thomas Hughes	Alvin Kwan
QUANTITIES	W.Thomas Hughes	Alvin Kwan

STATE OF CALIFORNIA
DEPARTMENT OF TRANSPORTATION

DIVISION OF ENGINEERING SERVICES
ELECTRICAL-MECHANICAL-WATER AND WASTEWATER DESIGN

BRIDGE NO. 50M5722
KM POST

TAFT MAINTENANCE STATION

MECHANICAL DETAILS NO. 3

SHEET **M1-14**

DOS ELEC (10/98) FILE => m114.dgn
DATE PLOTTED => 23-MAR-2010 TIME PLOTTED => 06:01

ORIGINAL SCALE IN MILLIMETERS FOR REDUCED PLANS 0 10 20 30 40 50 60 70 80 90 100

CU 06257
EA 483401

DISREGARD PRINTS BEARING EARLIER REVISION DATES →

REVISION DATES (PRELIMINARY STAGE ONLY): 03-31-06 06-29-06 07-28-06 10-26-06 11-29-06 01-29-07 03-30-07 05-14-07 10-14-08

SHEET OF

FILE => m114.dgn

USERNAME => trmikesi DATE PLOTTED => 23-MAR-2010 TIME PLOTTED => 06:01

VI=I

DIST.	COUNTY	LOCATION CODE	KILOMETER POST TOTAL PROJECT	SHEET NO.	TOTAL SHEETS
06	Ker	5722		143	178

REGISTERED ENGINEER-MECHANICAL 00-00-00 DATE

3-8-10
PLANS APPROVAL DATE

REGISTERED PROFESSIONAL ENGINEER Jack Wheeler No. M21648 Exp. 6-30-09 MECH STATE OF CALIFORNIA

The State of California or its officers or agents shall not be responsible for the accuracy or completeness of electronic copies of this plan sheet.

CALIFORNIA STATE FIRE MARSHAL APPROVED
Approval of this plan does not authorize or approve any omission or deviation from applicable regulations. Final approval is subject to field inspection. One set of approved plans shall be available on the project site at all times.
Reviewed by: JEFFERY SCHWARTZ
Approval date: 03/08/10

Caltrans Metric

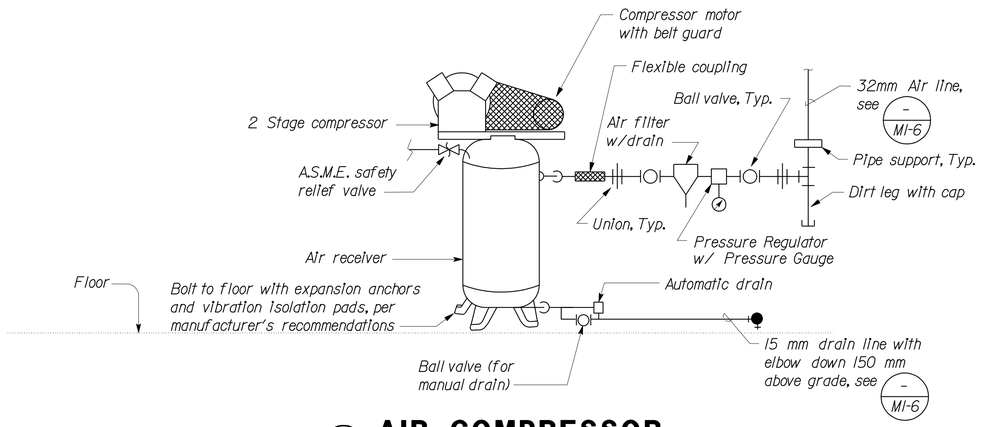

1 AIR COMPRESSOR
No Scale

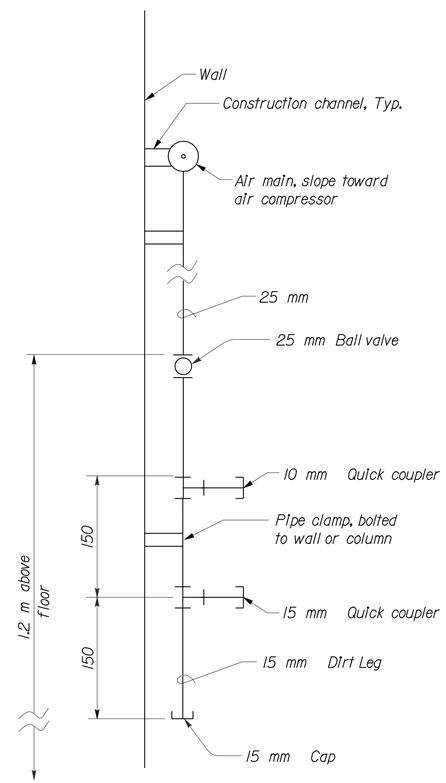

2 AIR DROP
No Scale

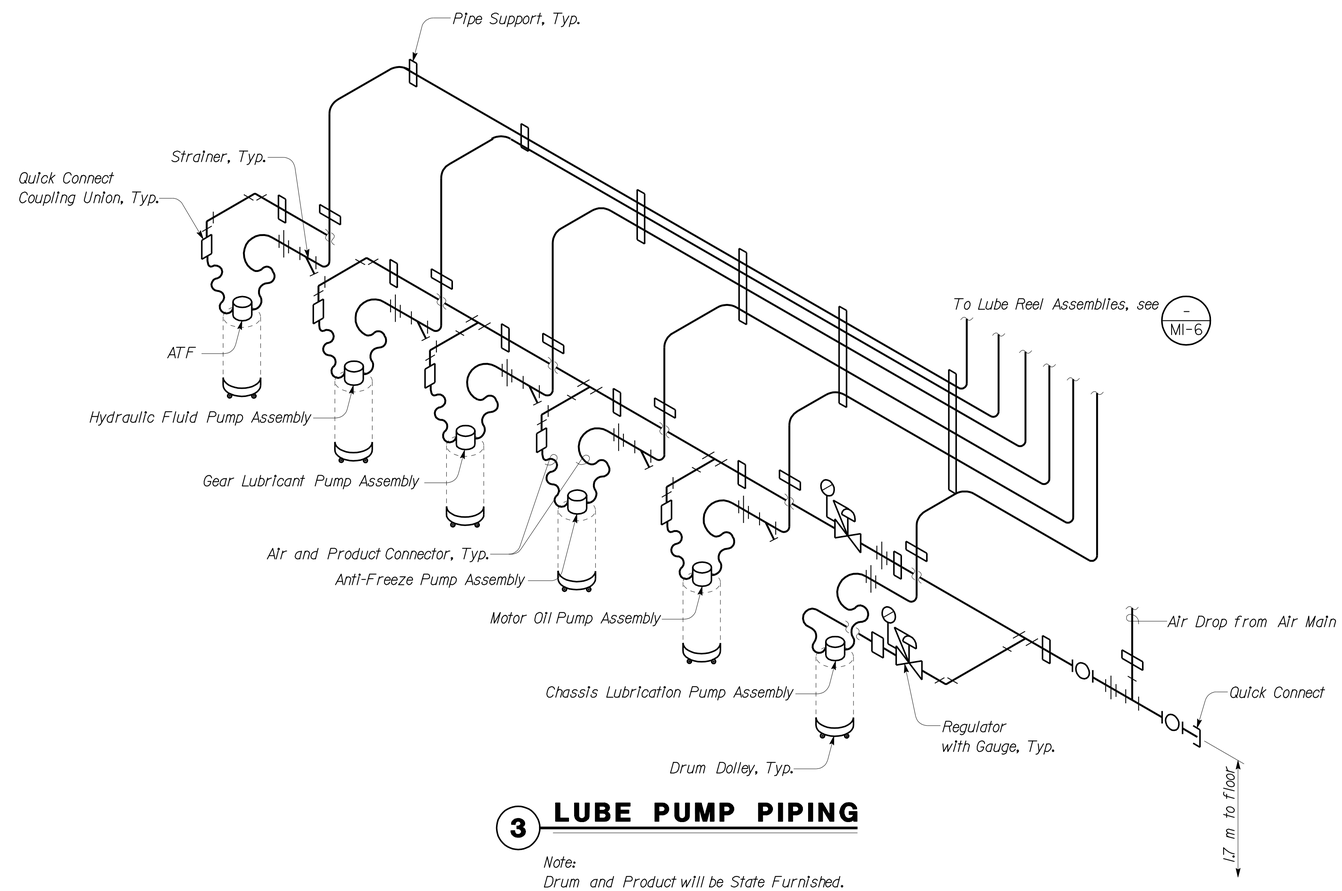

3 LUBE PUMP PIPING

Note:
Drum and Product will be State Furnished.
Install Drum Dolley under each Drum.

THIS SHEET ACCURATE FOR MECHANICAL WORK ONLY

ALL DIMENSIONS SHOWN IN MILLIMETERS, EXCEPT AS NOTED

	BY	CHECKED
DESIGN	W.Thomas Hughes	Alvin Kwan
DETAILS	W.Thomas Hughes	Alvin Kwan
QUANTITIES	W.Thomas Hughes	Alvin Kwan

STATE OF CALIFORNIA
DEPARTMENT OF TRANSPORTATION

DIVISION OF ENGINEERING SERVICES
ELECTRICAL-MECHANICAL-WATER AND WASTEWATER DESIGN

BRIDGE NO. 50M5722
KM POST

TAFT MAINTENANCE STATION
MECHANICAL DETAILS NO. 4

SHEET **M1-15**

DOS ELEC (10/98)
FILE => m115.dgn
DATE PLOTTED => 23-MAR-2010 TIME PLOTTED => 06:01

ORIGINAL SCALE IN MILLIMETERS FOR REDUCED PLANS 0 10 20 30 40 50 60 70 80 90 100

CU 06257
EA 483401

DISREGARD PRINTS BEARING EARLIER REVISION DATES

REVISION DATES (PRELIMINARY STAGE ONLY): 03-31-06 06-19-06 07-28-06 10-19-06 11-29-06 01-29-07 03-30-07 05-11-07 10-14-08

SHEET OF

FILE => m115.dgn

USERNAME => trmikesi DATE PLOTTED => 23-MAR-2010 TIME PLOTTED => 06:01

VI=I

DIST.	COUNTY	LOCATION CODE	KILOMETER POST TOTAL PROJECT	SHEET NO.	TOTAL SHEETS
06	Ker	5722		144	178

REGISTERED ENGINEER-MECHANICAL 00-00-00 DATE

3-8-10
PLANS APPROVAL DATE

REGISTERED PROFESSIONAL ENGINEER Jack Wheeler No. M21648 Exp. 6-30-09 MECH STATE OF CALIFORNIA

The State of California or its officers or agents shall not be responsible for the accuracy or completeness of electronic copies of this plan sheet.

CALIFORNIA STATE FIRE MARSHAL APPROVED
Approval of this plan does not authorize or approve any omission or deviation from applicable regulations. Final approval is subject to field inspection. One set of approved plans shall be available on the project site at all times.
Reviewed by: JEFFERY SCHWARTZ
Approval date: 03/08/10

Caltrans Metric

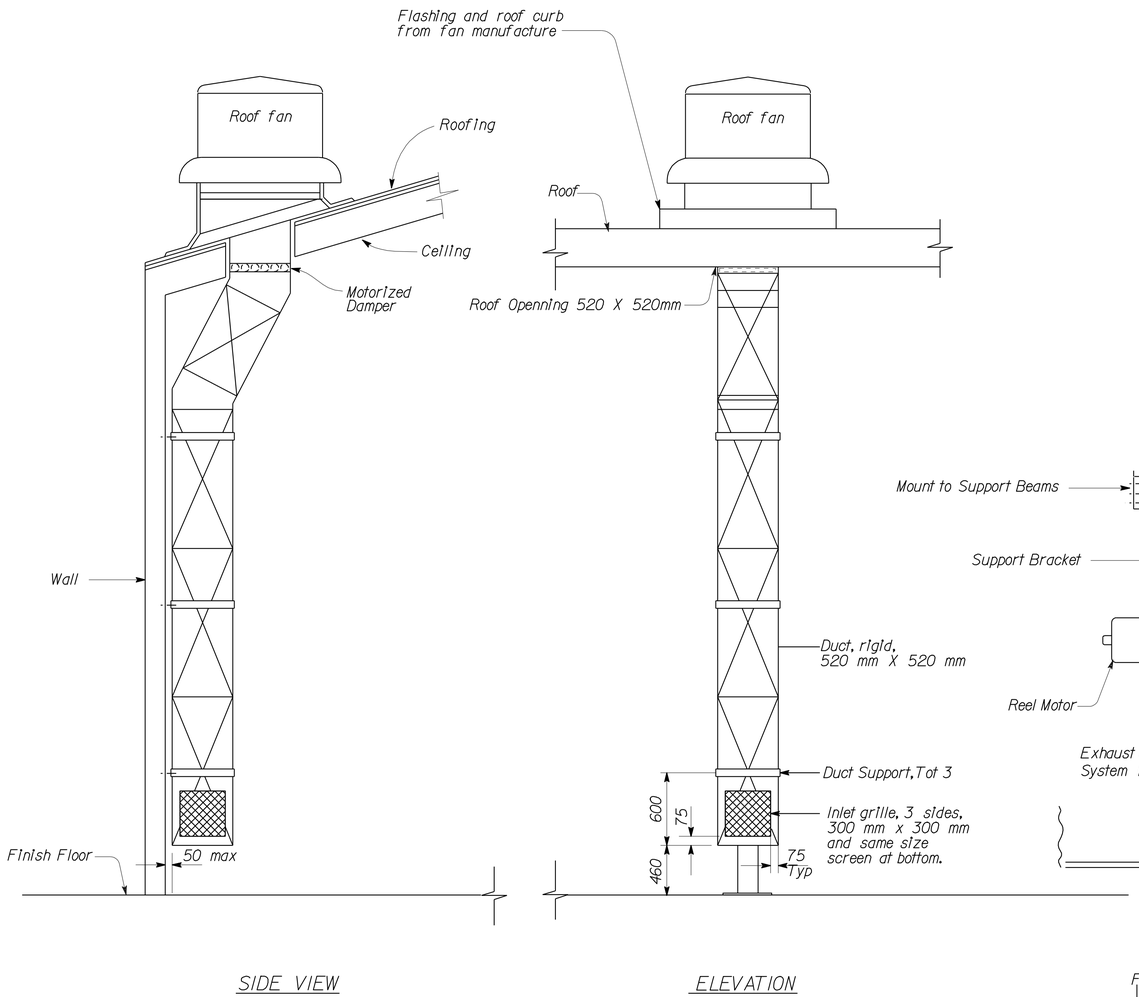

1 DECLASSIFICATION FAN

No Scale

Note:

Inlet grille shall be 19 mm x 2.03 mm flattened metal, with banded edge, 1.6 mm x 25 mm galvanized sheet metal. Attach to duct with eight M3.5 sheet metal screws per grille.

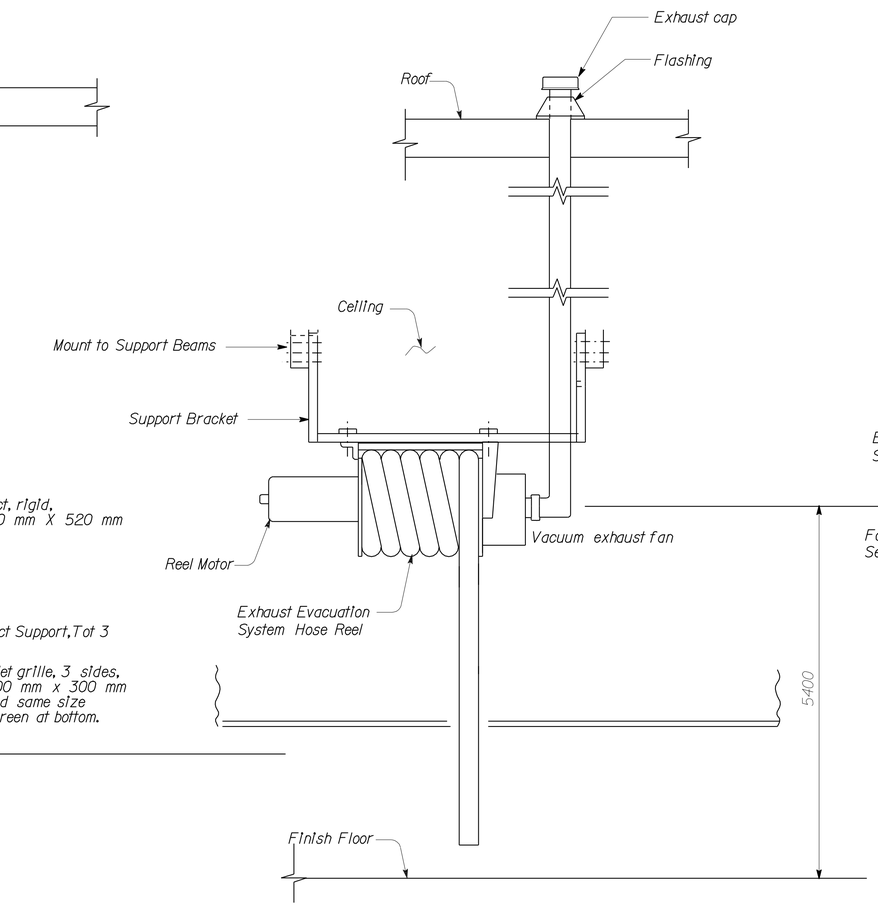

2 EXHAUST EVACUATION HOSE REEL AND FAN ELEVATION

No Scale

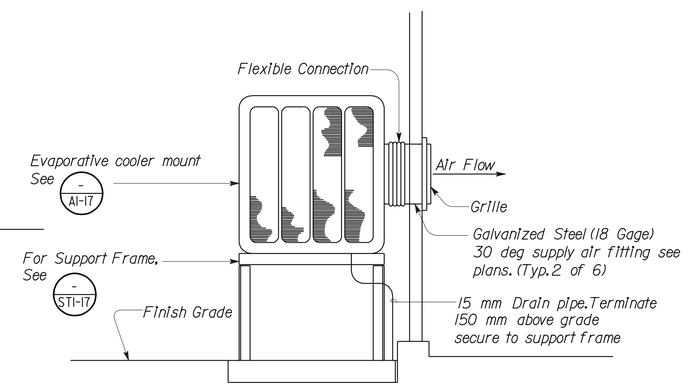

3 EVAPORATIVE COOLER

No Scale

THIS SHEET ACCURATE FOR MECHANICAL WORK ONLY

ALL DIMENSIONS SHOWN IN MILLIMETERS, EXCEPT AS NOTED

	BY	CHECKED
DESIGN	W. Thomas Hughes	Alvin Kwan
DETAILS	W. Thomas Hughes	Alvin Kwan
QUANTITIES	W. Thomas Hughes	Alvin Kwan

STATE OF CALIFORNIA DEPARTMENT OF TRANSPORTATION

DIVISION OF ENGINEERING SERVICES
ELECTRICAL-MECHANICAL-WATER AND WASTEWATER DESIGN

BRIDGE NO. 50M5722
KM POST

TAFT MAINTENANCE STATION

MECHANICAL DETAILS NO. 5

SHEET **M1-16**

DOS ELEC (10/98) FILE => m116.dgn
DATE PLOTTED => 23-MAR-2010 TIME PLOTTED => 06:01

ORIGINAL SCALE IN MILLIMETERS FOR REDUCED PLANS 0 10 20 30 40 50 60 70 80 90 100

CU 06257
EA 483401

DISREGARD PRINTS BEARING EARLIER REVISION DATES

REVISION DATES (PRELIMINARY STAGE ONLY): 03-31-06 06-19-06 07-28-06 10-30-06 11-30-06 01-29-07 03-30-07 05-11-07 10-14-08

SHEET OF

FILE => m116.dgn

USERNAME => trmikesi DATE PLOTTED => 23-MAR-2010 TIME PLOTTED => 06:01

VI=I

DIST.	COUNTY	LOCATION CODE	KILOMETER POST TOTAL PROJECT	SHEET NO.	TOTAL SHEETS
06	Ker	5722		145	178

REGISTERED ENGINEER-MECHANICAL 00-00-00 DATE

3-8-10
PLANS APPROVAL DATE

REGISTERED PROFESSIONAL ENGINEER Jack Wheeler No. M21648 Exp. 6-30-09 MECH STATE OF CALIFORNIA

The State of California or its officers or agents shall not be responsible for the accuracy or completeness of electronic copies of this plan sheet.

CALIFORNIA STATE FIRE MARSHAL APPROVED

Approval of this plan does not authorize or approve any omission or deviation from applicable regulations. Final approval is subject to field inspection. One set of approved plans shall be available on the project site at all times.

Reviewed by: JEFFERY SCHWARTZ

Approval date: 03/08/10

Caltrans Metric

NOTE

1. See Architecural sheet for location of equipment on this sheet.

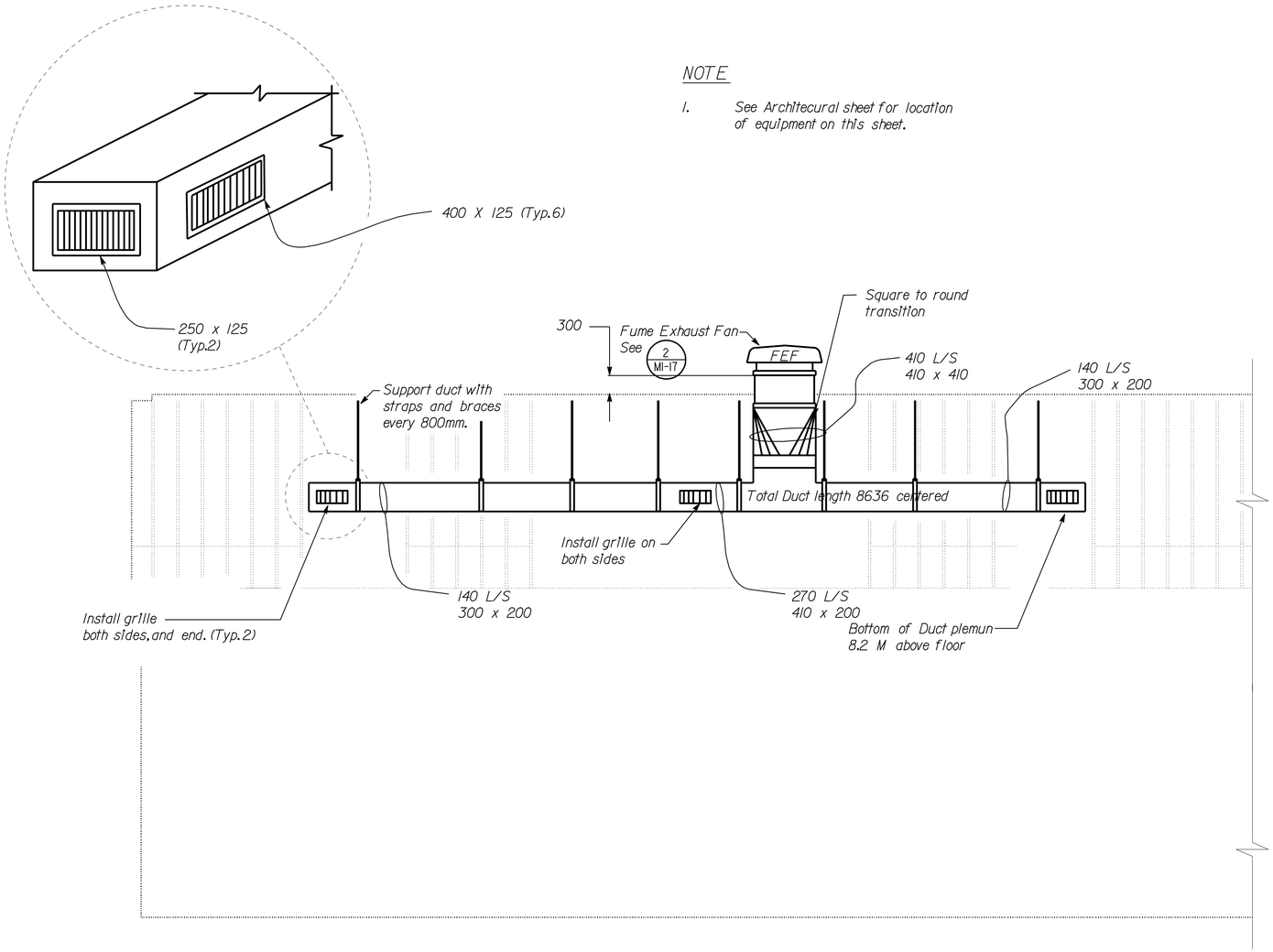

1 FAN AND DUCTING SECTION

No Scale

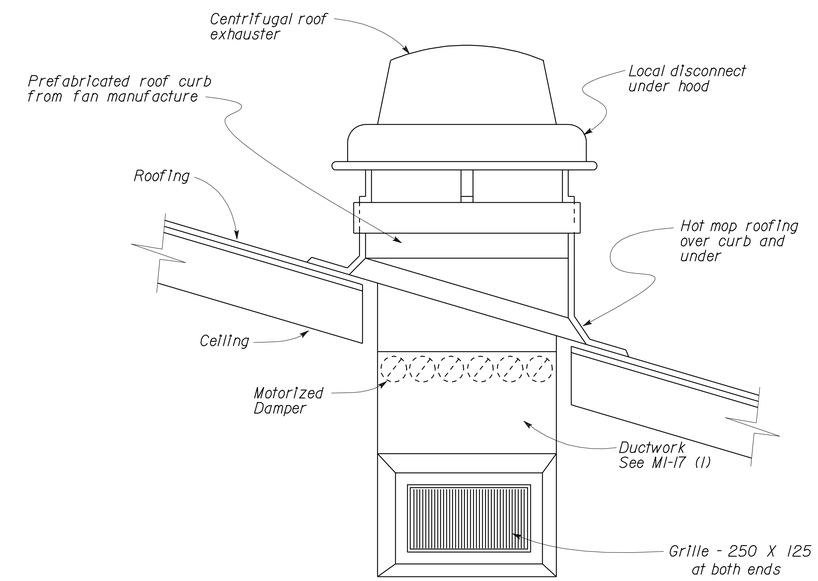

A FUME EXHAUST FAN DETAIL

No Scale

THIS SHEET ACCURATE FOR MECHANICAL WORK ONLY

ALL DIMENSIONS SHOWN IN MILLIMETERS, EXCEPT AS NOTED

	BY	CHECKED
DESIGN	W.Thomas Hughes	Alvin Kwan
DETAILS	W.Thomas Hughes	Alvin Kwan
QUANTITIES	W.Thomas Hughes	Alvin Kwan

STATE OF CALIFORNIA DEPARTMENT OF TRANSPORTATION

DIVISION OF ENGINEERING SERVICES ELECTRICAL-MECHANICAL-WATER AND WASTEWATER DESIGN

BRIDGE NO. 50M5722

KM POST

TAFT MAINTENANCE STATION

MECHANICAL DETAILS NO. 6

SHEET **M1-17**

DOS ELEC (10/98) FILE => m117.dgn DATE PLOTTED => 23-MAR-2010 TIME PLOTTED => 06:01

ORIGINAL SCALE IN MILLIMETERS FOR REDUCED PLANS 0 10 20 30 40 50 60 70 80 90 100

CU 06257
EA 483401

FILE => m117.dgn

DISREGARD PRINTS BEARING EARLIER REVISION DATES

REVISION DATES (PRELIMINARY STAGE ONLY) 03-31-06 06-19-06 07-28-06 10-30-06 11-30-06 01-29-07 03-30-07 05-11-07 10-14-08

SHEET OF

USERNAME => trmikesl DATE PLOTTED => 23-MAR-2010 TIME PLOTTED => 06:01

VI=I

DIST.	COUNTY	LOCATION CODE	KILOMETER POST TOTAL PROJECT	SHEET NO.	TOTAL SHEETS
06	Ker	5722		146	178

REGISTERED ENGINEER-MECHANICAL 00-00-00 DATE

3-8-10
PLANS APPROVAL DATE

REGISTERED PROFESSIONAL ENGINEER Jack Wheeler No. M21648 Exp. 6-30-09 MECH STATE OF CALIFORNIA

The State of California or its officers or agents shall not be responsible for the accuracy or completeness of electronic copies of this plan sheet.

CALIFORNIA STATE FIRE MARSHAL APPROVED
Approval of this plan does not authorize or approve any omission or deviation from applicable regulations. Final approval is subject to field inspection. One set of approved plans shall be available on the project site at all times.
Reviewed by: JEFFERY SCHWARTZ
Approval date: 03/08/10

Caltrans Metric

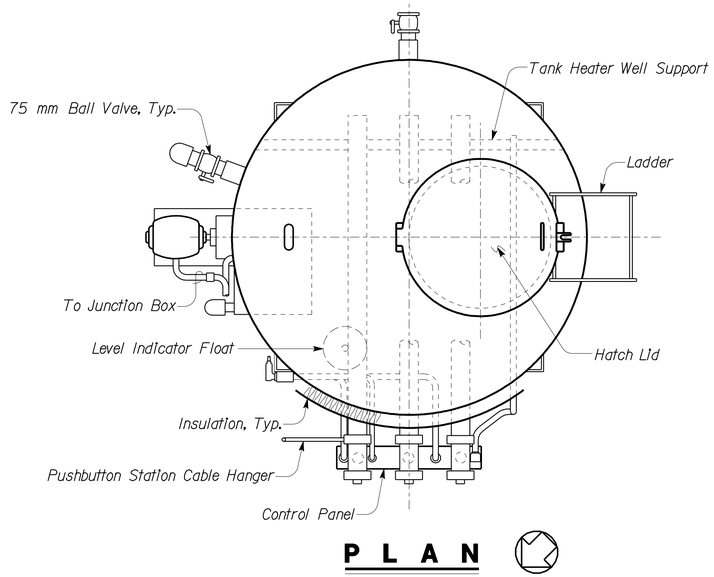

PLAN

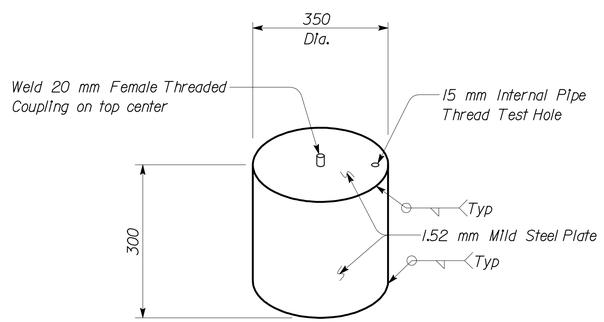

1 LEVEL INDICATOR FLOAT

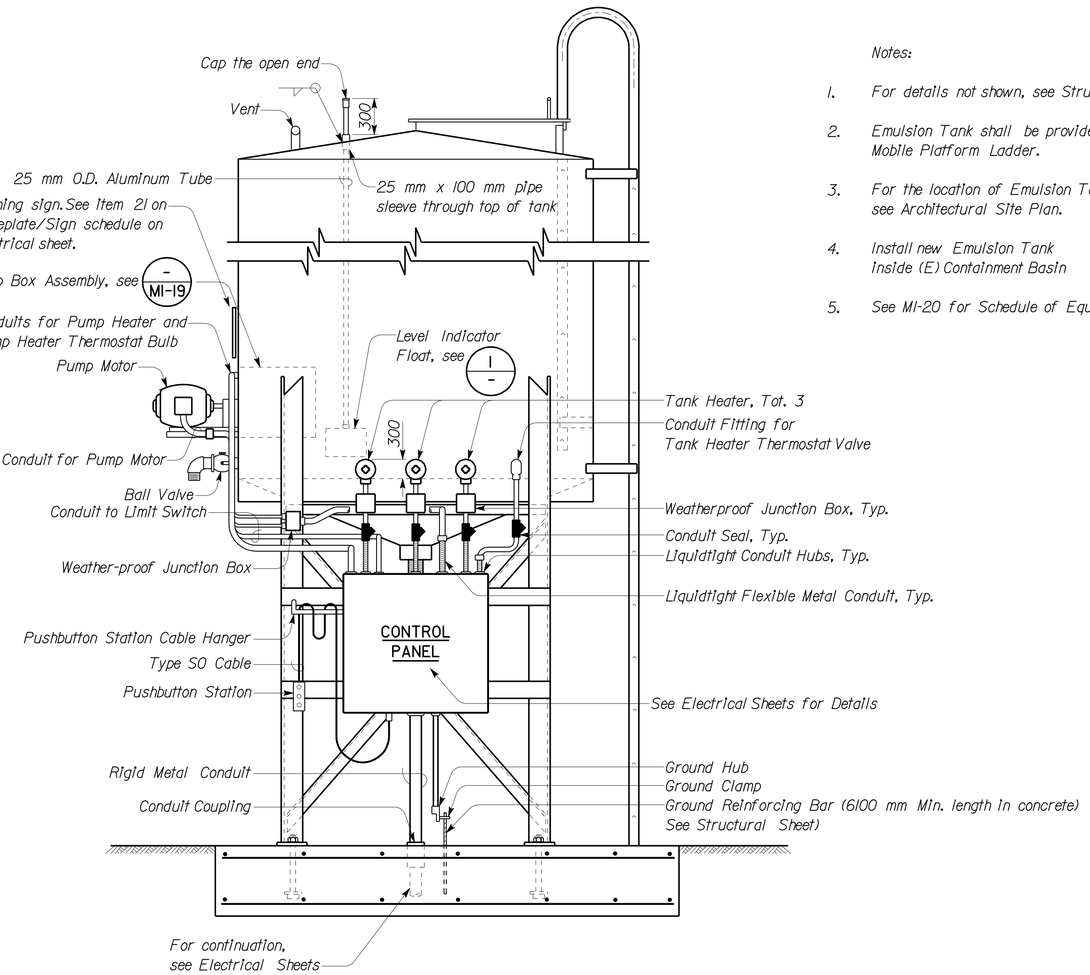

ELEVATION

Notes:

1. For details not shown, see Structural Sheets.
2. Emulsion Tank shall be provided with Mobile Platform Ladder.
3. For the location of Emulsion Tank, see Architectural Site Plan.
4. Install new Emulsion Tank inside (E) Containment Basin
5. See M1-20 for Schedule of Equipment.

11,360 L EMULSION TANK
No Scale

THIS SHEET ACCURATE FOR MECHANICAL WORK ONLY

ALL DIMENSIONS SHOWN IN MILLIMETERS, EXCEPT AS NOTED

	BY	CHECKED
DESIGN	W.Thomas Hughes	Alvin Kwan
DETAILS	W.Thomas Hughes	Alvin Kwan
QUANTITIES	W.Thomas Hughes	Alvin Kwan

STATE OF CALIFORNIA DEPARTMENT OF TRANSPORTATION

DIVISION OF ENGINEERING SERVICES
ELECTRICAL-MECHANICAL-WATER AND WASTEWATER DESIGN

BRIDGE NO. 50M5722
KM POST

TAFT MAINTENANCE STATION
MECHANICAL DETAILS NO. 7

SHEET **M1-18**

DOS ELEC (10/98) FILE => m118.dgn
DATE PLOTTED => 23-MAR-2010 TIME PLOTTED => 06:01

ORIGINAL SCALE IN MILLIMETERS FOR REDUCED PLANS 0 10 20 30 40 50 60 70 80 90 100

CU 06257
EA 483401

DISREGARD PRINTS BEARING EARLIER REVISION DATES

REVISION DATES (PRELIMINARY STAGE ONLY) 03-31-06 06-19-06 07-28-06 10-30-06 11-30-06 01-29-07 03-30-07 05-11-07 10-14-08

SHEET OF

FILE => m118.dgn

USERNAME => trmikesl DATE PLOTTED => 23-MAR-2010 TIME PLOTTED => 06:01

V1=1

DIST.	COUNTY	LOCATION CODE	KILOMETER POST TOTAL PROJECT	SHEET NO.	TOTAL SHEETS
06	Ker	5722		147	178

Caltrans Metric

REGISTERED ENGINEER-MECHANICAL — 00-00-00 DATE

3-8-10
PLANS APPROVAL DATE

REGISTERED PROFESSIONAL ENGINEER — Jack Wheeler — No. M21648 — Exp. 6-30-09 — MECH — STATE OF CALIFORNIA

The State of California or its officers or agents shall not be responsible for the accuracy or completeness of electronic copies of this plan sheet.

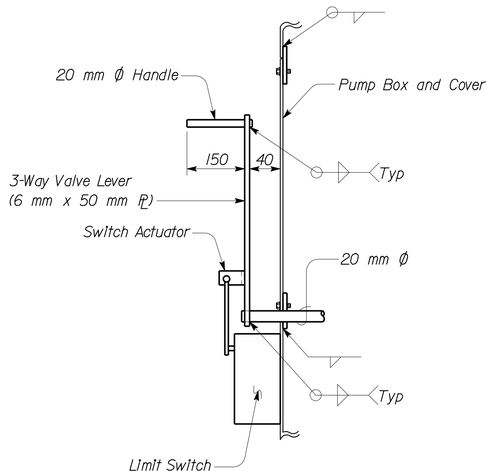

1 LIMIT SWITCH MOUNTING DETAIL

Switch Actuator shall be installed in the field during testing in the presence of the Engineer. Switch Actuator shall be installed with sheet metal screws.

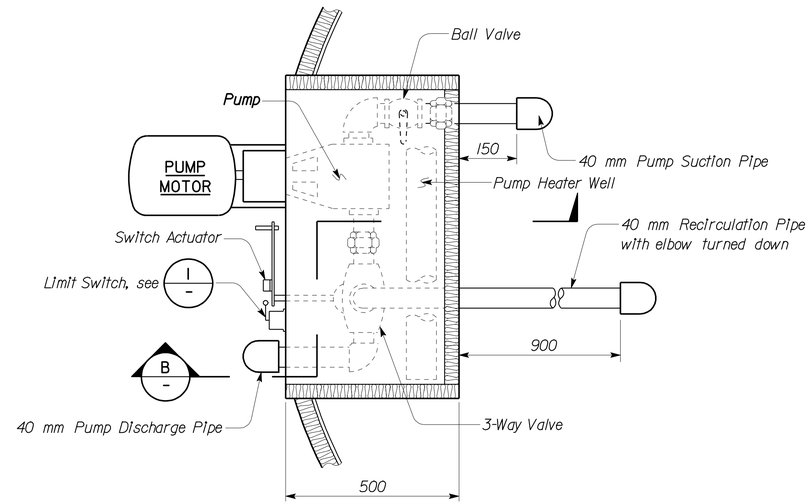

PLAN

Notes:

1. *Pump Heater Well shall be securely attached to the sides of the Pump Box wall and shall be removable for repair through the split cover.*
2. *See M1-20 for Schedule of Equipment.*

CALIFORNIA STATE FIRE MARSHAL APPROVED
Approval of this plan does not authorize or approve any omission or deviation from applicable regulations. Final approval is subject to field inspection. One set of approved plans shall be available on the project site at all times.
Reviewed by: JEFFERY SCHWARTZ
Approval date: 03/08/10

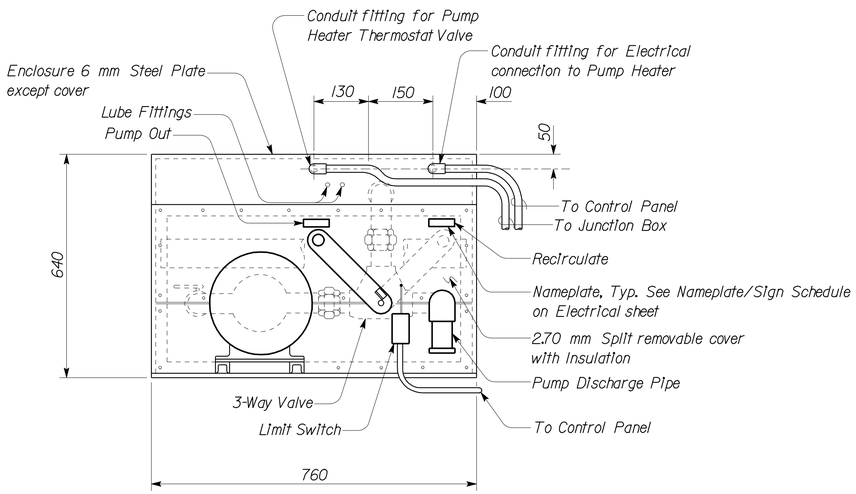

A ELEVATION

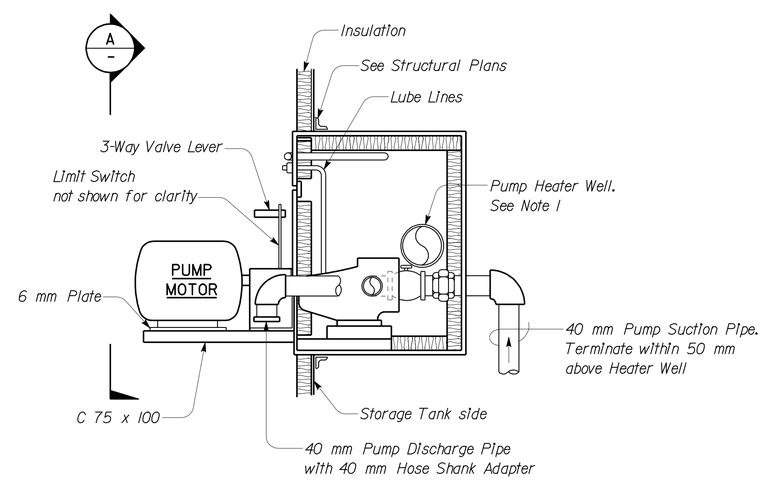

B SECTION

PUMP BOX

No Scale

THIS SHEET ACCURATE FOR MECHANICAL WORK ONLY

ALL DIMENSIONS SHOWN IN MILLIMETERS, EXCEPT AS NOTED

	BY	CHECKED
DESIGN	W.Thomas Hughes	Alvin Kwan
DETAILS	W.Thomas Hughes	Alvin Kwan
QUANTITIES	W.Thomas Hughes	Alvin Kwan

STATE OF CALIFORNIA DEPARTMENT OF TRANSPORTATION

DIVISION OF ENGINEERING SERVICES
ELECTRICAL-MECHANICAL-WATER AND WASTEWATER DESIGN

BRIDGE NO. 50M5722
KM POST

TAFT MAINTENANCE STATION

MECHANICAL DETAILS NO. 8

SHEET **M1-19**

DOS ELEC (10/98) FILE => m119.dgn
DATE PLOTTED => 23-MAR-2010 TIME PLOTTED => 06:01

ORIGINAL SCALE IN MILLIMETERS FOR REDUCED PLANS 0 10 20 30 40 50 60 70 80 90 100

CU 06257
EA 483401

DISREGARD PRINTS BEARING EARLIER REVISION DATES

REVISION DATES (PRELIMINARY STAGE ONLY) 03-31-06 06-19-06 07-28-06 10-30-06 11-30-06 01-29-07 03-30-07 05-11-07 10-14-08

SHEET OF

FILE => m119.dgn

USERNAME => trmikesl DATE PLOTTED => 23-MAR-2010 TIME PLOTTED => 06:01

VI=I

DIST	COUNTY	LOCATION CODE	KILOMETER POST TOTAL PROJECT	SHEET No.	TOTAL SHEETS
06	Ker	5722		148	178

REGISTERED ENGINEER-MECHANICAL — DATE 00-00-00

3-8-10
PLANS APPROVAL DATE

REGISTERED PROFESSIONAL ENGINEER — Jack Wheeler — No. M21648 — Exp. 6-30-09 — MECH — STATE OF CALIFORNIA

The State of California or its officers or agents shall not be responsible for the accuracy or completeness of electronic copies of this plan sheet.

CALIFORNIA STATE FIRE MARSHAL APPROVED

Approval of this plan does not authorize or approve any omission or deviation from applicable regulations. Final approval is subject to field inspection. One set of approved plans shall be available on the project site at all times.

Reviewed by: JEFFERY SCHWARTZ
Approval date: 03/08/10

Caltrans Metric

SYMBOL	DESCRIPTION
A/C	SPLIT SYSTEM AIR CONDITIONING UNIT : Quantity = 1 Cooling Capacity : 26.4 kW min. Nominal, 18.2 kW min. Sensible (total) A/C-1: 13.2 kW min. Nominal, 9.1 kW min. Sensible (each) 13.2 kW min. Nominal, 9.1 kW min. Sensible (each) Heating Capacity : 22.3 kW min. Output, Natural Gas Evap. Blower : 1350 L/s @ 200 Pa E.S.P. Unit Electrical : 240 V- 3Ph - 60Hz - 9KW Unit with modulating economizer set at 220 L/s outside air min. 4 Zones each zone is controlled by a T-stat and 7 Dampers and a duct smoke detector.
AC-1	AIR COMPRESSOR : Quantity = 1 Capacity : 1210 kPa @ 8 L/s free air delivery, 300 liters vertical tank, Unit Electrical : 3.7 kW, 240 V - 3 Ph - 60Hz
CPS-1	HOT WATER CIRCULATION PUMP SYSTEM : Quantity = 1 Electrical : 65 W - 120 V - 1Ph - 60HZ MAX 1034 KPa & 104 DEG C - 2.95 Kg 0.44 L/s - W/ 24 hr built-in timer and T-stat Valves and other fitting not listed
DEF-1 DEF-2 DEF-3	DECLASSIFICATION EXHAUST FAN : Quantity = 3 Air : 1200 L/s @ 120 Pa E.S.P., 14.7 sones max. Unit Electrical : 1.2 kW, 240 V - 3 Ph - 60Hz Provide local disconnect at exhaust fan, and motorized damper. Fan and damper shall be controlled by wall mounted on-off switch.
EC-1 EC-2 EC-3	EVAPORATIVE COOLER: Weight = 374 kg Quantity = 3 Air : 3840 L/s @ 75 Pa E.S.P Unit Electrical : 1.2 kW, 240 V - 3 Ph - 60Hz Evaporative cooler shall be wall discharge unit and controlled by a wall mounted selective switch.
EC-4	EVAPORATIVE COOLER: Weight = 275 kg Quantity = 1 Air : 2600 L/s @ 75 Pa E.S.P Unit Electrical : .75 kW, 240 V - 3 Ph - 60Hz Evaporative cooler shall be wall discharge unit and controlled by a wall mounted selective switch.
EEF-1 EEF-2	EXHAUST EVACUATION HOSE REEL AND FAN : Quantity = 2 Air : 500 L/s.@ 750 Pa Weight = 275 kg Unit Electrical : 1.2 kW, 240 V - 3 Ph - 60Hz Fan and hose reel shall be controlled by a remote operated 3 button (on-off, up, down) control station on wall.

SYMBOL	DESCRIPTION
EF-1 EF-2 EF-3 EF-5	CEILING EXHAUST FAN : Quantity = 4 Air : 110 L/s @ 30 Pa E.S.P., 4.5 sones max. Unit Electrical : 0.3 kW, 120 V - 1 Ph - 60Hz Route 150 mm dia. duct to roof cap. Provide backdraft damper and birdscreen.
EF-4	ROOF MOUNTED EXHAUST FAN : Weight 95 Kg. Quantity = 1 Air : 1350 L/s @ 124 Pa S.P., 19.7 sones max. Unit Electrical : 0.60 kW, 240 V - 1 Ph - 60Hz duct A/C unit add roof cap, birdscreen and w/barometeric relief damper w/local disconnect
ET-1	EMULSION TANK: Capacity = 11360 Liters Quantity = 1 Electrical : 9.0 KW 240 V - 3PH - 60 Hz Pump Motor 3.7 KW - 240 V - 3 PH Emulsion Heater 4.5 KW - 240 V - 3 PH W/ 24 hr. built-in timer
EWC-1	DUAL HEIGHT ELECTRIC WATER COOLER: Quantity = 1 Water: 30 L/H @ 27 °C inlet, 10 °C outlet at 32 C °ambient room temperature. Unit Electrical : 0.14 kw, 120V-1PH-60HZ
EWH-1	ELECTRIC WATER HEATER : Quantity = 1 Capacity : 45 liter Unit Input : 5.5 KW nominal input, 240V, 1Ph - 60Hz
FEF-1	FUME EXHAUST FAN : Weight = 25 kg Quantity = 1 Air : 410 L/s @ 62 Pa E.S.P., 9.4 sones max. Unit Electrical : 0.100 kW, 120 V - 1 Ph - 60Hz Provide local disconnect at exhaust fan, and motorized damper. Fan and damper shall be controlled by wall mounted on-off switch.
GFD-1	GASOLINE FUEL DISPENSER : Quantity = 2 Electrical : 240 V - 1Ph - 60HZ Pump Motor .55 KW MAX 56 L/s 344 KPa W/ 24 hr built-in timer
HLV-1 HLV-2 HLV-3	COMBINATION HEAT/ LIGHT CEILING EXHAUST FAN : Quantity = 3 Air : 33 L/s @ 30 Pa E.S.P., 3.5 sones max. Unit Electrical : 0.11 kW, 120 V - 1 Ph - 60Hz, Route 100 mm dia. duct to roof cap. Provide backdraft damper and birdscreen. Switch unit on with timer control. One 250 watts Infrared bulbs and One 100 watts Incandecent bulb. The fan and Infrared bulb shall be controlled by separate switches; Incandescent bulb is controlled by occupancy sensor.

SYMBOL	DESCRIPTION
HP-1	HEAT PUMP UNIT (THRU WALL): WT = 52 kg. Quantity = 1 Cooling Capacity : 2.69 kW min. Sensible @ 38°C Ambient temperature and 26°C DB/19°C WB Indoor temperature Heating Capacity : 2.16 kW min. Output @ 8°C Ambient temperature Evap. Blower : Fresh air intake and exhaust vent Unit Electrical : 240 V- 1Ph - 60Hz - 3KW
SF-1 SF-2	SUPPLY FAN : Quantity = 2 Air : 55 L/s @ 30 Pa E.S.P., 1.2 sones max. Unit Electrical : 0.049 kW, 120 V - 1 Ph - 60Hz Route 150 mm dia. duct. Provide backdraft damper. Controlled by 24 hr timer clock set to come on or off during working hours.
UH-1 THRU UH-8	UNIT HEATER : Weight = 65 kg Quantity = 8 Min. Output capacity : 29.5 KW natural gas Blower Capacity : 755 L/s @ 0 Pa E.S.P. Unit Electrical : 0.19 kW, 120 V - 1 Ph - 60Hz Unit heater shall be controlled by wall mounted thermostats and time switch. NOTE: Flue thru roof
VL-1	VEHICLE LIFT : Quantity = 1 Capacity : 4 Column lift, 6,800 kg/column Unit Electrical : 1.5 kW/motor (4 total), 240 V - 3 Ph - 60Hz Vehicle lift shall be operated by hand held pendent control.
WH-1	WATER HEATER :(GAS) Quantity = 1 Capacity : 190 liter Unit Input : 14.6 KW natural gas NOTE: Flue thru roof

General Note:

All equipment shall comply with 2007 Building Energy Efficiency Standards; Title 24.

THIS SHEET ACCURATE FOR MECHANICAL WORK ONLY

ALL DIMENSIONS SHOWN IN MILLIMETERS, EXCEPT AS NOTED

	BY	CHECKED
DESIGN	W.Thomas Hughes	Alvin Kwan
DETAILS	W.Thomas Hughes	Alvin Kwan
QUANTITIES	W.Thomas Hughes	Alvin Kwan

STATE OF CALIFORNIA
DEPARTMENT OF TRANSPORTATION

DIVISION OF ENGINEERING SERVICES
ELECTRICAL-MECHANICAL-WATER AND WASTEWATER DESIGN

BRIDGE NO. 50M5722
KM POST

TAFT MAINTENANCE STATION

MECHANICAL EQUIPMENT SCHEDULE

SHEET **M1-20**

DOS ELEC (10/98)
FILE => m120.dgn
DATE PLOTTED => 23-MAR-2010 TIME PLOTTED => 06:02

ORIGINAL SCALE IN MILLIMETERS FOR REDUCED PLANS 0 10 20 30 40 50 60 70 80 90 100

CU 06257
EA 483401

DISREGARD PRINTS BEARING EARLIER REVISION DATES

REVISION DATES (PRELIMINARY STAGE ONLY) 03-31-06 06-19-06 07-28-06 10-30-06 11-30-06 01-29-07 03-30-07 05-11-07 10-14-08 SHEET OF

FILE => m120.dgn

USERNAME => trmikesl DATE PLOTTED => 23-MAR-2010 TIME PLOTTED => 06:02

VI=1

DIST	COUNTY	LOCATION CODE	KILOMETER POST TOTAL PROJECT	SHEET No.	TOTAL SHEETS
06	Ker	5722		149	178

REGISTERED ENGINEER-MECHANICAL 00-00-00 DATE

3-8-10
PLANS APPROVAL DATE

REGISTERED PROFESSIONAL ENGINEER Jack Wheeler No. M21648 Exp. 6-30-09 MECH STATE OF CALIFORNIA

The State of California or its officers or agents shall not be responsible for the accuracy or completeness of electronic copies of this plan sheet.

Caltrans Metric

CALIFORNIA STATE FIRE MARSHAL APPROVED
Approval of this plan does not authorize or approve any omission or deviation from applicable regulations. Final approval is subject to field inspection. One set of approved plans shall be available on the project site at all times.
Reviewed by: JEFFERY SCHWARTZ
Approval date: 03/08/10

DAMPER:	ROOM:
D1	SUPERVISOR 1, CREWROOM 1
D2	SUPERVISOR 2, CREWROOM 2
D3	MEN & WOMEN RESTROOMS
D4	HALLWAY, KITCHEN, COMMUNICATIONS, ENTRY

DESIGN NOTE:

RESTROOM EXHAUST FAN EF-1 AND EF-2 MUST OPERATE WHEN A/C SYSTEM IS ON, BUT EXHAUST FAN EF-3, NOT SHOWN IN THIS SCHEMATIC, IS CONTROLLED BY LIGHTS.

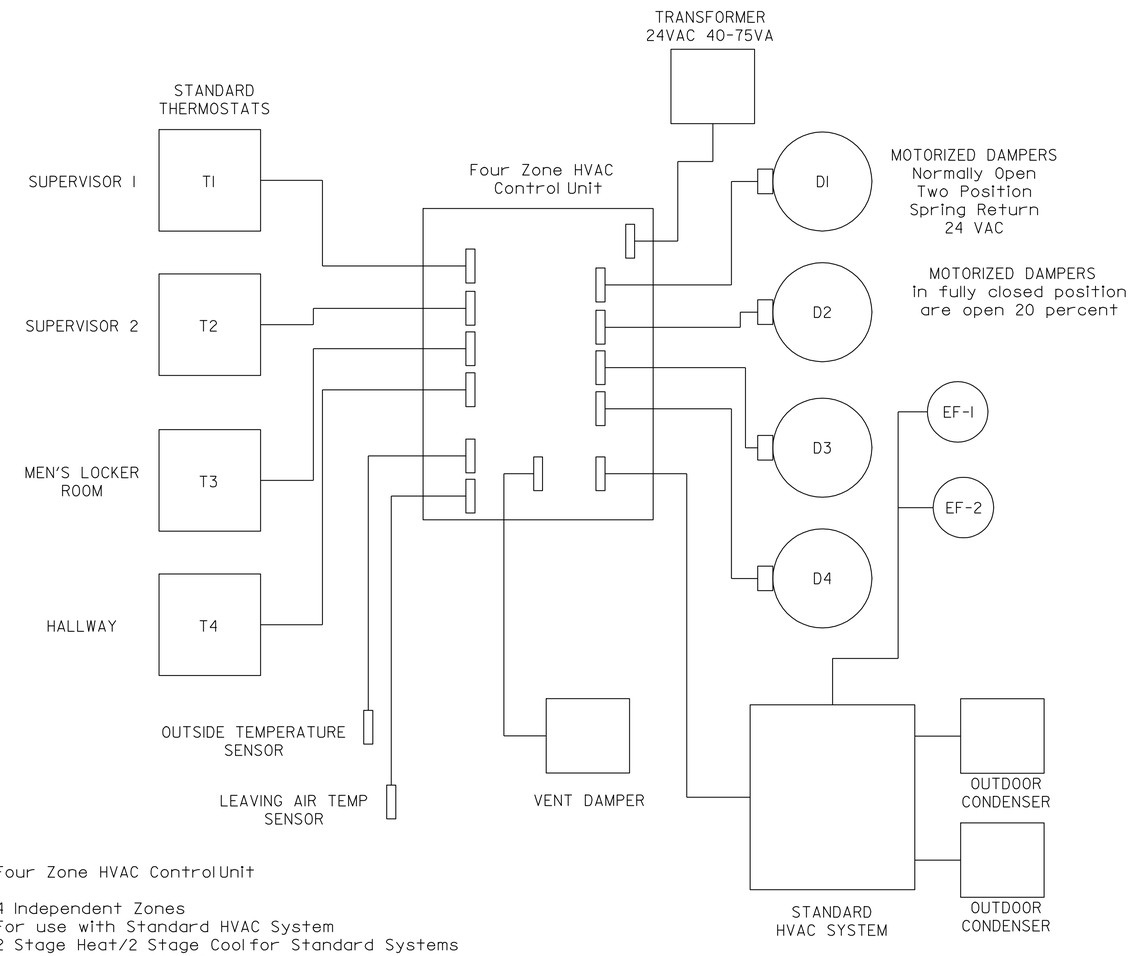

Four Zone HVAC Control Unit

4 Independent Zones
For use with Standard HVAC System
2 Stage Heat/2 Stage Cool for Standard Systems
Auto Heating/Cooling Changeover
Wire Zone Damper Outputs for Normally Open Dampers
2 wire Power Close/Spring Return or Power Open/Power Close Dampers
Vent Damper Output Modulating
Outside Temp Sensor Input
HVAC System LAT Sensor Input

CONTROL SEQUENCE:

Unit shall be capable of being programmed for night and weekend setback. Manual override shall be available at the thermostat of each room. Each room thermostat shall have a deadband of 1.6 degrees C minimum.

HEATING CYCLE (2 STAGE)
Call for 1st and 2nd stage heating is based on outside air temperature and is adjustable. The furnace will always start on the 1st stage with a delayed 2nd stage start (adjustable) on a call for heat. Upon a reduced load when two dampers close, the call for second stage heating shall be overridden regardless of outside air temperature.

COOLING CYCLE (2 STAGE)
Call for 1st and 2nd stage cooling is based on outside air temperature and thermostat control and they are adjustable. On the 1st stage one compressor will start. On the 2nd stage, the second compressor will start with a delayed stage start (adjustable) on a call for cooling. Upon a reduced load, when two dampers close, the call for second stage cooling shall be overridden and the unit lowered to first stage cooling regardless of outside air temperature.

FAN CYCLE
When building is occupied the HVAC fan shall run continuously, and when it is in the unoccupied mode it shall cycle to meet the setback temperature.

DAMPER (TWO POSITION)
Each pair of dampers for each zone shall be two position(either fully open or 80% closed) and shall operate in unison. Damper shall be fully open on a call for heating or cooling and shall close to 80% closed when heating and cooling are not required.

ECONOMIZER
Minimum outside air requirements. Adjustable set point.

HVAC CONTROL SCHEMATIC

THIS SHEET ACCURATE FOR MECHANICAL WORK ONLY

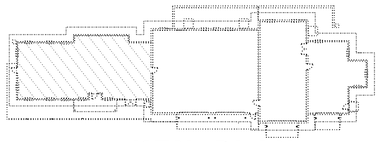

KEY PLAN

ALL DIMENSIONS SHOWN IN MILLIMETERS, EXCEPT AS NOTED

	BY	CHECKED
DESIGN	W.Thomas Hughes	Alvin Kwan
DETAILS	W.Thomas Hughes	Alvin Kwan
QUANTITIES	W.Thomas Hughes	Alvin Kwan

STATE OF CALIFORNIA
DEPARTMENT OF TRANSPORTATION

DIVISION OF ENGINEERING SERVICES
ELECTRICAL-MECHANICAL-WATER AND WASTEWATER DESIGN

BRIDGE NO. 50M5722
KM POST

CREW AND EQUIPMENT BUILDING

TAFT MAINTENANCE STATION
MECHANICAL DETAIL NO. 9

SHEET **M1-21**

DOS ELEC (10/98)
FILE => m121.dgn
DATE PLOTTED => 23-MAR-2010 TIME PLOTTED => 06:02

ORIGINAL SCALE IN MILLIMETERS FOR REDUCED PLANS 0 10 20 30 40 50 60 70 80 90 100

CU 06257
EA 483401

DISREGARD PRINTS BEARING EARLIER REVISION DATES

REVISION DATES (PRELIMINARY STAGE ONLY): 03-31-06 06-19-06 07-28-06 10-30-06 11-30-06 01-29-07 03-30-07 05-11-07 10-14-08

SHEET OF

FILE => m121.dgn

USERNAME => trmikesl DATE PLOTTED => 23-MAR-2010 TIME PLOTTED => 06:02

V1=1

DIST	COUNTY	LOCATION CODE	KILOMETER POST TOTAL PROJECT	SHEET No.	TOTAL SHEETS
06	Ker	5722		150	178

REGISTERED ENGINEER-MECHANICAL 00-00-00 DATE

3-8-10
PLANS APPROVAL DATE

REGISTERED PROFESSIONAL ENGINEER
Jack Wheeler
No. M21648
Exp. 6-30-09
MECH
STATE OF CALIFORNIA

The State of California or its officers or agents shall not be responsible for the accuracy or completeness of electronic copies of this plan sheet.

CALIFORNIA STATE FIRE MARSHAL APPROVED
Approval of this plan does not authorize or approve any omission or deviation from applicable regulations. Final approval is subject to field inspection. One set of approved plans shall be available on the project site at all times.
Reviewed by: JEFFERY SCHWARTZ
Approval date: 03/08/10

Caltrans Metric

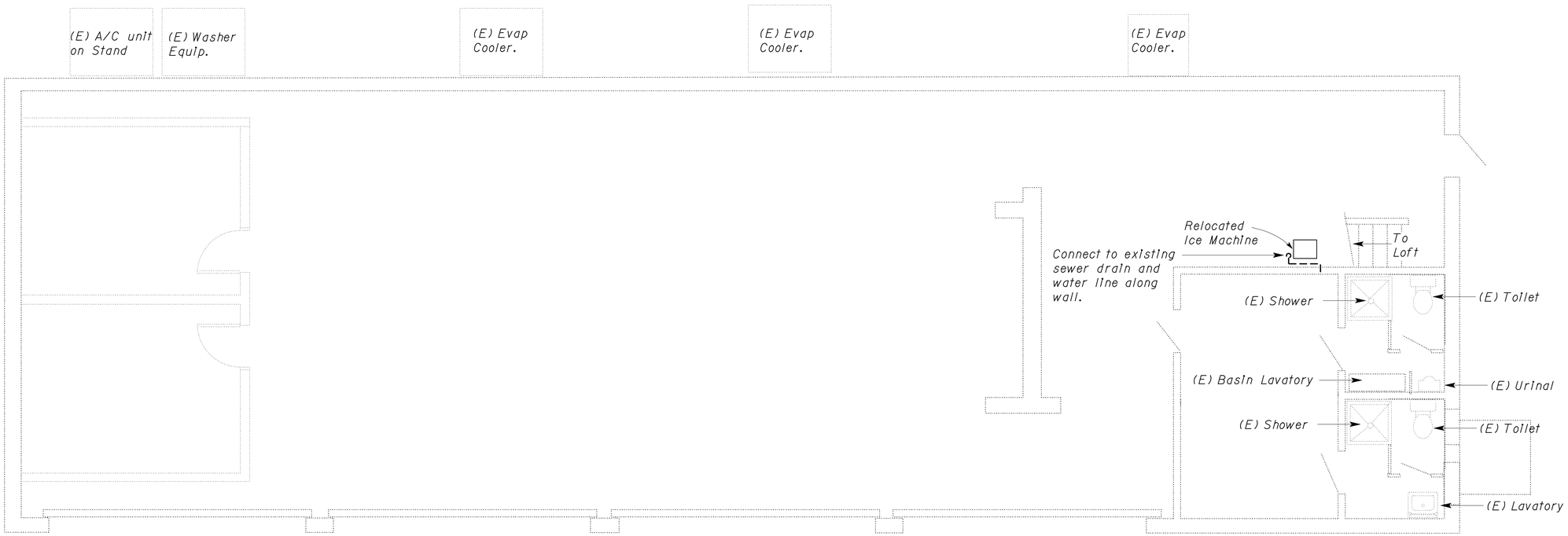

PLAN
Scale 1:50

THIS SHEET ACCURATE FOR MECHANICAL WORK ONLY

ALL DIMENSIONS SHOWN IN MILLIMETERS, EXCEPT AS NOTED

	BY	CHECKED
DESIGN	W.Thomas Hughes	Alvin Kwan
DETAILS	W.Thomas Hughes	Alvin Kwan
QUANTITIES	W.Thomas Hughes	Alvin Kwan

STATE OF CALIFORNIA
DEPARTMENT OF TRANSPORTATION

DIVISION OF ENGINEERING SERVICES
ELECTRICAL-MECHANICAL-WATER AND WASTEWATER DESIGN

BRIDGE NO. 50M5722
KM POST

TAFT MAINTENANCE STATION
EXISTING STORAGE BLDG.

SHEET **M3-1**

DOS ELEC (10/98)
FILE => m310.dgn
DATE PLOTTED => 23-MAR-2010 TIME PLOTTED => 06:02

ORIGINAL SCALE IN MILLIMETERS FOR REDUCED PLANS 0 10 20 30 40 50 60 70 80 90 100

CU 06257
EA 483401

DISREGARD PRINTS BEARING EARLIER REVISION DATES

REVISION DATES (PRELIMINARY STAGE ONLY): 03-31-06 06-19-06 07-28-06 10-30-06 11-30-06 01-29-07 03-30-07 05-11-07 10-14-08

SHEET OF

FILE => m310.dgn

USERNAME => trmikesl DATE PLOTTED => 23-MAR-2010 TIME PLOTTED => 06:02

VI=1

DIST	COUNTY	LOCATION CODE	KILOMETER POST TOTAL PROJECT	SHEET No.	TOTAL SHEETS
06	Ker	5722		151	178

REGISTERED ENGINEER-ELECTRICAL — DATE 5/2/07

3-8-10
PLANS APPROVAL DATE

REGISTERED PROFESSIONAL ENGINEER — CHI WU — No. 10773 — Exp. 6-30-09 — ELECT — STATE OF CALIFORNIA

The State of California or its officers or agents shall not be responsible for the accuracy or completeness of electronic copies of this plan sheet.

Caltrans Metric

GRAPHIC SYMBOLS FOR ELECTRICAL WIRING AND LAYOUT DIAGRAMS

SYMBOL CEILING	SYMBOL WALL	DESCRIPTION
S	S	SURFACE INCANDESCENT, METAL HALIDE OR SODIUM VAPOR FIXTURE
R	R	RECESSED INCANDESCENT, METAL HALIDE, OR SODIUM VAPOR FIXTURE
B	B	BLANK OUTLET
D		DROP CORD
J	J	JUNCTION BOX
X	X	EXIT LIGHT
		SURFACE OR PENDANT INDIVIDUAL FLUORESCENT FIXTURE
	R	RECESSED INDIVIDUAL FLUORESCENT FIXTURE
		SURFACE OR PENDANT CONTINUOUS ROW FLUORESCENT FIXTURES

NOTE: A LOWER CASE LETTER NEAR GRAPHIC LIGHTING FIXTURE SYMBOL DENOTES THAT FIXTURE IS CONTROLLED BY A SIMILARLY MARKED SWITCH, AN ALPHA-NUMERIC SYMBOL NEAR GRAPHIC LIGHTING FIXTURE SYMBOL DENOTES FIXTURE TYPE, (I=INCANDESCENT, F=FLUORESCENT, MH=METAL HALIDE, H=HIGH PRESSURE SODIUM VAPOR), DESIGN TYPE, NUMBER OF LAMPS AND WATTAGE.

EXAMPLE : (4) F 2 - 2 x 32
- 32 WATT LAMPS
- 2 LAMPS
- DESIGN TYPE
- FLUORESCENT
- NUMBER OF FIXTURES

SYMBOL	DESCRIPTION
	SINGLE RECEPTACLE OUTLET
	DUPLEX RECEPTACLE OUTLET
(GFCI)	DUPLEX RECEPTACLE OUTLET (WITH GFCI)
(GFCI) WP	DUPLEX RECEPTACLE OUTLET, WEATHERPROOF (WITH GFCI)
	QUADRUPLEX RECEPTACLE OUTLET
	SINGLE, SPECIAL PURPOSE RECEPTACLE OUTLET
R	RANGE OUTLET
	MULTI-OUTLET ASSEMBLY
S	SINGLE POLE SWITCH
S_2	DOUBLE POLE SWITCH
S_3	THREE WAY SWITCH
S_4	FOUR WAY SWITCH
SEC	EVAPORATIVE COOLER SELECTOR SWITCH
M	OVERHEAD DOOR MOUNT UNIT
S_{WP}	WEATHERPROOF SWITCH
S_F	FAN SWITCH

SYMBOL	DESCRIPTION
S^O	OCCUPANCY SENSOR SWITCH-TYPE 1
S^O_{ab}	OCCUPANCY SENSOR SWITCH-TYPE 2
SO	OCCUPANCY SENSOR SWITCH-CEILING MOUNTED
S_M	MOTION SENSOR SWITCH
S_T	MANUAL MOTOR STARTING SWITCH, THERMAL OVERLOAD TYPE
S_{HP}	MANUAL MOTOR STARTING SWITCH, WITHOUT OVERLOAD ELEMENT
Ts	TIMER SWITCH
H	HAND DRYER
	RADIO OUTLET
	TELEPHONE OUTLET
	SOUND SYSTEM LOUD SPEAKER OUTLET
	PUSHBUTTON
	PUSHBUTTON STATION MOTOR CONTROL
	BUZZER
	BELL
	COMBINATION BELL-BUZZER
T	THERMOSTAT
PS	PRESSURE SWITCH
FS	FLOW SWITCH
PEC	PHOTOELECTRIC CELL
	FLUSH-MOUNTED PANELBOARD AND CABINET
	SURFACE-MOUNTED PANELBOARD AND CABINET
	DISCONNECT SWITCH
	CONDUIT CONCEALED IN CEILING OR WALL
	CONDUIT CONCEALED IN FLOOR
	CONDUIT EXPOSED
	CROSS-LINES INDICATE NUMBER OF #12 AWG CONDUCTORS (GROUND CONDUCTOR NOT SHOWN). NO CROSS-LINE INDICATES 2#12 WITH 1#12 (G) UNLESS OTHERWISE NOTED. ALL CONDUIT SHALL BE 16C UNLESS OTHERWISE NOTED.
A1, A2	HOMERUN TO PANELBOARD, ARROWS INDICATE NUMBER OF CIRCUITS, LETTER DENOTES PANELBOARD, NUMERAL DENOTES CIRCUIT.

(2) 16C, PVC, 2#12
- CONDUCTOR INFO (PER CONDUIT)
- CONDUIT TYPE
- CONDUIT SIZE
- NUMBER OF CONDUITS (NO NUMBER INDICATES ONE CONDUIT)

SYMBOL	DESCRIPTION
MC	CONDUIT, METALLIC UNDERGROUND
PVC	CONDUIT, POLYVINYL CHLORIDE, UNDERGROUND
	CONDUIT, FLEXIBLE
	CONDUIT, TURN UP
	CONDUIT, TURN DOWN
	CONDUIT SEAL, EXPLOSION-PROOF
X	CONDUIT, EXPANSION JOINT
	ADAPTER, ONE TYPE CONDUIT TO ANOTHER POLE
	POLE-TOP LUMINAIRE
	POLE-ARM LUMINAIRE

SYMBOL	DESCRIPTION
H	HEAT DETECTOR
S	SMOKE DETECTOR
P	MANUAL PULL STATION
AV	AUDIO/VISUAL ALARM DEVICE
G	GLASS BREAK DISCRIMINATOR
C	MAGNETIC CONTACT SWITCH-PEDESTRIAN DOOR
C	MAGNETIC CONTACT SWITCH-VEHICLE DOOR
K	KEYPAD FOR ALARM SYSTEM
R	DIGITAL CARD READER
E	ELECTRIC DOOR STRIKE
	NO. 5 PULL BOX UNLESS OTHERWISE NOTED
(T)	NO. 5 PULL BOX TRAFFIC RATED UNLESS OTHERWISE NOTED
CHLF	COMBINATION HEAT, LIGHT AND FAN UNIT
A / EE-2	SECTION/ELEVATION LETTER — SHEET NUMBER
1 / EE-2	DETAIL NUMBER — SHEET NUMBER

REMODEL WORK

SYMBOL	DESCRIPTION
	EXISTING FLUORESCENT FIXTURE-TO REMAIN
	EXISTING FLUORESCENT FIXTURE-REMOVE
39	EXISTING INCANDESCENT FIXTURE-TO REMAIN
	EXISTING INCANDESCENT FIXTURE-REMOVE
	EXISTING OUTLET-TO REMAIN
	EXISTING RECEPTACLE OUTLET-TO REMAIN
	EXISTING RECEPTACLE OUTLET-REMOVE
—E—E—	EXISTING CONDUIT AND CONDUCTORS-TO REMAIN UNLESS OTHERWISE NOTED
—✱✱—	EXISTING CONDUIT AND CONDUCTORS-REMOVE
S	EXISTING SWITCH-TO REMAIN
	EXISTING SWITCH-REMOVE
J	EXISTING JUNCTION BOX-TO REMAIN
	EXISTING JUNCTION BOX-REMOVE

STANDARD PLANS APPLICABLE

(DATED JULY 2004)

- RSP ES-5A
- RSP ES-6A
- RSP ES-7P
- RSP ES-8

PROJECT NOTES

A. SEPARATE GROUNDED (NEUTRAL) CONDUCTOR SHALL BE USED FOR EACH 120-VOLT CIRCUIT.

B. HOMERUNS TO PANELBOARD SHALL BE INSTALLED AS SHOWN ON THE PLANS. HOMERUNS SHALL NOT BE COMBINED.

C. A SINGLE 1#12G INSULATED EQUIPMENT GROUNDING CONDUCTOR, UNLESS OTHERWISE SHOWN, SHALL BE INSTALLED IN EACH CONDUIT RUN, EXCEPT FOR EMPTY CONDUIT.

GRAPHIC SYMBOLS FOR ELECTRICAL DIAGRAMS

SYMBOL	DESCRIPTION
	CIRCUIT BREAKER, SINGLE POLE
	CIRCUIT BREAKER, DOUBLE POLE
	CIRCUIT BREAKER, THREE POLE
GFCI	CIRCUIT BREAKER, WITH GROUND FAULT CIRCUIT INTERRUPTER
	CONTACT, NORMALLY OPEN
	CONTACT, NORMALLY CLOSED
	CONTACT, NORMALLY CLOSED, TIME DELAY CLOSING ON DE-ENERGIZING
	CONTACT, NORMALLY OPEN, TIME DELAY OPENING ON DE-ENERGIZING
	CONTACT, NORMALLY OPEN, TIME DELAY CLOSING ON ENERGIZING
	CONTACT, NORMALLY CLOSED, TIME DELAY OPENING ON ENERGIZING
	CONTACT, SINGLE POLE DOUBLE-THROW
	OPERATING COIL
	LIQUID LEVEL ACTUATED SWITCH, NORMALLY CLOSED
	LIQUID LEVEL ACTUATED SWITCH, NORMALLY OPEN
	PRESSURE ACTUATED SWITCH, NORMALLY CLOSED
	PRESSURE ACTUATED SWITCH, NORMALLY OPEN
	FLOW ACTUATED SWITCH, NORMALLY CLOSED
	FLOW ACTUATED SWITCH, NORMALLY OPEN
	TEMPERATURE ACTUATED SWITCH, NORMALLY CLOSED
	TEMPERATURE ACTUATED SWITCH, NORMALLY OPEN
	LIMIT SWITCH, NORMALLY CLOSED
	LIMIT SWITCH, NORMALLY OPEN
	PUSHBUTTON SWITCH, NORMALLY CLOSED
	PUSHBUTTON SWITCH, NORMALLY OPEN
	SWITCH, SINGLE-POLE
	SWITCH, SINGLE-POLE, DOUBLE-THROW
	SWITCH, DOUBLE-POLE
	SWITCH, DOUBLE-POLE, DOUBLE-THROW
	SWITCH, SINGLE-POLE, 3-POSITION
	THERMAL OVERLOAD
	FUSE
	RESISTOR
	VARIABLE RESISTOR
	TRANSFORMER WINDING
	GROUNDING ELECTRODE
	ENCLOSURE BOND
A	PILOT LIGHT (A=AMBER, G=GREEN, R=RED)
G	GENERATOR
M	MOTOR
F	FAN MOTOR

ABBREVIATIONS

A	AMPERES
A/C	AIR CONDITIONING UNIT
ACS	AIR COMPRESSOR STARTER
AL	ALARM LIGHT
BD	BUILDING DISCONNECT
BRK	BREAKER
C	CONDUIT
CB	CIRCUIT BREAKER
CKT	CIRCUIT
CR	CONTROL RELAY
CSW	CURRENT SWITCH
DI	DIGITAL INPUT
DO	DIGITAL OUTPUT
DP	DUPLEX PLUG RECEPTACLE
(E)	EXISTING
EF	EXHAUST FAN
F	FUSE
FL	FAILURE LIGHT
FLA	FLASHER
FLS	FLOW SWITCH
FS	FLOAT SWITCH
G	GROUND
GFCI	GROUND FAULT CIRCUIT INTERRUPTER
JB	JUNCTION BOX
L	LIGHT
LC	LIGHTING CONTACTOR
LCP	LIGHTING CONTROL PANEL
MB	MAIN BREAKER
MC	METALLIC CONDUIT
MCP	MOTOR CIRCUIT PROTECTOR
MCC	MOTOR CONTROL CENTER
MSB	MAIN SWITCHBOARD
MT	EMPTY CONDUIT WITH PULL ROPE
(N)	NEW
NC	NORMALLY CLOSED
NO	NORMALLY OPEN
OL	OVERLOAD
P	POLE
PB	PULL BOX
PFR	PHASE FAILURE RELAY
PFRD	PHASE FAILURE RELAY DISCONNECT
PEC	PHOTOELECTRIC CELL
PL	PILOT LIGHT
PS	PRESSURE SWITCH
PTS	POWER TRANSFER SWITCH
PVC	POLYVINYL CHLORIDE
RES	RESISTOR
RTB	RADIO TERMINAL BOARD
S	STARTER COIL
SD	SERVICE DISCONNECT
SFR	SEAL FAILURE RELAY
SL	SUMP LIGHT
SPR	STANDBY POWER RECEPTACLE
SS	SELECTOR SWITCH
ST	STARTER
SV	SOLENOID VALVE
SWN	SWITCH NEUTRAL
T	TRANSFORMER
TB	TERMINAL BLOCK
TDR	TIME DELAY RELAY
TGLS	TOGGLE SWITCH
TM	TIME METER
TS	TIMER SWITCH
TSW	TEST SWITCH
TTB	TELEPHONE TERMINAL BOARD
TYP	TYPICAL
UPS	UNINTERRUPTIBLE POWER SUPPLY
WP	WEATHERPROOF

CALIFORNIA STATE FIRE MARSHAL APPROVED

Approval of this plan does not authorize or approve any omission or deviation from applicable regulations. Final approval is subject to field inspection. One set of approved plans shall be available on the project site at all times.

Reviewed by: JEFFERY SCHWARTZ
Approval date: 03/08/10

DESIGN	BY Johnny Wu	CHECKED Tech Ngov	
DETAILS	BY Linda M/Tech N.	CHECKED Johnny Wu	
QUANTITIES	BY Johnny Wu	CHECKED Tech Ngov	

STATE OF CALIFORNIA
DEPARTMENT OF TRANSPORTATION

DIVISION OF ENGINEERING SERVICES
ELECTRICAL-MECHANICAL-WATER AND WASTEWATER DESIGN

BRIDGE NO. 50M5722
KM POST

TAFT MAINTENANCE STATION

LEGEND

SHEET **EE-0**

CU 06257
EA 483401

DISREGARD PRINTS BEARING EARLIER REVISION DATES

REVISION DATES (PRELIMINARY STAGE ONLY): 2/28/06 5/2/07 4/24/06 9/29/06 1/18/07 2/15/07 3/8/07 3/15/07 3/20/07

SHEET OF

DOS ELEC (10/98) FILE => ee_00.dgn
DATE PLOTTED => 23-MAR-2010 TIME PLOTTED => 06:02

ORIGINAL SCALE IN MILLIMETERS FOR REDUCED PLANS 0 10 20 30 40 50 60 70 80 90 100

FILE => ee_00.dgn

USERNAME => trmikesl DATE PLOTTED => 23-MAR-2010 TIME PLOTTED => 06:02

VI=1

DIST	COUNTY	LOCATION CODE	KILOMETER POST TOTAL PROJECT	SHEET No.	TOTAL SHEETS
06	Ker	5722		152	178

Caltrans Metric

REGISTERED ENGINEER-ELECTRICAL — DATE 5/2/07

3-8-10
PLANS APPROVAL DATE

REGISTERED PROFESSIONAL ENGINEER — CHI WU — No. 10773 — Exp. 6-30-09 — ELEC — STATE OF CALIFORNIA

The State of California or its officers or agents shall not be responsible for the accuracy or completeness of electronic copies of this plan sheet.

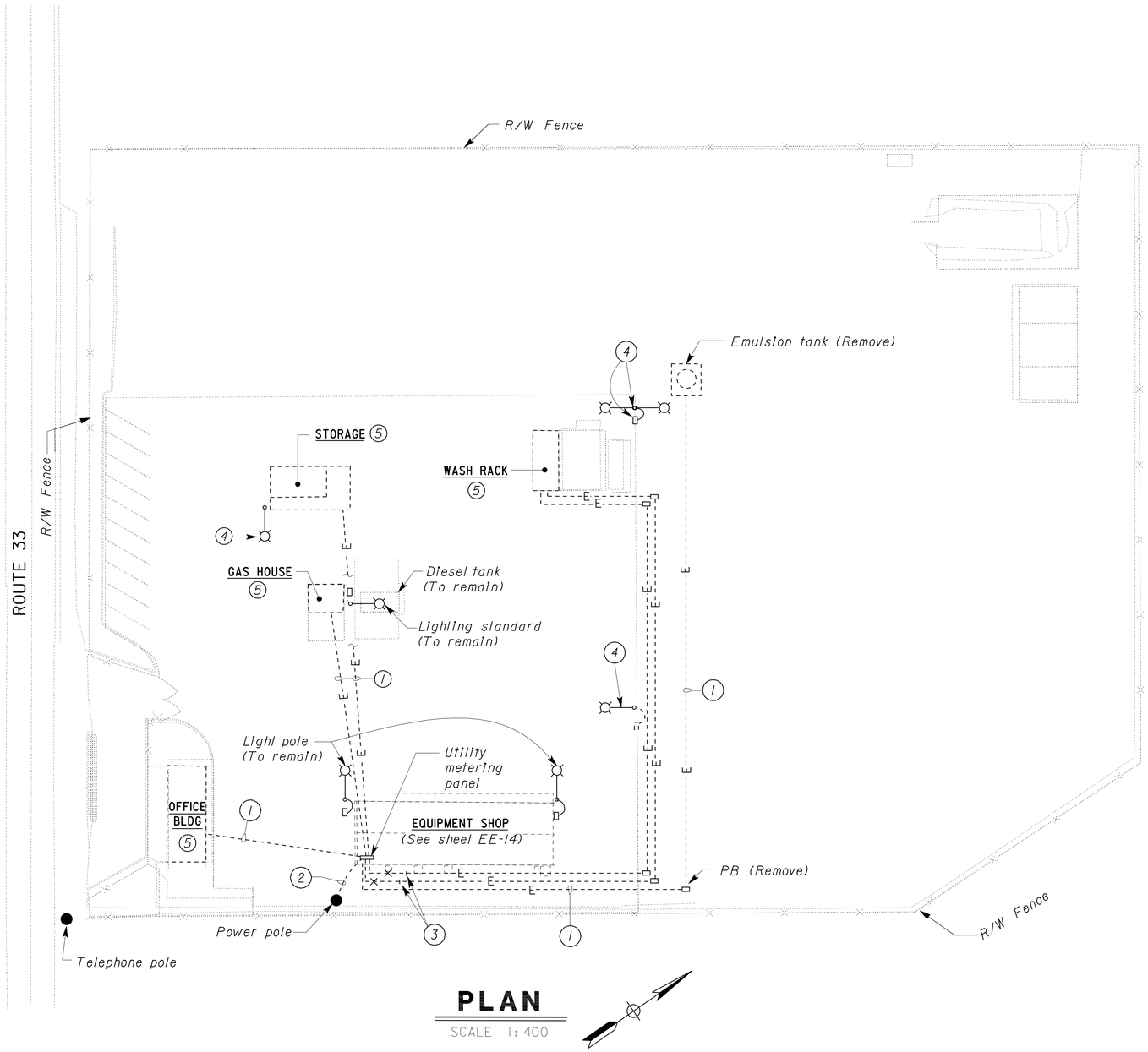

PLAN

SCALE 1:400

Notes:

1. *Existing underground conduit. Remove conductors, abandon underground conduit, cut exposed part of conduit flush to grade and fill with mortar.*
2. *Existing overhead lateral service conductors. Contact PG&E for removal of lateral service conductors up to the line side of existing service disconnect.*
3. *Intercept conduit and install new pull box. Remove conductors and abandon part of conduit going to metering panel. Cut exposed part of conduit flush to grade and fill with mortar.*
4. *Remove lighting standard and foundation, pull box, conductors and abandon conduit (Total 3 places).*
5. *See Architectural sheets for removal.*

CALIFORNIA STATE FIRE MARSHAL APPROVED

Approval of this plan does not authorize or approve any omission or deviation from applicable regulations. Final approval is subject to field inspection. One set of approved plans shall be available on the project site at all times.

Reviewed by: JEFFERY SCHWARTZ
Approval date: 03/08/10

THIS DRAWING IS ACCURATE FOR ELECTRICAL WORK ONLY.

ALL DIMENSIONS SHOWN IN MILLIMETERS, EXCEPT AS NOTED

DESIGN SUPERVISOR — DESIGN ENGINEER

	BY	CHECKED
DESIGN	Johnny Wu	Tech Ngov
DETAILS	Linda M/Tech N.	Johnny Wu
QUANTITIES	Johnny Wu	Tech Ngov

STATE OF CALIFORNIA
DEPARTMENT OF TRANSPORTATION

DIVISION OF ENGINEERING SERVICES
ELECTRICAL-MECHANICAL-WATER AND WASTEWATER DESIGN

BRIDGE NO. 50M5722
KM POST

TAFT MAINTENANCE STATION

EXISTING SITE PLAN

SHEET **EE-1**

DOS ELEC (10/98) FILE => ee_01.dgn
DATE PLOTTED => 23-MAR-2010 TIME PLOTTED => 06:02

ORIGINAL SCALE IN MILLIMETERS FOR REDUCED PLANS 0 10 20 30 40 50 60 70 80 90 100

CU 06257
EA 483401

DISREGARD PRINTS BEARING EARLIER REVISION DATES

REVISION DATES (PRELIMINARY STAGE ONLY): 2/28/06 3/20/07 5/2/07 7/18/06 9/29/06 1/16/07 1/18/07 2/13/07 3/8/07

SHEET OF

FILE => ee_01.dgn

USERNAME => trmikesi DATE PLOTTED => 23-MAR-2010 TIME PLOTTED => 06:02

VI=I

DIST.	COUNTY	LOCATION CODE	KILOMETER POST TOTAL PROJECT	SHEET NO.	TOTAL SHEETS
06	Ker	5722		153	178

REGISTERED ENGINEER-ELECTRICAL — DATE 5/2/07

3-8-10
PLANS APPROVAL DATE

REGISTERED PROFESSIONAL ENGINEER — CHI WU — No. 10773 — Exp. 6-30-09 — ELEC — STATE OF CALIFORNIA

The State of California or its officers or agents shall not be responsible for the accuracy or completeness of electronic copies of this plan sheet.

Caltrans Metric

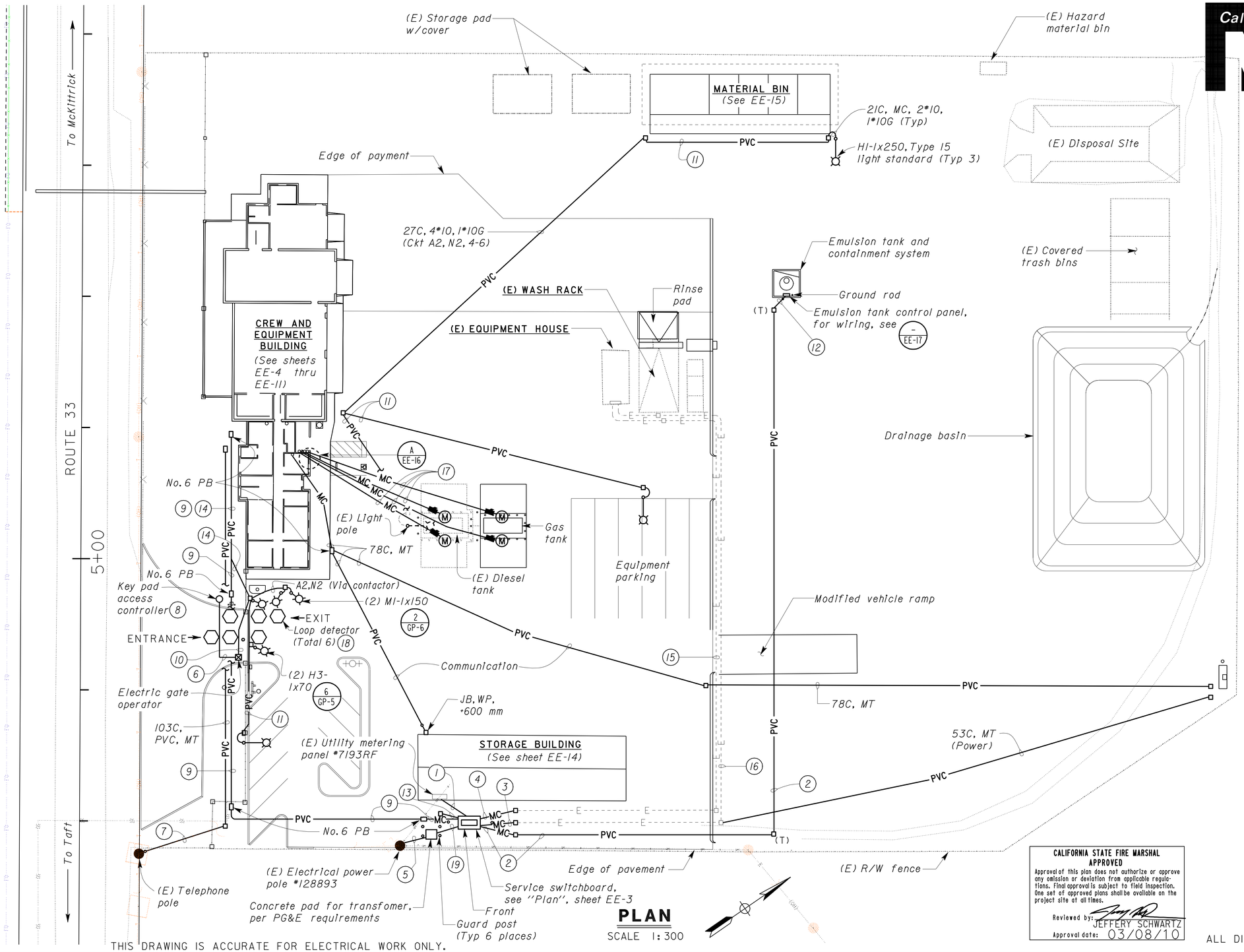

PLAN

SCALE 1:300

THIS DRAWING IS ACCURATE FOR ELECTRICAL WORK ONLY.

CALIFORNIA STATE FIRE MARSHAL APPROVED
Approval of this plan does not authorize or approve any omission or deviation from applicable regulations. Final approval is subject to field inspection. One set of approved plans shall be available on the project site at all times.
Reviewed by: JEFFERY SCHWARTZ
Approval date: 03/08/10

General Notes:

A. The contractor shall provide necessary conduit and control wires that are not shown for the automatic operation of the gate operator.

B. For Details of Lighting Standard Type 15 and Installation, see Standard Plan Sheet RSP ES-6A.

C. The shape and size of loop detector shall be as required by the manufacturer of electrical gate operator. For Installation of the loop detector, see Standard Plan Sheet RSP ES-5A.

Notes:

1. 53C, MC, 4*1, 1*8G.
2. 53C, 4*3, 1*8G, and 53C, MT.
3. 53C, MT.
4. 63C, 3*1/0, 1*6G.
5. 103C, PVC, with pull rope and riser conduit as required by utility company.
6. 16C, control cables as required by electric gate operator manufacturer.
7. 103C, with pull rope and riser conduit per telephone company requirements.
8. For key pad and post details, see sheet GP-4.
9. 78C, 4*4/0, 1*4G (Feeding Panel A), and 53C, 3*1/0, 1*6G (Feeding Panel B).
10. 27C, PVC, 4*10, 1*10G (Circuit A8-10-12).
11. 27C, PVC, 2*10, 1*10G (Circuit A4-6).
12. 4IC, MC, 4*3, 1*8G.
13. (2) 103C, MC, MT, for future standby generator connection.
14. 27C, 8*10, 1*10G (Power conductors and neutral for access gate controller and yard lighting).
15. Existing 63C, Install 3*1/0, 1*6G.
16. Existing 53C, Install pull rope.
17. 27C, MC, 2*10, 1*10G, see Panel E on sheet EE-16 for circuit assignment.
18. Homerun of loop detector shall be run to the electrical gate operator.
19. (2) 103C, PVC, conductors by PG&E.

ALL DIMENSIONS SHOWN IN MILLIMETERS, EXCEPT AS NOTED

	BY	CHECKED
DESIGN	Johnny Wu	Tech Ngov
DETAILS	Linda M/Tech N.	Johnny Wu
QUANTITIES	Johnny Wu	Tech Ngov

STATE OF CALIFORNIA DEPARTMENT OF TRANSPORTATION

DIVISION OF ENGINEERING SERVICES
ELECTRICAL-MECHANICAL-WATER AND WASTEWATER DESIGN

BRIDGE NO. 50M5722
KM POST

TAFT MAINTENANCE STATION

MODIFIED SITE PLAN

SHEET **EE-2**

DISREGARD PRINTS BEARING EARLIER REVISION DATES — REVISION DATES (PRELIMINARY STAGE ONLY): 9/29/06 3/29/07 5/2/07 1/18/07 1/25/07 2/13/07 3/16/07 3/18/07 3/16/07

SHEET OF

CU 06257
EA 483401

DOS ELEC (10/98) FILE => ee_02.dgn DATE PLOTTED => 23-MAR-2010 TIME PLOTTED => 06:02

ORIGINAL SCALE IN MILLIMETERS FOR REDUCED PLANS 0 10 20 30 40 50 60 70 80 90 100

FILE => ee_02.dgn

USERNAME => trmikesl DATE PLOTTED => 23-MAR-2010 TIME PLOTTED => 06:02

VI=1

DIST.	COUNTY	LOCATION CODE	KILOMETER POST TOTAL PROJECT	SHEET NO.	TOTAL SHEETS
06	Ker	5722		154	178

REGISTERED ENGINEER-ELECTRICAL — 5/2/07 DATE

3-8-10
PLANS APPROVAL DATE

REGISTERED PROFESSIONAL ENGINEER — CHI WU — No. 10773 — Exp. 6-30-09 — ELEC — STATE OF CALIFORNIA

The State of California or its officers or agents shall not be responsible for the accuracy or completeness of electronic copies of this plan sheet.

Caltrans Metric

General Note:

A. *For conduit and conductor size, see sheet EE-2.*

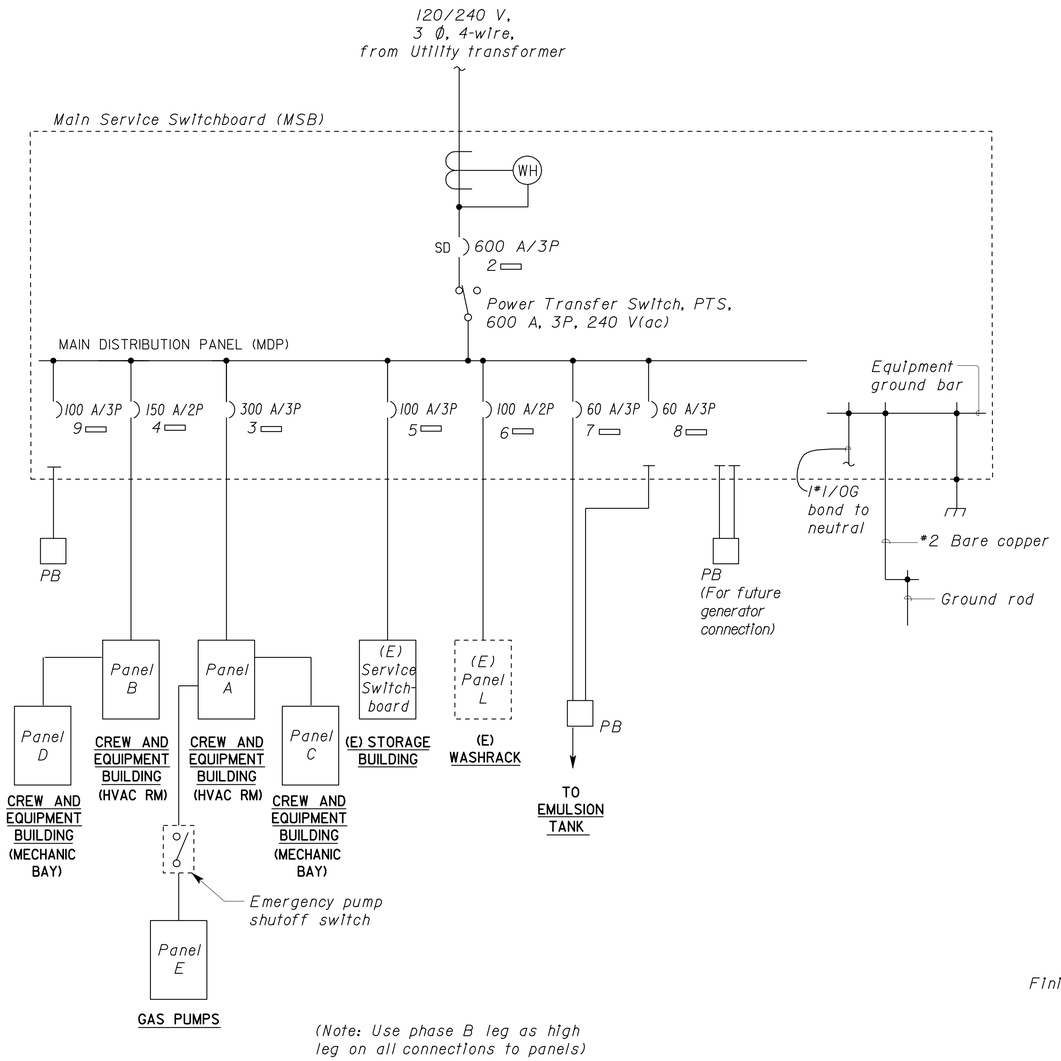

(Note: Use phase B leg as high leg on all connections to panels)

SINGLE-LINE POWER DISTRIBUTION DIAGRAM

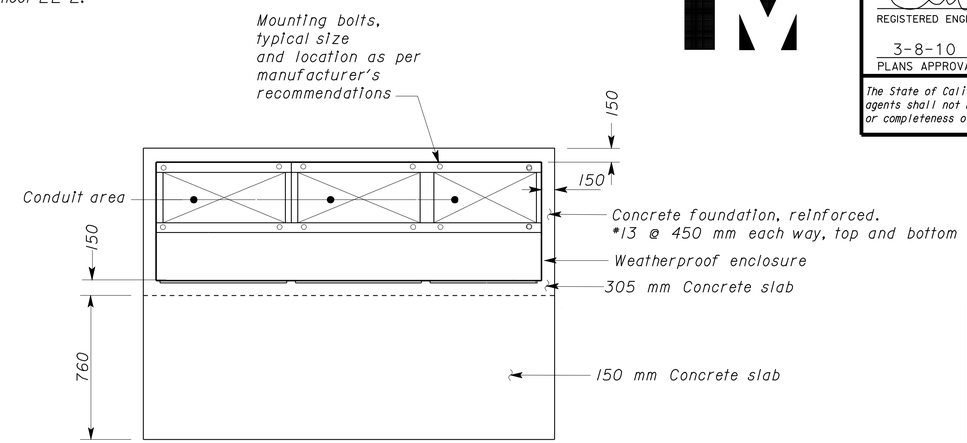

PLAN
(A) MAIN SWITCHBOARD (MSB)
NO SCALE

CALIFORNIA STATE FIRE MARSHAL APPROVED
Approval of this plan does not authorize or approve any omission or deviation from applicable regulations. Final approval is subject to field inspection. One set of approved plans shall be available on the project site at all times.
Reviewed by: JEFFERY SCHWARTZ
Approval date: 03/08/10

Notes:

(1) *(2) 103C, MT, to pull box for future standby generator connection.*

(2) *Installation of switchboard shall meet utility company standards. Utility company will supply and install metering transformer and meter.*

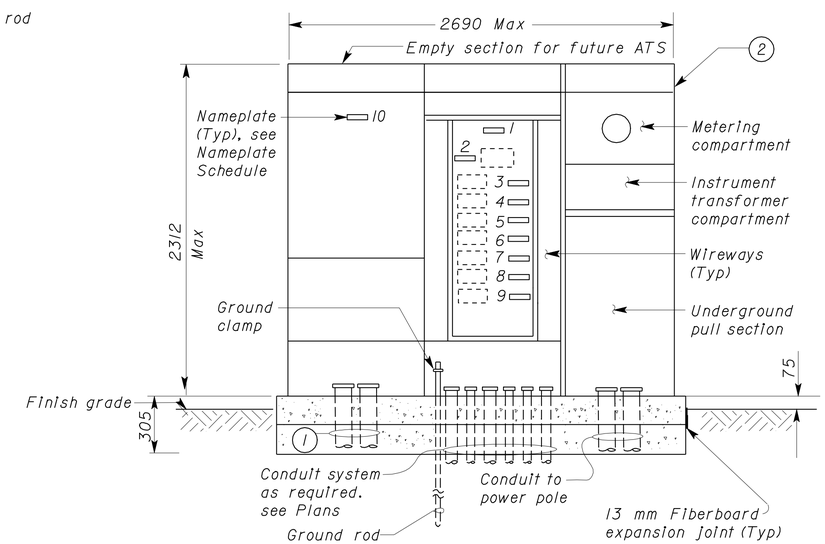

ELEVATION
(B) SERVICE SWITCHBOARD
NO SCALE

Note:

Dimensions of switchboard are approximate only. Service swithchboard elevation shown without weatherproof enclosure.

NAMEPLATE SCHEDULE

ITEM NO.	INSCRIPTION	LETTER HEIGHT
1	Main Distribution Panel	6 mm
2	Service Disconnect	6 mm
3	Panel A (Crew & Equipment Building-HVAC)	6 mm
4	Panel B (Crew & Equipment Bldg-HVAC)	6 mm
5	Panel E (Storage Building)	6 mm
6	Panel L (Washrack Building)	6 mm
7	Emulsion Tank	6 mm
8	Spare	6 mm
9	To PB (Spare)	6 mm
10	PTS SECTION	6 mm

ALL DIMENSIONS SHOWN IN MILLIMETERS, EXCEPT AS NOTED

	BY	CHECKED
DESIGN	Johnny Wu	Tech Ngov
DETAILS	Linda M/Tech N.	Johnny Wu
QUANTITIES	Johnny Wu	Tech Ngov

STATE OF CALIFORNIA DEPARTMENT OF TRANSPORTATION

DIVISION OF ENGINEERING SERVICES ELECTRICAL-MECHANICAL-WATER AND WASTEWATER DESIGN

BRIDGE NO. 50M5722 — KM POST

TAFT MAINTENANCE STATION

SINGLE LINE DIAGRAM AND SWITCHBOARD DETAILS

SHEET **EE-3**

DOS ELEC (10/98) — FILE => ee_03.dgn — DATE PLOTTED => 23-MAR-2010 — TIME PLOTTED => 06:02

ORIGINAL SCALE IN MILLIMETERS FOR REDUCED PLANS 0 10 20 30 40 50 60 70 80 90 100

CU 06257
EA 483401

DISREGARD PRINTS BEARING EARLIER REVISION DATES — REVISION DATES (PRELIMINARY STAGE ONLY): 10/12/06, 10/19/06, 1/19/07, 1/24/07, 2/14/07, 3/7/07, 3/26/07, 5/2/07, 7/31/06 — SHEET — OF

FILE => ee_03.dgn

USERNAME => trmikesi DATE PLOTTED => 23-MAR-2010 TIME PLOTTED => 06:02

VI=1

DIST.	COUNTY	LOCATION CODE	KILOMETER POST TOTAL PROJECT	SHEET NO.	TOTAL SHEETS
06	Ker	5722		155	178

REGISTERED ENGINEER-ELECTRICAL — 5/2/07 DATE

3-8-10
PLANS APPROVAL DATE

REGISTERED PROFESSIONAL ENGINEER — CHI WU — No. 10773 — Exp. 6-30-09 — ELEC — STATE OF CALIFORNIA

The State of California or its officers or agents shall not be responsible for the accuracy or completeness of electronic copies of this plan sheet.

Caltrans Metric

General Notes:

For connection of HVAC system (HVAC Control unit, furnace unit and air conditioning units, exhaust fans, see Mechanical sheets. Contractor shall install 16C, with control conductors as required from furnace to A/C units.

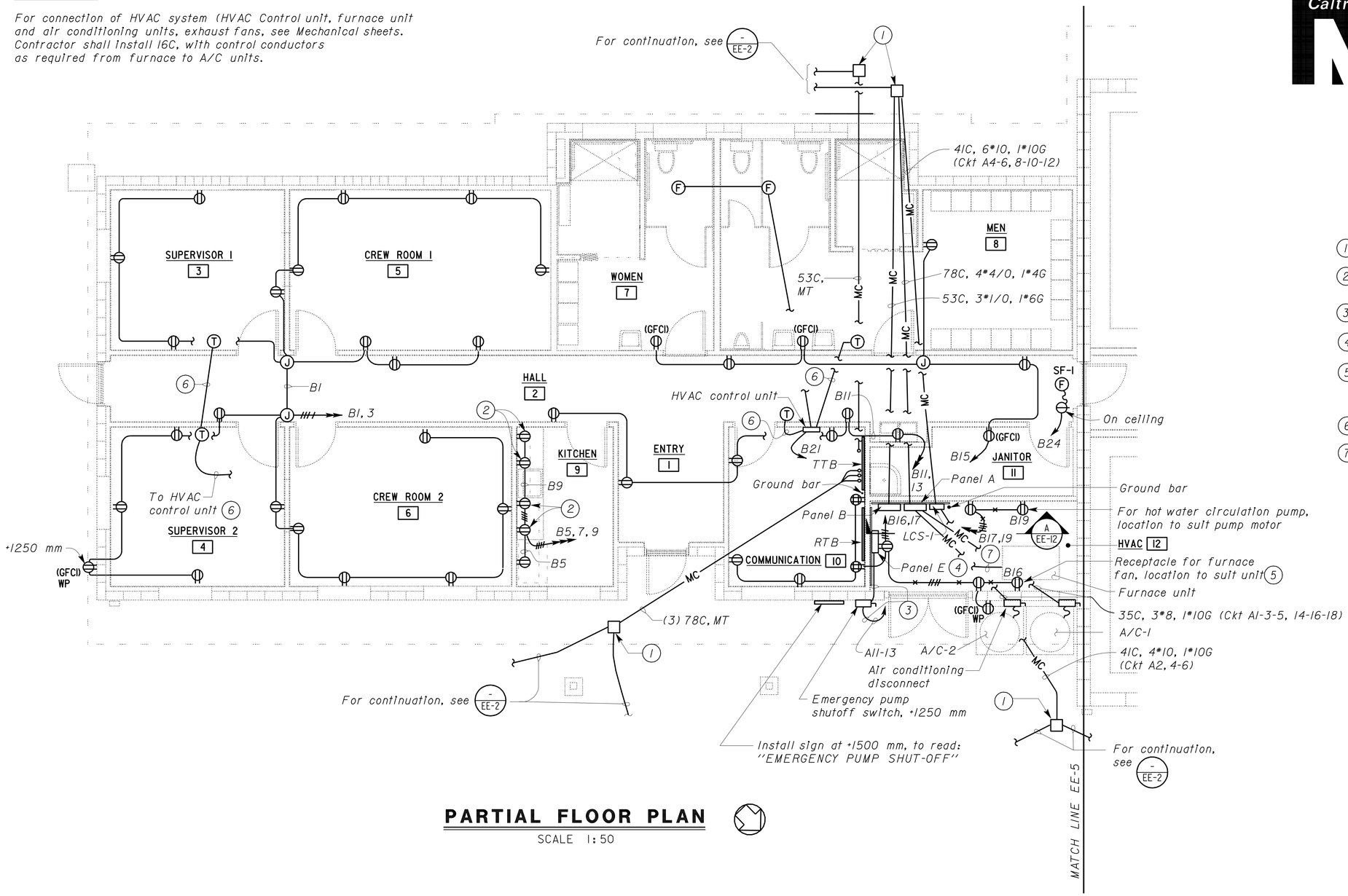

PARTIAL FLOOR PLAN

SCALE 1:50

Notes:

1. *This pull box is also shown on sheet EE-2 for clarity.*
2. *GFCI feed through type receptacle. Mount at 200 mm above counter top.*
3. *4IC, 3*4, 1*8G.*
4. *See "ELEVATION", sheet EE-16.*
5. *Install 16C, Flex, 2*12, from furnace control to duct smoke detector. See Mechanical sheet for location of duct smoke detector in the supply duct.*
6. *16C, control conductors as required.*
7. *21C, control conductors as required, to HVAC control unit.*

CALIFORNIA STATE FIRE MARSHAL APPROVED

Approval of this plan does not authorize or approve any omission or deviation from applicable regulations. Final approval is subject to field inspection. One set of approved plans shall be available on the project site at all times.

Reviewed by: JEFFERY SCHWARTZ
Approval date: 03/08/10

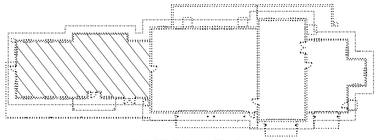

KEY PLAN

THIS DRAWING IS ACCURATE FOR ELECTRICAL WORK ONLY.

ALL DIMENSIONS SHOWN IN MILLIMETERS, EXCEPT AS NOTED

	BY	CHECKED
DESIGN	Johnny Wu	Tech Ngov
DETAILS	Linda M/Tech N.	Johnny Wu
QUANTITIES	Johnny Wu	Tech Ngov

STATE OF CALIFORNIA DEPARTMENT OF TRANSPORTATION

DIVISION OF ENGINEERING SERVICES ELECTRICAL-MECHANICAL-WATER AND WASTEWATER DESIGN

BRIDGE NO. 50M5722 — KM POST

TAFT MAINTENANCE STATION

CREW AND EQUIPMENT BUILDING

PARTIAL POWER PLAN No. 1

SHEET **EE-4**

DOS ELEC (10/98) FILE => ee_04.dgn DATE PLOTTED => 23-MAR-2010 TIME PLOTTED => 06:03

ORIGINAL SCALE IN MILLIMETERS FOR REDUCED PLANS 0 10 20 30 40 50 60 70 80 90 100

CU 06257
EA 483401

DISREGARD PRINTS BEARING EARLIER REVISION DATES

REVISION DATES (PRELIMINARY STAGE ONLY): 5/18/06 5/2/07 10/19/06 1/17/07 1/24/07 2/15/07 3/7/07 3/12/07 3/20/07

SHEET OF

FILE => ee_04.dgn

USERNAME => trmikesl DATE PLOTTED => 23-MAR-2010 TIME PLOTTED => 06:03

VI=1

DIST.	COUNTY	LOCATION CODE	KILOMETER POST TOTAL PROJECT	SHEET NO.	TOTAL SHEETS
06	Ker	5722		156	178

REGISTERED ENGINEER-ELECTRICAL — 5/2/07 DATE

3-8-10
PLANS APPROVAL DATE

REGISTERED PROFESSIONAL ENGINEER — CHI WU — No. 10773 — Exp. 6-30-09 — ELECT — STATE OF CALIFORNIA

The State of California or its officers or agents shall not be responsible for the accuracy or completeness of electronic copies of this plan sheet.

Caltrans Metric

General Note:

The contractor shall install 16C, 2*12 between door operator and safety edge limit switch, which are not shown on the plan for clarity.

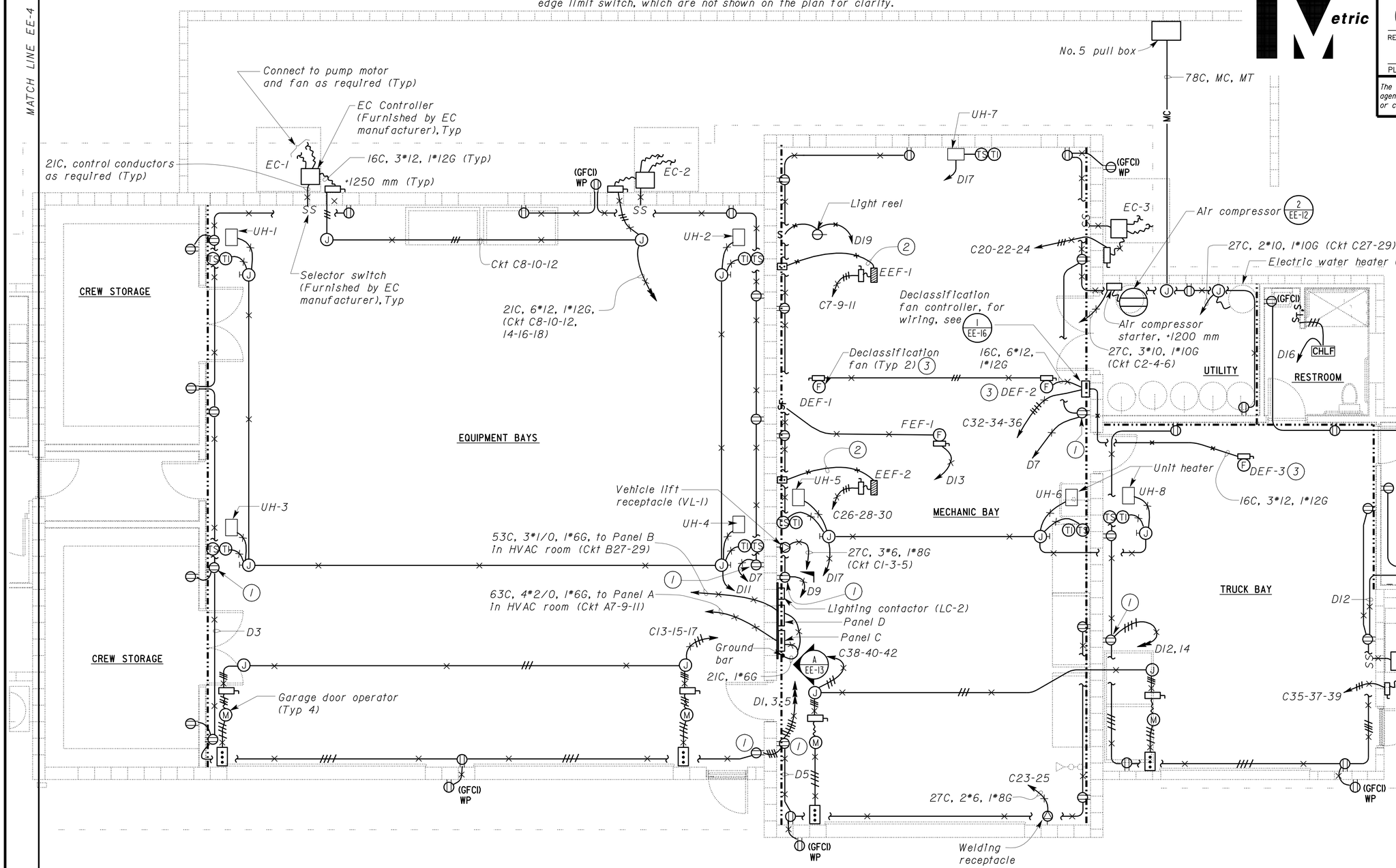

PARTIAL FLOOR PLAN

SCALE 1:50

Notes:

1. GFCI feed through type receptacle.
2. 21C, cable per manufacturer of unit.
3. See Detail 1 on sheet EE-16.

CALIFORNIA STATE FIRE MARSHAL APPROVED

Approval of this plan does not authorize or approve any omission or deviation from applicable regulations. Final approval is subject to field inspection. One set of approved plans shall be available on the project site at all times.

Reviewed by: JEFFERY SCHWARTZ
Approval date: 03/08/10

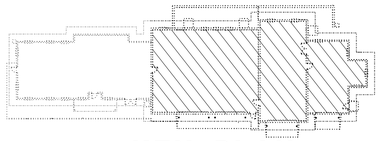

KEY PLAN

ALL DIMENSIONS SHOWN IN MILLIMETERS, EXCEPT AS NOTED

THIS DRAWING IS ACCURATE FOR ELECTRICAL WORK ONLY.

	BY	CHECKED
DESIGN	Johnny Wu	Tech Ngov
DETAILS	Linda M/Tech N.	Johnny Wu
QUANTITIES	Johnny Wu	Tech Ngov

STATE OF CALIFORNIA DEPARTMENT OF TRANSPORTATION

DIVISION OF ENGINEERING SERVICES
ELECTRICAL-MECHANICAL-WATER AND WASTEWATER DESIGN

BRIDGE NO. 50M5722
KM POST

TAFT MAINTENANCE STATION
CREW AND EQUIPMENT BUILDING
PARTIAL POWER PLAN No. 2

SHEET **EE-5**

DOS ELEC (10/98) FILE => ee_05.dgn
DATE PLOTTED => 23-MAR-2010 TIME PLOTTED => 06:03

ORIGINAL SCALE IN MILLIMETERS FOR REDUCED PLANS 0 10 20 30 40 50 60 70 80 90 100

CU 06257
EA 483401

DISREGARD PRINTS BEARING EARLIER REVISION DATES

REVISION DATES (PRELIMINARY STAGE ONLY): 7/27/06 5/2/07 1/11/07 1/22/07 2/13/07 3/7/07 3/15/07 3/29/07 4/19/07

SHEET OF

FILE => ee_05.dgn

USERNAME => trmikesi DATE PLOTTED => 23-MAR-2010 TIME PLOTTED => 06:03

VI=1

DIST.	COUNTY	LOCATION CODE	KILOMETER POST TOTAL PROJECT	SHEET NO.	TOTAL SHEETS
06	Ker	5722		157	178

Caltrans Metric

REGISTERED ENGINEER-ELECTRICAL — 5/2/07 DATE

3-8-10
PLANS APPROVAL DATE

REGISTERED PROFESSIONAL ENGINEER — CHI WU — No. 10773 — Exp. 6-30-09 — ELECT — STATE OF CALIFORNIA

The State of California or its officers or agents shall not be responsible for the accuracy or completeness of electronic copies of this plan sheet.

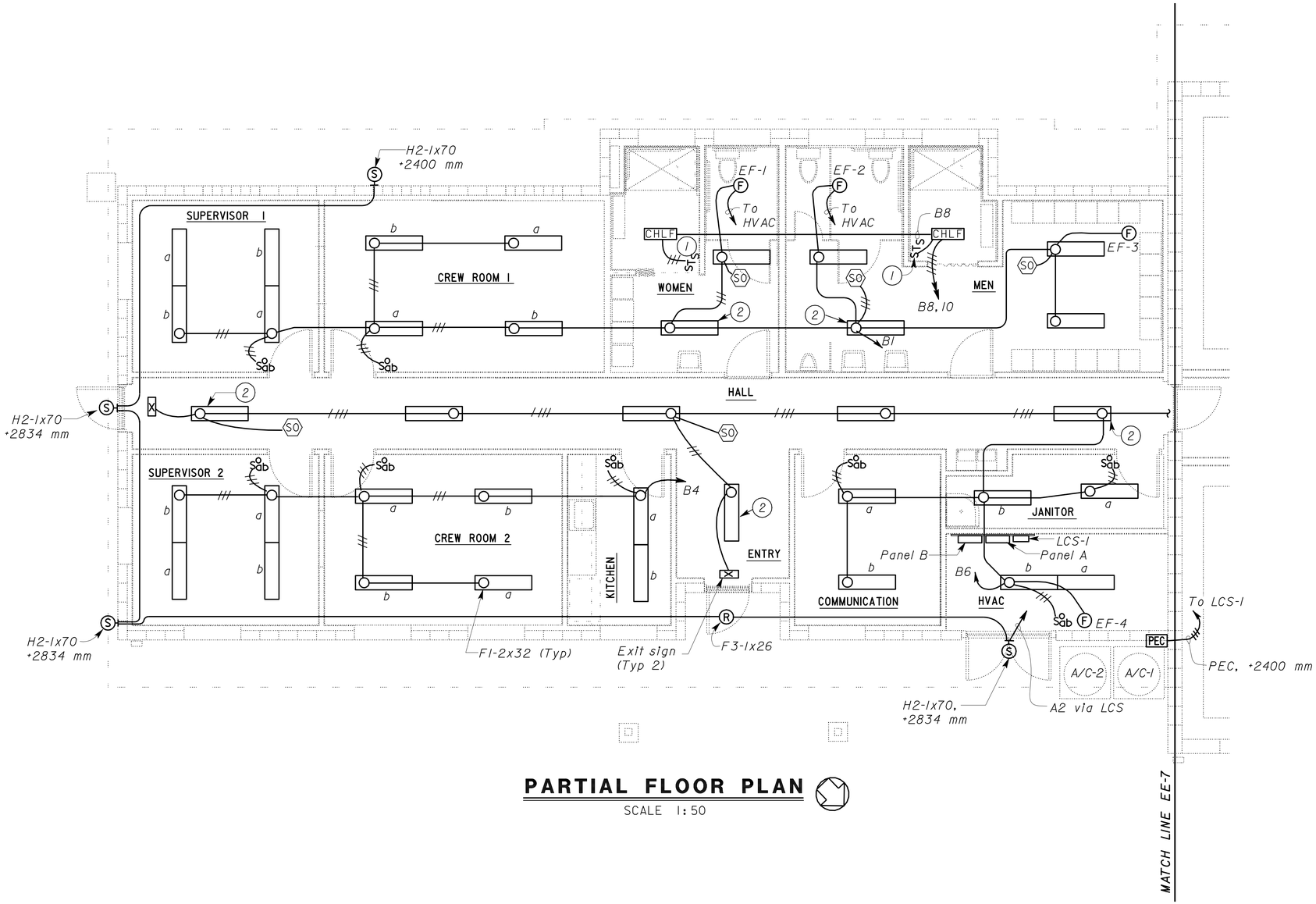

PARTIAL FLOOR PLAN

SCALE 1:50

General Notes:

A. *For exact location of light fixtures, see Architectural sheets.*

B. *For exact location of fan, see Mechanical sheets.*

Notes:

(1) *One switch controls fan and light, timer switch controls heat.*

(2) *The light shall be equipped with emergency ballast.*

CALIFORNIA STATE FIRE MARSHAL APPROVED

Approval of this plan does not authorize or approve any omission or deviation from applicable regulations. Final approval is subject to field inspection. One set of approved plans shall be available on the project site at all times.

Reviewed by: JEFFERY SCHWARTZ

Approval date: 03/08/10

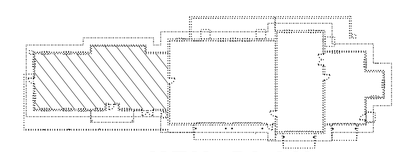

KEY PLAN

THIS DRAWING IS ACCURATE FOR ELECTRICAL WORK ONLY.

ALL DIMENSIONS SHOWN IN MILLIMETERS, EXCEPT AS NOTED

	BY	CHECKED
DESIGN	Johnny Wu	Tech Ngov
DETAILS	Linda M/Tech N.	Johnny Wu
QUANTITIES	Johnny Wu	Tech Ngov

STATE OF CALIFORNIA DEPARTMENT OF TRANSPORTATION

DIVISION OF ENGINEERING SERVICES
ELECTRICAL-MECHANICAL-WATER AND WASTEWATER DESIGN

BRIDGE NO. 50M5722
KM POST

CREW AND EQUIPMENT BUILDING

TAFT MAINTENANCE STATION

PARTIAL LIGHTING PLAN No. 1

SHEET **EE-6**

DOS ELEC (10/98) FILE => ee_06.dgn
DATE PLOTTED => 23-MAR-2010 TIME PLOTTED => 06:03

ORIGINAL SCALE IN MILLIMETERS FOR REDUCED PLANS 0 10 20 30 40 50 60 70 80 90 100

CU 06257
EA 483401

DISREGARD PRINTS BEARING EARLIER REVISION DATES

REVISION DATES (PRELIMINARY STAGE ONLY): 4/12/06 5/2/07 7/18/06 10/23/06 1/16/07 2/13/07 3/7/07 3/12/07 3/29/07

SHEET OF

FILE => ee_06.dgn

USERNAME => trmikesl DATE PLOTTED => 23-MAR-2010 TIME PLOTTED => 06:03

VI=1

DIST.	COUNTY	LOCATION CODE	KILOMETER POST TOTAL PROJECT	SHEET NO.	TOTAL SHEETS
06	Ker	5722		158	178

REGISTERED ENGINEER-ELECTRICAL — 5/2/07 DATE

3-8-10
PLANS APPROVAL DATE

REGISTERED PROFESSIONAL ENGINEER — CHI WU — No. 10773 — Exp. 6-30-09 — ELECT — STATE OF CALIFORNIA

The State of California or its officers or agents shall not be responsible for the accuracy or completeness of electronic copies of this plan sheet.

CALIFORNIA STATE FIRE MARSHAL APPROVED

Approval of this plan does not authorize or approve any omission or deviation from applicable regulations. Final approval is subject to field inspection. One set of approved plans shall be available on the project site at all times.

Reviewed by: JEFFERY SCHWARTZ
Approval date: 03/08/10

Caltrans Metric

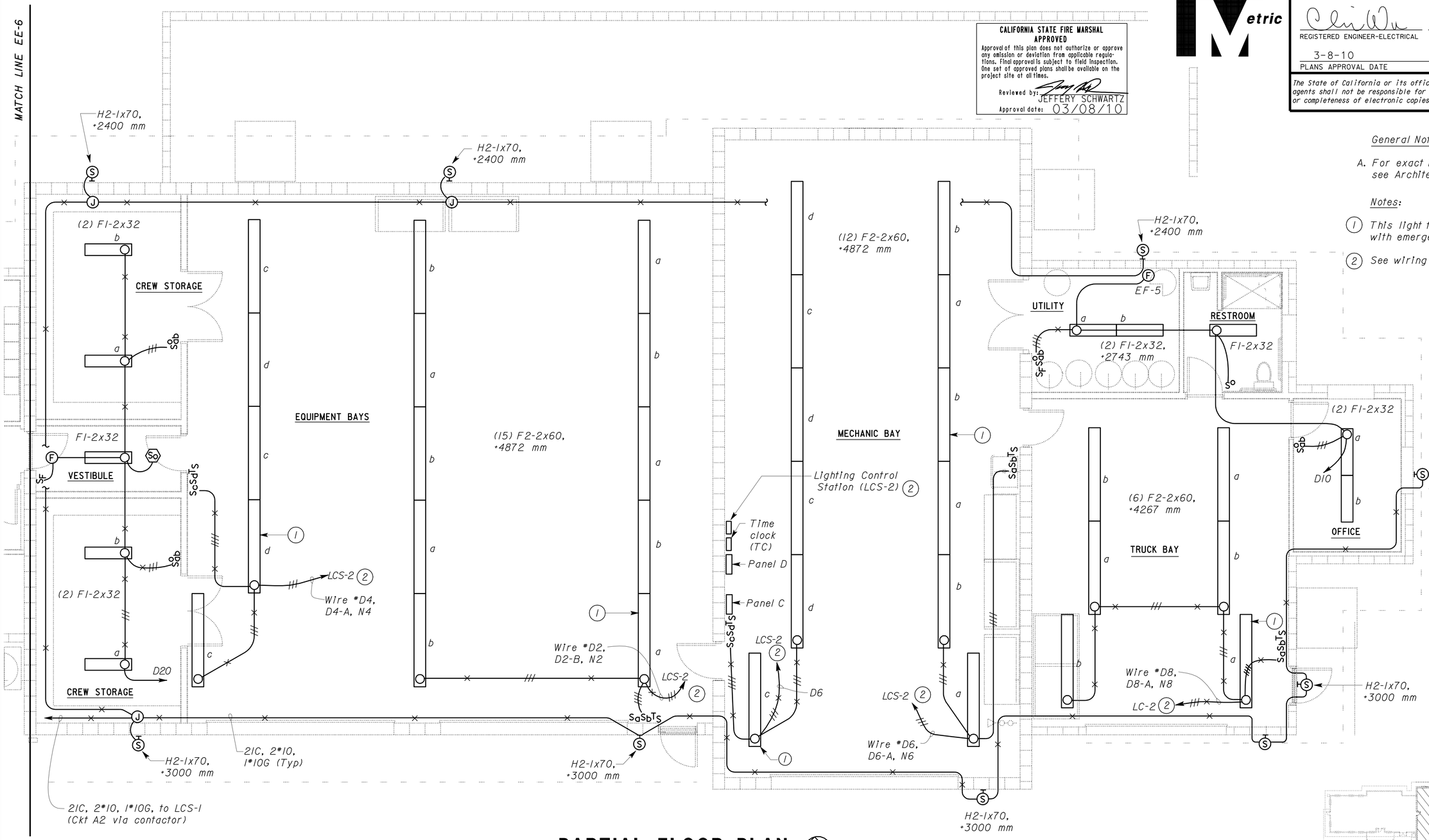

PARTIAL FLOOR PLAN

SCALE 1:50

THIS DRAWING IS ACCURATE FOR ELECTRICAL WORK ONLY.

General Note:

A. *For exact location of light fixtures, see Architectural plans.*

Notes:

1. *This light fixture shall be equipped with emergency ballast.*
2. *See wiring diagram on sheet EE-13.*

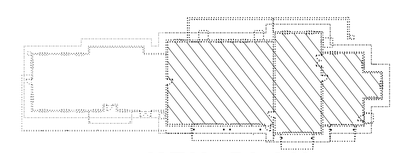

KEY PLAN

ALL DIMENSIONS SHOWN IN MILLIMETERS, EXCEPT AS NOTED

	BY	CHECKED
DESIGN	Johnny Wu	Tech Ngov
DETAILS	Linda M/Tech N.	Johnny Wu
QUANTITIES	Johnny Wu	Tech Ngov

STATE OF CALIFORNIA
DEPARTMENT OF TRANSPORTATION

DIVISION OF ENGINEERING SERVICES
ELECTRICAL-MECHANICAL-WATER AND WASTEWATER DESIGN

BRIDGE NO. 50M5722
KM POST

TAFT MAINTENANCE STATION
CREW AND EQUIPMENT BUILDING
PARTIAL LIGHTING PLAN No. 2

SHEET **EE-7**

DOS ELEC (10/98)
FILE => ee_07.dgn
DATE PLOTTED => 23-MAR-2010 TIME PLOTTED => 06:03

ORIGINAL SCALE IN MILLIMETERS FOR REDUCED PLANS 0 10 20 30 40 50 60 70 80 90 100

CU 06257
EA 483401

DISREGARD PRINTS BEARING EARLIER REVISION DATES
REVISION DATES (PRELIMINARY STAGE ONLY): 2/13/07 3/15/07 5/2/07 5/16/06 7/18/06 7/27/06 10/13/06 1/16/07 1/22/07

SHEET OF

FILE => ee_07.dgn

USERNAME => trmikesl DATE PLOTTED => 23-MAR-2010 TIME PLOTTED => 06:03

VI=1

DIST.	COUNTY	LOCATION CODE	KILOMETER POST TOTAL PROJECT	SHEET NO.	TOTAL SHEETS
06	Ker	5722		159	178

REGISTERED ENGINEER-ELECTRICAL — DATE 5/2/07

3-8-10
PLANS APPROVAL DATE

REGISTERED PROFESSIONAL ENGINEER — CHI WU — No. 10773 — Exp. 6-30-09 — ELECT — STATE OF CALIFORNIA

The State of California or its officers or agents shall not be responsible for the accuracy or completeness of electronic copies of this plan sheet.

CALIFORNIA STATE FIRE MARSHAL APPROVED

Approval of this plan does not authorize or approve any omission or deviation from applicable regulations. Final approval is subject to field inspection. One set of approved plans shall be available on the project site at all times.

Reviewed by: JEFFERY SCHWARTZ
Approval date: 03/08/10

General Notes:

A. *All conduit shall be 21C metal conduit with pull rope, unless otherwise shown.*

B. *Stub out conduits above RTB and TTB respectively with bushing, 300 mm below ceiling.*

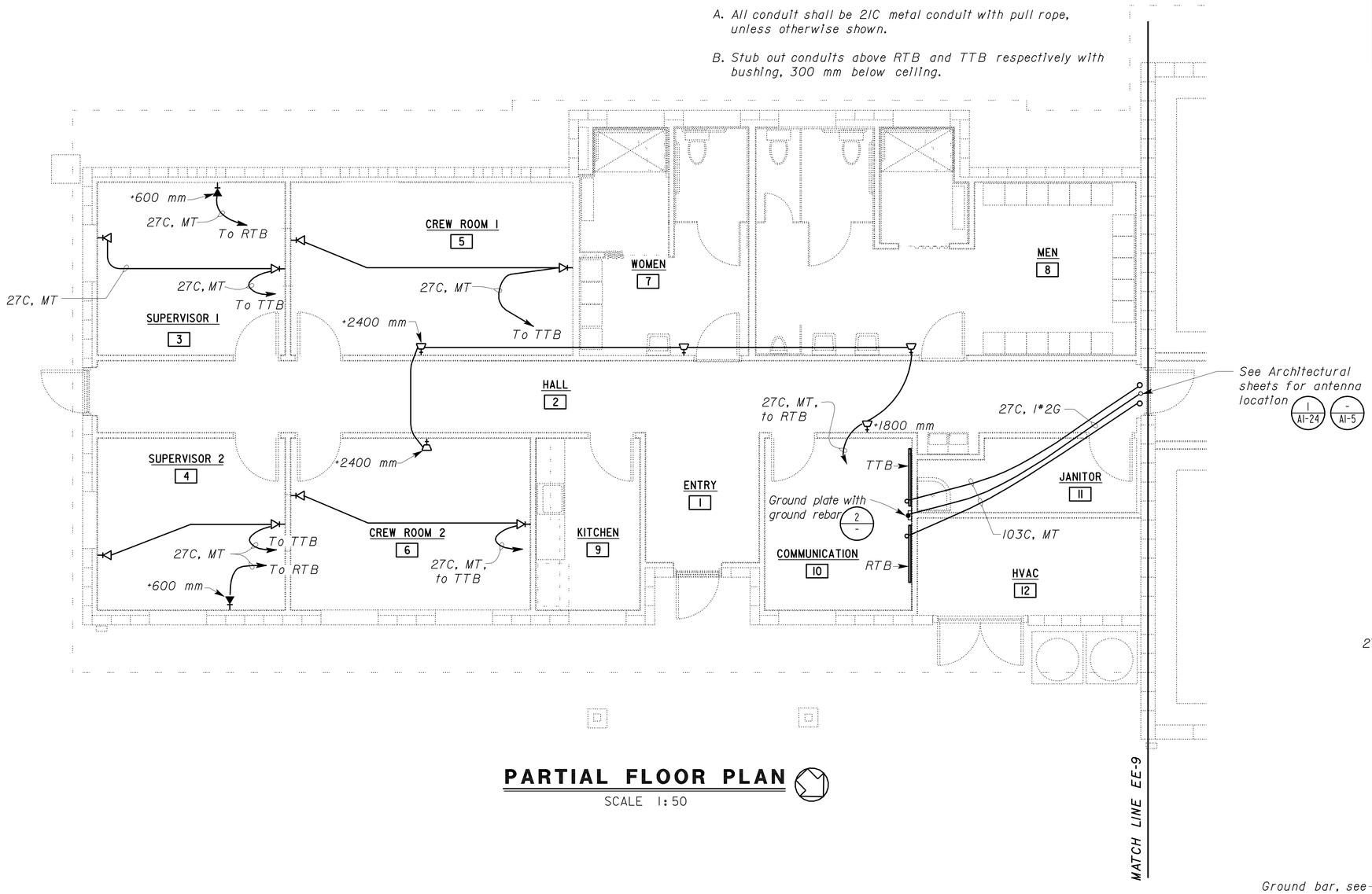

PARTIAL FLOOR PLAN

SCALE 1:50

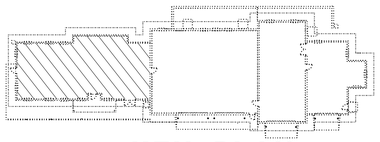

KEY PLAN

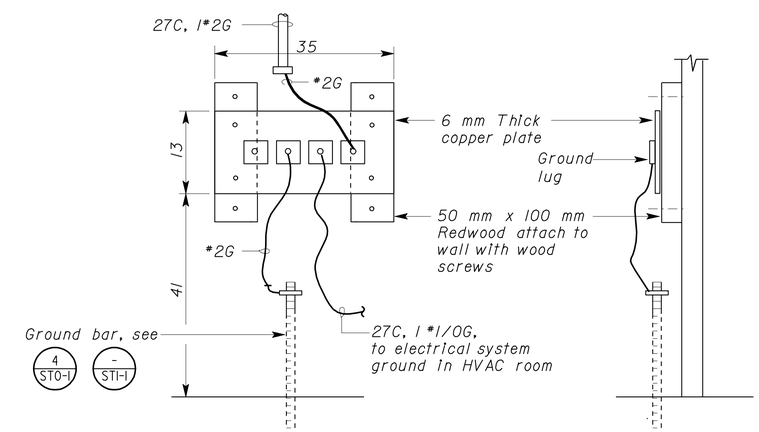

2 GROUND PLATE DETAIL

NO SCALE

THIS DRAWING IS ACCURATE FOR ELECTRICAL WORK ONLY.

ALL DIMENSIONS SHOWN IN MILLIMETERS, EXCEPT AS NOTED

	BY	CHECKED
DESIGN	Johnny Wu	Tech Ngov
DETAILS	Linda M/Tech N.	Johnny Wu
QUANTITIES	Johnny Wu	Tech Ngov

STATE OF CALIFORNIA DEPARTMENT OF TRANSPORTATION

DIVISION OF ENGINEERING SERVICES
ELECTRICAL-MECHANICAL-WATER AND WASTEWATER DESIGN

BRIDGE NO. 50M5722
KM POST

CREW AND EQUIPMENT BUILDING

TAFT MAINTENANCE STATION

PARTIAL COMMUNICATION PLAN No. 1

SHEET **EE-8**

DISREGARD PRINTS BEARING EARLIER REVISION DATES

REVISION DATES (PRELIMINARY STAGE ONLY): 2/8/06 5/2/07 10/31/06 10/14/06 10/16/06 1/18/07 2/15/07 3/12/07 3/29/07

SHEET OF

DOS ELEC (10/98) FILE => ee_08.dgn DATE PLOTTED => 23-MAR-2010 TIME PLOTTED => 06:03

ORIGINAL SCALE IN MILLIMETERS FOR REDUCED PLANS 0 10 20 30 40 50 60 70 80 90 100

CU 06257
EA 483401

FILE => ee_08.dgn

USERNAME => trmikesl DATE PLOTTED => 23-MAR-2010 TIME PLOTTED => 06:03

VI=1

DIST.	COUNTY	LOCATION CODE	KILOMETER POST TOTAL PROJECT	SHEET NO.	TOTAL SHEETS
06	Ker	5722		160	178

REGISTERED ENGINEER-ELECTRICAL — 5/2/07 DATE

3-8-10
PLANS APPROVAL DATE

REGISTERED PROFESSIONAL ENGINEER — CHI WU — No. 10773 — Exp. 6-30-09 — ELECT — STATE OF CALIFORNIA

The State of California or its officers or agents shall not be responsible for the accuracy or completeness of electronic copies of this plan sheet.

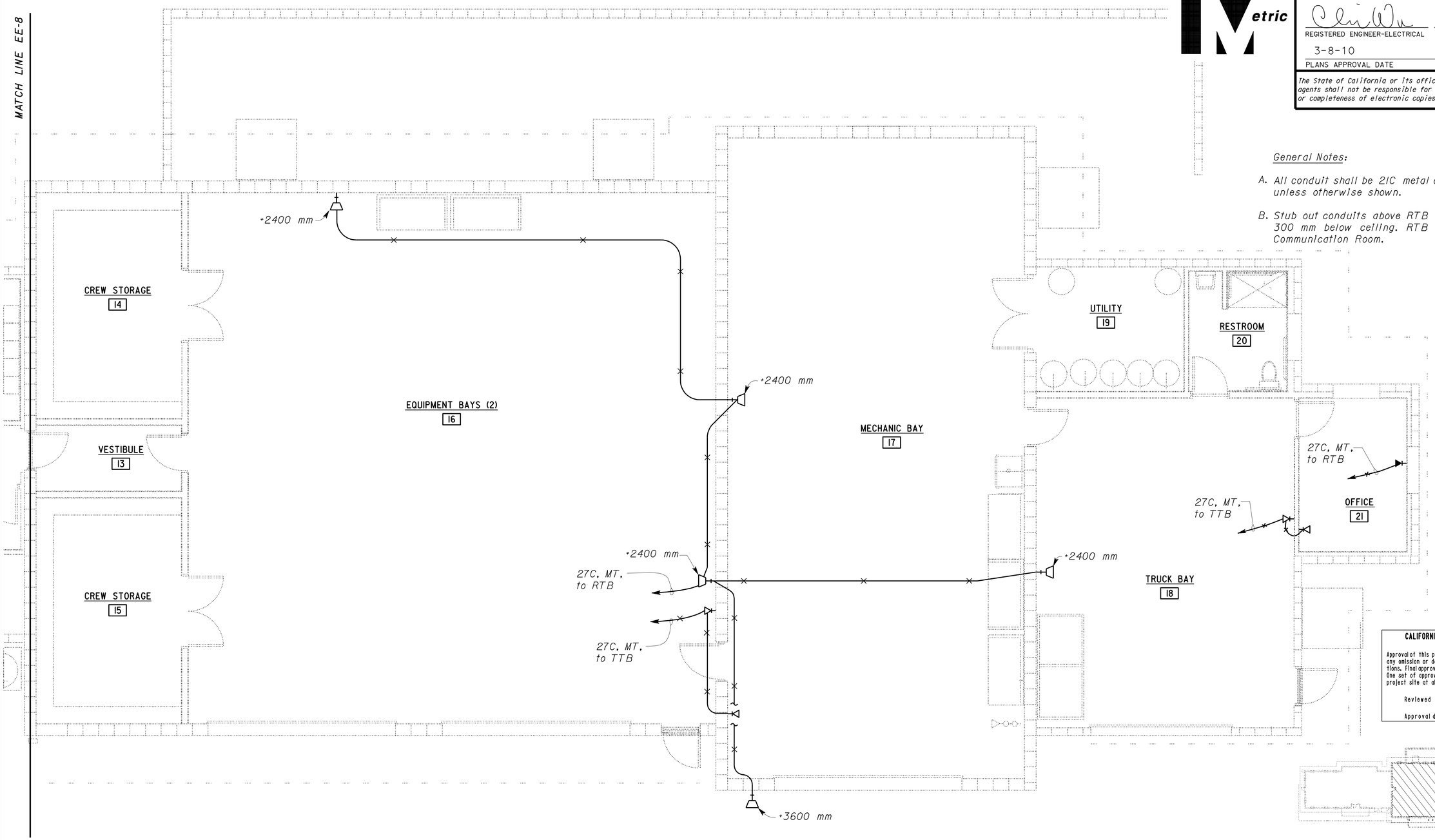

PARTIAL FLOOR PLAN

SCALE 1:50

THIS DRAWING IS ACCURATE FOR ELECTRICAL WORK ONLY.

General Notes:

A. *All conduit shall be 21C metal conduit with pull rope, unless otherwise shown.*

B. *Stub out conduits above RTB and TTB respectively, 300 mm below ceiling. RTB and TTB are located in Communication Room.*

CALIFORNIA STATE FIRE MARSHAL APPROVED

Approval of this plan does not authorize or approve any omission or deviation from applicable regulations. Final approval is subject to field inspection. One set of approved plans shall be available on the project site at all times.

Reviewed by: JEFFERY SCHWARTZ

Approval date: 03/08/10

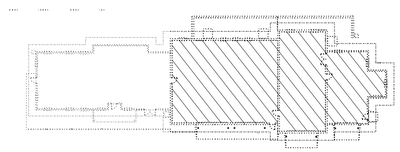

KEY PLAN

ALL DIMENSIONS SHOWN IN MILLIMETERS, EXCEPT AS NOTED

	BY	CHECKED
DESIGN	Johnny Wu	Tech Ngov
DETAILS	Linda M/Tech N.	Johnny Wu
QUANTITIES	Johnny Wu	Tech Ngov

STATE OF CALIFORNIA
DEPARTMENT OF TRANSPORTATION

DIVISION OF ENGINEERING SERVICES
ELECTRICAL-MECHANICAL-WATER AND WASTEWATER DESIGN

BRIDGE NO. 50M5722
KM POST

TAFT MAINTENANCE STATION

CREW AND EQUIPMENT BUILDING

PARTIAL COMMUNICATION PLAN No. 2

SHEET **EE-9**

DOS ELEC (10/98)
FILE => ee_09.dgn
DATE PLOTTED => 23-MAR-2010 TIME PLOTTED => 06:03

ORIGINAL SCALE IN MILLIMETERS FOR REDUCED PLANS 0 10 20 30 40 50 60 70 80 90 100

CU 06257
EA 483401

DISREGARD PRINTS BEARING EARLIER REVISION DATES

REVISION DATES (PRELIMINARY STAGE ONLY): 2/8/06 5/2/07 6/8/06 10/11/06 10/16/06 1/11/07 2/13/07 3/15/07 3/28/07

SHEET OF

FILE => ee_09.dgn

USERNAME => trmikesl DATE PLOTTED => 23-MAR-2010 TIME PLOTTED => 06:03

VI=I

DIST.	COUNTY	LOCATION CODE	KILOMETER POST TOTAL PROJECT	SHEET NO.	TOTAL SHEETS
06	Ker	5722		161	178

Caltrans Metric

REGISTERED ENGINEER-ELECTRICAL — 5/2/07 DATE

3-8-10
PLANS APPROVAL DATE

REGISTERED PROFESSIONAL ENGINEER — CHI WU — No. 10773 — Exp. 6-30-09 — ELECT — STATE OF CALIFORNIA

The State of California or its officers or agents shall not be responsible for the accuracy or completeness of electronic copies of this plan sheet.

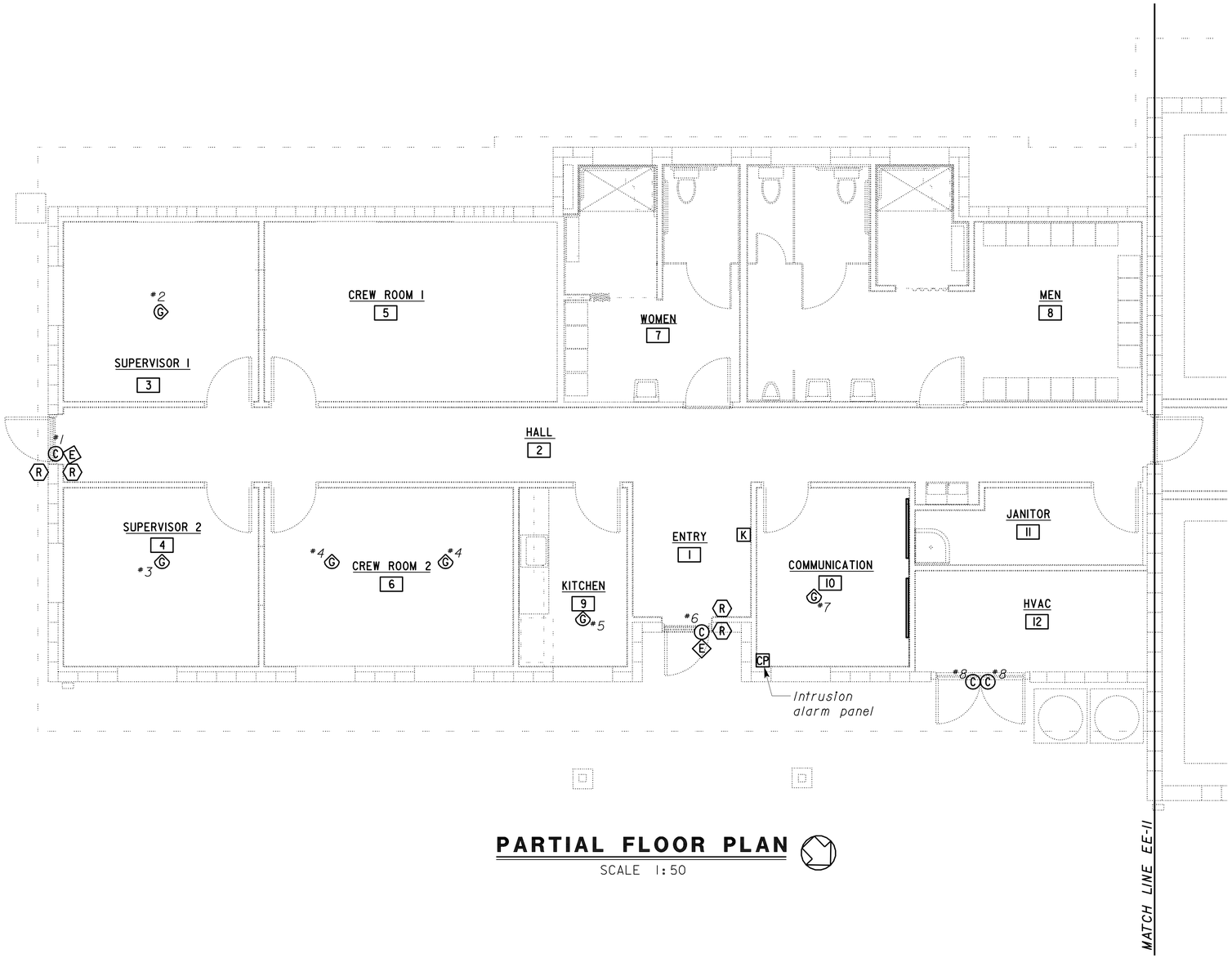

PARTIAL FLOOR PLAN

SCALE 1:50

CALIFORNIA STATE FIRE MARSHAL APPROVED

Approval of this plan does not authorize or approve any omission or deviation from applicable regulations. Final approval is subject to field inspection. One set of approved plans shall be available on the project site at all times.

Reviewed by: JEFFERY SCHWARTZ

Approval date: 03/08/10

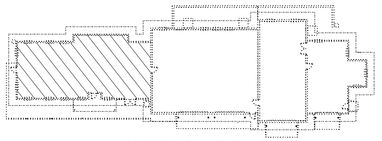

KEY PLAN

THIS DRAWING IS ACCURATE FOR ELECTRICAL WORK ONLY.

ALL DIMENSIONS SHOWN IN MILLIMETERS, EXCEPT AS NOTED

	BY	CHECKED
DESIGN	Johnny Wu	Tech Ngov
DETAILS	Linda M/Tech N.	Johnny Wu
QUANTITIES	Johnny Wu	Tech Ngov

STATE OF CALIFORNIA
DEPARTMENT OF TRANSPORTATION

DIVISION OF ENGINEERING SERVICES
ELECTRICAL-MECHANICAL-WATER AND WASTEWATER DESIGN

BRIDGE NO. 50M5722
KM POST

CREW AND EQUIPMENT BUILDING

TAFT MAINTENANCE STATION

PARTIAL INTRUSION ALARM PLAN No. 1

SHEET **EE-10**

DOS ELEC (10/98)
FILE => ee_10.dgn
DATE PLOTTED => 23-MAR-2010 TIME PLOTTED => 06:03

ORIGINAL SCALE IN MILLIMETERS FOR REDUCED PLANS 0 10 20 30 40 50 60 70 80 90 100

CU 06257
EA 483401

DISREGARD PRINTS BEARING EARLIER REVISION DATES

REVISION DATES (PRELIMINARY STAGE ONLY): 2/8/06 4/17/06 4/24/06 10/13/06 10/17/06 1/17/07 12/13/07 3/15/07 3/28/07 5/2/07

SHEET OF

FILE => ee_10.dgn

USERNAME => trmikesi DATE PLOTTED => 23-MAR-2010 TIME PLOTTED => 06:03

VI=1

DIST.	COUNTY	LOCATION CODE	KILOMETER POST TOTAL PROJECT	SHEET NO.	TOTAL SHEETS
06	Ker	5722		162	178

Caltrans Metric

REGISTERED ENGINEER-ELECTRICAL — 5/2/07 DATE

3-8-10
PLANS APPROVAL DATE

REGISTERED PROFESSIONAL ENGINEER — CHI WU — No. 10773 — Exp. 6-30-09 — ELECT — STATE OF CALIFORNIA

The State of California or its officers or agents shall not be responsible for the accuracy or completeness of electronic copies of this plan sheet.

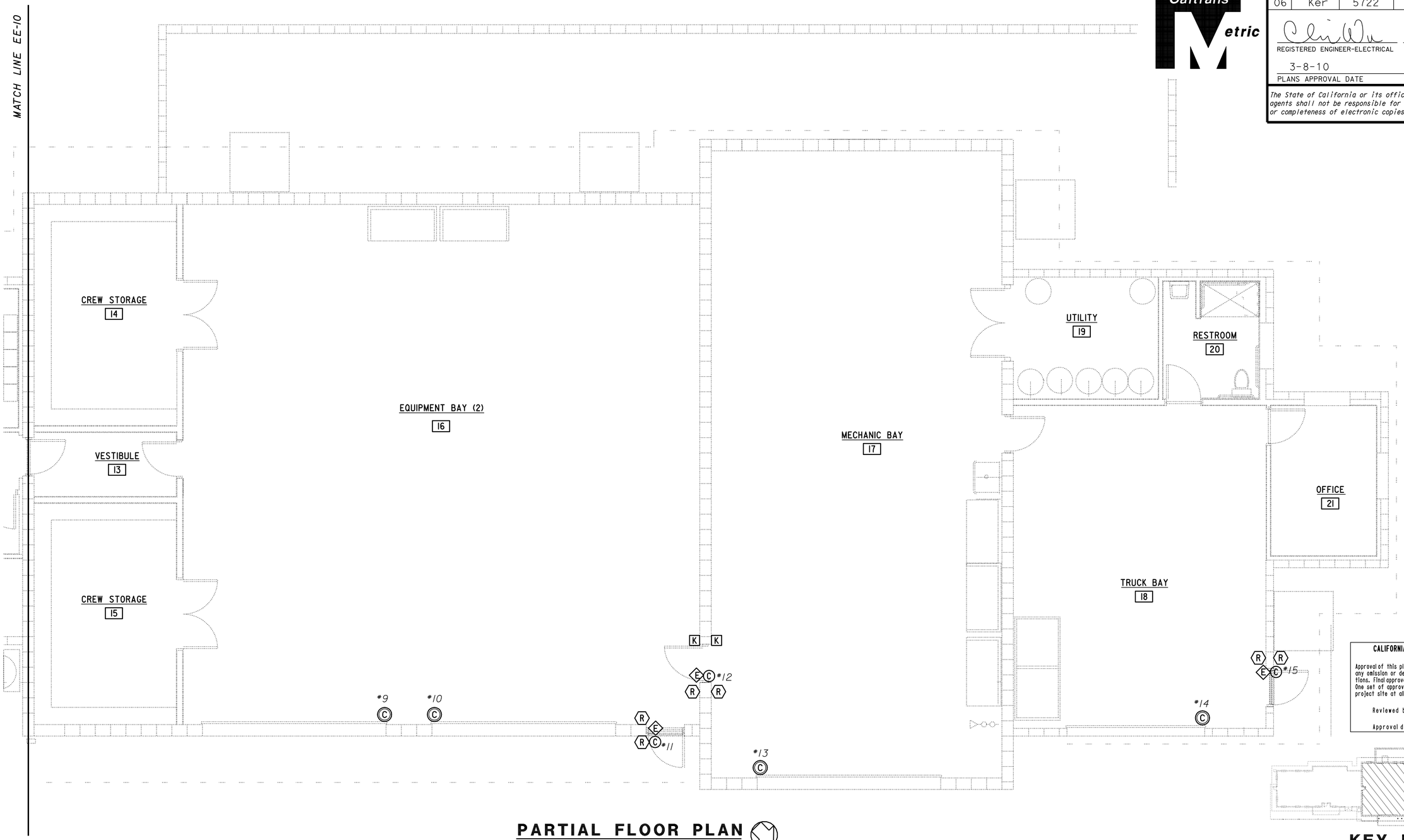

PARTIAL FLOOR PLAN

SCALE 1:50

CALIFORNIA STATE FIRE MARSHAL APPROVED

Approval of this plan does not authorize or approve any omission or deviation from applicable regulations. Final approval is subject to field inspection. One set of approved plans shall be available on the project site at all times.

Reviewed by: JEFFERY SCHWARTZ

Approval date: 03/08/10

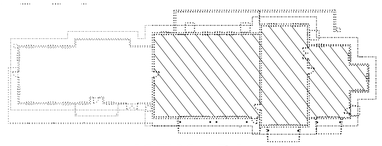

KEY PLAN

THIS DRAWING IS ACCURATE FOR ELECTRICAL WORK ONLY.

ALL DIMENSIONS SHOWN IN MILLIMETERS, EXCEPT AS NOTED

	BY	CHECKED
DESIGN	Johnny Wu	Tech Ngov
DETAILS	Linda M/Tech N.	Johnny Wu
QUANTITIES	Johnny Wu	Tech Ngov

STATE OF CALIFORNIA
DEPARTMENT OF TRANSPORTATION

DIVISION OF ENGINEERING SERVICES
ELECTRICAL-MECHANICAL-WATER AND WASTEWATER DESIGN

BRIDGE NO. 50M5722
KM POST

TAFT MAINTENANCE STATION

CREW AND EQUIPMENT BUILDING

PARTIAL INTRUSION ALARM PLAN No. 2

SHEET **EE-11**

DOS ELEC (10/98)
FILE => ee_11.dgn
DATE PLOTTED => 23-MAR-2010 TIME PLOTTED => 06:04

ORIGINAL SCALE IN MILLIMETERS FOR REDUCED PLANS 0 10 20 30 40 50 60 70 80 90 100

CU 06257
EA 483401

DISREGARD PRINTS BEARING EARLIER REVISION DATES

REVISION DATES (PRELIMINARY STAGE ONLY): 2/8/06 2/23/06 4/11/06 4/24/06 1/11/07 2/13/07 3/1/07 3/15/07 3/29/07 5/2/07

SHEET OF

FILE => ee_11.dgn

USERNAME => trmikesi DATE PLOTTED => 23-MAR-2010 TIME PLOTTED => 06:04

VI=I

DIST.	COUNTY	LOCATION CODE	KILOMETER POST TOTAL PROJECT	SHEET NO.	TOTAL SHEETS
06	Ker	5722		163	178

REGISTERED ENGINEER-ELECTRICAL — DATE 5/2/07

3-8-10
PLANS APPROVAL DATE

REGISTERED PROFESSIONAL ENGINEER — CHI WU — No. 10773 — Exp. 6-30-09 — ELECT — STATE OF CALIFORNIA

The State of California or its officers or agents shall not be responsible for the accuracy or completeness of electronic copies of this plan sheet.

Caltrans Metric

MAIN: 300 A CIRCUIT BREAKER
VOLTS: 120/240 V, 3 Ø, 4-WIRE

PANEL A

FEEDER SIZE: 4#4/0
LOCATION: HVAC ROOM

DESCRIPTION	AMPERES A	AMPERES B	AMPERES C	BRK	CKT	A B C	CKT	BRK	AMPERES A	AMPERES B	AMPERES C	DESCRIPTION
HVAC (A/C-1)	40			**/3	1		2	20/1	10			LIGHT - BUILDING EXTERIOR
		40			3		4	20/2		10		LIGHT - YARD
			40		5		6				10	
SPARE	--			15/2	7		8	**/3	7			GATE OPERATOR
		--			9		10			7		
FUEL ISLAND - PANEL E			20	60/2	11		12				7	
	20				13		14	20/3	40			HVAC (A/C-2)
SPARE		-		20/3	15		16			40		
			-		17		18				40	
	-				19		20	20/2	7			EF-4
BLANK		-			21		22			7		
SPARE			--	20/1	23		24	20/1			--	SPARE
SPARE	--			20/1	25		26	20/1	--			SPARE
BLANK		--		---	27		28	---		--		BLANK
SPARE			--	20/1	29		30	20/1			--	SPARE
SPACE	--			---	31		32	---	--			SPACE
SPACE		--		---	33		34	---		--		SPACE
SPACE			--	---	35		36	---			--	SPACE
PANEL C	111.5			125/3	37		38	---	--			SPACE
		114.5			39		40	---		--		SPACE
			124.5		41		42	---			--	SPACE

** AS REQUIRED BY MANUFACTURER

A	B	C	
235.5	218.5	241.5	TOTAL CONNECTED LOAD (AMPERES PER PHASE)

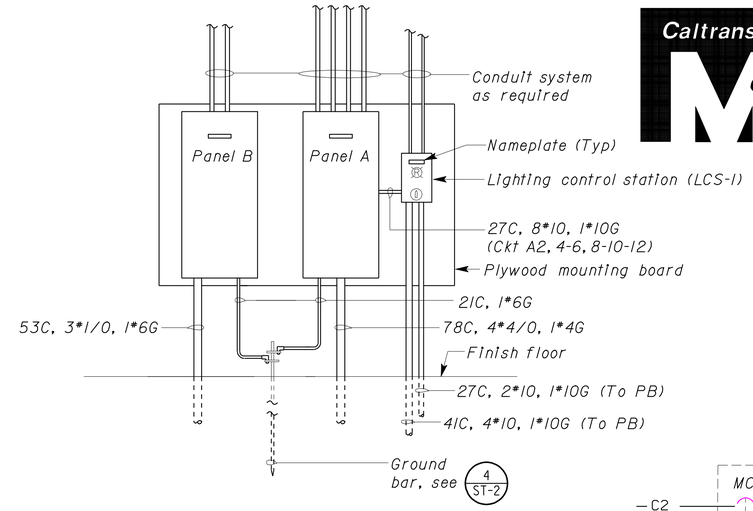

A ELEVATION
SCALE 1: 20

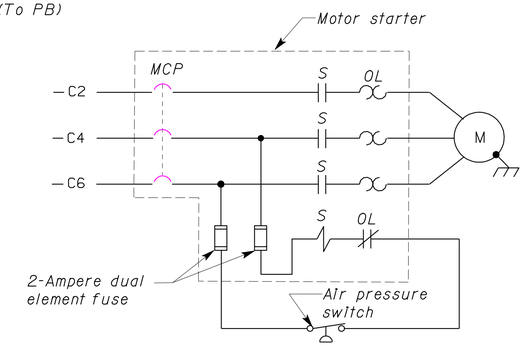

2 AIR COMPRESSOR CONTROL DIAGRAM
NO SCALE

MAIN: 150 A CIRCUIT BREAKER
VOLTS: 120/240 V, 1Ø, 3-WIRE

PANEL B

FEEDER SIZE: 3#1/0
LOCATION: HVAC ROOM

DESCRIPTION	AMPERES A	AMPERES C	BRK	CKT	A C	CKT	BRK	AMPERES A	AMPERES C	DESCRIPTION
RECEPT - SUPERVISOR 1, OFFICE, CREW ROOM 1	15		20/1	1		2	20/1	7		LIGHTS - SUPERVISOR 1, OFFICE, CREW ROOM 1, MEN, WOMEN
RECEPT - SUPERVISOR 2, CREW ROOM 2		15	20/1	3		4	20/1		5	LIGHTS - SUPERVISOR 2, OFFICE, CREW ROOM 2, KITCHEN
RECEPT - REFRIGERATOR	7		20/1	5		6	20/1	5.5		LIGHTS - ENTRY, HALL, COMMUNICATION ROOM, JANITOR, HVAC ROOM
RECEPT - KITCHEN COUNTER		3	20/1	7		8	20/1		8	CHLF - WOMEN'S RM
RECEPT - KITCHEN COUNTER	3		20/1	9		10	20/1	8		CHLF - MEN'S RM
RECEPT - HALL, ENTRY, COMMUNICATION ROOM		7.5	20/1	11		12	20/2		-	SPARE
RECEPT - WATER COOLER	9		20/1	13		14		-		
RECEPT - HALL, MEN, WOMEN, LOCKER, JANITOR		9	20/1	15		16	20/1		9	HVAC FURNACE FAN
RECEPT - COMMUNICATION ROOM, HVAC	10		20/1	17		18	100/2	61.5		PANEL D
HOT WATER CIRCULATION PUMP		6	20/1	19		20			63	
HVAC CONTROL UNIT	3		20/1	21		22	20/1	-		SPARE
SPARE		-	20/1	23		24	20/1		3	SF-1
SPARE	-		20/1	25		26	20/1	-		SPARE
SPARE		-	20/1	27		28	20/1		-	SPARE
SPARE	-		20/1	29		30	20/1	-		SPARE

A	C	
129	128.5	TOTAL CONNECTED LOAD (AMPERES PER PHASE)

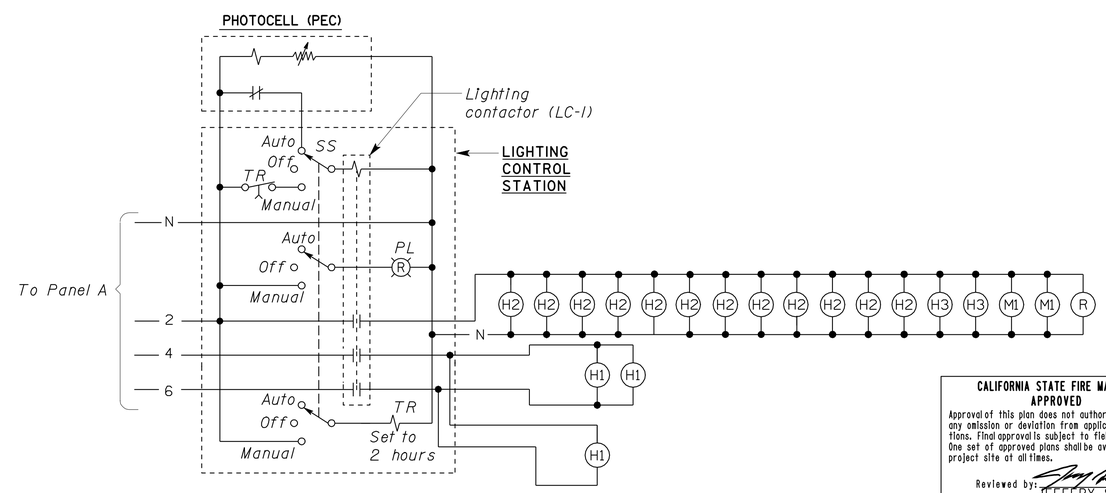

1 LIGHTING CONTROL STATION LCS-1 SCHEMATIC

CALIFORNIA STATE FIRE MARSHAL APPROVED
Approval of this plan does not authorize or approve any omission or deviation from applicable regulations. Final approval is subject to field inspection. One set of approved plans shall be available on the project site at all times.
Reviewed by: JEFFERY SCHWARTZ
Approval date: 03/08/10

ALL DIMENSIONS SHOWN IN MILLIMETERS, EXCEPT AS NOTED

	BY	CHECKED
DESIGN	Johnny Wu	Tech Ngov
DETAILS	Linda M/Tech N.	Johnny Wu
QUANTITIES	Johnny Wu	Tech Ngov

STATE OF CALIFORNIA
DEPARTMENT OF TRANSPORTATION

DIVISION OF ENGINEERING SERVICES
ELECTRICAL-MECHANICAL-WATER AND WASTEWATER DESIGN

BRIDGE NO. 50M5722
KM POST

TAFT MAINTENANCE STATION
PANEL SCHEDULE AND DETAILS 1

SHEET **EE-12**

DOS ELEC (10/98)
FILE => ee_12.dgn
DATE PLOTTED => 23-MAR-2010 TIME PLOTTED => 06:04

ORIGINAL SCALE IN MILLIMETERS FOR REDUCED PLANS 0 10 20 30 40 50 60 70 80 90 100

CU 06257
EA 483401

DISREGARD PRINTS BEARING EARLIER REVISION DATES
REVISION DATES (PRELIMINARY STAGE ONLY) 7/31/06 10/13/06 10/14/06 1/16/07 2/13/07 3/7/07 3/12/07 3/15/07 3/29/07 5/2/07
SHEET OF

FILE => ee_12.dgn

USERNAME => trmikesl DATE PLOTTED => 23-MAR-2010 TIME PLOTTED => 06:04

VI=1

DIST.	COUNTY	LOCATION CODE	KILOMETER POST TOTAL PROJECT	SHEET NO.	TOTAL SHEETS
06	Ker	5722		164	178

REGISTERED ENGINEER-ELECTRICAL — DATE 5/2/07

3-8-10
PLANS APPROVAL DATE

REGISTERED PROFESSIONAL ENGINEER — CHI WU — No. 10773 — Exp. 6-30-09 — ELECT — STATE OF CALIFORNIA

The State of California or its officers or agents shall not be responsible for the accuracy or completeness of electronic copies of this plan sheet.

Caltrans Metric

MAIN: 125 A CIRCUIT BREAKER
VOLTS: 120/240 V, 3 Ø, 4-WIRE

PANEL C

FEEDER SIZE: 4*1
LOCATION: MECHANIC BAY

DESCRIPTION	AMPERES A	AMPERES B	AMPERES C	BRK	CKT	A B C	CKT	BRK	AMPERES A	AMPERES B	AMPERES C	DESCRIPTION
VEHICLE LIFT (VL-1)	22			50/3	1		2	40/3	15			AIR COMPRESSOR
		22			3		4			15		
			22		5		6				15	
EXHAUST EVACUATION HOSE REEL AND FAN (EEF-1)	5			20/3	7		8	15/3	3.5			EVAPORATIVE COOLER (EC-1)
		5			9		10			3.5		
			5		11		12				3.5	
GARAGE DOOR OPERATORS	5			15/3	13		14	15/3	3.5			EVAPORATIVE COOLER (EC-2)
		5			15		16			3.5		
			5		17		18				3.5	
SPARE	-			20/2	19		20	15/3	5			EVAPORATIVE COOLER (EC-3)
		-			21		22			5		
WELDING RECEPTACLE			20	60/2	23		24				5	
	20				25		26	20/3	5			EXHAUST EVACUATION HOSE REEL AND FAN (EEF-2)
ELECTRIC WATER HEATER		23		50/2	27		28			5		
			23		29		30				5	
THROUGH WALL HEAT PUMP (HP-1)	10			20/2	31		32	15/3	9			DECLASSIFICATION FANS (DEF-1, DEF-2, DEF-3)
		10			33		34			9		
EVAPORATIVE COOLER (EC-4)			3.5	20/3	35		36				9	
	3.5				37		38	15/3	5			GARAGE DOOR OPERATORS
		3.5			39		40			5		
SPARE			-	20/1	41		42				5	

** AS REQUIRED BY MANUFACTURER

A	B	C	
111.5	114.5	124.5	TOTAL CONNECTED LOAD (AMPERES PER PHASE)

MAIN: 100 A CIRCUIT BREAKER
VOLTS: 120/240 V, 1Ø, 3-WIRE

PANEL D

FEEDER SIZE: 3*1
LOCATION: MECHANIC BAY

DESCRIPTION	AMPERES A	AMPERES C	BRK	CKT	A C	CKT	BRK	AMPERES A	AMPERES C	DESCRIPTION
RECEPT - CREW STORAGES, EQUIPMENT BAY-EAST	6		20/1	1		2	20/1	10		LIGHTS - EQUIPMENT BAY-NORTH, CENTER ROWS
RECEPT - CREW STORAGE, EQUIPMENT BAY-SOUTH		9	20/1	3		4	20/1		7	LIGHTS - EQUIPMENT BAY (SOUTH ROW), VESTIBULE, CREW STORAGE
RECEPT - MECHANIC BAY (EAST WALL)	6		20/1	5		6	20/1	12		LIGHTS - MECHANIC BAY
RECEPT - EQUIPMENT BAY-WEST (NORTH WALLS)		9	20/1	7		8	20/1		6	LIGHTS - TRUCK BAY
RECEPT - MECHANIC BAY (SOUTH WALL)	7.5		20/1	9		10	20/1	3		LIGHTS - UTILITY, RESTROOM, OFFICE
UNIT HEATERS		3	20/1	11		12	20/1		6	RECEPT - OFFICE, RESTROOM
FUME EXHAUST FAN (FEF-1)	2		20/1	13		14	20/1	9		RECEPT - TRUCK BAY (NORTH WALL)
RECEPT - MECHANIC BAY (NORTH WALL)		9	20/1	15		16	20/1		8	COMBINATION HEAT-LIGHT-FAN (CHLF)
UNIT HEATERS	3		20/1	17		18	20/1	3		FUTURE IRRIGATION CONTROLLER
LIGHT REEL		3	20/1	19		20	20/1		3	LIGHT - CREW STORAGE, VESTIBULE
SPARE	-		20/1	21		22	20/1	-		SPARE
SPARE		-	20/1	23		24	20/1		-	SPARE
SPARE	-		20/1	25		26	20/1	-		SPARE
SPARE		-	20/1	27		28	20/1		-	SPARE
SPARE	-		20/1	29		30	20/1	-		SPARE

A	C	
61.5	63	TOTAL CONNECTED LOAD (AMPERES PER PHASE)

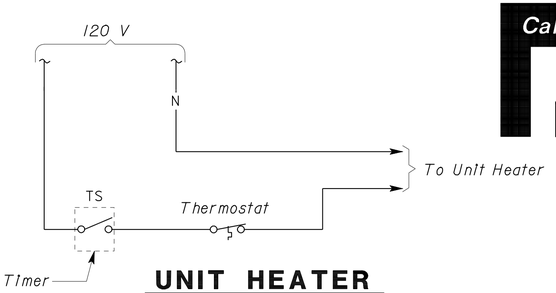

UNIT HEATER WIRING DIAGRAM (TYP)

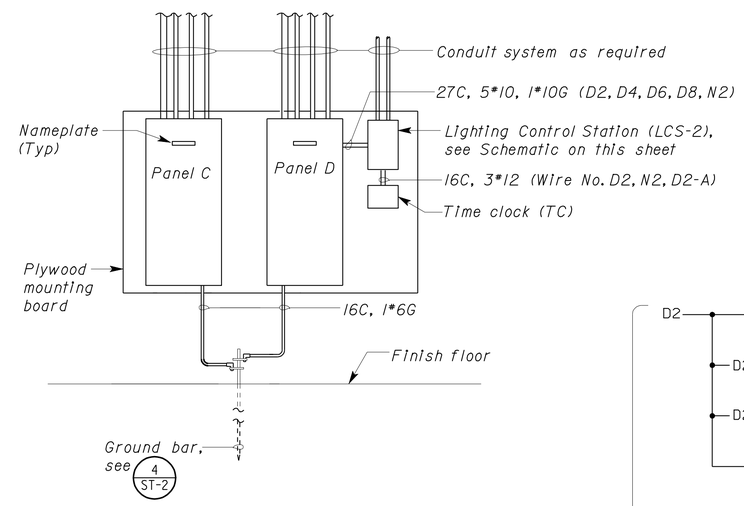

A ELEVATION

SCALE 1: 20

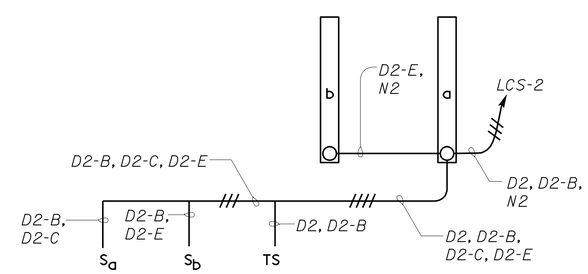

TYPICAL WIRING DIAGRAM

NO SCALE

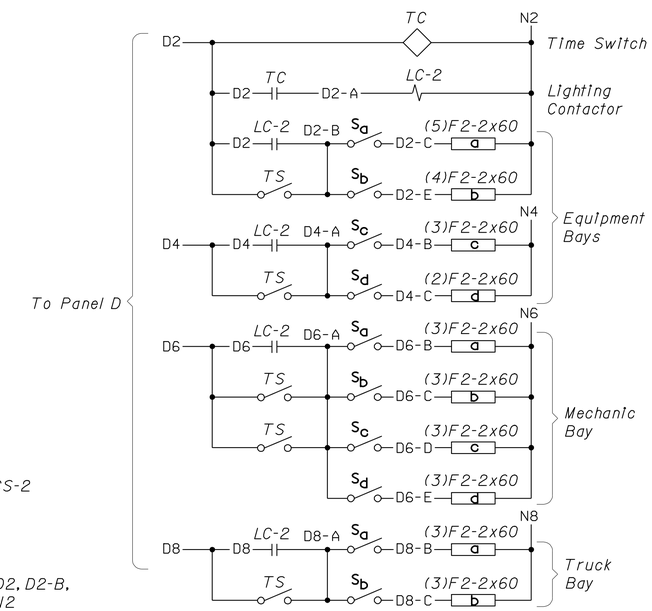

LIGHTING CONTROL STATION (LCS-2) SCHEMATIC

CALIFORNIA STATE FIRE MARSHAL APPROVED

Approval of this plan does not authorize or approve any omission or deviation from applicable regulations. Final approval is subject to field inspection. One set of approved plans shall be available on the project site at all times.

Reviewed by: JEFFERY SCHWARTZ
Approval date: 03/08/10

ALL DIMENSIONS SHOWN IN MILLIMETERS, EXCEPT AS NOTED

	BY	CHECKED
DESIGN	Johnny Wu	Tech Ngov
DETAILS	Linda M/Tech N.	Johnny Wu
QUANTITIES	Johnny Wu	Tech Ngov

STATE OF CALIFORNIA DEPARTMENT OF TRANSPORTATION

DIVISION OF ENGINEERING SERVICES
ELECTRICAL-MECHANICAL-WATER AND WASTEWATER DESIGN

BRIDGE NO. 50M5722
KM POST

TAFT MAINTENANCE STATION

PANEL SCHEDULE AND DETAILS 2

SHEET **EE-13**

DOS ELEC (10/98) FILE => ee_13.dgn
DATE PLOTTED => 23-MAR-2010 TIME PLOTTED => 06:04

ORIGINAL SCALE IN MILLIMETERS FOR REDUCED PLANS 0 10 20 30 40 50 60 70 80 90 100

CU 06257
EA 483401

DISREGARD PRINTS BEARING EARLIER REVISION DATES

REVISION DATES (PRELIMINARY STAGE ONLY): 4/25/06 5/2/07 7/31/06 10/31/06 1/16/07 2/15/07 3/7/07 3/15/07 3/20/07

SHEET OF

FILE => ee_13.dgn

USERNAME => trmikesl DATE PLOTTED => 23-MAR-2010 TIME PLOTTED => 06:04

V1=1

DIST.	COUNTY	LOCATION CODE	KILOMETER POST TOTAL PROJECT	SHEET NO.	TOTAL SHEETS
06	Ker	5722		165	178

Caltrans Metric

REGISTERED ENGINEER-ELECTRICAL — 5/2/07 DATE

3-8-10
PLANS APPROVAL DATE

REGISTERED PROFESSIONAL ENGINEER — CHI WU — No. 10773 — Exp. 6-30-09 — ELECT — STATE OF CALIFORNIA

The State of California or its officers or agents shall not be responsible for the accuracy or completeness of electronic copies of this plan sheet.

Note:

(1) *Remove utility meter and cover the hole. Connect new feeder directly to line side of building disconnect circuit breaker.*

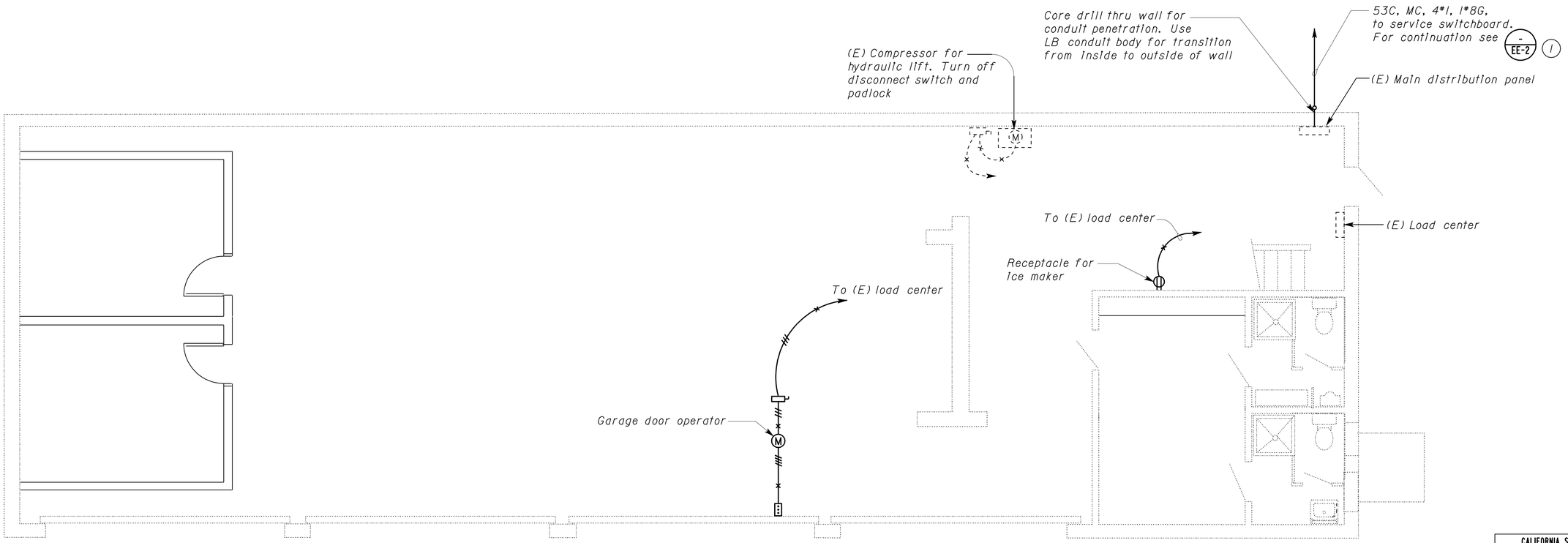

PLAN
SCALE 1:50

CALIFORNIA STATE FIRE MARSHAL APPROVED
Approval of this plan does not authorize or approve any omission or deviation from applicable regulations. Final approval is subject to field inspection. One set of approved plans shall be available on the project site at all times.
Reviewed by: JEFFERY SCHWARTZ
Approval date: 03/08/10

THIS DRAWING IS ACCURATE FOR ELECTRICAL WORK ONLY.

ALL DIMENSIONS SHOWN IN MILLIMETERS, EXCEPT AS NOTED

	BY	CHECKED
DESIGN	Johnny Wu	Tech Ngov
DETAILS	Linda M/Tech N.	Johnny Wu
QUANTITIES	Johnny Wu	Tech Ngov

STATE OF CALIFORNIA
DEPARTMENT OF TRANSPORTATION

DIVISION OF ENGINEERING SERVICES
ELECTRICAL-MECHANICAL-WATER AND WASTEWATER DESIGN

BRIDGE NO. 50M5722
KM POST

TAFT MAINTENANCE STATION
MODIFIED EQUIPMENT SHOP PLAN

SHEET **EE-14**

DOS ELEC (10/98)
FILE => ee_14.dgn
DATE PLOTTED => 23-MAR-2010 TIME PLOTTED => 06:04

ORIGINAL SCALE IN MILLIMETERS FOR REDUCED PLANS 0 10 20 30 40 50 60 70 80 90 100

CU 06257
EA 483401

DISREGARD PRINTS BEARING EARLIER REVISION DATES

REVISION DATES (PRELIMINARY STAGE ONLY): 2/28/06 4/17/06 6/5/06 1/16/07 1/26/07 2/13/07 3/15/07 3/28/07 5/2/07

SHEET OF

FILE => ee_14.dgn

USERNAME => trmikesl DATE PLOTTED => 23-MAR-2010 TIME PLOTTED => 06:04

VI=1

DIST.	COUNTY	LOCATION CODE	KILOMETER POST TOTAL PROJECT	SHEET NO.	TOTAL SHEETS
06	Ker	5722		166	178

REGISTERED ENGINEER-ELECTRICAL — 5/2/07 DATE

3-8-10
PLANS APPROVAL DATE

REGISTERED PROFESSIONAL ENGINEER — CHI WU — No. 10773 — Exp. 6-30-09 — ELECT — STATE OF CALIFORNIA

The State of California or its officers or agents shall not be responsible for the accuracy or completeness of electronic copies of this plan sheet.

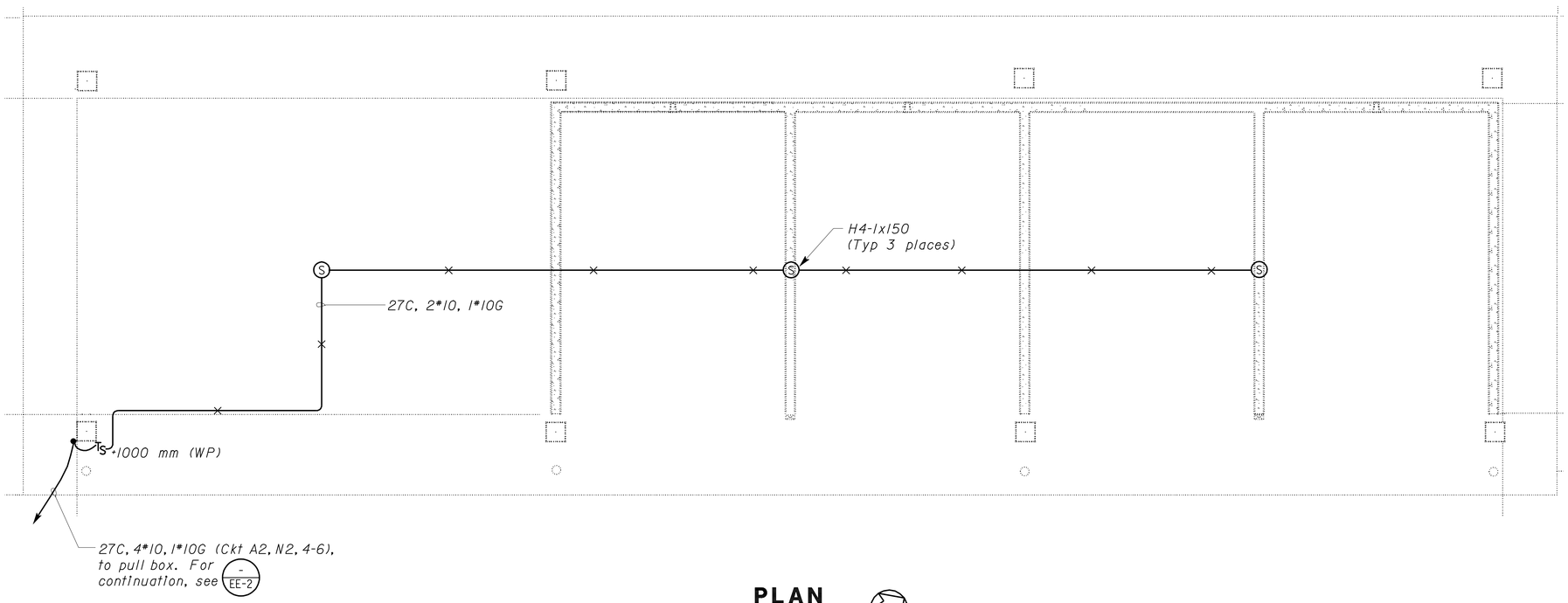

PLAN
SCALE 1:50

CALIFORNIA STATE FIRE MARSHAL APPROVED
Approval of this plan does not authorize or approve any omission or deviation from applicable regulations. Final approval is subject to field inspection. One set of approved plans shall be available on the project site at all times.
Reviewed by: JEFFERY SCHWARTZ
Approval date: 03/08/10

THIS DRAWING IS ACCURATE FOR ELECTRICAL WORK ONLY.

ALL DIMENSIONS SHOWN IN MILLIMETERS, EXCEPT AS NOTED

	BY	CHECKED
DESIGN	Johnny Wu	Tech Ngov
DETAILS	Linda M/Tech N.	Johnny Wu
QUANTITIES	Johnny Wu	Tech Ngov

STATE OF CALIFORNIA
DEPARTMENT OF TRANSPORTATION

DIVISION OF ENGINEERING SERVICES
ELECTRICAL-MECHANICAL-WATER AND WASTEWATER DESIGN

BRIDGE NO. 50M5722
KM POST

TAFT MAINTENANCE STATION
MATERIAL BIN — LIGHTING PLAN

SHEET **EE-15**

DOS ELEC (10/98)
FILE => ee_15.dgn
DATE PLOTTED => 23-MAR-2010 TIME PLOTTED => 06:04
ORIGINAL SCALE IN MILLIMETERS FOR REDUCED PLANS 0 10 20 30 40 50 60 70 80 90 100
CU 06257
EA 483401
FILE => ee_15.dgn
DISREGARD PRINTS BEARING EARLIER REVISION DATES
REVISION DATES (PRELIMINARY STAGE ONLY) 2/23/06 4/17/06 4/24/06 1/16/07 2/13/07 3/26/07 5/2/07
SHEET OF

USERNAME => trmikesl DATE PLOTTED => 23-MAR-2010 TIME PLOTTED => 06:04

VI=1

DIST.	COUNTY	LOCATION CODE	KILOMETER POST TOTAL PROJECT	SHEET NO.	TOTAL SHEETS
06	Ker	5722		167	178

Caltrans Metric

REGISTERED ENGINEER-ELECTRICAL — 5/2/07 DATE

3-8-10
PLANS APPROVAL DATE

REGISTERED PROFESSIONAL ENGINEER — CHI WU — No. 10773 — Exp. 6-30-09 — ELECT — STATE OF CALIFORNIA

The State of California or its officers or agents shall not be responsible for the accuracy or completeness of electronic copies of this plan sheet.

MAIN: 60 A CIRCUIT BREAKER
VOLTS: 120/240 V, 1 Ø, 3-WIRE

PANEL E

FEEDER SIZE: 3#4
LOCATION: HVAC ROOM

DESCRIPTION	AMPERES A	AMPERES C	BRK	CKT	A C	CKT	BRK	AMPERES A	AMPERES C	DESCRIPTION
DIESEL PUMP 1	5		15/2	1		2	15/2	5		DIESEL PUMP 2
		5		3		4			5	
GAS PUMP 1	5		15/2	5		6	15/2	5		GAS PUMP 2
		5		7		8			5	
SPARE	-		SWN 15/2	9		10	20/1			SPARE
		-		11		12	SWN 20/2		-	SPARE
SPARE	-		SWN 15/2	13		14		-		
		-		15		16	20/1		-	SPARE
SPARE	-		20/1	17		18	SWN 20/2	-		SPARE
SPARE		-	20/1	19		20			-	
								A	C	
								20	20	TOTAL AMPERES PER PHASE

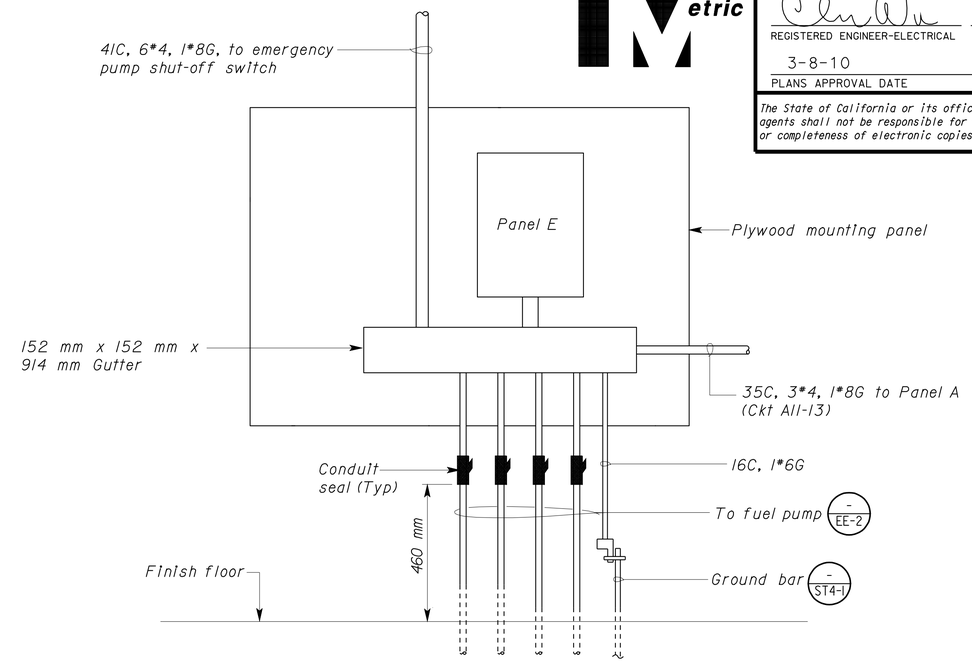

A ELEVATION
1:10

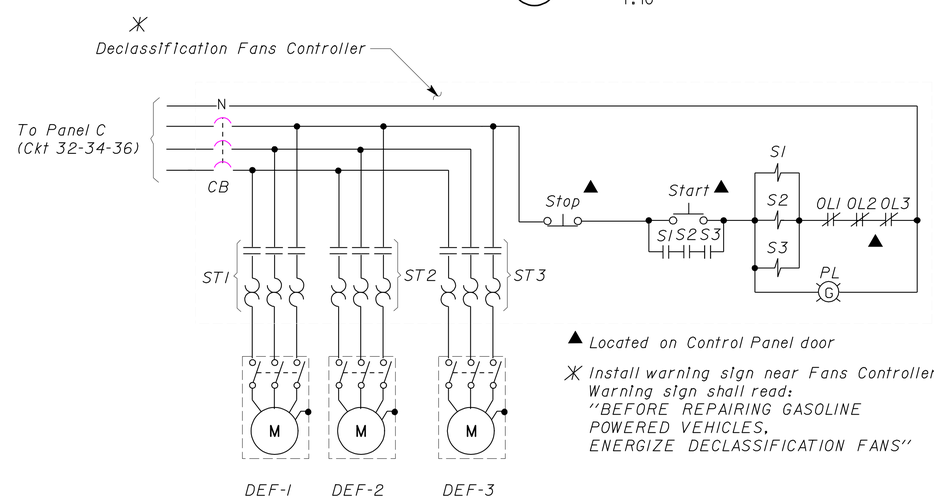

▲ Located on Control Panel door

✳ Install warning sign near Fans Controller. Warning sign shall read: "BEFORE REPAIRING GASOLINE POWERED VEHICLES, ENERGIZE DECLASSIFICATION FANS"

1 DECLASSIFICATION FAN WIRING DIAGRAM
NO SCALE

CALIFORNIA STATE FIRE MARSHAL APPROVED
Approval of this plan does not authorize or approve any omission or deviation from applicable regulations. Final approval is subject to field inspection. One set of approved plans shall be available on the project site at all times.
Reviewed by: JEFFERY SCHWARTZ
Approval date: 03/08/10

ALL DIMENSIONS SHOWN IN MILLIMETERS, EXCEPT AS NOTED

	BY	CHECKED
DESIGN	Johnny Wu	Tech Ngov
DETAILS	Linda Monson	Johnny Wu
QUANTITIES	Johnny Wu	Tech Ngov

STATE OF CALIFORNIA
DEPARTMENT OF TRANSPORTATION

DIVISION OF ENGINEERING SERVICES
ELECTRICAL-MECHANICAL-WATER AND WASTEWATER DESIGN

BRIDGE NO. 50M5722
KM POST

TAFT MAINTENANCE STATION
PANEL SCHEDULE AND DETAILS 3

SHEET **EE-16**

DOS ELEC (10/98)
FILE => ee_16.dgn
DATE PLOTTED => 23-MAR-2010 TIME PLOTTED => 06:04

ORIGINAL SCALE IN MILLIMETERS FOR REDUCED PLANS 0 10 20 30 40 50 60 70 80 90 100

CU 06257
EA 483401

DISREGARD PRINTS BEARING EARLIER REVISION DATES

REVISION DATES (PRELIMINARY STAGE ONLY) 7/25/06 7/31/06 10/5/06 1/11/07 1/24/07 2/13/07 3/12/07 3/15/07 3/29/07 5/2/07 SHEET OF

FILE => ee_16.dgn

USERNAME => trmikesl DATE PLOTTED => 23-MAR-2010 TIME PLOTTED => 06:04

VI=1

DIST.	COUNTY	LOCATION CODE	KILOMETER POST TOTAL PROJECT	SHEET NO.	TOTAL SHEETS
06	Ker	5722		168	178

REGISTERED ENGINEER-ELECTRICAL — 5/2/07 DATE

3-8-10
PLANS APPROVAL DATE

REGISTERED PROFESSIONAL ENGINEER — CHI WU — No. 10773 — Exp. 6-30-09 — ELECT — STATE OF CALIFORNIA

The State of California or its officers or agents shall not be responsible for the accuracy or completeness of electronic copies of this plan sheet.

Caltrans Metric

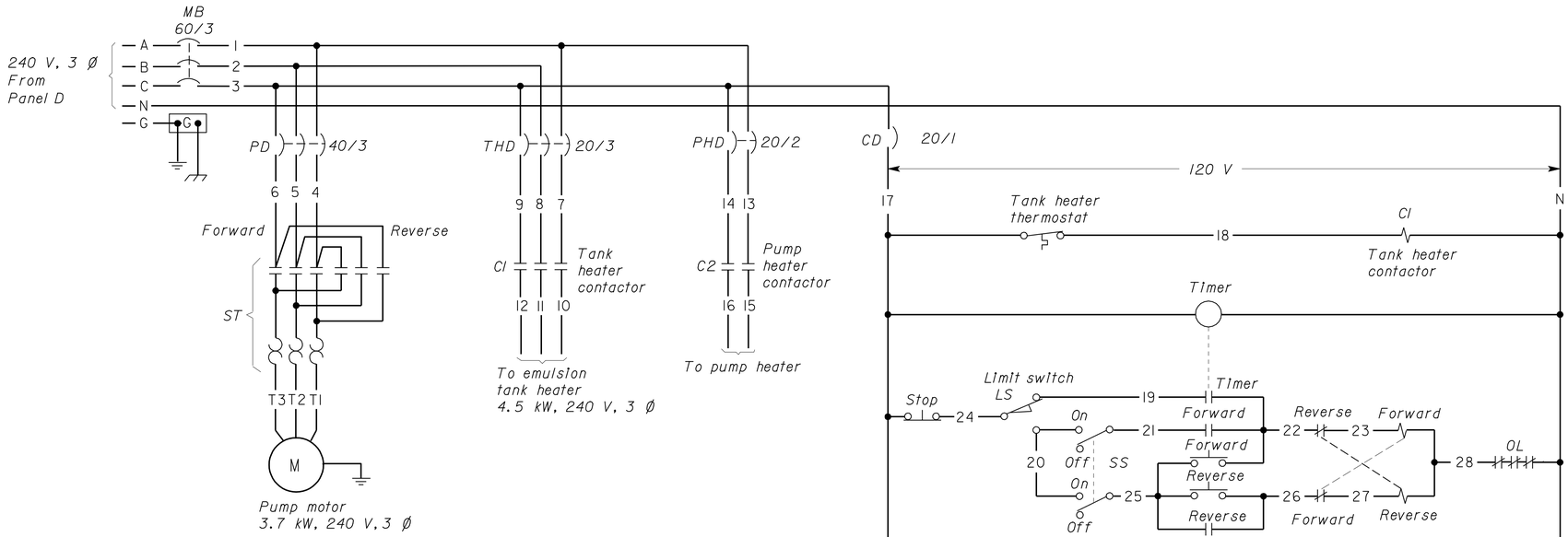

POWER DISTRIBUTION DIAGRAM

CONTROL SCHEMATIC

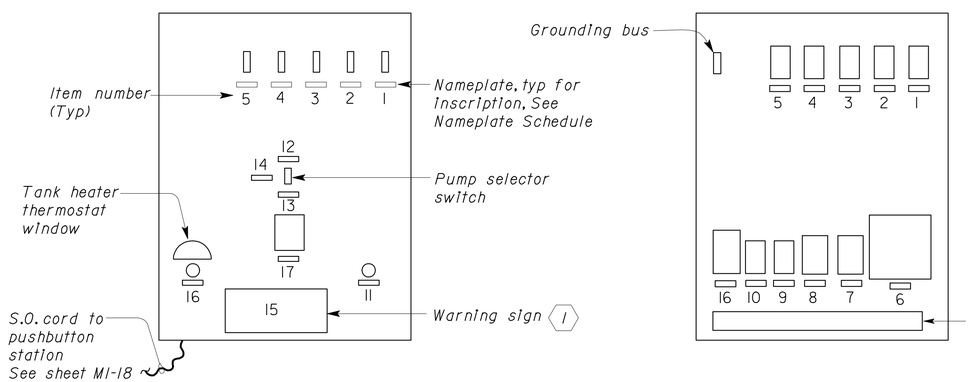

INTERIOR DOOR

MOUNTING PANEL

CONTROL PANEL-ELEVATION

(EXTERIOR DOOR NOT SHOWN)
NO SCALE

1 *A second warning sign with the same inscription shall be posted adjacent to the three-way valve.*

NAMEPLATE/SIGN SCHEDULE

ITEM NO.	INSCRIPTION	LETTER HEIGHT (mm)
1 (MB)	MAIN CIRCUIT BREAKER	3
2 (PD)	PUMP MOTOR DISCONNECT	↓
3 (THD)	TANK HEATER DISCONNECT	
4 (PHD)	PUMP HEATER DISCONNECT	
5 (CD)	CONTROL DISCONNECT	
6 (ST)	PUMP MOTOR STARTER	
7 (CI)	TANK HEATER CONTACTOR	
8	TIMER	
9 (C2)	PUMP HEATER CONTACTOR	
10	PUMP HEATER THERMOSTAT	
11	RESET	
12	ON	
13	OFF	
14	PUMPING	↓
15 (Warning sign)	RESET THE VALVE HANDLE TO RECIRCULATION MODE AFTER PUMPING IN OR OUT	7
16	TANK HEATER THERMOSTAT	3
17	0-60 MINUTE TIMER SWITCH (PUMP HEATER)	3
18	EMULSION TANK CONTROL PANEL	7*
19	PUMP OUT	7**
20	RECIRCULATE	7**
21 (Warning Sign)	REMOVE DISCHARGE PIPE PLUG PRIOR TO PUMPING OUT ASPHALT	50

* *Installed on exterior door*

** *Install as shown on Mechanical Plans*

Nameplates shall be laminated phenolic plastic with white core and black front and back. Nameplate inscription shall be in capital letters and etched through the outer layer of the nameplate material. Warning sign shall be the same except shall have red front and back.

Discharge pipe plug warning sign shall be sheet steel, not less than 1.2 mm thick (18 gage) with a baked enamel coating and shall have red letters, 50 mm in height, on a white background. This sign shall be posted on the tank above the pump box assembly.

CALIFORNIA STATE FIRE MARSHAL APPROVED

Approval of this plan does not authorize or approve any omission or deviation from applicable regulations. Final approval is subject to field inspection. One set of approved plans shall be available on the project site at all times.

Reviewed by: JEFFERY SCHWARTZ

Approval date: 03/08/10

ALL DIMENSIONS SHOWN IN MILLIMETERS, EXCEPT AS NOTED

	BY	CHECKED
DESIGN	Johnny Wu	Tech Ngov
DETAILS	Linda Monson	Johnny Wu
QUANTITIES	Johnny Wu	Tech Ngov

STATE OF CALIFORNIA
DEPARTMENT OF TRANSPORTATION

DIVISION OF ENGINEERING SERVICES
ELECTRICAL-MECHANICAL-WATER AND WASTEWATER DESIGN

BRIDGE NO. 50M5722
KM POST

TAFT MAINTENANCE STATION

EMULSION TANK CONTROL PANEL

SHEET **EE-17**

DOS ELEC (10/98)
FILE => ee_17.dgn
DATE PLOTTED => 23-MAR-2010 TIME PLOTTED => 06:04

ORIGINAL SCALE IN MILLIMETERS FOR REDUCED PLANS 0 10 20 30 40 50 60 70 80 90 100

CU 06257
EA 483401

DISREGARD PRINTS BEARING EARLIER REVISION DATES

REVISION DATES (PRELIMINARY STAGE ONLY): 7/25/06 7/31/06 10/5/06 7/12/07 1/28/07 2/13/07 3/16/07 3/20/07 5/2/07

SHEET OF

FILE => ee_17.dgn

USERNAME => trmikesl DATE PLOTTED => 23-MAR-2010 TIME PLOTTED => 06:04

VI=I

DIST	COUNTY	LOCATION CODE	KILOMETER POST TOTAL PROJECT	SHEET No.	TOTAL SHEETS
06	Ker	5722		169	178

Caltrans Metric

REGISTERED CIVIL ENGINEER — DATE: 5-03-07

3-8-10
PLANS APPROVAL DATE

REGISTERED PROFESSIONAL ENGINEER — J. MARCOTTE — No. C 36844 — Exp. 6-30-10 — Civil — STATE OF CALIFORNIA

The State of California or its officers or agents shall not be responsible for the accuracy or completeness of electronic copies of this plan sheet.

CALIFORNIA STATE FIRE MARSHAL APPROVED
Approval of this plan does not authorize or approve any omission or deviation from applicable regulations. Final approval is subject to field inspection. One set of approved plans shall be available on the project site at all times.
Reviewed by: JEFFERY SCHWARTZ
Approval date: 03/08/10

ABBREVIATIONS

AB	AGGREGATE BASE	m	METER (S)
ABS	ACRYLONITRILE BUTADIENE STYRENE (PIPE)	MAX	MAXIMUM
AC	ASPHALT CONCRETE	MFR	MANUFACTURER
AVC	AIR VOLUME CONTROLLER	MH	MANHOLE
B	BUNG	MIN	MINIMUM
BLDG	BUILDING	mm	MILLIMETER
C	CONDUIT	N	NORTH
C-C	CENTER TO CENTER	NIC	NOT IN CONTRACT
CI	CAST-IRON	NO	NUMBER
cm	CENTIMETERS	OC	ON CENTER
CMP	CORRUGATED METAL PIPE	OD	OUTSIDE DIAMETER
CONC	CONCRETE	OG	ORIGINAL GROUND
COTF	CLEANOUT TO FLOOR	O/W	OIL WATER SEPARATOR
COTG	CLEANOUT TO GRADE	P	PITCH
CW	COLD WATER PIPE	PCC	PORTLAND CEMENT CONCRETE
D	DRAIN	PH	PHASE
DI	DRAIN INLET	PRV	PRESSURE REDUCING VALVE
DIA	DIAMETER	PVC	POLYVINYL CHLORIDE (PIPE)
DP	DRAIN PIPE	PW	PRESSURE WASHER
E	ELECTRICAL	R	RADIUS
(E)	EXISTING	RCP	REINFORCED CONCRETE PIPE
EA	EACH	REQ	REQUIRED
EL	ELEVATION	RPM	REVOLUTIONS PER MINUTE
EP	EDGE OF PAVEMENT	RPU	RECYCLE PROCESS UNIT
FF	FINISH FLOOR	RT	RIGHT
FG	FINISH GRADE	RW	RETURN WATER
FL	FLOW LINE	R/W	RIGHT-OF-WAY
FM	FORCE MAIN	S	SEWER
FOC	FACE OF CONCRETE	SCH	SCHEDULE
GA	GAUGE	SD	STORM DRAIN
GAC	GRANULAR ACTIVATED CARBON	SP	SEWER PIPE
GSP	GALVANIZED STEEL PIPE	SQ	SQUARE
GV	GATE VALVE	STA	STATION
HF	HOSE FAUCET	STD	STANDARD
HP	HORSEPOWER	TBM	TEMPORARY BENCH MARK
HT	HEIGHT	TOC	TOP OF CURB OR CONCRETE
HZ	HERTZ	TOT	TOTAL
ID	INSIDE DIAMETER	TYP	TYPICAL
IE	INVERT ELEVATION	VP	VENT PIPE
kg	KILOGRAMS	VCP	VITRIFIED CLAY PIPE
Kw	KILOWATT	W	WATER
L	LITER(S)	W/O	WITHOUT
LPM	LITERS PER MINUTE	WP	WATER PIPE
LT	LEFT	WSP	WELDED STEEL PIPE

LEGEND

S	SANITARY SEWER
D	DRAIN
RD	RETURN DRAIN
V	VENT
W	WATER
FM	FORCE MAIN
L	LEACH LINES
7 / SS-5	DETAIL / SHEET NUMBER
99.00	NEW GRADE IN METERS
X (100.00)	EXISTING SPOT GRADE IN METERS
	SURFACE DRAINAGE
	ABANDON (E)
	BENCHMARK ELEVATION
℄	CENTERLINE
ø	DIAMETER
	SECTION / ELEVATION LETTER / SHEET NUMBER
	TREE

GENERAL WORK NOTES

The Contractor shall verify all controlling field dimensions and conditions before ordering or fabricating any materials.

The Contractor shall verify exact location of all underground facilities and utilities prior to start of construction.

No 90 degree bends allowed on drain or sewer pipe.

REQUIRED THRUST BLOCK BEARING AREA- TOTAL SQUARE METERS

TYPE OF FITTING		90 BEND	45 BEND	11-1/4 BEND 22-1/2 BEND	TEE OR DEAD END
TYPICAL INSTALLATION		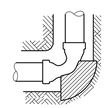	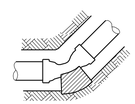	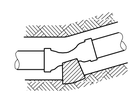	
PIPE SIZE (mm)	≤100	0.2	0.1	0.1	0.2
	150	0.4	0.2	0.1	0.3
	200	0.7	0.4	0.2	0.5
	250	1.1	0.6	0.3	0.8

PIPE FITTINGS AND VALVES

- CAP, THREADED
- ELBOW, TURNED DOWN
- FLEXIBLE CONNECTOR
- REDUCER, CONCENTRIC
- REDUCER, ECCENTRIC
- PRESSURE GAUGE (WITH VALVE AND SNUBBER)
- UNION
- UNION, INSULATING
- VALVE, BALL
- VALVE, CHECK
- VALVE, GATE
- VALVE, SAFETY RELIEF
- VALVE, PRESSURE REDUCING

ALL DIMENSIONS SHOWN IN MILLIMETERS, EXCEPT AS NOTED

	BY	CHECKED
DESIGN	Amar Baldwan	Jerry Marcotte
DETAILS	Amar Baldwan	David Wright
QUANTITIES	Amar Baldwan	David Wright

STATE OF CALIFORNIA DEPARTMENT OF TRANSPORTATION

DIVISION OF ENGINEERING SERVICES
ELECTRICAL-MECHANICAL-WATER AND WASTEWATER DESIGN

BRIDGE NO. 50M5722
KM POST 32.66/33.30

TAFT MAINTENANCE STATION
NOTES, LEGEND & ABBREVIATIONS

SHEET **SS-0**

DOS ELEC (10/98) FILE => ss_0.dgn
DATE PLOTTED => 23-MAR-2010 TIME PLOTTED => 06:04

ORIGINAL SCALE IN MILLIMETERS FOR REDUCED PLANS 0 10 20 30 40 50 60 70 80 90 100

CU 06257
EA 483401

DISREGARD PRINTS BEARING EARLIER REVISION DATES → 12-20-05 12-07-06 7-31-06 10-24-06 11-30-06 01-30-07 5-03-07 10-15-08

REVISION DATES (PRELIMINARY STAGE ONLY) SHEET OF

FILE => ss_0.dgn

USERNAME => trmikesl DATE PLOTTED => 23-MAR-2010 TIME PLOTTED => 06:04

VI=1

DIST	COUNTY	LOCATION CODE	KILOMETER POST TOTAL PROJECT	SHEET No.	TOTAL SHEETS
06	Ker	5722		170	178

Caltrans Metric

Jerome R. Marcotte 5-03-07
REGISTERED CIVIL ENGINEER DATE

3-8-10
PLANS APPROVAL DATE

REGISTERED PROFESSIONAL ENGINEER J. MARCOTTE No. C 36844 Exp. 6-30-10 Civil STATE OF CALIFORNIA

The State of California or its officers or agents shall not be responsible for the accuracy or completeness of electronic copies of this plan sheet.

CALIFORNIA STATE FIRE MARSHAL APPROVED
Approval of this plan does not authorize or approve any omission or deviation from applicable regulations. Final approval is subject to field inspection. One set of approved plans shall be available on the project site at all times.
Reviewed by: JEFFERY SCHWARTZ
Approval date: 03/08/10

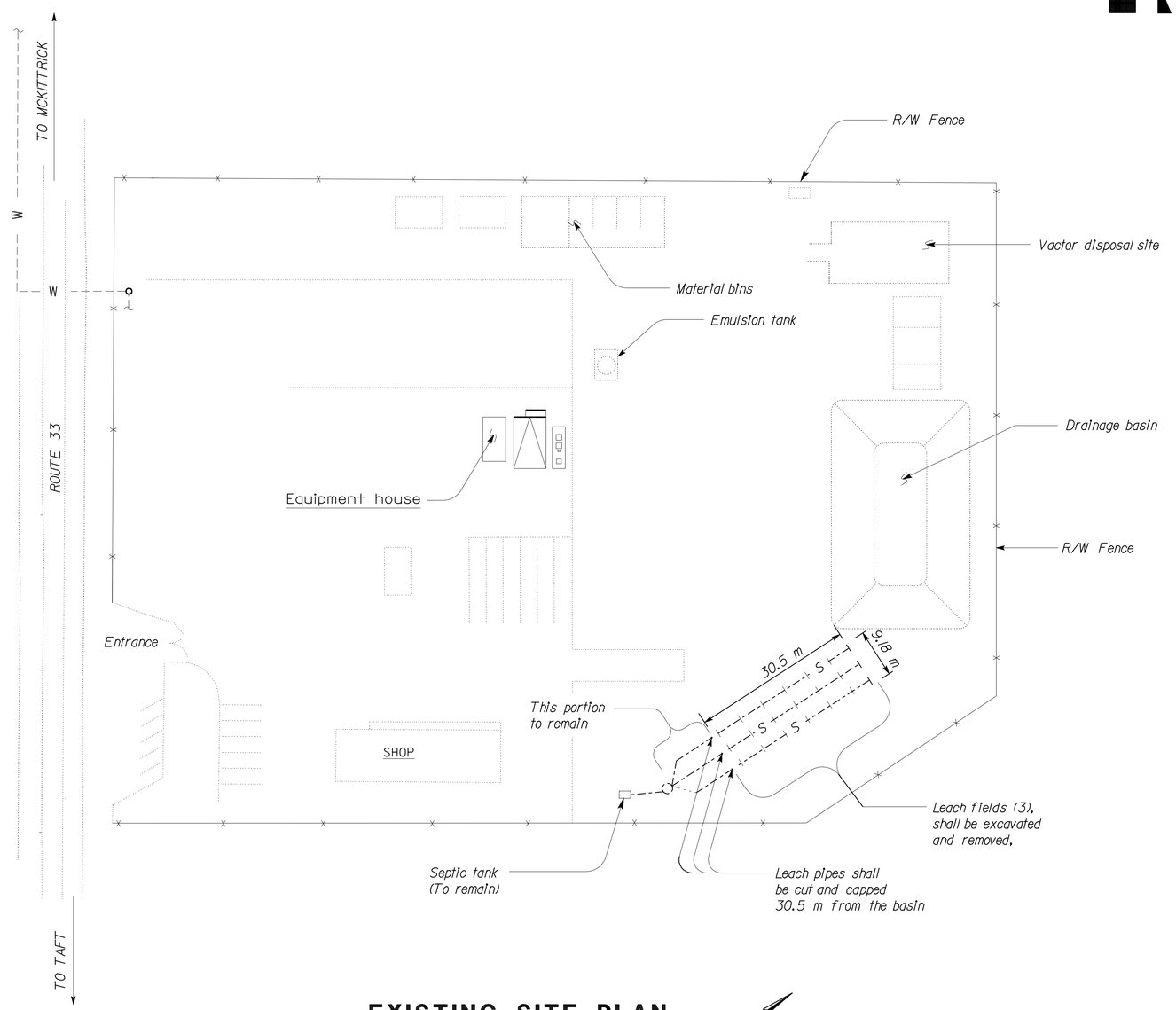

EXISTING SITE PLAN

SCALE 1:500

ALL DIMENSIONS SHOWN IN MILLIMETERS, EXCEPT AS NOTED

DESIGN SUPERVISOR
DESIGN ENGINEER

	BY		CHECKED	
DESIGN	BY	Amar Baldwan	CHECKED	Jerry Marcotte
DETAILS	BY	Amar Baldwan	CHECKED	David Wright
QUANTITIES	BY	Amar Baldwan	CHECKED	David Wright

STATE OF CALIFORNIA DEPARTMENT OF TRANSPORTATION

DIVISION OF ENGINEERING SERVICES
ELECTRICAL-MECHANICAL-WATER AND WASTEWATER DESIGN

BRIDGE NO. 50M5722
KM POST 32.66/33.30

TAFT MAINTENANCE STATION
EXISTING SITE PLAN

SHEET **SS-1**

DOS ELEC (10/98) FILE => ss_1.dgn
DATE PLOTTED => 23-MAR-2010 TIME PLOTTED => 06:05

ORIGINAL SCALE IN MILLIMETERS FOR REDUCED PLANS 0 10 20 30 40 50 60 70 80 90 100

CU 06257
EA 483401

DISREGARD PRINTS BEARING EARLIER REVISION DATES

REVISION DATES (PRELIMINARY STAGE ONLY) 12-20-05 12-07-06 7-31-06 10-24-06 11-30-06 01-30-07 5-03-07 10-15-08

SHEET OF

FILE => ss_1.dgn

USERNAME => trmikesl DATE PLOTTED => 23-MAR-2010 TIME PLOTTED => 06:05

VI=1

DIST	COUNTY	LOCATION CODE	KILOMETER POST TOTAL PROJECT	SHEET No.	TOTAL SHEETS
06	Ker	5722		171	178

Caltrans Metric

REGISTERED CIVIL ENGINEER — DATE 5-03-07

3-8-10
PLANS APPROVAL DATE

REGISTERED PROFESSIONAL ENGINEER — J. MARCOTTE — No. C 36844 — Exp. 6-30-10 — Civil — STATE OF CALIFORNIA

The State of California or its officers or agents shall not be responsible for the accuracy or completeness of electronic copies of this plan sheet.

CALIFORNIA STATE FIRE MARSHAL APPROVED

Approval of this plan does not authorize or approve any omission or deviation from applicable regulations. Final approval is subject to field inspection. One set of approved plans shall be available on the project site at all times.

Reviewed by: JEFFERY SCHWARTZ
Approval date: 03/08/10

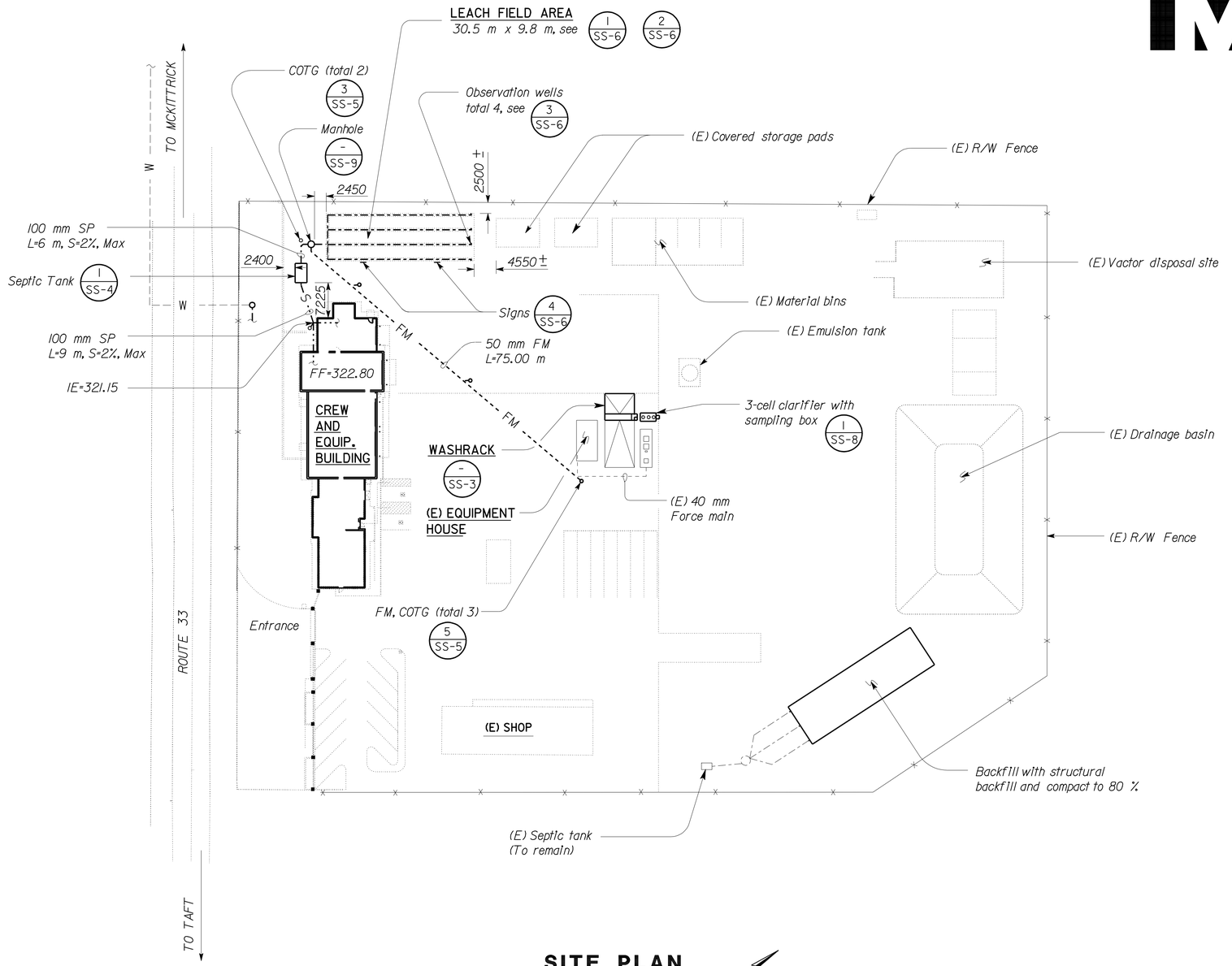

SITE PLAN

SCALE 1:500

ALL DIMENSIONS SHOWN IN MILLIMETERS, EXCEPT AS NOTED

	BY		CHECKED	
DESIGN	BY	Amar Baldwan	CHECKED	Jerry Marcotte
DETAILS	BY	Amar Baldwan	CHECKED	David Wright
QUANTITIES	BY	Amar Baldwan	CHECKED	David Wright

STATE OF CALIFORNIA DEPARTMENT OF TRANSPORTATION

DIVISION OF ENGINEERING SERVICES
ELECTRICAL-MECHANICAL-WATER AND WASTEWATER DESIGN

BRIDGE NO. 50M5722
KM POST 32.66/33.30

TAFT MAINTENANCE STATION

MODIFIED SITE PLAN

SHEET **SS-2**

DOS ELEC (10/98)
FILE => ss_2.dgn
DATE PLOTTED => 23-MAR-2010 TIME PLOTTED => 06:05

ORIGINAL SCALE IN MILLIMETERS FOR REDUCED PLANS 0 10 20 30 40 50 60 70 80 90 100

CU 06257
EA 483401

DISREGARD PRINTS BEARING EARLIER REVISION DATES

REVISION DATES (PRELIMINARY STAGE ONLY): 12-20-05 12-07-06 7-31-06 10-24-06 11-30-06 01-30-07 5-03-07 10-15-08

SHEET OF

FILE => ss_2.dgn

USERNAME => trmikesl DATE PLOTTED => 23-MAR-2010 TIME PLOTTED => 06:05

VI=1

DIST	COUNTY	LOCATION CODE	KILOMETER POST TOTAL PROJECT	SHEET No.	TOTAL SHEETS
06	Ker	5722		172	178

Caltrans Metric

REGISTERED CIVIL ENGINEER 5-03-07 DATE

3-8-10
PLANS APPROVAL DATE

REGISTERED PROFESSIONAL ENGINEER J. MARCOTTE No. C 36844 Exp. 6-30-10 Civil STATE OF CALIFORNIA

The State of California or its officers or agents shall not be responsible for the accuracy or completeness of electronic copies of this plan sheet.

CALIFORNIA STATE FIRE MARSHAL APPROVED
Approval of this plan does not authorize or approve any omission or deviation from applicable regulations. Final approval is subject to field inspection. One set of approved plans shall be available on the project site at all times.
Reviewed by: JEFFERY SCHWARTZ
Approval date: 03/08/10

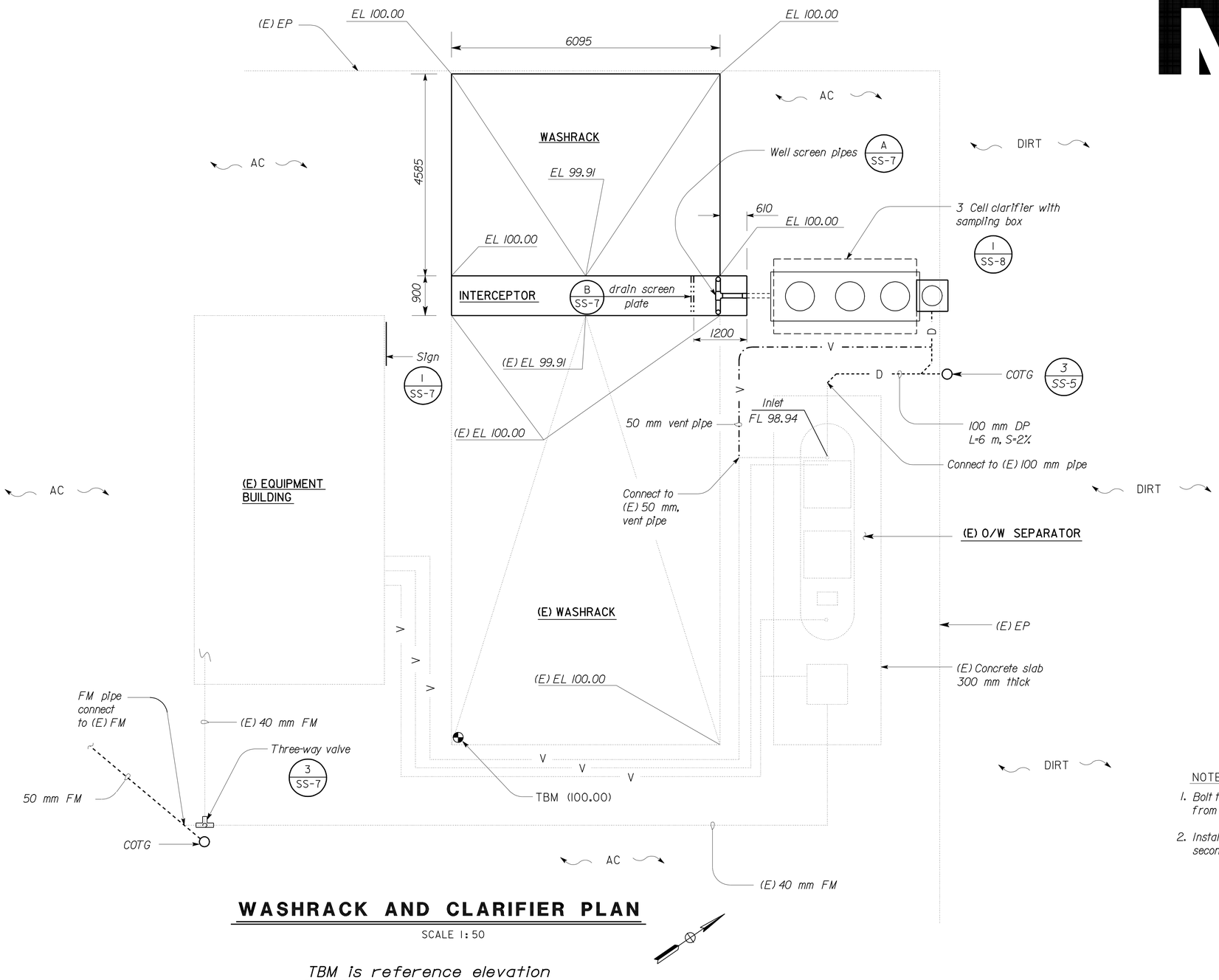

WASHRACK AND CLARIFIER PLAN

SCALE 1:50

TBM is reference elevation

NOTES

1. *Bolt the sign to building at location shown, at 1520 mm from finished floor, using galvanized expansion anchors.*
2. *Install two oil absorbent pillows, one each, in first and second cell of the clarifier.*

ALL DIMENSIONS SHOWN IN MILLIMETERS, EXCEPT AS NOTED

	BY	CHECKED
DESIGN	Amar Baldwan	Jerry Marcotte
DETAILS	Amar Baldwan	David Wright
QUANTITIES	Amar Baldwan	David Wright

STATE OF CALIFORNIA DEPARTMENT OF TRANSPORTATION

DIVISION OF ENGINEERING SERVICES
ELECTRICAL-MECHANICAL-WATER AND WASTEWATER DESIGN

BRIDGE NO. 50M5722
KM POST 32.66/33.30

TAFT MAINTENANCE STATION

WASHRACK & CLARIFIER PLAN

SHEET **SS-3**

DOS ELEC (10/98) FILE => ss_3.dgn
DATE PLOTTED => 23-MAR-2010 TIME PLOTTED => 06:05

ORIGINAL SCALE IN MILLIMETERS FOR REDUCED PLANS 0 10 20 30 40 50 60 70 80 90 100

CU 06257
EA 483401

DISREGARD PRINTS BEARING EARLIER REVISION DATES

REVISION DATES (PRELIMINARY STAGE ONLY) 12-20-05 12-07-06 7-31-06 10-24-06 11-30-06 01-30-07 5-03-07 10-15-08

SHEET OF

FILE => ss_3.dgn

USERNAME => trmikesl DATE PLOTTED => 23-MAR-2010 TIME PLOTTED => 06:05

VI=1

DIST	COUNTY	LOCATION CODE	KILOMETER POST TOTAL PROJECT	SHEET No.	TOTAL SHEETS
06	Ker	5722		173	178

Caltrans Metric

REGISTERED CIVIL ENGINEER — DATE 5-03-07

3-8-10
PLANS APPROVAL DATE

REGISTERED PROFESSIONAL ENGINEER — J. MARCOTTE — No. C 36844 — Exp. 6-30-10 — Civil — STATE OF CALIFORNIA

The State of California or its officers or agents shall not be responsible for the accuracy or completeness of electronic copies of this plan sheet.

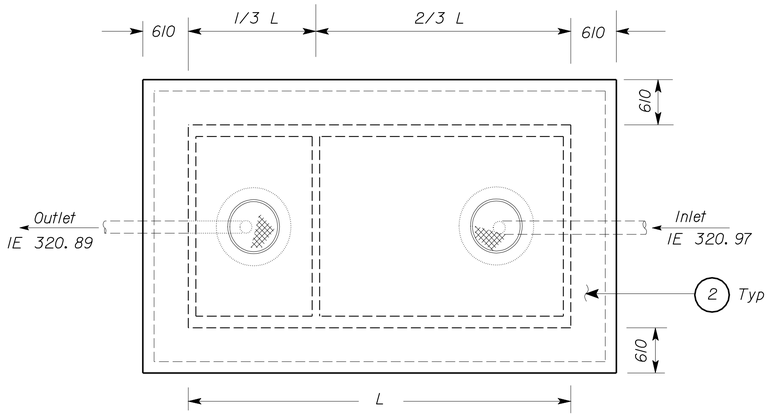

PLAN

Note:

Epoxy mortar all joints, connections and penetrations, inside and outside of tank.

CALIFORNIA STATE FIRE MARSHAL
APPROVED
Approval of this plan does not authorize or approve any omission or deviation from applicable regulations. Final approval is subject to field inspection. One set of approved plans shall be available on the project site at all times.
Reviewed by: JEFFERY SCHWARTZ
Approval date: 03/08/10

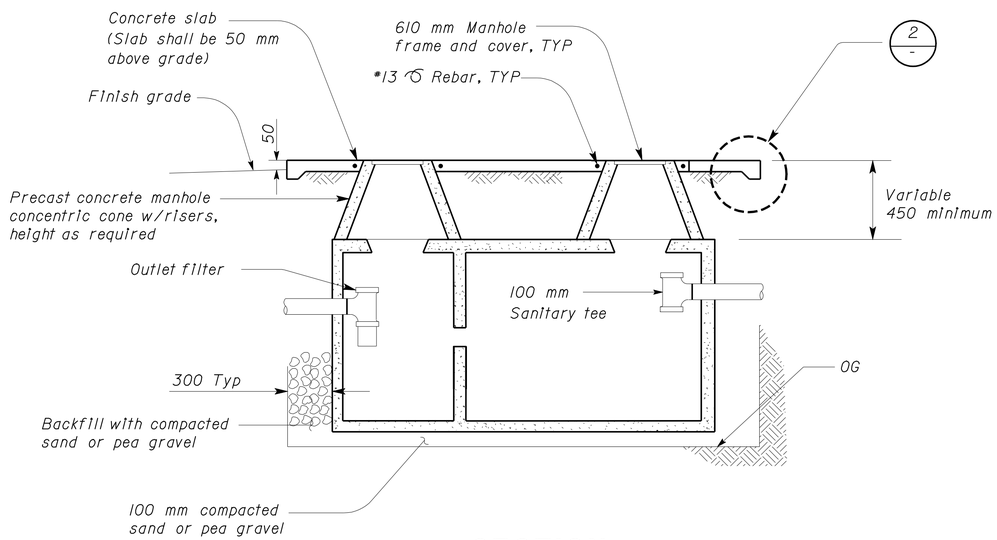

SECTION

1 SEPTIC TANK 5700 LITERS

NO SCALE

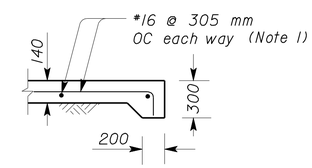

2 CONCRETE SLAB

NO SCALE

ALL DIMENSIONS SHOWN IN MILLIMETERS, EXCEPT AS NOTED

DESIGN	BY Amar Baldwan	CHECKED Jerry Marcotte	
DETAILS	BY Amar Baldwan	CHECKED David Wright	
QUANTITIES	BY Amar Baldwan	CHECKED David Wright	

STATE OF CALIFORNIA
DEPARTMENT OF TRANSPORTATION

DIVISION OF ENGINEERING SERVICES
ELECTRICAL-MECHANICAL-WATER AND WASTEWATER DESIGN

BRIDGE NO. 50M5722
KM POST 32.66/33.30

TAFT MAINTENANCE STATION

SEPTIC TANK DETAILS

SHEET **SS-4**

DOS ELEC (10/98) FILE => ss_4.dgn
DATE PLOTTED => 23-MAR-2010 TIME PLOTTED => 06:05

ORIGINAL SCALE IN MILLIMETERS FOR REDUCED PLANS 0 10 20 30 40 50 60 70 80 90 100

CU 06257
EA 483401

FILE => ss_4.dgn

DISREGARD PRINTS BEARING EARLIER REVISION DATES

REVISION DATES (PRELIMINARY STAGE ONLY) 12-20-05 12-07-06 7-31-06 10-24-06 11-30-06 01-30-07 5-03-07 10-15-08

SHEET OF

USERNAME => trmikes| DATE PLOTTED => 23-MAR-2010 TIME PLOTTED => 06:05

VI=1

DIST.	COUNTY	LOCATION CODE	KILOMETER POST TOTAL PROJECT	SHEET NO.	TOTAL SHEETS
06	Ker	5722		174	178

Caltrans Metric

REGISTERED CIVIL ENGINEER — DATE 5-03-07

3-8-10
PLANS APPROVAL DATE

REGISTERED PROFESSIONAL ENGINEER — J. MARCOTTE — No. C 36844 — Exp. 6-30-10 — Civil — STATE OF CALIFORNIA

The State of California or its officers or agents shall not be responsible for the accuracy or completeness of electronic copies of this plan sheet.

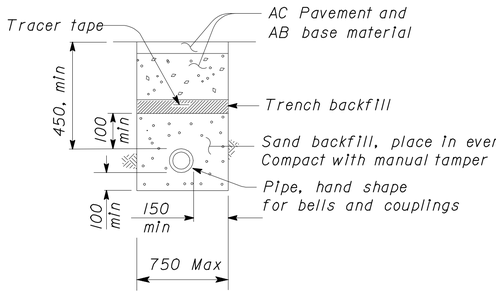

1 PIPE UNDER PAVEMENT

NO SCALE

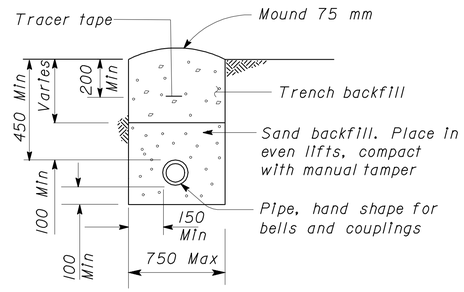

2 PIPE UNDER DIRT

NO SCALE

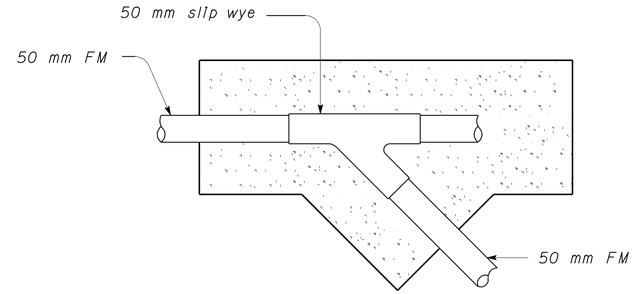

SECTION C-C

CALIFORNIA STATE FIRE MARSHAL APPROVED

Approval of this plan does not authorize or approve any omission or deviation from applicable regulations. Final approval is subject to field inspection. One set of approved plans shall be available on the project site at all times.

Reviewed by: JEFFERY SCHWARTZ

Approval date: 03/08/10

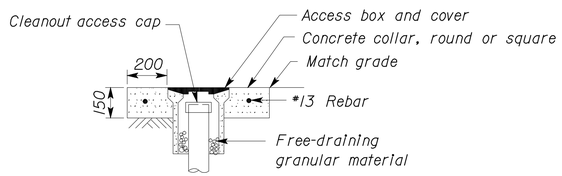

4 ACCESS BOX

NO SCALE

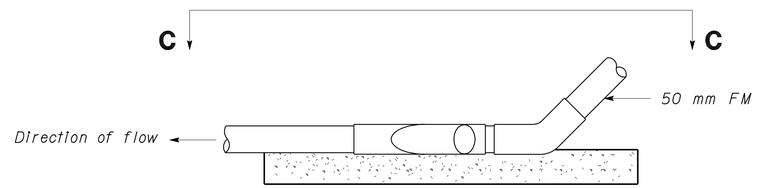

ELEVATION

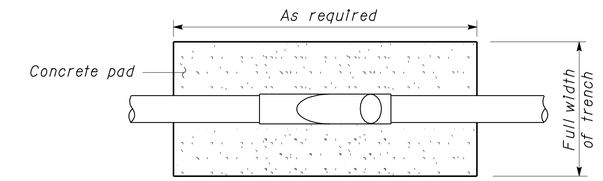

SECTION A-A

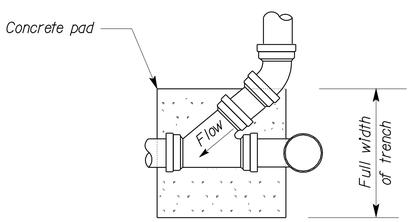

PLAN

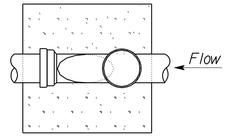

PLAN

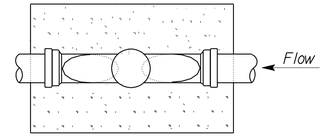

PLAN

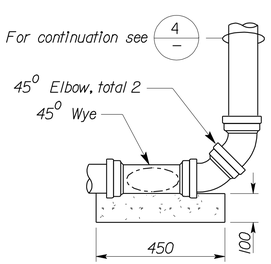

ELEVATION

CLEANOUT (AT BEND)

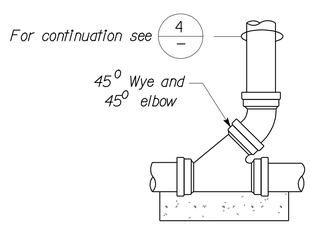

ELEVATION

CLEANOUT (STANDARD)

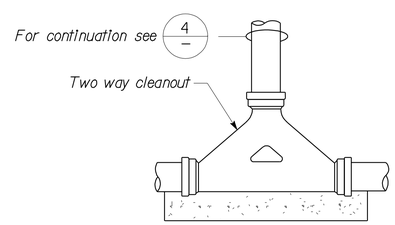

ELEVATION

TWO-WAY CLEANOUT

3 CLEANOUT TO GRADE - GRAVITY

NO SCALE

NOTE
Concrete pad shown typical for all cleanouts.

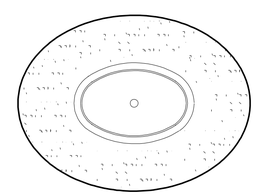

SECTION B-B

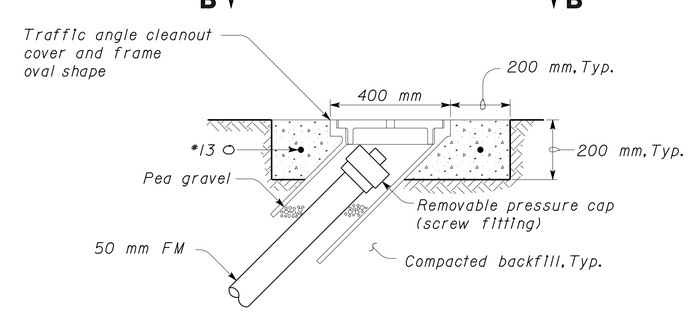

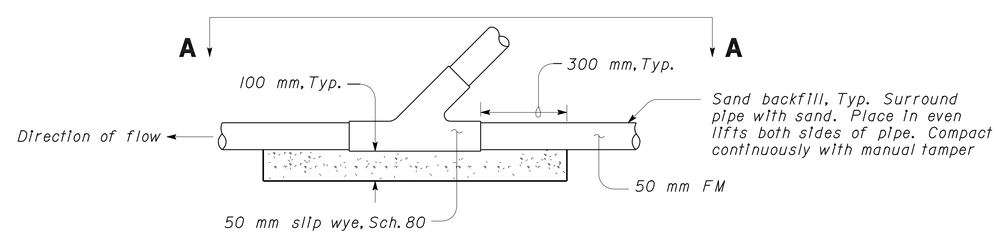

ELEVATION

5 FORCE MAIN CLEANOUT

NO SCALE

ALL DIMENSIONS SHOWN IN MILLIMETERS, EXCEPT AS NOTED

	BY		CHECKED
DESIGN	Amar Baldwan		Jerry Marcotte
DETAILS	Amar Baldwan		David Wright
QUANTITIES	Amar Baldwan		David Wright

STATE OF CALIFORNIA DEPARTMENT OF TRANSPORTATION

DIVISION OF ENGINEERING SERVICES
ELECTRICAL-MECHANICAL-WATER AND WASTEWATER DESIGN

BRIDGE NO. 50M5722
KM POST 32.66/33.30

TAFT MAINTENANCE STATION

DETAILS-I

SHEET **SS-5**

DOS ELEC (10/98)
FILE => ss_5.dgn
DATE PLOTTED => 23-MAR-2010 TIME PLOTTED => 06:05

ORIGINAL SCALE IN MILLIMETERS FOR REDUCED PLANS 0 10 20 30 40 50 60 70 80 90 100

CU 06257
EA 483401

DISREGARD PRINTS BEARING EARLIER REVISION DATES

REVISION DATES (PRELIMINARY STAGE ONLY) 12-20-05 12-07-06 7-31-06 10-24-06 11-30-06 01-30-07 5-03-07 10-15-08

SHEET OF

FILE => ss_5.dgn

USERNAME => trmikes1 DATE PLOTTED => 23-MAR-2010 TIME PLOTTED => 06:05

VI=1

DIST.	COUNTY	LOCATION CODE	KILOMETER POST TOTAL PROJECT	SHEET NO.	TOTAL SHEETS
06	Ker	5722		175	178

Caltrans Metric

REGISTERED CIVIL ENGINEER 5-03-07 DATE

3-8-10
PLANS APPROVAL DATE

REGISTERED PROFESSIONAL ENGINEER J. MARCOTTE NRC. C 36844 Exp. 6-30-10 Civil STATE OF CALIFORNIA

The State of California or its officers or agents shall not be responsible for the accuracy or completeness of electronic copies of this plan sheet.

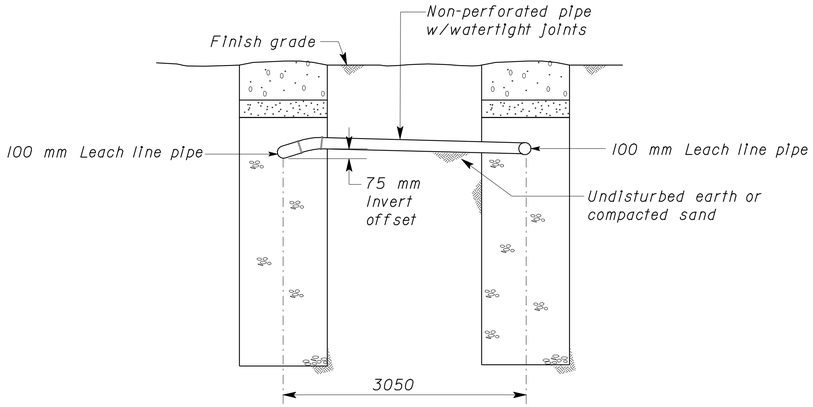

1 LEACH LINE CROSSOVER

NO SCALE

NOTE -- Three required

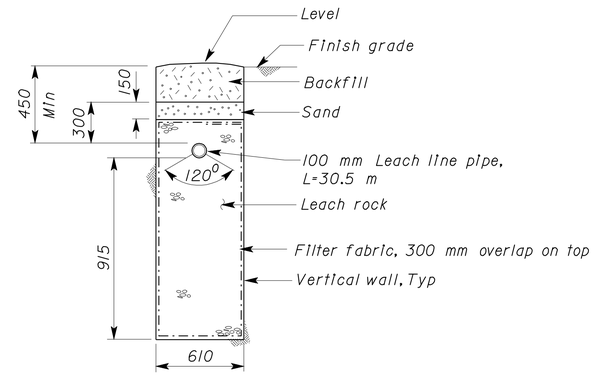

2 LEACH LINE

NO SCALE

NOTE -- Four required

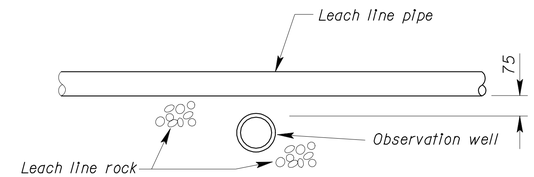

B SECTION - OBSERVATION WELL

NO SCALE

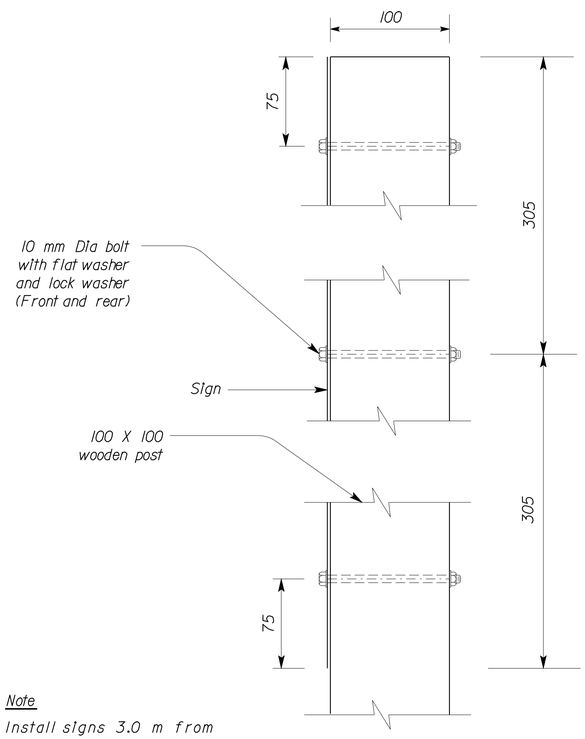

Note

Install signs 3.0 m from each end of the leach field.

A SECTION

NO SCALE

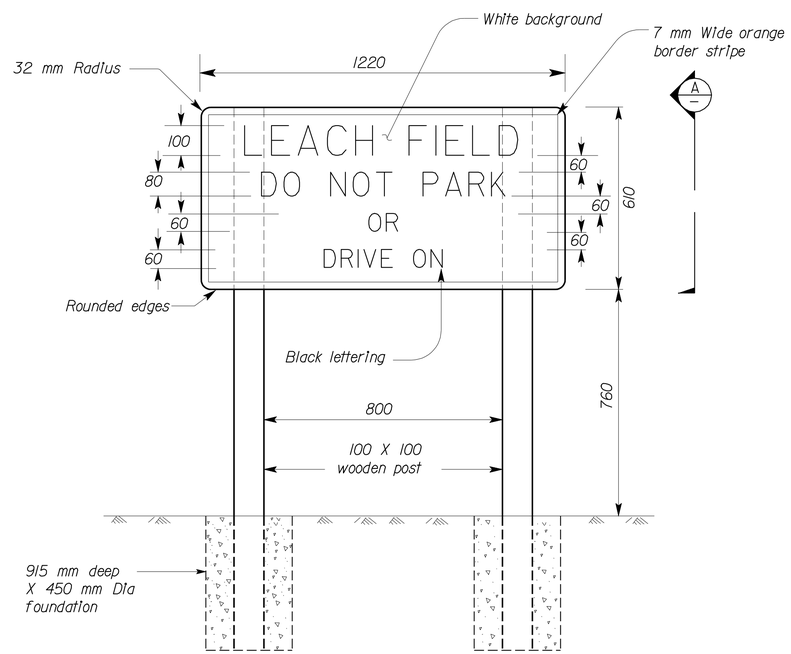

4 SIGN AND FOUNDATION DETAIL

NO SCALE

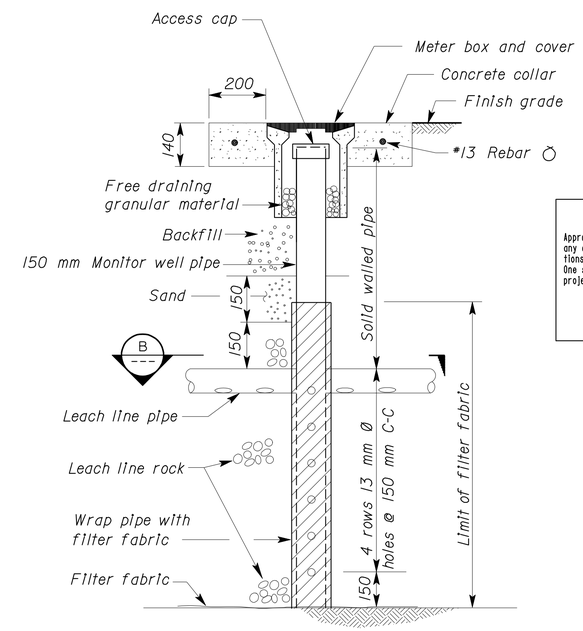

CALIFORNIA STATE FIRE MARSHAL APPROVED

Approval of this plan does not authorize or approve any omission or deviation from applicable regulations. Final approval is subject to field inspection. One set of approved plans shall be available on the project site at all times.

Reviewed by: JEFFERY SCHWARTZ
Approval date: 03/08/10

3 OBSERVATION WELL

NO SCALE

ALL DIMENSIONS SHOWN IN MILLIMETERS, EXCEPT AS NOTED

	BY		CHECKED	
DESIGN	BY	Amar Baldwan	CHECKED	Jerry Marcotte
DETAILS	BY	Amar Baldwan	CHECKED	David Wright
QUANTITIES	BY	Amar Baldwan	CHECKED	David Wright

STATE OF CALIFORNIA DEPARTMENT OF TRANSPORTATION

DIVISION OF ENGINEERING SERVICES
ELECTRICAL-MECHANICAL-WATER AND WASTEWATER DESIGN

BRIDGE NO. 50M5722
KM POST 32.66/33.30

TAFT MAINTENANCE STATION

DETAILS-2

SHEET **SS-6**

DOS ELEC (10/98) FILE => ss_6.dgn
DATE PLOTTED => 23-MAR-2010 TIME PLOTTED => 06:05

ORIGINAL SCALE IN MILLIMETERS FOR REDUCED PLANS 0 10 20 30 40 50 60 70 80 90 100

CU 06257
EA 483401

DISREGARD PRINTS BEARING EARLIER REVISION DATES

REVISION DATES (PRELIMINARY STAGE ONLY) 12-20-05 12-07-06 7-31-06 10-24-06 11-30-06 01-30-07 5-03-07 10-15-08

SHEET OF

FILE => ss_6.dgn

USERNAME => trmikesl DATE PLOTTED => 23-MAR-2010 TIME PLOTTED => 06:05

V1=1

DIST.	COUNTY	LOCATION CODE	KILOMETER POST TOTAL PROJECT	SHEET NO.	TOTAL SHEETS
06	Ker	5722		176	178

Caltrans Metric

REGISTERED CIVIL ENGINEER — DATE 5-03-07

3-8-10
PLANS APPROVAL DATE

REGISTERED PROFESSIONAL ENGINEER — J. MARCOTTE — No. C 36844 — Exp. 6-30-10 — Civil — STATE OF CALIFORNIA

The State of California or its officers or agents shall not be responsible for the accuracy or completeness of electronic copies of this plan sheet.

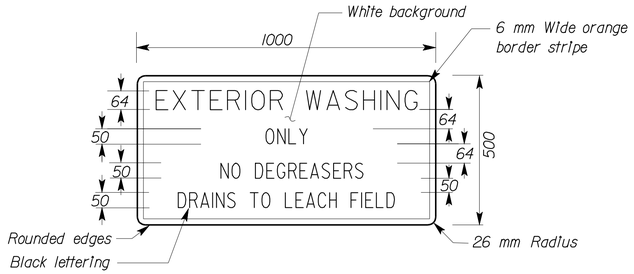

1 SIGN DETAIL

NO SCALE

Note:

1. Bolt to building at location shown on plans, at 1520 mm from finished floor, using galvanized expansion anchors.

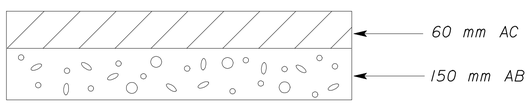

2 AC PAVEMENT SECTION

NO SCALE

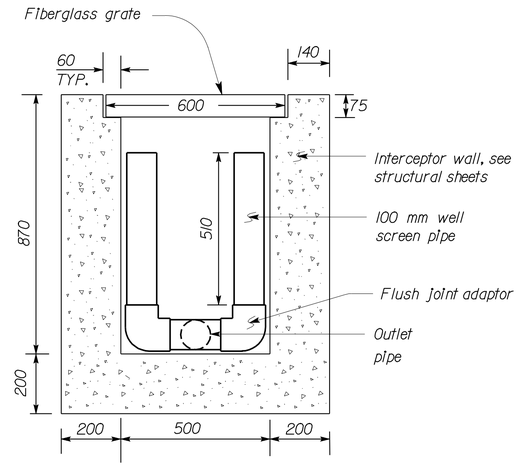

SECTION

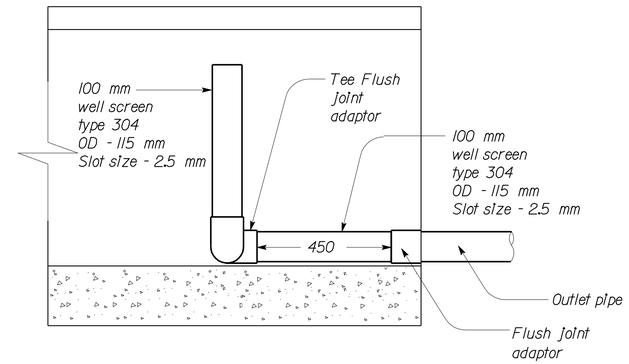

SIDE VIEW

A WELL SCREEN PIPES

SCALE 1:10

CALIFORNIA STATE FIRE MARSHAL APPROVED

Approval of this plan does not authorize or approve any omission or deviation from applicable regulations. Final approval is subject to field inspection. One set of approved plans shall be available on the project site at all times.

Reviewed by: JEFFERY SCHWARTZ

Approval date: 03/08/10

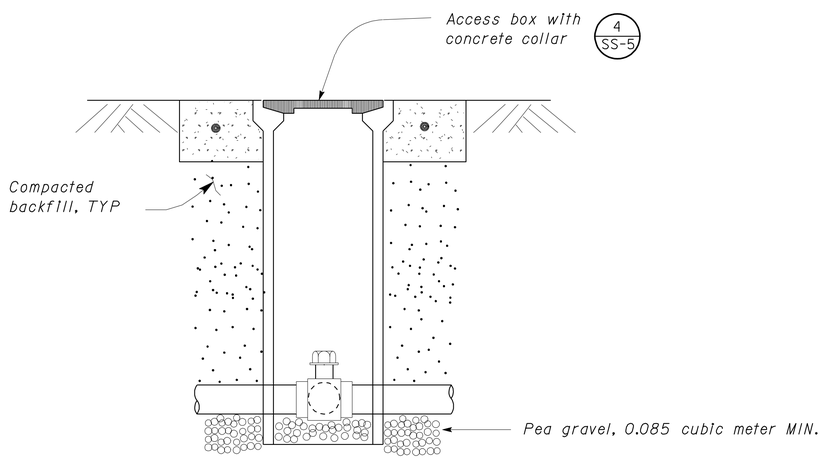

3 THREE-WAY VALVE

NO SCALE

NOTE:

1. Provide two long handle wrenches for valve operation.

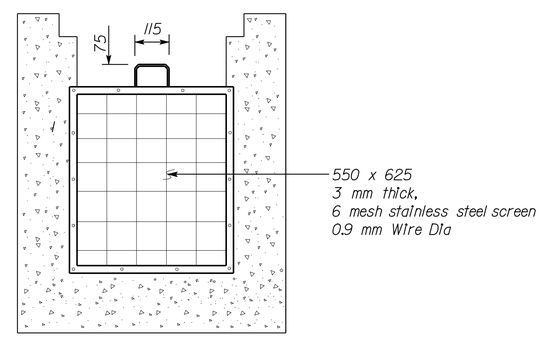

SECTION

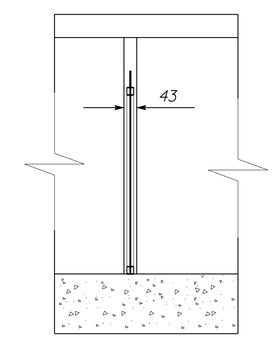

SIDE VIEW

B DRAIN SCREEN PLATE

SCALE 1:10

ALL DIMENSIONS SHOWN IN MILLIMETERS, EXCEPT AS NOTED

	BY	CHECKED
DESIGN	Amar Baldwan	Jerry Marcotte
DETAILS	Amar Baldwan	David Wright
QUANTITIES	Amar Baldwan	David Wright

STATE OF CALIFORNIA DEPARTMENT OF TRANSPORTATION

DIVISION OF ENGINEERING SERVICES
ELECTRICAL-MECHANICAL-WATER AND WASTEWATER DESIGN

BRIDGE NO. 50M5722
KM POST 32.66/33.30

TAFT MAINTENANCE STATION

DETAILS - 3

SHEET SS-7

DOS ELEC (10/98) FILE => ss_7.dgn
DATE PLOTTED => 23-MAR-2010 TIME PLOTTED => 06:05

ORIGINAL SCALE IN MILLIMETERS FOR REDUCED PLANS 0 10 20 30 40 50 60 70 80 90 100

CU 06257
EA 483401

DISREGARD PRINTS BEARING EARLIER REVISION DATES

REVISION DATES (PRELIMINARY STAGE ONLY) 12-20-05 12-07-06 7-31-06 10-24-06 11-30-06 01-30-07 5-03-07 10-15-08 SHEET OF

FILE => ss_7.dgn

USERNAME => trmikesl DATE PLOTTED => 23-MAR-2010 TIME PLOTTED => 06:05

VI=1

DIST.	COUNTY	LOCATION CODE	KILOMETER POST TOTAL PROJECT	SHEET NO.	TOTAL SHEETS
06	Ker	5722		177	178

Caltrans Metric

REGISTERED CIVIL ENGINEER 5-03-07 DATE

3-8-10
PLANS APPROVAL DATE

REGISTERED PROFESSIONAL ENGINEER J. MARCOTTE No. C 36844 Exp. 6-30-10 Civil STATE OF CALIFORNIA

The State of California or its officers or agents shall not be responsible for the accuracy or completeness of electronic copies of this plan sheet.

CALIFORNIA STATE FIRE MARSHAL APPROVED
Approval of this plan does not authorize or approve any omission or deviation from applicable regulations. Final approval is subject to field inspection. One set of approved plans shall be available on the project site at all times.
Reviewed by: JEFFERY SCHWARTZ
Approval date: 03/08/10

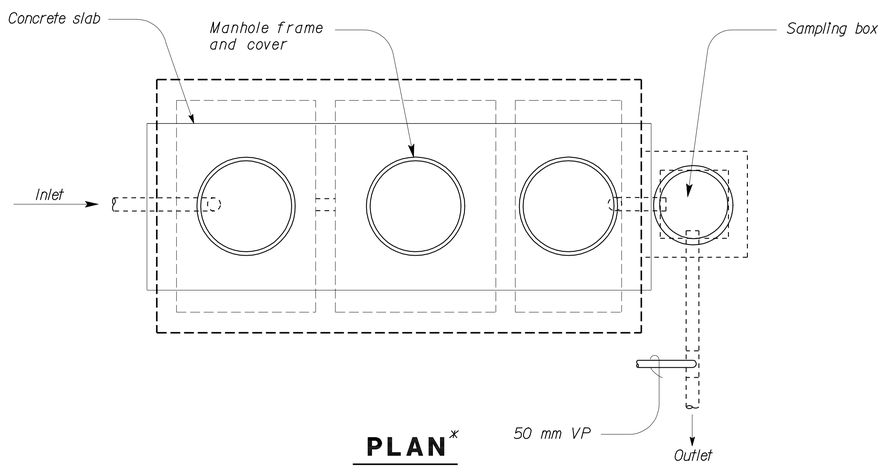

PLAN*

*Concrete collar not shown in this view

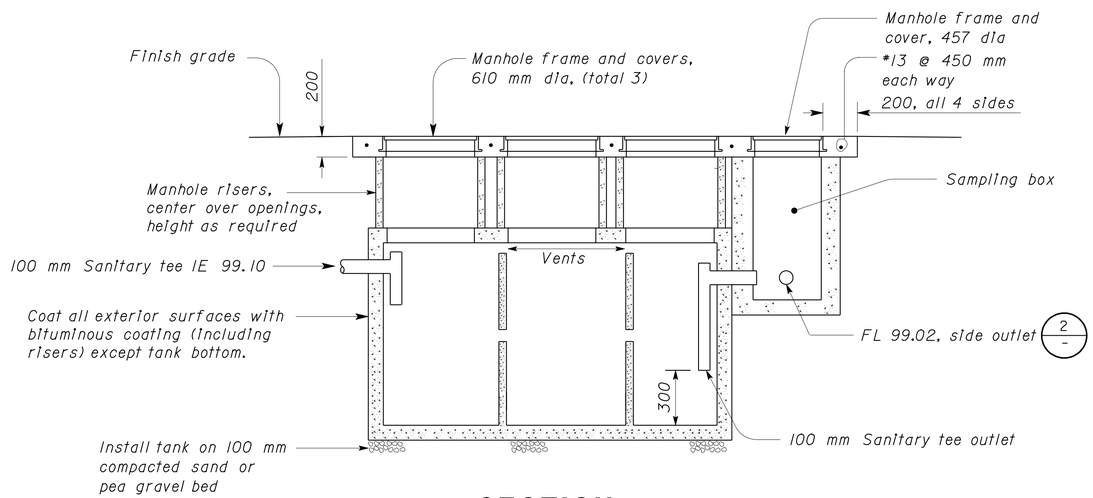

SECTION

1 3-CELL CLARIFIER TANK (5700 L) WITH SAMPLING BOX

NO SCALE

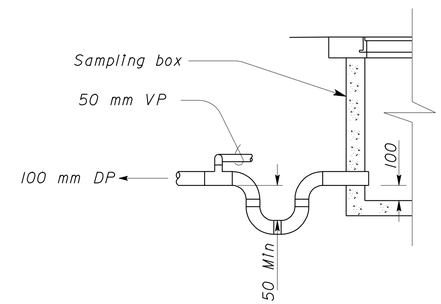

2 SIDE OUTLET

NO SCALE

NOTES

1. *Install two oil absorbent pillows, one each, in first and second cell of the clarifier.*
2. *For reference elevation, see TBM on sheet SS-3*

ALL DIMENSIONS SHOWN IN MILLIMETERS, EXCEPT AS NOTED

DESIGN	BY Amar Baldwan	CHECKED Jerry Marcotte	
DETAILS	BY Amar Baldwan	CHECKED David Wright	
QUANTITIES	BY Amar Baldwan	CHECKED David Wright	

STATE OF CALIFORNIA DEPARTMENT OF TRANSPORTATION

DIVISION OF ENGINEERING SERVICES
ELECTRICAL-MECHANICAL-WATER AND WASTEWATER DESIGN

BRIDGE NO. 50M5722
KM POST 32.66/33.30

TAFT MAINTENANCE STATION
CLARIFIER TANK DETAILS

SHEET **SS-8**

DOS ELEC (10/98) FILE => ss_8.dgn DATE PLOTTED => 23-MAR-2010 TIME PLOTTED => 06:06

ORIGINAL SCALE IN MILLIMETERS FOR REDUCED PLANS 0 10 20 30 40 50 60 70 80 90 100

CU 06257
EA 483401

FILE => ss_8.dgn

DISREGARD PRINTS BEARING EARLIER REVISION DATES

REVISION DATES (PRELIMINARY STAGE ONLY) 12-20-05 2-07-06 7-31-06 10-24-06 11-30-06 01-30-07 5-03-07 10-15-08

SHEET OF

USERNAME => trmikesl DATE PLOTTED => 23-MAR-2010 TIME PLOTTED => 06:06

VI=I

DIST.	COUNTY	LOCATION CODE	KILOMETER POST TOTAL PROJECT	SHEET NO.	TOTAL SHEETS
06	Ker	5722		178	178

Caltrans Metric

REGISTERED CIVIL ENGINEER — DATE: 5-03-07

3-8-10
PLANS APPROVAL DATE

REGISTERED PROFESSIONAL ENGINEER — J. MARCOTTE — No. C 36844 — Exp. 6-30-10 — Civil — STATE OF CALIFORNIA

The State of California or its officers or agents shall not be responsible for the accuracy or completeness of electronic copies of this plan sheet.

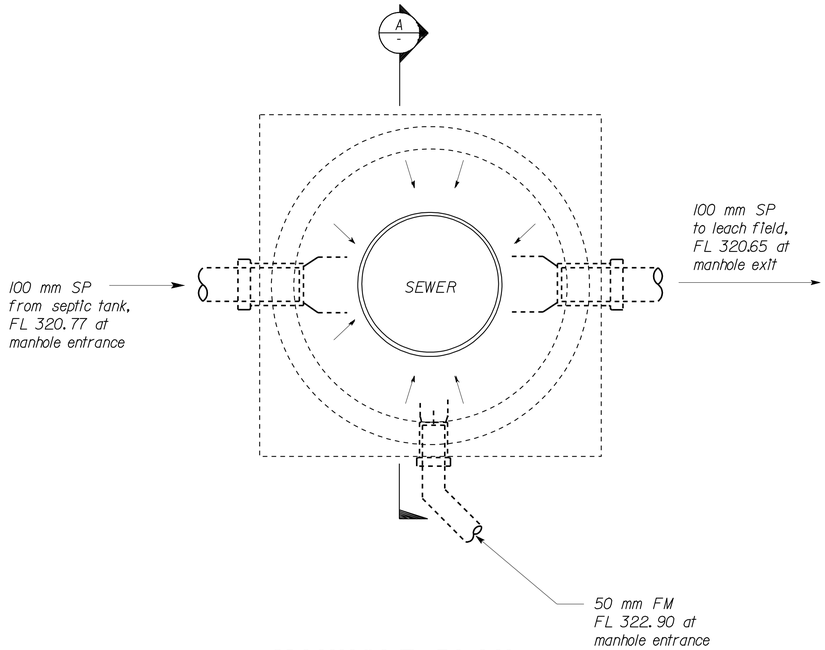

1 MANHOLE PLAN
NO SCALE

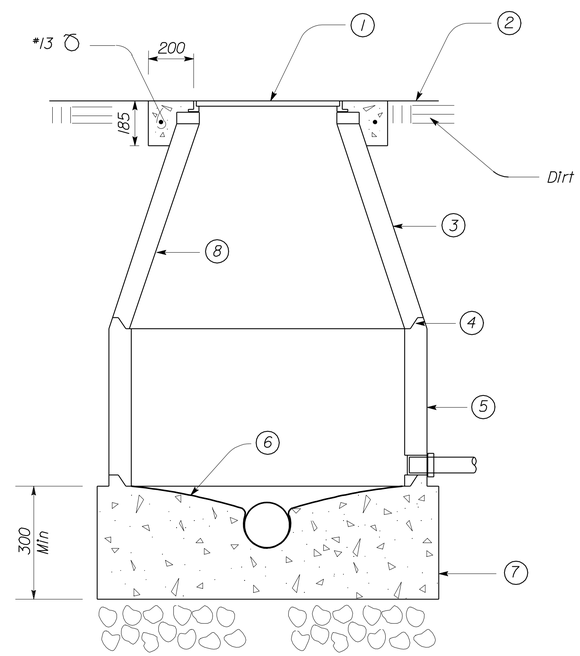

A ELEVATION
NO SCALE

CALIFORNIA STATE FIRE MARSHAL
APPROVED
Approval of this plan does not authorize or approve any omission or deviation from applicable regulations. Final approval is subject to field inspection. One set of approved plans shall be available on the project site at all times.
Reviewed by: JEFFERY SCHWARTZ
Approval date: 03/08/10

Notes:

1. *Manhole frame and cover, 610 mm, match existing grade. Lettering on the lid say SEWER.*
2. *Backfill around manhole shall be structure backfill. AC and AB shall be as specified.*
3. *Concentric Cone section, height as required.*
4. *All pipe joints shall be sealed watertight with manhole manufacturer's recommendation, or if none, with cement mortar.*
5. *Concrete barrel, height as required.*
6. *Slope concrete as required to form flow line.*
7. *Precast concrete base with cast in pipe sections or couplings.*
8. *Coat all interior surfaces of manhole with coal tar epoxy.*

ALL DIMENSIONS SHOWN IN MILLIMETERS, EXCEPT AS NOTED

	BY	CHECKED
DESIGN	Amar Baldwan	Jerry Marcotte
DETAILS	Amar Baldwan	David Wright
QUANTITIES	Amar Baldwan	David Wright

STATE OF CALIFORNIA
DEPARTMENT OF TRANSPORTATION

DIVISION OF ENGINEERING SERVICES
ELECTRICAL-MECHANICAL-WATER AND WASTEWATER DESIGN

BRIDGE NO. 50M5722
KM POST 32.66/33.30

TAFT MAINTENANCE STATION
MANHOLE DETAILS

SHEET **SS-9**

DOS ELEC (10/98) FILE => ss_9.dgn
DATE PLOTTED => 23-MAR-2010 TIME PLOTTED => 06:06

ORIGINAL SCALE IN MILLIMETERS FOR REDUCED PLANS 0 10 20 30 40 50 60 70 80 90 100

CU 06257
EA 483401

DISREGARD PRINTS BEARING EARLIER REVISION DATES

REVISION DATES (PRELIMINARY STAGE ONLY): 12-20-05 | 2-07-06 | 7-31-06 | 10-24-06 | 11-30-06 | 01-30-07 | 5-03-07 | 10-15-08

SHEET OF

FILE => ss_9.dgn

USERNAME => trmikesi DATE PLOTTED => 23-MAR-2010 TIME PLOTTED => 06:06

VI=I