This is to be used for all "INFORMATIONAL HANDOUT" cover sheets. Edit as appropriate.

FOR CONTRACT NO.: 06-483404

INFORMATION HANDOUT

MATERIALS INFORMATION

FOUNDATION REPORT WITH ADDENDUM

SITE INVESTIGATION REPORT:
INVESTIGATION FOR ASBESTOS CONTAINING MATERIAL AND LEAD BASE PAINT

SUPPLEMENTAL SITE INVESTIGATION REPORT FOR
INVESTIGATION FOR ASBESTOS CONTAINING MATERIAL AND LEAD BASE PAINT

ROUTE: 06-Ker-5722

M e m o r a n d u m

Flex your power!
Be energy efficient!

To: **MR. JOE ESFANDIARY**
Branch Chief
Structural Design Services &
Earthquake Engineering

Date: May 16, 2006

File: 06-KER-33
KP 32.7/33.3
(PM 20.3/20.7)
06-483401

From: **DEPARTMENT OF TRANSPORTATION**
DIVISION OF ENGINEERING SERVICES
GEOTECHNICAL SERVICES – MS 5

Subject: Foundation Report for Taft Maintenance Station

Introduction

Per your request dated October 27, 2005, we are providing this Foundation Report in support of the proposed one story building at the Taft Maintenance Station on Route 33 in Kern County. An infiltration basin is also proposed as part of this project. Plate No. 1 shows the approximate location of the site. This report summarizes our investigations and provides our recommended geotechnical design parameters.

Existing Facilities and Proposed Improvements

The building site is located towards the northwestern corner of the Taft Maintenance Station. The site is on the main asphalt covered parking lot, is flat, and currently vacant with the exception of parked vehicles throughout the day. The building site is bordered by vacant land covered with shrubs and brush to the north, Route 33 to the west, an asphalt covered area with an office building to the south, and asphalt covered areas with several equipment buildings to the east. The proposed infiltration basin is located on the eastern edge of the maintenance station. The basin site is located partly on an asphalt surface and on soil, is flat, and currently vacant. The basin site is bordered by an equipment building to the north, asphalt covered areas with several equipment buildings to the west, barrels and other debris from the adjacent property to the south, and vacant land covered with shrubs and brush to the east.

It is our understanding that this building will be a single story structure. The building will be used for equipment service, storage, and offices. The footprint of the proposed building is approximately 118 meters by 29 meters as shown in Plate No. 2. The support

for structural loading will be obtained from a continuous perimeter strip footing. The building will also have a slab placed on grade that will support loads from equipment placed inside the building.

Physical Setting

The physical setting of the project site and surrounding area was reviewed to provide climate, topography and drainage, man-made and natural features, and geology to aid in project design and construction planning. The following is a discussion of this information gathered during our review:

Climate

According to the Western Regional Climate Center for 1971-2000, the average annual precipitation at Maricopa, located approximately 13.0 km to the south and at a comparable elevation of the project site, is about 173 mm (7 in). The majority of this precipitation (over 97 percent) falls between September and May. The average annual air temperature is approximately 18.2^{o} C (64.7^{o} F) with the highest average daily maximum of 35.9^{o} C (96.7^{o} F) in July and the lowest average daily minimum of 2.4^{o} C (36.3^{o} F) in December.

Topography and Drainage

A map was viewed at http://topozone.com/ to determine the topographic features in the region of the project area. The site is located in the southern end of the Great Valley geomorphic province of California. The general terrain is flat with an elevation of approximately 318 meters above sea level at the project site. Within 1 kilometer of the project site the elevations range from 290 meters to 358 meters above sea level. Most of the localized drainage is generally trending to the east. The topography can be seen on Plate No. 3.

Regional Geology

The California Department of Conservation, Division of Mines and Geology Geologic Map of California, Bakersfield Sheet, 1992, was used to determine the geologic formations at the project location. A section from this map showing the project location

is attached as Plate No. 4. The project location is mapped as being in an area of Recent Alluvial Fan Deposits (Qf), consisting of sediments deposited from streams emerging from high lands surrounding the Great Valley. This formation occurred during the Quaternary Period of the Cenozoic Era, between 10 thousand and 1.6 million years ago.

The State of California, Air Resources Board (ARB) Map of California Showing Principal Asbestos Deposits has been reviewed to determine the potential that asbestos deposits will be encountered in the project area. According to this map, the project site is not located in an area of naturally occurring asbestos.

Subsurface Investigation Program

On March 7, 2006 a subsurface exploration program, consisting of three borings, was performed. Borings B1 and B2 were drilled to depths of 9.6 meters for the purpose of the building foundation while Boring B3 was drilled to a depth of 3.1 meters for the percolation test. Plate No. 5 shows the approximate locations of the borings.

The borings were drilled using a trailer mounted Mobile B-47 drill rig. The borings were advanced using a 152-mm diameter hollow stem auger. Soil samples were recovered from these borings by driving a 35-mm inner diameter split spoon sampler 0.46 m into the subsurface with a 63.5 kg automatic hammer dropped 0.76 m. The number of hammer blows required to drive the sampler the last 0.3 m into the ground was recorded on the log of borings. Samples recovered from the spilt spoon sampler were used to classify the subsurface soils. The logs of test borings (LOTB) have been submitted to the Geotechnical Services, Office of Geotechnical Support, Branch D – Contracts, Graphics, and Records and will be forwarded when completed. Ms. Irma Gamarra-Remmen of the Contracts, Graphics, and Records branch may be contacted directly at (916) 227-7203 for further information on the LOTB.

Subsurface Conditions

Based on the subsurface investigation, the foundation material at the site consists of silt, sand, rock fragments, and mixtures thereof ranging from loose to very dense. Bedrock and groundwater were not encountered in the borings during our investigation. Complete boring logs are presented in Appendix A as Plate Nos. 1 through 5.

Percolation Testing

Materials to perform percolation testing were installed in Boring B3 after drilling was completed and the test hole was prepared by saturating it overnight. The actual infiltration tests were performed the following day. The rate of water level drop was monitored until stabilized percolation rates were obtained. The percolation test for Boring B3 was performed from the ground surface to a depth of approximately 2.7 meters. We note that relatively clean water was used to perform the percolation tests. However, runoff water will likely contain silt, sand, oils, and/or other material that would decrease the percolation rates. Therefore, we recommend that a factor of safety of 2 be used when designing infiltration wells with the following values. The percolation test was performed twice in the boring (Tests 1A and 1B), and the average results are presented in Table 1.

Table 1 – Percolation Test Results

Percolation Test	Depth test was performed (m)	Perc. Rate ($l/m^2/day$)	Depth test was performed (ft)	Perc. Rate ($gal/ft^2/day$)	Date Tested
1A	0.0-2.7	1050	0.0-9.0	25.8	3/8/06
1B	0.0-2.7	1110	0.0-9.0	27.3	3/8/06

Laboratory Testing

Laboratory testing was performed to determine the corrosiveness and to verify the classification of the soil at the project location. The following laboratory tests were performed on selected samples obtained from the borings:

Mechanical Analysis – CTM 203
Plasticity Index – CTM 204
Corrosion – CTM 643
Sulfates – CTM 417
Chlorides – CTM 422

Corrosion

The Department currently defines a corrosive area as an area where the soil contains

more than 500 ppm of chlorides, or more than 2000 ppm of sulfates, or has a pH of 5.5 or less. With the exception of MSE walls, chloride and sulfate tests are not required if the minimum resistivity is greater than 1000 ohm-cm. Based on the lab results, the soil in the project area is considered non-corrosive. The corrosion test results are summarized in Table 2 below.

Table 2: Corrosion Test Results

Sample No.	Depth (m)	pH	Minimum Resistivity (ohm-cm)	Sulfate Content (ppm)	Chloride Content (ppm)
B1-3	1.8-2.4	8.20	640	1500	190
B2-2	0.9-1.5	8.11	610	800	400

Seismicity

We reviewed the Department's California Seismic Hazard Map dated 1996. The map indicates that the controlling fault is the San Andreas/C fault, which is located approximately 14.5 km east of the project location. The fault is expected to be capable of producing a Maximum Credible Earthquake (MCE) moment magnitude of M_w = 8.00. The peak bedrock acceleration, based on the above referenced map, is estimated to be 0.4g. The potential for surface rupture at this site due to fault movement is considered insignificant since there are no known faults projecting toward or passing directly through the project site.

According to the 1997 edition of the Uniform Building Code (UBC) this structure is located in Seismic Zone 4 (UBC Figure 16-2) and the geology corresponds to Soil Profile Type S_D (UBC Table 16-J). Based on the maximum moment magnitude the seismic source is Type A (UBC 16-U). At this site, the near-source acceleration factor, N_a, equals 1.0 (UBC Table 16-S), and the near source velocity factor, N_v, equals 1.1 (UBC Table 16-T). The Seismic Coefficients are C_a = 0.44 (UBC Table 16-Q) and C_v = 0.70 (UBC Table 16-R). Using equations from Figure 16-3 of the UBC the control periods are T_s = 0.64 seconds and T_o = 0.13 seconds. Plate No. 6 presents the recommended UBC 1997 acceleration response spectrum to be used for design.

Conclusions and Recommendations

The following recommendations are based on our subsurface investigation, review of information relevant to the project physical setting, and information forwarded by your Office.

The existing ground conditions are suitable for a shallow perimeter strip footing provided that the following recommendations are used for design. It was assumed, based on the building floor and foundation plans forwarded by your Office and telephone conversations with Mr. Edgardo A. Isidro and Mr. Alex Sherin, that the strip footing will have a width of 0.76 meters and/or 0.46 meters and will be embedded at least 0.94 meters below the lowest adjacent finish grade. If the following recommendations are met, the foundation may be designed using an allowable bearing capacity of 144 kPa.

The upper 0.6 m of native soils below the bottom of the proposed spread footings shall be removed and recompacted to at least 95% relative compaction as seen on Plate No. 7. Assuming that a bearing pressure of 144 kPa (or less) is planned for the 0.76-meter and/or 0.46-meter wide perimeter footings, our investigations indicate that a total settlement of less than 15 mm with a differential settlement of less than 5 mm would result. Based on a conversation with Mr. Isidro a maximum differential settlement of 25 mm is acceptable.

Since the building is located on flat ground, the lateral forces on either side of the footing will be equal. However, if conditions warrant the need for a retaining structure, an active equivalent fluid weight of 6.0 kN/m^3 and a passive equivalent fluid weight of 54.0 kN/m^3 are recommended. A sliding coefficient of 0.35 is recommended between concrete and soil.

For design of the slab-on-grade, we recommend a modulus of subgrade reaction, $k_{0.3}$, of 20 MN/m^3. We note that this value of modulus of subgrade reaction is assumed to act on a 0.3-meter by 0.3-meter footing and should be factored to account for the actual dimensions of the slab.

If adequate drainage is installed around the building, then a moisture barrier is not required. Water was not encountered at the time of drilling and it is not anticipated that the water table will rise or be drawn up to the bottom of the concrete slab.

We recommend that we be provided the opportunity for a general review of the geotechnical aspects of the PS&E package to check that the geotechnical recommendations are properly interpreted and implemented.

If you have any questions or comments, please call me at (916) 227-7153 or (CalNet) 498-7153.

MICHAEL ENGELMANN, PE
Transportation Engineer
Office of Geotechnical Design – North
Branch E

REZA MAHALLATI, PE
Senior Materials and Research Engineer
Office of Geotechnical Design – North

Attachments

c: John Huang
R.E. Pending
Structure OE (E-copy)
Peggy Lim (E-copy)
Ron Sekhon (E-copy)
GDN File
GS File Room

REGISTERED PROFESSIONAL ENGINEER
MICHAEL J. ENGELMANN
No. 65300
Exp. 9/30/07
CIVIL
STATE OF CALIFORNIA

REGISTERED PROFESSIONAL ENGINEER
REZA MAHALLATI
No. 49374
Exp. 9/30/06
CIVIL
STATE OF CALIFORNIA

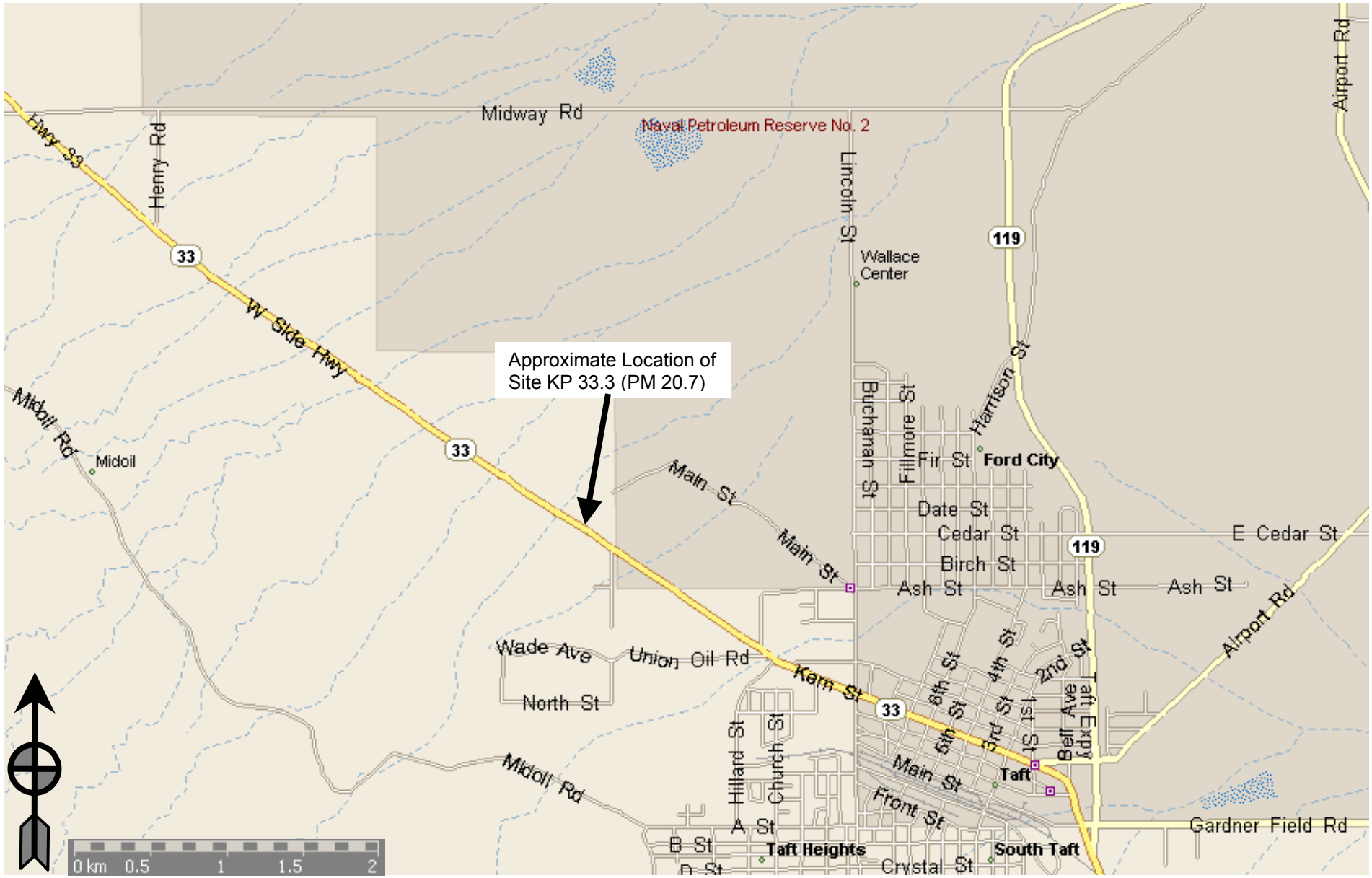

CALTRANS
Division of Engineering Services
Geotechnical Services
Office of Geotechnical Design - North

EA: 06-483401

Date: March 2006

LOCATION MAP

Plate No. 1

06-KER-33 KP 32.7/33.3 (PM 20.3/20.7)
FOUNDATION INVESTIGATION REPORT

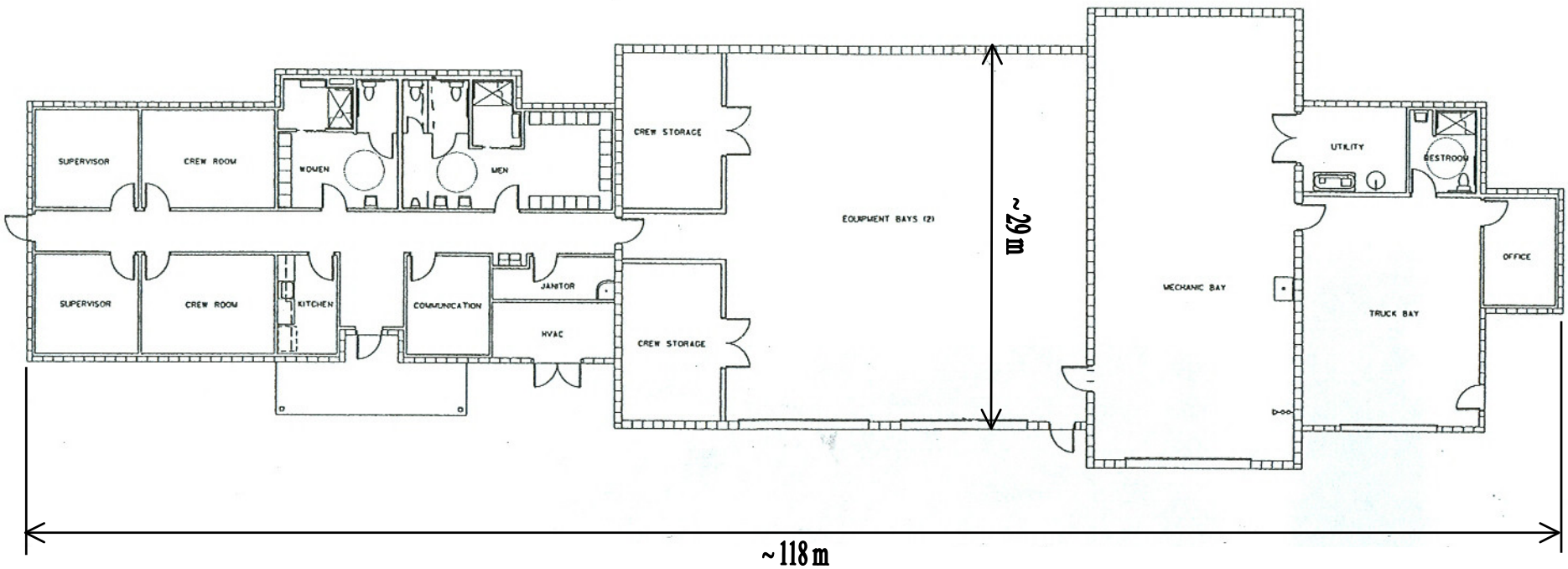

CALTRANS
Division of Engineering Services
Geotechnical Services
Office of Geotechnical Design - North

EA: 06-483401

Date: March 2006

BUILDING LAYOUT MAP

Plate No. 2

06-KER-33 KP 32.7/33.3 (PM 20.3/20.7)
FOUNDATION INVESTIGATION REPORT

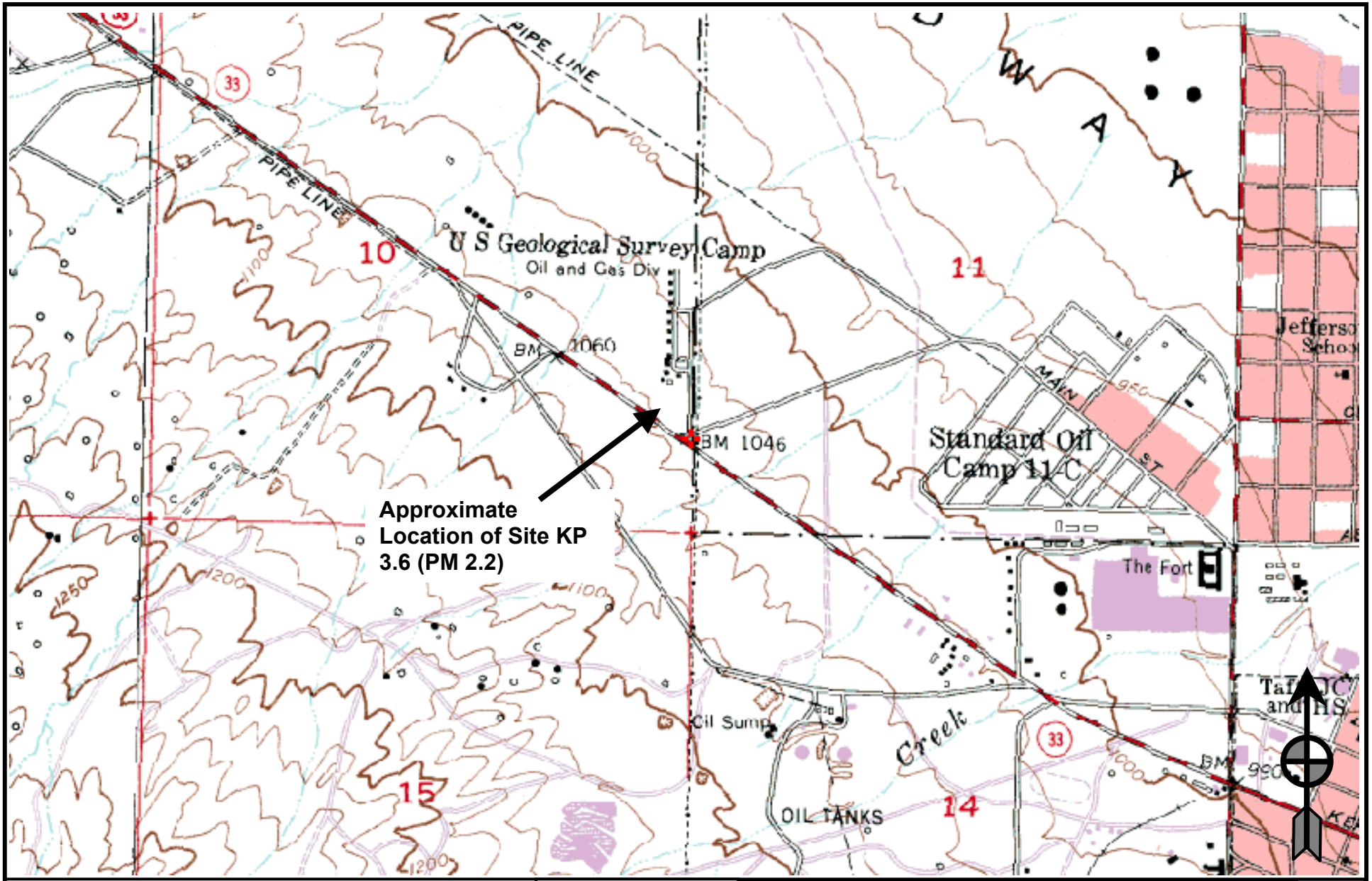

CALTRANS
Division of Engineering Services
Geotechnical Services
Office of Geotechnical Design - North

EA: 06-483401

Date: March 2006

TOPOGRAPHIC MAP

Plate No. 3

06-KER-33 KP 32.7/33.3 (PM 20.3/20.7)
FOUNDATION INVESTIGATION REPORT

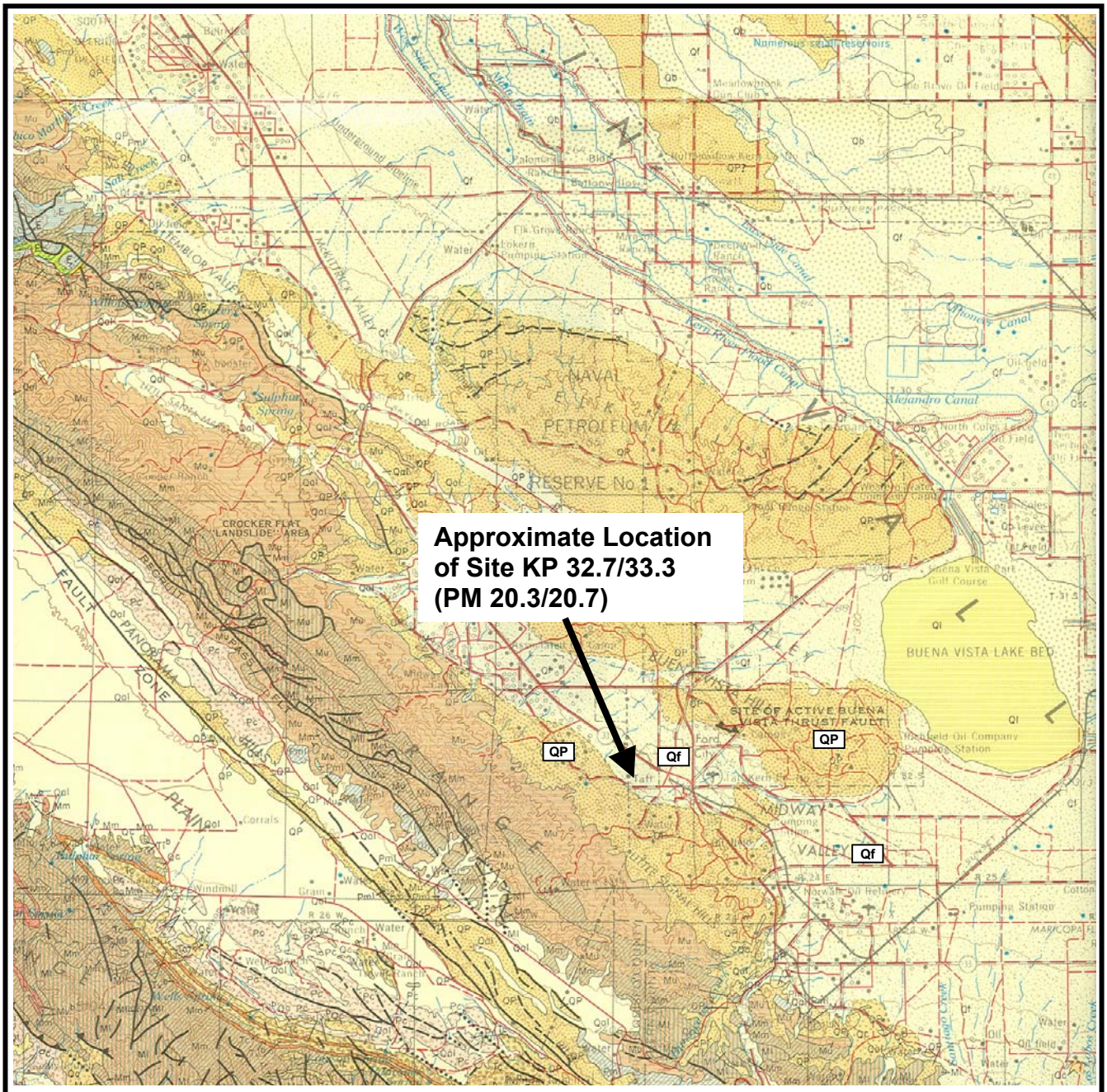

Geology base map from California Division of Mines and Geology – Geologic Map of California, Bakersfield Sheet, 1992

Explanation of Relevant Formations:

Qf – Recent Alluvial Fan Deposits – sediments deposited from streams emerging from high lands surrounding the Great Valley.

QP – Pliocene-Pleistocene Nonmarine Sedimentary Deposits – poorly bedded, loosely consolidated gravel composed mainly of ill-sorted, subrounded cobbles and boulders of various rock types.

CALTRANS Division of Engineering Services Geotechnical Services Office of Geotechnical Design - North	EA: 06-483401 Date: March 2006	**GEOLOGY MAP**
	06-KER-33 KP 32.7/33.3 (PM 20.3/20.7) **FOUNDATION INVESTIGATION REPORT**	Plate No. 4

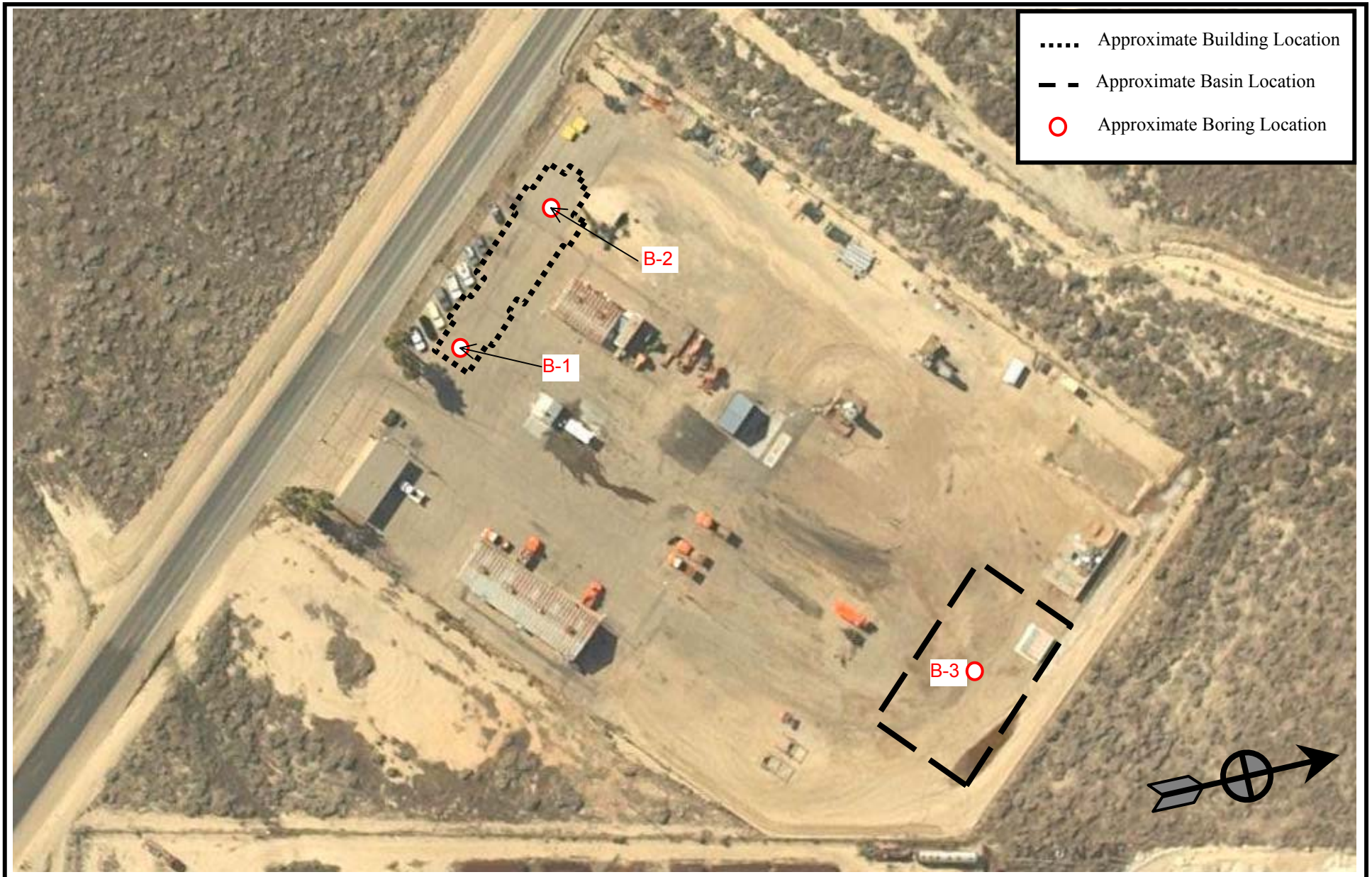

CALTRANS
Division of Engineering Services
Geotechnical Services
Office of Geotechnical Design - North

EA: 06-483401

Date: March 2006

BORING LOCATION MAP

Plate No. 5

06-KER-33 KP 32.7/33.3 (PM 20.3/20.7)
FOUNDATION INVESTIGATION REPORT

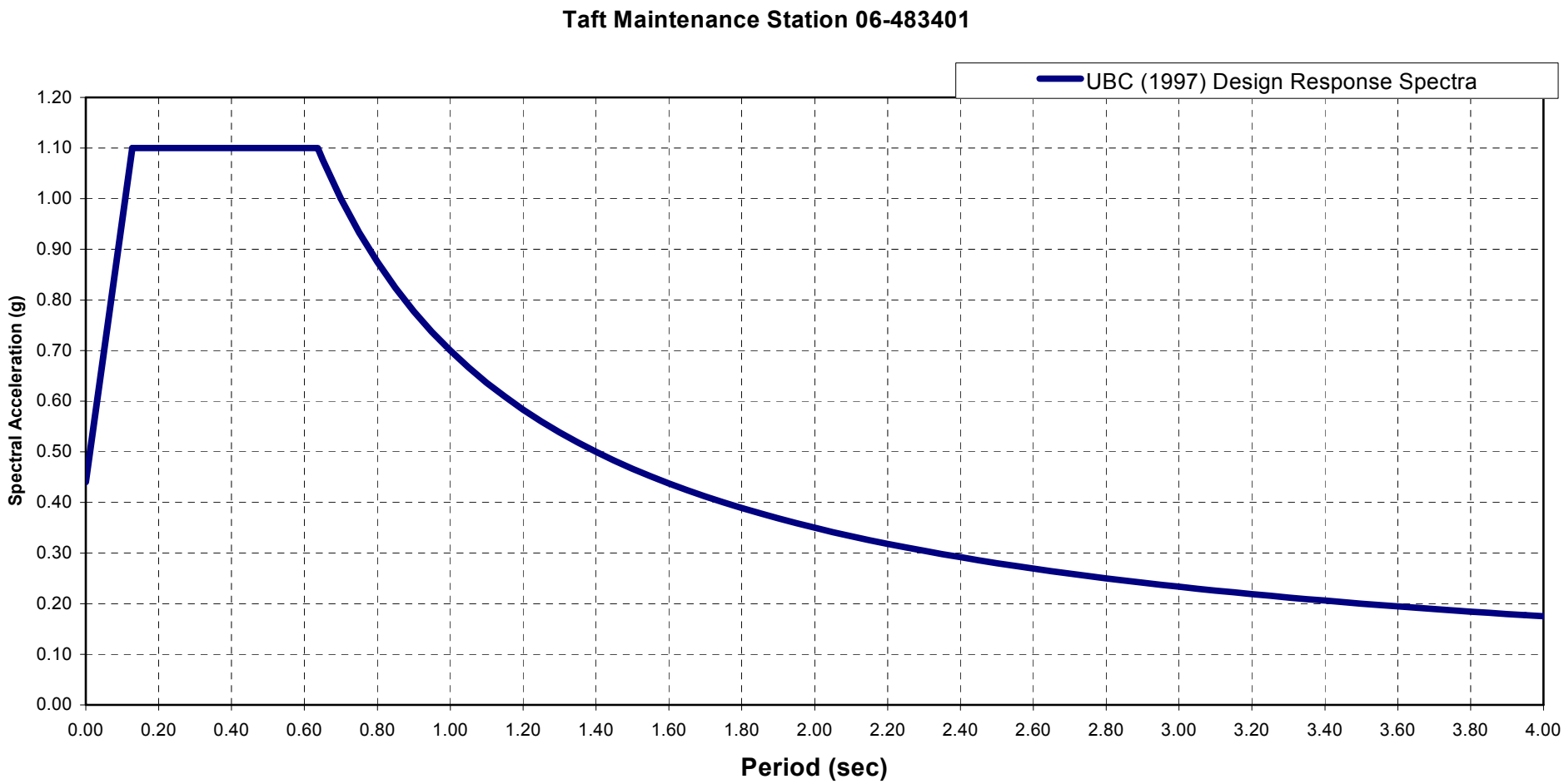

Plate No. 6 Acceleration Response Spectrum Recommended for Design

CALTRANS Division of Engineering Services Geotechnical Services Office of Geotechnical Design - North	EA: 06-483401 Date: April 2006	**ACCELERATION RESPONSE SPECTRUM RECOMMENDED FOR DESIGN**	Plate No. 6
		06-KER-33 KP 32.7 (PM 20.3) **FOUNDATION INVESTIGATION REPORT**	

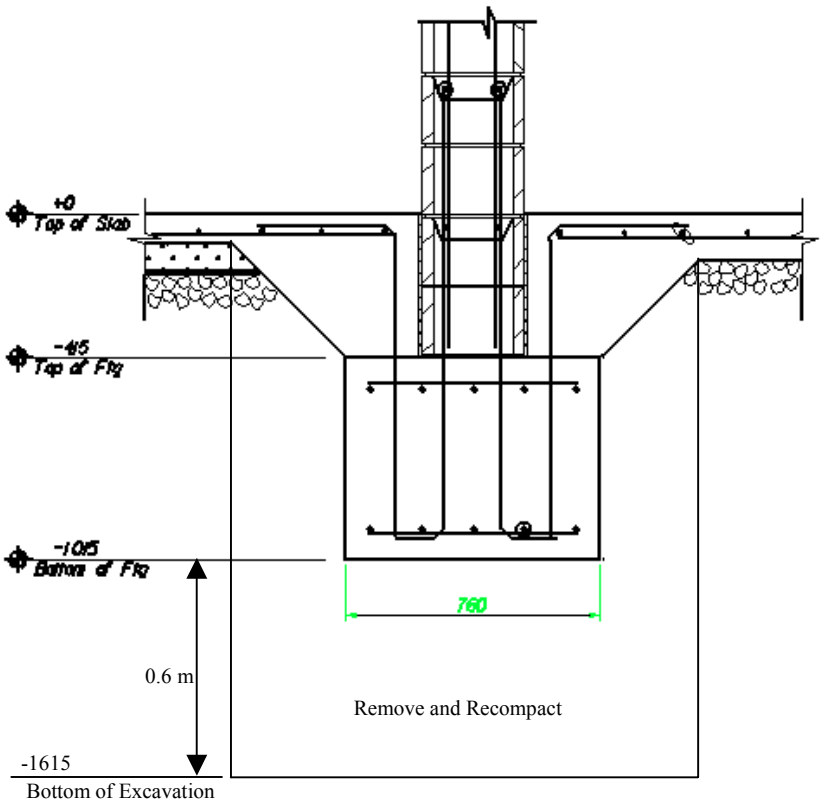

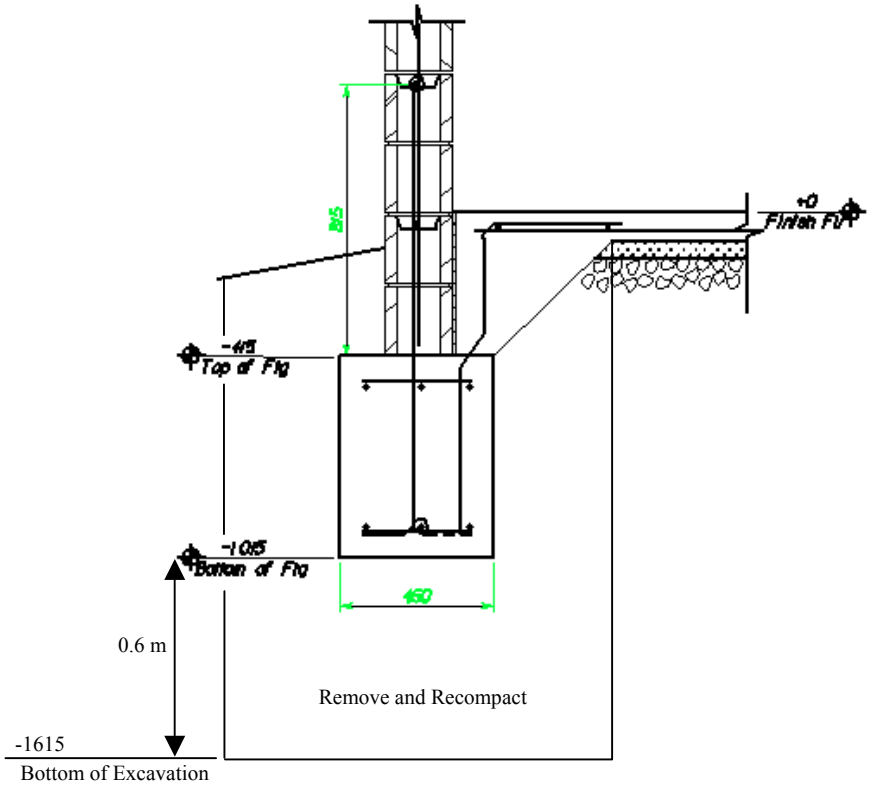

CALTRANS Division of Engineering Services Geotechnical Services Office of Geotechnical Design - North	EA: 06-483401 Date: May 2006	**COMPACTION DETAIL SHEET**	Plate No. 7
	06-KER-33 KP 32.7/33.3 (PM 20.3/20.7) **FOUNDATION INVESTIGATION REPORT**		

APPENDIX A

Logs of Test Borings

GRAPHIC SYMBOLS

- Bulk Sample
- Rock Core
- Modified California Sampler
- Standard Penetration Sampler
- Shelby Tube
- Vane Shear
- Auger
- Diamond Core
- Rotary
- California Sampler
- Water Level - 1st Reading
- Water Level - 2nd Reading
- Water Level - 3rd Reading

TESTING

CONS	Consolidation (Cal Test 219)	RQD	Rock Quality Designation (ASTM D6032)
UU	Unconsolidated Undrained Triaxial (Cal Test 230)	CP	Compaction Test (Cal Test 216)
CU	Consolidated Undrained Triaxial (Cal Test 230)	PERM	Permeability (Cal Test 220)
DS	Direct Shear (ASTM D3080)	COR	Corrosivity Testing (Cal Test 532/643)
UC	Unconfined Compression (Cal Test 221)	GRAD	Gradation Analysis (Cal Tests 202/203)
LL	Liquid Limit-% (Cal Test 204)	EP	Expansion Pressure (Cal Test 354)
PI	Plasticity Index-% (Cal Test 204)	OC	Organic Content-% (ASTM D2974)
PP	Pocket Penetrometer	SE	Sand Equivalent (Cal Test 217)
TV	Pocket Torvane		

SOIL GRAIN SIZE

U.S. STANDARD SIEVE: 12" | 3" | 3/4" | 4 | 10 | 40 | 200

BOULDERS	COBBLES	GRAVEL		SAND			SILT	CLAY
		COARSE	FINE	COARSE	MEDIUM	FINE		

SOIL GRAIN SIZE (in mm): 300 | 75 | 19 | 4.75 | 2 | 0.425 | 0.075 | 0.005

GENERAL NOTES

1. Logs represent general subsurface conditions observed at the point of exploration on the date indicated.
2. In general, USCS designations presented on logs were established by visual methods only; therefore, actual designations (based on laboratory tests) may vary.
3. No warranty is provided as to the continuity of soil conditions between individual sample locations.
4. Lines separating strata on the logs represent approximate boundaries only; actual transitions may be different or gradual.
5. Pocket penetrometer values reported on the logs under shear strength are actual values as recorded in the field. (To be used in analysis, the pocket penetrometer value should be divided by two)

MAJOR DIVISIONS			SYMBOLS GRAPH	SYMBOLS LETTER	TYPICAL DESCRIPTIONS
COARSE GRAINED SOILS MORE THAN 50% OF MATERIAL IS LARGER THAN NO. 200 SIEVE SIZE	GRAVEL AND GRAVELLY SOILS MORE THAN 50% OF COARSE FRACTION RETAINED ON NO. 4 SIEVE	CLEAN GRAVELS (LITTLE OR NO FINES)		GW	WELL-GRADED GRAVELS, GRAVEL - SAND MIXTURES, LITTLE OR NO FINES
				GP	POORLY-GRADED GRAVELS, GRAVEL - SAND MIXTURES, LITTLE OR NO FINES
		GRAVELS WITH FINES (APPRECIABLE AMOUNT OF FINES)		GM	SILTY GRAVELS, GRAVEL - SAND - SILT MIXTURES
				GC	CLAYEY GRAVELS, GRAVEL - SAND - CLAY MIXTURES
	SAND AND SANDY SOILS MORE THAN 50% OF COARSE FRACTION PASSING ON NO. 4 SIEVE	CLEAN SANDS (LITTLE OR NO FINES)		SW	WELL-GRADED SANDS, GRAVELLY SANDS, LITTLE OR NO FINES
				SP	POORLY-GRADED SANDS, GRAVELLY SAND, LITTLE OR NO FINES
		SANDS WITH FINES (APPRECIABLE AMOUNT OF FINES)		SM	SILTY SANDS, SAND - SILT MIXTURES
				SC	CLAYEY SANDS, SAND - CLAY MIXTURES
FINE GRAINED SOILS MORE THAN 50% OF MATERIAL IS SMALLER THAN NO. 200 SIEVE SIZE	SILTS AND CLAYS	LIQUID LIMIT LESS THAN 50		ML	INORGANIC SILTS AND VERY FINE SANDS, ROCK FLOUR, SILTY OR CLAYEY FINE SANDS OR CLAYEY SILTS WITH SLIGHT PLASTICITY
				CL	INORGANIC CLAYS OF LOW TO MEDIUM PLASTICITY, GRAVELLY CLAYS, SANDY CLAYS, SILTY CLAYS, LEAN CLAYS
				OL	ORGANIC SILTS AND ORGANIC SILTY CLAYS OF LOW PLASTICITY
	SILTS AND CLAYS	LIQUID LIMIT GREATER THAN 50		MH	INORGANIC SILTS, MICACEOUS OR DIATOMACEOUS FINE SAND OR SILTY SOILS
				CH	INORGANIC CLAYS OF HIGH PLASTICITY
				OH	ORGANIC CLAYS OF MEDIUM TO HIGH PLASTICITY, ORGANIC SILTS
HIGHLY ORGANIC SOILS				PT	PEAT, HUMUS, SWAMP SOILS WITH HIGH ORGANIC CONTENTS

Equipment: Mobile B47	Station/KP: 2+97	Boring ID.: B-1
Hammer: Safety semi-automatic drop (140#/ 30")	Offset Distance/Line: 29Lt./Route 33	Date Completed: 3-7-06
Drilling Method: 6-inch hollow stem auger	North/East:	Hole Diameter: 152mm
Sampling Method: SPT, Bulk Bag	Ground Surface Elevation: 322.5m	Total Depth: 9.6m
Notes:	Depth to GW/date measured: not encountered on 3-7-06	Logged By: MEngelmann

ELEVATION (m)	DEPTH (m)	DEPTH (ft)	Graphic Log	Description	Sample Type	Sample Number	Sample Blows	Blows per Foot	Recovery (%)	RQD (%)	w/c (%)	Dry Density (kN/m³)	Shear Strength (kPa)	Drilling Method/ Casing	Remarks
322.17	0.30	1		ASPHALT CONCRETE SILTY SAND (SM): loose, brown, dry, fine sand.											
321.87	0.61	2													
321.56	0.91	3				1	4 3 3	6							
321.26	1.22	4													
320.95	1.52	5													
320.65	1.83	6		becomes moist, with rock fragments.		2	3 4 4	8							
320.34	2.13	7				3									
320.04	2.44	8		becomes medium dense.		4	5 6 6	12							
319.74	2.74	9													
319.43	3.05	10													
319.13	3.35	11				5	6 11 9	20							
318.82	3.66	12													
318.52	3.96	13													
318.21	4.27	14													
317.91	4.57	15													
317.60	4.88	16				6	5 9 8	17							
317.30	5.18	17													
316.99	5.49	18													
316.69	5.79	19													
316.38	6.10	20													
316.08	6.40	21		becomes dense, medium grained.		7	14 16 21	37							
315.77	6.71	22													
315.47	7.01	23													
315.16	7.32	24													
314.86	7.62	25													
314.55	7.92	26				8	15 17 19	36							
314.25	8.23	27													
313.94	8.53	28													
313.64	8.84	29													
313.33	9.14	30													
313.03	9.45	31		becomes very dense.		9	29 26 31	57							
312.72	9.75	32		Bottom of Hole at 9.60 m (31.5 ft) on 3-7-06											
312.42	10.06	33													
312.12	10.36	34													
311.81	10.67	35													

Equipment: Mobile B47	Station/KP: 2+58	Boring ID.: B-2
Hammer: Safety semi-automatic drop (140#/ 30")	Offset Distance/Line: 28Lt./Route 33	Date Completed: 3-7-06
Drilling Method: 6-inch hollow stem auger	North/East:	Hole Diameter: 152mm
Sampling Method: SPT, Bulk Bag	Ground Surface Elevation: 322.8m	Total Depth: 9.6m
Notes:	Depth to GW/date measured: not encountered on 3-7-06	Logged By: MEngelmann

ELEVATION (m)	DEPTH (m)	DEPTH (ft)	Graphic Log	Description	Sample Type	Sample Number	Sample Blows	Blows per Foot	Recovery (%)	RQD (%)	w/c (%)	Dry Density (kN/m³)	Shear Strength (kPa)	Drilling Method/ Casing	Remarks
322.45	0.30	1		ASPHALT CONCRETE											
322.14	0.61	2		SILTY SAND (SM): medium dense, light brown, dry, fine sand.											
321.84	0.91	3				1	5 5 6	11							
321.53	1.22	4													
321.23	1.52	5				2									
320.92	1.83	6		becomes moist, with rock fragments.		3	4 4 6	10							
320.62	2.13	7													
320.31	2.44	8				4	6 5 6	11							
320.01	2.74	9													
319.70	3.05	10													
319.40	3.35	11		becomes fine grained.		5	21 12 12	24							
319.10	3.66	12													
318.79	3.96	13													
318.49	4.27	14													
318.18	4.57	15													
317.88	4.88	16		becomes dense, medium grained.		6	12 16 15	31							
317.57	5.18	17													
317.27	5.49	18													
316.96	5.79	19													
316.66	6.10	20													
316.35	6.40	21		becomes medium dense.		7	19 11 11	22							
316.05	6.71	22													
315.74	7.01	23													
315.44	7.32	24													
315.13	7.62	25													
314.83	7.92	26		becomes very dense, rust brown.		8	17 29 35	64							
314.52	8.23	27													
314.22	8.53	28													
313.91	8.84	29													
313.61	9.14	30													
313.30	9.45	31		becomes medium dense, light brown.		9	16 11 9	20							
313.00	9.75	32		Bottom of Hole at 9.60 m (31.5 ft) on 3-7-06											
312.69	10.06	33													
312.39	10.36	34													
312.08	10.67	35													

Equipment:	Station/KP:	Boring ID.:
Mobile B47	2+86	B-3
Hammer:	Offset Distance/Line:	Date Completed:
Safety semi-automatic drop (140#/ 30")	160Lt./Route 33	3-7-06
Drilling Method:	North/East:	Hole Diameter:
6-inch hollow stem auger		152mm
Sampling Method:	Ground Surface Elevation:	Total Depth:
SPT, Bulk Bag	317.9m	3.0m
Notes:	Depth to GW/date measured:	Logged By:
	not encountered on 3-7-06	MEngelmann

ELEVATION (m)	DEPTH (m)	DEPTH (ft)	Graphic Log	Description	Sample Type	Sample Number	Sample Blows	Blows per Foot	Recovery (%)	RQD (%)	w/c (%)	Dry Density (kN/m^3)	Shear Strength (kPa)	Drilling Method/ Casing	Remarks
317.60	0.30	1		SILTY SAND (SM): medium dense, light brown, dry.											
317.30	0.61	2													
316.99	0.91	3													
316.69	1.22	4													
316.38	1.52	5													
316.08	1.83	6		becomes moist, with rock fragments.		1	6 5 7	12							
315.77	2.13	7													
315.47	2.44	8				2									
315.16	2.74	9													
314.86	3.05	10													
314.55	3.35	11		Bottom of Hole at 3.05 m (10.0 ft) on 3-7-06											
314.25	3.66	12													
313.94	3.96	13													
313.64	4.27	14													
313.33	4.57	15													
313.03	4.88	16													
312.72	5.18	17													
312.42	5.49	18													
312.12	5.79	19													
311.81	6.10	20													
311.51	6.40	21													
311.20	6.71	22													
310.90	7.01	23													
310.59	7.32	24													
310.29	7.62	25													
309.98	7.92	26													
309.68	8.23	27													
309.37	8.53	28													
309.07	8.84	29													
308.76	9.14	30													
308.46	9.45	31													
308.15	9.75	32													
307.85	10.06	33													
307.54	10.36	34													
307.24	10.67	35													

State of California
Department of Transportation

Business, Transportation and Housing Agency

Memorandum

Flex your power!
Be energy efficient!

To: **MR. JOE ESFANDIARY**
Branch Chief
Structural Design Services &
Earthquake Engineering

Attn: Edgardo Isidro

Date: January 4, 2007

File: 06-KER-33
KP 32.7/33.3
(PM 20.3/20.7)
06-483401

From: **DEPARTMENT OF TRANSPORTATION**
DIVISION OF ENGINEERING SERVICES
GEOTECHNICAL SERVICES – MS 5

Subject: Addendum to the Foundation Report for Taft Maintenance Station

Introduction

This addendum serves to provide updated recommendations for the Taft Maintenance Station Foundation Report (FR) prepared by this Office, dated May 16, 2006. Changes have been made from the original design regarding the depth and width of the foundations, which change the recommendations in the original FR.

All recommendations remain applicable from the FR with the exception of the removal and recompaction of the loose native soil at the foundation locations. The upper 0.7 m (instead of 0.6 m) of native soils below the bottom of the proposed spread footings shall be removed and recompacted to at least 95% relative compaction as seen on the attached figure.

We recommend that we be provided the opportunity for a general review of the geotechnical aspects of the PS&E package to check that the geotechnical recommendations are properly interpreted and implemented.

If you have any questions or comments, please call me at (916) 227-7153 or (CalNet) 498-7153.

MICHAEL ENGELMANN, PE
Transportation Engineer
Office of Geotechnical Design – North
Branch E

REGISTERED PROFESSIONAL ENGINEER
MICHAEL J. ENGELMANN
No. 65300
Exp. 9/30/07
CIVIL
STATE OF CALIFORNIA

c: John Huang
R.E. Pending
Structure OE (E-copy)
Peggy Lim (E-copy)
Ron Sekhon (E-copy)
GDN File
GS File Room

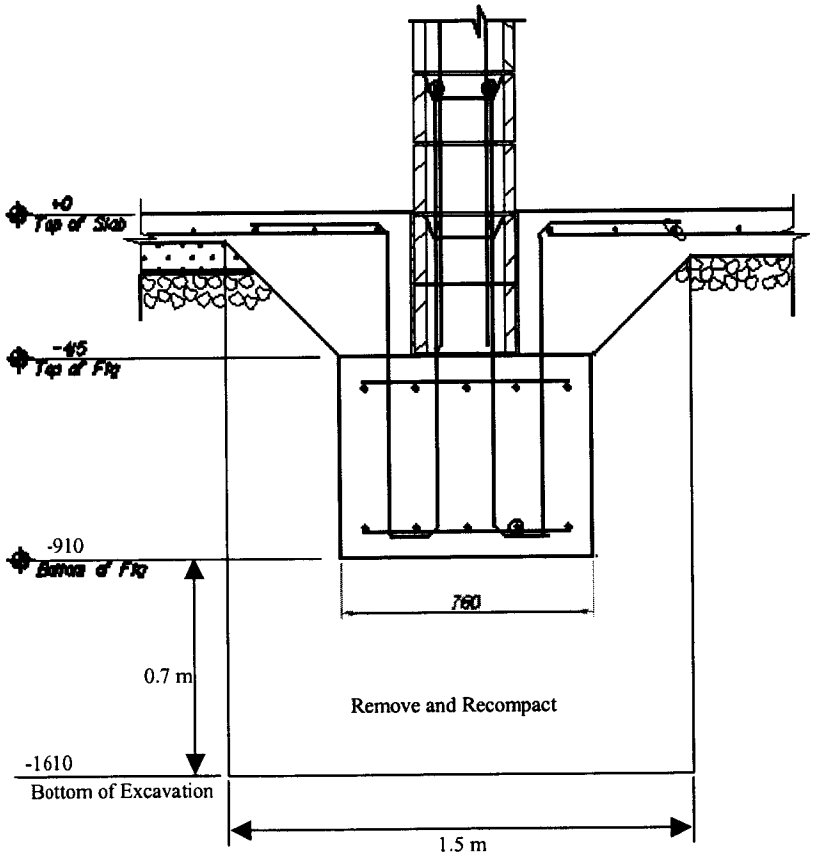

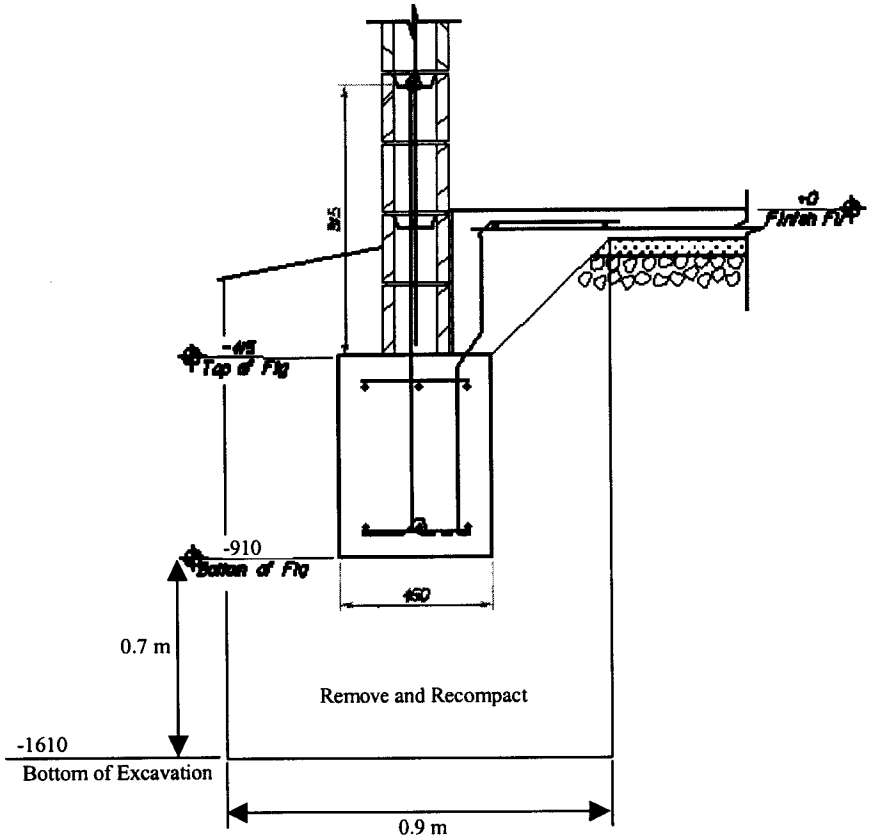

CALTRANS Division of Engineering Services Geotechnical Services Office of Geotechnical Design - North	EA: 06-483401 Date: January 2007	**COMPACTION DETAIL SHEET**	Figure No. 1
	06-KER-33 KP 32.7/33.3 (PM 20.3/20.7) FOUNDATION INVESTIGATION REPORT		

Shaw™ Shaw Environmental, Inc.

SITE INVESTIGATION REPORT

INVESTIGATION FOR ASBESTOS CONTAINING MATERIAL AND LEAD BASED PAINT INVESTIGATION

State Route 33, Taft Maintenance Station
Kern County, California

March 9, 2006

Prepared for:

California Department of Transportation
2015 E. Shields Avenue, Suite 100
Fresno, California 93726

Prepared by:

Shaw Environmental, Inc.
1326 North Market Boulevard
Sacramento, California 95834-1912

Task Order No.: 29
E.A. No. 06-483400
Contract No.: 06A0752

Project No.: 119603

SITE INVESTIGATION REPORT

INVESTIGATION FOR ASBESTOS CONTAINING MATERIAL AND LEAD BASED PAINT INVESTIGATION

State Route 33, Taft Maintenance Station
Kern County, California

March 9, 2006

Prepared for:

California Department of Transportation
2015 E. Shields Avenue, Suite 100
Fresno, California 93726

Prepared by:

Shaw Environmental, Inc.
1326 North Market Boulevard
Sacramento, California 95834-1912

Task Order No.: 29
E.A. No. 06-483400
Contract No.: 06A0752

Project No.: 119603

SHAW ENVIRONMENTAL, INC.

Martha Adams

Martha Adams, P.E.
Task Order Manager

REGISTERED PROFESSIONAL ENGINEER
MARTHA J. ADAMS
No. 58782
Exp. 6.30.07
CIVIL
STATE OF CALIFORNIA

Table of Contents

List of Tables iv
List of Figures iv
List of Appendices iv

Executive Summary ES-1
1.0 Introduction 1-1
1.1 Project Description 1-1
1.2 Project Objectives 1-1
2.0 Scope of Work 2-1
2.1 Planning and Permitting 2-1
2.2 Field Investigation 2-1
2.2.1 ACM and LBP Sampling 2-1
2.3 Laboratory Analysis 2-2
2.3.1 ACM and LBP Analyses 2-2
3.0 Site Investigation Results 3-1
3.1.1 ACM Results 3-1
3.1.2 LBP Results 3-1
4.0 ACM and LBP Evaluation 4-1
4.1 ACM 4-1
4.2 LBP 4-1
5.0 Conclusions 5-1
6.0 References 6-1

List of Tables

Table 1 Summary of ACM and LBP Analytical Results

List of Figures

Figure 1 Site Vicinity Map

List of Appendices

Appendix A Photographs
Appendix B Sampling Procedures
Appendix C Laboratory Analytical Reports and Chain-of-Custody Forms

Executive Summary

This report presents the results of the Asbestos Containing Materials (ACM) and Lead Based Paint (LBP) investigation performed by Shaw Environmental, Inc. (Shaw) along State Route 33 at the Taft Maintenance Station in Taft, in Kern County, California (Figure 1). This investigation is associated with a California Department of Transportation (Caltrans) construction project at the Taft Maintenance Station. The project work would include demolition and rehabilitation of select existing structures.

This investigation was conducted at the request and authorization of Mr. Shawn Ogletree of Caltrans under Contract No. 06A0752, Task Order No. 29.

The objectives of this investigation are to evaluate the presence of ACM and LBP for identified building structures. The analytical data obtained from this investigation will be used to plan disposal of building material.

Field work included the collection of 8 samples for asbestos and 3 samples for lead at various locations from suspect material of identified structures.

Of the samples collected, only the roof of the main office buildings was found to contain Chrysotile asbestos at a concentration of 3%. As a result, prior to demolition, Shaw recommends that the roofing materials be removed by a certified asbestos abatement contractor using standard asbestos precautions. It will also be necessary to notify the Kern County Air Pollution District 10 days in advance of any intended demolition.

Laboratory analysis of the paint used on the main office building indicated that it was non lead based paint with only a trace of lead. The paint was in good condition and it is anticipated that standard precautions for worker protection will be sufficient.

Laboratory analysis demonstrated that the paint samples collected from the warehouse are lead based. As a result, additional worker health and safety precautions and waste disposal procedures for lead are necessary when working on the building structures.

1.0 Introduction

This report presents the results of the Asbestos Containing Materials (ACM) and Lead Based Paint (LBP) investigation performed by Shaw Environmental, Inc. (Shaw) along State Route (SR) 33 at the Taft Maintenance Station in Taft, in Kern County, California (Figure 1).

1.1 Project Description

This investigation is associated with a California Department of Transportation (Caltrans) construction project at the Taft Maintenance Station. The project work would include demolition and rehabilitation of select existing structures.

This investigation was conducted at the request and authorization of Mr. Shawn Ogletree of Caltrans under Contract No. 06A0752, Task Order No. 29. All work was performed within Caltrans right-of-way.

1.2 Project Objectives

The objectives of this investigation are to evaluate the presence of asbestos containing material (ACM) and lead based paint (LBP) for identified building structures.

The analytical data obtained from this investigation will be used to plan disposal of building material.

2.0 Scope of Work

The investigation scope of work was presented in Shaw's workplan dated January 30, 2006, which was approved for implementation by Caltrans (Shaw, 2006a). The following scope of work was conducted:

1. Permitting and Mobilization
2. Field Investigation
3. Laboratory Analyses
4. Site Investigation Report Preparation

2.1 Planning and Permitting

Planning and permitting included a preparation of a workplan and health and safety plan (HSP).

A site-specific HSP (Shaw, 2006b) was prepared for the site in general accordance with 29 CFR 1910.120 and Title 8, California Code of Regulations, Section 5192. The HSP included safety procedures for work to be performed at the site, chemical hazard information, identification of site safety officers, and preferred medical emergency locations.

2.2 Field Investigation

2.2.1 ACM and LBP Sampling

This task included the collection of 8 samples for asbestos and 3 samples for lead at various locations from suspect material of identified structures. The samples were collected by a Cal-DOSH Certified Asbestos Consultant and California Registered Lead Inspector/Monitor.

The scope of work for this project consisted of a visual inspection and the collection of suspect ACM and LBP samples.

ACM samples were obtained using a chisel and hammer to loosen a small fragment of the suspected material. The sample was collected using latex gloves and placed into a sealable plastic bag. The bag was labeled with a field sample number and recorded on a chain-of custody form. The chisel and hammer were cleaned between samples.

For LBP samples, a chisel was also used to scrap or peel paint from the surface, again using latex gloves. The samples were handled similarly to the asbestos samples. Samples were obtained from three locations, the stucco on the main office building, silver paint from a loading platform at the warehouse, and off-white paint from the warehouse door.

Photographs were taken of sample locations (Appendix A). All of the buildings are single story. The main office building (Photograph No. 4) appears to be a wood frame construction with a flat tar and gravel roof (Photograph No. 4 and No. 5), interior paneling (Photograph No. 1), a gypsum and acoustical tile ceiling (Photograph No. 1 and No. 6), and exterior stucco. The gasoline storage building and warehouse are steel structures placed on slab foundations (Photograph No. 2 and No. 3). These buildings are unpainted either inside or out (Photograph No. 7 and No. 10), although the wooden door to the warehouse and a wooden support on a loading ramp at the warehouse were painted. The total painted surfaces of the warehouse amounted to less than 100 square feet. Lighting in the steel buildings was incandescent (Photograph No. 7 and No. 10), but fluorescent lighting is used in the main office (Photograph No. 1).

Sampling procedures are presented in Appendix B. ACM and LBP samples were shipped to a California-certified analytical laboratory via overnight courier.

2.3 Laboratory Analysis

2.3.1 ACM and LBP Analyses

The ACM samples were submitted to EMSL Analytical, Inc., of Milpitas, California, a California-certified analytical laboratory, for analysis. The LBP samples were submitted to Sparger Technology, Inc., of Sacramento, California, a California-certified analytical laboratory, for analysis.

Chain of custody procedures, including the use of chain of custody forms, were used to document sample handling and transport from the time of collection to delivery to the laboratory for analysis. The chain of custody forms and laboratory analytical reports are included in Appendix C.

The analyses were conducted on a standard turn-around basis in general accordance with U.S. Environmental Protection Agency (EPA) specified holding times. The analyses were performed on the samples in general accordance with the following methods.

Matrix	Collection	Analyses
Asbestos	Bulk Sample	ARB 435 and Polarized Light Microscopy (PLM) EPA-600/R36/116
Paint Chips	Discreet Sample	Total Lead (EPA Method 6010)

3.0 Site Investigation Results

3.1.1 ACM Results

A total of 8 samples were analyzed for asbestos. Laboratory results indicated that of the samples collected, only the main office building roof contained ACM with a concentration of 3% Chrysotile asbestos.

A summary of ACM analytical results is presented in Table 1. A certified analytical laboratory reports is presented in Appendix C.

3.1.2 LBP Results

A total of 3 samples were collected and submitted for LBP analysis. The paint on the stucco surface of the main office building contained only trace amounts of lead. However, the paint collected from the warehouse contained significant amounts of lead, indicating that lead based paints were used on the warehouse.

A summary of LBP analytical results is presented in Table 1. A certified analytical laboratory report is presented in Appendix C.

4.0 ACM and LBP Evaluation

4.1 ACM

For the purpose of general worker protection, the Division of Occupational Safety and Health (Cal/OSHA) defines an "asbestos-containing material" as material that contains greater than 1 percent asbestos. For the purpose of employer and contractor registration and notification and consultant certification, Cal/OSHA defines an "asbestos-containing construction material" as any manufactured construction material, including structural, mechanical, and building material, which contains greater than 0.1 percent asbestos. The Kern County Air Pollution Control District has incorporated the Federal National Emission Standard for Hazardous Air Pollution (NESHAP) for Asbestos (40 Code of Federal Regulations 140-157). This NESHAP defines a "regulated asbestos-containing material" (RACM) as a material that contains greater than 1 percent asbestos and is friable or may become friable during renovation and demolition activities. NESHAP classifies asphalt roofing material as RACM.

Of the samples collected, only the roof of the main office buildings was found to contain Chrysotile asbestos at a concentration of 3%. As a result, prior to demolition, Shaw recommends that the roofing materials be removed by a certified asbestos abatement contractor using standard asbestos precautions (8 CCR 1529, (g)(7)(D). Due to the level of asbestos in the roofing material, the square footage of the surface involved (greater than 100 square feet) and the classification of the material as RACM, it will be necessary to notify the Kern County Air Pollution District 10 days in advance of any intended demolition (40 CFR, Part 61, Subpart M; see also California Health & Safety Code Section 19827.5).

4.2 LBP

Laboratory analysis of the paint used on the main office building indicated that it was non lead based paint with only a trace of lead. The paint was in good condition and it is anticipated that standard precautions for worker protection will be sufficient.

Laboratory analysis demonstrated that the paint samples collected from the warehouse are lead based. As a result, additional worker health and safety precautions and waste disposal procedures for lead are necessary when working on the building structures.

Under current Cal/OSHA regulations, definitions of "lead-containing paint", "lead-based paint" or "lead-containing construction material" have not been established. The Cal/OSHA lead-in-construction standard (Title 8 California Code of Regulations Section 1532.1) applies to all construction work where an employee may be occupationally exposed to lead. The Consumer Products Safety Commission limits the amount of lead in paints manufactured for residential use

to 0.06 percent in dry paint. Under the lead-in-construction standard, a "negative" exposure assessment may be established for work involving coatings or paint containing less than 0.06 percent lead, if the work does not include certain "Trigger Tasks" established in the standard.

"Trigger Tasks" are identified in the Standard as:

A. Manual demolition, manual scraping, manual sanding, heat gun application, power tool cleaning with dust collection and spray painting.

B. Use of lead containing mortar, lead burning, rivet busting, power tool cleaning without dust collection, cleanup of dry abrasives and moving an abrasive blasting container.

C. Abrasive blasting, welding, cutting and torch burning.

Briefly, 8 CCR 1532.1 (d) will require the following when performing the "Trigger Tasks" on lead containing paint.

- Appropriate respiratory protection.
- Appropriate personal protective equipment.
- Change areas with separate storage facilities for work and street clothes
- Hand washing facilities.
- Biological monitoring consisting of baseline blood sampling for lead and zinc protoporphyrin (ZPP).
- Training – including Hazard Communication, respirator and lead training.

With respect to waste and waste handling, Shaw recommends the following:

- Controls be instituted to limit the dispersion of paint chips to the environment. This may include polyvinyl sheeting, wet methods and/or HEPA vacuum controls.
- Concentrated lead waste such as paint sludge, paint chips, vacuum debris, and vacuum filters be treated as hazardous waste (22 CCR 66260-66268).
- Structural materials where the paints remains firmly adhered may be disposed as non hazardous building debris.

5.0 Conclusions

Based on the laboratory results, current regulatory guidelines, and the judgment of Shaw, the following conclusions are offered.

- Of the samples collected, only the roof of the main office buildings was found to contain Chrysotile asbestos at a concentration of 3%. As a result, prior to demolition, Shaw recommends that the roofing materials be removed by a certified asbestos abatement contractor using standard asbestos precautions. It will also be necessary to notify the Kern County Air Pollution District 10 days in advance of any intended demolition.

- Laboratory analysis of the paint used on the main office building indicated that it was non lead based paint with only a trace of lead. The paint was in good condition and it is anticipated that standard precautions for worker protection will be sufficient.

- Laboratory analysis demonstrated that the paint samples collected from the warehouse are lead based. As a result, additional worker health and safety precautions and waste disposal procedures for lead are necessary when working on the building structures.

6.0 References

Caltrans (California Department of Transportation), 2005, Contract No. 06A0752, Task Order No. 29, dated December 23, 2005.

Shaw Environmental, Inc. (Shaw), 2006a, Work plan, investigation for asbestos containing material and lead based paint, State Route 33, Taft Maintenance Station, Kern County, California: dated January 30, 2006.

Shaw Environmental, Inc. (Shaw), 2006b, Health and safety plan, asbestos containing material and lead based paint, State Route 33, Taft Maintenance Station, Kern County, California: dated January 30, 2006.

Table 1

Summary of ACM and LBP Analytical Results
Taft Maintenance Station
Kern County, California
Task Order No. 29

Sample Number	Location	Material	Asbestos Concentration	Lead Concentration (% wt)	Lead Concentration (ppm)
CT # 1	Roof	Black Felt	3% Chrysotile	--	--
CT # 2	Exterior building wall	Stucco	ND	--	--
CT # 3	Exterior building wall	Paint	--	<0.006	6.22
CT # 4	Interior ceiling	Sheet rock	ND	--	--
CT # 5	Interior ceiling	Acoustical tile	ND	--	--
CT # 6	Interior ceiling	Mastic	ND	--	--
CT # 7	Interior floor	12 x 12 tile	ND	--	--
CT # 8	Warehouse window	Sealant	ND	--	--
CT # 9	Loading ramp	Cement	ND	--	
CT # 10	Warehouse dock	Silver paint	--	0.2	2,160
CT # 11	Warehouse entrance door	Paint	--	0.2	2,320

Notes:
ACM = asbestos containing material
LBP = lead based paint
-- = not analyzed
ND = not detected
% wt. = percent weight
0.01% = 100 parts per million (ppm)

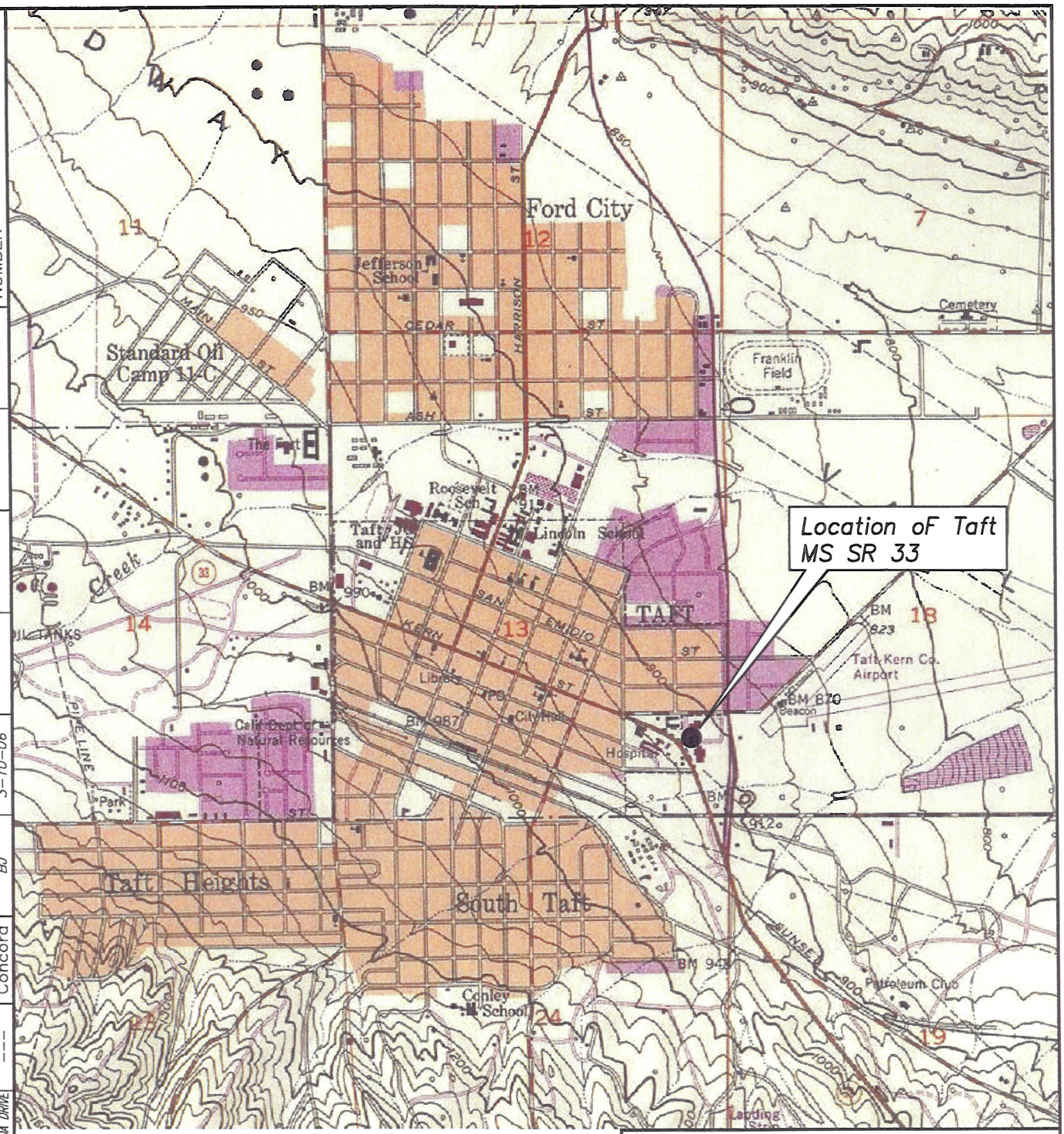

REFERENCE:
TOPO! 2001 NATIONAL GEOGRAPHIC HOLDINGS

SCALE

0 600m (1968 ft) 1200m (3936ft)

Shaw® Shaw Environmental, Inc.

CALTRANS
SR 33, TAFT MAINTENANCE STATION
KERN COUNTY, CA
TASK ORDER #29

FIGURE 1

SITE VICINITY MAP

DRAWING NUMBER	APPROVED BY	CHECKED BY	DRAWN BY	OFFICE	X-REF	IMAGE
119603-A1			BJ 3-10-06	Concord	---	ARBOLEDA DRIVE

Appendix A
Photographs

Shaw Environmental, Inc.

Photographic Documentation

Client: Caltrans
Site: Taft Maintenance Yard, Taft, CA

Prepared by: Shaw E & I.
Photographer: R. Von Burg
Photograph Date: February 2, 2006

Photograph No 1.

Description:
Office interior with paneled walls and fluorescent lighting.

Photograph No 2.

Description:
Unpainted steel shed and gasoline storage house.

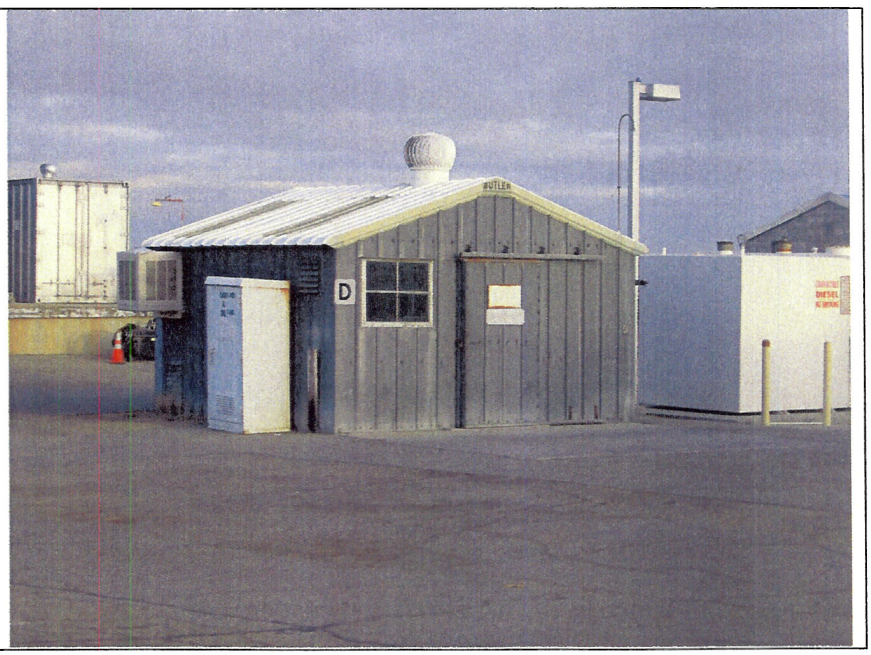

Shaw Environmental, Inc.

Photographic Documentation

Client: Caltrans
Site: Taft Maintenance Yard, Taft, CA

Prepared by: Shaw E & I.
Photographer: R. Von Burg
Photograph Date: February 2, 2006

Photograph No 3.

Description:
Unpainted steel warehouse.

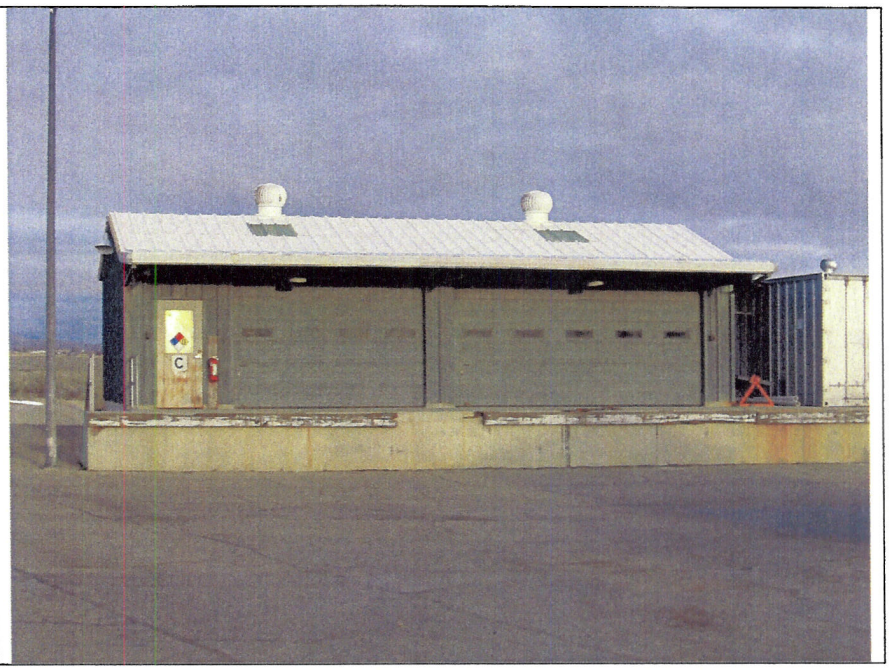

Photograph No 4.

Description:
Main office building with stucco walls and a tar and gravel roof.

Shaw Environmental, Inc.

Photographic Documentation

Client: Caltrans
Site: Taft Maintenance Yard, Taft, CA

Prepared by: Shaw E & I.
Photographer: R. Von Burg
Photograph Date: February 2, 2006

Photograph No 5.

Description:
Tar and gravel roof on main office building..

Photograph No 6.

Description:
Ceiling of main office showing sheet rock construction and glue on ceiling tiles.

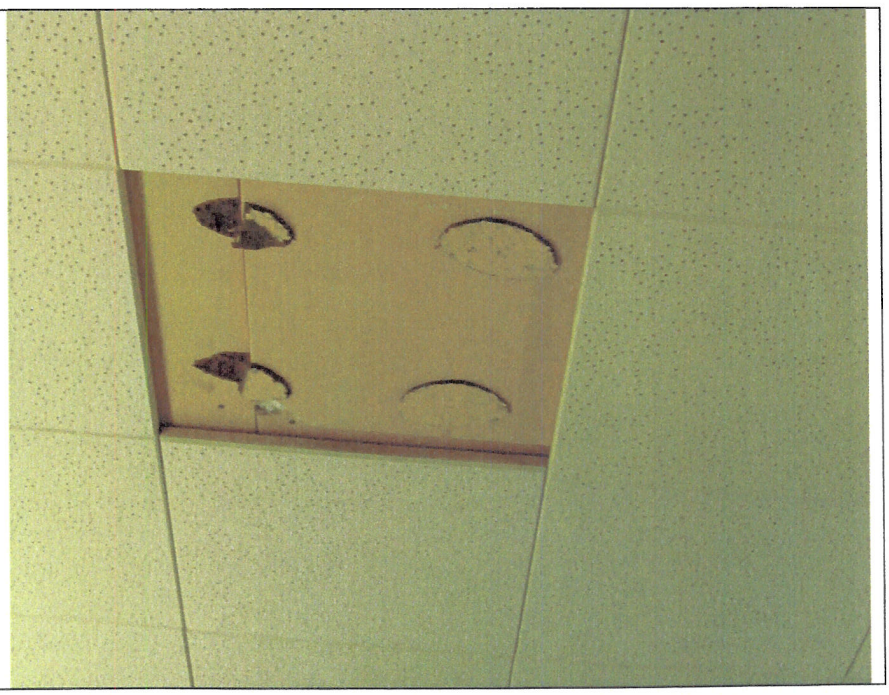

Shaw Environmental, Inc.

Photographic Documentation

Client: Caltrans
Site: Taft Maintenance Yard, Taft, CA

Prepared by: Shaw E & I.
Photographer: R. Von Burg
Photograph Date: February 2, 2006

Photograph No 7.

Description:
Interior of steel gasoline shed showing absence of any insulation..

Photograph No 8.

Description:
Back section of gasoline shed showing ice machine and absence of insulation.

Shaw Environmental, Inc.

Photographic Documentation

Client: Caltrans
Site: Taft Maintenance Yard, Taft, CA

Prepared by: Shaw E & I.
Photographer: R. Von Burg
Photograph Date: February 2, 2006

Photograph No 9.

Description:
Unpainted steel garage doors to warehouse.

Photograph No 10.

Description:
Typical storage supplies in warehouse. Lighting is incandescent.

Appendix B
Sampling Procedures

Appendix B
Sampling Procedures

The procedures that will be used for the soil borings and soil sample collection are presented below.

LBP Sample Collection

- A visual survey was conducted to document areas of chipped or peeling paint from suspect material of identified structures. Paint samples were collected from areas of chipped or peeling paint. Samples will be collected from all discrete layers of paint, if possible.
- LBP samples were collected by a California Registered Lead Inspector/Monitor.
- LBP samples were shipped to a California-certified analytical laboratory via overnight courier.
- All waste produced by sampling was removed and disposed of in a manner consistent with applicable state, federal, and local laws, rules and regulations.

ACM Sample Collection

- A visual field inspection was conducted to locate and document the existence and extent of suspected ACM.
- ACM samples were collected by a Cal-DOSH Certified Asbestos Consultant.
- Samples were collected using methods to control fiber release during sampling.
- Surfaces of friable or non-friable ACM that are damaged by the sampling procedures were sealed after sampling.
- All waste produced by sampling was removed and disposed of in a manner consistent with applicable state, federal, and local laws, rules and regulations.
- ACM samples were shipped to a California-certified analytical laboratory via overnight courier.

Sample Retention and Analysis

- Chain-of-custody procedures, including the use of chain-of-custody forms, were used to document sample handling and transport from collection to delivery to the analytical laboratory.
- The samples were placed in insulated ice chests in the custody of a Shaw employee. The samples were shipped to the laboratory via an overnight courier.

- Laboratory quality assurance/quality control procedures are summarized below:

  - Method Blank Frequency = one per 10 samples
  - Matrix Spike/Matrix Spike Duplicate = one per 10 samples
  - Laboratory Control Sample/Laboratory Control Sample Duplicate = one per 10 samples

Appendix C
Laboratory Analytical Reports and Chain-of-Custody Forms

LA Testing
159 Pasadena Avenue, South Pasadena, CA 91030
Phone: (323) 254-9960 Fax: (323) 254-9982 Email: pasadenalab@latesting.com

Attn: **Rudolph Von Burg**
Shaw Environmental & Infrastructure
4005 Port Chicago Highway
Concord, CA 94520

Fax: (925) 288-0888 Phone: (925) 288-2283
Project: **Taft Maintenance Yard**

Customer ID: 32EMCO50
Customer PO:
Received: 02/07/06 8:30 AM
LA Testing Order: 320601487

LA Testing Proj:
Analysis Date: 2/9/2006
Report Date: 2/13/2006

Asbestos Analysis of Bulk Materials via EPA 600/R-93/116 Method using Polarized Light Microscopy

Sample	Location	Appearance	Non-Asbestos %	Fibrous	Non-Asbestos %	Non-Fibrous	Asbestos % Type
CT-1 *320601487-0001*	Roofing felt	Black Fibrous Heterogeneous	10%	Glass	87%	Non-fibrous (other)	**3% Chrysotile**
CT-2 *320601487-0002*	Stucco	Beige/Green Non-Fibrous Heterogeneous			100%	Matrix	**None Detected**
CT-4 *320601487-0003*	Sheetrock	Brown/White Fibrous Heterogeneous	20%	Cellulose	80%	Matrix	**None Detected**
CT-5 *320601487-0004*	Acoustical Tile	Beige/Brown Fibrous Heterogeneous	90%	Cellulose	10%	Non-fibrous (other)	**None Detected**
CT-6 *320601487-0005*	Acoustical Tile Mastic	Brown Non-Fibrous Homogeneous			100%	Non-fibrous (other)	**None Detected**
CT-7 *320601487-0006*	Floor Tile 12x12	Tan Non-Fibrous Homogeneous			100%	Matrix	**None Detected**
CT-8 *320601487-0007*	Sec Can+Window Warehouse	Brown Fibrous Homogeneous	60%	Synthetic	40%	Non-fibrous (other)	**None Detected**
CT-9 *320601487-0008*	Cement Loading Ramp	Gray Non-Fibrous Homogeneous			100%	Matrix	**None Detected**

Analyst(s)

Duong Kieu-anh (8)

or other approved signatory

Due to magnification limitations inherent in PLM, asbestos fibers in dimensions below the resolution capability of PLM may not be detected. Samples reported as <1% or none detected may require additional testing by TEM to confirm asbestos quantities. The above test report relates only to the items tested and may not be reproduced in any form without the express written approval of EMSL Analytical, Inc. EMSL's liability is limited to the cost of analysis. EMSL bears no responsibility for sample collection activities or analytical method limitations. Interpretation and use of test results are the responsibility of the client.
Analysis performed by LA Testing (NVLAP #200232-0)

THIS IS THE LAST PAGE OF THE REPORT.

K E L L C O

CHAIN OF CUSTODY & SAMPLE SUBMITTAL FORM

CLIENT: SHAW E&I, 4005 PORT CHICAGO HWY, CONCORD CA

JOBSITE: Taft Maintenance Yard.

KELLCO Job #:

LAB LOGIN:

Collected By: R. VON BURG

Collection Date:

TYPE OF ANALYSIS: PLM ✓ LEAD ___ TEM Yamate II ___ TEM AHERA ___ OTHER ___

RESULTS NEEDED BY ___/___/___ ___ am pm

Samples Received: ___ # Samples Analyzed: ___ Analyze to First Positive: YES ___ NO ___

Report Results To: R. VON BURG PHONE #: 925-288-2366 FAX #:

EMAIL: RUDOLPH.VONBURG@SHAWGRP.COM

Reports Also To: PHONE #: FAX #:

EMAIL:

Notes & Comments: STD TAT.

LAB LOGIN#	FIELD #	LOCATION (bldg, rm #, area)	COLOR	MATERIAL or SUBSTRATE (ft w/size, mastic, tjc, etc.)	Notes: like condition, damage, quantity, inside what, underneath what, direction in building (NSEW), etc.
	✓ CT #1	Roofing felt	- office building		
	✓ CT 2	Stucco	office building		
	CT 3	Stucco	office building		- Lead Analysis
	✓ CT 4	Sheet rock.			
	✓ CT 5	Acoustical Tile			
	✓ CT 6	Acoustical Tile mastic			
	✓ CT 7	Floor Tile 12x12.			
	✓ CT 8	~~Co~~ Sealant window warehouse			
	✓ CT 9	Cement leveling samp			
	CT 10	Silver paint warehouse			Lead Analysis.
	CT 11	Paint from door.			Lead Analysis.

Samples Accepted For Analysis By LA Testing

RELEASED BY	DATE	TIME	RECEIVED BY	DATE	TIME
R. Von Burg	2/6/06	12:10	[illegible]	2/6/06	9:10 ups

320601487

Sparger Technology, Inc.
Environmental Laboratories

Analytical Laboratory Division

Mobile Laboratory Division

Scientific Division

EPA Method 6010
Lead

Attention:	Rudolph Von Burg Shaw E & I 4005 Port Chicago Hwy Concord, CA 95420	Date Sampled: Date Received: Date Analyzed: Invoice#:	Feb 2, 2006 Feb 6, 2006 Feb 16, 2006 17251
Project #:	Kellco	Project Name:	Taft Maintenance Yard
Matrix:	Paint Chips	Dilution: 1:	1

Lab ID	Client ID	Concentration	Reporting Limit	Units
17251001	CT #3	6.22	1.0	mg/kg
17251002	CT #10	2160	1.0	mg/kg
17251003	CT #11	2320	1.0	mg/kg

ppm= parts per million = mg/kg = milligram per kilogram

ND = Not Detected. Compound(s) may be present at concentrations below the detection limit.

R. L. James, Principal Chemist

Feb 16, 2006
Date Reported

SPARGER TECHNOLOGY ANALYTICAL LABORATORY, INC. IS CERTIFIED BY THE STATE OF CALIFORNIA DEPARTMENT OF HEALTH SERVICES AS A HAZARDOUS WASTE TESTING LABORATORY

(Certification No. 1614)

3738 Bradview Drive • Sacramento, California - 95827 • (916) 369-7688 • Fax (916) 369-7689

Sparger Technology, Inc.
Environmental Laboratories

Analytical Laboratory Division

Mobile Laboratory Division

Scientific Division

EPA Method 6010B
Lead
Method Blank

Attention:	Rudolph Von Burg Shaw E & I 4005 Port Chicago Hwy Concord, CA 95420	Date Sampled: Date Received: Date Analyzed: Invoice#:	Feb 3, 2006 Feb 6, 2006 Feb 16, 2006 17251
Project #:	Kellco	Project Name:	Taft Maintenance Yard
Client ID:	Method Blank	LAB ID:	QC Batch
Matrix:	Paint Chips	Dilution: 1:	1

Name	Concentration	Reporting Limit	Units
Lead (Pb)	ND	1.0	mg/kg

ppm= parts per million = mg/kg = milligram per kilogram

ND = Not Detected. Compound(s) may be present at concentrations below the detection limit.

R. L. James, Principal Chemist

Feb 16, 2006
Date Reported

SPARGER TECHNOLOGY ANALYTICAL LABORATORY, INC. IS CERTIFIED BY THE STATE OF CALIFORNIA DEPARTMENT OF HEALTH SERVICES AS A HAZARDOUS WASTE TESTING LABORATORY

(Certification No. 1614)

3738 Bradview Drive • Sacramento, California - 95827 • (916) 369-7688 • Fax (916) 369-7689

Sparger Technology, Inc.
Environmental Laboratories

Analytical Laboratory Division

Mobile Laboratory Division

Scientific Division

EPA Method 6010B
Lead
LCS / LCSD Recoveries

Attention:	Rudolph Von Burg Shaw E & I 4005 Port Chicago Hwy Concord, CA 95420	Date Sampled: Date Received: Date Analyzed: Invoice#:	Feb 3, 2006 Feb 6, 2006 Feb 16, 2006 17251
Project #:	Kellco	Project Name:	Taft Maintenance Yard
Client ID:	LCS/LCSD	LAB ID:	
Matrix:	Paint Chips	Dilution: 1:	1

Units : (mg/kg)

Element	Spike Conc.	LCS	% Recovery	Duplicate LCS	Duplicate % Recovery	% RPD
Lead (Pb)	250.0	252	100.8%	255	102.0%	1%

ppm= parts per million = mg/kg = milligram per kilogram

ND = Not Detected. Compound(s) may be present at concentrations below the detection limit.

R. L. James, Principal Chemist

Feb 16, 2006
Date Reported

SPARGER TECHNOLOGY ANALYTICAL LABORATORY, INC. IS CERTIFIED BY THE STATE OF CALIFORNIA DEPARTMENT OF HEALTH SERVICES AS A HAZARDOUS WASTE TESTING LABORATORY
(Certification No. 1614)

3738 Bradview Drive • Sacramento, California - 95827 • (916) 369-7688 • Fax (916) 369-7689

Sparger Technology, Inc.
Environmental Laboratories

Analytical Laboratory Division

Mobile Laboratory Division

Scientific Division

EPA Method 6010B
Lead
MS/MSD Recoveries

Attention:	Rudolph Von Burg Shaw E & I 4005 Port Chicago Hwy Concord, CA 95420	Date Sampled: Date Received: Date Analyzed: Invoice#:	Feb 3, 2006 Feb 6, 2006 Feb 16, 2006 17251
Project #:	Kellco	Project Name:	Taft Maintenance Yard
Client ID:	MS/MSD	LAB ID:	
Matrix:	Paint Chips	Dilution: 1:	1

Units : (mg/kg)

Element	Sample Conc.	Spike Conc.	MS	% Recovery	Duplicate MSD	Duplicate % Recovery	% RPD
Lead (Pb)	6.22	250.0	240	93.5%	240	93.5%	0%

ppm= parts per million = mg/Kg = milligram per kilogram

ND = Not Detected. Compound(s) may be present at concentrations below the detection limit.

Note: If sample concentration is higher than spike concentration, recoveries may be either high or low.

Note: If sample concentration is lower than spike concentration, recoveries may be either high or low due to matrix interference.

R. L. James, Principal Chemist

Feb 16, 2006
Date Reported

SPARGER TECHNOLOGY ANALYTICAL LABORATORY, INC. IS CERTIFIED BY THE STATE OF CALIFORNIA
DEPARTMENT OF HEALTH SERVICES AS A HAZARDOUS WASTE TESTING LABORATORY
(Certification No. 1614)

3738 Bradview Drive • Sacramento, California 95827 • (916) 369-7688 • Fax (916) 369-7689

B6C IN EXCEL

K E L L C O

CHAIN OF CUSTODY & SAMPLE SUBMITTAL FORM

CLIENT: SHAW E&I
4005 PORT CHICAGO HWY
CONCORD CA.

JOBSITE: Taft Maintenance Yard.

KELLCO Job #:

LAB LOGIN: 17251

Collected By: R. VON BURG

Collection Date:

TYPE OF ANALYSIS: PLM X LEAD ____ TEM Yamate II ____ TEM AHERA ____ OTHER ____

RESULTS NEEDED BY ___/___/___ ____ am pm

Samples Received: ____ # Samples Analyzed: ____ Analyze to First Positive: YES ___ NO ___

Report Results To: R. VON BURG PHONE #: 925-288-2366 FAX #:
EMAIL: RUDOLPH.VONBURG@SHAWGRP.COM

Reports Also To: PHONE #: FAX #:
EMAIL:

Notes & Comments: STD TAT.

LAB LOGIN#	FIELD #	LOCATION (bldg, rm #, area)	COLOR	MATERIAL or SUBSTRATE (ft w/size, mastic, tjc, etc.)	Notes: like condition, damage, quantity, inside what, underneath what, direction in building (NSEW), etc.
	CT #1	Roofing felt	- office building		
	CT 2	Stucco	office building		
(1) *	CT 3	Stucco	office building		- Lead Analysis.
	CT 4	Sheet rock.			
	CT 5	Acoustical Tile			
	CT 6	Acoustical Tile mastic			
	CT 7	Floor Tile 12x12.			
	CT 8	~~Com~~ Sealant window	warehouse		
	CT 9	Cement flooring	ramp		
(2) *	CT 10	Silver paint	warehouse		Lead Analysis.
(3) *	CT 11	Paint from Door.			Lead Analysis.

RELEASED BY	DATE	TIME	RECEIVED BY	DATE	TIME
R. Von Burg	2/3/06	10:AM	[illegible]	2/6/06	9:40
UPS	2/6/06	9:00 AM			

Supplemental Site Investigation Report

For

Investigation for Asbestos Containing Materials and Lead Based Paint

On

State Route 33, Taft Maintenance Station
Kern County, California

This will serve as a supplement to the Site Investigation Report, dated March 9, 2006, entitled Investigation For Asbestos Containing Material and Lead Based Paint Investigation. The investigation was conducted at the Taft Maintenance Station on State Route 33 in Kern County, California. The original investigation and accompanying report were conducted by Shaw Environmental, Inc. pursuant to Task Order #29 for Contract 06A0752 with Caltrans.

The purpose of this supplemental report is to designate the specific quantities of asbestos containing material (ACM) and lead based paint (LBP) that must be managed as a hazardous waste upon and during removal.

Hazardous concentration of ACM is present in the roofing of the main office building. The specific quantity that will be removed and will require management as a hazardous waste is 143.10 m^2.

Lead based paint is present in hazardous concentrations on the painted surface of the warehouse entrance door and in the silver paint found on the warehouse dock. The specific quantity that will be removed and will require management as a hazardous waste is 6.2 m^2.

Christopher Shawn Ogletree
Task Order Manager

4/20/09
Date

Gerry White, Chief
Central Region Hazardous Waste Branch

4/20/09
Date

Judy Aguilar, Project Manager

4/20/09
Date