Dist	COUNTY	ROUTE	POST MILES TOTAL PROJECT	SHEET No.	TOTAL SHEETS
06	Kin	198	R14.7/R18.0	1	80

STATE OF CALIFORNIA

DEPARTMENT OF TRANSPORTATION

ACNH-P198(060)E

PROJECT PLANS FOR CONSTRUCTION ON

STATE HIGHWAY

IN KINGS COUNTY

IN AND NEAR HANFORD AT VARIOUS LOCATIONS FROM 14TH AVENUE UNDERCROSSING TO 11TH AVENUE UNDERCROSSING

TO BE SUPPLEMENTED BY STANDARD PLANS DATED 2010

INDEX OF PLANS

SHEET No.	DESCRIPTION
1	TITLE AND LOCATION MAP
2-3	TYPICAL CROSS SECTIONS
4-12	LAYOUTS
13-15	PROFILE AND SUPERELEVATION DIAGRAM
16-19	CONSTRUCTION DETAILS
20	CONSTRUCTION AREA SIGNS
21-29	STAGE CONSTRUCTION PLANS
30-46	TRAFFIC HANDLING PLANS AND QUANTITIES
47-50	PAVEMENT DELINEATION PLANS AND QUANTITIES
51-53	SUMMARY OF QUANTITIES
54	EROSION CONTROL LEGEND AND QUANTITIES
55-57	EROSION CONTROL PLANS
58-61	ELECTRICAL PLANS AND QUANTITIES
62-72	REVISED STANDARD PLANS

STRUCTURE PLANS

73-80	HANFORD ARMONA DECK REHABILITATION

THE STANDARD PLANS LIST APPLICABLE TO THIS CONTRACT IS INCLUDED IN THE NOTICE TO BIDDERS AND SPECIAL PROVISIONS BOOK.

LOCATION MAP

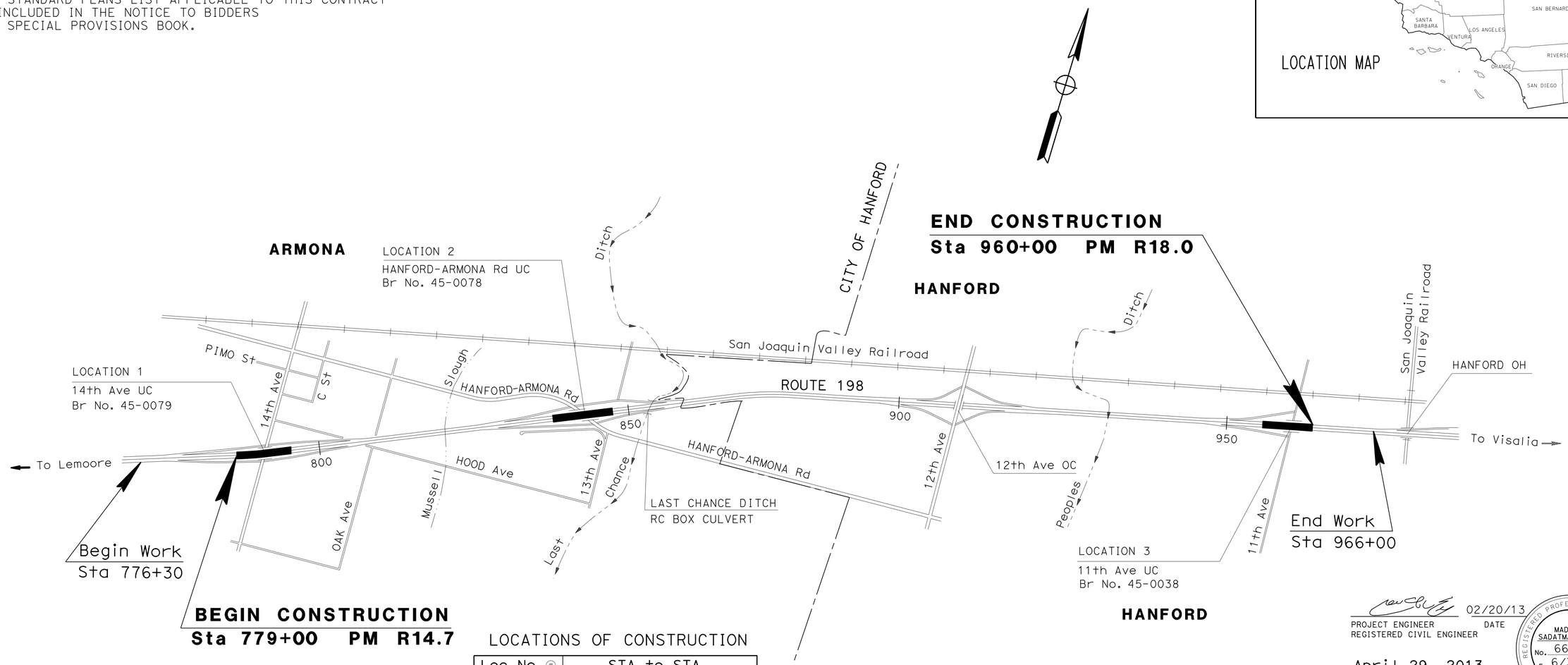

LOCATIONS OF CONSTRUCTION

Loc No. (#)	STA to STA
1	779+00.00 to 802+00.00
2	831+00.00 to 854+00.00
3	946+00.00 to 966+00.00

NO SCALE

THE CONTRACTOR SHALL POSSESS THE CLASS (OR CLASSES) OF LICENSE AS SPECIFIED IN THE "NOTICE TO BIDDERS."

02/20/13
PROJECT ENGINEER DATE
REGISTERED CIVIL ENGINEER

April 29, 2013
PLANS APPROVAL DATE

REGISTERED PROFESSIONAL ENGINEER MADJID SADATMANSOORI No. 66244 Exp. 6/30/14 CIVIL STATE OF CALIFORNIA

THE STATE OF CALIFORNIA OR ITS OFFICERS OR AGENTS SHALL NOT BE RESPONSIBLE FOR THE ACCURACY OR COMPLETENESS OF SCANNED COPIES OF THIS PLAN SHEET.

CONTRACT No.	06-462204
PROJECT ID	0600000457

PROJECT MANAGER Jim Heinen
DESIGN ENGINEER Sanku G Mohan

LAST REVISION 02-20-13
DATE PLOTTED => 11-JUN-2013
TIME PLOTTED => 14:34

Dist	COUNTY	ROUTE	POST MILES TOTAL PROJECT	SHEET No.	TOTAL SHEETS
06	Kin	198	R14.7/R18.0	2	80

REGISTERED CIVIL ENGINEER 02/20/13 DATE

04-29-13
PLANS APPROVAL DATE

REGISTERED PROFESSIONAL ENGINEER MADJID SADATMANSOORI No. 66244 Exp. 6/30/14 CIVIL STATE OF CALIFORNIA

THE STATE OF CALIFORNIA OR ITS OFFICERS OR AGENTS SHALL NOT BE RESPONSIBLE FOR THE ACCURACY OR COMPLETENESS OF SCANNED COPIES OF THIS PLAN SHEET.

NOTES:

1. DIMENSIONS OF THE PAVEMENT STRUCTURES (STRUCTURAL SECTIONS) ARE SUBJECT TO TOLERANCES SPECIFIED IN THE STANDARD SPECIFICATIONS.
2. FOR LOCATION OF SAWCUT/CONFORM LINES AND DIKE TYPE, SEE LAYOUT SHEETS.
3. FOR BRIDGE, APPROACH SLAB AND CONCRETE BARRIER (TYPE 60A Mod) DETAILS, SEE STRUCTURAL PLAN SHEETS.
4. FOR ACCURATE RIGHT OF WAY DATA, CONTACT RIGHT OF WAY ENGINEERING AT THE DISTRICT OFFICE.
5. SUPERELEVATION AS SHOWN OR AS DIRECTED BY THE ENGINEER.

ABBREVIATIONS:

S/C SAWCUT

AITS ALTERNATIVE INLINE TERMINAL SYSTEM

DESIGN DESIGNATION

ADT 2012	35,500	DHV 2022	4,600
ADT 2032	59,500	DHV 2032	6,000
		D	65%
		T	4%

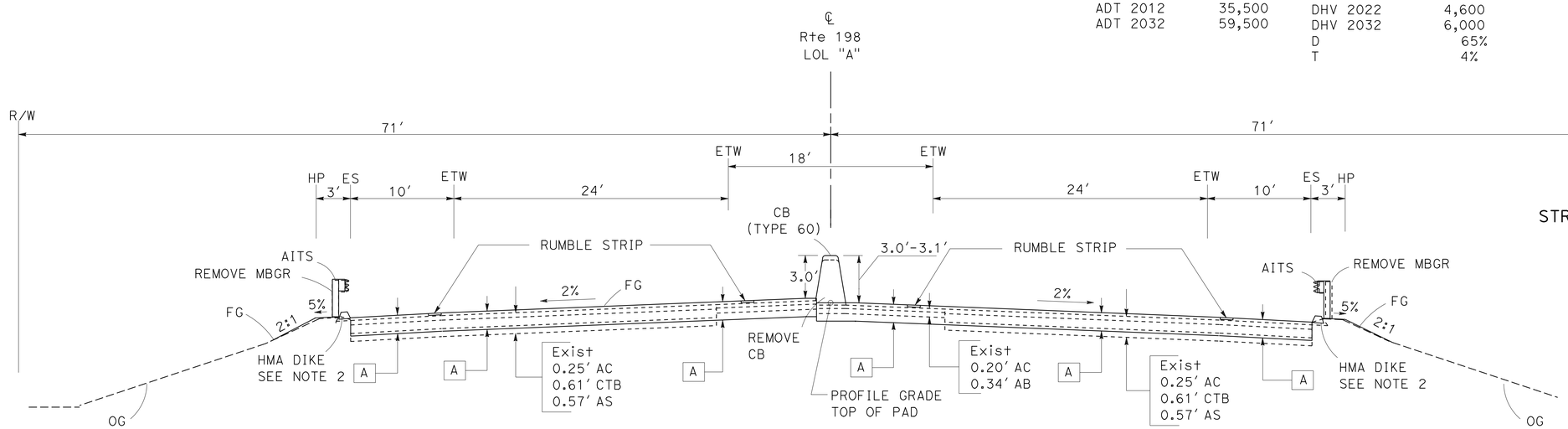

ROUTE 198

LOCATION 2

Sta 843+41.59 TO Sta 845+05.40

Sta 839+85.00 TO Sta 841+50.27

ROUTE 198

LOCATION 3

Sta 957+54.88 TO Sta 959+14.16

Sta 954+30.54 TO Sta 955+87.43

STRUCTURAL SECTION NOTES:

A — 1.15′ HMA (TYPE A)

B — 0.80′ HMA (TYPE A)

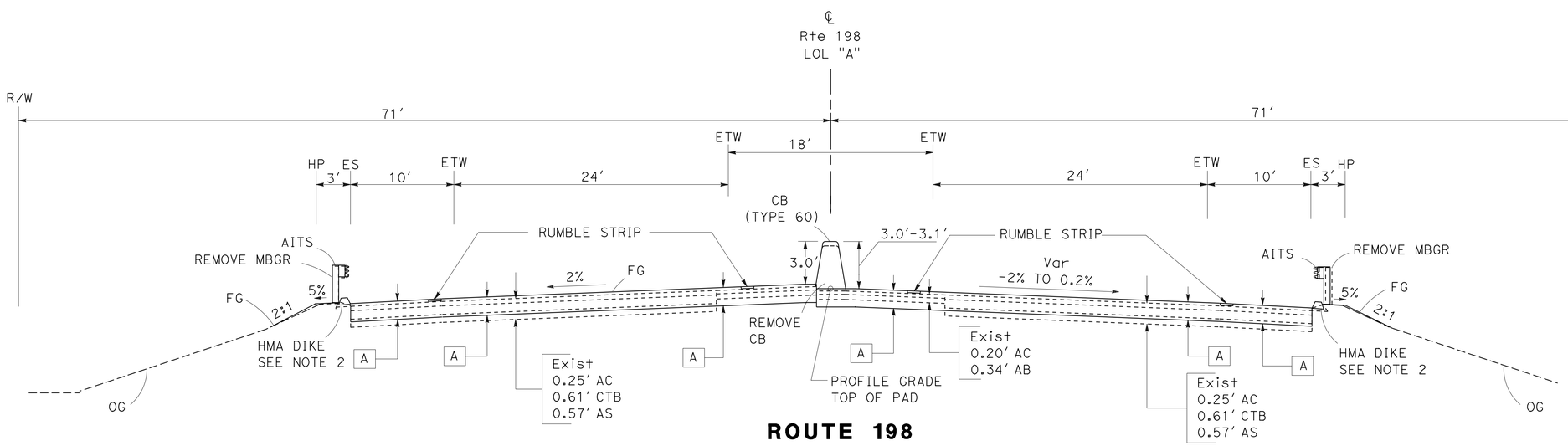

ROUTE 198

LOCATION 1

Sta 791+35.57 TO Sta 792+96.50

Sta 788+22.00 TO Sta 789+82.20

TYPICAL CROSS SECTIONS

NO SCALE

X-1

REVISED BY | DATE REVISED

MADJID SADATMANSOORI | KEVIN T NGUYEN

CALCULATED-DESIGNED BY | CHECKED BY

FUNCTIONAL SUPERVISOR: SANKU G. MOHAN

STATE OF CALIFORNIA - DEPARTMENT OF TRANSPORTATION

Caltrans® DESIGN

LAST REVISION 04-29-13 | DATE PLOTTED => 11-JUN-2013 | TIME PLOTTED => 14:34

Dist	COUNTY	ROUTE	POST MILES TOTAL PROJECT	SHEET No.	TOTAL SHEETS
06	Kin	198	R14.7/R18.0	3	80

REGISTERED CIVIL ENGINEER 02/20/13 DATE

04-29-13
PLANS APPROVAL DATE

REGISTERED PROFESSIONAL ENGINEER MADJID SADATMANSOORI No. 66244 Exp. 6/30/14 CIVIL STATE OF CALIFORNIA

THE STATE OF CALIFORNIA OR ITS OFFICERS OR AGENTS SHALL NOT BE RESPONSIBLE FOR THE ACCURACY OR COMPLETENESS OF SCANNED COPIES OF THIS PLAN SHEET.

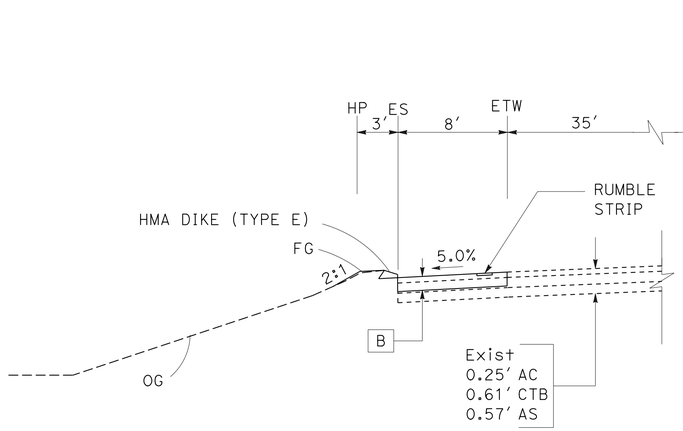

ROUTE 198
WB

LOCATION 3

Sta 959+14.16 TO Sta 966+00.00
Sta 949+00.00 TO Sta 954+30.54

LOCATION 2

Sta 845+05.40 TO Sta 854+00.00
Sta 834+50.00 TO Sta 839+85.00

LOCATION 1

Sta 792+96.50 TO Sta 802+00.00
Sta 782+00.00 TO Sta 788+22.00

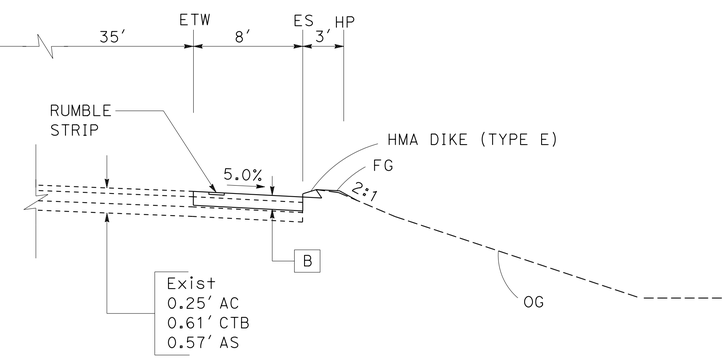

ROUTE 198
EB

LOCATION 3

Sta 959+14.16 TO Sta 964+50.00
Sta 946+00.00 TO Sta 954+30.54

LOCATION 2

Sta 845+05.40 TO Sta 854+50.00
Sta 831+00.00 TO Sta 839+85.00

LOCATION 1

Sta 792+96.50 TO Sta 797+50.00
Sta 779+00.00 TO Sta 788+22.00

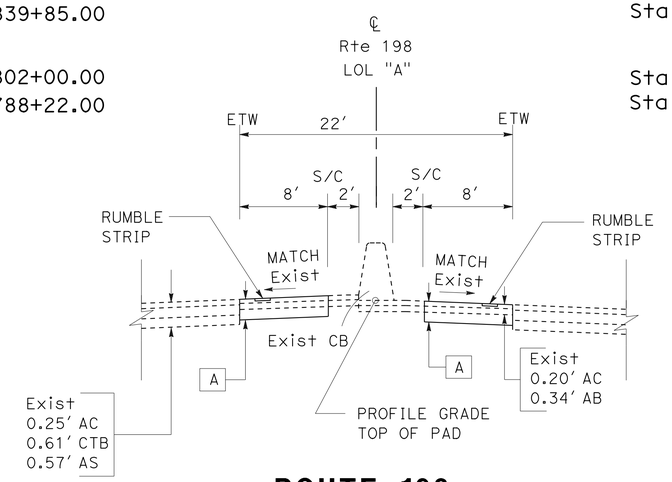

ROUTE 198

LOCATION 3

Sta 959+14.16 TO Sta 965+00.00
Sta 950+50.00 TO Sta 954+30.54

LOCATION 2

Sta 845+05.40 TO Sta 850+50.00
Sta 836+00.00 TO Sta 839+85.00

LOCATION 1

Sta 792+96.50 TO Sta 800+00.00
Sta 783+00.00 TO Sta 788+22.00

TYPICAL CROSS SECTIONS

NO SCALE

X-2

REVISED BY	DATE REVISED
MADJID SADATMANSOORI	KEVIN T NGUYEN
CALCULATED-DESIGNED BY	CHECKED BY
FUNCTIONAL SUPERVISOR	SANKU G. MOHAN

STATE OF CALIFORNIA - DEPARTMENT OF TRANSPORTATION
Caltrans® DESIGN

LAST REVISION 04-29-13 | DATE PLOTTED => 11-JUN-2013 | TIME PLOTTED => 14:34

Dist	COUNTY	ROUTE	POST MILES TOTAL PROJECT	SHEET No.	TOTAL SHEETS
06	Kin	198	R14.7/R18.0	4	80

REGISTERED CIVIL ENGINEER 02/20/13 DATE

04-29-13
PLANS APPROVAL DATE

REGISTERED PROFESSIONAL ENGINEER MADJID SADATMANSOORI No. 66244 Exp. 6/30/14 CIVIL STATE OF CALIFORNIA

THE STATE OF CALIFORNIA OR ITS OFFICERS OR AGENTS SHALL NOT BE RESPONSIBLE FOR THE ACCURACY OR COMPLETENESS OF SCANNED COPIES OF THIS PLAN SHEET.

NOTES:

1. FOR ACCURATE RIGHT OF WAY DATA, CONTACT RIGHT OF WAY ENGINEERING AT THE DISTRICT OFFICE.
2. UTILITY LOCATIONS ARE APPROXIMATE, AND HAVE NOT BEEN POSITIVELY LOCATED EXACT LOCATIONS TO BE DETERMINED BY THE ENGINEER IN THE FIELD.

ABBREVIATIONS:

PG&E	PACIFIC GAS & ELECTRIC COMPANY
AITS	ALTERNATIVE IN-LINE TERMINAL SYSTEM
TR	TRANSITION RAILING

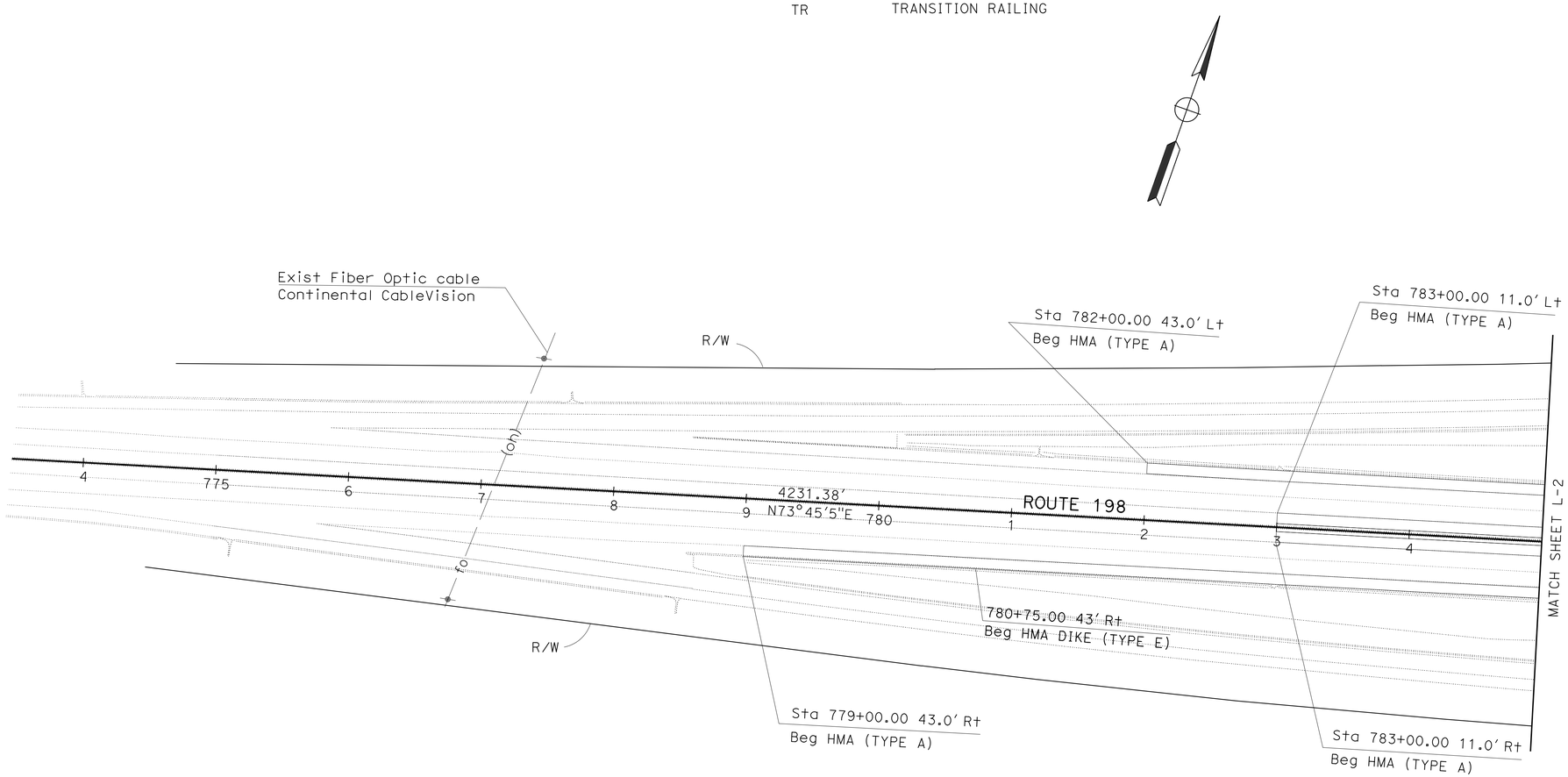

LAYOUT
(LOCATION 1)

SCALE: 1"=50'

L-1

STATE OF CALIFORNIA - DEPARTMENT OF TRANSPORTATION
Caltrans® **DESIGN**

FUNCTIONAL SUPERVISOR: SANKU G. MOHAN

CALCULATED-DESIGNED BY: MADJID SADATMANSOORI
CHECKED BY: KEVIN T NGUYEN

REVISED BY
DATE REVISED

LAST REVISION 04-29-13
DATE PLOTTED => 11-JUN-2013
TIME PLOTTED => 14:34

Dist	COUNTY	ROUTE	POST MILES TOTAL PROJECT	SHEET No.	TOTAL SHEETS
06	Kin	198	R14.7/R18.0	5	80

REGISTERED CIVIL ENGINEER 02/20/13 DATE

04-29-13
PLANS APPROVAL DATE

REGISTERED PROFESSIONAL ENGINEER MADJID SADATMANSOORI No. 66244 Exp. 6/30/14 CIVIL STATE OF CALIFORNIA

THE STATE OF CALIFORNIA OR ITS OFFICERS OR AGENTS SHALL NOT BE RESPONSIBLE FOR THE ACCURACY OR COMPLETENESS OF SCANNED COPIES OF THIS PLAN SHEET.

NOTES:

1. FOR ACCURATE RIGHT OF WAY DATA, CONTACT RIGHT OF WAY ENGINEERING AT THE DISTRICT OFFICE.
2. UTILITY LOCATIONS ARE APPROXIMATE, AND HAVE NOT BEEN POSITIVELY LOCATED EXACT LOCATIONS TO BE DETERMINED BY THE ENGINEER IN THE FIELD.

CURVE DATA

No.	R	Δ	T	L
1	6500.00′	4°38′29"	263.42′	526.75′

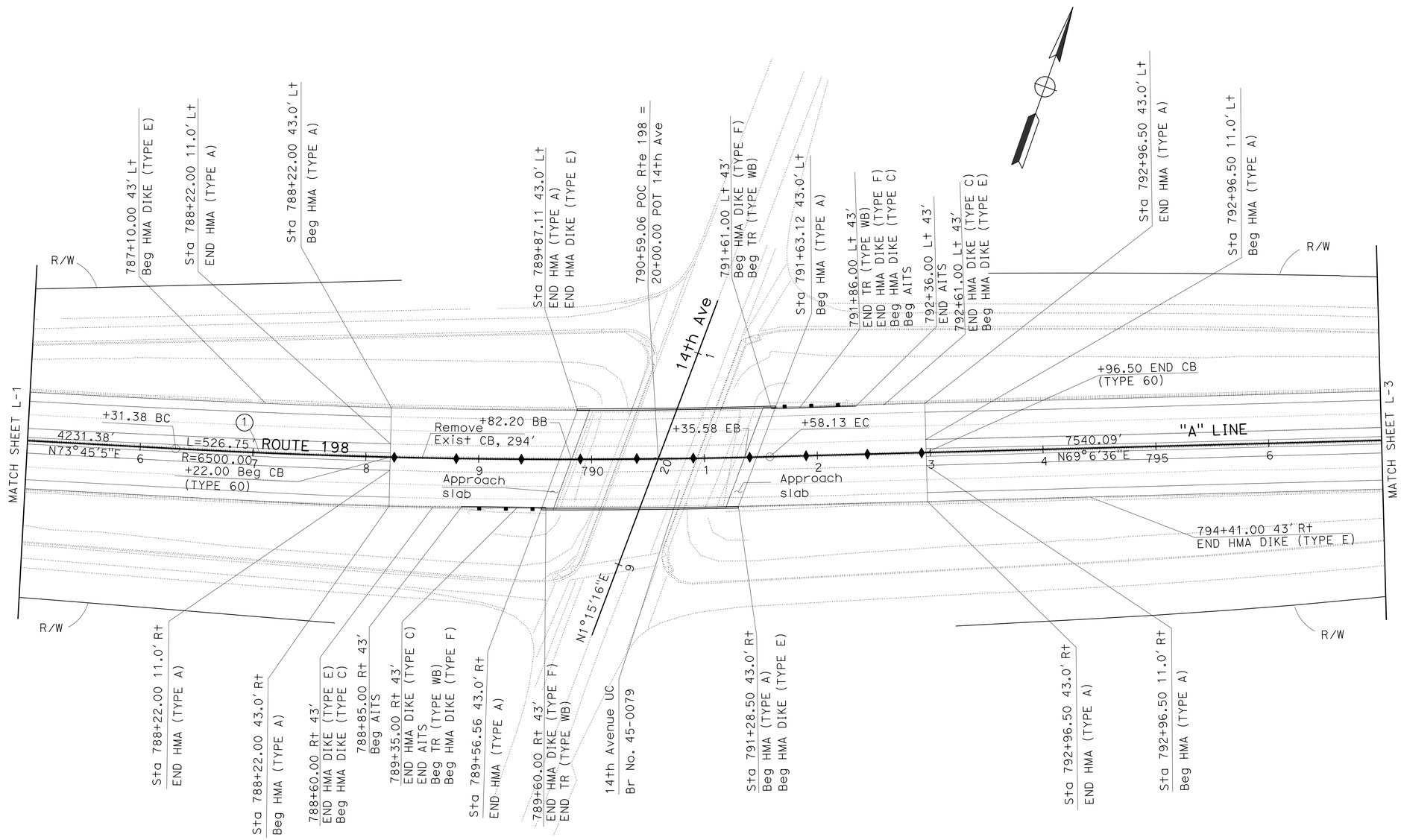

LAYOUT
(LOCATION 1)

SCALE: 1"=50′

L-2

STATE OF CALIFORNIA - DEPARTMENT OF TRANSPORTATION
Caltrans
DESIGN

FUNCTIONAL SUPERVISOR: SANKU G. MOHAN
CALCULATED-DESIGNED BY: MADJID SADATMANSOORI
CHECKED BY: KEVIN T NGUYEN
REVISED BY
DATE REVISED

LAST REVISION 04-29-13 | DATE PLOTTED => 11-JUN-2013 | TIME PLOTTED => 14:34

Dist	COUNTY	ROUTE	POST MILES TOTAL PROJECT	SHEET No.	TOTAL SHEETS
06	Kin	198	R14.7/R18.0	6	80

REGISTERED CIVIL ENGINEER DATE 02/20/13

04-29-13
PLANS APPROVAL DATE

REGISTERED PROFESSIONAL ENGINEER
MADJID SADATMANSOORI
No. 66244
Exp. 6/30/14
CIVIL
STATE OF CALIFORNIA

THE STATE OF CALIFORNIA OR ITS OFFICERS OR AGENTS SHALL NOT BE RESPONSIBLE FOR THE ACCURACY OR COMPLETENESS OF SCANNED COPIES OF THIS PLAN SHEET.

NOTES:

1. FOR ACCURATE RIGHT OF WAY DATA, CONTACT RIGHT OF WAY ENGINEERING AT THE DISTRICT OFFICE.
2. UTILITY LOCATIONS ARE APPROXIMATE, AND HAVE NOT BEEN POSITIVELY LOCATED EXACT LOCATIONS TO BE DETERMINED BY THE ENGINEER IN THE FIELD.

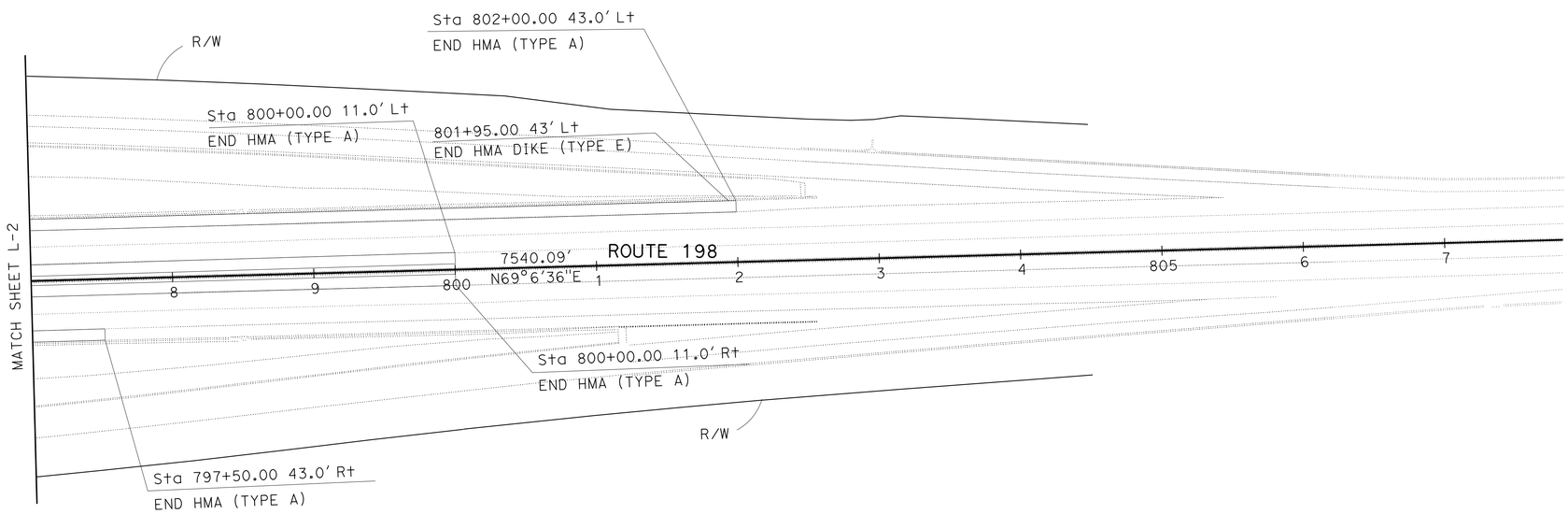

LAYOUT
(LOCATION 1)

SCALE: 1"=50'

L-3

REVISED BY	DATE REVISED

CALCULATED-DESIGNED BY: MADJID SADATMANSOORI
CHECKED BY: KEVIN T NGUYEN

FUNCTIONAL SUPERVISOR: SANKU G. MOHAN

STATE OF CALIFORNIA - DEPARTMENT OF TRANSPORTATION
Caltrans
DESIGN

LAST REVISION 04-29-13
DATE PLOTTED => 11-JUN-2013
TIME PLOTTED => 14:34

Dist	COUNTY	ROUTE	POST MILES TOTAL PROJECT	SHEET No.	TOTAL SHEETS
06	Kin	198	R14.7/R18.0	7	80

REGISTERED CIVIL ENGINEER 02/20/13 DATE

04-29-13
PLANS APPROVAL DATE

REGISTERED PROFESSIONAL ENGINEER MADJID SADATMANSOORI No. 66244 Exp. 6/30/14 CIVIL STATE OF CALIFORNIA

THE STATE OF CALIFORNIA OR ITS OFFICERS OR AGENTS SHALL NOT BE RESPONSIBLE FOR THE ACCURACY OR COMPLETENESS OF SCANNED COPIES OF THIS PLAN SHEET.

NOTES:

1. FOR ACCURATE RIGHT OF WAY DATA, CONTACT RIGHT OF WAY ENGINEERING AT THE DISTRICT OFFICE.
2. UTILITY LOCATIONS ARE APPROXIMATE, AND HAVE NOT BEEN POSITIVELY LOCATED EXACT LOCATIONS TO BE DETERMINED BY THE ENGINEER IN THE FIELD.

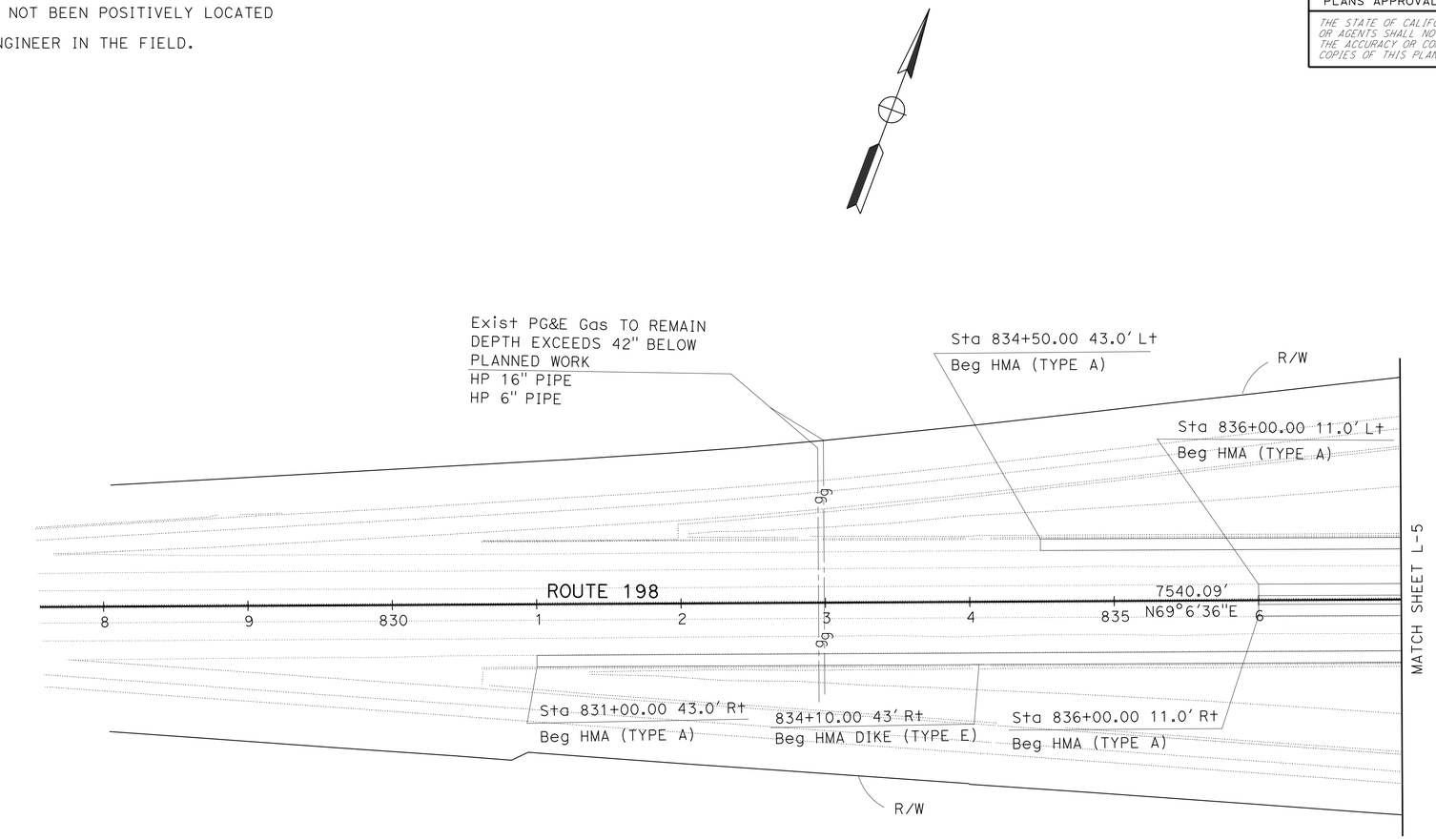

LAYOUT
(LOCATION 2)

SCALE: 1"=50'

L-4

STATE OF CALIFORNIA - DEPARTMENT OF TRANSPORTATION
Caltrans®
DESIGN

FUNCTIONAL SUPERVISOR: SANKU G. MOHAN
CALCULATED-DESIGNED BY: MADJID SADATMANSOORI
CHECKED BY: KEVIN T NGUYEN
REVISED BY
DATE REVISED

LAST REVISION 04-29-13
DATE PLOTTED => 11-JUN-2013
TIME PLOTTED => 14:34

Dist	COUNTY	ROUTE	POST MILES TOTAL PROJECT	SHEET No.	TOTAL SHEETS
06	Kin	198	R14.7/R18.0	8	80

REGISTERED CIVIL ENGINEER 02/20/13 DATE

04-29-13
PLANS APPROVAL DATE

REGISTERED PROFESSIONAL ENGINEER MADJID SADATMANSOORI No. 66244 Exp. 6/30/14 CIVIL STATE OF CALIFORNIA

THE STATE OF CALIFORNIA OR ITS OFFICERS OR AGENTS SHALL NOT BE RESPONSIBLE FOR THE ACCURACY OR COMPLETENESS OF SCANNED COPIES OF THIS PLAN SHEET.

NOTES:

1. FOR ACCURATE RIGHT OF WAY DATA, CONTACT RIGHT OF WAY ENGINEERING AT THE DISTRICT OFFICE.
2. UTILITY LOCATIONS ARE APPROXIMATE, AND HAVE NOT BEEN POSITIVELY LOCATED EXACT LOCATIONS TO BE DETERMINED BY THE ENGINEER IN THE FIELD.

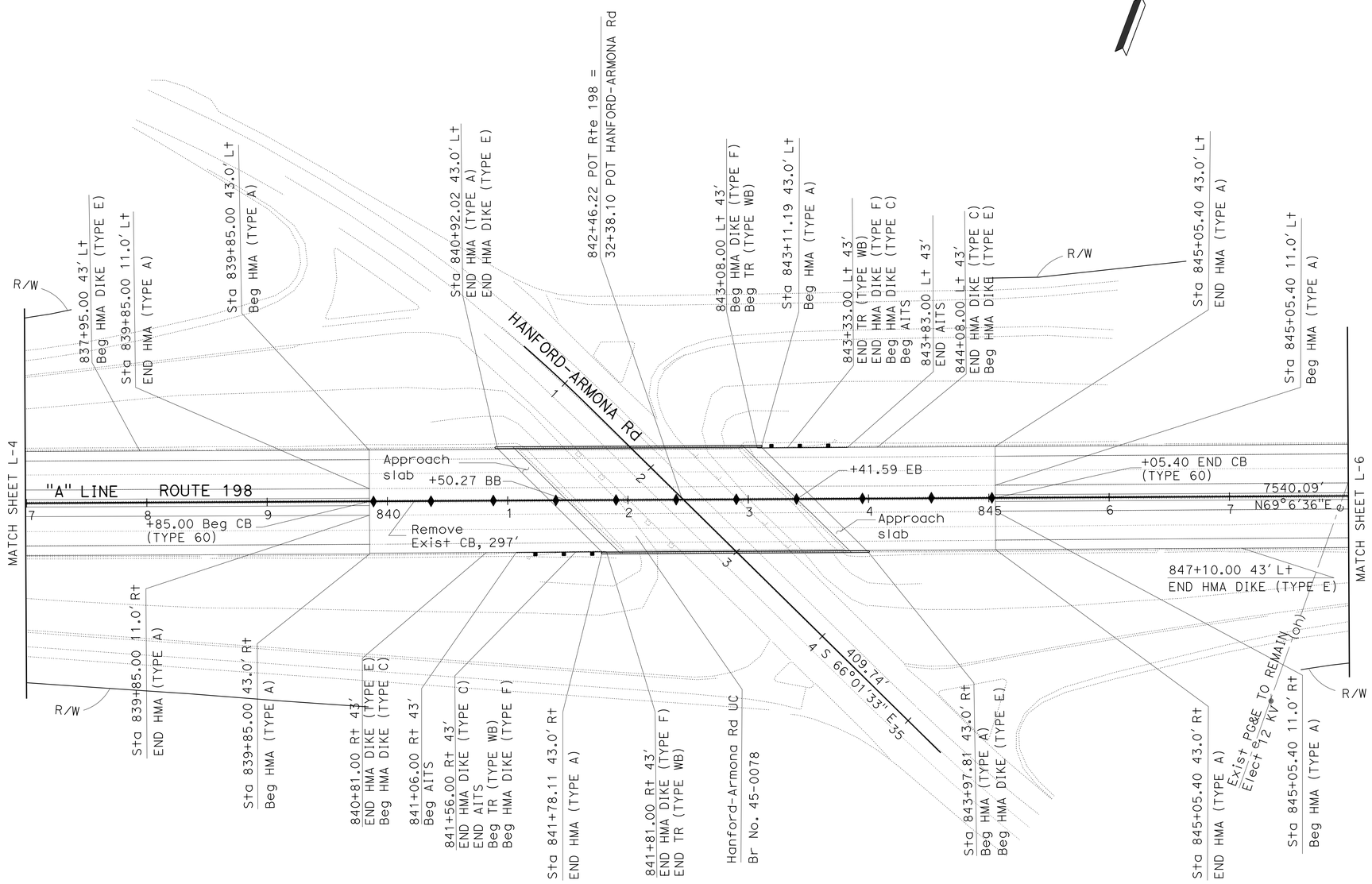

LAYOUT
(LOCATION 2)

SCALE: 1"=50'

L-5

STATE OF CALIFORNIA - DEPARTMENT OF TRANSPORTATION			
Caltrans® DESIGN	FUNCTIONAL SUPERVISOR: SANKU G. MOHAN	CALCULATED-DESIGNED BY: MADJID SADATMANSOORI	REVISED BY
		CHECKED BY: KEVIN T NGUYEN	DATE REVISED

LAST REVISION 04-29-13 | DATE PLOTTED => 11-JUN-2013 | TIME PLOTTED => 14:34

Dist	COUNTY	ROUTE	POST MILES TOTAL PROJECT	SHEET No.	TOTAL SHEETS
06	Kin	198	R14.7/R18.0	9	80

REGISTERED CIVIL ENGINEER 02/20/13 DATE

04-29-13
PLANS APPROVAL DATE

REGISTERED PROFESSIONAL ENGINEER
MADJID SADATMANSOORI
No. 66244
Exp. 6/30/14
CIVIL
STATE OF CALIFORNIA

THE STATE OF CALIFORNIA OR ITS OFFICERS OR AGENTS SHALL NOT BE RESPONSIBLE FOR THE ACCURACY OR COMPLETENESS OF SCANNED COPIES OF THIS PLAN SHEET.

NOTES:

1. FOR ACCURATE RIGHT OF WAY DATA, CONTACT RIGHT OF WAY ENGINEERING AT THE DISTRICT OFFICE.
2. UTILITY LOCATIONS ARE APPROXIMATE, AND HAVE NOT BEEN POSITIVELY LOCATED EXACT LOCATIONS TO BE DETERMINED BY THE ENGINEER IN THE FIELD.

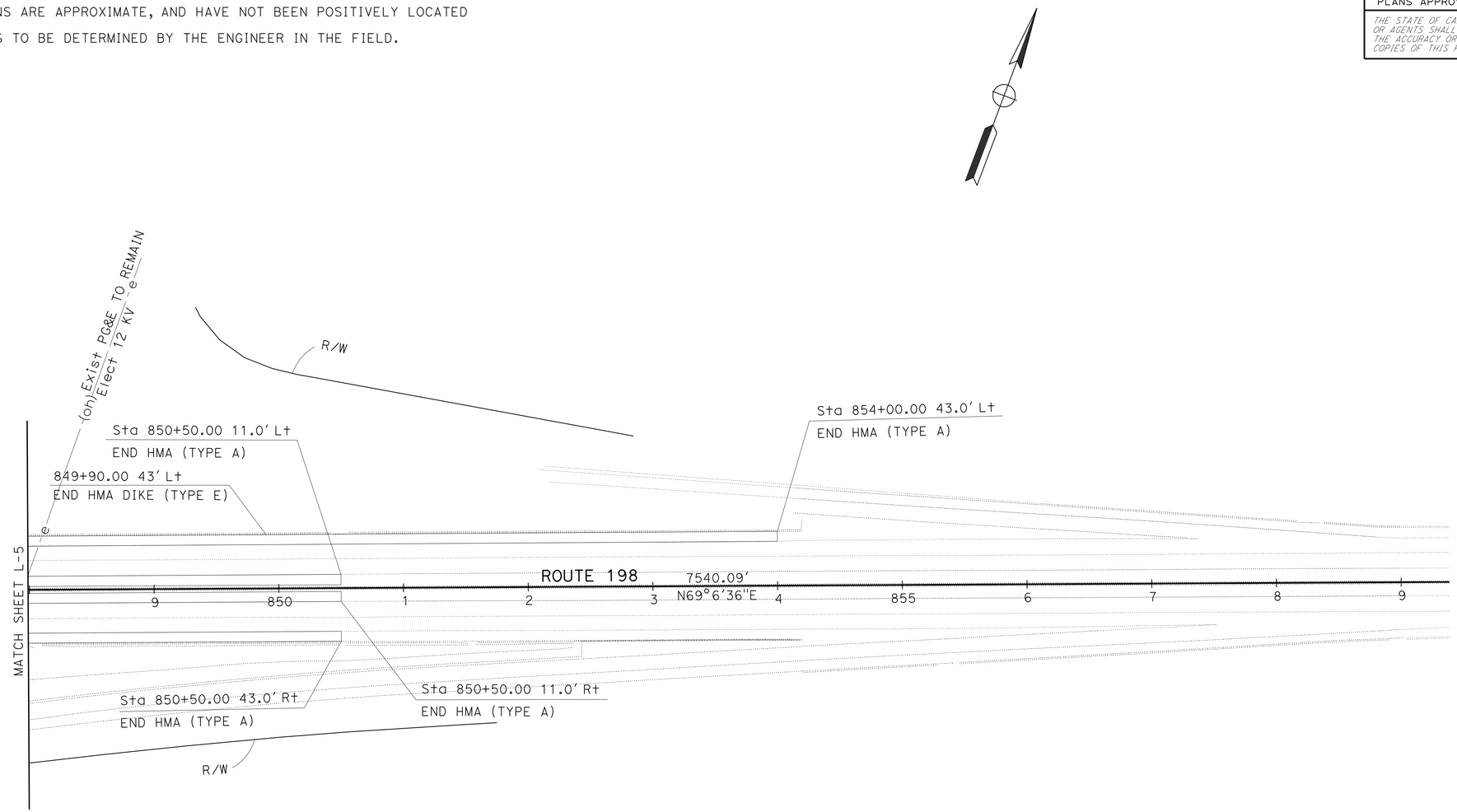

LAYOUT
(LOCATION 2)

SCALE: 1"=50'

L-6

STATE OF CALIFORNIA - DEPARTMENT OF TRANSPORTATION
Caltrans
DESIGN

FUNCTIONAL SUPERVISOR: SANKU G. MOHAN
CALCULATED-DESIGNED BY: MADJID SADATMANSOORI
CHECKED BY: KEVIN T NGUYEN
REVISED BY
DATE REVISED

LAST REVISION 04-29-13
DATE PLOTTED => 11-JUN-2013
TIME PLOTTED => 14:34

Dist	COUNTY	ROUTE	POST MILES TOTAL PROJECT	SHEET No.	TOTAL SHEETS
06	Kin	198	R14.7/R18.0	10	80

REGISTERED CIVIL ENGINEER 02/20/13 DATE

04-29-13
PLANS APPROVAL DATE

REGISTERED PROFESSIONAL ENGINEER
MADJID SADATMANSOORI
No. 66244
Exp. 6/30/14
CIVIL
STATE OF CALIFORNIA

THE STATE OF CALIFORNIA OR ITS OFFICERS OR AGENTS SHALL NOT BE RESPONSIBLE FOR THE ACCURACY OR COMPLETENESS OF SCANNED COPIES OF THIS PLAN SHEET.

NOTES:

1. FOR ACCURATE RIGHT OF WAY DATA, CONTACT RIGHT OF WAY ENGINEERING AT THE DISTRICT OFFICE.
2. UTILITY LOCATIONS ARE APPROXIMATE, AND HAVE NOT BEEN POSITIVELY LOCATED EXACT LOCATIONS TO BE DETERMINED BY THE ENGINEER IN THE FIELD.

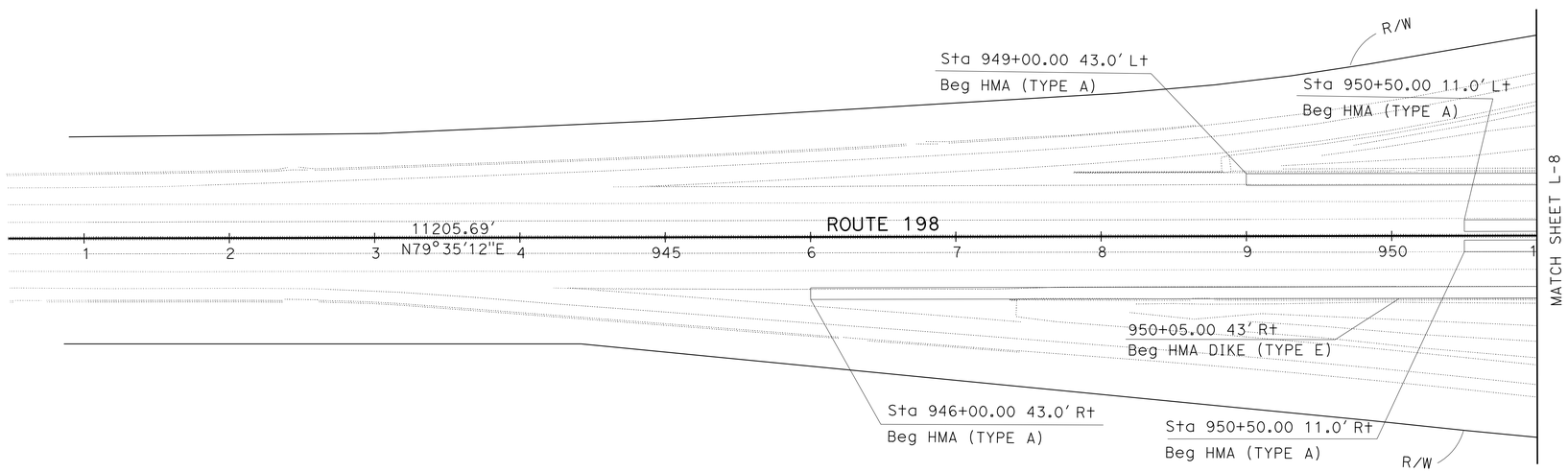

LAYOUT
(LOCATION 3)

SCALE: 1"=50'

L-7

REVISED BY	DATE REVISED

CALCULATED-DESIGNED BY	CHECKED BY
MADJID SADATMANSOORI	KEVIN T NGUYEN

FUNCTIONAL SUPERVISOR: SANKU G. MOHAN

STATE OF CALIFORNIA - DEPARTMENT OF TRANSPORTATION

Caltrans®

DESIGN

LAST REVISION 04-29-13 | DATE PLOTTED => 11-JUN-2013 | TIME PLOTTED => 14:34

Dist	COUNTY	ROUTE	POST MILES TOTAL PROJECT	SHEET No.	TOTAL SHEETS
06	Kin	198	R14.7/R18.0	11	80

REGISTERED CIVIL ENGINEER 02/20/13 DATE

04-29-13
PLANS APPROVAL DATE

REGISTERED PROFESSIONAL ENGINEER MADJID SADATMANSOORI No. 66244 Exp. 6/30/14 CIVIL STATE OF CALIFORNIA

THE STATE OF CALIFORNIA OR ITS OFFICERS OR AGENTS SHALL NOT BE RESPONSIBLE FOR THE ACCURACY OR COMPLETENESS OF SCANNED COPIES OF THIS PLAN SHEET.

NOTES:

1. FOR ACCURATE RIGHT OF WAY DATA, CONTACT RIGHT OF WAY ENGINEERING AT THE DISTRICT OFFICE.
2. UTILITY LOCATIONS ARE APPROXIMATE, AND HAVE NOT BEEN POSITIVELY LOCATED EXACT LOCATIONS TO BE DETERMINED BY THE ENGINEER IN THE FIELD.

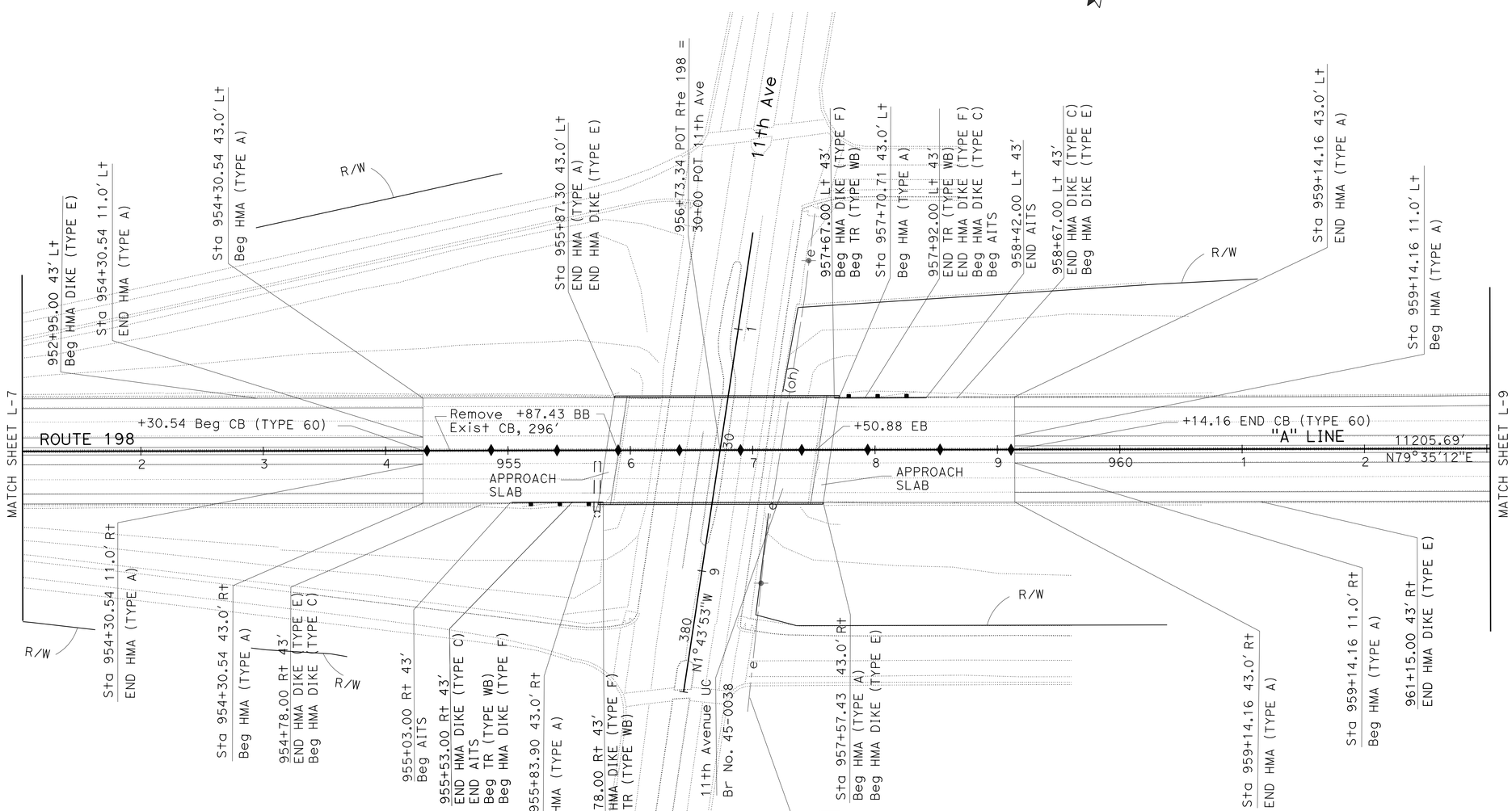

LAYOUT
(LOCATION 3)

SCALE: 1"=50'

L-8

STATE OF CALIFORNIA - DEPARTMENT OF TRANSPORTATION	Caltrans	DESIGN	
FUNCTIONAL SUPERVISOR	SANKU G. MOHAN		
CALCULATED-DESIGNED BY	MADJID SADATMANSOORI	REVISED BY	
CHECKED BY	KEVIN T NGUYEN	DATE REVISED	

LAST REVISION 04-29-13 | DATE PLOTTED => 11-JUN-2013 | TIME PLOTTED => 14:34

Dist	COUNTY	ROUTE	POST MILES TOTAL PROJECT	SHEET No.	TOTAL SHEETS
06	Kin	198	R14.7/R18.0	12	80

REGISTERED CIVIL ENGINEER 02/20/13 DATE

04-29-13
PLANS APPROVAL DATE

REGISTERED PROFESSIONAL ENGINEER
MADJID SADATMANSOORI
No. 66244
Exp. 6/30/14
CIVIL
STATE OF CALIFORNIA

THE STATE OF CALIFORNIA OR ITS OFFICERS OR AGENTS SHALL NOT BE RESPONSIBLE FOR THE ACCURACY OR COMPLETENESS OF SCANNED COPIES OF THIS PLAN SHEET.

NOTES:

1. FOR ACCURATE RIGHT OF WAY DATA, CONTACT RIGHT OF WAY ENGINEERING AT THE DISTRICT OFFICE.
2. UTILITY LOCATIONS ARE APPROXIMATE, AND HAVE NOT BEEN POSITIVELY LOCATED EXACT LOCATIONS TO BE DETERMINED BY THE ENGINEER IN THE FIELD.

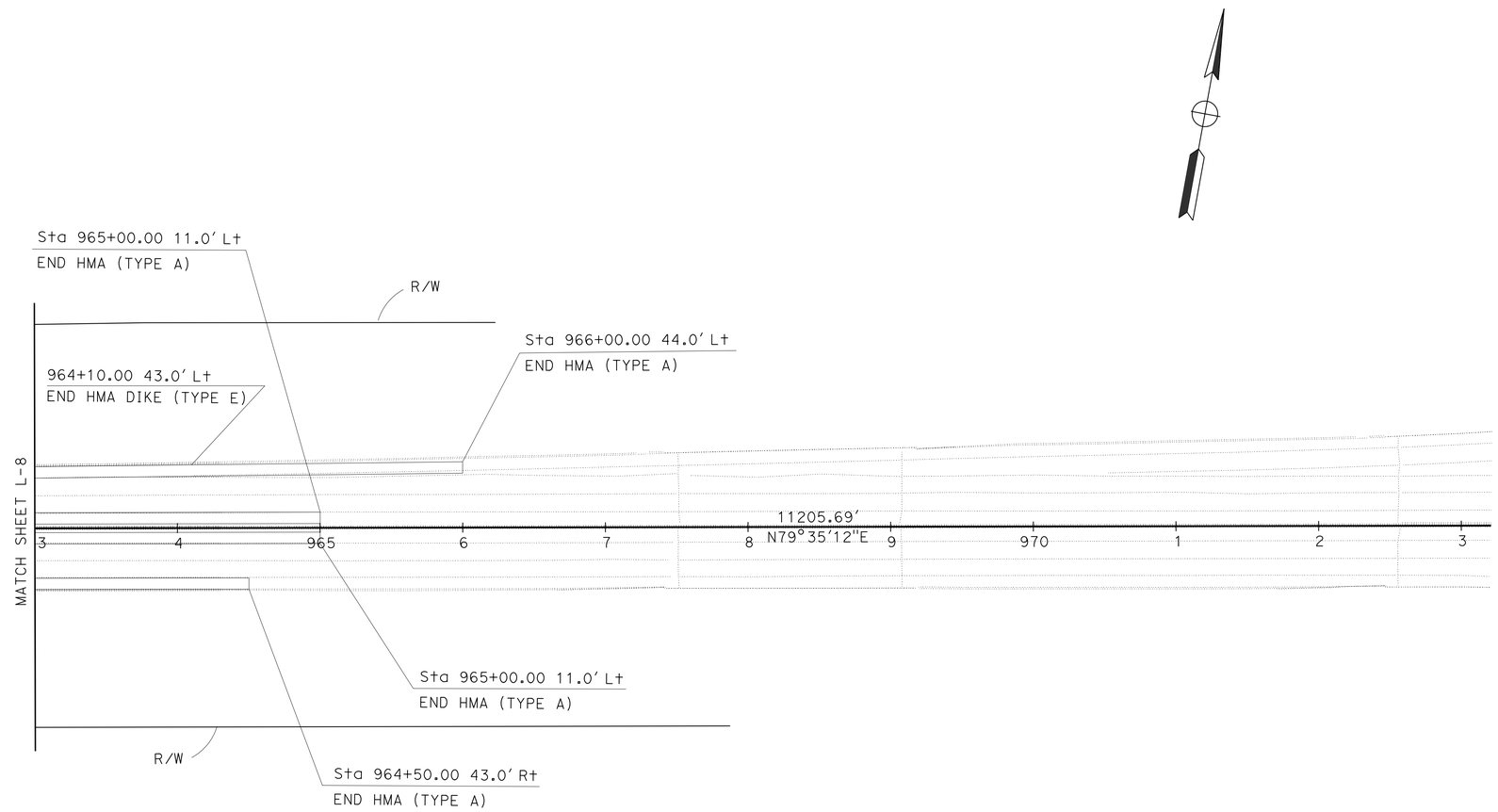

LAYOUT
(LOCATION 3)

SCALE: 1"=50'

L-9

STATE OF CALIFORNIA - DEPARTMENT OF TRANSPORTATION
Caltrans
DESIGN

FUNCTIONAL SUPERVISOR: SANKU G. MOHAN
CALCULATED-DESIGNED BY: MADJID SADATMANSOORI
CHECKED BY: KEVIN T NGUYEN
REVISED BY
DATE REVISED

LAST REVISION 04-29-13
DATE PLOTTED => 11-JUN-2013
TIME PLOTTED => 14:34

Dist	COUNTY	ROUTE	POST MILES TOTAL PROJECT	SHEET No.	TOTAL SHEETS
06	Kin	198	R14.7/R18.0	13	80

REGISTERED CIVIL ENGINEER 02/20/13 DATE

04-29-13
PLANS APPROVAL DATE

REGISTERED PROFESSIONAL ENGINEER MADJID SADATMANSOORI No. 66244 Exp. 6/30/14 CIVIL STATE OF CALIFORNIA

THE STATE OF CALIFORNIA OR ITS OFFICERS OR AGENTS SHALL NOT BE RESPONSIBLE FOR THE ACCURACY OR COMPLETENESS OF SCANNED COPIES OF THIS PLAN SHEET.

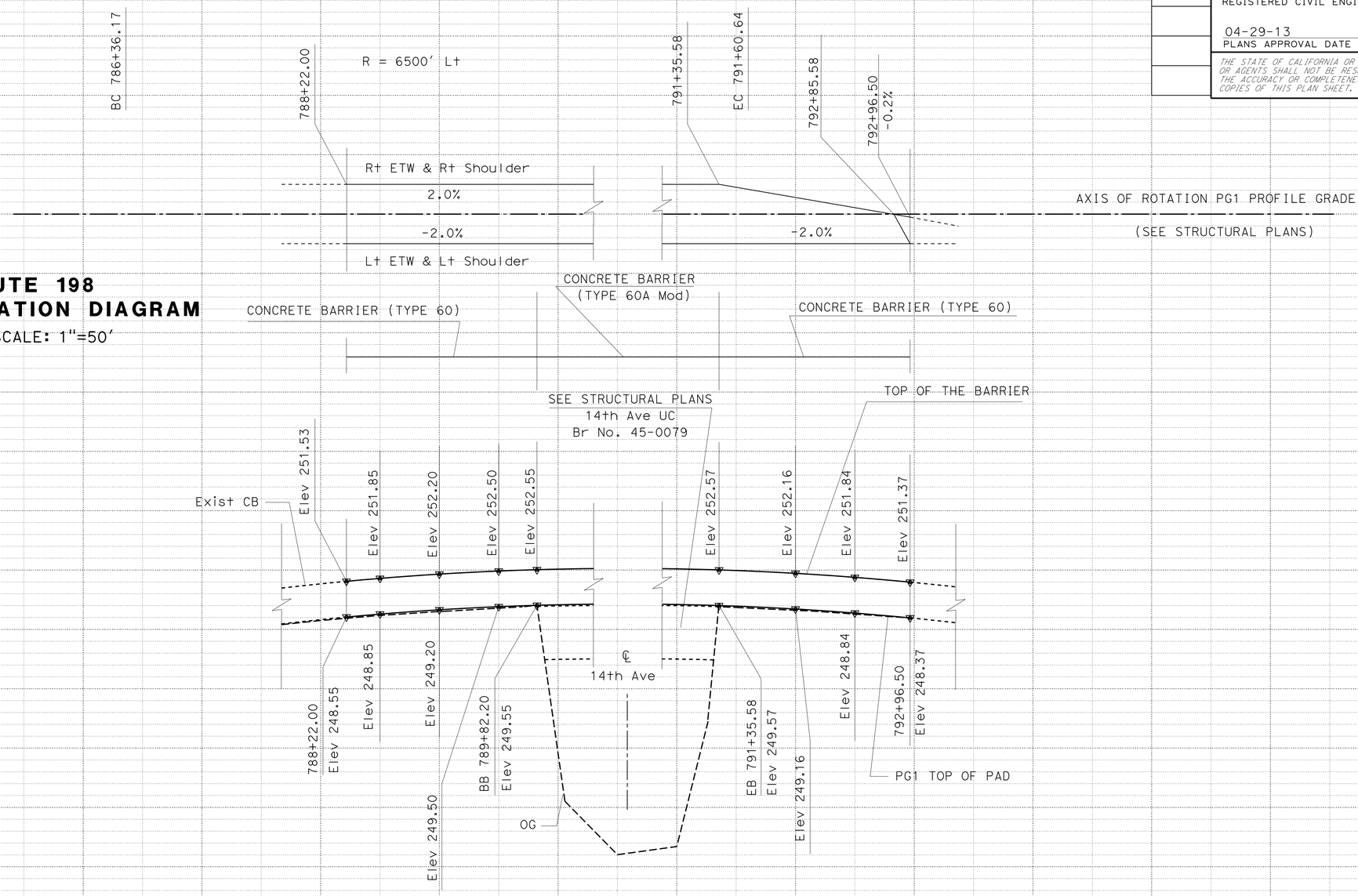

ROUTE 198 SUPERELEVATION DIAGRAM

Horiz SCALE: 1"=50'

ROUTE 198 PROFILE

PG1 PROFILE GRADE
TOP OF THE PAD

Horiz SCALE: 1"=50'
Vert SCALE: 1"=5'

PROFILE AND SUPERELEVATION DIAGRAM (LOCATION 1)

PS-1

STATION	787+00	788+00	789+00	790+00	791+00	792+00	793+00	TOTAL
CY Exc								
CY Emb								

STATE OF CALIFORNIA - DEPARTMENT OF TRANSPORTATION
Caltrans DESIGN

FUNCTIONAL SUPERVISOR: SANKU G. MOHAN
CALCULATED-DESIGNED BY: MADJID SADATMANSOORI
CHECKED BY: KEVIN T NGUYEN
REVISED BY / DATE REVISED

LAST REVISION 04-29-13 | DATE PLOTTED => 11-JUN-2013 | TIME PLOTTED => 14:34

Dist	COUNTY	ROUTE	POST MILES TOTAL PROJECT	SHEET No.	TOTAL SHEETS
06	Kin	198	R14.7/R18.0	14	80

REGISTERED CIVIL ENGINEER 02/20/13 DATE

04-29-13
PLANS APPROVAL DATE

REGISTERED PROFESSIONAL ENGINEER MADJID SADATMANSOORI No. 66244 Exp. 6/30/14 CIVIL STATE OF CALIFORNIA

THE STATE OF CALIFORNIA OR ITS OFFICERS OR AGENTS SHALL NOT BE RESPONSIBLE FOR THE ACCURACY OR COMPLETENESS OF SCANNED COPIES OF THIS PLAN SHEET.

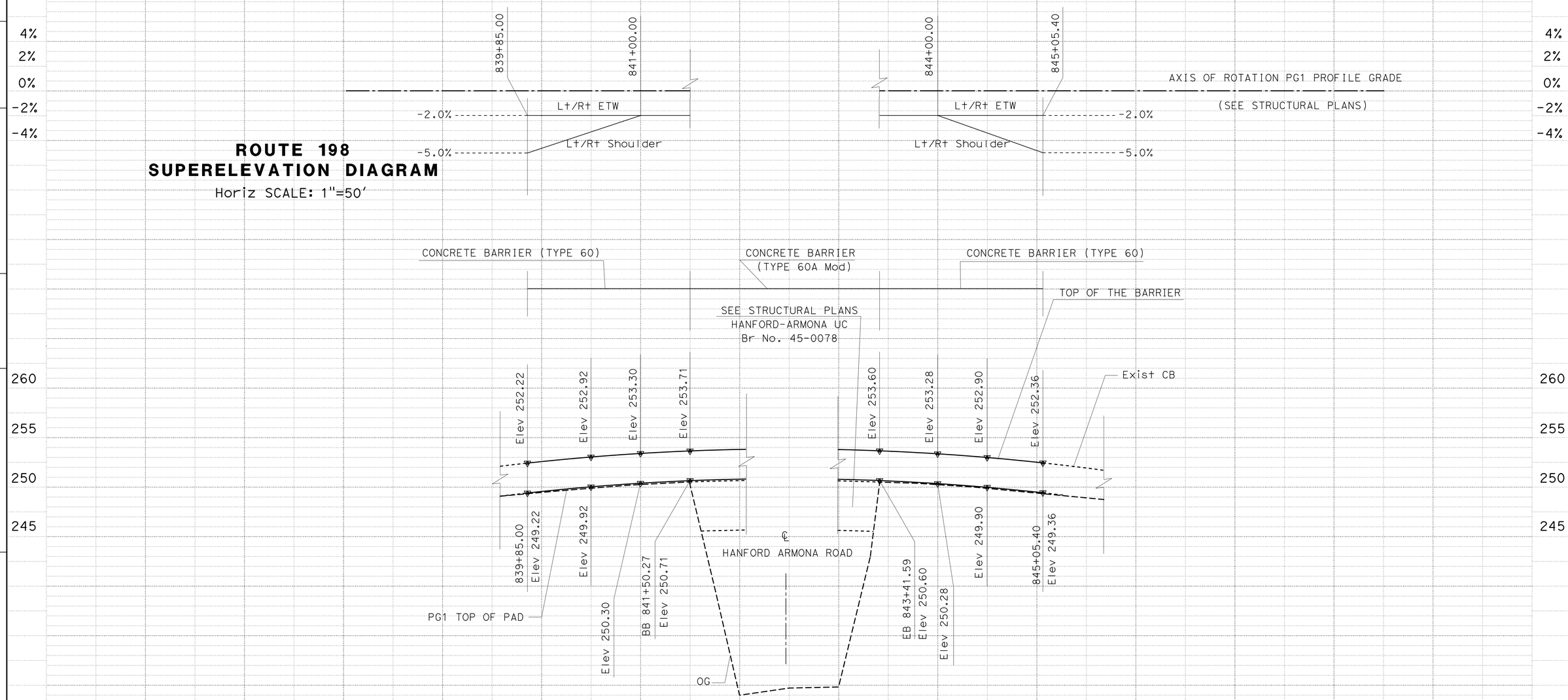

ROUTE 198
SUPERELEVATION DIAGRAM
Horiz SCALE: 1"=50'

ROUTE 198 PROFILE

PG1 PROFILE GRADE
TOP OF THE PAD

Horiz SCALE: 1"=50'
Vert SCALE: 1"=5'

PROFILE AND SUPERELEVATION DIAGRAM
(LOCATION 2)

PS-2

STATE OF CALIFORNIA - DEPARTMENT OF TRANSPORTATION
Caltrans®
DESIGN

FUNCTIONAL SUPERVISOR: SANKU G. MOHAN
CALCULATED-DESIGNED BY: MADJID SADATMANSOORI
CHECKED BY: KEVIN T NGUYEN
REVISED BY
DATE REVISED

STATION
CY Exc
Emb

LAST REVISION 04-29-13
DATE PLOTTED => 11-JUN-2013
TIME PLOTTED => 14:34

Dist	COUNTY	ROUTE	POST MILES TOTAL PROJECT	SHEET No.	TOTAL SHEETS
06	Kin	198	R14.7/R18.0	15	80

REGISTERED CIVIL ENGINEER DATE 02/20/13

04-29-13
PLANS APPROVAL DATE

REGISTERED PROFESSIONAL ENGINEER MADJID SADATMANSOORI No. 66244 Exp. 6/30/14 CIVIL STATE OF CALIFORNIA

THE STATE OF CALIFORNIA OR ITS OFFICERS OR AGENTS SHALL NOT BE RESPONSIBLE FOR THE ACCURACY OR COMPLETENESS OF SCANNED COPIES OF THIS PLAN SHEET.

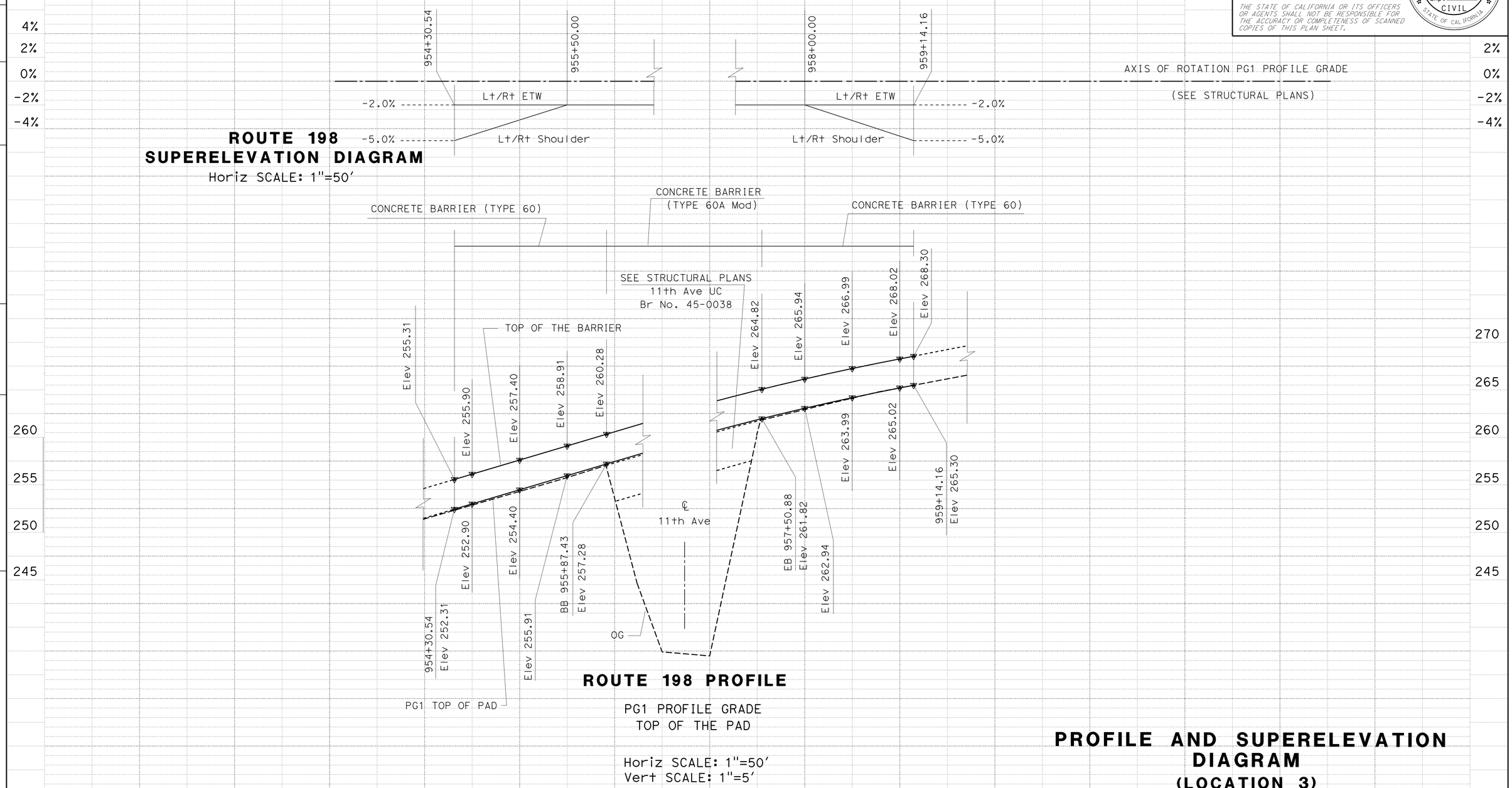

ROUTE 198 PROFILE

PG1 PROFILE GRADE
TOP OF THE PAD

Horiz SCALE: 1"=50'
Vert SCALE: 1"=5'

PROFILE AND SUPERELEVATION DIAGRAM (LOCATION 3)

PS-3

STATE OF CALIFORNIA - DEPARTMENT OF TRANSPORTATION
Caltrans® DESIGN

FUNCTIONAL SUPERVISOR: SANKU G. MOHAN
CALCULATED-DESIGNED BY: MADJID SADATMANSOORI
CHECKED BY: KEVIN T NGUYEN
REVISED BY / DATE REVISED

STATION
C.Y. Exc / Emb

LAST REVISION 04-29-13 | DATE PLOTTED => 11-JUN-2013 | TIME PLOTTED => 14:35

Dist	COUNTY	ROUTE	POST MILES TOTAL PROJECT	SHEET No.	TOTAL SHEETS
06	Kin	198	R14.7/R18.0	16	80

REGISTERED CIVIL ENGINEER DATE 02/20/13

04-29-13
PLANS APPROVAL DATE

REGISTERED PROFESSIONAL ENGINEER MADJID SADATMANSOORI No. 66244 Exp. 6/30/14 CIVIL STATE OF CALIFORNIA

THE STATE OF CALIFORNIA OR ITS OFFICERS OR AGENTS SHALL NOT BE RESPONSIBLE FOR THE ACCURACY OR COMPLETENESS OF SCANNED COPIES OF THIS PLAN SHEET.

NOTES:(THIS SHEET)

1. SEE MANUFACTURER PLANS FOR ADDITIONAL DETAILS AND DIMENSIONS NOT SHOWN ON PLANS.
2. SYSTEM TO BE INSTALLED PER MANUFACTURER SPECIFICATIONS.
3. ONLY TIGHTEN THE CABLE ASSEMBLIES USING THE NUTS AT THE CABLE BRACKET (SEE DETAIL D). DO NOT TIGHTEN THE CABLES AT THE FRONT OF THE GROUND ANCHOR.
4. WHEN DRIVING STEEL POST, ENSURE THAT A DRIVING CAP WITH TIMBER OR PLASTIC INSERT IS USED TO PREVENT DAMAGE TO THE GALVANIZING TO THE TOP OF THE STEEL POST.

LEGEND

ITEM	DESCRIPTION
1	X-TENSION TERMINAL COMPONENT KIT
2	X-TENSION HARDWARE KIT
3	X-TENSION SYSTEM HARDWARE KIT
4	X-TENSION GUARDRAIL COMPONENT KIT 3
5	I-BEAM POST, MIDDLE, X350

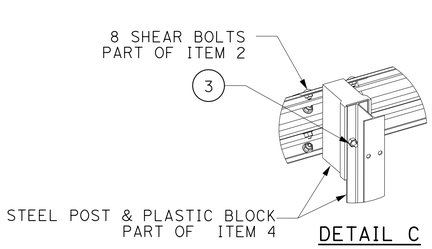

DETAIL C

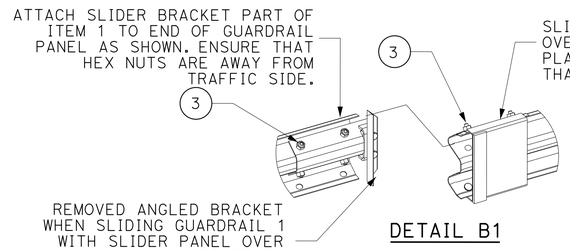

DETAIL B1

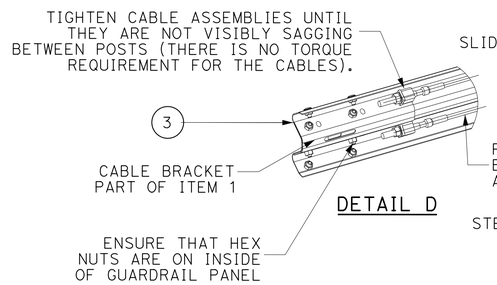

DETAIL D

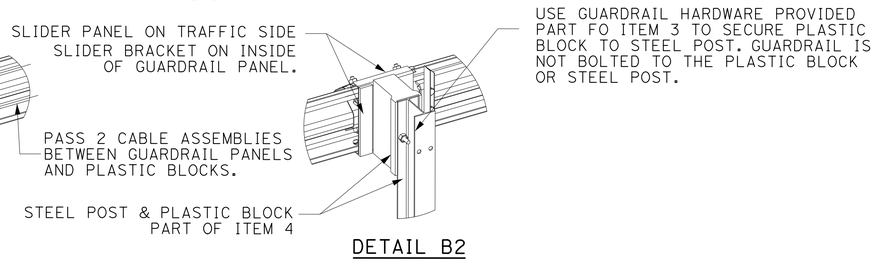

DETAIL B2

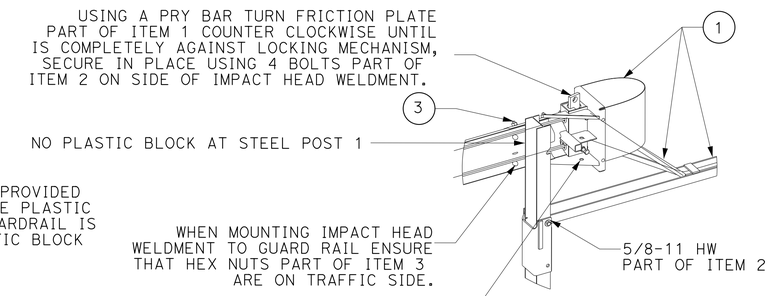

DETAIL A1

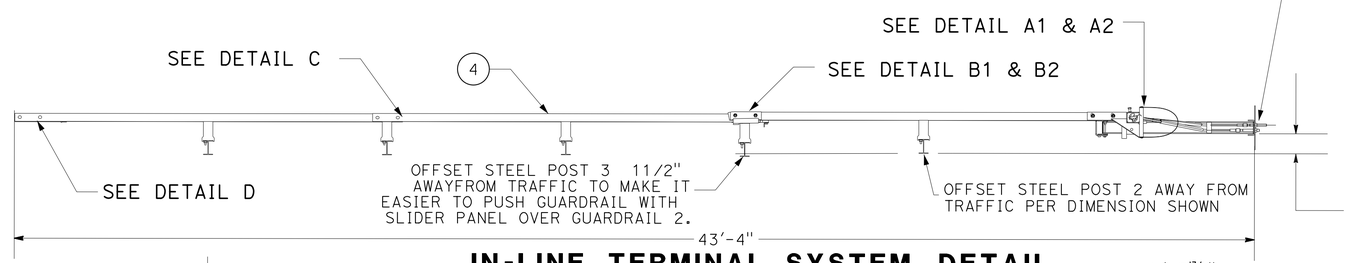

IN-LINE TERMINAL SYSTEM DETAIL

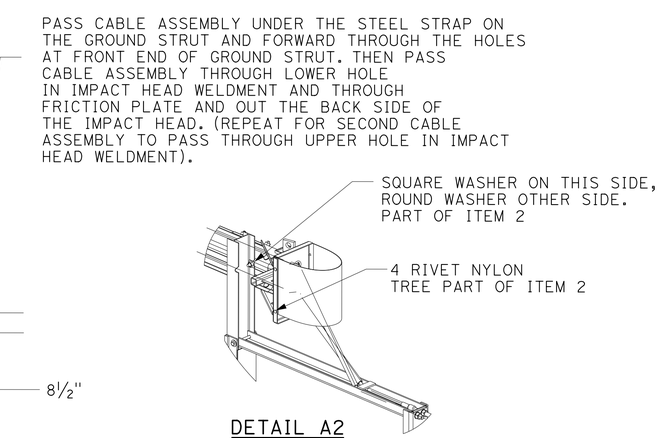

DETAIL A2

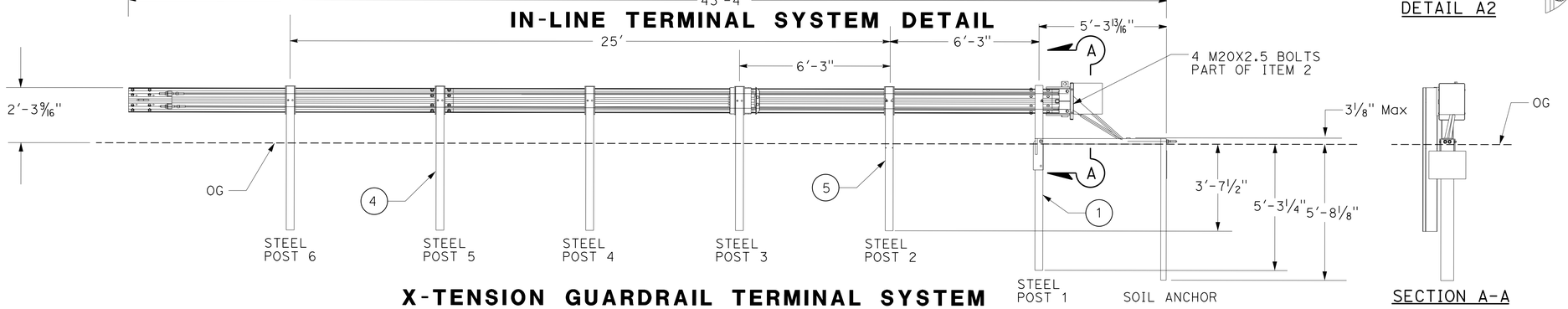

X-TENSION GUARDRAIL TERMINAL SYSTEM
MODEL No. XTGTSS3

SECTION A-A

CONSTRUCTION DETAILS

NO SCALE

C-1

STATE OF CALIFORNIA - DEPARTMENT OF TRANSPORTATION
Caltrans
DESIGN

FUNCTIONAL SUPERVISOR: SANKU G. MOHAN
CALCULATED-DESIGNED BY: MADJID SADATMANSOORI
CHECKED BY: KEVIN T NGUYEN
REVISED BY
DATE REVISED

LAST REVISION 04-29-13
DATE PLOTTED => 11-JUN-2013
TIME PLOTTED => 14:35

Dist	COUNTY	ROUTE	POST MILES TOTAL PROJECT	SHEET No.	TOTAL SHEETS
06	Kin	198	R14.7/R18.0	17	80

REGISTERED CIVIL ENGINEER 02/20/13 DATE

04-29-13
PLANS APPROVAL DATE

REGISTERED PROFESSIONAL ENGINEER MADJID SADATMANSOORI No. 66244 Exp. 6/30/14 CIVIL STATE OF CALIFORNIA

THE STATE OF CALIFORNIA OR ITS OFFICERS OR AGENTS SHALL NOT BE RESPONSIBLE FOR THE ACCURACY OR COMPLETENESS OF SCANNED COPIES OF THIS PLAN SHEET.

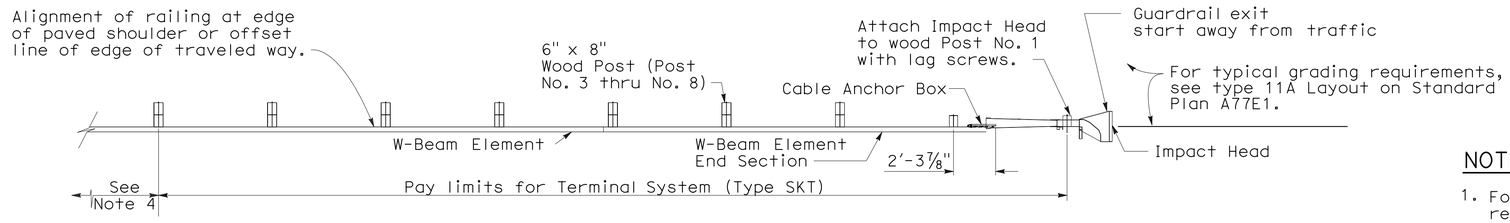

PLAN

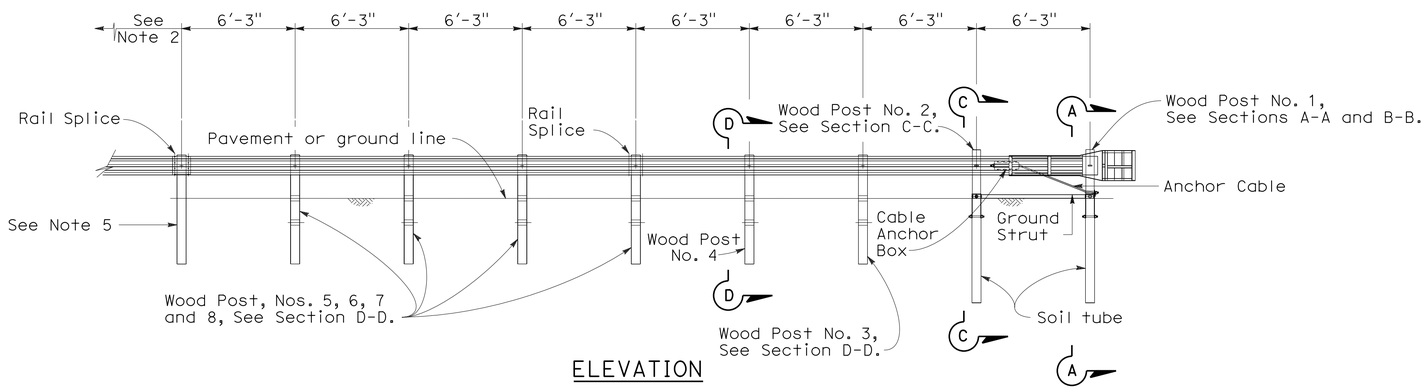

ELEVATION

TERMINAL SYSTEM (TYPE SKT)

NOTES:

1. For additional details of Terminal System (Type SKT), refer to the manufacturer's installation instructions.
2. Terminal System (Type SKT) must be constructed so that the full length of the terminal system guard railing is in straight alignment. Terminal System (Type SKT) can be flared at a maximum rate of 25:1 to prevent the impact head from encroaching on the shoulder. The flare is not required and may be decreased or eliminated for specific installations.
3. Terminal System (Type SKT) not to be used where extrusion of the rail on the back side of the installation would be in the path of pedestrian traffic or where there is less than 25'-0" between the outlet side of the Impacted Head and any adjacent vehicle traffic.
4. For the length and type of metal beam guard railing or metal barrier railing the terminal system is attached to, see Project Plans. For typical use of this terminal system with guard railing, see the A77E, A77F and A77G Series of the Standard Plans.
5. Attach rail element to this post and block. Payment for this post, block and hardware is included in payment for the type of railing or barrier the terminal system is attached to, not part of payment for Terminal System (Type SKT).

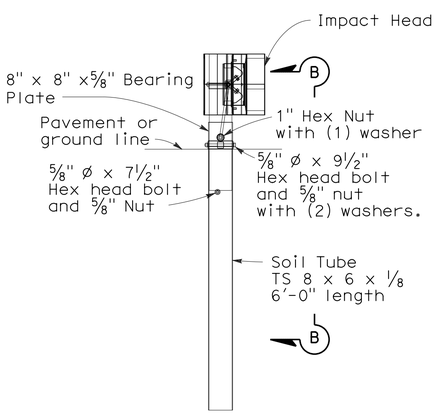

SECTION A-A
Post No. 1

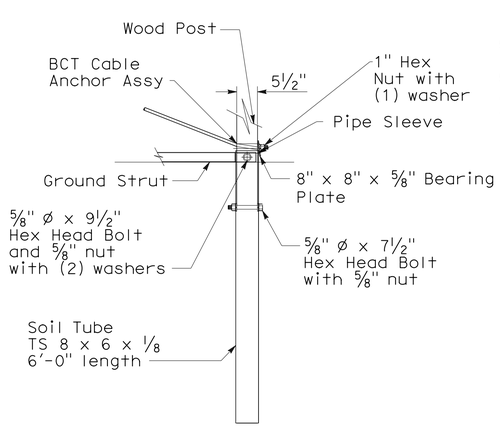

SECTION B-B
Partial view Post No. 1

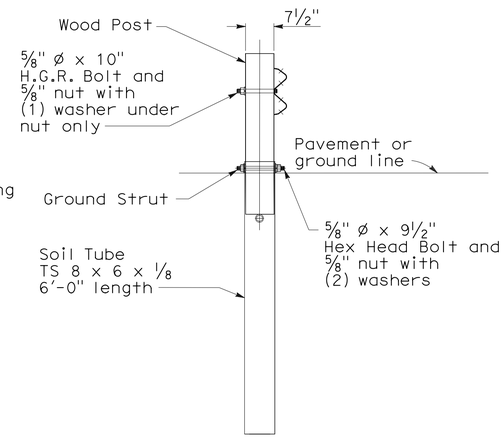

SECTION C-C
at Post No. 2

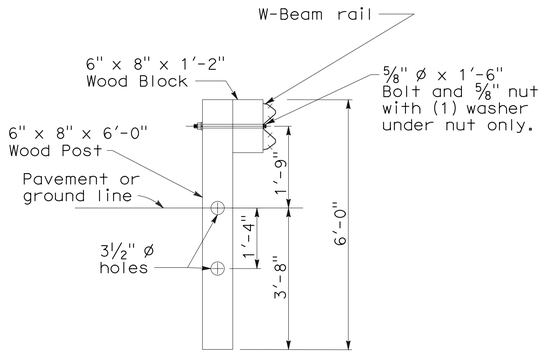

SECTION D-D
Post No. 3 through No. 8

METAL BEAM RAILING TERMINAL SYSTEM (TYPE SKT)

CONSTRUCTION DETAILS

NO SCALE

C-2

STATE OF CALIFORNIA - DEPARTMENT OF TRANSPORTATION
Caltrans DESIGN

FUNCTIONAL SUPERVISOR: SANKU G. MOHAN
CALCULATED-DESIGNED BY: MADJID SADATMANSOORI
CHECKED BY: KEVIN T NGUYEN
REVISED BY / DATE REVISED

LAST REVISION 04-29-13
DATE PLOTTED => 11-JUN-2013
TIME PLOTTED => 14:35

Dist	COUNTY	ROUTE	POST MILES TOTAL PROJECT	SHEET No.	TOTAL SHEETS
06	Kin	198	R14.7/R18.0	18	80

REGISTERED CIVIL ENGINEER 02/20/13 DATE

04-29-13
PLANS APPROVAL DATE

REGISTERED PROFESSIONAL ENGINEER MADJID SADATMANSOORI No. 66244 Exp. 6/30/14 CIVIL STATE OF CALIFORNIA

THE STATE OF CALIFORNIA OR ITS OFFICERS OR AGENTS SHALL NOT BE RESPONSIBLE FOR THE ACCURACY OR COMPLETENESS OF SCANNED COPIES OF THIS PLAN SHEET.

NOTES:

1. For additional details of Terminal System (Type ET), refer to the manufacturer's installation instructions.
2. Terminal System (Type ET) must be constructed so that the full length of the terminal system guard railing is in straight alignment. The Guard Rail Extruder head of the terminal system shall not encroach upon the adjacent paved shoulder or lane. A traffic approach flare of 50:1 or 25:1 for the full length of Terminal System (Type ET) installation may be used where the Guard Rail Extruder head would encroach upon the adjacent paved shoulder or lane.
3. Slide Guard Rail Extruder over the end of the rail element and attach to Post No.1 with lag screws. Do not bolt rail element to post. Guard Rail Extruder attachment brackets have 3 holes in each bracket to provide tolerance adjustment. Use the holes in the bracket closest to center of Post No.1. Drill 1/4" pilot holes to accommodate lag screws.
4. Attach strut to Post Nos. 1 and 2 foundation tubes with hex head bolts, washers and hex nuts. Bolts extend through the strut, steel foundation tube, and wood posts. Channel side of strut to face downward.
5. For length and type of metal beam guard railing or metal barrier railing the terminal system is attached to, see Project Plans. For typical use of this terminal system, see the A77E, A77F and A77G Series of the Standard Plans.
6. Attach rail element to this post and block. Payment for this post, block and hardware included in payment for the type of railing or barrier the terminal system is attached to, not part of the payment for Terminal System (Type ET).
7. Yellow retroreflective sheeting, as provided by Terminal System (Type ET) manufacturer, shall be adhered to the face of extruder head. The sheeting shall be consistent with the design pattern and colors of a Type P object marker panel.
8. Attach rail to Post No.2 (no wood block) in same manner shown in section A-A. Do not bolt rail to Post No.1, See Note 3.
9. Terminal System (Type ET) not to be used where extrusion of the rail on the back side of the installation would be in the path of pedestrian or vehicular traffic.
10. A continuous rail element section between Post Nos.1 and 5 (no intermediate rail splices) may continue to be used in existing installations. New installations shall be constructed as shown with two rail element sections between Post Nos.1 and 5.
11. A 6'-0" length steel foundation tube, TS 8 x 6 x 3/16", without soil plate, may be used in place of the 4'-6" length steel foundation tube and soil plate shown. Minimum embedment of the 6'-0" length tube shall be 5'-9". A 5/8" ø hex head bolt and nuts shall be installed in the hole in the 6'-0" length tube to keep the wood post from dropping into the tube.

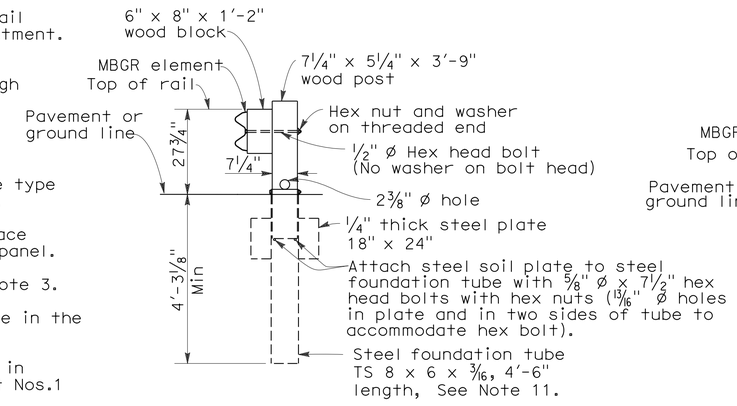

SECTION A-A

Soil plate and wood post attachment to steel foundation tube similar for Post Nos. 1, 2 and 4. Wood blocks not used with Post Nos.1 and 2. See Note 8.

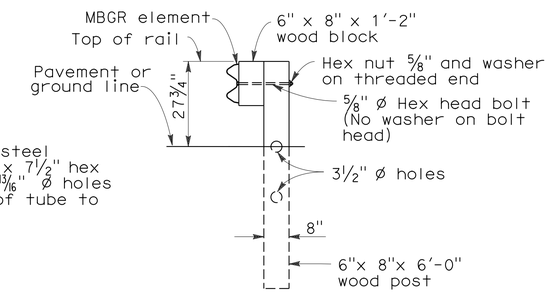

SECTION B-B

Post Nos. 5, 7 and 8 similar except rail elements are not attached to Post Nos. 5 and 7

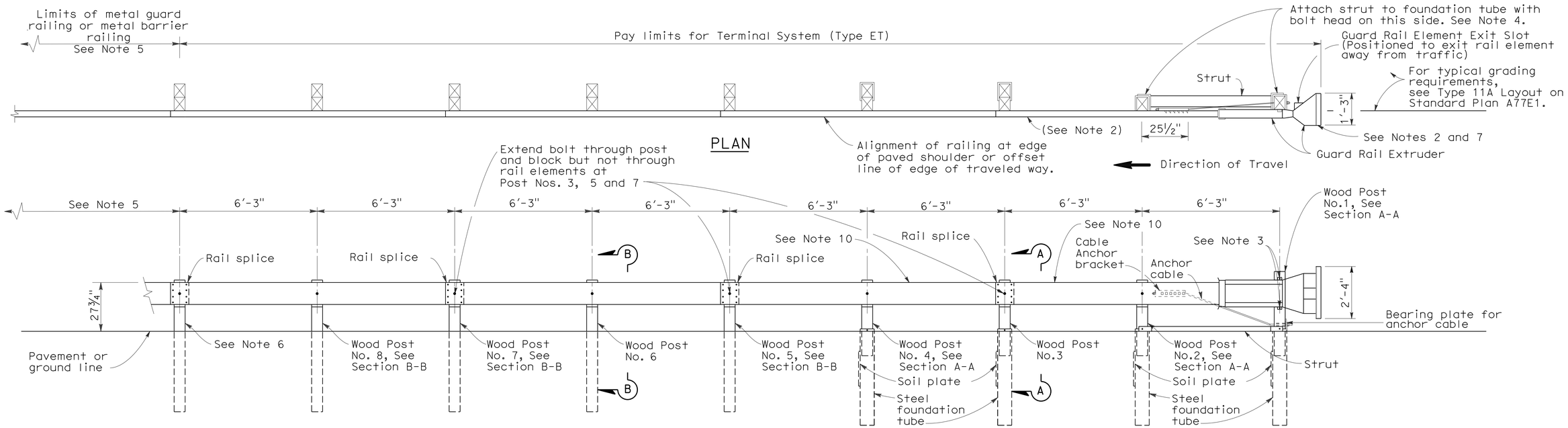

ELEVATION

METAL BEAM RAILING TERMINAL SYSTEM (TYPE ET)

(Type ET PLUS shown)
See Notes 9 and 10

CONSTRUCTION DETAILS

NO SCALE

C-3

STATE OF CALIFORNIA - DEPARTMENT OF TRANSPORTATION
Caltrans
DESIGN
FUNCTIONAL SUPERVISOR: SANKU G. MOHAN
CALCULATED-DESIGNED BY: MADJID SADATMANSOORI
CHECKED BY: KHALID CHAOUI
REVISED BY
DATE REVISED

LAST REVISION 04-29-13
DATE PLOTTED => 11-JUN-2013
TIME PLOTTED => 14:35

Dist	COUNTY	ROUTE	POST MILES TOTAL PROJECT	SHEET No.	TOTAL SHEETS
06	Kin	198	R14.7/R18.0	19	80

REGISTERED CIVIL ENGINEER 02/20/13 DATE

04-29-13
PLANS APPROVAL DATE

REGISTERED PROFESSIONAL ENGINEER MADJID SADATMANSOORI No. 66244 Exp. 6/30/14 CIVIL STATE OF CALIFORNIA

THE STATE OF CALIFORNIA OR ITS OFFICERS OR AGENTS SHALL NOT BE RESPONSIBLE FOR THE ACCURACY OR COMPLETENESS OF SCANNED COPIES OF THIS PLAN SHEET.

NOTES:

1. FOR DETAILS NOT SHOWN SEE STANDARD PLANS D73, D77A AND D77B.
2. FOR TRASITION TAPER LENGTHS SEE LAYOUT SHEETS.

LEGENDS:

REMOVE CONCRETE

HMA (TYPE A)

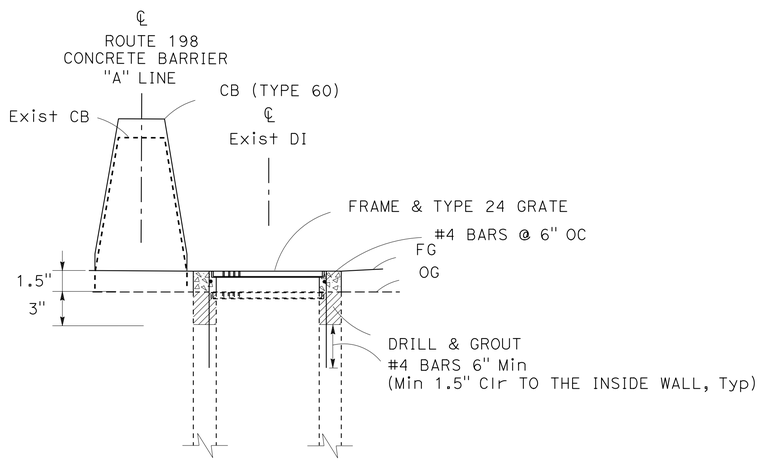

SECTION A-A

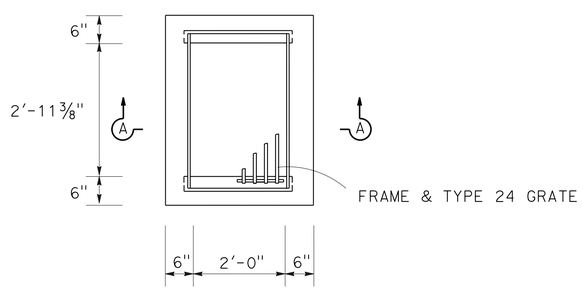

PLAN

TYPE G1 INLET

ADJUST FRAME AND GRATE TO GRADE

STAGE 1 PHASE 1

Sta 789+43 Rt 2'

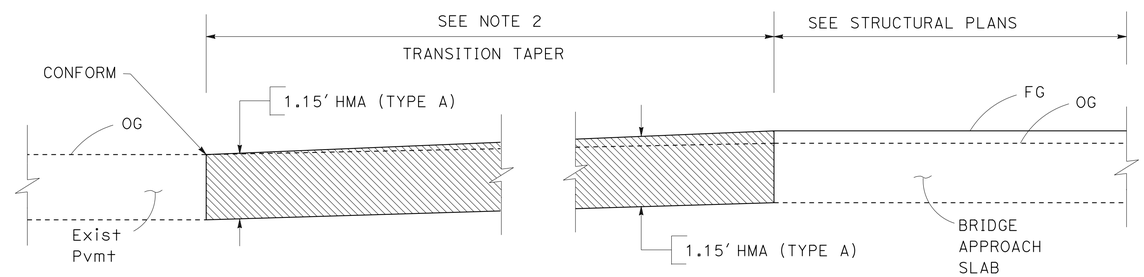

TYPICAL HMA (TYPE A) PAVEMENT TRANSITION TAPER

LOCATION 1, 2, 3

CONSTRUCTION DETAILS

NO SCALE

C-4

REVISED BY | DATE REVISED

MADJID SADATMANSOORI | KEVIN T NGUYEN

CALCULATED-DESIGNED BY | CHECKED BY

FUNCTIONAL SUPERVISOR | SANKU G. MOHAN

STATE OF CALIFORNIA - DEPARTMENT OF TRANSPORTATION

Caltrans® DESIGN

LAST REVISION 04-29-13 | DATE PLOTTED => 11-JUN-2013 | TIME PLOTTED => 14:35

Dist	COUNTY	ROUTE	POST MILES TOTAL PROJECT	SHEET No.	TOTAL SHEETS
06	Kin	198	R14.7/R18.0	20	80

Hassan Taha 04-29-13
REGISTERED CIVIL ENGINEER DATE

04-29-13
PLANS APPROVAL DATE

REGISTERED PROFESSIONAL ENGINEER
HASSAN M. TAHA
No. 60130
Exp. 06/30/14
CIVIL
STATE OF CALIFORNIA

THE STATE OF CALIFORNIA OR ITS OFFICERS OR AGENTS SHALL NOT BE RESPONSIBLE FOR THE ACCURACY OR COMPLETENESS OF SCANNED COPIES OF THIS PLAN SHEET.

STATIONARY MOUNTED CONSTRUCTION AREA SIGNS

SIGN No.	SIGN CODE	SIGN MESSAGE	PANEL SIZE	No. OF POST AND SIZE	No. OF SIGNS
A	W20-1	ROAD WORK AHEAD	48" x 48"	1 - 6" x 6"	12
B	G20-2	END ROAD WORK	36" x 18"	1 - 4" x 4"	8

NOTES:

1. ALL TEMPORARY WARNING SIGNS SHALL HAVE BLACK LEGEND ON FLUORESCENT ORANGE BACKGROUND
2. EXACT SIGN LOCATIONS TO BE DETERMINED BY THE ENGINEER
3. FOR ADDITIONAL CONSTRUCTION AREA SIGNS, REFER TO TRAFFIC HANDLING PLANS

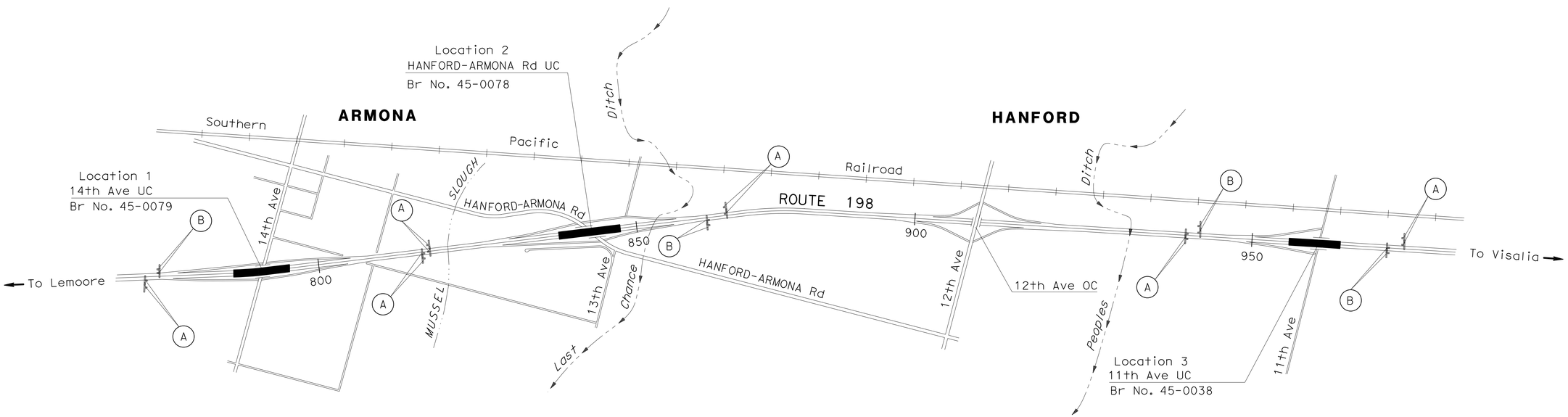

APPROVED FOR CONSTRUCTION AREA SIGN WORK ONLY

CONSTRUCTION AREA SIGNS

NO SCALE

CS-1

STATE OF CALIFORNIA - DEPARTMENT OF TRANSPORTATION
Caltrans® **TRAFFIC DESIGN**

FUNCTIONAL SUPERVISOR: MOHAMMED QATAMI
CALCULATED-DESIGNED BY: VANIK POGOSYAN
CHECKED BY: HASSAN TAHA
REVISED BY / DATE REVISED

LAST REVISION 04-29-13 | DATE PLOTTED => 11-JUN-2013 | TIME PLOTTED => 14:35

Dist	COUNTY	ROUTE	POST MILES TOTAL PROJECT	SHEET No.	TOTAL SHEETS
06	Kin	198	R14.7/R18.0	21	80

REGISTERED CIVIL ENGINEER 02/20/13 DATE

04-29-13
PLANS APPROVAL DATE

REGISTERED PROFESSIONAL ENGINEER MADJID SADATMANSOORI No. 66244 Exp. 6/30/14 CIVIL STATE OF CALIFORNIA

THE STATE OF CALIFORNIA OR ITS OFFICERS OR AGENTS SHALL NOT BE RESPONSIBLE FOR THE ACCURACY OR COMPLETENESS OF SCANNED COPIES OF THIS PLAN SHEET.

NOTE:

FOR MORE INFORMATION SEE TRAFFIC HANDLING PLANS AND STAGE CONSTRUCTION DETAIL PLANS .

CONSTRUCTION:

1. CONSTRUCT 8′ OUTSIDE SHOULDERS FROM Sta 782+00.00 Lt 43′ TO Sta 789+98.11 Lt 43′ Sta 791+53.12 Lt 43′ TO Sta 802+00.00 Lt 43′ AND Sta 779+00.00 Rt 43′ TO Sta 789+66.56 Rt 43′ Sta 791+35.57 Rt 43′ TO Sta 797+50.00 Rt 43′"A" LINE Rte 198 .
2. EXISTING DRAINAGE DIKES TO BE REMOVED UP TO THE BRIDGE BARRIER ON FOUR SIDES.
3. PLACE 10" CORRUGATED STEEL PIPE DOWNDRAINS. SEE SHEET Q-3 AND STANDARD PLAN D87A, FOR LOCATIONS AND DETAILS.
4. CONSTRUCT 8′ INSIDE SHOULDERS FROM Sta 783+00.00 Lt/Rt 11′ TO Sta 788+22.00 Lt/Rt 11′ Sta 792+96.50 Lt/Rt 11′ TO Sta 800+00.00 Lt/Rt 11′ "A" LINE Rte 198 .

TRAFFIC:

1. Rte 198 ALL RAMP TRAFFIC TO REMAIN OPEN DURING CONSTRUCTION.
2. TRAFFIC TO REMAIN OPEN ON ALL LANES DURING SHOULDER CONSTRUCTION.

LEGEND:

- DIRECTION OF TRAFFIC
- CONSTRUCT THIS STAGE
- CONSTRUCTED PREVIOUS STAGES
- (#) CONSTRUCTION NOTES NUMBER
- DRAINAGE RSP

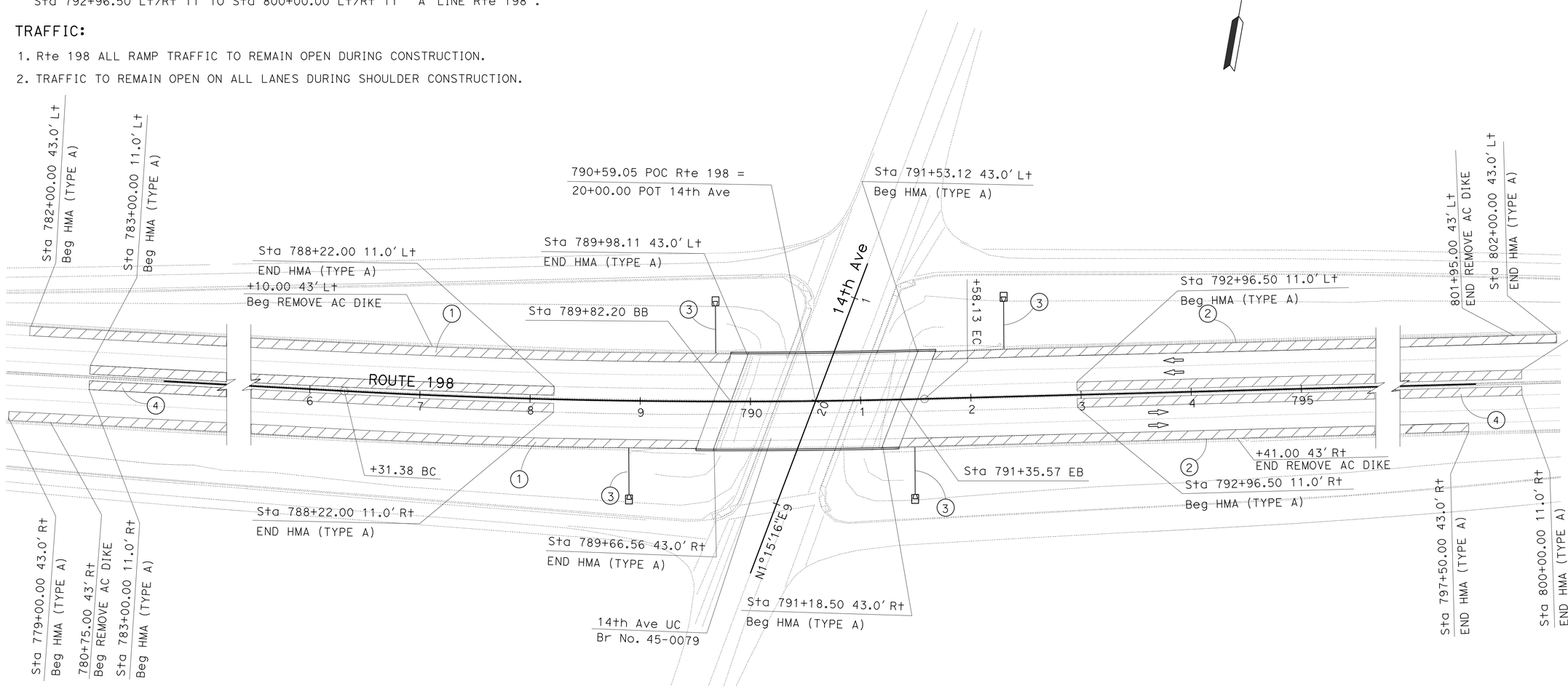

14th Avenue UC

STAGE CONSTRUCTION PLAN
(STAGE 1, PHASE 1)
(LOCATION 1)

SCALE: 1"=50′

SC-1

APPROVED FOR FOR STAGE CONSTRUCTION WORK ONLY.

REVISED BY	DATE REVISED

CALCULATED-DESIGNED BY	CHECKED BY
MADJID SADATMANSOORI	KEVIN T NGUYEN

FUNCTIONAL SUPERVISOR: SANKU G. MOHAN

STATE OF CALIFORNIA - DEPARTMENT OF TRANSPORTATION

Caltrans® DESIGN

LAST REVISION 04-29-13 | DATE PLOTTED => 11-JUN-2013 | TIME PLOTTED => 14:35

Dist	COUNTY	ROUTE	POST MILES TOTAL PROJECT	SHEET No.	TOTAL SHEETS
06	Kin	198	R14.7/R18.0	22	80

REGISTERED CIVIL ENGINEER 02/20/13 DATE

04-29-13
PLANS APPROVAL DATE

REGISTERED PROFESSIONAL ENGINEER MADJID SADATMANSOORI No. 66244 Exp. 6/30/14 CIVIL STATE OF CALIFORNIA

THE STATE OF CALIFORNIA OR ITS OFFICERS OR AGENTS SHALL NOT BE RESPONSIBLE FOR THE ACCURACY OR COMPLETENESS OF SCANNED COPIES OF THIS PLAN SHEET.

NOTE:

FOR MORE INFORMATION SEE TRAFFIC HANDLING PLANS
AND STAGE CONSTRUCTION DETAIL PLANS .

CONSTRUCTION:

1. CONSTRUCT 8′ OUTSIDE SHOULDERS FROM Sta 949+00.00 Lt 43′ TO Sta 955+97.30 Lt 43′
   Sta 957+60.71 Lt 43′ TO Sta 966+00.00 Lt 43′ AND Sta 946+00.00 Rt 43′ TO
   Sta 955+83.90 Rt 43′ Sta 957+47.43 Rt 43′ TO Sta 963+00.00 Rt 43′"A" LINE Rte 198.
2. EXISTING DRAINAGE DIKES TO BE REMOVED UP TO THE BRIDGE BARRIER ON FOUR SIDES.
3. PLACE 10" CORRUGATED STEEL PIPE DOWNDRAINS. SEE SHEET Q-3 AND STANDARD PLAN D87A, FOR LOCATIONS AND DETAILS.
4. CONSTRUCT 8′ INSIDE SHOULDERS FROM Sta 950+50.00 Lt/Rt 11′ TO Sta 954+30.54 Lt/Rt 11′
   Sta 959+14.16 Lt/Rt 11′ TO Sta 965+00.00 Lt/Rt 11′ "A" LINE Rte 198 .

TRAFFIC:

1. Rte 198 ALL RAMP TRAFFIC TO REMAIN OPEN DURING CONSTRUCTION.
2. TRAFFIC TO REMAIN OPEN ON ALL LANES DURING SHOULDER CONSTRUCTION.

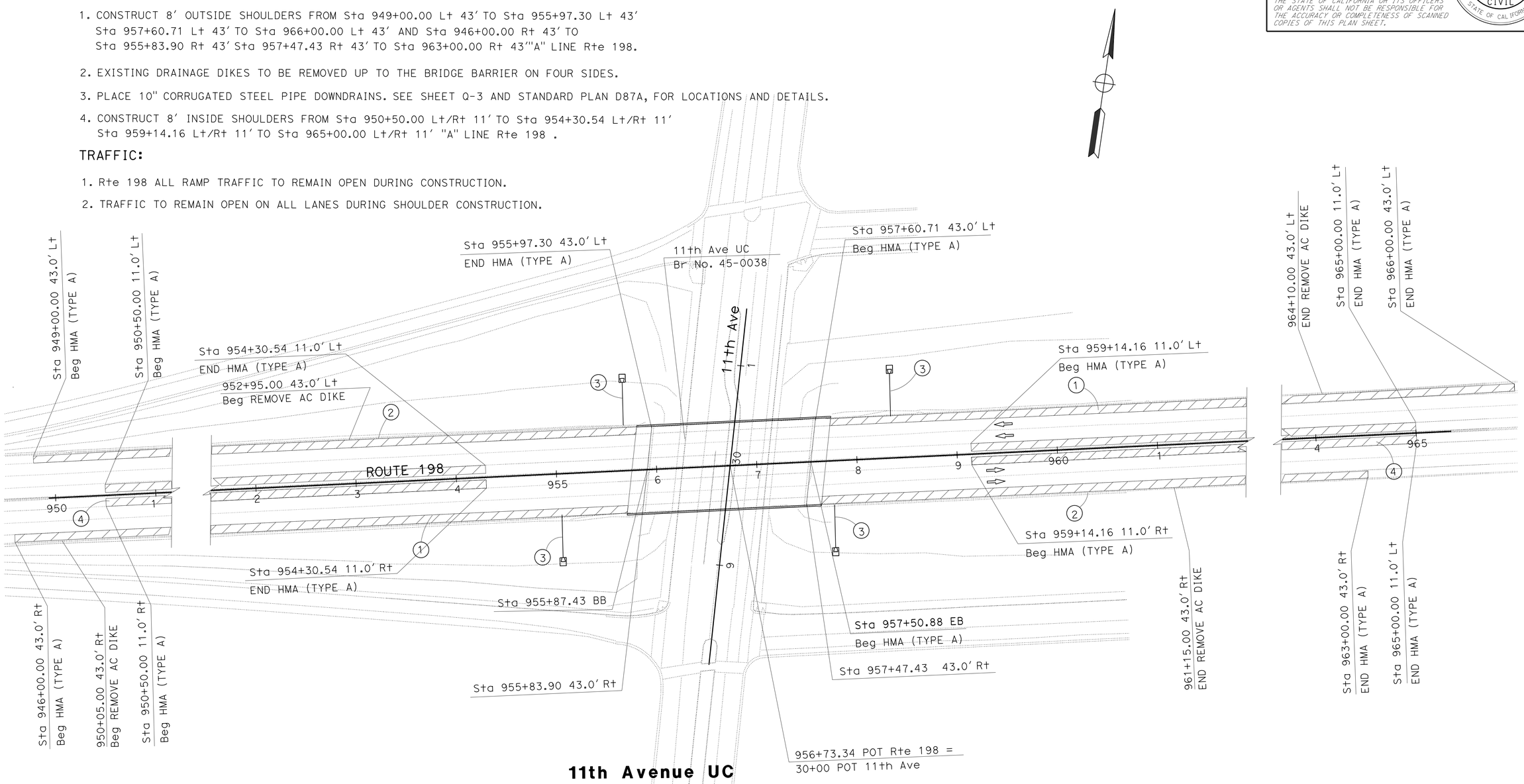

APPROVED FOR FOR STAGE CONSTRUCTION WORK ONLY.

STAGE CONSTRUCTION PLAN
(STAGE 1, PHASE 1)
(LOCATION 3)

SCALE: 1"=50′

SC-2

STATE OF CALIFORNIA - DEPARTMENT OF TRANSPORTATION
Caltrans®
DESIGN

FUNCTIONAL SUPERVISOR: SANKU G. MOHAN
CALCULATED-DESIGNED BY: MADJID SADATMANSOORI
CHECKED BY: KEVIN T NGUYEN
REVISED BY
DATE REVISED

LAST REVISION 04-29-13
DATE PLOTTED => 11-JUN-2013
TIME PLOTTED => 14:35

Dist	COUNTY	ROUTE	POST MILES TOTAL PROJECT	SHEET No.	TOTAL SHEETS
06	Kin	198	R14.7/R18.0	23	80

REGISTERED CIVIL ENGINEER DATE 02/20/13

04-29-13
PLANS APPROVAL DATE

REGISTERED PROFESSIONAL ENGINEER MADJID SADATMANSOORI No. 66244 Exp. 6/30/14 CIVIL STATE OF CALIFORNIA

THE STATE OF CALIFORNIA OR ITS OFFICERS OR AGENTS SHALL NOT BE RESPONSIBLE FOR THE ACCURACY OR COMPLETENESS OF SCANNED COPIES OF THIS PLAN SHEET.

NOTE:

FOR MORE INFORMATION SEE TRAFFIC HANDLING PLANS AND STAGE CONSTRUCTION DETAIL PLANS .

CONSTRUCTION:

1. REMOVE EXISTING CONCRETE BARRIER (TYPE 60) FROM Sta 788+22.00 TO Sta 792+96.50 "A" LINE Rte 198 .
2. REHABILITAE BRIDGE DECK AND PLACE CONCRETE BARRIER (TYPE 60) FROM Sta 788+22.00 TO Sta 792+96.50 "A" LINE Rte 198 .
3. CONSTRUCT HMA (TYPE A) TRANSITIONS TO APPROACH SLABS.

TRAFFIC:

1. Rte 198 ALL RAMP TRAFFIC TO REMAIN OPEN DURING CONSTRUCTION.
2. TRAFFIC TO REMAIN OPEN ON ONE LANE IN EACH DIRECTION, DURING THIS STAGE.

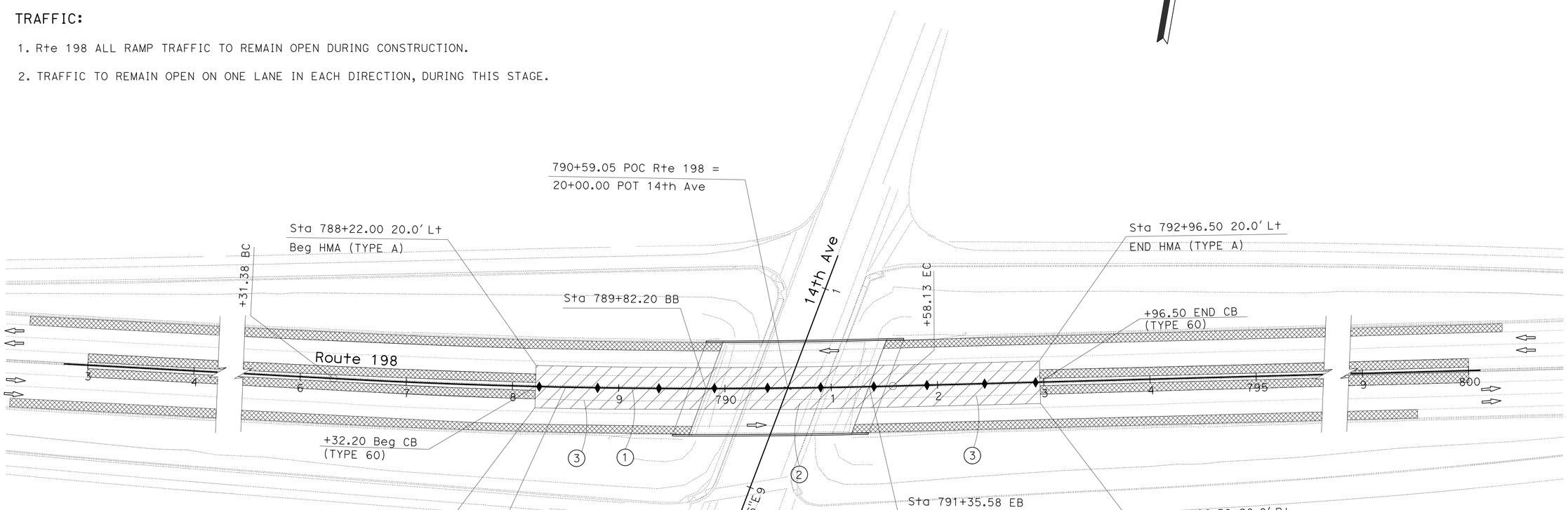

14th Avenue UC

STAGE CONSTRUCTION PLAN
(STAGE 1, PHASE 2)
(LOCATION 1)

SCALE: 1"=50'

SC-3

APPROVED FOR FOR STAGE CONSTRUCTION WORK ONLY.

STATE OF CALIFORNIA - DEPARTMENT OF TRANSPORTATION
Caltrans® DESIGN

FUNCTIONAL SUPERVISOR: SANKU G. MOHAN
CALCULATED-DESIGNED BY: MADJID SADATMANSOORI
CHECKED BY: KEVIN T NGUYEN
REVISED BY
DATE REVISED

LAST REVISION 04-29-13
DATE PLOTTED => 11-JUN-2013
TIME PLOTTED => 14:35

Dist	COUNTY	ROUTE	POST MILES TOTAL PROJECT	SHEET No.	TOTAL SHEETS
06	Kin	198	R14.7/R18.0	24	80

REGISTERED CIVIL ENGINEER 02/20/13 DATE

04-29-13
PLANS APPROVAL DATE

REGISTERED PROFESSIONAL ENGINEER MADJID SADATMANSOORI No. 66244 Exp. 6/30/14 CIVIL STATE OF CALIFORNIA

THE STATE OF CALIFORNIA OR ITS OFFICERS OR AGENTS SHALL NOT BE RESPONSIBLE FOR THE ACCURACY OR COMPLETENESS OF SCANNED COPIES OF THIS PLAN SHEET.

NOTE:

FOR MORE INFORMATION SEE TRAFFIC HANDLING PLANS AND STAGE CONSTRUCTION DETAIL PLANS .

CONSTRUCTION:

1. REMOVE EXISTING CONCRETE BARRIER (TYPE 60) FROM Sta 954+30.54 TO Sta 959+14.16 "A" LINE Rte 198 .
2. REHABILITATE BRIDGE DECK AND PLACE CONCRETE BARRIER (TYPE 60) FROM Sta 954+30.54 TO Sta 959+14.16 "A" LINE Rte 198 .
3. PLACE HMA (TYPE A) TRANSITIONS TO APPROACH SLABS.

TRAFFIC:

1. Rte 198 ALL RAMP TRAFFIC TO REMAIN OPEN DURING CONSTRUCTION.
2. TRAFFIC TO REMAIN OPEN ON ONE LANE IN EACH DIRECTION, DURING THIS STAGE.

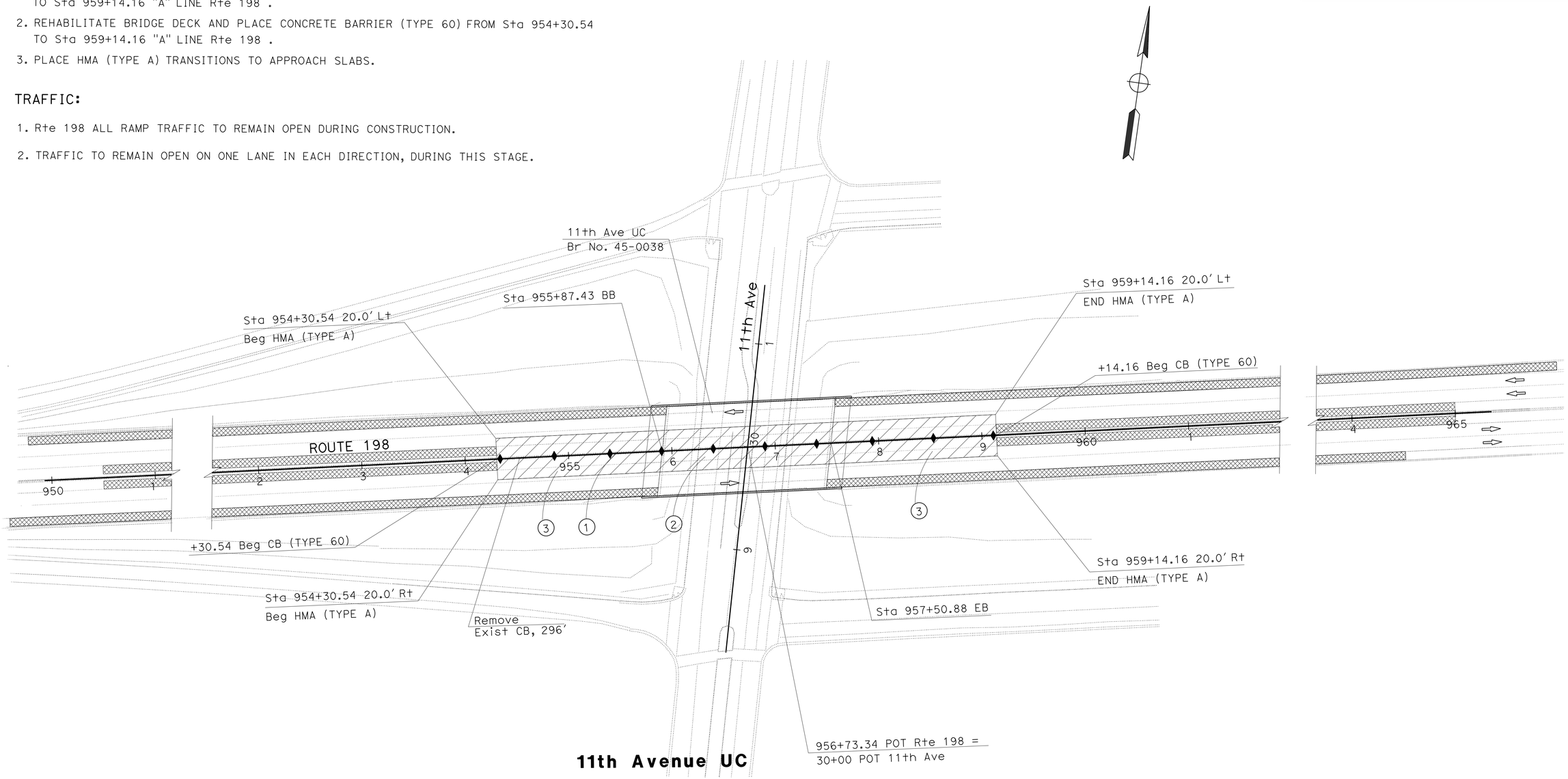

APPROVED FOR FOR STAGE CONSTRUCTION WORK ONLY.

STAGE CONSTRUCTION PLAN
(STAGE 1, PHASE 2)
(LOCATION 3)

SCALE: 1"=50'

SC-4

STATE OF CALIFORNIA - DEPARTMENT OF TRANSPORTATION
Caltrans®
DESIGN

FUNCTIONAL SUPERVISOR: SANKU G. MOHAN

CALCULATED-DESIGNED BY: MADJID SADATMANSOORI
CHECKED BY: KEVIN T NGUYEN

REVISED BY
DATE REVISED

LAST REVISION 04-29-13 | DATE PLOTTED => 11-JUN-2013 | TIME PLOTTED => 14:35

Dist	COUNTY	ROUTE	POST MILES TOTAL PROJECT	SHEET No.	TOTAL SHEETS
06	Kin	198	R14.7/R18.0	25	80

REGISTERED CIVIL ENGINEER 02/20/13 DATE

04-29-13
PLANS APPROVAL DATE

REGISTERED PROFESSIONAL ENGINEER MADJID SADATMANSOORI No. 66244 Exp. 6/30/14 CIVIL STATE OF CALIFORNIA

THE STATE OF CALIFORNIA OR ITS OFFICERS OR AGENTS SHALL NOT BE RESPONSIBLE FOR THE ACCURACY OR COMPLETENESS OF SCANNED COPIES OF THIS PLAN SHEET.

NOTE:

FOR MORE INFORMATION SEE TRAFFIC HANDLING PLANS AND STAGE CONSTRUCTION DETAIL PLANS .

CONSTRUCTION:

1. REHABILITATE BRIDGE, CONSTRUCT OUTSIDE LANE AND SHOULDERS FROM Sta 788+22.00 Lt/Rt 20' TO Sta 792+96.50 Lt/Rt 20' "A" LINE Rte 198 .
2. REMOVE Exist MBGR. CONSTRUCT ALTERNATIVE INLINE TERMINAL SYSTEMS, MBGR, AND DIKES ON BRIDGE APPROACHES. SEE STANDARD PLANS A77F1, A77F5 AND QUANTITY SHEETS.
3. CONSTRUCT HMA DIKES AND OUTSIDE SHOULDERS RUMBLE STRIPS.

TRAFFIC:

1. Rte 198 ALL RAMP TRAFFIC TO REMAIN OPEN DURING CONSTRUCTION.
2. TRAFFIC TO REMAIN OPEN ON MEDIAN DETOUR LANES DURING STAGE 2 CONSTRUCTION. ONE LANE TO BE OPEN IN EACH DIRECTION.

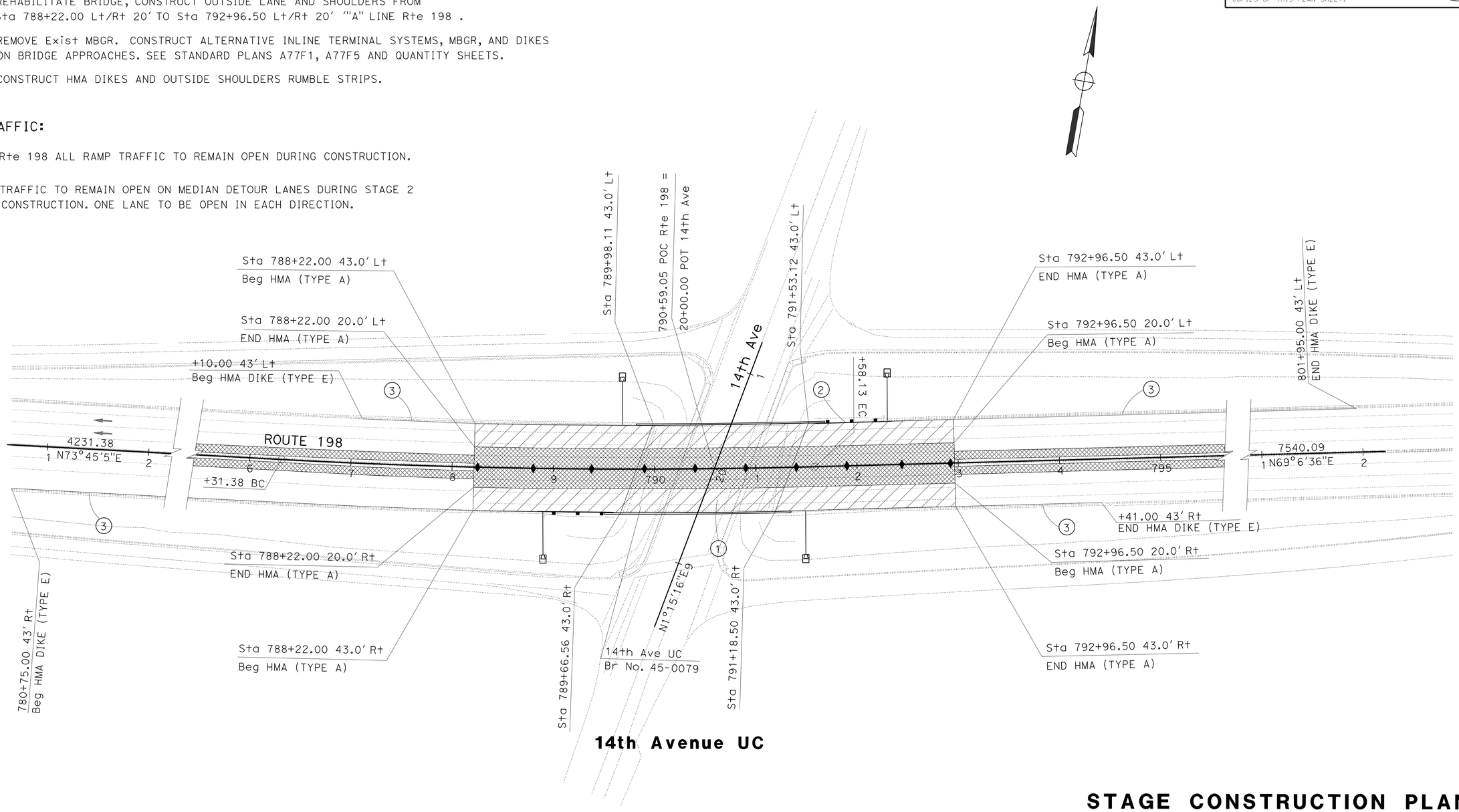

14th Avenue UC

APPROVED FOR FOR STAGE CONSTRUCTION WORK ONLY.

STAGE CONSTRUCTION PLAN
(STAGE 2)
(LOCATION 1)

SCALE: 1"=50'

SC-5

STATE OF CALIFORNIA - DEPARTMENT OF TRANSPORTATION
Caltrans
DESIGN

FUNCTIONAL SUPERVISOR: SANKU G. MOHAN
CALCULATED-DESIGNED BY: MADJID SADATMANSOORI
CHECKED BY: KEVIN T NGUYEN
REVISED BY
DATE REVISED

LAST REVISION 04-29-13
DATE PLOTTED => 11-JUN-2013
TIME PLOTTED => 14:35

Dist	COUNTY	ROUTE	POST MILES TOTAL PROJECT	SHEET No.	TOTAL SHEETS
06	Kin	198	R14.7/R18.0	26	80

REGISTERED CIVIL ENGINEER 02/20/13 DATE

04-29-13
PLANS APPROVAL DATE

REGISTERED PROFESSIONAL ENGINEER MADJID SADATMANSOORI No. 66244 Exp. 6/30/14 CIVIL STATE OF CALIFORNIA

THE STATE OF CALIFORNIA OR ITS OFFICERS OR AGENTS SHALL NOT BE RESPONSIBLE FOR THE ACCURACY OR COMPLETENESS OF SCANNED COPIES OF THIS PLAN SHEET.

NOTE:

FOR MORE INFORMATION SEE TRAFFIC HANDLING PLANS AND STAGE CONSTRUCTION DETAIL PLANS .

CONSTRUCTION:

1. REHABILITATE BRIDGE, CONSTRUCT OUTSIDE LANE AND SHOULDERS FROM Sta 954+30.54 Lt/Rt 20' TO Sta 959+14.16 Lt/Rt 20' "A" LINE Rte 198 .
2. REMOVE Exist MBGR. CONSTRUCT ALTERNATIVE INLINE TERMINAL SYSTEMS, MBGR, AND DIKES ON BRIDGE APPROACHES. SEE STANDARD PLANS A77F1, A77F5 AND QUANTITY SHEETS.
3. CONSTRUCT HMA DIKES AND OUTSIDE SHOULDERS RUMBLE STRIPS.

TRAFFIC:

1. Rte 198 ALL RAMP TRAFFIC TO REMAIN OPEN DURING CONSTRUCTION.
2. TRAFFIC TO REMAIN OPEN ON MEDIAN DETOUR LANES DURING STAGE 2 CONSTRUCTION. ONE LANE TO BE OPEN IN EACH DIRECTION.

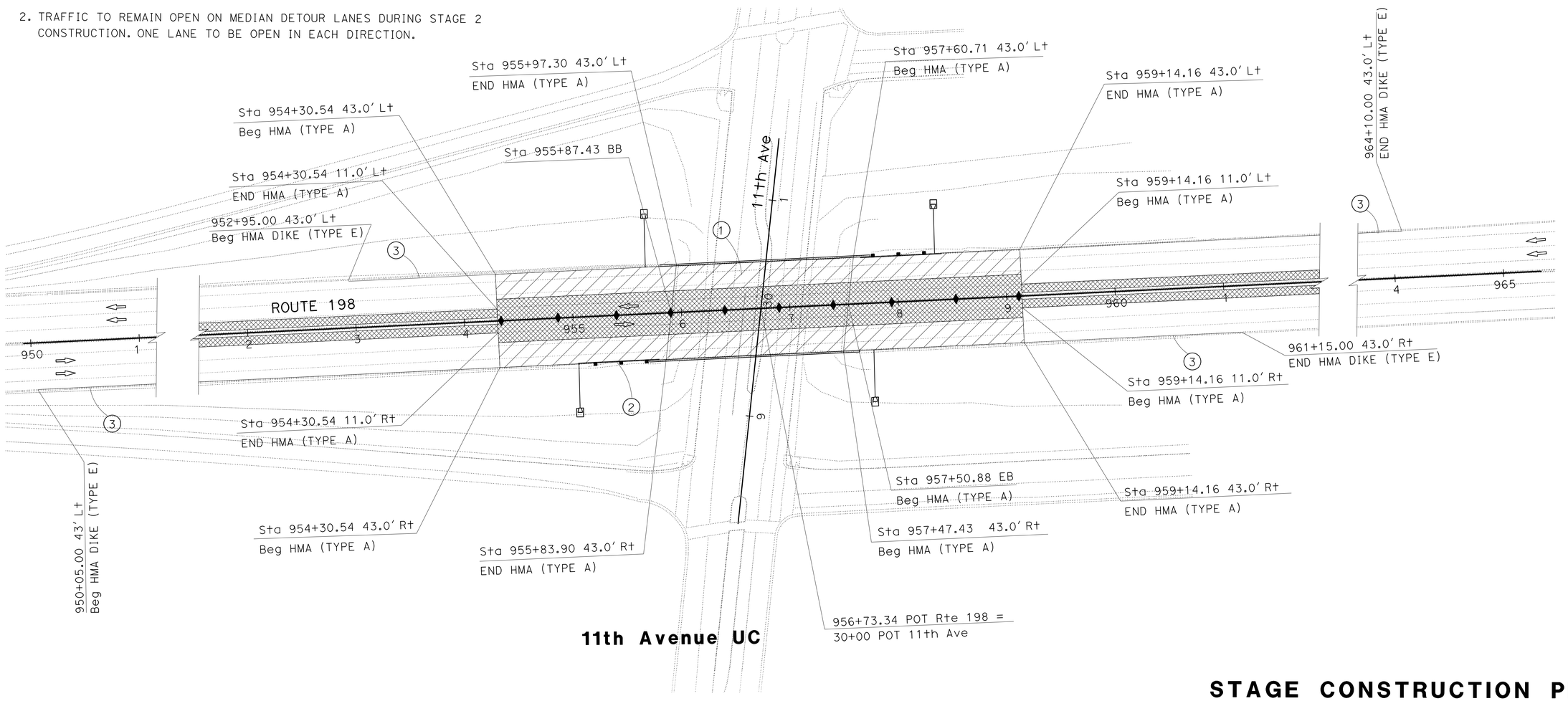

APPROVED FOR FOR STAGE CONSTRUCTION WORK ONLY.

STAGE CONSTRUCTION PLAN
(STAGE 2)
(LOCATION 3)

SCALE: 1"=50'

SC-6

STATE OF CALIFORNIA - DEPARTMENT OF TRANSPORTATION
Caltrans
DESIGN

FUNCTIONAL SUPERVISOR: SANKU G. MOHAN
CALCULATED-DESIGNED BY: MADJID SADATMANSOORI
CHECKED BY: KEVIN T NGUYEN
REVISED BY
DATE REVISED

LAST REVISION 04-29-13
DATE PLOTTED => 11-JUN-2013
TIME PLOTTED => 14:35

Dist	COUNTY	ROUTE	POST MILES TOTAL PROJECT	SHEET No.	TOTAL SHEETS
06	Kin	198	R14.7/R18.0	27	80

REGISTERED CIVIL ENGINEER 02/20/13 DATE

04-29-13
PLANS APPROVAL DATE

REGISTERED PROFESSIONAL ENGINEER MADJID SADATMANSOORI No. 66244 Exp. 6/30/14 CIVIL STATE OF CALIFORNIA

THE STATE OF CALIFORNIA OR ITS OFFICERS OR AGENTS SHALL NOT BE RESPONSIBLE FOR THE ACCURACY OR COMPLETENESS OF SCANNED COPIES OF THIS PLAN SHEET.

NOTE:

FOR MORE INFORMATION SEE TRAFFIC HANDLING PLANS
AND STAGE CONSTRUCTION DETAIL PLANS .

CONSTRUCTION:

1. CONSTRUCT 8′ OUTSIDE SHOULDERS FROM Sta 834+50.00 Lt 43′ TO Sta 841+06.27 Lt 43′
   Sta 842+97.19 Lt 43′ TO Sta 854+00.00 Lt 43′ AND Sta 831+00.00 Rt 43′ TO
   Sta 841+49.18 Rt 43′ Sta 843+83.81 Rt 43′ TO Sta 850+00.00 Rt 43′"A" LINE Rte 198 .
2. EXISTING DRAINAGE DIKES TO BE REMOVED UP TO THE BRIDGE BARRIER ON FOUR SIDES.
3. PLACE 10" CORRUGATED STEEL PIPE DOWNDRAINS, SEE SHEET Q-3 AND STANDARD PLAN D87A, FOR LOCATIONS AND DETAILS.
4. CONSTRUCT 8′ INSIDE SHOULDERS FROM Sta 836+00.00 Lt/Rt 11′ TO Sta 839+85.00 Lt/Rt 11′
   Sta 845+05.40 Lt/Rt 11′ TO Sta 850+50.00 Lt/Rt 11′ "A" LINE Rte 198 .

TRAFFIC:

1. Rte 198 ALL RAMP TRAFFIC TO REMAIN OPEN DURING CONSTRUCTION.
2. TRAFFIC TO REMAIN OPEN ON ALL LANES DURING SHOULDER CONSTRUCTION.

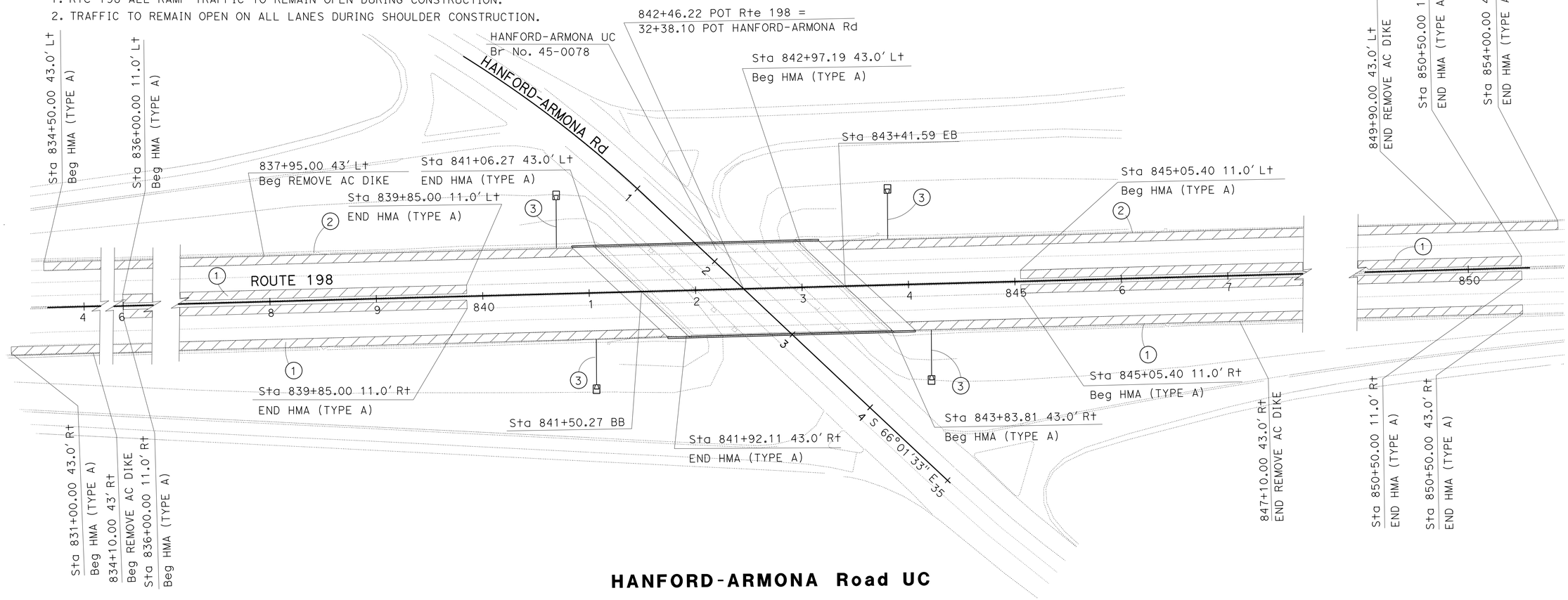

HANFORD-ARMONA Road UC

APPROVED FOR FOR STAGE CONSTRUCTION WORK ONLY.

STAGE CONSTRUCTION PLAN
(STAGE 3, PHASE 1)
(LOCATION 2)

SCALE: 1"=50′

SC-7

STATE OF CALIFORNIA - DEPARTMENT OF TRANSPORTATION
Caltrans®
DESIGN

FUNCTIONAL SUPERVISOR: SANKU G. MOHAN
CALCULATED-DESIGNED BY: MADJID SADATMANSOORI
CHECKED BY: KEVIN T NGUYEN
REVISED BY
DATE REVISED

LAST REVISION 04-29-13
DATE PLOTTED => 11-JUN-2013
TIME PLOTTED => 14:35

Dist	COUNTY	ROUTE	POST MILES TOTAL PROJECT	SHEET No.	TOTAL SHEETS
06	Kin	198	R14.7/R18.0	28	80

REGISTERED CIVIL ENGINEER 02/20/13 DATE

04-29-13
PLANS APPROVAL DATE

REGISTERED PROFESSIONAL ENGINEER MADJID SADATMANSOORI No. 66244 Exp. 6/30/14 CIVIL STATE OF CALIFORNIA

THE STATE OF CALIFORNIA OR ITS OFFICERS OR AGENTS SHALL NOT BE RESPONSIBLE FOR THE ACCURACY OR COMPLETENESS OF SCANNED COPIES OF THIS PLAN SHEET.

NOTE:

FOR MORE INFORMATION SEE TRAFFIC HANDLING PLANS AND STAGE CONSTRUCTION DETAIL PLANS .

CONSTRUCTION:

1. REMOVE EXISTING CONCRETE BARRIER (TYPE 60) FROM Sta 839+85.00 TO Sta 845+05.40 "A" LINE Rte 198 .
2. REHABILITATE BRIDGE DECK AND PLACE CONCRETE BARRIER (TYPE 60) FROM Sta 839+85.00 TO Sta 845+05.40 "A" LINE Rte 198 .
3. PLACE HMA (TYPE A) TRANSITIONS TO APPROACH SLABS.

TRAFFIC:

1. Rte 198 ALL RAMP TRAFFIC TO REMAIN OPEN DURING CONSTRUCTION.
2. TRAFFIC TO REMAIN OPEN ON ONE LANE IN EACH DIRECTION, DURING THIS STAGE.

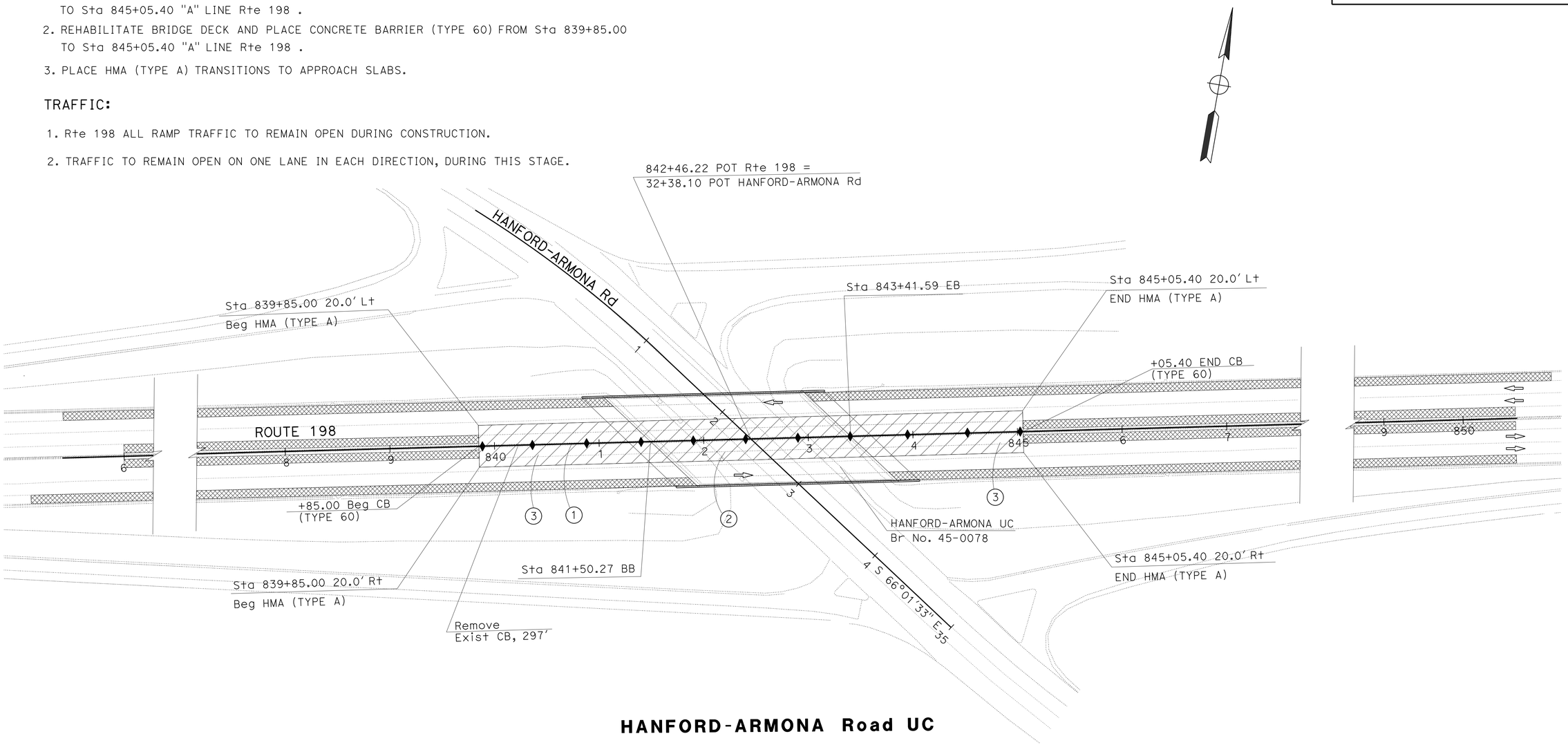

HANFORD-ARMONA Road UC

APPROVED FOR FOR STAGE CONSTRUCTION WORK ONLY.

STAGE CONSTRUCTION PLAN
(STAGE 3, PHASE 2)
(LOCATION 2)

SCALE: 1"=50'

SC-8

STATE OF CALIFORNIA - DEPARTMENT OF TRANSPORTATION
Caltrans®
DESIGN

FUNCTIONAL SUPERVISOR: SANKU G. MOHAN

CALCULATED-DESIGNED BY: MADJID SADATMANSOORI
CHECKED BY: KEVIN T NGUYEN

REVISED BY
DATE REVISED

LAST REVISION 04-29-13
DATE PLOTTED => 11-JUN-2013
TIME PLOTTED => 14:35

Dist	COUNTY	ROUTE	POST MILES TOTAL PROJECT	SHEET No.	TOTAL SHEETS
06	Kin	198	R14.7/R18.0	29	80

REGISTERED CIVIL ENGINEER 02/20/13 DATE

04-29-13
PLANS APPROVAL DATE

REGISTERED PROFESSIONAL ENGINEER MADJID SADATMANSOORI No. 66244 Exp. 6/30/14 CIVIL STATE OF CALIFORNIA

THE STATE OF CALIFORNIA OR ITS OFFICERS OR AGENTS SHALL NOT BE RESPONSIBLE FOR THE ACCURACY OR COMPLETENESS OF SCANNED COPIES OF THIS PLAN SHEET.

NOTE:

FOR MORE INFORMATION SEE TRAFFIC HANDLING PLANS AND STAGE CONSTRUCTION DETAIL PLANS .

CONSTRUCTION:

1. REHABILITATE BRIDGE, CONSTRUCT OUTSIDE LANE AND SHOULDERS FROM Sta 839+85.00 Lt/Rt 20' TO Sta 845+05.40 Lt/Rt 20' "A" LINE Rte 198 .
2. REMOVE Exist MBGR. CONSTRUCT ALTERNATIVE INLINE TERMINAL SYSTEMS, MBGR, AND DIKES ON BRIDGE APPROACHES. SEE STANDARD PLANS A77F1, A77F5 AND QUANTITY SHEETS.
3. CONSTRUCT HMA DIKES AND OUTSIDE SHOULDERS RUMBLE STRIPS.

TRAFFIC:

1. Rte 198 ALL RAMP TRAFFIC TO REMAIN OPEN DURING CONSTRUCTION.
2. TRAFFIC TO REMAIN OPEN ON MEDIAN DETOUR LANES DURING STAGE 2 CONSTRUCTION. ONE LANE TO BE OPEN IN EACH DIRECTION.

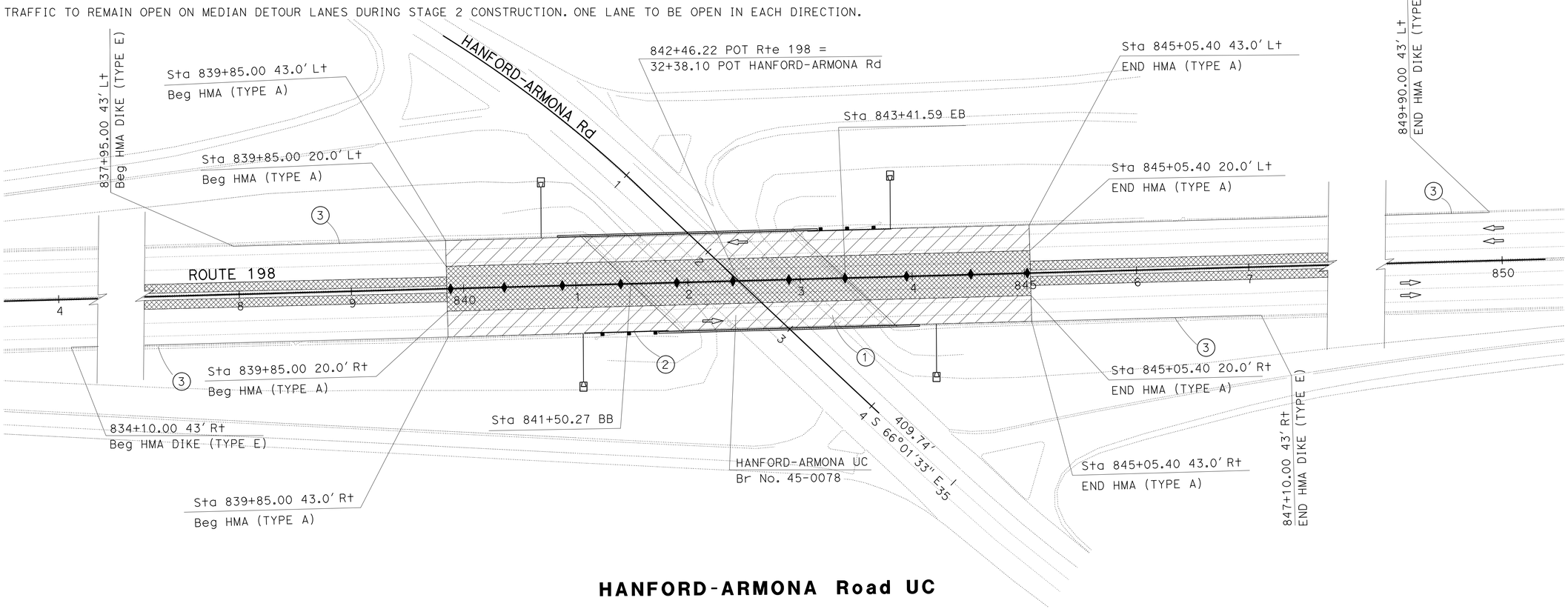

HANFORD-ARMONA Road UC

APPROVED FOR FOR STAGE CONSTRUCTION WORK ONLY.

STAGE CONSTRUCTION PLAN
(STAGE 4)
(LOCATION 2)

SCALE: 1"=50'

SC-9

STATE OF CALIFORNIA - DEPARTMENT OF TRANSPORTATION
Caltrans® DESIGN

FUNCTIONAL SUPERVISOR: SANKU G. MOHAN
CALCULATED-DESIGNED BY: MADJID SADATMANSOORI
CHECKED BY: KEVIN T NGUYEN
REVISED BY
DATE REVISED

LAST REVISION 04-29-13
DATE PLOTTED => 11-JUN-2013
TIME PLOTTED => 14:35

Dist	COUNTY	ROUTE	POST MILES TOTAL PROJECT	SHEET No.	TOTAL SHEETS
06	Kin	198	R14.7/R18.0	30	80

Hassan Taha 04-29-13
REGISTERED CIVIL ENGINEER DATE

04-29-13
PLANS APPROVAL DATE

REGISTERED PROFESSIONAL ENGINEER
HASSAN M. TAHA
No. 60130
Exp. 06/30/14
CIVIL
STATE OF CALIFORNIA

THE STATE OF CALIFORNIA OR ITS OFFICERS OR AGENTS SHALL NOT BE RESPONSIBLE FOR THE ACCURACY OR COMPLETENESS OF SCANNED COPIES OF THIS PLAN SHEET.

LEGEND:

- DIRECTION OF TRAFFIC
- Temp RAILING (TYPE K)
- CHANNELIZERS (SURFACE MOUNTED)
- (X) ROADSIDE SIGN No.
- ROADSIDE SIGN ONE-POST
- Temp CRASH CUSHION
- LANE REDUCTION ARROW
- (XX) TRAFFIC STRIPE DETAIL

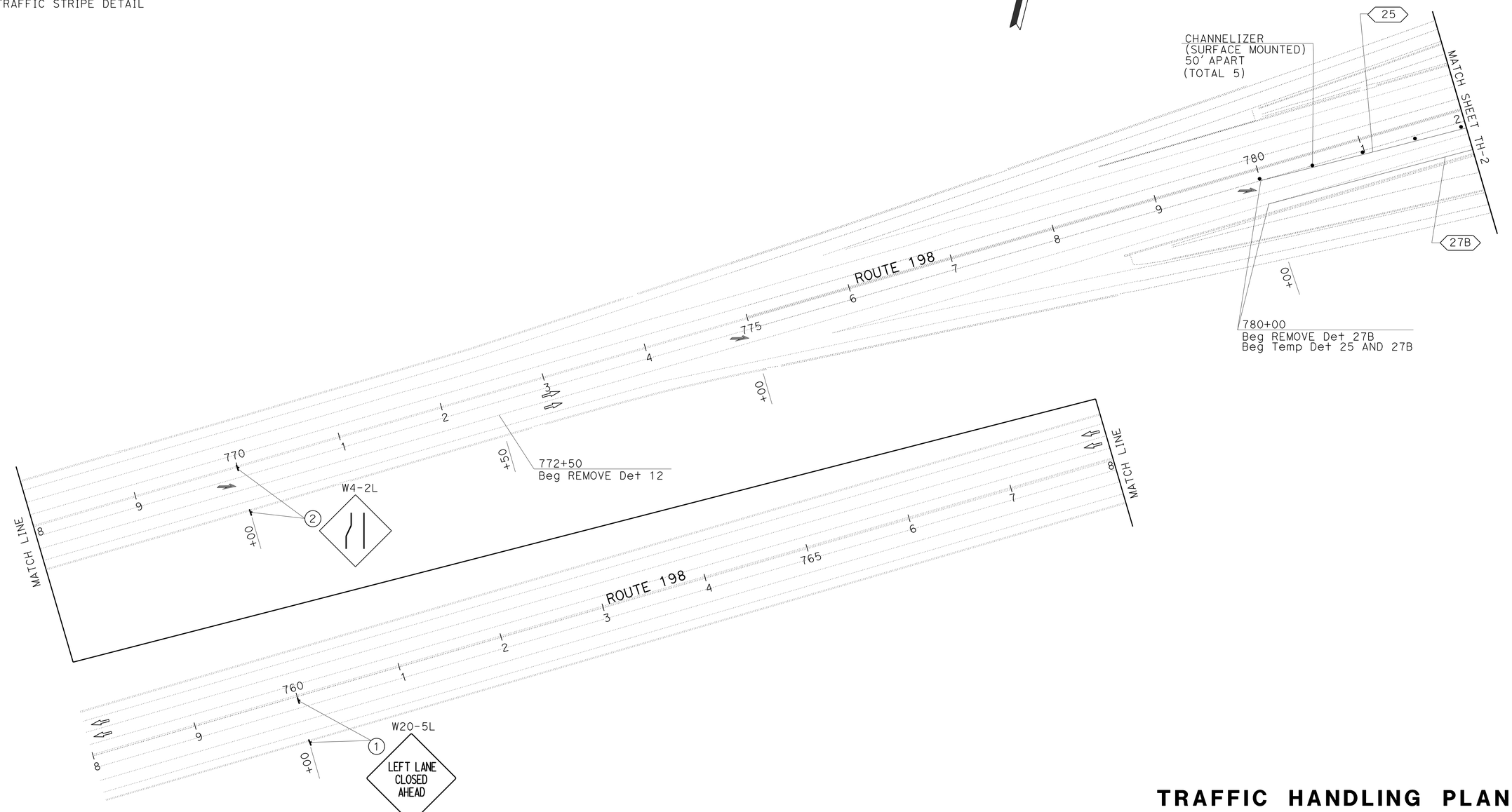

APPROVED FOR TRAFFIC HANDLING WORK ONLY

TRAFFIC HANDLING PLAN
(STAGE 1, LOCATION 1)

SCALE: 1" = 50'

TH-1

STATE OF CALIFORNIA - DEPARTMENT OF TRANSPORTATION
Caltrans® **TRAFFIC DESIGN**

FUNCTIONAL SUPERVISOR: MOHAMMED QATAMI
CALCULATED-DESIGNED BY: VANIK POGOSYAN
CHECKED BY: HASSAN TAHA
REVISED BY
DATE REVISED

LAST REVISION 04-29-13 | DATE PLOTTED => 11-JUN-2013 | TIME PLOTTED => 14:35

Dist	COUNTY	ROUTE	POST MILES TOTAL PROJECT	SHEET No.	TOTAL SHEETS
06	Kin	198	R14.7/R18.0	31	80

Hassan Taha 04-29-13
REGISTERED CIVIL ENGINEER DATE

04-29-13
PLANS APPROVAL DATE

REGISTERED PROFESSIONAL ENGINEER HASSAN M. TAHA No. 60130 Exp. 06/30/14 CIVIL STATE OF CALIFORNIA

THE STATE OF CALIFORNIA OR ITS OFFICERS OR AGENTS SHALL NOT BE RESPONSIBLE FOR THE ACCURACY OR COMPLETENESS OF SCANNED COPIES OF THIS PLAN SHEET.

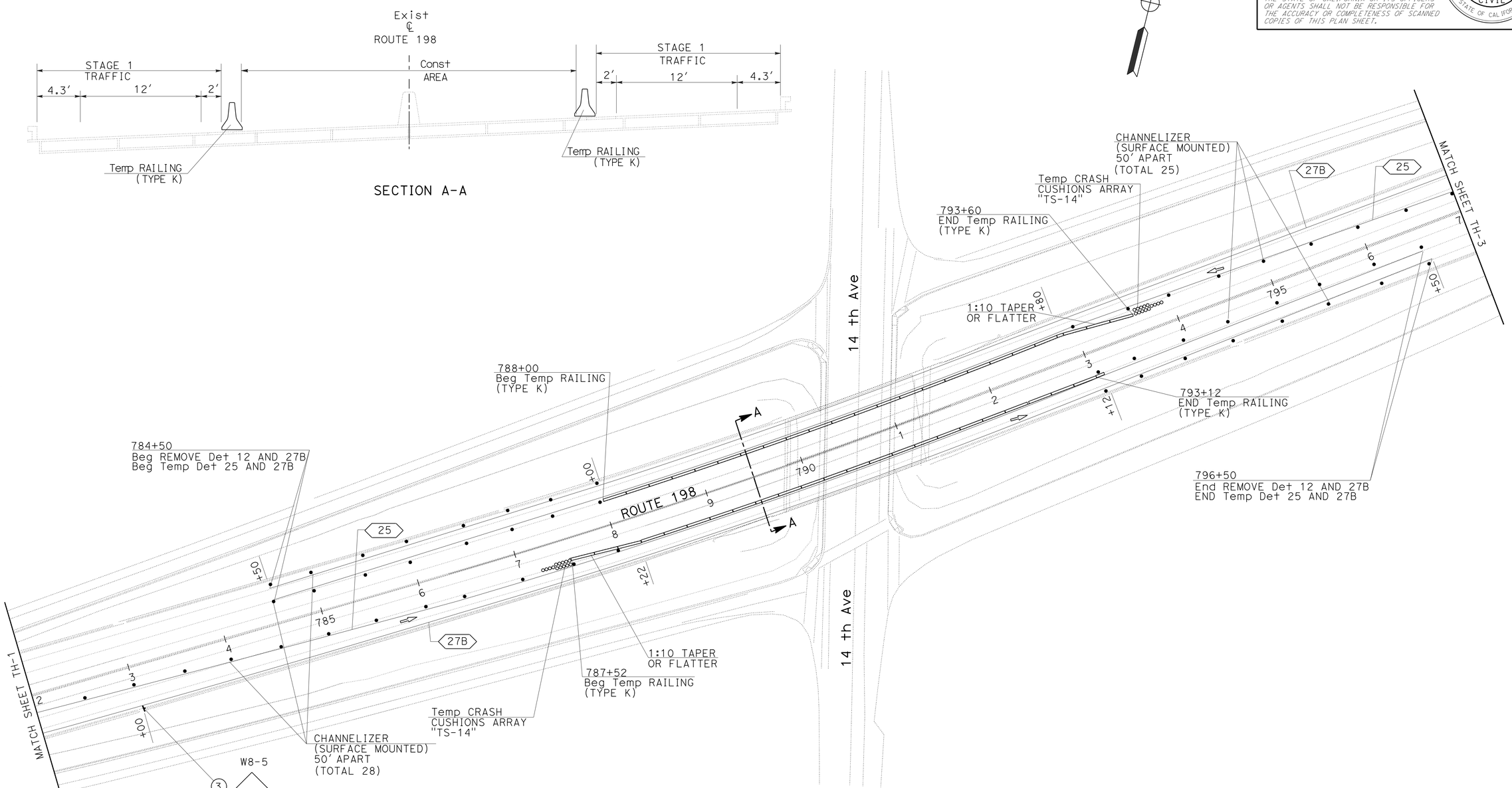

TRAFFIC HANDLING PLAN
(STAGE 1, LOCATION 1)

SCALE: 1" = 50′

TH-2

APPROVED FOR TRAFFIC HANDLING WORK ONLY

STATE OF CALIFORNIA - DEPARTMENT OF TRANSPORTATION
Caltrans® **TRAFFIC DESIGN**

FUNCTIONAL SUPERVISOR: MOHAMMED QATAMI
CALCULATED-DESIGNED BY: VANIK POGOSYAN
CHECKED BY: HASSAN TAHA
REVISED BY
DATE REVISED

LAST REVISION 04-29-13
DATE PLOTTED => 11-JUN-2013
TIME PLOTTED => 14:35

Dist	COUNTY	ROUTE	POST MILES TOTAL PROJECT	SHEET No.	TOTAL SHEETS
06	Kin	198	R14.7/R18.0	32	80

Hassan Taha 04-29-13
REGISTERED CIVIL ENGINEER DATE

04-29-13
PLANS APPROVAL DATE

REGISTERED PROFESSIONAL ENGINEER
HASSAN M. TAHA
No. 60130
Exp. 06/30/14
CIVIL
STATE OF CALIFORNIA

THE STATE OF CALIFORNIA OR ITS OFFICERS OR AGENTS SHALL NOT BE RESPONSIBLE FOR THE ACCURACY OR COMPLETENESS OF SCANNED COPIES OF THIS PLAN SHEET.

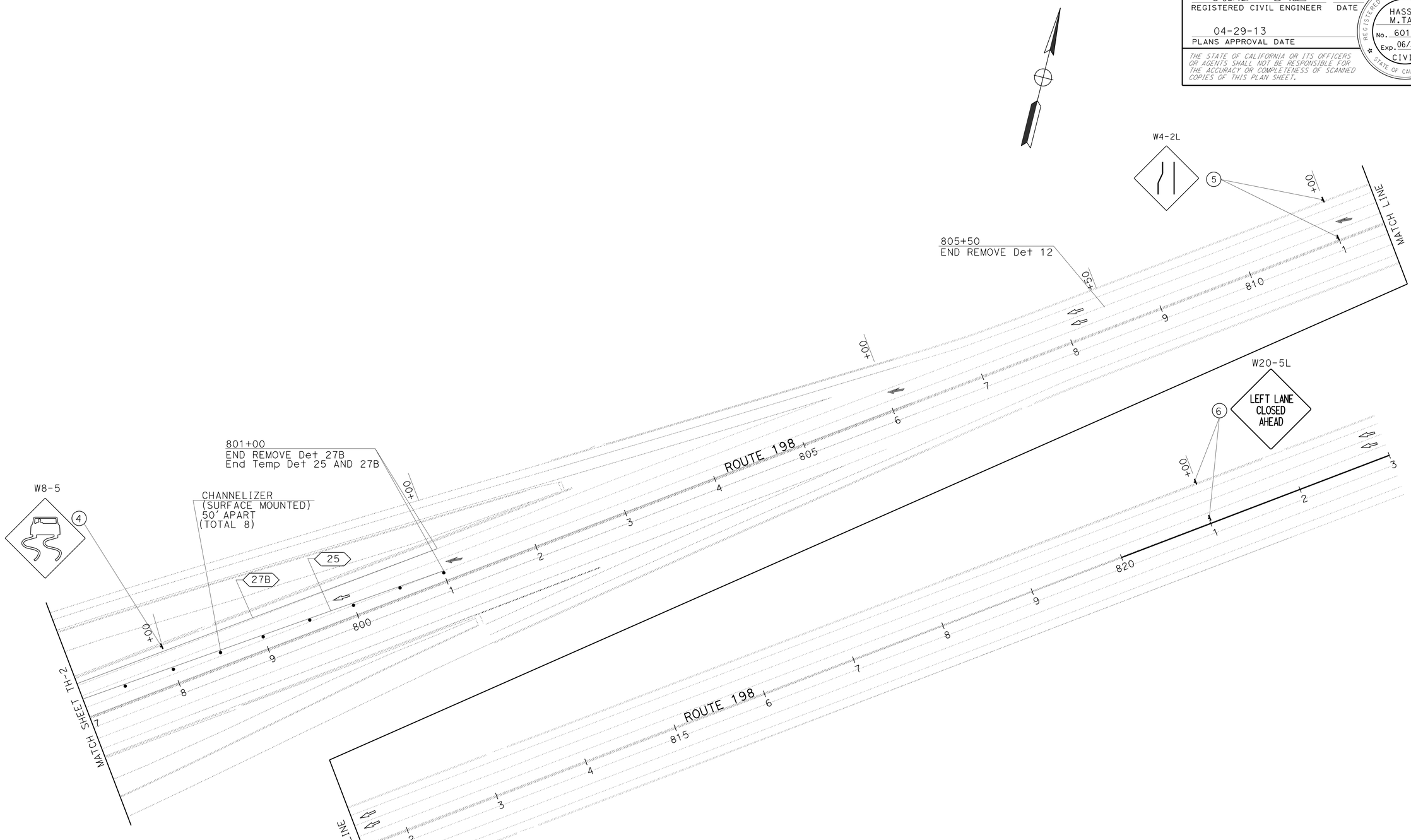

TRAFFIC HANDLING PLAN
(STAGE 1, LOCATION 1)

SCALE: 1" = 50'

TH-3

APPROVED FOR TRAFFIC HANDLING WORK ONLY

STATE OF CALIFORNIA - DEPARTMENT OF TRANSPORTATION
Caltrans® **TRAFFIC DESIGN**

FUNCTIONAL SUPERVISOR: MOHAMMED QATAMI
CALCULATED-DESIGNED BY: VANIK POGOSYAN
CHECKED BY: HASSAN TAHA
REVISED BY
DATE REVISED

LAST REVISION 04-29-13
DATE PLOTTED => 11-JUN-2013
TIME PLOTTED => 14:35

Dist	COUNTY	ROUTE	POST MILES TOTAL PROJECT	SHEET No.	TOTAL SHEETS
06	Kin	198	R14.7/R18.0	33	80

Hassan Taha 04-29-13
REGISTERED CIVIL ENGINEER DATE

04-29-13
PLANS APPROVAL DATE

REGISTERED PROFESSIONAL ENGINEER HASSAN M. TAHA No. 60130 Exp. 06/30/14 CIVIL STATE OF CALIFORNIA

THE STATE OF CALIFORNIA OR ITS OFFICERS OR AGENTS SHALL NOT BE RESPONSIBLE FOR THE ACCURACY OR COMPLETENESS OF SCANNED COPIES OF THIS PLAN SHEET.

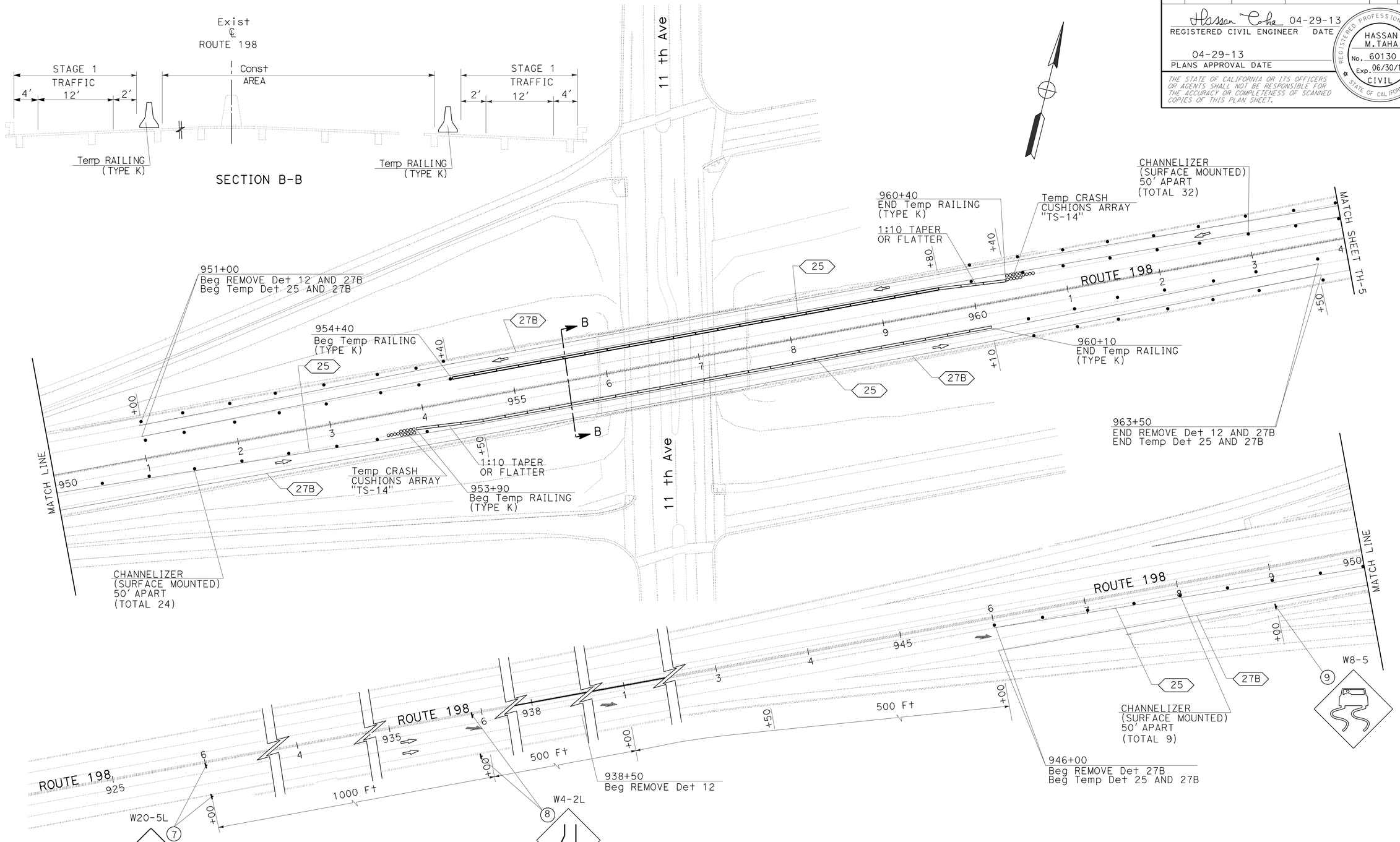

TRAFFIC HANDLING PLAN
(STAGE 1, LOCATION 3)

SCALE: 1" = 50′

TH-4

APPROVED FOR TRAFFIC HANDLING WORK ONLY

REVISED BY | DATE REVISED
VANIK POGOSYAN | HASSAN TAHA
CALCULATED-DESIGNED BY | CHECKED BY
FUNCTIONAL SUPERVISOR: MOHAMMED QATAMI

STATE OF CALIFORNIA - DEPARTMENT OF TRANSPORTATION
Caltrans® TRAFFIC DESIGN

LAST REVISION 04-29-13 | DATE PLOTTED => 11-JUN-2013 TIME PLOTTED => 14:35

Dist	COUNTY	ROUTE	POST MILES TOTAL PROJECT	SHEET No.	TOTAL SHEETS
06	Kin	198	R14.7/R18.0	34	80

Hassan Taha 04-29-13
REGISTERED CIVIL ENGINEER DATE

04-29-13
PLANS APPROVAL DATE

REGISTERED PROFESSIONAL ENGINEER
HASSAN M. TAHA
No. 60130
Exp. 06/30/14
CIVIL
STATE OF CALIFORNIA

THE STATE OF CALIFORNIA OR ITS OFFICERS OR AGENTS SHALL NOT BE RESPONSIBLE FOR THE ACCURACY OR COMPLETENESS OF SCANNED COPIES OF THIS PLAN SHEET.

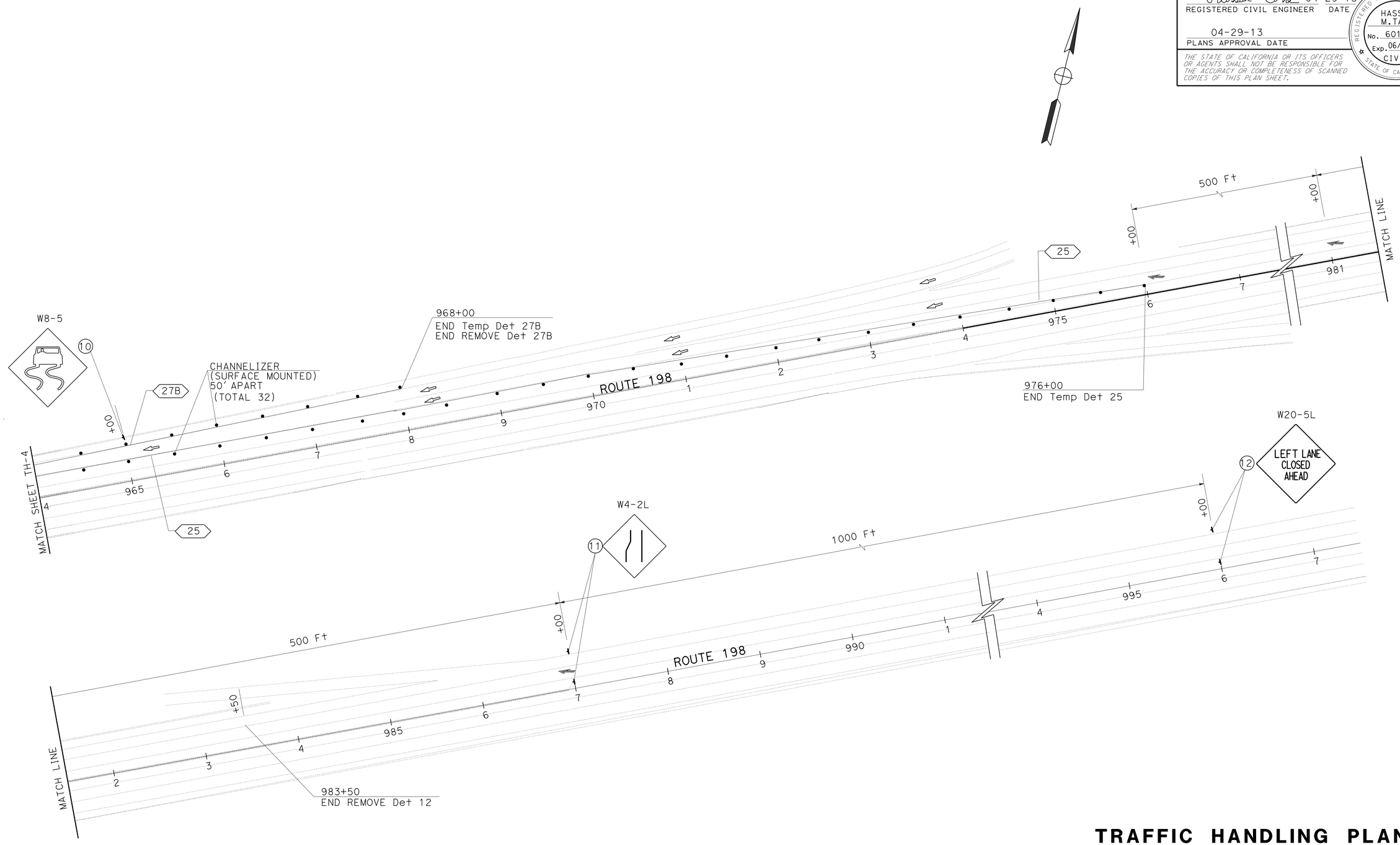

TRAFFIC HANDLING PLAN
(STAGE 1, LOCATION 3)

SCALE: 1" = 50'

TH-5

APPROVED FOR TRAFFIC HANDLING WORK ONLY

STATE OF CALIFORNIA - DEPARTMENT OF TRANSPORTATION
Caltrans
TRAFFIC DESIGN

FUNCTIONAL SUPERVISOR: MOHAMMED QATAMI
CALCULATED-DESIGNED BY: VANIK POGOSYAN
CHECKED BY: HASSAN TAHA
REVISED BY
DATE REVISED

LAST REVISION 04-29-13
DATE PLOTTED => 11-JUN-2013
TIME PLOTTED => 14:35

Dist	COUNTY	ROUTE	POST MILES TOTAL PROJECT	SHEET No.	TOTAL SHEETS
06	Kin	198	R14.7/R18.0	35	80

Hassan Taha 04-29-13
REGISTERED CIVIL ENGINEER DATE

04-29-13
PLANS APPROVAL DATE

REGISTERED PROFESSIONAL ENGINEER
HASSAN M. TAHA
No. 60130
Exp. 06/30/14
CIVIL
STATE OF CALIFORNIA

THE STATE OF CALIFORNIA OR ITS OFFICERS OR AGENTS SHALL NOT BE RESPONSIBLE FOR THE ACCURACY OR COMPLETENESS OF SCANNED COPIES OF THIS PLAN SHEET.

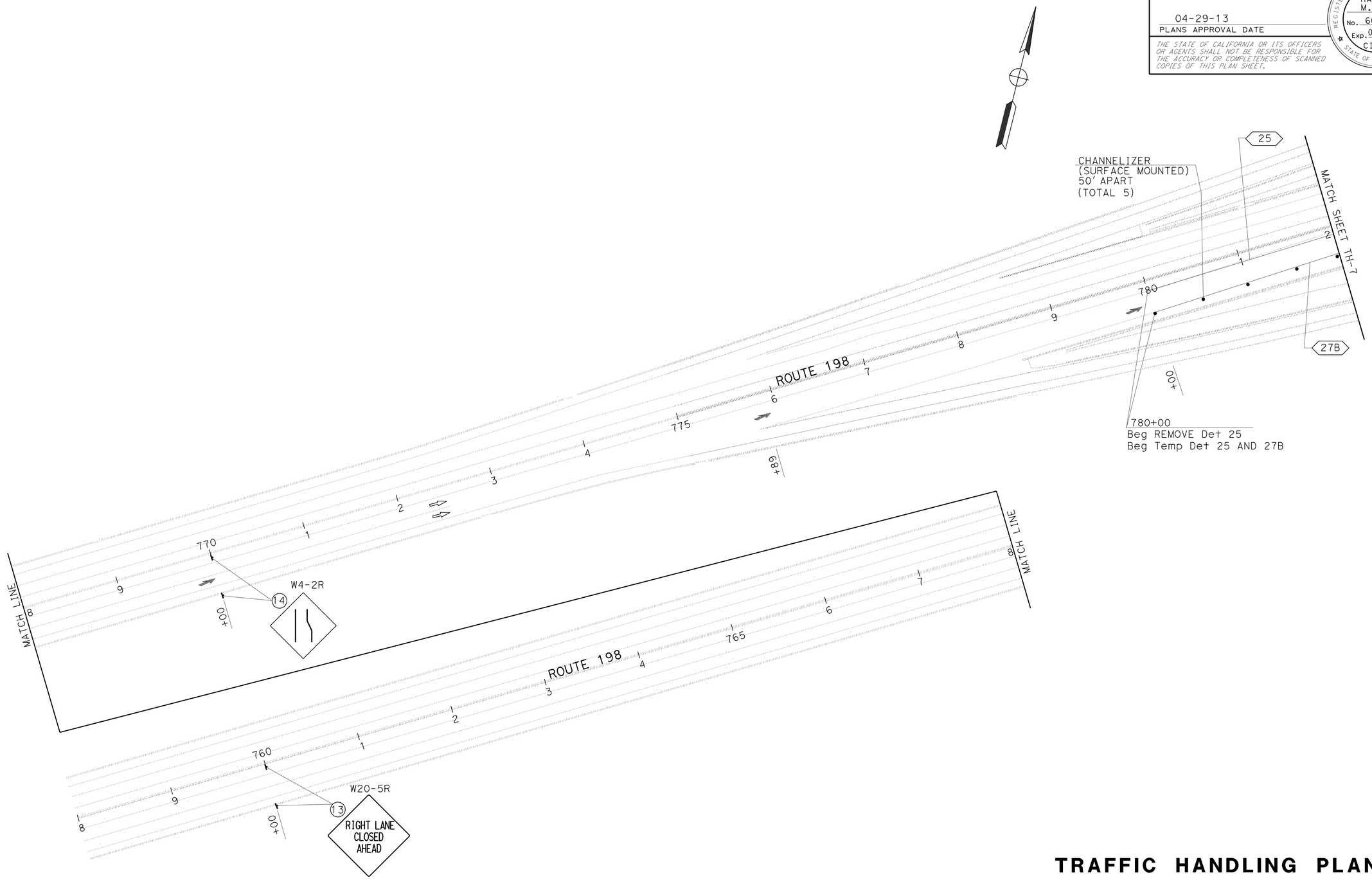

TRAFFIC HANDLING PLAN
(STAGE 2, LOCATION 1)

SCALE: 1" = 50'

TH-6

APPROVED FOR TRAFFIC HANDLING WORK ONLY

REVISED BY	DATE REVISED

CALCULATED-DESIGNED BY: VANIK POGOSYAN
CHECKED BY: HASSAN TAHA
FUNCTIONAL SUPERVISOR: MOHAMMED QATAMI

STATE OF CALIFORNIA - DEPARTMENT OF TRANSPORTATION
Caltrans
TRAFFIC DESIGN

LAST REVISION 04-29-13
DATE PLOTTED => 11-JUN-2013
TIME PLOTTED => 14:35

Dist	COUNTY	ROUTE	POST MILES TOTAL PROJECT	SHEET No.	TOTAL SHEETS
06	Kin	198	R14.7/R18.0	36	80

Hassan Taha 04-29-13
REGISTERED CIVIL ENGINEER DATE

04-29-13
PLANS APPROVAL DATE

REGISTERED PROFESSIONAL ENGINEER
HASSAN M. TAHA
No. 60130
Exp. 06/30/14
CIVIL
STATE OF CALIFORNIA

THE STATE OF CALIFORNIA OR ITS OFFICERS OR AGENTS SHALL NOT BE RESPONSIBLE FOR THE ACCURACY OR COMPLETENESS OF SCANNED COPIES OF THIS PLAN SHEET.

SECTION C-C

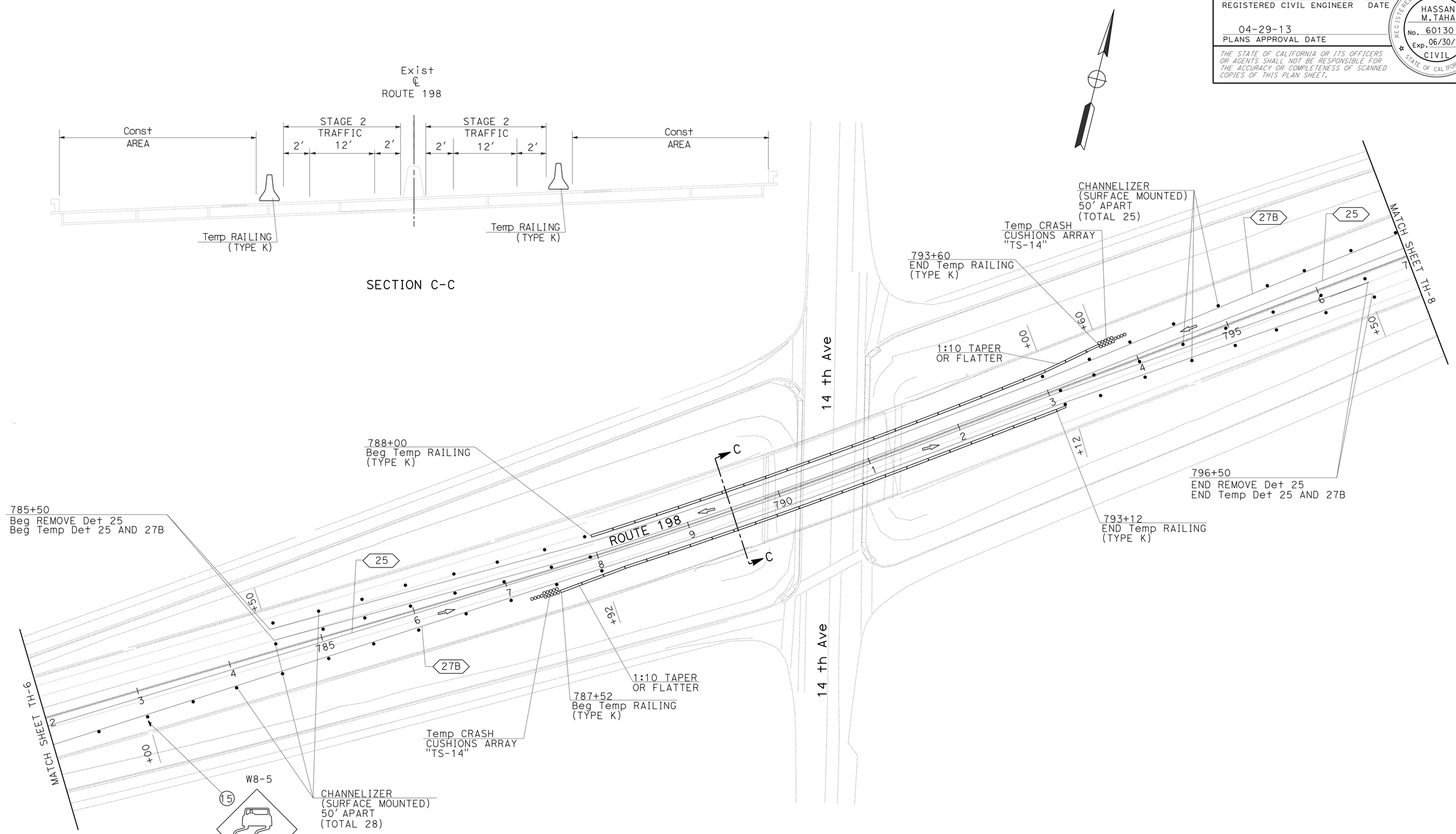

TRAFFIC HANDLING PLAN
(STAGE 2, LOCATION 1)

SCALE: 1" = 50′

TH-7

APPROVED FOR TRAFFIC HANDLING WORK ONLY

STATE OF CALIFORNIA - DEPARTMENT OF TRANSPORTATION
Caltrans® TRAFFIC DESIGN

FUNCTIONAL SUPERVISOR: MOHAMMED QATAMI
CALCULATED-DESIGNED BY: VANIK POGOSYAN
CHECKED BY: HASSAN TAHA
REVISED BY
DATE REVISED

LAST REVISION 04-29-13
DATE PLOTTED => 11-JUN-2013
TIME PLOTTED => 14:35

Dist	COUNTY	ROUTE	POST MILES TOTAL PROJECT	SHEET No.	TOTAL SHEETS
06	Kin	198	R14.7/R18.0	37	80

Hassan Taha 04-29-13
REGISTERED CIVIL ENGINEER DATE

04-29-13
PLANS APPROVAL DATE

REGISTERED PROFESSIONAL ENGINEER
HASSAN M. TAHA
No. 60130
Exp. 06/30/14
CIVIL
STATE OF CALIFORNIA

THE STATE OF CALIFORNIA OR ITS OFFICERS OR AGENTS SHALL NOT BE RESPONSIBLE FOR THE ACCURACY OR COMPLETENESS OF SCANNED COPIES OF THIS PLAN SHEET.

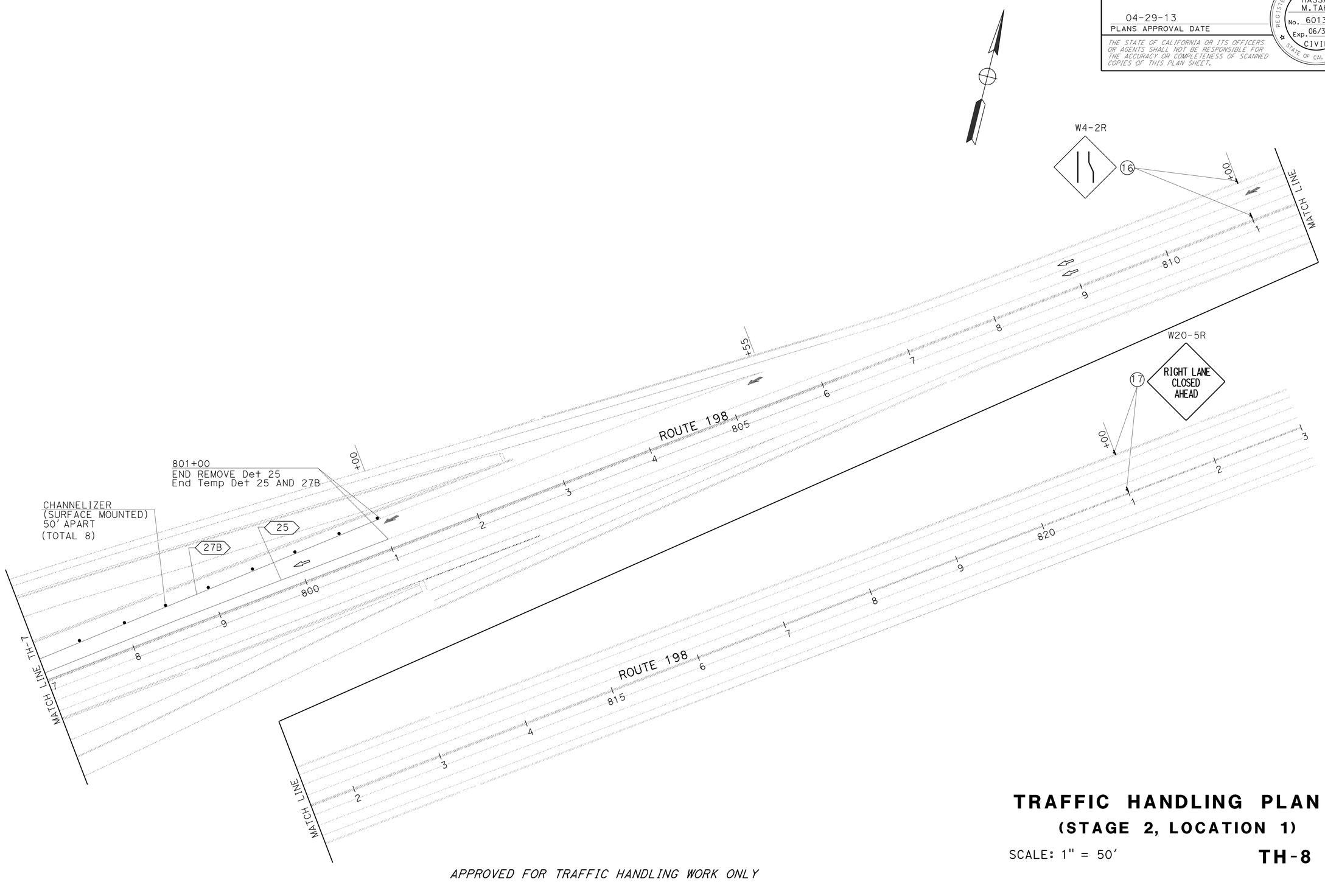

TRAFFIC HANDLING PLAN

(STAGE 2, LOCATION 1)

SCALE: 1" = 50'

TH-8

APPROVED FOR TRAFFIC HANDLING WORK ONLY

STATE OF CALIFORNIA - DEPARTMENT OF TRANSPORTATION
Caltrans® **TRAFFIC DESIGN**

FUNCTIONAL SUPERVISOR: MOHAMMED QATAMI
CALCULATED-DESIGNED BY: VANIK POGOSYAN
CHECKED BY: HASSAN TAHA
REVISED BY
DATE REVISED

LAST REVISION 04-29-13
DATE PLOTTED => 11-JUN-2013
TIME PLOTTED => 14:35

Dist	COUNTY	ROUTE	POST MILES TOTAL PROJECT	SHEET No.	TOTAL SHEETS
06	Kin	198	R14.7/R18.0	38	80

Hassan Taha 04-29-13
REGISTERED CIVIL ENGINEER DATE

04-29-13
PLANS APPROVAL DATE

REGISTERED PROFESSIONAL ENGINEER HASSAN M. TAHA No. 60130 Exp. 06/30/14 CIVIL STATE OF CALIFORNIA

THE STATE OF CALIFORNIA OR ITS OFFICERS OR AGENTS SHALL NOT BE RESPONSIBLE FOR THE ACCURACY OR COMPLETENESS OF SCANNED COPIES OF THIS PLAN SHEET.

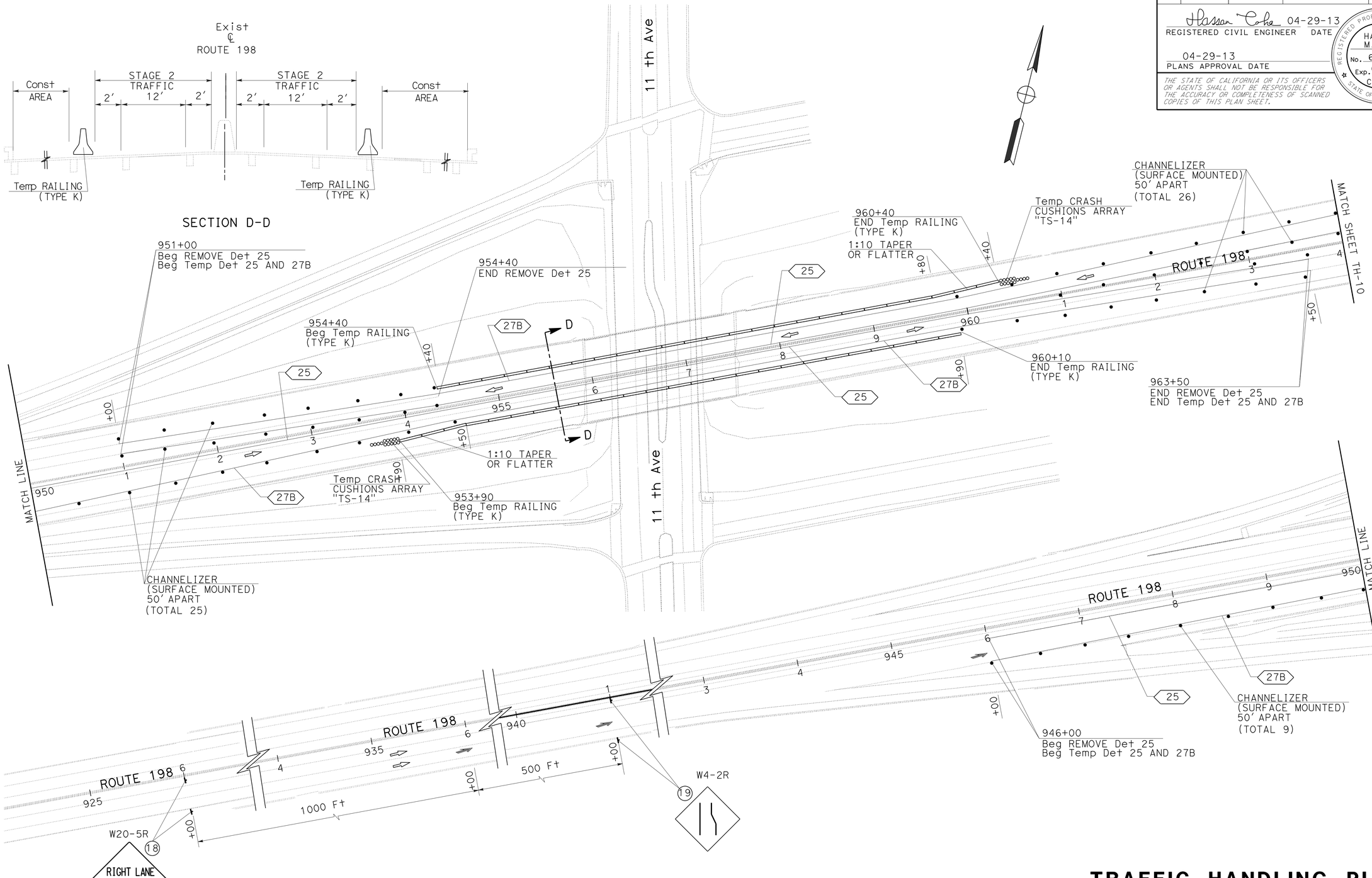

TRAFFIC HANDLING PLAN
(STAGE 2, LOCATION 3)

SCALE: 1" = 50′

TH-9

APPROVED FOR TRAFFIC HANDLING WORK ONLY

STATE OF CALIFORNIA - DEPARTMENT OF TRANSPORTATION
Caltrans® TRAFFIC DESIGN

FUNCTIONAL SUPERVISOR: MOHAMMED QATAMI
CALCULATED-DESIGNED BY: VANIK POGOSYAN
CHECKED BY: HASSAN TAHA
REVISED BY / DATE REVISED

LAST REVISION 04-29-13
DATE PLOTTED => 11-JUN-2013
TIME PLOTTED => 14:35

Dist	COUNTY	ROUTE	POST MILES TOTAL PROJECT	SHEET No.	TOTAL SHEETS
06	Kin	198	R14.7/R18.0	39	80

Hassan Taha 04-29-13
REGISTERED CIVIL ENGINEER DATE

04-29-13
PLANS APPROVAL DATE

REGISTERED PROFESSIONAL ENGINEER
HASSAN M. TAHA
No. 60130
Exp. 06/30/14
CIVIL
STATE OF CALIFORNIA

THE STATE OF CALIFORNIA OR ITS OFFICERS OR AGENTS SHALL NOT BE RESPONSIBLE FOR THE ACCURACY OR COMPLETENESS OF SCANNED COPIES OF THIS PLAN SHEET.

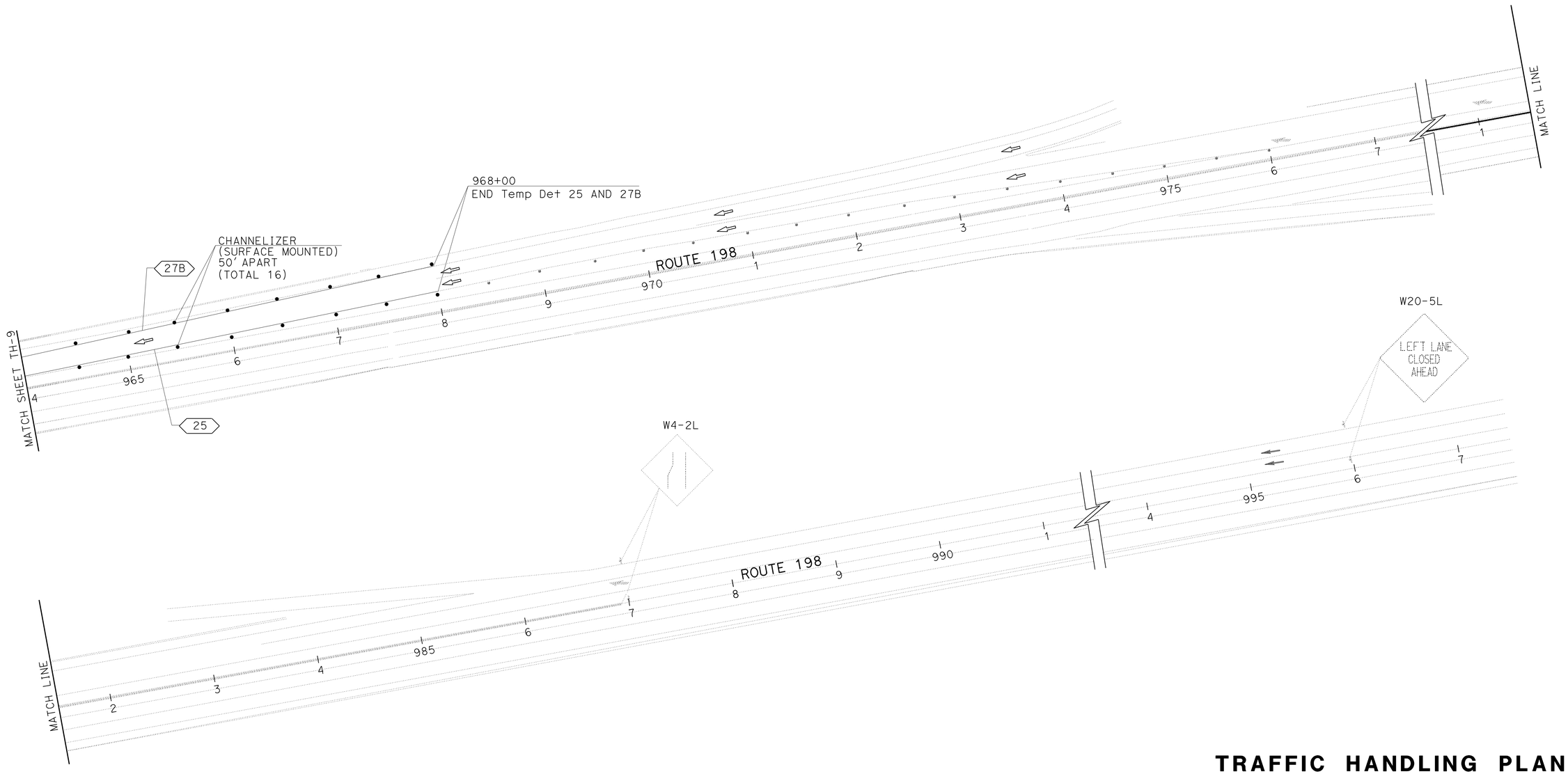

TRAFFIC HANDLING PLAN
(STAGE 2, LOCATION 3)

SCALE: 1" = 50'

TH-10

APPROVED FOR TRAFFIC HANDLING WORK ONLY

STATE OF CALIFORNIA - DEPARTMENT OF TRANSPORTATION
Caltrans® TRAFFIC DESIGN

FUNCTIONAL SUPERVISOR: MOHAMMED QATAMI
CALCULATED-DESIGNED BY: VANIK POGOSYAN
CHECKED BY: HASSAN TAHA
REVISED BY
DATE REVISED

LAST REVISION 04-29-13
DATE PLOTTED => 11-JUN-2013
TIME PLOTTED => 14:35

Dist	COUNTY	ROUTE	POST MILES TOTAL PROJECT	SHEET No.	TOTAL SHEETS
06	Kin	198	R14.7/R18.0	40	80

Hassan Taha 04-29-13
REGISTERED CIVIL ENGINEER DATE

04-29-13
PLANS APPROVAL DATE

REGISTERED PROFESSIONAL ENGINEER
HASSAN M. TAHA
No. 60130
Exp. 06/30/14
CIVIL
STATE OF CALIFORNIA

THE STATE OF CALIFORNIA OR ITS OFFICERS OR AGENTS SHALL NOT BE RESPONSIBLE FOR THE ACCURACY OR COMPLETENESS OF SCANNED COPIES OF THIS PLAN SHEET.

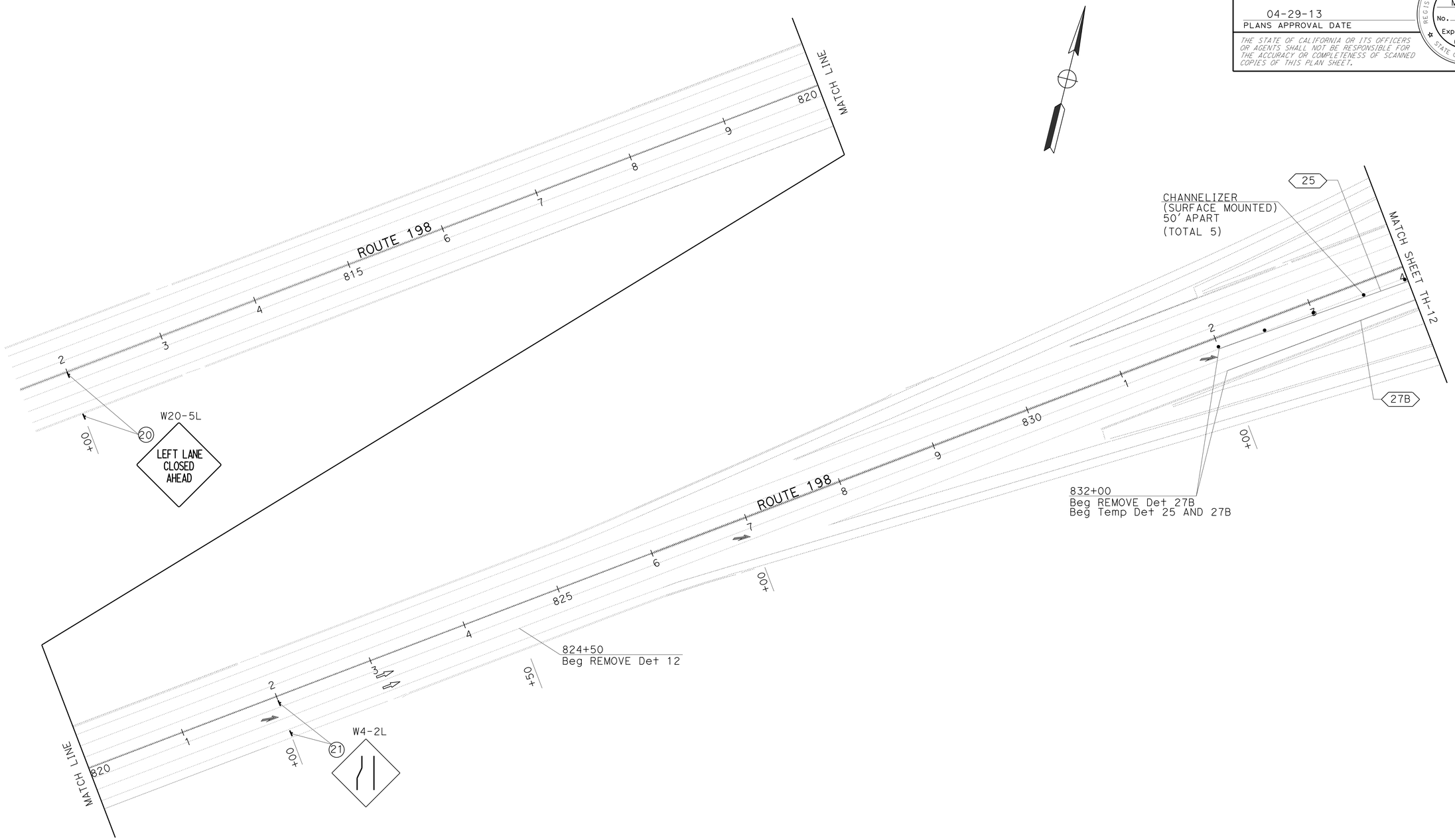

TRAFFIC HANDLING PLAN
(STAGE 3, LOCATION 2)

SCALE: 1" = 50'

TH-11

APPROVED FOR TRAFFIC HANDLING WORK ONLY

STATE OF CALIFORNIA - DEPARTMENT OF TRANSPORTATION
Caltrans
TRAFFIC DESIGN

FUNCTIONAL SUPERVISOR: MOHAMMED QATAMI
CALCULATED-DESIGNED BY: VANIK POGOSYAN
CHECKED BY: HASSAN TAHA
REVISED BY
DATE REVISED

LAST REVISION 04-29-13
DATE PLOTTED => 11-JUN-2013
TIME PLOTTED => 14:35

Dist	COUNTY	ROUTE	POST MILES TOTAL PROJECT	SHEET No.	TOTAL SHEETS
06	Kin	198	R14.7/R18.0	41	80

Hassan Taha 04-29-13
REGISTERED CIVIL ENGINEER DATE

04-29-13
PLANS APPROVAL DATE

REGISTERED PROFESSIONAL ENGINEER
HASSAN M. TAHA
No. 60130
Exp. 06/30/14
CIVIL
STATE OF CALIFORNIA

THE STATE OF CALIFORNIA OR ITS OFFICERS OR AGENTS SHALL NOT BE RESPONSIBLE FOR THE ACCURACY OR COMPLETENESS OF SCANNED COPIES OF THIS PLAN SHEET.

SECTION E-E

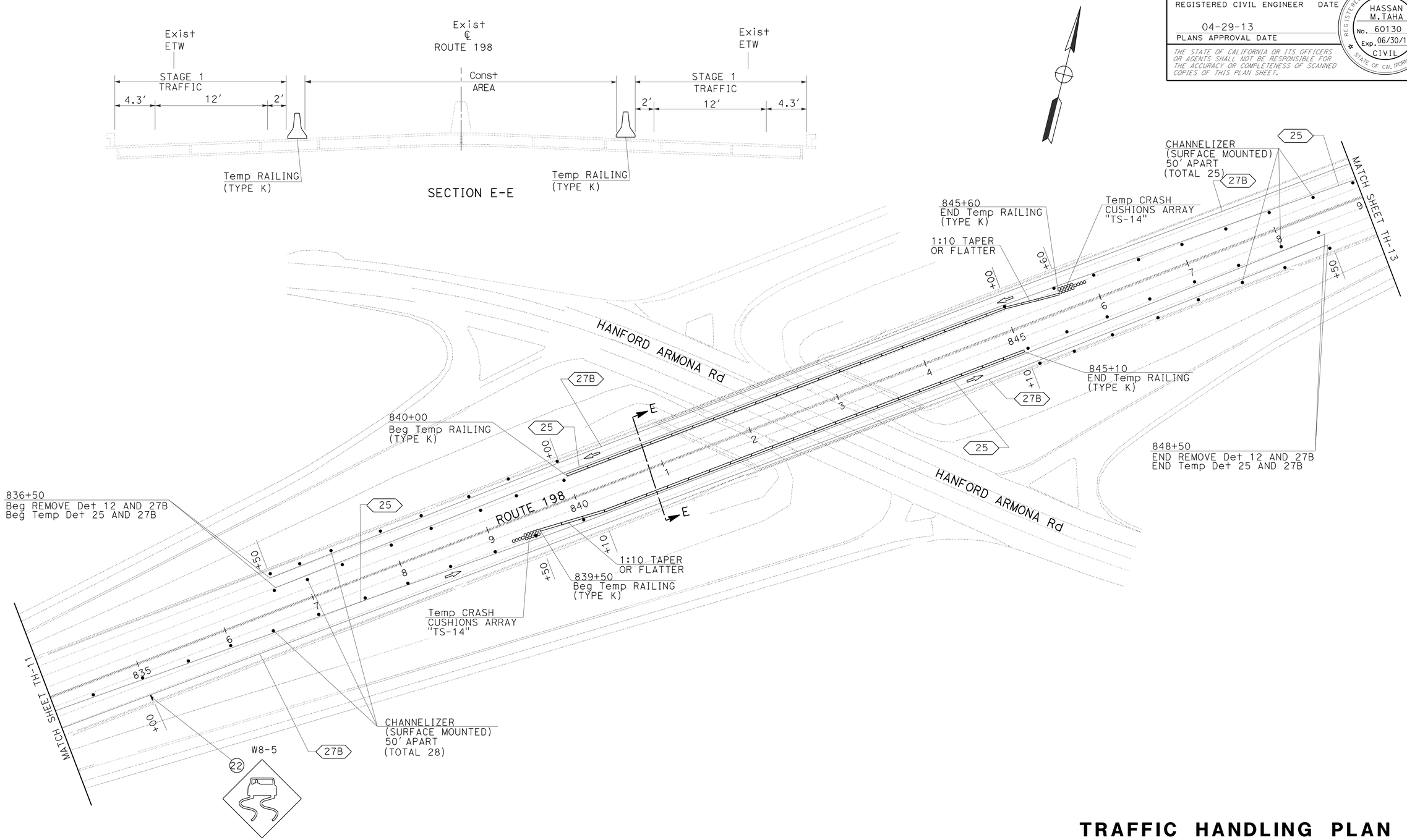

TRAFFIC HANDLING PLAN
(STAGE 3, LOCATION 2)

SCALE: 1" = 50′

TH-12

APPROVED FOR TRAFFIC HANDLING WORK ONLY

STATE OF CALIFORNIA - DEPARTMENT OF TRANSPORTATION
Caltrans
TRAFFIC DESIGN

FUNCTIONAL SUPERVISOR: MOHAMMED QATAMI
CALCULATED-DESIGNED BY: VANIK POGOSYAN
CHECKED BY: HASSAN TAHA
REVISED BY
DATE REVISED

LAST REVISION 04-29-13
DATE PLOTTED => 11-JUN-2013
TIME PLOTTED => 14:35

Dist	COUNTY	ROUTE	POST MILES TOTAL PROJECT	SHEET No.	TOTAL SHEETS
06	Kin	198	R14.7/R18.0	42	80

Hassan Taha 04-29-13
REGISTERED CIVIL ENGINEER DATE

04-29-13
PLANS APPROVAL DATE

REGISTERED PROFESSIONAL ENGINEER
HASSAN M. TAHA
No. 60130
Exp. 06/30/14
CIVIL
STATE OF CALIFORNIA

THE STATE OF CALIFORNIA OR ITS OFFICERS OR AGENTS SHALL NOT BE RESPONSIBLE FOR THE ACCURACY OR COMPLETENESS OF SCANNED COPIES OF THIS PLAN SHEET.

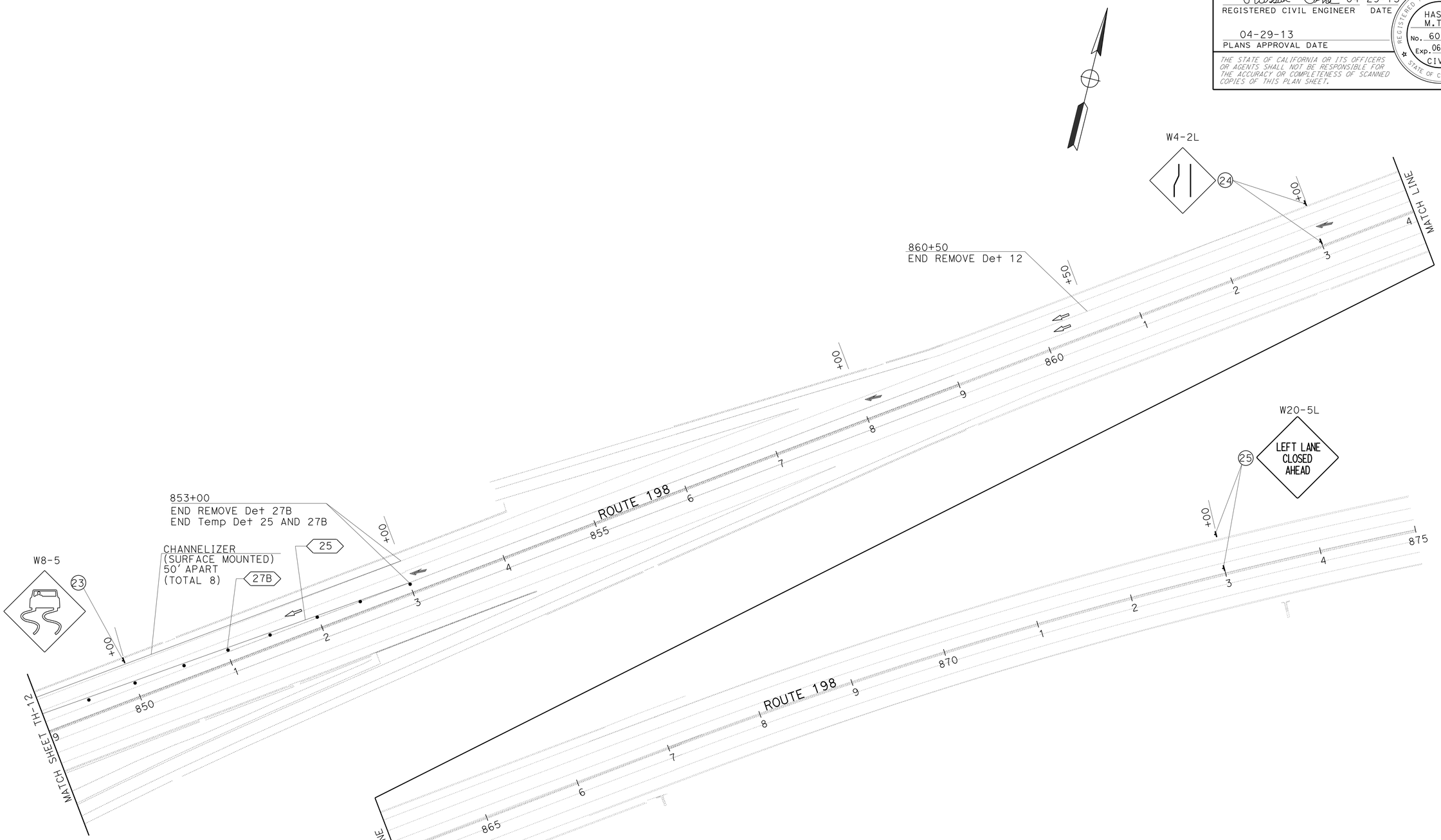

TRAFFIC HANDLING PLAN
(STAGE 3, LOCATION 2)

SCALE: 1" = 50'

TH-13

APPROVED FOR TRAFFIC HANDLING WORK ONLY

STATE OF CALIFORNIA - DEPARTMENT OF TRANSPORTATION
Caltrans® TRAFFIC DESIGN

FUNCTIONAL SUPERVISOR: MOHAMMED QATAMI
CALCULATED-DESIGNED BY: VANIK POGOSYAN
CHECKED BY: HASSAN TAHA
REVISED BY
DATE REVISED

LAST REVISION 04-29-13
DATE PLOTTED => 11-JUN-2013
TIME PLOTTED => 14:35

Dist	COUNTY	ROUTE	POST MILES TOTAL PROJECT	SHEET No.	TOTAL SHEETS
06	Kin	198	R14.7/R18.0	43	80

Hassan Taha 04-29-13
REGISTERED CIVIL ENGINEER DATE

04-29-13
PLANS APPROVAL DATE

REGISTERED PROFESSIONAL ENGINEER
HASSAN M. TAHA
No. 60130
Exp. 06/30/14
CIVIL
STATE OF CALIFORNIA

THE STATE OF CALIFORNIA OR ITS OFFICERS OR AGENTS SHALL NOT BE RESPONSIBLE FOR THE ACCURACY OR COMPLETENESS OF SCANNED COPIES OF THIS PLAN SHEET.

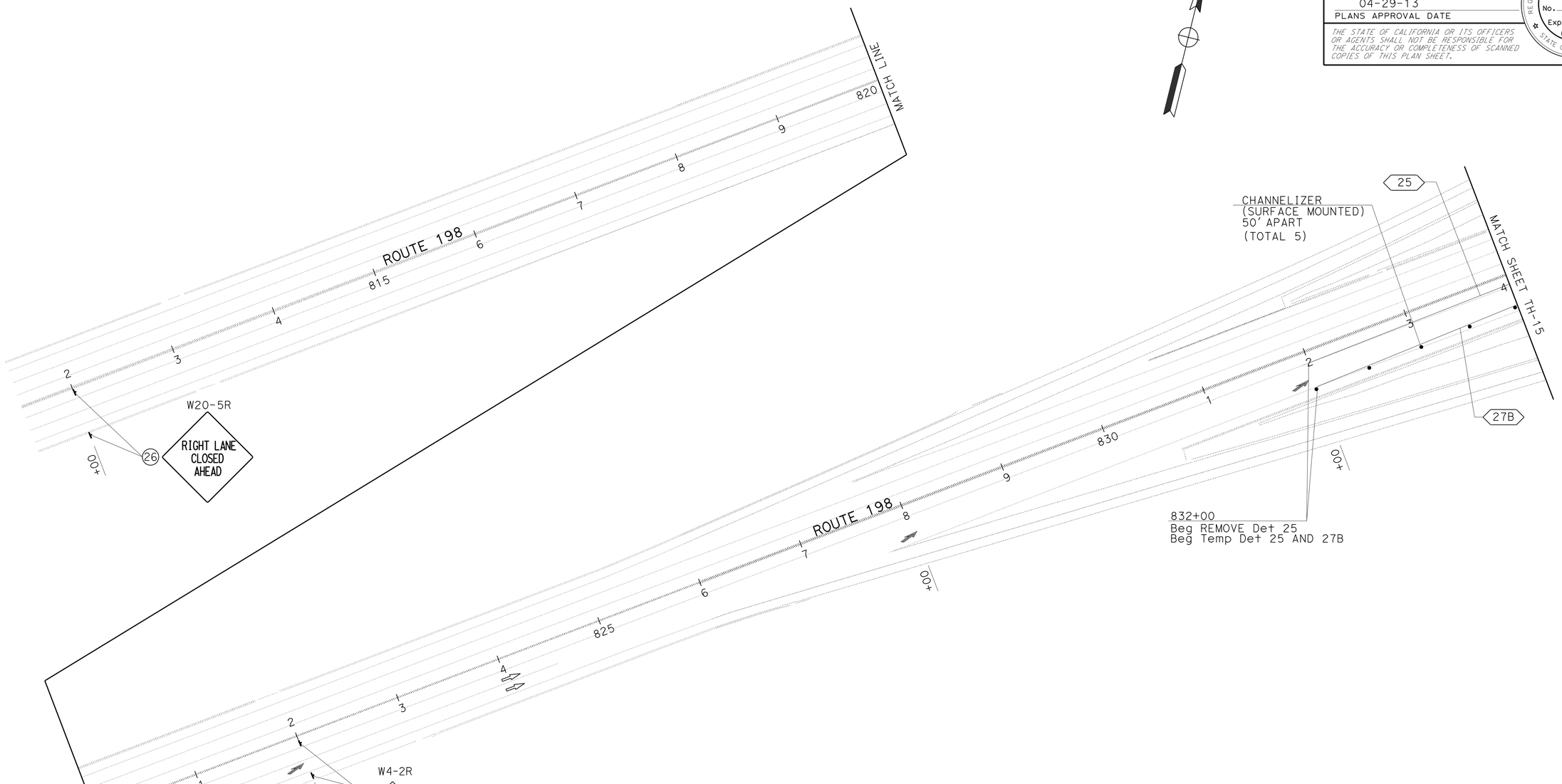

TRAFFIC HANDLING PLAN
(STAGE 4, LOCATION 2)

SCALE: 1" = 50'

TH-14

APPROVED FOR TRAFFIC HANDLING WORK ONLY

STATE OF CALIFORNIA - DEPARTMENT OF TRANSPORTATION
Caltrans® TRAFFIC DESIGN

FUNCTIONAL SUPERVISOR: MOHAMMED QATAMI
CALCULATED-DESIGNED BY: VANIK POGOSYAN
CHECKED BY: HASSAN TAHA
REVISED BY
DATE REVISED

LAST REVISION 04-29-13
DATE PLOTTED => 11-JUN-2013
TIME PLOTTED => 14:35

Dist	COUNTY	ROUTE	POST MILES TOTAL PROJECT	SHEET No.	TOTAL SHEETS
06	Kin	198	R14.7/R18.0	44	80

Hassan Taha 04-29-13
REGISTERED CIVIL ENGINEER DATE

04-29-13
PLANS APPROVAL DATE

REGISTERED PROFESSIONAL ENGINEER
HASSAN M. TAHA
No. 60130
Exp. 06/30/14
CIVIL
STATE OF CALIFORNIA

THE STATE OF CALIFORNIA OR ITS OFFICERS OR AGENTS SHALL NOT BE RESPONSIBLE FOR THE ACCURACY OR COMPLETENESS OF SCANNED COPIES OF THIS PLAN SHEET.

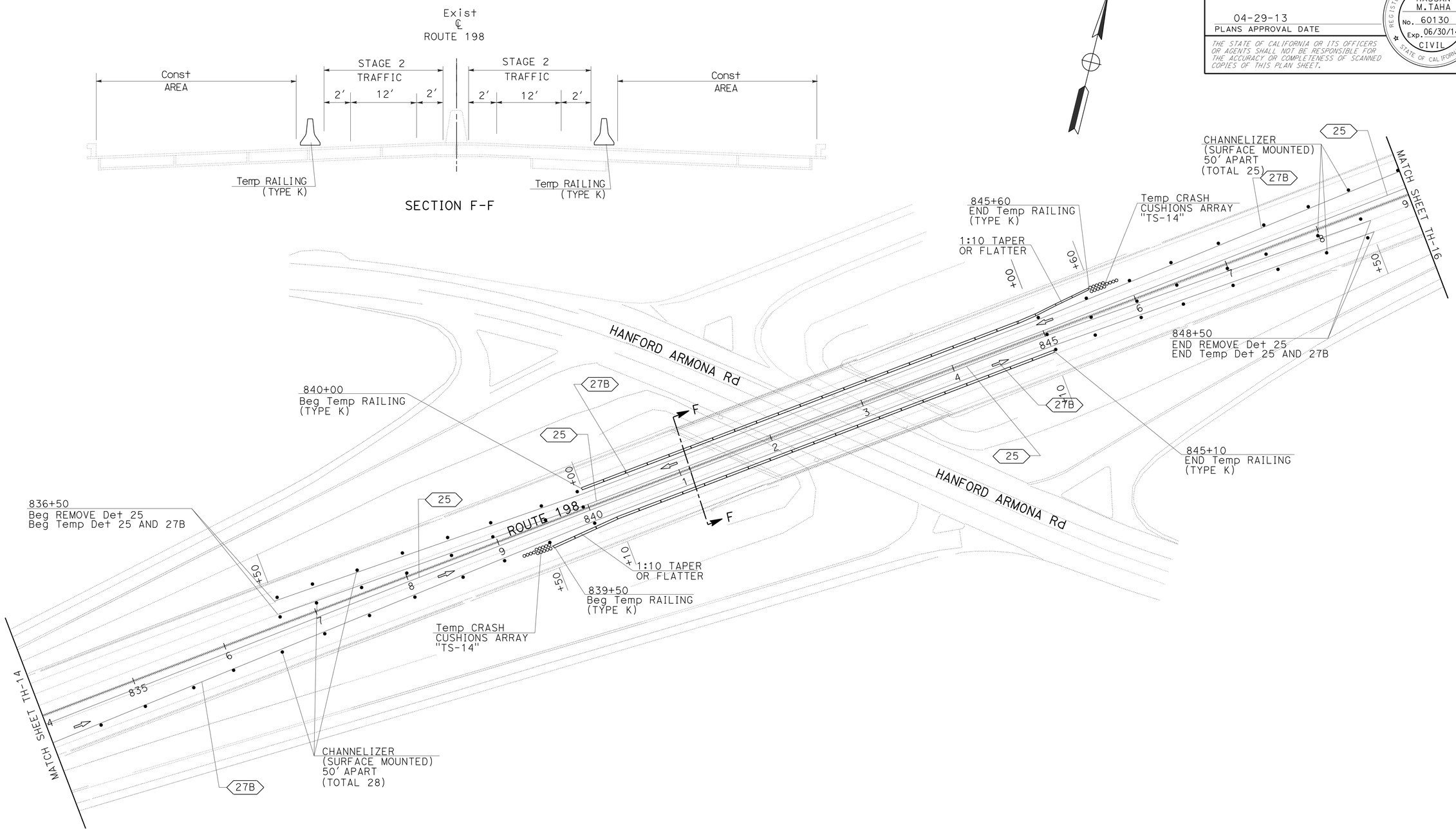

TRAFFIC HANDLING PLAN
(STAGE 4, LOCATION 2)

SCALE: 1" = 50′

TH-15

APPROVED FOR TRAFFIC HANDLING WORK ONLY

STATE OF CALIFORNIA - DEPARTMENT OF TRANSPORTATION
Caltrans® TRAFFIC DESIGN

FUNCTIONAL SUPERVISOR: MOHAMMED QATAMI
CALCULATED-DESIGNED BY: VANIK POGOSYAN
CHECKED BY: HASSAN TAHA
REVISED BY / DATE REVISED

LAST REVISION 04-29-13 | DATE PLOTTED => 11-JUN-2013 | TIME PLOTTED => 14:35

Dist	COUNTY	ROUTE	POST MILES TOTAL PROJECT	SHEET No.	TOTAL SHEETS
06	Kin	198	R14.7/R18.0	45	80

Hassan Taha 04-29-13
REGISTERED CIVIL ENGINEER DATE

04-29-13
PLANS APPROVAL DATE

REGISTERED PROFESSIONAL ENGINEER
HASSAN M. TAHA
No. 60130
Exp. 06/30/14
CIVIL
STATE OF CALIFORNIA

THE STATE OF CALIFORNIA OR ITS OFFICERS OR AGENTS SHALL NOT BE RESPONSIBLE FOR THE ACCURACY OR COMPLETENESS OF SCANNED COPIES OF THIS PLAN SHEET.

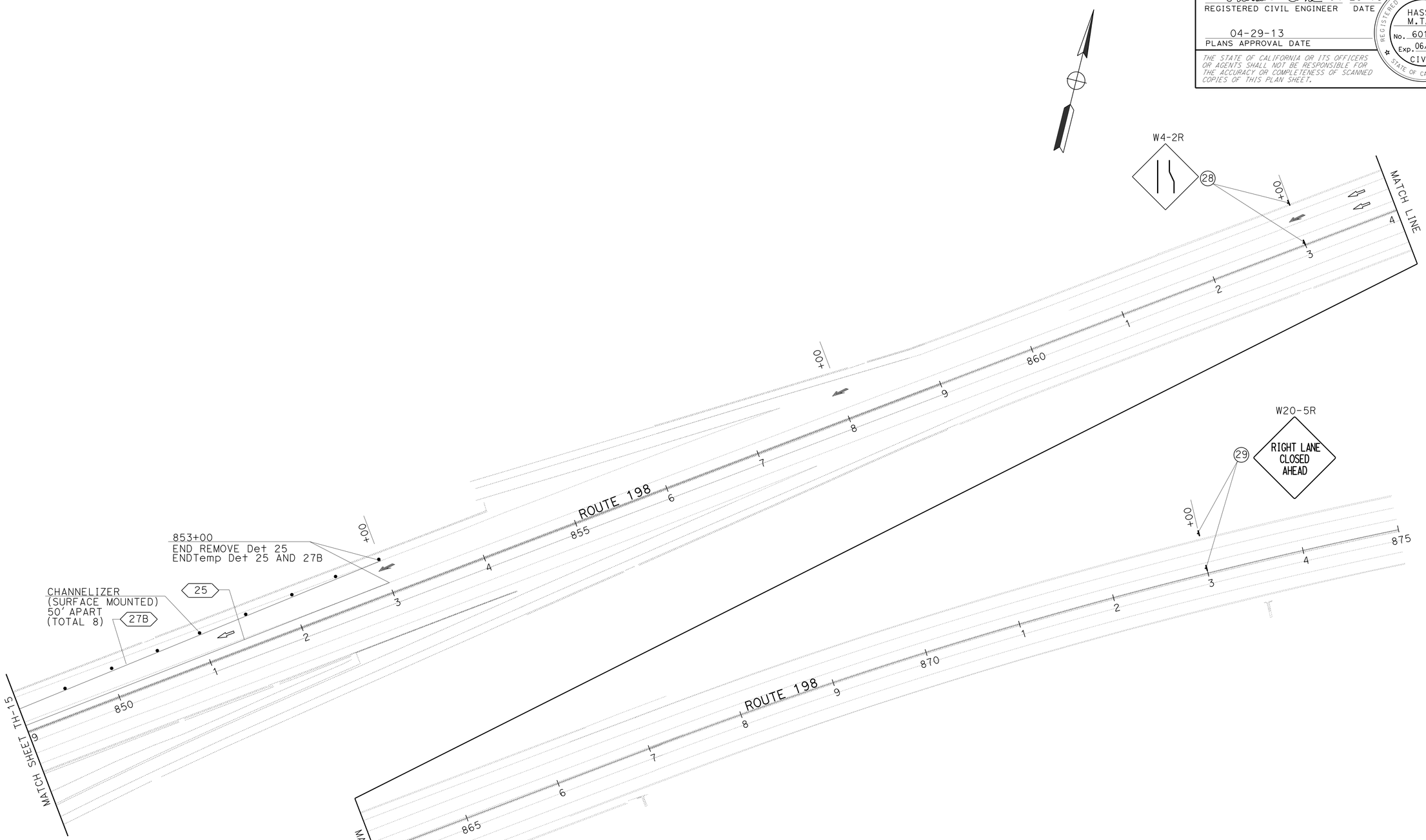

TRAFFIC HANDLING PLAN
(STAGE 4, LOCATION 2)

SCALE: 1" = 50'

TH-16

APPROVED FOR TRAFFIC HANDLING WORK ONLY

STATE OF CALIFORNIA - DEPARTMENT OF TRANSPORTATION
Caltrans
TRAFFIC DESIGN

FUNCTIONAL SUPERVISOR: MOHAMMED QATAMI
CALCULATED-DESIGNED BY: VANIK POGOSYAN
CHECKED BY: HASSAN TAHA
REVISED BY
DATE REVISED

LAST REVISION 04-29-13
DATE PLOTTED => 11-JUN-2013
TIME PLOTTED => 14:35

Dist	COUNTY	ROUTE	POST MILES TOTAL PROJECT	SHEET No.	TOTAL SHEETS
06	Kin	198	R14.7/R18.0	46	80

Hassan Taha 04-29-13
REGISTERED CIVIL ENGINEER DATE

04-29-13
PLANS APPROVAL DATE

REGISTERED PROFESSIONAL ENGINEER HASSAN M. TAHA No. 60130 Exp. 06/30/14 CIVIL STATE OF CALIFORNIA

THE STATE OF CALIFORNIA OR ITS OFFICERS OR AGENTS SHALL NOT BE RESPONSIBLE FOR THE ACCURACY OR COMPLETENESS OF SCANNED COPIES OF THIS PLAN SHEET.

TEMPORARY PAVEMENT DELINEATION

SHEET No.	LOCATION STA TO STA	DIRECTION	DETAIL No.	TEMPORARY PAVEMENT MARKER	REMOVE PAVEMENT MARKER	REMOVE TRAFFIC STRIPE WHITE	REMOVE TRAFFIC STRIPE YELLOW (HAZARDOUS WASTE)	TEMPORARY TRAFFIC STRIPE (TAPE)	TEMPORARY PAVEMENT MARKING (TYPE) DESCRIPTION	TEMPORARY PAVEMENT MARKING (TYPE) SQFT
				EA	EA	LF	LF	LF		
TH-1 And TH-2	772+50 TO 796+50	E	12		51	600			33-TYPE VI ARROW	1,386
	780+00 TO 796+50	E	25	35				1,650		
			27B			1,650		1,650		
TH-2 And TH-3	784+50 TO 805+50	W	12		45	525				
	784+50 TO 801+00	W	25	35				1,650		
			27B			1,650		1,650		
TH-4	938+50 TO 963+50	E	12		53	625				
	946+00 TO 963+50	E	25	37				1,750		
			27B			1,750		1,750		
TH-4 And TH-5	951+00 TO 983+50	W	12		69	813				
	951+00 TO 976+00	W	25	53				2,500		
	951+00 TO 968+00		27B			1,700		1,700		
TH-6 And TH-7	780+00 TO 796+50	E	25		35		1,650			
			25	35				1,650		
			27B					1,650		
TH-7 And TH-8	785+50 TO 801+00	W	25		33		1,550			
			25	33				1,550		
			27B					1,550		
TH-9	946+00 TO 963+50	E	25		37		1,750			
			25	37				1,750		
			27B					1,750		
	951+00 TO 954+40	W	25		8		340			
TH-9 And TH-10	951+00 TO 968+00	W	25	36				1,700		
			27B					1,700		
TH-11 And TH-12	824+50 TO 848+50	E	12		51	600				
	832+00 TO 848+50		25	35				1,650		
			27B			1,650		1,650		
TH-12 And TH-13	836+50 TO 860+50	W	12		51	600				
	836+50 TO 853+00		25	35				1,650		
			27B			1,650		1,650		
TH-14 And TH-15	832+00 TO 848+50	E	25		35		1,650			
			25	35				1,650		
			27B					1,650		
TH-15 And TH-16	836+50 TO 853+00	W	25		35		1,650			
			25	35				1,650		
			27B					1,650		
TOTAL				454	505	13,813	8,590	40,800		1,386

TEMPORARY RAILING (TYPE K)

SHEET No.	STA TO STA	LF
TH-2	787+52 TO 793+12	560
	788+00 TO 793+60	560
TH-4	953+90 TO 959+90	600
	954+40 TO 960+40	600
TH-7	787+52 TO 793+12	560
	788+00 TO 793+60	560
TH-9	953+90 TO 959+90	600
	954+40 TO 960+40	600
TH-12	839+50 TO 845+10	560
	840+00 TO 845+60	560
TH-15	839+50 TO 845+10	560
	840+00 TO 845+60	560
	TOTAL	6,880

CHANNELIZER (SURFACE MOUNTED)

SHEET No.	EA
TH-1	5
TH-2	53
TH-3	8
TH-4	65
TH-5	32
TH-6	5
TH-7	53
TH-8	8
TH-9	60
TH-10	16
TH-11	5
TH-12	53
TH-13	8
TH-14	5
TH-15	53
TH-16	8
TOTAL	437

TEMPORARY CRASH CUSHION MODULE

SHEET No.	EA
TH-2	28
TH-4	28
TH-7	28
TH-9	28
TH-12	28
TH-15	28
TOTAL	168

CONSTRUCTION AREA SIGNS (TRAFFIC HANDLING)

SHEET No.	SIGN No.	SIGN CODE	SIGN MESSAGE	PANEL SIZE	No. OF POST AND SIZE	No. OF SIGNS
TH-1	1	W20-5L	LEFT LANE CLOSED AHEAD	36" x 36"	1-4" x 4"	2
	2	W4-2L	LEFT LANE ENDS	36" x 36"	1-4" x 4"	2
TH-2	3	W8-5	SLIPPERY WHEN WET	36" x 36"	1-4" x 4"	1
TH-3	4	W8-5	SLIPPERY WHEN WET	36" x 36"	1-4" x 4"	1
	5	W4-2L	LEFT LANE ENDS	36" x 36"	1-4" x 4"	2
	6	W20-5L	LEFT LANE CLOSED AHEAD	36" x 36"	1-4" x 4"	2
TH-4	7	W20-5L	LEFT LANE CLOSED AHEAD	36" x 36"	1-4" x 4"	2
	8	W4-2L	LEFT LANE ENDS	36" x 36"	1-4" x 4"	2
	9	W8-5	SLIPPERY WHEN WET	36" x 36"	1-4" x 4"	1
TH-5	10	W8-5	SLIPPERY WHEN WET	36" x 36"	1-4" x 4"	1
	11	W4-2L	LEFT LANE ENDS	36" x 36"	1-4" x 4"	2
	12	W20-5L	LEFT LANE CLOSED AHEAD	36" x 36"	1-4" x 4"	2
TH-6	13	W20-5R	RIGHT LANE CLOSED AHEAD	36" x 36"	1-4" x 4"	2
	14	W4-2R	RIGHT LANE ENDS	36" x 36"	1-4" x 4"	2
TH-7	15	W8-5	SLIPPERY WHEN WET	36" x 36"	1-4" x 4"	1
TH-8	16	W4-2R	RIGHT LANE ENDS	36" x 36"	1-4" x 4"	2
	17	W20-5R	RIGHT LANE CLOSED AHEAD	36" x 36"	1-4" x 4"	2
TH-9	18	W4-2R	RIGHT LANE ENDS	36" x 36"	1-4" x 4"	2
	19	W20-5R	RIGHT LANE CLOSED AHEAD	36" x 36"	1-4" x 4"	2
TH-11	20	W20-5L	LEFT LANE CLOSED AHEAD	36" x 36"	1-4" x 4"	2
	21	W4-2L	LEFT LANE ENDS	36" x 36"	1-4" x 4"	2
TH-12	22	W8-5	SLIPPERY WHEN WET	36" x 36"	1-4" x 4"	1
TH-13	23	W8-5	SLIPPERY WHEN WET	36" x 36"	1-4" x 4"	1
	24	W4-2L	LEFT LANE ENDS	36" x 36"	1-4" x 4"	2
	25	W20-5L	LEFT LANE CLOSED AHEAD	36" x 36"	1-4" x 4"	2
TH-14	26	W20-5R	RIGHT LANE CLOSED AHEAD	36" x 36"	1-4" x 4"	2
	27	W4-2R	RIGHT LANE ENDS	36" x 36"	1-4" x 4"	2
TH-16	28	W4-2R	RIGHT LANE ENDS	36" x 36"	1-4" x 4"	2
	29	W20-5R	RIGHT LANE CLOSED AHEAD	36" x 36"	1-4" x 4"	2

TRAFFIC HANDLING QUANTITIES

THQ-1

STATE OF CALIFORNIA - DEPARTMENT OF TRANSPORTATION
Caltrans® TRAFFIC DESIGN

FUNCTIONAL SUPERVISOR: MOHAMMED QATAMI
CALCULATED-DESIGNED BY: VANIK POGOSYAN
CHECKED BY: HASSAN TAHA
REVISED BY / DATE REVISED

LAST REVISION 04-29-13 | DATE PLOTTED => 11-JUN-2013 | TIME PLOTTED => 14:35

Dist	COUNTY	ROUTE	POST MILES TOTAL PROJECT	SHEET No.	TOTAL SHEETS
06	Kin	198	R14.7/R18.0	47	80

Hassan Taha 04-29-13
REGISTERED CIVIL ENGINEER DATE

04-29-13
PLANS APPROVAL DATE

REGISTERED PROFESSIONAL ENGINEER HASSAN M. TAHA No. 60130 Exp. 06/30/14 CIVIL STATE OF CALIFORNIA

THE STATE OF CALIFORNIA OR ITS OFFICERS OR AGENTS SHALL NOT BE RESPONSIBLE FOR THE ACCURACY OR COMPLETENESS OF SCANNED COPIES OF THIS PLAN SHEET.

LEGEND

XX TRAFFIC STRIPE DETAIL No.

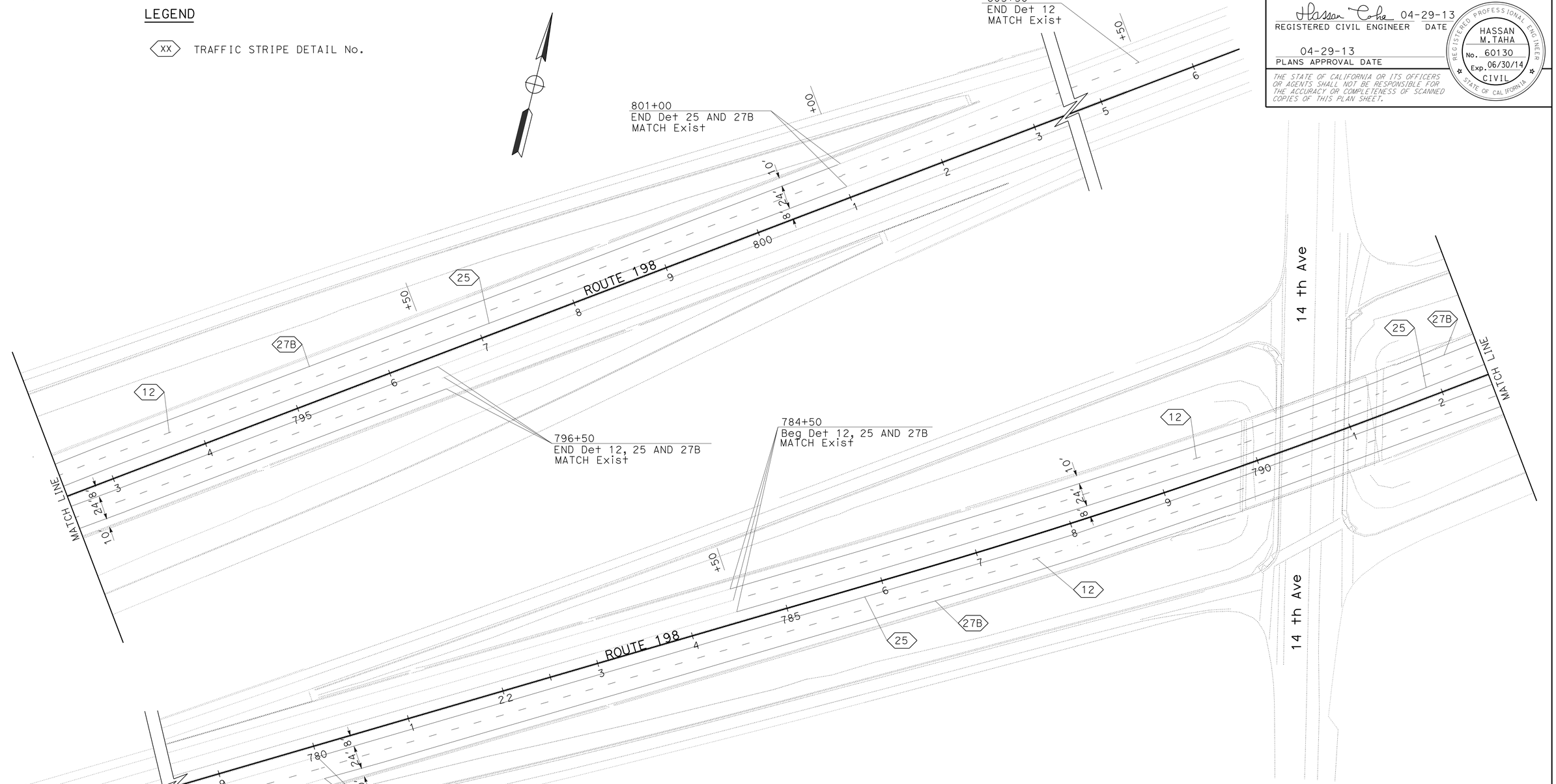

APPROVED FOR PAVEMENT DELINEATION WORK ONLY

PAVEMENT DELINEATION PLAN

SCALE: 1" = 50'

PD-1

STATE OF CALIFORNIA - DEPARTMENT OF TRANSPORTATION
Caltrans® TRAFFIC DESIGN

FUNCTIONAL SUPERVISOR: MOHAMMED QATAMI
CALCULATED-DESIGNED BY: VANIK POGOSYAN
CHECKED BY: HASSAN TAHA
REVISED BY
DATE REVISED

LAST REVISION 04-29-13
DATE PLOTTED => 11-JUN-2013
TIME PLOTTED => 14:35

Dist	COUNTY	ROUTE	POST MILES TOTAL PROJECT	SHEET No.	TOTAL SHEETS
06	Kin	198	R14.7/R18.0	48	80

Hassan Taha 04-29-13
REGISTERED CIVIL ENGINEER DATE

04-29-13
PLANS APPROVAL DATE

REGISTERED PROFESSIONAL ENGINEER
HASSAN M. TAHA
No. 60130
Exp. 06/30/14
CIVIL
STATE OF CALIFORNIA

THE STATE OF CALIFORNIA OR ITS OFFICERS OR AGENTS SHALL NOT BE RESPONSIBLE FOR THE ACCURACY OR COMPLETENESS OF SCANNED COPIES OF THIS PLAN SHEET.

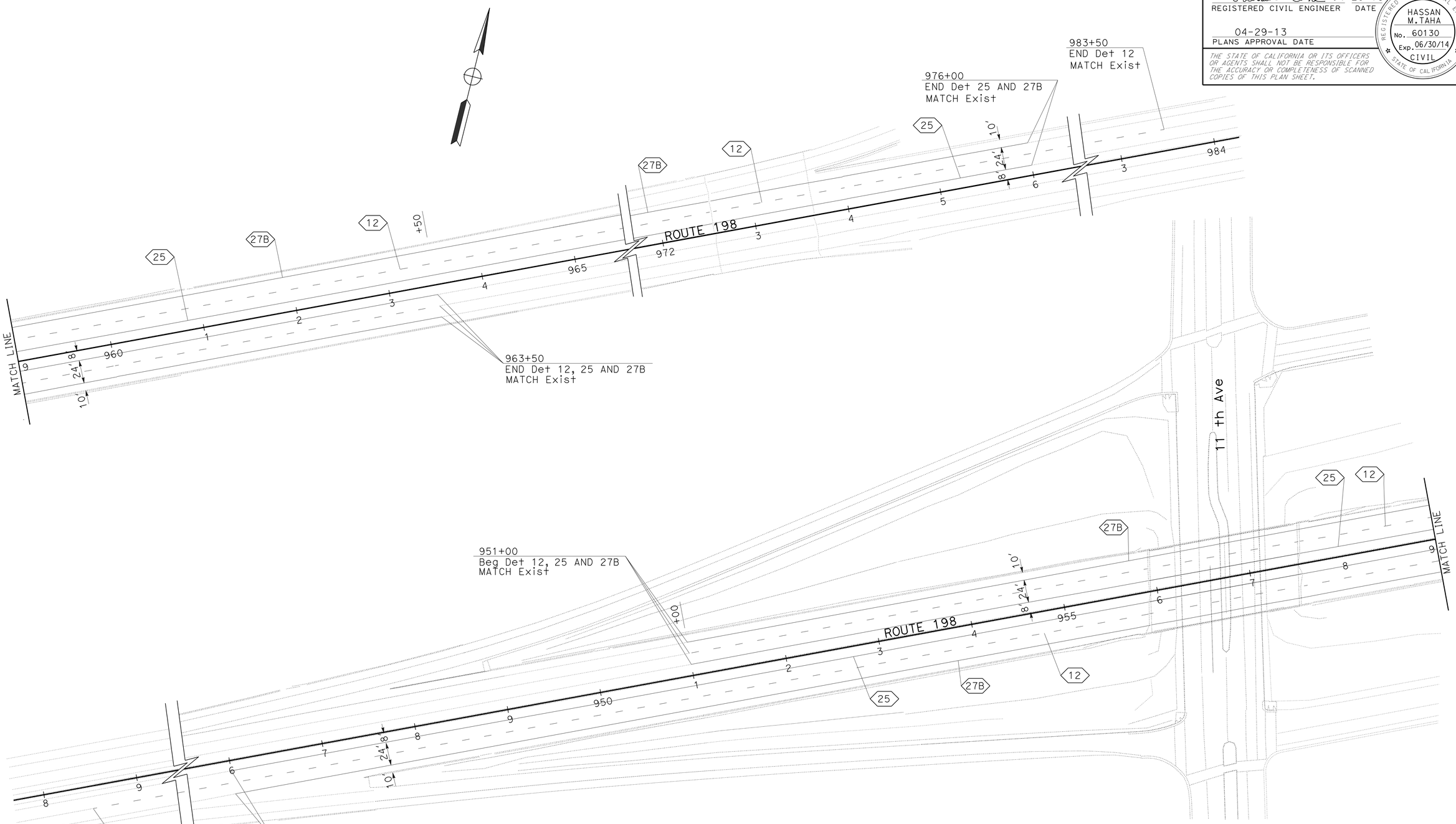

PAVEMENT DELINEATION PLAN

SCALE: 1" = 50'

APPROVED FOR PAVEMENT DELINEATION WORK ONLY

PD-2

STATE OF CALIFORNIA - DEPARTMENT OF TRANSPORTATION
Caltrans® **TRAFFIC DESIGN**

FUNCTIONAL SUPERVISOR: MOHAMMED QATAMI
CALCULATED-DESIGNED BY: VANIK POGOSYAN
CHECKED BY: HASSAN TAHA
REVISED BY
DATE REVISED

LAST REVISION 04-29-13
DATE PLOTTED => 11-JUN-2013
TIME PLOTTED => 14:35

Dist	COUNTY	ROUTE	POST MILES TOTAL PROJECT	SHEET No.	TOTAL SHEETS
06	Kin	198	R14.7/R18.0	49	80

Hassan Taha 04-29-13
REGISTERED CIVIL ENGINEER DATE

04-29-13
PLANS APPROVAL DATE

REGISTERED PROFESSIONAL ENGINEER
HASSAN M. TAHA
No. 60130
Exp. 06/30/14
CIVIL
STATE OF CALIFORNIA

THE STATE OF CALIFORNIA OR ITS OFFICERS OR AGENTS SHALL NOT BE RESPONSIBLE FOR THE ACCURACY OR COMPLETENESS OF SCANNED COPIES OF THIS PLAN SHEET.

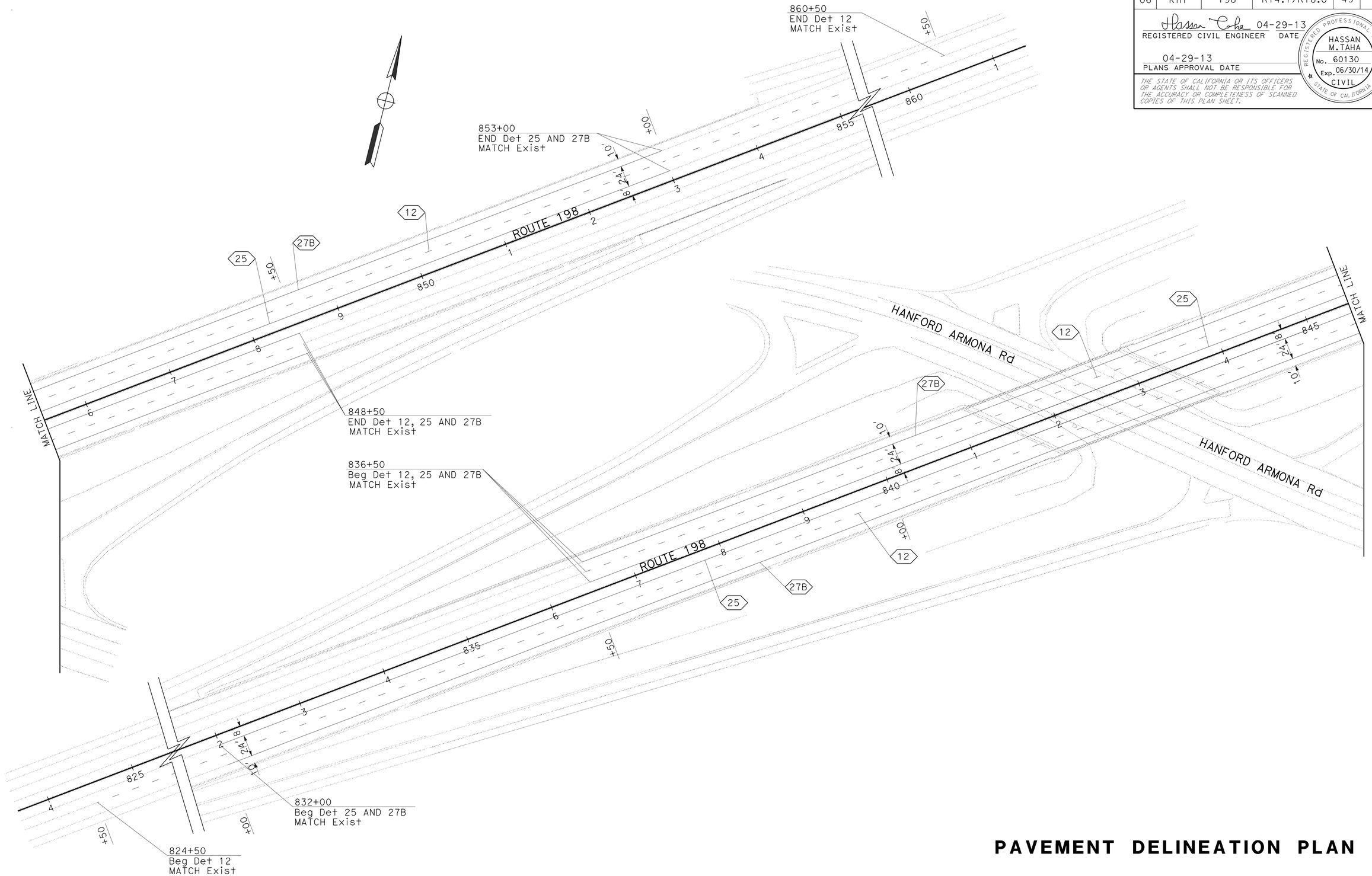

PAVEMENT DELINEATION PLAN

SCALE: 1" = 50'

APPROVED FOR PAVEMENT DELINEATION WORK ONLY

PD-3

STATE OF CALIFORNIA - DEPARTMENT OF TRANSPORTATION
Caltrans® **TRAFFIC DESIGN**

FUNCTIONAL SUPERVISOR: MOHAMMED QATAMI
CALCULATED-DESIGNED BY: VANIK POGOSYAN
CHECKED BY: HASSAN TAHA
REVISED BY
DATE REVISED

LAST REVISION 04-29-13
DATE PLOTTED => 11-JUN-2013
TIME PLOTTED => 14:35

Dist	COUNTY	ROUTE	POST MILES TOTAL PROJECT	SHEET No.	TOTAL SHEETS
06	Kin	198	R14.7/R18.0	50	80

Hassan Taha 04-29-13
REGISTERED CIVIL ENGINEER DATE

04-29-13
PLANS APPROVAL DATE

REGISTERED PROFESSIONAL ENGINEER
HASSAN M. TAHA
No. 60130
Exp. 06/30/14
CIVIL
STATE OF CALIFORNIA

THE STATE OF CALIFORNIA OR ITS OFFICERS OR AGENTS SHALL NOT BE RESPONSIBLE FOR THE ACCURACY OR COMPLETENESS OF SCANNED COPIES OF THIS PLAN SHEET.

PAVEMENT DELINEATION QUANTITIES

SHEET No.	LOCATION	DIRECTION	DETAIL No.	PAVEMENT MARKER (RETROREFLECTIVE) TYPE G Clear (One-Way) EA	PAVEMENT MARKER (RETROREFLECTIVE) TYPE H Yellow (One-Way) EA	THERMOPLASTIC TRAFFIC STRIPE 4" YELLOW LF	THERMOPLASTIC TRAFFIC STRIPE 4" WHITE LF	THERMOPLASTIC TRAFFIC STRIPE 4" BROKEN (36'-12') LF
PD-1	STA 772+50 TO 796+50	E	12	51				2,400
	STA 780+00 TO 796+50	E	25		35	1,650		
			27B				1,650	
	STA 784+50 TO 805+50	W	12	45				2,100
	STA 784+50 TO 801+00	W	25		35	1,650		
			27B				1,650	
PD-2	STA 938+50 TO 963+50	E	12	53				2,500
	STA 946+00 TO 963+50	E	25		37	1,750		
			27B				1,750	
	STA 951+00 TO 983+50	W	12	69				3,250
	STA 951+00 TO 976+00	W	25		53	2,500		
			27B				2,500	
PD-3	STA 824+50 TO 848+50	E	12	51				2,400
	STA 832+00 TO 848+50	E	25		35	1,650		
			27B				1,650	
	STA 836+50 TO 860+50	W	12	51				2,400
	STA 836+50 TO 853+00	W	25		35	1,650		
			27B				1,650	
			SUB TOTAL	320	230	10,850	10,850	15,050
			TOTAL	550		21,700		15,050

PAVEMENT DELINEATION QUANTITIES

NO SCALE

PDQ-1

STATE OF CALIFORNIA - DEPARTMENT OF TRANSPORTATION
Caltrans® TRAFFIC DESIGN

FUNCTIONAL SUPERVISOR: MOHAMMED QATAMI
CALCULATED-DESIGNED BY: VANIK POGOSYAN
CHECKED BY: HASSAN TAHA
REVISED BY
DATE REVISED

LAST REVISION 04-29-13
DATE PLOTTED => 11-JUN-2013
TIME PLOTTED => 14:35

Dist	COUNTY	ROUTE	POST MILES TOTAL PROJECT	SHEET No.	TOTAL SHEETS
06	Kin	198	R14.7/R18.0	51	80

REGISTERED CIVIL ENGINEER 02/20/13 DATE

04-29-13
PLANS APPROVAL DATE

REGISTERED PROFESSIONAL ENGINEER MADJID SADATMANSOORI No. 66244 Exp. 6/30/14 CIVIL STATE OF CALIFORNIA

THE STATE OF CALIFORNIA OR ITS OFFICERS OR AGENTS SHALL NOT BE RESPONSIBLE FOR THE ACCURACY OR COMPLETENESS OF SCANNED COPIES OF THIS PLAN SHEET.

ABBREVIATION:

HMA: HOT MIX ASPHALT

ROADWAY QUANTITIES

	PHASE	LOCATION	STATION	DESCRIPTION	HOT MIX ASPHALT (TYPE A)	ROADWAY EXCAVATION	EMBANKMENT (N)	TACK COAT	CONCRETE BARRIER (TYPE 60)	REMOVE CONCRETE BARRIER
					TON	CY	CY	TON	LF	LF
STAGE 1	1	1	"A" Sta 782+00.00 Lt TO Sta 789+98.11 Lt	OUTSIDE SHOULDER WB	367	189		0.25		
		1	"A" Sta 791+53.12 Lt TO Sta 802+00.00 Lt	OUTSIDE SHOULDER WB	481	248		0.33		
		1	"A" Sta 779+00.00 Rt TO Sta 789+66.56 Rt	OUTSIDE SHOULDER EB	491	253		0.33		
		1	"A" Sta 791+18.50 Rt TO Sta 797+50.00 Rt	OUTSIDE SHOULDER EB	290	150		0.20		
		3	"A" Sta 949+00.00 Lt TO Sta 955+97.30 Lt	OUTSIDE SHOULDER WB	321	166		0.22		
		3	"A" Sta 957+60.71 Lt TO Sta 966+00.00 Lt	OUTSIDE SHOULDER WB	386	199		0.25		
		3	"A" Sta 946+00.00 Rt TO Sta 955+83.90 Rt	OUTSIDE SHOULDER EB	453	233		0.25		
		3	"A" Sta 957+47.43 Rt TO Sta 963+00.00 Rt	OUTSIDE SHOULDER EB	254	131		0.18		
	1	1	"A" Sta 783+00.00 Lt/Rt TO Sta 788+22.00 Lt/Rt	INSIDE SHOULDERS	859	443		0.59		
	2	1	"A" Sta 788+22.00 Lt/Rt TO Sta 792+96.50 Lt/Rt	BRIDGE APPROACH	1029	531	346	0.70	294	294
	1	1	"A" Sta 792+96.50 Lt/Rt TO Sta 800+00.00 Lt/Rt	INSIDE SHOULDERS	1086	560		0.71		
	1	3	"A" Sta 950+50.00 Lt/Rt TO Sta 954+30.54 Lt/Rt	INSIDE SHOULDERS	657	339		0.47		
	2	3	"A" Sta 954+30.54 Lt/Rt TO Sta 959+14.16 Lt/Rt	BRIDGE APPROACH	1056	545	356	0.76	296	296
	1	3	"A" Sta 959+14.16 Lt/Rt TO Sta 965+00.00 Lt/Rt	INSIDE SHOULDERS	931	480		0.66		
				STAGE 1 SUB-TOTAL	8661	4467		5.90		
STAGE 2										
		1	"A" Sta 788+22.00 Lt/Rt TO Sta 792+96.50 Lt/Rt	BRIDGE APPROACH	926	478		0.72		
		3	"A" Sta 954+30.54 Lt/Rt TO Sta 959+14.16 Lt/Rt	BRIDGE APPROACH	951	491		0.73		
				STAGE 2 SUB-TOTAL	1877	969		1.45		
STAGE 3	1	2	"A" Sta 834+50.00 Lt TO Sta 841+06.27 Lt	OUTSIDE SHOULDER WB	302	156		0.20		
		2	"A" Sta 842+97.19 Lt TO Sta 854+00.00 Lt	OUTSIDE SHOULDER WB	507	262		0.34		
		2	"A" Sta 831+00.00 Rt TO Sta 841+49.18 Rt	OUTSIDE SHOULDER EB	483	249		0.33		
		2	"A" Sta 843+83.81 Rt TO Sta 850+50.00 Rt	OUTSIDE SHOULDER EB	306	158		0.21		
	1	2	"A" Sta 836+00.00 Lt/Rt TO Sta 839+85.00 Lt/Rt	INSIDE SHOULDERS	665	343		0.45		
	2	2	"A" Sta 839+85.00 Lt/Rt TO Sta 845+05.40 Lt/Rt	BRIDGE APPROACH	1086	560	365	0.74	297	297
	1	2	"A" Sta 845+05.40 Lt/Rt TO Sta 850+50.00 Lt/Rt	INSIDE SHOULDERS	875	451		0.60		
				STAGE 3 SUB-TOTAL	4224	2179		2.90		
STAGE 4										
		2	"A" Sta 839+85.00 Lt/Rt TO Sta 845+05.40 Lt/Rt	BRIDGE APPROACH	971	501		0.75		
				STAGE 4 SUB-TOTAL	971	501		0.75		
FROM DIKE TABLE					152					
TOTAL					15,885	8116		11	887	887

(N) NOT A SEPARATE PAY ITEM, FOR INFORMATION ONLY.

* QUANTITY INCLUDED IN ROADWAY EXCAVATION.

SUMMARY OF QUANTITIES

Q-1

REVISED BY | DATE REVISED

MADJID SADATMANSOORI | KEVIN T NGUYEN

CALCULATED-DESIGNED BY | CHECKED BY

FUNCTIONAL SUPERVISOR: SANKU G. MOHAN

STATE OF CALIFORNIA - DEPARTMENT OF TRANSPORTATION

Caltrans® DESIGN

LAST REVISION 04-29-13 | DATE PLOTTED => 11-JUN-2013 TIME PLOTTED => 14:35

Dist	COUNTY	ROUTE	POST MILES TOTAL PROJECT	SHEET No.	TOTAL SHEETS
06	Kin	198	R14.7/R18.0	52	80

REGISTERED CIVIL ENGINEER 02/20/13 DATE

04-29-13
PLANS APPROVAL DATE

REGISTERED PROFESSIONAL ENGINEER MADJID SADATMANSOORI No. 66244 Exp. 6/30/14 CIVIL STATE OF CALIFORNIA

THE STATE OF CALIFORNIA OR ITS OFFICERS OR AGENTS SHALL NOT BE RESPONSIBLE FOR THE ACCURACY OR COMPLETENESS OF SCANNED COPIES OF THIS PLAN SHEET.

DIKE

STATION	STAGE	PLACE HMA DIKE TYPE E	PLACE HMA DIKE TYPE F	PLACE HMA DIKE TYPE C	HMA * (TYPE A)	REMOVE AC DIKE
		LF	LF	LF	TON	LF
"A" Sta 787+10.00 Lt TO Sta 789+87.11 Lt	1	278			6.8	278
"A" Sta 792+61.00 Lt TO Sta 801+95.00 Lt	1	934			23.2	959
"A" Sta 780+75.00 Rt TO Sta 788+60.00 Rt	1	785			19.7	810
"A" Sta 791+28.50 Rt TO Sta 794+41.00 Rt	1	313			7.7	313
"A" Sta 952+95.00 Lt TO Sta 955+87.30 Lt	1	293			7.2	293
"A" Sta 958+67.00 Lt TO Sta 964+10.00 Lt	1	543			13.8	568
"A" Sta 950+05.00 Rt TO Sta 954+78.00 Rt	1	473			12.0	498
"A" Sta 957+57.43 Rt TO Sta 961+15.00 Rt	1	358			8.8	358
"A" Sta 791+61.00 Lt TO Sta 792+61.00 Lt	2		25	75	0.9	75
"A" Sta 788+60.00 Rt TO Sta 789+60.00 Rt	2		25	75	0.9	75
"A" Sta 957+67.00 Lt TO Sta 958+67.00 Lt	2		25	75	0.9	75
"A" Sta 954+78.00 Rt TO Sta 955+78.00 Rt	2		25	75	0.9	75
"A" Sta 837+95.00 Lt TO Sta 840+92.02 Lt	3	297			7.3	297
"A" Sta 844+08.00 Lt TO Sta 849+90.00 Lt	3	582			14.7	607
"A" Sta 834+10.00 Rt TO Sta 840+81.00 Rt	3	671			16.8	696
"A" Sta 843+97.81 Rt TO Sta 847+10.00 Rt	3	312			7.7	312
"A" Sta 843+08.00 Lt TO Sta 844+08.00 Lt	4		25	75	0.9	75
"A" Sta 840+81.00 Rt TO Sta 841+81.00 Rt	4		25	75	0.9	75
TOTAL		5839	150	450	152	6439

* QUANTITIES INCLUDED IN THE ROADWAY QUANTITIES TABLE.

METAL BEAM GUARD RAILING

STATION	STAGE	REMOVE MBGR	TREATED WOOD WASTE	REMOVE TERMINAL SYSTEM (N)	TRANSITION RAILING (TYPE WB)	ALTERNATIVE IN-LINE TERMINAL SYSTEM	MBGR LAYOUT (N)	VEGETATION CONTROL (MINOR CONCRETE)
		LF	LB	EA	EA	EA	TYPE	SQYD
"A" Sta 788+85.00 Rt	2	75	1900	1	1	1	12A	35
"A" Sta 791+61.00 Lt	2	75	1900	1	1	1	12A	35
"A" Sta 955+03.00 Rt	2	75	1900	1	1	1	12A	35
"A" Sta 957+67.00 Lt	2	75	1900	1	1	1	12A	35
"A" Sta 841+06.00 Rt	4	75	1900	1	1	1	12A	35
"A" Sta 843+08.00 Lt	4	75	1900	1	1	1	12A	35
TOTAL		450	11,400		6	6		210

(N) NOT A SEPARATE PAY ITEM. FOR INFORMATION PURPOSES ONLY.

TEMPORARY DRAINAGE INLET PROTECTION

STATION	EA
"A" Sta 785+50.00 Lt 43'	1
"A" Sta 785+50.00 Rt 1'	1
"A" Sta 786+80.00 Rt 1'	1
"A" Sta 788+27.00 Rt 1'	1
"A" Sta 789+42.60 Rt 1'	1
"A" Sta 836+49.00 Rt 43'	1
"A" Sta 947+39.00 Rt 43'	1
"A" Sta 947+81.00 Lt 43'	1
"A" Sta 958+66.00 Rt 43'	1
"A" Sta 960+91.00 Rt 43'	1
TOTAL	10

SUMMARY OF QUANTITIES

Q-2

REVISED BY | DATE REVISED
MADJID SADATMANSOORI | KEVIN T NGUYEN
CALCULATED-DESIGNED BY | CHECKED BY
FUNCTIONAL SUPERVISOR | SANKU G. MOHAN
STATE OF CALIFORNIA - DEPARTMENT OF TRANSPORTATION
Caltrans® DESIGN

LAST REVISION 04-29-13 | DATE PLOTTED => 11-JUN-2013 | TIME PLOTTED => 14:35

Dist	COUNTY	ROUTE	POST MILES TOTAL PROJECT	SHEET No.	TOTAL SHEETS
06	Kin	198	R14.7/R18.0	53	80

REGISTERED CIVIL ENGINEER 02/20/13 DATE

04-29-13
PLANS APPROVAL DATE

REGISTERED PROFESSIONAL ENGINEER MADJID SADATMANSOORI No. 66244 Exp. 6/30/14 CIVIL STATE OF CALIFORNIA

THE STATE OF CALIFORNIA OR ITS OFFICERS OR AGENTS SHALL NOT BE RESPONSIBLE FOR THE ACCURACY OR COMPLETENESS OF SCANNED COPIES OF THIS PLAN SHEET.

RUMBLE STRIP (GROUND-IN INDENTATIONS)

LOCATION	Sta
"A" Sta 782+00.00 Lt TO Sta 789+87.11 Lt	8
"A" Sta 791+63.12 Lt TO Sta 802+00.00 Lt	11
"A" Sta 779+00.00 Rt TO Sta 789+56.56 Rt	11
"A" Sta 791+28.50 Rt TO Sta 797+50.00 Rt	7
"A" Sta 783+00.00 TO Sta 789+55.00 Rt/Lt	7
"A" Sta 791+55.00 TO Sta 800+00.00 Rt/Lt	9
"A" Sta 949+00.00 Lt TO Sta 955+87.30 Lt	7
"A" Sta 957+67.00 Lt TO Sta 966+00.00 Lt	9
"A" Sta 946+00.00 Rt TO Sta 955+83.90 Rt	10
"A" Sta 957+57.43 Rt TO Sta 964+50.00 Rt	7
"A" Sta 950+50.00 TO Sta 955+70.00 Rt/Lt	6
"A" Sta 957+80.00 TO Sta 965+00.00 Rt/Lt	7
"A" Sta 834+50.00 Lt TO Sta 840+92.02 Lt	7
"A" Sta 843+11.19 Lt TO Sta 854+00.00 Lt	11
"A" Sta 831+00.00 Rt TO Sta 841+78.11 Rt	11
"A" Sta 843+97.81 Rt TO Sta 850+50.00 Rt	7
"A" Sta 836+00.00 TO Sta 841+35.00 Rt/Lt	6
"A" Sta 843+58.00 TO Sta 850+50.00 Rt/Lt	7
TOTAL	148

ADJUST FRAME AND GRATE TO GRADE

LOCATION	EA
"A" Sta 789+43 Rt	1

DRAINAGE

LOCATION	10" CORRUGATED STEEL PIPE DOWNDRAIN	10" TAPERED INLET	ANCHOR ASSEMBLY	STAGE	PHASE	RSP FABRIC (CLASS 8)	RSP (No. 2, METHOD B)
	LF	EA	EA			SQYD	CY
"A" Sta 789+68.00 Lt	44	1	4	1	1	5	1.5
"A" Sta 792+31.00 Lt	44	1	4	1	1	5	1.5
"A" Sta 788+90.00 Rt	44	1	4	1	1	5	1.5
"A" Sta 791+48.00 Rt	44	1	4	1	1	5	1.5
"A" Sta 955+69.00 Lt	44	1	4	1	1	5	1.5
"A" Sta 958+35.00 Lt	44	1	4	1	1	5	1.5
"A" Sta 955+03.00 Rt	44	1	4	1	1	5	1.5
"A" Sta 957+76.00 Rt	44	1	4	1	1	5	1.5
"A" Sta 840+70.00 Lt	44	1	4	2	1	5	1.5
"A" Sta 843+82.00 Lt	44	1	4	2	1	5	1.5
"A" Sta 841+05.00 Rt	44	1	4	2	1	5	1.5
"A" Sta 844+20.00 Rt	44	1	4	2	1	5	1.5
TOTAL	528	12	48			60	18

SUMMARY OF QUANTITIES

Q-3

STATE OF CALIFORNIA - DEPARTMENT OF TRANSPORTATION
Caltrans DESIGN

FUNCTIONAL SUPERVISOR: SANKU G. MOHAN
CALCULATED-DESIGNED BY: MADJID SADATMANSOORI
CHECKED BY: KEVIN T NGUYEN
REVISED BY
DATE REVISED

LAST REVISION 04-29-13
DATE PLOTTED => 11-JUN-2013
TIME PLOTTED => 14:35

Dist	COUNTY	ROUTE	POST MILES TOTAL PROJECT	SHEET No.	TOTAL SHEETS
06	Kin	198	R14.7/R18.0	54	80

LICENSED LANDSCAPE ARCHITECT

04-29-13
PLANS APPROVAL DATE

LICENSED LANDSCAPE ARCHITECT KEVIN GALLO No. 2525 Date 12/31/13 Renewal Date 01/25/12 Date STATE OF CALIFORNIA

THE STATE OF CALIFORNIA OR ITS OFFICERS OR AGENTS SHALL NOT BE RESPONSIBLE FOR THE ACCURACY OR COMPLETENESS OF SCANNED COPIES OF THIS PLAN SHEET.

EROSION CONTROL TYPE 1 (N)

SEQUENCE	ITEM	MATERIAL DESCRIPTION	MATERIAL TYPE	APPLICATION RATE	REMARKS
STEP 1	BONDED FIBER MATRIX	FIBER		2500 LB/ACRE FOR SLOPES ≤ 4:1 (Horiz:Vert) 3000 LB/ACRE FOR SLOPES > 4:1 and ≤ 3:1 (Horiz:Vert) 3500 LB/ACRE FOR SLOPES > 3:1 and ≤ 2:1 (Horiz:Vert) 4000 LB/ACRE FOR SLOPES > 2:1 and ≤ 1:1 (Horiz:Vert) 4500 LB/ACRE FOR SLOPES > 1:1 (Horiz:Vert)	APPLICATION RATE IS FOR FIBER AND TACKIFIER COMBINED
		TACKIFIER			
STEP 2	BONDED FIBER MATRIX	FIBER		500 LB/ACRE	
		TACKIFIER			
		SEED	MIX	32.7 LB/ACRE	

(N) NOT A SEPARATE PAY ITEM, FOR INFORMATION ONLY.

SEED MIX (N)

BOTANICAL NAME (COMMON NAME)	PERCENT GERMINATION (MINIMUM)	POUNDS PURE LIVE SEED SEED PER ACRE (SLOPE MEASUREMENT)
Eshosholzia californica (California Poppy)	70	4.8
Lasthenia glabrata (Goldfields)	55	2.3
Layia platyglossa (Tiddy Tips)	50	2.9
Lotus purchianus (Purshings Lotus)	50	1.2
Lupinus bicolor (Pygmy Leaved Lupine)	50	1.2
Nassella pulchra (deawned) (Purple Needle Grass)	40	1.0
Trifolium gacillentum (Pin Point Clover)	50	4.3
Vulpia octoflora (Six Week Fescue)	50	15

(N) NOT A SEPARATE PAY ITEM, FOR INFORMATION ONLY.

EROSION CONTROL QUANTITIES

EROSION CONTROL (TYPE 1)				
SHEET	LOCATION STATION	L†	R†	EROSION CONTROL (BONDED FIBER MATRIX) ACRE
EC-1	"A" Sta 787+73.00 TO Sta 789+95.00	X		0.04
	"A" Sta 787+75.00 TO Sta 789+76.00		X	0.03
	"A" Sta 791+59.00 TO Sta 793+39.00	X		0.03
	"A" Sta 791+25.00 TO Sta 793+40.00		X	0.04
EC-2	"A" Sta 839+37.00 TO Sta 841+10.00	X		0.03
	"A" Sta 839+38.00 TO Sta 841+95.00		X	0.04
	"A" Sta 843+08.00 TO Sta 845+55.00	X		0.04
	"A" Sta 843+75.00 TO Sta 845+56.00		X	0.03
EC-3	"A" Sta 953+74.00 TO Sta 955+98.00	X		0.03
	"A" Sta 953+78.00 TO Sta 955+90.00		X	0.03
	"A" Sta 957+62.00 TO Sta 959+65.00	X		0.03
	"A" Sta 957+50.00 TO Sta 959+70.00		X	0.03
			TOTAL	0.40

FIBER ROLLS

SEQUENCE	ITEM	MATERIAL DESCRIPTION	MATERIAL TYPE	REMARKS	UNIT	QTY
IN BONDED FIBER MATRIX AREAS FIBER ROLLS MUST BE INSTALLED BEFORE BONDED FIBER MATRIX.	FIBER ROLL	FIBER ROLL	TYPE B STRAW FILL 8" TO 10" Dia	TYPE 1 FIBER ROLL INSTALLATION	LF	4000

EROSION CONTROL LEGEND AND QUANTITIES

ECL-1

APPROVED FOR EROSION CONTROL WORK ONLY

STATE OF CALIFORNIA - DEPARTMENT OF TRANSPORTATION
Caltrans® LANDSCAPE ARCHITECTURE
SENIOR LANDSCAPE ARCHITECT: BRAD COLE
CALCULATED-DESIGNED BY: RAYMOND SEGURA
CHECKED BY: KEVIN GALLO
REVISED BY
DATE REVISED

LAST REVISION 04-05-13
DATE PLOTTED => 11-JUN-2013
TIME PLOTTED => 14:35

Dist	COUNTY	ROUTE	POST MILES TOTAL PROJECT	SHEET No.	TOTAL SHEETS
06	Kin	198	R14.7/R18.0	55	80

LICENSED LANDSCAPE ARCHITECT

04-29-13
PLANS APPROVAL DATE

LICENSED LANDSCAPE ARCHITECT KEVIN GALLO No. 2555 STATE OF CALIFORNIA
Expiration Date 12/31/13
Scanned Date 04-29-13
Date

THE STATE OF CALIFORNIA OR ITS OFFICERS OR AGENTS SHALL NOT BE RESPONSIBLE FOR THE ACCURACY OR COMPLETENESS OF SCANNED COPIES OF THIS PLAN SHEET.

NOTE:

FOR ACCURATE RIGHT OF WAY DATA, CONTACT RIGHT OF WAY ENGINEERING AT THE DISTRICT OFFICE.

LEGEND

EROSION CONTROL TYPE 1

FR FIBER ROLL

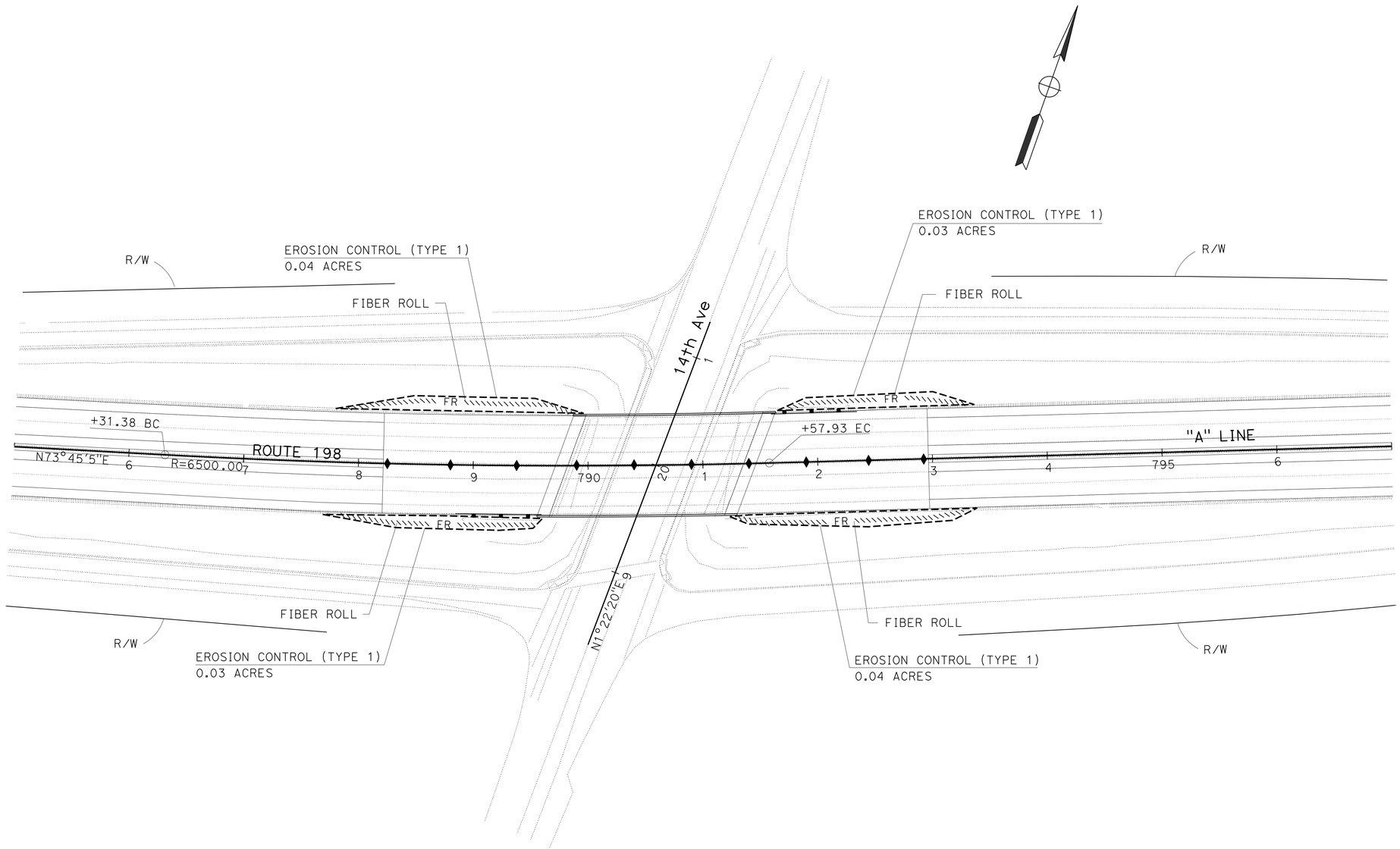

EROSION CONTROL PLAN
(LOCATION 1)

SCALE: 1"=50'

EC-1

APPROVED FOR EROSION CONTROL WORK ONLY

STATE OF CALIFORNIA - DEPARTMENT OF TRANSPORTATION
Caltrans® LANDSCAPE ARCHITECTURE

SENIOR LANDSCAPE ARCHITECT: BRAD COLE
CALCULATED-DESIGNED BY: RAYMOND SEGURA
CHECKED BY: KEVIN GALLO
REVISED BY
DATE REVISED

LAST REVISION 04-05-13
DATE PLOTTED => 11-JUN-2013
TIME PLOTTED => 14:35

Dist	COUNTY	ROUTE	POST MILES TOTAL PROJECT	SHEET No.	TOTAL SHEETS
06	Kin	198	R14.7/R18.0	56	80

LICENSED LANDSCAPE ARCHITECT

04-29-13
PLANS APPROVAL DATE

LICENSED LANDSCAPE ARCHITECT KEVIN GALLO No. 2525 STATE OF CALIFORNIA
EXPIRES 12/31/13
RENEWED DATE
04-29-13
Date

THE STATE OF CALIFORNIA OR ITS OFFICERS OR AGENTS SHALL NOT BE RESPONSIBLE FOR THE ACCURACY OR COMPLETENESS OF SCANNED COPIES OF THIS PLAN SHEET.

NOTE:

FOR ACCURATE RIGHT OF WAY DATA, CONTACT RIGHT OF WAY ENGINEERING AT THE DISTRICT OFFICE.

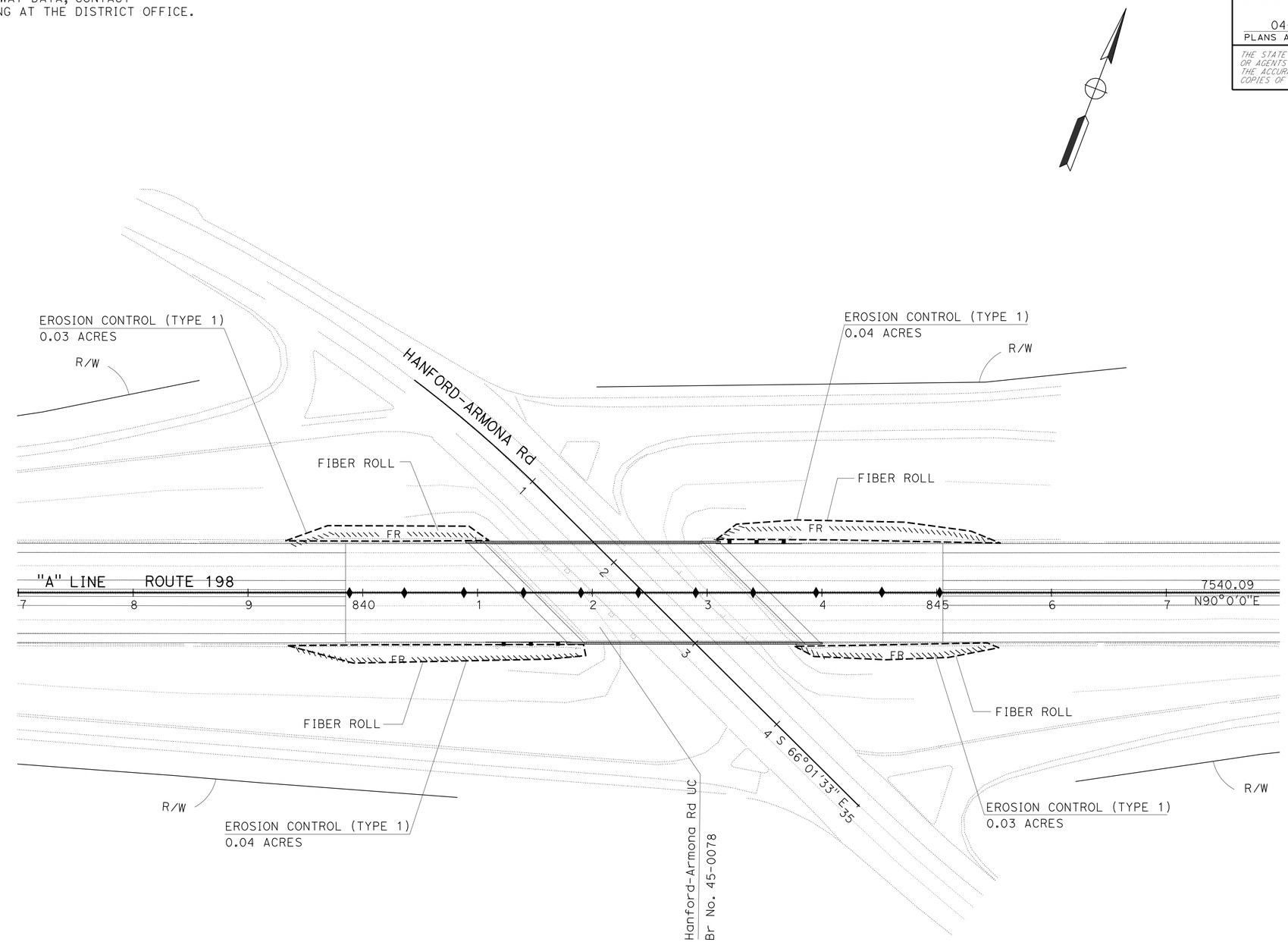

EROSION CONTROL PLAN
(LOCATION 2)

EC-2

APPROVED FOR EROSION CONTROL WORK ONLY

SCALE: 1"=50'

STATE OF CALIFORNIA - DEPARTMENT OF TRANSPORTATION
Caltrans® LANDSCAPE ARCHITECTURE

SENIOR LANDSCAPE ARCHITECT: BRAD COLE
CALCULATED-DESIGNED BY: RAYMOND SEGURA
CHECKED BY: KEVIN GALLO
REVISED BY
DATE REVISED

LAST REVISION 04-05-13
DATE PLOTTED => 11-JUN-2013
TIME PLOTTED => 14:35

Dist	COUNTY	ROUTE	POST MILES TOTAL PROJECT	SHEET No.	TOTAL SHEETS
06	Kin	198	R14.7/R18.0	57	80

LICENSED LANDSCAPE ARCHITECT

04-29-13
PLANS APPROVAL DATE

LICENSED LANDSCAPE ARCHITECT
KEVIN GALLO No. 2556
Expiration Date
12/31/13
Renewal Date
04-29-13
Date
STATE OF CALIFORNIA

THE STATE OF CALIFORNIA OR ITS OFFICERS OR AGENTS SHALL NOT BE RESPONSIBLE FOR THE ACCURACY OR COMPLETENESS OF SCANNED COPIES OF THIS PLAN SHEET.

NOTE:

FOR ACCURATE RIGHT OF WAY DATA, CONTACT
RIGHT OF WAY ENGINEERING AT THE DISTRICT OFFICE.

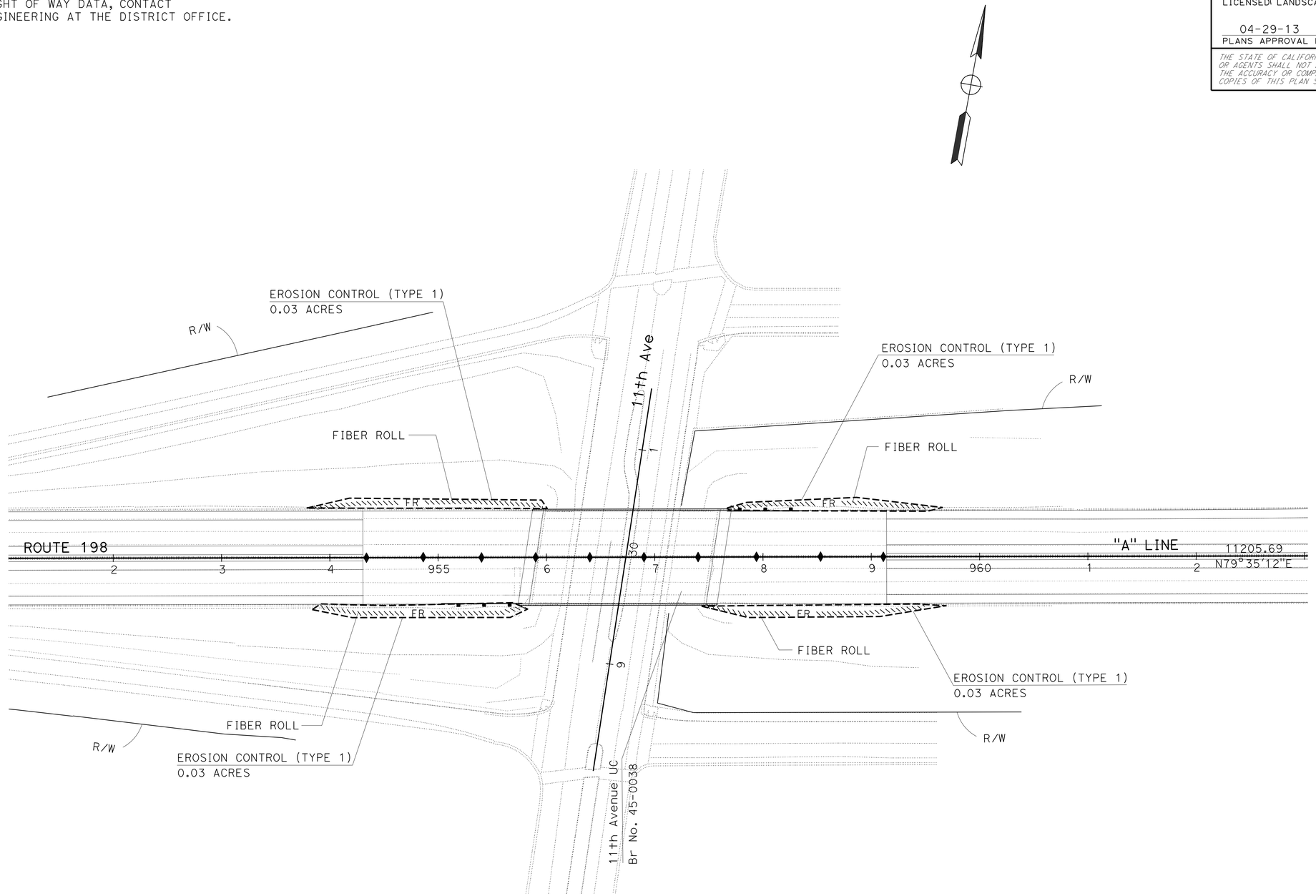

EROSION CONTROL PLAN
(LOCATION 3)

APPROVED FOR EROSION CONTROL WORK ONLY

SCALE: 1"=50'

EC-3

STATE OF CALIFORNIA - DEPARTMENT OF TRANSPORTATION
Caltrans® LANDSCAPE ARCHITECTURE

SENIOR LANDSCAPE ARCHITECT: BRAD COLE
CALCULATED-DESIGNED BY: RAYMOND SEGURA
CHECKED BY: KEVIN GALLO
REVISED BY
DATE REVISED

LAST REVISION 04-05-13
DATE PLOTTED => 11-JUN-2013
TIME PLOTTED => 14:35

Dist	COUNTY	ROUTE	POST MILES TOTAL PROJECT	SHEET No.	TOTAL SHEETS
06	Kin	198	R14.7/R18.0	58	80

REGISTERED ELECTRICAL ENGINEER 1-31-13 DATE

04-29-13
PLANS APPROVAL DATE

REGISTERED PROFESSIONAL ENGINEER HASHIM KHALID No. 18054 Exp. 6/30/13 ELECTRICAL STATE OF CALIFORNIA

THE STATE OF CALIFORNIA OR ITS OFFICERS OR AGENTS SHALL NOT BE RESPONSIBLE FOR THE ACCURACY OR COMPLETENESS OF SCANNED COPIES OF THIS PLAN SHEET.

NOTES: (FOR THIS SHEET ONLY)

1. ALL PULL BOXES MUST BE No. 5(E)(T) UNLESS OTHERWISE NOTED.

2 Exist 2-3/4"C THROUGH BRIDGE BENTS.

3 TO Exist 120/240 V, 1ø, 3-WIRE TYPE III-BF CITY SERVICE EQUIPMENT ENCLOSURE LOCATED AT NE CORNER OF 11TH Ave AND 4TH St.

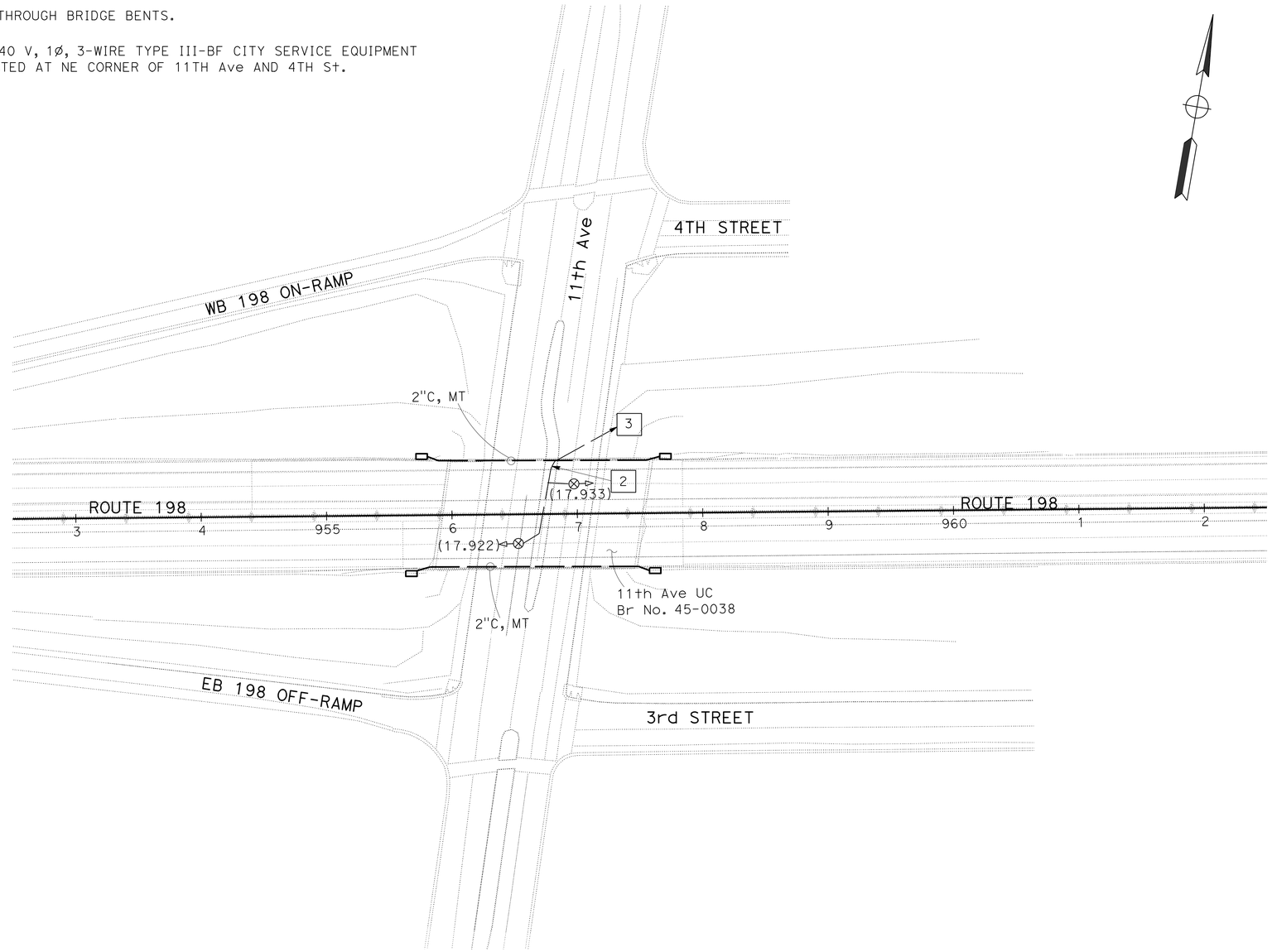

MODIFY LIGHTING

E-1

APPROVED FOR ELECTRICAL WORK ONLY

SCALE: 1" = 50'

STATE OF CALIFORNIA - DEPARTMENT OF TRANSPORTATION
Caltrans ELECTRICAL DESIGN

FUNCTIONAL SUPERVISOR: ALI BAKHDOUD
CALCULATED-DESIGNED BY: GURVINDERJIT S. BAINS
CHECKED BY: HASHIM KHALID
REVISED BY
DATE REVISED

LAST REVISION 04-29-13
DATE PLOTTED => 11-JUN-2013
TIME PLOTTED => 14:35

Dist	COUNTY	ROUTE	POST MILES TOTAL PROJECT	SHEET No.	TOTAL SHEETS
06	Kin	198	R14.7/R18.0	59	80

REGISTERED ELECTRICAL ENGINEER 1-31-13 DATE

04-29-13
PLANS APPROVAL DATE

REGISTERED PROFESSIONAL ENGINEER HASHIM KHALID No. 18054 Exp. 6/30/13 ELECTRICAL STATE OF CALIFORNIA

THE STATE OF CALIFORNIA OR ITS OFFICERS OR AGENTS SHALL NOT BE RESPONSIBLE FOR THE ACCURACY OR COMPLETENESS OF SCANNED COPIES OF THIS PLAN SHEET.

NOTE: (FOR THIS SHEET ONLY)

ALL PULL BOXES MUST BE No. 5(E)(T) UNLESS OTHERWISE NOTED.

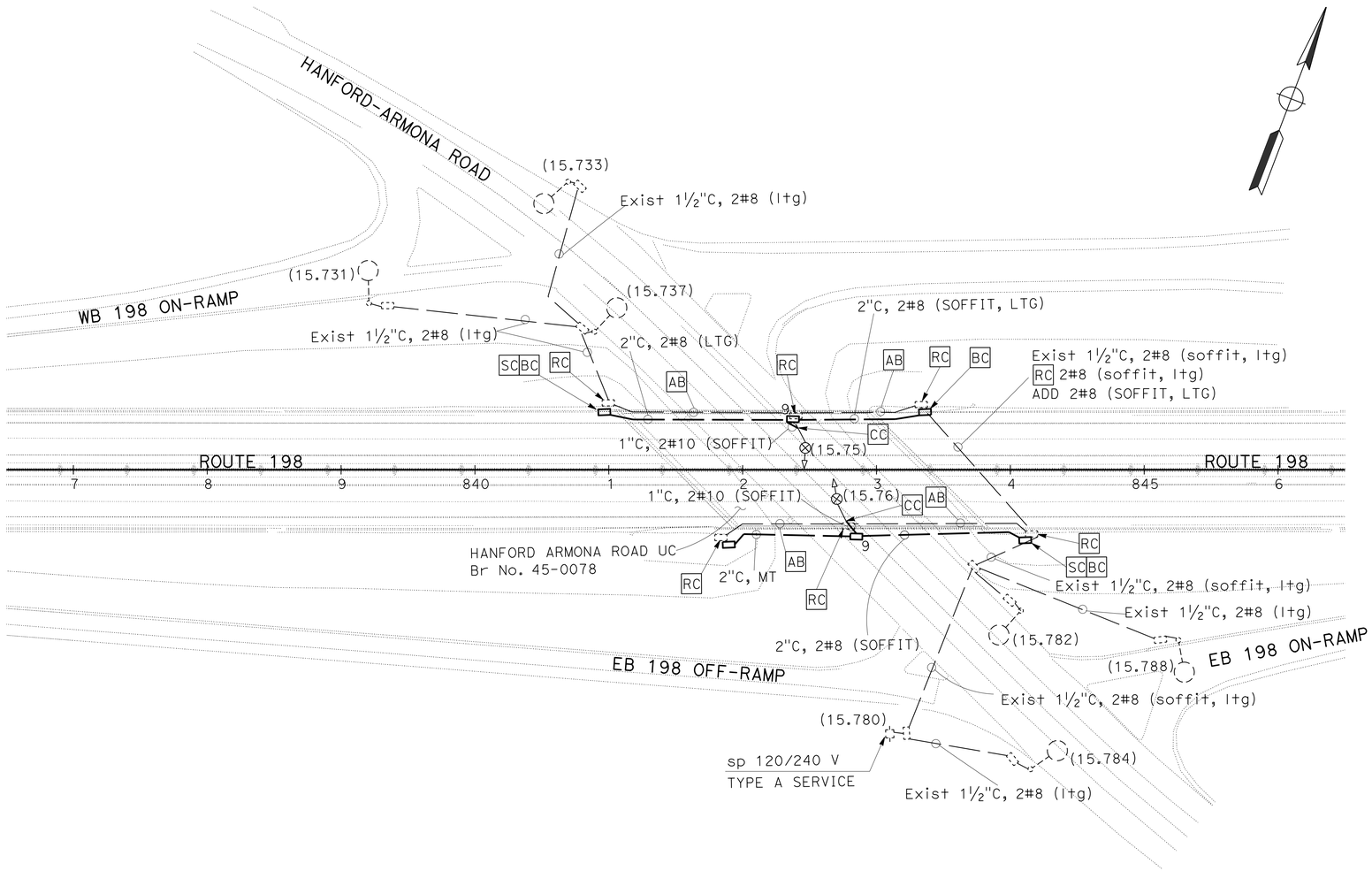

MODIFY LIGHTING

E-2

APPROVED FOR ELECTRICAL WORK ONLY

SCALE: 1" = 50'

STATE OF CALIFORNIA - DEPARTMENT OF TRANSPORTATION
Caltrans® ELECTRICAL DESIGN

FUNCTIONAL SUPERVISOR: ALI BAKHDOUD
CALCULATED-DESIGNED BY: GURVINDERJIT S. BAINS
CHECKED BY: HASHIM KHALID
REVISED BY
DATE REVISED

LAST REVISION 04-29-13
DATE PLOTTED => 11-JUN-2013
TIME PLOTTED => 14:35

Dist	COUNTY	ROUTE	POST MILES TOTAL PROJECT	SHEET No.	TOTAL SHEETS
06	Kin	198	R14.7/R18.0	60	80

REGISTERED ELECTRICAL ENGINEER 1-31-13 DATE

04-29-13
PLANS APPROVAL DATE

REGISTERED PROFESSIONAL ENGINEER HASHIM KHALID No. 18054 Exp. 6/30/13 ELECTRICAL STATE OF CALIFORNIA

THE STATE OF CALIFORNIA OR ITS OFFICERS OR AGENTS SHALL NOT BE RESPONSIBLE FOR THE ACCURACY OR COMPLETENESS OF SCANNED COPIES OF THIS PLAN SHEET.

NOTE: (FOR THIS SHEET ONLY)

ALL PULL BOXES MUST BE No. 5(E)(T) UNLESS OTHERWISE NOTED.

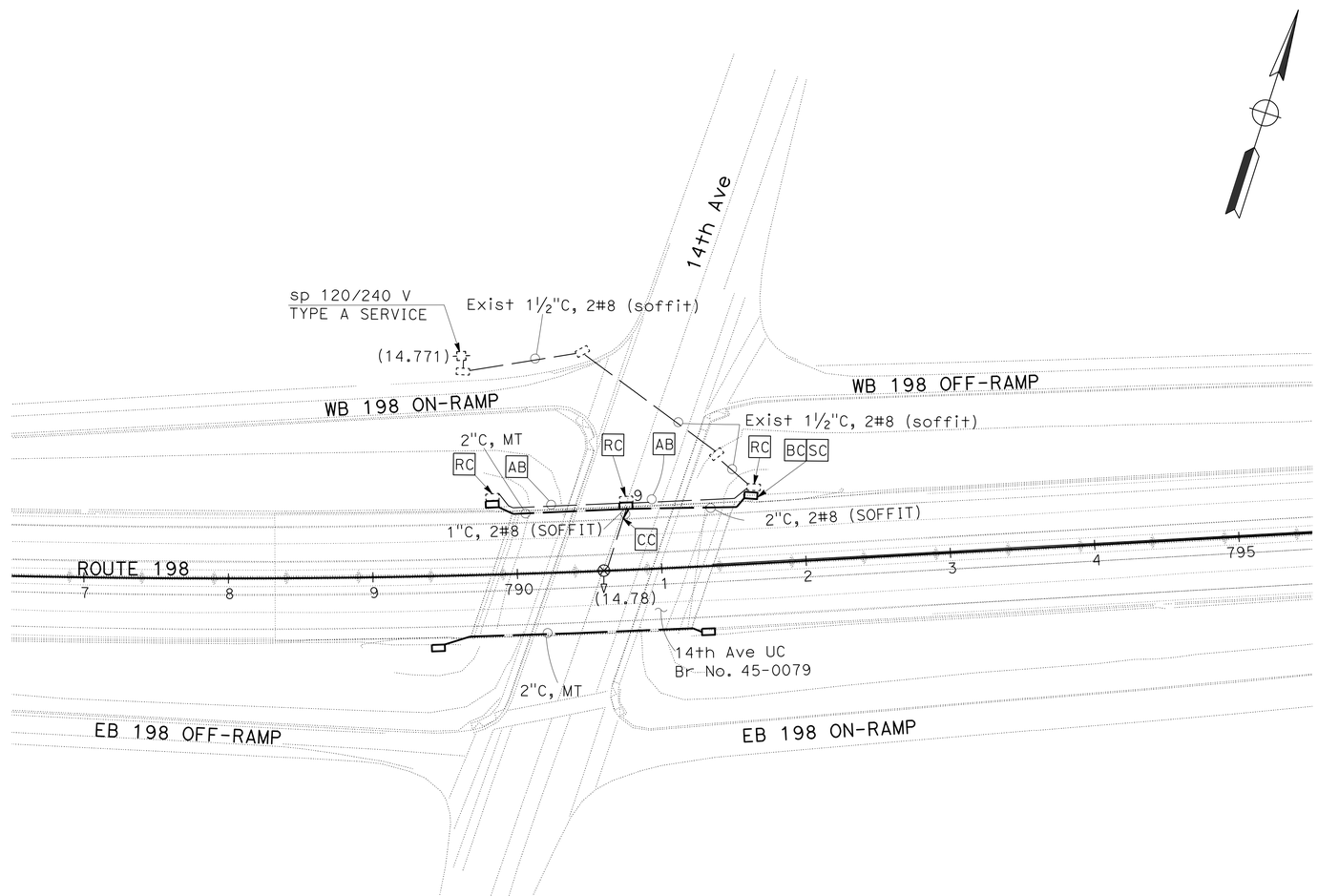

MODIFY LIGHTING

E-3

APPROVED FOR ELECTRICAL WORK ONLY

SCALE: 1" = 50'

STATE OF CALIFORNIA - DEPARTMENT OF TRANSPORTATION
Caltrans® ELECTRICAL DESIGN

FUNCTIONAL SUPERVISOR: ALI BAKHDOUD

CALCULATED-DESIGNED BY: GURVINDERJIT S. BAINS
CHECKED BY: HASHIM KHALID

REVISED BY
DATE REVISED

LAST REVISION 04-29-13
DATE PLOTTED => 11-JUN-2013
TIME PLOTTED => 14:35

Dist	COUNTY	ROUTE	POST MILES TOTAL PROJECT	SHEET No.	TOTAL SHEETS
06	Kin	198	R14.7/R18.0	61	80

REGISTERED ELECTRICAL ENGINEER 1-31-12 DATE

04-29-13
PLANS APPROVAL DATE

REGISTERED PROFESSIONAL ENGINEER HASHIM KHALID No. 18054 Exp. 6/30/13 ELECTRICAL STATE OF CALIFORNIA

THE STATE OF CALIFORNIA OR ITS OFFICERS OR AGENTS SHALL NOT BE RESPONSIBLE FOR THE ACCURACY OR COMPLETENESS OF SCANNED COPIES OF THIS PLAN SHEET.

NOTE:

THE QUANTITIES ON THIS SHEET ARE FOR INFORMATION ONLY AND ARE NOT SEPARATE PAY ITEMS.

MODIFY LIGHTING

SHEET No.	2"C, TYPE 1	No. 9 PB	No. 5(T)(E) PB	CONDUCTORS #8	CONDUCTORS(G) #8
	LF	EA	EA	LF	LF
E-1	400		4		
E-2	500	2	4	800	400
E-3	340	1	4	200	100

ELECTRICAL QUANTITIES

E-4

REVISED BY | DATE REVISED

GURVINDERJIT S. BAINS | HASHIM KHALID

CALCULATED-DESIGNED BY | CHECKED BY

FUNCTIONAL SUPERVISOR | ALI BAKHDOUD

STATE OF CALIFORNIA - DEPARTMENT OF TRANSPORTATION
Caltrans® ELECTRICAL DESIGN

LAST REVISION 04-29-13 | DATE PLOTTED => 11-JUN-2013 TIME PLOTTED => 14:36

Dist	COUNTY	ROUTE	POST MILES TOTAL PROJECT	SHEET No.	TOTAL SHEETS
06	Kin	198	R14.7/R18.0	62	80

REGISTERED CIVIL ENGINEER

April 20, 2012
PLANS APPROVAL DATE

REGISTERED PROFESSIONAL ENGINEER
Roberta L. McLaughlin
No. C40375
Exp. 3-31-13
CIVIL
STATE OF CALIFORNIA

THE STATE OF CALIFORNIA OR ITS OFFICERS OR AGENTS SHALL NOT BE RESPONSIBLE FOR THE ACCURACY OR COMPLETENESS OF SCANNED COPIES OF THIS PLAN SHEET.

TO ACCOMPANY PLANS DATED 4-29-13

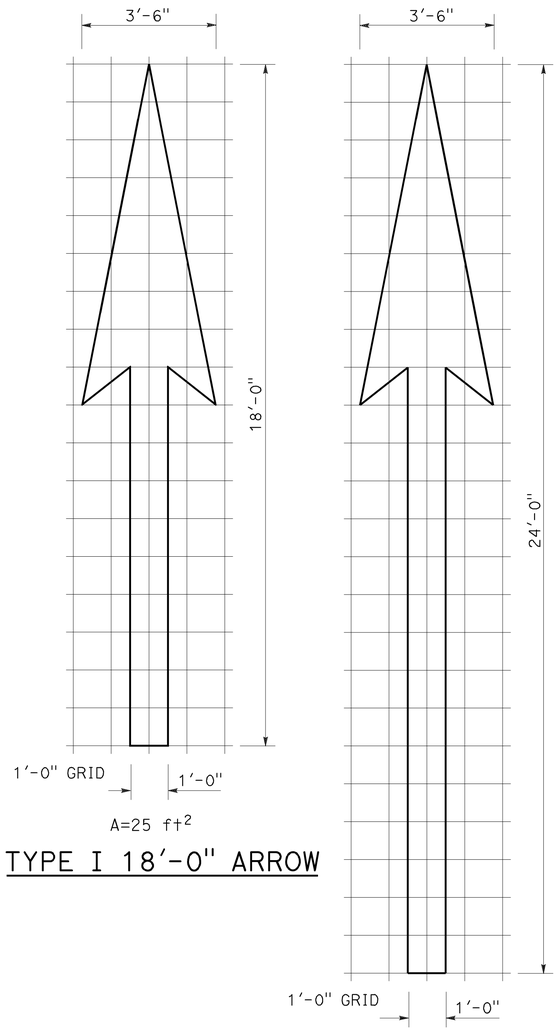

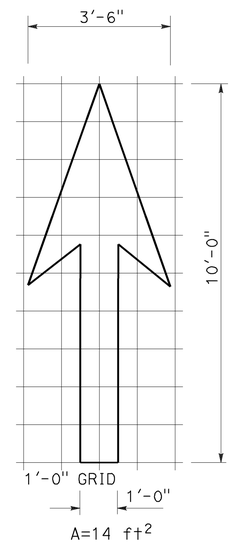

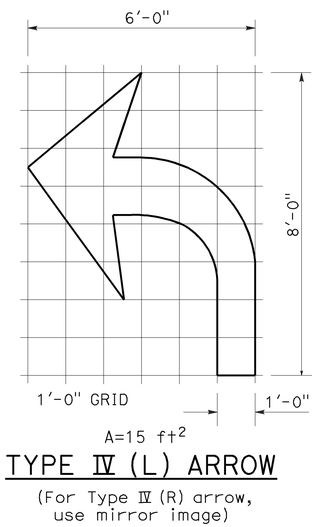

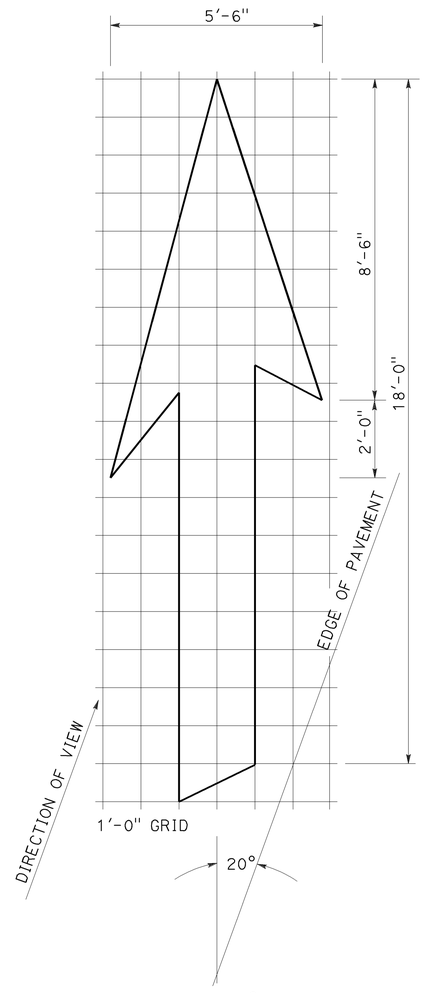

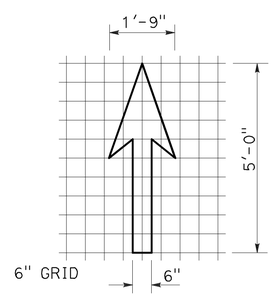

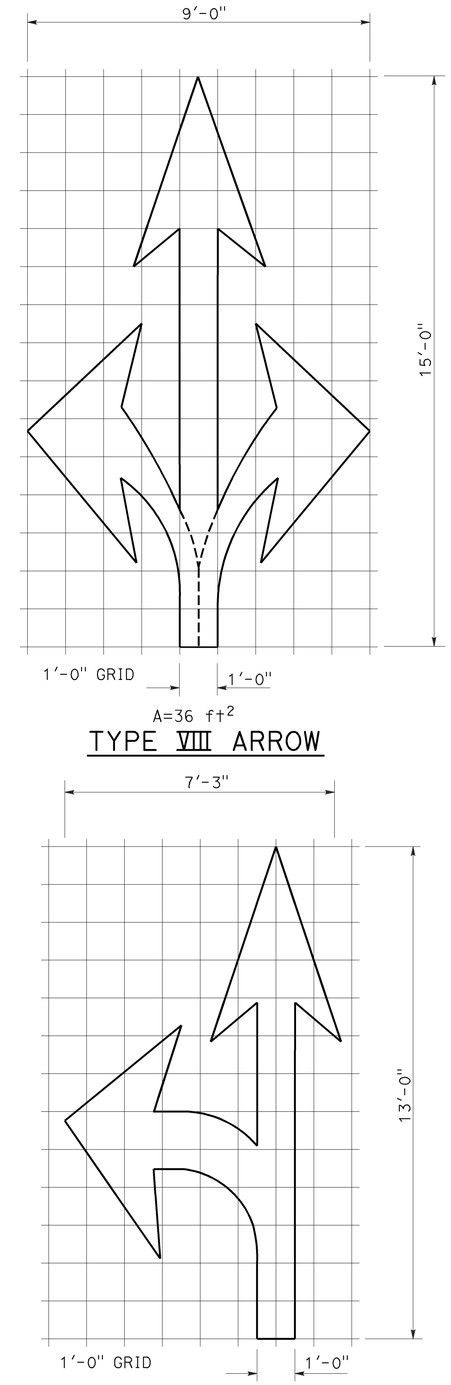

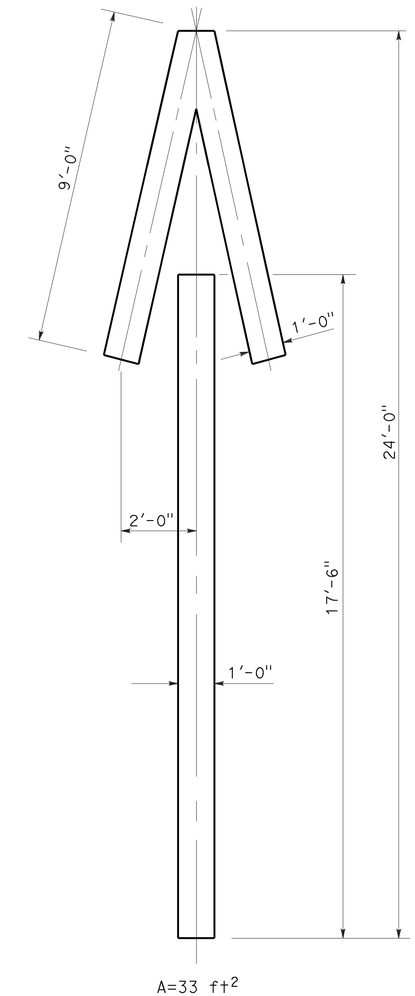

NOTE:
Minor variations in dimensions may be accepted by the Engineer.

STATE OF CALIFORNIA
DEPARTMENT OF TRANSPORTATION

PAVEMENT MARKINGS ARROWS

NO SCALE

RSP A24A DATED APRIL 20, 2012 SUPERSEDES STANDARD PLAN A24A DATED MAY 20, 2011 - PAGE 13 OF THE STANDARD PLANS BOOK DATED 2010.

REVISED STANDARD PLAN RSP A24A

2010 REVISED STANDARD PLAN RSP A24A

3-14-12

Dist	COUNTY	ROUTE	POST MILES TOTAL PROJECT	SHEET No.	TOTAL SHEETS
06	Kin	198	R14.7/R18.0	63	80

REGISTERED CIVIL ENGINEER

July 20, 2012
PLANS APPROVAL DATE

REGISTERED PROFESSIONAL ENGINEER
Roberta L. McLaughlin
No. C40375
Exp. 3-31-13
CIVIL
STATE OF CALIFORNIA

THE STATE OF CALIFORNIA OR ITS OFFICERS OR AGENTS SHALL NOT BE RESPONSIBLE FOR THE ACCURACY OR COMPLETENESS OF SCANNED COPIES OF THIS PLAN SHEET.

TO ACCOMPANY PLANS DATED 04-29-13

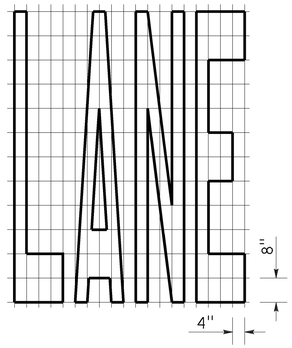

A=24 ft²

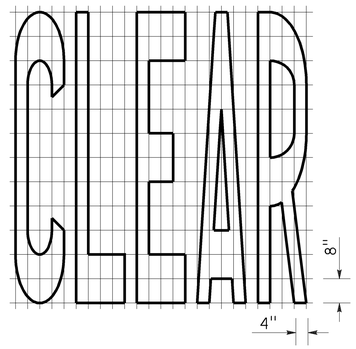

A=27 ft²

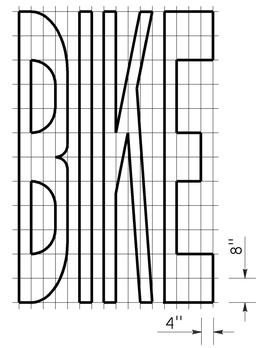

A=21 ft²

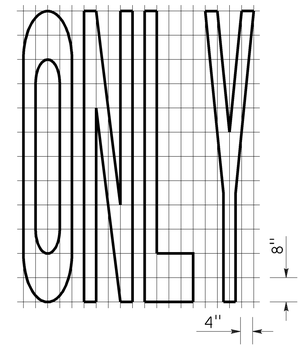

A=22 ft²

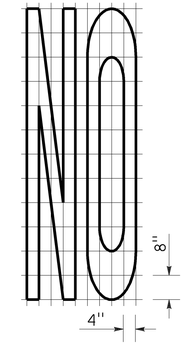

A=14 ft²

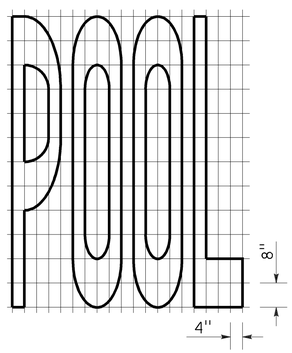

A=23 ft²

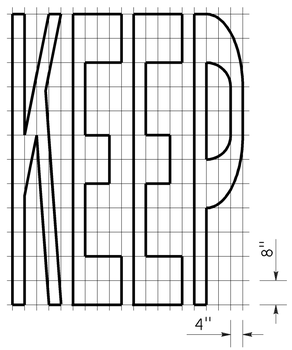

A=24 ft²

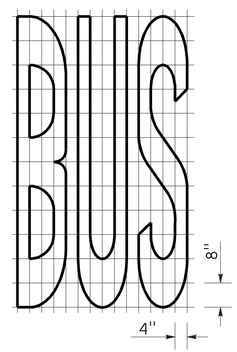

A=20 ft²

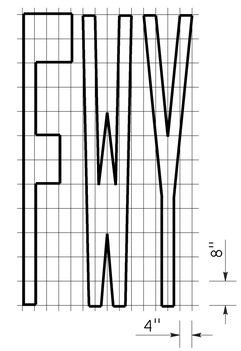

A=16 ft²

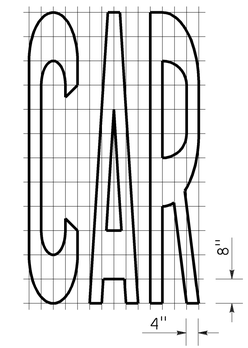

A=17 ft²

WORD MARKINGS			
ITEM	ft²	ITEM	ft²
LANE	24	NO	14
POOL	23	BIKE	21
CAR	17	BUS	20
CLEAR	27	ONLY	22
KEEP	24	FWY	16

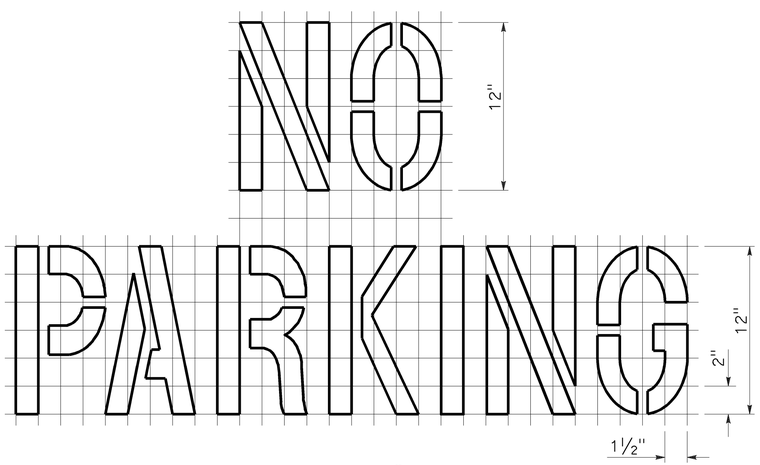

A=2 ft²
See Notes 6 and 7

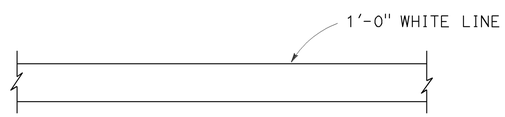

LIMIT LINE (STOP LINE)

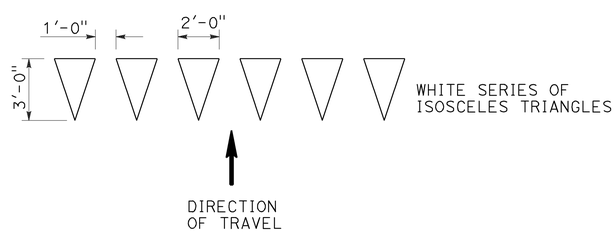

YIELD LINE

NOTES:

1. If a message consists of more than one word, it should read "UP", i.e., the first word should be nearest the driver.
2. The space between words should be at least four times the height of the characters for low speed roads, but not more than ten times the height of the characters. The space may be reduced appropriately where there is limited space because of local conditions.
3. Minor variations in dimensions may be accepted by the Engineer.
4. Portions of a letter, number or symbol may be separated by connecting segments not to exceed 2" in width.
5. The words "NO PARKING" pavement marking is to be used for parking facilities. For typical locations of markings, see Standard Plans A90A and A90B.
6. The words "NO PARKING", shall be painted in white letters no less than 1'-0" high on a contrasting background and located so that it is visible to traffic enforcement officials.

STATE OF CALIFORNIA
DEPARTMENT OF TRANSPORTATION

PAVEMENT MARKINGS WORDS, LIMIT AND YIELD LINES

NO SCALE

RSP A24E DATED JULY 20, 2012 SUPERSEDES STANDARD PLAN A24E
DATED MAY 20, 2011 - PAGE 17 OF THE STANDARD PLANS BOOK DATED 2010.

REVISED STANDARD PLAN RSP A24E

2010 REVISED STANDARD PLAN RSP A24E

6-12-12

Dist	COUNTY	ROUTE	POST MILES TOTAL PROJECT	SHEET No.	TOTAL SHEETS
06	Kin	198	R14.7/R18.0	64	80

REGISTERED CIVIL ENGINEER

July 20, 2012
PLANS APPROVAL DATE

REGISTERED PROFESSIONAL ENGINEER
Roberta L. McLaughlin
No. C40375
Exp. 3-31-13
CIVIL
STATE OF CALIFORNIA

THE STATE OF CALIFORNIA OR ITS OFFICERS OR AGENTS SHALL NOT BE RESPONSIBLE FOR THE ACCURACY OR COMPLETENESS OF SCANNED COPIES OF THIS PLAN SHEET.

TO ACCOMPANY PLANS DATED 04-29-13

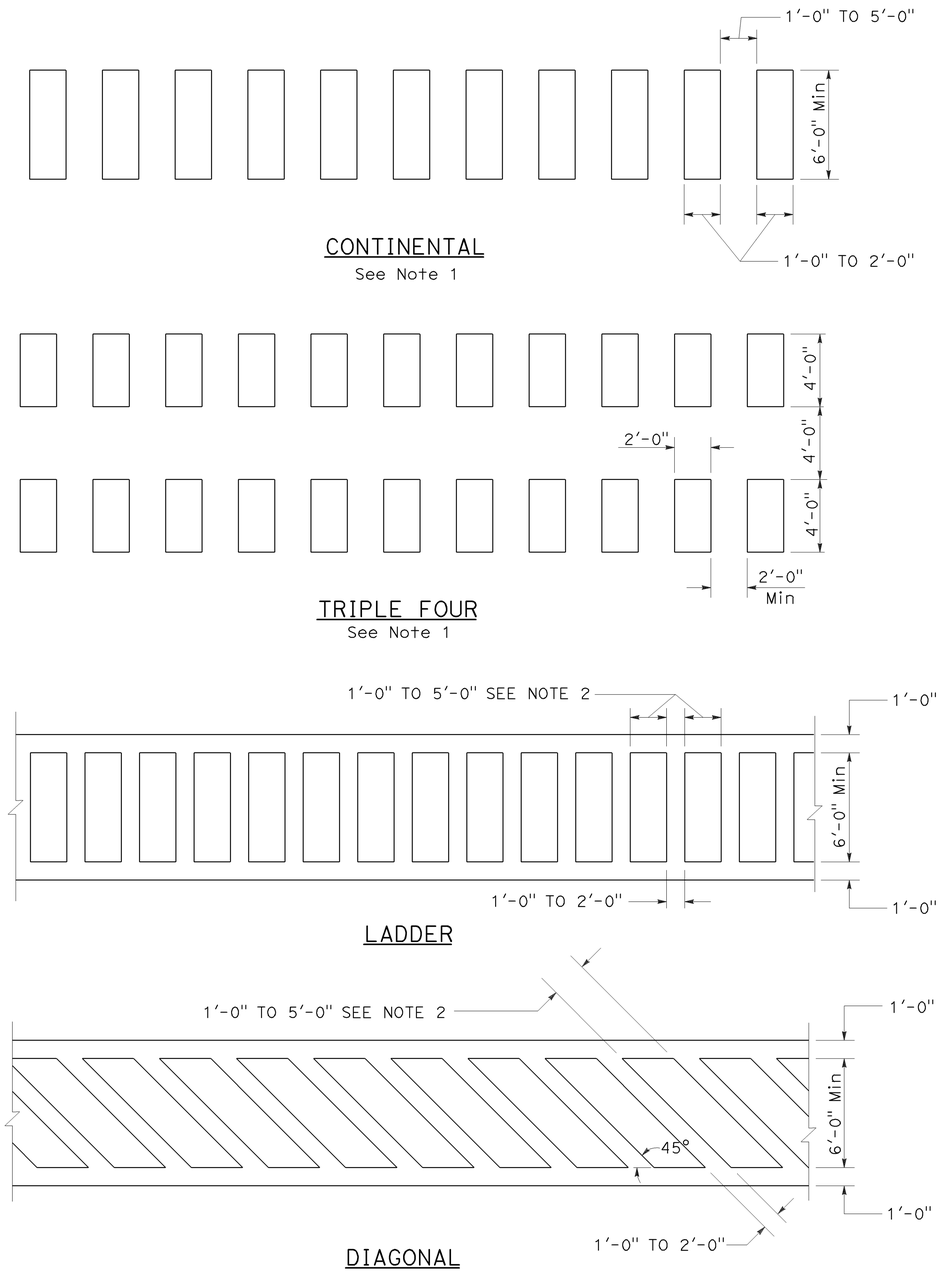

HIGHER VISIBILITY CROSSWALKS

NOTES:

1. Spaces between markings should be placed in wheel tracks of each lane.
2. Spacings not to exceed 2.5 times width of longitudinal line.
3. All crosswalk markings must be white except for those near schools must be yellow.

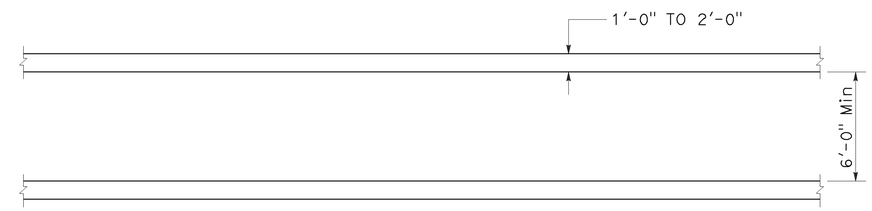

BASIC

STATE OF CALIFORNIA
DEPARTMENT OF TRANSPORTATION

PAVEMENT MARKINGS CROSSWALKS

NO SCALE

RSP A24F DATED JULY 20, 2012 SUPPLEMENTS THE STANDARD PLANS BOOK DATED 2010.

REVISED STANDARD PLAN RSP A24F

2010 REVISED STANDARD PLAN RSP A24F

6-28-12

Dist	COUNTY	ROUTE	POST MILES TOTAL PROJECT	SHEET No.	TOTAL SHEETS
06	Kin	198	R14.7/R18.0	65	80

Randell D. Hiatt
REGISTERED CIVIL ENGINEER

October 19, 2012
PLANS APPROVAL DATE

REGISTERED PROFESSIONAL ENGINEER
Randell D. Hiatt
No. C50200
Exp. 6-30-13
CIVIL
STATE OF CALIFORNIA

THE STATE OF CALIFORNIA OR ITS OFFICERS OR AGENTS SHALL NOT BE RESPONSIBLE FOR THE ACCURACY OR COMPLETENESS OF SCANNED COPIES OF THIS PLAN SHEET.

TO ACCOMPANY PLANS DATED 04-29-13

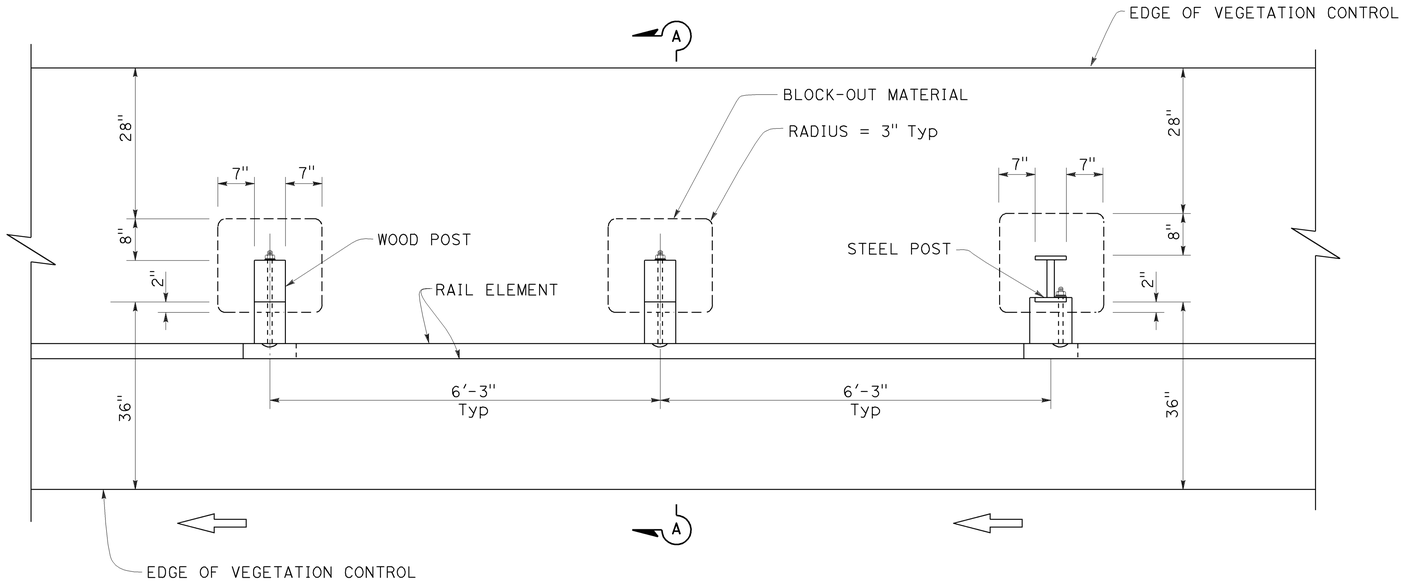

PLAN

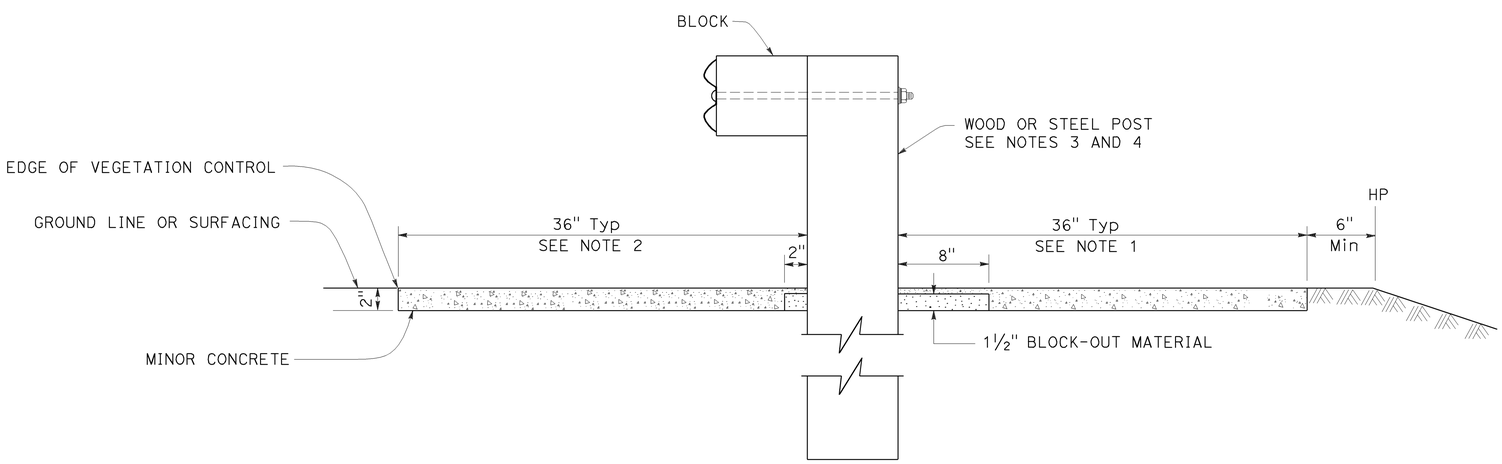

SECTION A-A

NOTES:

1. Where the distance between back of post and hinge point is less than 42", construct vegetation control to 6" from hinge point while maintaining the 8" block-out at back of post. If the 8" block-out at back of post can not be maintained, construct vegetation control flush with the back edge of post.
2. Where dike is constructed under railing, construct vegetation control to back edge of dike. Where paved shoulder is constructed within 36" in front of the post, construct vegetation control to the edge of paved shoulder.
3. For wood post sizes, see Standard Plan A77C1.
4. For steel post sizes, see Standard Plan A77C2.
5. For details not shown, see Standard Plans A77A1 and A77A2.

STATE OF CALIFORNIA
DEPARTMENT OF TRANSPORTATION

METAL BEAM GUARD RAILING TYPICAL VEGETATION CONTROL STANDARD RAILING SECTION

NO SCALE

RSP A77C5 DATED OCTOBER 19, 2012 SUPERSEDES STANDARD PLAN A77C5 DATED MAY 20, 2011 - PAGE 53 OF THE STANDARD PLANS BOOK DATED 2010.

REVISED STANDARD PLAN RSP A77C5

2010 REVISED STANDARD PLAN RSP A77C5

9-26-12

Dist	COUNTY	ROUTE	POST MILES TOTAL PROJECT	SHEET No.	TOTAL SHEETS
06	Kin	198	R14.7/R18.0	66	80

Randell D. Hiatt
REGISTERED CIVIL ENGINEER

October 19, 2012
PLANS APPROVAL DATE

REGISTERED PROFESSIONAL ENGINEER
Randell D. Hiatt
No. C50200
Exp. 6-30-13
CIVIL
STATE OF CALIFORNIA

THE STATE OF CALIFORNIA OR ITS OFFICERS OR AGENTS SHALL NOT BE RESPONSIBLE FOR THE ACCURACY OR COMPLETENESS OF SCANNED COPIES OF THIS PLAN SHEET.

TO ACCOMPANY PLANS DATED 04-29-13

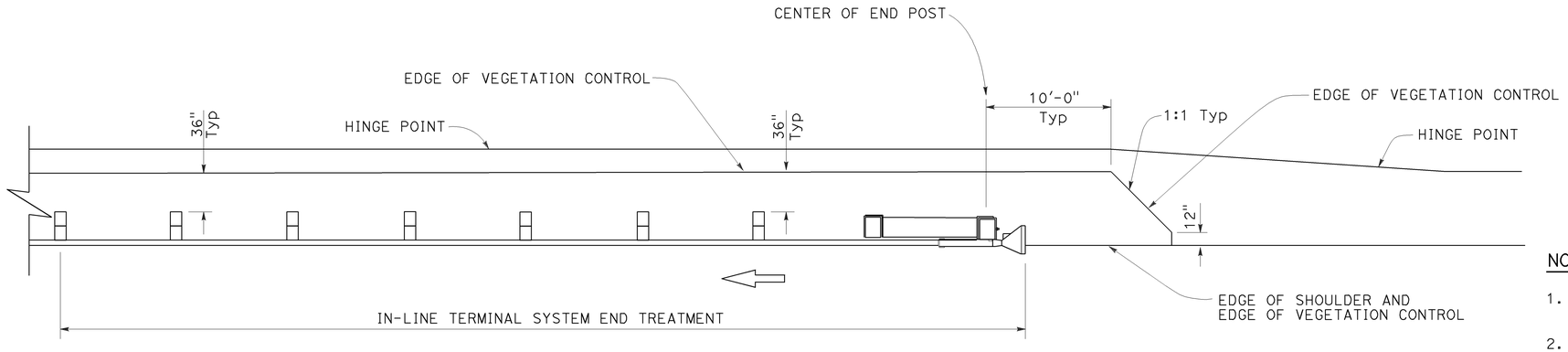

PLAN

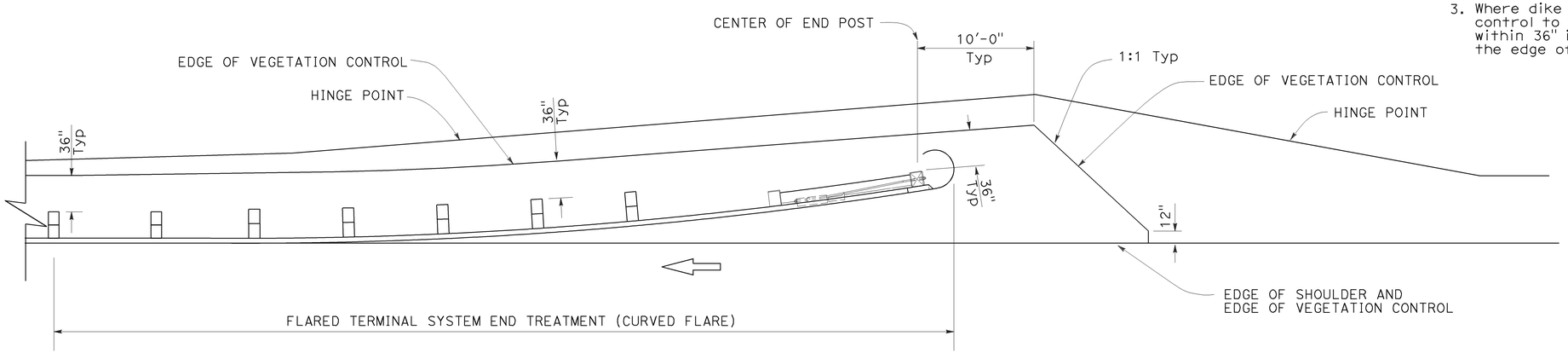

PLAN

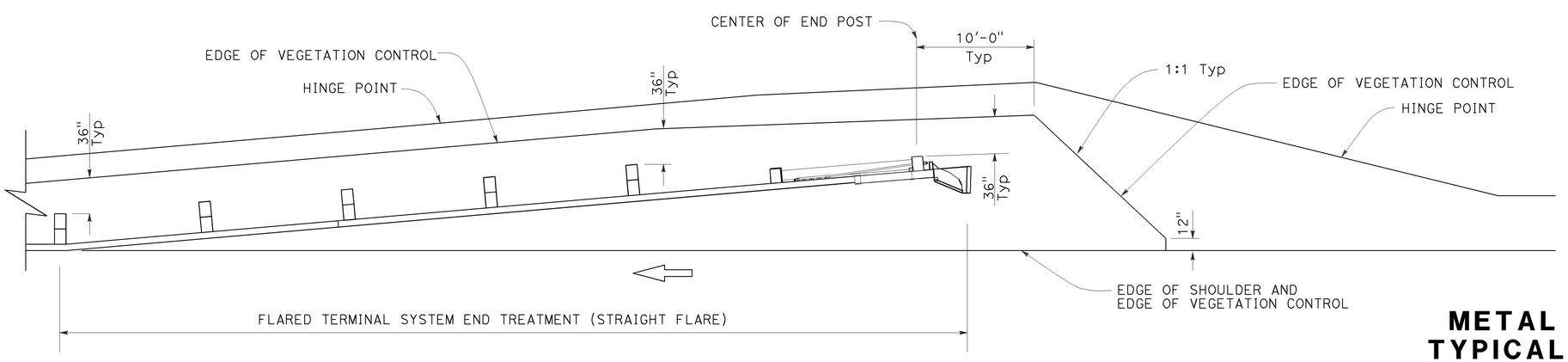

PLAN

NOTES:

1. See Revised Standard Plan RSP A77C5 for additional vegetation control details.
2. Where the distance between back of post and hinge point is less than 42", construct vegetation control to 6" from hinge point while maintaining the 8" block-out at back of post. If the 8" block-out at back of post can not be maintained, construct vegetation control flush with the back edge of post.
3. Where dike is constructed under railing, construct vegetation control to back edge of dike. Where paved shoulder is constructed within 36" in front of the post, construct vegetation control to the edge of paved shoulder.

STATE OF CALIFORNIA
DEPARTMENT OF TRANSPORTATION

METAL BEAM GUARD RAILING TYPICAL VEGETATION CONTROL FOR TERMINAL SYSTEM END TREATMENTS

NO SCALE

RSP A77C6 DATED OCTOBER 19, 2012 SUPERSEDES STANDARD PLAN A77C6 DATED MAY 20, 2011 - PAGE 54 OF THE STANDARD PLANS BOOK DATED 2010.

REVISED STANDARD PLAN RSP A77C6

2010 REVISED STANDARD PLAN RSP A77C6

9-26-12

Dist	COUNTY	ROUTE	POST MILES TOTAL PROJECT	SHEET No.	TOTAL SHEETS
06	Kin	198	R14.7/R18.0	67	80

REGISTERED CIVIL ENGINEER

April 19, 2013
PLANS APPROVAL DATE

REGISTERED PROFESSIONAL ENGINEER Gurinderpal Bhullar No. C48815 Exp. 9-30-14 CIVIL STATE OF CALIFORNIA

THE STATE OF CALIFORNIA OR ITS OFFICERS OR AGENTS SHALL NOT BE RESPONSIBLE FOR THE ACCURACY OR COMPLETENESS OF SCANNED COPIES OF THIS PLAN SHEET.

TO ACCOMPANY PLANS DATED 04-29-13

NOTES:

See Revised Standard Plan RSP T9 for tables.

Use cone spacing X for taper segment, Y for tangent segment or Z for conflict situations, as approriate, per Table 1, unless X, Y, or Z cone spacing is shown on this sheet.

Unless otherwise specified in the special provisions, all temporary warning signs shall have black legend on fluorescent orange background.

California codes are designated by (CA). Otherwise, Federal (MUTCD) codes are shown.

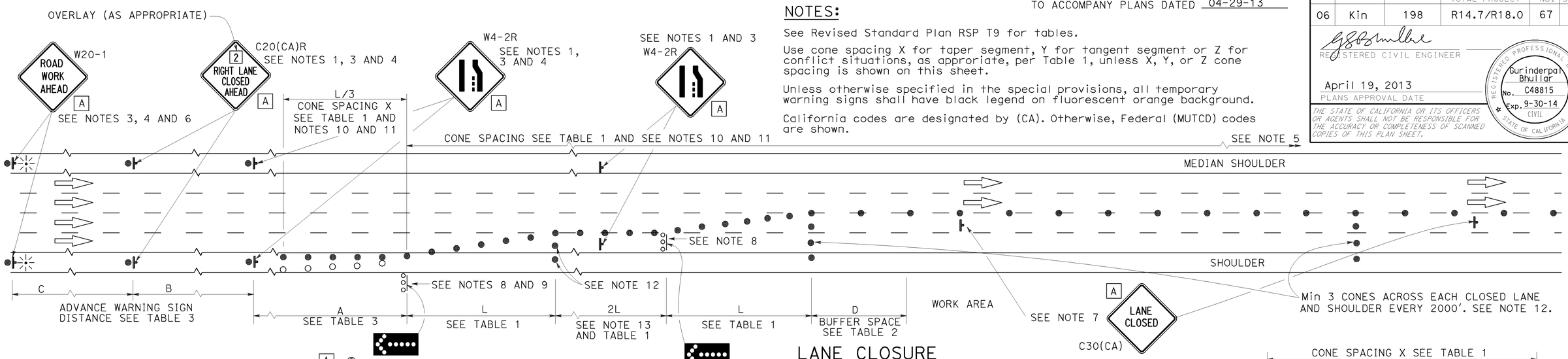

LANE CLOSURE

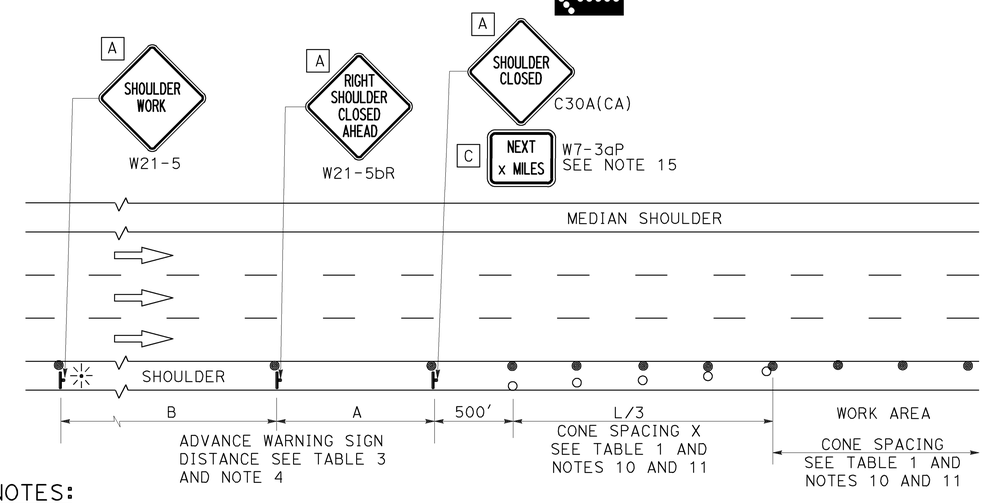

SHOULDER CLOSURE

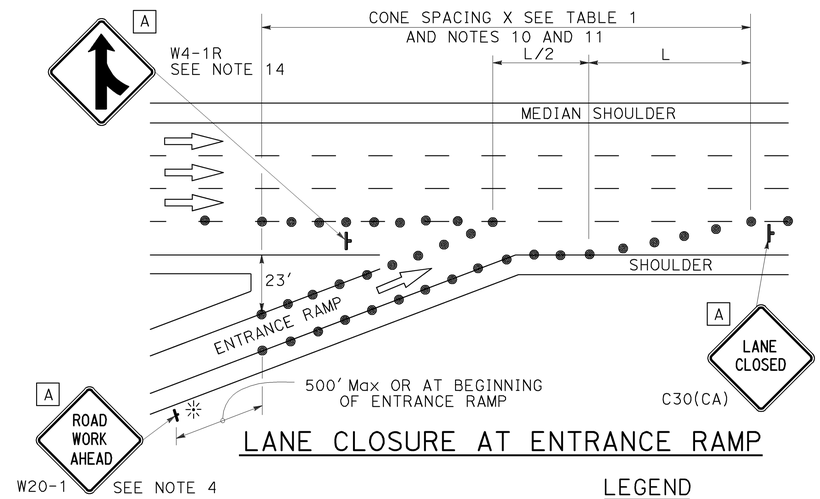

LANE CLOSURE AT ENTRANCE RAMP

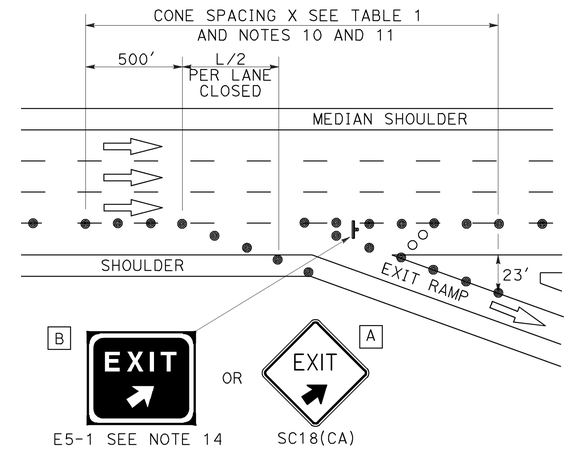

LANE CLOSURE AT EXIT RAMP

NOTES:

1. Median lane closures shall conform to the details as shown except that C20(CA)L and W4-2L signs shall be used.
2. At least one person shall be assigned to provide full time maintenance of traffic control devices for lane closures.
3. Duplicate sign installations are not required:
   a) On opposite shoulder if at least one-half of the available lanes remain open to traffic.
   b) In the median if the width of the median shoulder is less than 8' and the outside lanes are to be closed.
4. Each advance warning sign on each side of the roadway shall be equipped with at least two flags for daytime closure. Each flag shall be at least 16" x 16" in size and shall be orange or fluorescent red-orange in color. Flashing beacons shall be placed at the locations indicated for lane closure during hours of darkness.
5. A G20-2 "END ROAD WORK" sign, with minimum size of 48" x 24" as appropriate, shall be placed at the end of the lane closure unless the end of work area is obvious or ends within a larger project's limits.
6. If the W20-1 sign would follow within 2000' of a stationary W20-1 or G20-1 "ROAD WORK NEXT _____ MILES", use a C20(CA) sign for the first advance warning sign.
7. Place a C30(CA) sign every 2000' throughout length of lane closure.
8. One flashing arrow sign for each lane closed. The flashing arrow signs shall be Type I.
9. A minimum 1500' of sight distance shall be provided where possible for vehicles approaching the first flashing arrow sign. Lane closures shall not begin at top of crest vertical curve or on a horizontal curve.
10. All cones used for lane closures during the hours of darkness shall be fitted with retroreflective bands (or sleeves) as specified in the specifications.
11. Portable delineators, placed at one-half the spacing indicated for traffic cones may be used instead of cones for daytime closures only.
12. Unless otherwise specified in the special provisions, a minimum of 3 cones shall be placed transversely across each closed lane and shoulder at each location where a taper across a traffic lane ends and every 2000' as shown on the "Lane Closure" detail. Two Type II barricades may be used instead of the 3 cones. The transverse alignment of the cones or barricades on the closed shoulder may be shifted from the transverse alignment to provide access to the work.
13. Unless otherwise specified in the special provisions, the 2L tangent shown along lane lines shall be used between the L tapers required for each closed traffic lane.
14. Unless otherwise specified in the special provisions, the E5-1 or SC18(CA) and W4-1 signs shall be used as shown.
15. A W7-3aP "NEXT____ MILES" plaque must be used if theshoulder closure extends beyond the distance that can be perceived by road users.

LEGEND

- TRAFFIC CONE
- TRAFFIC CONE (OPTIONAL TAPER)
- TEMPORARY TRAFFIC CONTROL SIGN
- FLASHING ARROW SIGN (FAS)
- FAS SUPPORT OR TRAILER
- PORTABLE FLASHING BEACON

SIGN PANEL SIZE (Min)

A	48" x 48"
B	72" x 60"
C	36" x 30"

STATE OF CALIFORNIA
DEPARTMENT OF TRANSPORTATION

TRAFFIC CONTROL SYSTEM FOR LANE CLOSURE ON FREEWAYS AND EXPRESSWAYS

NO SCALE

RSP T10 DATED APRIL 19, 2013 SUPERSEDES STANDARD PLAN T10 DATED MAY 20, 2011 - PAGE 237 OF THE STANDARD PLANS BOOK DATED 2010.

REVISED STANDARD PLAN RSP T10

2010 REVISED STANDARD PLAN RSP T10

12-18-12

TO ACCOMPANY PLANS DATED 04-29-13

Dist	COUNTY	ROUTE	POST MILES TOTAL PROJECT	SHEET No.	TOTAL SHEETS
06	Kin	198	R14.7/R18.0	68	80

REGISTERED CIVIL ENGINEER

April 19, 2013
PLANS APPROVAL DATE

REGISTERED PROFESSIONAL ENGINEER Gurinderpal Bhullar No. C48815 Exp. 9-30-14 CIVIL STATE OF CALIFORNIA

THE STATE OF CALIFORNIA OR ITS OFFICERS OR AGENTS SHALL NOT BE RESPONSIBLE FOR THE ACCURACY OR COMPLETENESS OF SCANNED COPIES OF THIS PLAN SHEET.

NOTES: See Revised Standard Plan RSP T9 for tables.

Use cone spacing X for taper segment, Y for tangent segment or Z for conflict situations, as approriate, per Table 1, unless X, Y, or Z cone spacing is shown on this sheet.

Unless otherwise specified in the special provisions, all temporary warning signs shall have black legend on fluorescent orange background.

California codes are designated by (CA). Otherwise, Federal (MUTCD) codes are shown.

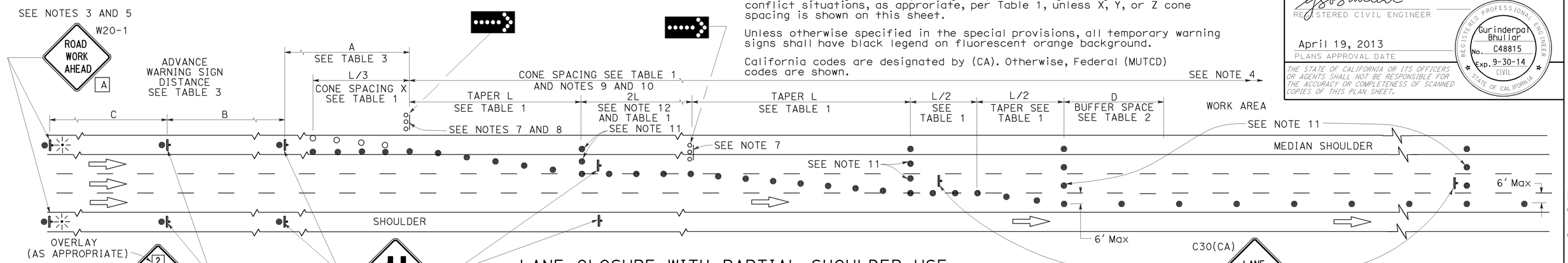

LANE CLOSURE WITH PARTIAL SHOULDER USE

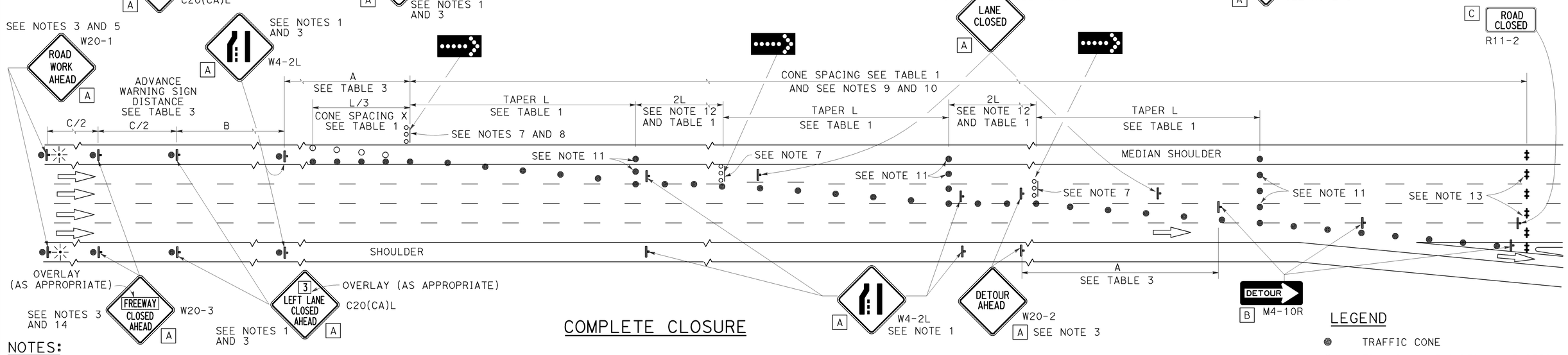

COMPLETE CLOSURE

NOTES:

1. Lane closures on the right side using partial median shoulder as a traffic lane shall conform to the details as shown except that C20(CA)R and W4-2R signs shall be used.
2. At least one person shall be assigned to provide full time maintenance of traffic control devices for lane closures.
3. Each advance warning sign on each side of the roadway shall be equipped with at least two flags for daytime closure. Each flag shall be at least 16" X 16" in size and shall be orange or fluorescent red-orange in color. Flashing beacons shall be placed at the locations indicated for lane closure during hours of darkness.
4. A G20-2 "END ROAD WORK" sign, with minimum size of 48" x 24" as appropriate, shall be placed at the end of the lane closure unless the end of work area is obvious or ends within a larger project's limits.
5. If the W20-1 sign would follow within 2000' of a stationary W20-1 or G20-1 "ROAD WORK NEXT ___ MILES", use a C20(CA) sign for the first advance warning sign.
6. Place a C30(CA) sign every 2000' throughout length of lane closure.
7. One flashing arrow sign for each lane closed. The flashing arrow signs shall be Type I.
8. A minimum 1500' of sight distance shall be provided where possible for vehicles approaching the first flashing arrow sign. Lane closures shall not begin at the top of crest vertical curve or on a horizontal curve.
9. All cones used for lane closures during the hours of darkness shall be fitted with retroreflective bands (or sleeves) as specified in the specifications.
10. Portable delineators, placed at one-half the spacing indicated for traffic cones, may be used instead of cones for daytime closures only.
11. Unless otherwise specified in the special provisions, a minimum of 3 cones shall be placed transversely across each closed lane and shoulder at each location where a taper across a traffic lane ends and every 2000' as shown on the "Lane Closure With Partial Shoulder Use" detail. Two Type II barricades may be used instead of the 3 cones. The transverse alignment of the cones or barricades on the closed shoulder may be shifted from the transverse alignment to provide access to the work.
12. Unless otherwise specified in the special provisions, the 2L tangent shown along lane lines shall be used between the L tapers required for each closed traffic lane.
13. A minimum of Two Type II or III barricades shall be placed across each closed lane and shoulder at the location shown and every 2000' within the complete closure area. Within the complete closure area, the transverse alignment of the barricades on the closed shoulder may be shifted from the transverse alignment to provide access to the work.
14. When specified in the special provisions, a W20-2 "DETOUR AHEAD" sign is to be used in place of the W20-3 "FREEWAY CLOSED AHEAD" sign.

SIGN PANEL SIZE (Min)

A	48" x 48"
B	48" x 18"
C	48" x 30"

LEGEND

- TRAFFIC CONE
- TRAFFIC CONE (OPTIONAL TAPER)
- TEMPORARY TRAFFIC CONTROL SIGN
- FLASHING ARROW SIGN (FAS)
- FAS SUPPORT OR TRAILER
- PORTABLE FLASHING BEACON

STATE OF CALIFORNIA
DEPARTMENT OF TRANSPORTATION

TRAFFIC CONTROL SYSTEM FOR LANE CLOSURES ON FREEWAYS AND EXPRESSWAYS

NO SCALE

RSP T10A DATED APRIL 19, 2013 SUPERSEDES STANDARD PLAN T10A DATED MAY 20, 2011 - PAGE 238 OF THE STANDARD PLANS BOOK DATED 2010.

REVISED STANDARD PLAN RSP T10A

2010 REVISED STANDARD PLAN RSP T10A

12-18-12

Dist	COUNTY	ROUTE	POST MILES TOTAL PROJECT	SHEET No.	TOTAL SHEETS
06	Kin	198	R14.7/R18.0	69	80

REGISTERED CIVIL ENGINEER

April 19, 2013
PLANS APPROVAL DATE

REGISTERED PROFESSIONAL ENGINEER
Gurinderpal Bhullar
No. C48815
Exp. 9-30-14
CIVIL
STATE OF CALIFORNIA

THE STATE OF CALIFORNIA OR ITS OFFICERS OR AGENTS SHALL NOT BE RESPONSIBLE FOR THE ACCURACY OR COMPLETENESS OF SCANNED COPIES OF THIS PLAN SHEET.

TO ACCOMPANY PLANS DATED 04-29-13

NOTES:

See Revised Standard Plan RSP T9 for tables.

Use cone spacing X for taper segment, Y for tangent segment or Z for conflict situations, as approriate, per Table 1, unless X, Y, or Z cone spacing is shown on this sheet.

Unless otherwise specified in the special provisions, all temporary warning signs shall have black legend on fluorescent orange background.

California codes are designated by (CA). Otherwise, Federal (MUTCD) codes are shown.

TYPICAL LANE CLOSURE WITH REVERSIBLE CONTROL

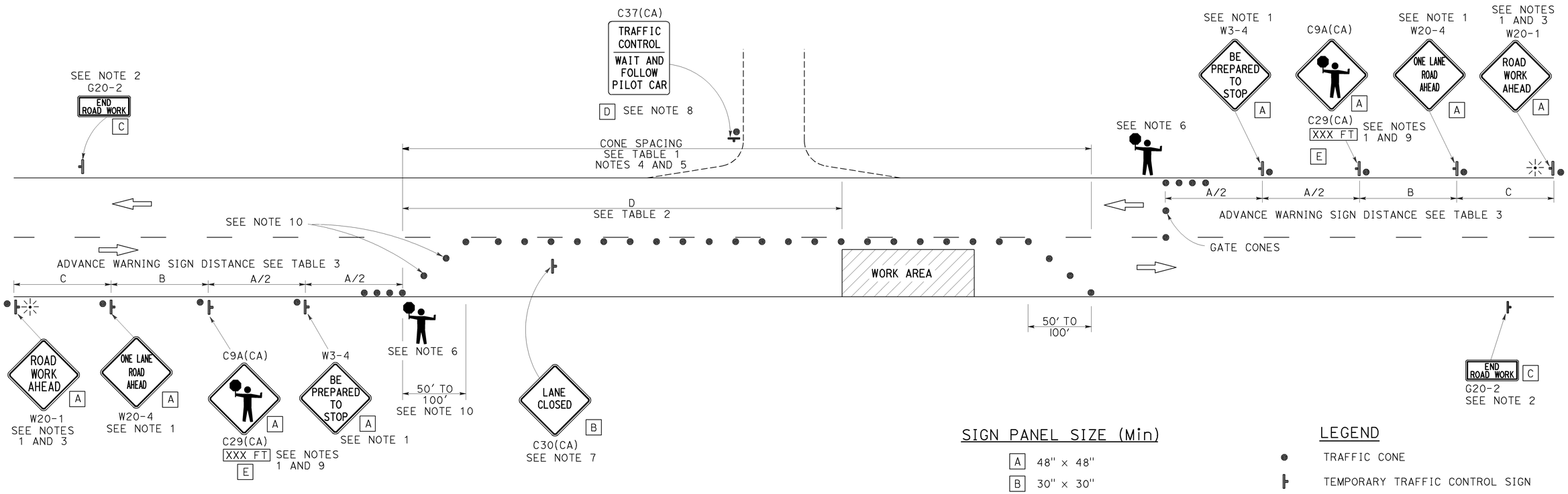

SIGN PANEL SIZE (Min)

A	48" × 48"
B	30" × 30"
C	36" × 18"
D	36" × 42"
E	20" × 7"

LEGEND

- TRAFFIC CONE
- TEMPORARY TRAFFIC CONTROL SIGN
- PORTABLE FLASHING BEACON
- FLAGGER

NOTES:

1. Each advance warning sign in each direction of travel shall be equipped with at least two flags for daytime closure. Each flag shall be at least 16" x 16" in size and shall be orange or fluorescent red-orange in color. Flashing beacons shall be placed at the locations indicated for lane closure during hours of darkness.
2. A G20-2 "END ROAD WORK" sign, as appropriate, shall be placed at the end of the lane control unless the end of work area is obvious, or ends within a larger project's limits.
3. If the W20-1 sign would follow within 2000' of a stationary W20-1 or G20-1 "ROAD WORK NEXT _____ MILES", use a W20-4 sign for the first advance warning sign.
4. All cones used for lane closures during the hours of darkness shall be fitted with retroreflective bands (or sleeves) as specified in the specifications.
5. Portable delineators, placed at one-half the spacing indicated for traffic cones, may be used instead of cones for daytime closures only.
6. Additional advance flaggers may be required. Flagger should stand in a conspicuous place, be visible to approaching traffic as well as approaching vehicles after the first vehicle has stopped. During the hours of darkness, the flagging-station and flagger shall be illuminated and clearly visible to approaching traffic. The illumination footprint of the lighting on the ground shall be at least 20' in diameter. Place a minimum of four cones at 50' intervals in advance of flagger station as shown.
7. Place C30(CA) "LANE CLOSED" sign at 500' to 1000' intervals throughout extended work areas. They are optional if the work area is visible from the flagger station.
8. When a pilot car is used, place a C37(CA) "TRAFFIC CONTROL-WAIT AND FOLLOW PILOT CAR" sign with black legend on white background at all intersections, driveways and alleys without a flagger within traffic control area. Signs shall be clean and visible at all times. Where traffic can not be effectively self-regulated, at least one flagger shall be used at each intersection within traffic control area.
9. An optional C29(CA) sign may be placed below the C9A(CA) sign.
10. Either traffic cones or barricades shall be placed on the taper. Barricades shall be Type I, II, or III.

STATE OF CALIFORNIA
DEPARTMENT OF TRANSPORTATION

TRAFFIC CONTROL SYSTEM FOR LANE CLOSURE ON TWO LANE CONVENTIONAL HIGHWAYS

NO SCALE

RSP T13 DATED APRIL 19, 2013 SUPERSEDES STANDARD PLAN T13 DATED MAY 20, 2011 - PAGE 241 OF THE STANDARD PLANS BOOK DATED 2010.

REVISED STANDARD PLAN RSP T13

2010 REVISED STANDARD PLAN RSP T13

4-2-13

Dist	COUNTY	ROUTE	POST MILES TOTAL PROJECT	SHEET No.	TOTAL SHEETS
06	Kin	198	R14.7/R18.0	70	80

REGISTERED CIVIL ENGINEER

April 19, 2013
PLANS APPROVAL DATE

REGISTERED PROFESSIONAL ENGINEER
Gurinderpal Bhullar
No. C48815
Exp. 9-30-14
CIVIL
STATE OF CALIFORNIA

THE STATE OF CALIFORNIA OR ITS OFFICERS OR AGENTS SHALL NOT BE RESPONSIBLE FOR THE ACCURACY OR COMPLETENESS OF SCANNED COPIES OF THIS PLAN SHEET.

TO ACCOMPANY PLANS DATED 04-29-13

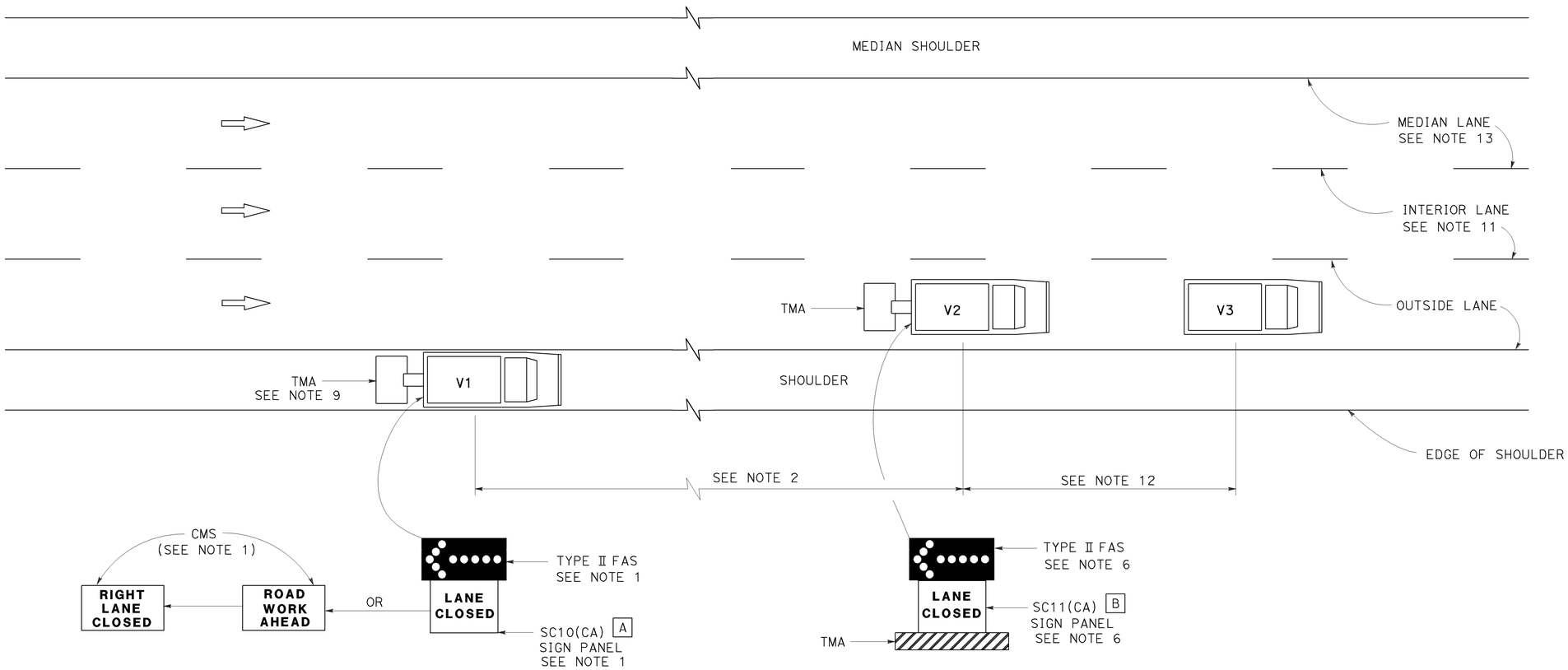

MOVING LANE CLOSURE ON MEDIAN LANE OR OUTSIDE LANE OF MULTILANE HIGHWAYS

SIGN PANEL SIZE (Min)

A 66" x 36"

B 54" x 42"

LEGEND

V1	SIGN VEHICLE
V2	SHADOW VEHICLE
V3	WORK/APPLICATION VEHICLE
	FLASHING ARROW SIGN (FAS)
CMS	CHANGEABLE MESSAGE SIGN
TMA	TRUCK-MOUNTED ATTENUATOR

NOTES:

1. Either a changeable message sign or a SC10(CA) sign panel and a Type II flashing arrow sign shall be mounted on the rear of sign vehicle V1. The changeable message sign shall be sequenced to show the "ROAD WORK AHEAD" message first, followed by the "RIGHT LANE CLOSED" message. For median lane closure, the flashing arrow symbol shall be reversed with the arrowhead on the right and the changeable message sign shall show "LEFT LANE CLOSED".
2. If traffic queues develop, sign vehicle V1 should be positioned upstream from the end of queue. Sign vehicle V1 shall be positioned where highly visible when shoulders are not available.
3. A minimum sight distance of 1500′ should be provided in advance of sign vehicle V1.
4. Sign vehicle V1 should remain at the beginning of horizontal or vertical curves until the other vehicles (V2 and V3) are far enough beyond the curve to resume the minimum sight distance of 1500′.
5. Vehicle-mounted sign panels shall have Type III or above retroreflective sheeting, black on white, or black on fluorescent orange, with 6" minimum series D letters per Caltrans sign specifications.
6. Shadow vehicle V2 shall be equipped with a truck-mounted attenuator. The sign panel shown and a Type II flashing arrow sign shall be mounted on the rear of shadow vehicle V2. For median lane closure the flashing arrow sign symbol shall be displayed with the arrowhead on the right.
7. All vehicles used for lane closures shall be equipped with two-way radios, and the vehicle operators shall maintain communication during the work or application operation.
8. All vehicles shall be equipped with flashing or rotating amber lights.
9. If sign vehicle V1 encroaches into the traffic lane due to insufficient shoulder width, sign vehicle V1 shall be equipped with a truck-mounted attenuator. Sign vehicle V1 shall stay as close to the edge of shoulder as practicable.
10. Where workers would be on foot in the work area, a stationary type lane closure (Revised Standard Plan T10, T11, etc., as applicable) shall be used instead of this plan.
11. For moving lane closure on interior lane of multilane highways, use Revised Standard Plan T16.
12. The spacing between work vehicle(s) and the shadow vehicles, and between each shadow vehicle should be minimized to deter road users from driving in between.
13. When the work/application vehicle V3 occupies the median lane, sign vehicle V1 should drive in the median shoulder and indicate left lane closed ahead.

STATE OF CALIFORNIA
DEPARTMENT OF TRANSPORTATION

TRAFFIC CONTROL SYSTEM FOR MOVING LANE CLOSURE ON MULTILANE HIGHWAYS

NO SCALE

RSP T15 DATED APRIL 19, 2013 SUPERSEDES STANDARD PLAN T15
DATED MAY 20, 2011 - PAGE 243 OF THE STANDARD PLANS BOOK DATED 2010.

REVISED STANDARD PLAN RSP T15

2010 REVISED STANDARD PLAN RSP T15

12-18-12

Dist	COUNTY	ROUTE	POST MILES TOTAL PROJECT	SHEET No.	TOTAL SHEETS
06	Kin	198	R14.7/R18.0	71	80

REGISTERED CIVIL ENGINEER

April 19, 2013
PLANS APPROVAL DATE

REGISTERED PROFESSIONAL ENGINEER
Gurinderpal Bhullar
No. C48815
Exp. 9-30-14
CIVIL
STATE OF CALIFORNIA

THE STATE OF CALIFORNIA OR ITS OFFICERS OR AGENTS SHALL NOT BE RESPONSIBLE FOR THE ACCURACY OR COMPLETENESS OF SCANNED COPIES OF THIS PLAN SHEET.

TO ACCOMPANY PLANS DATED 04-29-13

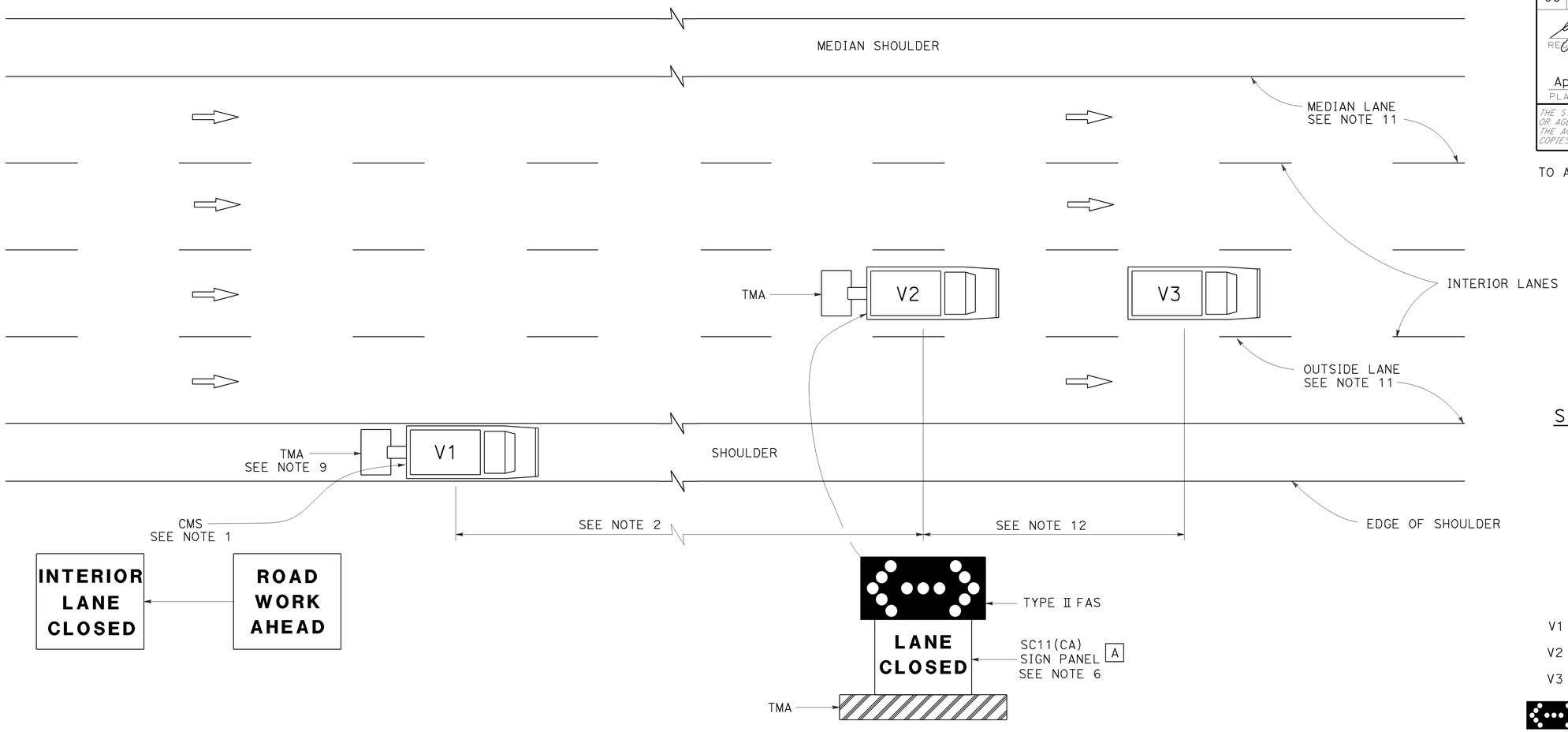

MOVING LANE CLOSURE ON INTERIOR LANE OF MULTILANE HIGHWAYS

SIGN PANEL SIZE (Min)

A 54" x 42"

LEGEND

V1	SIGN VEHICLE
V2	SHADOW VEHICLE
V3	WORK/APPLICATION VEHICLE
	FLASHING ARROW SIGN (FAS) IN FLASHING DOUBLE ARROW MODE
CMS	CHANGEABLE MESSAGE SIGN
TMA	TRUCK-MOUNTED ATTENUATOR

NOTES:

1. A changeable message sign shall be mounted on the rear of sign vehicle V1. The changeable message sign shall be sequenced to show the "ROAD WORK AHEAD" message first, followed by the "INTERIOR LANE CLOSED" message. The message "CENTER LANE CLOSED" may be used in place of the "INTERIOR LANE CLOSED" message.
2. If traffic queues develop, sign vehicle V1 should be positioned upstream from the end of queue. Sign vehicle V1 shall be positioned where highly visible when shoulders are not available.
3. A minimum sight distance of 1500′ should be provided in advance of sign vehicle V1.
4. Sign vehicle V1 should remain at the beginning of horizontal or vertical curves until the other vehicles (V2 and V3) are far enough beyond the curve to resume the minimum sight distance of 1500′.
5. Vehicle-mounted sign panels shall have Type III or above retroreflective sheeting, black on white, or black on fluorescent orange, with 6" minimum series D letters per Caltrans sign specifications.
6. Shadow vehicle V2 shall be equipped with a truck-mounted attenuator. The sign panel shown and a Type II flashing arrow sign shall be mounted on the rear of shadow vehicle V2.
7. All vehicles used for lane closures shall be equipped with two-way radios, and the vehicle operators shall maintain communication during the work or application operation.
8. All vehicles shall be equipped with flashing or rotating amber lights.
9. If sign vehicle V1 encroaches into the traffic lane due to insufficient shoulder width, sign vehicle V1 shall be equipped with a truck-mounted attenuator. Sign vehicle V1 shall stay as close to the edge of shoulder as practicable.
10. Where workers would be on foot in the work area, a stationary type lane closure (Revised Standard Plan T10, T11 etc., as applicable) shall be used instead of this plan.
11. For moving lane closure on median lane or outside lane of multilane highways, use Revised Standard Plan T15.
12. The spacing between work vehicle(s) and the shadow vehicles, and between each shadow vehicle should be minimized to deter road users from driving in between.

STATE OF CALIFORNIA
DEPARTMENT OF TRANSPORTATION

TRAFFIC CONTROL SYSTEM FOR MOVING LANE CLOSURE ON MULTILANE HIGHWAYS

NO SCALE

RSP T16 DATED APRIL 19, 2013 SUPERSEDES STANDARD PLAN T16
DATED MAY 20, 2011 - PAGE 244 OF THE STANDARD PLANS BOOK DATED 2010.

REVISED STANDARD PLAN RSP T16

2010 REVISED STANDARD PLAN RSP T16

12-18-12

DIST	COUNTY	ROUTE	POST MILES TOTAL PROJECT	SHEET NO.	TOTAL SHEETS
06	Kin	198	R14.7/R18.0	72	80

Jeffery G. McRae
REGISTERED ELECTRICAL ENGINEER

January 20, 2012
PLANS APPROVAL DATE

REGISTERED PROFESSIONAL ENGINEER
Jeffery G. McRae
No. E14512
Exp. 6-30-12
ELECTRICAL
STATE OF CALIFORNIA

THE STATE OF CALIFORNIA OR ITS OFFICERS OR AGENTS SHALL NOT BE RESPONSIBLE FOR THE ACCURACY OR COMPLETENESS OF SCANNED COPIES OF THIS PLAN SHEET.

TO ACCOMPANY PLANS DATED 04-29-13

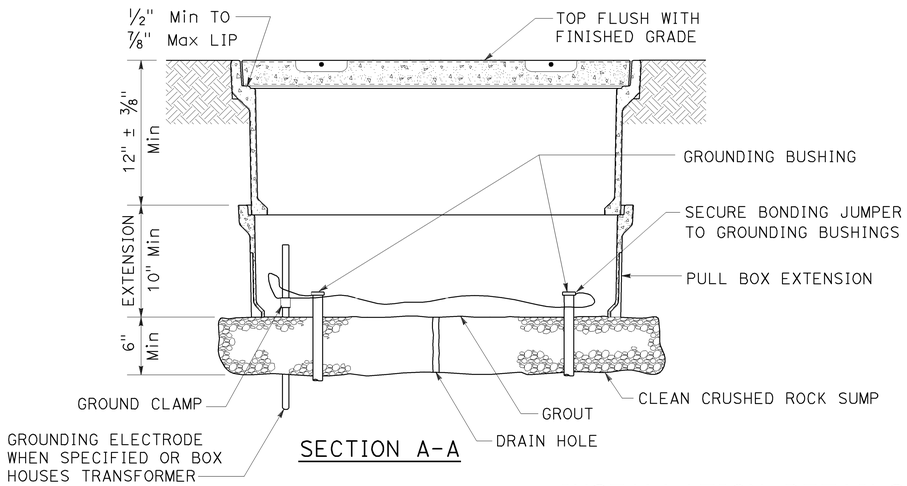

SECTION A-A

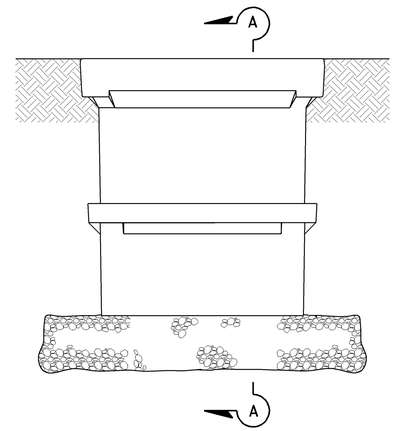

SIDE VIEW

INSTALLATION DETAILS

DETAIL A

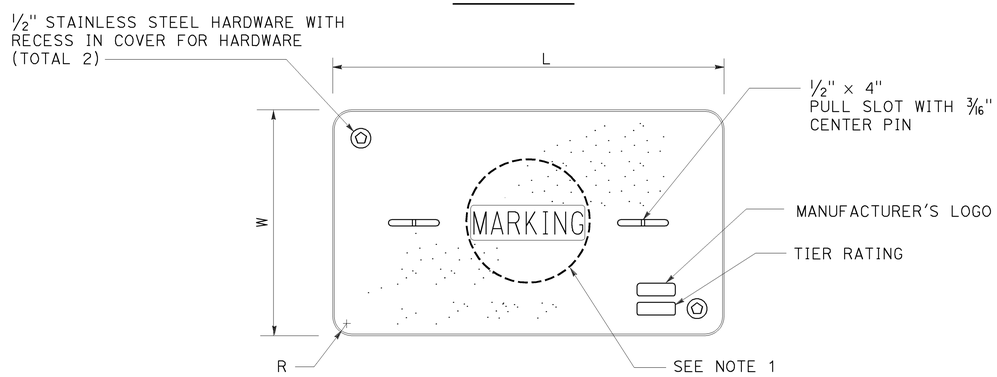

COVER TOP VIEW

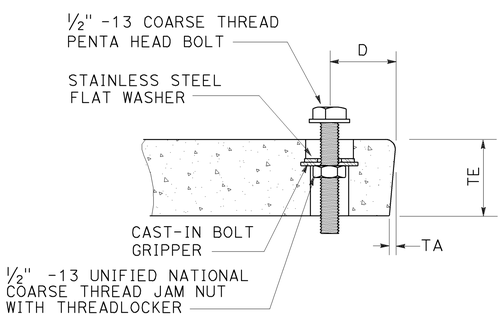

TYPICAL COVER CAPTIVE BOLT

OR SIMILAR

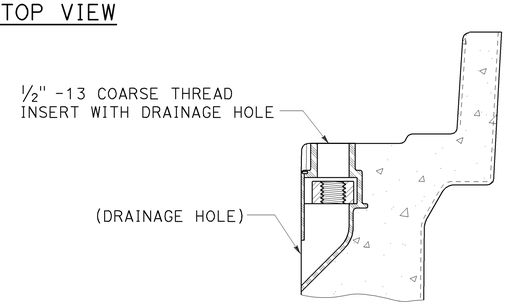

TYPICAL THREADED INSERT

OR SIMILAR

DIMENSION TABLE										
PULL BOX	PULL BOX			COVER						
	MINIMUM DEPTH BOX	MINIMUM DEPTH EXTENSION	MAXIMUM WEIGHT	L	W	R	TE	TA	D	MAXIMUM WEIGHT
No. 3 1/2	12"	N/A	40 lb	1' - 3 3/8"	10 1/8"	1 3/8"	2"	1/8"	1 3/4"	30 lb
No. 5	12"	10"	55 lb	1' - 11 1/4"	1' - 1 3/4"	1 3/8"	2"	1/8"	1 3/4"	60 lb
No. 6	12"	10"	70 lb	2' - 6 1/2"	1' - 5 1/2"	1 3/8"	2"	1/8"	2"	85 lb

NOTES ON PULL BOXES:

1. Pull box covers must be marked as follows: "SERVICE" Service circuits between service point and service disconnect; "SPRINKLER-CONTROL" sprinkler control circuits, 50 V or less; "CALTRANS" on all pull boxes, except pull boxes marked "SPRINKLER-CONTROL"; and "TELEPHONE" Telephone service;

   A) No. 3 1/2 pull box.
      1) "SIGNAL" - Traffic signal circuits with or without street or sign lighting circuits.
      2) "ST LIGHTING" - Street or sign lighting circuits where voltage is under 600 V.

   B) No. 5, 6, 9 or 9A pull box.
      1) "TRAFFIC SIGNAL" - Traffic signal circuits with or without street or sign lighting circuits.
      2) "STREET LIGHTING" - Street or sign lighting circuits where voltage is under 600 V.
      3) "STREET LIGHTING-HIGH VOLTAGE" - Street or sign lighting circuits where voltage is above 600 V.
      4) "IRRIGATION" - Circuits to irrigation controller 120 V or more.
      5) "RAMP METER" - Ramp meter circuits.
      6) "COUNT STATION" - Count or speed monitor circuits.
      7) "COMMUNICATIONS" - Communication circuits.
      8) "TOS COMMUNICATIONS" - TOS communication line.
      9) "TOS POWER" - TOS power.
      10) "TDC POWER" - Telephone demarcation cabinet power.
      11) "CCTV" - Closed circuit television circuits.
      12) "TMS" - Traffic monitoring station circuits.
      13) "CMS" - Changeable message sign circuits.
      14) "HAR" - Highway advisory radio circuits.

2. The nominal dimensions of the opening in which the cover sets must be the same as the cover dimensions (L and W) plus 1/8" or greater.
3. Covers and boxes must be interchangeable with California Standard. When interchanged with a standard, the top surfaces must be flush within 1/8". Top outside radius of covers and pull boxes must have a 1/8" radius.
4. Pull box extension may be another pull box as long as the bottom edge of the pull box can fit into the cover opening.

STATE OF CALIFORNIA
DEPARTMENT OF TRANSPORTATION

ELECTRICAL SYSTEMS (PULL BOX)

NO SCALE

RSP ES-8A DATED JANUARY 20, 2012 SUPPLEMENTS THE STANDARD PLANS BOOK DATED 2010.

REVISED STANDARD PLAN RSP ES-8A

2010 REVISED STANDARD PLAN RSP ES-8A

01-09-12

DIST	COUNTY	ROUTE	POST MILES TOTAL PROJECT	SHEET No.	TOTAL SHEETS
06	Kin	198	R14.7/R18.0	73	80

REGISTERED CIVIL ENGINEER 3-8-13 DATE

04-29-13
PLANS APPROVAL DATE

REGISTERED PROFESSIONAL ENGINEER DON NGUYEN-TAN No. C 57510 Exp. 12-31-13 CIVIL STATE OF CALIFORNIA

The State of California or its officers or agents shall not be responsible for the accuracy or completeness of electronic copies of this plan sheet.

Notes:

For Quantities, Index To Plan, Standard Plans list and General Notes see "ABUTMENT DETAILS NO. 1" sheet.

Notes:

1. Remove existing Type 1 Barrier Railing, and place Concrete Barrier (Type 732 Mod)
2. Existing 1½"± AC surfacing
3. Remove existing Concrete Barrier (Type 60A), and place Concrete Barrier (Type 60A Mod)
4. Temporary Railing (Type K), See "Road Plans"
5. Paint "11th Avenue UC"
6. Paint "Br No. 45-0038"
7. MBGR, see "Road Plans"
8. Structural Concrete, Approach Slab (Type R) (10D)
9. Remove existing median closure slab, and place new median closure slab
10. Place Paving Notch Extension
11. Place Joint Seal

Indicates existing structure

Approximate point of minimum vertical clearance

Indicates Approx limits of remove 1½"± exist AC surfacing, Remove 1" Conc Deck Surface, Prepare Conc Br Deck surface, Treat Br Deck, roughen deck surface, and place 4" Conc Overlay

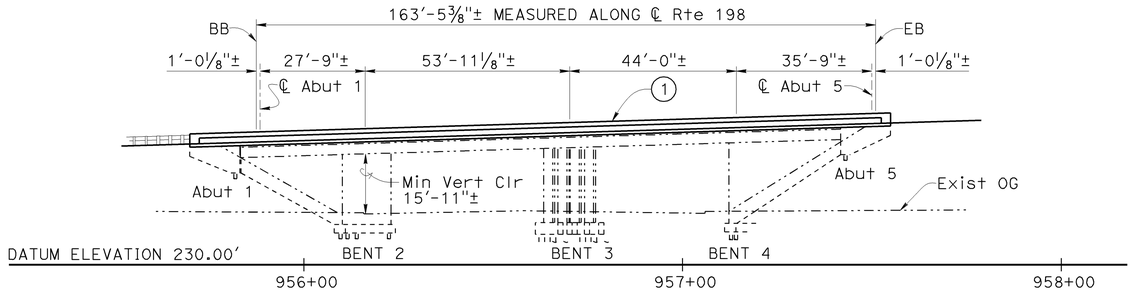

ELEVATION

1" = 20'

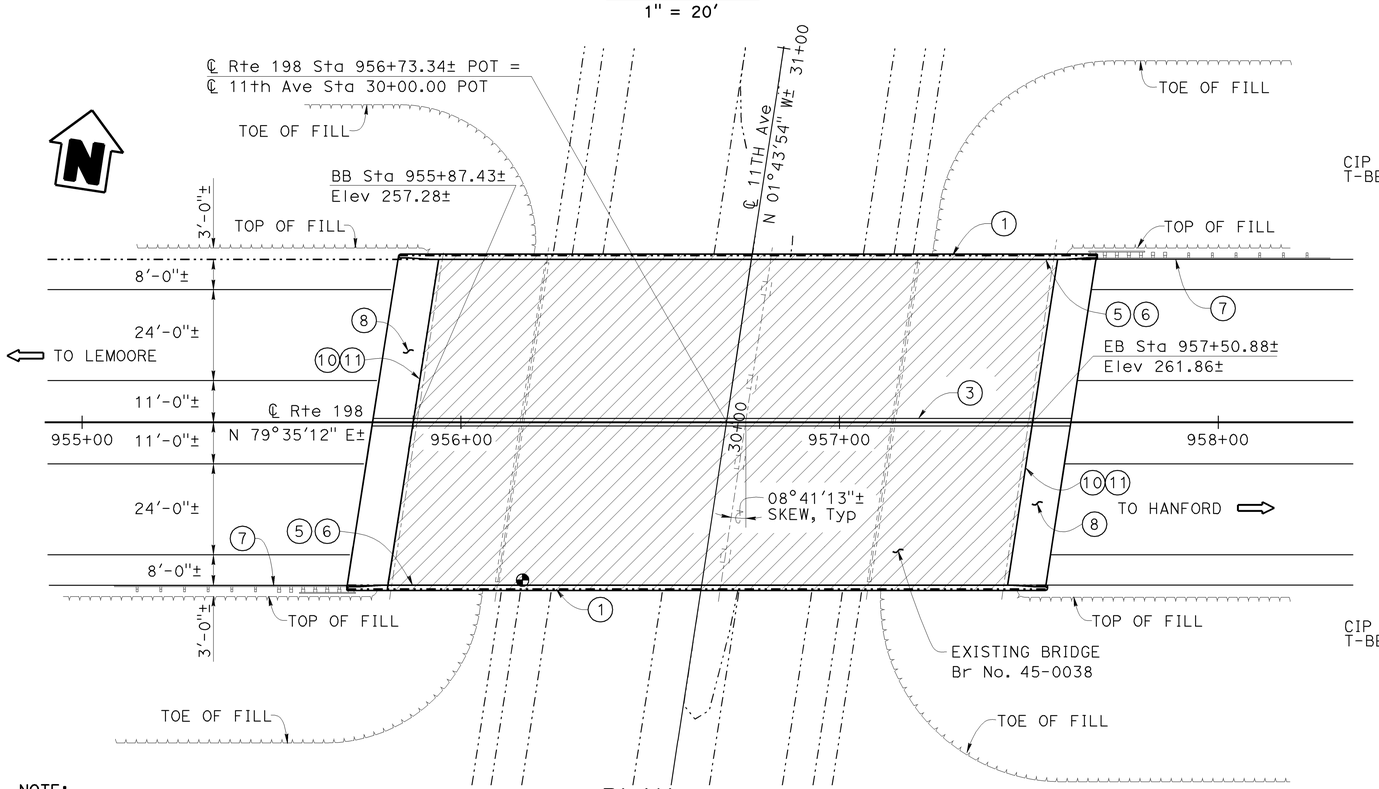

PLAN

1" = 20'

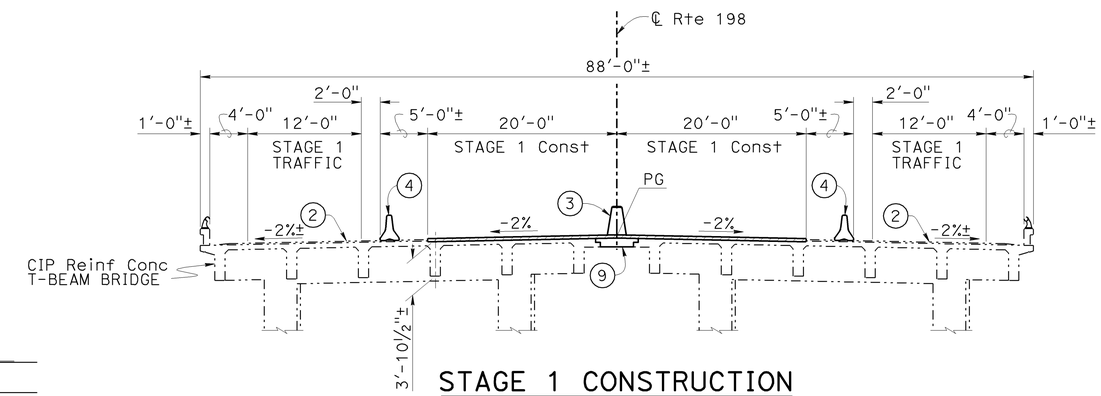

STAGE 1 CONSTRUCTION

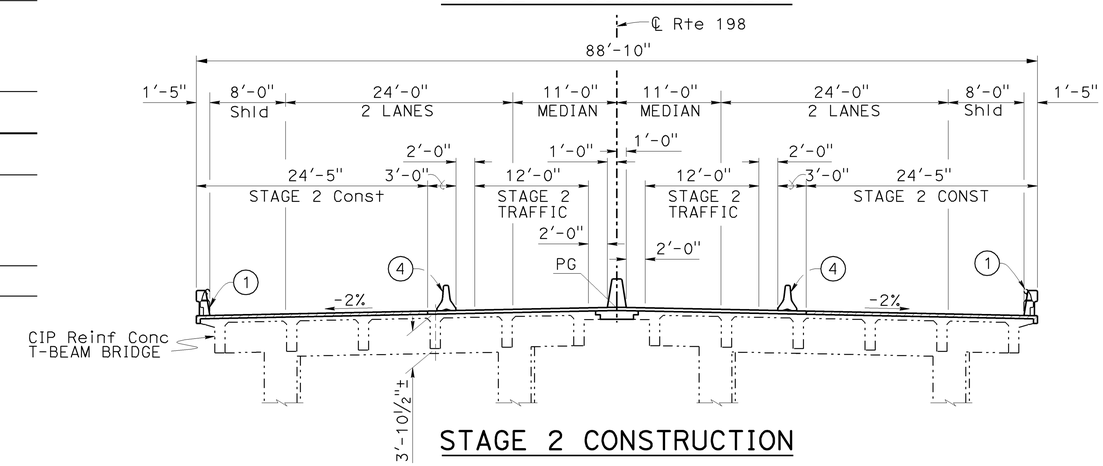

STAGE 2 CONSTRUCTION

TYPICAL SECTION

⅛" = 1'-0"

NOTE:
THE CONTRACTOR SHALL VERIFY ALL CONTROLLING FIELD DIMENSIONS BEFORE ORDERING OR FABRICATING ANY MATERIAL.

HANFORD ARMONA DECK REHABILITATION

11TH AVENUE UC

GENERAL PLAN NO. 1

	BY	CHECKED
DESIGN	D. NGUYEN-TAN	H. TUAZON
DETAILS	C. FIGUERRES/ Y. FENG	H. TUAZON
QUANTITIES	G. REYES-GUTIERREZ	D. NGUYEN-TAN

LOAD & RESISTANCE FACTOR DESIGN — LIVE LOADING: HS 20-44 AND ALTERNATIVE AND PERMIT DESIGN LOAD

	BY	CHECKED
LAYOUT	D. NGUYEN-TAN	H. TUAZON
SPECIFICATIONS	M. KOPSA	PLANS AND SPECS COMPARED M. KOPSA

F. HOFFMAN
DESIGN ENGINEER

STATE OF CALIFORNIA
DEPARTMENT OF TRANSPORTATION

DIVISION OF ENGINEERING SERVICES
STRUCTURE DESIGN
DESIGN BRANCH 6

BRIDGE NO. 45-0038
POST MILE R17.91

ORIGINAL SCALE IN INCHES FOR REDUCED PLANS 0 1 2 3

UNIT: 3591
PROJECT NUMBER & PHASE: 06000004571
CONTRACT NO.: 06-462201

DISREGARD PRINTS BEARING EARLIER REVISION DATES

REVISION DATES: 7-20-11 | 4-24-12 | 1-15-13

SHEET 1 OF 8

STRUCTURES DESIGN GENERAL PLAN SHEET (ENGLISH) (REV.09-01-10)

FILE => 45-0000-a-gp1.dgn

USERNAME => s113491 DATE PLOTTED => 28-MAY-2013 TIME PLOTTED => 07:07

DIST	COUNTY	ROUTE	POST MILES TOTAL PROJECT	SHEET No.	TOTAL SHEETS
06	Kin	198	R14.7/R18.0	74	80

REGISTERED CIVIL ENGINEER — DATE 3-8-13

04-29-13
PLANS APPROVAL DATE

REGISTERED PROFESSIONAL ENGINEER — DON NGUYEN-TAN — No. C 57510 — Exp. 12-31-13 — CIVIL — STATE OF CALIFORNIA

The State of California or its officers or agents shall not be responsible for the accuracy or completeness of electronic copies of this plan sheet.

Notes:

1. Remove existing Type 1 barrier railing, and place with Concrete Barrier (Type 732 Mod)
2. Existing 1½"± AC surfacing
3. Remove existing Concrete Barrier (Type 60A), and place Concrete Barrier (Type 60A Mod)
4. Temporary Railing (Type K), See "Road Plans"
5. Paint "Hanford Armona Road UC"
6. Paint "Br No. 45-0078"
7. MBGR, see "Road Plans"
8. Structural Concrete Approach Slab (Type R) (10D)
9. Place Paving Notch Extension
10. Place Joint Seal

Indicates existing structure

Approximate point of minimum vertical clearance

Indicates Approx limits of remove 1½"± exist AC surfacing, Remove 1" Conc Deck Surface, Prepare Conc Br Deck surface, Treat Br Deck, roughen deck surface, and place 4" Conc Overlay

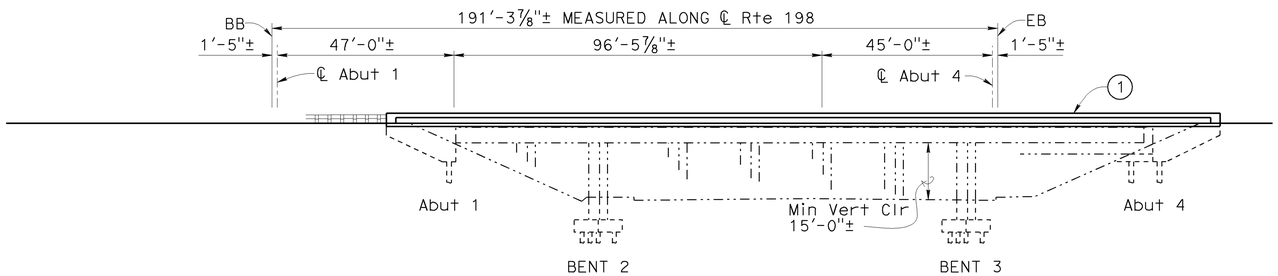

ELEVATION

1" = 20'

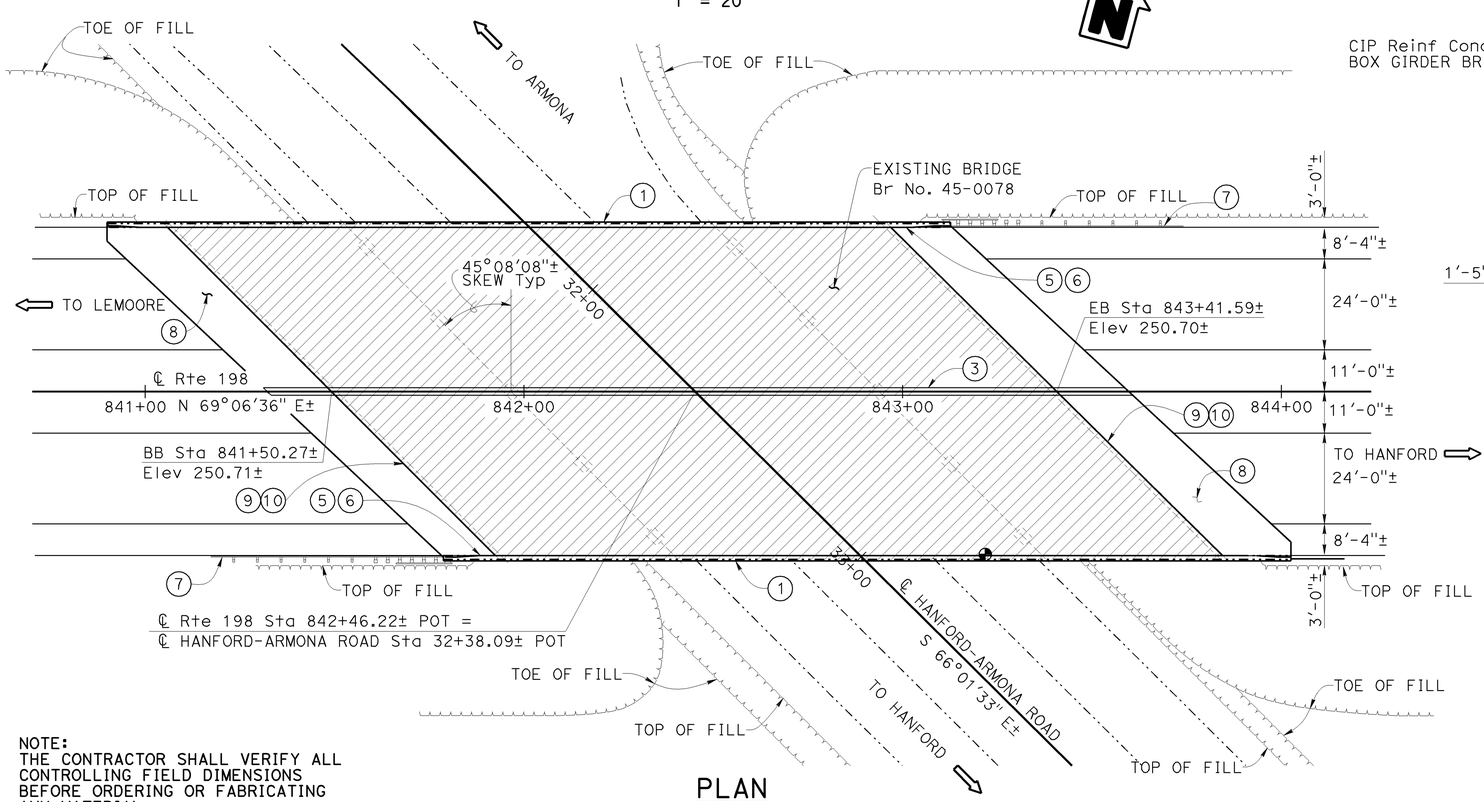

PLAN

1" = 20'

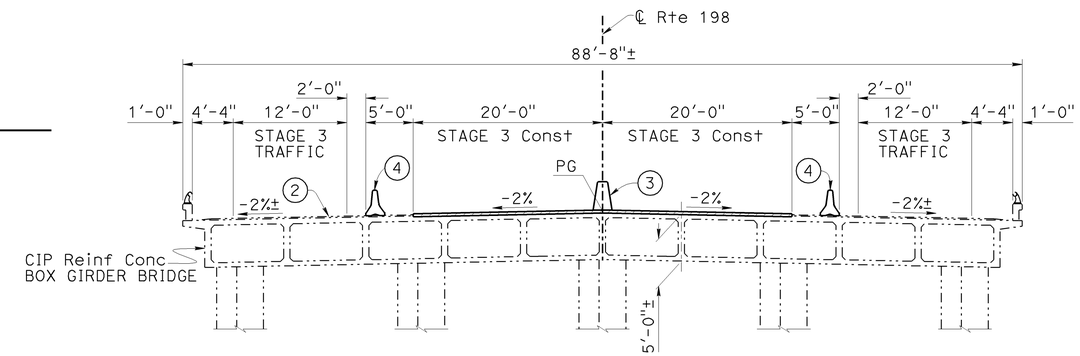

STAGE 3 CONSTRUCTION

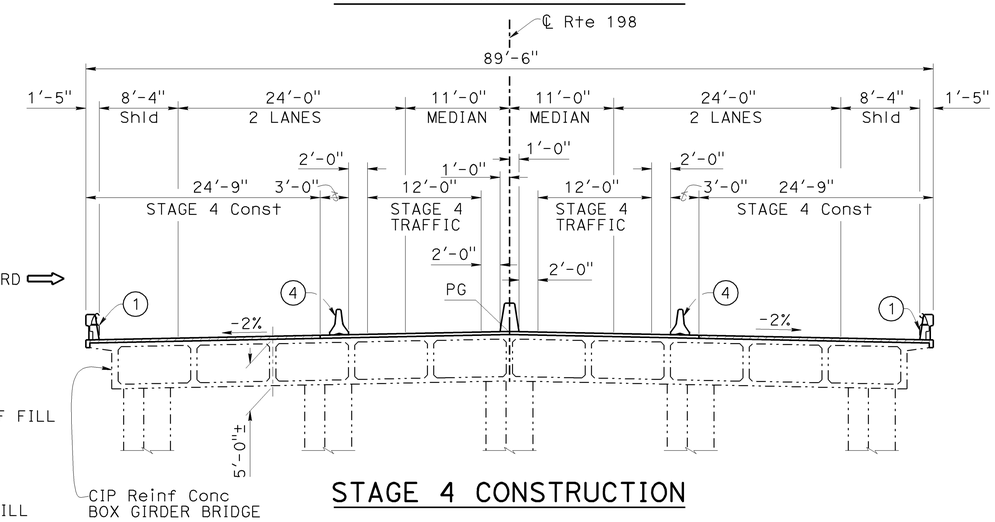

STAGE 4 CONSTRUCTION

TYPICAL SECTION

⅛" = 1'-0"

NOTE:
THE CONTRACTOR SHALL VERIFY ALL CONTROLLING FIELD DIMENSIONS BEFORE ORDERING OR FABRICATING ANY MATERIAL.

HANFORD ARMONA DECK REHABILITATION

HANFORD ARMONA ROAD UC

GENERAL PLAN NO. 2

F. HOFFMAN
DESIGN ENGINEER

	BY	CHECKED
DESIGN	D. NGUYEN-TAN	H. TUAZON
DETAILS	C. FIGUERRES/ Y. FENG	H. TUAZON
QUANTITIES	G. REYES-GUTIERREZ	D. NGUYEN-TAN

LOAD & RESISTANCE FACTOR DESIGN — LIVE LOADING: HS20-44 AND ALTERNATIVE AND PERMIT DESIGN LOAD

	BY	CHECKED
LAYOUT	D. NGUYEN-TAN	H. TUAZON
SPECIFICATIONS	M. KOPSA	PLANS AND SPECS COMPARED M. KOPSA

ORIGINAL SCALE IN INCHES FOR REDUCED PLANS 0 1 2 3

STATE OF CALIFORNIA
DEPARTMENT OF TRANSPORTATION

DIVISION OF ENGINEERING SERVICES
STRUCTURE DESIGN
DESIGN BRANCH 6

BRIDGE NO. 45-0078
POST MILE R15.75

UNIT: 3591
PROJECT NUMBER & PHASE: 06000004571
CONTRACT NO.: 06-462201

DISREGARD PRINTS BEARING EARLIER REVISION DATES

REVISION DATES			SHEET	OF
7-20-11		6-24-12	1-15-13	2	8

USERNAME => s613491 DATE PLOTTED => 28-MAY-2013 TIME PLOTTED => 07:07

STRUCTURES DESIGN GENERAL PLAN SHEET (ENGLISH) (REV.09-01-10)

FILE => 45-0000-a-gp2.dgn

DIST	COUNTY	ROUTE	POST MILES TOTAL PROJECT	SHEET No.	TOTAL SHEETS
06	Kin	198	R14.7/R18.0	75	80

REGISTERED CIVIL ENGINEER 3-8-13 DATE

04-29-13
PLANS APPROVAL DATE

REGISTERED PROFESSIONAL ENGINEER DON NGUYEN-TAN No. C 57510 Exp. 12-31-13 CIVIL STATE OF CALIFORNIA

The State of California or its officers or agents shall not be responsible for the accuracy or completeness of electronic copies of this plan sheet.

Notes:

1. Remove existing Type 1 barrier railing, and place Concrete Barrier (Type 732 Mod)
2. Existing 1½"± AC surfacing
3. Remove existing Concrete Barrier (Type 60A), and place Conc Barrier (Type 60A Mod)
4. Temporary Railing (Type K), See "Road Plans"
5. Paint "14th Avenue UC"
6. Paint "Br No. 45-0079"
7. MBGR, see "Road Plans"
8. Structural Concrete Approach Slab (Type R) (10D)
9. Place Paving Notch Extension
10. Place Joint Seal

Indicates existing structure

Approximate point of minimum vertical clearance

Indicates Approx limits of remove 1½"± exist AC surfacing, Remove 1" Conc Deck Surface, Prepare Conc Br Deck surface, Treat Br Deck, roughen deck surface, and place 4" Conc Overlay

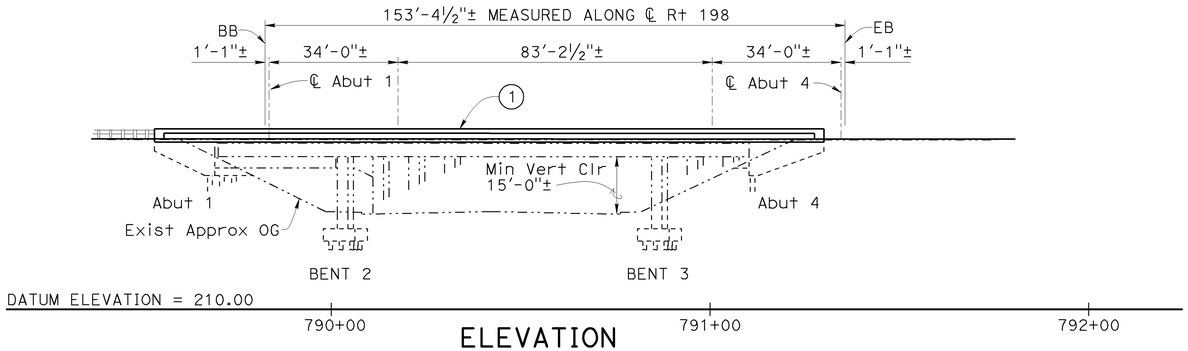

ELEVATION

1" = 20'

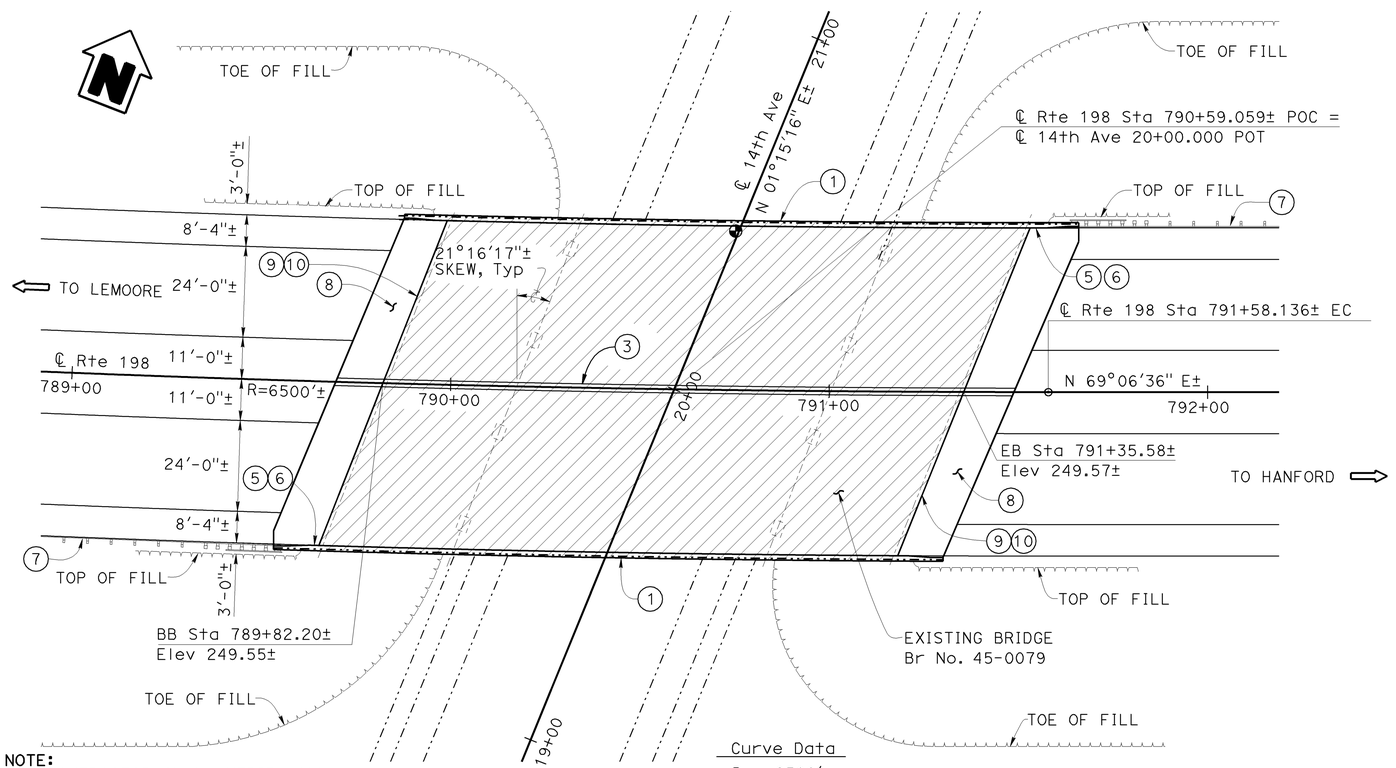

PLAN

1" = 20'

Curve Data

R = 6500'±
Δ = 4°38'29"±
T = 263.42'±
L = 526.55'±

NOTE:
THE CONTRACTOR SHALL VERIFY ALL CONTROLLING FIELD DIMENSIONS BEFORE ORDERING OR FABRICATING ANY MATERIAL.

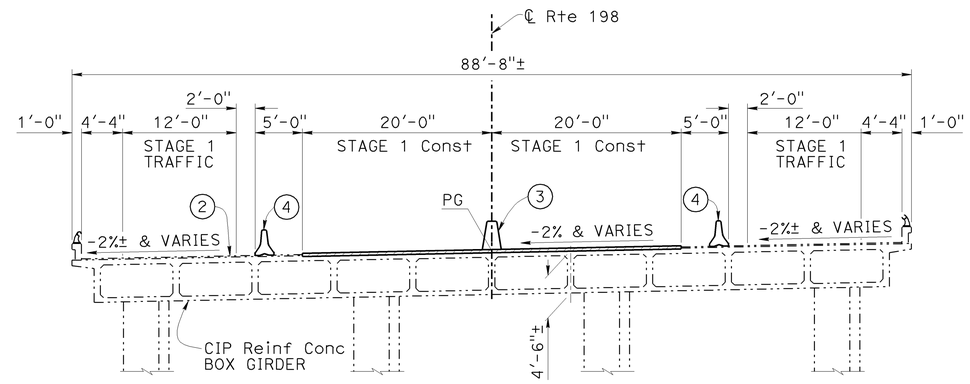

STAGE 1 CONSTRUCTION

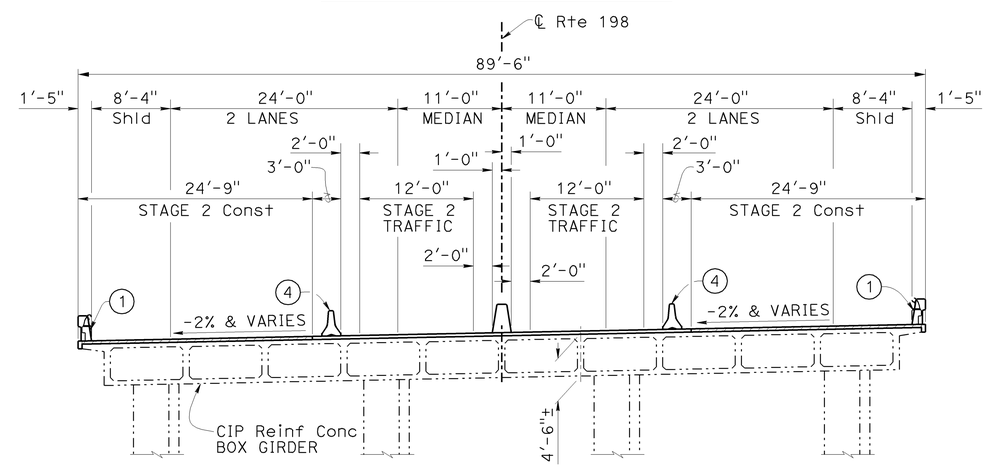

STAGE 2 CONSTRUCTION

TYPICAL SECTION

⅛" = 1'-0"

HANFORD ARMONA DECK REHABILITATION

14TH AVENUE UC

GENERAL PLAN NO. 3

DESIGN	BY D. NGUYEN-TAN	CHECKED H. TUAZON	LOAD & RESISTANCE FACTOR DESIGN	LIVE LOADING: HS20-44 AND ALTERNATIVE AND PERMIT DESIGN LOAD	
DETAILS	BY C. FIGUERRES/ Y. FENG	CHECKED H. TUAZON	LAYOUT	BY D. NGUYEN-TAN	CHECKED H. TUAZON
QUANTITIES	BY G. REYES-GUTIERREZ	CHECKED D. NGUYEN-TAN	SPECIFICATIONS	BY M. KOPSA	PLANS AND SPECS COMPARED M. KOPSA

F. HOFFMAN
DESIGN ENGINEER

STATE OF CALIFORNIA
DEPARTMENT OF TRANSPORTATION

DIVISION OF ENGINEERING SERVICES
STRUCTURE DESIGN
DESIGN BRANCH 6

BRIDGE NO. 45-0079
POST MILE R14.77

ORIGINAL SCALE IN INCHES FOR REDUCED PLANS 0 1 2 3

UNIT: 3591
PROJECT NUMBER & PHASE: 06000004571
CONTRACT NO.: 06-462201

DISREGARD PRINTS BEARING EARLIER REVISION DATES

REVISION DATES 8-01-11 6-24-12 1-15-13

SHEET 3 OF 8

USERNAME => s6113491 DATE PLOTTED => 28-MAY-2013 TIME PLOTTED => 07:07

STRUCTURES DESIGN GENERAL PLAN SHEET (ENGLISH) (REV.09-01-10)

FILE => 45-0000-a-gp3.dgn

DIST	COUNTY	ROUTE	POST MILES TOTAL PROJECT	SHEET No	TOTAL SHEETS
06	Kin	198	R14.7/R18.0	76	80

REGISTERED CIVIL ENGINEER 3-8-13 DATE

04-29-13
PLANS APPROVAL DATE

REGISTERED PROFESSIONAL ENGINEER DON NGUYEN-TAN No. C 57510 Exp. 12-31-13 CIVIL STATE OF CALIFORNIA

The State of California or its officers or agents shall not be responsible for the accuracy or completeness of electronic copies of this plan sheet.

To get to the Caltrans web site, go to: http://www.dot.ca.gov

LEGEND:

- Denotes new construction
- Denotes existing structure
- Denotes Bridge Removal (Portion)
- Denotes limits of payment for Structure Excavation
- Denotes limits of payment for Structure Backfill

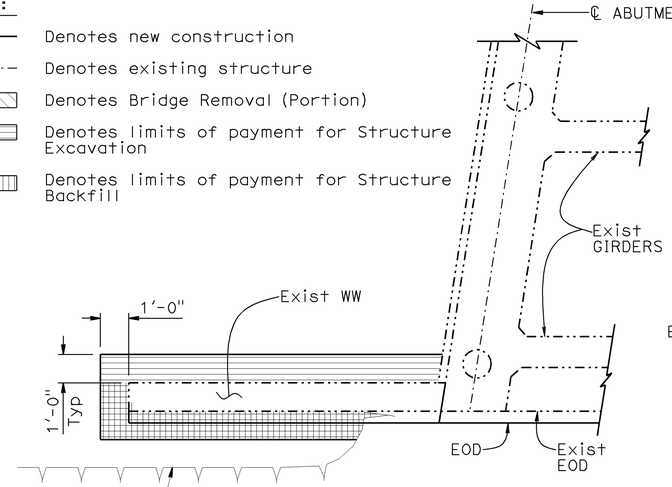

PARTIAL ABUTMENT PLAN

1" = 3/8"

NOTE: Structure Approach & Paving Notch Extension not shown

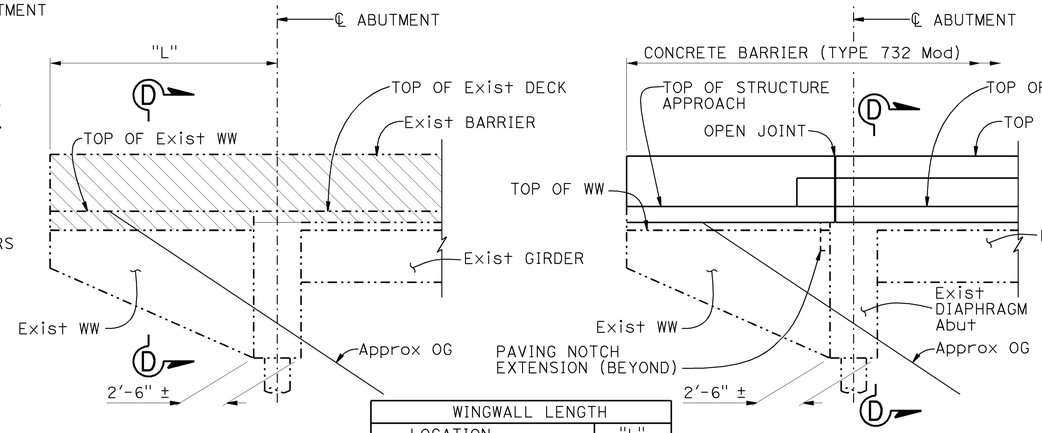

WINGWALL LENGTH	
LOCATION	"L"
11TH AVENUE UC	12'-0"±
HANFORD ARMONA RD UC	16'-0"±
14TH AVENUE UC	13'-6"±

WINGWALL ELEVATION

1/4" = 1'-0"

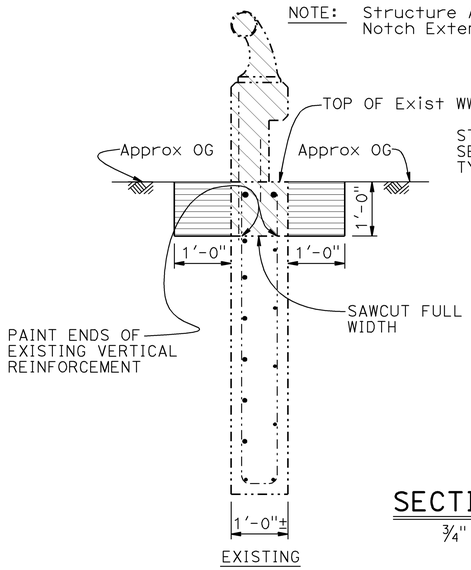

SECTION D-D

3/4" = 1'-0"

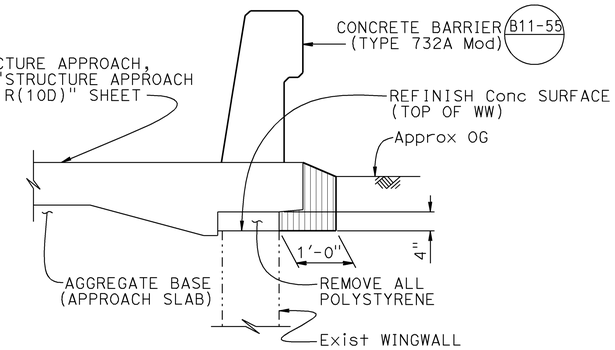

NOTE:

11th Avenue UC shown, Hanford Armona Rd UC and 14th Avenue UC similar.

NOTE:
THE CONTRACTOR SHALL VERIFY ALL CONTROLLING FIELD DIMENSIONS BEFORE ORDERING OR FABRICATING ANY MATERIAL.

2010 STANDARD PLANS

A10A	ABBREVIATIONS (SHEET 1 OF 2)
A10B	ABBREVIATIONS (SHEET 2 OF 2)
A10C	LINES AND SYMBOLS (SHEET 1 OF 3)
A10D	LINES AND SYMBOLS (SHEET 2 OF 3)
A10E	LINES AND SYMBOLS (SHEET 3 OF 3)
A76A	CONCRETE BARRIER TYPE 60
A76B	CONCRETE BARRIER TYPE 60
B0-1	BRIDGE DETAILS
B0-5	BRIDGE DETAILS
B6-21	JOINT SEALS (MAXIMUM MOVEMENT RATING = 2")
B11-55	CONCRETE BARRIER TYPE 732

STANDARD PLAN SHEET No.

DETAIL No.

INDEX TO PLAN

SHEET NO.	TITLE
1.	GENERAL PLAN NO. 1
2.	GENERAL PLAN NO. 2
3.	GENERAL PLAN NO. 3
4.	ABUTMENT DETAILS NO. 1
5.	ABUTMENT DETAILS NO. 2
6.	TYPICAL SECTION NO. 1
7.	TYPICAL SECTION NO. 2
8.	STRUCTURE APPROACH TYPE R(10D)

GENERAL NOTES
LOAD FACTOR DESIGN

DESIGN:
Bridge Design Specifications (2000 LFD)
(1996 AASHTO with Interims and Revisions by Caltrans)

DEAD LOAD:
Does not include provisions for future wearing surface.

LIVE LOADING:
HS20-44 and alternative and permit design load.

REINFORCED CONCRETE:
fy = 60,000 psi
f'c = 4,000 psi
n = 8

Transverse Deck Slabs (Working Stress Design)
fs = 20,000 psi
fc = 1,200 psi
n = 10

11TH AVENUE UC - BR No. 45-0038

QUANTITIES

REMOVE ASPHALT CONCRETE SURFACING	13,730	SQFT
REMOVE CONCRETE DECK SURFACE	13,321	SQFT
PREPARE CONCRETE BRIDGE DECK SURFACE	13,648	SQFT
BRIDGE REMOVAL (PORTION), LOCATION A	LUMP	SUM
STRUCTURE EXCAVATION (BRIDGE)	4	CY
STRUCTURE BACKFILL (BRIDGE)	2	CY
AGGREGATE BASE (APPROACH SLAB)	6	CY
STRUCTURAL CONCRETE, BRIDGE	209	CY
STRUCTURAL CONCRETE, APPROACH SLAB (TYPE R)	55	CY
PAVING NOTCH EXTENSION	132	CF
DRILL AND BOND DOWEL	2,640	LF
REFINISH CONCRETE SURFACE	45	SQFT
JOINT SEAL (MR 1/2")	180	LF
BAR REINFORCING STEEL (BRIDGE)	57,816	LB
TREAT BRIDGE DECK	13,648	SQFT
FURNISH BRIDGE DECK TREATMENT MATERIAL	152	GAL
CONCRETE BARRIER (TYPE 60A MODIFIED)	185	LF
CONCRETE BARRIER (TYPE 732 MODIFIED)	370	LF

HANFORD ARMONA RD UC - BR No. 45-0078

QUANTITIES

REMOVE ASPHALT CONCRETE SURFACING	16,199	SQFT
REMOVE CONCRETE DECK SURFACE	16,199	SQFT
PREPARE CONCRETE BRIDGE DECK SURFACE	16,964	SQFT
BRIDGE REMOVAL (PORTION), LOCATION B	LUMP	SUM
STRUCTURE EXCAVATION (BRIDGE)	5	CY
STRUCTURE BACKFILL (BRIDGE)	2	CY
AGGREGATE BASE (APPROACH SLAB)	8	CY
STRUCTURAL CONCRETE, BRIDGE	214	CY
STRUCTURAL CONCRETE, APPROACH SLAB (TYPE R)	75	CY
PAVING NOTCH EXTENSION	186	CF
DRILL AND BOND DOWEL	2,524	LF
REFINISH CONCRETE SURFACE	61	SQFT
JOINT SEAL (MR 1")	254	LF
BAR REINFORCING STEEL (BRIDGE)	57,939	LB
TREAT BRIDGE DECK	16,964	SQFT
FURNISH BRIDGE DECK TREATMENT MATERIAL	189	GAL
CONCRETE BARRIER (TYPE 60A MODIFIED)	222	LF
CONCRETE BARRIER (TYPE 732 MODIFIED)	443	LF

14TH AVENUE UC - Br No. 45-0079

QUANTITIES

REMOVE ASPHALT CONCRETE SURFACING	12,986	SQFT
REMOVE CONCRETE DECK SURFACE	12,986	SQFT
PREPARE CONCRETE BRIDGE DECK SURFACE	13,600	SQFT
BRIDGE REMOVAL (PORTION), LOCATION C	LUMP	SUM
STRUCTURE EXCAVATION (BRIDGE)	4	CY
STRUCTURE BACKFILL (BRIDGE)	2	CY
AGGREGATE BASE (APPROACH SLAB)	7	CY
STRUCTURAL CONCRETE, BRIDGE	172	CY
STRUCTURAL CONCRETE, APPROACH SLAB (TYPE R)	63	CY
PAVING NOTCH EXTENSION	140	CF
DRILL AND BOND DOWEL	2,046	LF
REFINISH CONCRETE SURFACE	51	SQFT
JOINT SEAL (MR 1/2")	193	LF
BAR REINFORCING STEEL (BRIDGE)	46,653	LB
TREAT BRIDGE DECK	13,600	SQFT
FURNISH BRIDGE DECK TREATMENT MATERIAL	151	GAL
CONCRETE BARRIER (TYPE 60A MODIFIED)	178	LF
CONCRETE BARRIER (TYPE 732 MODIFIED)	357	LF

	BY	CHECKED
DESIGN	D. NGUYEN-TAN	H. TUAZON
DETAILS	Y. FENG	H. TUAZON
QUANTITIES	G. REYES-GUTIERREZ	D. NGUYEN-TAN

STATE OF CALIFORNIA
DEPARTMENT OF TRANSPORTATION

DIVISION OF ENGINEERING SERVICES
STRUCTURE DESIGN
DESIGN BRANCH 6

BRIDGE NO. VARIOUS
POST MILE R14.7/18.0

HANFORD ARMONA DECK REHABILITATION
ABUTMENT DETAILS NO. 1

STRUCTURES DESIGN DETAIL SHEET (ENGLISH) (REV. 10/25/05)

ORIGINAL SCALE IN INCHES FOR REDUCED PLANS 0 1 2 3

UNIT: 3591
PROJECT NUMBER & PHASE: 06000004571
CONTRACT NO.: 06-462201

DISREGARD PRINTS BEARING EARLIER REVISION DATES

REVISION DATES 12-8-11 8-24-12 1-15-13

SHEET 4 OF 8

FILE => 45-0000-f-adt1.dgn

USERNAME => s113491 DATE PLOTTED => 28-MAY-2013 TIME PLOTTED => 07:07

DIST	COUNTY	ROUTE	POST MILES TOTAL PROJECT	SHEET No	TOTAL SHEETS
06	Kin	198	R14.7/R18.0	77	80

REGISTERED CIVIL ENGINEER 3-8-13 DATE

04-29-13
PLANS APPROVAL DATE

REGISTERED PROFESSIONAL ENGINEER DON NGUYEN-TAN No. C 57510 Exp. 12-31-13 CIVIL STATE OF CALIFORNIA

The State of California or its officers or agents shall not be responsible for the accuracy or completeness of electronic copies of this plan sheet.

To get to the Caltrans web site, go to: http://www.dot.ca.gov

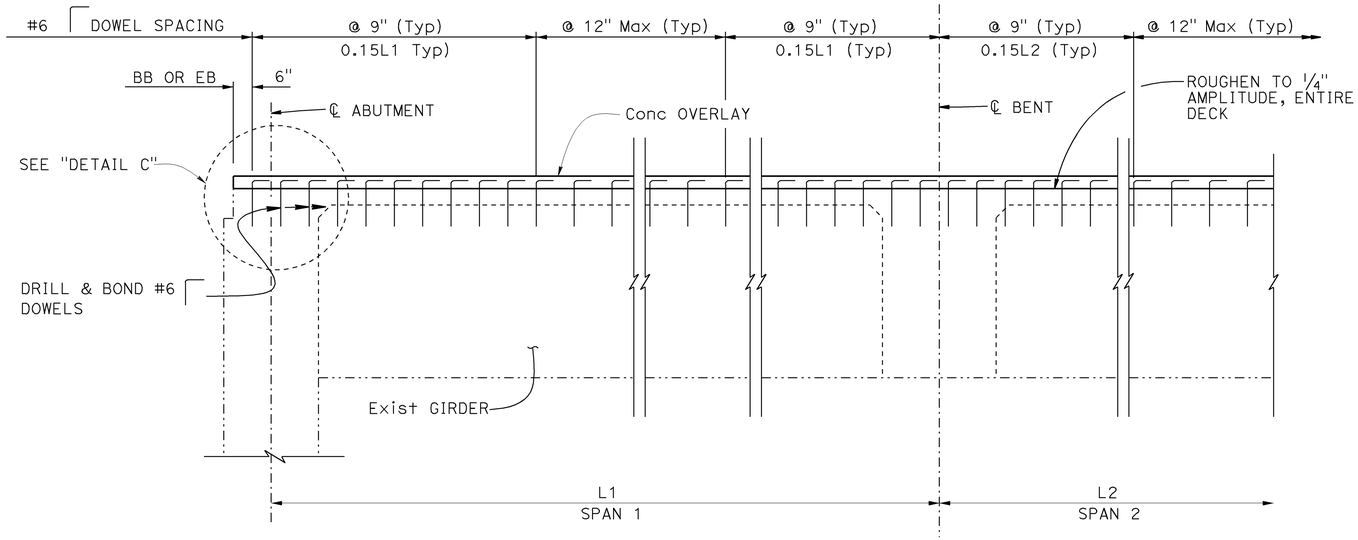

SECTION AT ABUTMENT

1/2" = 1'-0"

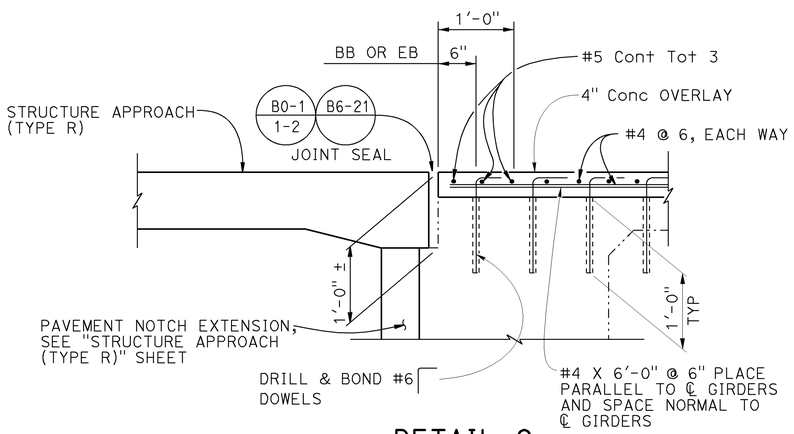

DETAIL C

1" = 1'-0"

JOINT SEAL TABLE				
LOCATION	MR	APPROX LENGTH (FT)	EXISTING WATER STOP	Approx DEPTH TO CLEAN Exp JOINT
11TH AVENUE UC	1/2"	180	NO	12"
HANFORD ARMONA RD UC	1"	254	NO	12"
14TH AVENUE UC	1/2"	193	NO	12"

Notes:

1. Approach Slab and Paving Notch Extension not shown
2. For Conc overlay reinforcement, see "TYPICAL SECTION" sheets.

L1, L2 = Span Length (℄ abutment to ℄ bent or ℄ bent to ℄ bent)

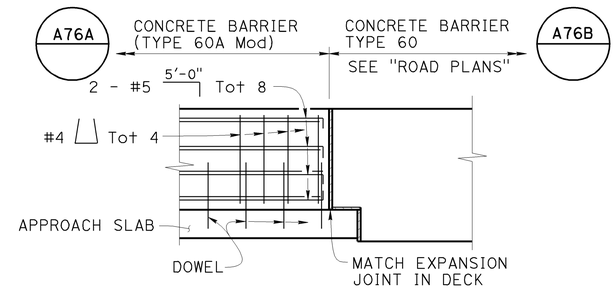

ELEVATION

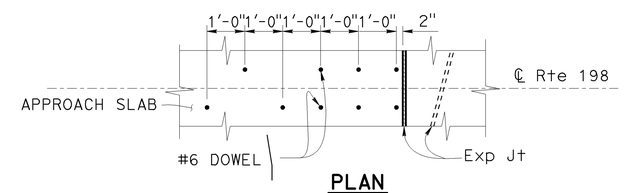

PLAN

CONNECTION TO APPROACH SLAB

1/2" = 1'-0"

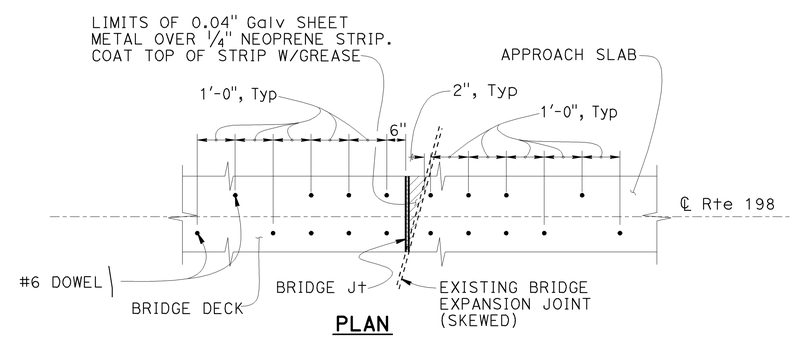

PLAN

DOWEL SPACING AT EXPANSION JOINT

1/2" = 1'-0"

NOTES:

1. Expansion joints in concrete barrier shall match all deck joints.
2. Minor adjustments may be made in dowel spacing to clear main reinforcement.
3. Barrier to be doweled on both sides of bridge expansion joints.
4. For Concrete Barrier Type 60A details not shown, see STANDARD PLAN A76A.

LEGEND:

-·-·- Indictates existing structure
——— Indictates new structure

NOTE:
THE CONTRACTOR SHALL VERIFY ALL CONTROLLING FIELD DIMENSIONS BEFORE ORDERING OR FABRICATING ANY MATERIAL.

	BY	CHECKED
DESIGN	D. NGUYEN-TAN	H. TUAZON
DETAILS	Y. FENG	H. TUAZON
QUANTITIES	G. REYES-GUTIERREZ	D. NGUYEN-TAN

STATE OF CALIFORNIA
DEPARTMENT OF TRANSPORTATION

DIVISION OF ENGINEERING SERVICES
STRUCTURE DESIGN
DESIGN BRANCH 6

BRIDGE NO. VARIOUS
POST MILE R14.7/18.0

HANFORD ARMONA DECK REHABILITATION
ABUTMENT DETAILS NO. 2

STRUCTURES DESIGN DETAIL SHEET (ENGLISH) (REV. 10/25/05)

ORIGINAL SCALE IN INCHES FOR REDUCED PLANS 0 1 2 3

UNIT: 3591
PROJECT NUMBER & PHASE: 06000004571
CONTRACT NO.: 06-462201

DISREGARD PRINTS BEARING EARLIER REVISION DATES

REVISION DATES: 9-28-11 1-15-13 4-24-13

SHEET 5 OF 8

FILE => 45-0000-f-adt2.dgn

USERNAME => s113491 DATE PLOTTED => 28-MAY-2013 TIME PLOTTED => 07:07

DIST	COUNTY	ROUTE	POST MILES TOTAL PROJECT	SHEET No	TOTAL SHEETS
06	Kin	198	R14.7/R18.0	78	80

REGISTERED CIVIL ENGINEER 3-8-13 DATE

04-29-13
PLANS APPROVAL DATE

REGISTERED PROFESSIONAL ENGINEER DON NGUYEN-TAN No. C 57510 Exp. 12-31-13 CIVIL STATE OF CALIFORNIA

The State of California or its officers or agents shall not be responsible for the accuracy or completeness of electronic copies of this plan sheet.

To get to the Caltrans web site, go to: http://www.dot.ca.gov

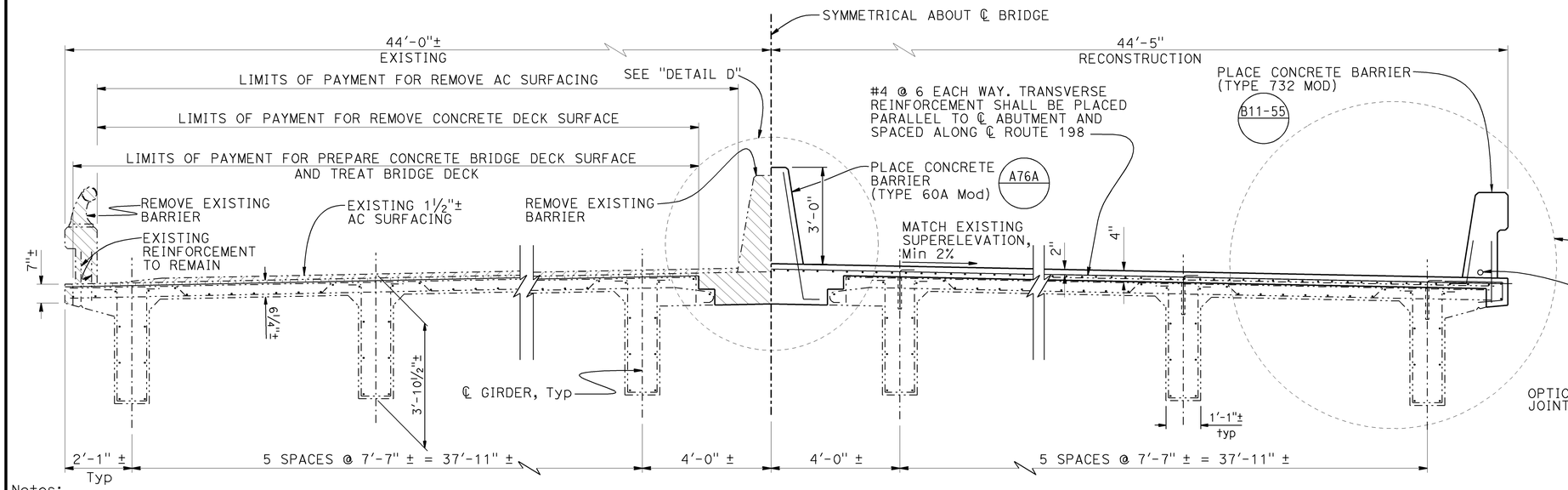

TYPICAL SECTION (11TH AVENUE UC)

½" = 1'-0"

Notes:

- ——— Denotes new construction
- ···—·— Denotes existing structure
- Denotes Remove Asphalt Concrete Surfacing
- Denotes Bridge Removal (Portion)
- Denotes Remove Concrete Deck Surface

Note:
For additional information, see Partial Typical Section on "TYPICAL SECTION NO. 2" sheet.

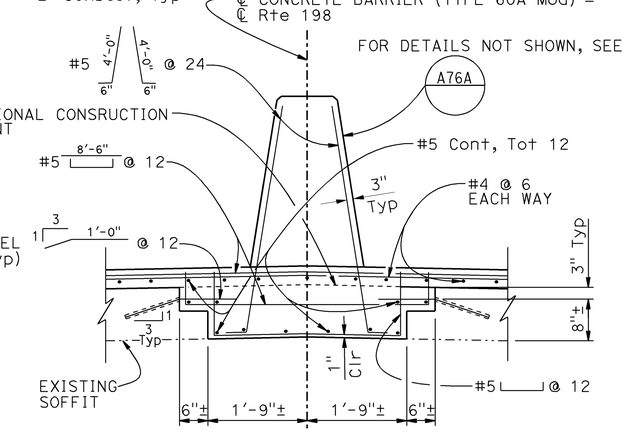

DETAIL D

¾" = 1'-0"

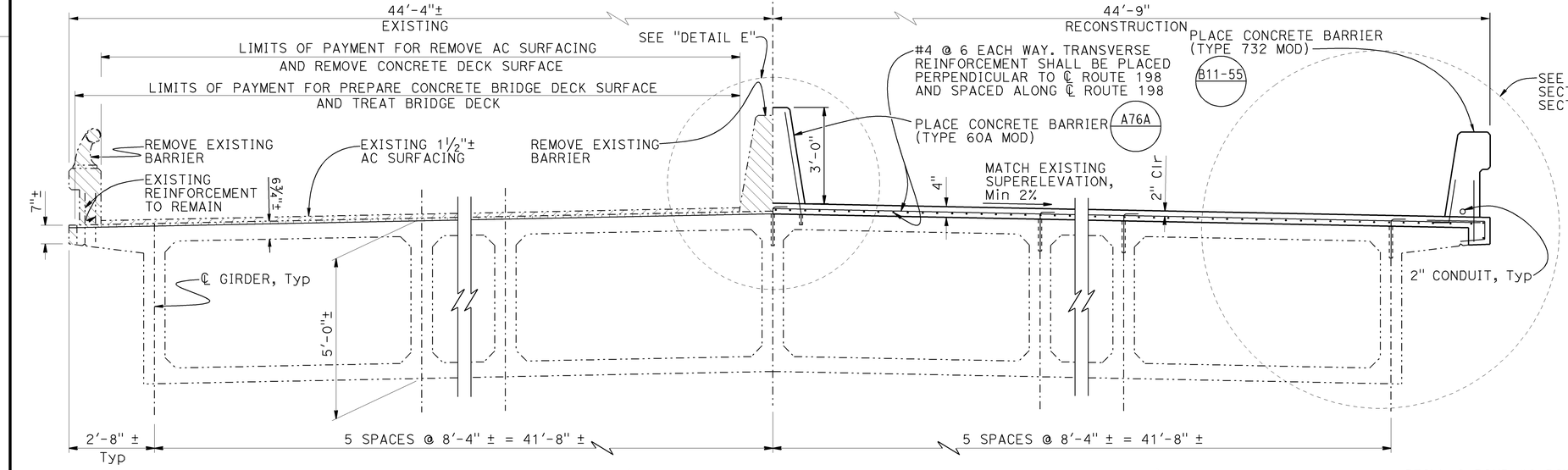

TYPICAL SECTION (HANFORD ARMONA RD UC & 14th AVE UC)

½" = 1'-0"

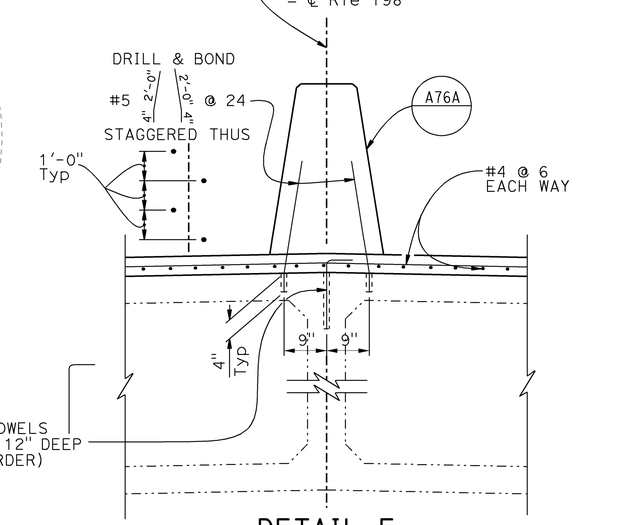

DETAIL E

¾" = 1'-0"

NOTE:
THE CONTRACTOR SHALL VERIFY ALL CONTROLLING FIELD DIMENSIONS BEFORE ORDERING OR FABRICATING ANY MATERIAL.

Note:
Hanford Armona Rd UC shown, 14th Ave UC similar.

STRUCTURAL CONCRETE BRIDGE (CONCRETE OVERLAY)

f'c @ 7 days = 3,000 psi
f'c @ 28 days = 4,000 psi

	BY	CHECKED
DESIGN	D. NGUYEN-TAN	H. TUAZON
DETAILS	Y. FENG	H. TUAZON
QUANTITIES	G. REYES-GUTIERREZ	D. NGUYEN-TAN

STATE OF CALIFORNIA
DEPARTMENT OF TRANSPORTATION

DIVISION OF ENGINEERING SERVICES
STRUCTURE DESIGN
DESIGN BRANCH 6

BRIDGE NO. VARIOUS
POST MILE R14.7/18.0

HANFORD ARMONA DECK REHABILITATION

TYPICAL SECTION NO. 1

STRUCTURES DESIGN DETAIL SHEET (ENGLISH) (REV. 10/25/05)

ORIGINAL SCALE IN INCHES FOR REDUCED PLANS 0 1 2 3

UNIT: 3591
PROJECT NUMBER & PHASE: 06000004571
CONTRACT NO.: 06-462201

DISREGARD PRINTS BEARING EARLIER REVISION DATES

REVISION DATES: 12-6-11 | 8-24-12 | 1-15-13

SHEET 6 OF 8

FILE => 45-0000-k-ts1.dgn

USERNAME => s113491 DATE PLOTTED => 28-MAY-2013 TIME PLOTTED => 07:07

DIST	COUNTY	ROUTE	POST MILES TOTAL PROJECT	SHEET No	TOTAL SHEETS
06	Kin	198	R14.7/R18.0	79	80

REGISTERED CIVIL ENGINEER 3-8-13 DATE

04-29-13
PLANS APPROVAL DATE

REGISTERED PROFESSIONAL ENGINEER DON NGUYEN-TAN No. C 57510 Exp. 12-31-13 CIVIL STATE OF CALIFORNIA

The State of California or its officers or agents shall not be responsible for the accuracy or completeness of electronic copies of this plan sheet.

To get to the Caltrans web site, go to: http://www.dot.ca.gov

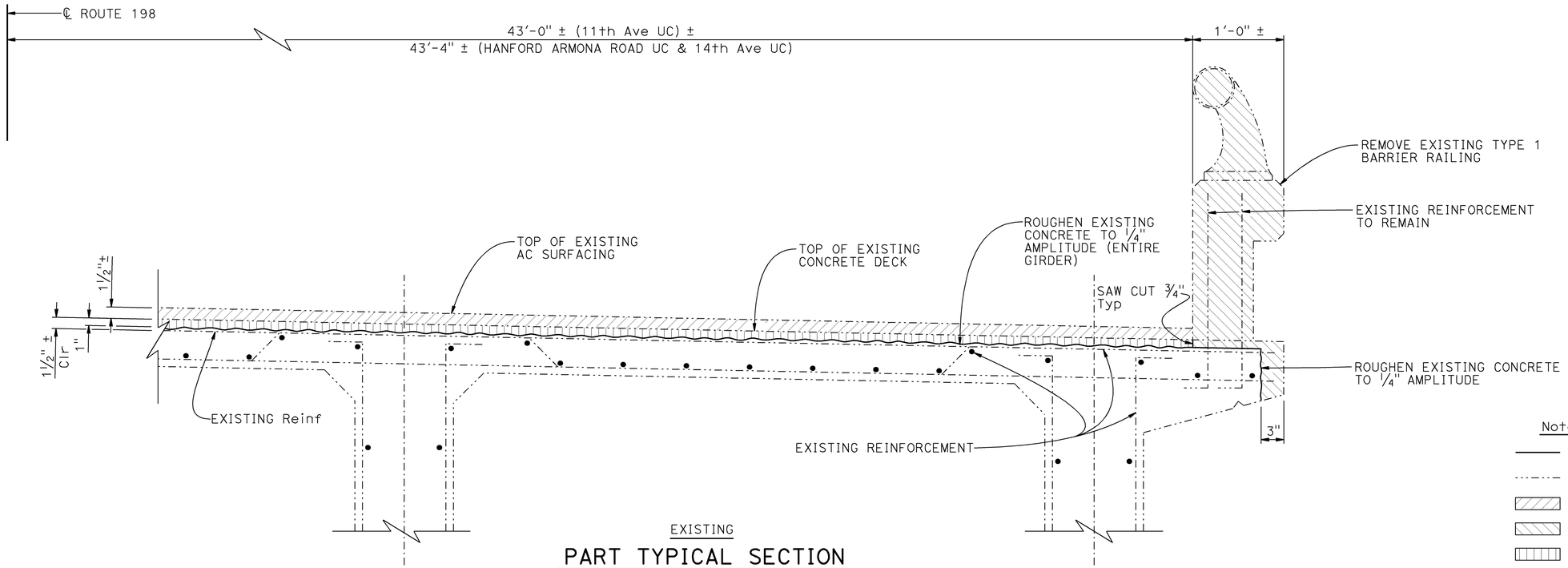

EXISTING

PART TYPICAL SECTION

1 1/2" = 1'-0"

Notes:

- Denotes new construction
- Denotes existing structure
- Denotes Remove Asphalt Concrete Surfacing
- Denotes Bridge Removal (Portion)
- Denotes Remove Concrete Deck Surface

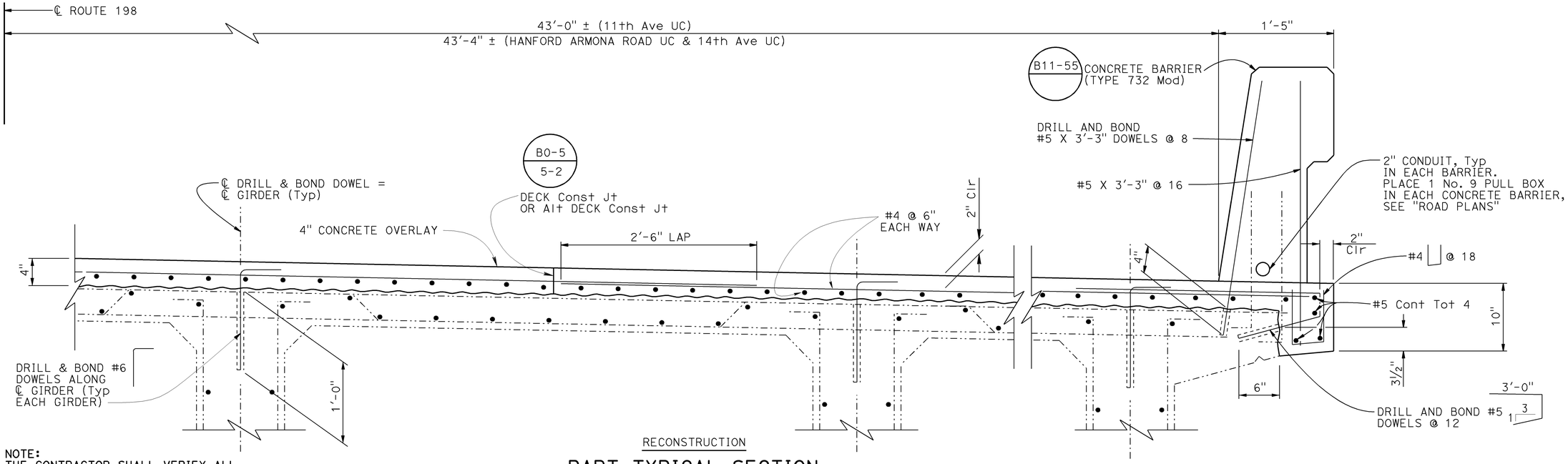

NOTE:
THE CONTRACTOR SHALL VERIFY ALL CONTROLLING FIELD DIMENSIONS BEFORE ORDERING OR FABRICATING ANY MATERIAL.

RECONSTRUCTION

PART TYPICAL SECTION

1 1/2" = 1'-0"

	BY	CHECKED
DESIGN	D. NGUYEN-TAN	H. TUAZON
DETAILS	Y. FENG	H. TUAZON
QUANTITIES	G. REYES-GUTIERREZ	D. NGUYEN-TAN

STATE OF CALIFORNIA
DEPARTMENT OF TRANSPORTATION

DIVISION OF ENGINEERING SERVICES
STRUCTURE DESIGN
DESIGN BRANCH 6

BRIDGE NO. VARIOUS
POST MILE R14.7/18.0

HANFORD ARMONA DECK REHABILITATION

TYPICAL SECTION NO. 2

STRUCTURES DESIGN DETAIL SHEET (ENGLISH) (REV. 10/25/05)

ORIGINAL SCALE IN INCHES FOR REDUCED PLANS 0 1 2 3

UNIT: 3591
PROJECT NUMBER & PHASE: 06000004571
CONTRACT NO.: 06-462201

DISREGARD PRINTS BEARING EARLIER REVISION DATES

REVISION DATES: 10-21-11 | 12-6-11 | 1-15-13

SHEET 7 OF 8

FILE => 45-0000-k-ts2.dgn

USERNAME => S6113491 DATE PLOTTED => 28-MAY-2013 TIME PLOTTED => 07:07

DIST	COUNTY	ROUTE	POST MILES TOTAL PROJECT	SHEET No.	TOTAL SHEETS
06	Kin	198	R14.7/R18.0	80	80

REGISTERED CIVIL ENGINEER — DATE 3-8-13

04-29-13
PLANS APPROVAL DATE

REGISTERED PROFESSIONAL ENGINEER — DON NGUYEN-TAN — No. C 57510 — Exp. 12-31-13 — CIVIL — STATE OF CALIFORNIA

The State of California or its officers or agents shall not be responsible for the accuracy or completeness of electronic copies of this plan sheet.

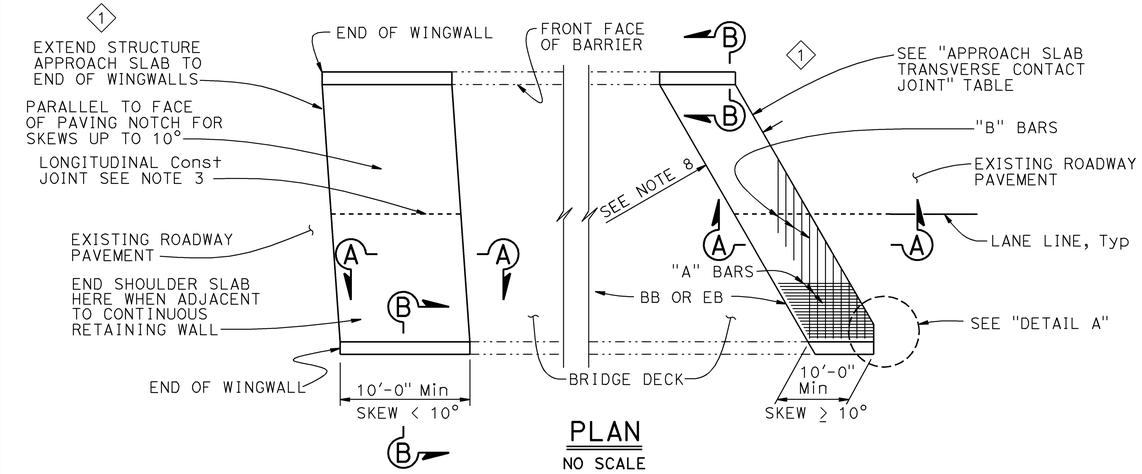

PLAN
NO SCALE

APPROACH SLAB TRANSVERSE CONTACT JOINT		
APPROACH SKEW	WITH AC ROADWAY PAVEMENT	2
< 10°	PARALLEL TO FACE OF PN	2
10° - 45°	PARALLEL TO FACE OF PN USE "DETAIL A"	2
> 45°	PARALLEL TO FACE OF PN USE "DETAIL A"	2

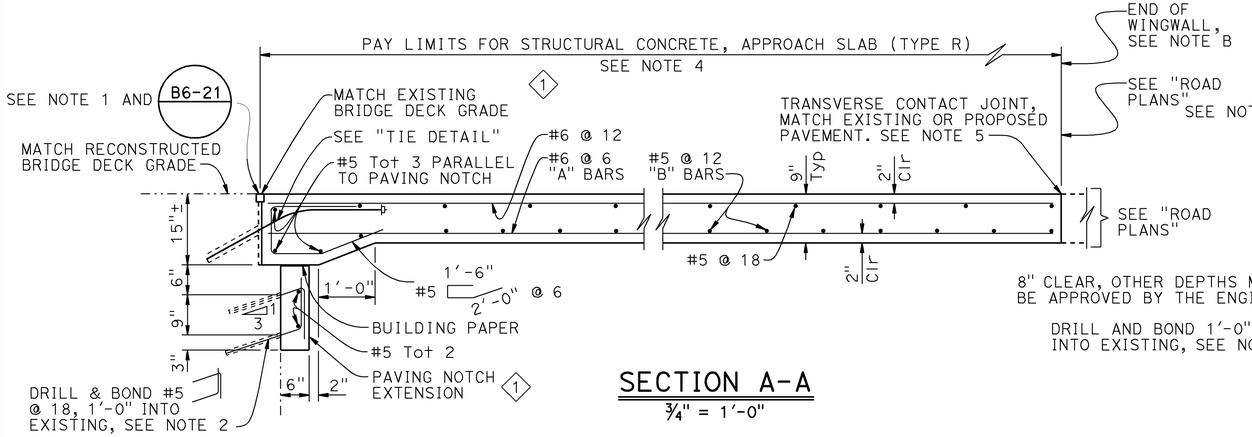

SECTION A-A
¾" = 1'-0"

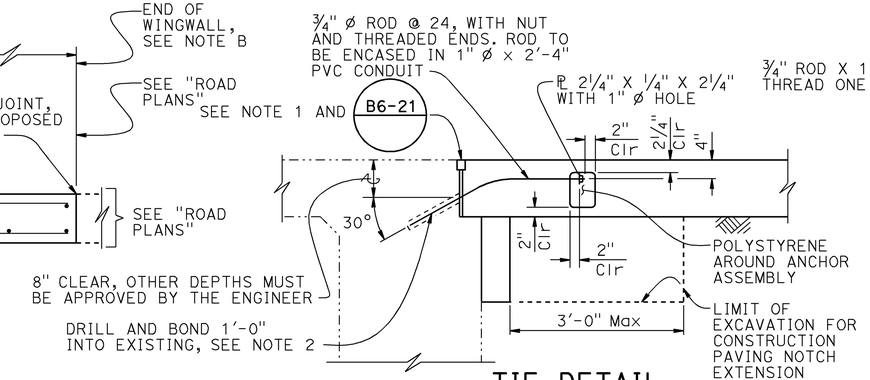

TIE DETAIL
¾" = 1'-0"

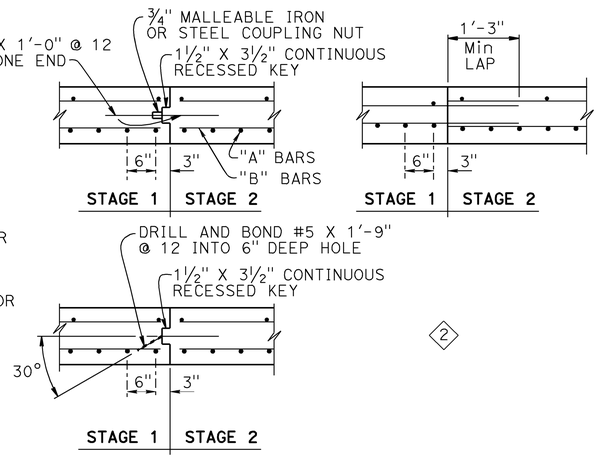

LONGITUDINAL CONSTRUCTION JOINT ALTERNATIVES
¾" = 1'-0"

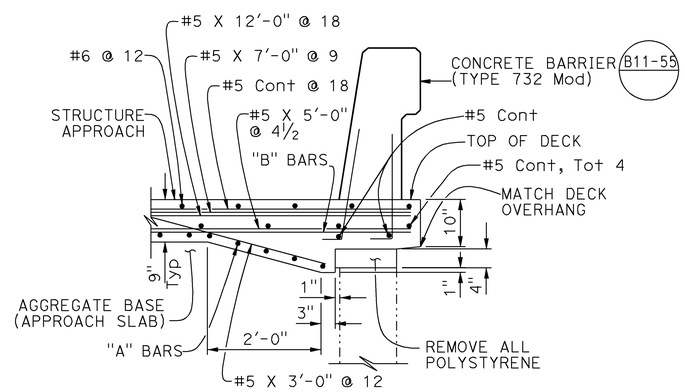

SECTION B-B
¾" = 1'-0"

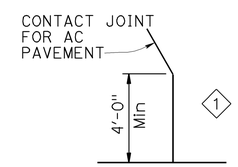

DETAIL A
NO SCALE

NOTES:

1. For details not noted or shown, see Structure Plans. Adjust bar reinforcement to clear a sawcut for sealed joint, when required
2. Space to avoid existing main reinforcement 1
3. Longitudinal construction joints, when permitted by the Engineer, shall be located on lane lines
4. Transverse contact joint shall be a minimum of 5' from an existing or constructed weakened plane joint
5. 2
6. Couplers are required for stage construction
7. End plate at end of structure approach
8. Approach Slab Limits may be extended beyond the end of wingwall to provide a slab width that is constant.

NOTE:
THE CONTRACTOR SHALL VERIFY ALL CONTROLLING FIELD DIMENSIONS BEFORE ORDERING OR FABRICATING ANY MATERIAL.

STANDARD DRAWING
FILE NO. xs3-180
APPROVAL DATE July 2011

1 Revised Detail and Notes
2 Detail and Notes omitted
3 New detail

STATE OF CALIFORNIA
DEPARTMENT OF TRANSPORTATION

DIVISION OF ENGINEERING SERVICES

BRIDGE NO. VARIOUS
POST MILE R14.7/18.0

HANFORD ARMONA DECK REHABILITATION
STRUCTURE APPROACH TYPE R(10D)

DS OSD 2147A (ENGLISH STANDARD DRAWING "XS" BORDER REV. (02-02-11)

ORIGINAL SCALE IN INCHES FOR REDUCED PLANS 0 1 2 3

UNIT: 3591
PROJECT NUMBER & PHASE: 06000004571
CONTRACT NO.: 06-462201

DISREGARD PRINTS BEARING EARLIER REVISION DATES
REVISION DATES: 9-29-11 4-24-12 1-15-13
SHEET 8 OF 8

FILE => 45-0000-s-sadd.dgn

USERNAME => s613491 DATE PLOTTED => 28-MAY-2013 TIME PLOTTED => 07:07