Dist	COUNTY	ROUTE	POST MILES TOTAL PROJECT	SHEET No.	TOTAL SHEETS
06	Tul	216	2.9/11.7	1	14

STATE OF CALIFORNIA
DEPARTMENT OF TRANSPORTATION

STP-P216(006)E

PROJECT PLANS FOR CONSTRUCTION ON
STATE HIGHWAY

IN TULARE COUNTY
IN AND NEAR VISALIA FROM 0.4 MILE EAST OF MCAULIFF STREET TO AVENUE 344

TO BE SUPPLEMENTED BY STANDARD PLANS DATED MAY 2006

INDEX OF PLANS

SHEET No.	DESCRIPTION
1	TITLE AND LOCATION MAP
2-3	TYPICAL CROSS SECTIONS
4	CONSTRUCTION DETAILS
5	CONSTRUCTION AREA SIGNS
6	PAVEMENT DELINEATION QUANTITIES
7-10	SUMMARY OF QUANTITIES
11-14	REVISED STANDARD PLANS

THE STANDARD PLANS LIST APPLICABLE TO THIS CONTRACT IS INCLUDED IN THE NOTICE TO BIDDERS AND SPECIAL PROVISIONS BOOK.

LOCATION MAP

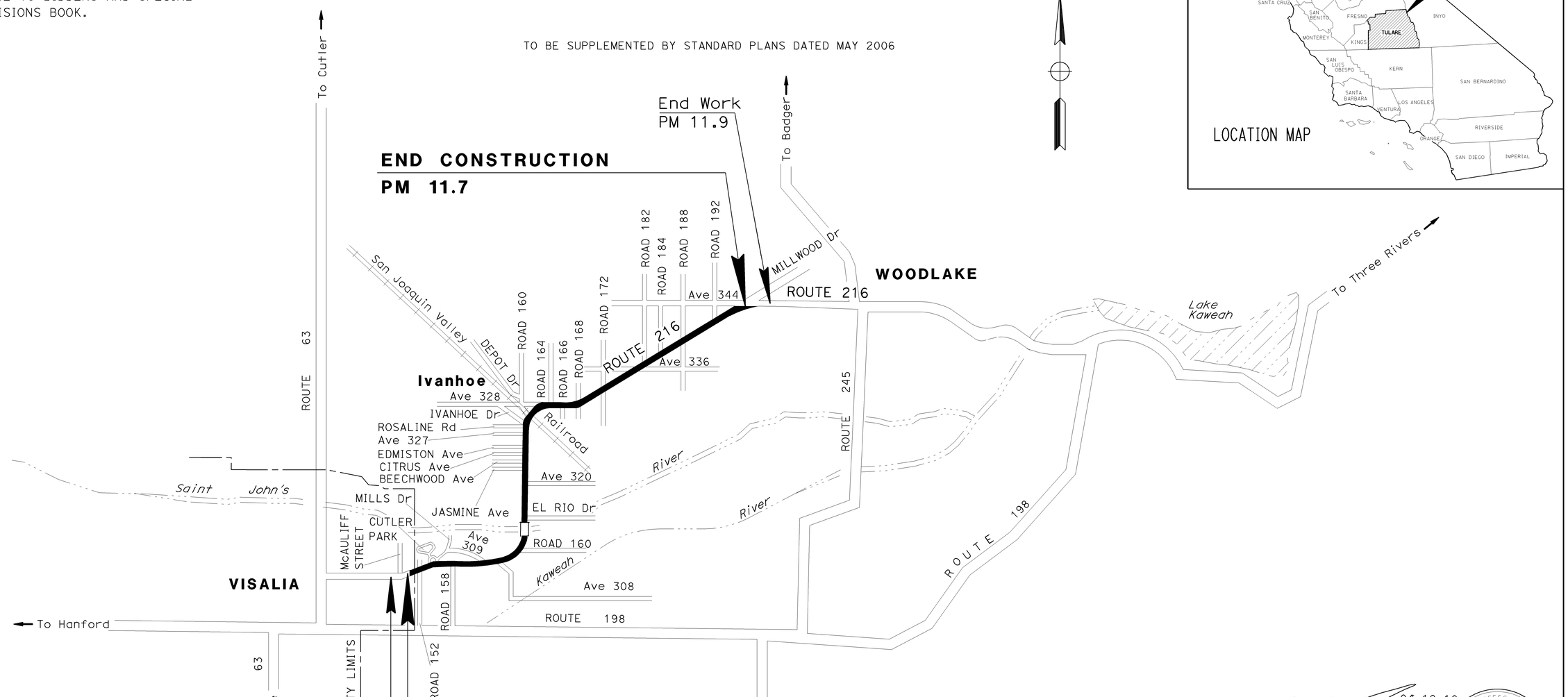

THE CONTRACTOR SHALL POSSESS THE CLASS (OR CLASSES) OF LICENSE AS SPECIFIED IN THE "NOTICE TO BIDDERS."

PROJECT MANAGER: STEVEN MILTON
DESIGN ENGINEER: MIKE LIM

04-10-10
PROJECT ENGINEER REGISTERED CIVIL ENGINEER — DATE

May 17, 2010
PLANS APPROVAL DATE

REGISTERED PROFESSIONAL ENGINEER — MAJID MONFAREDIAN No. 65517 Exp. 9/30/11 CIVIL — STATE OF CALIFORNIA

THE STATE OF CALIFORNIA OR ITS OFFICERS OR AGENTS SHALL NOT BE RESPONSIBLE FOR THE ACCURACY OR COMPLETENESS OF ELECTRONIC COPIES OF THIS PLAN SHEET.

LAST REVISION 04-05-10 | DATE PLOTTED => 25-JUN-2010 | TIME PLOTTED => 15:47

CONTRACT No. **06-446704**

Dist	COUNTY	ROUTE	POST MILES TOTAL PROJECT	SHEET No.	TOTAL SHEETS
06	Tul	216	2.9/11.7	2	14

REGISTERED CIVIL ENGINEER 04-10-10 DATE

5-17-10
PLANS APPROVAL DATE

REGISTERED PROFESSIONAL ENGINEER MAJID MONFAREDIAN No. 65517 Exp. 9/30/11 CIVIL STATE OF CALIFORNIA

THE STATE OF CALIFORNIA OR ITS OFFICERS OR AGENTS SHALL NOT BE RESPONSIBLE FOR THE ACCURACY OR COMPLETENESS OF SCANNED COPIES OF THIS PLAN SHEET.

NOTES:
1. DIMENSIONS OF THE PAVEMENT STRUCTURES (STRUCTURAL SECTIONS) ARE SUBJECT TO TOLERANCES SPECIFIED IN THE STANDARD SPECIFICATIONS.
2. SUPERELEVATION AS SHOWN OR AS DIRECTED BY THE ENGINEER.
3. EXACT LOCATIONS AND TYPE OF HMA DIKE, ARE SHOWN ON THE SUMMARY OF QUANTITIES.
4. FOR ACCURATE RIGHT OF WAY DATA, CONTACT RIGHT OF WAY ENGINEERING AT THE DISTRICT OFFICE.

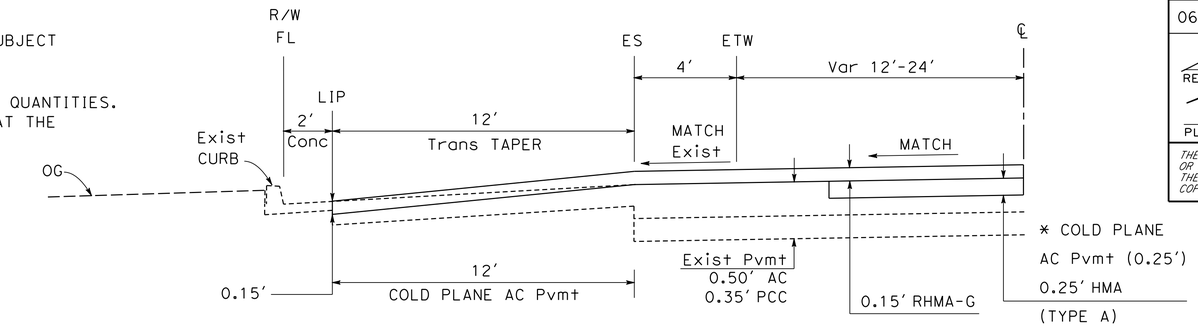

ABBREVIATION

RHMA-G: RUBBERIZED HOT MIX ASPHALT (GAP GRADED)

DESIGN DESIGNATION

2015 ADT	7300	(ROUTE 216)
DHV	810	
D	67%	
T	10%	

NOTES:

* DETAIL LOCATION AND WIDTH OF COLD PLANE AND HMA ARE SHOWN ON QUANTITY SHEET Q-2.

** 8' SHOULDERS FROM PM 3.853 TO PM 4.788.

*** SEE SHEET X-2 FOR CONSTRUCTION AT BRIDGE APPROACHES.

WESTBOUND
PM 6.507 TO PM 6.541 (12' TRAVELED WAY)
PM 6.587 TO PM 6.630 (12' TRAVELED WAY)
PM 6.630 TO PM 6.684 (12' TRAVELED WAY)
PM 6.684 TO PM 6.719 (24' TRAVELED WAY)
PM 6.850 TO PM 6.902 (24' TRAVELED WAY)

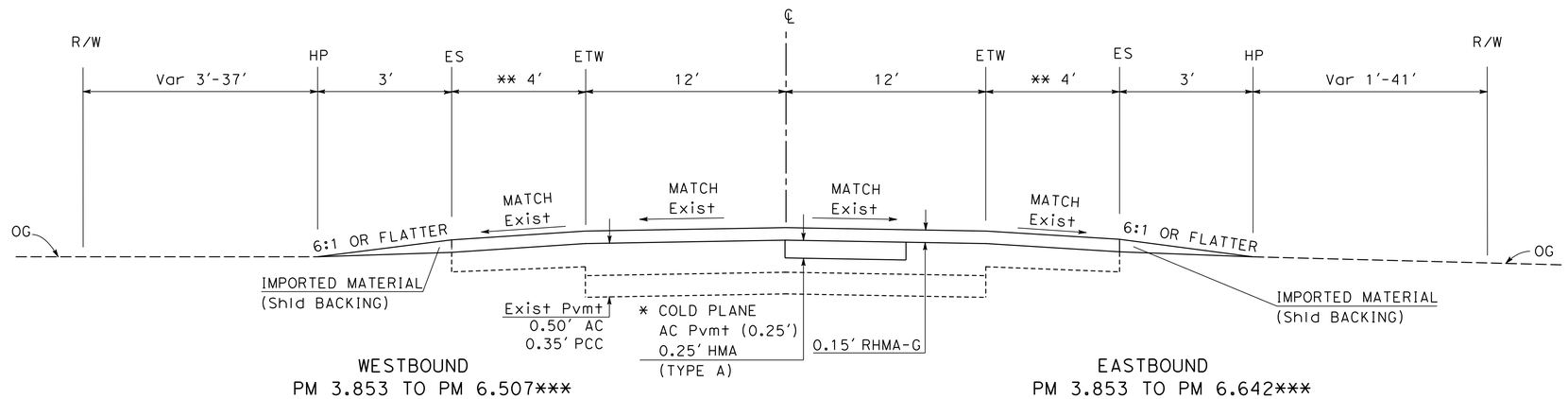

WESTBOUND
PM 3.853 TO PM 6.507***
PM 7.021 TO PM 7.950

EASTBOUND
PM 3.853 TO PM 6.642***
PM 6.716 TO PM 6.840
PM 6.950 TO PM 7.950

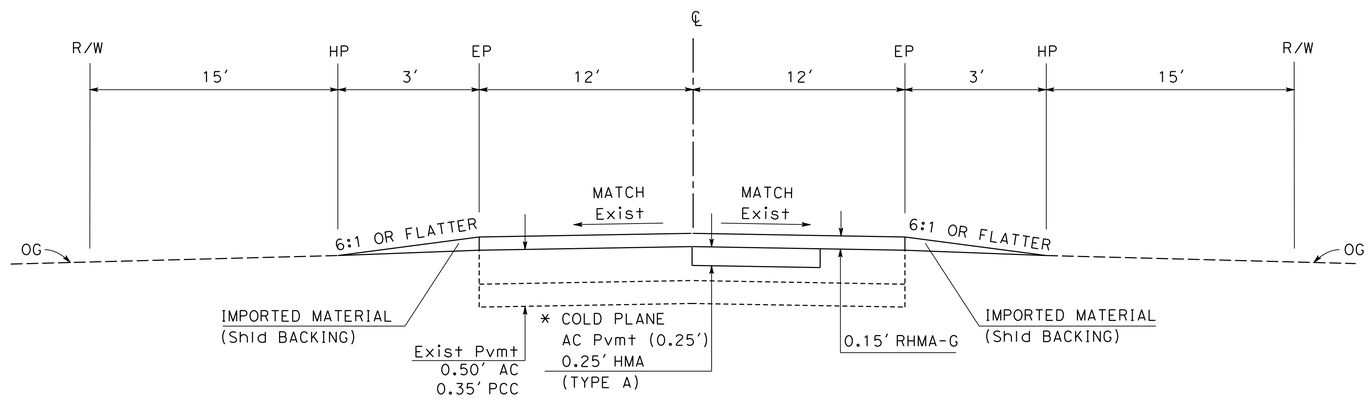

PM 2.930 TO PM 3.853
PM 7.950 TO PM 11.734

TYPICAL CROSS SECTIONS

NO SCALE

X-1

ROUTE 216

STATE OF CALIFORNIA - DEPARTMENT OF TRANSPORTATION
Caltrans® **DESIGN**

FUNCTIONAL SUPERVISOR: MIKE LIM
CALCULATED-DESIGNED BY: MAJID MONFAREDIAN
CHECKED BY: SCOTT FRIESEN
REVISED BY / DATE REVISED

LAST REVISION 05-11-10
DATE PLOTTED => $DATE
TIME PLOTTED => $TIME

Dist	COUNTY	ROUTE	POST MILES TOTAL PROJECT	SHEET No.	TOTAL SHEETS
06	Tul	216	2.9/11.7	3	14

REGISTERED CIVIL ENGINEER 04-10-10 DATE

5-17-10
PLANS APPROVAL DATE

REGISTERED PROFESSIONAL ENGINEER MAJID MONFAREDIAN No. 65517 Exp. 9/30/11 CIVIL STATE OF CALIFORNIA

THE STATE OF CALIFORNIA OR ITS OFFICERS OR AGENTS SHALL NOT BE RESPONSIBLE FOR THE ACCURACY OR COMPLETENESS OF SCANNED COPIES OF THIS PLAN SHEET.

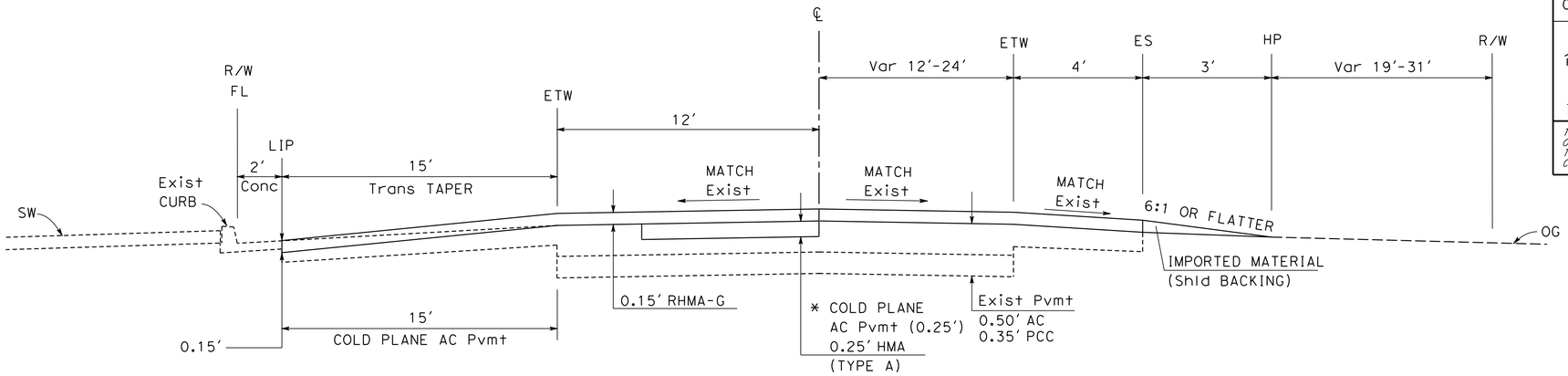

WESTBOUND
PM 6.950 TO PM 7.021

EASTBOUND
PM 6.840 TO PM 6.950

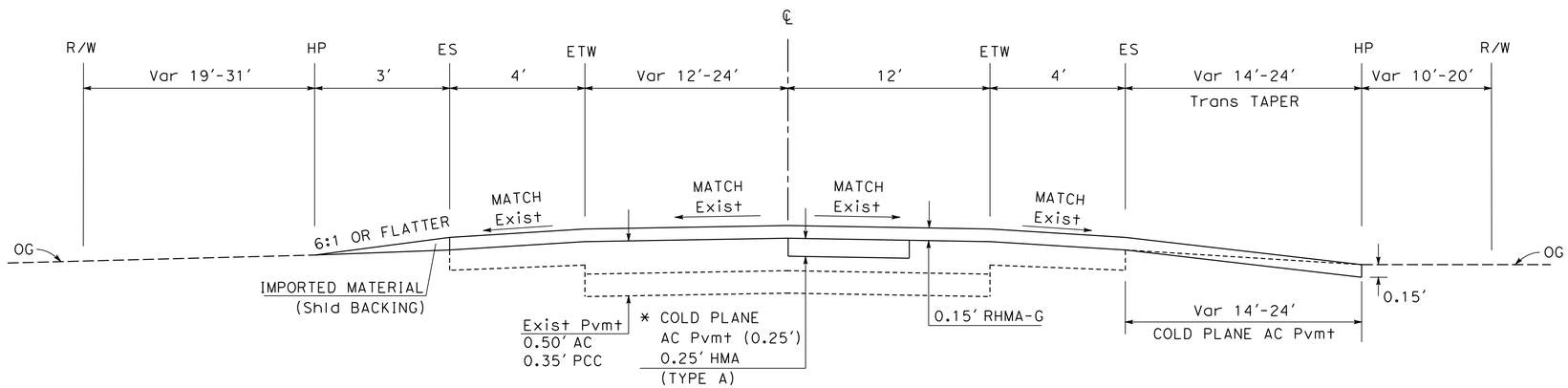

WESTBOUND
PM 6.541 TO PM 6.587
PM 6.719 TO PM 6.850
PM 6.902 TO PM 6.950

EASTBOUND
PM 6.642 TO PM 6.716

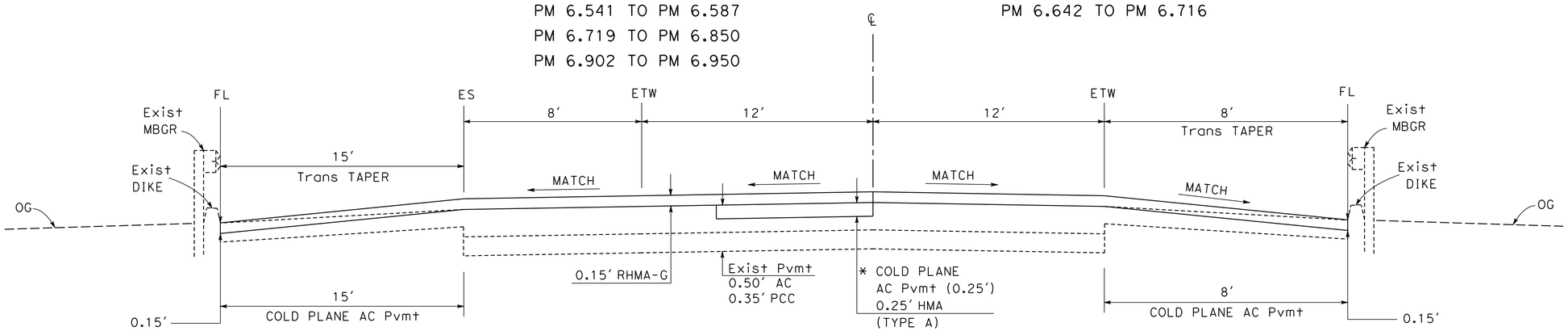

PM 4.773 TO PM 4.782
PM 4.842 TO PM 4.851
(SAINT JOHN'S RIVER BRIDGE APPROACH)

ROUTE 216

TYPICAL CROSS SECTIONS

NO SCALE

X-2

STATE OF CALIFORNIA - DEPARTMENT OF TRANSPORTATION
Caltrans®
DESIGN

FUNCTIONAL SUPERVISOR: MIKE LIM
CALCULATED-DESIGNED BY: MAJID MONFAREDIAN
CHECKED BY: SCOTT FRIESEN
REVISED BY
DATE REVISED

LAST REVISION 05-11-10
DATE PLOTTED => $DATE
TIME PLOTTED => $TIME

BORDER LAST REVISED 4/11/2008
RELATIVE BORDER SCALE IS IN INCHES 0 1 2 3
USERNAME => $USER
DGN FILE => $REQUEST
CU 06252
EA 446701

644670ca002.dgn 5/19/2010 11:50:49 AM

Dist	COUNTY	ROUTE	POST MILES TOTAL PROJECT	SHEET No.	TOTAL SHEETS
06	Tul	216	2.9/11.7	4	14

REGISTERED CIVIL ENGINEER 04-10-10 DATE

5-17-10
PLANS APPROVAL DATE

REGISTERED PROFESSIONAL ENGINEER MAJID MONFAREDIAN No. 65517 Exp. 9/30/11 CIVIL STATE OF CALIFORNIA

THE STATE OF CALIFORNIA OR ITS OFFICERS OR AGENTS SHALL NOT BE RESPONSIBLE FOR THE ACCURACY OR COMPLETENESS OF SCANNED COPIES OF THIS PLAN SHEET.

LEGEND

- COLD PLANE AC PAVEMENT (0-0.15') 0.15' HMA
- 0.15' HMA
- COLD PLANE AC PAVEMENT (0-0.15') 0.15' RMHA-G

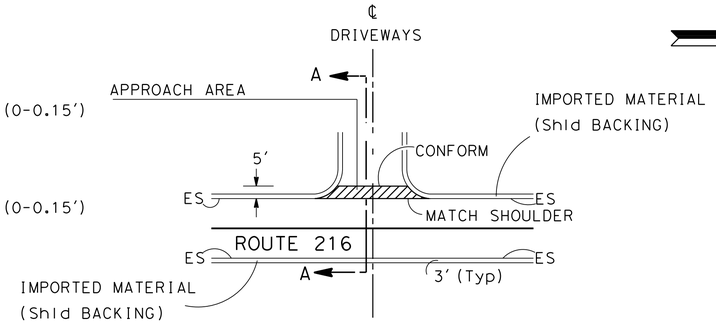

TYPICAL PAVED DRIVEWAY APPROACH WEST SIDE

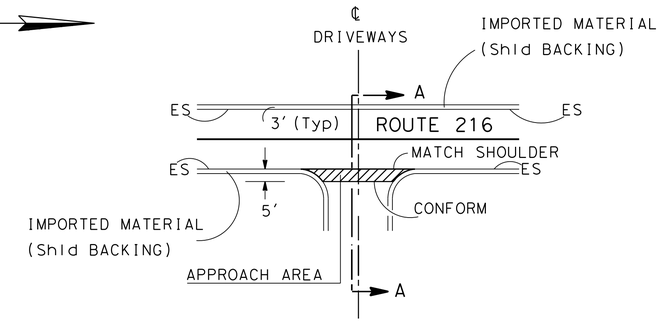

TYPICAL PAVED DRIVEWAY APPROACH EAST SIDE

ABBREVIATION

RHMA-G: RUBBERIZED HOT MIX ASPHALT (GAP GRADED)

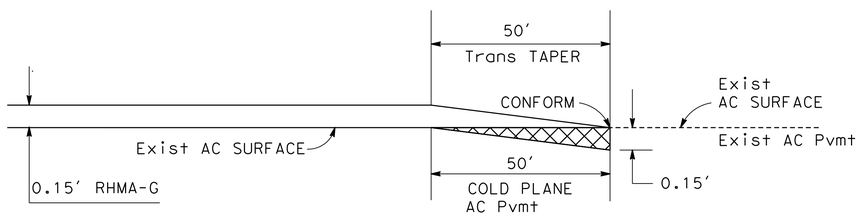

TYPICAL LONGITUDINAL TRANSITION

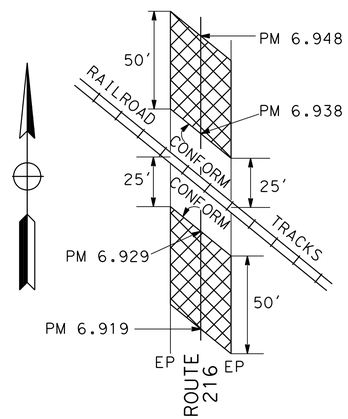

LONGITUDINAL TRANSITION AT THE RAILROAD TRACKS

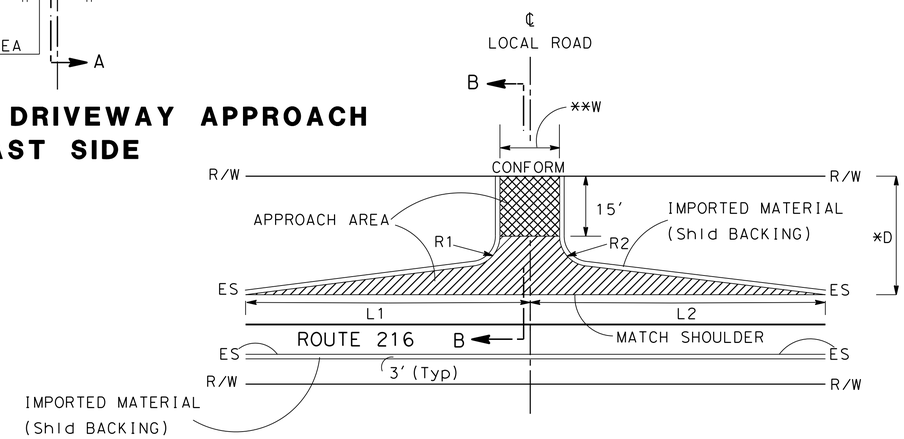

TYPICAL LOCAL ROAD INTERSECTION WEST SIDE

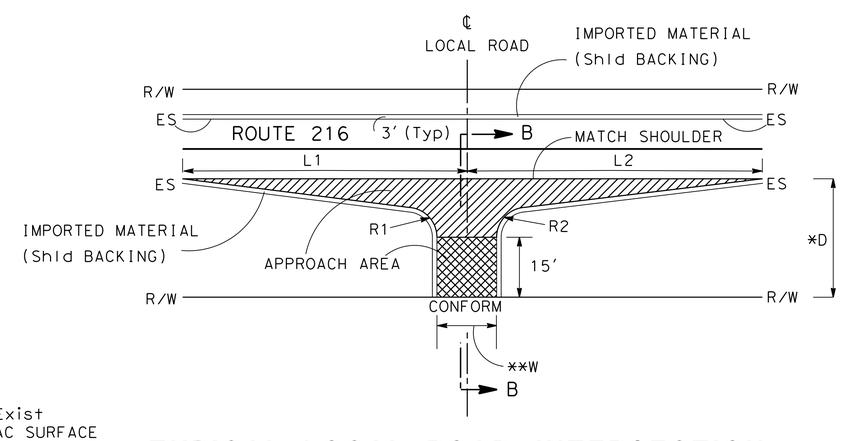

TYPICAL LOCAL ROAD INTERSECTION EAST SIDE

ROUTE 216 PM	2.930	TO PM	2.939	(CONFORM TO ROUTE 216)
ROUTE 216 PM	4.773	TO PM	4.782	(CONFORM TO Br APPROACH SLAB)
ROUTE 216 PM	4.842	TO PM	4.851	(CONFORM TO Br APPROACH SLAB)
ROUTE 216 PM	6.919	TO PM	6.929	(CONFORM TO ROUTE 216, 25' FROM CENTER LINE OF RR TRACKS)
ROUTE 216 PM	6.938	TO PM	6.948	(CONFORM TO ROUTE 216, 25' FROM CENTER LINE OF RR TRACKS)
ROUTE 216 PM	6.969	TO PM	6.978	(CONFORM TO Ave 328)
ROUTE 216 PM	11.721	TO PM	11.734	(CONFORM TO Ave 344)

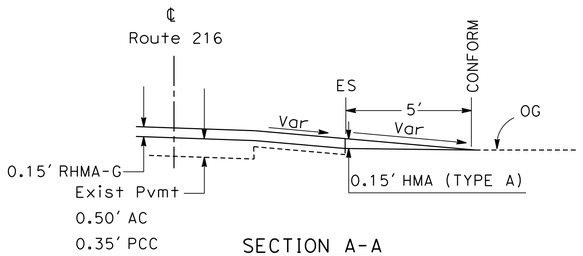

SECTION A-A

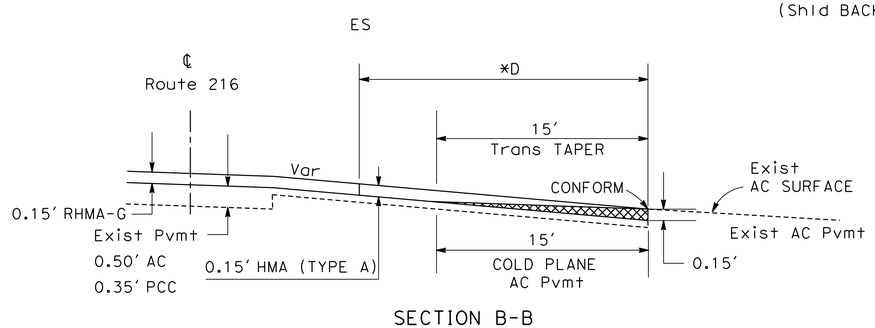

SECTION B-B

* D MEASURED ALONG CENTER LINE OF LOCAL ROAD
** W MEASURED PARALLEL TO ROUTE 216

CONSTRUCTION DETAILS

NO SCALE

C-1

STATE OF CALIFORNIA - DEPARTMENT OF TRANSPORTATION
Caltrans® DESIGN

FUNCTIONAL SUPERVISOR: MIKE LIM
CALCULATED-DESIGNED BY: MAJID MONFAREDIAN
CHECKED BY: SCOTT FRIESEN
REVISED BY
DATE REVISED

LAST REVISION 05-11-10
DATE PLOTTED => $DATE
TIME PLOTTED => $TIME

Dist	COUNTY	ROUTE	POST MILES TOTAL PROJECT	SHEET No.	TOTAL SHEETS
06	Tul	216	2.9/11.7	5	14

Sandy L Le 05-17-10
REGISTERED CIVIL ENGINEER DATE

5-17-10
PLANS APPROVAL DATE

REGISTERED PROFESSIONAL ENGINEER SANDY L. LE No. 67065 Exp. 9/30/10 CIVIL STATE OF CALIFORNIA

THE STATE OF CALIFORNIA OR ITS OFFICERS OR AGENTS SHALL NOT BE RESPONSIBLE FOR THE ACCURACY OR COMPLETENESS OF SCANNED COPIES OF THIS PLAN SHEET.

STATIONARY MOUNTED CONSTRUCTION AREA SIGNS

SIGN No.	SIGN CODE	PANEL SIZE	SIGN MESSAGE	No. OF POST AND SIZE(inch)	No. OF SIGNS
A	W20-1	48" x 48"	ROAD WORK AHEAD	1- 6" x 6"	2
B	W20-1	36" x 36"	ROAD WORK AHEAD	1- 4" x 6"	31
C	G20-2	36" x 18"	END ROAD WORK	1- 4" x 6"	2
D	C40(CA)	108" x 42"	TRAFFIC FINES DOUBLED IN CONSTRUCTION ZONES	2- 6" x 6"	2
E	G20-1	60" x 36"	ROAD WORK NEXT 9 MILES	2- 4" x 6"	2

NOTE: LOCATIONS OF CONSTRUCTION AREA SIGNS SHOWN ARE APPROXIMATE. EXACT LOCATIONS TO BE DETERMINED BY THE ENGINEER.

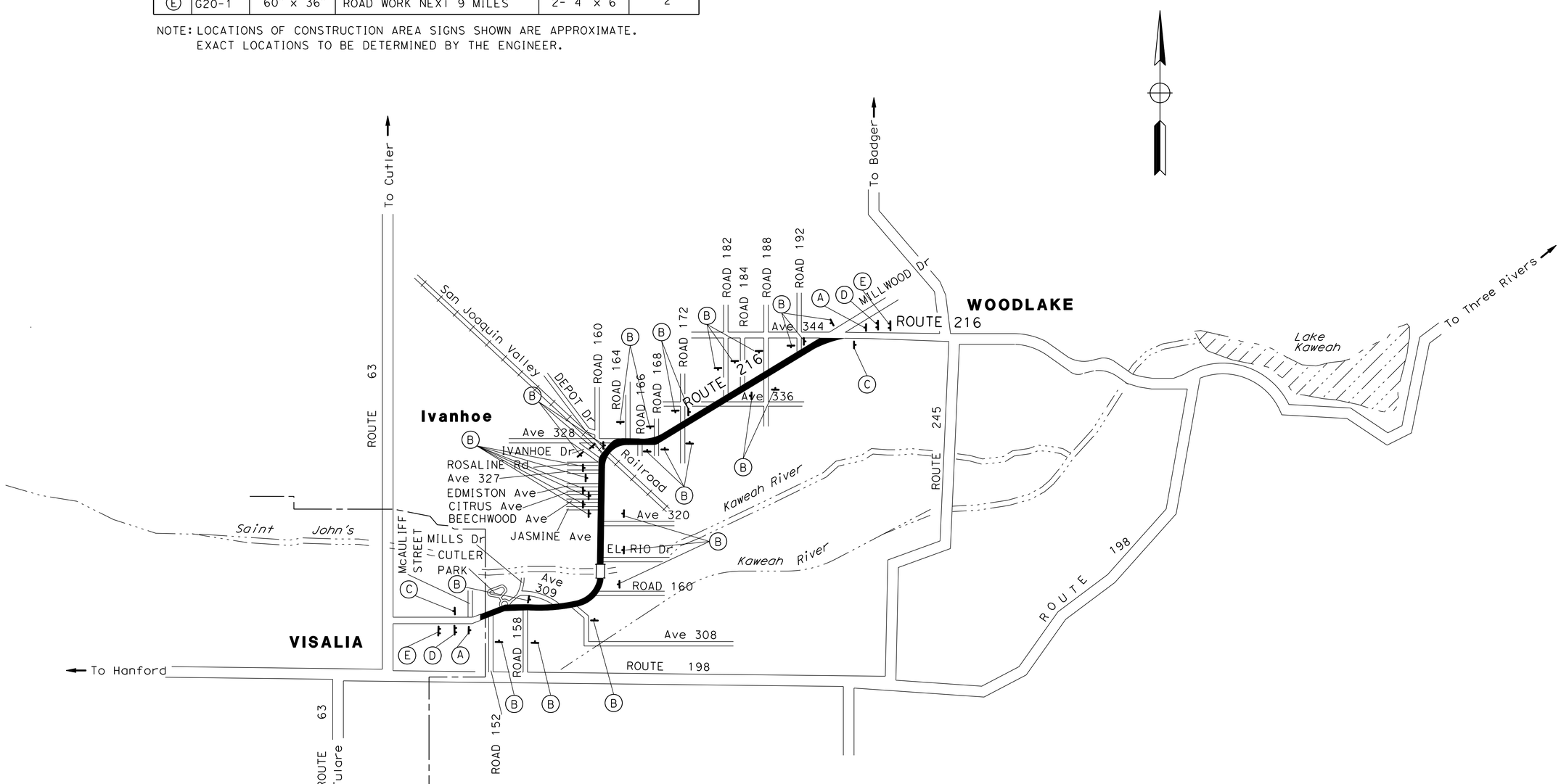

THIS PLAN ACCURATE FOR CONSTRUCTION AREA SIGN ONLY.

CONSTRUCTION AREA SIGNS

NO SCALE

CS-1

STATE OF CALIFORNIA - DEPARTMENT OF TRANSPORTATION
Caltrans® 06-TRAFFIC DESIGN

FUNCTIONAL SUPERVISOR: MOHAMMED QATAMI
CALCULATED-DESIGNED BY: SANDY LE
CHECKED BY: HASSAN TAHA
REVISED BY
DATE REVISED

LAST REVISION 05-17-10 | DATE PLOTTED => $DATE | TIME PLOTTED => $TIME

Dist	COUNTY	ROUTE	POST MILES TOTAL PROJECT	SHEET No.	TOTAL SHEETS
06	Tul	216	2.9/11.7	6	14

Sandy L Le 05-17-10
REGISTERED CIVIL ENGINEER DATE

5-17-10
PLANS APPROVAL DATE

REGISTERED PROFESSIONAL ENGINEER SANDY L. LE No. 67065 Exp. 9/30/10 CIVIL STATE OF CALIFORNIA

THE STATE OFF CALIFORNIA OR ITS OFFICERS OR AGENTS SHALL NOT BE RESPONSIBLE FOR THE ACCURACY OR COMPLETENESS OFF SCANNED COPIES OFF THIS PLAN SHEET.

PAVEMENT DELINEATION QUANTITIES

ROUTE	LOCATION	DIRECTION	DETAIL No.	PAVEMENT MARKERS (RETROREFLECTIVE) TYPE D TWO-WAY YELLOW	TYPE G ONE-WAY CLEAR	TYPE H ONE-WAY YELLOW	REMOVE PAVEMENT MARKERS (N)	THERMOPLASTIC TRAFFIC STRIPE 8" SOLID WHITE	4" SOLID WHITE	4" SOLID YELLOW	4" BROKEN (36-12)	THERMOPLASTIC PAVEMENT MARKING DESCRIPTION	SQFT
				EA	EA	EA	EA	LF	LF	LF	LF		
ROUTE 216	PM 2.90 TO PM 11.70	EB	27B						46,464			3-LIMIT LINE	120
	PM 2.90 TO PM 11.70	WB	27B						46,464			5-STOP	110
	PM 2.90 TO PM 3.43		6	59			59				2,798	2-AHEAD	62
	PM 3.43 TO PM 3.71		19	34		63	97			1,478	1,478	2-SCHOOL	70
	PM 3.71 TO PM 3.85		6	16			16				740	5-RAILROAD CROSSING SYMBOL	350
	PM 3.85 TO PM 4.00		19	20		34	54			792	792	8-RAILROAD TRANSVERSE LINE	240
	PM 4.00 TO PM 4.26		6	30			30				1,373	8-RAILROAD LIMIT LINE	320
	PM 4.26 TO PM 4.33		19	10		16	26			370	370	2-TYPE III (LT) ARROW	84
	PM 4.33 TO PM 5.04		22	316			316			7,498		4-TYPE V ARROW	132
	PM 5.04 TO PM 5.11		19	10		16	26			370	370		
	PM 5.11 TO PM 5.90		6	88			88				4,171		
	PM 5.90 TO PM 6.03		19	18		30	48			686	686		
	PM 6.03 TO PM 6.36		6	37			37				1,742		
	PM 6.36 TO PM 6.42		19	10		14	24			317	317		
	PM 6.42 TO PM 6.84		22	188			188			4,435			
	PM 6.78 TO PM 6.84	EB	38		14		14	317					
	PM 6.85 TO PM 6.88		29	16			16			634			
	PM 6.91 TO PM 7.04		22	60			60			1,373			
	PM 7.04 TO PM 7.21		19	22		38	60			898	898		
	PM 7.21 TO PM 7.35		6	16			16				739		
	PM 7.35 TO PM 7.45		19	14		23	37			528	528		
	PM 7.46 TO PM 7.95		22	218			218			5,174			
	PM 7.95 TO PM 8.05		19	14		23	37			528	528		
	PM 8.05 TO PM 8.48		6	48			48				2,270		
	PM 8.48 TO PM 8.60		19	16		27	43			634	634		
	PM 8.60 TO PM 9.73		6	125			125				5,966		
	PM 9.73 TO PM 9.79		19	10		14	24			317	317		
	PM 9.80 TO PM 10.00		22	90			90			2,112			
	PM 10.00 TO PM 10.07		19	10		14	24			317	317		
	PM 10.07 TO PM 10.22		6	18			18				792		
	PM 10.22 TO PM 10.37		19	20		34	54			792	792		
	PM 10.37 TO PM 10.81		6	49			49				2,323		
	PM 10.81 TO PM 10.95		19	18		32	50			739	739		
	PM 10.95 TO PM 11.39		6	49			49				2,323		
	PM 11.39 TO PM 11.47		19	12		19	31			422	422		
	PM 11.47 TO PM 11.54		22	34			34			739			
	PM 11.54 TO PM 11.70		19	20		36	56			845	845		
	CROSS ROADS		21						1,450			31-LIMIT LINE	620
	CROSS ROADS		27B							2,900		31-STOP	682
SUBTOTAL				1715	14	433		317	94,378	34,898	35,270		2790
TOTAL				2162				317	129,276		35,270		2790

(N) = NOT A SEPARATE PAY ITEM, FOR INFORMATION ONLY

STATE OFF CALIFORNIA - DEPARTMENT OFF TRANSPORTATION
Caltrans® TRAFFIC DESIGN

FUNCTIONAL SUPERVISOR: MOHAMMED QATAMI
CALCULATED-DESIGNED BY: SANDY LE
CHECKED BY: HASSAN TAHA
REVISED BY
DATE REVISED

PAVEMENT DELINEATION QUANTITIES

PDQ-1

LAST REVISION 05-17-10
DATE PLOTTED => $DATE
TIME PLOTTED => $TIME

Dist	COUNTY	ROUTE	POST MILES TOTAL PROJECT	SHEET No.	TOTAL SHEETS
06	Tul	216	2.9/11.7	7	14

REGISTERED CIVIL ENGINEER 04-10-10 DATE

5-17-10
PLANS APPROVAL DATE

REGISTERED PROFESSIONAL ENGINEER MAJID MONFAREDIAN No. 65517 Exp. 9/30/11 CIVIL STATE OF CALIFORNIA

THE STATE OF CALIFORNIA OR ITS OFFICERS OR AGENTS SHALL NOT BE RESPONSIBLE FOR THE ACCURACY OR COMPLETENESS OF SCANNED COPIES OF THIS PLAN SHEET.

ROADWAY QUANTITIES SUMMARY

DESCRIPTION	COLD PLANE AC Pvmt	RUBBERIZED HOT MIX ASPHALT (GAP GRADED)	HOT MIX ASPHALT (TYPE A)	IMPORTED MATERIAL (Shld BACKING)	TACK COAT
	SQYD	TON	TON	TON	TON
LOCAL ROAD INTERSECTIONS (SHEET Q-4)	2,528.0		930.4		1.692
ROUTE 216 ROADWAY QUANTITIES (SHEET Q-4)		14,841.9		1,389.9	26.981
PRIVATE AND COMMERCIAL DRIVEWAYS (SHEET Q-3)			74.6		0.269
AREAS BEYOND SHOULDERS (SHEET Q-3)	3,227.3	326.8			0.593
ROUTE 216 LONGITUDINAL TRANSITIONS (SHEET Q-3)	2,355.7	238.3			0.433
COLD PLANE AC AND HMA QUANTITIES (WESTBOUND) (SHEET Q-2)	14,034.2		2,368.7		2.585
COLD PLANE AC AND HMA QUANTITIES (EASTBOUND) (SHEET Q-2)	14,597.4		2,463.2		2.690
HMA DIKE (TYPE E) (SHEET Q-1)			16.8		
TOTAL	36,742.6	15,407.0	5,853.7	1,389.9	35.243

CRACK TREATMENT

PM LOCATION (ROUTE 216)		DIRECTION	NUMBER OF LANES	CRACK TREATMENT
FROM	TO			LNMI
2.930	4.782	E&W	2	3.704
4.842	6.929	E&W	2	4.174
6.938	11.734	E&W	2	9.592
TOTAL				17.470

HMA DIKE QUANTITIES

PM LOCATION (ROUTE 216)		DIRECTION	NOTES	REMOVE AC DIKE	PLACE HMA DIKE (TYPE E)	HOT MIX ASPHALT (TYPE A)
FROM	TO			LF	LF	*TON
4.880	6.910	EB	INCLUDE CURB RETURN ON LOCAL ROADS AND DRIVEWAYS	10,720	0	0
6.910	6.970	EB	REMOVE AC DIKE (TYPE A), PLACE HMA DIKE (TYPE E)	320	320	8.4
4.750	4.780	WB	INCLUDE CURB RETURN ON LOCAL ROADS AND DRIVEWAYS	160	0	0
4.860	5.220	WB	INCLUDE CURB RETURN ON LOCAL ROADS AND DRIVEWAYS	1,910	0	0
5.310	5.670	WB	INCLUDE CURB RETURN ON LOCAL ROADS AND DRIVEWAYS	1,910	0	0
5.830	5.900	WB	INCLUDE CURB RETURN ON LOCAL ROADS AND DRIVEWAYS	370	0	0
5.970	6.170	WB	INCLUDE CURB RETURN ON LOCAL ROADS AND DRIVEWAYS	1,060	0	0
6.230	6.400	WB	INCLUDE CURB RETURN ON LOCAL ROADS AND DRIVEWAYS	900	0	0
6.910	6.970	WB	REMOVE AC DIKE (TYPE A), PLACE HMA DIKE (TYPE E)	320	320	8.4
TOTAL				17,670	640	16.8

* QUANTITY IS INCLUDED IN THE ROADWAY QUANTITIES SUMMARY TABLE ABOVE

SUMMARY OF QUANTITIES
Q-1

STATE OF CALIFORNIA - DEPARTMENT OF TRANSPORTATION
Caltrans® DESIGN

FUNCTIONAL SUPERVISOR: MIKE LIM
CALCULATED-DESIGNED BY: MAJID MONFAREDIAN
CHECKED BY: SCOTT FRIESEN
REVISED BY
DATE REVISED

LAST REVISION 05-11-10
DATE PLOTTED => $DATE
TIME PLOTTED => $TIME

Dist	COUNTY	ROUTE	POST MILES TOTAL PROJECT	SHEET No.	TOTAL SHEETS
06	Tul	216	2.9/11.7	8	14

REGISTERED CIVIL ENGINEER 04-10-10 DATE

5-17-10
PLANS APPROVAL DATE

REGISTERED PROFESSIONAL ENGINEER MAJID MONFAREDIAN No. 65517 Exp. 9/30/11 CIVIL STATE OF CALIFORNIA

THE STATE OF CALIFORNIA OR ITS OFFICERS OR AGENTS SHALL NOT BE RESPONSIBLE FOR THE ACCURACY OR COMPLETENESS OF SCANNED COPIES OF THIS PLAN SHEET.

COLD PLANE AC PAVEMENT AND HMA QUANTITIES (WESTBOUND)

POST MILE LOCATION Rte 216 WESTBOUND					COLD PLANE AC Pvmt	HOT MIX ASPHALT (TYPE A)	TACK COAT
POST MILE		LENGTH	WIDTH	LANE-1			
FROM	TO	LF	LF	PORTION	*SQYD	*TON	*TON
5.001	5.022	110.9	12	FULL	147.8	24.9	0.027
5.047	5.125	411.8	6	INSIDE	274.6	46.3	0.051
5.285	5.325	211.2	6	OUTSIDE	140.8	23.8	0.026
5.325	5.437	591.4	12	FULL	788.5	133.1	0.145
5.448	5.491	227.0	6	INSIDE	151.4	25.5	0.028
5.606	5.632	137.3	6	INSIDE	91.5	15.4	0.017
5.666	5.678	63.4	6	INSIDE	42.2	7.1	0.008
5.679	5.686	37.0	12	FULL	49.3	8.3	0.009
5.689	5.713	126.7	12	FULL	169.0	28.5	0.031
5.713	5.745	169.0	6	INSIDE	112.6	19.0	0.021
5.745	5.778	174.2	12	FULL	232.3	39.2	0.043
5.789	6.183	2 080.3	12	FULL	2,773.8	468.1	0.511
6.202	6.232	158.4	12	FULL	211.2	35.6	0.039
6.240	6.283	227.0	12	FULL	302.7	51.1	0.056
6.290	6.308	95.0	12	FULL	126.7	21.4	0.023
6.311	6.323	63.4	6	INSIDE	42.2	7.1	0.008
6.333	6.359	137.3	12	FULL	183.0	30.9	0.034
6.359	6.373	73.9	6	INSIDE	49.3	8.3	0.009
6.399	6.417	95.0	6	INSIDE	63.4	10.7	0.012
6.417	6.613	1,034.9	12	FULL	1,379.8	232.8	0.254
6.613	6.646	174.2	6	INSIDE	116.2	19.6	0.021
6.744	6.878	707.5	6	OUTSIDE	471.7	79.6	0.087
6.955	7.001	242.9	12	FULL	323.8	54.6	0.060
7.001	7.034	174.2	6	OUTSIDE	116.2	19.6	0.021
7.034	7.060	137.3	12	FULL	183.0	30.9	0.034
7.060	7.147	459.4	6	OUTSIDE	302.6	51.7	0.056
7.271	7.279	42.2	6	OUTSIDE	28.2	4.8	0.005
7.331	7.366	184.8	6	OUTSIDE	123.2	20.8	0.023
7.379	7.393	73.9	6	OUTSIDE	49.3	8.3	0.009
7.393	7.418	132.0	12	FULL	176.0	29.7	0.032
7.432	7.465	174.2	12	FULL	232.3	39.2	0.043
7.465	7.510	237.6	12	FULL	316.8	53.5	0.058
7.567	7.599	169.0	12	FULL	225.3	38.0	0.041
7.599	7.629	158.4	6	OUTSIDE	105.6	17.8	0.019
7.676	7.680	21.1	6	OUTSIDE	14.1	2.4	0.003
7.696	7.716	105.6	6	INSIDE	70.4	11.9	0.013
7.722	7.740	95.0	6	OUTSIDE	63.4	10.7	0.012
8.479	8.518	205.9	6	INSIDE	137.3	23.2	0.025
8.528	9.160	3,337.0	6	OUTSIDE	2,224.6	375.4	0.409
9.553	9.648	501.6	6	OUTSIDE	334.4	56.4	0.062
10.131	10.440	1,631.5	6	OUTSIDE	1,087.7	183.5	0.200
SUBTOTAL					14,034.2	2,368.7	2.585

COLD PLANE AC PAVEMENT AND HMA QUANTITIES (EASTBOUND)

POST MILE LOCATION Rte 216 EASTBOUND					COLD PLANE AC Pvmt	HOT MIX ASPHALT (TYPE A)	TACK COAT
POST MILE		LENGTH	WIDTH	LANE-1			
FROM	TO	LF	LF	PORTION	*SQYD	*TON	*TON
4.333	4.339	31.7	12	FULL	42.2	7.1	0.008
4.538	4.542	21.2	6	INSIDE	14.1	2.4	0.003
4.709	4.730	110.9	6	INSIDE	73.9	12.5	0.014
5.048	5.092	232.3	6	OUTSIDE	154.9	26.1	0.029
5.156	5.173	89.8	6	OUTSIDE	59.8	10.1	0.011
5.184	5.202	95.1	6	OUTSIDE	63.4	10.7	0.012
5.217	5.241	126.7	12	FULL	169.0	28.5	0.031
5.256	5.285	153.1	6	OUTSIDE	102.1	17.2	0.019
5.297	5.347	264.0	6	OUTSIDE	176.0	29.7	0.032
5.381	5.479	517.5	6	OUTSIDE	345.0	58.2	0.064
5.589	5.614	132.0	6	OUTSIDE	88.0	14.8	0.016
5.626	5.647	110.9	6	OUTSIDE	73.9	12.5	0.014
5.641	5.654	68.7	6	INSIDE	45.8	7.7	0.008
5.661	5.669	42.3	6	OUTSIDE	28.2	4.8	0.005
5.695	6.023	1,731.9	12	FULL	2,309.1	389.7	0.425
6.023	6.144	638.9	6	INSIDE	425.9	71.9	0.078
6.169	6.193	126.7	6	OUTSIDE	84.5	14.3	0.016
6.198	6.256	306.3	12	FULL	408.3	68.9	0.075
6.264	6.281	89.8	6	OUTSIDE	59.8	10.1	0.011
6.281	6.443	855.4	12	FULL	1,140.5	192.5	0.210
6.443	6.455	63.4	6	INSIDE	42.2	7.1	0.008
6.455	6.479	126.7	12	FULL	169.0	28.5	0.031
6.488	6.726	1,256.7	12	FULL	1,675.5	282.8	0.308
6.732	6.777	237.6	6	OUTSIDE	158.4	26.7	0.029
6.777	6.941	865.9	12	FULL	1,154.6	194.8	0.213
6.955	6.961	31.7	12	FULL	42.2	7.1	0.008
6.966	6.998	169.0	12	FULL	225.3	38.0	0.041
7.019	7.040	110.9	6	OUTSIDE	73.9	12.5	0.014
7.068	7.077	47.5	6	OUTSIDE	31.7	5.3	0.006
7.091	7.133	221.8	6	OUTSIDE	147.8	24.9	0.027
7.134	7.140	31.7	12	FULL	42.2	7.1	0.008
7.407	7.416	47.5	6	INSIDE	31.7	5.3	0.006
7.541	7.571	158.4	6	OUTSIDE	105.6	17.8	0.019
7.571	7.596	132.0	12	FULL	176.0	29.7	0.032
7.596	7.725	681.1	6	INSIDE	454.1	76.6	0.084
8.481	8.574	491.1	6	OUTSIDE	327.4	55.2	0.060
8.590	8.651	322.1	6	OUTSIDE	214.7	36.2	0.040
8.651	8.678	142.6	12	FULL	190.1	32.1	0.035
8.678	8.698	105.6	6	OUTSIDE	70.4	11.9	0.013
8.714	8.750	190.1	6	OUTSIDE	126.7	21.4	0.023
8.750	8.785	184.8	12	FULL	246.4	41.6	0.045
8.785	8.809	126.7	6	OUTSIDE	84.5	14.3	0.016
8.809	8.862	279.9	12	FULL	373.1	63.0	0.069
8.913	9.079	876.5	6	OUTSIDE	584.3	98.6	0.108
9.127	9.239	591.4	6	OUTSIDE	394.2	66.5	0.073
9.262	9.342	422.4	6	OUTSIDE	281.6	47.5	0.052
9.379	9.645	1,404.5	6	OUTSIDE	936.3	158.0	0.172
10.221	10.293	380.2	6	OUTSIDE	253.4	42.8	0.047
10.404	10.438	179.5	6	OUTSIDE	119.7	20.2	0.022
SUBTOTAL					14,597.4	2,463.2	2.690

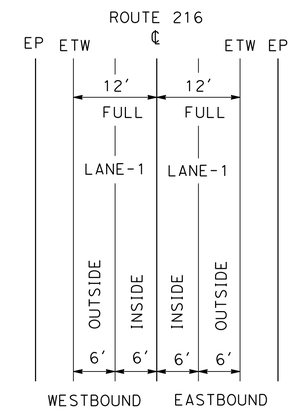

LANE DESCRIPTION CHART

NOTES: FOR LANE PORTION DEFINITION SEE LANE DESCRIPTION CHART ABOVE

* QUANTITIES ARE INCLUDED IN THE ROADWAY QUANTITIES SUMMARY TABLE ON SHEET Q-1

SUMMARY OF QUANTITIES
Q-2

STATE OF CALIFORNIA - DEPARTMENT OF TRANSPORTATION
Caltrans® DESIGN
FUNCTIONAL SUPERVISOR: MIKE LIM
CALCULATED-DESIGNED BY: MAJID MONFAREDIAN
CHECKED BY: SCOTT FRIESEN
REVISED BY
DATE REVISED

LAST REVISION 05-11-10 | DATE PLOTTED => $DATE | TIME PLOTTED => $TIME

Dist	COUNTY	ROUTE	POST MILES TOTAL PROJECT	SHEET No.	TOTAL SHEETS
06	Tul	216	2.9/11.7	9	14

REGISTERED CIVIL ENGINEER 04-10-10 DATE

5-17-10
PLANS APPROVAL DATE

REGISTERED PROFESSIONAL ENGINEER MAJID MONFAREDIAN No. 65517 Exp. 9/30/11 CIVIL STATE OF CALIFORNIA

THE STATE OF CALIFORNIA OR ITS OFFICERS OR AGENTS SHALL NOT BE RESPONSIBLE FOR THE ACCURACY OR COMPLETENESS OF SCANNED COPIES OF THIS PLAN SHEET.

HOT MIX ASPHALT QUANTITIES (PRIVATE AND COMMERCIAL PAVED DRIVEWAYS)

PAVED DRIVEWAYS WITH ACCESS TO ROUTE 216			TOTAL APPROACH AREA (N)	HOT MIX ASPHALT (TYPE A)	TACK COAT
PM	DESCRIPTION	SIDE	SQYD	*TON	*TON
4.874	PRIVATE DRIVEWAY	EAST	41	2.1	0.008
4.930	PRIVATE DRIVEWAY	EAST	24	1.2	0.004
4.993	PRIVATE DRIVEWAY	EAST	40	2.0	0.007
5.300	PRIVATE DRIVEWAY	EAST	43	2.2	0.008
5.765	PRIVATE DRIVEWAY	EAST	33	1.7	0.006
5.852	PRIVATE DRIVEWAY	EAST	38	1.9	0.007
6.637	PRIVATE DRIVEWAY	EAST	29	1.5	0.005
3.059	PRIVATE DRIVEWAY	WEST	37	1.9	0.007
3.089	PRIVATE DRIVEWAY	WEST	40	2.0	0.007
3.285	PRIVATE DRIVEWAY	WEST	37	1.9	0.007
3.918	PRIVATE DRIVEWAY	WEST	48	2.4	0.009
3.939	PARK EXIT	WEST	57	2.9	0.010
3.972	PARK ENTRANCE	WEST	67	3.4	0.012
4.748	PRIVATE DRIVEWAY	WEST	23	1.2	0.004
5.152	PRIVATE DRIVEWAY	WEST	33	1.7	0.006
5.225	PRIVATE DRIVEWAY	WEST	36	1.8	0.007
5.267	PRIVATE DRIVEWAY	WEST	61	3.1	0.011
5.292	PRIVATE DRIVEWAY	WEST	34	1.7	0.006
5.306	PRIVATE DRIVEWAY	WEST	42	2.1	0.008
5.367	PRIVATE DRIVEWAY	WEST	27	1.4	0.005
5.684	PRIVATE DRIVEWAY	WEST	31	1.6	0.006
5.709	PRIVATE DRIVEWAY	WEST	28	1.4	0.005
5.728	COMMERCIAL DRIVEWAY	WEST	47	2.4	0.009
5.748	COMMERCIAL DRIVEWAY	WEST	60	3.0	0.011
5.786	PRIVATE DRIVEWAY	WEST	47	2.4	0.009
5.805	PRIVATE DRIVEWAY	WEST	44	2.3	0.008
5.865	PRIVATE DRIVEWAY	WEST	29	1.5	0.005
5.907	PRIVATE DRIVEWAY	WEST	59	3.0	0.011
5.942	PRIVATE DRIVEWAY	WEST	39	2.0	0.007
6.077	PRIVATE DRIVEWAY	WEST	42	2.1	0.008
6.195	PRIVATE DRIVEWAY	WEST	46	2.3	0.008
6.206	PRIVATE DRIVEWAY	WEST	26	1.3	0.005
6.220	PRIVATE DRIVEWAY	WEST	39	2.0	0.007
8.785	PRIVATE DRIVEWAY	WEST	61	3.1	0.011
10.151	PRIVATE DRIVEWAY	WEST	44	2.3	0.008
10.593	PRIVATE DRIVEWAY	WEST	36	1.8	0.007
SUBTOTAL				74.6	0.269

(N) NOT A SEPARATE PAY ITEM, FOR INFORMATION ONLY.

* QUANTITIES ARE INCLUDED IN THE ROADWAY QUANTITIES SUMMARY TABLE ON SHEET Q-1

COLD PLANE AC PAVEMENT AND RUBBERIZED HOT MIX ASPHALT QUANTITIES (BEYOND Shld AREA, FROM ES TO FL)

PAVED AREAS BEYOND SHOULDER						COLD PLANE AC Pvmt	RUBBERIZED HOT MIX ASPHALT (GAP GRADED)	TACK COAT
POST MILE		LENGTH	Avg WIDTH		DIRECTION			
FROM	TO	LF	LF	SHEET		*SQYD	*TON	*TON
4.773	4.782	47.5	23	X-2	EB & WB	121.4	12.3	0.022
4.842	4.851	47.5	23	X-2	EB & WB	121.4	12.3	0.022
6.507	6.541	110.9	12	X-1	WB	239.4	24.2	0.044
6.587	6.630	396.0	12	X-1	WB	302.7	30.7	0.056
6.630	6.684	285.1	12	X-1	WB	380.2	38.5	0.070
6.642	6.716	390.7	19	X-2	EB	824.9	83.5	0.152
6.684	6.719	137.3	12	X-1	WB	246.4	24.9	0.045
6.850	6.902	274.6	12	X-1	WB	366.1	37.1	0.067
6.950	7.021	374.9	15	X-2	WB	624.8	63.3	0.115
SUBTOTAL						3,227.3	326.8	0.593

COLD PLANE AC PAVEMENT AND RUBBERIZED HOT MIX ASPHALT QUANTITIES (TYPICAL LONGITUDINAL TRANSITION)

LONGITUDINAL CONFORM ROUTE 216					COLD PLANE AC Pvmt	RUBBERIZED HOT MIX ASPHALT (GAP GRADED)	TACK COAT
POST MILE		LENGTH	Avg WIDTH	DESCRIPTION			
FROM	TO	LF	LF		*SQYD	*TON	*TON
2.930	2.939	50.0	24	CONFORM TO ROUTE 216	133.3	13.5	0.025
4.773	4.782	50.0	55	CONFORM TO Br APPROACH SLAB	305.6	30.9	0.056
4.842	4.851	50.0	55	CONFORM TO Br APPROACH SLAB	305.6	30.9	0.056
6.919	6.929	50.0	55	CONFORM TO ROUTE 216, 25' FROM CENTER LINE OF RR TRACKS	305.6	30.9	0.056
6.938	6.948	50.0	55	CONFORM TO ROUTE 216, 25' FROM CENTER LINE OF RR TRACKS	305.6	30.9	0.056
6.969	6.978	50.0	130	CONFORM TO Ave 328	722.2	73.1	0.133
11.721	11.734	50.0	50	CONFORM TO Ave 344	277.8	28.1	0.051
SUBTOTAL					2,355.7	238.3	0.433

SUMMARY OF QUANTITIES
Q-3

STATE OF CALIFORNIA - DEPARTMENT OF TRANSPORTATION
Caltrans®
DESIGN
FUNCTIONAL SUPERVISOR: MIKE LIM
CALCULATED-DESIGNED BY: MAJID MONFAREDIAN
CHECKED BY: SCOTT FRIESEN
REVISED BY
DATE REVISED

LAST REVISION 05-11-10
DATE PLOTTED => $DATE
TIME PLOTTED => $TIME

Dist	COUNTY	ROUTE	POST MILES TOTAL PROJECT	SHEET No.	TOTAL SHEETS
06	Tul	216	2.9/11.7	10	14

REGISTERED CIVIL ENGINEER 04-10-10 DATE

5-17-10
PLANS APPROVAL DATE

REGISTERED PROFESSIONAL ENGINEER MAJID MONFAREDIAN No. 65517 Exp. 9/30/11 CIVIL STATE OF CALIFORNIA

THE STATE OF CALIFORNIA OR ITS OFFICERS OR AGENTS SHALL NOT BE RESPONSIBLE FOR THE ACCURACY OR COMPLETENESS OF SCANNED COPIES OF THIS PLAN SHEET.

COLD PLANE AC PAVEMENT AND HOT MIX ASPHALT QUANTITIES (LOCAL ROAD INTERSECTIONS)

PM	DESCRIPTION	SIDE	L1	L2	R1	R2	W	D	COLD PLANE AC Pvmt	TOTAL APPROACH AREA (N)	HOT MIX ASPHALT (TYPE A)	TACK COAT
			LF	LF	LF	LF	LF	LF	*SQYD	SQYD	*TON	*TON
3.548	ROAD 152	EAST	100	50	90	70	70	23	148	196	19.8	0.036
4.329	ROAD 158	EAST	110	90	115	70	55	40	104	422	42.8	0.078
4.565	Ave 308	EAST	60	50	40	50	26	40	49	200	20.3	0.037
4.731	ROAD 160	EAST	28	25	30	30	16	40	27	93	9.5	0.017
5.040	EL RIO DRIVE	EAST	215	380	65	67	40	58	77	940	95.2	0.173
5.960	Ave 320	EAST	250	250	50	35	26	80	51	149	15.1	0.027
7.690	ROAD 166	EAST	40	40	30	30	26	18	61	71	7.1	0.013
7.951	ROAD 168	EAST	230	230	60	50	40	100	45	975	98.7	0.179
8.536	ROAD 172	EAST	46	46	30	75	20	22	64	89	9.0	0.016
9.797	Ave 336	EAST	75	50	85	10	45	35	90	122	12.4	0.022
10.884	ROAD 188	EAST	45	25	30	55	28	20	67	89	9.0	0.016
4.323	ROAD 158	WEST	100	100	70	140	50	40	103	428	43.4	0.079
4.540	Ave 309	WEST	70	90	15	65	50	55	80	352	35.6	0.065
4.855	MILLS ROAD	WEST	65	160	40	75	28	42	59	292	29.6	0.054
5.972	Ave 320	WEST	345	345	60	70	24	80	42	1 064	107.7	0.196
6.421	JASMINE Ave	WEST	200	200	75	70	75	34	161	711	72.0	0.131
6.533	BEECHWOOD Ave	WEST	50	75	30	40	60	18	125	161	16.3	0.030
6.626	CITRUS Ave	WEST	55	60	45	55	55	18	114	157	15.9	0.029
6.688	EDMISTON Ave	WEST	55	55	30	40	50	18	101	130	13.2	0.024
6.840	Ave 327	WEST	110	80	135	80	50	25	123	273	27.7	0.050
6.900	ROASALINE Ave	WEST	70	36	60	0	60	26	108	210	21.3	0.039
6.910	IVANHOE DRIVE	WEST	12	60	0	14	63	40	94	166	16.8	0.031
7.468	ROAD 164	WEST	35	35	30	30	26	15	70	70	7.1	0.013
7.959	ROAD 168	WEST	200	250	77	0	34	110	60	1 156	117.0	0.213
8.544	ROAD 172	WEST	38	80	40	85	32	20	87	118	12.0	0.022
9.805	Ave 336	WEST	75	75	30	65	70	32	146	186	18.8	0.034
10.018	ROAD 182	WEST	60	40	50	25	36	20	81	109	11.0	0.020
10.308	ROAD 184	WEST	50	45	70	18	30	20	71	94	9.5	0.017
10.892	ROAD 188	WEST	40	40	50	15	26	20	59	79	8.0	0.015
11.479	ROAD 192	WEST	35	55	50	45	20	20	61	85	8.6	0.016
SUBTOTAL									2,528		930.4	1.692

(N) NOT A SEPARATE PAY ITEM, FOR INFORMATION ONLY.

* QUANTITIES ARE INCLUDED IN THE ROADWAY QUANTITIES SUMARY TABLE ON SHEET Q-1

ROADWAY QUANTITIES (ON TRAVEL WAY AND SHOULDERS OF ROUTE 216)

PM LOCATION (ROUTE 216)		TOTAL SEGMENT LENGTH (N)	TOTAL ROADWAY WIDTH (N)	AREA (N)	RUBBERIZED HOT MIX ASPHALT (GAP GRADED)	IMPORTED MATERIAL (Shld BACKING)	TACK COAT
FROM	TO	LF	LF	SQYD	*TON	*TON	*TON
2.939	3.853	4,825.9	24	12,869.1	1,303.0	146.6	2.369
3.853	4.773	4,857.6	40	21,589.3	2,185.9	147.5	3.974
4.851	6.684	9,678.2	32	34,411.5	3,484.2	294.0	6.334
6.684	6.902	1,151.0	44	5,627.3	569.8	35.0	1.036
6.902	6.919	89.8	48	478.7	48.5	2.7	0.088
6.948	6.950	10.6	48	56.3	5.7	0.3	0.010
6.950	6.969	100.3	28	312.9	31.6	3.1	0.057
6.978	7.021	227.0	28	706.3	71.5	6.9	0.130
7.021	7.950	4,905.1	32	17,440.4	1,765.8	149.0	3.210
7.950	11.721	19,910.9	24	53,095.7	5,375.9	604.8	9.773
SUBTOTAL					14,841.9	1,389.9	26.981

SUMMARY OF QUANTITIES
Q-4

STATE OF CALIFORNIA - DEPARTMENT OF TRANSPORTATION
Caltrans DESIGN

FUNCTIONAL SUPERVISOR: MIKE LIM
CALCULATED-DESIGNED BY: MAJID MONFAREDIAN
CHECKED BY: SCOTT FRIESEN
REVISED BY
DATE REVISED

LAST REVISION 05-11-10 | DATE PLOTTED => $DATE | TIME PLOTTED => $TIME

DIST	COUNTY	ROUTE	POST MILES TOTAL PROJECT	SHEET NO.	TOTAL SHEETS
06	Tul	216	2.9/11.7	11	14

REGISTERED CIVIL ENGINEER

June 6, 2008
PLANS APPROVAL DATE

REGISTERED PROFESSIONAL ENGINEER Donald E. Howe No. C46402 Exp. 3-31-09 CIVIL STATE OF CALIFORNIA

The State of California or its officers or agents shall not be responsible for the accuracy or completeness of electronic copies of this plan sheet.

To accompany plans dated 5-17-10

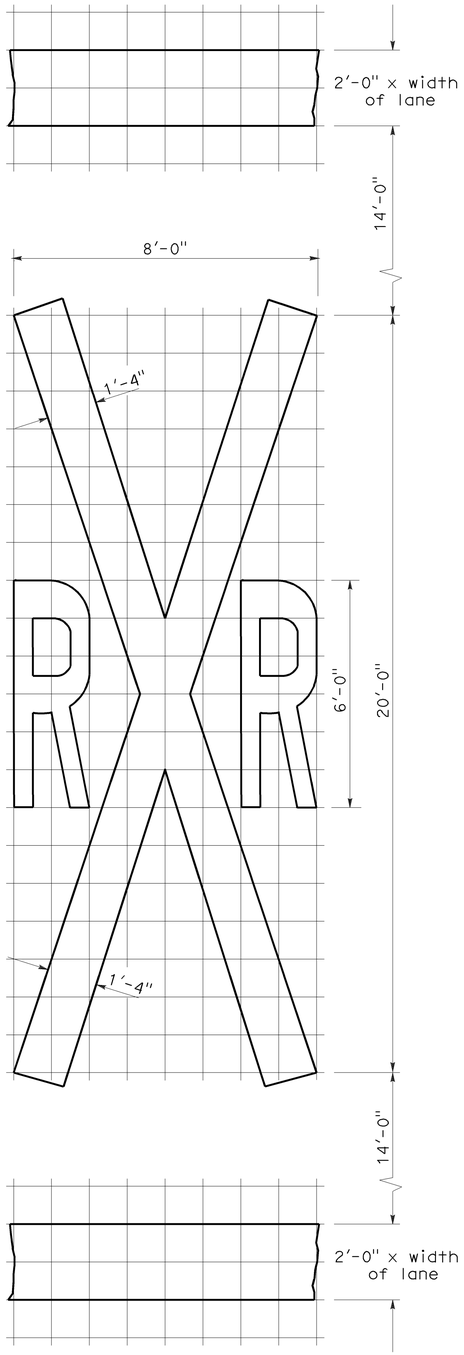

RAILROAD CROSSING SYMBOL

✳70 sq ft DOES NOT INCLUDE THE 2'-0" x VARIABLE WIDTH TRANSVERSE LINES.

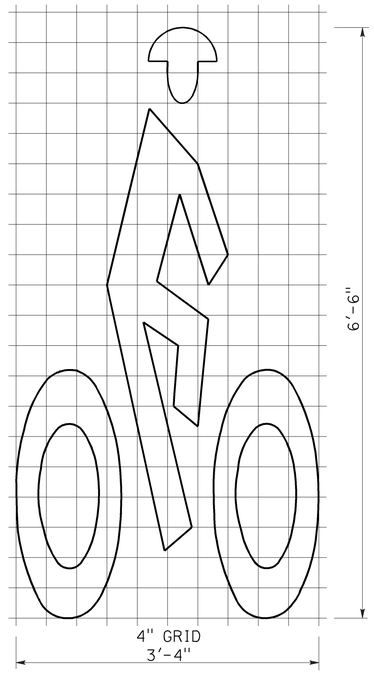

BIKE LANE SYMBOL

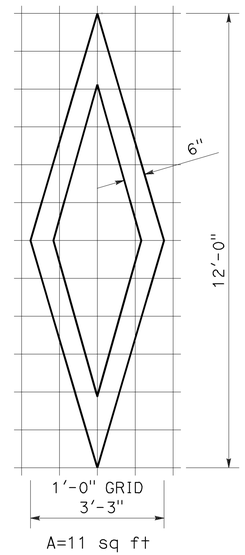

DIAMOND SYMBOL

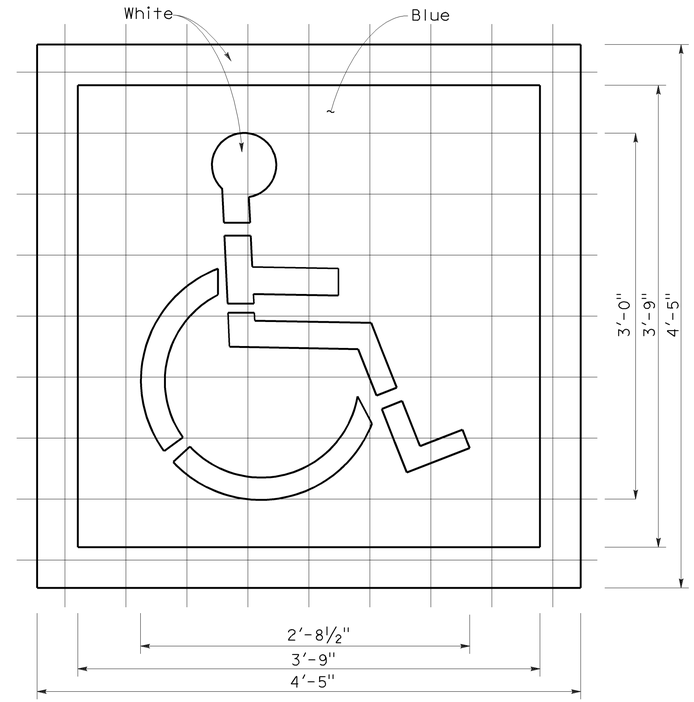

INTERNATIONAL SYMBOL OF ACCESSIBILITY MARKING

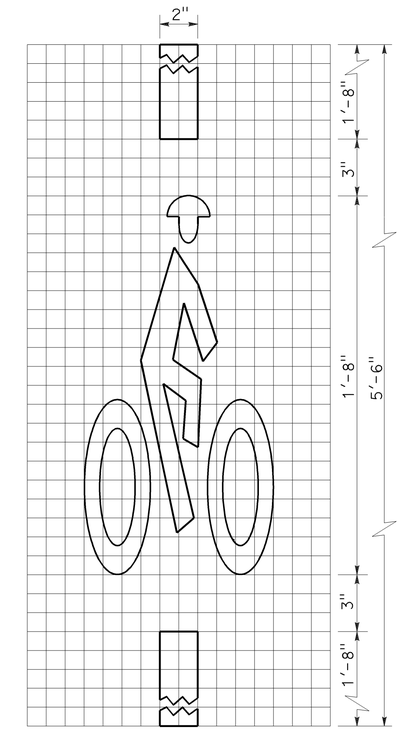

BICYCLE LOOP DETECTOR SYMBOL

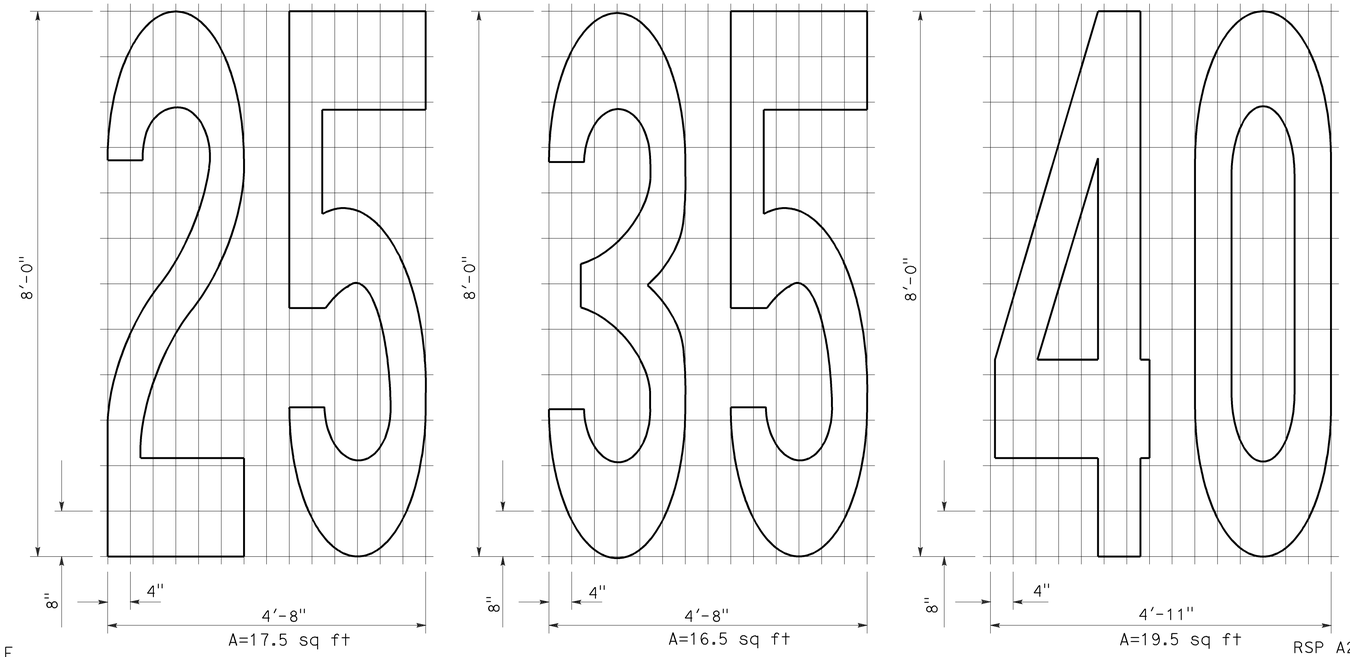

NUMERALS

NOTE:

1. Minor variations in dimensions may be accepted by the Engineer.

STATE OF CALIFORNIA
DEPARTMENT OF TRANSPORTATION

PAVEMENT MARKINGS SYMBOLS AND NUMERALS

NO SCALE

RSP A24C DATED JUNE 6, 2008 SUPERSEDES STANDARD PLAN A24C DATED MAY 1, 2006 - PAGE 11 OF THE STANDARD PLANS BOOK DATED MAY 2006.

REVISED STANDARD PLAN RSP A24C

2006 REVISED STANDARD PLAN RSP A24C

5-27-08

DIST	COUNTY	ROUTE	POST MILES TOTAL PROJECT	SHEET NO.	TOTAL SHEETS
06	Tul	216	2.9/11.7	12	14

Randell D. Hiatt
REGISTERED CIVIL ENGINEER

June 6, 2008
PLANS APPROVAL DATE

REGISTERED PROFESSIONAL ENGINEER
Randell D. Hiatt
No. C50200
Exp. 6-30-09
CIVIL
STATE OF CALIFORNIA

The State of California or its officers or agents shall not be responsible for the accuracy or completeness of electronic copies of this plan sheet.

To accompany plans dated 5-17-10

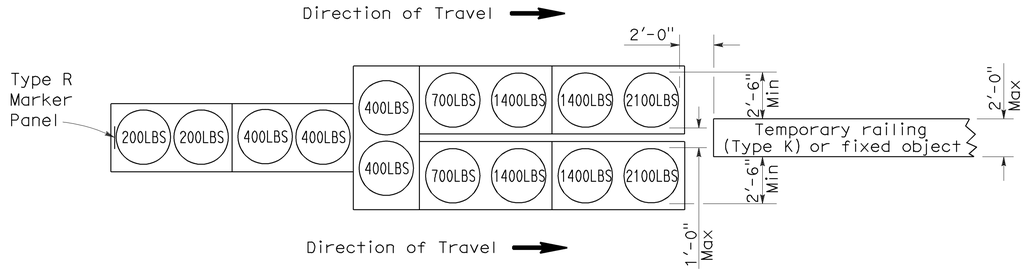

ARRAY 'TU14'

Approach speed 45 mph or more

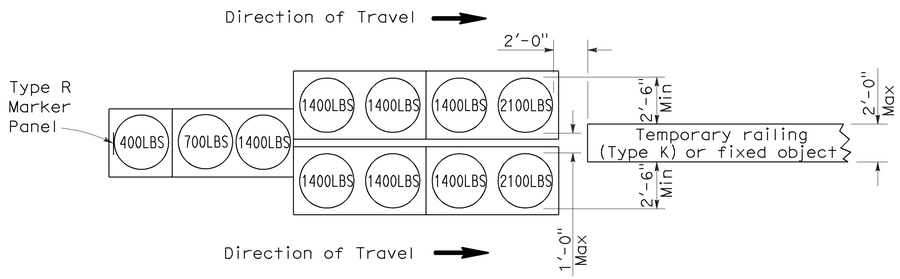

ARRAY 'TU11'

Approach speed less than 45 mph

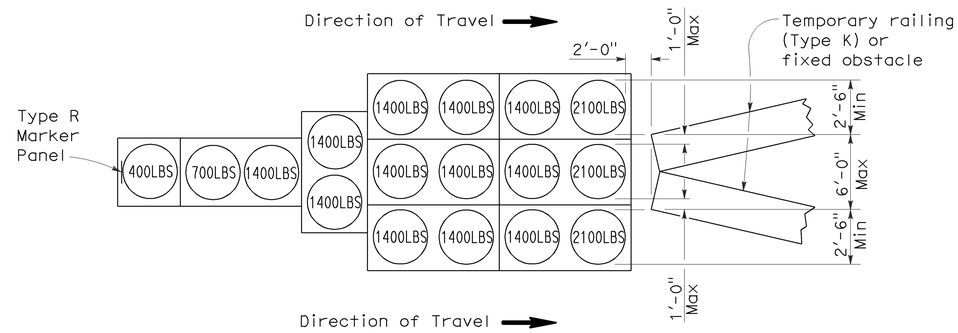

ARRAY 'TU17'

Approach speed less than 45 mph

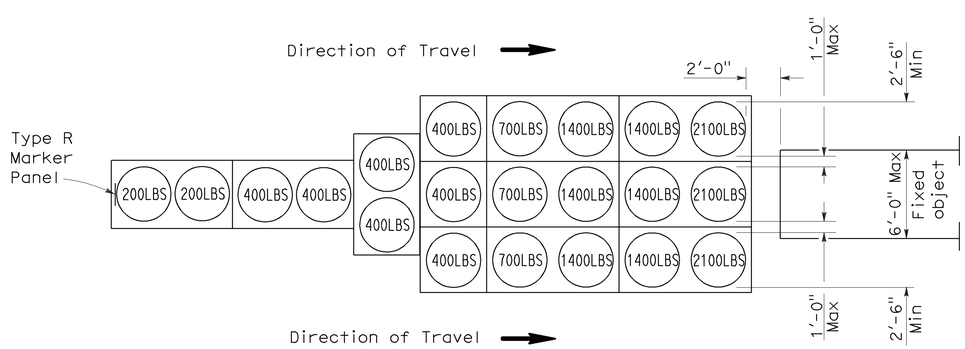

ARRAY 'TU21'

Approach speed 45 mph or more

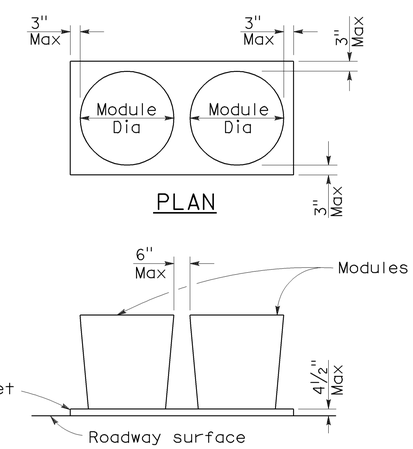

CRASH CUSHION PALLET DETAIL

See Note 7

NOTES:

1. (XXX) Indicates sand filled module location and weight of sand in pounds for each module. Module spacing is based on the greater diameter of the module.
2. All sand weights are nominal.
3. Temporary crash cushion arrays shall not encroach on the traveled way.
4. Place the top of Type R marker panel 1" below the module lid.
5. Refer to Standard Plan A73B for marker details.
6. Approach speeds indicated conform to NCHRP 350 Report criteria.
7. Use of pallets is optional.

STATE OF CALIFORNIA
DEPARTMENT OF TRANSPORTATION

TEMPORARY CRASH CUSHION, SAND FILLED (UNIDIRECTIONAL)

NO SCALE

RSP T1A DATED JUNE 6, 2008 SUPERSEDES STANDARD PLAN T1A
DATED MAY 1, 2006 - PAGE 211 OF THE STANDARD PLANS BOOK DATED MAY 2006.

REVISED STANDARD PLAN RSP T1A

2006 REVISED STANDARD PLAN RSP T1A

5-15-08

DIST	COUNTY	ROUTE	POST MILES TOTAL PROJECT	SHEET NO.	TOTAL SHEETS
06	Tul	216	2.9/11.7	13	14

Randell D. Hiatt
REGISTERED CIVIL ENGINEER

June 6, 2008
PLANS APPROVAL DATE

REGISTERED PROFESSIONAL ENGINEER
Randell D. Hiatt
No. C50200
Exp. 6-30-09
CIVIL
STATE OF CALIFORNIA

The State of California or its officers or agents shall not be responsible for the accuracy or completeness of electronic copies of this plan sheet.

To accompany plans dated 5-17-10

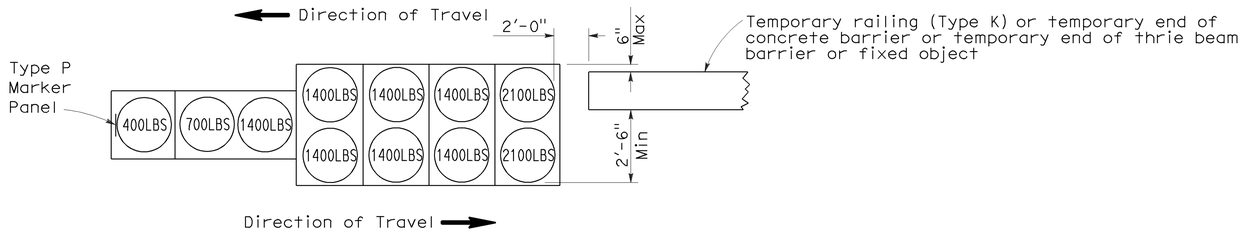

ARRAY 'TB11'

Approach speed less than 45 mph

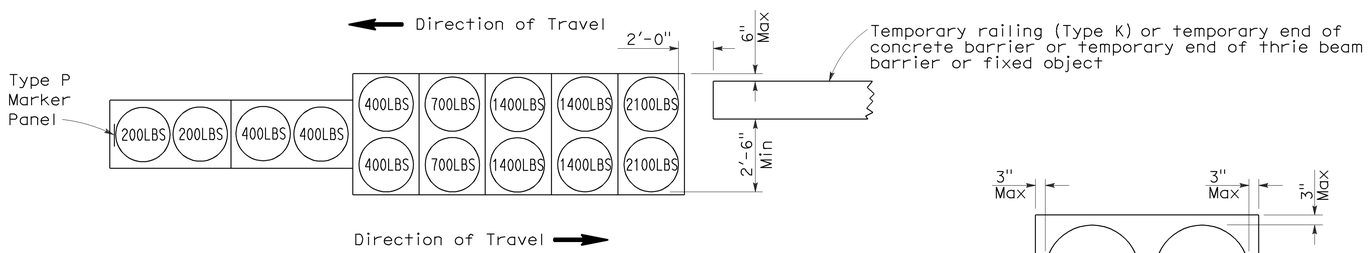

ARRAY 'TB14'

Approach speed 45 mph or more

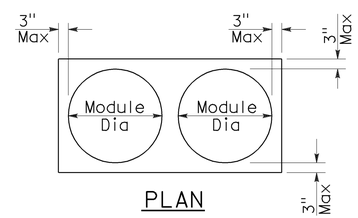

PLAN

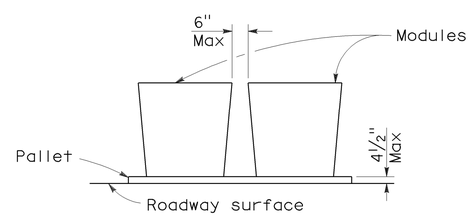

ELEVATION

CRASH CUSHION PALLET DETAIL

See Note 7

NOTES:

1. (XXX) Indicates sand filled module location and weight of sand in pounds for each module. Module spacing is based on the greater diameter of the module.
2. All sand weights are nominal.
3. Temporary crash cushion arrays shall not encroach on the traveled way.
4. Place the Type P marker panel so that the bottom of the panel rests upon the pallet.
5. Refer to Standard Plan A73B for marker details.
6. Approach speeds indicated conform to NCHRP 350 Report criteria.
7. Use of pallets is optional.

STATE OF CALIFORNIA
DEPARTMENT OF TRANSPORTATION

TEMPORARY CRASH CUSHION, SAND FILLED (BIDIRECTIONAL)

NO SCALE

RSP T1B DATED JUNE 6, 2008 SUPERSEDES STANDARD PLAN T1B
DATED MAY 1, 2006 - PAGE 212 OF THE STANDARD PLANS BOOK DATED MAY 2006.

REVISED STANDARD PLAN RSP T1B

2006 REVISED STANDARD PLAN RSP T1B

5-15-08

DIST	COUNTY	ROUTE	POST MILES TOTAL PROJECT	SHEET NO.	TOTAL SHEETS
06	Tul	216	2.9/11.7	14	14

Randell D. Hiatt
REGISTERED CIVIL ENGINEER

June 6, 2008
PLANS APPROVAL DATE

REGISTERED PROFESSIONAL ENGINEER
Randell D. Hiatt
No. C50200
Exp. 6-30-09
CIVIL
STATE OF CALIFORNIA

The State of California or its officers or agents shall not be responsible for the accuracy or completeness of electronic copies of this plan sheet.

To accompany plans dated 5-17-10

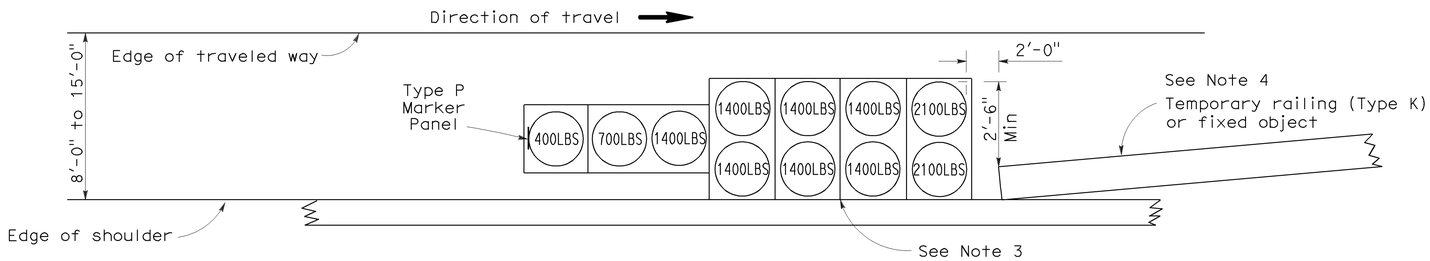

ARRAY 'TS11'

Approach speed less than 45 mph
See Note 9

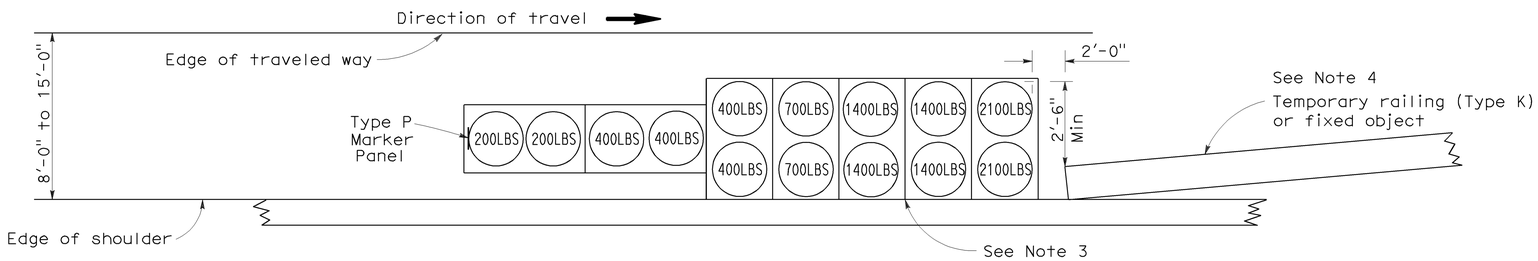

ARRAY 'TS14'

Approach speed 45 mph or more
See Note 9

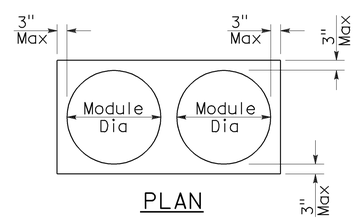

PLAN

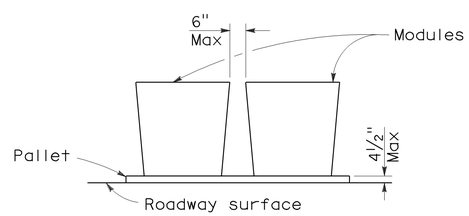

ELEVATION

CRASH CUSHION PALLET DETAIL

See Note 11

NOTES:

1. (XXX) Indicates sand filled module location and weight of sand in pounds for each module. Module spacing is based on the greater diameter of the module.
2. All sand weights are nominal.
3. The temporary crash cushion arrays shown on this plan shall be used only in locations where there will be traffic on one side of the temporary crash cushion array.
4. If the fixed object or approach end of the temporary railing is less than 15'-0" from the edge of traveled way, a temporary crash cushion is required in a construction or work zone.
5. Temporary crash cushion arrays shall not encroach on the traveled way.
6. Arrays for median shoulders shall conform to details shown on this plan for outside shoulders.
7. Place the Type P marker panel so that the bottom of the panel rests upon the pallet and faces traffic.
8. Refer to Standard Plan A73B for marker details.
9. For shoulder widths less than 8'-0", appropriate approved crash cushion protection, other than sand filled modules, shall be provided at fixed objects and at approach ends of temporary railing. The specific type of crash cushion shall be as shown on the project plans or as specified in the Special Provisions, or if not shown on the project plans or specified in the Special Provisions, shall be as approved by the Engineer.
10. Approach speeds indicated conform to NCHRP 350 Report criteria.
11. Use of pallets is optional.

STATE OF CALIFORNIA
DEPARTMENT OF TRANSPORTATION

TEMPORARY CRASH CUSHION, SAND FILLED (SHOULDER INSTALLATIONS)

NO SCALE

RSP T2 DATED JUNE 6, 2008 SUPERSEDES STANDARD PLAN T2
DATED MAY 1, 2006 - PAGE 213 OF THE STANDARD PLANS BOOK DATED MAY 2006.

REVISED STANDARD PLAN RSP T2

2006 REVISED STANDARD PLAN RSP T2

5-15-08