Dist	COUNTY	ROUTE	POST MILES TOTAL PROJECT	SHEET No.	TOTAL SHEETS
06	Fre	99	26.7/30.6	1	242

INDEX OF PLANS

SHEET No.	DESCRIPTION
1	TITLE AND LOCATION MAP
2-6	TYPICAL CROSS SECTIONS
7-21	LAYOUTS
22-35	PROFILES
36-39	SUPERELEVATION DIAGRAMS
40-45	CONSTRUCTION DETAILS
46-75	DRAINAGE PLANS, PROFILES, DETAILS AND QUANTITIES
76-90	UTILITY PLANS
91	CONSTRUCTION AREA SIGNS
92-110	STAGE CONSTRUCTION, TRAFFIC HANDLING AND QUANTITIES
111	DETOUR PLAN
112-128	PAVEMENT DELINEATION PLANS, QUANTITIES AND DETAILS
129-138	SIGN, OVERHEAD SIGN DETAILS AND QUANTITIES
139-143	SUMMARY OF QUANTITIES
144-172	ELECTRICAL PLANS
173-207	REVISED AND NEW STANDARD PLANS

STRUCTURE PLANS

208-216	GRANTLAND Ave CU Br No. 42-0127
217-229	HERNDON CANAL BRIDGE Br No. 42-0129
230-242	BIOLA JUNCTION OH Br No. 42-0131

THE STANDARD PLANS LIST APPLICABLE TO THIS CONTRACT IS INCLUDED IN THE NOTICE TO BIDDERS AND SPECIAL PROVISIONS BOOK.

STATE OF CALIFORNIA

DEPARTMENT OF TRANSPORTATION

PROJECT PLANS FOR CONSTRUCTION ON

STATE HIGHWAY

IN FRESNO COUNTY
IN FRESNO
FROM 0.2 MILE NORTH OF ASHLAN AVENUE OVERCROSSING TO 0.1 MILE NORTH OF GRANTLAND AVENUE UNDERCROSSING

TO BE SUPPLEMENTED BY STANDARD PLANS DATED MAY 2006

LOCATION MAP

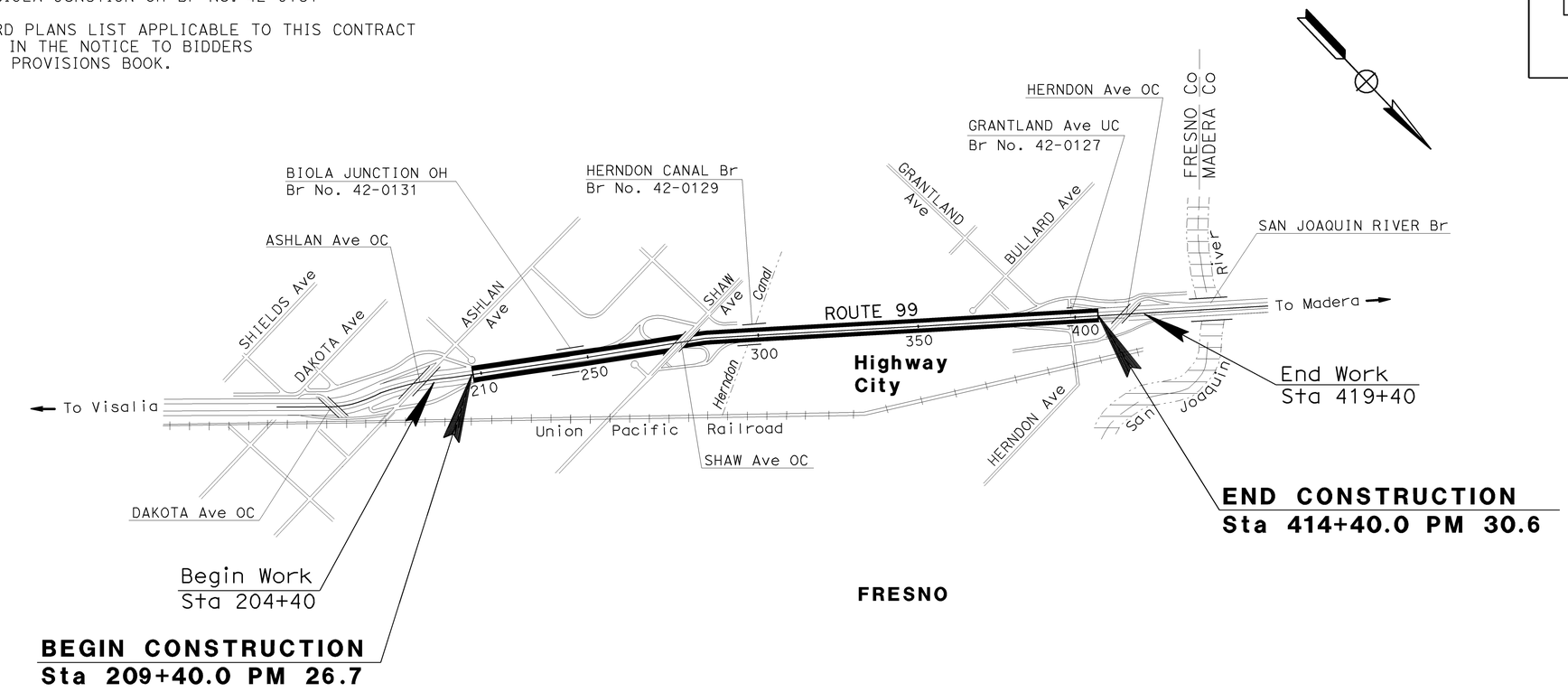

NO SCALE

PROJECT MANAGER: JIM BANE

DESIGN ENGINEER: JUN XU

05/29/09
PROJECT ENGINEER — DATE
REGISTERED CIVIL ENGINEER

REGISTERED PROFESSIONAL ENGINEER
RODRIGO M. CRUZ
No. 57918
Exp. 06/30/10
CIVIL
STATE OF CALIFORNIA

September 28, 2009
PLANS APPROVAL DATE

THE STATE OF CALIFORNIA OR ITS OFFICERS OR AGENTS SHALL NOT BE RESPONSIBLE FOR THE ACCURACY OR COMPLETENESS OF SCANNED COPIES OF THIS PLAN SHEET.

THE CONTRACTOR SHALL POSSESS THE CLASS (OR CLASSES) OF LICENSE AS SPECIFIED IN THE "NOTICE TO BIDDERS."

DATE PLOTTED => 28-SEP-2009
TIME PLOTTED => 13:47
LAST REVISION 06-08-09

CONTRACT No. 06-442614

Dist	COUNTY	ROUTE	POST MILES TOTAL PROJECT	SHEET No.	TOTAL SHEETS
06	Fre	99	26.7/30.6	2	242

05-29-09
REGISTERED CIVIL ENGINEER DATE

9-28-09
PLANS APPROVAL DATE

REGISTERED PROFESSIONAL ENGINEER
RODRIGO M. CRUZ
No. 57918
Exp 06/30/10
CIVIL
STATE OF CALIFORNIA

THE STATE OF CALIFORNIA OR ITS OFFICERS OR AGENTS SHALL NOT BE RESPONSIBLE FOR THE ACCURACY OR COMPLETENESS OF SCANNED COPIES OF THIS PLAN SHEET.

NOTES:

1. DIMENSIONS OF THE PAVEMENT STRUCTURES (STRUCTURAL SECTIONS) ARE SUBJECT TO TOLERANCES IN THE STANDARD SPECIFICATIONS.
2. SUPERELEVATION AS SHOWN OR AS DIRECTED BY THE ENGINEER.
3. FOR LOCATION AND TYPE OF HMA DIKE, SEE LAYOUT SHEETS AND SUMMARY OF QUANTITIES SHEETS.
4. FOR LOCATION OF REMOVE AC DIKE, SEE LAYOUT SHEETS AND SUMMARY OF QUANTITIES SHEETS.
5. SEE STRUCTURE PLANS FOR APPROACH SLAB RECONSTRUCTION LIMITS.
6. FOR REMOVE FENCE AND FENCE LOCATION, SEE LAYOUT SHEETS AND SUMMARY OF QUANTITIES SHEETS.
7. FOR DITCH MODIFICATION LOCATION, SEE DRAINAGE PLAN SHEETS.
8. FOR SHOULDER BACKING LOCATIONS, SEE SUMMARY OF QUANTITIES SHEETS.
9. FOR SHOULDER RECONSTRUCTION LOCATIONS, SEE LAYOUT SHEETS AND SUMMARY OF QUANTITIES SHEETS.
10. FOR COMPLETE RIGHT OF WAY AND ACCURATE ACCESS DATA, SEE RIGHT OF WAY RECORD MAPS AT DISTRICT OFFICE.

STRUCTURAL SECTIONS

A: 0.70′ HMA
0.90′ Cl 2 AB

B: Exist
0.60′ AC
0.35′ AS

C: CROSS SLOPE CORRECTION:
LANE 0.25′-0.40′ HMA
Shld 0.25′ HMA

D: Exist
0.25′ AC
PRF *
0.10′ AC
0.75′ PCC
0.70′ CTB
0.60′ AS

E: 0.60′ HMA
0.70′ Cl 2 AB

F: Exist Pvmnt
0.15′-0.60′ AC
0.35′ AB

G: Exist
0.08′ RUBBERIZED AC (TYPE O)
0.25′ AC
PRF *
0.10′ AC
0.66′-0.75′ PCC
0.30′ CTB
0.50′ SM

H: 1.05′ JPCP
0.35′ LCB

I: Exist
0.35′ AC
0.35′ Cl 2 AB

J: Exist
0.60′ AC
0.70′ CTB

K: Exist
0.15′-0.60′ AC
0.35′ UB

L: 0.20′ HMA

* DENOTES THAT THE EXISTING PRF EXTENDS 1′ INTO SHOUDER STRUCTURAL SECTION.

DESIGN DESIGNATIONS

DESCRIPTION	2012-2022	2012-2032
2012 ADT	86,000	86,000
2022 ADT	128,000	-
2032 ADT	-	191,000
2022 DHV	11,500	-
2032 DHV	-	17,200
D	52 %	52 %
T	14 %	14 %
TI	14.5	16.5
ESAL	61,190,000	158,310,000
V	65 MPH	

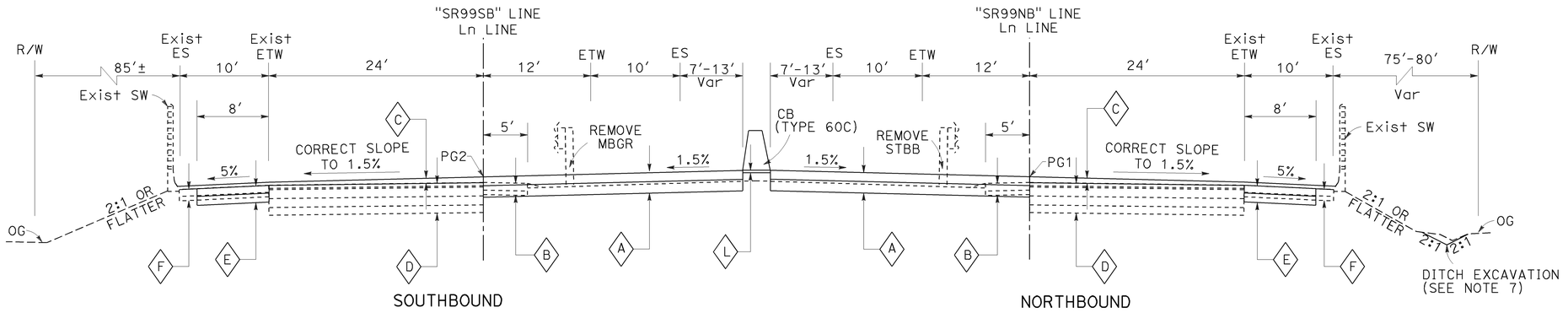

Sta 240+28.98 TO Sta 240+99.99 "SR99SB"

Sta 239+59.52 TO Sta 241+25.48 "SR99NB"

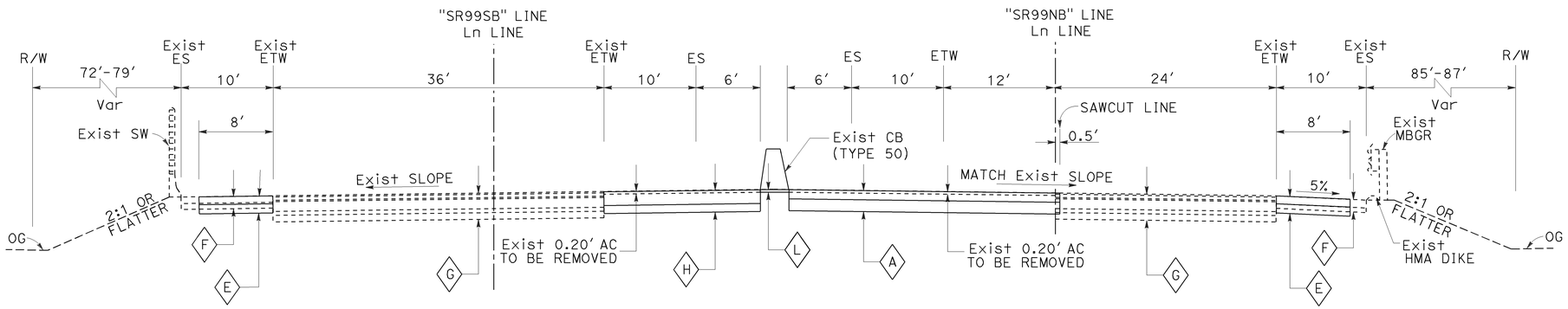

Sta 231+68.00 TO Sta 238+27.48 "SR99SB"

Sta 231+68.00 TO Sta 237+57.68 "SR99NB"

TYPICAL CROSS SECTIONS

NO SCALE

X-1

ROUTE 99

STATE OF CALIFORNIA - DEPARTMENT OF TRANSPORTATION
DESIGN
FUNCTIONAL SUPERVISOR: JUN XU
CALCULATED-DESIGNED BY: TAM LA
CHECKED BY: SUSAN GONZALEZ
REVISED BY
DATE REVISED

LAST REVISION DATE PLOTTED => 28-SEP-2009
TIME PLOTTED => 13:50

BORDER LAST REVISED 4/11/2008
RELATIVE BORDER SCALE IS IN INCHES 0 1 2 3
USERNAME => trmartin
DGN FILE => 644261ca001.dgn
CU 06249
EA 442611

Dist	COUNTY	ROUTE	POST MILES TOTAL PROJECT	SHEET No.	TOTAL SHEETS
06	Fre	99	26.7/30.6	3	242

REGISTERED CIVIL ENGINEER — DATE 05-29-09

PLANS APPROVAL DATE 9-28-09

RODRIGO M. CRUZ No. 57918 Exp 06/30/10 CIVIL — REGISTERED PROFESSIONAL ENGINEER — STATE OF CALIFORNIA

THE STATE OF CALIFORNIA OR ITS OFFICERS OR AGENTS SHALL NOT BE RESPONSIBLE FOR THE ACCURACY OR COMPLETENESS OF SCANNED COPIES OF THIS PLAN SHEET.

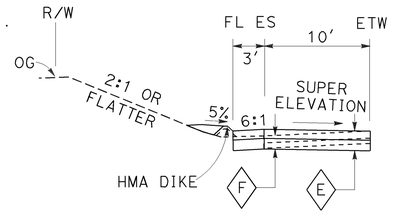

Sta 281+00.00 TO Sta 291+63.19 "SR99SB"

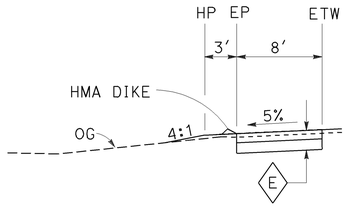

Sta 260+49.60 TO Sta 270+81.95 "SR99SB"

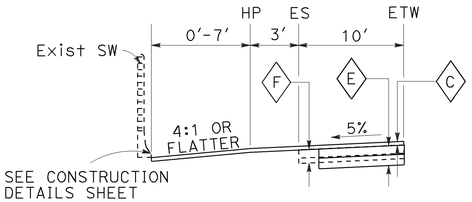

Sta 253+50.00 TO Sta 260+49.60 "SR99SB"

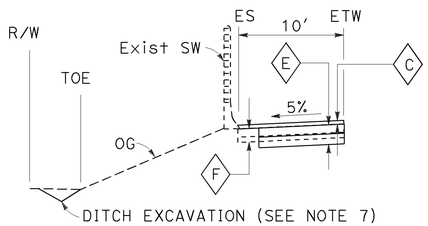

Sta 241+30.00 TO Sta 253+50.00 "SR99SB"

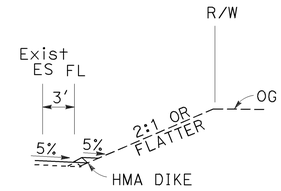

Sta 270+01.41 TO Sta 278+43.21 "SR99NB"
Sta 283+49.57 TO Sta 290+22.22 "SR99NB"

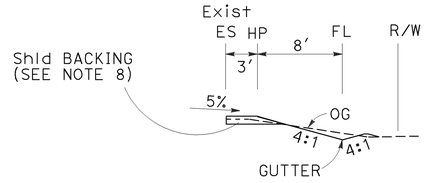

Sta 256+00.00 TO Sta 270+00.00 "SR99NB"

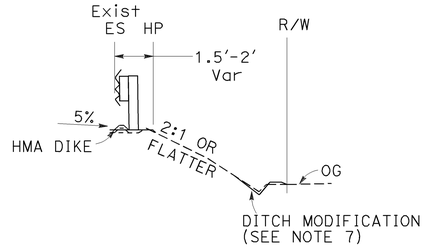

Sta 241+46.90 TO Sta 250+75.00 "SR99NB"

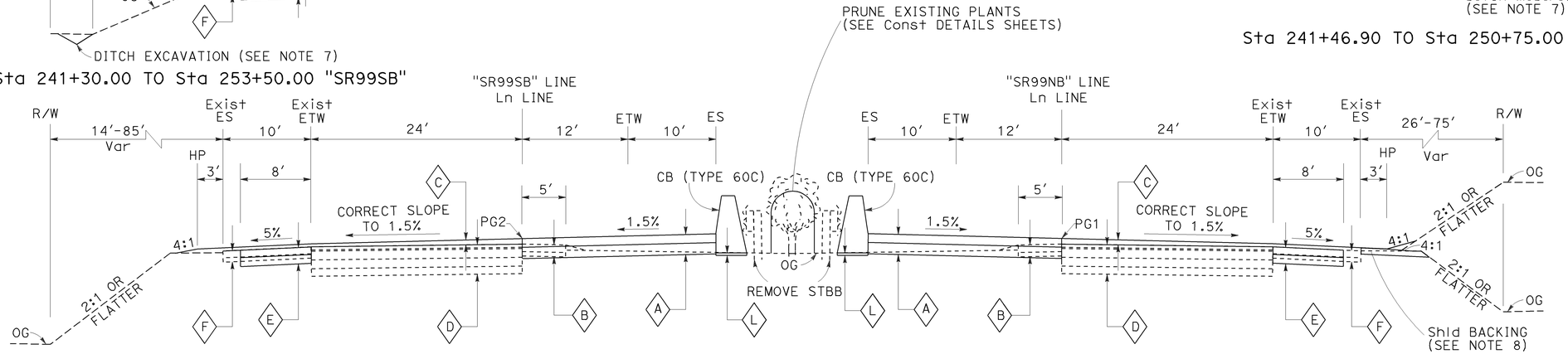

SOUTHBOUND

Sta 240+99.99 TO Sta 276+80.80 "SR99SB"
Sta 281+00.00 TO Sta 293+60.00 "SR99SB"

NORTHBOUND

Sta 241+25.48 TO Sta 278+00.00 "SR99NB"
Sta 281+00.00 TO Sta 292+50.00 "SR99NB"

TYPICAL CROSS SECTIONS

NO SCALE

X-2

ROUTE 99

STATE OF CALIFORNIA - DEPARTMENT OF TRANSPORTATION — DESIGN
CALCULATED-DESIGNED BY — TAM LA
CHECKED BY — SUSAN GONZALEZ
FUNCTIONAL SUPERVISOR — JUN XU
REVISED BY
DATE REVISED

LAST REVISION DATE PLOTTED => 28-SEP-2009
06-26-09 TIME PLOTTED => 13:50

BORDER LAST REVISED 4/11/2008 — RELATIVE BORDER SCALE IS IN INCHES (0 1 2 3) — USERNAME => trmartin — DGN FILE => 644261ca002.dgn — CU 06249 — EA 442611

Dist	COUNTY	ROUTE	POST MILES TOTAL PROJECT	SHEET No.	TOTAL SHEETS
06	Fre	99	26.7/30.6	4	242

05-29-09
REGISTERED CIVIL ENGINEER DATE

9-28-09
PLANS APPROVAL DATE

RODRIGO M. CRUZ
No. 57918
Exp 06/30/10
CIVIL
REGISTERED PROFESSIONAL ENGINEER
STATE OF CALIFORNIA

THE STATE OF CALIFORNIA OR ITS OFFICERS OR AGENTS SHALL NOT BE RESPONSIBLE FOR THE ACCURACY OR COMPLETENESS OF SCANNED COPIES OF THIS PLAN SHEET.

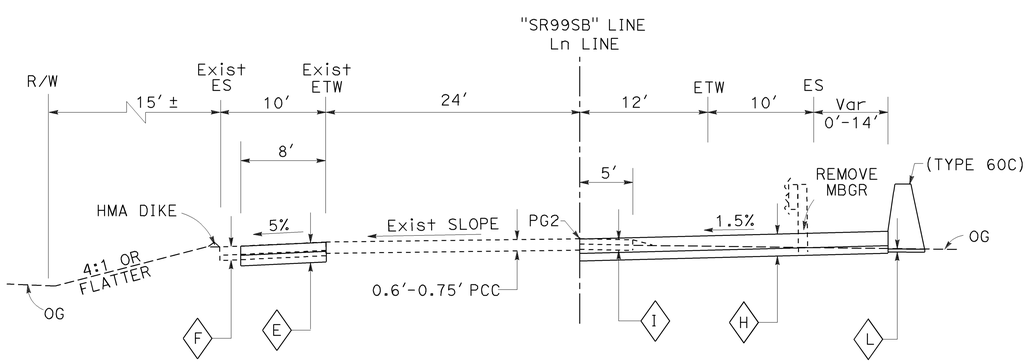

SOUTHBOUND

Sta 296+15.00 TO Sta 298+06.00 "SR99SB"

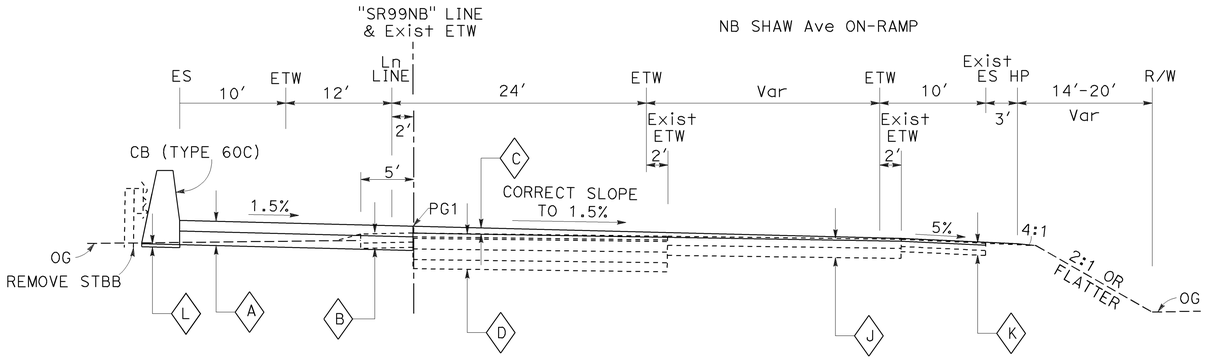

NORTHBOUND

Sta 292+50.00 TO Sta 294+00.00 "SR99NB"

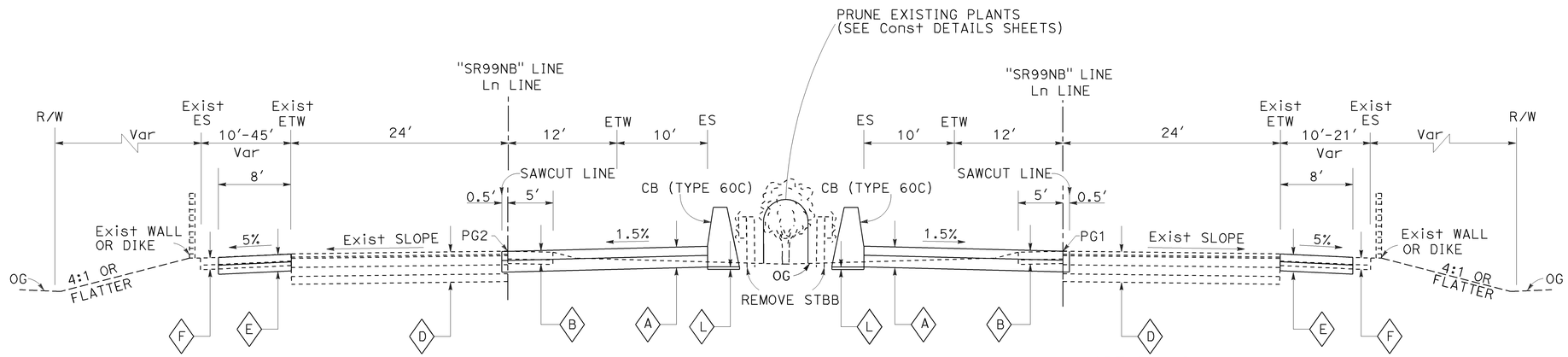

SOUTHBOUND AT SHAW Ave OC NORTHBOUND

Sta 276+80.80 TO Sta 281+00.00 "SR99SB"

Sta 278+00.00 TO Sta 281+00.00 "SR99NB"

ROUTE 99

TYPICAL CROSS SECTIONS

NO SCALE

X-3

STATE OF CALIFORNIA - DEPARTMENT OF TRANSPORTATION
DESIGN
FUNCTIONAL SUPERVISOR: JUN XU
CALCULATED-DESIGNED BY
CHECKED BY: SUSAN GONZALEZ
REVISED BY
DATE REVISED
TAM LA

BORDER LAST REVISED 4/11/2008

RELATIVE BORDER SCALE IS IN INCHES 0 1 2 3

USERNAME => trmartin
DGN FILE => 644261ca003.dgn

CU 06249

EA 442611

LAST REVISION 06-26-09
DATE PLOTTED => 28-SEP-2009
TIME PLOTTED => 13:50

Dist	COUNTY	ROUTE	POST MILES TOTAL PROJECT	SHEET No.	TOTAL SHEETS
06	Fre	99	26.7/30.6	5	242

05-29-09
REGISTERED CIVIL ENGINEER DATE

9-28-09
PLANS APPROVAL DATE

RODRIGO M. CRUZ No. 57918 Exp 06/30/10 CIVIL — REGISTERED PROFESSIONAL ENGINEER — STATE OF CALIFORNIA

THE STATE OF CALIFORNIA OR ITS OFFICERS OR AGENTS SHALL NOT BE RESPONSIBLE FOR THE ACCURACY OR COMPLETENESS OF SCANNED COPIES OF THIS PLAN SHEET.

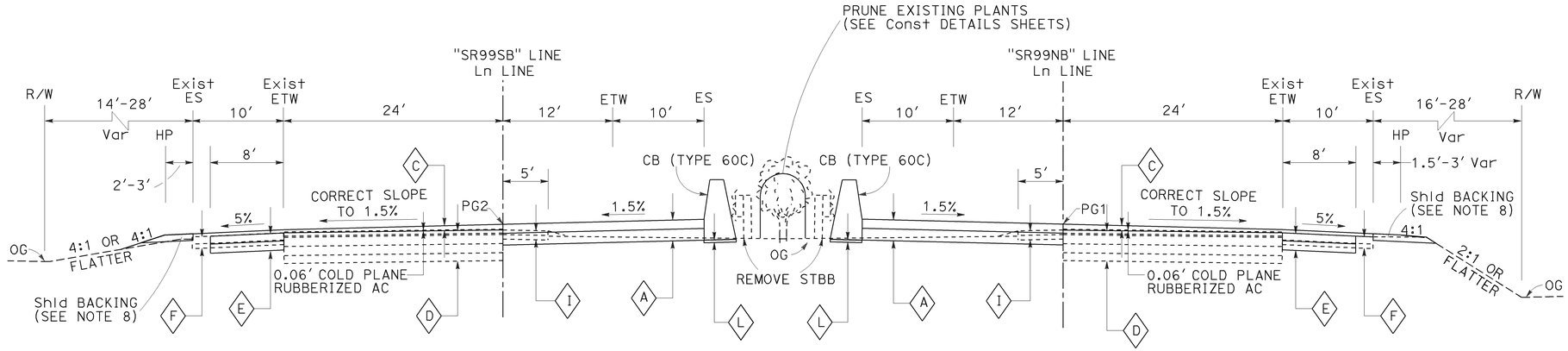

SOUTHBOUND

Sta 298+06.00 TO Sta 398+50.00 "SR99SB"

NORTHBOUND

Sta 298+50.00 TO Sta 401+00.00 "SR99NB"

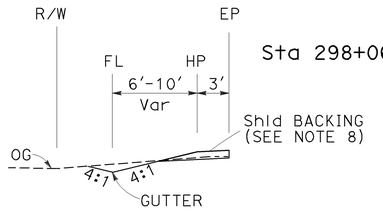

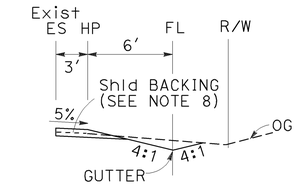

Sta 298+25.00 TO Sta 389+00.00 "SR99NB"

Sta 303+00.00 TO Sta 331+00.00 "SR99SB"
Sta 336+00.00 TO Sta 394+00.00 "SR99SB"

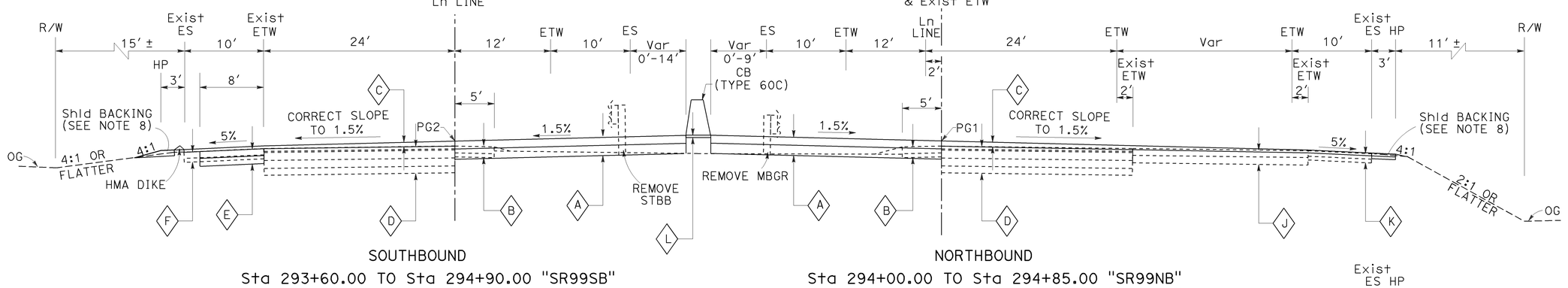

SOUTHBOUND

Sta 293+60.00 TO Sta 294+90.00 "SR99SB"

NORTHBOUND

Sta 294+00.00 TO Sta 294+85.00 "SR99NB"
Sta 296+10.20 TO Sta 298+50.00 "SR99NB"

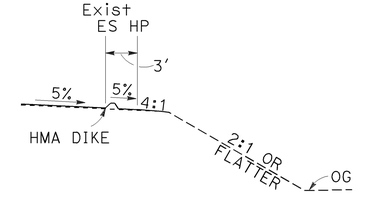

Sta 294+00.00 TO Sta 295+00.00 "SR99NB"
Sta 296+10.20 TO Sta 298+01.63 "SR99NB"

ROUTE 99

TYPICAL CROSS SECTIONS

NO SCALE

X-4

CALCULATED-DESIGNED BY: TAM LA
CHECKED BY: SUSAN GONZALEZ
REVISED BY
DATE REVISED
FUNCTIONAL SUPERVISOR: JUN XU
STATE OF CALIFORNIA - DEPARTMENT OF TRANSPORTATION
DESIGN
Caltrans

LAST REVISION DATE PLOTTED => 28-SEP-2009
TIME PLOTTED => 13:50
06-26-09

BORDER LAST REVISED 4/11/2008
RELATIVE BORDER SCALE IS IN INCHES 0 1 2 3
USERNAME => trmartin
DGN FILE => 644261ca004.dgn
CU 06249
EA 442611

Dist	COUNTY	ROUTE	POST MILES TOTAL PROJECT	SHEET No.	TOTAL SHEETS
06	Fre	99	26.7/30.6	6	242

REGISTERED CIVIL ENGINEER — DATE: 05-29-09

PLANS APPROVAL DATE: 9-28-09

REGISTERED PROFESSIONAL ENGINEER — RODRIGO M. CRUZ — No. 57918 — Exp 06/30/10 — CIVIL — STATE OF CALIFORNIA

THE STATE OF CALIFORNIA OR ITS OFFICERS OR AGENTS SHALL NOT BE RESPONSIBLE FOR THE ACCURACY OR COMPLETENESS OF SCANNED COPIES OF THIS PLAN SHEET.

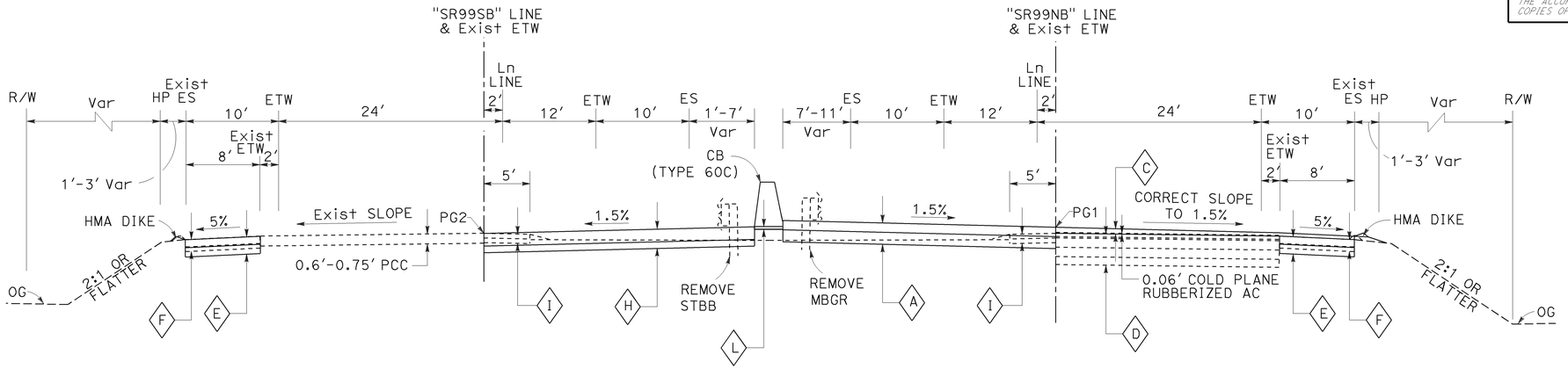

SOUTHBOUND

Sta 402+93.00 TO Sta 405+00.00 "SR99SB"

NORTHBOUND

Sta 404+00.00 TO Sta 404+95.00 "SR99NB"

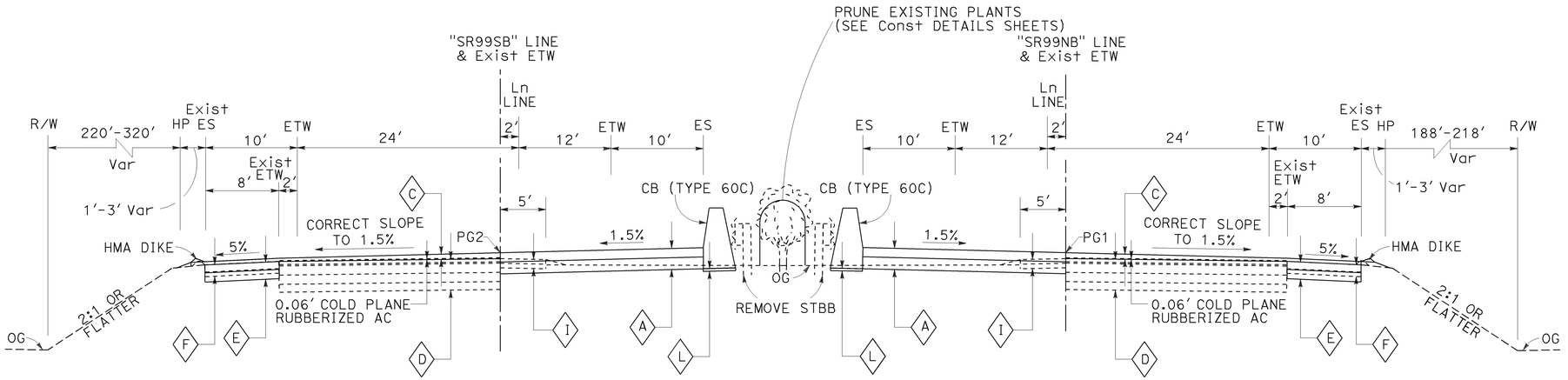

SOUTHBOUND

Sta 398+50.00 TO Sta 402+93.00 "SR99SB"

NORTHBOUND

Sta 401+00.00 TO Sta 404+00.00 "SR99NB"

ROUTE 99

TYPICAL CROSS SECTIONS

NO SCALE

X-5

STATE OF CALIFORNIA - DEPARTMENT OF TRANSPORTATION

DESIGN — FUNCTIONAL SUPERVISOR: JUN XU

CALCULATED-DESIGNED BY: TAM LA

CHECKED BY: SUSAN GONZALEZ

REVISED BY | DATE REVISED

BORDER LAST REVISED 4/11/2008

RELATIVE BORDER SCALE IS IN INCHES 0 1 2 3

USERNAME => trmartin

DGN FILE => 644261ca005.dgn

CU 06249

EA 442611

LAST REVISION 06-26-09 | DATE PLOTTED => 28-SEP-2009 | TIME PLOTTED => 13:50

Dist	COUNTY	ROUTE	POST MILES TOTAL PROJECT	SHEET No.	TOTAL SHEETS
06	Fre	99	26.7/30.6	7	242

05-29-09
REGISTERED CIVIL ENGINEER DATE

9-28-09
PLANS APPROVAL DATE

REGISTERED PROFESSIONAL ENGINEER
RODRIGO M. CRUZ
No. 57918
Exp 06/30/10
CIVIL
STATE OF CALIFORNIA

THE STATE OF CALIFORNIA OR ITS OFFICERS OR AGENTS SHALL NOT BE RESPONSIBLE FOR THE ACCURACY OR COMPLETENESS OF SCANNED COPIES OF THIS PLAN SHEET.

NOTES:

1. FOR COMPLETE RIGHT OF WAY AND ACCURATE ACCESS DATA, SEE RIGHT OF WAY RECORD MAPS AT DISTRICT OFFICE.
2. ALL EXISTING VEGETATION TO REMAIN UNLESS OTHERWISE SHOWN ON THE PLANS.
3. FOR STRUCTURE APPROACH, SEE STRUCTURE PLANS.
4. FOR TYPE OF CONCRETE BARRIER ON BRIDGES, SEE STRUCTURE PLANS.
5. COLD PLANE AC PAVEMENT (0.06' THICKNESS) NOT SHOWN ON THESE SHEETS. REFER TO TYPICAL X-SECTION SHEETS AND SUMMARY OF QUANTITIES SHEETS FOR LIMITS.

LEGEND:

- BRIDGE WIDENING (MEDIAN)
- Exist PCC PAVEMENT
- PCC PAVEMENT MATCH NEW STRUCTURE APPROACH
- Temp CONSTRUCTION EASEMENT
- COLD PLANE AC PAVEMENT
- REPLACE AC SURFACING
- Exist TREE TO REMAIN
- Exist TREE WITH TEMP FENCE (ESA)

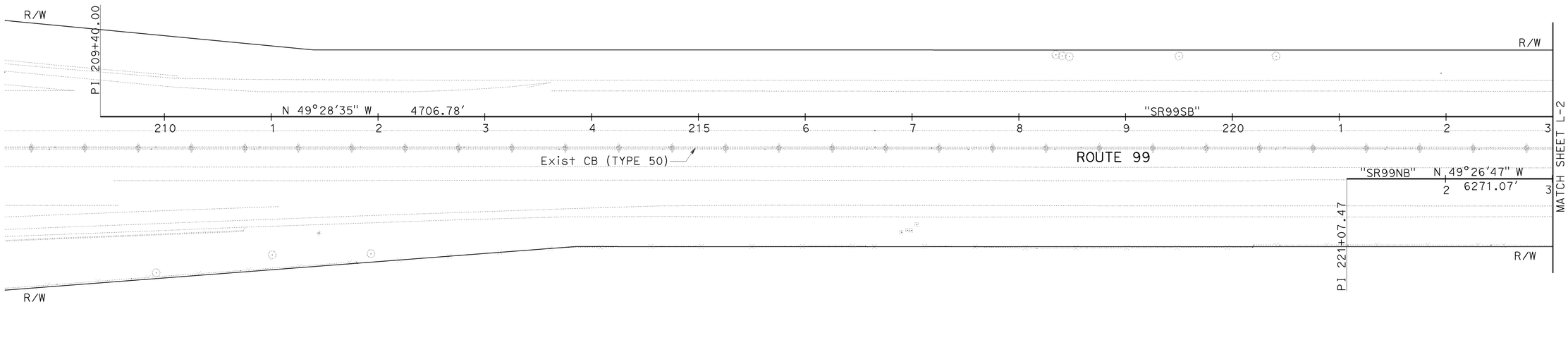

LAYOUT

SCALE: 1"=50'

L-1

LAST REVISION
DATE PLOTTED => 28-SEP-2009
TIME PLOTTED => 13:50
06-22-09

STATE OF CALIFORNIA - DEPARTMENT OF TRANSPORTATION
DESIGN
FUNCTIONAL SUPERVISOR: JUN XU
CALCULATED-DESIGNED BY: SUSAN GONZALEZ
CHECKED BY: RODRIGO CRUZ
REVISED BY
DATE REVISED

BORDER LAST REVISED 4/11/2008

RELATIVE BORDER SCALE IS IN INCHES 0 1 2 3

USERNAME => trmartin
DGN FILE => 644261ea001.dgn

CU 06249

EA 442611

Dist	COUNTY	ROUTE	POST MILES TOTAL PROJECT	SHEET No.	TOTAL SHEETS
06	Fre	99	26.7/30.6	8	242

REGISTERED CIVIL ENGINEER — DATE 05-29-09

PLANS APPROVAL DATE 9-28-09

REGISTERED PROFESSIONAL ENGINEER — RODRIGO M. CRUZ — No. 57918 — Exp 06/30/10 — CIVIL — STATE OF CALIFORNIA

THE STATE OF CALIFORNIA OR ITS OFFICERS OR AGENTS SHALL NOT BE RESPONSIBLE FOR THE ACCURACY OR COMPLETENESS OF SCANNED COPIES OF THIS PLAN SHEET.

NOTE: FOR COMPLETE RIGHT OF WAY DATA, SEE RIGHT OF WAY RECORD MAPS AT DISTRICT OFFICE.

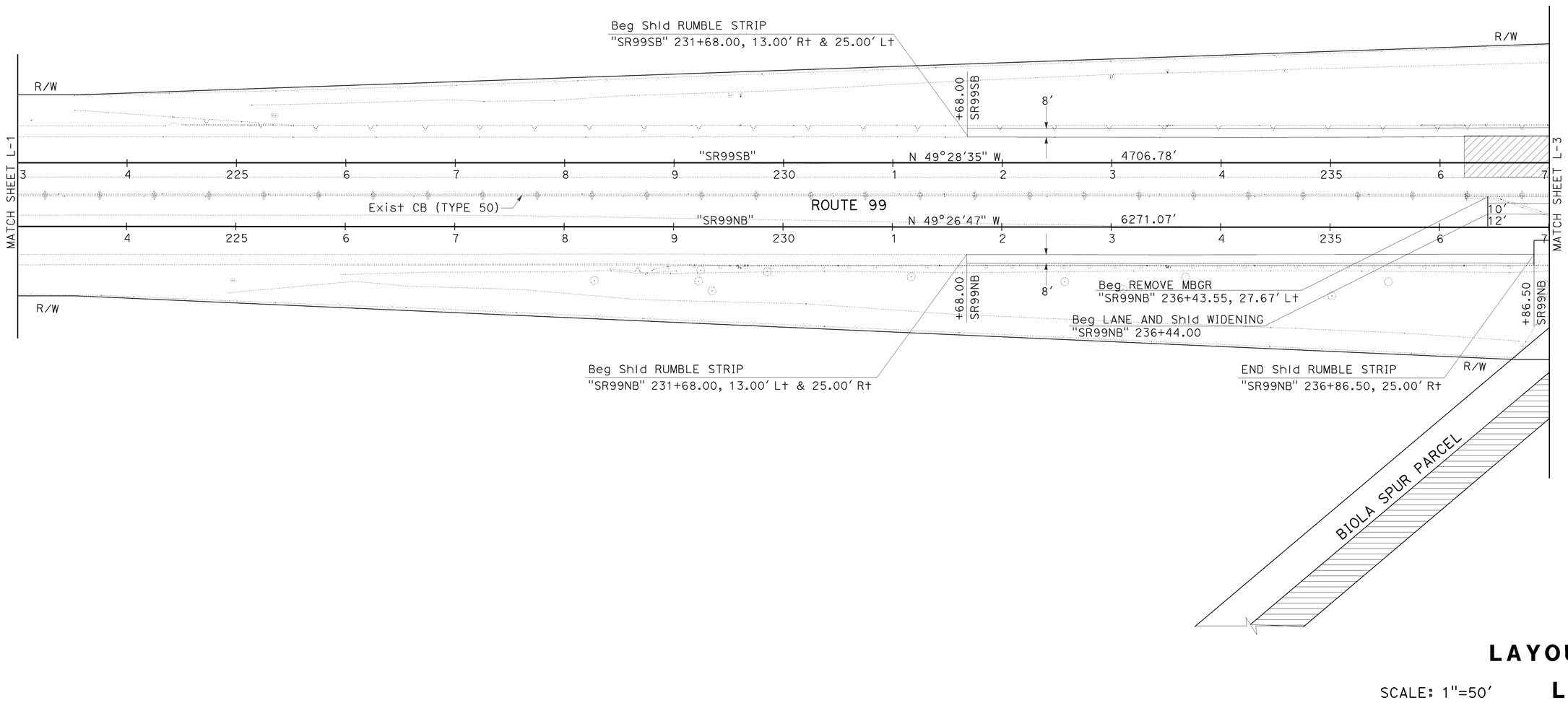

LAYOUT

SCALE: 1"=50'

L-2

CALCULATED-DESIGNED BY: SUSAN GONZALEZ
CHECKED BY: RODRIGO CRUZ
REVISED BY
DATE REVISED
FUNCTIONAL SUPERVISOR: JUN XU
STATE OF CALIFORNIA - DEPARTMENT OF TRANSPORTATION
DESIGN

LAST REVISION | DATE PLOTTED => 28-SEP-2009 | 05-28-09 | TIME PLOTTED => 13:50

BORDER LAST REVISED 4/11/2008

RELATIVE BORDER SCALE IS IN INCHES 0 1 2 3

USERNAME => trmartin
DGN FILE => 644261ea002.dgn

CU 06249

EA 442611

Dist	COUNTY	ROUTE	POST MILES TOTAL PROJECT	SHEET No.	TOTAL SHEETS
06	Fre	99	26.7/30.6	9	242

REGISTERED CIVIL ENGINEER — DATE: 05-29-09

PLANS APPROVAL DATE: 9-28-09

REGISTERED PROFESSIONAL ENGINEER — RODRIGO M. CRUZ — No. 57918 — Exp 06/30/10 — CIVIL — STATE OF CALIFORNIA

THE STATE OF CALIFORNIA OR ITS OFFICERS OR AGENTS SHALL NOT BE RESPONSIBLE FOR THE ACCURACY OR COMPLETENESS OF SCANNED COPIES OF THIS PLAN SHEET.

NOTE: FOR COMPLETE RIGHT OF WAY DATA, SEE RIGHT OF WAY RECORD MAPS AT DISTRICT OFFICE.

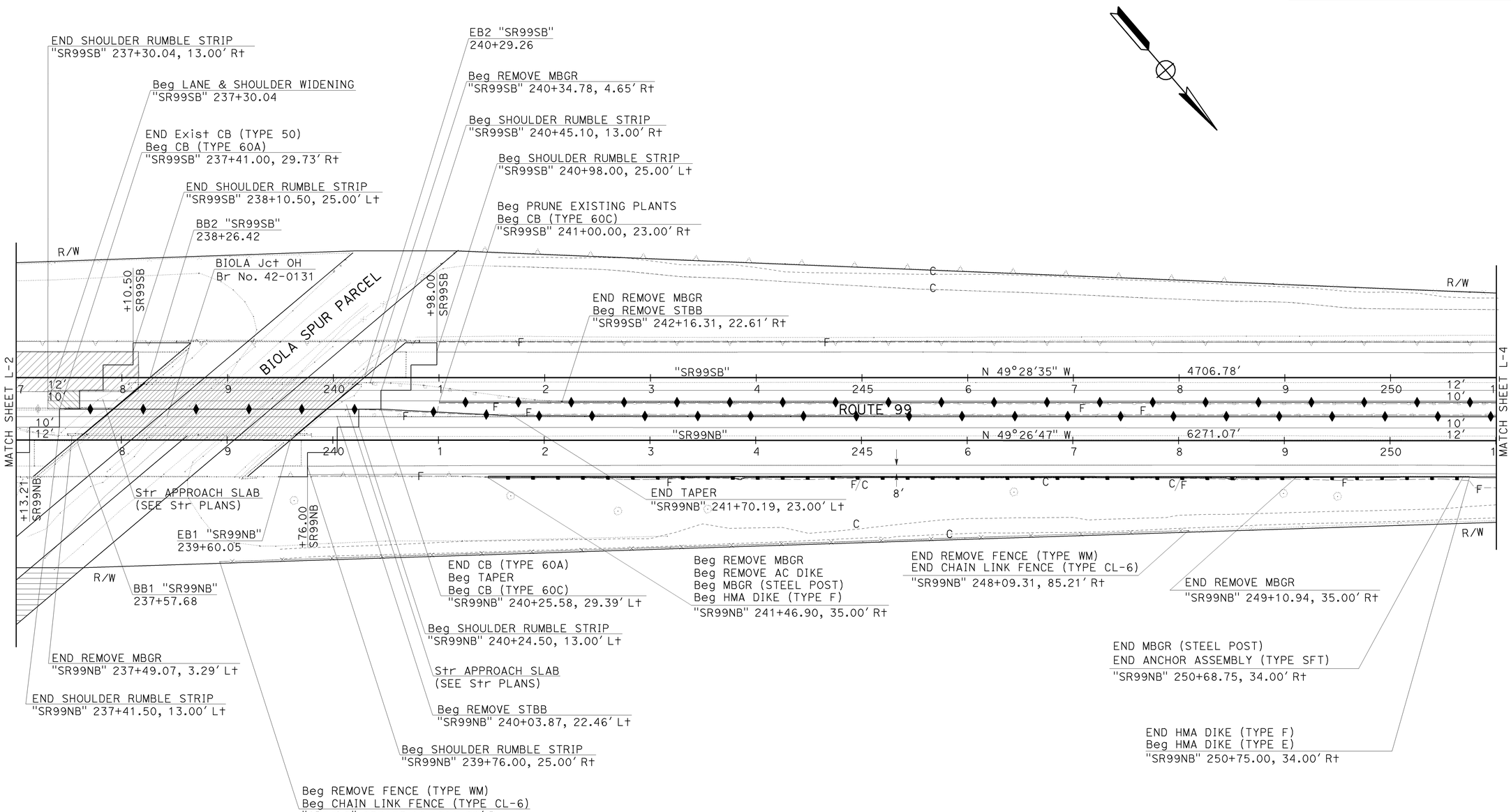

LAYOUT

SCALE: 1"=50'

L-3

REVISED BY	DATE REVISED

CALCULATED-DESIGNED BY: SUSAN GONZALEZ
CHECKED BY: RODRIGO CRUZ
FUNCTIONAL SUPERVISOR: JUN XU

STATE OF CALIFORNIA - DEPARTMENT OF TRANSPORTATION
DESIGN

LAST REVISION DATE PLOTTED => 28-SEP-2009
06-22-09 TIME PLOTTED => 13:50

BORDER LAST REVISED 4/11/2008

RELATIVE BORDER SCALE IS IN INCHES 0 1 2 3

USERNAME => trmartin
DGN FILE => 644261ea003.dgn

CU 06249

EA 442611

Dist	COUNTY	ROUTE	POST MILES TOTAL PROJECT	SHEET No.	TOTAL SHEETS
06	Fre	99	26.7/30.6	10	242

REGISTERED CIVIL ENGINEER 05-29-09 DATE

9-28-09
PLANS APPROVAL DATE

REGISTERED PROFESSIONAL ENGINEER RODRIGO M.CRUZ No. 57918 Exp. 06/30/10 CIVIL STATE OF CALIFORNIA

THE STATE OF CALIFORNIA OR ITS OFFICERS OR AGENTS SHALL NOT BE RESPONSIBLE FOR THE ACCURACY OR COMPLETENESS OF SCANNED COPIES OF THIS PLAN SHEET.

NOTE: FOR COMPLETE RIGHT OF WAY DATA, SEE RIGHT OF WAY RECORD MAPS AT DISTRICT OFFICE.

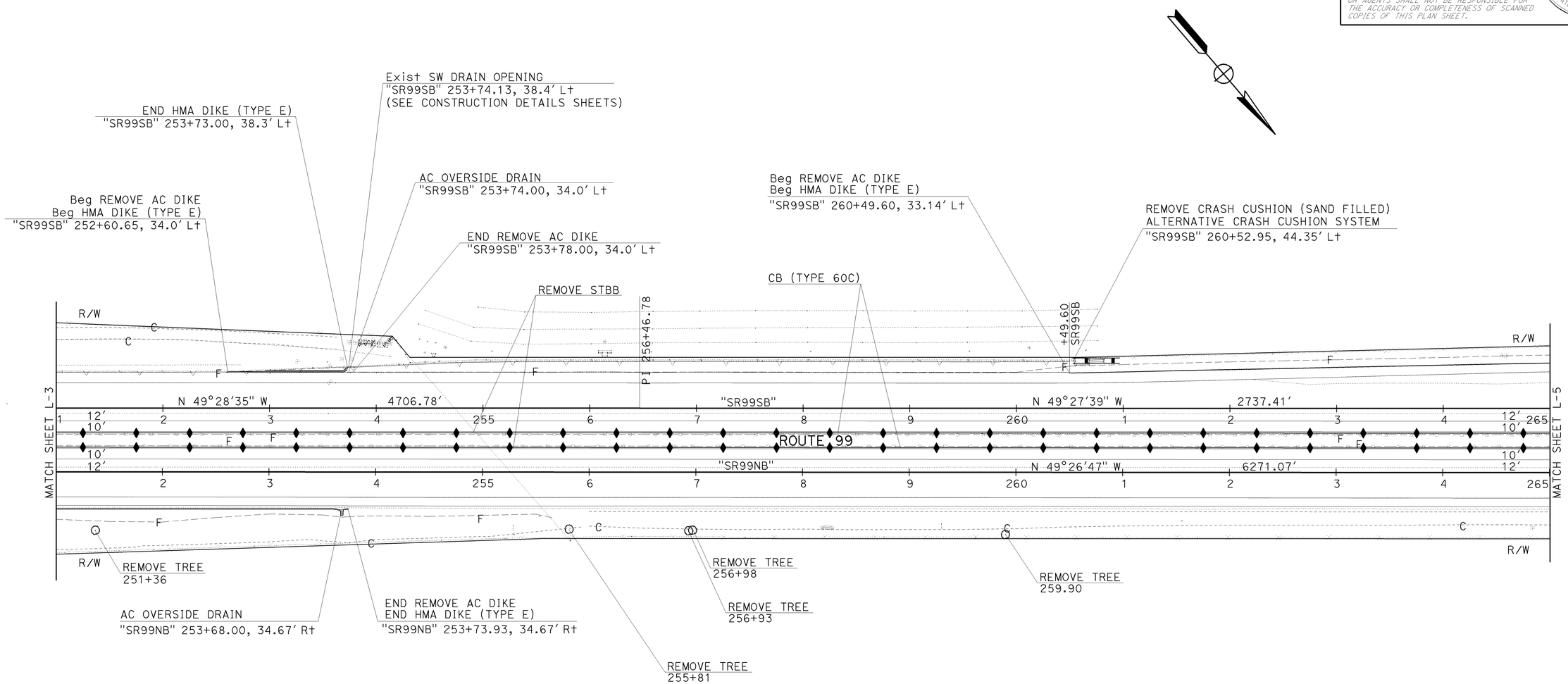

LAYOUT

SCALE: 1"=50'

L-4

STATE OF CALIFORNIA - DEPARTMENT OF TRANSPORTATION
Caltrans
DESIGN
FUNCTIONAL SUPERVISOR: JUN XU
CALCULATED-DESIGNED BY: SUSAN GONZALEZ
CHECKED BY: RODRIGO CRUZ
REVISED BY
DATE REVISED

LAST REVISION 06-22-09
DATE PLOTTED => 28-SEP-2009
TIME PLOTTED => 13:50

Dist	COUNTY	ROUTE	POST MILES TOTAL PROJECT	SHEET No.	TOTAL SHEETS
06	Fre	99	26.7/30.6	11	242

05-29-09
REGISTERED CIVIL ENGINEER DATE

9-28-09
PLANS APPROVAL DATE

REGISTERED PROFESSIONAL ENGINEER
RODRIGO M. CRUZ
No. 57918
Exp 06/30/10
CIVIL
STATE OF CALIFORNIA

THE STATE OF CALIFORNIA OR ITS OFFICERS OR AGENTS SHALL NOT BE RESPONSIBLE FOR THE ACCURACY OR COMPLETENESS OF SCANNED COPIES OF THIS PLAN SHEET.

NOTE: FOR COMPLETE RIGHT OF WAY DATA, SEE RIGHT OF WAY RECORD MAPS AT DISTRICT OFFICE.

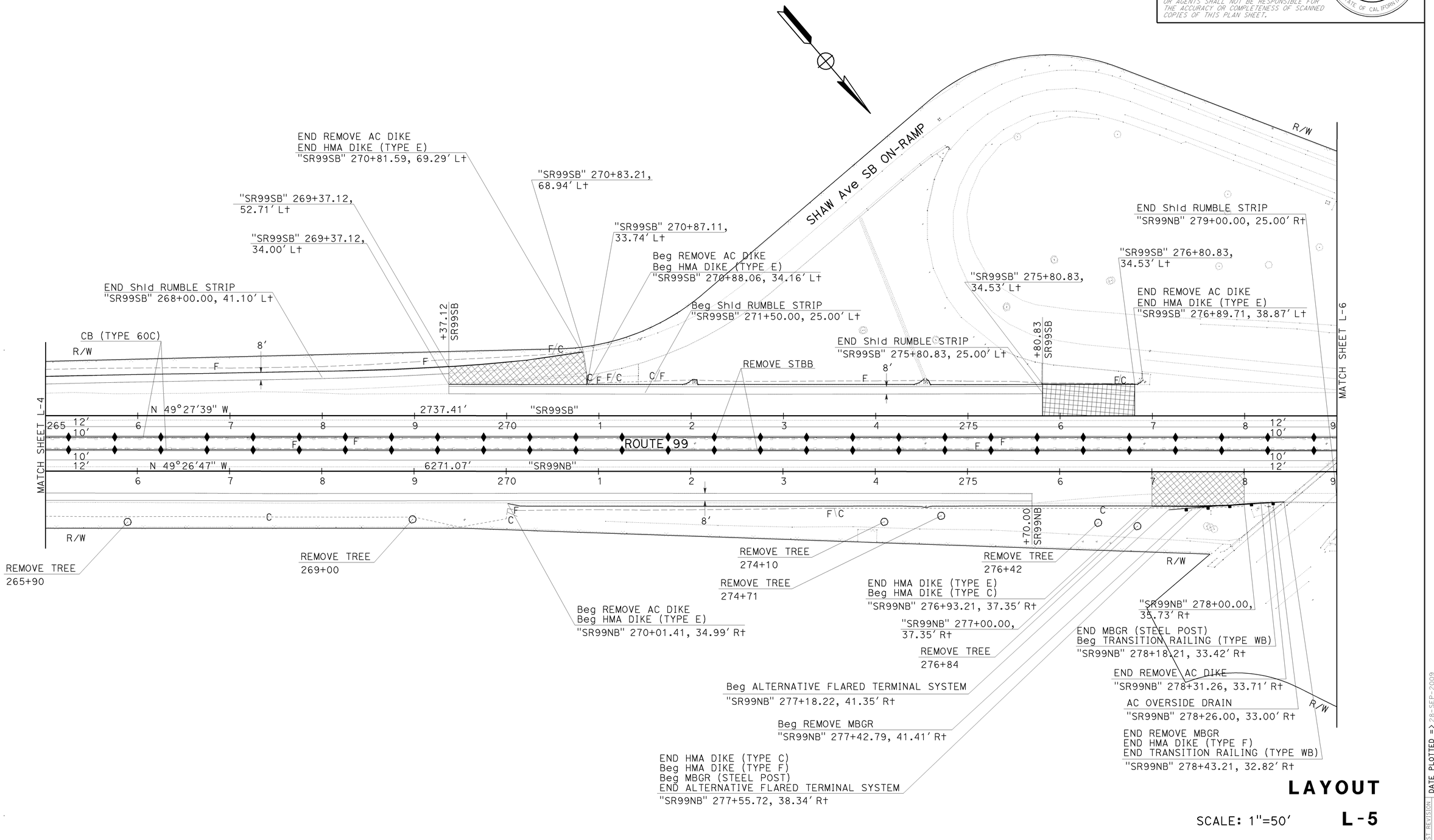

LAYOUT

SCALE: 1"=50'

L-5

REVISED BY	DATE REVISED

CALCULATED-DESIGNED BY: SUSAN GONZALEZ
CHECKED BY: RODRIGO CRUZ
FUNCTIONAL SUPERVISOR: JUN XU

STATE OF CALIFORNIA - DEPARTMENT OF TRANSPORTATION
DESIGN

LAST REVISION DATE PLOTTED => 28-SEP-2009
TIME PLOTTED => 13:50
05-19-09

BORDER LAST REVISED 4/11/2008

RELATIVE BORDER SCALE IS IN INCHES 0 1 2 3

USERNAME => trmartin
DGN FILE => 644261eq005.dgn

CU 06249

EA 442611

Dist	COUNTY	ROUTE	POST MILES TOTAL PROJECT	SHEET No.	TOTAL SHEETS
06	Fre	99	26.7/30.6	12	242

05-29-09
REGISTERED CIVIL ENGINEER DATE

RODRIGO M. CRUZ No. 57918 Exp 06/30/10 CIVIL — REGISTERED PROFESSIONAL ENGINEER — STATE OF CALIFORNIA

9-28-09
PLANS APPROVAL DATE

THE STATE OF CALIFORNIA OR ITS OFFICERS OR AGENTS SHALL NOT BE RESPONSIBLE FOR THE ACCURACY OR COMPLETENESS OF SCANNED COPIES OF THIS PLAN SHEET.

NOTE: FOR COMPLETE RIGHT OF WAY DATA, SEE RIGHT OF WAY RECORD MAPS AT DISTRICT OFFICE.

CURVE DATA

No.	R	Δ	T	L
①	6495.02′	4°42′46"	267.28′	534.25′
②	6870.31′	4°41′44"	281.68′	563.04′

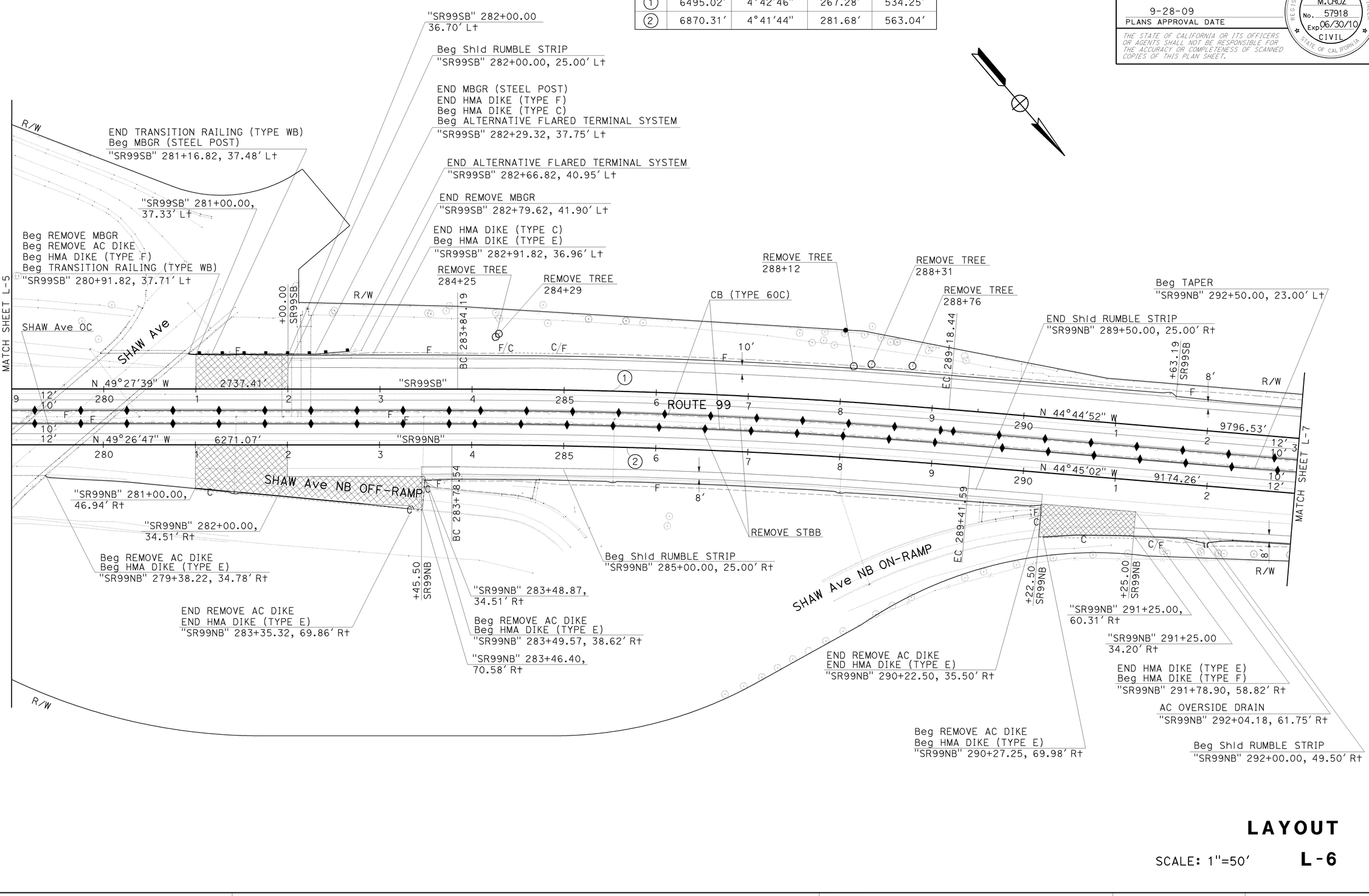

LAYOUT

SCALE: 1"=50′ **L-6**

REVISED BY	DATE REVISED

CALCULATED-DESIGNED BY: SUSAN GONZALEZ
CHECKED BY: RODRIGO CRUZ
FUNCTIONAL SUPERVISOR: JUN XU
STATE OF CALIFORNIA - DEPARTMENT OF TRANSPORTATION
DESIGN

LAST REVISION | DATE PLOTTED => 28-SEP-2009 | TIME PLOTTED => 13:50
05-19-09

BORDER LAST REVISED 4/11/2008 | RELATIVE BORDER SCALE IS IN INCHES 0 1 2 3 | USERNAME => trmartin | DGN FILE => 644261ea006.dgn | CU 06249 | EA 442611

Dist	COUNTY	ROUTE	POST MILES TOTAL PROJECT	SHEET No.	TOTAL SHEETS
06	Fre	99	26.7/30.6	13	242

05-29-09
REGISTERED CIVIL ENGINEER DATE

RODRIGO M. CRUZ No. 57918 Exp 06/30/10 CIVIL — REGISTERED PROFESSIONAL ENGINEER — STATE OF CALIFORNIA

9-28-09
PLANS APPROVAL DATE

THE STATE OF CALIFORNIA OR ITS OFFICERS OR AGENTS SHALL NOT BE RESPONSIBLE FOR THE ACCURACY OR COMPLETENESS OF SCANNED COPIES OF THIS PLAN SHEET.

NOTE: FOR COMPLETE RIGHT OF WAY DATA, SEE RIGHT OF WAY RECORD MAPS AT DISTRICT OFFICE.

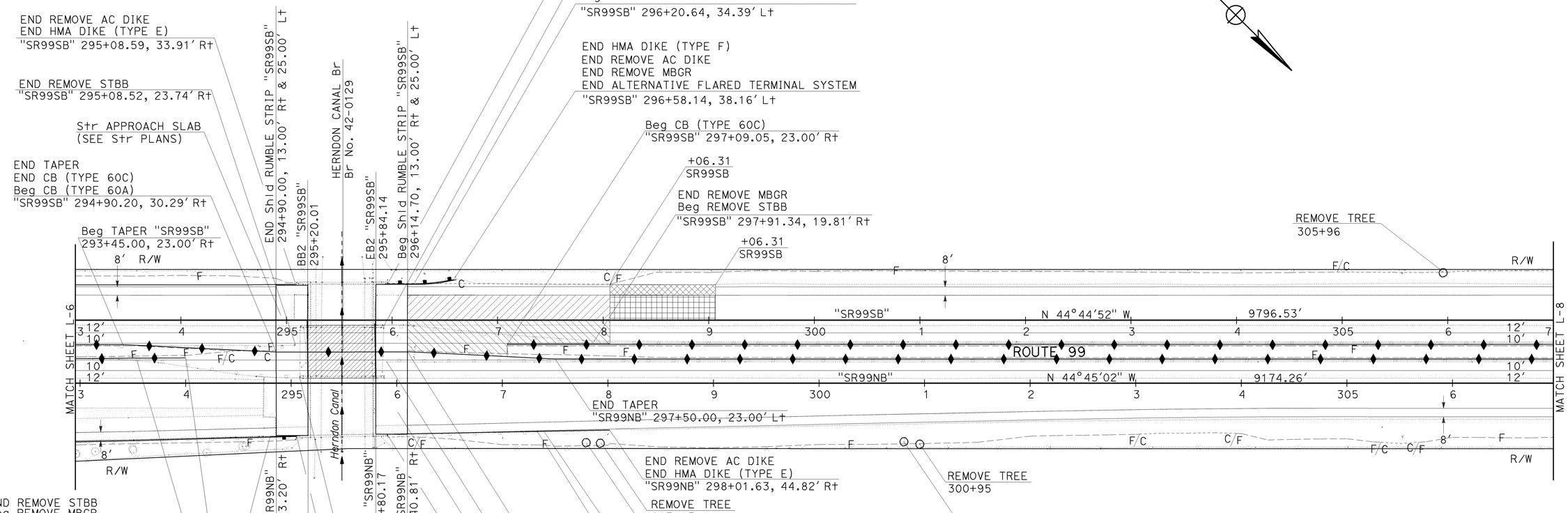

LAYOUT

SCALE: 1"=50'

L-7

STATE OF CALIFORNIA - DEPARTMENT OF TRANSPORTATION
DESIGN
FUNCTIONAL SUPERVISOR: JUN XU
CALCULATED-DESIGNED BY: SUSAN GONZALEZ
CHECKED BY: RODRIGO CRUZ
REVISED BY
DATE REVISED

LAST REVISION | DATE PLOTTED => 28-SEP-2009
06-29-09 | TIME PLOTTED => 13:50

BORDER LAST REVISED 4/11/2008
RELATIVE BORDER SCALE IS IN INCHES 0 1 2 3
USERNAME => trmartin
DGN FILE => 644261ea007.dgn
CU 06249
EA 442611

NOTE: FOR COMPLETE RIGHT OF WAY DATA, SEE RIGHT OF WAY RECORD MAPS AT DISTRICT OFFICE.

Dist	COUNTY	ROUTE	POST MILES TOTAL PROJECT	SHEET No.	TOTAL SHEETS
06	Fre	99	26.7/30.6	14	242

REGISTERED CIVIL ENGINEER — DATE 05-29-09

PLANS APPROVAL DATE 9-28-09

RODRIGO M. CRUZ No. 57918 Exp 06/30/10 CIVIL — REGISTERED PROFESSIONAL ENGINEER — STATE OF CALIFORNIA

THE STATE OF CALIFORNIA OR ITS OFFICERS OR AGENTS SHALL NOT BE RESPONSIBLE FOR THE ACCURACY OR COMPLETENESS OF SCANNED COPIES OF THIS PLAN SHEET.

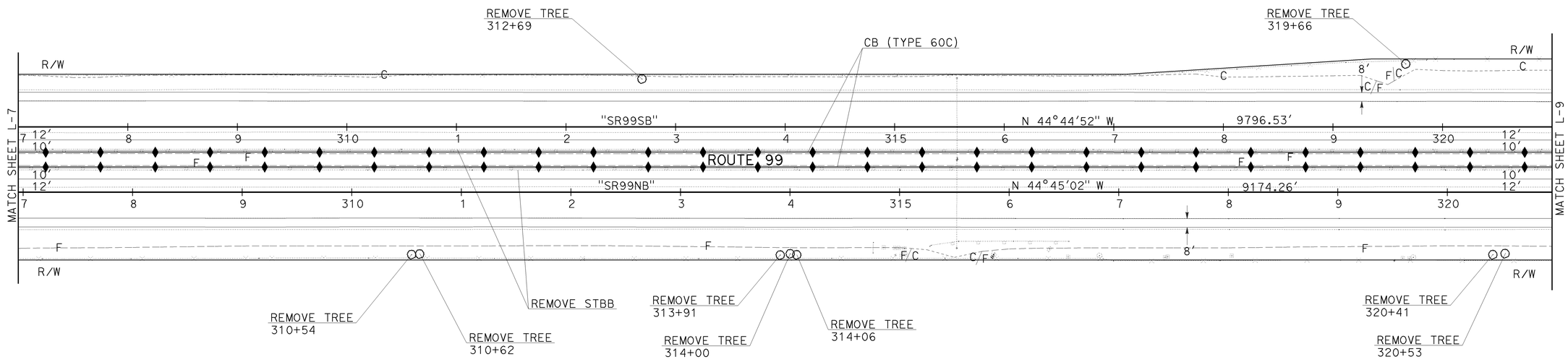

LAYOUT

SCALE: 1"=50' **L-8**

STATE OF CALIFORNIA - DEPARTMENT OF TRANSPORTATION — DESIGN

FUNCTIONAL SUPERVISOR: JUN XU

CALCULATED-DESIGNED BY: SUSAN GONZALEZ

CHECKED BY: RODRIGO CRUZ

REVISED BY / DATE REVISED

LAST REVISION | DATE PLOTTED => 28-SEP-2009 | TIME PLOTTED => 13:51 | 06-29-09

BORDER LAST REVISED 4/11/2008

RELATIVE BORDER SCALE IS IN INCHES 0 1 2 3

USERNAME => trmartin
DGN FILE => 644261ea008.dgn

CU 06249

EA 442611

Dist	COUNTY	ROUTE	POST MILES TOTAL PROJECT	SHEET No.	TOTAL SHEETS
06	Fre	99	26.7/30.6	15	242

REGISTERED CIVIL ENGINEER — DATE: 05-29-09

PLANS APPROVAL DATE: 9-28-09

REGISTERED PROFESSIONAL ENGINEER — RODRIGO M. CRUZ — No. 57918 — Exp 06/30/10 — CIVIL — STATE OF CALIFORNIA

THE STATE OF CALIFORNIA OR ITS OFFICERS OR AGENTS SHALL NOT BE RESPONSIBLE FOR THE ACCURACY OR COMPLETENESS OF SCANNED COPIES OF THIS PLAN SHEET.

NOTE: FOR COMPLETE RIGHT OF WAY DATA, SEE RIGHT OF WAY RECORD MAPS AT DISTRICT OFFICE.

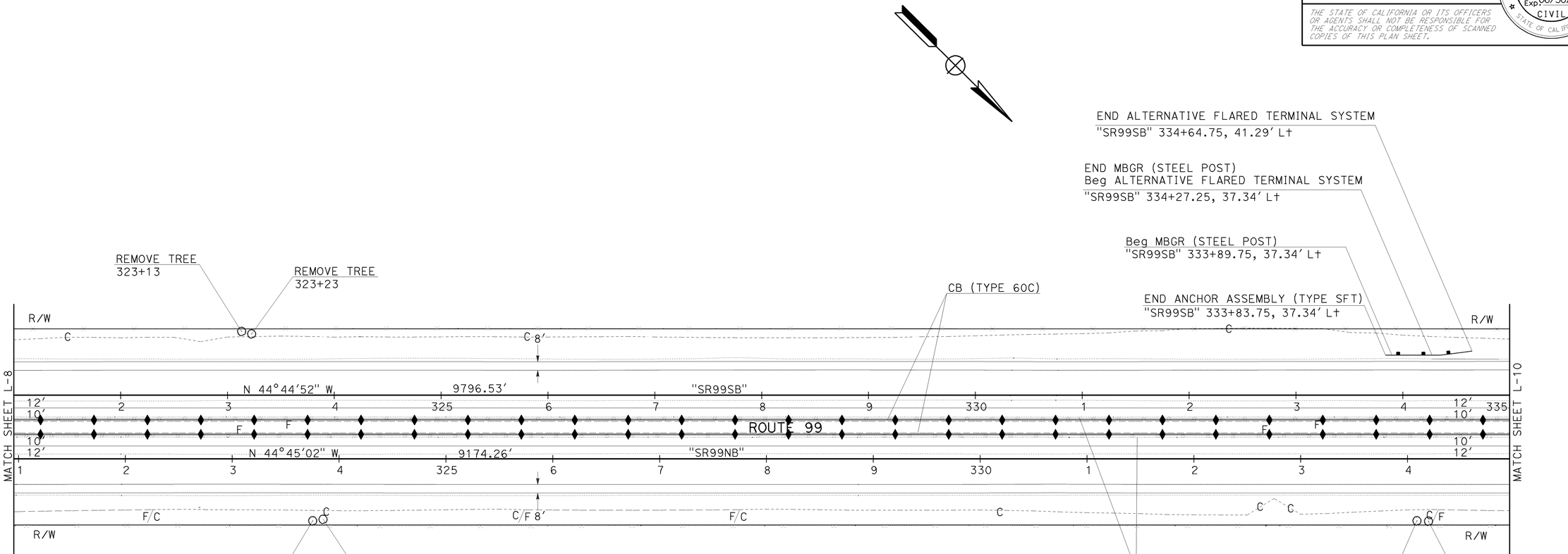

LAYOUT

SCALE: 1"=50'

L-9

STATE OF CALIFORNIA - DEPARTMENT OF TRANSPORTATION

DESIGN

FUNCTIONAL SUPERVISOR: JUN XU

CALCULATED-DESIGNED BY: SUSAN GONZALEZ

CHECKED BY: RODRIGO CRUZ

REVISED BY

DATE REVISED

LAST REVISION 06-29-09

DATE PLOTTED => 28-SEP-2009

TIME PLOTTED => 13:51

BORDER LAST REVISED 4/11/2008

RELATIVE BORDER SCALE IS IN INCHES 0 1 2 3

USERNAME => trmartin

DGN FILE => 644261ea009.dgn

CU 06249

EA 442611

Dist	COUNTY	ROUTE	POST MILES TOTAL PROJECT	SHEET No.	TOTAL SHEETS
06	Fre	99	26.7/30.6	16	242

05-29-09
REGISTERED CIVIL ENGINEER DATE

9-28-09
PLANS APPROVAL DATE

REGISTERED PROFESSIONAL ENGINEER
RODRIGO M. CRUZ
No. 57918
Exp 06/30/10
CIVIL
STATE OF CALIFORNIA

THE STATE OF CALIFORNIA OR ITS OFFICERS OR AGENTS SHALL NOT BE RESPONSIBLE FOR THE ACCURACY OR COMPLETENESS OF SCANNED COPIES OF THIS PLAN SHEET.

NOTE: FOR COMPLETE RIGHT OF WAY DATA, SEE RIGHT OF WAY RECORD MAPS AT DISTRICT OFFICE.

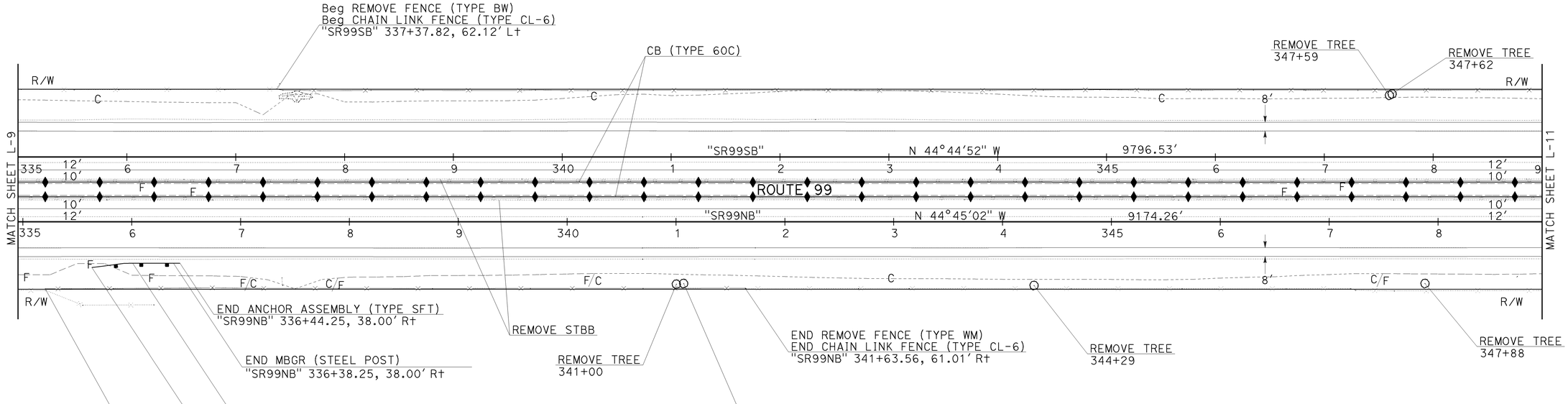

LAYOUT

SCALE: 1"=50' **L-10**

REVISED BY | DATE REVISED
CALCULATED-DESIGNED BY | CHECKED BY
FUNCTIONAL SUPERVISOR
SUSAN GONZALEZ | RODRIGO CRUZ
JUN XU
STATE OF CALIFORNIA - DEPARTMENT OF TRANSPORTATION
DESIGN
Caltrans

LAST REVISION | DATE PLOTTED => 28-SEP-2009
06-29-09 | TIME PLOTTED => 13:59

BORDER LAST REVISED 4/11/2008 | RELATIVE BORDER SCALE IS IN INCHES 0 1 2 3 | USERNAME => trmartin | DGN FILE => 644261ea010.dgn | CU 06249 | EA 442611

Dist	COUNTY	ROUTE	POST MILES TOTAL PROJECT	SHEET No.	TOTAL SHEETS
06	Fre	99	26.7/30.6	17	242

05-29-09
REGISTERED CIVIL ENGINEER DATE

9-28-09
PLANS APPROVAL DATE

REGISTERED PROFESSIONAL ENGINEER
RODRIGO M. CRUZ
No. 57918
Exp 06/30/10
CIVIL
STATE OF CALIFORNIA

THE STATE OF CALIFORNIA OR ITS OFFICERS OR AGENTS SHALL NOT BE RESPONSIBLE FOR THE ACCURACY OR COMPLETENESS OF SCANNED COPIES OF THIS PLAN SHEET.

NOTE: FOR COMPLETE RIGHT OF WAY DATA, SEE RIGHT OF WAY RECORD MAPS AT DISTRICT OFFICE.

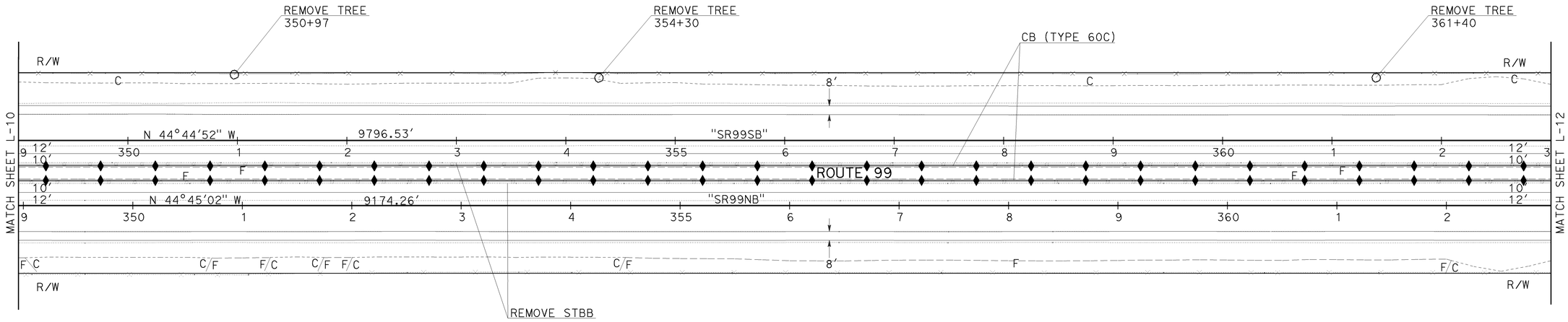

LAYOUT

SCALE: 1"=50' L-11

LAST REVISION 06-29-09
DATE PLOTTED => 28-SEP-2009
TIME PLOTTED => 13:53

REVISED BY | DATE REVISED

CALCULATED-DESIGNED BY: SUSAN GONZALEZ
CHECKED BY: RODRIGO CRUZ
FUNCTIONAL SUPERVISOR: JUN XU

STATE OF CALIFORNIA - DEPARTMENT OF TRANSPORTATION
DESIGN

BORDER LAST REVISED 4/11/2008

RELATIVE BORDER SCALE IS IN INCHES 0 1 2 3

USERNAME => trmartin
DGN FILE => 644261ea011.dgn

CU 06249

EA 442611

Dist	COUNTY	ROUTE	POST MILES TOTAL PROJECT	SHEET No.	TOTAL SHEETS
06	Fre	99	26.7/30.6	18	242

05-29-09
REGISTERED CIVIL ENGINEER DATE

9-28-09
PLANS APPROVAL DATE

REGISTERED PROFESSIONAL ENGINEER
RODRIGO M. CRUZ
No. 57918
Exp 06/30/10
CIVIL
STATE OF CALIFORNIA

THE STATE OF CALIFORNIA OR ITS OFFICERS OR AGENTS SHALL NOT BE RESPONSIBLE FOR THE ACCURACY OR COMPLETENESS OF SCANNED COPIES OF THIS PLAN SHEET.

NOTE: FOR COMPLETE RIGHT OF WAY DATA, SEE RIGHT OF WAY RECORD MAPS AT DISTRICT OFFICE.

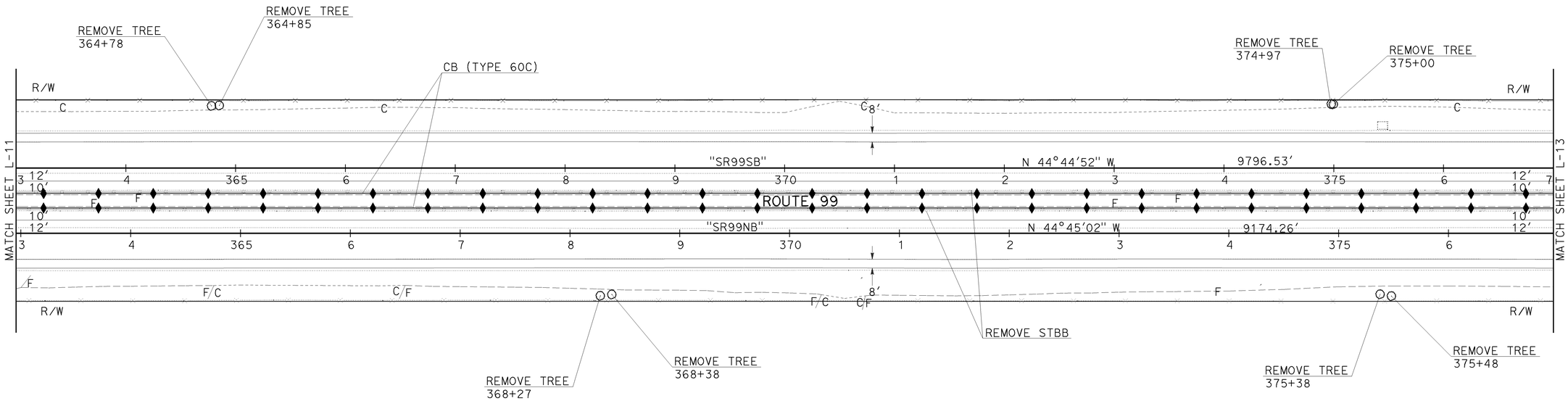

LAYOUT

SCALE: 1"=50' **L-12**

STATE OF CALIFORNIA - DEPARTMENT OF TRANSPORTATION
DESIGN
FUNCTIONAL SUPERVISOR: JUN XU
CALCULATED-DESIGNED BY: SUSAN GONZALEZ
CHECKED BY: RODRIGO CRUZ
REVISED BY
DATE REVISED

LAST REVISION DATE PLOTTED => 28-SEP-2009
06-29-09 TIME PLOTTED => 13:51

BORDER LAST REVISED 4/11/2008

RELATIVE BORDER SCALE IS IN INCHES 0 1 2 3

USERNAME => trmartin
DGN FILE => 644261ea012.dgn

CU 06249

EA 442611

NOTE: FOR COMPLETE RIGHT OF WAY DATA, SEE RIGHT OF WAY RECORD MAPS AT DISTRICT OFFICE.

Dist	COUNTY	ROUTE	POST MILES TOTAL PROJECT	SHEET No.	TOTAL SHEETS
06	Fre	99	26.7/30.6	19	242

REGISTERED CIVIL ENGINEER — DATE: 05-29-09

RODRIGO M. CRUZ — No. 57918 — Exp 06/30/10 — CIVIL — REGISTERED PROFESSIONAL ENGINEER — STATE OF CALIFORNIA

PLANS APPROVAL DATE: 9-28-09

THE STATE OF CALIFORNIA OR ITS OFFICERS OR AGENTS SHALL NOT BE RESPONSIBLE FOR THE ACCURACY OR COMPLETENESS OF SCANNED COPIES OF THIS PLAN SHEET.

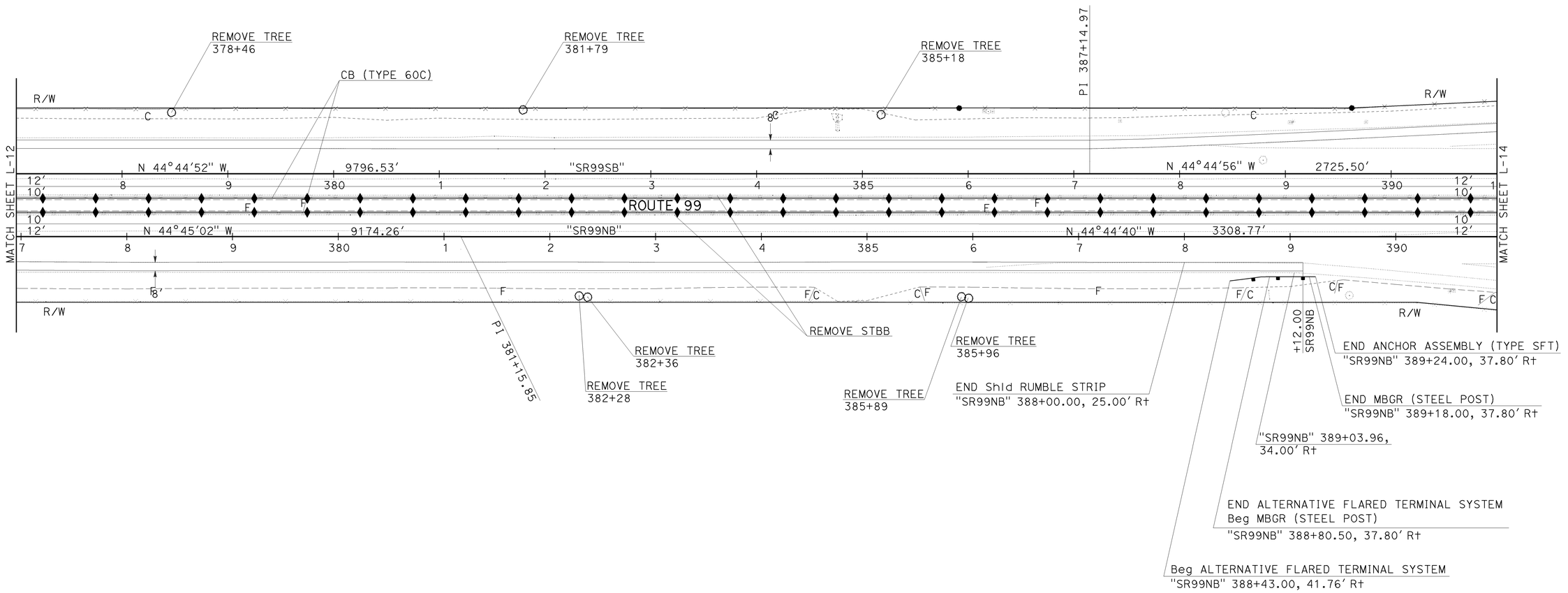

LAYOUT

SCALE: 1"=50'

L-13

CALCULATED-DESIGNED BY: SUSAN GONZALEZ
CHECKED BY: RODRIGO CRUZ
REVISED BY
DATE REVISED
FUNCTIONAL SUPERVISOR: JUN XU
STATE OF CALIFORNIA - DEPARTMENT OF TRANSPORTATION: DESIGN

LAST REVISION: DATE PLOTTED => 28-SEP-2009; TIME PLOTTED => 13:51; 06-29-09

BORDER LAST REVISED 4/11/2008

RELATIVE BORDER SCALE IS IN INCHES 0 1 2 3

USERNAME => trmartin
DGN FILE => 644261eq013.dgn

CU 06249

EA 442611

NOTE: FOR COMPLETE RIGHT OF WAY DATA, SEE RIGHT OF WAY RECORD MAPS AT DISTRICT OFFICE.

Dist	COUNTY	ROUTE	POST MILES TOTAL PROJECT	SHEET No.	TOTAL SHEETS
06	Fre	99	26.7/30.6	20	242

REGISTERED CIVIL ENGINEER — DATE: 05-29-09

PLANS APPROVAL DATE: 9-28-09

REGISTERED PROFESSIONAL ENGINEER — RODRIGO M. CRUZ — No. 57918 — Exp 06/30/10 — CIVIL — STATE OF CALIFORNIA

THE STATE OF CALIFORNIA OR ITS OFFICERS OR AGENTS SHALL NOT BE RESPONSIBLE FOR THE ACCURACY OR COMPLETENESS OF SCANNED COPIES OF THIS PLAN SHEET.

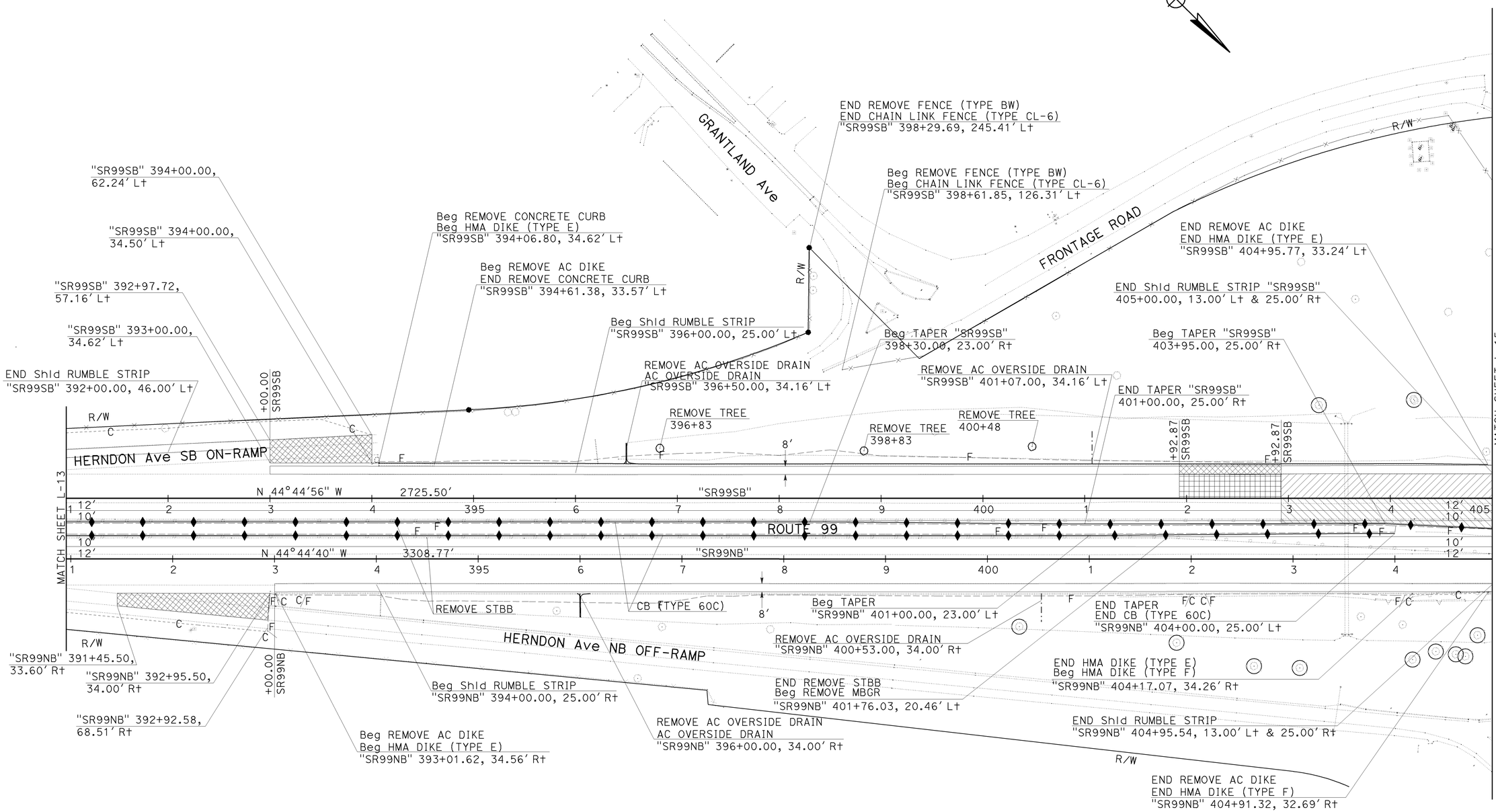

LAYOUT

SCALE: 1"=50′ **L-14**

STATE OF CALIFORNIA - DEPARTMENT OF TRANSPORTATION — DESIGN

FUNCTIONAL SUPERVISOR: JUN XU

CALCULATED-DESIGNED BY | CHECKED BY

REVISED BY | DATE REVISED

SUSAN GONZALEZ | RODRIGO CRUZ

LAST REVISION: DATE PLOTTED => 28-SEP-2009; TIME PLOTTED => 13:51; 06-22-09

BORDER LAST REVISED 4/11/2008

RELATIVE BORDER SCALE IS IN INCHES 0 1 2 3

USERNAME => trmartin
DGN FILE => 644261ea014.dgn

CU 06249

EA 442611

Dist	COUNTY	ROUTE	POST MILES TOTAL PROJECT	SHEET No.	TOTAL SHEETS
06	Fre	99	26.7/30.6	21	242

REGISTERED CIVIL ENGINEER — DATE 05-29-09

PLANS APPROVAL DATE 9-28-09

REGISTERED PROFESSIONAL ENGINEER — RODRIGO M. CRUZ — No. 57918 — Exp 06/30/10 — CIVIL — STATE OF CALIFORNIA

THE STATE OF CALIFORNIA OR ITS OFFICERS OR AGENTS SHALL NOT BE RESPONSIBLE FOR THE ACCURACY OR COMPLETENESS OF SCANNED COPIES OF THIS PLAN SHEET.

NOTE: FOR COMPLETE RIGHT OF WAY DATA, SEE RIGHT OF WAY RECORD MAPS AT DISTRICT OFFICE.

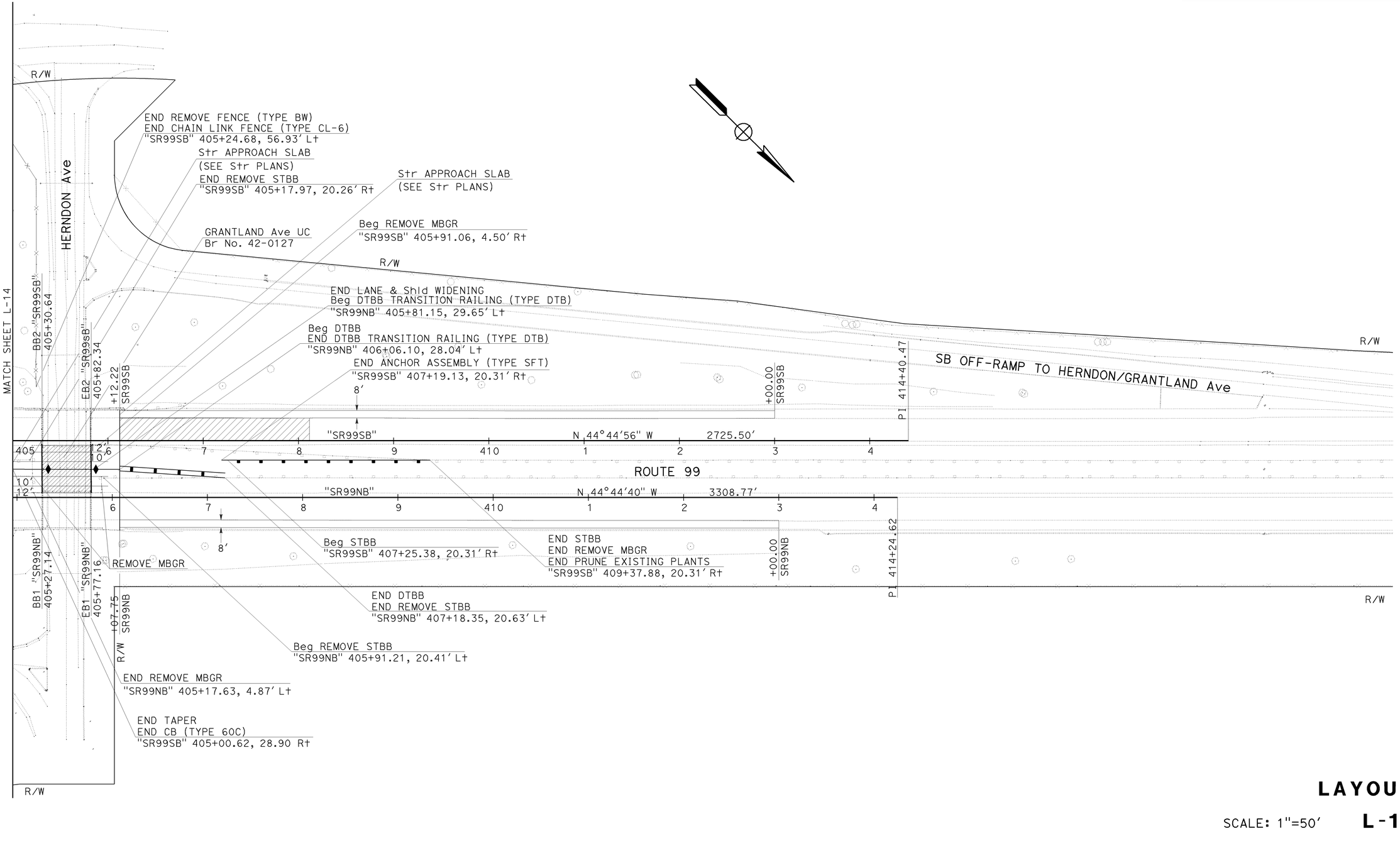

LAYOUT

SCALE: 1"=50'

L-15

STATE OF CALIFORNIA - DEPARTMENT OF TRANSPORTATION — DESIGN — Caltrans

FUNCTIONAL SUPERVISOR: JUN XU

CALCULATED-DESIGNED BY: SUSAN GONZALEZ

CHECKED BY: RODRIGO CRUZ

REVISED BY | DATE REVISED

LAST REVISION — DATE PLOTTED => 28-SEP-2009 — TIME PLOTTED => 13:51 — 05-20-09

BORDER LAST REVISED 4/11/2008

RELATIVE BORDER SCALE IS IN INCHES 0 1 2 3

USERNAME => trmartin
DGN FILE => 644261ea015.dgn

CU 06249

EA 442611

Dist	COUNTY	ROUTE	POST MILES TOTAL PROJECT	SHEET No.	TOTAL SHEETS
06	Fre	99	26.7/30.6	22	242

05-29-09
REGISTERED CIVIL ENGINEER DATE

9-28-09
PLANS APPROVAL DATE

REGISTERED PROFESSIONAL ENGINEER
RODRIGO M. CRUZ
No. 57918
Exp 06/30/10
CIVIL
STATE OF CALIFORNIA

THE STATE OF CALIFORNIA OR ITS OFFICERS OR AGENTS SHALL NOT BE RESPONSIBLE FOR THE ACCURACY OR COMPLETENESS OF ELECTRONIC COPIES OF THIS PLAN SHEET.

CALCULATED-DESIGNED BY: SUSAN GONZALEZ
CHECKED BY: RODRIGO CRUZ
REVISED BY
DATE REVISED

FUNCTIONAL SUPERVISOR: JUN XU

STATE OF CALIFORNIA - DEPARTMENT OF TRANSPORTATION
DESIGN

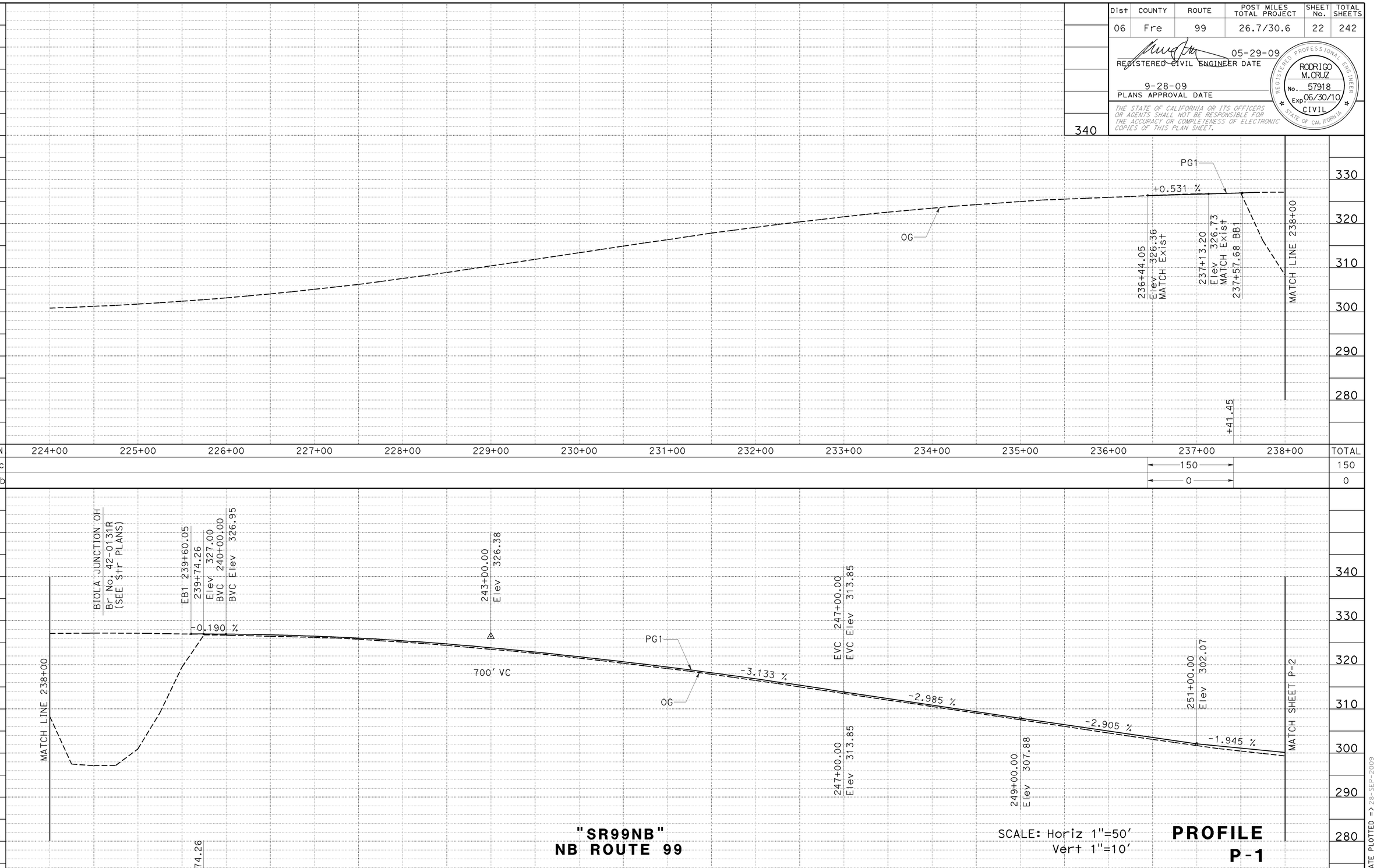

STATION	224+00	225+00	226+00	227+00	228+00	229+00	230+00	231+00	232+00	233+00	234+00	235+00	236+00	237+00	238+00	TOTAL
CY Exc														150		150
CY Emb														0		0

STATION	238+00	239+00	240+00	241+00	242+00	243+00	244+00	245+00	246+00	247+00	248+00	249+00	250+00	251+00	252+00	TOTAL
CY Exc																514
CY Emb																64

"SR99NB"
NB ROUTE 99

SCALE: Horiz 1"=50'
Vert 1"=10'

PROFILE
P-1

LAST REVISION DATE PLOTTED => 28-SEP-2009
TIME PLOTTED => 14:10
06-19-09

BORDER LAST REVISED 4/11/2008

RELATIVE BORDER SCALE IS IN INCHES 0 1 2 3

USERNAME => trliim
DGN FILE => 644261fa001.dgn

CU 06249

EA 442611

Dist	COUNTY	ROUTE	POST MILES TOTAL PROJECT	SHEET No.	TOTAL SHEETS
06	Fre	99	26.7/30.6	23	242

05-29-09
REGISTERED CIVIL ENGINEER DATE

9-28-09
PLANS APPROVAL DATE

REGISTERED PROFESSIONAL ENGINEER
RODRIGO M. CRUZ
No. 57918
Exp 06/30/10
CIVIL
STATE OF CALIFORNIA

THE STATE OF CALIFORNIA OR ITS OFFICERS OR AGENTS SHALL NOT BE RESPONSIBLE FOR THE ACCURACY OR COMPLETENESS OF ELECTRONIC COPIES OF THIS PLAN SHEET.

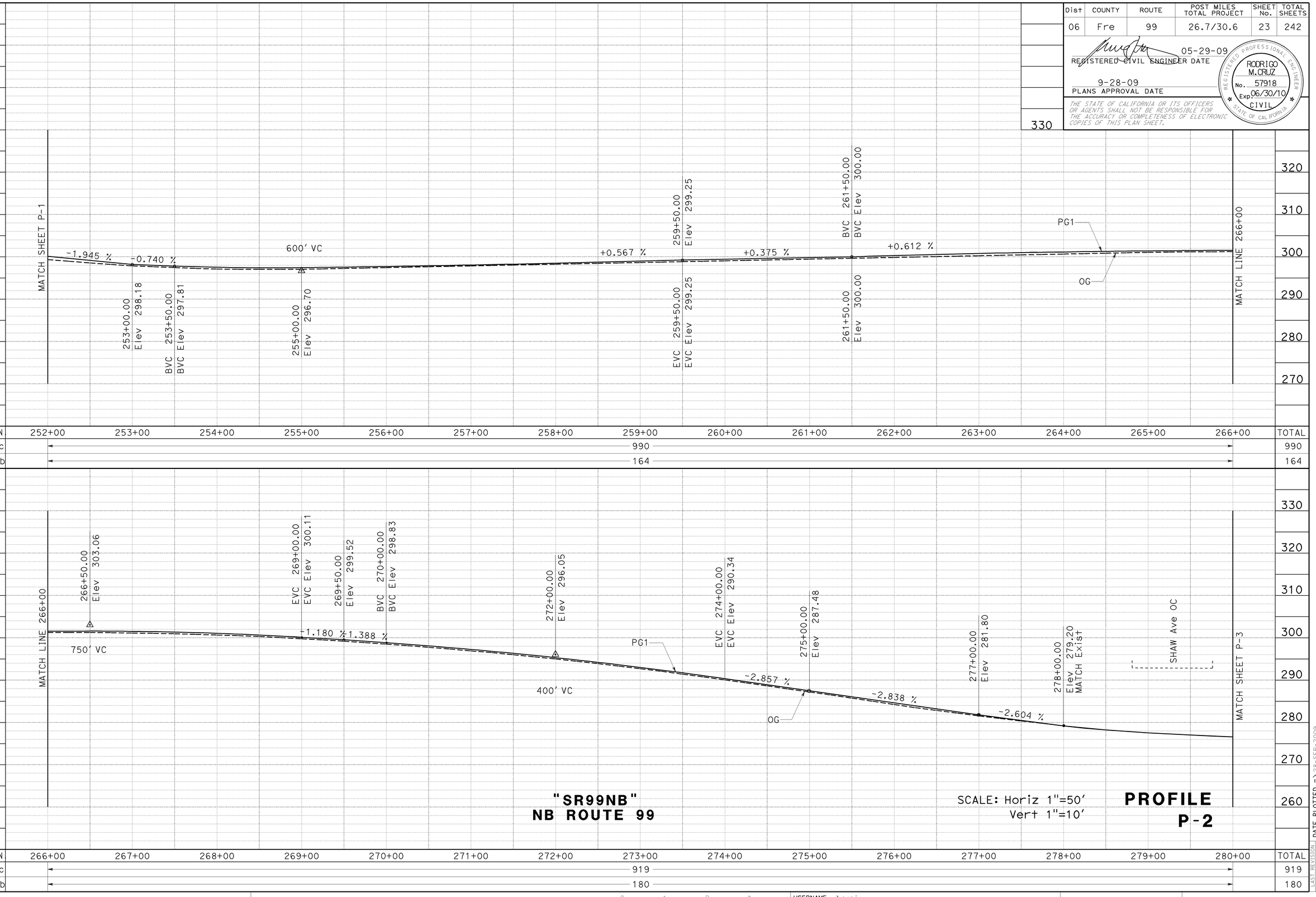

STATION	252+00	253+00	254+00	255+00	256+00	257+00	258+00	259+00	260+00	261+00	262+00	263+00	264+00	265+00	266+00	TOTAL
CY Exc	◄														►	990
CY Emb	◄														►	164

STATION	266+00	267+00	268+00	269+00	270+00	271+00	272+00	273+00	274+00	275+00	276+00	277+00	278+00	279+00	280+00	TOTAL
CY Exc	◄														►	919
CY Emb	◄														►	180

"SR99NB"
NB ROUTE 99

SCALE: Horiz 1"=50'
Vert 1"=10'

PROFILE
P-2

CALCULATED-DESIGNED BY
CHECKED BY
REVISED BY
DATE REVISED
SUSAN GONZALEZ
RODRIGO CRUZ
FUNCTIONAL SUPERVISOR
JUN XU
STATE OF CALIFORNIA - DEPARTMENT OF TRANSPORTATION
DESIGN
Caltrans

LAST REVISION DATE PLOTTED => 28-SEP-2009
TIME PLOTTED => 14:10
06-19-09

BORDER LAST REVISED 4/11/2008
RELATIVE BORDER SCALE IS IN INCHES 0 1 2 3
USERNAME => triim
DGN FILE => 644261fa002.dgn
CU 06249
EA 442611

Dist	COUNTY	ROUTE	POST MILES TOTAL PROJECT	SHEET No.	TOTAL SHEETS
06	Fre	99	26.7/30.6	24	242

05-29-09
REGISTERED CIVIL ENGINEER DATE

9-28-09
PLANS APPROVAL DATE

REGISTERED PROFESSIONAL ENGINEER
RODRIGO M. CRUZ
No. 57918
Exp 06/30/10
CIVIL
STATE OF CALIFORNIA

THE STATE OF CALIFORNIA OR ITS OFFICERS OR AGENTS SHALL NOT BE RESPONSIBLE FOR THE ACCURACY OR COMPLETENESS OF ELECTRONIC COPIES OF THIS PLAN SHEET.

CALCULATED-DESIGNED BY: SUSAN GONZALEZ
CHECKED BY: RODRIGO CRUZ
REVISED BY
DATE REVISED

FUNCTIONAL SUPERVISOR: JUN XU

STATE OF CALIFORNIA - DEPARTMENT OF TRANSPORTATION
Caltrans®
DESIGN

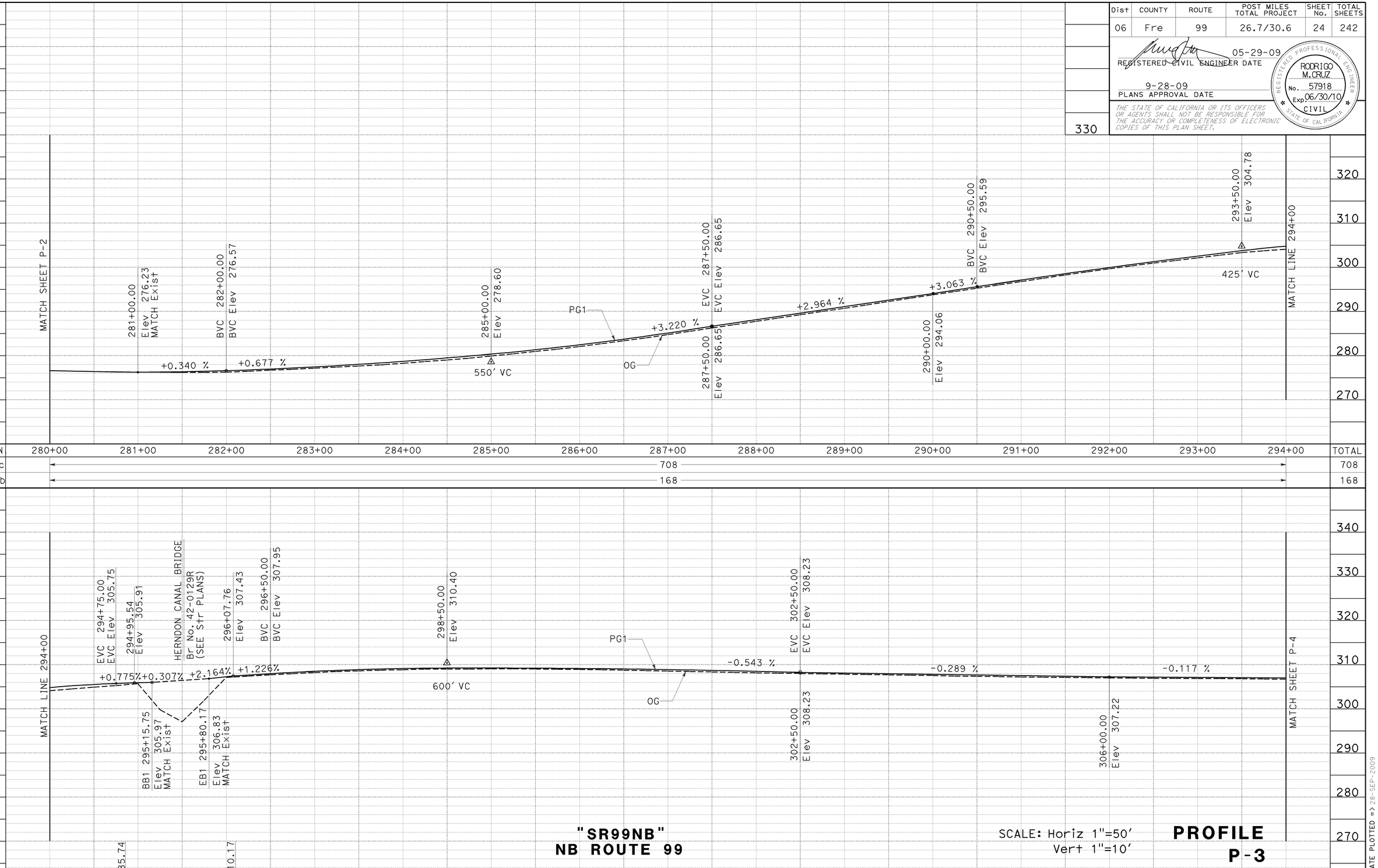

LAST REVISION
DATE PLOTTED => 28-SEP-2009
TIME PLOTTED => 14:11
06-19-09

BORDER LAST REVISED 4/11/2008

RELATIVE BORDER SCALE IS IN INCHES 0 1 2 3

USERNAME => triim
DGN FILE => 644261fa003.dgn

CU 06249

EA 442611

Dist	COUNTY	ROUTE	POST MILES TOTAL PROJECT	SHEET No.	TOTAL SHEETS
06	Fre	99	26.7/30.6	25	242

05-29-09
REGISTERED CIVIL ENGINEER DATE

9-28-09
PLANS APPROVAL DATE

REGISTERED PROFESSIONAL ENGINEER
RODRIGO M. CRUZ
No. 57918
Exp 06/30/10
CIVIL
STATE OF CALIFORNIA

THE STATE OF CALIFORNIA OR ITS OFFICERS OR AGENTS SHALL NOT BE RESPONSIBLE FOR THE ACCURACY OR COMPLETENESS OF ELECTRONIC COPIES OF THIS PLAN SHEET.

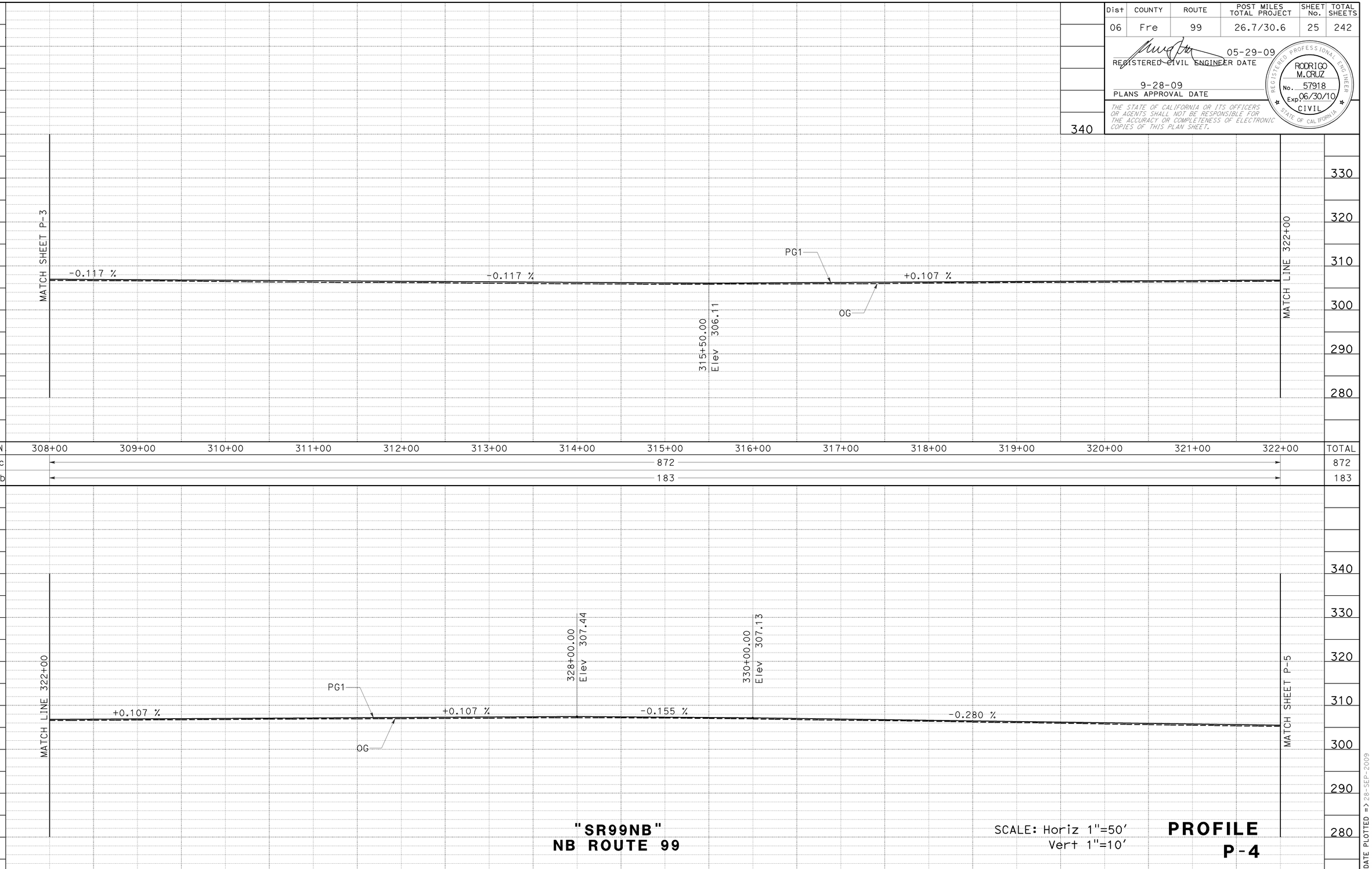

STATION	308+00	309+00	310+00	311+00	312+00	313+00	314+00	315+00	316+00	317+00	318+00	319+00	320+00	321+00	322+00	TOTAL
CY Exc	◄														►	872
CY Emb	◄														►	183

STATION	322+00	323+00	324+00	325+00	326+00	327+00	328+00	329+00	330+00	331+00	332+00	333+00	334+00	335+00	336+00	TOTAL
CY Exc	◄														►	994
CY Emb	◄														►	48

"SR99NB"
NB ROUTE 99

SCALE: Horiz 1"=50'
Vert 1"=10'

PROFILE
P-4

SUSAN GONZALEZ — CALCULATED-DESIGNED BY
RODRIGO CRUZ — CHECKED BY
REVISED BY
DATE REVISED
FUNCTIONAL SUPERVISOR: JUN XU

STATE OF CALIFORNIA - DEPARTMENT OF TRANSPORTATION
DESIGN

LAST REVISION DATE PLOTTED => 28-SEP-2009
TIME PLOTTED => 14:11
06-19-09

BORDER LAST REVISED 4/11/2008

RELATIVE BORDER SCALE IS IN INCHES 0 1 2 3

USERNAME => trliim
DGN FILE => 644261fa004.dgn

CU 06249

EA 442611

Dist	COUNTY	ROUTE	POST MILES TOTAL PROJECT	SHEET No.	TOTAL SHEETS
06	Fre	99	26.7/30.6	26	242

05-29-09
REGISTERED CIVIL ENGINEER DATE

9-28-09
PLANS APPROVAL DATE

REGISTERED PROFESSIONAL ENGINEER
RODRIGO M. CRUZ
No. 57918
Exp 06/30/10
CIVIL
STATE OF CALIFORNIA

THE STATE OF CALIFORNIA OR ITS OFFICERS OR AGENTS SHALL NOT BE RESPONSIBLE FOR THE ACCURACY OR COMPLETENESS OF ELECTRONIC COPIES OF THIS PLAN SHEET.

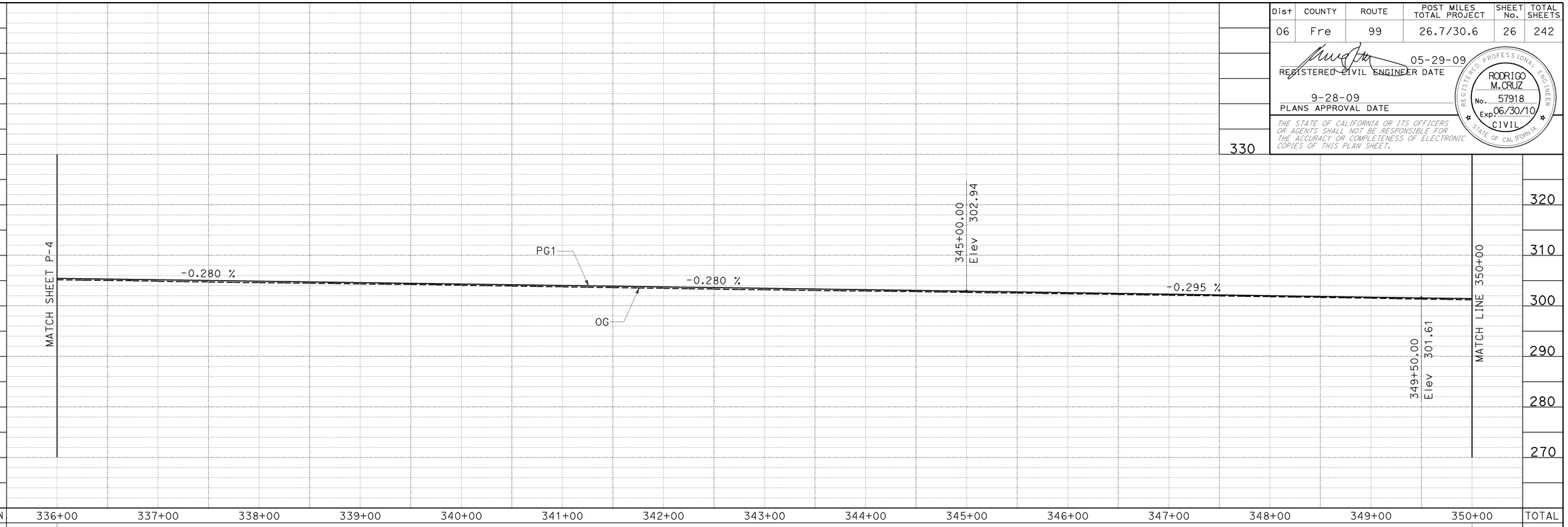

STATION	336+00	337+00	338+00	339+00	340+00	341+00	342+00	343+00	344+00	345+00	346+00	347+00	348+00	349+00	350+00	TOTAL
CY Exc	◄							1051							►	1051
CY Emb	◄							60							►	60

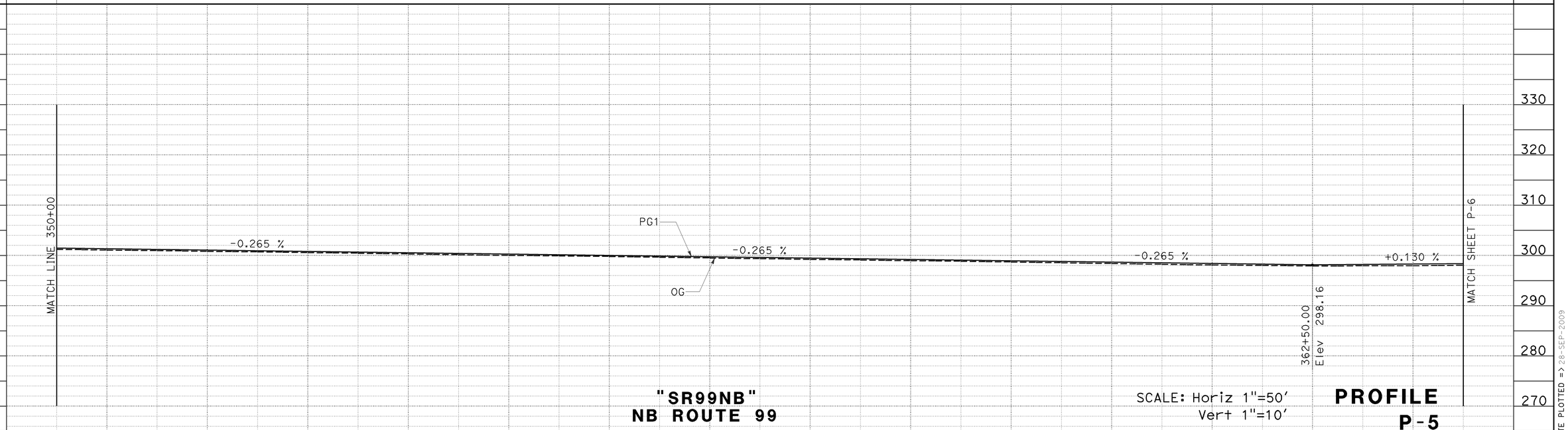

STATION	350+00	351+00	352+00	353+00	354+00	355+00	356+00	357+00	358+00	359+00	360+00	361+00	362+00	363+00	364+00	TOTAL
CY Exc	◄							822							►	822
CY Emb	◄							153							►	153

"SR99NB"
NB ROUTE 99

SCALE: Horiz 1"=50'
Vert 1"=10'

PROFILE
P-5

CALCULATED-DESIGNED BY
CHECKED BY
REVISED BY
DATE REVISED
SUSAN GONZALEZ
RODRIGO CRUZ
FUNCTIONAL SUPERVISOR
JUN XU
STATE OF CALIFORNIA - DEPARTMENT OF TRANSPORTATION
DESIGN
Caltrans

LAST REVISION DATE PLOTTED => 28-SEP-2009
TIME PLOTTED => 14:11
06-19-09

BORDER LAST REVISED 4/11/2008
RELATIVE BORDER SCALE IS IN INCHES 0 1 2 3
USERNAME => triim
DGN FILE => 644261fa005.dgn
CU 06249
EA 442611

Dist	COUNTY	ROUTE	POST MILES TOTAL PROJECT	SHEET No.	TOTAL SHEETS
06	Fre	99	26.7/30.6	27	242

05-29-09
REGISTERED CIVIL ENGINEER DATE

9-28-09
PLANS APPROVAL DATE

RODRIGO M. CRUZ No. 57918 Exp 06/30/10 CIVIL — REGISTERED PROFESSIONAL ENGINEER — STATE OF CALIFORNIA

THE STATE OF CALIFORNIA OR ITS OFFICERS OR AGENTS SHALL NOT BE RESPONSIBLE FOR THE ACCURACY OR COMPLETENESS OF ELECTRONIC COPIES OF THIS PLAN SHEET.

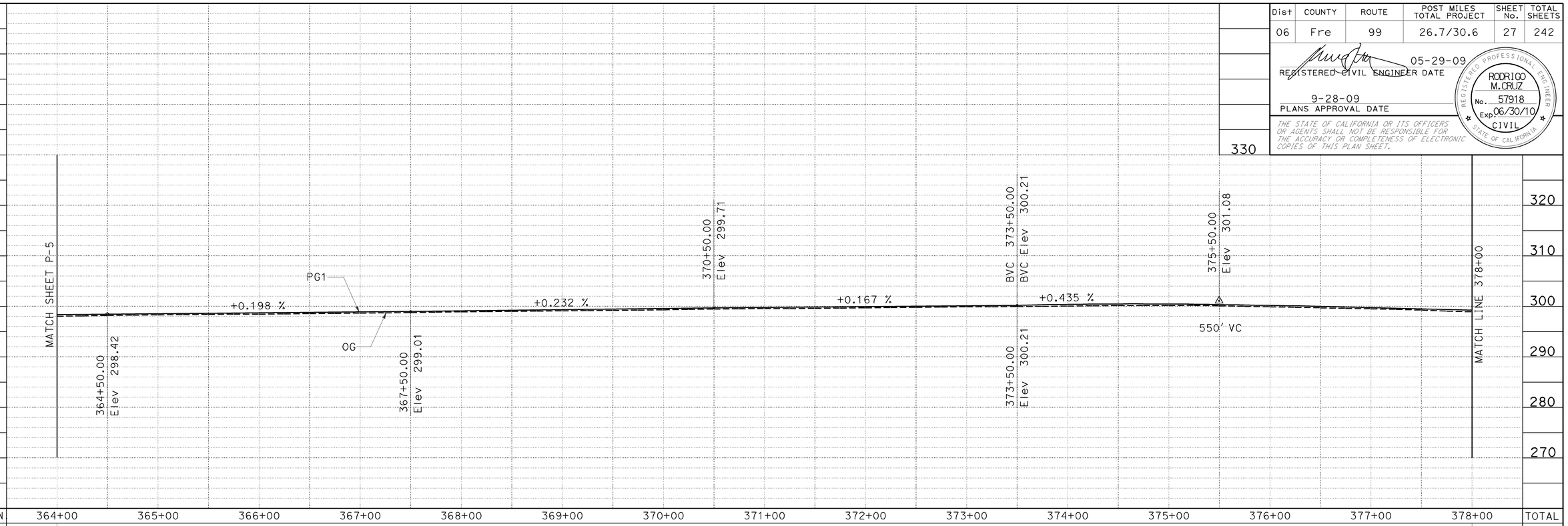

STATION	364+00	365+00	366+00	367+00	368+00	369+00	370+00	371+00	372+00	373+00	374+00	375+00	376+00	377+00	378+00	TOTAL
CY Exc	◄														►	730
CY Emb	◄														►	241

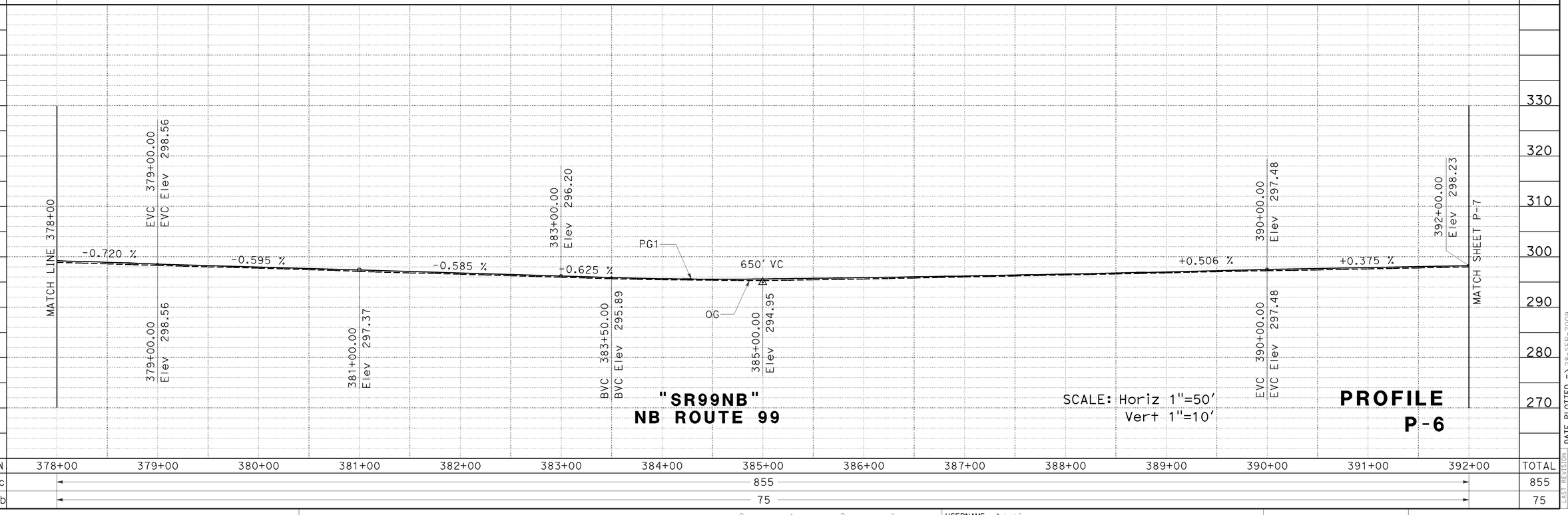

STATION	378+00	379+00	380+00	381+00	382+00	383+00	384+00	385+00	386+00	387+00	388+00	389+00	390+00	391+00	392+00	TOTAL
CY Exc	◄														►	855
CY Emb	◄														►	75

"SR99NB"
NB ROUTE 99

SCALE: Horiz 1"=50'
Vert 1"=10'

PROFILE
P-6

REVISED BY | DATE REVISED
CALCULATED-DESIGNED BY: SUSAN GONZALEZ
CHECKED BY: RODRIGO CRUZ
FUNCTIONAL SUPERVISOR: JUN XU
STATE OF CALIFORNIA - DEPARTMENT OF TRANSPORTATION
DESIGN
Caltrans

LAST REVISION | DATE PLOTTED => 28-SEP-2009
06-19-09 | TIME PLOTTED => 14:11

BORDER LAST REVISED 4/11/2008
RELATIVE BORDER SCALE IS IN INCHES 0 1 2 3
USERNAME => triim
DGN FILE => 644261fa006.dgn
CU 06249
EA 442611

Dist	COUNTY	ROUTE	POST MILES TOTAL PROJECT	SHEET No.	TOTAL SHEETS
06	Fre	99	26.7/30.6	28	242

05-29-09
REGISTERED CIVIL ENGINEER DATE

9-28-09
PLANS APPROVAL DATE

REGISTERED PROFESSIONAL ENGINEER
RODRIGO M. CRUZ
No. 57918
Exp 06/30/10
CIVIL
STATE OF CALIFORNIA

THE STATE OF CALIFORNIA OR ITS OFFICERS OR AGENTS SHALL NOT BE RESPONSIBLE FOR THE ACCURACY OR COMPLETENESS OF ELECTRONIC COPIES OF THIS PLAN SHEET.

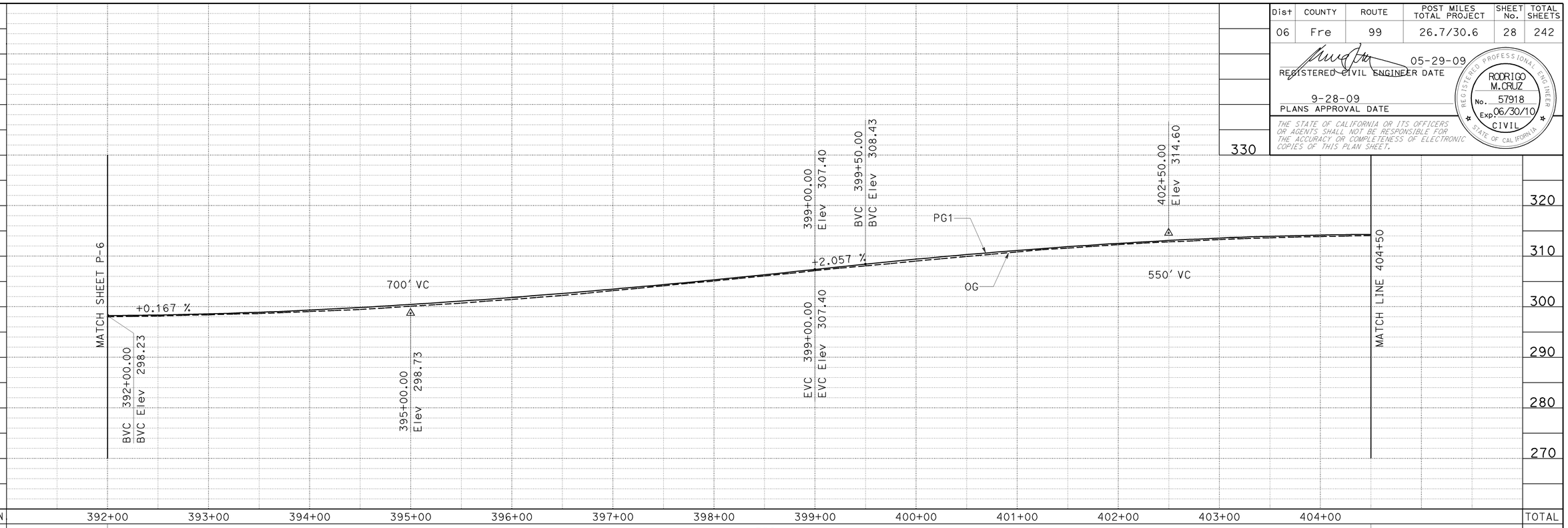

STATION	392+00	393+00	394+00	395+00	396+00	397+00	398+00	399+00	400+00	401+00	402+00	403+00	404+00	TOTAL
CY Exc	←							528					→	528
CY Emb	←							69					→	69

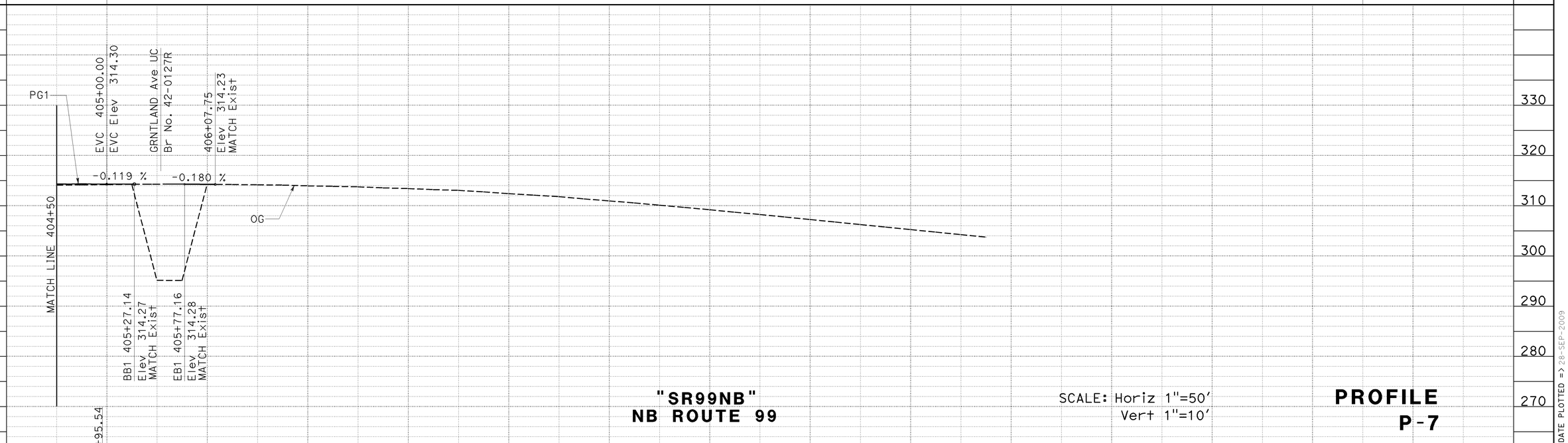

STATION	405+00	406+00	407+00	408+00	409+00	410+00	411+00	412+00	413+00	TOTAL
CY Exc	←41→									41
CY Emb	←0→									0

"SR99NB"
NB ROUTE 99

SCALE: Horiz 1"=50'
Vert 1"=10'

PROFILE
P-7

STATE OF CALIFORNIA - DEPARTMENT OF TRANSPORTATION
DESIGN
FUNCTIONAL SUPERVISOR: JUN XU
CALCULATED-DESIGNED BY
CHECKED BY: SUSAN GONZALEZ
REVISED BY
DATE REVISED: RODRIGO CRUZ

LAST REVISION DATE PLOTTED => 28-SEP-2009
TIME PLOTTED => 14:11
06-19-09

BORDER LAST REVISED 4/11/2008
RELATIVE BORDER SCALE IS IN INCHES 0 1 2 3
USERNAME => triim
DGN FILE => 644261fa007.dgn
CU 06249
EA 442611

Dist	COUNTY	ROUTE	POST MILES TOTAL PROJECT	SHEET No.	TOTAL SHEETS
06	Fre	99	26.7/30.6	29	242

05-29-09
REGISTERED CIVIL ENGINEER DATE

9-28-09
PLANS APPROVAL DATE

RODRIGO M. CRUZ
No. 57918
Exp 06/30/10
CIVIL
REGISTERED PROFESSIONAL ENGINEER
STATE OF CALIFORNIA

THE STATE OF CALIFORNIA OR ITS OFFICERS OR AGENTS SHALL NOT BE RESPONSIBLE FOR THE ACCURACY OR COMPLETENESS OF ELECTRONIC COPIES OF THIS PLAN SHEET.

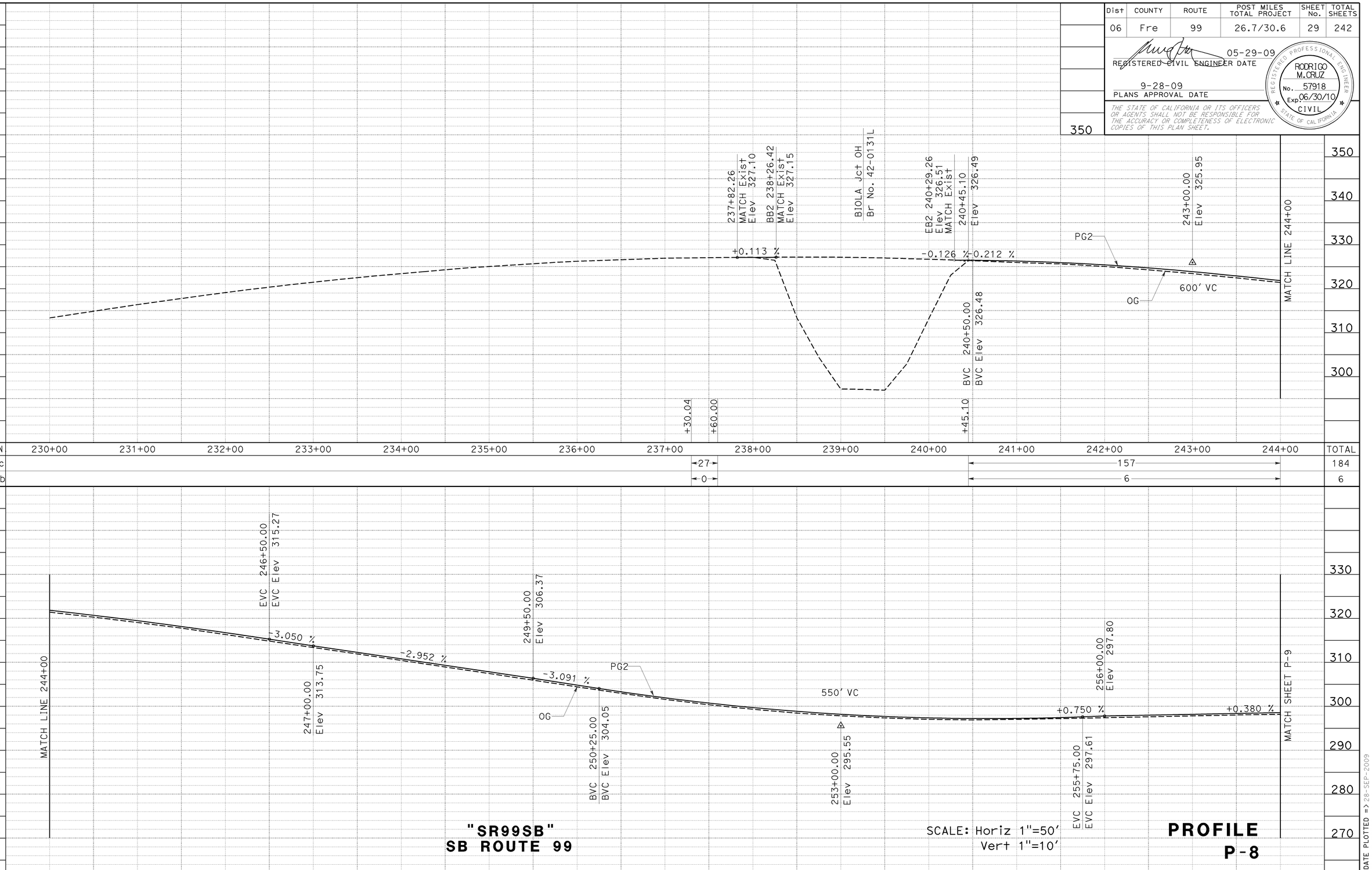

"SR99SB"
SB ROUTE 99

SCALE: Horiz 1"=50'
Vert 1"=10'

PROFILE
P-8

CALCULATED-DESIGNED BY
CHECKED BY
REVISED BY
DATE REVISED

SUSAN GONZALEZ
RODRIGO CRUZ

FUNCTIONAL SUPERVISOR
JUN XU

STATE OF CALIFORNIA - DEPARTMENT OF TRANSPORTATION
DESIGN

Caltrans

LAST REVISION
DATE PLOTTED => 28-SEP-2009
TIME PLOTTED => 14:11
06-29-09

BORDER LAST REVISED 4/11/2008

RELATIVE BORDER SCALE IS IN INCHES
0 1 2 3

USERNAME => trliim
DGN FILE => 644261fa008.dgn

CU 06249

EA 442611

Dist	COUNTY	ROUTE	POST MILES TOTAL PROJECT	SHEET No.	TOTAL SHEETS
06	Fre	99	26.7/30.6	30	242

05-29-09
REGISTERED CIVIL ENGINEER DATE

9-28-09
PLANS APPROVAL DATE

REGISTERED PROFESSIONAL ENGINEER
RODRIGO M. CRUZ
No. 57918
Exp 06/30/10
CIVIL
STATE OF CALIFORNIA

THE STATE OF CALIFORNIA OR ITS OFFICERS OR AGENTS SHALL NOT BE RESPONSIBLE FOR THE ACCURACY OR COMPLETENESS OF ELECTRONIC COPIES OF THIS PLAN SHEET.

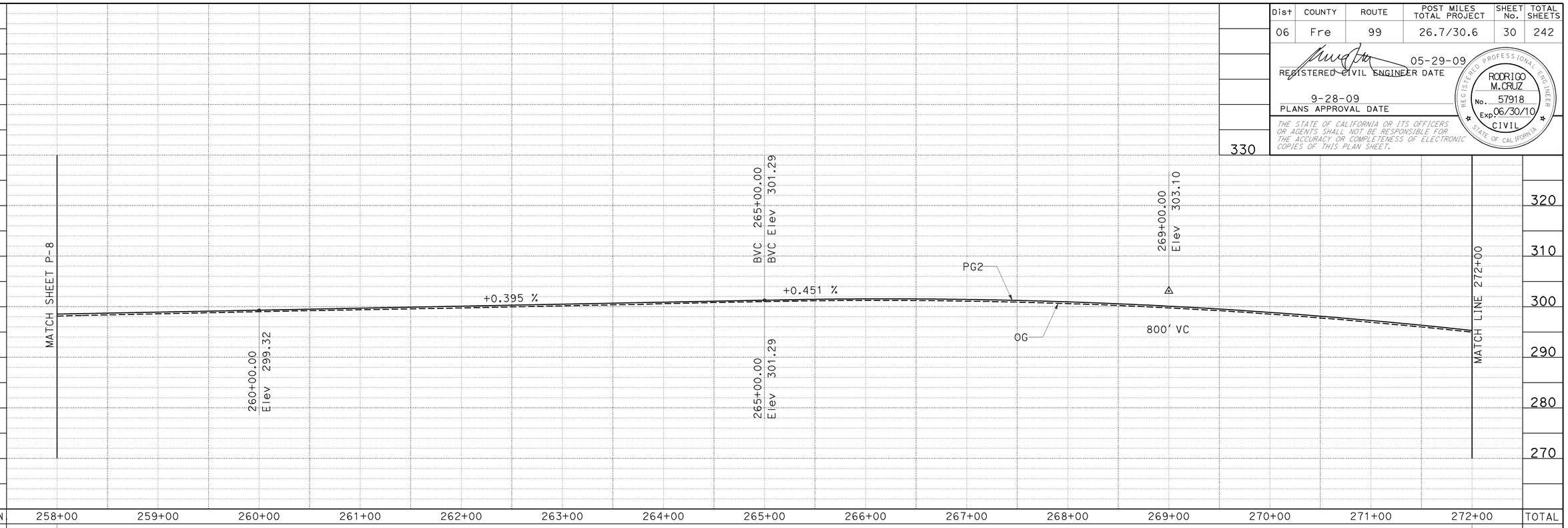

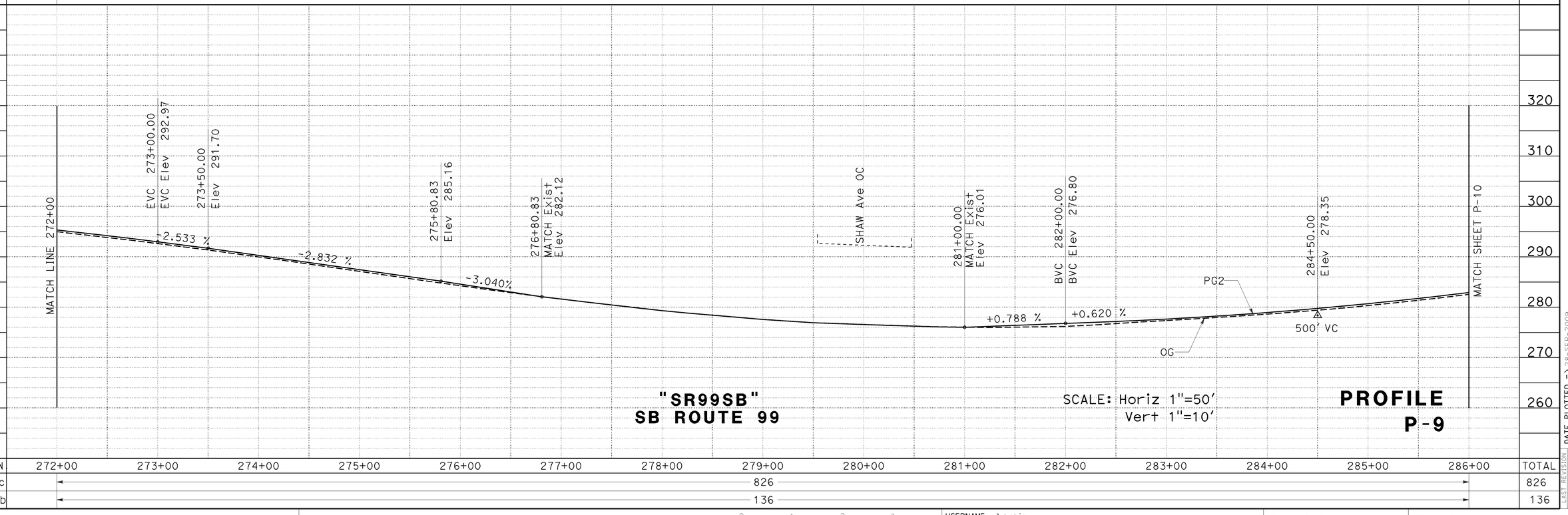

"SR99SB"
SB ROUTE 99

SCALE: Horiz 1"=50'
Vert 1"=10'

PROFILE
P-9

CALCULATED-DESIGNED BY
CHECKED BY
REVISED BY
DATE REVISED

SUSAN GONZALEZ
RODRIGO CRUZ

FUNCTIONAL SUPERVISOR
JUN XU

STATE OF CALIFORNIA - DEPARTMENT OF TRANSPORTATION
DESIGN

Caltrans

LAST REVISION DATE PLOTTED => 28-SEP-2009
TIME PLOTTED => 14:11
06-01-09

BORDER LAST REVISED 4/11/2008

RELATIVE BORDER SCALE IS IN INCHES 0 1 2 3

USERNAME => trliim
DGN FILE => 644261fa009.dgn

CU 06249

EA 442611

Dist	COUNTY	ROUTE	POST MILES TOTAL PROJECT	SHEET No.	TOTAL SHEETS
06	Fre	99	26.7/30.6	31	242

05-29-09
REGISTERED CIVIL ENGINEER DATE

9-28-09
PLANS APPROVAL DATE

REGISTERED PROFESSIONAL ENGINEER
RODRIGO M. CRUZ
No. 57918
Exp 06/30/10
CIVIL
STATE OF CALIFORNIA

THE STATE OF CALIFORNIA OR ITS OFFICERS OR AGENTS SHALL NOT BE RESPONSIBLE FOR THE ACCURACY OR COMPLETENESS OF ELECTRONIC COPIES OF THIS PLAN SHEET.

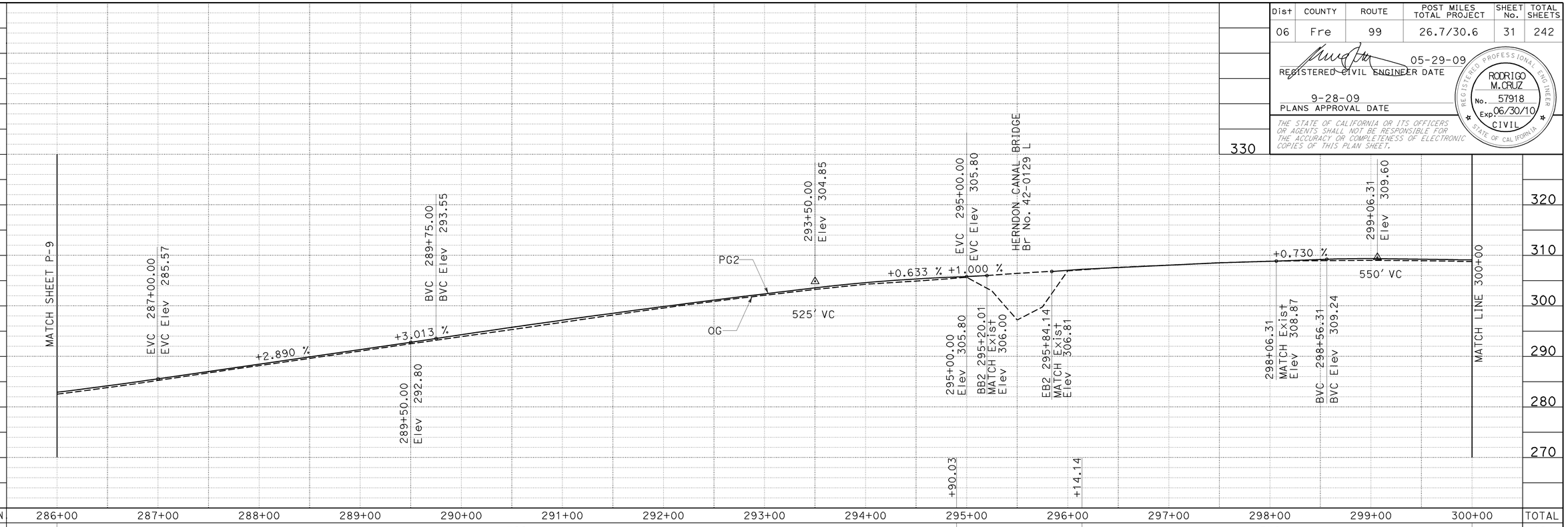

STATION	286+00	287+00	288+00	289+00	290+00	291+00	292+00	293+00	294+00	295+00	296+00	297+00	298+00	299+00	300+00	TOTAL
CY Exc	388										236					624
CY Emb	192										45					237

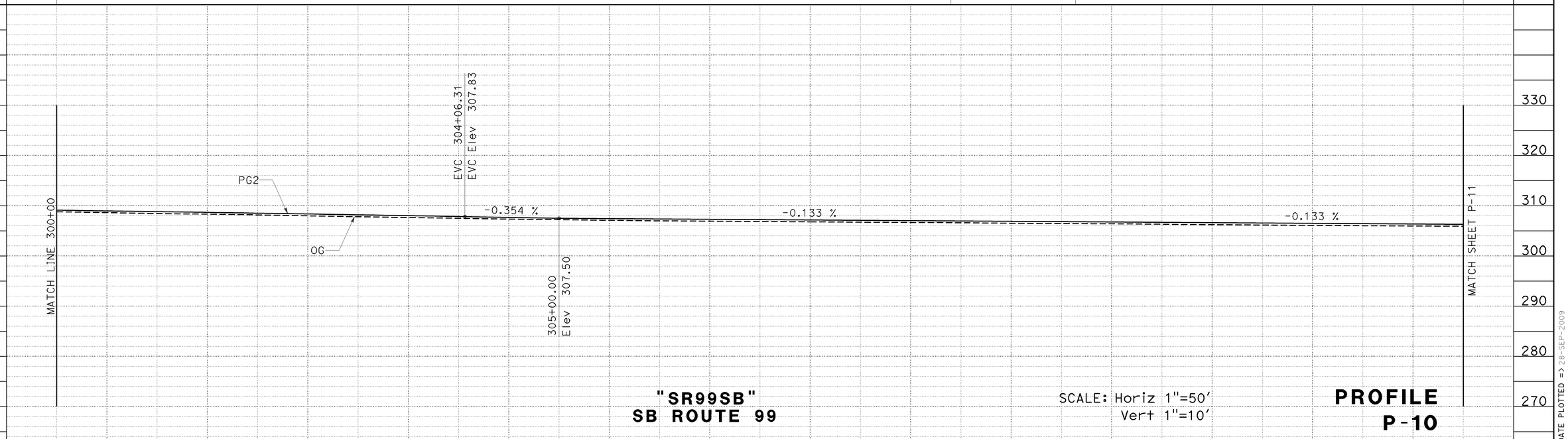

STATION	300+00	301+00	302+00	303+00	304+00	305+00	306+00	307+00	308+00	309+00	310+00	311+00	312+00	313+00	314+00	TOTAL
CY Exc	546															546
CY Emb	264															264

"SR99SB"
SB ROUTE 99

SCALE: Horiz 1"=50'
Vert 1"=10'

PROFILE
P-10

STATE OF CALIFORNIA - DEPARTMENT OF TRANSPORTATION
DESIGN
FUNCTIONAL SUPERVISOR: JUN XU
CALCULATED-DESIGNED BY
CHECKED BY: SUSAN GONZALEZ
DRAWN BY: RODRIGO CRUZ
REVISED BY
DATE REVISED

LAST REVISION DATE PLOTTED => 28-SEP-2009
TIME PLOTTED => 14:11
06-19-09

BORDER LAST REVISED 4/11/2008
RELATIVE BORDER SCALE IS IN INCHES 0 1 2 3
USERNAME => trliim
DGN FILE => 644261fa010.dgn
CU 06249
EA 442611

Dist	COUNTY	ROUTE	POST MILES TOTAL PROJECT	SHEET No.	TOTAL SHEETS
06	Fre	99	26.7/30.6	32	242

REGISTERED CIVIL ENGINEER — 05-29-09 DATE

PLANS APPROVAL DATE — 9-28-09

REGISTERED PROFESSIONAL ENGINEER — RODRIGO M. CRUZ — No. 57918 — Exp 06/30/10 — CIVIL — STATE OF CALIFORNIA

THE STATE OF CALIFORNIA OR ITS OFFICERS OR AGENTS SHALL NOT BE RESPONSIBLE FOR THE ACCURACY OR COMPLETENESS OF ELECTRONIC COPIES OF THIS PLAN SHEET.

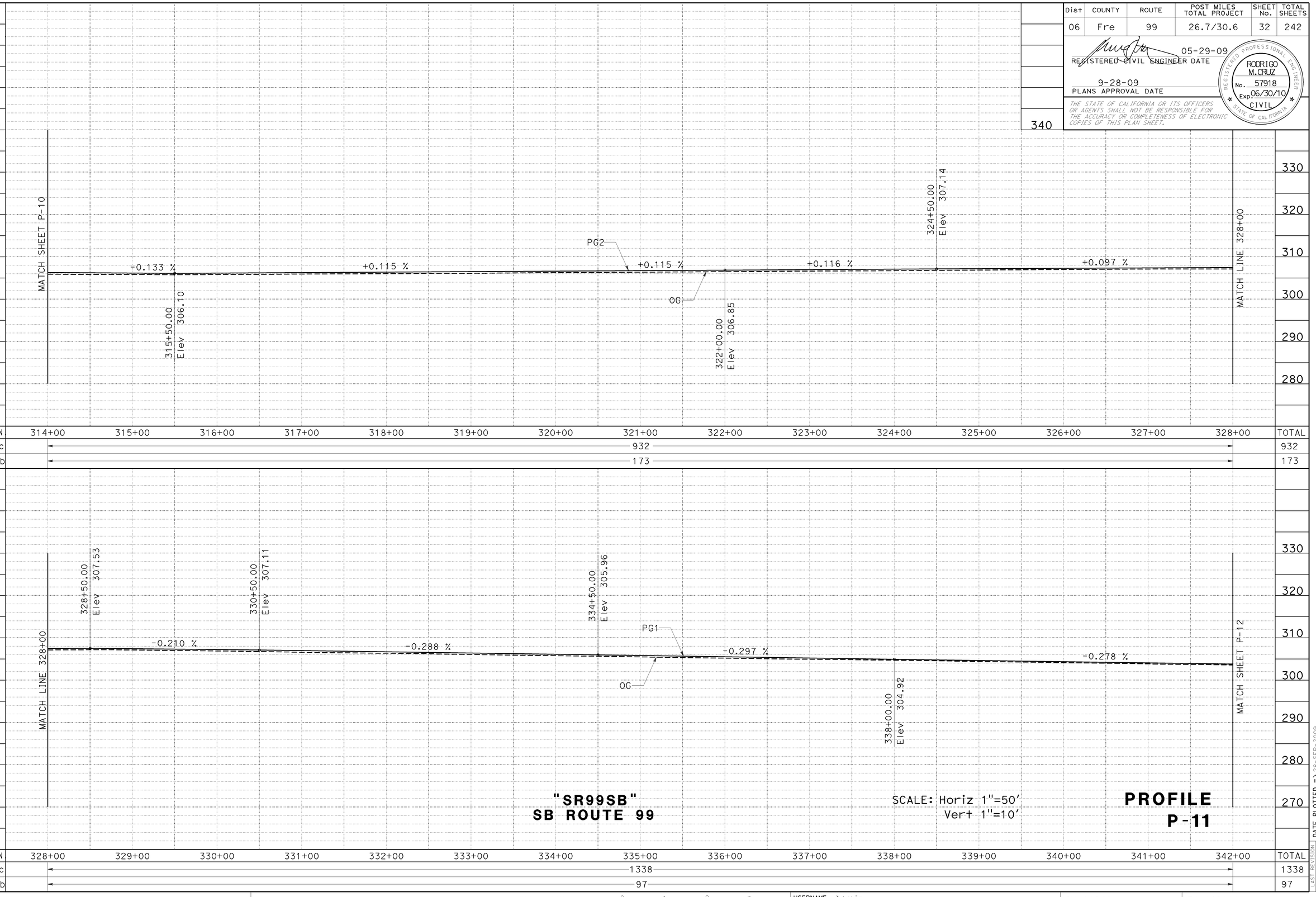

"SR99SB"
SB ROUTE 99

SCALE: Horiz 1"=50'
Vert 1"=10'

PROFILE
P-11

CALCULATED-DESIGNED BY

CHECKED BY

REVISED BY

DATE REVISED

SUSAN GONZALEZ

RODRIGO CRUZ

FUNCTIONAL SUPERVISOR

JUN XU

STATE OF CALIFORNIA - DEPARTMENT OF TRANSPORTATION

DESIGN

Caltrans

LAST REVISION
DATE PLOTTED => 28-SEP-2009
TIME PLOTTED => 14:11
06-19-09

BORDER LAST REVISED 4/11/2008

RELATIVE BORDER SCALE IS IN INCHES 0 1 2 3

USERNAME => trliim
DGN FILE => 644261fa011.dgn

CU 06249

EA 442611

Dist	COUNTY	ROUTE	POST MILES TOTAL PROJECT	SHEET No.	TOTAL SHEETS
06	Fre	99	26.7/30.6	33	242

05-29-09
REGISTERED CIVIL ENGINEER DATE

9-28-09
PLANS APPROVAL DATE

REGISTERED PROFESSIONAL ENGINEER
RODRIGO M. CRUZ
No. 57918
Exp 06/30/10
CIVIL
STATE OF CALIFORNIA

THE STATE OF CALIFORNIA OR ITS OFFICERS OR AGENTS SHALL NOT BE RESPONSIBLE FOR THE ACCURACY OR COMPLETENESS OF ELECTRONIC COPIES OF THIS PLAN SHEET.

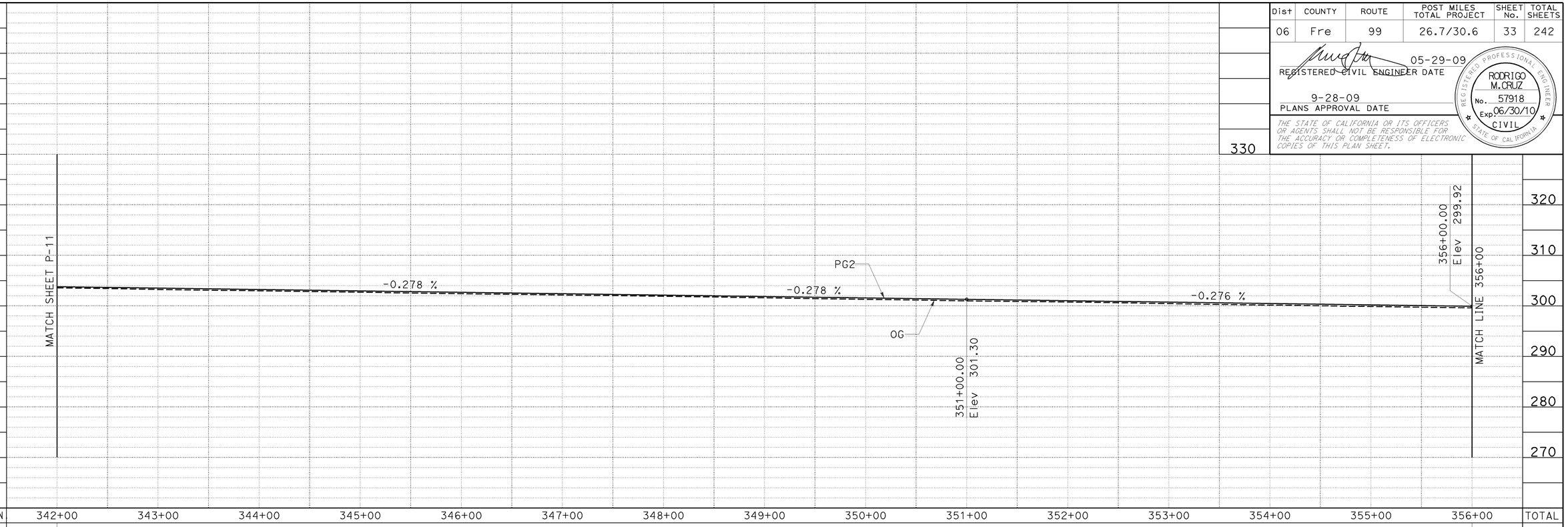

STATION	342+00	343+00	344+00	345+00	346+00	347+00	348+00	349+00	350+00	351+00	352+00	353+00	354+00	355+00	356+00	TOTAL
CY Exc	1403															1403
CY Emb	60															60

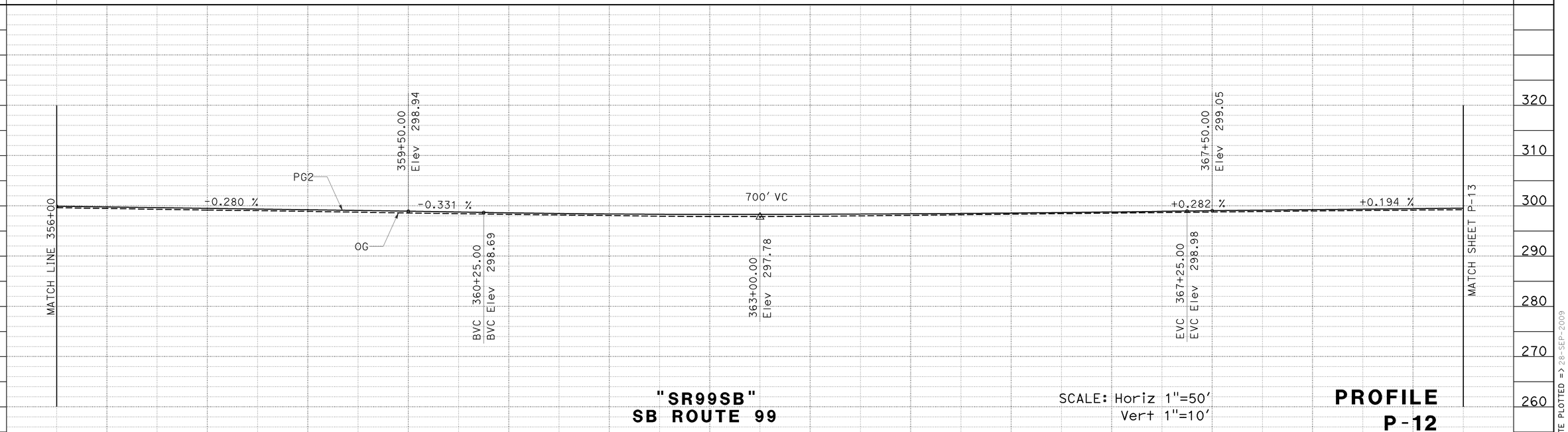

STATION	356+00	357+00	358+00	359+00	360+00	361+00	362+00	363+00	364+00	365+00	366+00	367+00	368+00	369+00	370+00	TOTAL
CY Exc	1231															1231
CY Emb	58															58

"SR99SB"
SB ROUTE 99

SCALE: Horiz 1"=50'
Vert 1"=10'

PROFILE
P-12

CALCULATED-DESIGNED BY: SUSAN GONZALEZ
CHECKED BY: RODRIGO CRUZ
FUNCTIONAL SUPERVISOR: JUN XU
STATE OF CALIFORNIA - DEPARTMENT OF TRANSPORTATION
Caltrans®
DESIGN

REVISED BY | DATE REVISED

LAST REVISION | DATE PLOTTED => 28-SEP-2009
06-19-09 | TIME PLOTTED => 14:11

BORDER LAST REVISED 4/11/2008

RELATIVE BORDER SCALE IS IN INCHES 0 1 2 3

USERNAME => triim
DGN FILE => 644261fa012.dgn

CU 06249

EA 442611

Dist	COUNTY	ROUTE	POST MILES TOTAL PROJECT	SHEET No.	TOTAL SHEETS
06	Fre	99	26.7/30.6	34	242

05-29-09
REGISTERED CIVIL ENGINEER DATE

9-28-09
PLANS APPROVAL DATE

RODRIGO M. CRUZ
No. 57918
Exp 06/30/10
CIVIL
REGISTERED PROFESSIONAL ENGINEER
STATE OF CALIFORNIA

THE STATE OF CALIFORNIA OR ITS OFFICERS OR AGENTS SHALL NOT BE RESPONSIBLE FOR THE ACCURACY OR COMPLETENESS OF ELECTRONIC COPIES OF THIS PLAN SHEET.

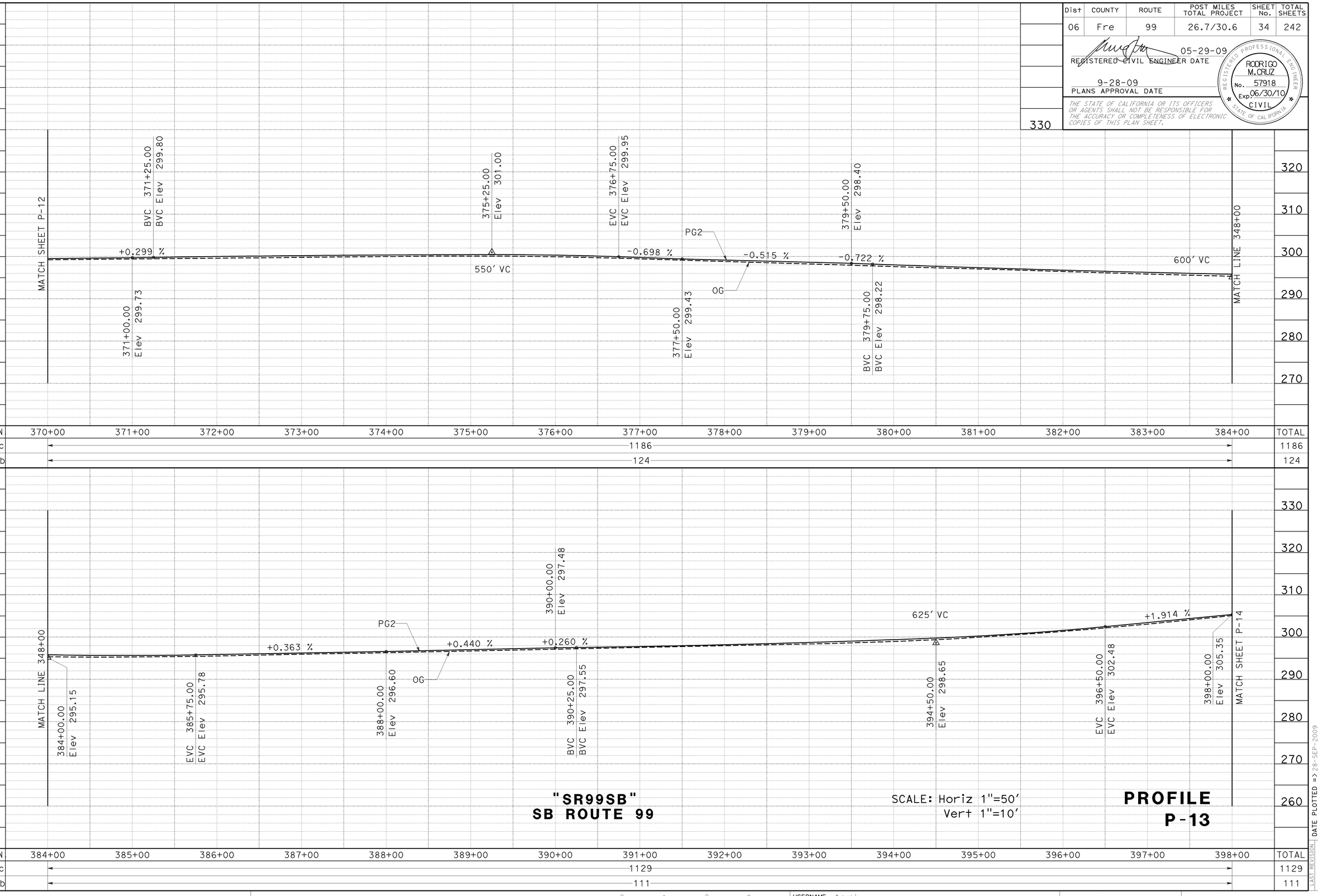

"SR99SB"
SB ROUTE 99

SCALE: Horiz 1"=50'
Vert 1"=10'

PROFILE
P-13

STATE OF CALIFORNIA - DEPARTMENT OF TRANSPORTATION
DESIGN
FUNCTIONAL SUPERVISOR: JUN XU
CALCULATED-DESIGNED BY
CHECKED BY: SUSAN GONZALEZ
DRAWN BY: RODRIGO CRUZ
REVISED BY
DATE REVISED

LAST REVISION
DATE PLOTTED => 28-SEP-2009
TIME PLOTTED => 14:11
06-19-09

BORDER LAST REVISED 4/11/2008

RELATIVE BORDER SCALE IS IN INCHES 0 1 2 3

USERNAME => trliim
DGN FILE => 644261fa013.dgn

CU 06249

EA 442611

Dist	COUNTY	ROUTE	POST MILES TOTAL PROJECT	SHEET No.	TOTAL SHEETS
06	Fre	99	26.7/30.6	35	242

05-29-09
REGISTERED CIVIL ENGINEER DATE

9-28-09
PLANS APPROVAL DATE

REGISTERED PROFESSIONAL ENGINEER
RODRIGO M. CRUZ
No. 57918
Exp 06/30/10
CIVIL
STATE OF CALIFORNIA

THE STATE OF CALIFORNIA OR ITS OFFICERS OR AGENTS SHALL NOT BE RESPONSIBLE FOR THE ACCURACY OR COMPLETENESS OF ELECTRONIC COPIES OF THIS PLAN SHEET.

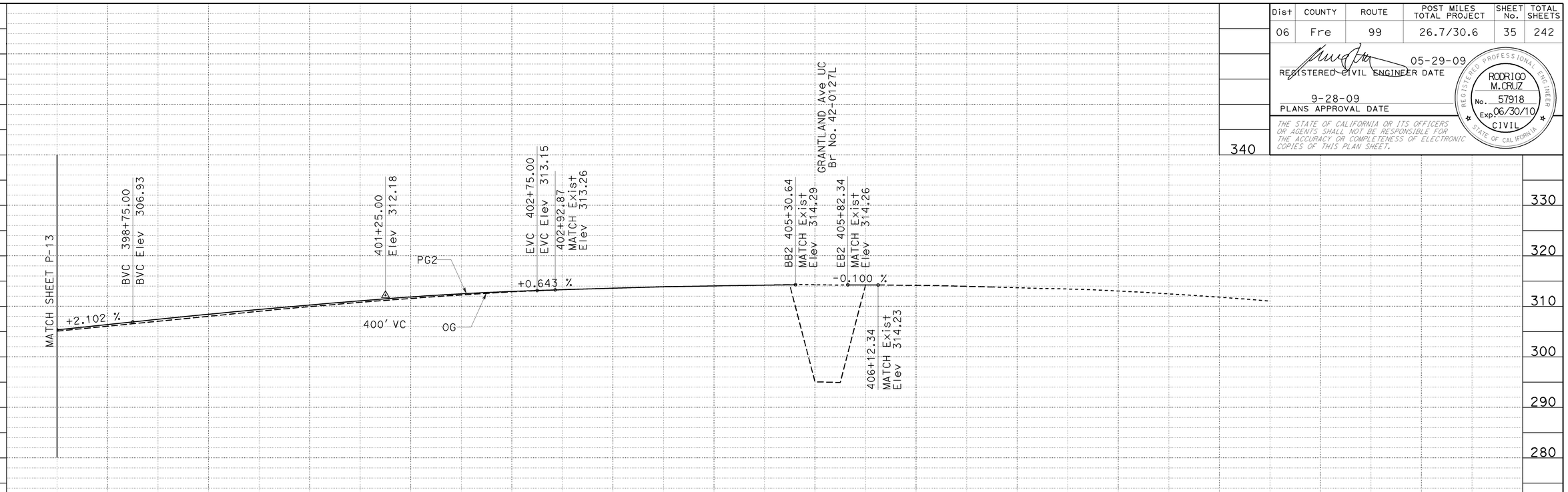

STATION	398+00	399+00	400+00	401+00	402+00	403+00	404+00	405+00	406+00	407+00	408+00	409+00	410+00	420+00	430+00	TOTAL
CY Exc	◄							307							►	307
CY Emb	◄							74							►	74

"SR99SB"
SB ROUTE 99

SCALE: Horiz 1"=50'
Vert 1"=10'

PROFILE
P-14

CALCULATED-DESIGNED BY
CHECKED BY
REVISED BY
DATE REVISED
SUSAN GONZALEZ
RODRIGO CRUZ
FUNCTIONAL SUPERVISOR
JUN XU
STATE OF CALIFORNIA - DEPARTMENT OF TRANSPORTATION
Caltrans
DESIGN

LAST REVISION DATE PLOTTED => 28-SEP-2009
TIME PLOTTED => 14:12
06-19-09

BORDER LAST REVISED 4/11/2008
RELATIVE BORDER SCALE IS IN INCHES 0 1 2 3
USERNAME => triim
DGN FILE => 644261fa014.dgn
CU 06249
EA 442611

Dist	COUNTY	ROUTE	POST MILES TOTAL PROJECT	SHEET No.	TOTAL SHEETS
06	Fre	99	26.7/30.6	36	242

05-29-09
REGISTERED CIVIL ENGINEER DATE

9-28-09
PLANS APPROVAL DATE

RODRIGO M. CRUZ No. 57918 Exp 06/30/10 CIVIL — REGISTERED PROFESSIONAL ENGINEER — STATE OF CALIFORNIA

THE STATE OF CALIFORNIA OR ITS OFFICERS OR AGENTS SHALL NOT BE RESPONSIBLE FOR THE ACCURACY OR COMPLETENESS OF ELECTRONIC COPIES OF THIS PLAN SHEET.

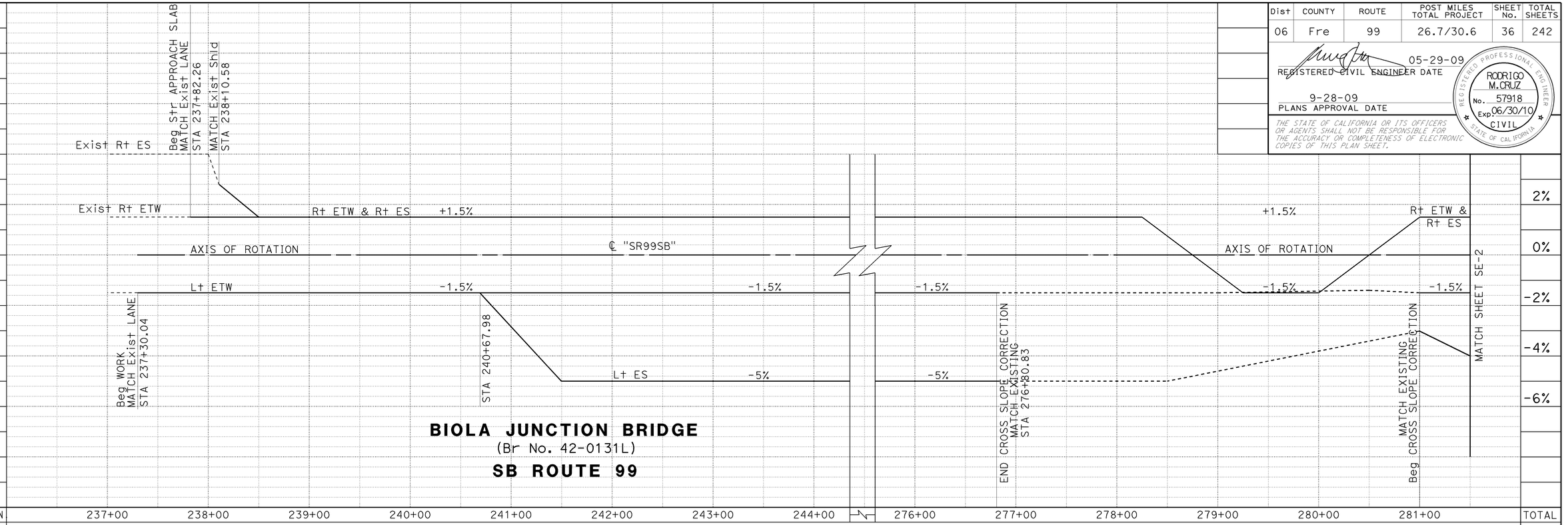

BIOLA JUNCTION BRIDGE
(Br No. 42-0131L)
SB ROUTE 99

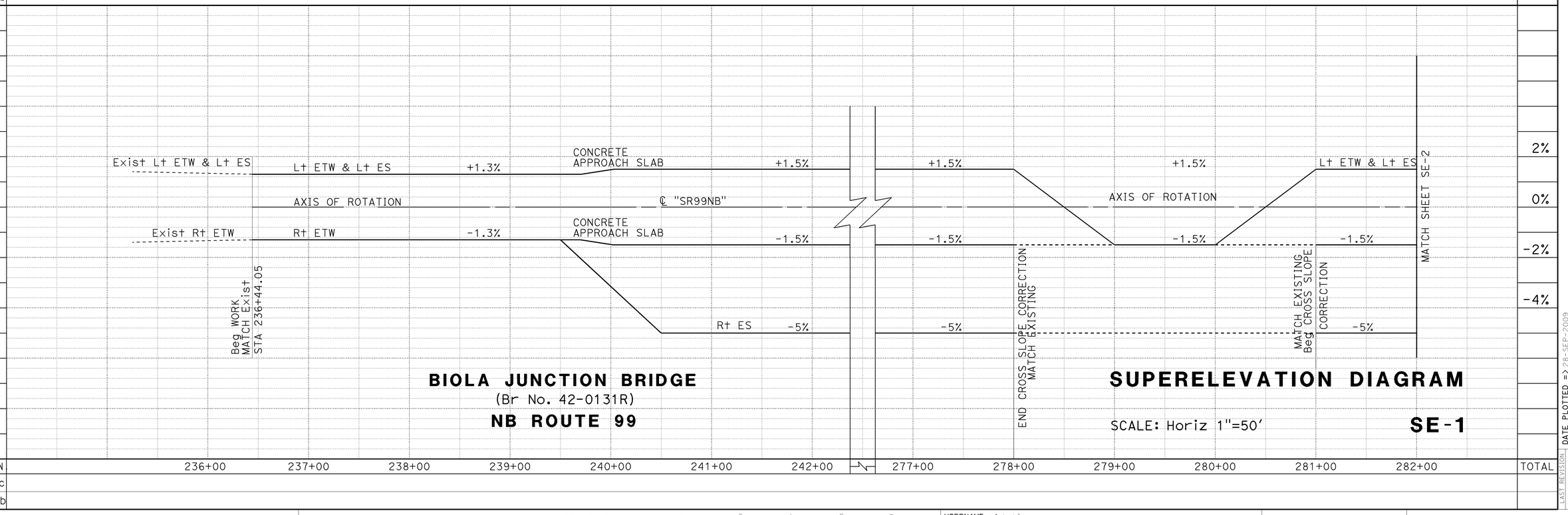

BIOLA JUNCTION BRIDGE
(Br No. 42-0131R)
NB ROUTE 99

SUPERELEVATION DIAGRAM

SCALE: Horiz 1"=50'

SE-1

STATE OF CALIFORNIA - DEPARTMENT OF TRANSPORTATION
DESIGN
FUNCTIONAL SUPERVISOR: JUN XU
CALCULATED-DESIGNED BY: SUSAN M GONZALEZ
CHECKED BY: RODRIGO CRUZ
REVISED BY
DATE REVISED
Caltrans

LAST REVISION DATE PLOTTED => 26-SEP-2009
TIME PLOTTED => 14:12
05-28-09

BORDER LAST REVISED 4/11/2008
RELATIVE BORDER SCALE IS IN INCHES 0 1 2 3
USERNAME => triim
DGN FILE => 644261fc001.dgn
CU 06249
EA 442611

Dist	COUNTY	ROUTE	POST MILES TOTAL PROJECT	SHEET No.	TOTAL SHEETS
06	Fre	99	26.7/30.6	37	242

05-29-09
REGISTERED CIVIL ENGINEER DATE

9-28-09
PLANS APPROVAL DATE

REGISTERED PROFESSIONAL ENGINEER
RODRIGO M. CRUZ
No. 57918
Exp 06/30/10
CIVIL
STATE OF CALIFORNIA

THE STATE OF CALIFORNIA OR ITS OFFICERS OR AGENTS SHALL NOT BE RESPONSIBLE FOR THE ACCURACY OR COMPLETENESS OF ELECTRONIC COPIES OF THIS PLAN SHEET.

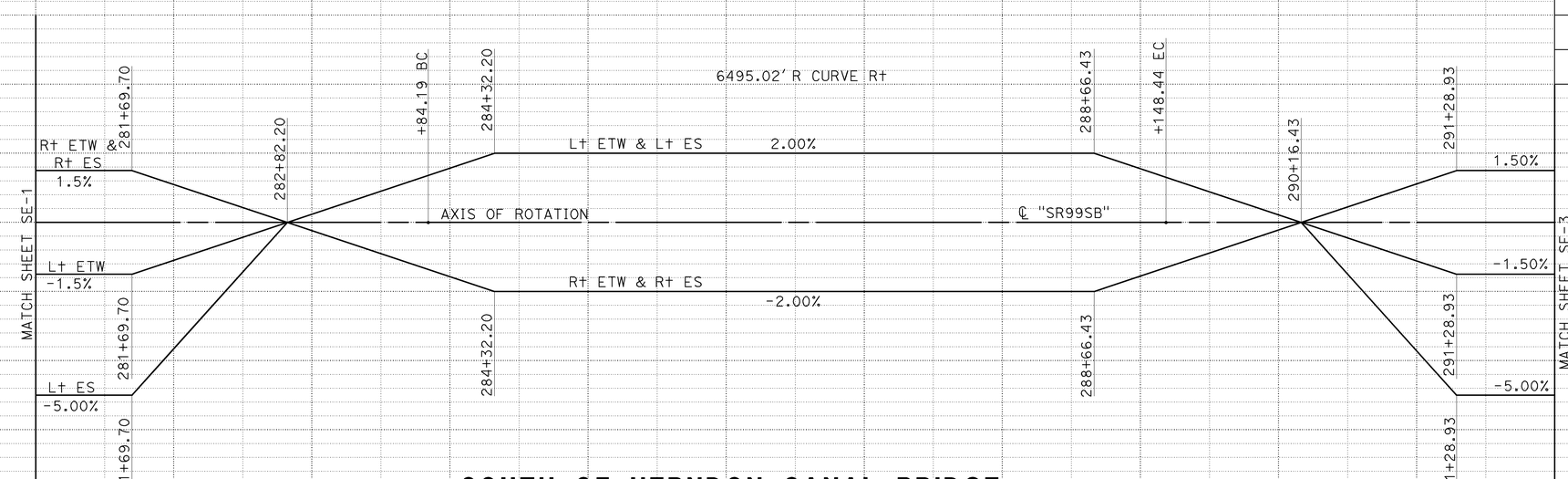

SOUTH OF HERNDON CANAL BRIDGE
SB ROUTE 99

STATION	281+00	282+00	283+00	284+00	285+00	286+00	287+00	288+00	289+00	290+00	291+00	292+00	TOTAL
CY Exc													
CY Emb													

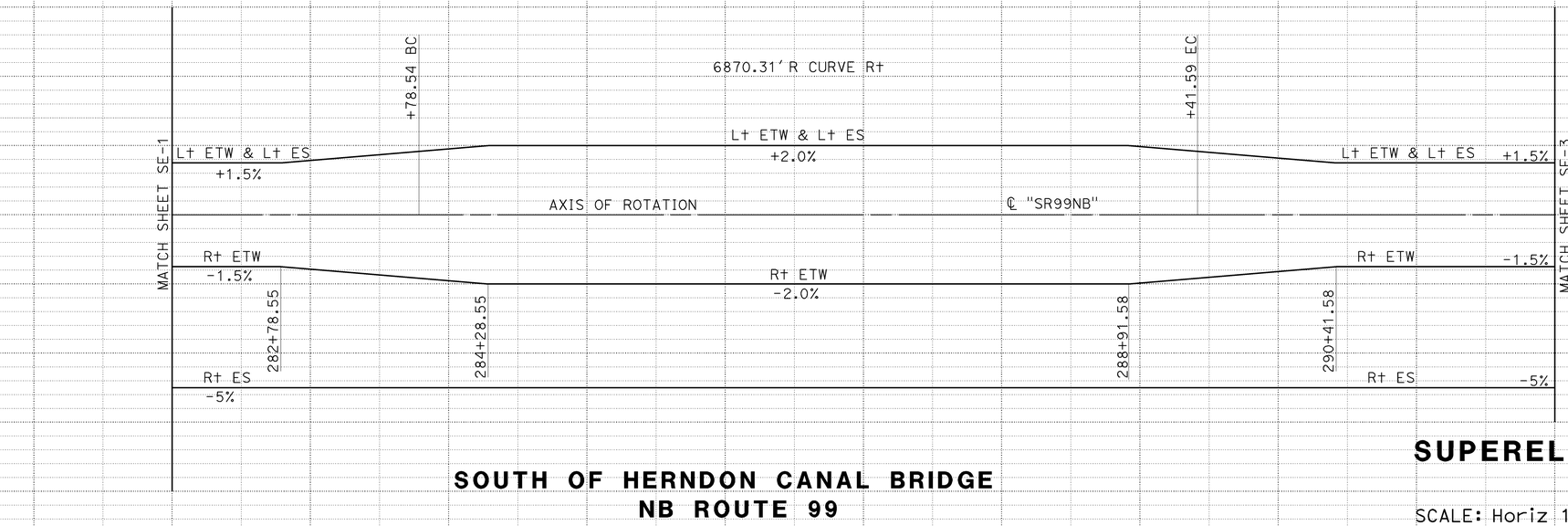

SOUTH OF HERNDON CANAL BRIDGE
NB ROUTE 99

SUPERELEVATION DIAGRAM

SCALE: Horiz 1"=50'

SE-2

STATION	282+00	283+00	284+00	285+00	286+00	287+00	288+00	289+00	290+00	291+00	292+00	TOTAL
CY Exc												
CY Emb												

CALCULATED-DESIGNED BY: SUSAN M GONZALEZ
CHECKED BY: RODRIGO CRUZ
REVISED BY
DATE REVISED
FUNCTIONAL SUPERVISOR: JUN XU
STATE OF CALIFORNIA - DEPARTMENT OF TRANSPORTATION
DESIGN
Caltrans

LAST REVISION DATE PLOTTED => 28-SEP-2009
TIME PLOTTED => 14:12
03-12-09

BORDER LAST REVISED 4/11/2008
RELATIVE BORDER SCALE IS IN INCHES 0 1 2 3
USERNAME => triim
DGN FILE => 644261fc002.dgn
CU 06249
EA 442611

Dist	COUNTY	ROUTE	POST MILES TOTAL PROJECT	SHEET No.	TOTAL SHEETS
06	Fre	99	26.7/30.6	38	242

05-29-09
REGISTERED CIVIL ENGINEER DATE

9-28-09
PLANS APPROVAL DATE

REGISTERED PROFESSIONAL ENGINEER
RODRIGO M. CRUZ
No. 57918
Exp 06/30/10
CIVIL
STATE OF CALIFORNIA

THE STATE OF CALIFORNIA OR ITS OFFICERS OR AGENTS SHALL NOT BE RESPONSIBLE FOR THE ACCURACY OR COMPLETENESS OF ELECTRONIC COPIES OF THIS PLAN SHEET.

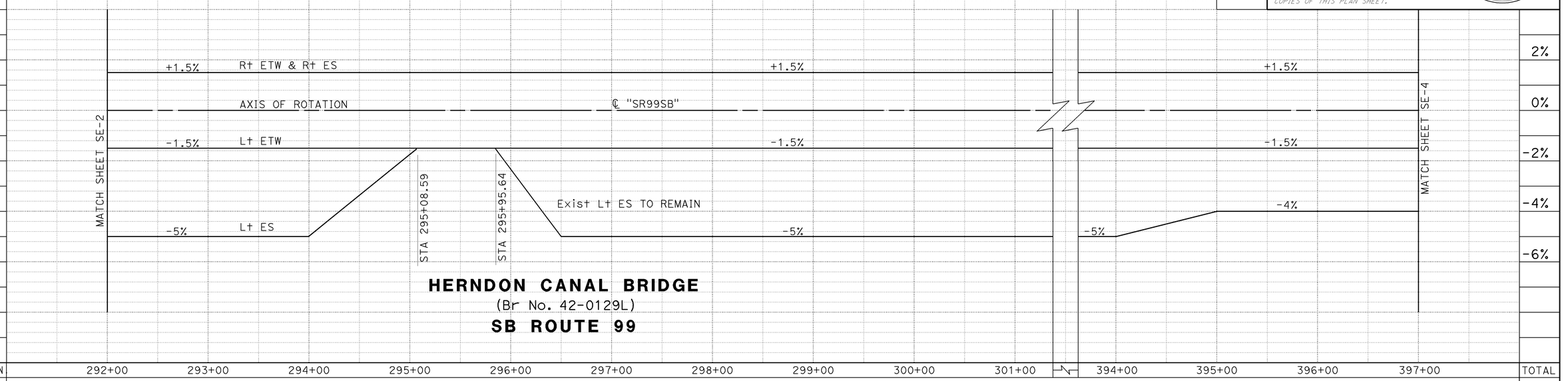

HERNDON CANAL BRIDGE
(Br No. 42-0129L)
SB ROUTE 99

STATION	292+00	293+00	294+00	295+00	296+00	297+00	298+00	299+00	300+00	301+00	394+00	395+00	396+00	397+00	TOTAL
CY Exc															
CY Emb															

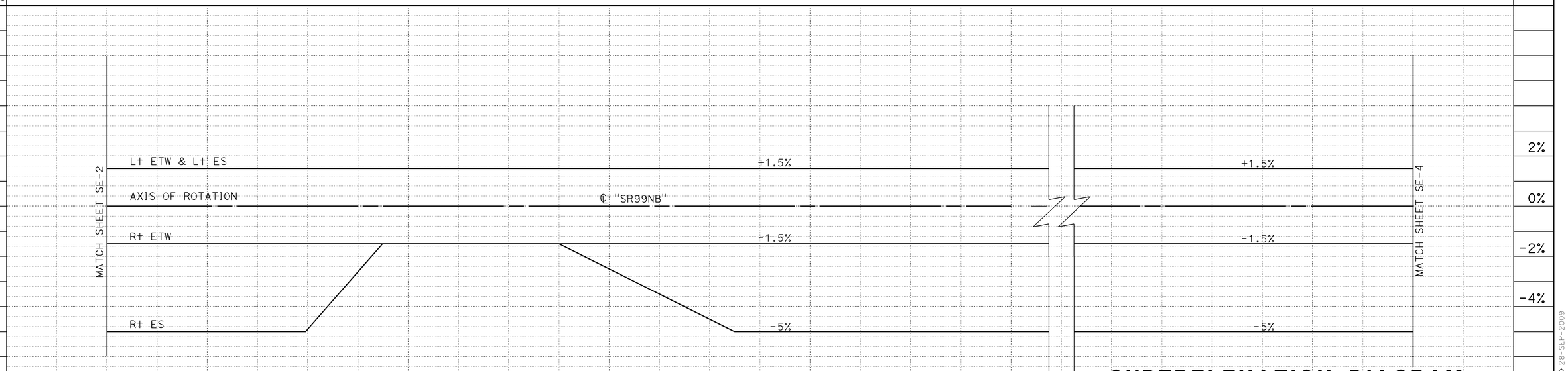

HERNDON CANAL BRIDGE
(Br No. 42-0129R)
NB ROUTE 99

SUPERELEVATION DIAGRAM

SCALE: Horiz 1"=50'

SE-3

STATION	292+00	293+00	294+00	295+00	296+00	297+00	298+00	299+00	300+00	301+00	398+00	399+00	400+00	401+00	TOTAL
CY Exc															
CY Emb															

REVISED BY | DATE REVISED

CALCULATED-DESIGNED BY: SUSAN M GONZALEZ
CHECKED BY: RODRIGO CRUZ
FUNCTIONAL SUPERVISOR: JUN XU

STATE OF CALIFORNIA - DEPARTMENT OF TRANSPORTATION
DESIGN

LAST REVISION | DATE PLOTTED => 26-SEP-2009 | TIME PLOTTED => 14:12
03-12-09

BORDER LAST REVISED 4/11/2008

RELATIVE BORDER SCALE IS IN INCHES 0 1 2 3

USERNAME => trlim
DGN FILE => 644261fc003.dgn

CU 06249

EA 442611

Dist	COUNTY	ROUTE	POST MILES TOTAL PROJECT	SHEET No.	TOTAL SHEETS
06	Fre	99	26.7/30.6	39	242

05-29-09
REGISTERED CIVIL ENGINEER DATE

9-28-09
PLANS APPROVAL DATE

REGISTERED PROFESSIONAL ENGINEER
RODRIGO M. CRUZ
No. 57918
Exp 06/30/10
CIVIL
STATE OF CALIFORNIA

THE STATE OF CALIFORNIA OR ITS OFFICERS OR AGENTS SHALL NOT BE RESPONSIBLE FOR THE ACCURACY OR COMPLETENESS OF ELECTRONIC COPIES OF THIS PLAN SHEET.

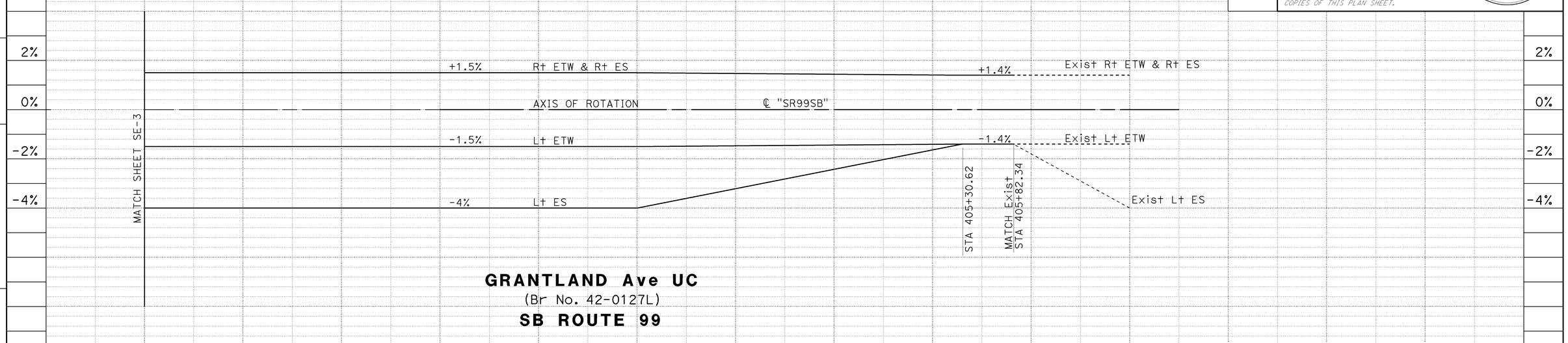

GRANTLAND Ave UC
(Br No. 42-0127L)
SB ROUTE 99

STATION	397+00	398+00	399+00	400+00	401+00	402+00	403+00	404+00	405+00	406+00	407+00	TOTAL
CY Exc												
CY Emb												

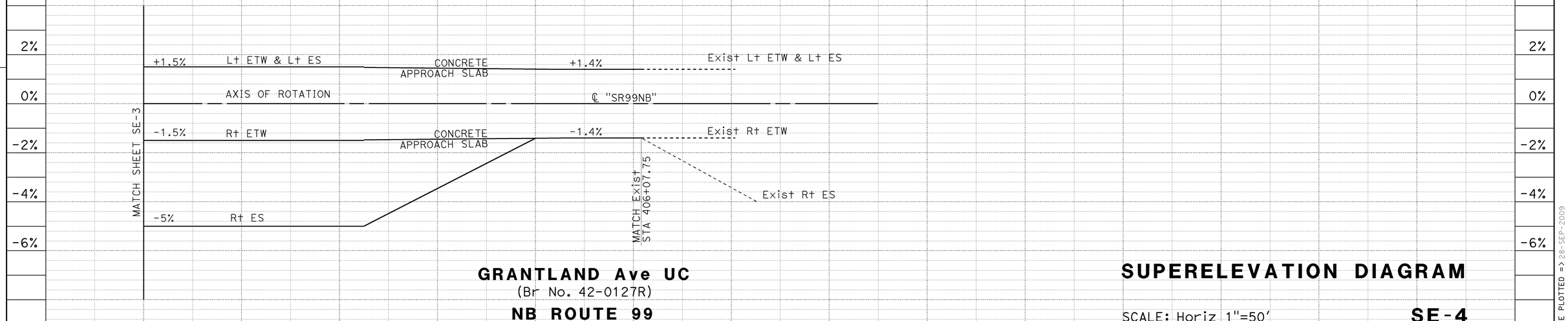

GRANTLAND Ave UC
(Br No. 42-0127R)
NB ROUTE 99

STATION	401+00	402+00	403+00	404+00	405+00	406+00	407+00	408+00	TOTAL
CY Exc									
CY Emb									

SUPERELEVATION DIAGRAM

SCALE: Horiz 1"=50'

SE-4

CALCULATED-DESIGNED BY: SUSAN M GONZALEZ
CHECKED BY: RODRIGO CRUZ
REVISED BY
DATE REVISED
FUNCTIONAL SUPERVISOR: JUN XU

STATE OF CALIFORNIA - DEPARTMENT OF TRANSPORTATION
Caltrans®
DESIGN

LAST REVISION DATE PLOTTED => 28-SEP-2009
TIME PLOTTED => 14:12
05-29-09

BORDER LAST REVISED 4/11/2008

RELATIVE BORDER SCALE IS IN INCHES 0 1 2 3

USERNAME => triim
DGN FILE => 644261fc004.dgn

CU 06249

EA 442611

Dist	COUNTY	ROUTE	POST MILES TOTAL PROJECT	SHEET No.	TOTAL SHEETS
06	Fre	99	26.7/30.6	40	242

05-29-09
REGISTERED CIVIL ENGINEER DATE

9-28-09
PLANS APPROVAL DATE

REGISTERED PROFESSIONAL ENGINEER
RODRIGO M. CRUZ
No. 57918
Exp 06/30/10
CIVIL
STATE OF CALIFORNIA

THE STATE OF CALIFORNIA OR ITS OFFICERS OR AGENTS SHALL NOT BE RESPONSIBLE FOR THE ACCURACY OR COMPLETENESS OF SCANNED COPIES OF THIS PLAN SHEET.

LEGEND

COLD PLANE AC PVMT

REPLACE AC SURFACING (0.35' AC & PRF)

REMOVE CONCRETE

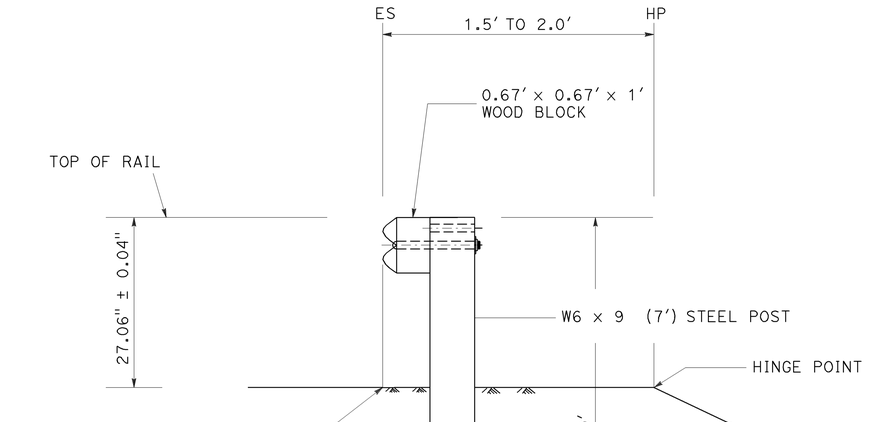

MBGR (7' POST) AT NARROW ROADWAY

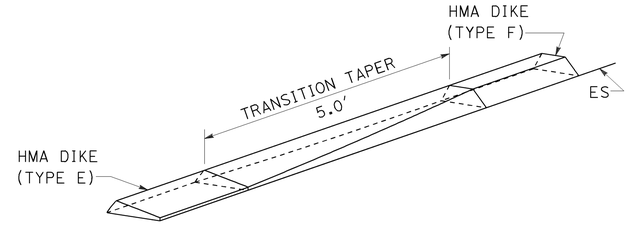

HMA DIKE TRANSITION DETAILS (TYPE E TO TYPE F)

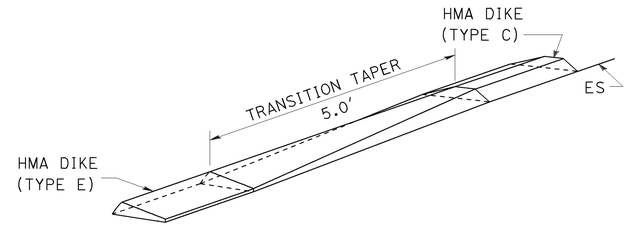

HMA DIKE TRANSITION DETAILS (TYPE E TO TYPE C)

CONSTRUCTION DETAILS

NO SCALE

C-1

CALCULATED-DESIGNED BY	HARITH KIRAN/I. LEE	REVISED BY
CHECKED BY	SUSAN M. GONZALEZ	DATE REVISED
FUNCTIONAL SUPERVISOR	JUN XU	
STATE OF CALIFORNIA - DEPARTMENT OF TRANSPORTATION	DESIGN	

Caltrans

LAST REVISION 04-28-09
DATE PLOTTED => 28-SEP-2009
TIME PLOTTED => 14:12

BORDER LAST REVISED 4/11/2008

RELATIVE BORDER SCALE IS IN INCHES 0 1 2 3

USERNAME => trliim
DGN FILE => 644261ga001.dgn

CU 06249

EA 442611

Dist	COUNTY	ROUTE	POST MILES TOTAL PROJECT	SHEET No.	TOTAL SHEETS
06	Fre	99	26.7/30.6	41	242

REGISTERED CIVIL ENGINEER — DATE: 05-29-09

PLANS APPROVAL DATE: 9-28-09

REGISTERED PROFESSIONAL ENGINEER — RODRIGO M. CRUZ — No. 57918 — Exp 06/30/10 — CIVIL — STATE OF CALIFORNIA

THE STATE OF CALIFORNIA OR ITS OFFICERS OR AGENTS SHALL NOT BE RESPONSIBLE FOR THE ACCURACY OR COMPLETENESS OF SCANNED COPIES OF THIS PLAN SHEET.

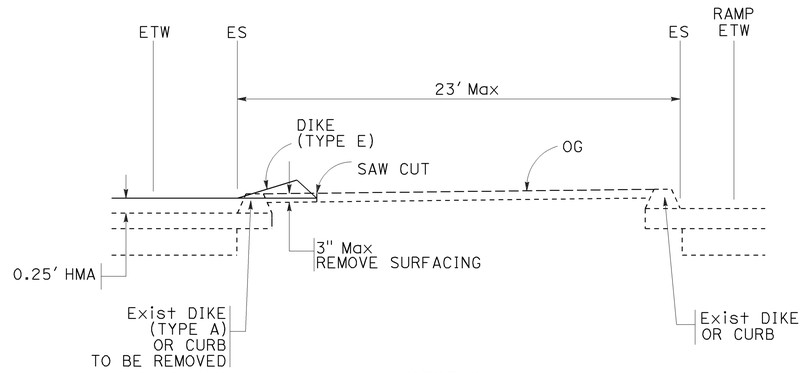

SECTION A-A

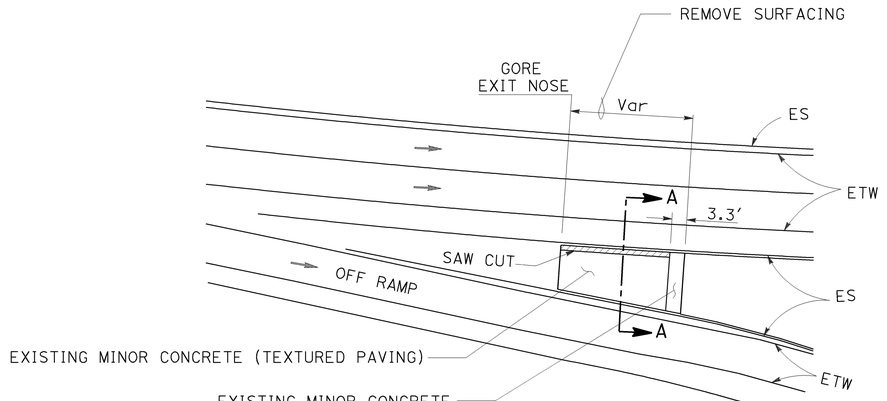

OFF RAMP (SHAW Ave NB & SB, HERNDON Ave NB)

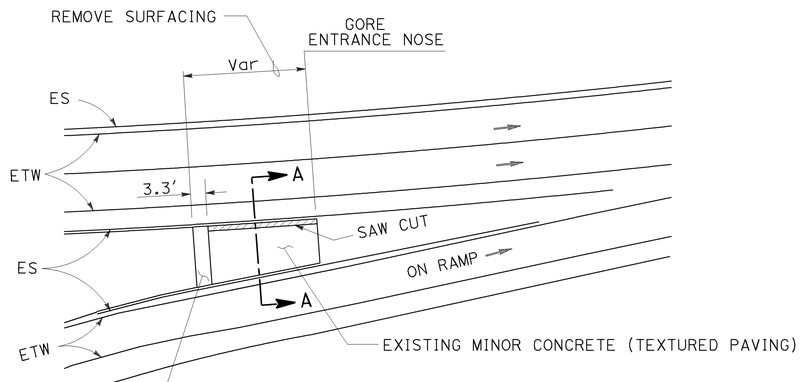

ON RAMP (SHAW Ave SB, NB & HERNDON Ave SB)

PLACEMENT OF HMA DIKE (TYPE E) AT EXISTING TEXTURED GORE PAVING

CONSTRUCTION DETAILS

NO SCALE

C-2

CALCULATED-DESIGNED BY: HARITH KIRAN
CHECKED BY: SUSAN M. GONZALEZ
REVISED BY
DATE REVISED
FUNCTIONAL SUPERVISOR: JUN XU
STATE OF CALIFORNIA - DEPARTMENT OF TRANSPORTATION
DESIGN
Caltrans

BORDER LAST REVISED 4/11/2008

RELATIVE BORDER SCALE IS IN INCHES 0 1 2 3

USERNAME => trlim
DGN FILE => 644261ga002.dgn

CU 06249

EA 442611

LAST REVISION 05-16-09
DATE PLOTTED => 28-SEP-2009
TIME PLOTTED => 14:12

Dist	COUNTY	ROUTE	POST MILES TOTAL PROJECT	SHEET No.	TOTAL SHEETS
06	Fre	99	26.7/30.6	42	242

05-29-09
REGISTERED CIVIL ENGINEER DATE

9-28-09
PLANS APPROVAL DATE

REGISTERED PROFESSIONAL ENGINEER
RODRIGO M. CRUZ
No. 57918
Exp 06/30/10
CIVIL
STATE OF CALIFORNIA

THE STATE OF CALIFORNIA OR ITS OFFICERS OR AGENTS SHALL NOT BE RESPONSIBLE FOR THE ACCURACY OR COMPLETENESS OF SCANNED COPIES OF THIS PLAN SHEET.

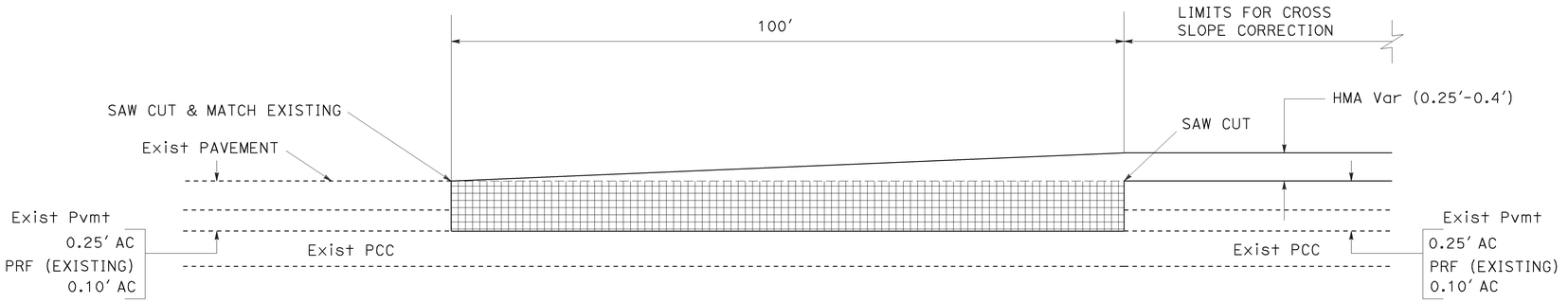

"SR99SB" 275+80.83 TO 276+80.83

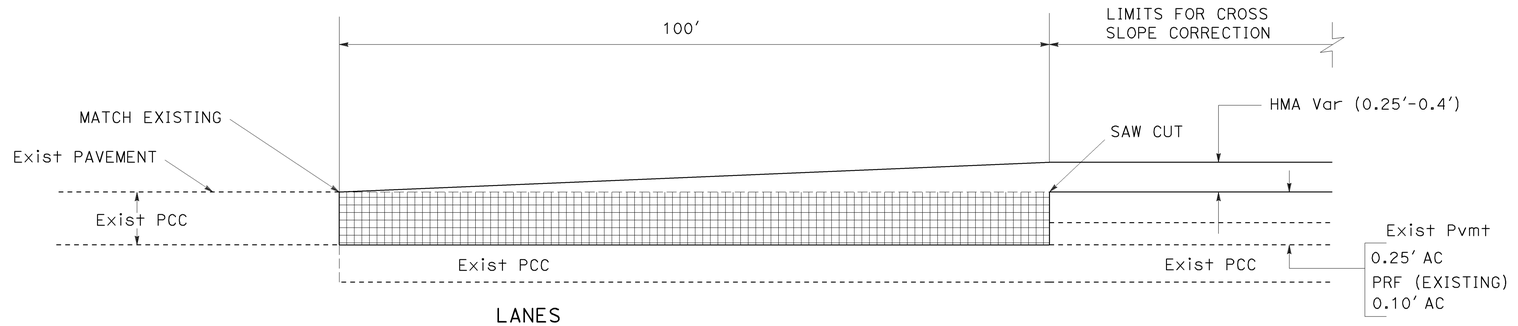

LANES
"SR99SB" 298+06.31 TO 299+06.31
"SR99SB" 401+92.87 TO 402+92.87

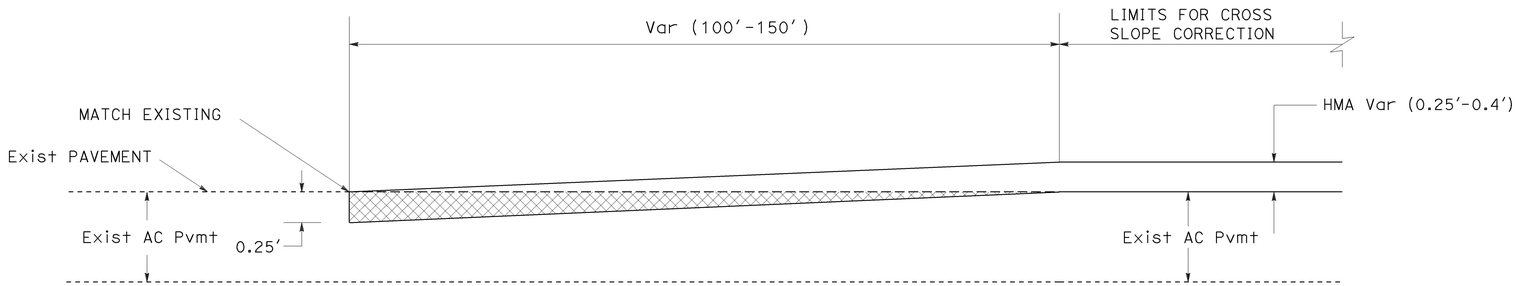

LANES
"SR99NB" 277+00.00 TO 278+00.00
"SR99SB" 281+00.00 TO 282+00.00
"SR99NB" 281+00.00 TO 282+00.00
SHOULDERS
"SR99SB" 298+06.31 TO 299+06.31
"SR99SB" 401+92.87 TO 402+92.87

RAMPS
"SR99SB" 269+37.12 TO 270+87.11
"SR99NB" 282+00.00 TO 283+48.87
"SR99NB" 290+22.22 TO 291+25.00
"SR99NB" 391+45.50 TO 392+95.50
"SR99SB" 393+00.00 TO 394+00.00

TAPER TRANSITIONS AT STRUCTURES & RAMPS

CONSTRUCTION DETAILS

C-3

REVISED BY | DATE REVISED
CALCULATED-DESIGNED BY: HARITH KIRAN
CHECKED BY: SUSAN GONZALEZ
FUNCTIONAL SUPERVISOR: JUN XU
STATE OF CALIFORNIA - DEPARTMENT OF TRANSPORTATION
Caltrans®
DESIGN

LAST REVISION DATE PLOTTED => 28-SEP-2009
06-04-09 TIME PLOTTED => 14:12

BORDER LAST REVISED 4/11/2008
RELATIVE BORDER SCALE IS IN INCHES 0 1 2 3
USERNAME => trliim
DGN FILE => 644261ga003.dgn
CU 06249
EA 442611

Dist	COUNTY	ROUTE	POST MILES TOTAL PROJECT	SHEET No.	TOTAL SHEETS
06	Fre	99	26.7/30.6	43	242

REGISTERED CIVIL ENGINEER — DATE: 05-29-09

PLANS APPROVAL DATE: 9-28-09

REGISTERED PROFESSIONAL ENGINEER — RODRIGO M. CRUZ — No. 57918 — Exp 06/30/10 — CIVIL — STATE OF CALIFORNIA

THE STATE OF CALIFORNIA OR ITS OFFICERS OR AGENTS SHALL NOT BE RESPONSIBLE FOR THE ACCURACY OR COMPLETENESS OF SCANNED COPIES OF THIS PLAN SHEET.

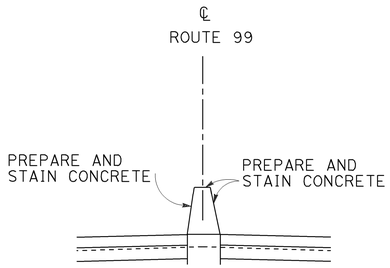

SINGLE CONCRETE BARRIER

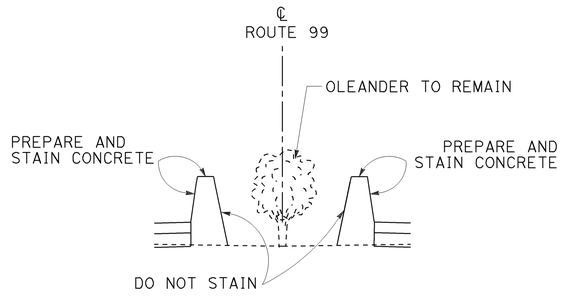

DOUBLE CONCRETE BARRIER

PREPARE AND STAIN CONCRETE

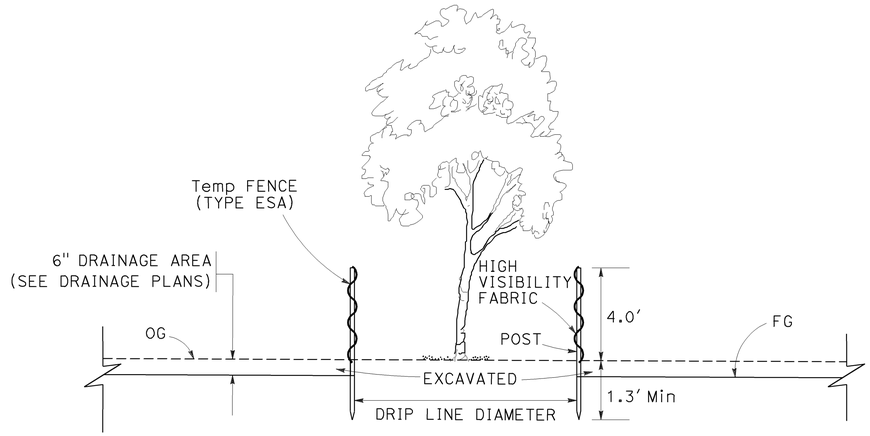

SECTION

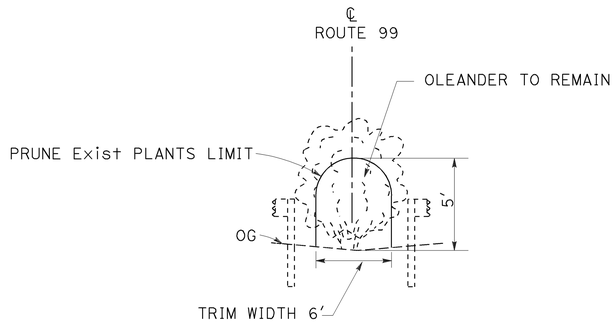

PRUNE EXISTING PLANTS

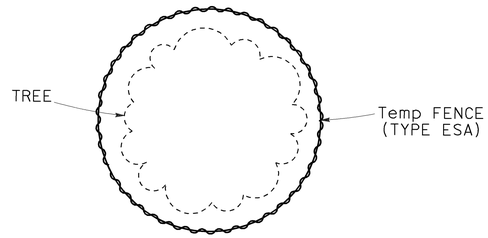

PLAN

SEE SUMMARY OF QUANTITIES FOR LOCATION AND DRIP LINE Dia

Temp FENCE (TYPE ESA)

CONSTRUCTION DETAILS

NO SCALE

C-4

STATE OF CALIFORNIA - DEPARTMENT OF TRANSPORTATION
DESIGN
FUNCTIONAL SUPERVISOR: JUN XU
CALCULATED-DESIGNED BY
CHECKED BY
TAM LA
SUSAN GONZALEZ
REVISED BY
DATE REVISED

LAST REVISION — DATE PLOTTED => 28-SEP-2009 — TIME PLOTTED => 14:12 — 06-29-09

BORDER LAST REVISED 4/11/2008

RELATIVE BORDER SCALE IS IN INCHES 0 1 2 3

USERNAME => trliim
DGN FILE => 644261ga004.dgn

CU 06249

EA 442611

Dist	COUNTY	ROUTE	POST MILES TOTAL PROJECT	SHEET No.	TOTAL SHEETS
06	Fre	99	26.7/30.6	44	242

05-29-09
REGISTERED CIVIL ENGINEER DATE

RODRIGO M. CRUZ
No. 57918
Exp 06/30/10
CIVIL
REGISTERED PROFESSIONAL ENGINEER
STATE OF CALIFORNIA

9-28-09
PLANS APPROVAL DATE

THE STATE OF CALIFORNIA OR ITS OFFICERS OR AGENTS SHALL NOT BE RESPONSIBLE FOR THE ACCURACY OR COMPLETENESS OF SCANNED COPIES OF THIS PLAN SHEET.

NOTES:

1. ALL RAIL ELEMENTS ARE 12.5′ LONG.
2. SEE Std PLANS FOR DETAILS NOT SHOWN.

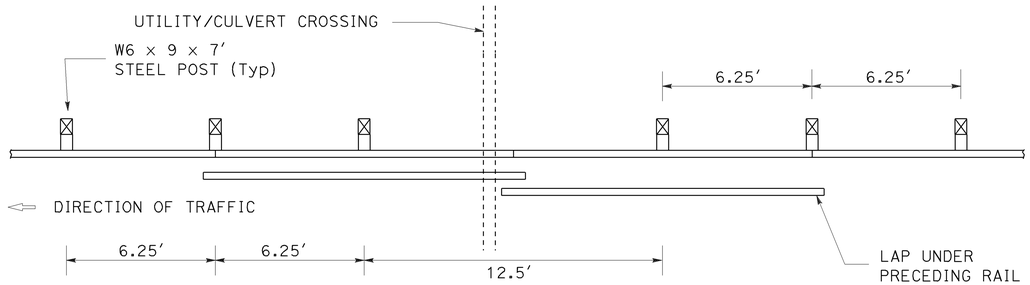

PLAN

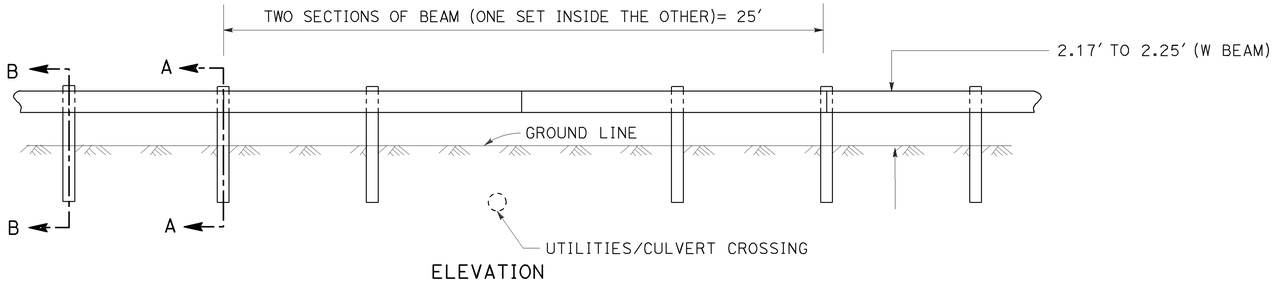

ELEVATION

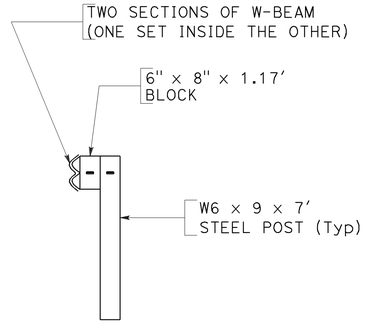

SECTION A-A

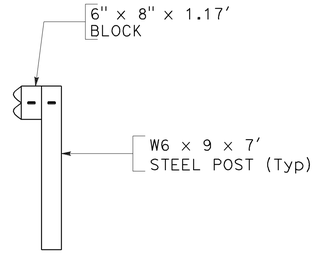

SECTION B-B

CASE 1 - SPLICE BETWEEN POSTS

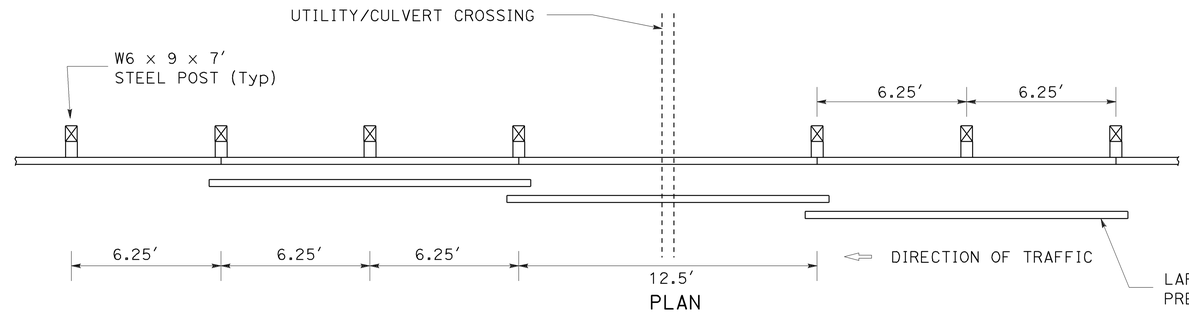

PLAN

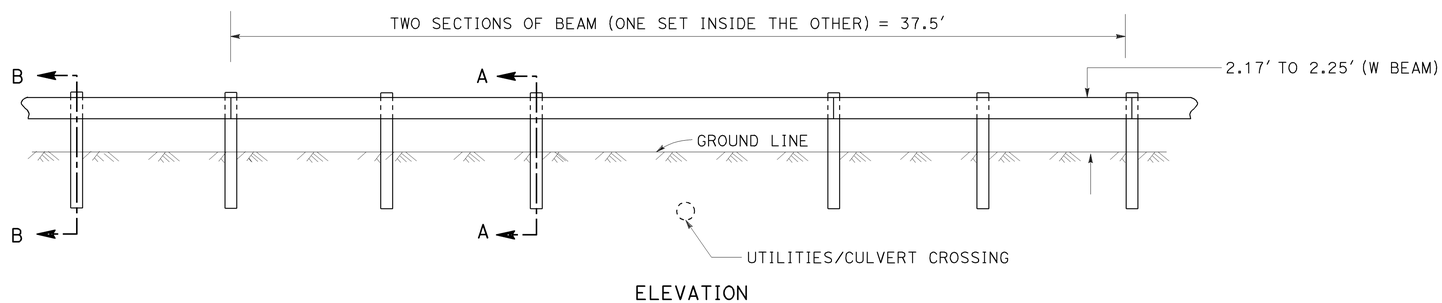

ELEVATION

CASE 2 - SPLICE AT POSTS
NESTED GUARRAIL

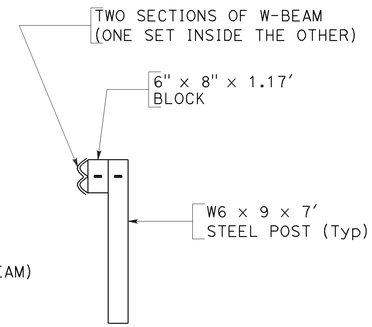

SECTION A-A

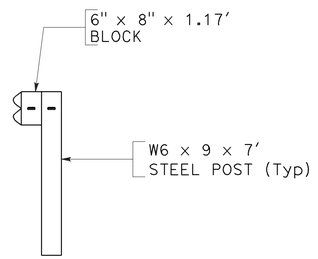

SECTION B-B

CONSTRUCTION DETAILS

NO SCALE

C-5

STATE OF CALIFORNIA - DEPARTMENT OF TRANSPORTATION
DESIGN
FUNCTIONAL SUPERVISOR: JUN XU
CALCULATED-DESIGNED BY: KHALID CHAOUI
CHECKED BY: RODRIGO CRUZ
REVISED BY
DATE REVISED

LAST REVISION 05-16-09
DATE PLOTTED => 28-SEP-2009
TIME PLOTTED => 14:12

BORDER LAST REVISED 4/11/2008
RELATIVE BORDER SCALE IS IN INCHES 0 1 2 3
USERNAME => trliim
DGN FILE => 644261ga005.dgn
CU 06249
EA 442611

Dist	COUNTY	ROUTE	POST MILES TOTAL PROJECT	SHEET No.	TOTAL SHEETS
06	Fre	99	26.7/30.6	45	242

05-29-09
REGISTERED CIVIL ENGINEER DATE

9-28-09
PLANS APPROVAL DATE

REGISTERED PROFESSIONAL ENGINEER
RODRIGO M. CRUZ
No. 57918
Exp 06/30/10
CIVIL
STATE OF CALIFORNIA

THE STATE OF CALIFORNIA OR ITS OFFICERS OR AGENTS SHALL NOT BE RESPONSIBLE FOR THE ACCURACY OR COMPLETENESS OF SCANNED COPIES OF THIS PLAN SHEET.

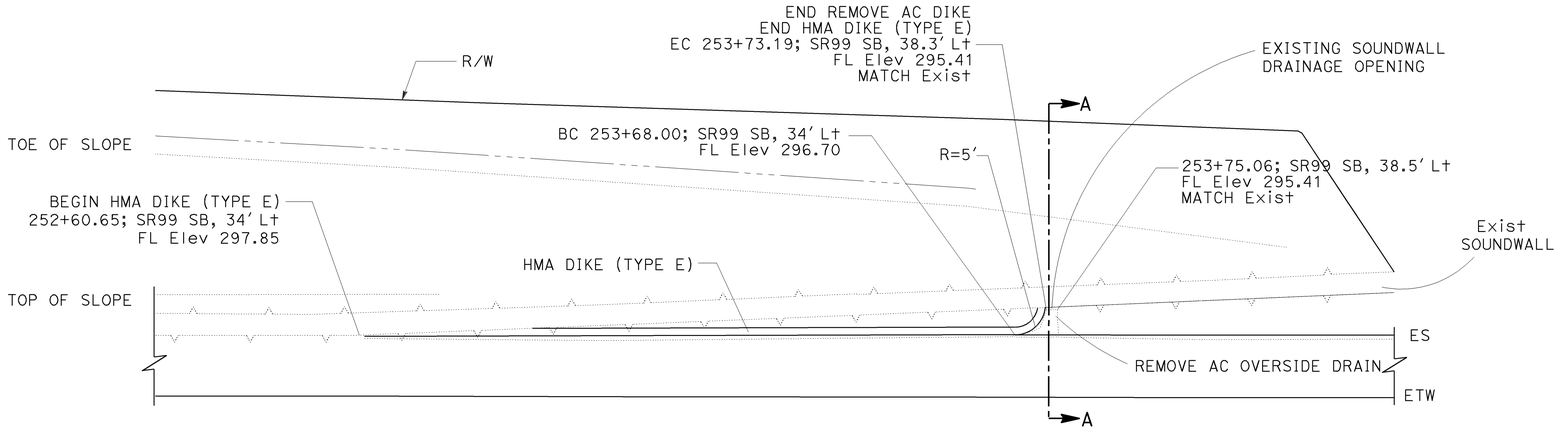

PLAN

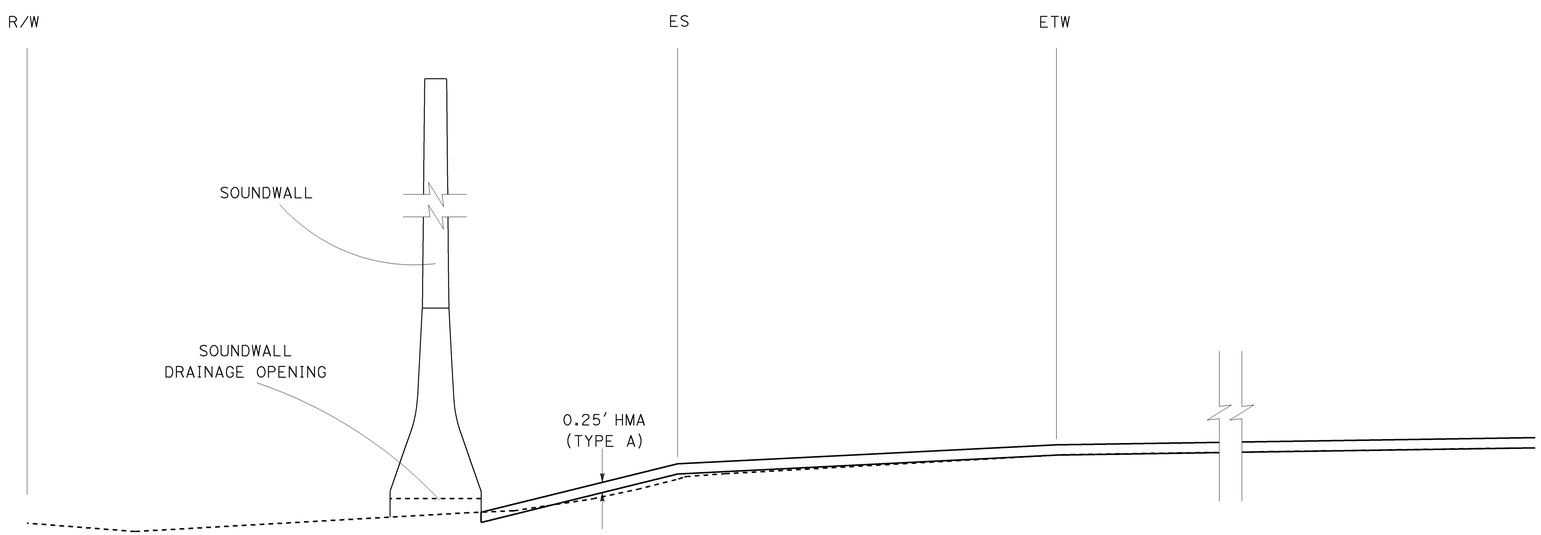

SECTION A-A

HMA OVERLAY BEYOND OUTSIDE SHOULDER AT SOUNDWALLS

CONSTRUCTION DETAILS

NO SCALE

C-6

STATE OF CALIFORNIA - DEPARTMENT OF TRANSPORTATION
DESIGN
FUNCTIONAL SUPERVISOR: JUN XU
CALCULATED-DESIGNED BY: IRENE LEE
CHECKED BY: SUSAN M. GONZALEZ
REVISED BY
DATE REVISED

LAST REVISION 06-30-09
DATE PLOTTED => 26-SEP-2009
TIME PLOTTED => 14:12

BORDER LAST REVISED 4/11/2008
RELATIVE BORDER SCALE IS IN INCHES 0 1 2 3
USERNAME => trliim
DGN FILE => 644261ga006.dgn
CU 06249
EA 442611

Dist	COUNTY	ROUTE	POST MILES TOTAL PROJECT	SHEET No.	TOTAL SHEETS
06	Fre	99	26.7/30.6	46	242

REGISTERED CIVIL ENGINEER — DATE 05-29-09

PLANS APPROVAL DATE 9-28-09

RODRIGO M. CRUZ No. 57918 Exp 06/30/10 CIVIL — REGISTERED PROFESSIONAL ENGINEER — STATE OF CALIFORNIA

THE STATE OF CALIFORNIA OR ITS OFFICERS OR AGENTS SHALL NOT BE RESPONSIBLE FOR THE ACCURACY OR COMPLETENESS OF SCANNED COPIES OF THIS PLAN SHEET.

NOTES:

1. FOR COMPLETE RIGHT OF WAY AND ACCURATE ACCESS DATA, SEE RIGHT OF WAY RECORD MAPS AT DISTRICT OFFICE.
2. ALL EXISTING VEGETATION TO REMAIN UNLESS OTHERWISE SHOWN ON THE PLANS.

LEGEND

- STORAGE DITCH FLOW LINES
- GUTTER FLOW LINES
- DRAINAGE SYSTEM No.
- DRAINAGE UNIT
- DRAINAGE EXCAVATED AREAS (TO BE DEEPENED BY 6")
- ROCK SLOPE PROTECTION
- EARTH BERM

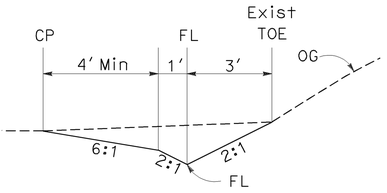

SECTION B-B
"SR99SB" STA 241+30.00 TO 253+60.00

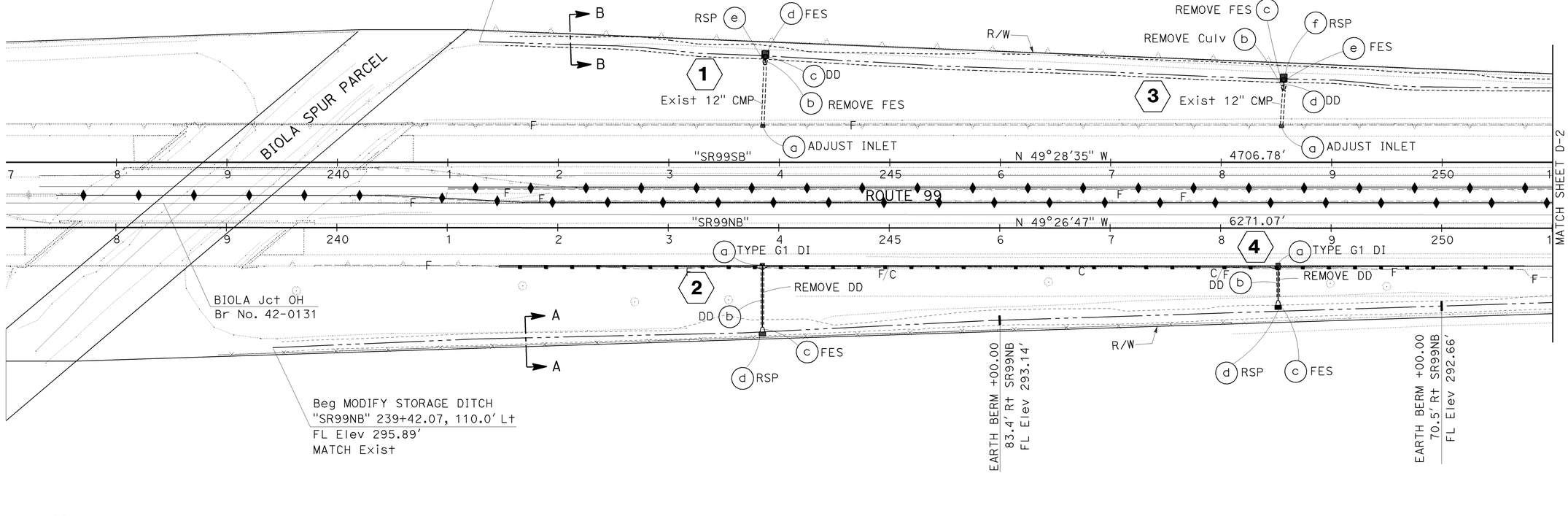

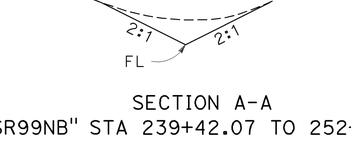

SECTION A-A
"SR99NB" STA 239+42.07 TO 252+00.00

THIS PLAN ACCURATE FOR DRAINAGE ONLY

DRAINAGE PLAN

SCALE: 1"=50' **D-1**

REVISED BY	DATE REVISED

CALCULATED-DESIGNED BY	CHECKED BY
IRENE LEE	SUSAN GONZALEZ

FUNCTIONAL SUPERVISOR: JUN XU

STATE OF CALIFORNIA - DEPARTMENT OF TRANSPORTATION

Caltrans® DESIGN

LAST REVISION 06-19-09 | DATE PLOTTED => 28-SEP-2009 | TIME PLOTTED => 14:12

BORDER LAST REVISED 4/11/2008 | RELATIVE BORDER SCALE IS IN INCHES 0 1 2 3 | USERNAME => trliim | DGN FILE => 644261ia001.dgn | CU 06249 | EA 442611

Dist	COUNTY	ROUTE	POST MILES TOTAL PROJECT	SHEET No.	TOTAL SHEETS
06	Fre	99	26.7/30.6	47	242

REGISTERED CIVIL ENGINEER — DATE: 05-29-09

PLANS APPROVAL DATE: 9-28-09

REGISTERED PROFESSIONAL ENGINEER — RODRIGO M. CRUZ — No. 57918 — Exp 06/30/10 — CIVIL — STATE OF CALIFORNIA

THE STATE OF CALIFORNIA OR ITS OFFICERS OR AGENTS SHALL NOT BE RESPONSIBLE FOR THE ACCURACY OR COMPLETENESS OF SCANNED COPIES OF THIS PLAN SHEET.

NOTE: FOR COMPLETE RIGHT OF WAY AND ACCURATE ACCESS DATA, SEE RIGHT OF WAY RECORD MAPS AT DISTRICT OFFICE.

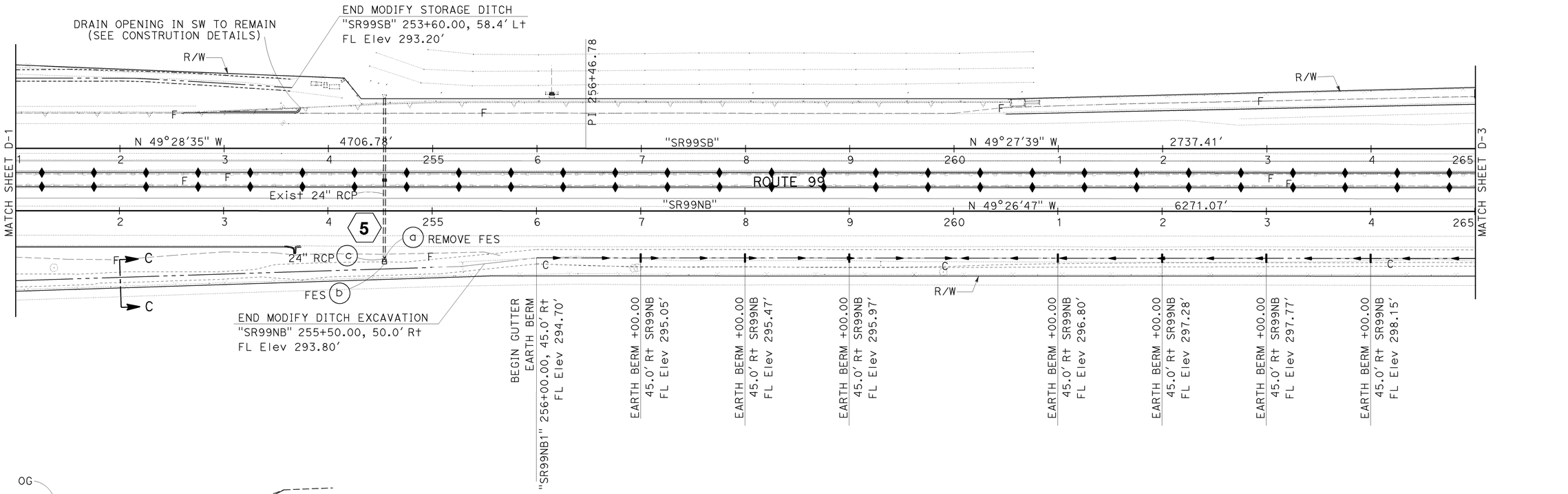

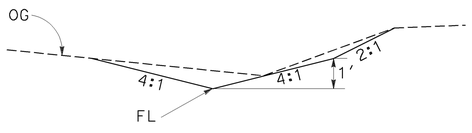

SECTION C-C
"SR99NB" STA 252+00 TO 255+50

THIS PLAN ACCURATE FOR DRAINAGE ONLY

DRAINAGE PLAN

SCALE: 1"=50'

D-2

STATE OF CALIFORNIA - DEPARTMENT OF TRANSPORTATION
DESIGN
FUNCTIONAL SUPERVISOR: JUN XU
CALCULATED-DESIGNED BY: IRENE LEE
CHECKED BY: SUSAN GONZALEZ
REVISED BY
DATE REVISED

LAST REVISION DATE PLOTTED => 28-SEP-2009
06-19-09 TIME PLOTTED => 14:12

BORDER LAST REVISED 4/11/2008
RELATIVE BORDER SCALE IS IN INCHES 0 1 2 3
USERNAME => trliim
DGN FILE => 644261ia002.dgn
CU 06249
EA 442611

Dist	COUNTY	ROUTE	POST MILES TOTAL PROJECT	SHEET No.	TOTAL SHEETS
06	Fre	99	26.7/30.6	48	242

REGISTERED CIVIL ENGINEER — DATE: 05-29-09

PLANS APPROVAL DATE: 9-28-09

REGISTERED PROFESSIONAL ENGINEER — RODRIGO M. CRUZ — No. 57918 — Exp 06/30/10 — CIVIL — STATE OF CALIFORNIA

THE STATE OF CALIFORNIA OR ITS OFFICERS OR AGENTS SHALL NOT BE RESPONSIBLE FOR THE ACCURACY OR COMPLETENESS OF SCANNED COPIES OF THIS PLAN SHEET.

NOTE: FOR COMPLETE RIGHT OF WAY AND ACCURATE ACCESS DATA, SEE RIGHT OF WAY RECORD MAPS AT DISTRICT OFFICE.

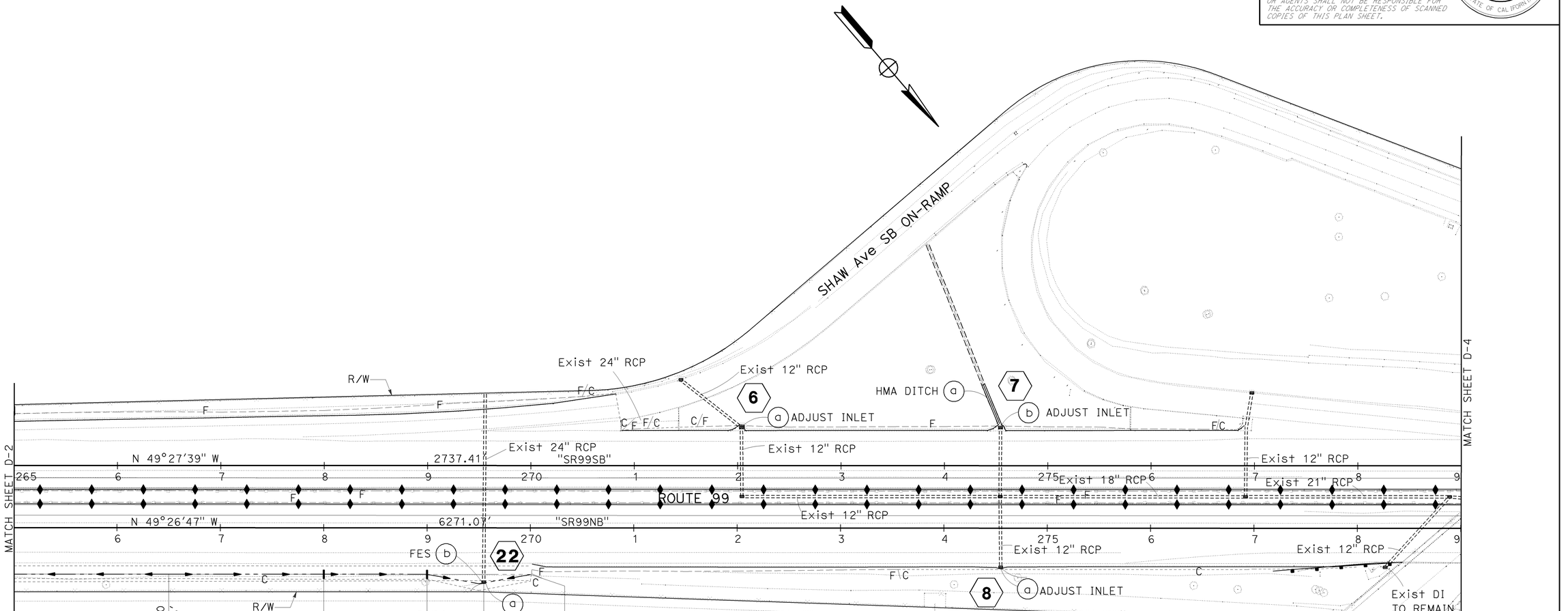

THIS PLAN ACCURATE FOR DRAINAGE ONLY

DRAINAGE PLAN

SCALE: 1"=50'

D-3

STATE OF CALIFORNIA - DEPARTMENT OF TRANSPORTATION

DESIGN

FUNCTIONAL SUPERVISOR: JUN XU

CALCULATED-DESIGNED BY

CHECKED BY: SUSAN GONZALEZ

REVISED BY: IRENE LEE

DATE REVISED

LAST REVISION — DATE PLOTTED => 28-SEP-2009 — TIME PLOTTED => 14:12 — 06-19-09

BORDER LAST REVISED 4/11/2008

RELATIVE BORDER SCALE IS IN INCHES 0 1 2 3

USERNAME => trlim

DGN FILE => 644261ia003.dgn

CU 06249

EA 442611

NOTE: FOR COMPLETE RIGHT OF WAY AND ACCURATE ACCESS DATA, SEE RIGHT OF WAY RECORD MAPS AT DISTRICT OFFICE.

Dist	COUNTY	ROUTE	POST MILES TOTAL PROJECT	SHEET No.	TOTAL SHEETS
06	Fre	99	26.7/30.6	49	242

REGISTERED CIVIL ENGINEER — DATE: 05-29-09

PLANS APPROVAL DATE: 9-28-09

REGISTERED PROFESSIONAL ENGINEER — RODRIGO M. CRUZ — No. 57918 — Exp 06/30/10 — CIVIL — STATE OF CALIFORNIA

THE STATE OF CALIFORNIA OR ITS OFFICERS OR AGENTS SHALL NOT BE RESPONSIBLE FOR THE ACCURACY OR COMPLETENESS OF SCANNED COPIES OF THIS PLAN SHEET.

THIS PLAN ACCURATE FOR DRAINAGE ONLY

DRAINAGE PLAN

SCALE: 1"=50'

D-4

CALCULATED-DESIGNED BY: IRENE LEE
CHECKED BY: SUSAN GONZALEZ
REVISED BY
DATE REVISED
FUNCTIONAL SUPERVISOR: JUN XU
STATE OF CALIFORNIA - DEPARTMENT OF TRANSPORTATION
DESIGN

LAST REVISION DATE PLOTTED => 28-SEP-2009
TIME PLOTTED => 14:13

BORDER LAST REVISED 4/11/2008

RELATIVE BORDER SCALE IS IN INCHES 0 1 2 3

USERNAME => trlim
DGN FILE => 6442611a004.dgn

CU 06249

EA 442611

Dist	COUNTY	ROUTE	POST MILES TOTAL PROJECT	SHEET No.	TOTAL SHEETS
06	Fre	99	26.7/30.6	50	242

REGISTERED CIVIL ENGINEER — DATE: 05-29-09

9-28-09
PLANS APPROVAL DATE

REGISTERED PROFESSIONAL ENGINEER — RODRIGO M. CRUZ — No. 57918 — Exp 06/30/10 — CIVIL — STATE OF CALIFORNIA

THE STATE OF CALIFORNIA OR ITS OFFICERS OR AGENTS SHALL NOT BE RESPONSIBLE FOR THE ACCURACY OR COMPLETENESS OF SCANNED COPIES OF THIS PLAN SHEET.

NOTE: FOR COMPLETE RIGHT OF WAY AND ACCURATE ACCESS DATA, SEE RIGHT OF WAY RECORD MAPS AT DISTRICT OFFICE.

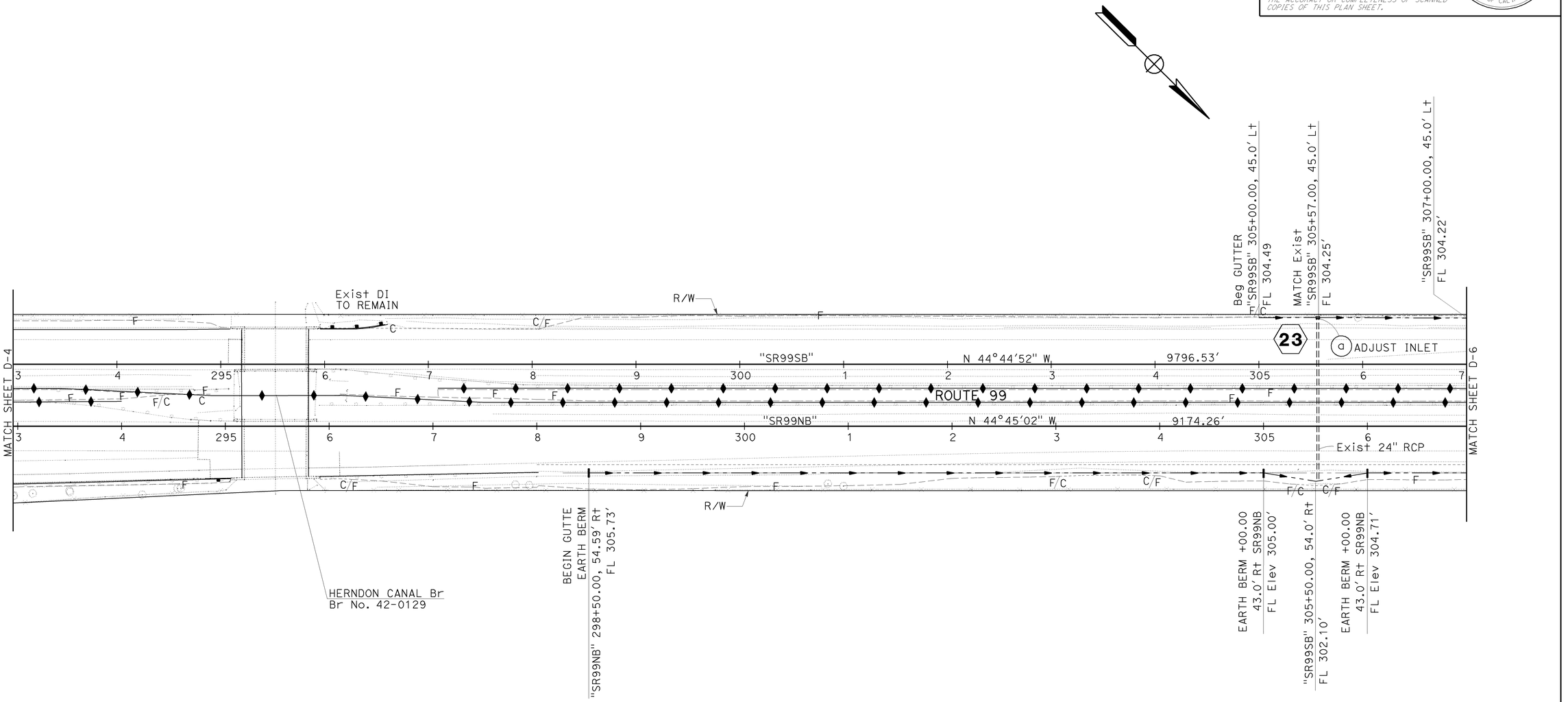

DRAINAGE PLAN

THIS PLAN ACCURATE FOR DRAINAGE ONLY

SCALE: 1"=50'

D-5

CALCULATED-DESIGNED BY: IRENE LEE
CHECKED BY: SUSAN GONZALEZ
REVISED BY
DATE REVISED
FUNCTIONAL SUPERVISOR: JUN XU
STATE OF CALIFORNIA - DEPARTMENT OF TRANSPORTATION
DESIGN
Caltrans

LAST REVISION DATE PLOTTED => 28-SEP-2009
06-23-09 TIME PLOTTED => 14:13

BORDER LAST REVISED 4/11/2008

RELATIVE BORDER SCALE IS IN INCHES 0 1 2 3

USERNAME => trlim
DGN FILE => 6442611a005.dgn

CU 06249

EA 442611

Dist	COUNTY	ROUTE	POST MILES TOTAL PROJECT	SHEET No.	TOTAL SHEETS
06	Fre	99	26.7/30.6	51	242

05-29-09
REGISTERED CIVIL ENGINEER DATE

RODRIGO M. CRUZ 57918 No. 06/30/10 Exp. CIVIL — REGISTERED PROFESSIONAL ENGINEER — STATE OF CALIFORNIA

9-28-09
PLANS APPROVAL DATE

THE STATE OF CALIFORNIA OR ITS OFFICERS OR AGENTS SHALL NOT BE RESPONSIBLE FOR THE ACCURACY OR COMPLETENESS OF SCANNED COPIES OF THIS PLAN SHEET.

NOTE: FOR COMPLETE RIGHT OF WAY AND ACCURATE ACCESS DATA, SEE RIGHT OF WAY RECORD MAPS AT DISTRICT OFFICE.

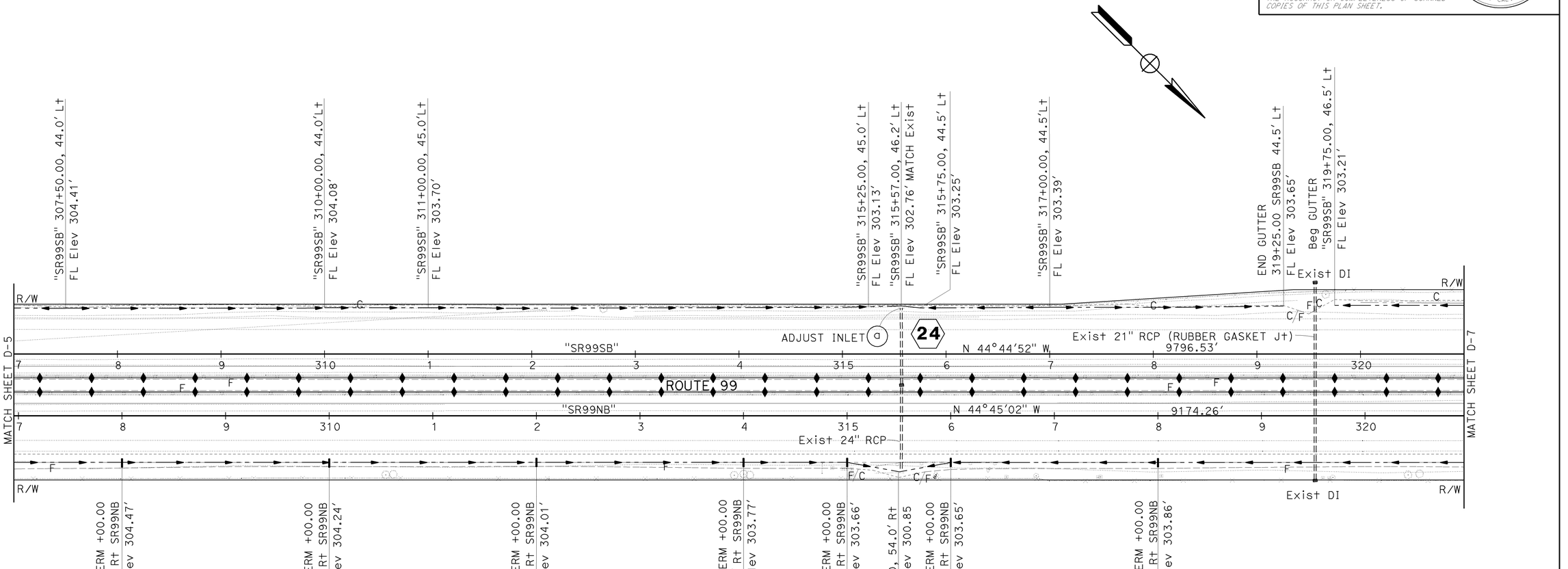

THIS PLAN ACCURATE FOR DRAINAGE ONLY

DRAINAGE PLAN

SCALE: 1"=50'

D-6

REVISED BY	DATE REVISED

CALCULATED-DESIGNED BY: IRENE LEE
CHECKED BY: SUSAN GONZALEZ
FUNCTIONAL SUPERVISOR: JUN XU

STATE OF CALIFORNIA - DEPARTMENT OF TRANSPORTATION
Caltrans®
DESIGN

LAST REVISION DATE PLOTTED => 28-SEP-2009
06-23-09 TIME PLOTTED => 13:44

BORDER LAST REVISED 4/11/2008

RELATIVE BORDER SCALE IS IN INCHES 0 1 2 3

USERNAME => s135318
DGN FILE => 644261ia006.dgn

CU 06249

EA 442611

Dist	COUNTY	ROUTE	POST MILES TOTAL PROJECT	SHEET No.	TOTAL SHEETS
06	Fre	99	26.7/30.6	52	242

REGISTERED CIVIL ENGINEER 05-29-09 DATE

9-28-09
PLANS APPROVAL DATE

REGISTERED PROFESSIONAL ENGINEER RODRIGO M.CRUZ No. 57918 Exp. 06/30/10 CIVIL STATE OF CALIFORNIA

THE STATE OF CALIFORNIA OR ITS OFFICERS OR AGENTS SHALL NOT BE RESPONSIBLE FOR THE ACCURACY OR COMPLETENESS OF SCANNED COPIES OF THIS PLAN SHEET.

NOTE: FOR COMPLETE RIGHT OF WAY AND ACCURATE ACCESS DATA, SEE RIGHT OF WAY RECORD MAPS AT DISTRICT OFFICE.

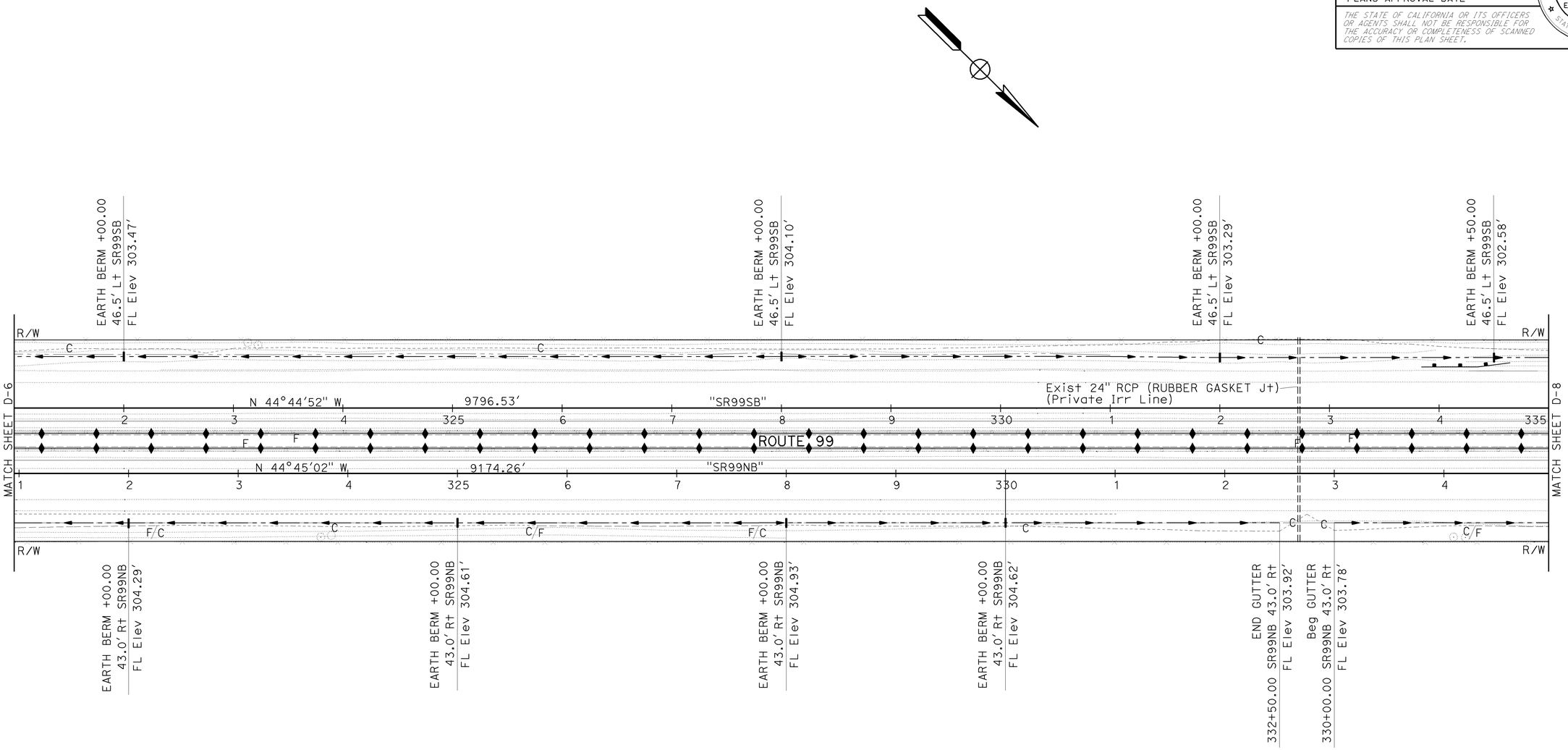

THIS PLAN ACCURATE FOR DRAINAGE ONLY

DRAINAGE PLAN

SCALE: 1"=50'

D-7

STATE OF CALIFORNIA - DEPARTMENT OF TRANSPORTATION
Caltrans
DESIGN
FUNCTIONAL SUPERVISOR JUN XU
CALCULATED-DESIGNED BY IRENE LEE
CHECKED BY SUSAN GONZALEZ
REVISED BY
DATE REVISED

LAST REVISION 06-19-09
DATE PLOTTED => 28-SEP-2009
TIME PLOTTED => 13:44

Dist	COUNTY	ROUTE	POST MILES TOTAL PROJECT	SHEET No.	TOTAL SHEETS
06	Fre	99	26.7/30.6	53	242

05-29-09
REGISTERED CIVIL ENGINEER DATE

RODRIGO M. CRUZ
No. 57918
Exp 06/30/10
CIVIL
REGISTERED PROFESSIONAL ENGINEER
STATE OF CALIFORNIA

9-28-09
PLANS APPROVAL DATE

THE STATE OF CALIFORNIA OR ITS OFFICERS OR AGENTS SHALL NOT BE RESPONSIBLE FOR THE ACCURACY OR COMPLETENESS OF SCANNED COPIES OF THIS PLAN SHEET.

NOTE: FOR COMPLETE RIGHT OF WAY AND ACCURATE ACCESS DATA, SEE RIGHT OF WAY RECORD MAPS AT DISTRICT OFFICE.

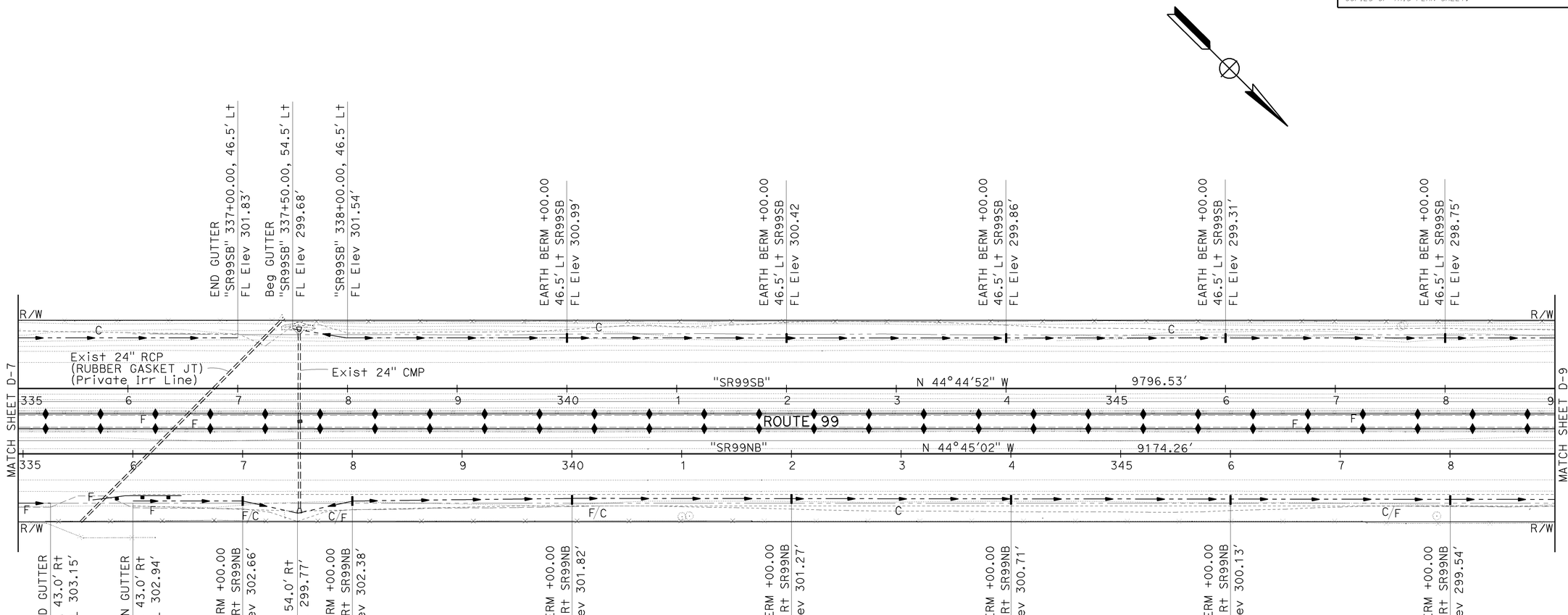

THIS PLAN ACCURATE FOR DRAINAGE ONLY

DRAINAGE PLAN

SCALE: 1"=50' **D-8**

REVISED BY | DATE REVISED
CALCULATED-DESIGNED BY | CHECKED BY
FUNCTIONAL SUPERVISOR: JUN XU
STATE OF CALIFORNIA - DEPARTMENT OF TRANSPORTATION
DESIGN

LAST REVISION 06-19-09 | DATE PLOTTED => 28-SEP-2009 | TIME PLOTTED => 13:44

BORDER LAST REVISED 4/11/2008 | RELATIVE BORDER SCALE IS IN INCHES 0 1 2 3 | USERNAME => s135318 | DGN FILE => 644261ia008.dgn | CU 06249 | EA 442611

Dist	COUNTY	ROUTE	POST MILES TOTAL PROJECT	SHEET No.	TOTAL SHEETS
06	Fre	99	26.7/30.6	54	242

05-29-09
REGISTERED CIVIL ENGINEER DATE

RODRIGO M. CRUZ 57918 No. 06/30/10 Exp. CIVIL — REGISTERED PROFESSIONAL ENGINEER — STATE OF CALIFORNIA

9-28-09
PLANS APPROVAL DATE

THE STATE OF CALIFORNIA OR ITS OFFICERS OR AGENTS SHALL NOT BE RESPONSIBLE FOR THE ACCURACY OR COMPLETENESS OF SCANNED COPIES OF THIS PLAN SHEET.

NOTE: FOR COMPLETE RIGHT OF WAY AND ACCURATE ACCESS DATA, SEE RIGHT OF WAY RECORD MAPS AT DISTRICT OFFICE.

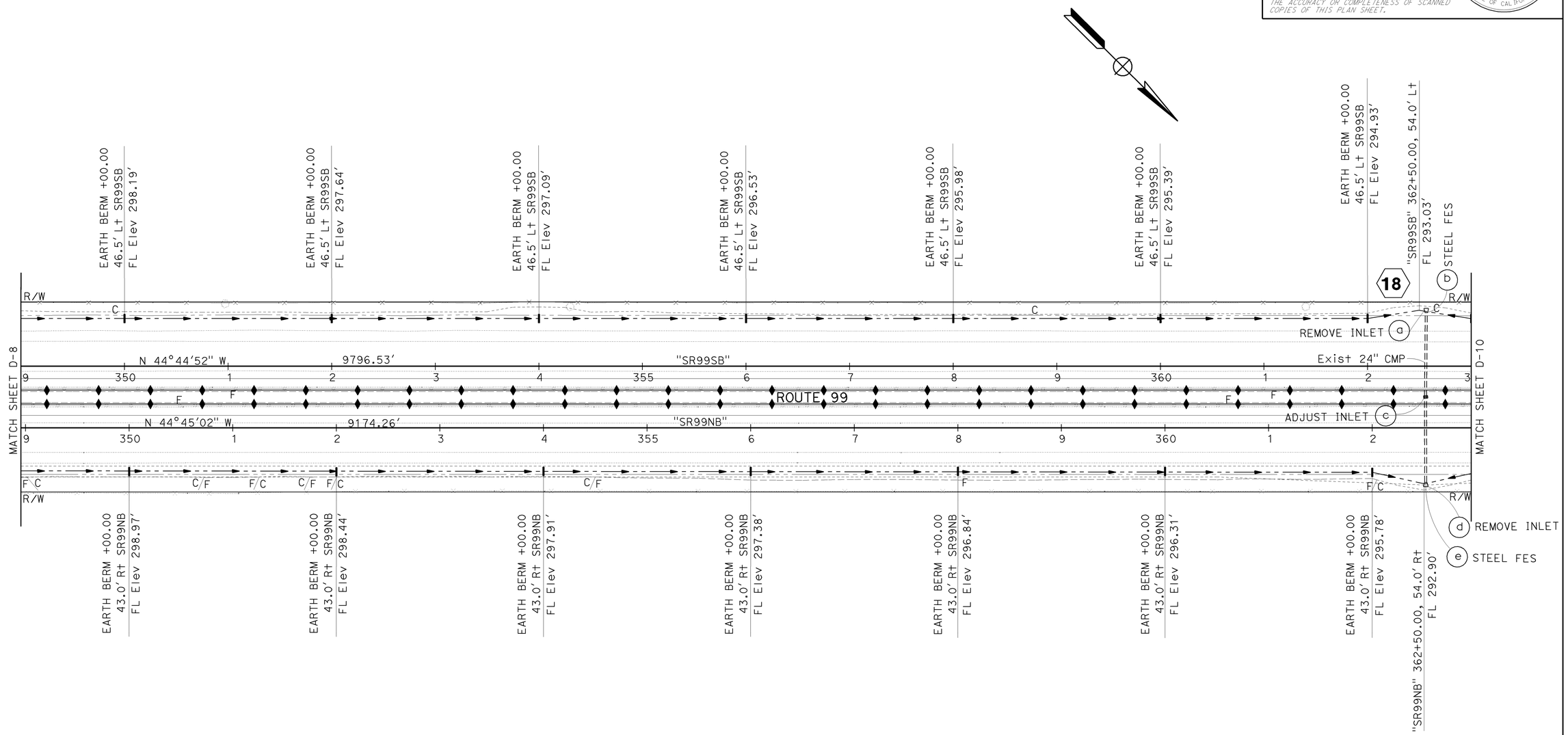

THIS PLAN ACCURATE FOR DRAINAGE ONLY

DRAINAGE PLAN

SCALE: 1"=50' **D-9**

CALCULATED-DESIGNED BY
CHECKED BY
REVISED BY
DATE REVISED

IRENE LEE
SUSAN GONZALEZ

FUNCTIONAL SUPERVISOR
JUN XU

STATE OF CALIFORNIA - DEPARTMENT OF TRANSPORTATION
DESIGN

LAST REVISION DATE PLOTTED => 28-SEP-2009
06-19-09 TIME PLOTTED => 13:44

BORDER LAST REVISED 4/11/2008

RELATIVE BORDER SCALE IS IN INCHES 0 1 2 3

USERNAME => s135318
DGN FILE => 644261ia009.dgn

CU 06249

EA 442611

Dist	COUNTY	ROUTE	POST MILES TOTAL PROJECT	SHEET No.	TOTAL SHEETS
06	Fre	99	26.7/30.6	55	242

REGISTERED CIVIL ENGINEER — DATE: 05-29-09

PLANS APPROVAL DATE: 9-28-09

REGISTERED PROFESSIONAL ENGINEER — RODRIGO M. CRUZ — No. 57918 — Exp 06/30/10 — CIVIL — STATE OF CALIFORNIA

THE STATE OF CALIFORNIA OR ITS OFFICERS OR AGENTS SHALL NOT BE RESPONSIBLE FOR THE ACCURACY OR COMPLETENESS OF SCANNED COPIES OF THIS PLAN SHEET.

NOTE: FOR COMPLETE RIGHT OF WAY AND ACCURATE ACCESS DATA, SEE RIGHT OF WAY RECORD MAPS AT DISTRICT OFFICE.

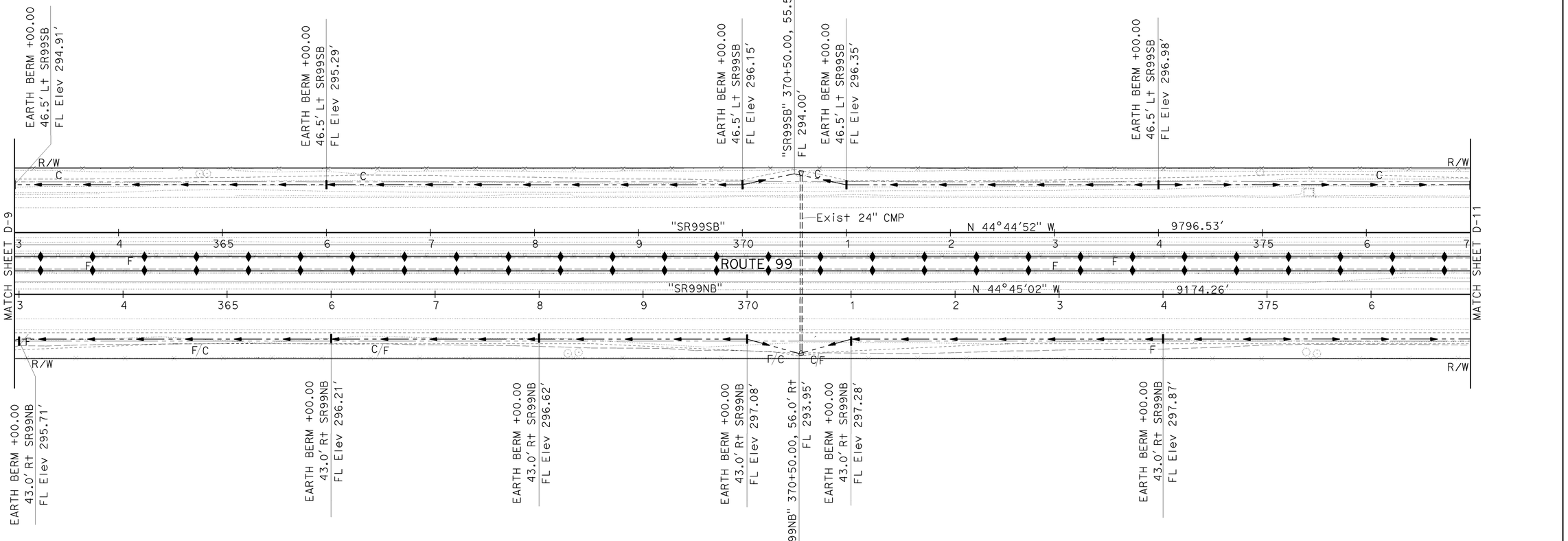

THIS PLAN ACCURATE FOR DRAINAGE ONLY

DRAINAGE PLAN

SCALE: 1"=50′ **D-10**

CALCULATED-DESIGNED BY: IRENE LEE
CHECKED BY: SUSAN GONZALEZ
REVISED BY
DATE REVISED
FUNCTIONAL SUPERVISOR: JUN XU
STATE OF CALIFORNIA - DEPARTMENT OF TRANSPORTATION
DESIGN

LAST REVISION DATE PLOTTED => 28-SEP-2009
06-19-09 TIME PLOTTED => 13:44

BORDER LAST REVISED 4/11/2008 | RELATIVE BORDER SCALE IS IN INCHES 0 1 2 3 | USERNAME => s135318 | DGN FILE => 644261ia010.dgn | CU 06249 | EA 442611

Dist	COUNTY	ROUTE	POST MILES TOTAL PROJECT	SHEET No.	TOTAL SHEETS
06	Fre	99	26.7/30.6	56	242

REGISTERED CIVIL ENGINEER — DATE: 05-29-09

RODRIGO M. CRUZ — No. 57918 — Exp 06/30/10 — CIVIL — REGISTERED PROFESSIONAL ENGINEER — STATE OF CALIFORNIA

9-28-09
PLANS APPROVAL DATE

THE STATE OF CALIFORNIA OR ITS OFFICERS OR AGENTS SHALL NOT BE RESPONSIBLE FOR THE ACCURACY OR COMPLETENESS OF SCANNED COPIES OF THIS PLAN SHEET.

NOTE: FOR COMPLETE RIGHT OF WAY AND ACCURATE ACCESS DATA, SEE RIGHT OF WAY RECORD MAPS AT DISTRICT OFFICE.

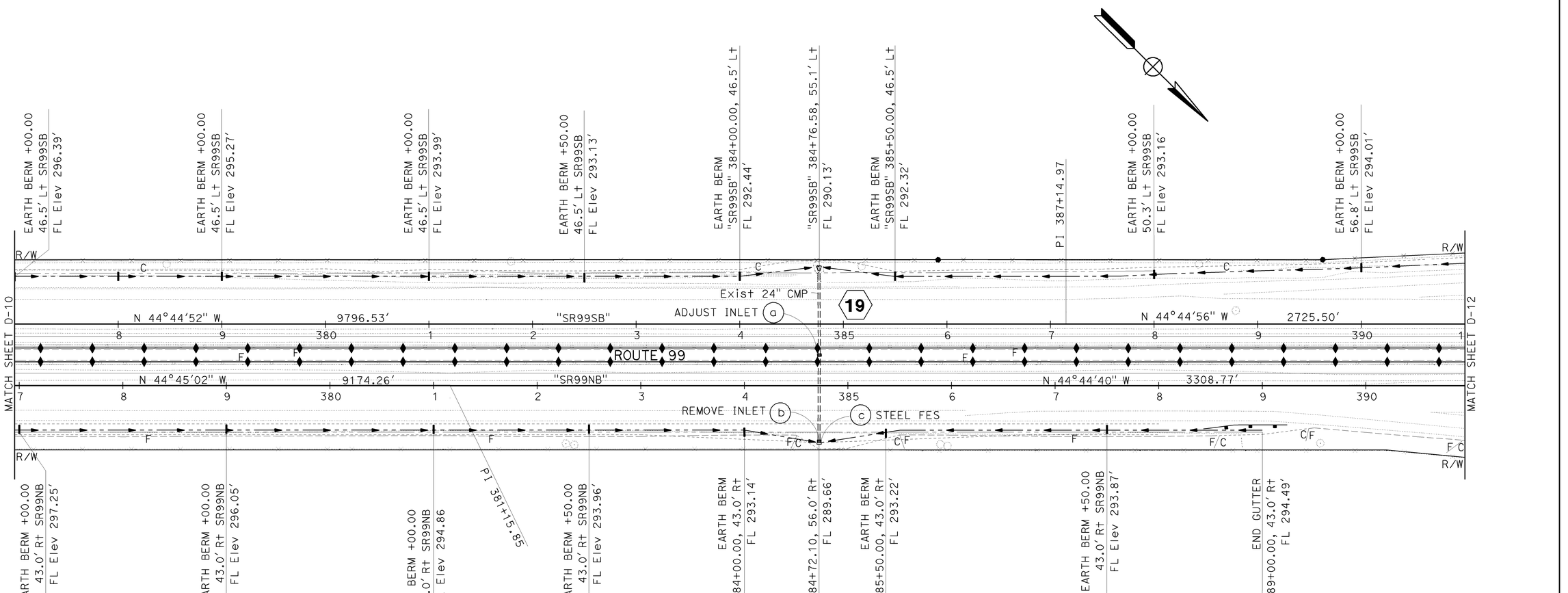

THIS PLAN ACCURATE FOR DRAINAGE ONLY

DRAINAGE PLAN

SCALE: 1"=50' **D-11**

LAST REVISION | DATE PLOTTED => 28-SEP-2009
06-19-09 | TIME PLOTTED => 13:44

STATE OF CALIFORNIA - DEPARTMENT OF TRANSPORTATION
Caltrans® DESIGN

FUNCTIONAL SUPERVISOR: JUN XU

CALCULATED-DESIGNED BY: IRENE LEE
CHECKED BY: SUSAN GONZALEZ

REVISED BY | DATE REVISED

BORDER LAST REVISED 4/11/2008

RELATIVE BORDER SCALE IS IN INCHES 0 1 2 3

USERNAME => s135318
DGN FILE => 6442611a011.dgn

CU 06249

EA 442611

Dist	COUNTY	ROUTE	POST MILES TOTAL PROJECT	SHEET No.	TOTAL SHEETS
06	Fre	99	26.7/30.6	57	242

05-29-09
REGISTERED CIVIL ENGINEER DATE

9-28-09
PLANS APPROVAL DATE

RODRIGO M. CRUZ
No. 57918
Exp 06/30/10
CIVIL
REGISTERED PROFESSIONAL ENGINEER
STATE OF CALIFORNIA

THE STATE OF CALIFORNIA OR ITS OFFICERS OR AGENTS SHALL NOT BE RESPONSIBLE FOR THE ACCURACY OR COMPLETENESS OF SCANNED COPIES OF THIS PLAN SHEET.

NOTE: FOR COMPLETE RIGHT OF WAY AND ACCURATE ACCESS DATA, SEE RIGHT OF WAY RECORD MAPS AT DISTRICT OFFICE.

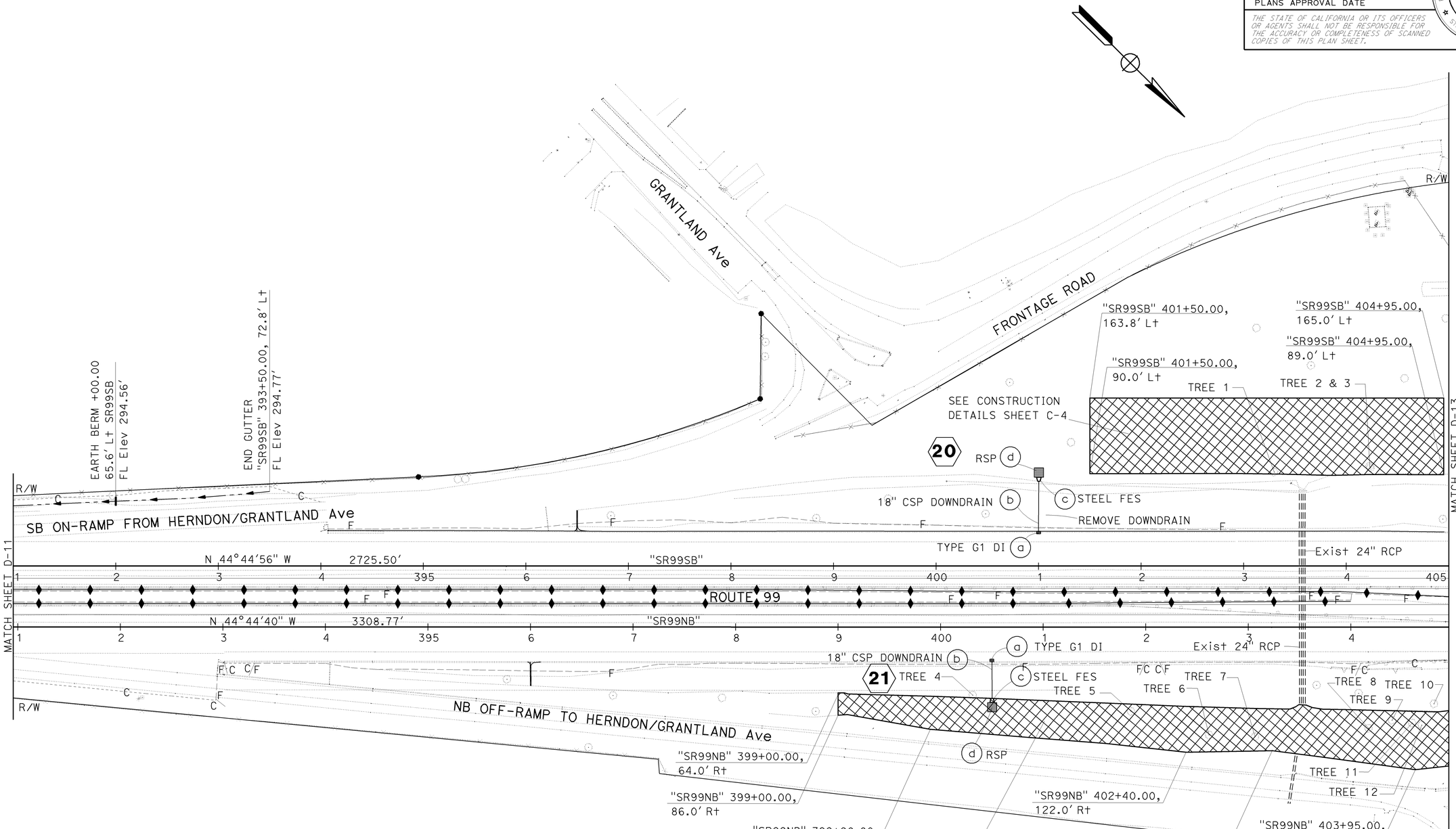

DRAINAGE PLAN

THIS PLAN ACCURATE FOR DRAINAGE ONLY

SCALE: 1"=50′ **D-12**

CALCULATED-DESIGNED BY: IRENE LEE
CHECKED BY: SUSAN GONZALEZ
REVISED BY
DATE REVISED
FUNCTIONAL SUPERVISOR: JUN XU
STATE OF CALIFORNIA - DEPARTMENT OF TRANSPORTATION
DESIGN
Caltrans

LAST REVISION | DATE PLOTTED => 28-SEP-2009
06-19-09 | TIME PLOTTED => 13:44

BORDER LAST REVISED 4/11/2008
RELATIVE BORDER SCALE IS IN INCHES 0 1 2 3
USERNAME => s135318
DGN FILE => 644261ja012.dgn
CU 06249
EA 442611

Dist	COUNTY	ROUTE	POST MILES TOTAL PROJECT	SHEET No.	TOTAL SHEETS
06	Fre	99	26.7/30.6	58	242

REGISTERED CIVIL ENGINEER — DATE: 05-29-09

PLANS APPROVAL DATE: 9-28-09

REGISTERED PROFESSIONAL ENGINEER — RODRIGO M. CRUZ — No. 57918 — Exp 06/30/10 — CIVIL — STATE OF CALIFORNIA

THE STATE OF CALIFORNIA OR ITS OFFICERS OR AGENTS SHALL NOT BE RESPONSIBLE FOR THE ACCURACY OR COMPLETENESS OF SCANNED COPIES OF THIS PLAN SHEET.

NOTE: FOR COMPLETE RIGHT OF WAY AND ACCURATE ACCESS DATA, SEE RIGHT OF WAY RECORD MAPS AT DISTRICT OFFICE.

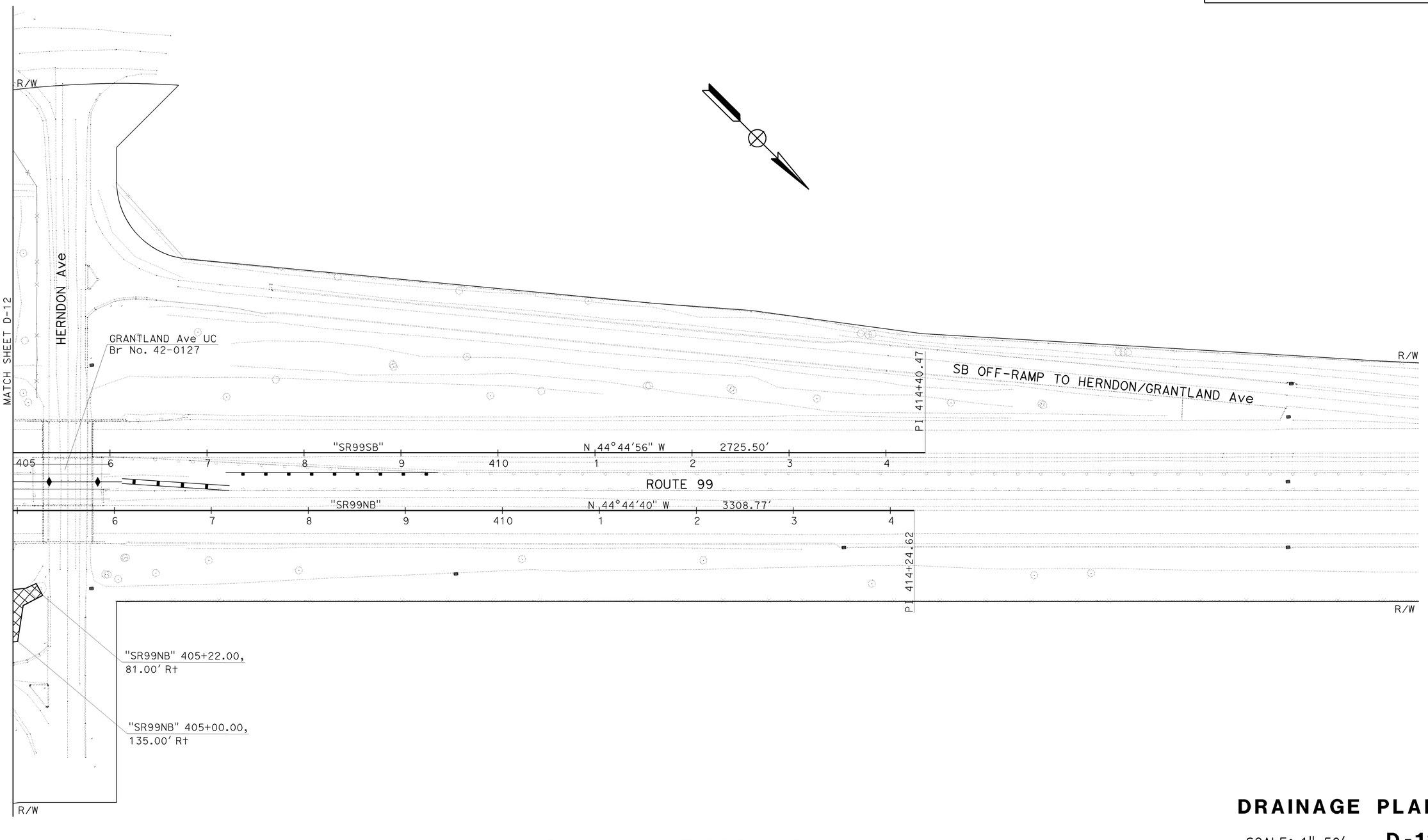

THIS PLAN ACCURATE FOR DRAINAGE ONLY

DRAINAGE PLAN

SCALE: 1"=50'

D-13

STATE OF CALIFORNIA - DEPARTMENT OF TRANSPORTATION — DESIGN

FUNCTIONAL SUPERVISOR: JUN XU

CALCULATED-DESIGNED BY: IRENE LEE

CHECKED BY: SUSAN GONZALEZ

REVISED BY	DATE REVISED

LAST REVISION — DATE PLOTTED => 28-SEP-2009 — TIME PLOTTED => 13:44 — 06-19-09

BORDER LAST REVISED 4/11/2008

RELATIVE BORDER SCALE IS IN INCHES 0 1 2 3

USERNAME => s135318
DGN FILE => 642611a013.dgn

CU 06249

EA 442611

Dist	COUNTY	ROUTE	POST MILES TOTAL PROJECT	SHEET No.	TOTAL SHEETS
06	Fre	99	26.7/30.6	59	242

REGISTERED CIVIL ENGINEER — DATE 05-29-09

RODRIGO M. CRUZ No. 57918 Exp 06/30/10 CIVIL — REGISTERED PROFESSIONAL ENGINEER — STATE OF CALIFORNIA

9-28-09
PLANS APPROVAL DATE

THE STATE OF CALIFORNIA OR ITS OFFICERS OR AGENTS SHALL NOT BE RESPONSIBLE FOR THE ACCURACY OR COMPLETENESS OF SCANNED COPIES OF THIS PLAN SHEET.

ABBREVIATION :

S - SLOPE

"SR99SB" LINE
STA 243+84.95

ADJUST INLET
GRATE FL 321.06 (a)

"SR99SB" 243+84.95
32.8' Lt

FG

OG

FL 317.31

STORAGE DITCH
"SR99SB" 243+84.95
96.56' Lt
FL Elev 293.50'

(d) 12" STEEL FES

(c) 12" x 2.6' CSP DOWNDRAIN

Exist 12" CMP

(b) REMOVE FES

ROCK SLOPE PROTECTION
(SEE DRAINAGE DETAILS
SHEET DD-2)
(e)

S = 0.104

FIELD BEND
"SR99SB" 243+84.95, 88.4' Lt
FL 294.90 MATCH Exist

"SR99SB" 243+84.95, 91.0' Lt
FL 294.63

DRAINAGE SYSTEM No. 1

"SR99NB" LINE
STA 243+85.09

"SR99NB" 243+85.09
33.0' Rt

(a) TYPE G1 DI
GRATE FL 321.23
H= 4.9'
TYPE 24-12 GRATE

FG

HMA APRON
(SEE DRAINAGE
DETAILS SHEET DD-3)

REMOVE DOWNDRAIN

OG

FL 316.32

S=0.439

18" x 47.5' CSP DOWNDRAIN (b)

"SR99NB" 243+85.09
81.5' Rt

(c) 18" STEEL FES

STORAGE DITCH
"SR99NB" 243+85.09
92.12' Rt
FL Elev 294.24'

S=0.020

FIELD BEND
"SR99NB" 243+85.09, 72.0' Rt
FL 299.62

FL 299.43

(d) ROCK SLOPE PROTECTION
(SEE DRAINAGE DETAILS SHEET DD-2)

DRAINAGE SYSTEM No. 2

DRAINAGE PROFILE

SCALE: Horiz 1"=5'
Vert 1"=5'

DP-1

STATION

CY Exc / Emb

TOTAL

STATE OF CALIFORNIA - DEPARTMENT OF TRANSPORTATION
Caltrans

FUNCTIONAL SUPERVISOR: JUN XU
DESIGN

CALCULATED-DESIGNED BY: SUSAN GONZALEZ
CHECKED BY: IRENE LEE

REVISED BY / DATE REVISED

LAST REVISION DATE PLOTTED => 28-SEP-2009
TIME PLOTTED => 13:44
05-04-09

BORDER LAST REVISED 4/11/2008

RELATIVE BORDER SCALE IS IN INCHES 0 1 2 3

USERNAME => s135318
DGN FILE => 644261ib001.dgn

CU 06249

EA 442611

Dist	COUNTY	ROUTE	POST MILES TOTAL PROJECT	SHEET No.	TOTAL SHEETS
06	Fre	99	26.7/30.6	60	242

REGISTERED CIVIL ENGINEER — DATE: 05-29-09

RODRIGO M. CRUZ
No. 57918
Exp 06/30/10
CIVIL
REGISTERED PROFESSIONAL ENGINEER
STATE OF CALIFORNIA

9-28-09
PLANS APPROVAL DATE

THE STATE OF CALIFORNIA OR ITS OFFICERS OR AGENTS SHALL NOT BE RESPONSIBLE FOR THE ACCURACY OR COMPLETENESS OF SCANNED COPIES OF THIS PLAN SHEET.

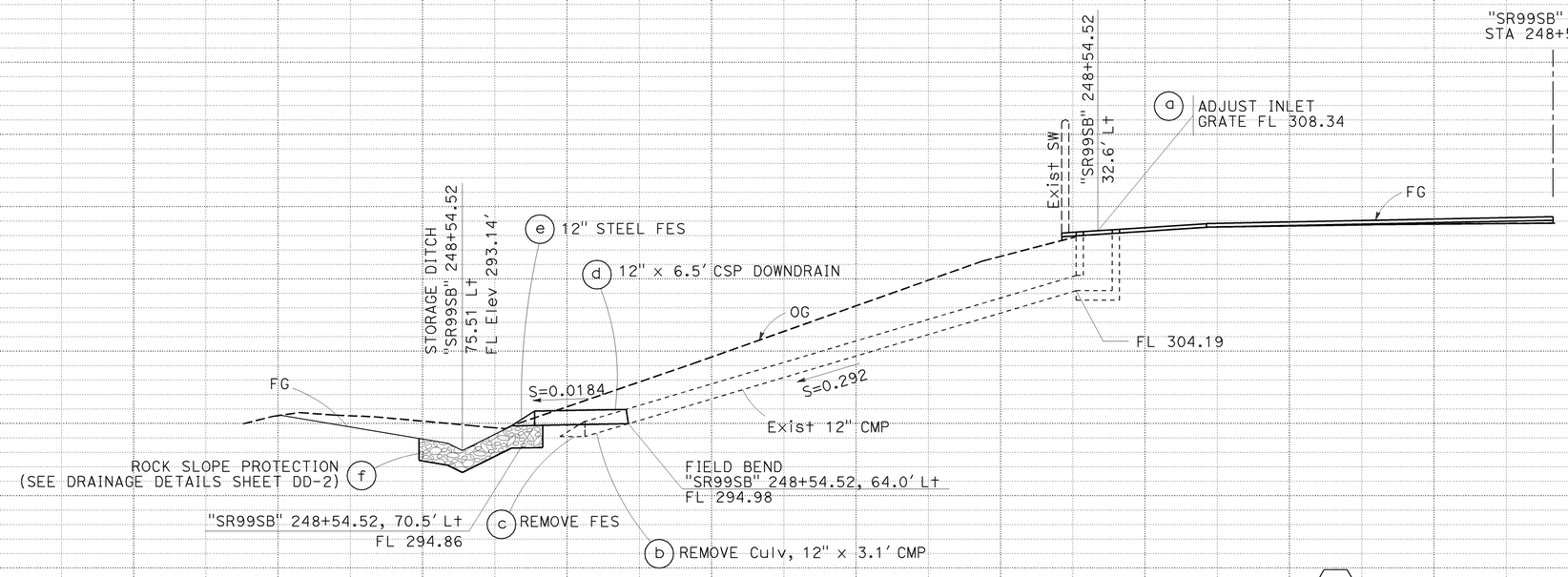

DRAINAGE SYSTEM No. 3

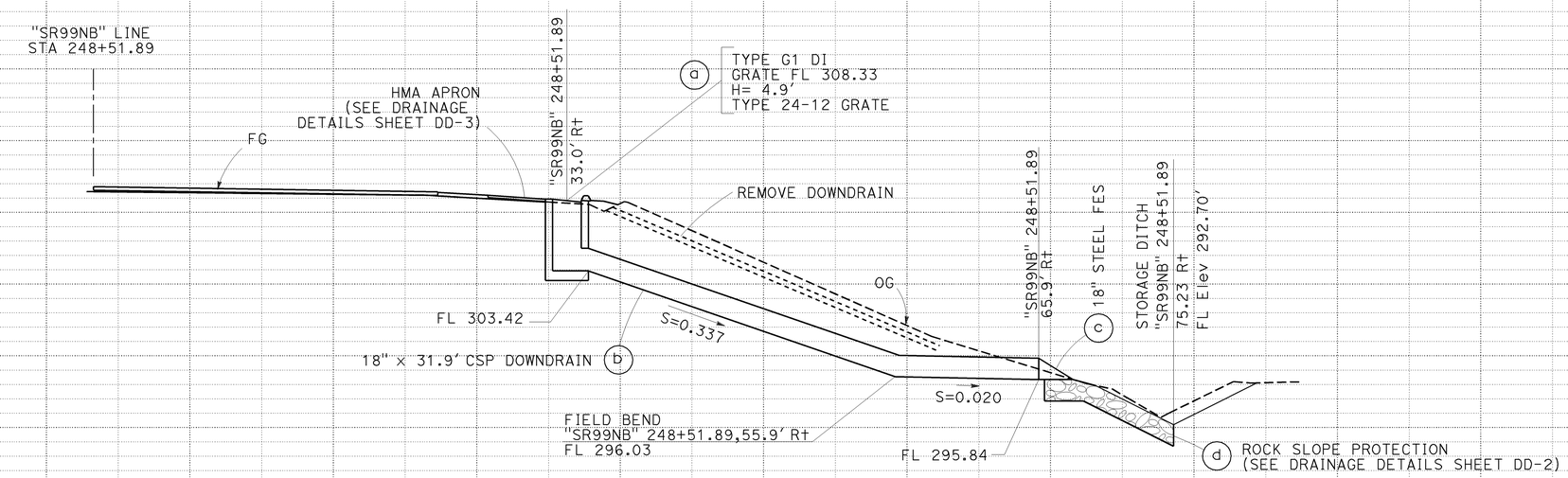

DRAINAGE SYSTEM No. 4

DRAINAGE PROFILE

SCALE: Horiz 1"=5'
Vert 1"=5'

DP-2

STATION		TOTAL
CY	Exc	
	Emb	

STATE OF CALIFORNIA - DEPARTMENT OF TRANSPORTATION — Caltrans

FUNCTIONAL SUPERVISOR: JUN XU

DESIGN: IRENE LEE

CALCULATED-DESIGNED BY: SUSAN GONZALEZ

CHECKED BY

REVISED BY | DATE REVISED

LAST REVISION — DATE PLOTTED => 28-SEP-2009
05-04-09 — TIME PLOTTED => 13:44

BORDER LAST REVISED 4/11/2008

RELATIVE BORDER SCALE IS IN INCHES 0 1 2 3

USERNAME => s135318
DGN FILE => 644261ib002.dgn

CU 06249

EA 442611

Dist	COUNTY	ROUTE	POST MILES TOTAL PROJECT	SHEET No.	TOTAL SHEETS
06	Fre	99	26.7/30.6	61	242

05-29-09
REGISTERED CIVIL ENGINEER DATE

9-28-09
PLANS APPROVAL DATE

RODRIGO M. CRUZ
No. 57918
Exp 06/30/10
CIVIL
REGISTERED PROFESSIONAL ENGINEER
STATE OF CALIFORNIA

THE STATE OF CALIFORNIA OR ITS OFFICERS OR AGENTS SHALL NOT BE RESPONSIBLE FOR THE ACCURACY OR COMPLETENESS OF SCANNED COPIES OF THIS PLAN SHEET.

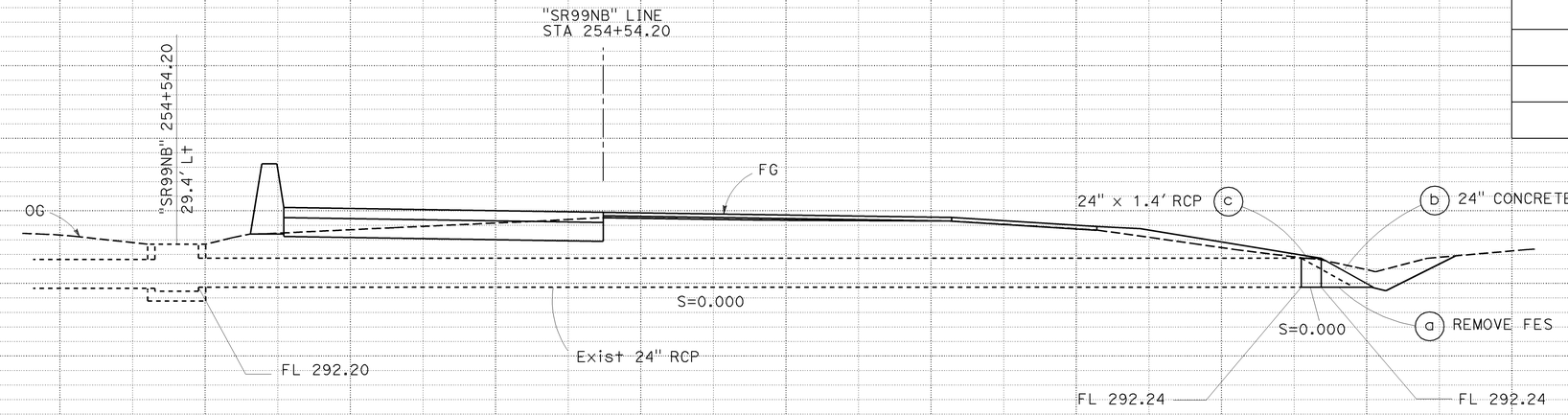

DRAINAGE SYSTEM No. 5

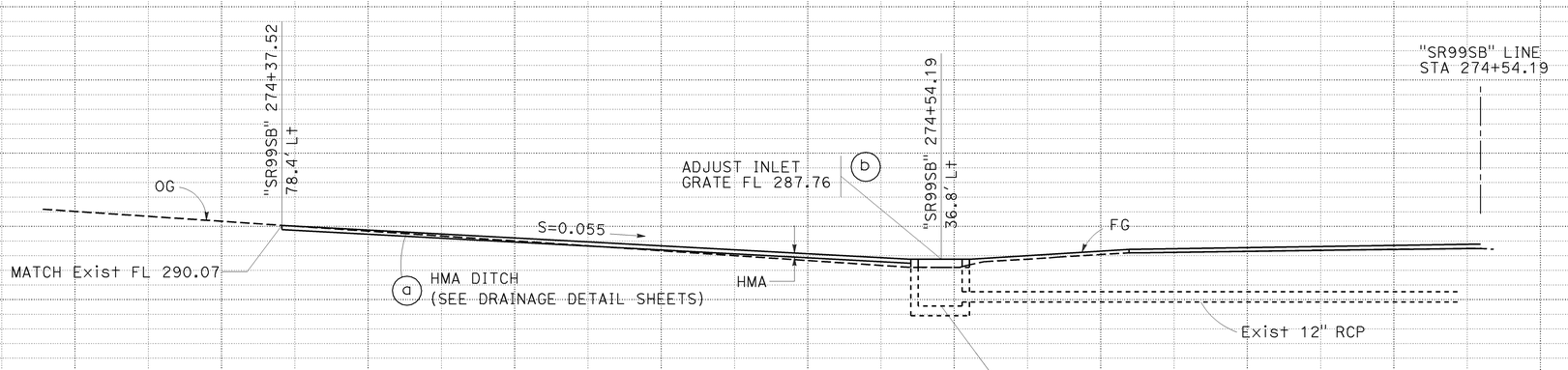

DRAINAGE SYSTEM No. 7

DRAINAGE PROFILE

SCALE: Horiz 1"=5'
Vert 1"=5'

DP-3

STATE OF CALIFORNIA - DEPARTMENT OF TRANSPORTATION
DESIGN
FUNCTIONAL SUPERVISOR: JUN XU
CALCULATED-DESIGNED BY: IRENE LEE
CHECKED BY: SUSAN GONZALEZ
REVISED BY
DATE REVISED

STATION
CY Exc
Emb
TOTAL

LAST REVISION DATE PLOTTED => 28-SEP-2009
06-29-09 TIME PLOTTED => 13:45

BORDER LAST REVISED 4/11/2008
RELATIVE BORDER SCALE IS IN INCHES 0 1 2 3
USERNAME => s135318
DGN FILE => 644261ib003.dgn
CU 06249
EA 442611

Dist	COUNTY	ROUTE	POST MILES TOTAL PROJECT	SHEET No.	TOTAL SHEETS
06	Fre	99	26.7/30.6	62	242

REGISTERED CIVIL ENGINEER 05-29-09 DATE

9-28-09
PLANS APPROVAL DATE

REGISTERED PROFESSIONAL ENGINEER RODRIGO M.CRUZ No. 57918 Exp. 06/30/10 CIVIL STATE OF CALIFORNIA

THE STATE OF CALIFORNIA OR ITS OFFICERS OR AGENTS SHALL NOT BE RESPONSIBLE FOR THE ACCURACY OR COMPLETENESS OF SCANNED COPIES OF THIS PLAN SHEET.

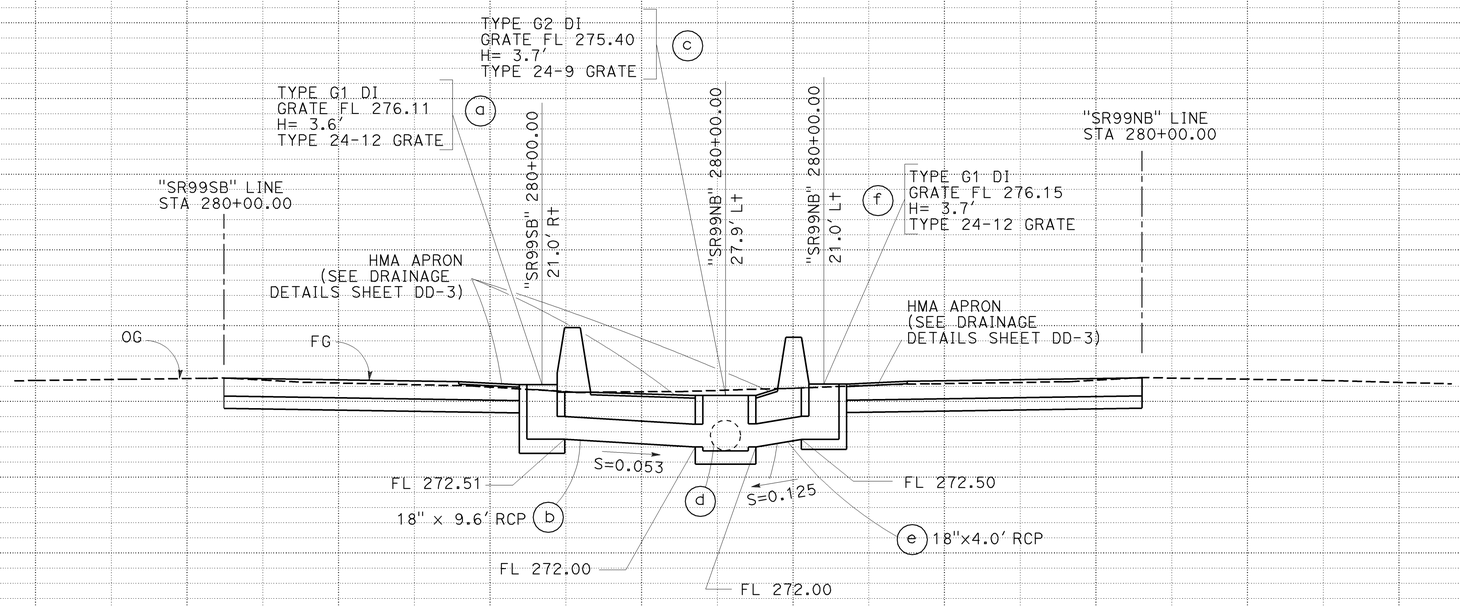

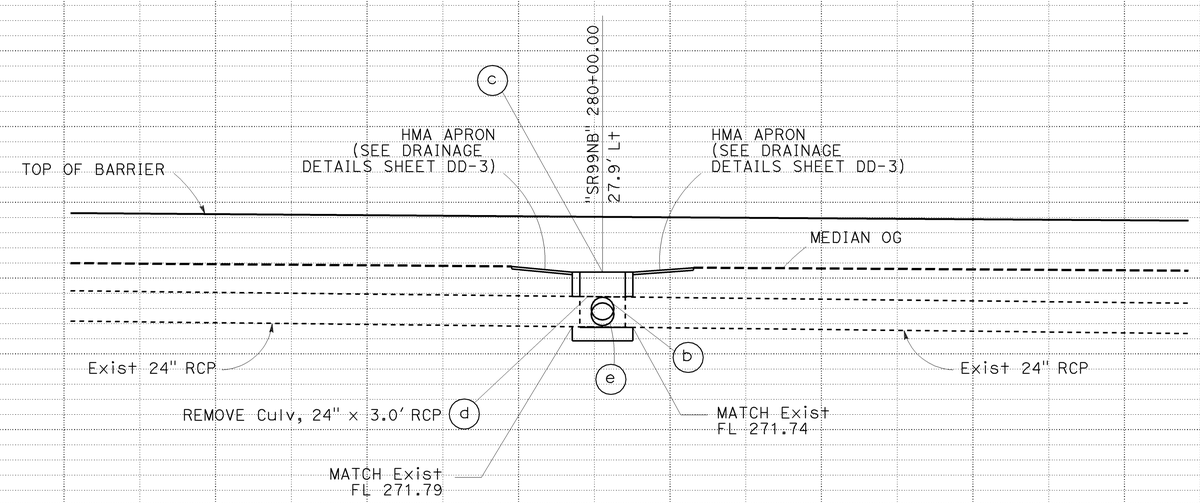

DRAINAGE PROFILE

SCALE: Horiz 1"=5'
Vert 1"=5'

DP-4

DRAINAGE SYSTEM No. 9

STATION | TOTAL
CY Exc
Emb

STATE OF CALIFORNIA - DEPARTMENT OF TRANSPORTATION
Caltrans
DESIGN
FUNCTIONAL SUPERVISOR JUN XU
CALCULATED-DESIGNED BY SUSAN GONZALEZ
CHECKED BY IRENE LEE
REVISED BY
DATE REVISED

LAST REVISION 06-19-09
DATE PLOTTED => 28-SEP-2009
TIME PLOTTED => 13:45

Dist	COUNTY	ROUTE	POST MILES TOTAL PROJECT	SHEET No.	TOTAL SHEETS
06	Fre	99	26.7/30.6	63	242

05-29-09
REGISTERED CIVIL ENGINEER DATE

REGISTERED PROFESSIONAL ENGINEER
RODRIGO M. CRUZ
No. 57918
Exp 06/30/10
CIVIL
STATE OF CALIFORNIA

9-28-09
PLANS APPROVAL DATE

THE STATE OF CALIFORNIA OR ITS OFFICERS OR AGENTS SHALL NOT BE RESPONSIBLE FOR THE ACCURACY OR COMPLETENESS OF SCANNED COPIES OF THIS PLAN SHEET.

DRAINAGE SYSTEM No. 10

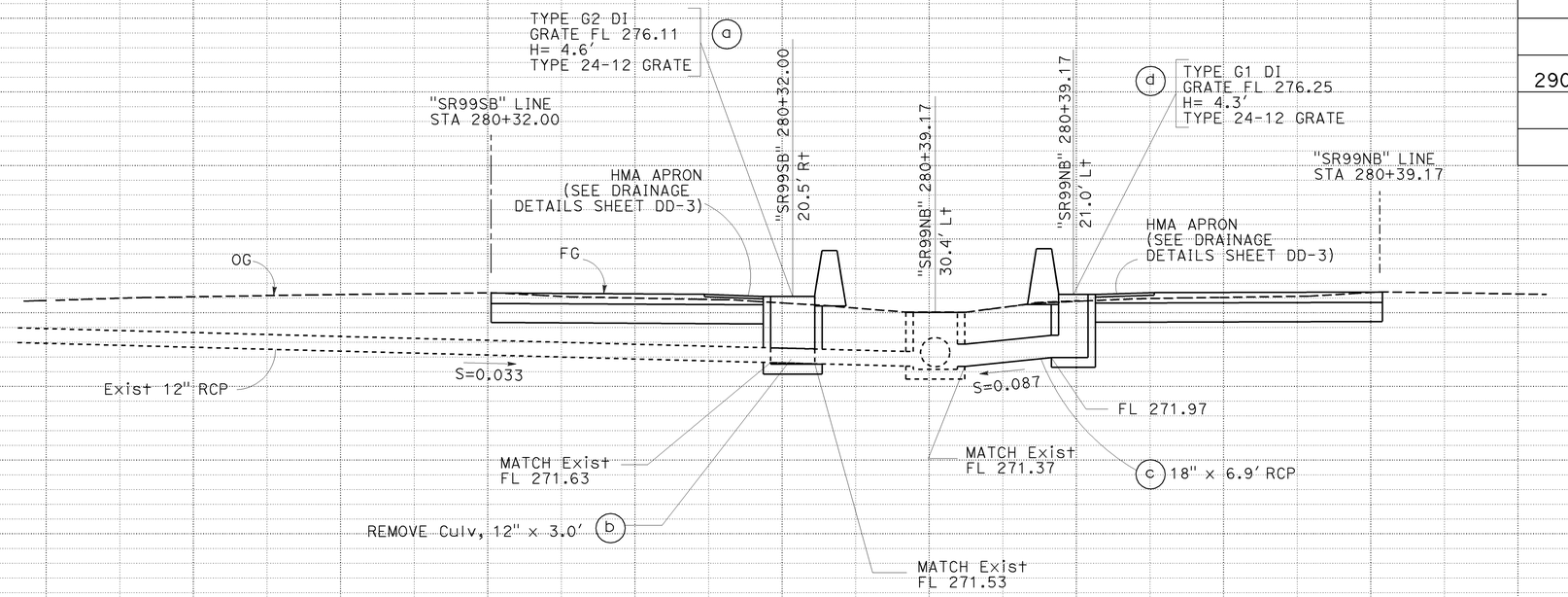

DRAINAGE SYSTEM No. 12

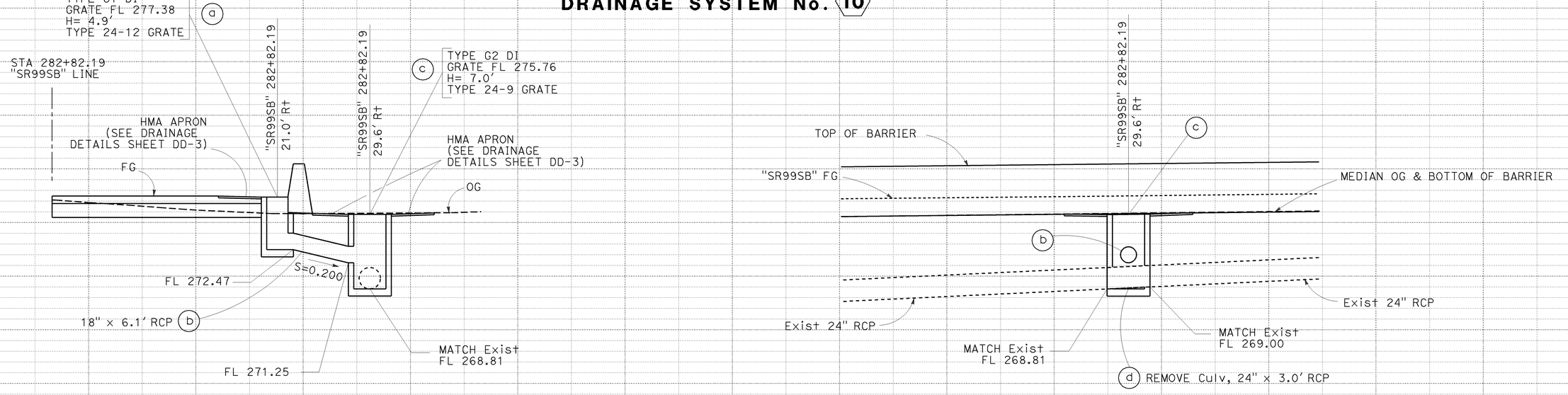

DRAINAGE PROFILE

SCALE: Horiz 1"=5'
Vert 1"=5'

DP-5

STATION

CY Exc
Emb

TOTAL

STATE OF CALIFORNIA - DEPARTMENT OF TRANSPORTATION
DESIGN
FUNCTIONAL SUPERVISOR: JUN XU
CALCULATED-DESIGNED BY: IRENE LEE
CHECKED BY: SUSAN GONZALEZ
REVISED BY
DATE REVISED

LAST REVISION DATE PLOTTED => 28-SEP-2009
06-19-09 TIME PLOTTED => 13:45

BORDER LAST REVISED 4/11/2008

RELATIVE BORDER SCALE IS IN INCHES 0 1 2 3

USERNAME => s135318
DGN FILE => 644261ib005.dgn

CU 06249

EA 442611

Dist	COUNTY	ROUTE	POST MILES TOTAL PROJECT	SHEET No.	TOTAL SHEETS
06	Fre	99	26.7/30.6	64	242

REGISTERED CIVIL ENGINEER — DATE: 05-29-09

9-28-09
PLANS APPROVAL DATE

RODRIGO M. CRUZ
No. 57918
Exp 06/30/10
CIVIL
REGISTERED PROFESSIONAL ENGINEER
STATE OF CALIFORNIA

THE STATE OF CALIFORNIA OR ITS OFFICERS OR AGENTS SHALL NOT BE RESPONSIBLE FOR THE ACCURACY OR COMPLETENESS OF SCANNED COPIES OF THIS PLAN SHEET.

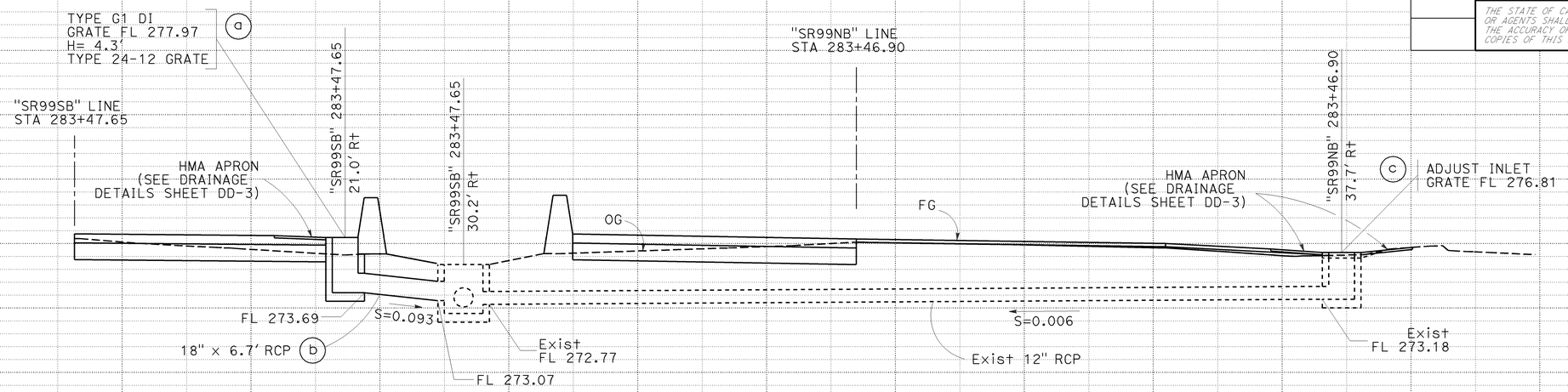

DRAINAGE SYSTEM No. 13

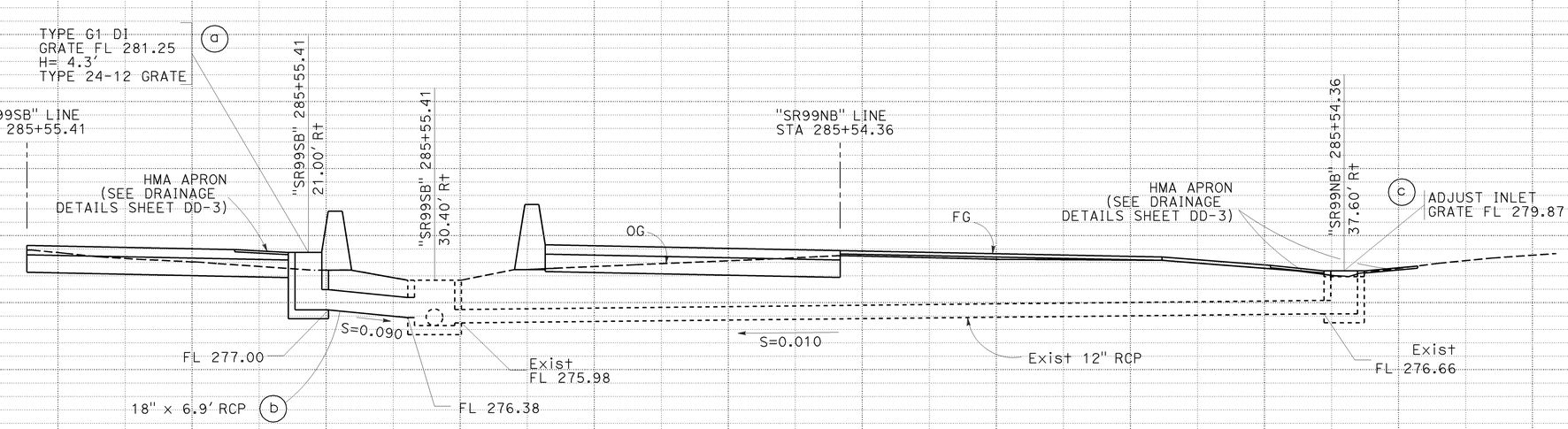

DRAINAGE SYSTEM No. 14

DRAINAGE PROFILE

SCALE: Horiz 1"=5'
Vert 1"=5'

DP-6

STATION		TOTAL
CY	Exc	
	Emb	

IRENE LEE — CALCULATED-DESIGNED BY
SUSAN GONZALEZ — CHECKED BY
JUN XU — FUNCTIONAL SUPERVISOR
REVISED BY — DATE REVISED

STATE OF CALIFORNIA - DEPARTMENT OF TRANSPORTATION
DESIGN
Caltrans

LAST REVISION DATE PLOTTED => 28-SEP-2009
TIME PLOTTED => 13:45
05-04-09

BORDER LAST REVISED 4/11/2008

RELATIVE BORDER SCALE IS IN INCHES 0 1 2 3

USERNAME => s135318
DGN FILE => 644261ib006.dgn

CU 06249

EA 442611

Dist	COUNTY	ROUTE	POST MILES TOTAL PROJECT	SHEET No.	TOTAL SHEETS
06	Fre	99	26.7/30.6	65	242

05-29-09
REGISTERED CIVIL ENGINEER DATE

RODRIGO M. CRUZ
No. 57918
Exp 06/30/10
CIVIL
REGISTERED PROFESSIONAL ENGINEER
STATE OF CALIFORNIA

9-28-09
PLANS APPROVAL DATE

THE STATE OF CALIFORNIA OR ITS OFFICERS OR AGENTS SHALL NOT BE RESPONSIBLE FOR THE ACCURACY OR COMPLETENESS OF SCANNED COPIES OF THIS PLAN SHEET.

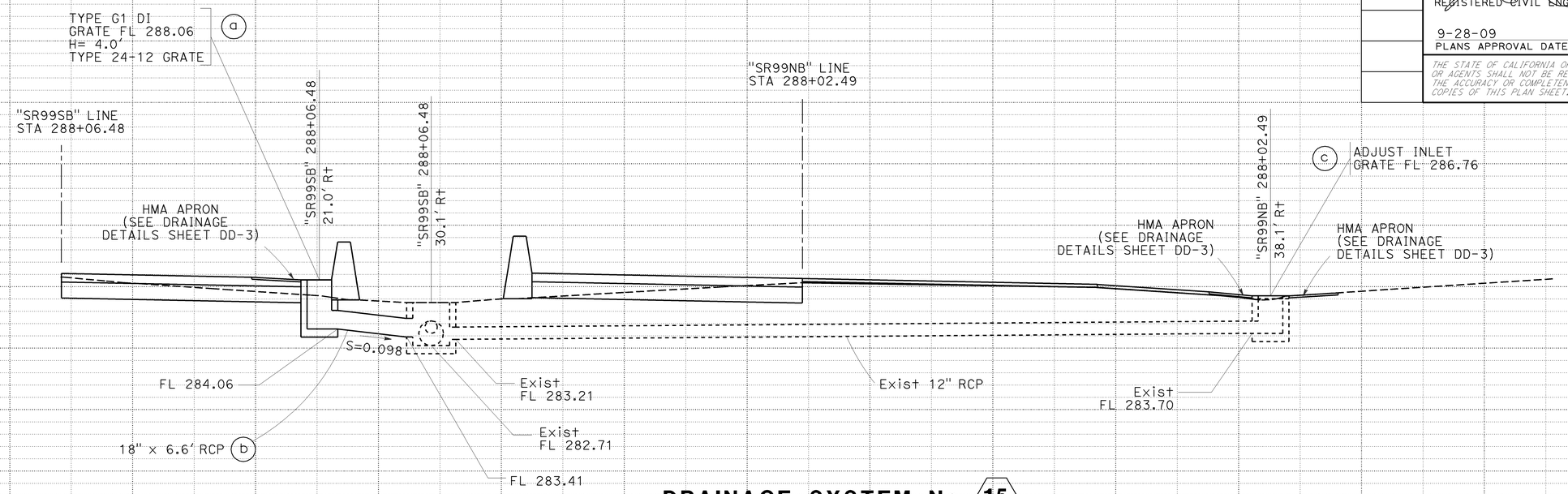

DRAINAGE SYSTEM No. 15

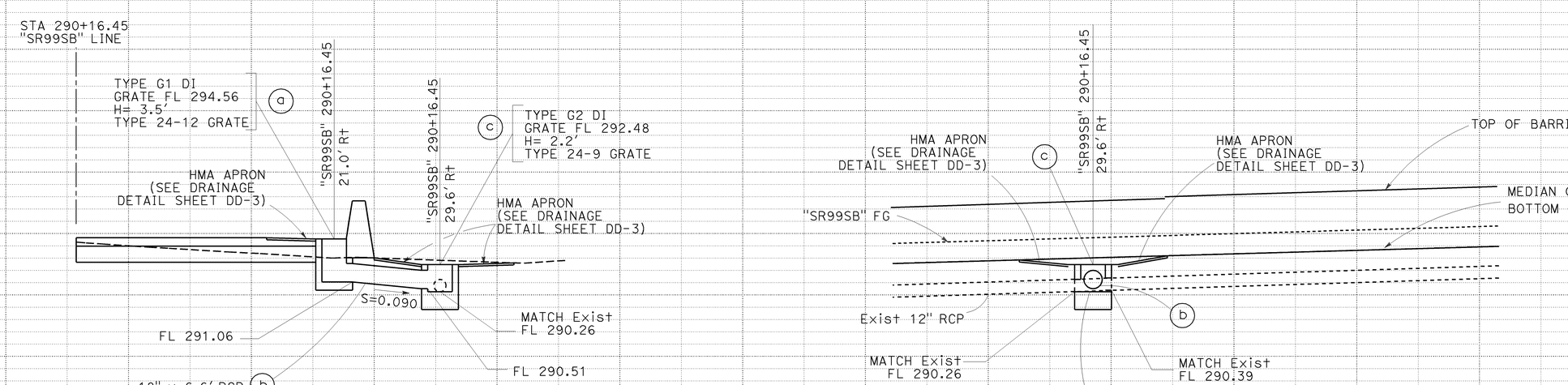

DRAINAGE SYSTEM No. 16

DRAINAGE PROFILE

SCALE: Horiz 1"=5'
Vert 1"=5'

DP-7

STATION		TOTAL
CY	Exc	
	Emb	

LAST REVISION DATE PLOTTED => 28-SEP-2009
06-21-09 TIME PLOTTED => 13:45

IRENE LEE — CALCULATED-DESIGNED BY
SUSAN GONZALEZ — CHECKED BY
JUN XU — FUNCTIONAL SUPERVISOR
DESIGN
STATE OF CALIFORNIA - DEPARTMENT OF TRANSPORTATION
Caltrans

REVISED BY | DATE REVISED

BORDER LAST REVISED 4/11/2008

RELATIVE BORDER SCALE IS IN INCHES 0 1 2 3

USERNAME => s135318
DGN FILE => 644261ib007.dgn

CU 06249

EA 442611

Dist	COUNTY	ROUTE	POST MILES TOTAL PROJECT	SHEET No.	TOTAL SHEETS
06	Fre	99	26.7/30.6	66	242

REGISTERED CIVIL ENGINEER — DATE: 05-29-09

9-28-09
PLANS APPROVAL DATE

REGISTERED PROFESSIONAL ENGINEER — RODRIGO M. CRUZ — No. 57918 — Exp 06/30/10 — CIVIL — STATE OF CALIFORNIA

THE STATE OF CALIFORNIA OR ITS OFFICERS OR AGENTS SHALL NOT BE RESPONSIBLE FOR THE ACCURACY OR COMPLETENESS OF SCANNED COPIES OF THIS PLAN SHEET.

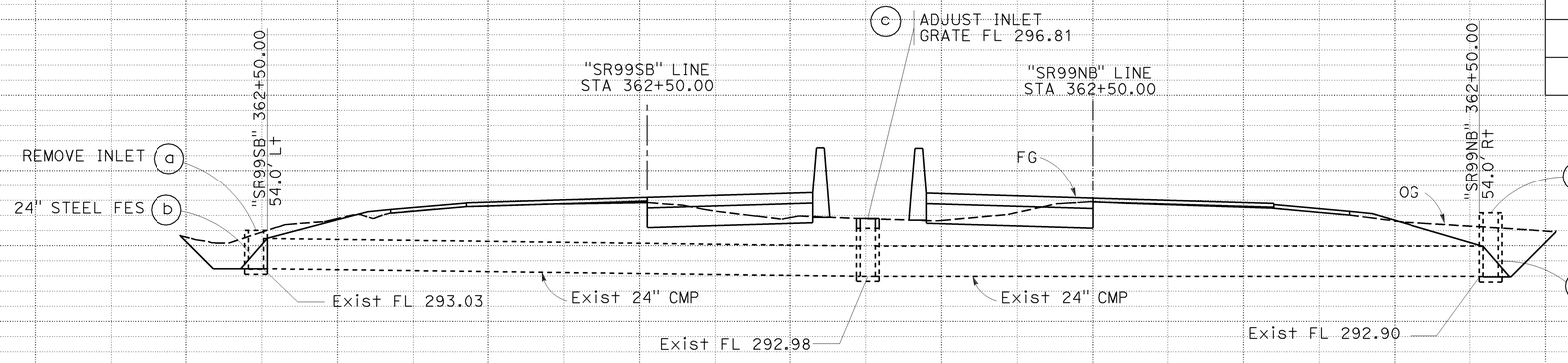

DRAINAGE SYSTEM No. 18

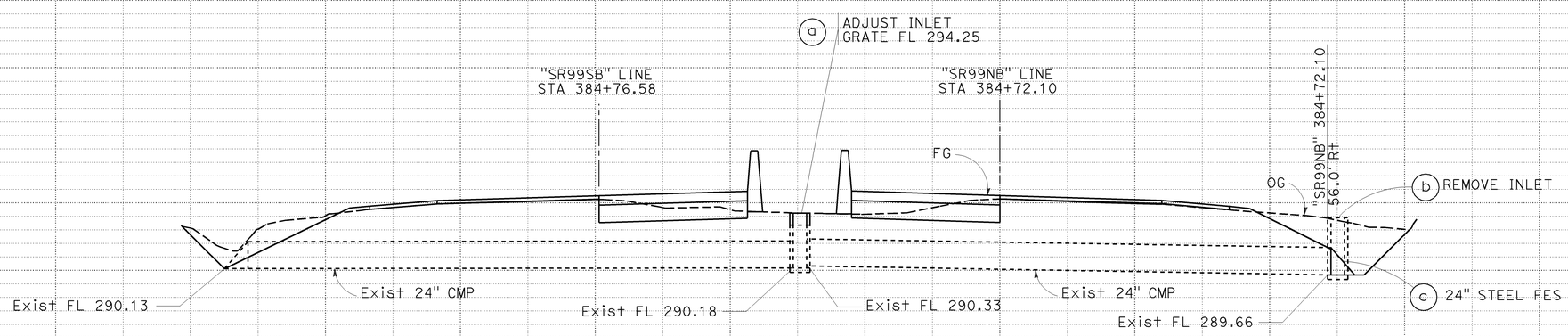

DRAINAGE SYSTEM No. 19

DRAINAGE PROFILE

SCALE: Horiz 1"=10'
Vert 1"=5'

DP-8

STATION

CY Exc / Emb

TOTAL

STATE OF CALIFORNIA - DEPARTMENT OF TRANSPORTATION
DESIGN
FUNCTIONAL SUPERVISOR: JUN XU
CALCULATED-DESIGNED BY: IRENE LEE
CHECKED BY: SUSAN GONZALEZ
REVISED BY / DATE REVISED

LAST REVISION 06-29-09
DATE PLOTTED => 28-SEP-2009
TIME PLOTTED => 13:45

BORDER LAST REVISED 4/11/2008

RELATIVE BORDER SCALE IS IN INCHES 0 1 2 3

USERNAME => s135318
DGN FILE => 6442611b008.dgn

CU 06249

EA 442611

Dist	COUNTY	ROUTE	POST MILES TOTAL PROJECT	SHEET No.	TOTAL SHEETS
06	Fre	99	26.7/30.6	67	242

REGISTERED CIVIL ENGINEER — 05-29-09 DATE

9-28-09
PLANS APPROVAL DATE

RODRIGO M. CRUZ
No. 57918
Exp 06/30/10
CIVIL
REGISTERED PROFESSIONAL ENGINEER
STATE OF CALIFORNIA

THE STATE OF CALIFORNIA OR ITS OFFICERS OR AGENTS SHALL NOT BE RESPONSIBLE FOR THE ACCURACY OR COMPLETENESS OF SCANNED COPIES OF THIS PLAN SHEET.

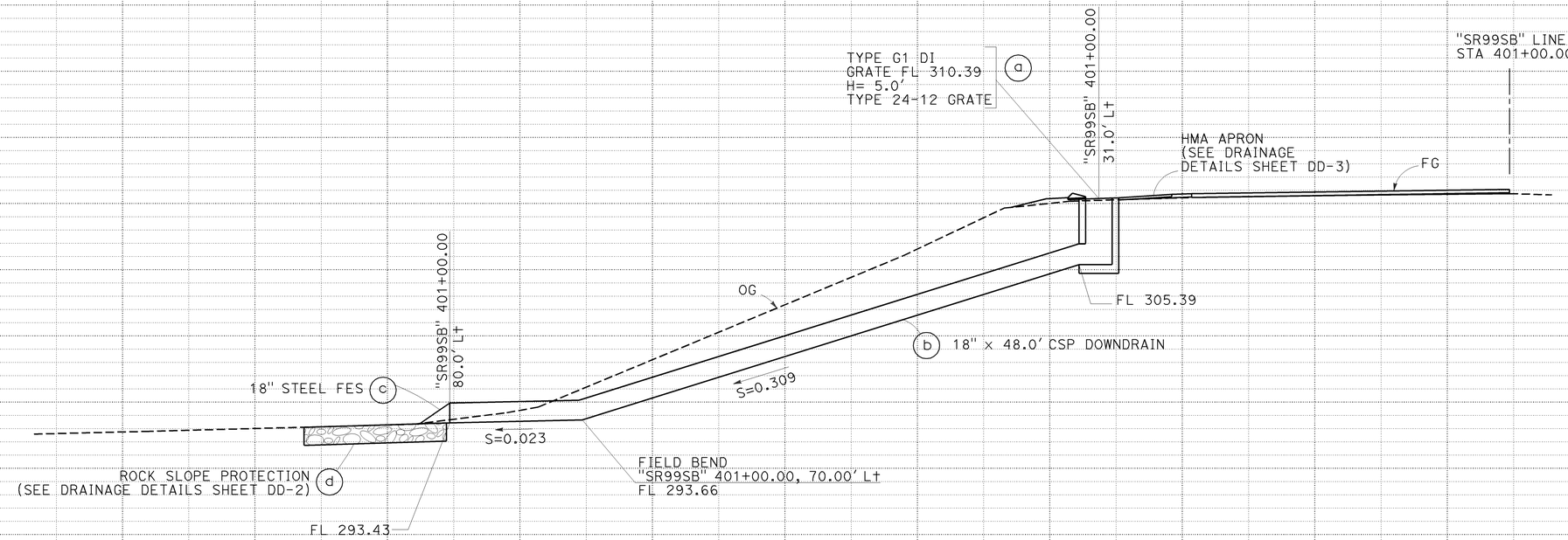

DRAINAGE SYSTEM No. 20

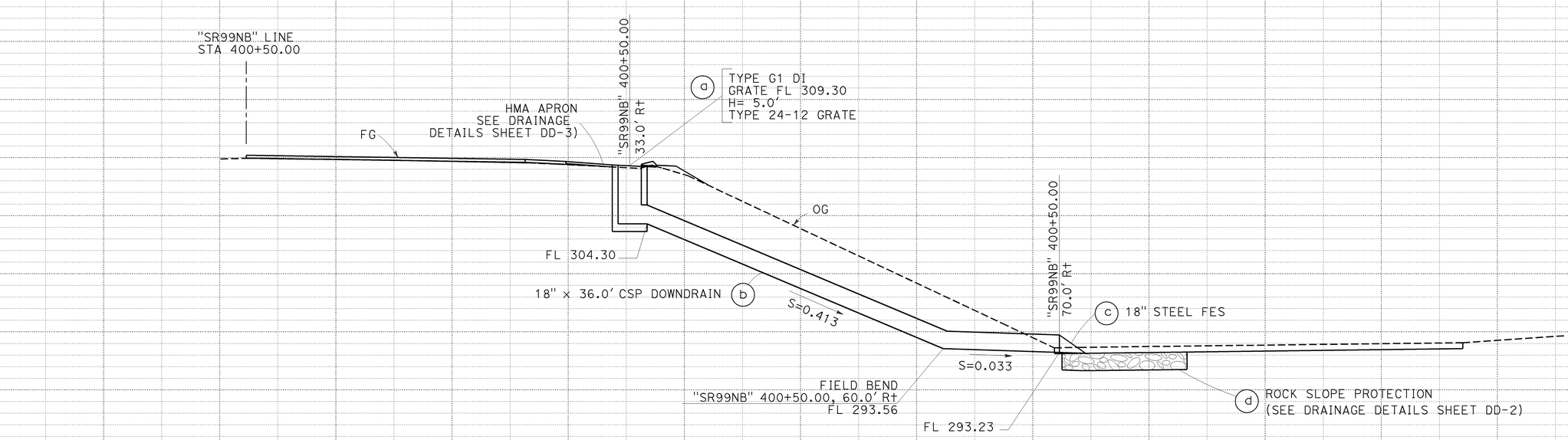

DRAINAGE SYSTEM No. 21

DRAINAGE PROFILE

SCALE: Horiz 1"=5'
Vert 1"=5'

DP-9

STATION		TOTAL
CY	Exc	
	Emb	

IRENE LEE — CALCULATED-DESIGNED BY
SUSAN GONZALEZ — CHECKED BY
JUN XU — FUNCTIONAL SUPERVISOR
REVISED BY / DATE REVISED

STATE OF CALIFORNIA - DEPARTMENT OF TRANSPORTATION
DESIGN
Caltrans

LAST REVISION DATE PLOTTED => 28-SEP-2009
TIME PLOTTED => 13:45
05-04-09

BORDER LAST REVISED 4/11/2008

RELATIVE BORDER SCALE IS IN INCHES 0 1 2 3

USERNAME => s135318
DGN FILE => 644261ib009.dgn

CU 06249

EA 442611

Dist	COUNTY	ROUTE	POST MILES TOTAL PROJECT	SHEET No.	TOTAL SHEETS
06	Fre	99	26.7/30.6	68	242

REGISTERED CIVIL ENGINEER — DATE: 05-29-09

RODRIGO M. CRUZ
No. 57918
Exp 06/30/10
CIVIL
REGISTERED PROFESSIONAL ENGINEER
STATE OF CALIFORNIA

9-28-09
PLANS APPROVAL DATE

THE STATE OF CALIFORNIA OR ITS OFFICERS OR AGENTS SHALL NOT BE RESPONSIBLE FOR THE ACCURACY OR COMPLETENESS OF SCANNED COPIES OF THIS PLAN SHEET.

NOTE: Exist CONDITION IS TO BE FIELD VERIFIED BY ENGINEER.

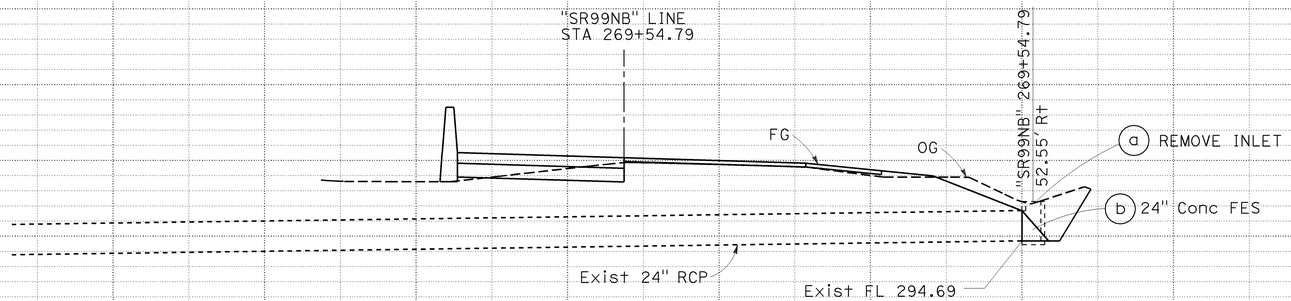

DRAINAGE SYSTEM No. 22

DRAINAGE PROFILE

SCALE: Horiz 1"=10'
Vert 1"=5'

DP-10

STATION		TOTAL
CY	Exc	
	Emb	

IRENE LEE — CALCULATED-DESIGNED BY
SUSAN GONZALEZ — CHECKED BY
JUN XU — FUNCTIONAL SUPERVISOR
DESIGN
STATE OF CALIFORNIA - DEPARTMENT OF TRANSPORTATION

REVISED BY | DATE REVISED

LAST REVISION — DATE PLOTTED => 28-SEP-2009 — TIME PLOTTED => 13:45
05-28-09

BORDER LAST REVISED 4/11/2008

RELATIVE BORDER SCALE IS IN INCHES 0 1 2 3

USERNAME => s135318
DGN FILE => 644261ib010.dgn

CU 06249

EA 442611

Dist	COUNTY	ROUTE	POST MILES TOTAL PROJECT	SHEET No.	TOTAL SHEETS
06	Fre	99	26.7/30.6	69	242

REGISTERED CIVIL ENGINEER — DATE 05-29-09

PLANS APPROVAL DATE 9-28-09

RODRIGO M. CRUZ No. 57918 Exp 06/30/10 CIVIL — REGISTERED PROFESSIONAL ENGINEER — STATE OF CALIFORNIA

THE STATE OF CALIFORNIA OR ITS OFFICERS OR AGENTS SHALL NOT BE RESPONSIBLE FOR THE ACCURACY OR COMPLETENESS OF SCANNED COPIES OF THIS PLAN SHEET.

LEGEND

Exist APRON

Exist CONCRETE

NOTES:

1. SEE DRAINAGE PLANS FOR LOCATION AND ELEVATION OF EARTH BERMS.
2. SEE TYPICAL CROSS SECTION SHEETS FOR SIDE SLOPE AND DIMENSIONS OF EARTH BERMS.

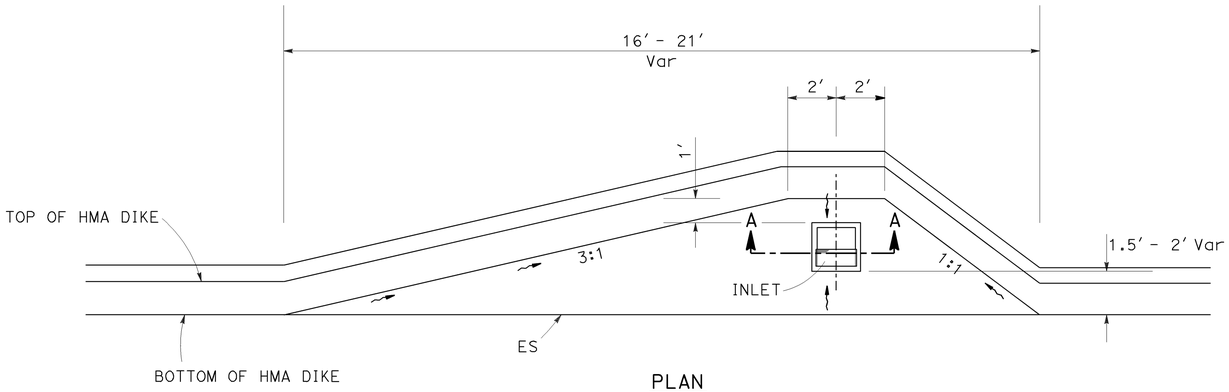

PLAN

ADJUST INLET

LOCATION	DRAINAGE SYSTEM No./ DRAINAGE UNIT	H (FT)
"SR99SB" 243+84.95, 32.80′ Lt	1/a	0.15
"SR99SB" 248+54.52, 32.60′ Lt	3/a	0.35
"SR99SB" 272+03.61, 36.80′ Lt	6/a	0.49
"SR99SB" 274+54.19, 36.80′ Lt	7/b	0.56
"SR99NB" 274+54.93, 37.90′ Rt	8/a	0.25
"SR99SB" 281+43.90, 36.90′ Lt	11/a	0.84
"SR99NB" 283+46.90, 37.70′ Rt	13/c	0.43
"SR99NB" 285+54.36, 37.60′ Rt	14/c	0.43
"SR99NB" 288+02.49, 38.10′ Rt	15/c	0.24
"SR99SB" 291+56.60, 37.00′ Lt	17/a	0.41
"SR99SB" 362+55.97, 29.75′ Rt	18/c	0.73
"SR99SB" 384+76.83, 30.00′ Rt	19/a	0.90

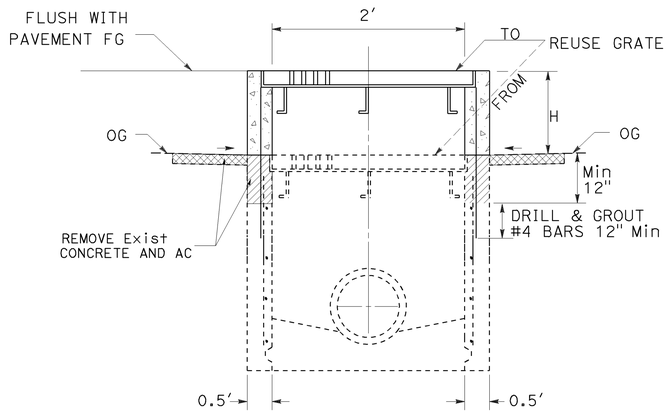

SECTION A-A

RAISE INLET

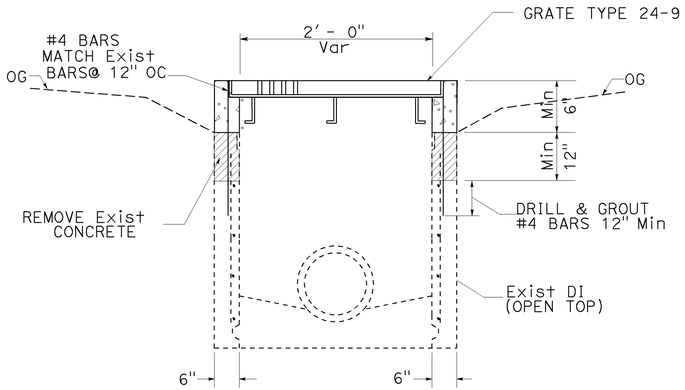

DRAINAGE SYSTEM No. 23 & 24

ADJUST INLET

DRAINAGE DETAILS

NO SCALE

DD-1

REVISED BY | DATE REVISED

IRENE LEE | RODRIGO CRUZ

CALCULATED-DESIGNED BY | CHECKED BY

FUNCTIONAL SUPERVISOR: JUN XU

STATE OF CALIFORNIA - DEPARTMENT OF TRANSPORTATION

DESIGN

Caltrans

LAST REVISION 06-26-09 | DATE PLOTTED => 28-SEP-2009 | TIME PLOTTED => 13:45

BORDER LAST REVISED 4/11/2008

RELATIVE BORDER SCALE IS IN INCHES 0 1 2 3

USERNAME => s135318
DGN FILE => 644261ic001.dgn

CU 06249

EA 442611

Dist	COUNTY	LOCATION CODE	POST MILES TOTAL PROJECT	SHEET No.	TOTAL SHEETS
06	Fre	99	26.7/30.6	70	242

05-29-09
REGISTERED CIVIL ENGINEER DATE

9-28-09
PLANS APPROVAL DATE

REGISTERED PROFESSIONAL ENGINEER
RODRIGO M. CRUZ
No. 57918
Exp 06/30/10
CIVIL
STATE OF CALIFORNIA

THE STATE OF CALIFORNIA OR ITS OFFICERS OR AGENTS SHALL NOT BE RESPONSIBLE FOR THE ACCURACY OR COMPLETENESS OF ELECTRONIC COPIES OF THIS PLAN SHEET.

NOTE:

"D" REPRESENTS THE OUTSIDE DIAMETER OF THE PIPE CONNECTED TO THE FLARED-END SECTION.

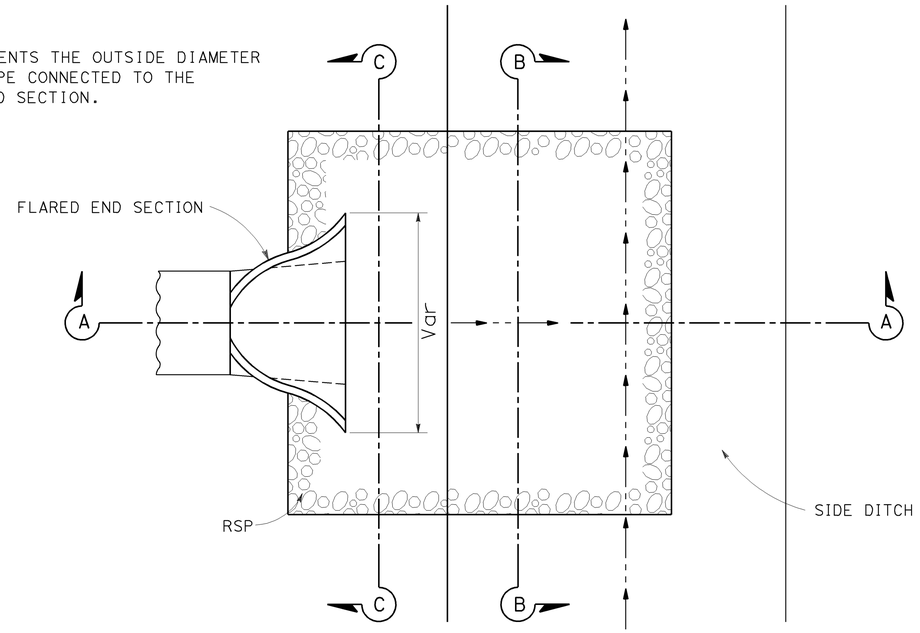

PLAN

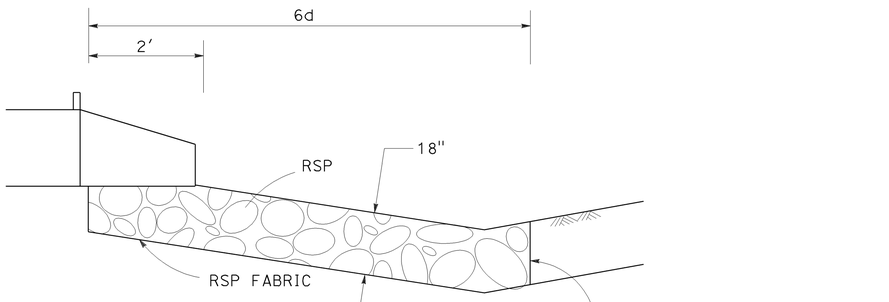

SECTION A-A

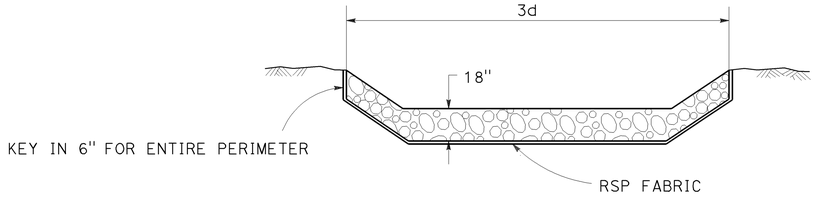

SECTION B-B

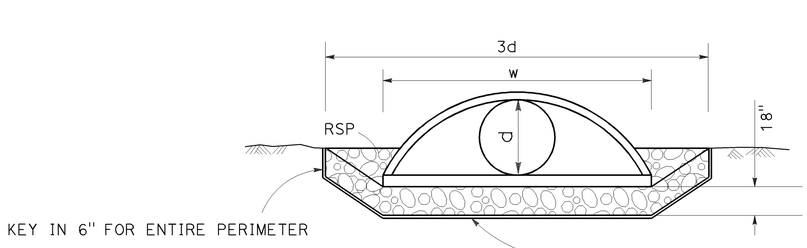

SECTION C-C

ROCK ENERGY DISSIPATOR AT SIDE DITCHES

DRAINAGE DETAILS
NO SCALE **DD-2**

STATE OF CALIFORNIA - DEPARTMENT OF TRANSPORTATION
Caltrans
DESIGN
FUNCTIONAL SUPERVISOR: JUN XU
CALCULATED-DESIGNED BY: IRENE LEE
CHECKED BY: RODRIGO CRUZ
REVISED BY
DATE REVISED

LAST REVISION DATE PLOTTED => 28-SEP-2009
06-30-09 TIME PLOTTED => 13:34

BORDER LAST REVISED 3/1/2007
RELATIVE BORDER SCALE IS IN INCHES 0 1 2 3
USERNAME => trrene
DGN FILE => 644261ic002.dgn
CU 06249
EA 442611

Dist	COUNTY	ROUTE	POST MILES TOTAL PROJECT	SHEET No.	TOTAL SHEETS
06	Fre	99	26.7/30.6	71	242

05-29-09
REGISTERED CIVIL ENGINEER DATE

9-28-09
PLANS APPROVAL DATE

REGISTERED PROFESSIONAL ENGINEER
RODRIGO M.CRUZ
No. 57918
Exp 06/30/10
CIVIL
STATE OF CALIFORNIA

THE STATE OF CALIFORNIA OR ITS OFFICERS OR AGENTS SHALL NOT BE RESPONSIBLE FOR THE ACCURACY OR COMPLETENESS OF SCANNED COPIES OF THIS PLAN SHEET.

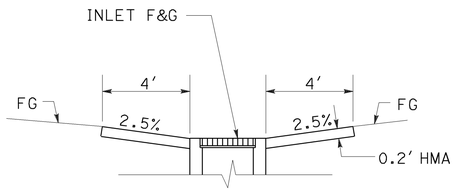

SECTION A-A

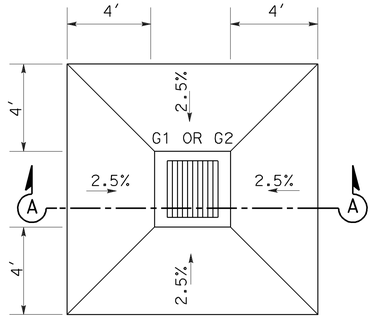

PLAN

TYPICAL HMA APRON

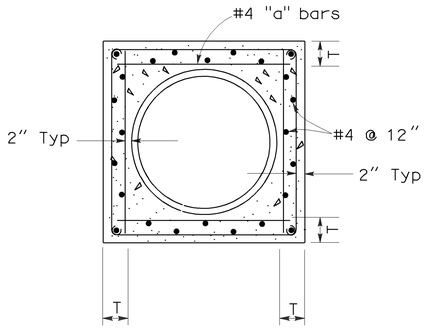

SECTION C-C

NOTES:

1. WHERE PIPE OF DIFFERENT DIAMENTERS ARE JOINED WITH A CONCRETE COLLAR. "L" SHALL BE THOSE OF THE LARGER PIPE. D=D1 OR D2 WHICHEVER IS GREATER.
2. JOIN PIPES AT INVERTS WHERE THE SLOPE OF THE DOWNSTREAM PIPE IS GREATER THAN THE SLOPE OF THE UPSTREAM PIPE. AND JOIN PIPES AT SOFFIT WHERE THE SLOPE OF THE UPSTREAM PIPE IS GREATER THAN THE SLOPE OF THE DOWNSTREAM PIPE.
3. "b" BARS TO BE LOCKED AROUND LONGITUDUNAL REINFORCEMENT. ROTATE BARS AS NECESSARY.
4. CONCRETE COLLAR SHOWN IS ADEQUATE FOR UP TO 40 FEET OF FILL.
5. FOR PIPE SIZE NOT LISTED USE NEXT LARGER.

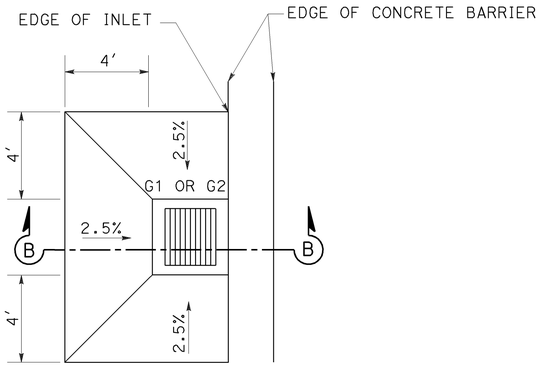

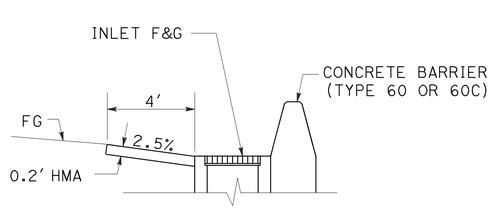

SECTION B-B

PLAN

TYPICAL HMA APRON AT EDGE OF CONCRETE BARRIER

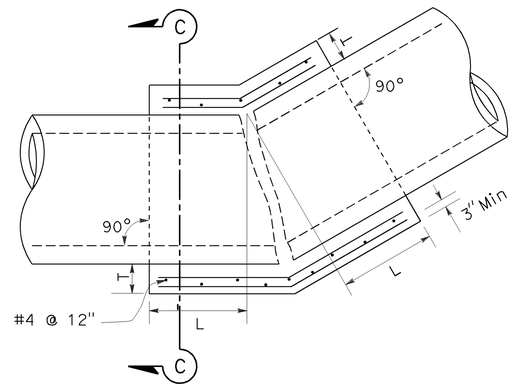

D	L	T	"a"
12"	1.0′	4"	@12"
18"	1.0′	5"	@12"
24"	1.0′	6"	@12"

TYPICAL CONCRETE COLLAR FIELD BEND

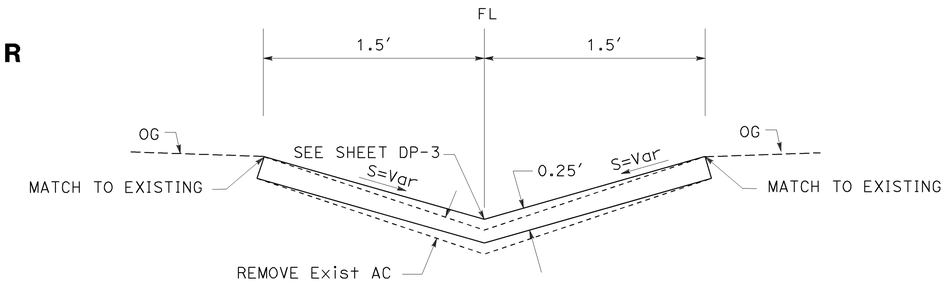

HMA DITCH (DRAINAGE SYSTEM No. 7)

DRAINAGE DETAILS

NO SCALE

DD-3

STATE OF CALIFORNIA - DEPARTMENT OF TRANSPORTATION
Caltrans®
DESIGN
FUNCTIONAL SUPERVISOR: JUN XU
CALCULATED-DESIGNED BY: TAM LA/IRENE LEE
CHECKED BY: RODRIGO CRUZ
REVISED BY
DATE REVISED

LAST REVISION DATE PLOTTED => 28-SEP-2009
TIME PLOTTED => 13:34

BORDER LAST REVISED 4/11/2008
RELATIVE BORDER SCALE IS IN INCHES 0 1 2 3
USERNAME => trrene
DGN FILE => 644261ic003.dgn
CU 06249
EA 442611

Dist	COUNTY	ROUTE	POST MILES TOTAL PROJECT	SHEET No.	TOTAL SHEETS
06	Fre	99	26.7/30.6	72	242

REGISTERED CIVIL ENGINEER — DATE: 05-29-09

PLANS APPROVAL DATE: 9-28-09

REGISTERED PROFESSIONAL ENGINEER — RODRIGO M. CRUZ — No. 57918 — Exp 06/30/10 — CIVIL — STATE OF CALIFORNIA

THE STATE OF CALIFORNIA OR ITS OFFICERS OR AGENTS SHALL NOT BE RESPONSIBLE FOR THE ACCURACY OR COMPLETENESS OF SCANNED COPIES OF THIS PLAN SHEET.

DIRECTION OF TRAFFIC

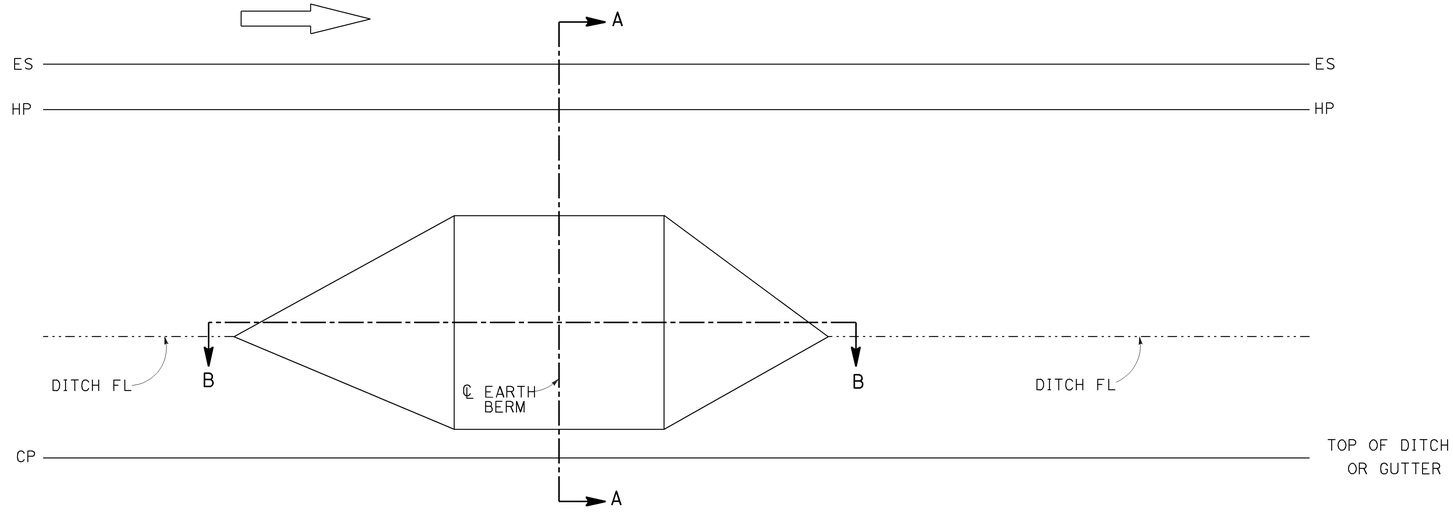

PLAN

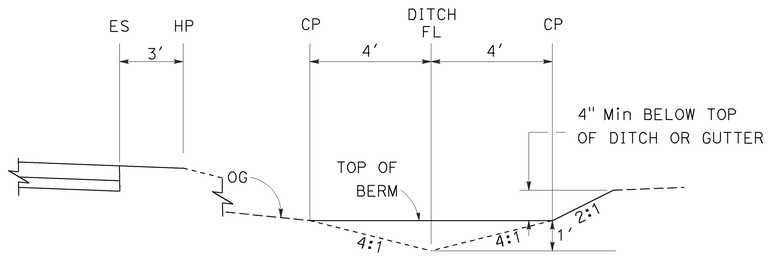

SECTION A-A
FOR STORAGE DITCH WITH 4:1 SLOPE

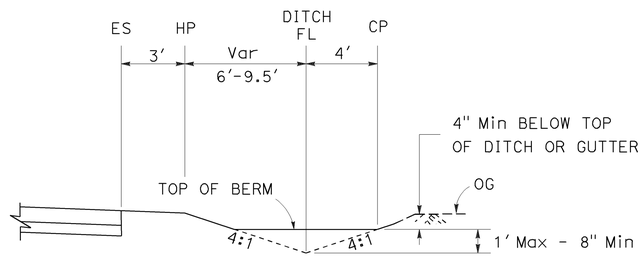

SECTION A-A
FOR GUTTER

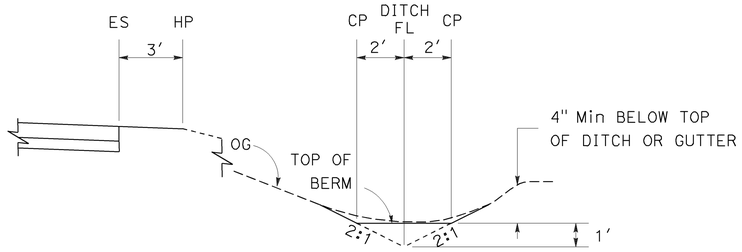

SECTION A-A
FOR STORAGE DITCH WITH 2:1 SLOPE

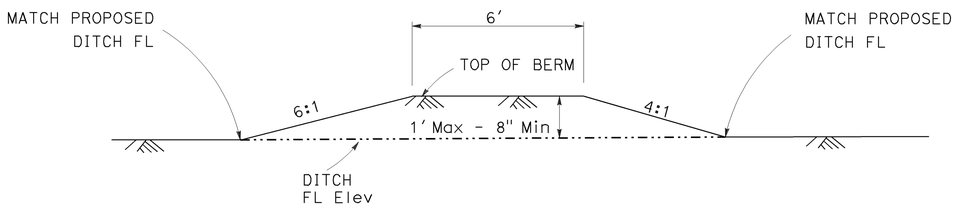

SECTION B-B

MODIFY STORAGE DITCH OR GUTTER WITH EARTH BERM

DRAINAGE DETAILS

NO SCALE

DD-4

STATE OF CALIFORNIA - DEPARTMENT OF TRANSPORTATION — DESIGN — FUNCTIONAL SUPERVISOR: JUN XU — CALCULATED-DESIGNED BY — CHECKED BY: SUSAN GONZALEZ — REVISED BY — DATE REVISED: IRENE LEE

LAST REVISION: DATE PLOTTED => 28-SEP-2009; TIME PLOTTED => 13:34; 06-29-09

BORDER LAST REVISED 4/11/2008 — RELATIVE BORDER SCALE IS IN INCHES 0 1 2 3 — USERNAME => trrene — DGN FILE => 644261ic004.dgn — CU 06249 — EA 442611

Dist	COUNTY	ROUTE	POST MILES TOTAL PROJECT	SHEET No.	TOTAL SHEETS
06	Fre	99	26.7/30.6	73	242

05-29-09
REGISTERED CIVIL ENGINEER DATE

9-28-09
PLANS APPROVAL DATE

REGISTERED PROFESSIONAL ENGINEER
RODRIGO M. CRUZ
No. 57918
Exp 06/30/10
CIVIL
STATE OF CALIFORNIA

THE STATE OF CALIFORNIA OR ITS OFFICERS OR AGENTS SHALL NOT BE RESPONSIBLE FOR THE ACCURACY OR COMPLETENESS OF SCANNED COPIES OF THIS PLAN SHEET.

CULVERT JOINT

TYPE OF MATERIAL	JOINT TYPE	
	POSITIVE	DOWNDRAIN
RCP	X	
CSP		X

DRAINAGE QUANTITIES

DRAINAGE SYSTEM No. ⬡	DRAINAGE UNIT ◯	DRAINAGE INLET TYPE	DRAINAGE INLET (N) DESIGN H FT	DRAINAGE INLET (N) MINOR CONCRETE (MINOR STRUCTURE) CY	DRAINAGE INLET Misc IRON & STEEL LB	DRAINAGE INLET ADJUST INLET EA	PLACE HMA (Misc AREA) SQYD	RCP 18" LF	RCP 24" LF	CSP DD (0.064" THICK) 12" LF	CSP DD (0.064" THICK) 18" LF	24" CONCRETE FES EA	STEEL FES 12" EA	STEEL FES 18" EA	STEEL FES 24" EA	ROCK SLOPE PROTECTION (BACKING No. 2, METHOD B) CY	ROCK SLOPE PROTECTION FABRIC SQYD	REMOVE FES EA	REMOVE CULVERT LF	REMOVE INLET EA	(N) MAXIMUM COVER FT	DESCRIPTION	STATION	DRAINAGE PLAN SHEET No.	DRAINAGE SYSTEM No. ⬡	DRAINAGE UNIT ◯
1	a	Exist				1																ADJUST INLET, REUSE GRATE	"SR99SB" 243+84.95, 32.80′ L†	D-1	1	a
	b																	1				REMOVE FES	"SR99SB" 243+84.95, 86.10′ L†	D-1		b
	c									2.6												12" CSP DOWNDRAIN	"SR99SB" 243+84.95, 85.00′ L†	D-1		c
	d												1									12" STEEL FES	"SR99SB" 243+84.95, 91.00′ L†	D-1		d
1	e															1.0	6.0					ROCK SLOPE PROTECTION	"SR99SB" 243+84.95, L†	D-1	1	e
2	a	G1	4.9	1.37	326		8.0															G1 INLET GRATE TYPE 24-12, HMA APRON	"SR99NB" 243+85.09, 33.00′ R†	D-1	2	a
	b										47.5											18" CSP DOWNDRAIN	a TO d	D-1		b
	c													1								18" STEEL FES	"SR99NB" 243+85.09, 80.00′ R†	D-1		c
2	d															2.3	10.5					ROCK SLOPE PROTECTION	"SR99NB" 243+85.09, R†	D-1	2	d
3	a	Exist				1																ADJUST INLET, REUSE GRATE	"SR99SB" 248+54.52, 32.60′ L†	D-1	3	a
	b																		3.1			REMOVE CULVERT, 12" CMP	"SR99SB" 248+54.52, 64.00′ L†	D-1		b
	c																	1				REMOVE FES	"SR99SB" 248+54.52, 67.10′ L†	D-1		c
	d									6.5												12" CSP DOWNDRAIN	"SR99SB" 248+54.52, 64.00′ L†	D-1		d
	e												1									12" STEEL FES	"SR99SB" 248+54.52, 70.50′ L†	D-1		e
3	f															1.0	6.0					ROCK SLOPE PROTECTION	"SR99SB" 248+54.52, L†	D-1	3	f
4	a	G1	4.9	1.37	326		8.0															G1 INLET GRATE TYPE 24-12, HMA APRON	"SR99NB" 248+51.89, 32.50′ R†	D-1	4	a
	b										31.9											18" CSP DOWNDRAIN	a TO d	D-1		b
	c													1								18" STEEL FES	"SR99NB" 248+51.89, 58.45′ R†	D-1		c
4	d															2.3	10.5					ROCK SLOPE PROTECTION	"SR99NB" 248+51.89, R†	D-1	4	d
5	a																	1				REMOVE FES	"SR99NB" 254+54.20, R†	D-2	5	a
	b											1										24" CONCRETE FES	"SR99NB" 254+54.20, R†	D-2		b
5	c								1.4												0.23	24" RCP	"SR99NB" 254+54.20, R†	D-2	5	c
6	a	Exist				1																ADJUST INLET, REUSE GRATE	"SR99SB" 272+03.61, 36.83′ L†	D-3	6	a
7	a						13.6															CONSTRUCT HMA DITCH	"SR99SB" 274+54.19, 36.80′ L† TO 274+37.52, 78.40′ L†	D-3	7	a
7	b	Exist				1																ADJUST INLET, REUSE GRATE	"SR99SB" 274+54.19, 36.80′ L†	D-3	7	b
8	a	Exist				1																ADJUST INLET, REUSE GRATE	"SR99NB" 274+54.93, 37.87′ R†	D-3	8	a
SHEET TOTAL			2.74	652	5	29.6		1.4	9.1	79.4	1	2	2		6.6	33.0	3	3.1								

(N) - NOT A SEPARATE PAY ITEM, FOR INFORMATION USE ONLY.

DRAINAGE QUANTITIES

DQ-1

STATE OF CALIFORNIA - DEPARTMENT OF TRANSPORTATION
DESIGN
FUNCTIONAL SUPERVISOR: JUN XU
CALCULATED-DESIGNED BY: IRENE LEE
CHECKED BY: TAM LA
REVISED BY
DATE REVISED

LAST REVISION DATE PLOTTED => 28-SEP-2009
TIME PLOTTED => 13:34
06-23-09

BORDER LAST REVISED 4/11/2008
RELATIVE BORDER SCALE IS IN INCHES 0 1 2 3
USERNAME => trrene
DGN FILE => 644261id001.dgn
CU 06249
EA 442611

Dist	COUNTY	ROUTE	POST MILES TOTAL PROJECT	SHEET No.	TOTAL SHEETS
06	Fre	99	26.7/30.6	74	242

REGISTERED CIVIL ENGINEER — DATE: 05-29-09

PLANS APPROVAL DATE: 9-28-09

REGISTERED PROFESSIONAL ENGINEER — RODRIGO M. CRUZ — No. 57918 — Exp 06/30/10 — CIVIL — STATE OF CALIFORNIA

THE STATE OF CALIFORNIA OR ITS OFFICERS OR AGENTS SHALL NOT BE RESPONSIBLE FOR THE ACCURACY OR COMPLETENESS OF SCANNED COPIES OF THIS PLAN SHEET.

DRAINAGE QUANTITIES

DRAINAGE SYSTEM No. ⬡	DRAINAGE UNIT ○	DRAINAGE INLET TYPE	DRAINAGE INLET (N) DESIGN H FT	DRAINAGE INLET MINOR CONCRETE (MINOR STRUCTURE) CY	DRAINAGE INLET Misc IRON & STEEL LB	DRAINAGE INLET ADJUST INLET EA	PLACE HMA (Misc AREA) SQYD	RCP 18" LF	RCP 24" LF	CSP DD (0.064" THICK) 12" LF	CSP DD (0.064" THICK) 18" LF	24" CONCRETE FES EA	STEEL FES 12" EA	STEEL FES 18" EA	STEEL FES 24" EA	ROCK SLOPE PROTECTION (BACKING No. 2, METHOD B) CY	ROCK SLOPE PROTECTION FABRIC SQYD	REMOVE FES EA	REMOVE CULVERT LF	REMOVE INLET EA	(N) MAXIMUM COVER FT	DESCRIPTION	STATION	DRAINAGE PLAN SHEET No.	DRAINAGE SYSTEM No. ⬡	DRAINAGE UNIT ○
9	a	G1	3.6	1.08	326		8.0															G1 INLET GRATE TYPE 24-12, HMA APRON	"SR99SB" 280+00.00, 21.00′ R†	D-4	9	a
	b							9.6													1.89	18" RCP	a TO c	D-4		b
	c	G2	3.7	1.49	263		14.2															G2 INLET GRATE TYPE 24-9, HMA APRON	"SR99NB" 280+00.00, 27.90′ L†	D-4		c
	d																		3.0			REMOVE CULVERT, 24" RCP	"SR99NB" 280+00.00, 25.90′ L† TO 27.90′ L†	D-4		d
	e							4.0													5.22	18" RCP	c TO f	D-4		e
9	f	G1	3.7	1.10	326		8.0															G1 INLET GRATE TYPE 24-12, HMA APRON	"SR99SB" 280+00.00, 21.00′ L†	D-4	9	f
10	a	G2	4.6	1.72	326		8.9															G2 INLET GRATE TYPE 24-12, HMA APRON	"SR99NB" 280+32.00, 20.50′ R†	D-4	10	a
	b																		3.0			REMOVE CULVERT, 12" RCP	"SR99NB" 280+32.00, 19.00′ R† TO 22.00′ R†	D-4		b
	c							6.9													5.88	18" RCP	"SR99NB" 280+39.17, 30.40′ L† TO 21.00′ L†	D-4		c
10	d	G1	4.3	1.24	326		8.0															G1 INLET GRATE TYPE 24-12, HMA APRON	"SR99NB" 280+39.17, 21.00′ L†	D-4	10	d
11	a	Exist				1																ADJUST INLET, REUSE GRATE	"SR99SB" 281+43.90, 36.90′ L†		11	a
12	a	G1	4.9	1.37	326		8.0															G1 INLET GRATE TYPE 24-12, HMA APRON	"SR99SB" 282+82.19, 21.00′ R†	D-4	12	a
	b							6.1													6.47	18" RCP	a TO c	D-4		b
	c	G2	7.0	2.33	263		14.2															G2 INLET GRATE TYPE 24-9, HMA APRON	"SR99SB" 282+82.19, 29.60′ R†	D-4		c
12	d																		3.0			REMOVE CULVERT, 24" RCP	"SR99SB" 282+82.19, 28.10′ R† TO 31.10′ R†	D-4	12	d
13	a	G1	4.3	1.24	326		8.0															G1 INLET GRATE TYPE 24-12, HMA APRON	"SR99SB" 283+47.65, 21.00′ R†	D-4	13	a
	b							6.7													6.30	18" RCP	"SR99SB" 283+47.65, 21.00′ R† TO 30.20′ R†	D-4		b
13	c	Exist				1	13.3															ADJUST INLET, HMA APRON, REUSE GRATE	"SR99NB" 283+46.90, 37.70′ R†	D-4	13	c
14	a	G1	4.3	1.24	326		8.0															G1 INLET GRATE TYPE 24-12, HMA APRON	"SR99SB" 285+55.41, 21.00′ R†	D-4	14	a
	b							6.9													5.86	18" RCP	"SR99SB" 285+55.41, 21.00′ R† TO 30.40′ R†	D-4		b
14	c	Exist				1	13.3															ADJUST INLET, HMA APRON, REUSE GRATE	"SR99NB" 285+54.36, 37.60′ R†	D-4	14	c
15	a	G1	4.0	1.17	326		8.0															G1 INLET GRATE TYPE 24-12, HMA APRON	"SR99SB" 288+06.48, 21.00′ R†	D-4	15	a
	b							6.6													5.57	18" RCP	"SR99SB" 288+06.48, 21.00′ R† TO 30.10′ R†	D-4		b
15	c	Exist				1	13.3															ADJUST INLET, HMA APRON, REUSE GRATE	"SR99NB" 288+02.49, 38.10′ R†	D-4	15	c
16	a	G1	3.5	1.06	326		8.0															G1 INLET GRATE TYPE 24-12, HMA APRON	"SR99SB" 290+16.45, 21.00′ R†	D-4	16	a
	b							6.6													5.10	18" RCP	a TO c	D-4		b
	c	G2	2.2	1.31	263		14.2															G2 INLET GRATE TYPE 24-9, HMA APRON	"SR99SB" 290+16.45, 29.60′ R†	D-4		c
16	d																		3.0			REMOVE CULVERT, 12" RCP	"SR99SB" 290+16.45, 28.10′ R† TO 31.10" R†	D-4	16	d
17	a	Exist				1																ADJUST INLET, REUSE GRATE	"SR99SB" 291+56.60, 37.00′ L†	D-4	17	a
SHEET TOTAL			16.3	4	3723	5	155.4	53.4											12.0							

(N) - NOT A SEPARATE PAY ITEM, FOR INFORMATION USE ONLY.

DRAINAGE QUANTITIES

DQ-2

STATE OF CALIFORNIA - DEPARTMENT OF TRANSPORTATION — DESIGN — FUNCTIONAL SUPERVISOR: JUN XU — CALCULATED-DESIGNED BY: TAM LA — CHECKED BY: IRENE LEE — REVISED BY — DATE REVISED

LAST REVISION: DATE PLOTTED => 28-SEP-2009 06-23-09 TIME PLOTTED => 13:34

BORDER LAST REVISED 4/11/2008 — RELATIVE BORDER SCALE IS IN INCHES 0 1 2 3 — USERNAME => trrene — DGN FILE => 644261id002.dgn — CU 06249 — EA 442611

Dist	COUNTY	ROUTE	POST MILES TOTAL PROJECT	SHEET No.	TOTAL SHEETS
06	Fre	99	26.7/30.6	75	242

05-29-09
REGISTERED CIVIL ENGINEER DATE

9-28-09
PLANS APPROVAL DATE

RODRIGO M. CRUZ
No. 57918
Exp 06/30/10
CIVIL
REGISTERED PROFESSIONAL ENGINEER
STATE OF CALIFORNIA

THE STATE OF CALIFORNIA OR ITS OFFICERS OR AGENTS SHALL NOT BE RESPONSIBLE FOR THE ACCURACY OR COMPLETENESS OF SCANNED COPIES OF THIS PLAN SHEET.

DRAINAGE QUANTITIES

DRAINAGE SYSTEM No. ⬡	DRAINAGE UNIT ◯	DRAINAGE INLET TYPE	DRAINAGE INLET (N) DESIGN H FT	DRAINAGE INLET MINOR CONCRETE (MINOR STRUCTURE) CY	DRAINAGE INLET Misc IRON & STEEL LB	DRAINAGE INLET ADJUST INLET EA	PLACE HMA (Misc AREA) SQYD	RCP 18" LF	RCP 24" LF	CSP DD (0.064" THICK) 12" LF	CSP DD (0.064" THICK) 18" LF	24" CONCRETE FES EA	STEEL FES 12" EA	STEEL FES 18" EA	STEEL FES 24" EA	ROCK SLOPE PROTECTION (BACKING No. 2, METHOD B) CY	ROCK SLOPE PROTECTION FABRIC SQYD	REMOVE FES EA	REMOVE CULVERT LF	REMOVE INLET EA	(N) MAXIMUM COVER FT	DESCRIPTION	STATION	DRAINAGE PLAN SHEET No.	DRAINAGE SYSTEM No. ⬡	DRAINAGE UNIT ◯
18	a																			1		REMOVE INLET	"SR99SB" 362+56.66, 50.30′ L†	D-9	18	a
	b														1							24" STEEL FES	"SR99SB" 362+56.66, 50.30′ L†	D-9		b
	c	Exist				1																ADJUST INLET, REUSE GRATE	"SR99SB" 362+56.66, R†	D-9		c
	d																			1		REMOVE INLET	"SR99NB" 362+51.68, 51.30′ R†	D-9		d
18	e														1							24" STEEL FES	"SR99NB" 362+51.68, 51.30′ R†	D-9	18	e
19	a	Exist				1																ADJUST INLET, REUSE GRATE	"SR99SB" 384+76.58, R†	D-11	19	a
	b																			1		REMOVE INLET	"SR99NB" 384+72.10, 48.00′ R†	D-11		b
19	c														1							24" STEEL FES	"SR99NB" 384+72.10, 48.00′ R†	D-11	19	c
20	a	G1	5.0	1.39	326		8.0															G1 INLET GRATE TYPE 24-12, HMA APRON	"SR99SB" 401+00.00, 31.00′ L†	D-12	20	a
	b										48.0											18" CSP DOWNDRAIN	a TO c	D-12		b
	c													1								18" STEEL FES	"SR99SB" 401+00.00, 80.00′ L†	D-12		c
20	d															2.3	10.5					ROCK SLOPE PROTECTION	"SR99SB" 401+00.00, L†	D-12	20	d
21	a	G1	5.0	1.39	326		8.0															G1 INLET GRATE TYPE 24-12, HMA APRON	"SR99NB" 400+50.00, 33.00′ R†	D-12	21	a
	b										36.0											18" CSP DOWNDRAIN	a TO c	D-12		b
	c													1								18" STEEL FES	"SR99NB" 400+50.00, 70.00′ R†	D-12		c
21	d															2.3	10.5					ROCK SLOPE PROTECTION	"SR99NB" 400+50.00, R†	D-12	21	d
22	a																			1		REMOVE INLET	"SR99NB" 269+54.79, 52.50′ R†	D-3	22	a
22	b											1										24" CONCRETE FES	"SR99NB" 269+54.79, 52.50′ R†	D-3	22	b
23	a	Exist			263	1																INLET FRAME & GRATE, TYPE 24-9	"SR99SB" 305+56.74, 44.45′ L†	D-5	23	a
24	a	Exist			263	1																INLET FRAME & GRATE, TYPE 24-9	"SR99SB" 315+56.69, 44.51′ L†	D-6	24	a
SHEET TOTAL				2.78	1178	4	16.0				84.0	1		2	3	4.6	21.0			4						
GRAND TOTAL				21.86	5553	14	201.0*	53.4	1.4	9.1	163.4	2	2	4	3	11.2	54.0	3	15.1	4						

(N) - NOT A SEPARATE PAY ITEM, FOR INFORMATION USE ONLY.
* QUANTITY INCLUDED IN OVERSIDE DRAIN TABLE,PLACE HMA (Misc AREA) IN SUMMARY OF QUANTITIES SHEETS.

DRAINAGE QUANTITIES
DQ-3

CALCULATED-DESIGNED BY: TAM LA
CHECKED BY: SUSAN GONZALEZ
FUNCTIONAL SUPERVISOR: JUN XU
STATE OF CALIFORNIA - DEPARTMENT OF TRANSPORTATION
DESIGN
Caltrans

REVISED BY | DATE REVISED

LAST REVISION | DATE PLOTTED => 28-SEP-2009 | TIME PLOTTED => 13:35
06-23-09

BORDER LAST REVISED 4/11/2008
RELATIVE BORDER SCALE IS IN INCHES 0 1 2 3
USERNAME => trrene
DGN FILE => 644261id003.dgn
CU 06249
EA 442611

Dist	COUNTY	ROUTE	POST MILES TOTAL PROJECT	SHEET No.	TOTAL SHEETS
06	Fre	99	26.7/30.6	76	242

05-29-09
REGISTERED CIVIL ENGINEER DATE

9-28-09
PLANS APPROVAL DATE

REGISTERED PROFESSIONAL ENGINEER
RODRIGO M. CRUZ
No. 57918
Exp 06/30/10
CIVIL
STATE OF CALIFORNIA

THE STATE OF CALIFORNIA OR ITS OFFICERS OR AGENTS SHALL NOT BE RESPONSIBLE FOR THE ACCURACY OR COMPLETENESS OF SCANNED COPIES OF THIS PLAN SHEET.

NOTES:

1. FOR COMPLETE RIGHT OF WAY AND ACCURATE ACCESS DATA, SEE RIGHT OF WAY RECORD MAPS AT DISTRICT OFFICE.
2. LOCATIONS OF UTILITY FACILITIES SHOWN ON THE PLANS ARE APPROXIMATE AND SHALL BE VERIFIED BY THE CONTRACTOR PRIOR TO CONSTRUCTION.
3. UTILITY OWNERSHIP ON THIS PROJECT:
   - ELECTRIC & GAS - PACIFIC GAS & ELECTRIC CO. (PG&E)
   - TELEPHONE - AT&T & KERMAN TELEPHONE
   - WATER MAIN - CITY OF FRESNO
   - SANITARY SEWER - CITY OF FRESNO
   - CABLE TV - COMCAST
   - LISENBY No. 45 PIPELINE - FID
   - HERNDON CANAL No. 39 - FID
   - EPSTEIN No. 48 PIPELINE - FID

ABBREVIATIONS:

FID	FRESNO IRRIGATION DISTRICT
RGRCP	RUBBERIZED GASKET REINFORCED CONCRETE PIPE
PG&E	PACIFIC GAS AND ELECTRIC COMPANY
AT&T	AMERICAN TELEPHONE AND TELEGRAPH COMPANY
FMFCD	FRESNO METROPOLITAN FLOOD CONTROL DISTRICT
UG	UNDERGROUND

LEGEND

UB	PULLBOX UTILITY
	MANHOLE
	MASTARM LUMINAIRE
	CABINET UTILITY
	IRRIGATION/ WATER VALVE
	PUMP
	ELECTRICAL MANHOLE
	POLE
	FIRE HYDRANT
WELL	WELL
X	POTHOLE No.

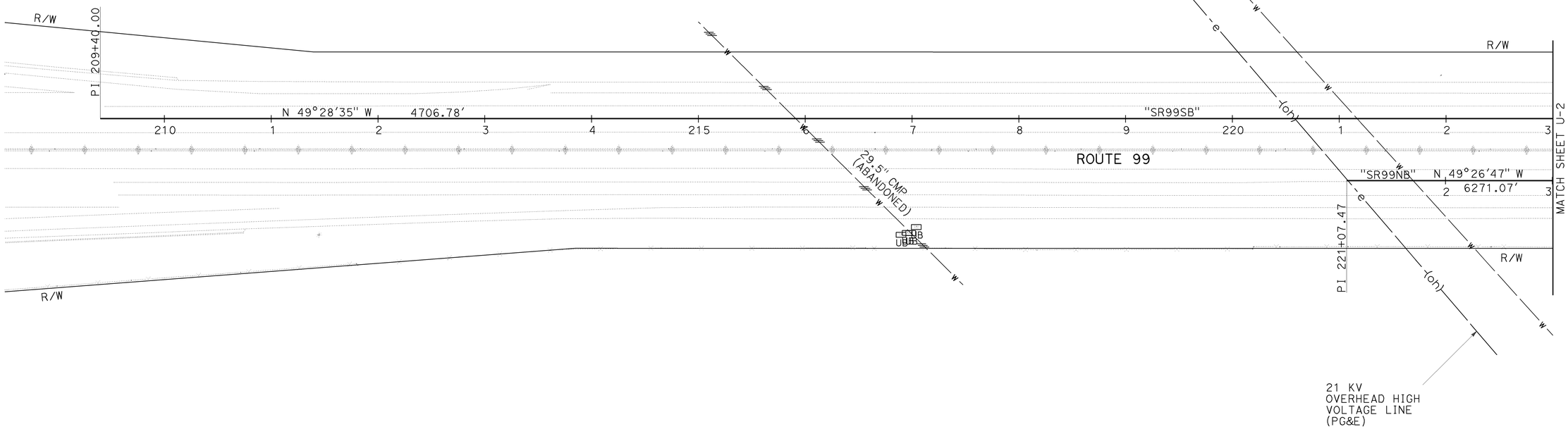

THIS PLAN ACCURATE FOR UTILITY WORK ONLY.

UTILITY PLAN

SCALE: 1"=50'

U-1

STATE OF CALIFORNIA - DEPARTMENT OF TRANSPORTATION
Caltrans
DESIGN
FUNCTIONAL SUPERVISOR: JUN XU
CALCULATED-DESIGNED BY: HARITH KIRAN
CHECKED BY: SUSAN GONZALEZ
REVISED BY: HK
DATE REVISED: 9-9-09

BORDER LAST REVISED 4/11/2008

RELATIVE BORDER SCALE IS IN INCHES 0 1 2 3

USERNAME => trrene
DGN FILE => 644261ka001.dgn

CU 06249

EA 442611

LAST REVISION DATE PLOTTED => 28-SEP-2009
09-09-09 TIME PLOTTED => 13:35

Dist	COUNTY	ROUTE	POST MILES TOTAL PROJECT	SHEET No.	TOTAL SHEETS
06	Fre	99	26.7/30.6	77	242

05-29-09
REGISTERED CIVIL ENGINEER DATE

9-28-09
PLANS APPROVAL DATE

REGISTERED PROFESSIONAL ENGINEER
RODRIGO M. CRUZ
No. 57918
Exp 06/30/10
CIVIL
STATE OF CALIFORNIA

THE STATE OF CALIFORNIA OR ITS OFFICERS OR AGENTS SHALL NOT BE RESPONSIBLE FOR THE ACCURACY OR COMPLETENESS OF SCANNED COPIES OF THIS PLAN SHEET.

NOTE : FOR COMPLETE RIGHT OF WAY AND ACCURATE ACCESS DATA, SEE RIGHT OF WAY RECORD MAPS AT DISTRICT OFFICE.

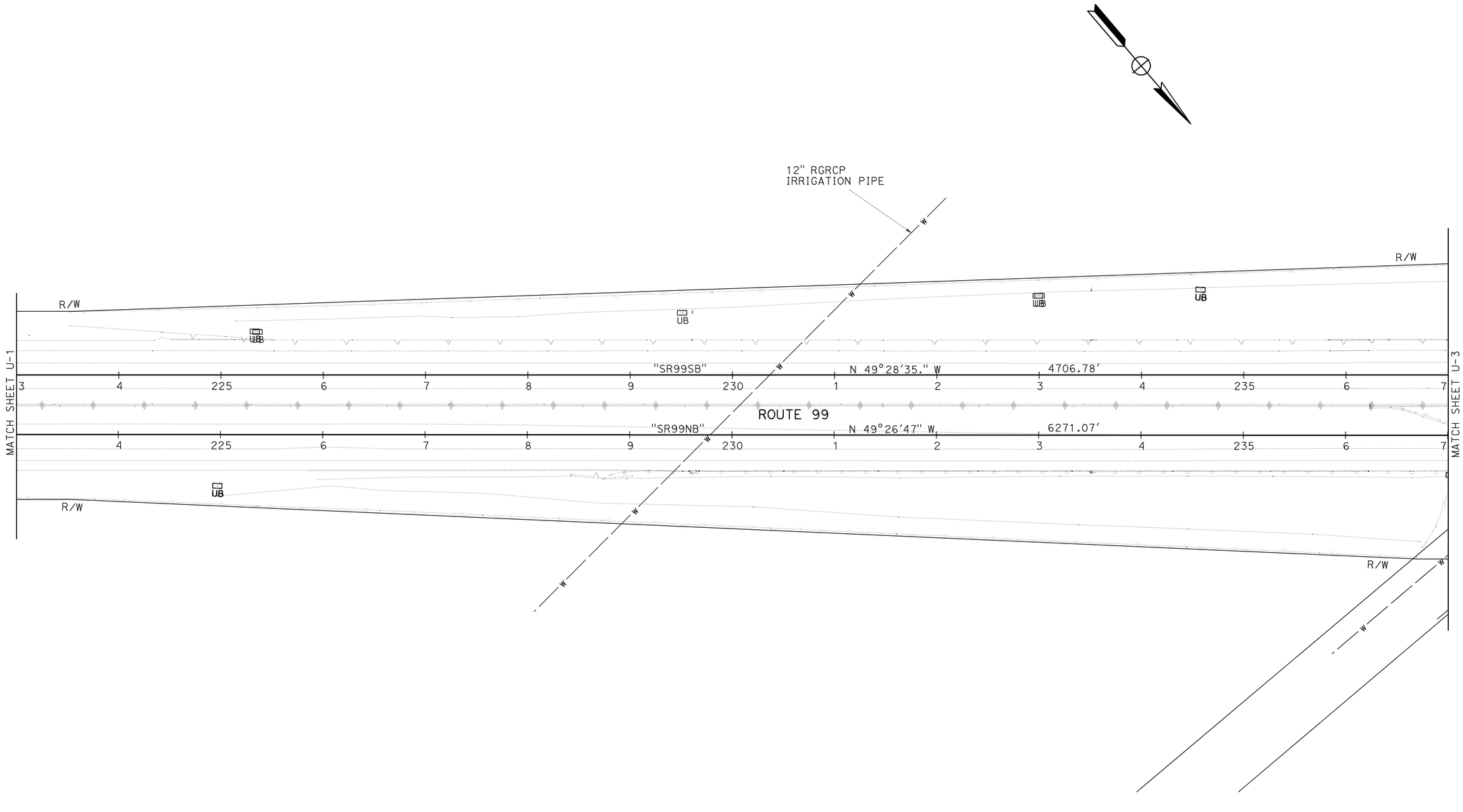

UTILITY PLAN

SCALE: 1"=50'

U-2

THIS PLAN ACCURATE FOR UTILITY WORK ONLY.

CALCULATED-DESIGNED BY: HARITH KIRAN
CHECKED BY: SUSAN GONZALEZ
REVISED BY: HK
DATE REVISED: 9-9-09
FUNCTIONAL SUPERVISOR: JUN XU
STATE OF CALIFORNIA - DEPARTMENT OF TRANSPORTATION
DESIGN

LAST REVISION DATE PLOTTED => 28-SEP-2009
TIME PLOTTED => 13:35
05-16-09

BORDER LAST REVISED 4/11/2008

RELATIVE BORDER SCALE IS IN INCHES 0 1 2 3

USERNAME => trrene
DGN FILE => 644261ka002.dgn

CU 06249

EA 442611

Dist	COUNTY	ROUTE	POST MILES TOTAL PROJECT	SHEET No.	TOTAL SHEETS
06	Fre	99	26.7/30.6	78	242

05-29-09
REGISTERED CIVIL ENGINEER DATE

9-28-09
PLANS APPROVAL DATE

RODRIGO M. CRUZ
No. 57918
Exp 06/30/10
CIVIL
REGISTERED PROFESSIONAL ENGINEER
STATE OF CALIFORNIA

THE STATE OF CALIFORNIA OR ITS OFFICERS OR AGENTS SHALL NOT BE RESPONSIBLE FOR THE ACCURACY OR COMPLETENESS OF SCANNED COPIES OF THIS PLAN SHEET.

NOTE : FOR COMPLETE RIGHT OF WAY AND ACCURATE ACCESS DATA, SEE RIGHT OF WAY RECORD MAPS AT DISTRICT OFFICE.

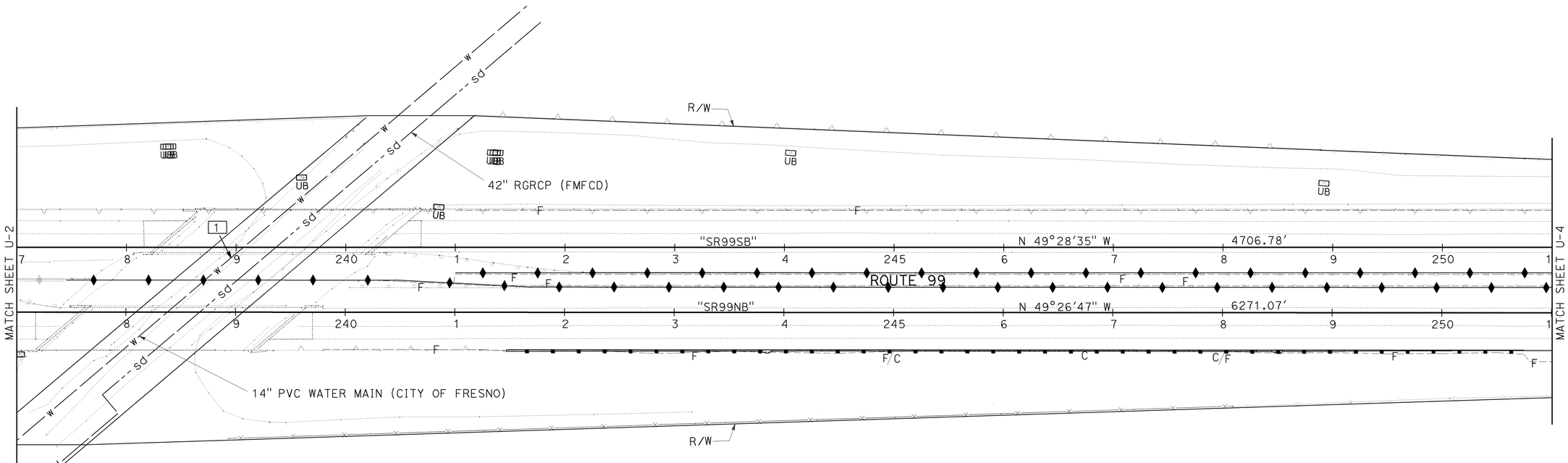

X	UTILITY - OWNER	STATION / LOCATION	UTILITY ELEVATION	* DEPTH
1	14" PVC WATER MAIN - CITY OF FRESNO	"SR99NB" 238 + 71.64, 49.03' Lt	297.42'	3.5'

* - DEPTH IS THE DIFFERENCE BETWEEN OG AND TOP OF EXISTING UTILITY.

THIS PLAN ACCURATE FOR UTILITY WORK ONLY.

UTILITY PLAN

SCALE: 1"=50' **U-3**

STATE OF CALIFORNIA - DEPARTMENT OF TRANSPORTATION
DESIGN
FUNCTIONAL SUPERVISOR: JUN XU
CALCULATED-DESIGNED BY: HARITH KIRAN
CHECKED BY: SUSAN GONZALEZ
REVISED BY: HK
DATE REVISED: 9-9-09

LAST REVISION
DATE PLOTTED => 28-SEP-2009
TIME PLOTTED => 13:15
09-09-09

BORDER LAST REVISED 4/11/2008
RELATIVE BORDER SCALE IS IN INCHES 0 1 2 3
USERNAME => trphils
DGN FILE => 644261kq003.dgn
CU 06249
EA 442611

Dist	COUNTY	ROUTE	POST MILES TOTAL PROJECT	SHEET No.	TOTAL SHEETS
06	Fre	99	26.7/30.6	79	242

REGISTERED CIVIL ENGINEER 05-29-09 DATE

9-28-09
PLANS APPROVAL DATE

REGISTERED PROFESSIONAL ENGINEER RODRIGO M.CRUZ No. 57918 Exp. 06/30/10 CIVIL STATE OF CALIFORNIA

THE STATE OF CALIFORNIA OR ITS OFFICERS OR AGENTS SHALL NOT BE RESPONSIBLE FOR THE ACCURACY OR COMPLETENESS OF SCANNED COPIES OF THIS PLAN SHEET.

NOTE : FOR COMPLETE RIGHT OF WAY AND ACCURATE ACCESS DATA, SEE RIGHT OF WAY RECORD MAPS AT DISTRICT OFFICE.

X	UTILITY - OWNER	STATION / LOCATION	UTILITY ELEVATION	* DEPTH
2	10" GAS MAIN (PG&E) - PG&E	"SR99NB" 255+00.00, 29.48' Lt	296.01'	3.7' TO TOP OF SLURRY

* - DEPTH IS THE DIFFERENCE BETWEEN OG AND TOP OF EXISTING UTILITY.

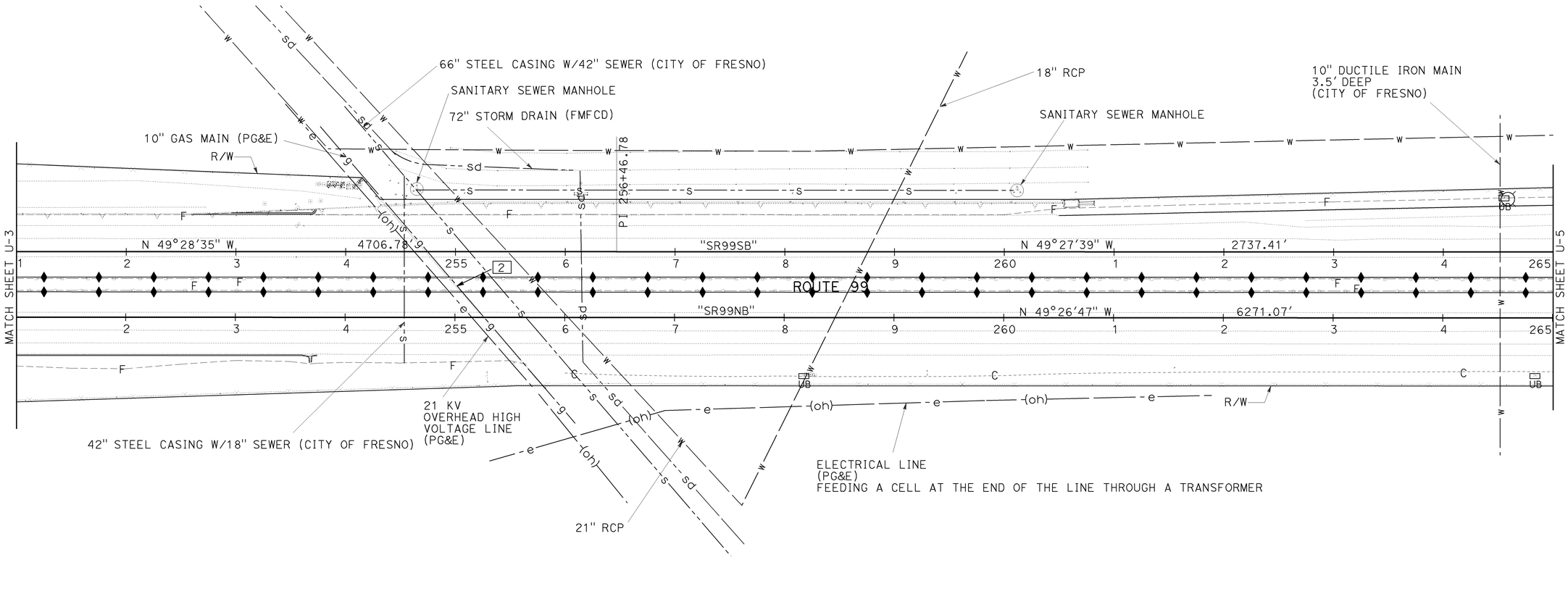

UTILITY PLAN

SCALE: 1"=50'

U-4

THIS PLAN ACCURATE FOR UTILITY WORK ONLY.

STATE OF CALIFORNIA - DEPARTMENT OF TRANSPORTATION
Caltrans
DESIGN
FUNCTIONAL SUPERVISOR: JUN XU
CALCULATED-DESIGNED BY: HARITH KIRAN
CHECKED BY: SUSAN GONZALEZ
REVISED BY: HK
DATE REVISED: 9-9-09

LAST REVISION 09-09-09
DATE PLOTTED => 28-SEP-2009
TIME PLOTTED => 13:15

Dist	COUNTY	ROUTE	POST MILES TOTAL PROJECT	SHEET No.	TOTAL SHEETS
06	Fre	99	26.7/30.6	80	242

REGISTERED CIVIL ENGINEER 05-29-09 DATE

9-28-09
PLANS APPROVAL DATE

REGISTERED PROFESSIONAL ENGINEER RODRIGO M.CRUZ No. 57918 Exp. 06/30/10 CIVIL STATE OF CALIFORNIA

THE STATE OF CALIFORNIA OR ITS OFFICERS OR AGENTS SHALL NOT BE RESPONSIBLE FOR THE ACCURACY OR COMPLETENESS OF SCANNED COPIES OF THIS PLAN SHEET.

NOTE : FOR COMPLETE RIGHT OF WAY AND ACCURATE ACCESS DATA, SEE RIGHT OF WAY RECORD MAPS AT DISTRICT OFFICE.

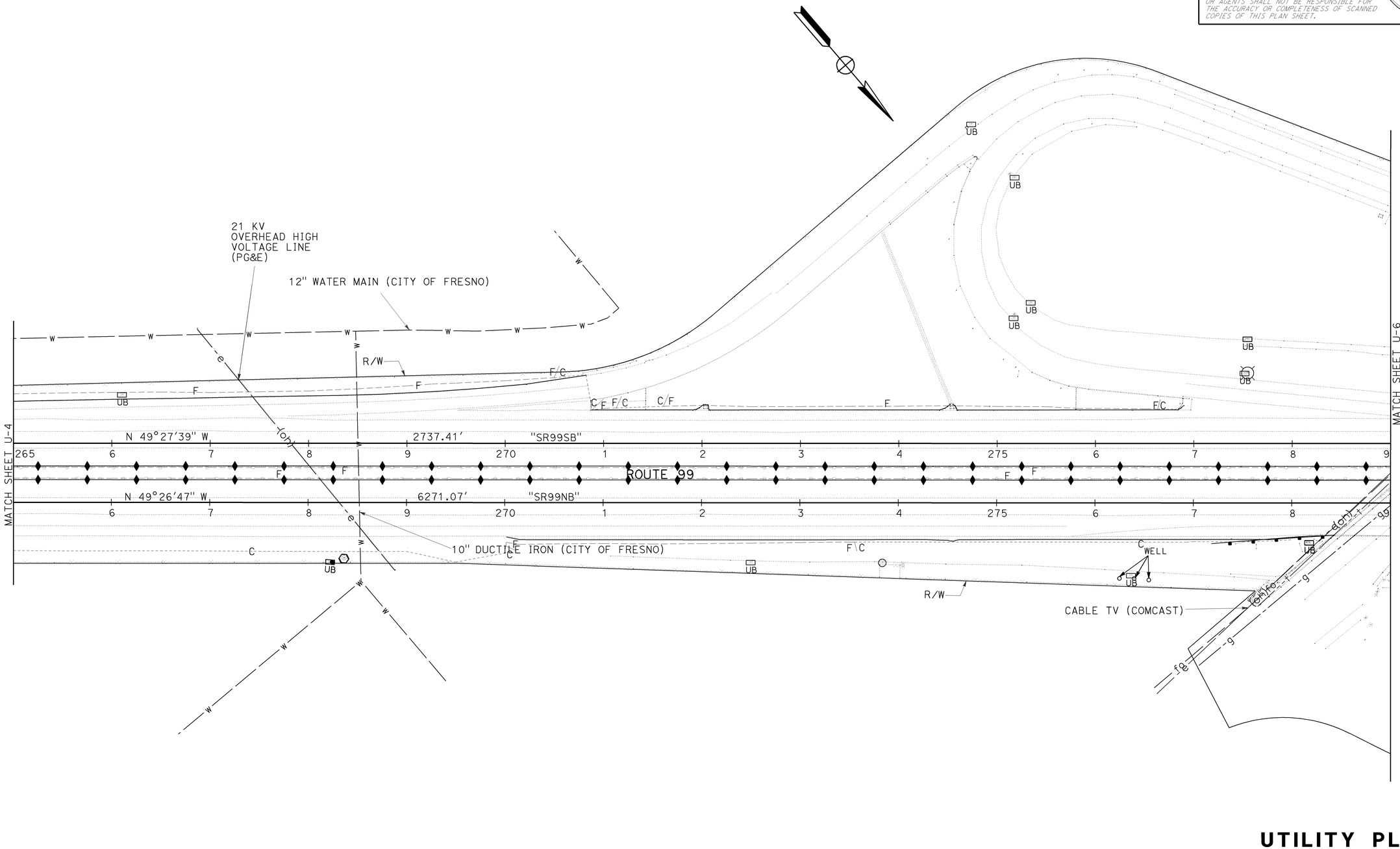

THIS PLAN ACCURATE FOR UTILITY WORK ONLY.

UTILITY PLAN

SCALE: 1"=50'

U-5

STATE OF CALIFORNIA - DEPARTMENT OF TRANSPORTATION
Caltrans
DESIGN

FUNCTIONAL SUPERVISOR: JUN XU
CALCULATED-DESIGNED BY: HARITH KIRAN
CHECKED BY: SUSAN GONZALEZ
REVISED BY: HK
DATE REVISED: 9-9-09

LAST REVISION 09-09-09
DATE PLOTTED => 28-SEP-2009
TIME PLOTTED => 13:16

Dist	COUNTY	ROUTE	POST MILES TOTAL PROJECT	SHEET No.	TOTAL SHEETS
06	Fre	99	26.7/30.6	81	242

05-29-09
REGISTERED CIVIL ENGINEER DATE

9-28-09
PLANS APPROVAL DATE

REGISTERED PROFESSIONAL ENGINEER
RODRIGO M. CRUZ
No. 57918
Exp 06/30/10
CIVIL
STATE OF CALIFORNIA

THE STATE OF CALIFORNIA OR ITS OFFICERS OR AGENTS SHALL NOT BE RESPONSIBLE FOR THE ACCURACY OR COMPLETENESS OF SCANNED COPIES OF THIS PLAN SHEET.

NOTE : FOR COMPLETE RIGHT OF WAY AND ACCURATE ACCESS DATA, SEE RIGHT OF WAY RECORD MAPS AT DISTRICT OFFICE.

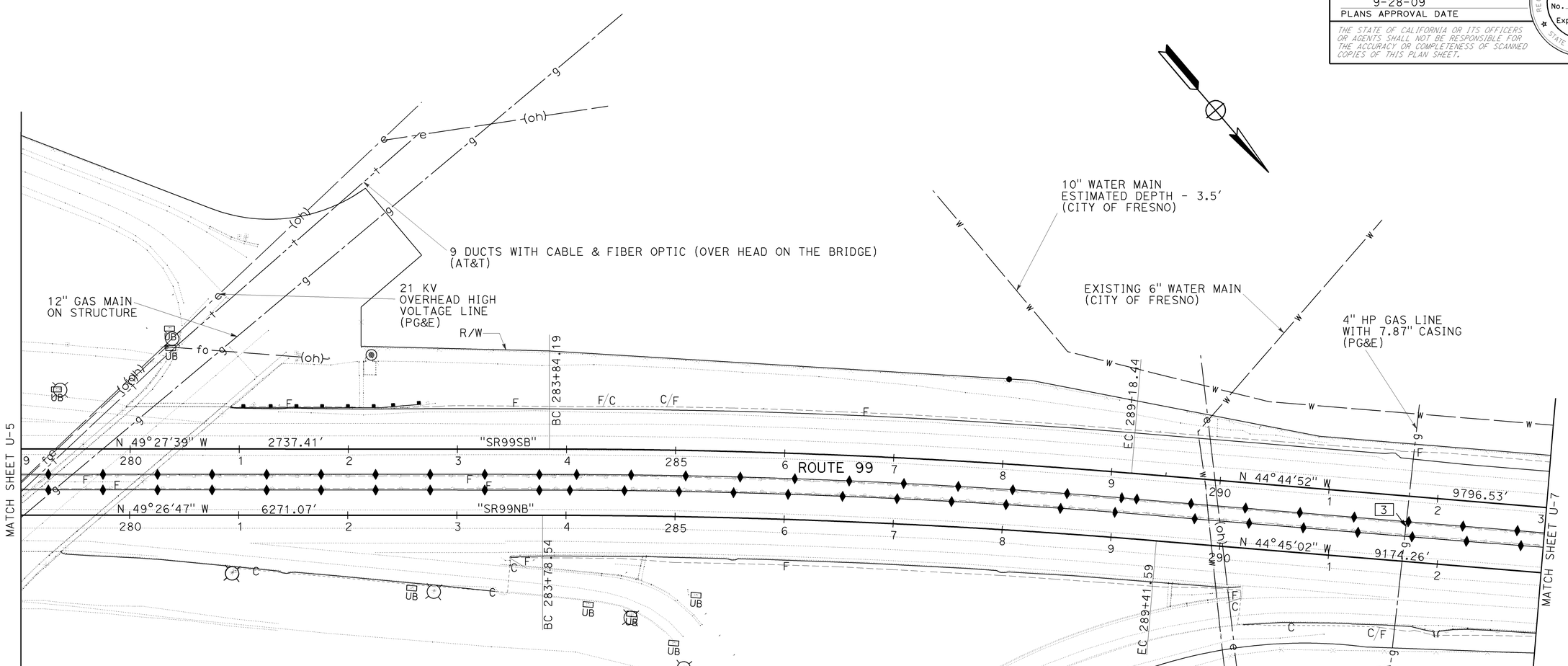

X	UTILITY - OWNER	STATION / LOCATION	UTILITY ELEVATION	* DEPTH
3	4" HP GAS LINE WITH 10" CASING - (PG&E)	"SR99NB" 291+72.76, 32.15' L+	293.94'	6.0'

* - DEPTH IS THE DIFFERENCE BETWEEN OG AND TOP OF EXISTING UTILITY.

THIS PLAN ACCURATE FOR UTILITY WORK ONLY.

UTILITY PLAN

SCALE: 1"=50' **U-6**

CALCULATED-DESIGNED BY: HARITH KIRAN
CHECKED BY: SUSAN GONZALEZ
REVISED BY: HK
DATE REVISED: 9-9-09
FUNCTIONAL SUPERVISOR: JUN XU
STATE OF CALIFORNIA - DEPARTMENT OF TRANSPORTATION
DESIGN

LAST REVISION | DATE PLOTTED => 28-SEP-2009
09-09-09 | TIME PLOTTED => 13:16

BORDER LAST REVISED 4/11/2008 | RELATIVE BORDER SCALE IS IN INCHES 0 1 2 3 | USERNAME => trphils | DGN FILE => 644261ka006.dgn | CU 06249 | EA 442611

Dist	COUNTY	ROUTE	POST MILES TOTAL PROJECT	SHEET No.	TOTAL SHEETS
06	Fre	99	26.7/30.6	82	242

REGISTERED CIVIL ENGINEER 05-29-09 DATE

9-28-09
PLANS APPROVAL DATE

REGISTERED PROFESSIONAL ENGINEER RODRIGO M.CRUZ No. 57918 Exp. 06/30/10 CIVIL STATE OF CALIFORNIA

THE STATE OF CALIFORNIA OR ITS OFFICERS OR AGENTS SHALL NOT BE RESPONSIBLE FOR THE ACCURACY OR COMPLETENESS OF SCANNED COPIES OF THIS PLAN SHEET.

NOTE : FOR COMPLETE RIGHT OF WAY AND ACCURATE ACCESS DATA, SEE RIGHT OF WAY RECORD MAPS AT DISTRICT OFFICE.

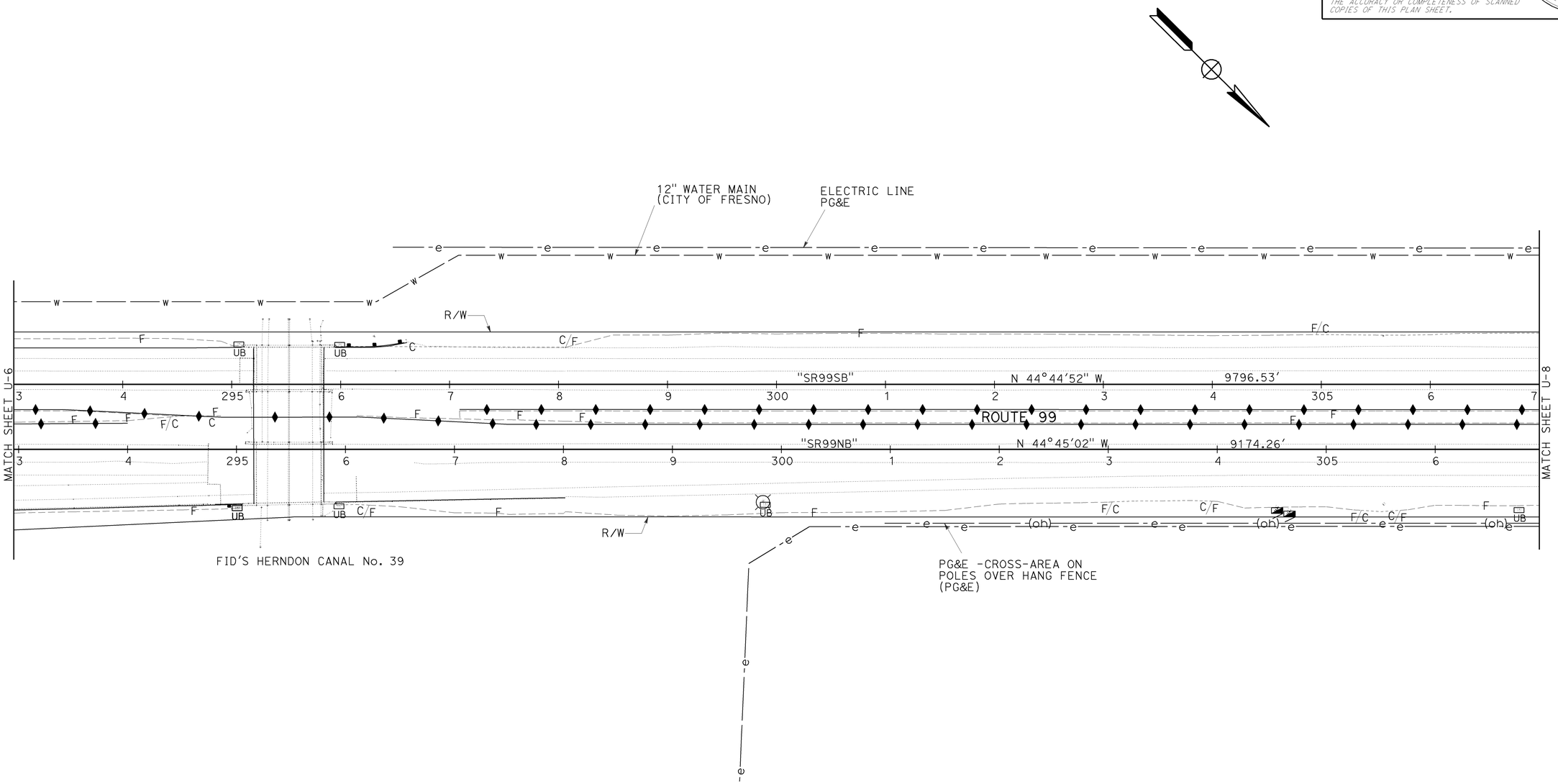

UTILITY PLAN

SCALE: 1"=50'

U-7

THIS PLAN ACCURATE FOR UTILITY WORK ONLY.

STATE OF CALIFORNIA - DEPARTMENT OF TRANSPORTATION
Caltrans
DESIGN
FUNCTIONAL SUPERVISOR: JUN XU
CALCULATED-DESIGNED BY: HARITH KIRAN
CHECKED BY: SUSAN GONZALEZ
REVISED BY: HK
DATE REVISED: 9-9-09

LAST REVISION 09-09-09
DATE PLOTTED => 28-SEP-2009
TIME PLOTTED => 13:16

Dist	COUNTY	ROUTE	POST MILES TOTAL PROJECT	SHEET No.	TOTAL SHEETS
06	Fre	99	26.7/30.6	83	242

05-29-09
REGISTERED CIVIL ENGINEER DATE

9-28-09
PLANS APPROVAL DATE

REGISTERED PROFESSIONAL ENGINEER
RODRIGO M. CRUZ
No. 57918
Exp 06/30/10
CIVIL
STATE OF CALIFORNIA

THE STATE OF CALIFORNIA OR ITS OFFICERS OR AGENTS SHALL NOT BE RESPONSIBLE FOR THE ACCURACY OR COMPLETENESS OF SCANNED COPIES OF THIS PLAN SHEET.

NOTE : FOR COMPLETE RIGHT OF WAY AND ACCURATE ACCESS DATA, SEE RIGHT OF WAY RECORD MAPS AT DISTRICT OFFICE.

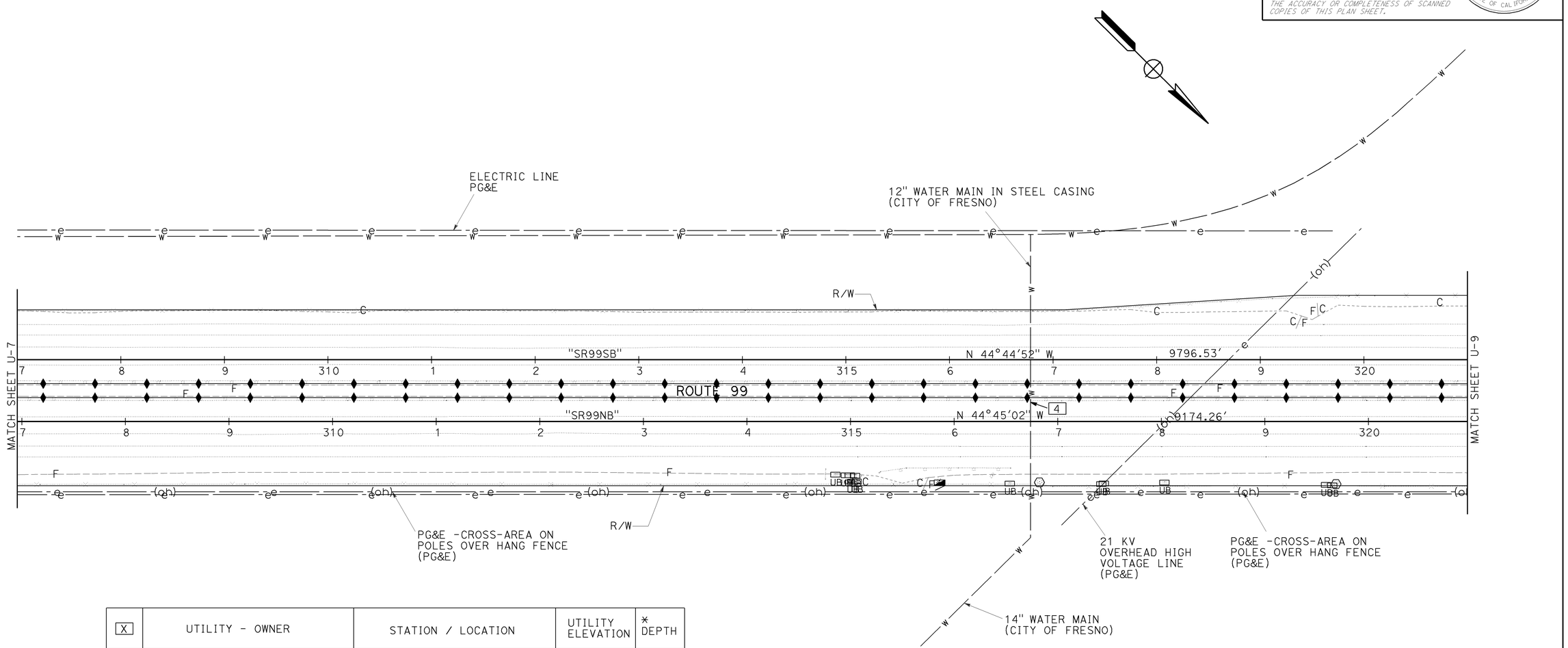

X	UTILITY - OWNER	STATION / LOCATION	UTILITY ELEVATION	* DEPTH
4	12" WATER MAIN IN STEEL CASING - CITY OF FRESNO	"SR99NB" 316+78.27, 17.51' Lt	304.59'	4.8'

* - DEPTH IS THE DIFFERENCE BETWEEN OG AND TOP OF EXISTING UTILITY.

THIS PLAN ACCURATE FOR UTILITY WORK ONLY.

UTILITY PLAN

SCALE: 1"=50'

U-8

STATE OF CALIFORNIA - DEPARTMENT OF TRANSPORTATION
DESIGN
FUNCTIONAL SUPERVISOR: JUN XU
CALCULATED-DESIGNED BY: HARITH KIRAN
CHECKED BY: SUSAN GONZALEZ
REVISED BY: HK
DATE REVISED: 9-9-09

LAST REVISION 09-09-09
DATE PLOTTED => 28-SEP-2009
TIME PLOTTED => 13:16

BORDER LAST REVISED 4/11/2008
RELATIVE BORDER SCALE IS IN INCHES 0 1 2 3
USERNAME => trphils
DGN FILE => 644261ka008.dgn
CU 06249
EA 442611

NOTE : FOR COMPLETE RIGHT OF WAY AND ACCURATE ACCESS DATA,
SEE RIGHT OF WAY RECORD MAPS AT DISTRICT OFFICE.

Dist	COUNTY	ROUTE	POST MILES TOTAL PROJECT	SHEET No.	TOTAL SHEETS
06	Fre	99	26.7/30.6	84	242

05-29-09
REGISTERED CIVIL ENGINEER DATE

9-28-09
PLANS APPROVAL DATE

REGISTERED PROFESSIONAL ENGINEER
RODRIGO M. CRUZ
No. 57918
Exp 06/30/10
CIVIL
STATE OF CALIFORNIA

THE STATE OF CALIFORNIA OR ITS OFFICERS OR AGENTS SHALL NOT BE RESPONSIBLE FOR THE ACCURACY OR COMPLETENESS OF SCANNED COPIES OF THIS PLAN SHEET.

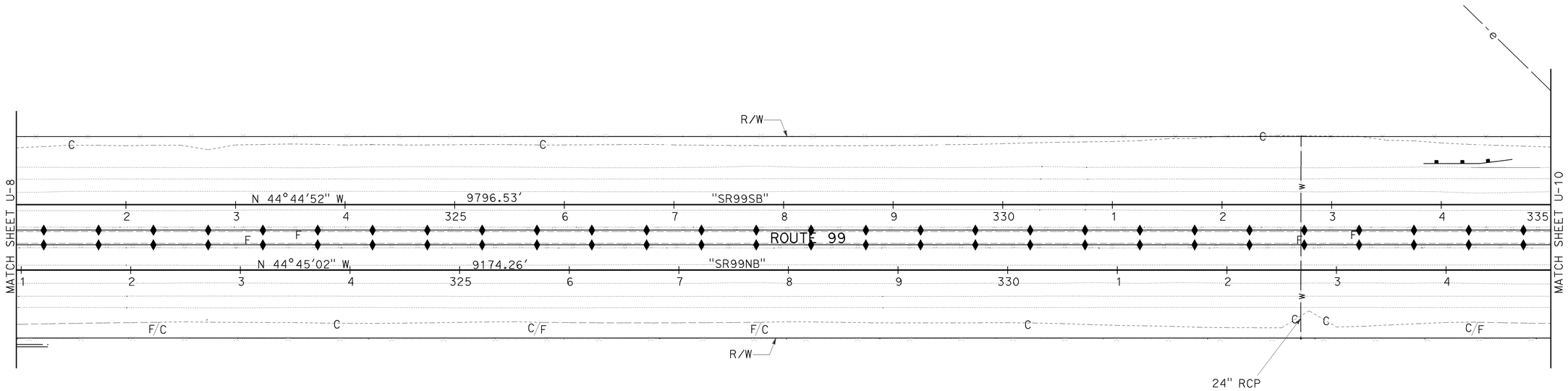

THIS PLAN ACCURATE FOR UTILITY WORK ONLY.

UTILITY PLAN

SCALE: 1"=50' **U-9**

CALCULATED-DESIGNED BY	CHECKED BY	REVISED BY	DATE REVISED
HARITH KIRAN	SUSAN GONZALEZ	HK	9-9-09

FUNCTIONAL SUPERVISOR: JUN XU

STATE OF CALIFORNIA - DEPARTMENT OF TRANSPORTATION
DESIGN

LAST REVISION 09-09-09
DATE PLOTTED => 28-SEP-2009
TIME PLOTTED => 13:16

BORDER LAST REVISED 4/11/2008

RELATIVE BORDER SCALE IS IN INCHES 0 1 2 3

USERNAME => trphils
DGN FILE => 644261ka009.dgn

CU 06249

EA 442611

Dist	COUNTY	ROUTE	POST MILES TOTAL PROJECT	SHEET No.	TOTAL SHEETS
06	Fre	99	26.7/30.6	85	242

REGISTERED CIVIL ENGINEER — DATE: 05-29-09

PLANS APPROVAL DATE: 9-28-09

REGISTERED PROFESSIONAL ENGINEER — RODRIGO M. CRUZ — No. 57918 — Exp 06/30/10 — CIVIL — STATE OF CALIFORNIA

THE STATE OF CALIFORNIA OR ITS OFFICERS OR AGENTS SHALL NOT BE RESPONSIBLE FOR THE ACCURACY OR COMPLETENESS OF SCANNED COPIES OF THIS PLAN SHEET.

NOTE : FOR COMPLETE RIGHT OF WAY AND ACCURATE ACCESS DATA, SEE RIGHT OF WAY RECORD MAPS AT DISTRICT OFFICE.

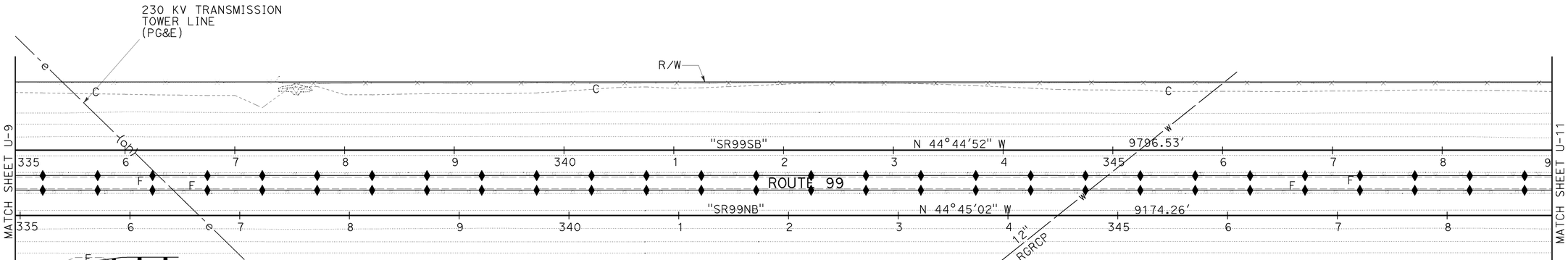

THIS PLAN ACCURATE FOR UTILITY WORK ONLY.

UTILITY PLAN

SCALE: 1"=50'

U-10

LAST REVISION 09-09-09
DATE PLOTTED => 28-SEP-2009
TIME PLOTTED => 13:16

CALCULATED-DESIGNED BY	CHECKED BY	REVISED BY	DATE REVISED
HARITH KIRAN	SUSAN GONZALEZ	HK	9-9-09

FUNCTIONAL SUPERVISOR: JUN XU

STATE OF CALIFORNIA - DEPARTMENT OF TRANSPORTATION — DESIGN

Caltrans

BORDER LAST REVISED 4/11/2008

RELATIVE BORDER SCALE IS IN INCHES 0 1 2 3

USERNAME => trphils
DGN FILE => 644261ka010.dgn

CU 06249

EA 442611

Dist	COUNTY	ROUTE	POST MILES TOTAL PROJECT	SHEET No.	TOTAL SHEETS
06	Fre	99	26.7/30.6	86	242

REGISTERED CIVIL ENGINEER 05-29-09 DATE

9-28-09
PLANS APPROVAL DATE

REGISTERED PROFESSIONAL ENGINEER RODRIGO M.CRUZ No. 57918 Exp. 06/30/10 CIVIL STATE OF CALIFORNIA

THE STATE OF CALIFORNIA OR ITS OFFICERS OR AGENTS SHALL NOT BE RESPONSIBLE FOR THE ACCURACY OR COMPLETENESS OF SCANNED COPIES OF THIS PLAN SHEET.

NOTE : FOR COMPLETE RIGHT OF WAY AND ACCURATE ACCESS DATA, SEE RIGHT OF WAY RECORD MAPS AT DISTRICT OFFICE.

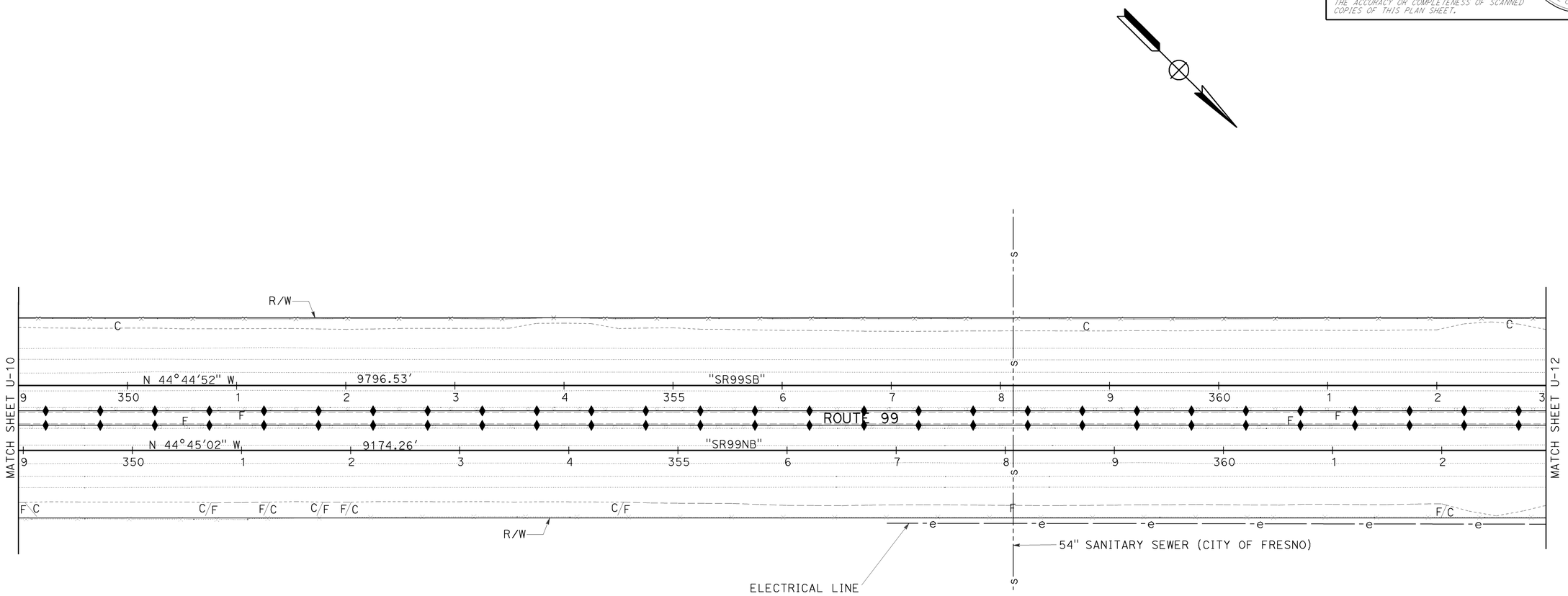

UTILITY PLAN

SCALE: 1"=50'

U-11

THIS PLAN ACCURATE FOR UTILITY WORK ONLY.

STATE OF CALIFORNIA - DEPARTMENT OF TRANSPORTATION
Caltrans
DESIGN

FUNCTIONAL SUPERVISOR: JUN XU

CALCULATED-DESIGNED BY: HARITH KIRAN
CHECKED BY: SUSAN GONZALEZ

REVISED BY: HK
DATE REVISED: 9-9-09

LAST REVISION 09-09-09
DATE PLOTTED => 28-SEP-2009
TIME PLOTTED => 13:16

NOTE : FOR COMPLETE RIGHT OF WAY AND ACCURATE ACCESS DATA,
SEE RIGHT OF WAY RECORD MAPS AT DISTRICT OFFICE.

Dist	COUNTY	ROUTE	POST MILES TOTAL PROJECT	SHEET No.	TOTAL SHEETS
06	Fre	99	26.7/30.6	87	242

05-29-09
REGISTERED CIVIL ENGINEER DATE

9-28-09
PLANS APPROVAL DATE

REGISTERED PROFESSIONAL ENGINEER
RODRIGO M. CRUZ
No. 57918
Exp 06/30/10
CIVIL
STATE OF CALIFORNIA

THE STATE OF CALIFORNIA OR ITS OFFICERS OR AGENTS SHALL NOT BE RESPONSIBLE FOR THE ACCURACY OR COMPLETENESS OF SCANNED COPIES OF THIS PLAN SHEET.

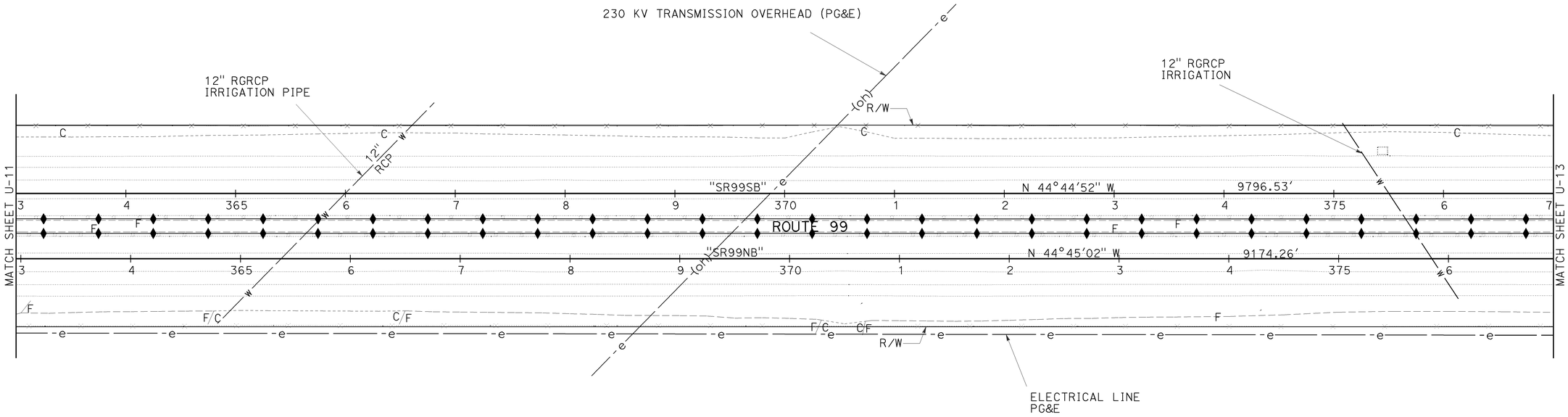

THIS PLAN ACCURATE FOR UTILITY WORK ONLY.

UTILITY PLAN

SCALE: 1"=50'

U-12

HARITH KIRAN — CALCULATED-DESIGNED BY
SUSAN GONZALEZ — CHECKED BY
HK — REVISED BY
9-9-09 — DATE REVISED
JUN XU — FUNCTIONAL SUPERVISOR
STATE OF CALIFORNIA - DEPARTMENT OF TRANSPORTATION
DESIGN

LAST REVISION | DATE PLOTTED => 28-SEP-2009
09-09-09 | TIME PLOTTED => 13:16

BORDER LAST REVISED 4/11/2008 | RELATIVE BORDER SCALE IS IN INCHES 0 1 2 3 | USERNAME => trphils | DGN FILE => 644261ka012.dgn | CU 06249 | EA 442611

NOTE : FOR COMPLETE RIGHT OF WAY AND ACCURATE ACCESS DATA,
SEE RIGHT OF WAY RECORD MAPS AT DISTRICT OFFICE.

Dist	COUNTY	ROUTE	POST MILES TOTAL PROJECT	SHEET No.	TOTAL SHEETS
06	Fre	99	26.7/30.6	88	242

05-29-09
REGISTERED CIVIL ENGINEER DATE

9-28-09
PLANS APPROVAL DATE

REGISTERED PROFESSIONAL ENGINEER
RODRIGO M. CRUZ
No. 57918
Exp 06/30/10
CIVIL
STATE OF CALIFORNIA

THE STATE OF CALIFORNIA OR ITS OFFICERS OR AGENTS SHALL NOT BE RESPONSIBLE FOR THE ACCURACY OR COMPLETENESS OF SCANNED COPIES OF THIS PLAN SHEET.

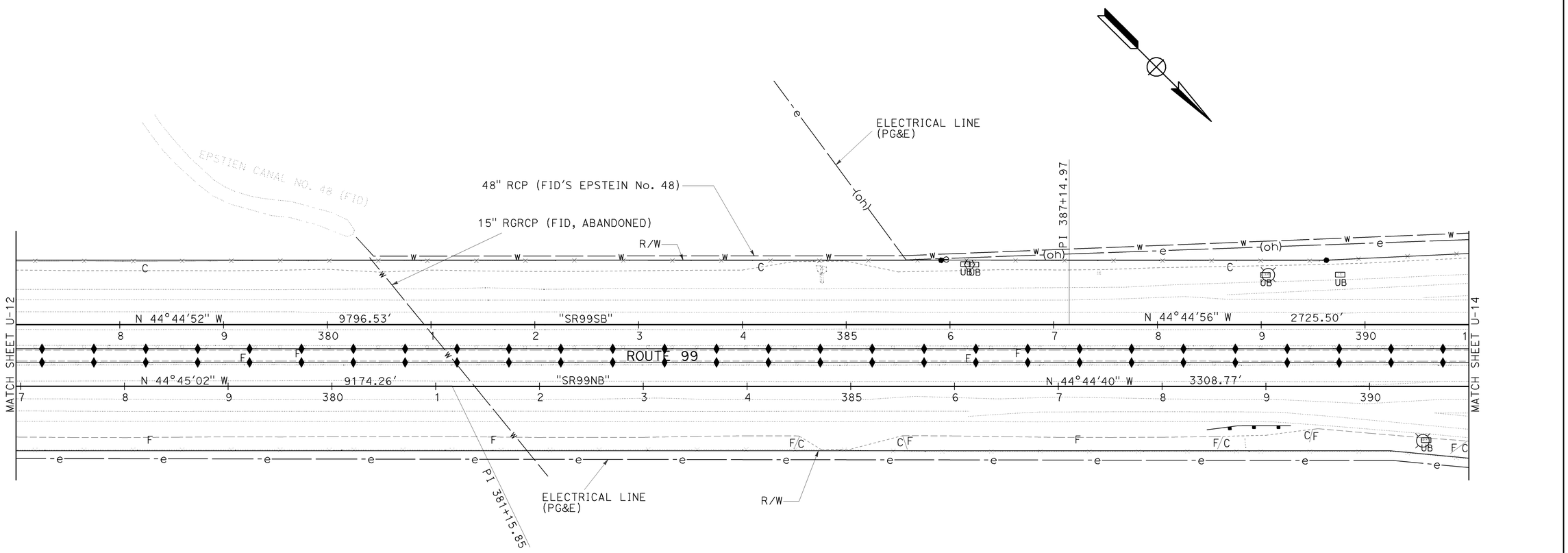

THIS PLAN ACCURATE FOR UTILITY WORK ONLY.

UTILITY PLAN

SCALE: 1"=50'

U-13

LAST REVISION DATE PLOTTED => 28-SEP-2009
09-09-09 TIME PLOTTED => 13:16

CALCULATED-DESIGNED BY	HARITH KIRAN	
CHECKED BY	SUSAN GONZALEZ	
REVISED BY	HK	
DATE REVISED	9-9-09	
FUNCTIONAL SUPERVISOR	JUN XU	
STATE OF CALIFORNIA - DEPARTMENT OF TRANSPORTATION	DESIGN	

BORDER LAST REVISED 4/11/2008

RELATIVE BORDER SCALE IS IN INCHES 0 1 2 3

USERNAME => trphils
DGN FILE => 644261ka013.dgn

CU 06249

EA 442611

Dist	COUNTY	ROUTE	POST MILES TOTAL PROJECT	SHEET No.	TOTAL SHEETS
06	Fre	99	26.7/30.6	89	242

05-29-09
REGISTERED CIVIL ENGINEER DATE

9-28-09
PLANS APPROVAL DATE

REGISTERED PROFESSIONAL ENGINEER
RODRIGO M. CRUZ
No. 57918
Exp 06/30/10
CIVIL
STATE OF CALIFORNIA

THE STATE OF CALIFORNIA OR ITS OFFICERS OR AGENTS SHALL NOT BE RESPONSIBLE FOR THE ACCURACY OR COMPLETENESS OF SCANNED COPIES OF THIS PLAN SHEET.

NOTE : FOR COMPLETE RIGHT OF WAY AND ACCURATE ACCESS DATA, SEE RIGHT OF WAY RECORD MAPS AT DISTRICT OFFICE.

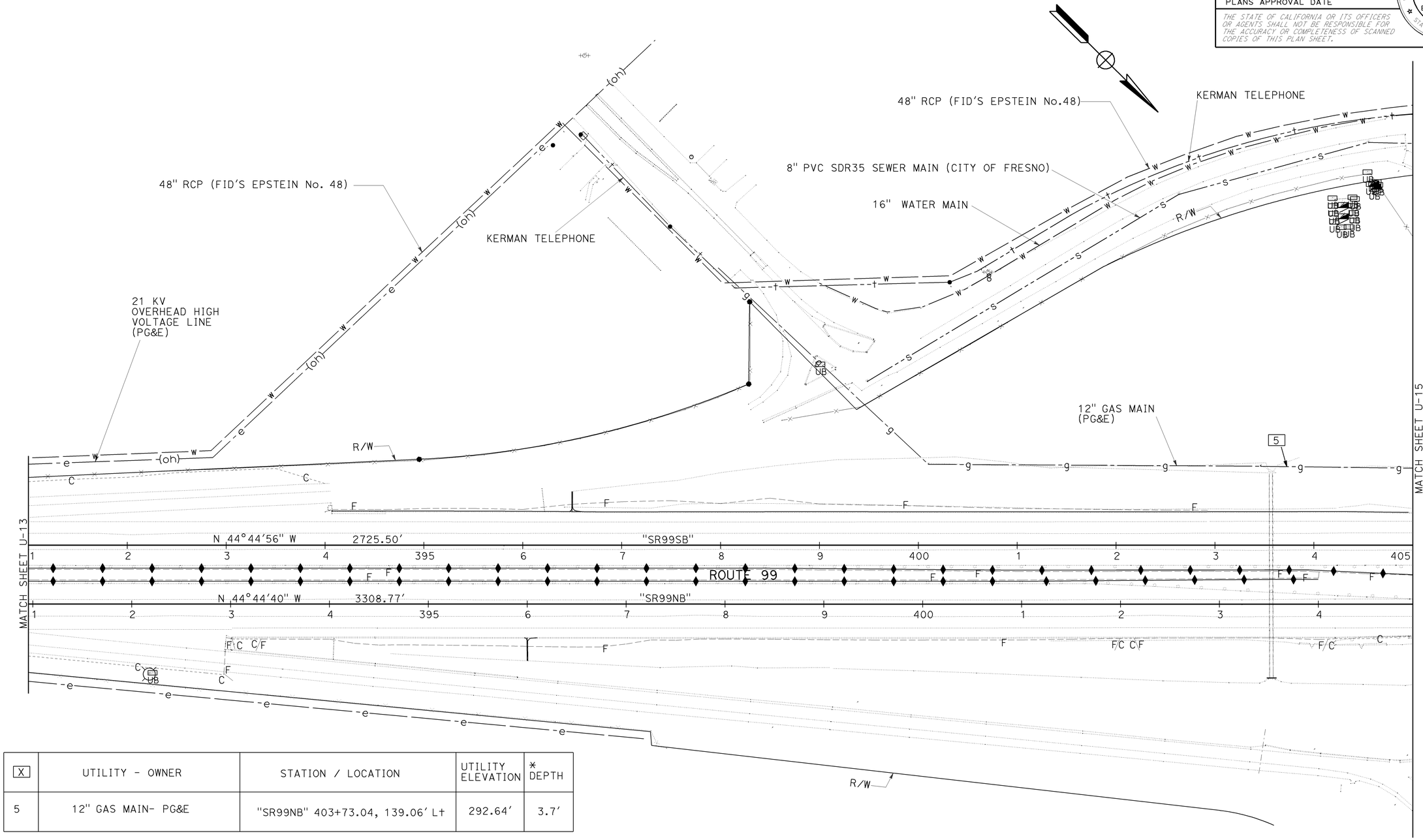

X	UTILITY - OWNER	STATION / LOCATION	UTILITY ELEVATION	* DEPTH
5	12" GAS MAIN- PG&E	"SR99NB" 403+73.04, 139.06' Lt	292.64'	3.7'

* - DEPTH IS THE DIFFERENCE BETWEEN OG AND TOP OF EXISTING UTILITY.

THIS PLAN ACCURATE FOR UTILITY WORK ONLY.

UTILITY PLAN

SCALE: 1"=50' **U-14**

CALCULATED-DESIGNED BY HARITH KIRAN
CHECKED BY SUSAN GONZALEZ
REVISED BY HK
DATE REVISED 9-9-09
FUNCTIONAL SUPERVISOR JUN XU
STATE OF CALIFORNIA - DEPARTMENT OF TRANSPORTATION DESIGN
Caltrans

LAST REVISION 09-09-09
DATE PLOTTED => 28-SEP-2009
TIME PLOTTED => 13:16

BORDER LAST REVISED 4/11/2008
RELATIVE BORDER SCALE IS IN INCHES 0 1 2 3
USERNAME => trphils
DGN FILE => 644261ka014.dgn
CU 06249
EA 442611

Dist	COUNTY	ROUTE	POST MILES TOTAL PROJECT	SHEET No.	TOTAL SHEETS
06	Fre	99	26.7/30.6	90	242

05-29-09
REGISTERED CIVIL ENGINEER DATE

9-28-09
PLANS APPROVAL DATE

REGISTERED PROFESSIONAL ENGINEER
RODRIGO M. CRUZ
No. 57918
Exp 06/30/10
CIVIL
STATE OF CALIFORNIA

THE STATE OF CALIFORNIA OR ITS OFFICERS OR AGENTS SHALL NOT BE RESPONSIBLE FOR THE ACCURACY OR COMPLETENESS OF SCANNED COPIES OF THIS PLAN SHEET.

NOTE : FOR COMPLETE RIGHT OF WAY AND ACCURATE ACCESS DATA, SEE RIGHT OF WAY RECORD MAPS AT DISTRICT OFFICE.

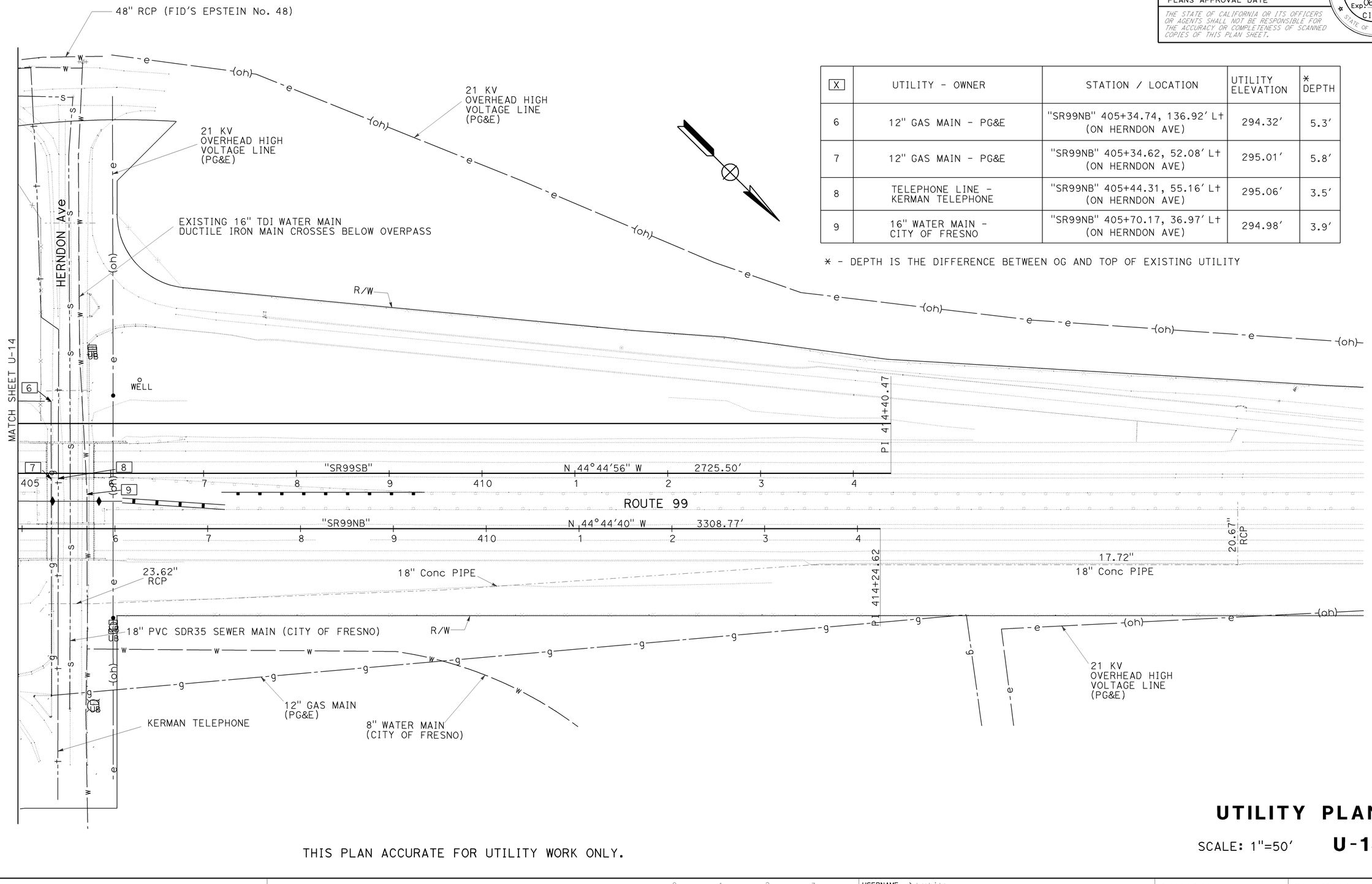

X	UTILITY - OWNER	STATION / LOCATION	UTILITY ELEVATION	* DEPTH
6	12" GAS MAIN - PG&E	"SR99NB" 405+34.74, 136.92' Lt (ON HERNDON AVE)	294.32'	5.3'
7	12" GAS MAIN - PG&E	"SR99NB" 405+34.62, 52.08' Lt (ON HERNDON AVE)	295.01'	5.8'
8	TELEPHONE LINE - KERMAN TELEPHONE	"SR99NB" 405+44.31, 55.16' Lt (ON HERNDON AVE)	295.06'	3.5'
9	16" WATER MAIN - CITY OF FRESNO	"SR99NB" 405+70.17, 36.97' Lt (ON HERNDON AVE)	294.98'	3.9'

* - DEPTH IS THE DIFFERENCE BETWEEN OG AND TOP OF EXISTING UTILITY

THIS PLAN ACCURATE FOR UTILITY WORK ONLY.

UTILITY PLAN

SCALE: 1"=50' **U-15**

CALCULATED-DESIGNED BY: HARITH KIRAN
CHECKED BY: SUSAN GONZALEZ
REVISED BY: HK
DATE REVISED: 9-9-09
FUNCTIONAL SUPERVISOR: JUN XU
STATE OF CALIFORNIA - DEPARTMENT OF TRANSPORTATION
DESIGN
Caltrans

LAST REVISION DATE PLOTTED => 28-SEP-2009
TIME PLOTTED => 13:16
09-09-09

BORDER LAST REVISED 4/11/2008
RELATIVE BORDER SCALE IS IN INCHES 0 1 2 3
USERNAME => trphils
DGN FILE => 644261ka015.dgn
CU 06249
EA 442611

Dist	COUNTY	ROUTE	POST MILES TOTAL PROJECT	SHEET No.	TOTAL SHEETS
06	Fre	99	26.7/30.6	91	242

MAz - AL i 06-23-09
REGISTERED CIVIL ENGINEER DATE

9-28-09
PLANS APPROVAL DATE

REGISTERED PROFESSIONAL ENGINEER
MAZIN H. AL-ALI
No. 65523
Exp. 9/30/09
CIVIL
STATE OF CALIFORNIA

THE STATE OF CALIFORNIA OR ITS OFFICERS OR AGENTS SHALL NOT BE RESPONSIBLE FOR THE ACCURACY OR COMPLETENESS OF SCANNED COPIES OF THIS PLAN SHEET.

STATIONARY MOUNTED CONSTRUCTION AREA SIGNS

SIGN No.	SIGN CODE	PANEL SIZE	SIGN MESSAGE	No. OF POST AND SIZE	METAL (BARRIER MOUNTED SIGN)	EACH
(A)	W20-1	48" x 48"	ROAD WORK AHEAD	1-6" x 6"	1 (SEE NOTE 2)	4
(B)	W20-1	36" x 36"	ROAD WORK AHEAD	1-4" x 6"		4
(C)	G20-2	36" x 18"	END ROAD WORK	1-4" x 6"		2
(D)	C40(CA)	102" x 42"	TRAFFIC FINES DOUBLED IN WORK ZONES	2-6" x 6"		2
(E)	C24(CA) MOD	48" x 48"	SHOULDER CLOSED AHEAD	1-6" x 6"	1 (SEE NOTE 2)	4
(F)	C31A(CA)	48" x 48"	NO SHOULDER	1-6" x 6"	1 (SEE NOTE 2)	4

NOTES:

1. LOCATIONS OF CONSTRUCTION AREA SIGNS SHOWN ARE APPROXIMATE, EXACT LOCATIONS WILL BE DETERMINED BY THE ENGINEER.
2. FOR BARRIER MOUNTED SIGNS POST AND INSTALLATION, SEE SIGN DETAILS SHEET SD-1.

LEGEND

▼ BARRIER MOUNTED SIGN

(E)

C24(CA) MOD

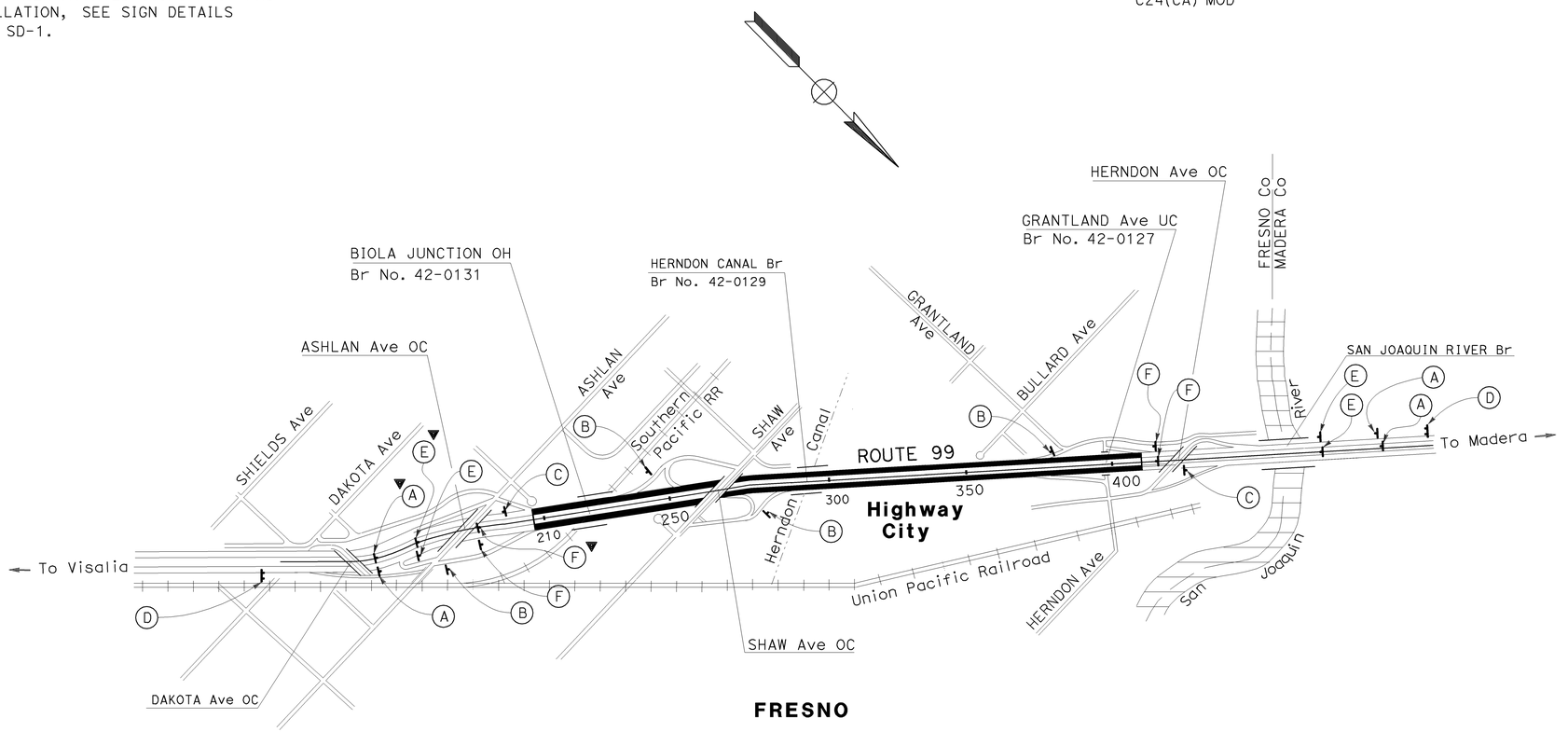

THIS PLAN ACCURATE FOR CONSTRUCTION AREA SIGN WORK ONLY

CONSTRUCTION AREA SIGNS

NO SCALE

CS-1

STATE OF CALIFORNIA - DEPARTMENT OF TRANSPORTATION
TRAFFIC DESIGN
FUNCTIONAL SUPERVISOR: M. QATAMI
CALCULATED-DESIGNED BY: HASEEB YOUSAF
CHECKED BY: MAZIN AL-ALI
REVISED BY
DATE REVISED

LAST REVISION DATE PLOTTED => 28-SEP-2009
TIME PLOTTED => 13:16
06-23-09

BORDER LAST REVISED 4/11/2008
RELATIVE BORDER SCALE IS IN INCHES 0 1 2 3
USERNAME => trphils
DGN FILE => 6442611a001.dgn
CU 06386
EA 442611

Dist	COUNTY	ROUTE	POST MILES TOTAL PROJECT	SHEET No.	TOTAL SHEETS
06	Fre	99	26.7/30.6	92	242

06-29-09
REGISTERED CIVIL ENGINEER DATE

9-28-09
PLANS APPROVAL DATE

REGISTERED PROFESSIONAL ENGINEER
RODRIGO M. CRUZ
No. 57918
Exp 06/30/10
CIVIL
STATE OF CALIFORNIA

THE STATE OF CALIFORNIA OR ITS OFFICERS OR AGENTS SHALL NOT BE RESPONSIBLE FOR THE ACCURACY OR COMPLETENESS OF ELECTRONIC COPIES OF THIS PLAN SHEET.

NOTE: FOR COMPLETE RIGHT OF WAY AND ACCURATE ACCESS DATA, SEE RIGHT OF WAY RECORD MAPS AT DISTRICT OFFICE.

STAGE 1 CONSTRUCTION

NOTE: CONSTRUCT OUTSIDE SHOULDERS. RECONSTRUCTION WORK SHALL BE DONE DURING NIGHT SHIFT UNDER TRAFFIC CONTROL SYSTEM.

LEGEND

CONSTRUCT THIS STAGE

Temp RAILING (TYPE K)

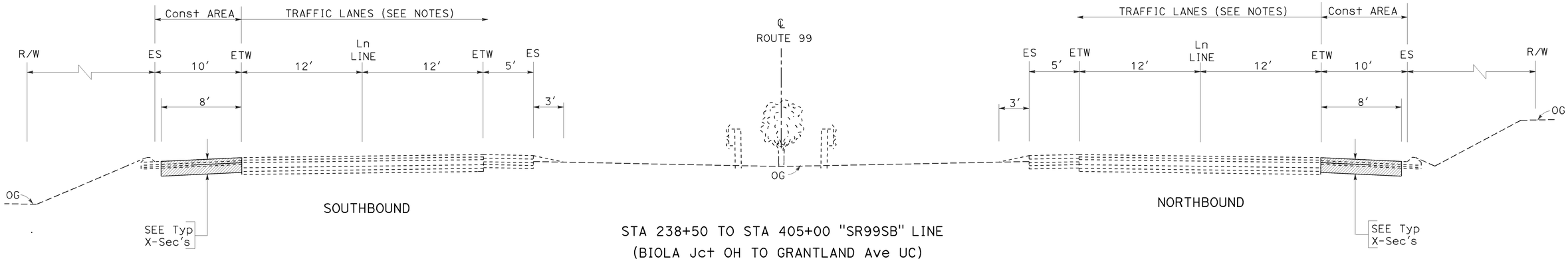

STA 238+50 TO STA 405+00 "SR99SB" LINE
(BIOLA Jct OH TO GRANTLAND Ave UC)

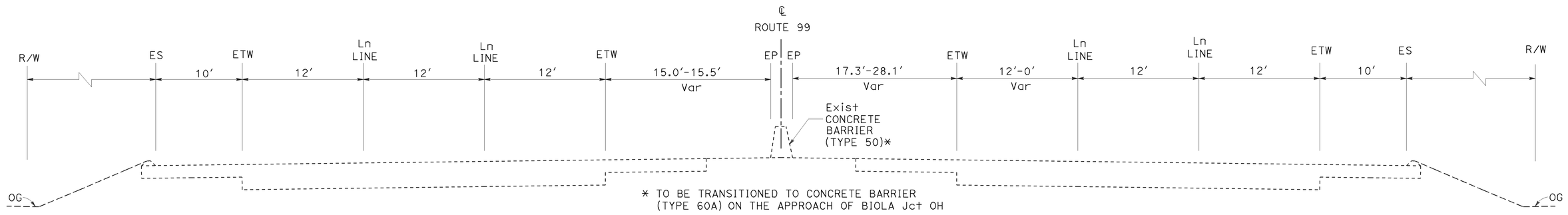

STA 209+40 TO STA 238+50 "SR99SB" LINE
(JUST NORTH OF ASHLAN Ave OC TO BIOLA Jct OH)

ROUTE 99

THIS PLAN ACCURATE FOR STAGE CONSTRUCTION WORK ONLY

STAGE CONSTRUCTION

(STAGE 1) **SC-1**

NO SCALE

REVISED BY | DATE REVISED
CALCULATED-DESIGNED BY: TAM LA
CHECKED BY: IRENE LEE
FUNCTIONAL SUPERVISOR: JUN XU
STATE OF CALIFORNIA - DEPARTMENT OF TRANSPORTATION
Caltrans DESIGN

LAST REVISION | DATE PLOTTED => 28-SEP-2009
06-29-09 | TIME PLOTTED => 13:16

BORDER LAST REVISED 3/1/2007
RELATIVE BORDER SCALE IS IN INCHES 0 1 2 3
USERNAME => trphils
DGN FILE => 644261ma001.dgn
CU 06249
EA 442611

Dist	COUNTY	ROUTE	POST MILES TOTAL PROJECT	SHEET No.	TOTAL SHEETS
06	Fre	99	26.7/30.6	93	242

05-29-09
REGISTERED CIVIL ENGINEER DATE

9-28-09
PLANS APPROVAL DATE

REGISTERED PROFESSIONAL ENGINEER
RODRIGO M. CRUZ
No. 57918
Exp 06/30/10
CIVIL
STATE OF CALIFORNIA

THE STATE OF CALIFORNIA OR ITS OFFICERS OR AGENTS SHALL NOT BE RESPONSIBLE FOR THE ACCURACY OR COMPLETENESS OF ELECTRONIC COPIES OF THIS PLAN SHEET.

NOTE : FOR COMPLETE RIGHT OF WAY AND ACCURATE ACCESS DATA, SEE RIGHT OF WAY RECORD MAPS AT DISTRICT OFFICE.

STAGE 2 CONSTRUCTION

NOTES:

1. OVERLAY INSIDE LANES IN BOTH DIRECTIONS DURING NIGHT SHIFT UNDER TRAFFIC CONTROL SYSTEM.
2. OVERLAY OUTSIDE LANES IN BOTH DIRECTIONS DURING NIGHT SHIFT UNDER TRAFFIC CONTROL SYSTEM.
3. OVERLAY OUTSIDE SHOULDERS IN BOTH DIRECTIONS DURING NIGHT SHIFT UNDER TRAFFIC CONTROL SYSTEM.
4. PRIOR TO OVERLAY, REMOVE EXISTING PAVEMENT MARKERS.

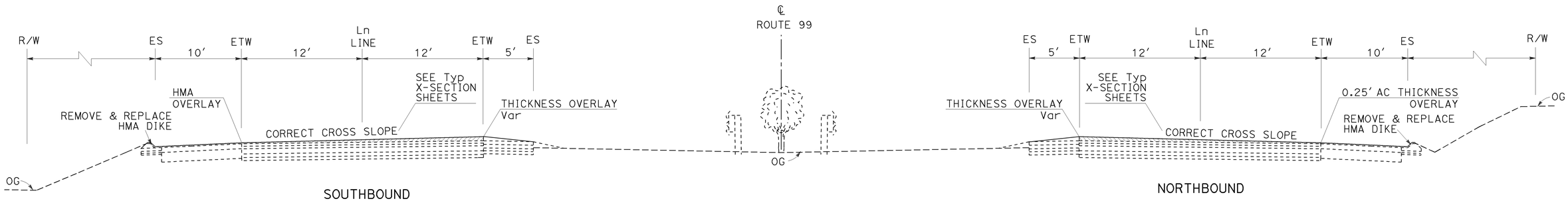

STA 238+50 TO STA 405+00 "SR99SB" LINE
(BIOLA Jct OH TO GRANTLAND Ave UC)

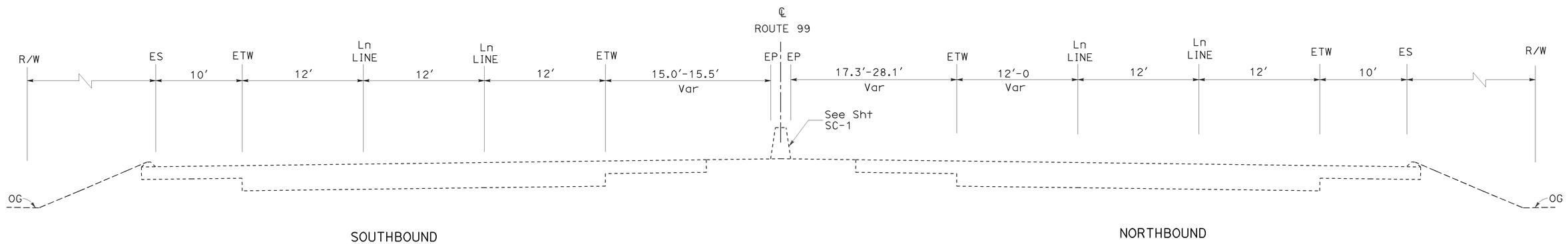

STA 209+40 TO STA 238+50 "SR99SB" LINE
(JUST NORTH OF ASHLAN Ave OC TO BIOLA Jct OH)

ROUTE 99

THIS PLAN ACCURATE FOR STAGE CONSTRUCTION WORK ONLY

STAGE CONSTRUCTION

(STAGE 1)

NO SCALE

SC-2

STATE OF CALIFORNIA - DEPARTMENT OF TRANSPORTATION
DESIGN
FUNCTIONAL SUPERVISOR: JUN XU
CALCULATED-DESIGNED BY
CHECKED BY
TAM LA
RODRIGO CRUZ
REVISED BY
DATE REVISED

LAST REVISION DATE PLOTTED => 28-SEP-2009
09-15-09 TIME PLOTTED => 13:17

BORDER LAST REVISED 3/1/2007
RELATIVE BORDER SCALE IS IN INCHES 0 1 2 3
USERNAME => trphils
DGN FILE => 644261ma002.dgn
CU 06249
EA 442611

Dist	COUNTY	ROUTE	POST MILES TOTAL PROJECT	SHEET No.	TOTAL SHEETS
06	Fre	99	26.7/30.6	94	242

05-29-09
REGISTERED CIVIL ENGINEER DATE

9-28-09
PLANS APPROVAL DATE

REGISTERED PROFESSIONAL ENGINEER
RODRIGO M. CRUZ
No. 57918
Exp 06/30/10
CIVIL
STATE OF CALIFORNIA

THE STATE OF CALIFORNIA OR ITS OFFICERS OR AGENTS SHALL NOT BE RESPONSIBLE FOR THE ACCURACY OR COMPLETENESS OF ELECTRONIC COPIES OF THIS PLAN SHEET.

NOTE: FOR COMPLETE RIGHT OF WAY AND ACCURATE ACCESS DATA, SEE RIGHT OF WAY RECORD MAPS AT DISTRICT OFFICE.

STAGE 3 CONSTRUCTION

NOTES:

1. RE-STRIPE LANES AND USE PART OF RECONSTRUCTED SHOULDERS AS TRAVELED LANES. (SEE TH SHEETS)
2. INSTALL Temp RAILING (TYPE K). (SEE TH SHEETS)
3. REMOVE SINGLE THRIE BEAM BARRIERS IN BOTH DIRECTIONS.
4. CONSTRUCT 12′ LANES, 10′ SHOULDERS AND CONCRETE BARRIER (TYPE 60C) IN THE MEDIAN.

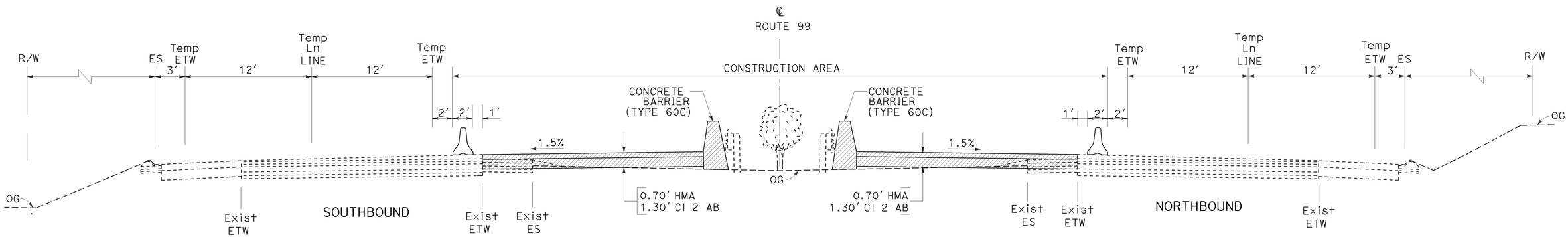

STA 238+50 TO STA 405+00 "SR99SB" LINE
(BIOLA Jct OH TO GRANTLAND Ave UC)

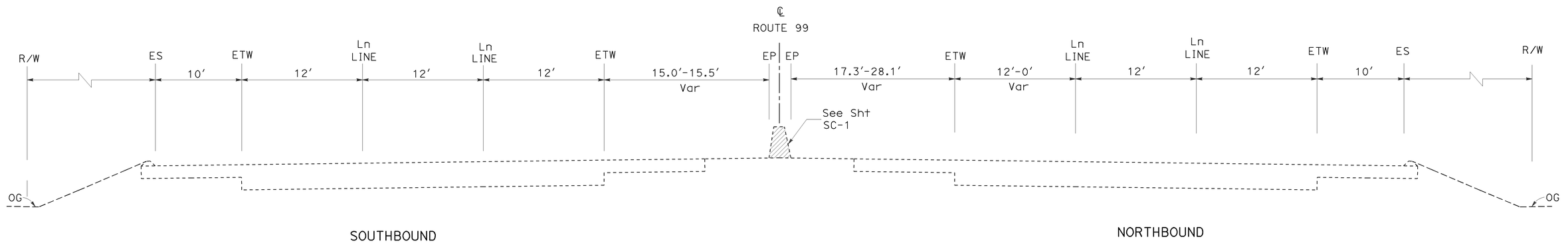

STA 209+40 TO STA 238+50 "SR99SB" LINE
(JUST NORTH OF ASHLAN Ave OC TO BIOLA Jct OH)

ROUTE 99

THIS PLAN ACCURATE FOR STAGE CONSTRUCTION WORK ONLY

STAGE CONSTRUCTION

(STAGE 1)

NO SCALE

SC-3

STATE OF CALIFORNIA - DEPARTMENT OF TRANSPORTATION
Caltrans PROJECT DEVELOPMENT
FUNCTIONAL SUPERVISOR: JUN XU
CALCULATED-DESIGNED BY: TAM LA
CHECKED BY: RODRIGO CRUZ
REVISED BY
DATE REVISED

LAST REVISION | DATE PLOTTED => 28-SEP-2009 | TIME PLOTTED => 13:17
06-22-09

BORDER LAST REVISED 3/1/2007
RELATIVE BORDER SCALE IS IN INCHES 0 1 2 3
USERNAME => trphils
DGN FILE => 644261ma003.dgn
CU 06249
EA 442611

Dist	COUNTY	ROUTE	POST MILES TOTAL PROJECT	SHEET No.	TOTAL SHEETS
06	Fre	99	26.7/30.6	95	242

REGISTERED CIVIL ENGINEER — DATE: 06-23-09

PLANS APPROVAL DATE: 9-28-09

MAZIN H. AL-ALI No. 65523 Exp. 9/30/09 CIVIL — REGISTERED PROFESSIONAL ENGINEER — STATE OF CALIFORNIA

THE STATE OF CALIFORNIA OR ITS OFFICERS OR AGENTS SHALL NOT BE RESPONSIBLE FOR THE ACCURACY OR COMPLETENESS OF SCANNED COPIES OF THIS PLAN SHEET.

LEGEND

- DIRECTION OF TRAVEL
- Temp Railing (TYPE K)
- TEMPORARY CRASH CUSHION MODULE
- (XX) TEMPORARY PAINT TRAFFIC STRIPE DETAIL NUMBER
- ● CHANNELIZER (SURFACE MOUNTED)

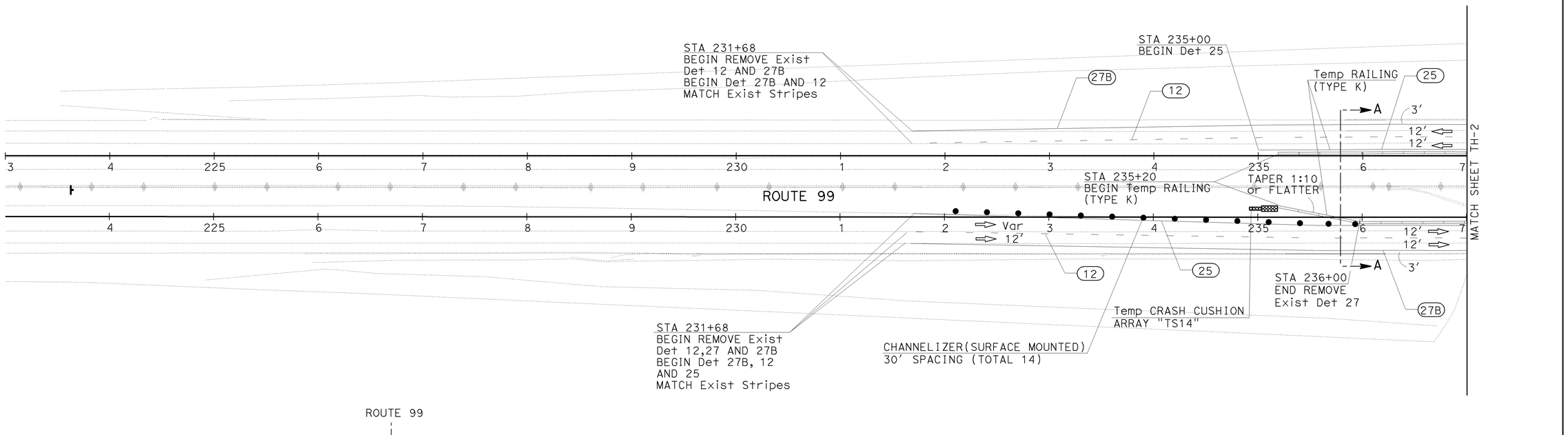

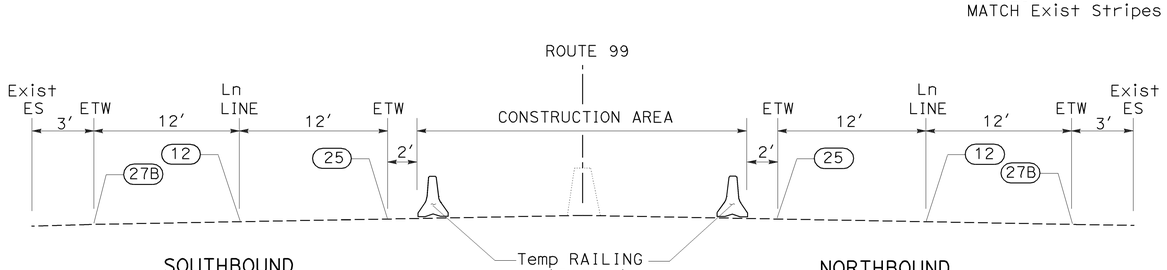

SECTION A-A
NO SCALE

THIS PLAN ACCURATE FOR TRAFFIC HANDLING ONLY.

TRAFFIC HANDLING PLAN
(STAGE 3)

SCALE: 1"=50'

TH-1

STATE OF CALIFORNIA - DEPARTMENT OF TRANSPORTATION
Caltrans®
TRAFFIC DESIGN
FUNCTIONAL SUPERVISOR: M. QATAMI
CALCULATED-DESIGNED BY: HASEEB YOUSAF
CHECKED BY: MAZIN AL-ALI
REVISED BY
DATE REVISED

LAST REVISION DATE PLOTTED => 28-SEP-2009
06-23-09 TIME PLOTTED => 13:17

BORDER LAST REVISED 4/11/2008

RELATIVE BORDER SCALE IS IN INCHES 0 1 2 3

USERNAME => trphils
DGN FILE => 644261md001.dgn

CU 06386

EA 442611

Dist	COUNTY	ROUTE	POST MILES TOTAL PROJECT	SHEET No.	TOTAL SHEETS
06	Fre	99	26.7/30.6	96	242

MAZ-ALI 06-23-09
REGISTERED CIVIL ENGINEER DATE

9-28-09
PLANS APPROVAL DATE

REGISTERED PROFESSIONAL ENGINEER
MAZIN H. AL-ALI
No. 65523
Exp. 9/30/09
CIVIL
STATE OF CALIFORNIA

THE STATE OF CALIFORNIA OR ITS OFFICERS OR AGENTS SHALL NOT BE RESPONSIBLE FOR THE ACCURACY OR COMPLETENESS OF SCANNED COPIES OF THIS PLAN SHEET.

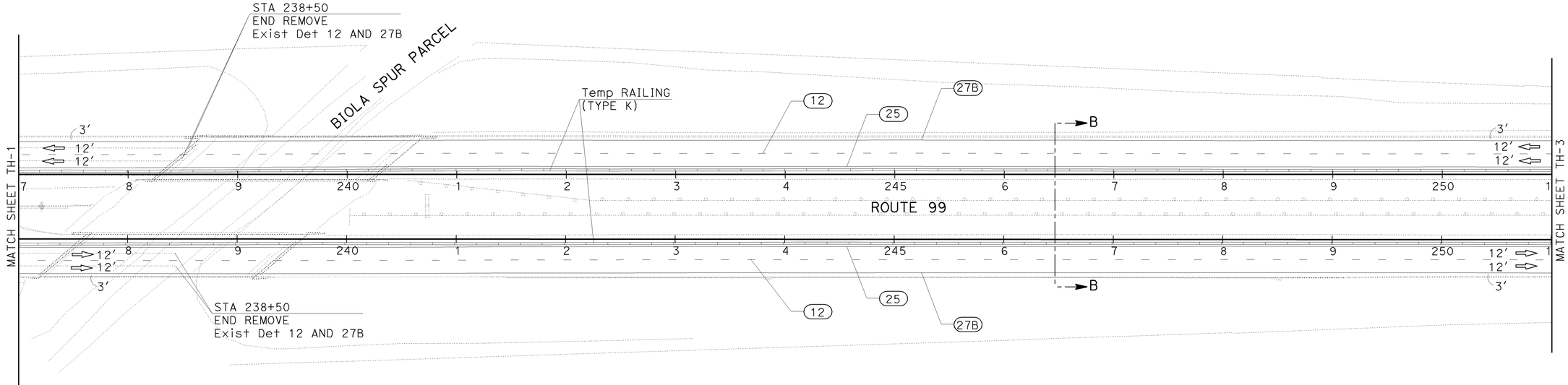

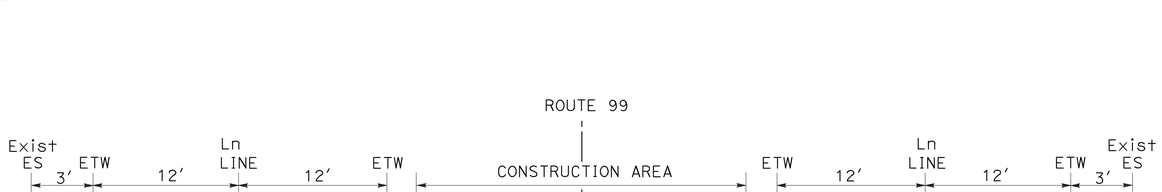

SECTION B-B
NO SCALE

TRAFFIC HANDLING PLAN
(STAGE 3)

SCALE: 1"=50′

TH-2

THIS PLAN ACCURATE FOR TRAFFIC HANDLING ONLY.

STATE OF CALIFORNIA - DEPARTMENT OF TRANSPORTATION
Caltrans®
TRAFFIC DESIGN
FUNCTIONAL SUPERVISOR: M. QATAMI
CALCULATED-DESIGNED BY: HASEEB YOUSAF
CHECKED BY: MAZIN AL-ALI
REVISED BY
DATE REVISED

LAST REVISION DATE PLOTTED => 28-SEP-2009
06-23-09 TIME PLOTTED => 13:17

BORDER LAST REVISED 4/11/2008
RELATIVE BORDER SCALE IS IN INCHES 0 1 2 3
USERNAME => trphils
DGN FILE => 644261md002.dgn
CU 06386
EA 442611

Dist	COUNTY	ROUTE	POST MILES TOTAL PROJECT	SHEET No.	TOTAL SHEETS
06	Fre	99	26.7/30.6	97	242

06-23-09
REGISTERED CIVIL ENGINEER DATE

9-28-09
PLANS APPROVAL DATE

REGISTERED PROFESSIONAL ENGINEER
MAZIN H. AL-ALI
No. 65523
Exp. 9/30/09
CIVIL
STATE OF CALIFORNIA

THE STATE OF CALIFORNIA OR ITS OFFICERS OR AGENTS SHALL NOT BE RESPONSIBLE FOR THE ACCURACY OR COMPLETENESS OF SCANNED COPIES OF THIS PLAN SHEET.

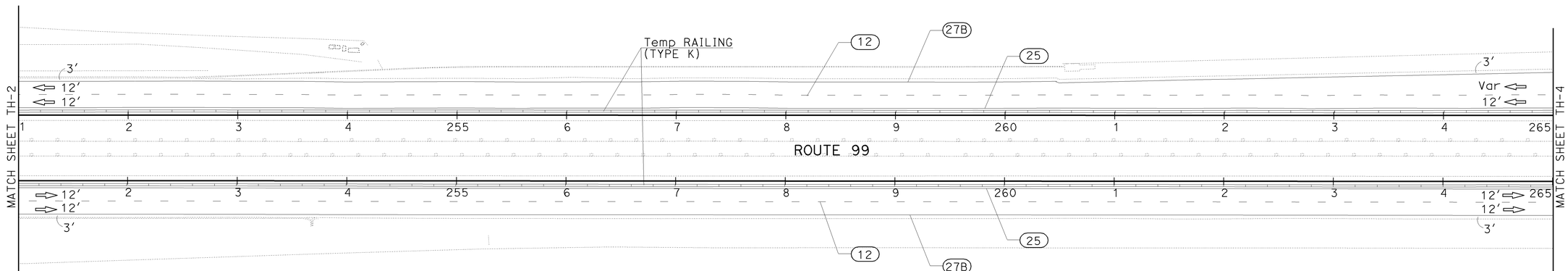

THIS PLAN ACCURATE FOR TRAFFIC HANDLING ONLY.

TRAFFIC HANDLING PLAN
(STAGE 3)

SCALE: 1"=50′

TH-3

STATE OF CALIFORNIA - DEPARTMENT OF TRANSPORTATION
Caltrans
TRAFFIC DESIGN
FUNCTIONAL SUPERVISOR: M. QATAMI
CALCULATED-DESIGNED BY: HASEEB YOUSAF
CHECKED BY: MAZIN AL-ALI
REVISED BY
DATE REVISED

LAST REVISION
DATE PLOTTED => 28-SEP-2009
TIME PLOTTED => 13:17
06-23-09

BORDER LAST REVISED 4/11/2008
RELATIVE BORDER SCALE IS IN INCHES 0 1 2 3
USERNAME => trphils
DGN FILE => 644261md003.dgn
CU 06386
EA 442611

Dist	COUNTY	ROUTE	POST MILES TOTAL PROJECT	SHEET No.	TOTAL SHEETS
06	Fre	99	26.7/30.6	98	242

REGISTERED CIVIL ENGINEER — 06-23-09 DATE

9-28-09
PLANS APPROVAL DATE

MAZIN H. AL-ALI No. 65523 Exp. 9/30/09 CIVIL — REGISTERED PROFESSIONAL ENGINEER — STATE OF CALIFORNIA

THE STATE OF CALIFORNIA OR ITS OFFICERS OR AGENTS SHALL NOT BE RESPONSIBLE FOR THE ACCURACY OR COMPLETENESS OF SCANNED COPIES OF THIS PLAN SHEET.

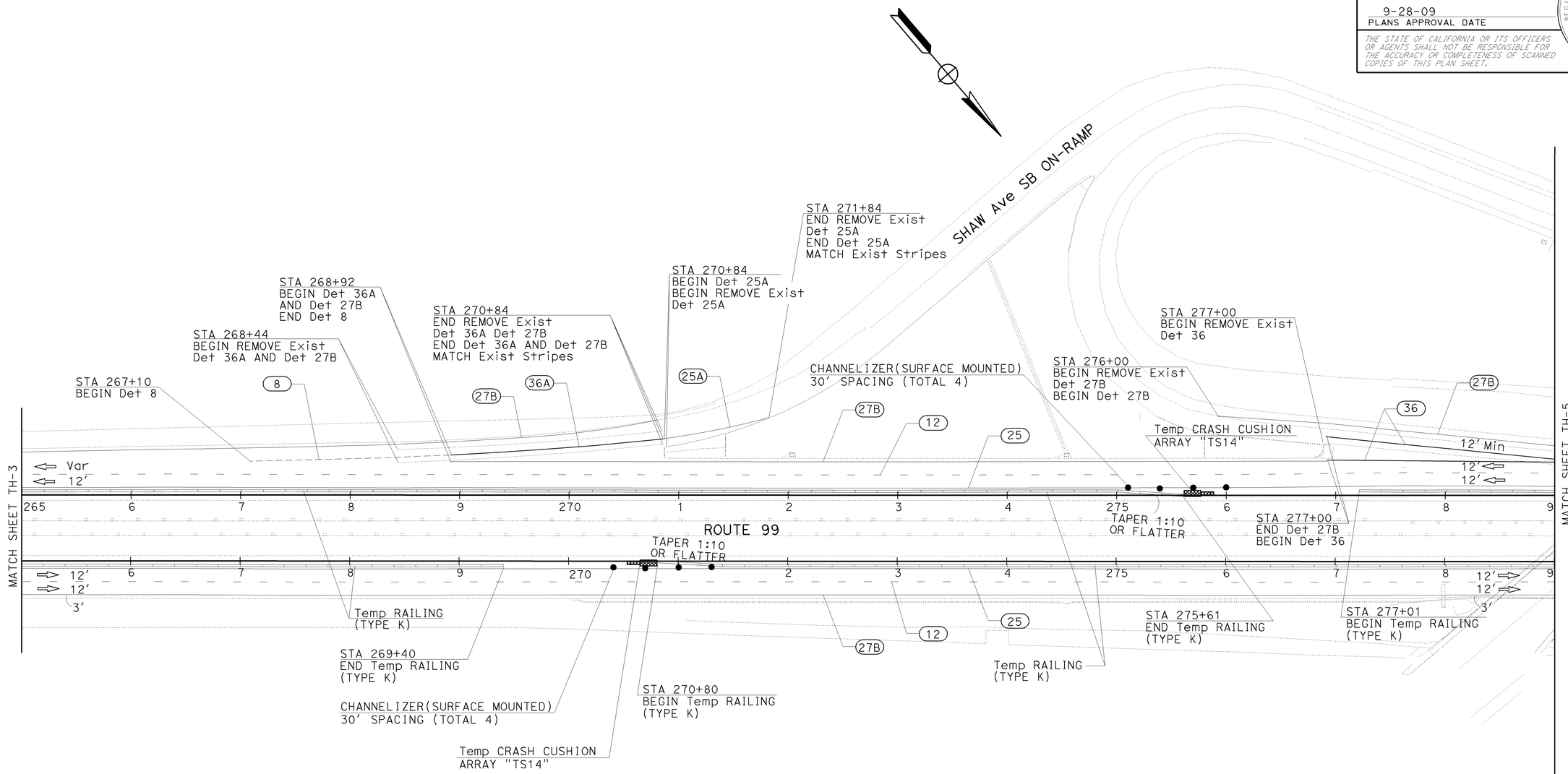

THIS PLAN ACCURATE FOR TRAFFIC HANDLING ONLY.

TRAFFIC HANDLING PLAN
(STAGE 3)

SCALE: 1"=50'

TH-4

LAST REVISION
DATE PLOTTED => 28-SEP-2009
TIME PLOTTED => 13:20
06-23-09

REVISED BY	DATE REVISED

CALCULATED-DESIGNED BY: HASEEB YOUSAF
CHECKED BY: MAZIN AL-ALI
FUNCTIONAL SUPERVISOR: M. QATAMI

STATE OF CALIFORNIA - DEPARTMENT OF TRANSPORTATION
Caltrans®
TRAFFIC DESIGN

BORDER LAST REVISED 4/11/2008

RELATIVE BORDER SCALE IS IN INCHES 0 1 2 3

USERNAME => trmariak
DGN FILE => 644261md004.dgn

CU 06386

EA 442611

Dist	COUNTY	ROUTE	POST MILES TOTAL PROJECT	SHEET No.	TOTAL SHEETS
06	Fre	99	26.7/30.6	99	242

MAz-AL-I 06-23-09
REGISTERED CIVIL ENGINEER DATE

9-28-09
PLANS APPROVAL DATE

REGISTERED PROFESSIONAL ENGINEER
MAZIN H. AL-ALI
No. 65523
Exp. 9/30/09
CIVIL
STATE OF CALIFORNIA

THE STATE OF CALIFORNIA OR ITS OFFICERS OR AGENTS SHALL NOT BE RESPONSIBLE FOR THE ACCURACY OR COMPLETENESS OF SCANNED COPIES OF THIS PLAN SHEET.

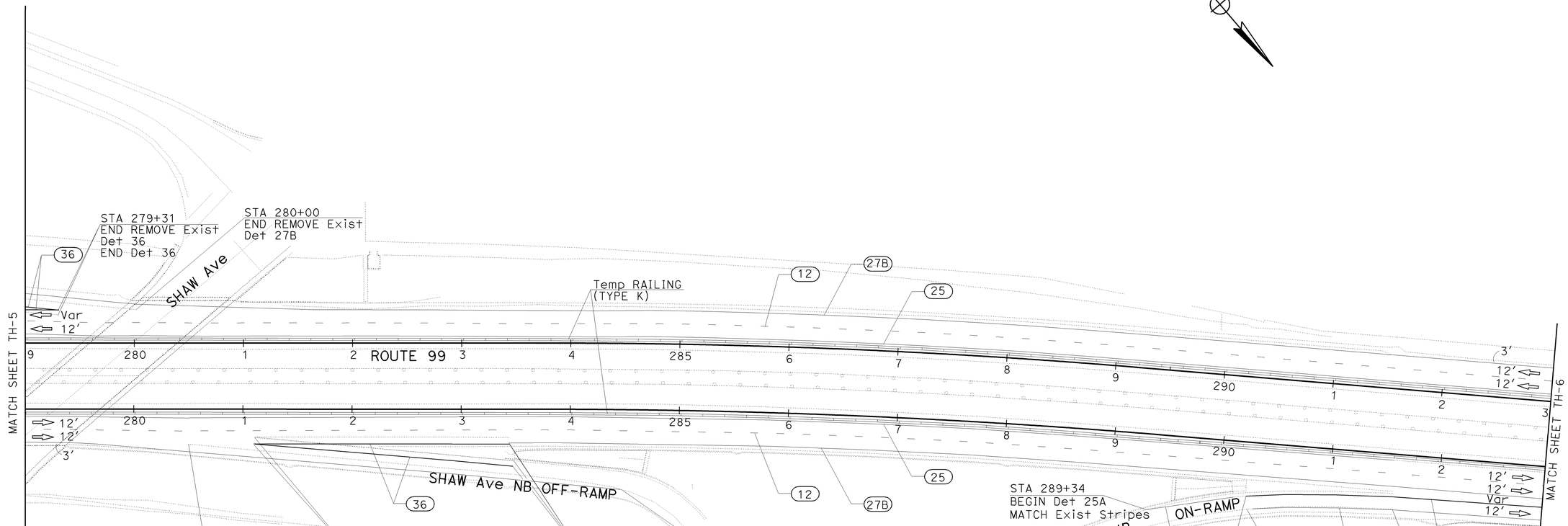

TRAFFIC HANDLING PLAN
(STAGE 3)

SCALE: 1"=50'

TH-5

THIS PLAN ACCURATE FOR TRAFFIC HANDLING ONLY.

STATE OF CALIFORNIA - DEPARTMENT OF TRANSPORTATION
TRAFFIC DESIGN
FUNCTIONAL SUPERVISOR: M. QATAMI
CHECKED BY: MAZIN AL-ALI
CALCULATED-DESIGNED BY: HASEEB YOUSAF
DATE REVISED | REVISED BY

LAST REVISION DATE PLOTTED => 28-SEP-2009
06-23-09 TIME PLOTTED => 13:20

BORDER LAST REVISED 4/11/2008
RELATIVE BORDER SCALE IS IN INCHES 0 1 2 3
USERNAME => trmariak
DGN FILE => 644261md005.dgn
CU 06386
EA 442611

Dist	COUNTY	ROUTE	POST MILES TOTAL PROJECT	SHEET No.	TOTAL SHEETS
06	Fre	99	26.7/30.6	100	242

REGISTERED CIVIL ENGINEER — DATE: 06-23-09

PLANS APPROVAL DATE: 9-28-09

REGISTERED PROFESSIONAL ENGINEER — MAZIN H. AL-ALI — No. 65523 — Exp. 9/30/09 — CIVIL — STATE OF CALIFORNIA

THE STATE OF CALIFORNIA OR ITS OFFICERS OR AGENTS SHALL NOT BE RESPONSIBLE FOR THE ACCURACY OR COMPLETENESS OF SCANNED COPIES OF THIS PLAN SHEET.

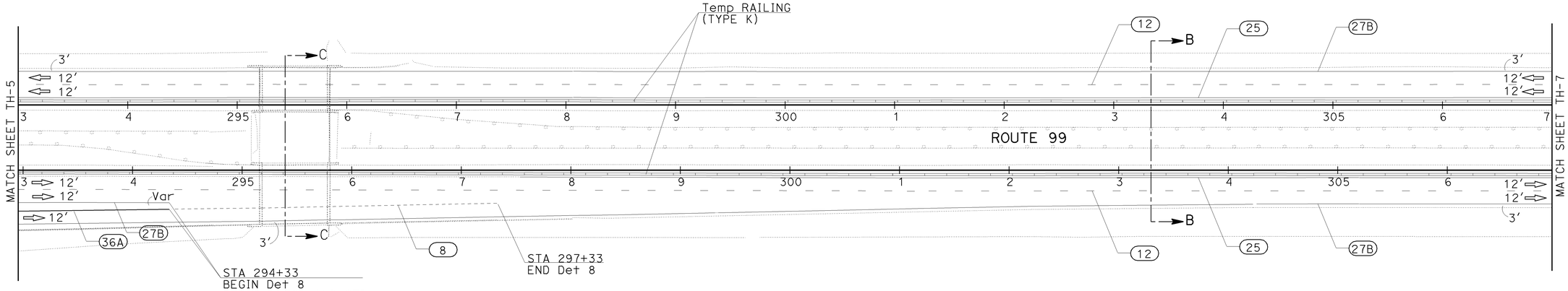

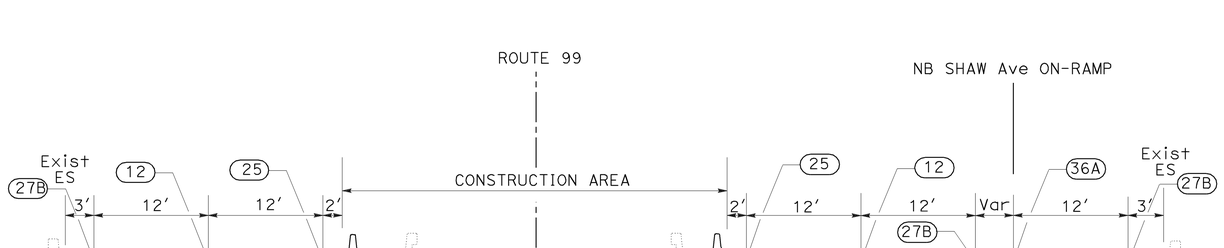

SECTION C-C
NO SCALE

THIS PLAN ACCURATE FOR TRAFFIC HANDLING ONLY.

TRAFFIC HANDLING PLAN
(STAGE 3)

SCALE: 1"=50'

TH-6

STATE OF CALIFORNIA - DEPARTMENT OF TRANSPORTATION
TRAFFIC DESIGN
FUNCTIONAL SUPERVISOR: M. QATAMI
CALCULATED-DESIGNED BY: HASEEB YOUSAF
CHECKED BY: MAZIN AL-ALI
REVISED BY
DATE REVISED

LAST REVISION — DATE PLOTTED => 28-SEP-2009 — TIME PLOTTED => 13:20 — 06-23-09

BORDER LAST REVISED 4/11/2008 | RELATIVE BORDER SCALE IS IN INCHES 0 1 2 3 | USERNAME => trmariak | DGN FILE => 644261md006.dgn | CU 06386 | EA 442611

Dist	COUNTY	ROUTE	POST MILES TOTAL PROJECT	SHEET No.	TOTAL SHEETS
06	Fre	99	26.7/30.6	101	242

REGISTERED CIVIL ENGINEER — DATE: 06-23-09

PLANS APPROVAL DATE: 9-28-09

MAZIN H. AL-ALI No. 65523 Exp. 9/30/09 CIVIL — REGISTERED PROFESSIONAL ENGINEER — STATE OF CALIFORNIA

THE STATE OF CALIFORNIA OR ITS OFFICERS OR AGENTS SHALL NOT BE RESPONSIBLE FOR THE ACCURACY OR COMPLETENESS OF SCANNED COPIES OF THIS PLAN SHEET.

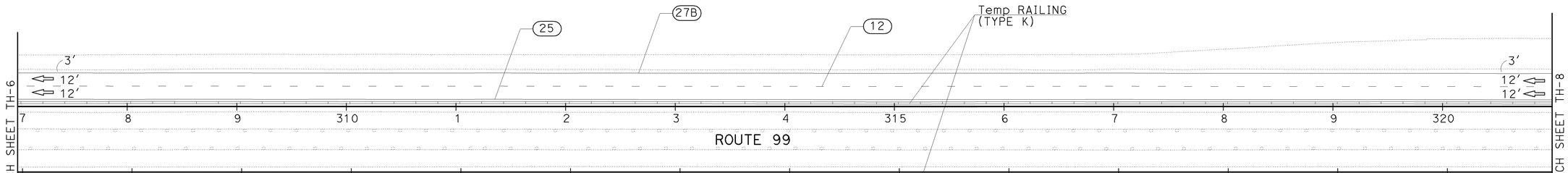

TRAFFIC HANDLING PLAN
(STAGE 3)

TH-7

SCALE: 1"=50′

THIS PLAN ACCURATE FOR TRAFFIC HANDLING ONLY.

CALCULATED-DESIGNED BY

CHECKED BY

REVISED BY

DATE REVISED

HASEEB YOUSAF

MAZIN AL-ALI

FUNCTIONAL SUPERVISOR

M. QATAMI

STATE OF CALIFORNIA - DEPARTMENT OF TRANSPORTATION

Caltrans®

TRAFFIC DESIGN

LAST REVISION 06-23-09

DATE PLOTTED => 28-SEP-2009

TIME PLOTTED => 13:20

BORDER LAST REVISED 4/11/2008

RELATIVE BORDER SCALE IS IN INCHES 0 1 2 3

USERNAME => trmariak

DGN FILE => 644261md007.dgn

CU 06386

EA 442611

Dist	COUNTY	ROUTE	POST MILES TOTAL PROJECT	SHEET No.	TOTAL SHEETS
06	Fre	99	26.7/30.6	102	242

REGISTERED CIVIL ENGINEER 06-23-09 DATE

9-28-09
PLANS APPROVAL DATE

REGISTERED PROFESSIONAL ENGINEER
MAZIN H. AL-ALI
No. 65523
Exp. 9/30/09
CIVIL
STATE OF CALIFORNIA

THE STATE OF CALIFORNIA OR ITS OFFICERS OR AGENTS SHALL NOT BE RESPONSIBLE FOR THE ACCURACY OR COMPLETENESS OF SCANNED COPIES OF THIS PLAN SHEET.

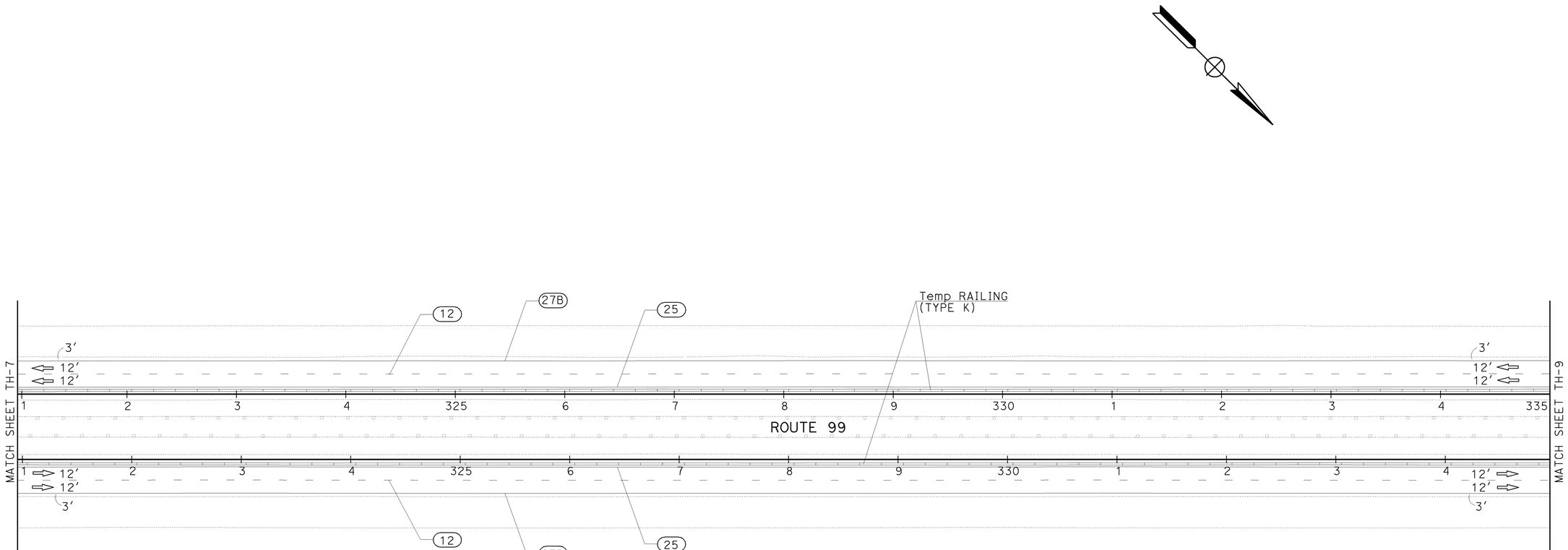

TRAFFIC HANDLING PLAN
(STAGE 3)

SCALE: 1"=50'

TH-8

THIS PLAN ACCURATE FOR TRAFFIC HANDLING ONLY.

STATE OF CALIFORNIA - DEPARTMENT OF TRANSPORTATION
Caltrans
TRAFFIC DESIGN

FUNCTIONAL SUPERVISOR: M. QATAMI

CALCULATED-DESIGNED BY: HASEEB YOUSAF
CHECKED BY: MAZIN AL-ALI

REVISED BY
DATE REVISED

LAST REVISION 06-23-09
DATE PLOTTED => 28-SEP-2009
TIME PLOTTED => 13:20

Dist	COUNTY	ROUTE	POST MILES TOTAL PROJECT	SHEET No.	TOTAL SHEETS
06	Fre	99	26.7/30.6	103	242

REGISTERED CIVIL ENGINEER — DATE: 06-23-09

PLANS APPROVAL DATE: 9-28-09

MAZIN H. AL-ALI No. 65523 Exp. 9/30/09 CIVIL — REGISTERED PROFESSIONAL ENGINEER — STATE OF CALIFORNIA

THE STATE OF CALIFORNIA OR ITS OFFICERS OR AGENTS SHALL NOT BE RESPONSIBLE FOR THE ACCURACY OR COMPLETENESS OF SCANNED COPIES OF THIS PLAN SHEET.

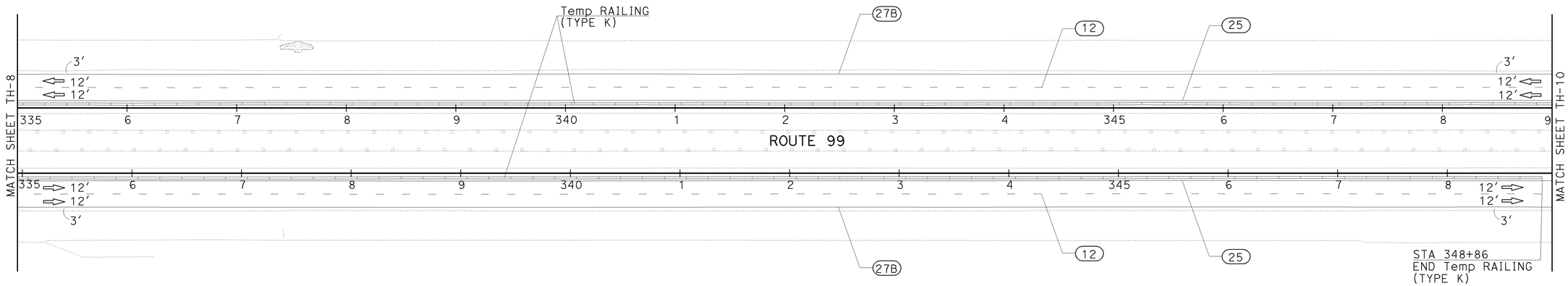

THIS PLAN ACCURATE FOR TRAFFIC HANDLING ONLY.

TRAFFIC HANDLING PLAN
(STAGE 3)

SCALE: 1"=50′

TH-9

LAST REVISION 06-23-09
DATE PLOTTED => 28-SEP-2009
TIME PLOTTED => 13:20

CALCULATED-DESIGNED BY: HASEEB YOUSAF
CHECKED BY: MAZIN AL-ALI
REVISED BY
DATE REVISED
FUNCTIONAL SUPERVISOR: M. QATAMI
STATE OF CALIFORNIA - DEPARTMENT OF TRANSPORTATION
Caltrans®
TRAFFIC DESIGN

BORDER LAST REVISED 4/11/2008

RELATIVE BORDER SCALE IS IN INCHES 0 1 2 3

USERNAME => trmariak
DGN FILE => 644261md009.dgn

CU 06386

EA 442611

Dist	COUNTY	ROUTE	POST MILES TOTAL PROJECT	SHEET No.	TOTAL SHEETS
06	Fre	99	26.7/30.6	104	242

MAZ - AL I 06-23-09
REGISTERED CIVIL ENGINEER DATE

9-28-09
PLANS APPROVAL DATE

REGISTERED PROFESSIONAL ENGINEER
MAZIN H. AL-ALI
No. 65523
Exp. 9/30/09
CIVIL
STATE OF CALIFORNIA

THE STATE OF CALIFORNIA OR ITS OFFICERS OR AGENTS SHALL NOT BE RESPONSIBLE FOR THE ACCURACY OR COMPLETENESS OF SCANNED COPIES OF THIS PLAN SHEET.

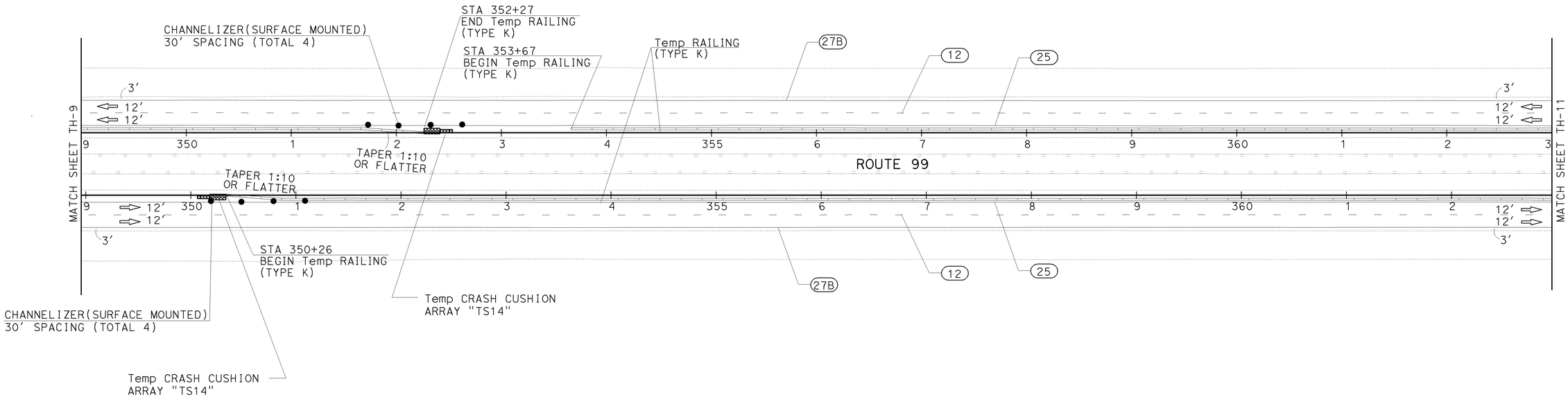

TRAFFIC HANDLING PLAN
(STAGE 3)

TH-10

SCALE: 1"=50'

THIS PLAN ACCURATE FOR TRAFFIC HANDLING ONLY.

CALCULATED-DESIGNED BY: HASEEB YOUSAF
CHECKED BY: MAZIN AL-ALI
REVISED BY
DATE REVISED
FUNCTIONAL SUPERVISOR: M. QATAMI
STATE OF CALIFORNIA - DEPARTMENT OF TRANSPORTATION
TRAFFIC DESIGN
Caltrans

LAST REVISION 06-23-09
DATE PLOTTED => 28-SEP-2009
TIME PLOTTED => 13:20

BORDER LAST REVISED 4/11/2008
RELATIVE BORDER SCALE IS IN INCHES 0 1 2 3
USERNAME => trmariak
DGN FILE => 644261md010.dgn
CU 06386
EA 442611

Dist	COUNTY	ROUTE	POST MILES TOTAL PROJECT	SHEET No.	TOTAL SHEETS
06	Fre	99	26.7/30.6	105	242

MAZ - AL-I 06-23-09
REGISTERED CIVIL ENGINEER DATE

9-28-09
PLANS APPROVAL DATE

REGISTERED PROFESSIONAL ENGINEER
MAZIN H. AL-ALI
No. 65523
Exp. 9/30/09
CIVIL
STATE OF CALIFORNIA

THE STATE OF CALIFORNIA OR ITS OFFICERS OR AGENTS SHALL NOT BE RESPONSIBLE FOR THE ACCURACY OR COMPLETENESS OF SCANNED COPIES OF THIS PLAN SHEET.

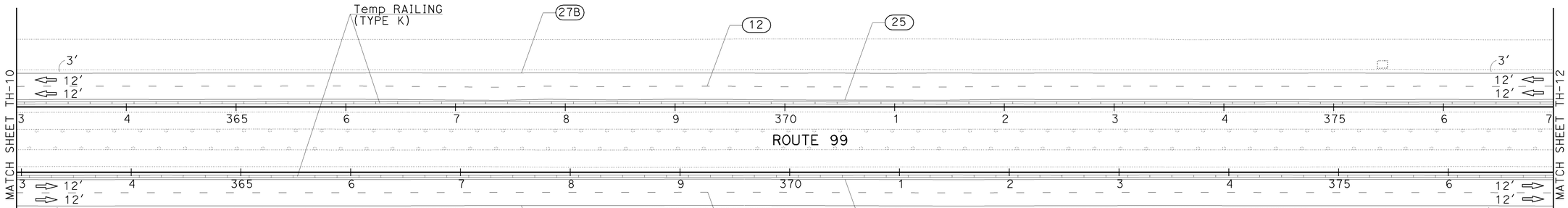

TRAFFIC HANDLING PLAN
(STAGE 3)

SCALE: 1"=50'

TH-11

THIS PLAN ACCURATE FOR TRAFFIC HANDLING ONLY.

STATE OF CALIFORNIA - DEPARTMENT OF TRANSPORTATION
Caltrans
TRAFFIC DESIGN
FUNCTIONAL SUPERVISOR: M. QATAMI
CALCULATED-DESIGNED BY: HASEEB YOUSAF
CHECKED BY: MAZIN AL-ALI
REVISED BY
DATE REVISED

LAST REVISION
DATE PLOTTED => 28-SEP-2009
TIME PLOTTED => 13:20
06-23-09

BORDER LAST REVISED 4/11/2008
RELATIVE BORDER SCALE IS IN INCHES 0 1 2 3
USERNAME => trmariak
DGN FILE => 644261md011.dgn
CU 06386
EA 442611

Dist	COUNTY	ROUTE	POST MILES TOTAL PROJECT	SHEET No.	TOTAL SHEETS
06	Fre	99	26.7/30.6	106	242

MAz - AL i 06-23-09
REGISTERED CIVIL ENGINEER DATE

9-28-09
PLANS APPROVAL DATE

REGISTERED PROFESSIONAL ENGINEER
MAZIN H. AL-ALI
No. 65523
Exp. 9/30/09
CIVIL
STATE OF CALIFORNIA

THE STATE OF CALIFORNIA OR ITS OFFICERS OR AGENTS SHALL NOT BE RESPONSIBLE FOR THE ACCURACY OR COMPLETENESS OF SCANNED COPIES OF THIS PLAN SHEET.

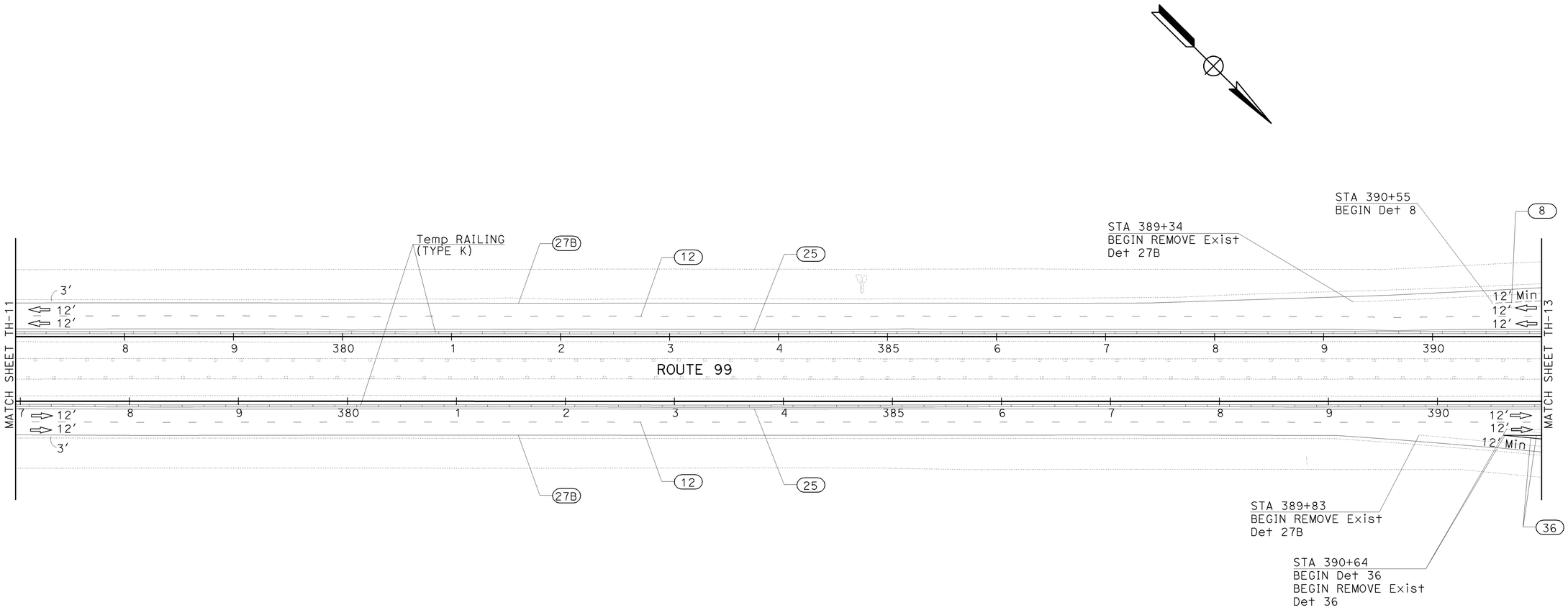

TRAFFIC HANDLING PLAN
(STAGE 3)

SCALE: 1"=50'

TH-12

THIS PLAN ACCURATE FOR TRAFFIC HANDLING ONLY.

LAST REVISION DATE PLOTTED => 28-SEP-2009
06-23-09 TIME PLOTTED => 13:21

CALCULATED-DESIGNED BY: HASEEB YOUSAF
CHECKED BY: MAZIN AL-ALI
REVISED BY
DATE REVISED
FUNCTIONAL SUPERVISOR: M. QATAMI
STATE OF CALIFORNIA - DEPARTMENT OF TRANSPORTATION
Caltrans®
TRAFFIC DESIGN

BORDER LAST REVISED 4/11/2008

RELATIVE BORDER SCALE IS IN INCHES 0 1 2 3

USERNAME => trmariak
DGN FILE => 644261md012.dgn

CU 06386

EA 442611

Dist	COUNTY	ROUTE	POST MILES TOTAL PROJECT	SHEET No.	TOTAL SHEETS
06	Fre	99	26.7/30.6	107	242

MAZ - AL-I 06-23-09
REGISTERED CIVIL ENGINEER DATE

9-28-09
PLANS APPROVAL DATE

REGISTERED PROFESSIONAL ENGINEER
MAZIN H. AL-ALI
No. 65523
Exp. 9/30/09
CIVIL
STATE OF CALIFORNIA

THE STATE OF CALIFORNIA OR ITS OFFICERS OR AGENTS SHALL NOT BE RESPONSIBLE FOR THE ACCURACY OR COMPLETENESS OF SCANNED COPIES OF THIS PLAN SHEET.

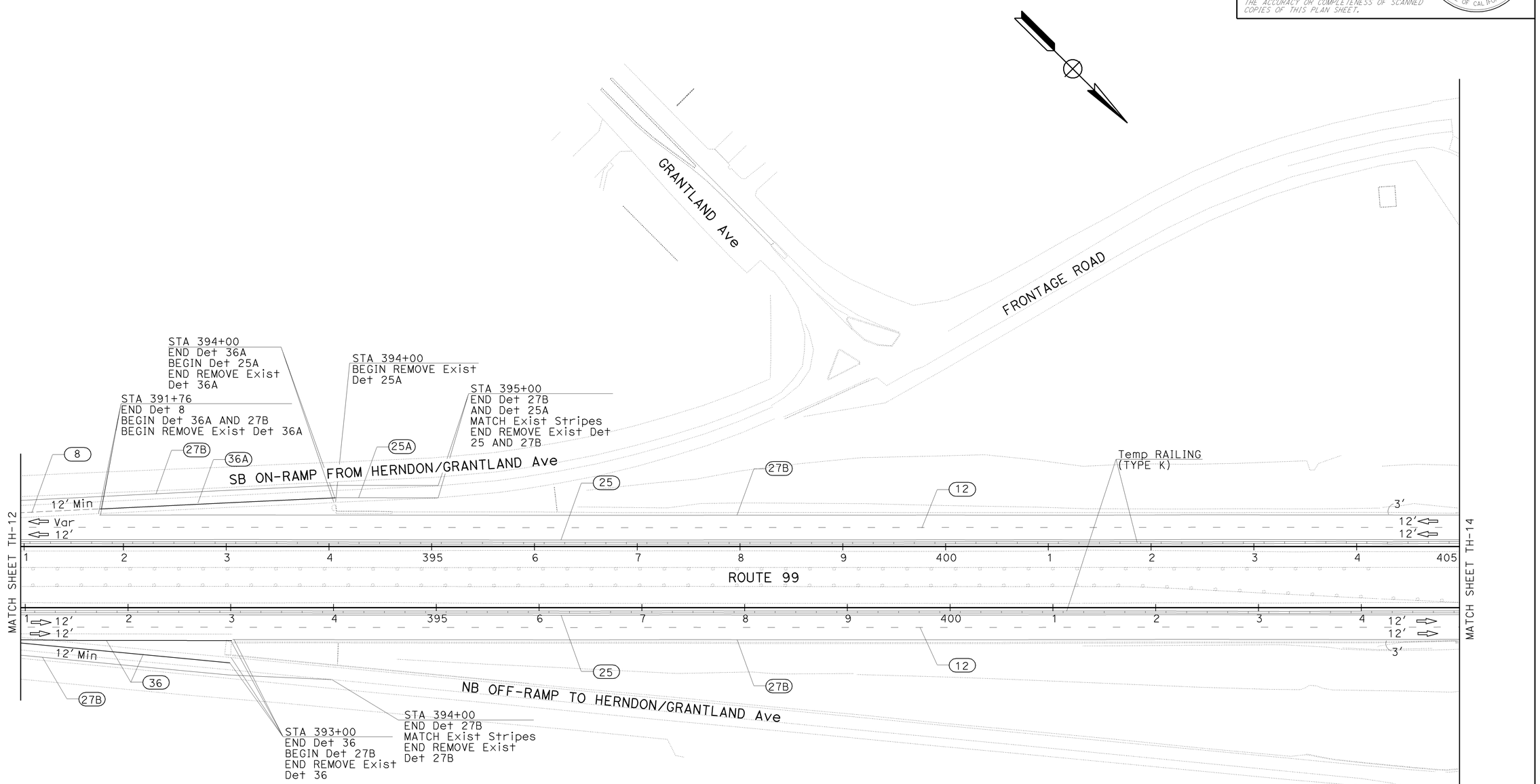

TRAFFIC HANDLING PLAN
(STAGE 3)

SCALE: 1"=50'

TH-13

THIS PLAN ACCURATE FOR TRAFFIC HANDLING ONLY.

CALCULATED-DESIGNED BY
CHECKED BY
REVISED BY
DATE REVISED

HASEEB YOUSAF
MAZIN AL-ALI

FUNCTIONAL SUPERVISOR
M. QATAMI

STATE OF CALIFORNIA - DEPARTMENT OF TRANSPORTATION
TRAFFIC DESIGN

LAST REVISION
DATE PLOTTED => 28-SEP-2009
TIME PLOTTED => 13:21
06-23-09

BORDER LAST REVISED 4/11/2008

RELATIVE BORDER SCALE IS IN INCHES 0 1 2 3

USERNAME => trmariak
DGN FILE => 644261md013.dgn

CU 06386

EA 442611

Dist	COUNTY	ROUTE	POST MILES TOTAL PROJECT	SHEET No.	TOTAL SHEETS
06	Fre	99	26.7/30.6	108	242

REGISTERED CIVIL ENGINEER 06-23-09 DATE

9-28-09
PLANS APPROVAL DATE

REGISTERED PROFESSIONAL ENGINEER MAZIN H. AL-ALI No. 65523 Exp. 9/30/09 CIVIL STATE OF CALIFORNIA

THE STATE OF CALIFORNIA OR ITS OFFICERS OR AGENTS SHALL NOT BE RESPONSIBLE FOR THE ACCURACY OR COMPLETENESS OF SCANNED COPIES OF THIS PLAN SHEET.

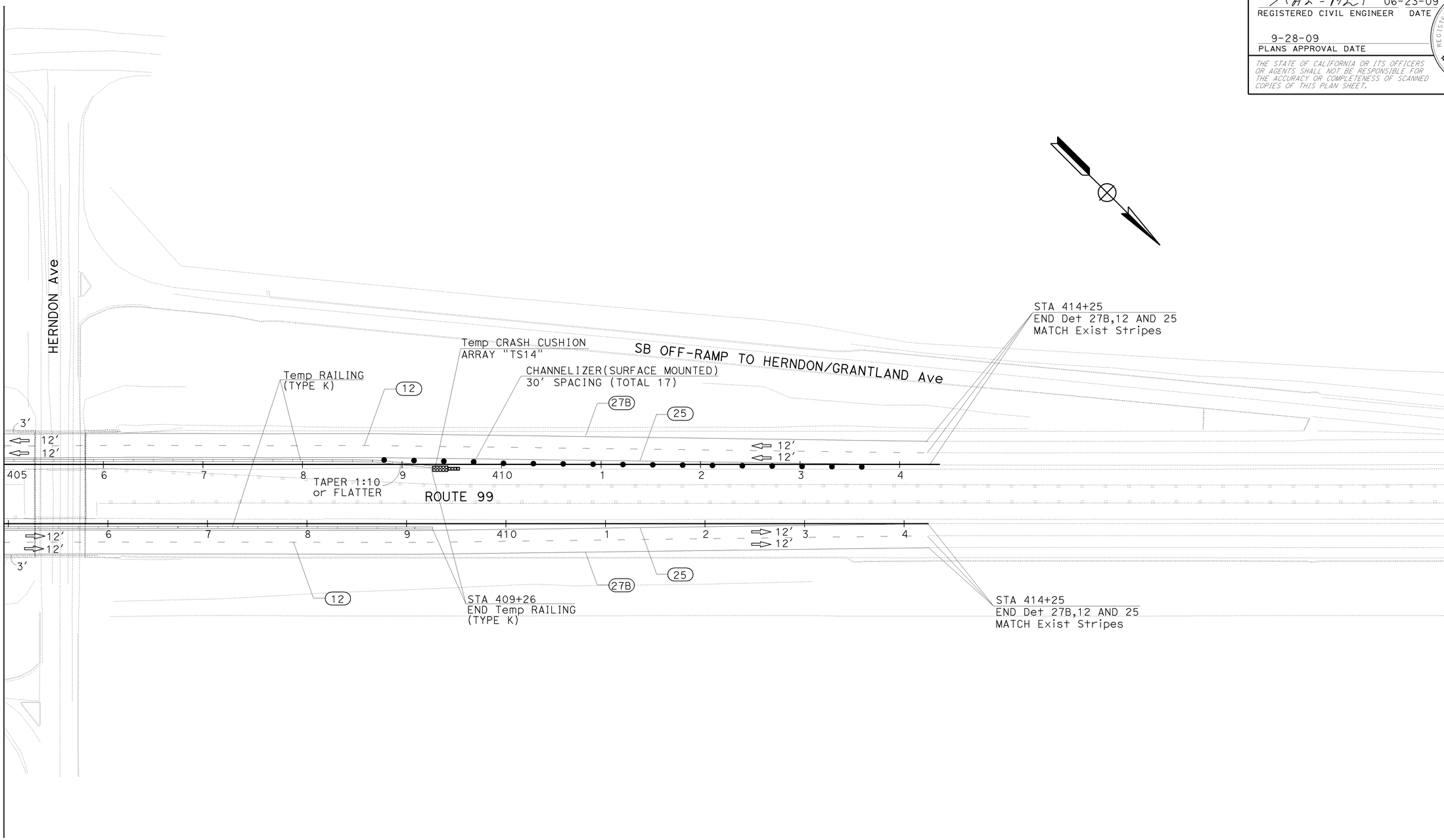

TRAFFIC HANDLING PLAN
(STAGE 3)

SCALE: 1"=50'

TH-14

THIS PLAN ACCURATE FOR TRAFFIC HANDLING ONLY.

STATE OF CALIFORNIA - DEPARTMENT OF TRANSPORTATION
Caltrans
TRAFFIC DESIGN

FUNCTIONAL SUPERVISOR: M. QATAMI
CALCULATED-DESIGNED BY: HASEEB YOUSAF
CHECKED BY: MAZIN AL-ALI
REVISED BY
DATE REVISED

LAST REVISION 06-23-09
DATE PLOTTED => 28-SEP-2009
TIME PLOTTED => 13:43

Dist	COUNTY	ROUTE	POST MILES TOTAL PROJECT	SHEET No.	TOTAL SHEETS
06	Fre	99	26.7/30.6	109	242

MAZ - AL I 06-23-09
REGISTERED CIVIL ENGINEER DATE

9-28-09
PLANS APPROVAL DATE

REGISTERED PROFESSIONAL ENGINEER
MAZIN H. AL-ALI
No. 65523
Exp. 9/30/09
CIVIL
STATE OF CALIFORNIA

THE STATE OF CALIFORNIA OR ITS OFFICERS OR AGENTS SHALL NOT BE RESPONSIBLE FOR THE ACCURACY OR COMPLETENESS OF ELECTRONIC COPIES OF THIS PLAN SHEET.

PAVEMENT DELINEATION QUANTITIES (TRAFFIC HANDLING)

SHEET No.	LOCATION	DIRECTION	DETAIL No.	PAVEMENT MARKER (RETROREFLECTIVE)		REMOVE PAVEMENT MARKERS	PAINT TRAFFIC STRIPE (2-COAT)		REMOVE PAINTED TRAFFIC STRIPE	REMOVE THERMOPLASTIC TRAFFIC STRIPE	
				TYPE G CLEAR (ONE-WAY)	TYPE H YELLOW (TWO-WAY)		4"	8"		YELLOW (Hazadous Waste)	WHITE
				EA	EA	EA	LF	LF	LF	LF	LF
TH-1 THRU TH-3	STA 231+68 TO STA 265+00	SB	27B	71		71	3332		3332		
	STA 231+68 TO STA 265+00	SB	12	71		71	3332		833		
	STA 235+20 TO STA 265+00	SB	25		64		2980		2980		
	STA 231+68 TO STA 238+50	SB	12			15					171
	STA 231+68 TO STA 238+50	SB	27B								682
	STA 231+68 TO STA 265+00	NB	27B				3332		3332		
	STA 231+68 TO STA 265+00	NB	12	71		71	3332		833		
	STA 231+68 TO STA 265+00	NB	25		71	71	3332		3332		
	STA 231+68 TO STA 236+00	NB	27			10				862	
	STA 231+68 TO STA 238+50	NB	27B								682
	STA 231+68 TO STA 238+50	NB	12			15					171
TH-4 THRU TH-6	STA 265+00 TO STA 271+00	SB	27B				600		600		
	STA 267+10 TO STA 268+92	SB	8				182		53		
	STA 268+90 TO STA 270+84	SB	36A	9		9		192	384		
	STA 270+84 TO STA 271+84	SB	25A		5	5	100		100		
	STA 270+84 TO STA 271+84	SB	25A			5				100	
	STA 268+44 TO STA 270+84	SB	36A			11					480
	STA 268+44 TO STA 270+84	SB	27B								240
	STA 268+92 TO STA 277+00	SB	27B				808		808		
	STA 277+00 TO STA 279+31	SB	36	20		20		231	462		
	STA 277+00 TO STA 279+31	SB	36			20					462
	STA 276+00 TO STA 280+00	SB	27B							400	
	STA 276+00 TO STA 307+00	SB	27B				3100		3100		
	STA 265+00 TO STA 307+00	SB	12	89		89	4200		1050		
	STA 265+00 TO STA 307+00	SB	25		89	89	4200		4200		
	STA 265+00 TO STA 284+47	NB	27B				1947		1947		
	STA 280+51 TO STA 284+47	NB	27B							396	
	STA 281+11 TO STA 283+50	NB	36			21					478
	STA 281+11 TO STA 283+50	NB	36	21		21		478			
	STA 283+50 TO STA 295+80	NB	27B				1230		1230		
	STA 290+24 TO STA 307+00	NB	27B				1676		1676		
	STA 291+50 TO STA 295+80	NB	36A			19					860
	STA 290+24 TO STA 294+33	NB	36A	18		18		409	818		
	STA 295+80 TO STA 297+19	NB	8				139		40		
	STA 265+00 TO STA 307+00	NB	12	89		89	4200		1050		
	STA 265+00 TO STA 307+00	NB	25		89	89	4200		4200		
	STA 289+34 TO STA 290+24	SB	25A		5	5	100		100		
TH-7 THRU TH-9	STA 307+00 TO STA 349+00	SB	25		89	89	4200		4200		
	STA 307+00 TO STA 349+00	SB	12	89		89	4200		1050		
	STA 307+00 TO STA 349+00	SB	27B				4200		4200		
	SUBTOTAL			548	412	1012	58,942	1310		1758	4226
TOTAL				960		1012	60,252		45,930	1758	4226

TEMPORARY RAILING (TYPE K)

STAGE No.	DIRECTION	SHEET No.	LOCATION	LF
3	SOUTHBOUND	TH-1 THRU TH-14	STA 235+20 TO STA 275+61	4041
			STA 277+01 TO STA 352+27	7526
			STA 353+67 TO STA 409+26	5559
3	NORTHBOUND	TH-1 THRU TH-14	STA 235+20 TO STA 269+40	3420
			STA 270+80 TO STA 348+86	7806
			STA 350+26 TO STA 409+26	5900
TOTAL				34,252

CHANNELIZER (SURFACE MOUNTED)

SHEET No.	EA
TH-1	14
TH-4	8
TH-10	8
TH-14	17
TOTAL	47

TEMPORARY CRASH CUSHION MODULE

SHEET No.	EA
TH-1	14
TH-4	28
TH-10	28
TH-14	14
TOTAL	84

TRAFFIC HANDLING QUANTITIES THQ-1

STATE OF CALIFORNIA - DEPARTMENT OF TRANSPORTATION
Caltrans
TRAFFIC DESIGN
FUNCTIONAL SUPERVISOR: M. QATAMI
CALCULATED-DESIGNED BY: MAZIN AL-ALI
CHECKED BY: HASEEB YOUSAF
REVISED BY
DATE REVISED

LAST REVISION | DATE PLOTTED => 28-SEP-2009
06-23-09 | TIME PLOTTED => 13:43

BORDER LAST REVISED 4/11/2008
RELATIVE BORDER SCALE IS IN INCHES 0 1 2 3
USERNAME => trrichf
DGN FILE => 644261mf001.dgn
CU 06386
EA 442611

Dist	COUNTY	ROUTE	POST MILES TOTAL PROJECT	SHEET No.	TOTAL SHEETS
06	Fre	99	26.7/30.6	110	242

9A2 - AL1 06-23-09
REGISTERED CIVIL ENGINEER DATE

9-28-09
PLANS APPROVAL DATE

REGISTERED PROFESSIONAL ENGINEER
MAZIN H. AL-ALI
No. 65523
Exp 9/30/09
CIVIL
STATE OF CALIFORNIA

THE STATE OF CALIFORNIA OR ITS OFFICERS OR AGENTS SHALL NOT BE RESPONSIBLE FOR THE ACCURACY OR COMPLETENESS OF ELECTRONIC COPIES OF THIS PLAN SHEET.

PAVEMENT DELINEATION QUANTITIES
(TRAFFIC HANDLING)

SHEET No.	LOCATION	DIRECTION	DETAIL No.	PAVEMENT MARKER (RETROREFLECTIVE)		REMOVE PAVEMENT MARKERS	PAINT TRAFFIC STRIPE (2-COAT)		REMOVE PAINTED TRAFFIC STRIPE	REMOVE THERMOPLASTIC TRAFFIC STRIPE	
				TYPE G CLEAR (ONE-WAY)	TYPE H YELLOW (TWO-WAY)		4"	8"		YELLOW (Hazadous Waste)	WHITE
				EA	EA	EA	LF	LF	LF	LF	LF
TH-7 THRU TH-9	STA 307+00 TO STA 349+00	NB	27B				4200		4200		
	STA 307+00 TO STA 349+00	NB	12	89		89	4200		1050		
	STA 307+00 TO STA 349+00	NB	25		89	89	4200		4200		
TH-10 THRU TH-14	STA 349+00 TO STA 395+00	SB	27B				4600		4600		
	STA 389+34 TO STA 395+00	SB	27B								2566
	STA 390+55 TO STA 391+76	SB	8				121		35		
	STA 391+76 TO STA 394+00	SB	36A	10		10		224	448		
	STA 391+76 TO STA 394+00	SB	36A			10					448
	STA 394+00 TO STA 395+00	SB	25A			5				100	
	STA 394+00 TO STA 395+00	SB	25A		5	5	100		100		
	STA 391+76 TO STA 414+25	SB	27B				2249		2249		
	STA 349+00 TO STA 414+25	SB	12	137		137	6525		1631		
	STA 349+00 TO STA 414+25	SB	25		137	137	6525		6525		
	STA 349+00 TO STA 394+00	NB	27B				4500		4500		
	STA 389+83 TO STA 394+00	NB	27B								417
	STA 390+64 TO STA 393+00	NB	36			21					944
	STA 390+64 TO STA 393+00	NB	36	21		21		472	472		
	STA 393+00 TO STA 414+25	NB	27B				2125		2125		
	STA 349+00 TO STA 414+25	NB	12	137		137	6525		1631		
	STA 349+00 TO STA 414+25	NB	25		137	137	6525		6525		
	FROM STAGE 2					2664					
	SUBTOTAL			394	368	3462	52,395	696	40,291	100	4375
	FROM THQ-1			960		1012	60,252		45,930	1758	4226
TOTAL				* 1722		4474	113,343		86,221	1858	8601

* QUANTITY INCLUDED IN PAVEMENT DELINEATION QUANTITIES TABLE ON SHEET PDQ-2

TRAFFIC HANDLING QUANTITIES
THQ-2

CALCULATED-DESIGNED BY: HASEEB YOUSAF
CHECKED BY: MAZIN AL-ALI
REVISED BY
DATE REVISED
FUNCTIONAL SUPERVISOR: M. QATAMI
STATE OF CALIFORNIA - DEPARTMENT OF TRANSPORTATION
Caltrans TRAFFIC DESIGN

LAST REVISION 06-23-09
DATE PLOTTED => 28-SEP-2009
TIME PLOTTED => 13:43

BORDER LAST REVISED 4/11/2008
RELATIVE BORDER SCALE IS IN INCHES 0 1 2 3
USERNAME => trrichf
DGN FILE => 644261mf002.dgn
CU 06386
EA 442611

Dist	COUNTY	ROUTE	POST MILES TOTAL PROJECT	SHEET No.	TOTAL SHEETS
06	Fre	99	26.7/30.6	111	242

MAZ - AL-I 06-23-09
REGISTERED CIVIL ENGINEER DATE

9-28-09
PLANS APPROVAL DATE

REGISTERED PROFESSIONAL ENGINEER
MAZIN H. AL-ALI
No. 65523
Exp 9/30/09
CIVIL
STATE OF CALIFORNIA

THE STATE OF CALIFORNIA OR ITS OFFICERS OR AGENTS SHALL NOT BE RESPONSIBLE FOR THE ACCURACY OR COMPLETENESS OF SCANNED COPIES OF THIS PLAN SHEET.

LEGEND

- DIRECTION OF TRAFFIC
- TRAFFIC CONE
- BARRICADE (TYPE III)
- CONSTRUCTION AREA SIGN
- WORK AREA

NOTES:

1. LOCATIONS OF CONSTRUCTION AREA SIGNS SHOWN ARE APPROXIMATE, EXACT LOCATIONS WILL BE DETERMINED BY THE ENGINEER.
2. ALL DETOUR PLAN SIGNS ARE TO BE MOUNTED ON BARRICADES (TYPE III)
3. SEE SHEET CS-1 FOR ADDITIONAL CONSTRUCTION AREA SIGNS.
4. PLACE BARRICADE (TYPE III) Min 3 PER LANE. MOUNT SIGN R11-2 ON CENTER BARRICADE.

CONSTRUCTION AREA SIGNS (DETOUR)

SIGN CODE	PANEL SIZE	SIGN MESSAGE	MOUNTING METHOD	EACH (N)
M4-10R	48" x 18"	DETOUR (RIGHT)	BARRICADE	5
M4-10L	48" x 18"	DETOUR (LEFT)		4
R11-4	60" x 30"	ROAD CLOSED TO THRU TRAFFIC		1
R3-1	36" x 36"	NO RIGHT TURN		1
R3-2	36" x 36"	NO LEFT TURN		3
R11-2	48" x 30"	ROAD CLOSED		3
M3-1	24" x 12"	SOUTH		1
M3-3	24" x 12"	NORTH		1
G28-2(CA)	21" x 18"	99 SHIELD		2
SP-1	SEE DETAILS	Herndon Ave Use Shaw Exit		1
SP-2	SEE DETAILS	Grantland Ave Use Ave 7		1

(N) NOT A SEPARATE PAY ITEM. FOR INFORMATION ONLY

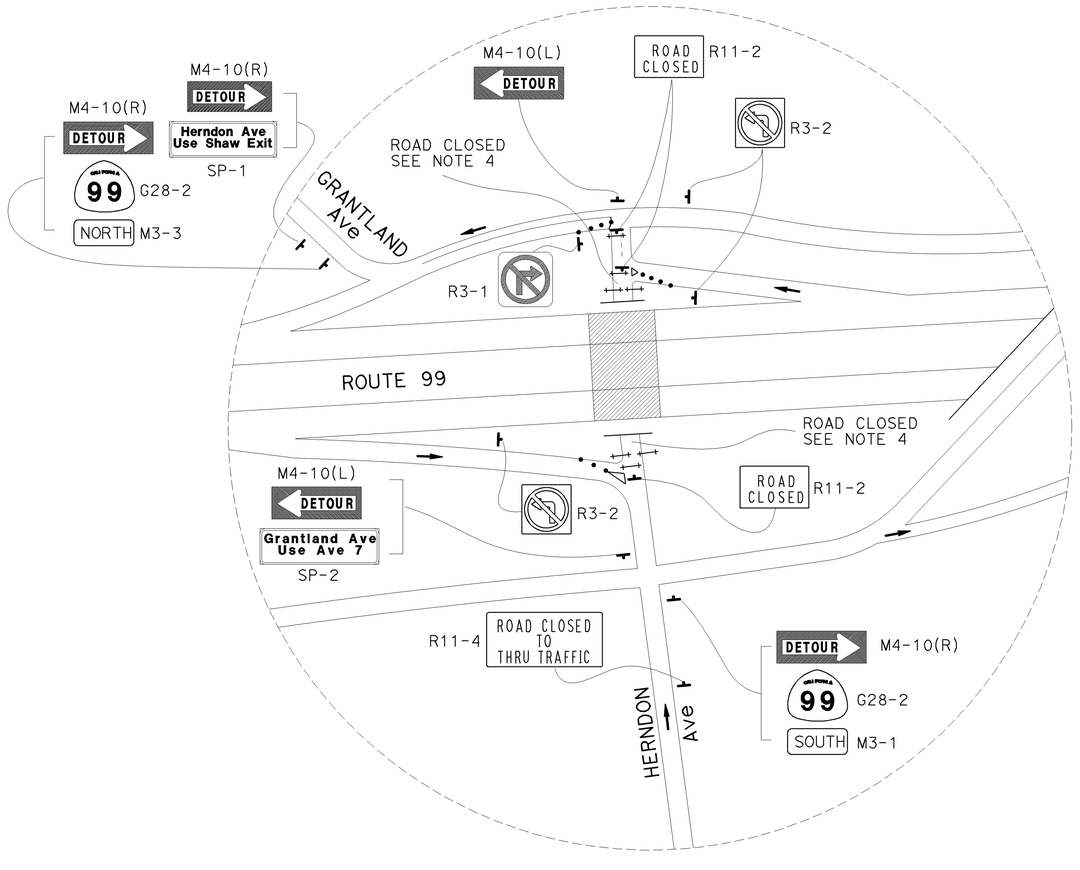

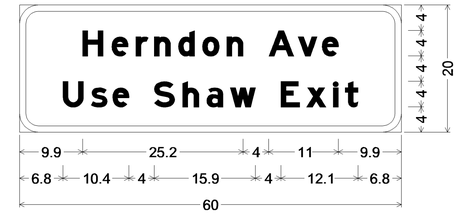

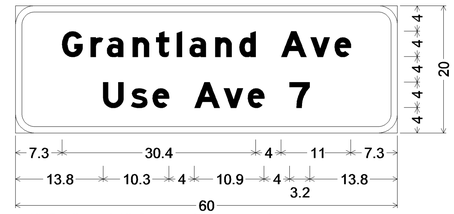

DETAIL "A"

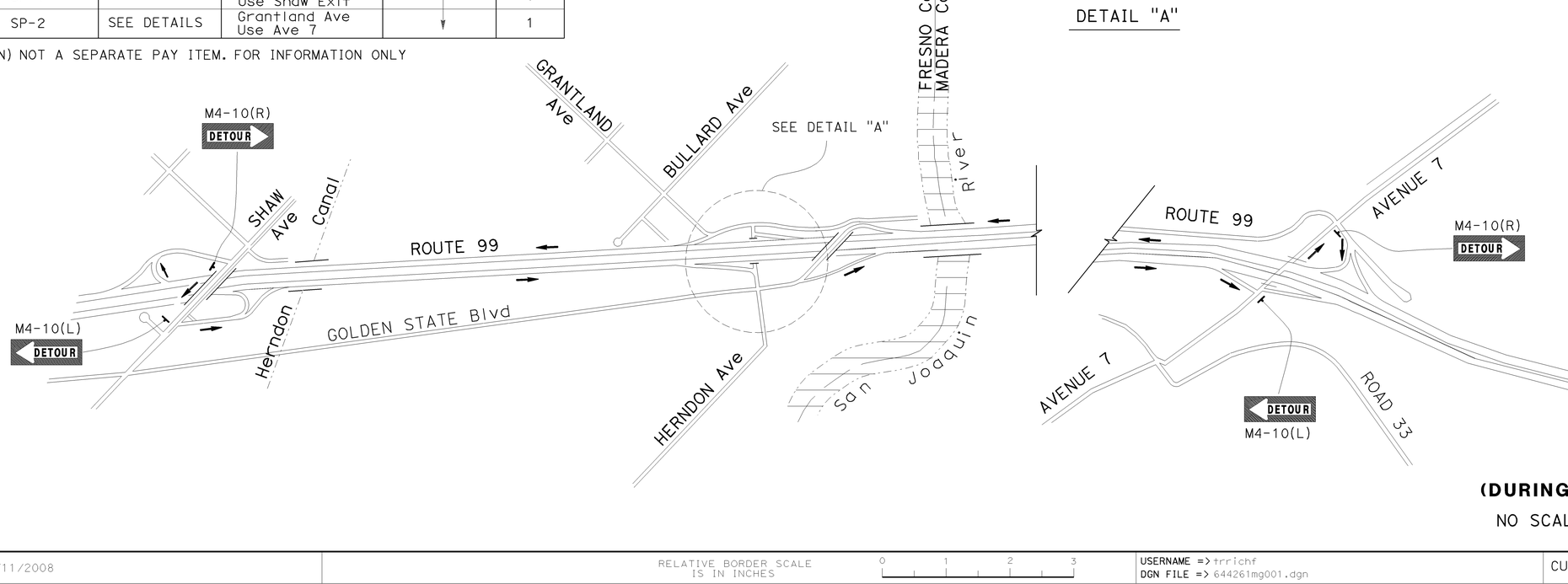

DETOUR PLAN
(DURING CLOSURE OF HERNDON Ave)

NO SCALE

DE-1

STATE OF CALIFORNIA - DEPARTMENT OF TRANSPORTATION
TRAFFIC DESIGN
FUNCTIONAL SUPERVISOR: M. QATAMI
CALCULATED-DESIGNED BY: MAZIN AL-ALI
CHECKED BY: HASEEB YOUSAF
REVISED BY
DATE REVISED

LAST REVISION
DATE PLOTTED => 28-SEP-2009
TIME PLOTTED => 13:43
06-23-09

BORDER LAST REVISED 4/11/2008
RELATIVE BORDER SCALE IS IN INCHES 0 1 2 3
USERNAME => trrichf
DGN FILE => 644261mg001.dgn
CU 06386
EA 442611

Dist	COUNTY	ROUTE	POST MILES TOTAL PROJECT	SHEET No.	TOTAL SHEETS
06	Fre	99	26.7/30.6	112	242

MAZ-AL-I 06-23-09
REGISTERED CIVIL ENGINEER DATE

9-28-09
PLANS APPROVAL DATE

REGISTERED PROFESSIONAL ENGINEER
MAZIN H. AL-ALI
No. 65523
Exp. 9/30/09
CIVIL
STATE OF CALIFORNIA

THE STATE OF CALIFORNIA OR ITS OFFICERS OR AGENTS SHALL NOT BE RESPONSIBLE FOR THE ACCURACY OR COMPLETENESS OF SCANNED COPIES OF THIS PLAN SHEET.

LEGEND

- XX — TRAFFIC STRIPE DETAIL No.
- DIRECTION OF TRAFFIC
- TYPE VI ARROW
- A — OVERHEAD SIGN
- REMOVE Exist ROADSIDE SIGN
- No. — ROADSIDE SIGN NUMBER
- CHANGE OF STRIPE DETAIL
- DELINEATOR TYPE "G"
- RESET Exist ROADSIDE SIGN

NOTE: WHEN REMOVING Exist BARRIER MOUNTED SIGNS, BOLT HOLES IN BARRIER SHALL BE FILLED WITH MORTATR.

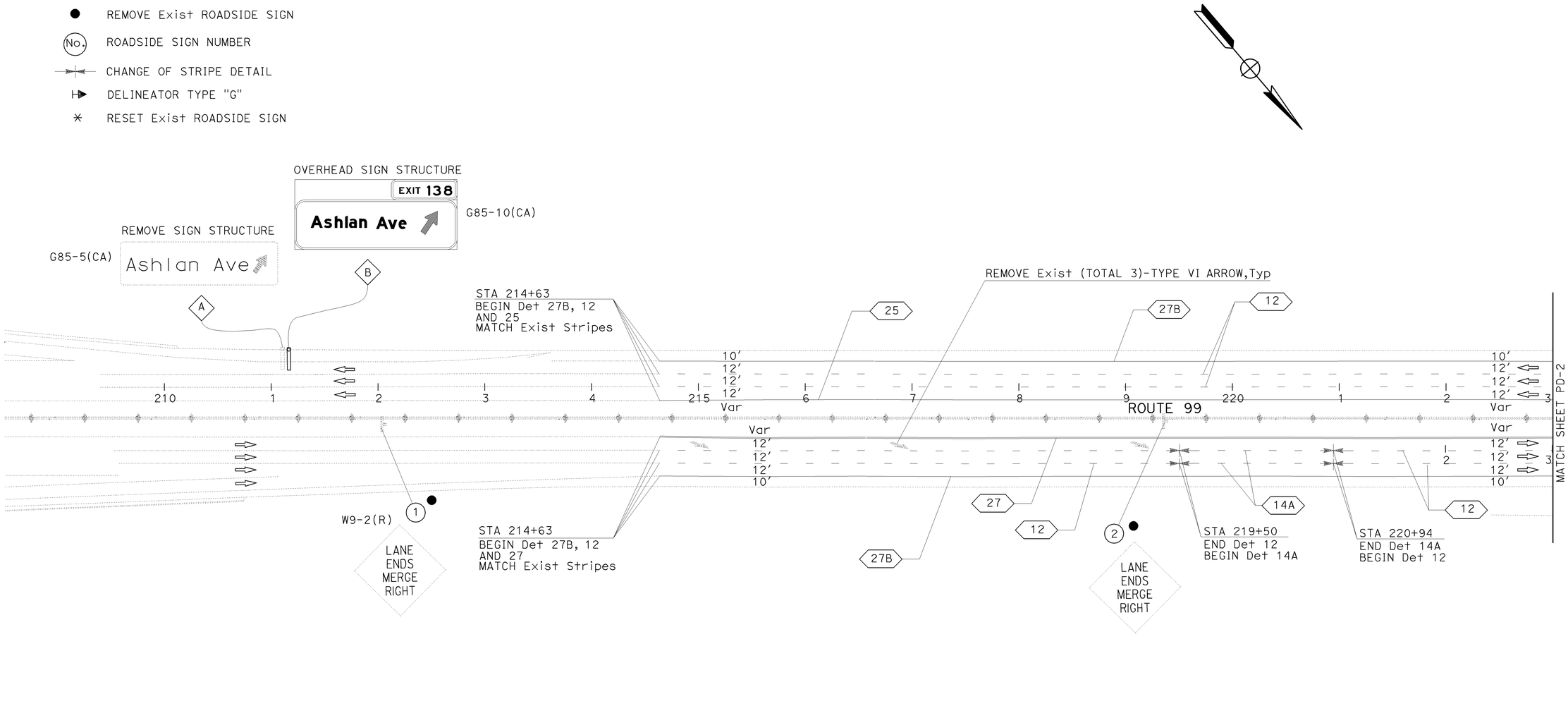

PAVEMENT DELINEATION AND SIGN PLAN

SCALE: 1"=50' **PD-1**

THIS PLAN ACCURATE FOR PAVEMENT DELINEATION AND SIGNS ONLY.

CALCULATED-DESIGNED BY: MAZIN AL-ALI
CHECKED BY: HASEEB YOUSAF
FUNCTIONAL SUPERVISOR: M. QATAMI
REVISED BY
DATE REVISED
STATE OF CALIFORNIA - DEPARTMENT OF TRANSPORTATION
TRAFFIC DESIGN

LAST REVISION DATE PLOTTED => 28-SEP-2009
TIME PLOTTED => 13:44
06-23-09

BORDER LAST REVISED 4/11/2008
RELATIVE BORDER SCALE IS IN INCHES 0 1 2 3
USERNAME => trrichf
DGN FILE => 644261na001.dgn
CU 06386
EA 442611

Dist	COUNTY	ROUTE	POST MILES TOTAL PROJECT	SHEET No.	TOTAL SHEETS
06	Fre	99	26.7/30.6	113	242

MAZ-ALI 06-23-09
REGISTERED CIVIL ENGINEER DATE

9-28-09
PLANS APPROVAL DATE

REGISTERED PROFESSIONAL ENGINEER
MAZIN H. AL-ALI
No. 65523
Exp. 9/30/09
CIVIL
STATE OF CALIFORNIA

THE STATE OF CALIFORNIA OR ITS OFFICERS OR AGENTS SHALL NOT BE RESPONSIBLE FOR THE ACCURACY OR COMPLETENESS OF SCANNED COPIES OF THIS PLAN SHEET.

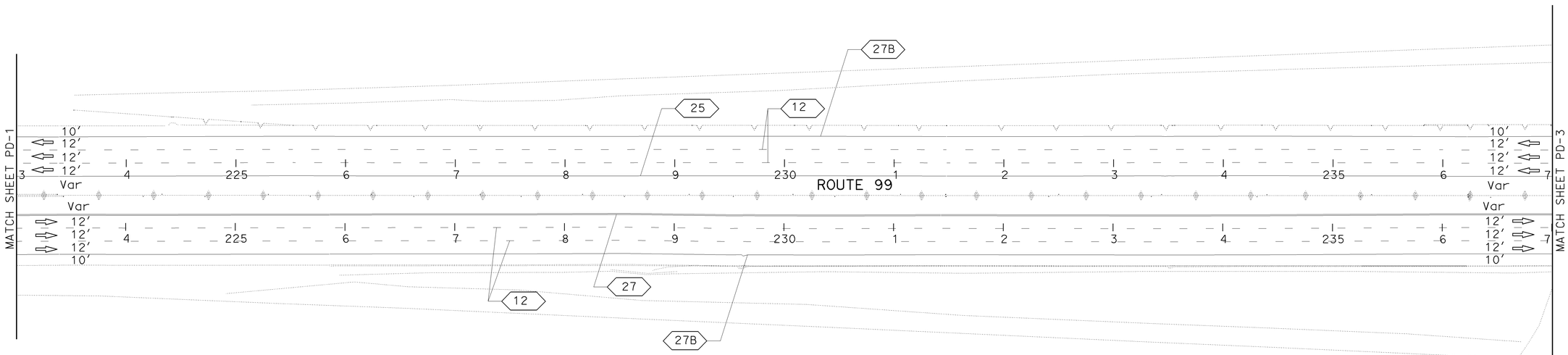

THIS PLAN ACCURATE FOR PAVEMENT DELINEATION AND SIGNS ONLY.

PAVEMENT DELINEATION AND SIGN PLAN

SCALE: 1"=50'

PD-2

REVISED BY
DATE REVISED

CALCULATED-DESIGNED BY MAZIN AL-ALI
CHECKED BY HASEEB YOUSAF
FUNCTIONAL SUPERVISOR M. QATAMI

STATE OF CALIFORNIA - DEPARTMENT OF TRANSPORTATION
Caltrans®
TRAFFIC DESIGN

LAST REVISION DATE PLOTTED => 28-SEP-2009
06-23-09 TIME PLOTTED => 13:44

BORDER LAST REVISED 4/11/2008

RELATIVE BORDER SCALE IS IN INCHES 0 1 2 3

USERNAME => trrichf
DGN FILE => 644261na002.dgn

CU 06386

EA 442611

Dist	COUNTY	ROUTE	POST MILES TOTAL PROJECT	SHEET No.	TOTAL SHEETS
06	Fre	99	26.7/30.6	114	242

MAZ - AL I 06-23-09
REGISTERED CIVIL ENGINEER DATE

9-28-09
PLANS APPROVAL DATE

REGISTERED PROFESSIONAL ENGINEER
MAZIN H. AL-ALI
No. 65523
Exp. 9/30/09
CIVIL
STATE OF CALIFORNIA

THE STATE OF CALIFORNIA OR ITS OFFICERS OR AGENTS SHALL NOT BE RESPONSIBLE FOR THE ACCURACY OR COMPLETENESS OF SCANNED COPIES OF THIS PLAN SHEET.

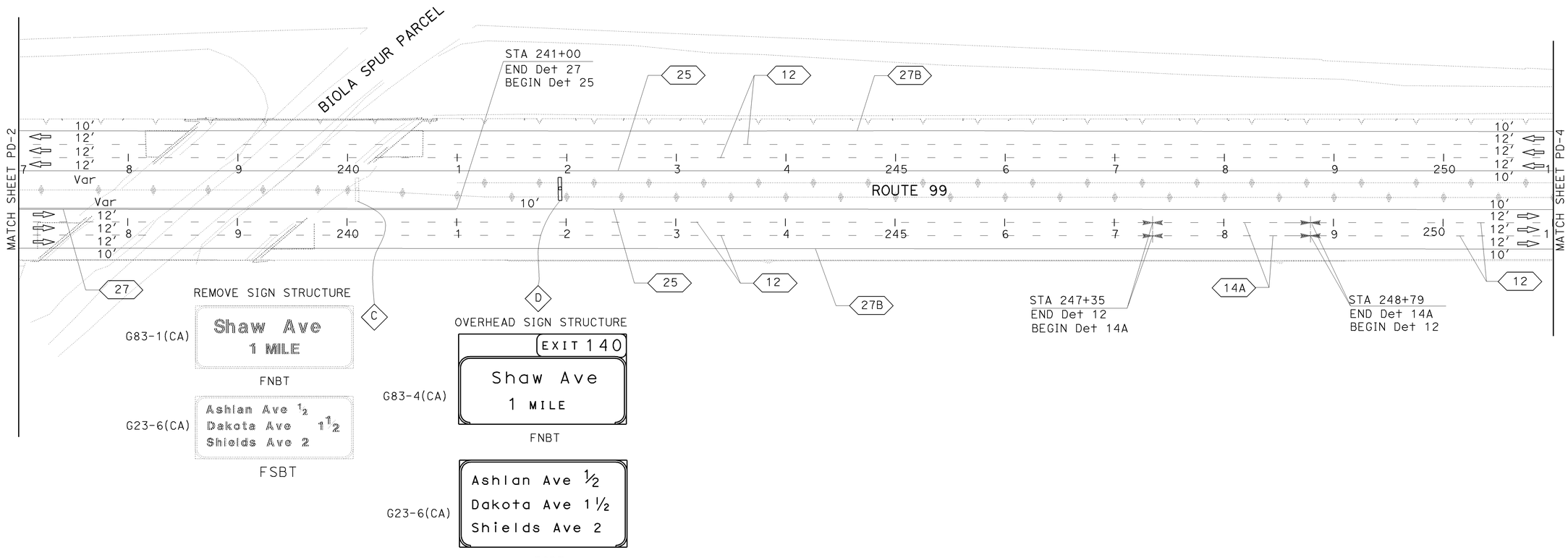

THIS PLAN ACCURATE FOR PAVEMENT DELINEATION AND SIGNS ONLY.

PAVEMENT DELINEATION AND SIGN PLAN

SCALE: 1"=50′

PD-3

CALCULATED-DESIGNED BY: MAZIN AL-ALI
CHECKED BY: HASEEB YOUSAF
REVISED BY
DATE REVISED
FUNCTIONAL SUPERVISOR: M. QATAMI
STATE OF CALIFORNIA - DEPARTMENT OF TRANSPORTATION
Caltrans®
TRAFFIC DESIGN

LAST REVISION | DATE PLOTTED => 28-SEP-2009
06-23-09 | TIME PLOTTED => 13:44

BORDER LAST REVISED 4/11/2008
RELATIVE BORDER SCALE IS IN INCHES 0 1 2 3
USERNAME => trrichf
DGN FILE => 644261na003.dgn
CU 06386
EA 442611

Dist	COUNTY	ROUTE	POST MILES TOTAL PROJECT	SHEET No.	TOTAL SHEETS
06	Fre	99	26.7/30.6	115	242

REGISTERED CIVIL ENGINEER — DATE: 06-23-09

PLANS APPROVAL DATE: 9-28-09

MAZIN H. AL-ALI No. 65523 Exp. 9/30/09 CIVIL — REGISTERED PROFESSIONAL ENGINEER — STATE OF CALIFORNIA

THE STATE OF CALIFORNIA OR ITS OFFICERS OR AGENTS SHALL NOT BE RESPONSIBLE FOR THE ACCURACY OR COMPLETENESS OF SCANNED COPIES OF THIS PLAN SHEET.

OVERHEAD SIGN STRUCTURE

EXIT 138
Ashlan Ave
1 MILE

G83-4(CA)

REMOVE SIGN STRUCTURE

G83-1(CA)

Ashlan Ave
1 MILE

THIS PLAN ACCURATE FOR PAVEMENT DELINEATION AND SIGNS ONLY.

PAVEMENT DELINEATION AND SIGN PLAN

SCALE: 1"=50′

PD-4

LAST REVISION DATE PLOTTED => 28-SEP-2009
TIME PLOTTED => 13:44
06-23-09

STATE OF CALIFORNIA - DEPARTMENT OF TRANSPORTATION
Caltrans®
TRAFFIC DESIGN
FUNCTIONAL SUPERVISOR: M. QATAMI
CALCULATED-DESIGNED BY: HASEEB YOUSAF
CHECKED BY: MAZIN AL-ALI
REVISED BY
DATE REVISED

BORDER LAST REVISED 4/11/2008

RELATIVE BORDER SCALE IS IN INCHES 0 1 2 3

USERNAME => trrichf
DGN FILE => 644261na004.dgn

CU 06386

EA 442611

Dist	COUNTY	ROUTE	POST MILES TOTAL PROJECT	SHEET No.	TOTAL SHEETS
06	Fre	99	26.7/30.6	116	242

REGISTERED CIVIL ENGINEER — DATE: 06-23-09

MAZIN H. AL-ALI No. 65523 Exp. 9/30/09 CIVIL — REGISTERED PROFESSIONAL ENGINEER — STATE OF CALIFORNIA

9-28-09
PLANS APPROVAL DATE

THE STATE OF CALIFORNIA OR ITS OFFICERS OR AGENTS SHALL NOT BE RESPONSIBLE FOR THE ACCURACY OR COMPLETENESS OF SCANNED COPIES OF THIS PLAN SHEET.

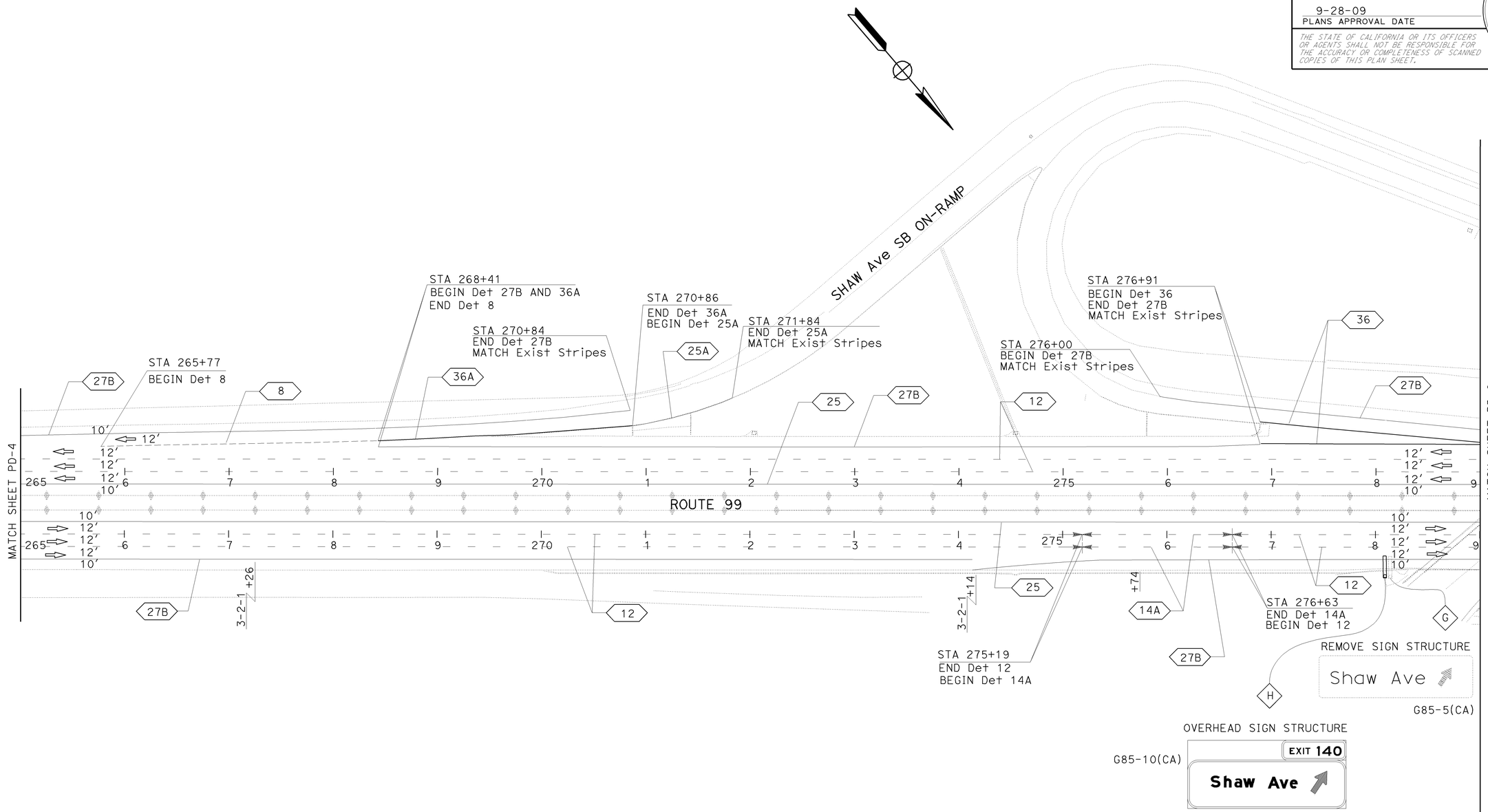

PAVEMENT DELINEATION AND SIGN PLAN

SCALE: 1"=50′

PD-5

THIS PLAN ACCURATE FOR PAVEMENT DELINEATION AND SIGNS ONLY.

CALCULATED-DESIGNED BY: MAZIN AL-ALI
CHECKED BY: HASEEB YOUSAF
REVISED BY
DATE REVISED
FUNCTIONAL SUPERVISOR: M. QATAMI
STATE OF CALIFORNIA - DEPARTMENT OF TRANSPORTATION
TRAFFIC DESIGN

LAST REVISION DATE PLOTTED => 28-SEP-2009
TIME PLOTTED => 13:44
06-23-09

BORDER LAST REVISED 4/11/2008
RELATIVE BORDER SCALE IS IN INCHES 0 1 2 3
USERNAME => trrichf
DGN FILE => 644261na005.dgn
CU 06386
EA 442611

Dist	COUNTY	ROUTE	POST MILES TOTAL PROJECT	SHEET No.	TOTAL SHEETS
06	Fre	99	26.7/30.6	117	242

REGISTERED CIVIL ENGINEER — DATE: 06-23-09

PLANS APPROVAL DATE: 9-28-09

MAZIN H. AL-ALI No. 65523 Exp. 9/30/09 CIVIL — REGISTERED PROFESSIONAL ENGINEER — STATE OF CALIFORNIA

THE STATE OF CALIFORNIA OR ITS OFFICERS OR AGENTS SHALL NOT BE RESPONSIBLE FOR THE ACCURACY OR COMPLETENESS OF SCANNED COPIES OF THIS PLAN SHEET.

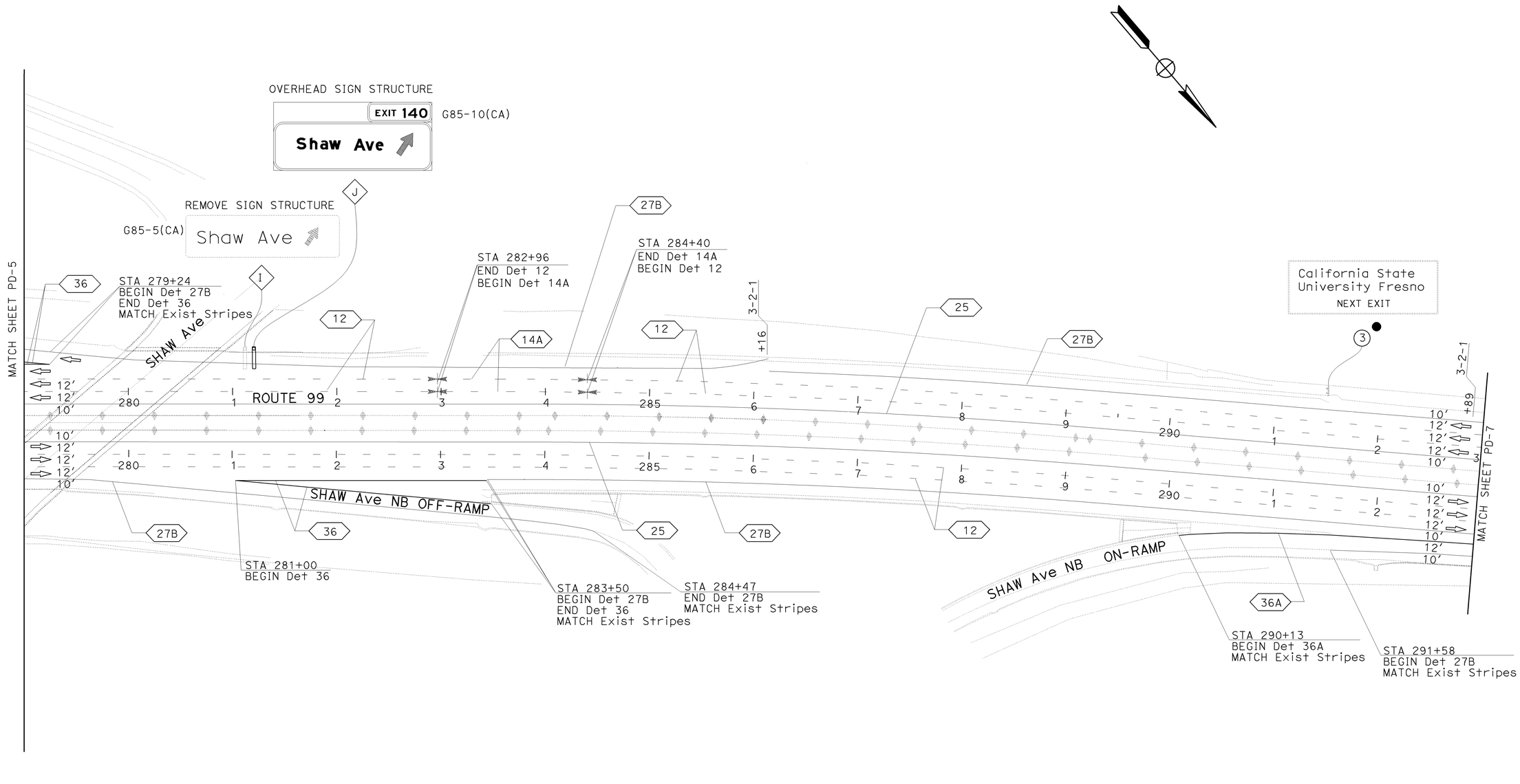

PAVEMENT DELINEATION AND SIGN PLAN

SCALE: 1"=50'

PD-6

THIS PLAN ACCURATE FOR PAVEMENT DELINEATION AND SIGNS ONLY.

STATE OF CALIFORNIA - DEPARTMENT OF TRANSPORTATION
TRAFFIC DESIGN
FUNCTIONAL SUPERVISOR: M. QATAMI
CALCULATED-DESIGNED BY: MAZIN AL-ALI
CHECKED BY: HASEEB YOUSAF
REVISED BY
DATE REVISED

LAST REVISION DATE PLOTTED => 28-SEP-2009
TIME PLOTTED => 13:44
06-23-09

BORDER LAST REVISED 4/11/2008

RELATIVE BORDER SCALE IS IN INCHES 0 1 2 3

USERNAME => trrichf
DGN FILE => 644261na006.dgn

CU 06386

EA 442611

Dist	COUNTY	ROUTE	POST MILES TOTAL PROJECT	SHEET No.	TOTAL SHEETS
06	Fre	99	26.7/30.6	118	242

MAZ-ALI 06-23-09
REGISTERED CIVIL ENGINEER DATE

9-28-09
PLANS APPROVAL DATE

REGISTERED PROFESSIONAL ENGINEER
MAZIN H. AL-ALI
No. 65523
Exp. 9/30/09
CIVIL
STATE OF CALIFORNIA

THE STATE OF CALIFORNIA OR ITS OFFICERS OR AGENTS SHALL NOT BE RESPONSIBLE FOR THE ACCURACY OR COMPLETENESS OF SCANNED COPIES OF THIS PLAN SHEET.

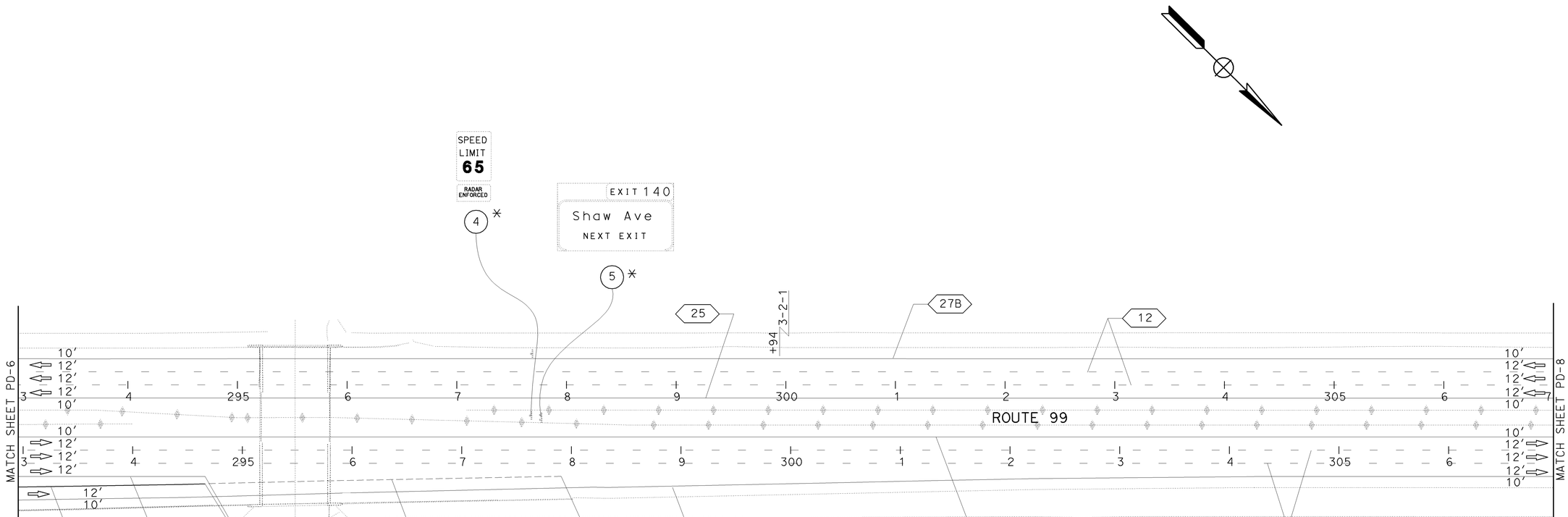

PAVEMENT DELINEATION AND SIGN PLAN

SCALE: 1"=50'

PD-7

THIS PLAN ACCURATE FOR PAVEMENT DELINEATION AND SIGNS ONLY.

STATE OF CALIFORNIA - DEPARTMENT OF TRANSPORTATION
Caltrans®
TRAFFIC DESIGN
FUNCTIONAL SUPERVISOR: M. QATAMI
CALCULATED-DESIGNED BY: MAZIN AL-ALI
CHECKED BY: HASEEB YOUSAF
REVISED BY
DATE REVISED

LAST REVISION
DATE PLOTTED => 28-SEP-2009
TIME PLOTTED => 13:44
06-23-09

BORDER LAST REVISED 4/11/2008
RELATIVE BORDER SCALE IS IN INCHES 0 1 2 3
USERNAME => trrichf
DGN FILE => 644261na007.dgn
CU 06386
EA 442611

Dist	COUNTY	ROUTE	POST MILES TOTAL PROJECT	SHEET No.	TOTAL SHEETS
06	Fre	99	26.7/30.6	119	242

REGISTERED CIVIL ENGINEER — DATE: 06-23-09

PLANS APPROVAL DATE: 9-28-09

MAZIN H. AL-ALI No. 65523 Exp. 9/30/09 CIVIL — REGISTERED PROFESSIONAL ENGINEER — STATE OF CALIFORNIA

THE STATE OF CALIFORNIA OR ITS OFFICERS OR AGENTS SHALL NOT BE RESPONSIBLE FOR THE ACCURACY OR COMPLETENESS OF SCANNED COPIES OF THIS PLAN SHEET.

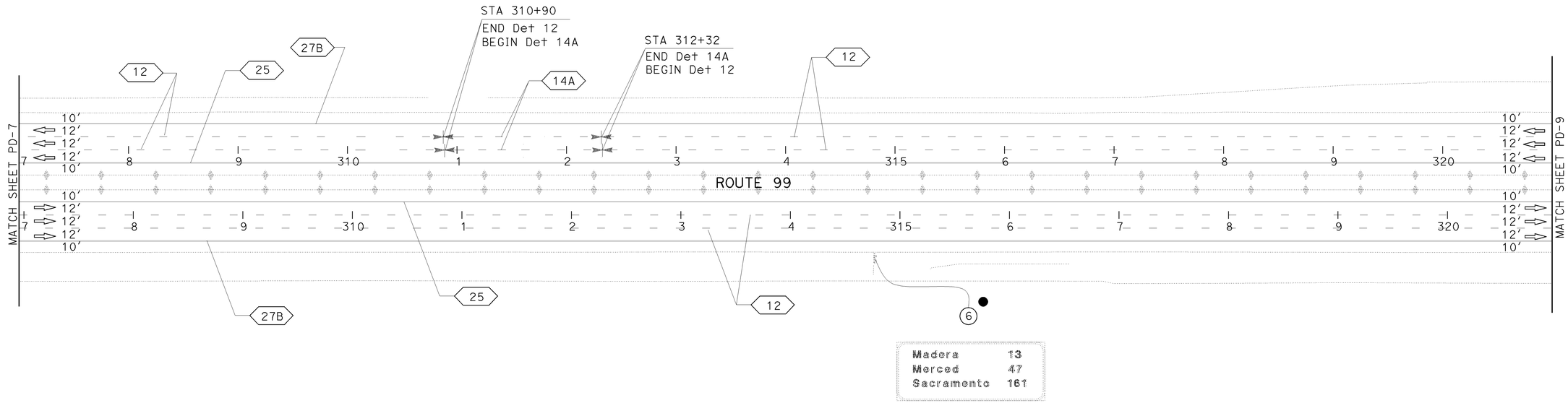

Madera	13
Merced	47
Sacramento	161

PAVEMENT DELINEATION AND SIGN PLAN

SCALE: 1"=50′

PD-8

THIS PLAN ACCURATE FOR PAVEMENT DELINEATION AND SIGNS ONLY.

STATE OF CALIFORNIA - DEPARTMENT OF TRANSPORTATION
Caltrans®
TRAFFIC DESIGN

FUNCTIONAL SUPERVISOR: M. QATAMI

CALCULATED-DESIGNED BY: MAZIN AL-ALI
CHECKED BY: HASEEB YOUSAF

REVISED BY
DATE REVISED

LAST REVISION
DATE PLOTTED => 28-SEP-2009
TIME PLOTTED => 13:44
06-23-09

BORDER LAST REVISED 4/11/2008

RELATIVE BORDER SCALE IS IN INCHES 0 1 2 3

USERNAME => trrichf
DGN FILE => 644261na008.dgn

CU 06386

EA 442611

Dist	COUNTY	ROUTE	POST MILES TOTAL PROJECT	SHEET No.	TOTAL SHEETS
06	Fre	99	26.7/30.6	120	242

REGISTERED CIVIL ENGINEER — DATE: 06-23-09

PLANS APPROVAL DATE: 9-28-09

MAZIN H. AL-ALI No. 65523 Exp. 9/30/09 CIVIL — REGISTERED PROFESSIONAL ENGINEER — STATE OF CALIFORNIA

THE STATE OF CALIFORNIA OR ITS OFFICERS OR AGENTS SHALL NOT BE RESPONSIBLE FOR THE ACCURACY OR COMPLETENESS OF SCANNED COPIES OF THIS PLAN SHEET.

OVERHEAD SIGN STRUCTURE

G83-4(CA)

EXIT 140
Shaw Ave
1 MILE

EXIT 140
Shaw Ave
1 MILE

MATCH SHEET PD-8

MATCH SHEET PD-10

ROUTE 99

27B 25 12

12 27B 25 14A 12

STA 328+99
END Det 12
BEGIN Det 14A

STA 330+43
END Det 14A
BEGIN Det 12

Herndon Ave
1 MILE

OVERHEAD SIGN STRUCTURE

G5 (CA)

Madera	13
Merced	47
Sacramento	161

FNBT

G23-1(CA)

Shaw Ave	3/4
Ashlan Ave	2
Dakota Ave	3

FSBT

THIS PLAN IS ACCURATE FOR PAVEMENT DELINEATION AND SIGNS ONLY.

PAVEMENT DELINEATION AND SIGN PLAN

SCALE: 1"=50'

PD-9

LAST REVISION | DATE PLOTTED => 28-SEP-2009 | TIME PLOTTED => 13:44 | 06-23-09

STATE OF CALIFORNIA - DEPARTMENT OF TRANSPORTATION | TRAFFIC DESIGN | FUNCTIONAL SUPERVISOR: M. QATAMI | CALCULATED-DESIGNED BY: MAZIN AL-ALI | CHECKED BY: HASEEB YOUSAF | REVISED BY | DATE REVISED

Dist	COUNTY	ROUTE	POST MILES TOTAL PROJECT	SHEET No.	TOTAL SHEETS
06	Fre	99	26.7/30.6	121	242

MAZ - AL I 06-23-09
REGISTERED CIVIL ENGINEER DATE

9-28-09
PLANS APPROVAL DATE

REGISTERED PROFESSIONAL ENGINEER
MAZIN H. AL-ALI
No. 65523
Exp. 9/30/09
CIVIL
STATE OF CALIFORNIA

THE STATE OF CALIFORNIA OR ITS OFFICERS OR AGENTS SHALL NOT BE RESPONSIBLE FOR THE ACCURACY OR COMPLETENESS OF SCANNED COPIES OF THIS PLAN SHEET.

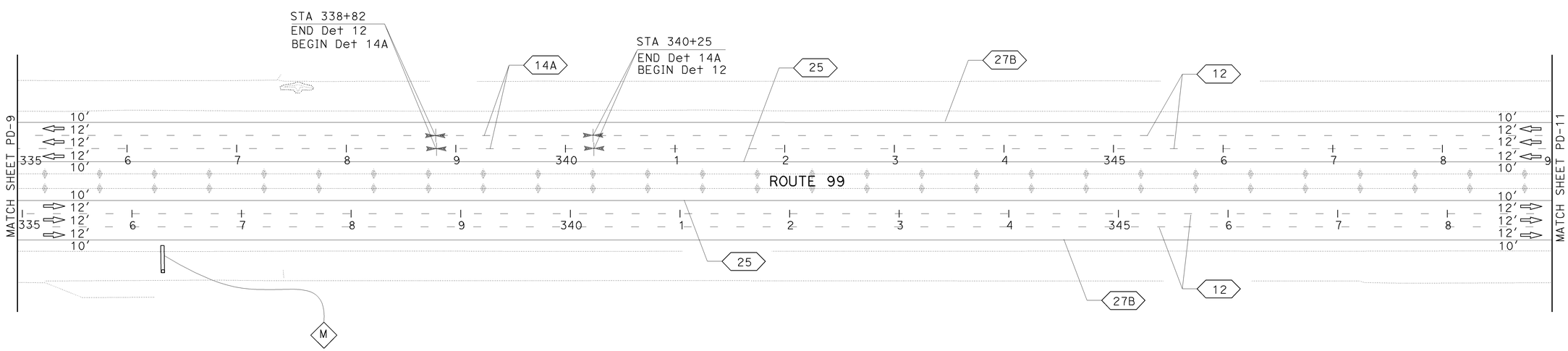

THIS PLAN ACCURATE FOR PAVEMENT DELINEATION AND SIGNS ONLY.

PAVEMENT DELINEATION AND SIGN PLAN

SCALE: 1"=50′ **PD-10**

STATE OF CALIFORNIA - DEPARTMENT OF TRANSPORTATION
TRAFFIC DESIGN
FUNCTIONAL SUPERVISOR: M. QATAMI
CALCULATED-DESIGNED BY: MAZIN AL-ALI
CHECKED BY: HASEEB YOUSAF
REVISED BY
DATE REVISED

LAST REVISION DATE PLOTTED => 28-SEP-2009
TIME PLOTTED => 13:44
06-23-09

BORDER LAST REVISED 4/11/2008
RELATIVE BORDER SCALE IS IN INCHES 0 1 2 3
USERNAME => trrichf
DGN FILE => 644261na010.dgn
CU 06386
EA 442611

Dist	COUNTY	ROUTE	POST MILES TOTAL PROJECT	SHEET No.	TOTAL SHEETS
06	Fre	99	26.7/30.6	122	242

MAZIN H. AL-ALI
REGISTERED CIVIL ENGINEER — 06-23-09 DATE

9-28-09
PLANS APPROVAL DATE

REGISTERED PROFESSIONAL ENGINEER
MAZIN H. AL-ALI
No. 65523
Exp. 9/30/09
CIVIL
STATE OF CALIFORNIA

THE STATE OF CALIFORNIA OR ITS OFFICERS OR AGENTS SHALL NOT BE RESPONSIBLE FOR THE ACCURACY OR COMPLETENESS OF SCANNED COPIES OF THIS PLAN SHEET.

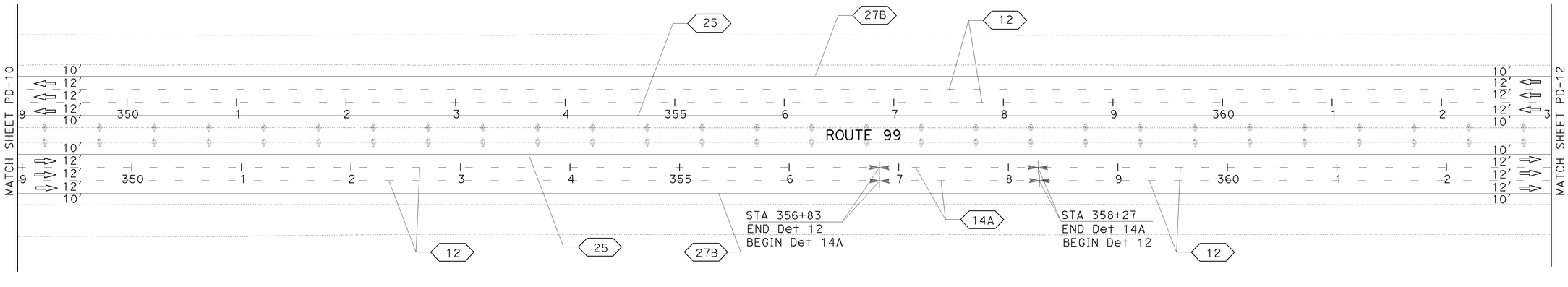

THIS PLAN ACCURATE FOR PAVEMENT DELINEATION AND SIGNS ONLY.

PAVEMENT DELINEATION AND SIGN PLAN

SCALE: 1"=50′

PD-11

STATE OF CALIFORNIA - DEPARTMENT OF TRANSPORTATION
Caltrans®
TRAFFIC DESIGN
FUNCTIONAL SUPERVISOR: M. QATAMI
CALCULATED-DESIGNED BY: MAZIN AL-ALI
CHECKED BY: HASEEB YOUSAF
REVISED BY
DATE REVISED

LAST REVISION DATE PLOTTED => 28-SEP-2009
TIME PLOTTED => 13:45
06-23-09

BORDER LAST REVISED 4/11/2008
RELATIVE BORDER SCALE IS IN INCHES 0 1 2 3
USERNAME => trrichf
DGN FILE => 644261na011.dgn
CU 06386
EA 442611

Dist	COUNTY	ROUTE	POST MILES TOTAL PROJECT	SHEET No.	TOTAL SHEETS
06	Fre	99	26.7/30.6	123	242

MAZ AL-ALI 06-23-09
REGISTERED CIVIL ENGINEER DATE

9-28-09
PLANS APPROVAL DATE

REGISTERED PROFESSIONAL ENGINEER
MAZIN H. AL-ALI
No. 65523
Exp. 9/30/09
CIVIL
STATE OF CALIFORNIA

THE STATE OF CALIFORNIA OR ITS OFFICERS OR AGENTS SHALL NOT BE RESPONSIBLE FOR THE ACCURACY OR COMPLETENESS OF SCANNED COPIES OF THIS PLAN SHEET.

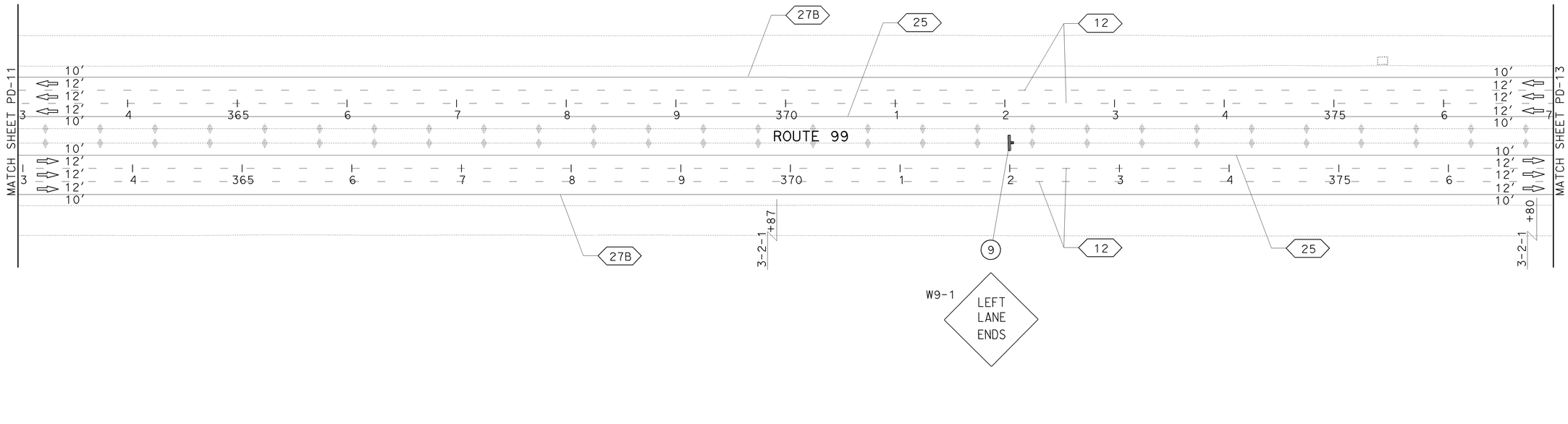

THIS PLAN ACCURATE FOR PAVEMENT DELINEATION AND SIGNS ONLY.

PAVEMENT DELINEATION AND SIGN PLAN

SCALE: 1"=50′

PD-12

STATE OF CALIFORNIA - DEPARTMENT OF TRANSPORTATION
TRAFFIC DESIGN
FUNCTIONAL SUPERVISOR M. QATAMI
CALCULATED-DESIGNED BY MAZIN AL-ALI
CHECKED BY HASEEB YOUSAF
REVISED BY
DATE REVISED

LAST REVISION 06-23-09
DATE PLOTTED => 28-SEP-2009
TIME PLOTTED => 13:45

BORDER LAST REVISED 4/11/2008
RELATIVE BORDER SCALE IS IN INCHES 0 1 2 3
USERNAME => trrichf
DGN FILE => 644261na012.dgn
CU 06386
EA 442611

Dist	COUNTY	ROUTE	POST MILES TOTAL PROJECT	SHEET No.	TOTAL SHEETS
06	Fre	99	26.7/30.6	124	242

REGISTERED CIVIL ENGINEER — DATE: 06-23-09

PLANS APPROVAL DATE: 9-28-09

REGISTERED PROFESSIONAL ENGINEER — MAZIN H. AL-ALI — No. 65523 — Exp 9/30/09 — CIVIL — STATE OF CALIFORNIA

THE STATE OF CALIFORNIA OR ITS OFFICERS OR AGENTS SHALL NOT BE RESPONSIBLE FOR THE ACCURACY OR COMPLETENESS OF SCANNED COPIES OF THIS PLAN SHEET.

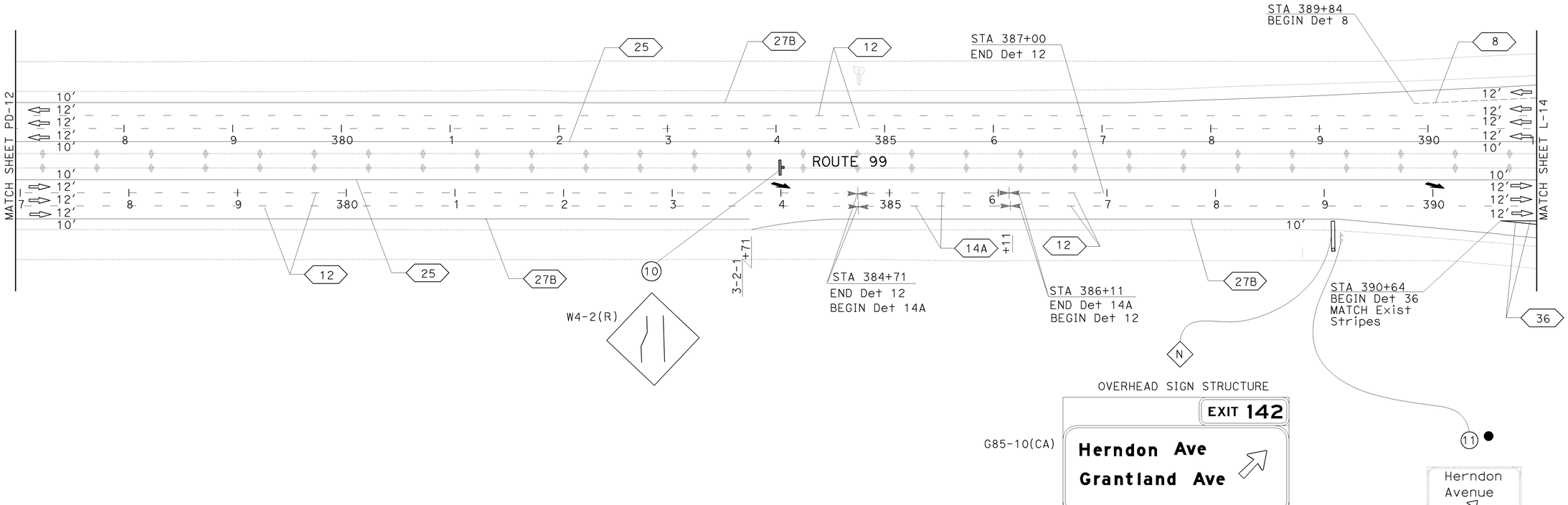

PAVEMENT DELINEATION AND SIGN PLAN

SCALE: 1"=50′ **PD-13**

THIS PLAN ACCURATE FOR PAVEMENT DELINEATION AND SIGNS ONLY.

STATE OF CALIFORNIA - DEPARTMENT OF TRANSPORTATION
Caltrans®
TRAFFIC DESIGN
FUNCTIONAL SUPERVISOR: M. QATAMI
CALCULATED-DESIGNED BY: MAZIN AL-ALI
CHECKED BY: HASEEB YOUSAF
REVISED BY
DATE REVISED

LAST REVISION — DATE PLOTTED => 28-SEP-2009 — TIME PLOTTED => 13:45 — 06-23-09

BORDER LAST REVISED 4/11/2008

RELATIVE BORDER SCALE IS IN INCHES 0 1 2 3

USERNAME => trrichf
DGN FILE => 644261na013.dgn

CU 06386

EA 442611

Dist	COUNTY	ROUTE	POST MILES TOTAL PROJECT	SHEET No.	TOTAL SHEETS
06	Fre	99	26.7/30.6	125	242

REGISTERED CIVIL ENGINEER — DATE: 06-23-09

PLANS APPROVAL DATE: 9-28-09

MAZIN H. AL-ALI No. 65523 Exp. 9/30/09 CIVIL — REGISTERED PROFESSIONAL ENGINEER — STATE OF CALIFORNIA

THE STATE OF CALIFORNIA OR ITS OFFICERS OR AGENTS SHALL NOT BE RESPONSIBLE FOR THE ACCURACY OR COMPLETENESS OF SCANNED COPIES OF THIS PLAN SHEET.

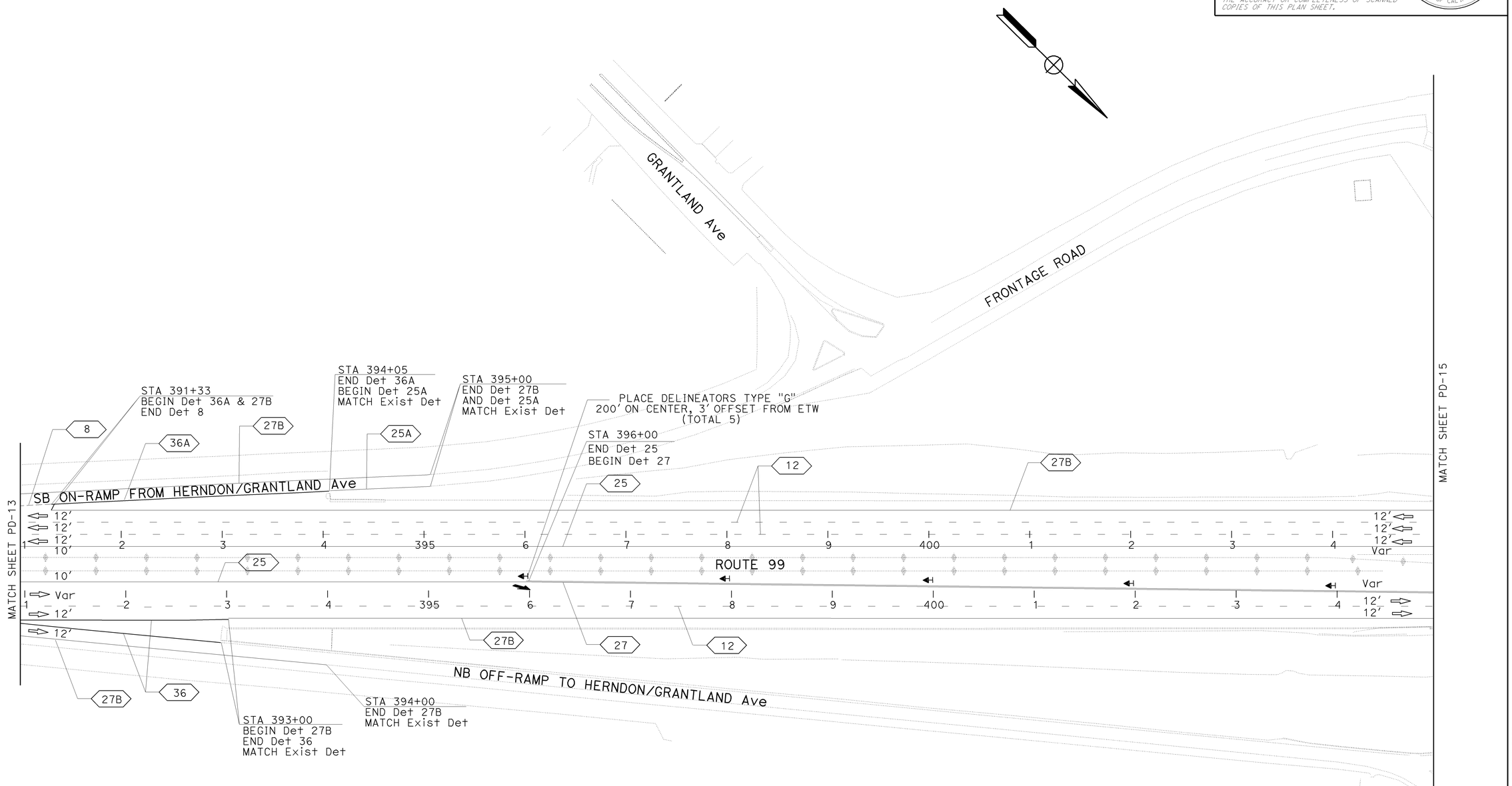

THIS PLAN ACCURATE FOR PAVEMENT DELINEATION AND SIGNS ONLY.

PAVEMENT DELINEATION AND SIGN PLAN

SCALE: 1"=50′

PD-14

STATE OF CALIFORNIA - DEPARTMENT OF TRANSPORTATION
Caltrans®
TRAFFIC DESIGN
FUNCTIONAL SUPERVISOR: M. QATAMI
CALCULATED-DESIGNED BY: MAZIN AL-ALI
CHECKED BY: HASEEB YOUSAF
REVISED BY
DATE REVISED

LAST REVISION DATE PLOTTED => 28-SEP-2009
TIME PLOTTED => 13:45

BORDER LAST REVISED 4/11/2008 | RELATIVE BORDER SCALE IS IN INCHES 0 1 2 3 | USERNAME => trrichf | DGN FILE => 644261na014.dgn | CU 06386 | EA 442611

Dist	COUNTY	ROUTE	POST MILES TOTAL PROJECT	SHEET No.	TOTAL SHEETS
06	Fre	99	26.7/30.6	126	242

MAZ - ALI 06-23-09
REGISTERED CIVIL ENGINEER DATE

9-28-09
PLANS APPROVAL DATE

REGISTERED PROFESSIONAL ENGINEER
MAZIN H. AL-ALI
No. 65523
Exp. 9/30/09
CIVIL
STATE OF CALIFORNIA

THE STATE OF CALIFORNIA OR ITS OFFICERS OR AGENTS SHALL NOT BE RESPONSIBLE FOR THE ACCURACY OR COMPLETENESS OF SCANNED COPIES OF THIS PLAN SHEET.

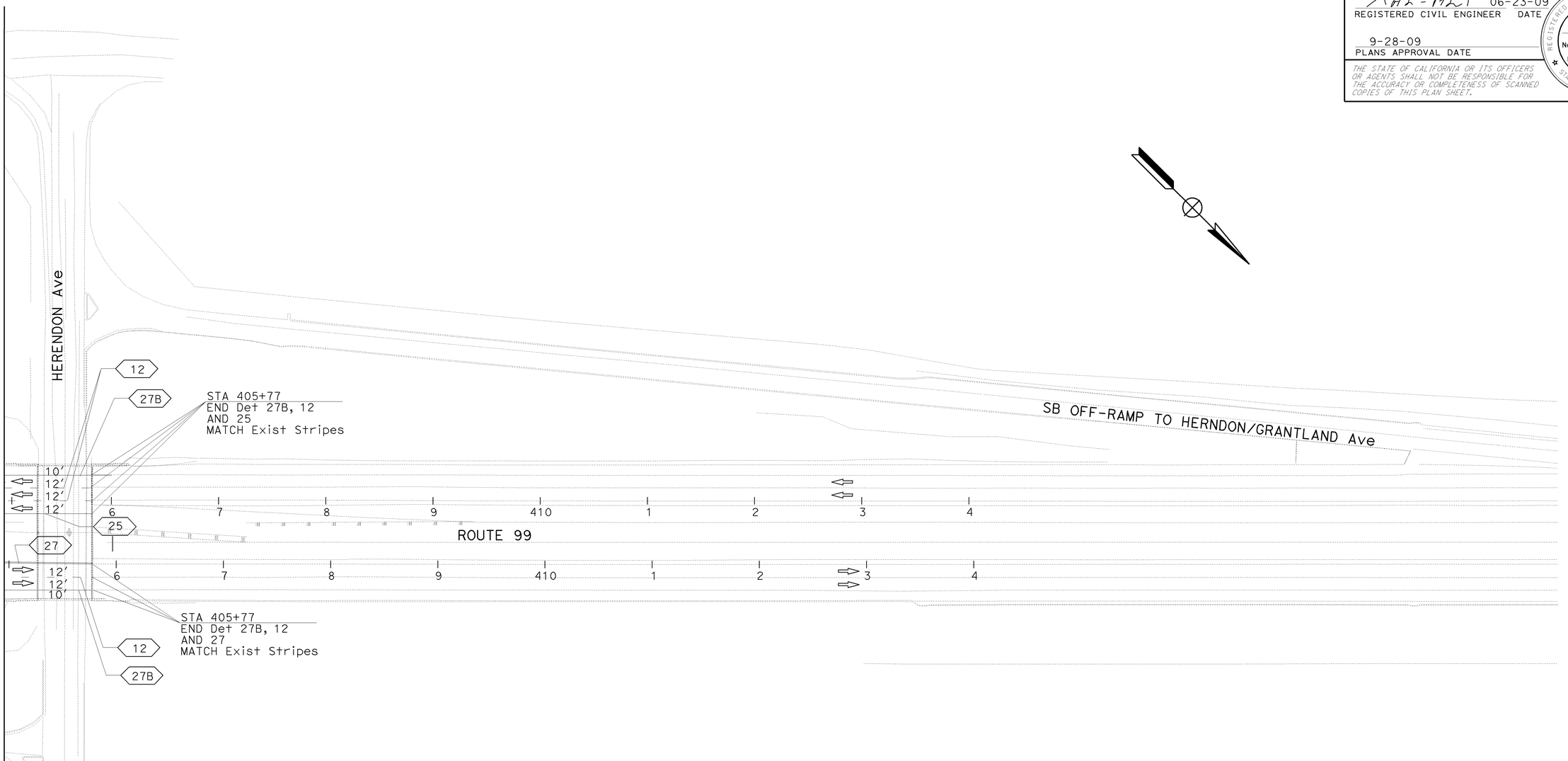

PAVEMENT DELINEATION AND SIGN PLAN

SCALE: 1"=50'

PD-15

THIS PLAN ACCURATE FOR PAVEMENT DELINEATION AND SIGNS ONLY.

CALCULATED-DESIGNED BY
MAZIN AL-ALI
CHECKED BY
HASEEB YOUSAF
REVISED BY
DATE REVISED
FUNCTIONAL SUPERVISOR
M. QATAMI
STATE OF CALIFORNIA - DEPARTMENT OF TRANSPORTATION
Caltrans®
TRAFFIC DESIGN

LAST REVISION DATE PLOTTED => 28-SEP-2009
06-23-09 TIME PLOTTED => 13:45

BORDER LAST REVISED 4/11/2008
RELATIVE BORDER SCALE IS IN INCHES 0 1 2 3
USERNAME => trrichf
DGN FILE => 644261na015.dgn
CU 06386
EA 442611

Dist	COUNTY	ROUTE	POST MILES TOTAL PROJECT	SHEET No.	TOTAL SHEETS
06	Fre	99	26.7/30.6	127	242

REGISTERED CIVIL ENGINEER DATE 06-23-09

PLANS APPROVAL DATE 9-28-09

REGISTERED PROFESSIONAL ENGINEER — MAZIN H. AL-ALI No. 65523 Exp 9/30/09 CIVIL — STATE OF CALIFORNIA

THE STATE OF CALIFORNIA OR ITS OFFICERS OR AGENTS SHALL NOT BE RESPONSIBLE FOR THE ACCURACY OR COMPLETENESS OF ELECTRONIC COPIES OF THIS PLAN SHEET.

PAVEMENT DELINEATION QUANTITIES

SHEET No.	ROUTE	LOCATION FROM	LOCATION TO	DIRECTION	DETAIL No.	PAVEMENT MARKER (RETROREFLECTIVE) TYPE C RED-CLEAR	PAVEMENT MARKER (RETROREFLECTIVE) TYPE G YELLOW (ONE-WAY)	PAVEMENT MARKER (RETROREFLECTIVE) TYPE H YELLOW (ONE-WAY)	THERMOPLASTIC TRAFFIC STRIPE SOLID 4"	SOLID 8"	4" (BROKEN 36'-12')	4" (BROKEN 17'-7')	THERMOPLASTIC PAVEMENT MARKING DESCRIPTION	SQFT	REMOVE
						EA	EA	EA	LF	LF	LF	LF			SQFT
PD-1 TO PD-5	ROUTE 99	214+63	270+84	SB	27B				5621						
PD-1 TO PD-6	ROUTE 99	214+63	282+96	SB	12		143				6833				
	ROUTE 99	214+63	282+96	SB	12		143				6833				
PD-6	ROUTE 99	282+96	284+40	SB	14A	4			36						
	ROUTE 99	282+96	284+40	SB	14A	4			36						
PD-6 TO PD-8	ROUTE 99	284+40	310+90	SB	12		56				2650				
	ROUTE 99	284+40	310+90	SB	12		56				2650				
PD-8	ROUTE 99	310+90	312+32	SB	14A	4			36						
	ROUTE 99	310+90	312+32	SB	14A	4			36						
PD-8 TO PD-10	ROUTE 99	312+32	338+82	SB	12		56				2650				
	ROUTE 99	312+32	338+82	SB	12		56				2650				
PD-10	ROUTE 99	338+82	340+25	SB	14A	4			36						
	ROUTE 99	338+82	340+25	SB	14A	4			36						
PD-10 TO PD-15	ROUTE 99	340+25	405+77	SB	12		138				6552				
	ROUTE 99	340+25	405+77	SB	12		138				6552				
PD-1 TO PD-15	ROUTE 99	214+63	405+77	SB	25			399	19,114						
PD-5	ROUTE 99	265+77	268+41	SB	8							264			
	ROUTE 99	268+41	270+86	SB	36A		11			245					
	ROUTE 99	270+86	271+84	SB	25A			5	98						
	ROUTE 99	268+41	276+91	SB	27B				850						
PD-5 TO PD-6	ROUTE 99	276+91	279+24	SB	36		22			466					
PD-5 TO PD-14	ROUTE 99	276+00	395+00	SB	27B				11,900						
PD-13 TO PD-14	ROUTE 99	389+84	391+33	SB	8							149			
PD-14	ROUTE 99	391+33	394+05	SB	36A		12			272					
	ROUTE 99	394+05	395+00	SB	25A			5	95						
PD-14 TO PD-15	ROUTE 99	391+33	405+77	SB	27B				1444						
PD-1 TO PD-3	ROUTE 99	214+63	241+00	NB	27			56	5274						
PD-3 TO PD-14	ROUTE 99	241+00	396+00	NB	25			324	15,500						
PD-14 TO PD-15	ROUTE 99	396+00	405+77	NB	27			21	1954				3 - TYPE VI ARROW		126
PD-1	ROUTE 99	214+63	219+50	NB	12		11				487		3 - TYPE VI ARROW	126	
	ROUTE 99	214+63	219+50	NB	12		11				487				
	ROUTE 99	219+50	220+94	NB	14A	4			36						
	ROUTE 99	219+50	220+94	NB	14A	4			36						
PD-1 TO PD-3	ROUTE 99	220+94	247+35	NB	12		56				2641				
	ROUTE 99	220+94	247+35	NB	12		56				2641				
PD-3	ROUTE 99	247+35	248+79	NB	14A	4			36						
	ROUTE 99	247+35	248+79	NB	14A	4			36						
PD-3 TO PD-5	ROUTE 99	248+79	275+19	NB	12		56				2640				
	ROUTE 99	248+79	275+19	NB	12		56				2640				
PD-5	ROUTE 99	275+19	276+63	NB	14A	4			36						
	ROUTE 99	275+19	276+63	NB	14A	4			36						
PD-5 TO PD-9	ROUTE 99	276+63	328+99	NB	12		110				5236				
	ROUTE 99	276+63	328+99	NB	12		110				5236				
PD-9	ROUTE 99	328+99	330+43	NB	14A	4			36						
	ROUTE 99	328+99	330+43	NB	14A	4			36						
SHEET SUBTOTAL						56	1297	810	62,354	983	59,378	413		126	126
SHEET TOTAL							2163		62,354	983	59,378	413		126	126

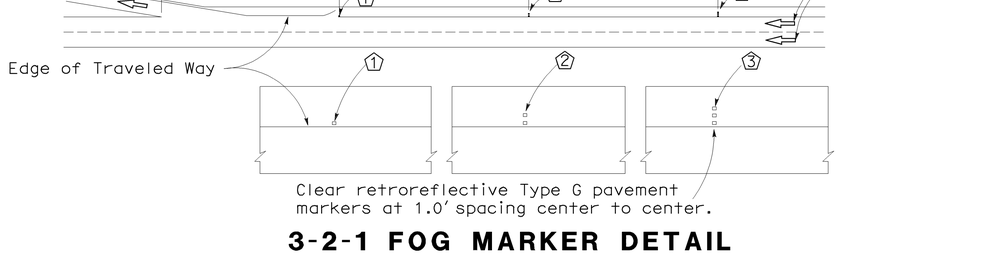

3-2-1 FOG MARKER DETAIL

PAVEMENT DELINEATION QUANTITIES AND DETAILS

PDQ-1

REVISED BY	DATE REVISED

CALCULATED-DESIGNED BY: ALICIA RODRIGUEZ
CHECKED BY: MAZIN AL-ALI
FUNCTIONAL SUPERVISOR: M. QATAMI
STATE OF CALIFORNIA - DEPARTMENT OF TRANSPORTATION
Caltrans TRAFFIC DESIGN

LAST REVISION 06-23-09
DATE PLOTTED => 28-SEP-2009
TIME PLOTTED => 13:45

BORDER LAST REVISED 4/11/2008
RELATIVE BORDER SCALE IS IN INCHES 0 1 2 3
USERNAME => trrichf
DGN FILE => 644261nc001.dgn
CU 06386
EA 442611

Dist	COUNTY	ROUTE	POST MILES TOTAL PROJECT	SHEET No.	TOTAL SHEETS
06	Fre	99	26.7/30.6	128	242

REGISTERED CIVIL ENGINEER DATE 06-23-09

PLANS APPROVAL DATE 9-28-09

REGISTERED PROFESSIONAL ENGINEER
MAZIN H. AL-ALI
No. 65523
Exp. 9/30/09
CIVIL
STATE OF CALIFORNIA

THE STATE OF CALIFORNIA OR ITS OFFICERS OR AGENTS SHALL NOT BE RESPONSIBLE FOR THE ACCURACY OR COMPLETENESS OF ELECTRONIC COPIES OF THIS PLAN SHEET.

PAVEMENT DELINEATION QUANTITIES

SHEET No.	ROUTE	LOCATION		DIRECTION	DETAIL No.	PAVEMENT MARKER (RETROREFLECTIVE)			THERMOPLASTIC TRAFFIC STRIPE				THERMOPLASTIC PAVEMENT MARKING		
						TYPE C RED-CLEAR	TYPE G YELLOW (ONE-WAY)	TYPE H YELLOW (ONE-WAY)	SOLID 4"	SOLID 8"	4" (Broken 36'-12')	4" (Broken 17'-7')	Description		REMOVE
		FROM	TO			EA	EA	EA	LF	LF	LF	LF		SQFT	SQFT
PD-9 TO PD-11	Route 99	330+43	356+83	NB	12		56				2640				
	Route 99	330+43	356+83	NB	12		56				2640				
PD-11	Route 99	356+83	358+27	NB	14A	4			36						
	Route 99	356+83	358+27	NB	14A	4			36						
PD-11 TO PD-13	Route 99	358+27	384+71	NB	12		56				2644				
	Route 99	358+27	384+71	NB	12		56				2644				
PD-13	Route 99	384+71	386+11	NB	14A	4			36						
	Route 99	384+71	386+11	NB	14A	4			36						
PD-13	Route 99	386+11	387+00	NB	12		17				756				
PD-13 TO PD-15	Route 99	386+11	405+77	NB	12		42				1966				
PD-1 TO PD-5	Route 99	214+63	274+14	NB	27B				5951						
PD-5 TO PD-6	Route 99	274+14	284+47	NB	27B				1033						
PD-6	Route 99	281+00	283+50	NB	36		24			500					
PD-6 TO PD-7	Route 99	283+50	294+66	NB	27B				1116						
	Route 99	290+13	294+66	NB	36A		20			453					
PD-7	Route 99	294+66	297+92	NB	8							326			
PD-7 TO PD-13	Route 99	294+66	383+71	NB	27B				8905						
PD-13 TO PD-14	Route 99	383+71	394+00	NB	27B				1029						
PD-13 TO PD-14	Route 99	390+64	393+00	NB	36		22			472					
PD-14 TO PD-15	Route 99	393+00	405+77	NB	27B				1277						
3-2-1 FOG MARKER PD-4 TO PD-13	Route 99	-	-	NB/SB	-	18									
SHEET TOTAL						34	349	0	19,455	1425	13,290	326		0	0
SHEET PDQ-1 TOTAL							2163		62,354	983	59,378	413		126	126
SHEET THQ-2 TOTAL							1722								
TOTAL							4268		81,809	2408	72,668	739		126	126

CALCULATED-DESIGNED BY: ALICIA RODRIGUEZ
CHECKED BY: MAZIN AL-ALI
FUNCTIONAL SUPERVISOR: M. QATAMI
STATE OF CALIFORNIA - DEPARTMENT OF TRANSPORTATION
Caltrans TRAFFIC DESIGN
REVISED BY | DATE REVISED

PAVEMENT DELINEATION QUANTITIES
PDQ-2

LAST REVISION | DATE PLOTTED => 28-SEP-2009
06-23-09 | TIME PLOTTED => 13:45

BORDER LAST REVISED 4/11/2008
RELATIVE BORDER SCALE IS IN INCHES 0 1 2 3
USERNAME => trrichf
DGN FILE => 644261nc002.dgn
CU 06386
EA 442611

Dist	COUNTY	ROUTE	POST MILES TOTAL PROJECT	SHEET No.	TOTAL SHEETS
06	Fre	99	26.7/30.6	129	242

MAZ-AL 06-23-09
REGISTERED CIVIL ENGINEER DATE

9-28-09
PLANS APPROVAL DATE

REGISTERED PROFESSIONAL ENGINEER
MAZIN H. AL-ALI
No. 65523
Exp. 9/30/09
CIVIL
STATE OF CALIFORNIA

THE STATE OF CALIFORNIA OR ITS OFFICERS OR AGENTS SHALL NOT BE RESPONSIBLE FOR THE ACCURACY OR COMPLETENESS OF SCANNED COPIES OF THIS PLAN SHEET.

NOTES: (BARRIER MOUNTED SIGN)

1. All bolts shall have a washer under the nut. Bolts through post shall be ½" diameter bolts through sign panel and brace shall be ⅜" diameter. Ream holes in sign as required.
2. All steel to be galvanized.
3. For location of signs, see Project Plans.

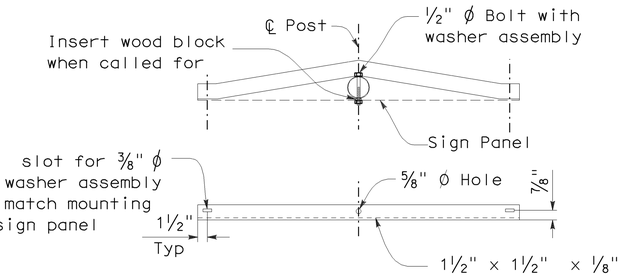

BACK BRACE DETAILS

SCALE: 2" = 1'

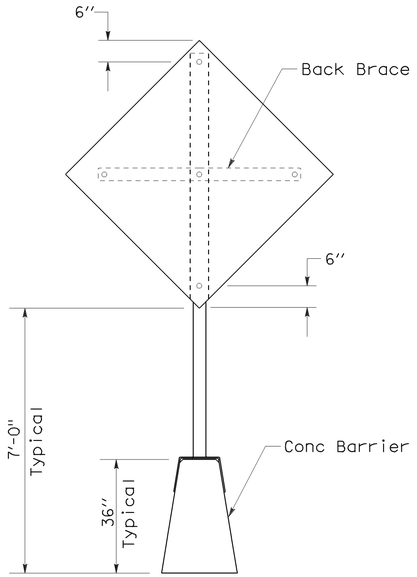

SECTION
NO SCALE

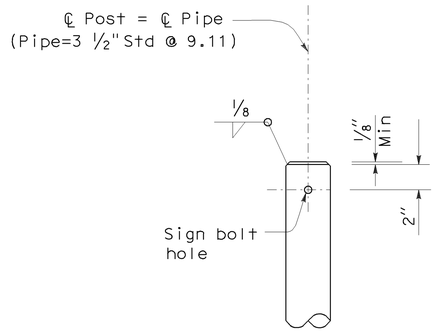

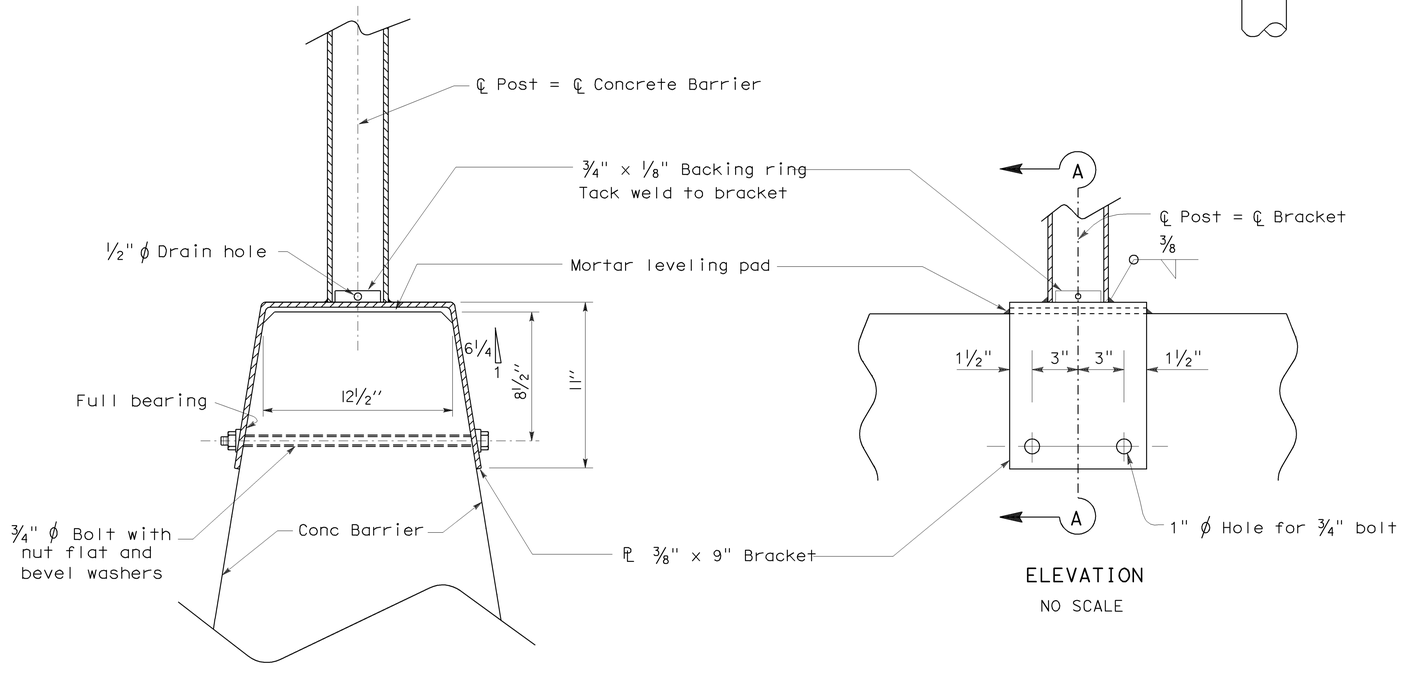

SECTION A-A
NO SCALE

ELEVATION
NO SCALE

BASE PLATE, ANCHORAGE & TOP OF POST DETAILS
METAL (BARRIER MOUNTED SIGN)

SIGN DETAILS
SD-1

SCALE AS SHOWN

STATE OF CALIFORNIA - DEPARTMENT OF TRANSPORTATION
Caltrans®
TRAFFIC DESIGN
FUNCTIONAL SUPERVISOR: M. QATAMI
CALCULATED-DESIGNED BY: MAZIN AL-ALI
CHECKED BY: HASEEB YOUSAF
REVISED BY
DATE REVISED

LAST REVISION DATE PLOTTED => 28-SEP-2009
06-23-09 TIME PLOTTED => 13:45

BORDER LAST REVISED 4/11/2008
RELATIVE BORDER SCALE IS IN INCHES 0 1 2 3
USERNAME => trrichf
DGN FILE => 644261ob001.dgn
CU 06386
EA 442611

Dist	COUNTY	ROUTE	POST MILES TOTAL PROJECT	SHEET No.	TOTAL SHEETS
06	Fre	99	26.7/30.6	130	242

9/A2 - AL1 06-23-09
REGISTERED CIVIL ENGINEER DATE

9-28-09
PLANS APPROVAL DATE

MAZIN H. AL-ALI No. 65523 Exp 9/30/09 CIVIL — REGISTERED PROFESSIONAL ENGINEER — STATE OF CALIFORNIA

THE STATE OF CALIFORNIA OR ITS OFFICERS OR AGENTS SHALL NOT BE RESPONSIBLE FOR THE ACCURACY OR COMPLETENESS OF SCANNED COPIES OF THIS PLAN SHEET.

FSBT

No border, White on Green;
6.0" Radius, 2.0" Border, White on Green;
[EXIT] E; [138] E;
12.0" Radius, 2.0" Border, White on Green;
[Ashlan Ave] E Mod 75% spacing; Arrow 16CAP-1L - 25.0" 45°;

G85-10 (CA) B

FSBT

No border, White on Green;
6.0" Radius, 2.0" Border, White on Green;
[EXIT] E; [138] E;
12.0" Radius, 2.0" Border, White on Green;
[Ashlan Ave] E Mod 75% spacing; [1] E; [MILE] E;

G83-4 (CA) F

FNBT

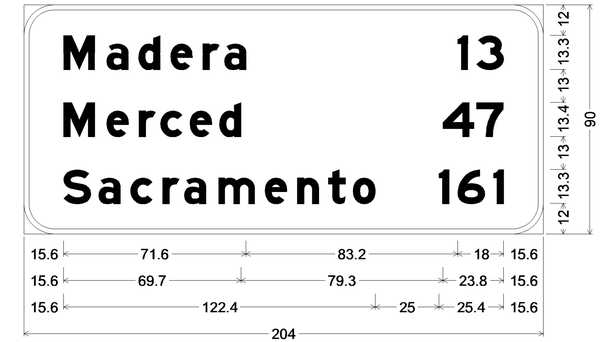

12.0" Radius, 2.0" Border, White on Green;
[Madera] E Mod; [Merced] E Mod; [Sacramento] E Mod; [13] E Mod;
[47] E Mod; [161] E Mod;

G5 (CA)

FNBT

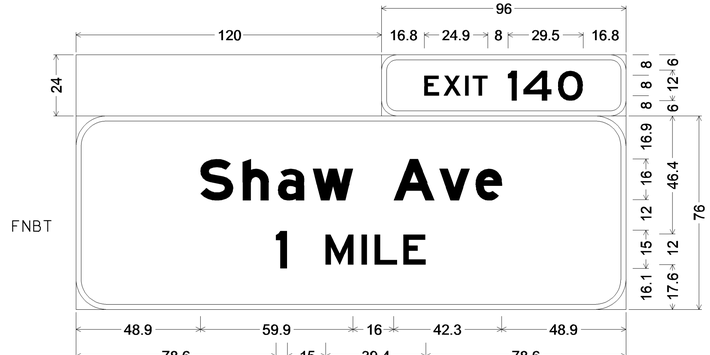

No border, White on Green;
6.0" Radius, 2.0" Border, White on Green;
[EXIT] E; [140] E;
12.0" Radius, 2.0" Border, White on Green;
[Shaw Ave] E Mod 75% spacing; [1] E; [MILE] E;

G83-4 (CA)

FNBT

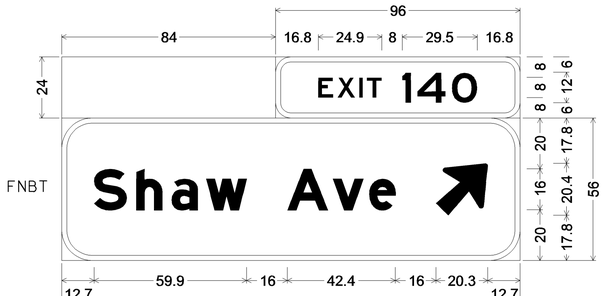

No border, White on Green;
6.0" Radius, 2.0" Border, White on Green;
[EXIT] E; [140] E;
12.0" Radius, 2.0" Border, White on Green;
[Shaw Ave] E Mod 75% spacing;
Arrow 16CAP-1L - 25.0" 45°;

G85-10 (CA) H

FSBT

12.0" Radius, 2.0" Border, White on Green;
[Shaw Ave] E Mod; [Ashlan Ave] E Mod; [Dakota Ave] E Mod;
[2] E Mod; [3] E Mod;

G23-1 (CA) K

FSBT

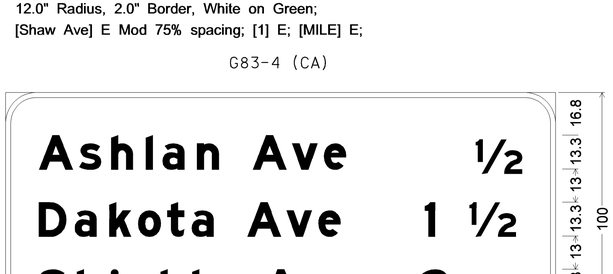

12.0" Radius, 2.0" Border, White on Green;
[Ashlan Ave] E Mod; [Dakota Ave] E Mod; [1 ½] E Mod;
[Shields Ave] E Mod; [2] E Mod;

G23-6 (CA) D

FSBT

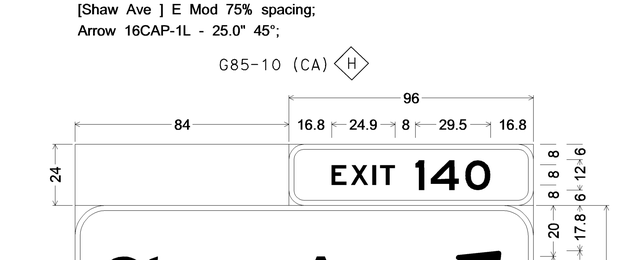

No border, White on Green;
6.0" Radius, 2.0" Border, White on Green;
[EXIT] E; [140] E;
12.0" Radius, 2.0" Border, White on Green;
[Shaw Ave] E Mod 75% spacing;
Arrow 16CAP-1L - 25.0" 45°;

G85-10 (CA) J

NOTE: ALL DIMENSIONS ARE IN INCHES UNLESS OTHERWISE SHOWN

SIGN DETAILS
SD-2

NO SCALE

STATE OF CALIFORNIA - DEPARTMENT OF TRANSPORTATION
TRAFFIC DESIGN
FUNCTIONAL SUPERVISOR: M. QATAMI
CALCULATED-DESIGNED BY: MAZIN AL-ALI
CHECKED BY: HASEEB YOUSAF
REVISED BY
DATE REVISED

LAST REVISION DATE PLOTTED => 28-SEP-2009
06-23-09 TIME PLOTTED => 13:45

BORDER LAST REVISED 4/11/2008
RELATIVE BORDER SCALE IS IN INCHES 0 1 2 3
USERNAME => trrichf
DGN FILE => 644261ob002.dgn
CU 06386
EA 442611

Dist	COUNTY	ROUTE	POST MILES TOTAL PROJECT	SHEET No.	TOTAL SHEETS
06	Fre	99	26.7/30.6	131	242

REGISTERED CIVIL ENGINEER — DATE: 06-23-09

PLANS APPROVAL DATE: 9-28-09

MAZIN H. AL-ALI No. 65523 Exp. 9/30/09 CIVIL — REGISTERED PROFESSIONAL ENGINEER — STATE OF CALIFORNIA

THE STATE OF CALIFORNIA OR ITS OFFICERS OR AGENTS SHALL NOT BE RESPONSIBLE FOR THE ACCURACY OR COMPLETENESS OF SCANNED COPIES OF THIS PLAN SHEET.

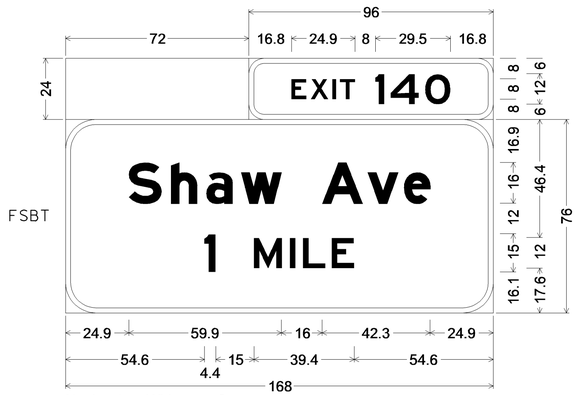

No border, White on Green;
6.0" Radius, 2.0" Border, White on Green;
[EXIT] E; [140] E;
12.0" Radius, 2.0" Border, White on Green;
[Shaw Ave] E Mod 75% spacing; [1] E; [MILE] E;

G83-4 (CA) L

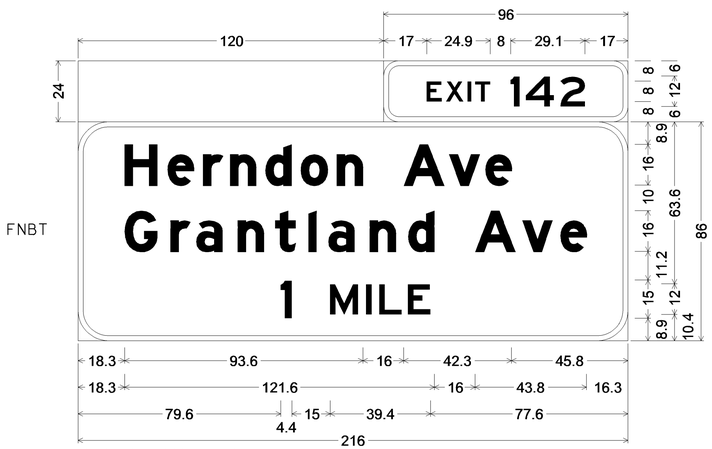

No border, White on Green;
6.0" Radius, 2.0" Border, White on Green;
[EXIT] E; [142] E;
12.0" Radius, 2.0" Border, White on Green;
[Herndon Ave] E Mod 75% spacing; [Grantland Ave] E Mod; [1] E;
[MILE] E;

G83-4 (CA) M

No border, White on Green;
6.0" Radius, 2.0" Border, White on Green;
[EXIT] E; [142] E;
12.0" Radius, 2.0" Border, White on Green;
[Herndon Ave] E Mod 75% spacing; [Grantland Ave] E Mod; Arrow 16CAP-2LV - 35.6" 45°;

G85-10 (CA) N

SIGN DETAILS
SD-3

NO SCALE

NOTE: ALL DIMENSIONS ARE IN INCHES UNLESS OTHERWISE SHOWN

STATE OF CALIFORNIA - DEPARTMENT OF TRANSPORTATION
Caltrans®
TRAFFIC DESIGN
FUNCTIONAL SUPERVISOR: M. QATAMI
CALCULATED-DESIGNED BY: MAZIN AL-ALI
CHECKED BY: HASEEB YOUSAF
REVISED BY
DATE REVISED

LAST REVISION DATE PLOTTED => 28-SEP-2009
06-23-09 TIME PLOTTED => 13:45

Dist	COUNTY	ROUTE	POST MILES TOTAL PROJECT	SHEET No.	TOTAL SHEETS
06	Fre	99	26.7/30.6	132	242

REGISTERED CIVIL ENGINEER — 06-23-09

PLANS APPROVAL DATE — 9-28-09

MAZIN H. AL-ALI No. 65523 Exp. 9/30/09 CIVIL — REGISTERED PROFESSIONAL ENGINEER — STATE OF CALIFORNIA

THE STATE OF CALIFORNIA OR ITS OFFICERS OR AGENTS SHALL NOT BE RESPONSIBLE FOR THE ACCURACY OR COMPLETENESS OF ELECTRONIC COPIES OF THIS PLAN SHEET.

NOTES:

1. BASE PLATE ELEVATIONS TO BE SET IN THE FIELD TO PROVIDE A VERTICAL CLEARANCE OF 18'-6" MINIMUM FROM BOTTOM OF FRAME OR LIGHTING FIXTURE TO THE TRAVELWAY
2. THE CONTRACTOR SHALL VERIFY ALL FIELD CONTROLLING DIMENSIONS BEFORE ORDERING OR FABRICATING ANY MATERIAL
3. "h" AND BASE PLATE ELEVATIONS ARE FOR QUANTITIES ONLY AND ARE SUBJECTED TO CHANGE BASED ON NOTE 1

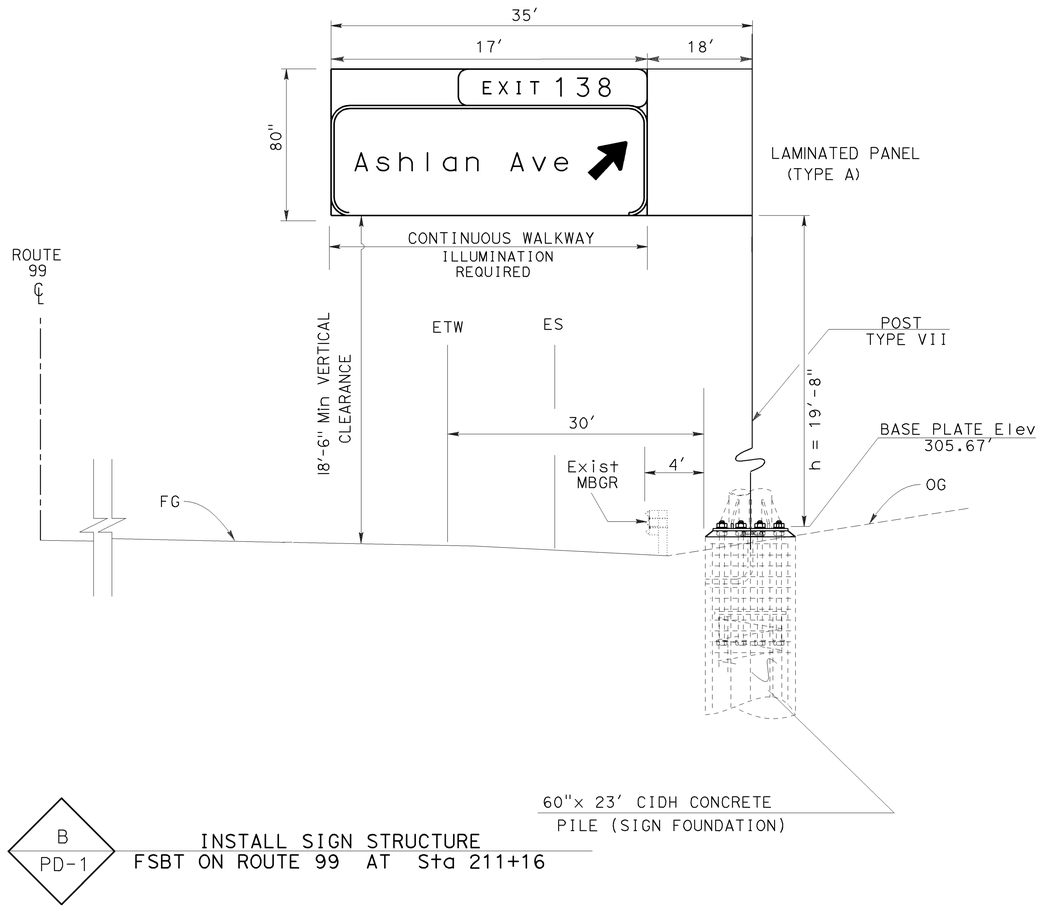

B / PD-1 — INSTALL SIGN STRUCTURE FSBT ON ROUTE 99 AT Sta 211+16

SIGN TYPE: BALANCED (DOUBLE FACED)

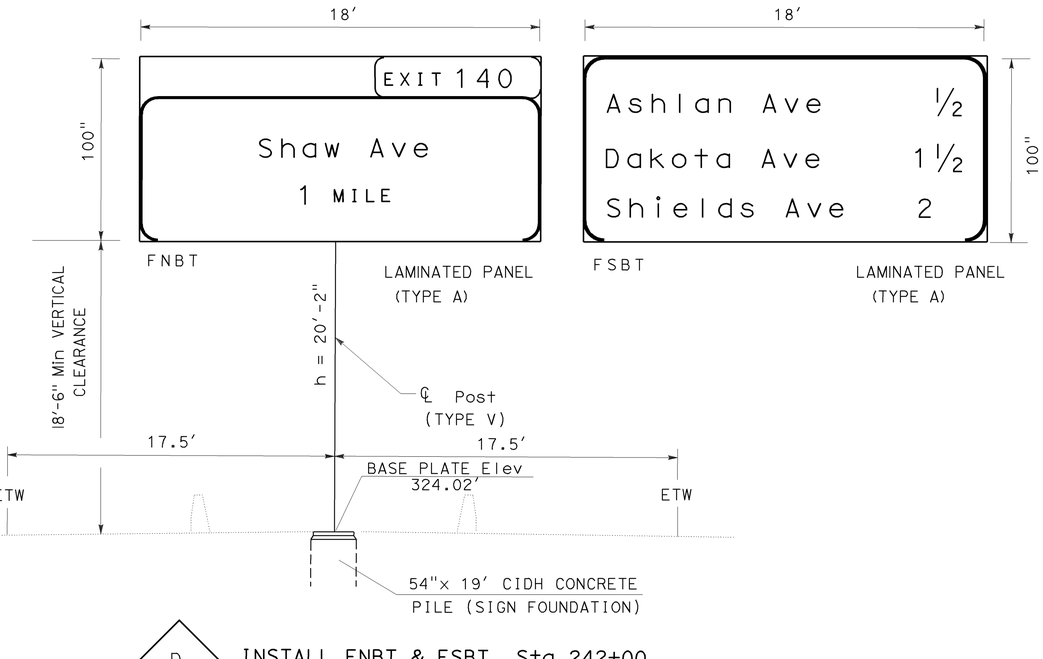

D / PD-3 — INSTALL FNBT & FSBT Sta 242+00 on ROUTE 99

OVERHEAD SIGN DETAILS

NO SCALE

SD-4

STATE OF CALIFORNIA - DEPARTMENT OF TRANSPORTATION
Caltrans
TRAFFIC DESIGN
FUNCTIONAL SUPERVISOR: MOHAMMED QATAMI
CALCULATED-DESIGNED BY: HASEEB YOUSAF
CHECKED BY: MAZIN AL-ALI
REVISED BY
DATE REVISED

LAST REVISION | DATE PLOTTED => 28-SEP-2009 | 06-23-09 | TIME PLOTTED => 13:46

BORDER LAST REVISED 4/11/2008 | RELATIVE BORDER SCALE IS IN INCHES 0 1 2 3 | USERNAME => trrichf | DGN FILE => 644261ob004.dgn | CU 06386 | EA 442611

Dist	COUNTY	ROUTE	POST MILES TOTAL PROJECT	SHEET No.	TOTAL SHEETS
06	Fre	99	26.7/30.6	133	242

REGISTERED CIVIL ENGINEER — 06-23-09

PLANS APPROVAL DATE — 9-28-09

MAZIN H. AL-ALI No. 65523 Exp. 9/30/09 CIVIL — REGISTERED PROFESSIONAL ENGINEER — STATE OF CALIFORNIA

THE STATE OF CALIFORNIA OR ITS OFFICERS OR AGENTS SHALL NOT BE RESPONSIBLE FOR THE ACCURACY OR COMPLETENESS OF ELECTRONIC COPIES OF THIS PLAN SHEET.

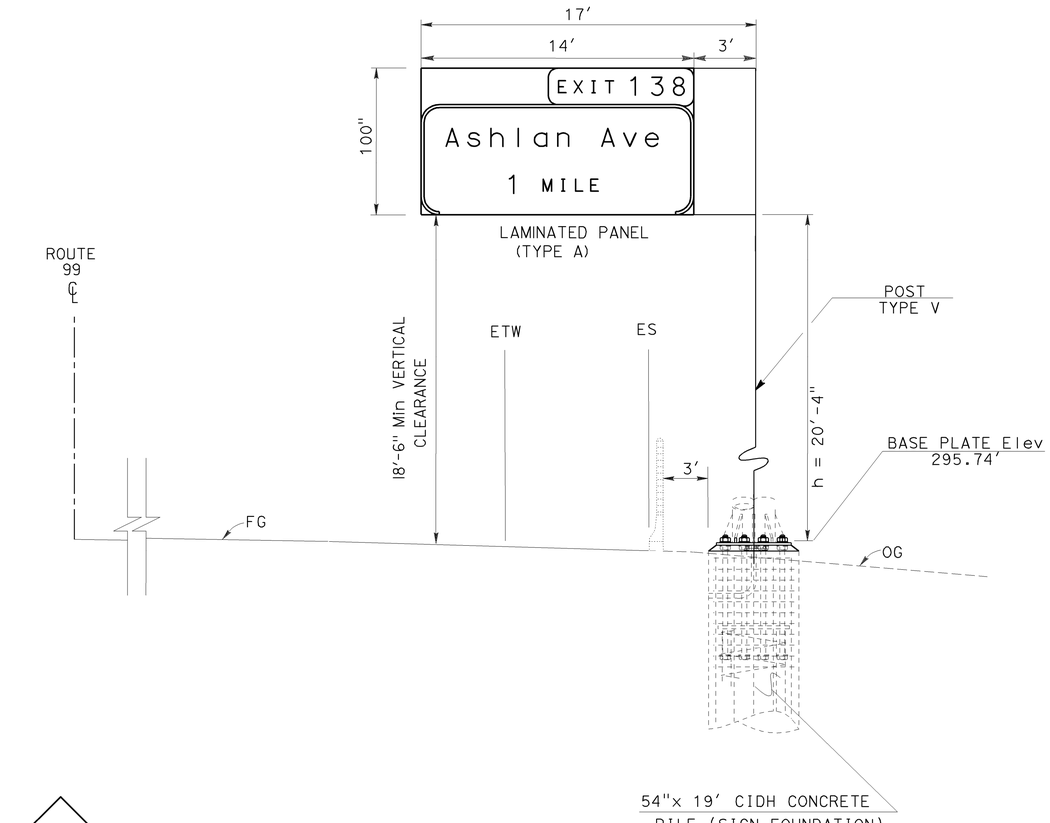

F
PD-4

INSTALL SIGN STRUCTURE
FSBT ON ROUTE 99 AT Sta 253+64

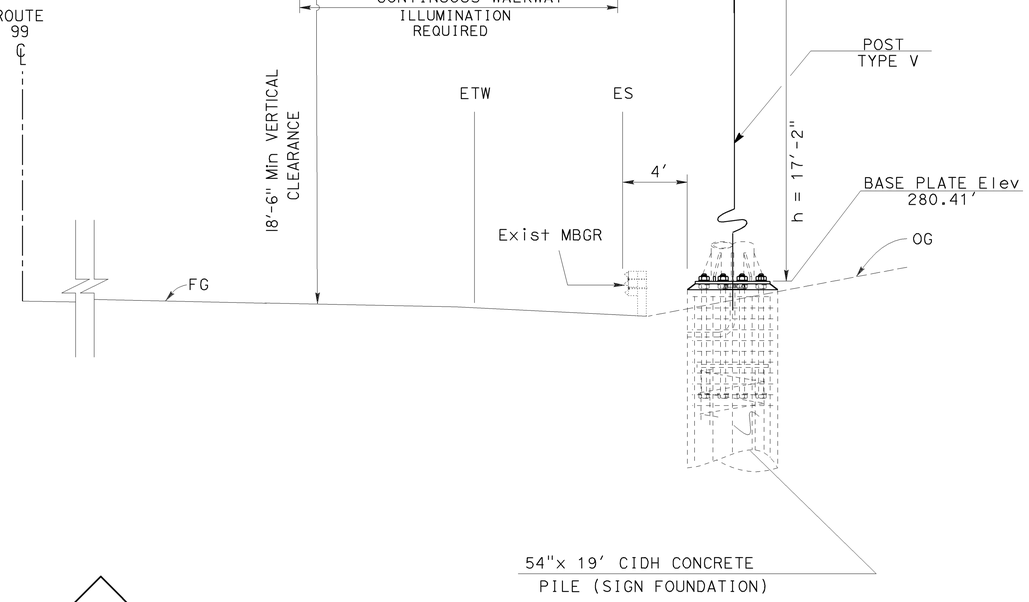

H
PD-5

INSTALL SIGN STRUCTURE
FNBT ON ROUTE 99 AT Sta 278+08

OVERHEAD SIGN DETAILS

NO SCALE

SD-5

STATE OF CALIFORNIA - DEPARTMENT OF TRANSPORTATION
Caltrans
TRAFFIC DESIGN
FUNCTIONAL SUPERVISOR: MOHAMMED QATAMI
CALCULATED-DESIGNED BY: HASEEB YOUSAF
CHECKED BY: MAZIN AL-ALI
REVISED BY
DATE REVISED

LAST REVISION 06-23-09
DATE PLOTTED => 28-SEP-2009
TIME PLOTTED => 13:46

Dist	COUNTY	ROUTE	POST MILES TOTAL PROJECT	SHEET No.	TOTAL SHEETS
06	Fre	99	26.7/30.6	134	242

REGISTERED CIVIL ENGINEER DATE 06-23-09

PLANS APPROVAL DATE 9-28-09

REGISTERED PROFESSIONAL ENGINEER MAZIN H. AL-ALI No. 65523 Exp. 9/30/09 CIVIL STATE OF CALIFORNIA

THE STATE OF CALIFORNIA OR ITS OFFICERS OR AGENTS SHALL NOT BE RESPONSIBLE FOR THE ACCURACY OR COMPLETENESS OF ELECTRONIC COPIES OF THIS PLAN SHEET.

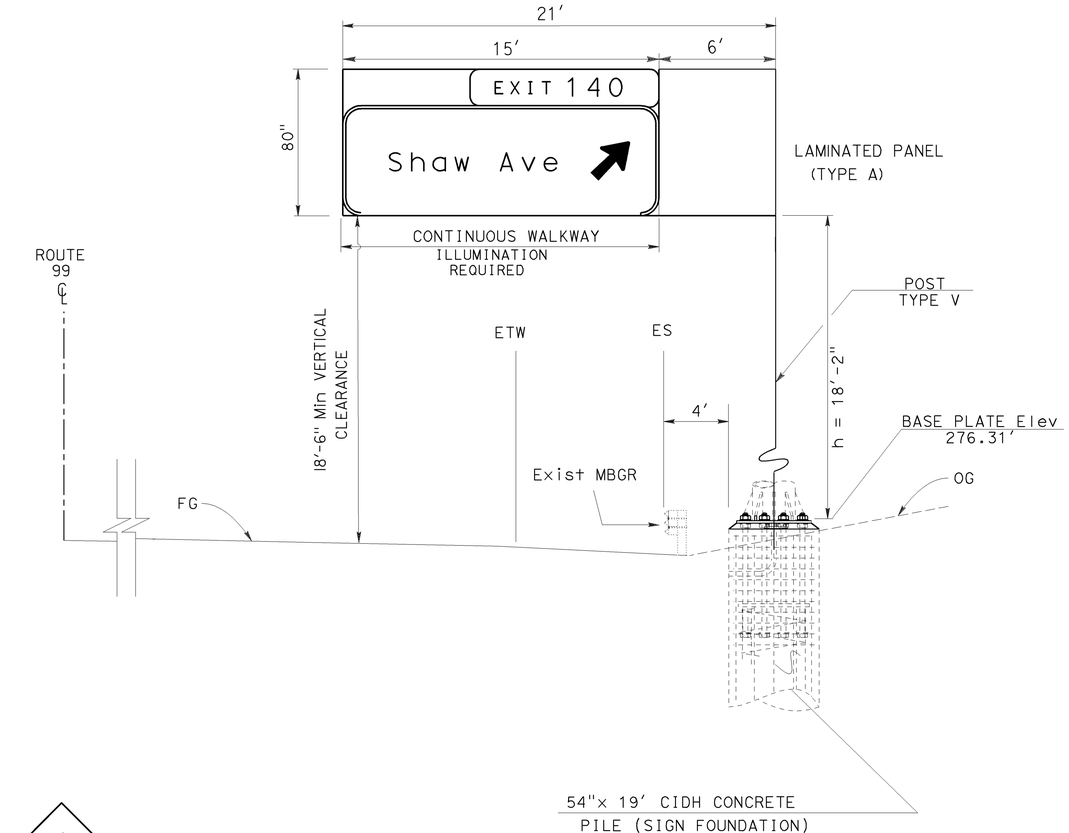

J PD-6 INSTALL SIGN STRUCTURE FSBT ON ROUTE 99 AT Sta 281+21

SIGN TYPE: BALANCED (DOUBLE FACED)

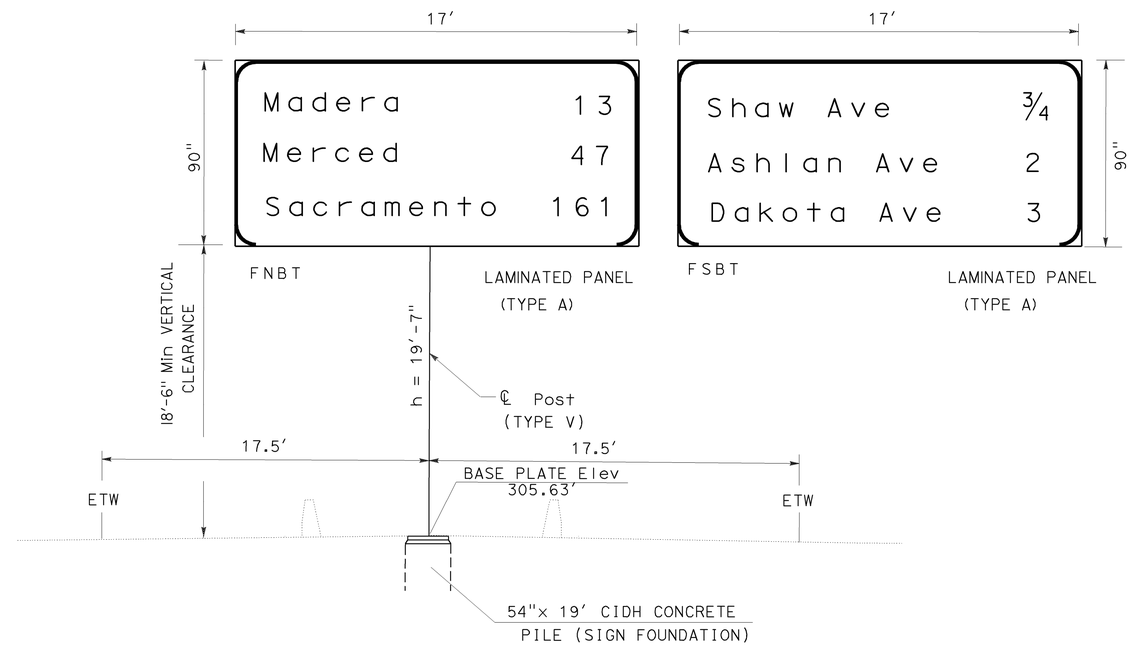

K PD-9 INSTALL FNBT & FSBT Sta 322+00 on ROUTE 99

OVERHEAD SIGN DETAILS

NO SCALE

SD-6

STATE OF CALIFORNIA - DEPARTMENT OF TRANSPORTATION

Caltrans

TRAFFIC DESIGN

FUNCTIONAL SUPERVISOR MOHAMMED QATAMI

CALCULATED-DESIGNED BY HASEEB YOUSAF

CHECKED BY MAZIN AL-ALI

REVISED BY

DATE REVISED

LAST REVISION 06-23-09

DATE PLOTTED => 28-SEP-2009

TIME PLOTTED => 13:46

Dist	COUNTY	ROUTE	POST MILES TOTAL PROJECT	SHEET No.	TOTAL SHEETS
06	Fre	99	26.7/30.6	135	242

REGISTERED CIVIL ENGINEER — 06-23-09

PLANS APPROVAL DATE — 9-28-09

REGISTERED PROFESSIONAL ENGINEER
MAZIN H. AL-ALI
No. 65523
Exp. 9/30/09
CIVIL
STATE OF CALIFORNIA

THE STATE OF CALIFORNIA OR ITS OFFICERS OR AGENTS SHALL NOT BE RESPONSIBLE FOR THE ACCURACY OR COMPLETENESS OF ELECTRONIC COPIES OF THIS PLAN SHEET.

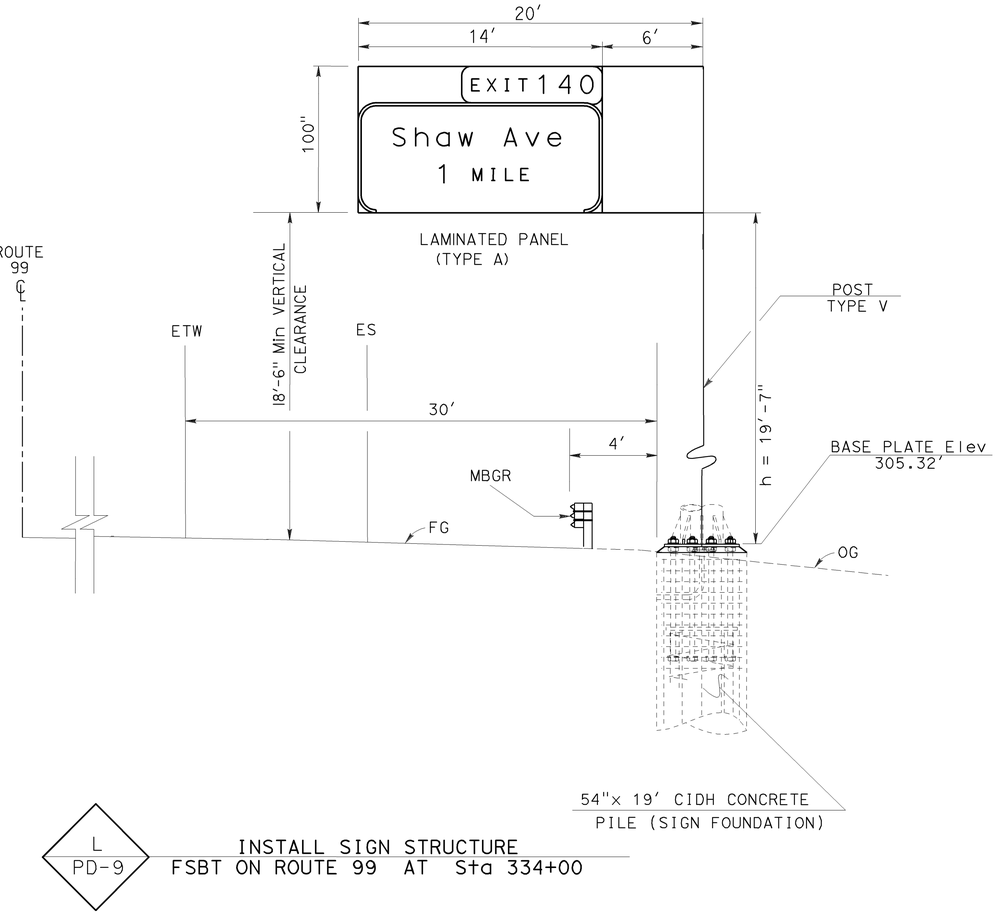

L / PD-9 — INSTALL SIGN STRUCTURE
FSBT ON ROUTE 99 AT Sta 334+00

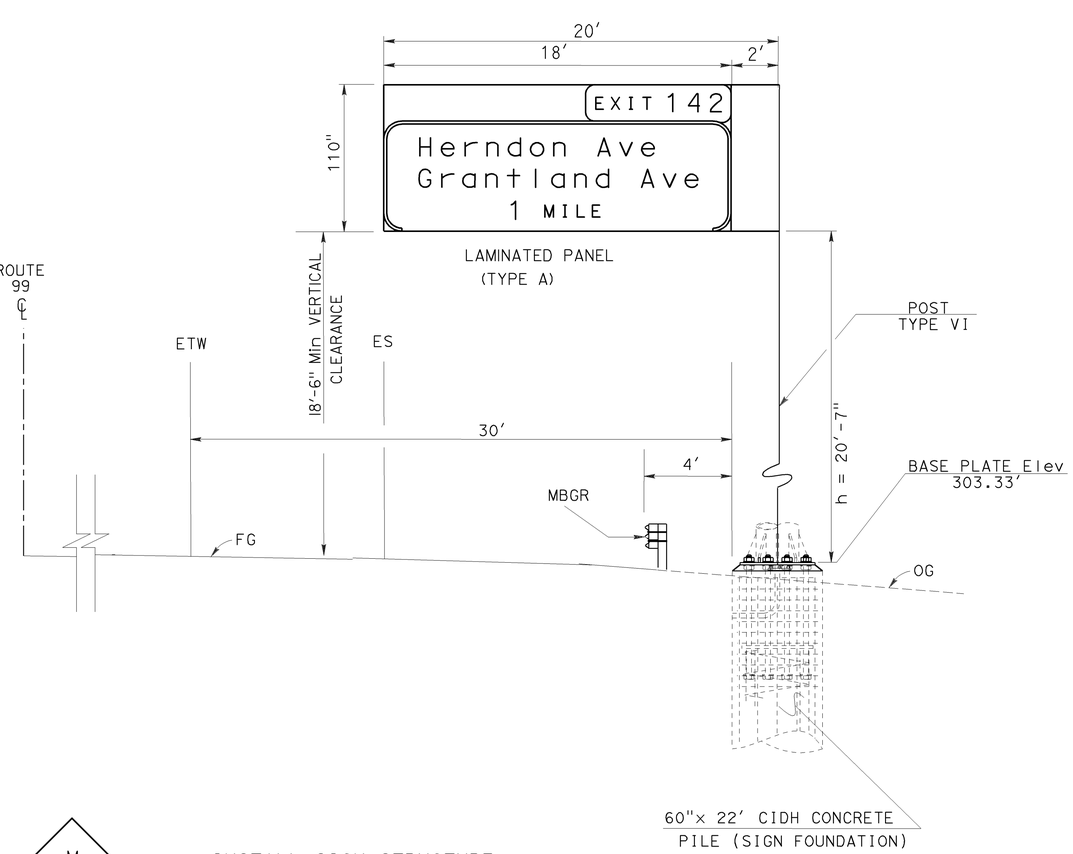

M / PD-10 — INSTALL SIGN STRUCTURE
FNBT ON ROUTE 99 AT Sta 336+28

OVERHEAD SIGN DETAILS

NO SCALE

SD-7

STATE OF CALIFORNIA - DEPARTMENT OF TRANSPORTATION
Caltrans
TRAFFIC DESIGN
FUNCTIONAL SUPERVISOR: MOHAMMED QATAMI
CALCULATED-DESIGNED BY: HASEEB YOUSAF
CHECKED BY: MAZIN AL-ALI
REVISED BY
DATE REVISED

LAST REVISION DATE PLOTTED => 28-SEP-2009
06-23-09 TIME PLOTTED => 13:46

Dist	COUNTY	ROUTE	POST MILES TOTAL PROJECT	SHEET No.	TOTAL SHEETS
06	Fre	99	26.7/30.6	136	242

REGISTERED CIVIL ENGINEER DATE 06-23-09

PLANS APPROVAL DATE 9-28-09

REGISTERED PROFESSIONAL ENGINEER
MAZIN H. AL-ALI
No. 65523
Exp. 9/30/09
CIVIL
STATE OF CALIFORNIA

THE STATE OF CALIFORNIA OR ITS OFFICERS OR AGENTS SHALL NOT BE RESPONSIBLE FOR THE ACCURACY OR COMPLETENESS OF ELECTRONIC COPIES OF THIS PLAN SHEET.

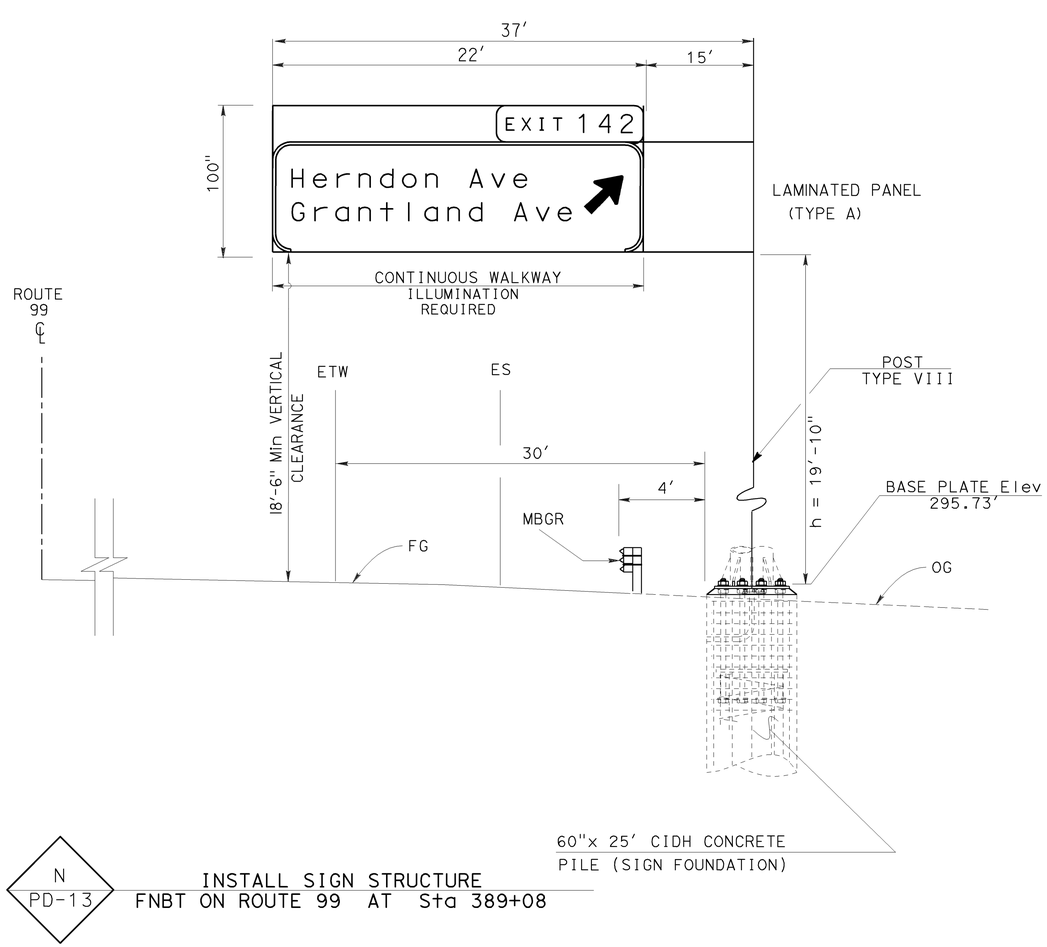

N
PD-13

INSTALL SIGN STRUCTURE
FNBT ON ROUTE 99 AT Sta 389+08

OVERHEAD SIGN DETAILS

NO SCALE

SD-8

STATE OF CALIFORNIA - DEPARTMENT OF TRANSPORTATION
Caltrans
TRAFFIC DESIGN

FUNCTIONAL SUPERVISOR: MOHAMMED QATAMI

CALCULATED-DESIGNED BY: HASEEB YOUSAF
CHECKED BY: MAZIN AL-ALI

REVISED BY
DATE REVISED

LAST REVISION
DATE PLOTTED => 28-SEP-2009
TIME PLOTTED => 13:46
06-23-09

BORDER LAST REVISED 4/11/2008

RELATIVE BORDER SCALE IS IN INCHES 0 1 2 3

USERNAME => trrichf
DGN FILE => 644261ob008.dgn

CU 06386

EA 442611

Dist	COUNTY	ROUTE	POST MILES TOTAL PROJECT	SHEET No.	TOTAL SHEETS
06	Fre	99	26.7/30.6	137	242

MAZ-ALI 06-23-09
REGISTERED CIVIL ENGINEER DATE

9-28-09
PLANS APPROVAL DATE

REGISTERED PROFESSIONAL ENGINEER
MAZIN H. AL-ALI
No. 65523
Exp 9/30/09
CIVIL
STATE OF CALIFORNIA

THE STATE OF CALIFORNIA OR ITS OFFICERS OR AGENTS SHALL NOT BE RESPONSIBLE FOR THE ACCURACY OR COMPLETENESS OF ELECTRONIC COPIES OF THIS PLAN SHEET.

ROADSIDE SIGN QUANTITIES

SHEET No.	SIGN No.	SIGN CODE	SIGN MESSAGE	No. OF POST AND POST SIZE	PANEL SIZE	SINGLE FACED	DOUBLE FACED	BACKGROUND		LEGEND		GRAFFITI FLOW		FURNISH SINGLE SHEET ALUMINUM SIGN				METAL (BARRIER MOUNTED SIGN)	REMOVE ROADSIDE SIGN	RESET ROADSIDE SIGN
														UNFRAMED		FRAMED				
								SHEETING COLOR	RETROREFLECTIVITY ASTM TYPE	SHEETING COLOR	RETROREFLECTIVITY ASTM TYPE	STANDARD	PREMIUM	0.063"	0.080"	0.063"	0.080"			
														SQFT	SQFT	SQFT	SQFT	EA	EA	EA
PD-1	1	W9-2(R)	LANE ENDS MERGE RIGHT																1	
PD-1	2	W4-2(R)	LEFT LANE ENDS MERGE RIGHT																1	
PD-6	3		CALIFORNIA STATE UNIVERSITY FRESNO NEXT EXIT																1	
PD-7	4	R2-1(65)	SPEED LIMIT 65																	1
		R48-1(CA)	RADAR ENFORCED																	
PD-7	5		SHAW AVE NEXT EXIT																	1
PD-8	6	G5(CA)	AS SHOWN ON PLAN SHEET PD-8																1	
PD-9	7	G83-1(CA)	HERNDON AVE 1 MILE																1	
PD-9	8	G83-4(CA)	SHAW AVENUE 1 MILE																1	
PD-12	9	W9-1	LEFT LANE ENDS	1-6" x 6"	48" x 48"	X		YELLOW	III	BLACK	IV		X	16				1		
PD-13	10	W4-2(R)	LEFT LANE ENDS MERGE RIGHT	1-6" x 6"	48" x 48"	X		YELLOW	III	BLACK	IV		X	16				1		
PD-13	11	G85-10(CA)	HERNDON AVENUE																1	
											TOTAL			32				2	7	2

SIGN QUANTITIES
SQ-1

CALCULATED-DESIGNED BY: ALICIA RODRIGUEZ
CHECKED BY: MAZIN AL-ALI
REVISED BY
DATE REVISED
FUNCTIONAL SUPERVISOR: M. QATAMI
STATE OF CALIFORNIA - DEPARTMENT OF TRANSPORTATION
Caltrans TRAFFIC DESIGN

LAST REVISION 06-23-09
DATE PLOTTED => 28-SEP-2009
TIME PLOTTED => 13:46

BORDER LAST REVISED 4/11/2008
RELATIVE BORDER SCALE IS IN INCHES 0 1 2 3
USERNAME => trrichf
DGN FILE => 644261oc001.dgn
CU 06386
EA 442611

Dist	COUNTY	ROUTE	POST MILES TOTAL PROJECT	SHEET No.	TOTAL SHEETS
06	Fre	99	26.7/30.6	138	242

REGISTERED CIVIL ENGINEER DATE 06-23-09

PLANS APPROVAL DATE 9-28-09

MAZIN H. AL-ALI No. 65523 Exp. 9/30/09 CIVIL — REGISTERED PROFESSIONAL ENGINEER — STATE OF CALIFORNIA

THE STATE OF CALIFORNIA OR ITS OFFICERS OR AGENTS SHALL NOT BE RESPONSIBLE FOR THE ACCURACY OR COMPLETENESS OF ELECTRONIC COPIES OF THIS PLAN SHEET.

OVERHEAD SIGN STRUCTURE QUANTITIES

SHEET No.	SIGN No.	LOCATION	SIGN MESSAGE	PANEL SIZE	SINGLE FACED	OVERHEAD SIGN PANEL					FURNISH LAMINATED PANEL SIGN (1"-TYPE A)	FURNISH SIGN STRUCTURE (TRUSS)	INSTALL SIGN STRUCTURE (TRUSS)	60" CAST-IN-DRILLED-HOLE CONCRETE PILE (SIGN FOUNDATION)	54" CAST-IN-DRILLED-HOLE CONCRETE PILE (SIGN FOUNDATION)	REMOVE SIGN STRUCTURE
						BACKGROUND		LEGEND		GRAFFITI FLOW						
				FT x INCH		SHEETING COLOR	RETROREFLECTIVITY ASTM TYPE	SHEETING COLOR	RETROREFLECTIVITY ASTM TYPE	PREMIUM	SQFT	LB	LB	LF	LF	EA
PD-1	A	STA 211+11 ROUTE 99	Ashlan Ave ↗													1
PD-1	B	STA 211+16 ROUTE 99	EXIT 138 Ashlan Ave ↗	17 x 80	X	GREEN	X	WHITE	X	X	113.34	19,880	19,880	23		
PD-3	C	STA 240+09 ROUTE 99 FNBT / FSBT	Shaw Ave 1 MILE Ashlan Ave ½ Dakota Ave 1½ Shields Ave 2													1
PD-3	D	STA 242+00 ROUTE 99 FNBT / FSBT	EXIT 140 Shaw Ave 1 MILE Ashlan Ave ½ Dakota Ave 1½ Shields Ave 2	18 x 100 18 x 100	X X	GREEN GREEN	X X	WHITE WHITE	X X	X X	150.00 150.00	9780	9780		19	
PD-4	E	STA 253+55 ROUTE 99	Ashlan Ave 1 MILE													1
PD-4	F	STA 253+64 ROUTE 99	EXIT 138 Ashlan Ave 1 MILE	14 x 100	X	GREEN	X	WHITE	X	X	116.67	9320	9320		19	
PD-5	G	STA 278+14 ROUTE 99	Shaw Ave ↗													1
PD-5	H	STA 278+08 ROUTE 99	EXIT 140 Shaw Ave ↗	15 x 80	X	GREEN	X	WHITE	X	X	100.00	11,930	11,930		19	
PD-6	I	STA 281+12 ROUTE 99	Shaw Ave ↗													1
PD-6	J	STA 281+21 ROUTE 99	EXIT 140 Shaw Ave ↗	15 x 80	X	GREEN	X	WHITE	X	X	100.00	11,930	11,930		19	
PD-9	K	STA 322+00 ROUTE 99 FNBT / FSBT	Madera 13 Merced 47 Sacramento 161 Shaw Ave ¾ Ashlan Ave 2 Dakota Ave 3	17 x 90 17 x 90	X X	GREEN GREEN	X X	WHITE WHITE	X X	X X	127.50 127.50	9370	9370		19	
PD-9	L	STA 334+00 ROUTE 99	EXIT 140 Shaw Ave 1 MILE	14 x 100	X	GREEN	X	WHITE	X	X	116.67	9990	9990		19	
PD-10	M	STA 336+28 ROUTE 99	EXIT 142 Herndon Ave Grantland Ave 1 MILE	18 x 110	X	GREEN	X	WHITE	X	X	165.00	11,850	11,850	22		
PD-13	N	STA 389+08 ROUTE 99	EXIT 142 Herndon Ave ↗ Grantland Ave	22 x 100	X	GREEN	X	WHITE	X	X	183.34	21,590	21,590	25		
										TOTAL	1450	115,640	115,640	70	114	5

OVERHEAD SIGN QUANTITIES
SQ-2

CALCULATED-DESIGNED BY: ALICIA RODRIGUEZ
CHECKED BY: MAZIN AL-ALI
FUNCTIONAL SUPERVISOR: M. QATAMI
STATE OF CALIFORNIA - DEPARTMENT OF TRANSPORTATION
Caltrans TRAFFIC DESIGN
REVISED BY
DATE REVISED

LAST REVISION 06-23-09
DATE PLOTTED => 28-SEP-2009
TIME PLOTTED => 13:46

BORDER LAST REVISED 4/11/2008
RELATIVE BORDER SCALE IS IN INCHES 0 1 2 3
USERNAME => trrichf
DGN FILE => 644261oc002.dgn
CU 06386
EA 442611

Dist	COUNTY	ROUTE	POST MILES TOTAL PROJECT	SHEET No.	TOTAL SHEETS
06	Fre	99	26.7/30.6	139	242

05-29-09
REGISTERED CIVIL ENGINEER DATE

9-28-09
PLANS APPROVAL DATE

REGISTERED PROFESSIONAL ENGINEER
RODRIGO M. CRUZ
No. 57918
Exp 06/30/10
CIVIL
STATE OF CALIFORNIA

THE STATE OF CALIFORNIA OR ITS OFFICERS OR AGENTS SHALL NOT BE RESPONSIBLE FOR THE ACCURACY OR COMPLETENESS OF SCANNED COPIES OF THIS PLAN SHEET.

THRIE BEAM BARRIER

LOCATION	REMOVE STBB LF	STBB LF	DTBB LF	TRANSITION RAILING (TYPE DTB) EA	END ANCHOR ASSEMBLY (TYPE SFT) EA
"SR99NB" 240+03.87, L† TO 293+53.88, L†	5,350.0				
"SR99SB" 242+16.31, R† TO 295+08.52, R†	5,292.2				
"SR99NB" 295+90.57, L† TO 401+76.03, L†	10,585.5				
"SR99SB" 297+91.34, R† TO 405+17.97, R†	10,726.6				
"SR99NB" 405+81.15, 29.65′ L† TO 406+06.10, 18.04′ L†				1	
"SR99NB" 406+06.10, 28.04′ L† TO 407+18.35, 20.63′ L†			112.3		
"SR99NB" 405+91.21, 20.41′ L† TO 407+18.35, 20.63′ L†	127.1				
"SR99SB" 407+19.13, 20.31′ R† TO 407+25.38, 20.31′ R†					1
"SR99SB" 407+25.38, 20.31′ R† TO 409+37.88, 20.31′ R†		212.5			
TOTAL	32,081.4	212.5	112.3	1	1*

* QUANTITY INCLUDED IN METAL BEAM GUARD RAILING TABLE.

CONCRETE BARRIER

LOCATION	TYPE 60C LF	PREPARE AND STAIN CONCRETE SQFT
"SR99NB" 240+25.58, 29.29′ L† TO 241+70.10, 23.00′ L†	144.5	1,263.3
"SR99SB" 241+00.00, 23.00′ R† TO 293+45.00, 23.26′ R†	5,245.0	21,417.1
"SR99NB" 241+70.10, 23.00′ L† TO 292+50.00, 23.00′ L†	5,079.9	20,742.9
"SR99NB" 292+50.00, 23.00′ L† TO 294+00.00, 25.00′ L†	150.0	612.5
"SR99NB" 293+45.00, 23.00′ L† TO 294+90.20, 30.29′ L†	145.2	1,263.2
"SR99NB" 296+10.17, 29.87′ L† TO 297+50.00, 23.00′ L†	139.8	1,216.5
"SR99SB" 297+09.05, 23.00′ R† TO 398+30.00, 23.00′ R†	10,121.0	41,495.9
"SR99NB" 297+50.00, 23.00′ L† TO 401+00.00, 23.00′ L†	10,350.0	42,435.0
"SR99SB" 398+30.00, 23.00′ R† TO 403+95.00, 25.00′ R†	565.0	2,316.5
"SR99NB" 401+00.00, 23.00′ L† TO 404+00.00, 25.00′ L†	300.0	1,230.0
"SR99SB" 403+95.00, 25.00′ R† TO 405+00.62, 29.00′ R†	105.6	918.9
TOTAL	32,346.0	134,911.8

HOT MIX ASPHALT

DESCRIPTION	TON
NB OUTSIDE SHOULDER RECONSTRUCTION	5,840.3
NB CROSS SLOPE CORRECTION	12,446.3
NB NEW MEDIAN LANE AND SHOULDER	19,852.5
SB OUTSIDE SHOULDER RECONSTRUCTION	6,270.3
SB CROSS SLOPE CORRECTION	10,957.6
SB NEW MEDIAN LANE AND SHOULDER	18,304.2
HMA DIKE	218.6
PLACE HMA (Misc AREA) FOR OVERSIDE DRAIN	46.4
HMA FOR AC PAD UNDER CONCRETE BARRIER	957.4
TOTAL	74,893.6

CLASS 2 AGGREGATE SUBBASE

LOCATION	CY
"SR99SB" 296+14.68 TO 298+06.31	66.6
"SR99SB" 402+92.87 TO 405+00.00	67.9
"SR99SB" 237+30.00 TO 237+60.00	6.9
TOTAL	141.4

COLD PLANE AC PAVEMENT

LOCATION	SQYD (0.25′ DEEP)	SQYD (0.06′ DEEP)
"SR99SB" 269+37.12, L† TO 270+87.11, L†	425.9	
"SR99NB" 277+00.00, R† TO 278+00.00, R†	412.8	
"SR99SB" 281+00.00, L† TO 282+00.00, L†	417.1	
"SR99NB" 281+00.00, R† TO 283+48.87, R†	1033.8	
"SR99NB" 290+22.22, R† TO 291+25.00, R†	341.3	
"SR99SB" 298+06.31, L† TO 299+06.31, L†	111.1	
"SR99SB" 298+50.00, L† TO 404+95.00, L†		29,569.4
"SR99NB" 296+10.20, R† TO 402+93.00, R†		29,130.6
"SR99NB" 391+45.50, R† TO 392+95.50, R†	320.7	
"SR99SB" 393+00.00, L† TO 394+00.00, L†	279.3	
"SR99SB" 401+92.87, L† TO 402+92.87, L†	111.1	
SUBTOTAL	3453.1	58,700.0
TOTAL	62,153.1	

CLASS 2 AGGREGATE BASE

DESCRIPTION	CY
NB OUTSIDE SHOULDER RECONSTRUCTION	3,410.2
NB INSIDE LANE AND SHOULDER	12,330.8
SB OUTSIDE SHOULDER RECONSTRUCTION	3,627.6
SB INSIDE LANE AND SHOULDER	11,778.8
TOTAL	31,591.7

LEAN CONCRETE BASE

LOCATION	CY
"SR99SB" 296+14.68 TO 298+06.31	95.2
"SR99SB" 402+92.87 TO 405+00.00	97.0
"SR99SB" 237+30.00 TO 237+60.00	9.8
TOTAL	202.0

SEAL PAVEMENT JOINT

LOCATION	TRANSVERSE WEAKENED PLANE JOINT LF	LONGITUDINAL JOINT LF
"SR99SB" 237+30.00 TO 237+60.00	53.2	59.9
"SR99SB" 296+14.68 TO 298+06.31	410.4	575.0
"SR99SB" 402+92.87 TO 405+00.00	420.0	413.2
SUBTOTAL	883.6	1048.1
TOTAL	1931.6	

JOINTED PLAIN CONCRETE PAVEMENT

LOCATION	CY
"SR99SB" 237+30.00 TO 237+60.00	20.7
"SR99SB" 296+14.68 TO 298+06.31	199.9
"SR99SB" 402+92.87 TO 405+00.00	203.7
TOTAL	424.3

TACK COAT

DESCRIPTION	TON
NB OUTSIDE SHOULDER RECONSTRUCTION	4.3
NB CROSS SLOPE CORRECTION	16.5
SB OUTSIDE SHOULDER RECONSTRUCTION	4.6
SB CROSS SLOPE CORRECTION	17.7
TOTAL	43.1

SUMMARY OF QUANTITIES

Q-1

CALCULATED-DESIGNED BY: TAM LA
CHECKED BY: RODRIGO CRUZ
FUNCTIONAL SUPERVISOR: JUN XU
REVISED BY / DATE REVISED

STATE OF CALIFORNIA - DEPARTMENT OF TRANSPORTATION
DESIGN
Caltrans

LAST REVISION 09-14-09
DATE PLOTTED => 28-SEP-2009
TIME PLOTTED => 13:46

BORDER LAST REVISED 4/11/2008
RELATIVE BORDER SCALE IS IN INCHES 0 1 2 3
USERNAME => trrichf
DGN FILE => 644261pa001.dgn
CU 06249
EA 442611

Dist	COUNTY	ROUTE	POST MILES TOTAL PROJECT	SHEET No.	TOTAL SHEETS
06	Fre	99	26.7/30.6	140	242

REGISTERED CIVIL ENGINEER — 05-29-09 DATE

9-28-09
PLANS APPROVAL DATE

RODRIGO M. CRUZ No. 57918 Exp 06/30/10 CIVIL — REGISTERED PROFESSIONAL ENGINEER — STATE OF CALIFORNIA

THE STATE OF CALIFORNIA OR ITS OFFICERS OR AGENTS SHALL NOT BE RESPONSIBLE FOR THE ACCURACY OR COMPLETENESS OF SCANNED COPIES OF THIS PLAN SHEET.

TEMPORARY DRAINAGE INLET PROTECTION

LOCATION	EA
"SR99SB" 229+60.51, 34.21′ L†	1
"SR99NB" 233+51.85, 36.23′ R†	1
"SR99SB" 233+51.18, 34.00′ L†	1
"SR99SB" 243+84.95, 32.80′ L†	1
"SR99NB" 243+85.09, 36.75′ R†	1
"SR99SB" 248+54.52, 32.55′ L†	1
"SR99NB" 248+51.89, 36.37′ R†	1
"SR99SB" 254+53.86, 47.68′ L†	1
"SR99SB" 254+53.71, 30.50′ R†	1
"SR99NB" 254+54.20, 29.37′ L†	1
"SR99SB" 256+14.13, 52.23′ L†	1
"SR99SB" 271+45.02, 82.89′ L†	1
"SR99SB" 272+03.61, 36.83′ L†	1
"SR99NB" 269+54.80, 52.55′ R†	1
"SR99SB" 272+04.04, 29.96′ R†	1
"SR99NB" 272+04.53, 30.40 L†	1
"SR99SB" 274+54.19, 36.76 L†	1
"SR99NB" 274+54.39, 30.53′ L†	1
"SR99SB" 274+53.90, 29.89′ R†	1
"SR99NB" 274+54.93, 37.87′ R†	1
"SR99NB" 276+91.77, 30.30′ L†	1
"SR99SB" 276+91.28, 30.18′ R†	1
"SR99SB" 277+92.00, 36.74′ L†	1
"SR99SB" 276+97.33, 70.35′ L†	1
"SR99SB" 279+85.12, 43.01′ L†	1
"SR99NB" 278+89.17, 30.31′ L†	1
"SR99SB" 279+88.72, 30.11′ R†	1
"SR99NB" 278+26.84, 37.77′ R†	1
SUBTOTAL	28

LOCATION	EA
"SR99NB" 280+39.17, 30.38′ L†	1
"SR99SB" 280+38.69, 30.19′ R†	1
"SR99SB" 281+43.90, 36.88′ L†	1
"SR99NB" 281+44.39, 30.42′ L†	1
"SR99SB" 281+43.91, 30.18′ R†	1
"SR99NB" 281+42.22, 52.14′ R†	1
"SR99NB" 281+95.51, 30.51′ L†	1
"SR99SB" 281+95.03, 30.11′ R†	1
"SR99NB" 283+48.13, 30.46′ L†	1
"SR99SB" 283+47.65, 30.19′ R†	1
"SR99NB" 283+46.90, 37.66′ R†	1
"SR99NB" 283+41.52, 71.02′ R†	1
"SR99NB" 285+54.36, 37.59′ R†	1
"SR99NB" 285+54.32, 30.31′ L†	1
"SR99SB" 285+55.41. 30.41′ R†	1
"SR99NB" 288+03.14, 30.22′ L†	1
"SR99SB" 288+06.48, 30.06′ R†	1
"SR99NB" 288+02.49, 38.09′ R†	1
"SR99SB" 291+56.59, 37.03′ L†	1
"SR99SB" 296+30.68, 44.05′ L†	1
"SR99NB" 319+51.71, 62.47′ R†	1
"SR99NB" 332+67.66, 62.45′ R†	1
"SR99NB" 384+76.83, 30.04′ L†	1
"SR99SB" 384+72.37, 29.38′ R†	1
"SR99NB" 405+76.34, 80.41′ R†	1
"SR99SB" 405+81.15, 90.33′ L†	1
"SR99NB" 409+52.06, 65.31′ R†	1
SUBTOTAL	27
TOTAL	55

RUMBLE STRIP

LOCATION	STA
"SR99NB" 231+68.00, 13.00′ L† TO 237+41.50, 13.00′ L†	5.7
"SR99NB" 231+68.00, 25.00′ R† TO 236+86.50, 25.00 R†	5.2
"SR99SB" 231+68.00, 13.00′ R† TO 237+30.04, 13.00′ R†	5.6
"SR99SB" 231+68.00, 25.00′ L† TO 238+10.50, 25.00′ L†	6.4
"SR99NB" 239+76.00, 25.00′ R† TO 279+00.00, 25.00 R†	39.2
"SR99NB" 240+24.50, 13.00′ L† TO 294+85.90, 13.00′ L†	54.6
"SR99SB" 240+45.10, 13.00′ R† TO 294+90.00, 13.00′ R†	54.4
"SR99SB" 240+98.00, 25.00′ L† TO 268+00.00, 41.10′ L†	27.0
"SR99SB" 271+50.00, 25.00′ L† TO 278+80.83, 25.00′ L†	7.3
"SR99SB" 282+00.00, 25.00′ L† TO 294+90.00, 25.00′ L†	12.9
"SR99NB" 285+00.00, 25.00′ R† TO 289+50.00, 25.00′ R†	4.5
"SR99NB" 292+00.00, 49.50′ R† TO 294+85.90, 43.20′ R†	2.9
"SR99NB" 296+10.00, 13.00′ L† TO 404+95.54, 13.00′ L†	108.9
"SR99NB" 296+10.00, 40.81′ R† TO 388+00.00, 25.00′ R†	91.9
"SR99NB" 394+00.00, 25.00′ R† TO 404+95.54, 25.00′ R†	11.0
"SR99SB" 296+14.70, 13.00′ R† TO 405+00.00, 13.00′ R†	108.9
"SR99SB" 296+14.70, 25.00′ L† TO 392+00.00, 46.00′ L†	95.9
"SR99SB" 396+00.00, 25.00′ L† TO 405+00.00, 25.00′ L†	9.0
TOTAL	651.3

EARTHWORK

DESCRIPTION	ROADWAY EXCAVATION CY	DITCH EXCAVATION CY	(N) EMBANKMENT CY	(N) SURPLUS M†I CY
SR99NB - DITCH 239+42.07, R† TO 255+50.00, R†		384.2	4.4	322.2
SR99NB - MAINLINE (STAGE 1) 231+68.00 TO 413+00.00	6,140.9			5,219.8
SR99NB - MAINLINE (STAGE 2 & 3) 236+44.05 TO 404+95.54	9,940.0		1649.0	6,800.0
SR99NB - BASIN AT GRANTLAND Ave NB OFF-RAMP	460.5			391.4
SR99SB - DITCH 241+30.00, L† TO 253+60.00, L†		489.1	0.5	415.3
SR99SB - MAINLINE (STAGE 1) 231+68.00 TO 413+00.00	6,466.7		1605.0	5,496.7
SR99SB - MAINLINE 237+30.04 TO 405+00.00	10,822.0			7,593.7
SR99SB - BASIN AT GRANTLAND Ave SB ON-RAMP	474.9			403.7
EARTH BERMS			108.0	-108.0
TOTAL	34,305.0	873.3		

(N) NOT A SEPARATE PAY ITEM. FOR INFORMATION ONLY.

OVERSIDE DRAIN

LOCATION	TYPE OF DOWNDRAIN	(N) REMOVE DOWNDRAIN EA	PLACE HMA (Misc AREA) SQYD	HMA TON
"SR99NB" 243+85.22, R†	PIPE	1		
"SR99NB" 248+53.90, R†	PIPE	1		
"SR99NB" 253+68.00, R†	AC	1	2.6	1.7
"SR99NB" 278+26.00, R†	AC	1	1.0	0.9
"SR99NB" 290+30.50, R†	AC		2.7	1.7
"SR99NB" 292+04.18, R†	AC	1	3.8	2.3
"SR99NB" 396+00.00, R†	AC		7.6	4.2
"SR99NB" 396+03.00, R†	FLUME	1		
"SR99NB" 400+53.00, R†	PIPE	1		
"SR99SB" 253+68.00, L†	AC	1	1.8	1.3
"SR99SB" 396+50.00, L†	AC		9.4	5.1
"SR99SB" 396+52.00, L†	FLUME	1		
"SR99SB" 401+07.00, L†	PIPE	1		
HMA APRON FOR DI (SHEET DQ-3)			201.0	26.8
		TOTAL	229.9	44.0*

* TOTAL INCLUDED IN HOT MIX ASPHALT TABLE.
(N) NOT A SEPARATE PAY ITEM. FOR INFORMATION ONLY.

SUMMARY OF QUANTITIES

Q-2

CALCULATED-DESIGNED BY
CHECKED BY
TAM LA/HARITH KIRAN
RODRIGO CRUZ
REVISED BY
DATE REVISED
FUNCTIONAL SUPERVISOR
JUN XU
STATE OF CALIFORNIA - DEPARTMENT OF TRANSPORTATION
DESIGN
Caltrans

LAST REVISION DATE PLOTTED => 29-SEP-2009
06-29-09 TIME PLOTTED => 10:21

BORDER LAST REVISED 4/11/2008
RELATIVE BORDER SCALE IS IN INCHES 0 1 2 3
USERNAME => trphils
DGN FILE => 644261pa002.dgn
CU 06249
EA 442611

Dist	COUNTY	ROUTE	POST MILES TOTAL PROJECT	SHEET No.	TOTAL SHEETS
06	Fre	99	26.7/30.6	141	242

05-29-09
REGISTERED CIVIL ENGINEER DATE

9-28-09
PLANS APPROVAL DATE

REGISTERED PROFESSIONAL ENGINEER
RODRIGO M. CRUZ
No. 57918
Exp 06/30/10
CIVIL
STATE OF CALIFORNIA

THE STATE OF CALIFORNIA OR ITS OFFICERS OR AGENTS SHALL NOT BE RESPONSIBLE FOR THE ACCURACY OR COMPLETENESS OF SCANNED COPIES OF THIS PLAN SHEET.

METAL BEAM GUARD RAILING

LOCATION	REMOVE MBGR LF	MBGR (7' STEEL POST) LF	END ANCHOR ASSEMBLY (TYPE SFT) EA	ALTERNATIVE FLARED TERMINAL SYSTEM EA	TRANSITION RAILING (TYPE WB) EA	(N) GUARD RAILING LAYOUT
"SR99NB" 236+43.55, 27.67' Lt TO 237+49.07, 03.29' Lt	112.3					
"SR99SB" 240+34.78, 04.65' Rt TO 242+16.31, 22.61' Rt	182.2					
"SR99NB" 241+46.90, 35.00' Rt TO 249+10.94, 35.00' Rt	764.0					
"SR99NB" 241+46.90, 35.00' Rt TO 250+68.75, 34.00' Rt		921.8				SEE SHEET C-1
"SR99NB" 250+68.75, 34.00' Rt TO 250+75.00, 34.00' Rt			1			
"SR99NB" 277+42.79, 41.41' Rt TO 278+43.21, 32.82' Rt	100.9					
"SR99NB" 277+18.22, 41.35' Rt TO 277+55.72, 38.34' Rt				1		
"SR99NB" 277+55.72, 38.34' Rt TO 278+18.21, 33.42' Rt		62.5				16B
"SR99NB" 278+18.21, 33.42' Rt TO 278+43.21, 32.82' Rt					1	
"SR99SB" 280+91.82, 37.71' Lt TO 282+79.62, 41.90' Lt	188.2					
"SR99SB" 280+91.82, 37.71' Lt TO 281+16.82, 37.48' Lt					1	
"SR99SB" 281+16.82, 37.48' Lt TO 282+29.32, 37.75' Lt		112.5				12B
"SR99SB" 282+29.32, 37.75' Lt TO 282+66.82, 40.95' Lt				1		
"SR99NB" 293+53.88, 21.23' Lt TO 295+05.05, 49.90' Rt	158.4					
"SR99NB" 294+80.06, 50.37' Rt TO 295+05.05, 49.90' Rt	25.0				1	
"SR99SB" 295+95.64, 34.15' Lt TO 296+58.14, 38.16' Lt	62.7					
"SR99SB" 295+95.64, 34.15' Lt TO 296+20.64, 34.39' Lt					1	
"SR99SB" 296+20.64, 34.39' Lt TO 296+58.14, 38.16' Lt				1		
"SR99SB" 295+92.20, 05.35' Rt TO 297+91.34, 19.81' Rt	199.7					
"SR99NB" 297+33.05, 45.51' Rt TO 297+39.30, 45.51' Rt			1			
"SR99SB" 333+83.75, 37.34' Lt TO 333+89.75, 37.34' Lt			1			
"SR99SB" 333+89.75, 37.34' Lt TO 334+27.25, 37.34' Lt		37.5				16B
"SR99SB" 334+27.25, 37.34' Lt TO 334+64.75, 41.29' Lt				1		
"SR99NB" 335+63.25, 41.96' Rt TO 336+00.75, 38.01' Rt				1		
"SR99NB" 336+00.75, 38.01' Rt TO 336+38.25, 38.01' Rt		37.5				16B
"SR99NB" 336+38.25, 38.01' Rt TO 336+44.25, 38.01' Rt			1			
"SR99NB" 388+43.00, 41.76' Rt TO 388+80.50, 37.80' Rt				1		
"SR99NB" 388+80.50, 37.80' Rt TO 389+18.00, 37.80' Rt		37.5				16B
"SR99NB" 389+18.00, 37.80' Rt TO 389+24.00, 37.80' Rt			1			
"SR99NB" 401+76.03, 20.46' Lt TO 405+17.63, 04.87' Lt	386.7					
"SR99SB" 405+91.06, 04.50' Rt TO 409+37.17, 19.60' Rt	346.3					
"SR99NB" 405+16.49, 09.43' Lt TO 405+16.49, 51.09' Lt	41.7					
"SR99NB" 405+88.92, 08.37' Lt TO 405+88.92, 21.78' Lt	13.4					
FROM THRIE BEAM BARRIER			1			
TOTAL	2581.6	1209.3	6	6	4	

REPLACE AC SURFACING

LOCATION	CY
"SR99SB" 275+80.83, Lt TO 276+80.83, Lt	44.8
"SR99SB" 298+06.31, Lt TO 299+06.31, Lt	30.7
"SR99SB" 401+92.87, Lt TO 402+92.87, Lt	30.7
TOTAL	106.3

REMOVE CONCRETE

LOCATION	CY
"SR99SB" 394+06.80, Lt TO 394+61.38, Lt	3.5
TOTAL	3.5

SUMMARY OF QUANTITIES

Q-3

STATE OF CALIFORNIA - DEPARTMENT OF TRANSPORTATION
DESIGN
FUNCTIONAL SUPERVISOR: JUN XU
CALCULATED-DESIGNED BY: TAM LA
CHECKED BY: RODRIGO CRUZ
REVISED BY
DATE REVISED

LAST REVISION 06-22-09
DATE PLOTTED => 28-SEP-2009
TIME PLOTTED => 13:47

BORDER LAST REVISED 4/11/2008
RELATIVE BORDER SCALE IS IN INCHES 0 1 2 3
USERNAME => trrichf
DGN FILE => 644261pa003.dgn
CU 06249
EA 442611

Dist	COUNTY	ROUTE	POST MILES TOTAL PROJECT	SHEET No.	TOTAL SHEETS
06	Fre	99	26.7/30.6	142	242

05-29-09
REGISTERED CIVIL ENGINEER DATE

9-28-09
PLANS APPROVAL DATE

REGISTERED PROFESSIONAL ENGINEER
RODRIGO M. CRUZ
No. 57918
Exp 06/30/10
CIVIL
STATE OF CALIFORNIA

THE STATE OF CALIFORNIA OR ITS OFFICERS OR AGENTS SHALL NOT BE RESPONSIBLE FOR THE ACCURACY OR COMPLETENESS OF SCANNED COPIES OF THIS PLAN SHEET.

DIKE

LOCATION	REMOVE AC DIKE LF	PLACE HMA DIKE (TYPE F) LF	PLACE HMA DIKE (TYPE E) LF	PLACE HMA DIKE (TYPE C) LF	HMA TON
"SR99NB" 241+46.90, 35.00' R† TO 253+73.93, 34.67' R†	1227.0				
"SR99NB" 241+46.90, 35.00' R† TO 250+75.00, 34.00' R†		928.1			12.3
"SR99NB" 250+75.00, 34.00' R† TO 253+73.93, 34.67' R†			298.9		7.8
"SR99SB" 252+60.65, 34.00' L† TO 253+78.00, 34.00' L†	117.3				
"SR99SB" 252+60.65, 34.00' L† TO 253+73.00, 38.40' L†			112.3		2.9
"SR99SB" 260+49.59, 33.14' L† TO 270+81.59, 69.29' L†	1032.0		1032.0		26.9
"SR99NB" 270+01.41, 34.99' R† TO 278+31.26, 33.71' R†	829.8				
"SR99NB" 270+01.41, 34.99' R† TO 276+93.21, 37.35' R†			691.8		18.0
"SR99SB" 270+88.06, 34.16' L† TO 276+89.71, 38.37' L†	601.6		601.6		15.7
"SR99NB" 276+93.21, 37.35' R† TO 277+55.72, 38.34' R†				62.5	0.5
"SR99NB" 277+55.72, 38.34' R† TO 278+43.21, 32.82' R†		87.5			1.2
"SR99NB" 279+38.22, 34.78' R† TO 283+35.32, 69.86' R†	397.1		397.1		10.3
"SR99SB" 280+91.82, 37.71' L† TO 295+08.59, 33.91' L†	1416.8				
"SR99SB" 280+91.82, 37.71' L† TO 282+29.32, 37.75' L†		137.5			1.8
"SR99SB" 282+29.32, 37.75' L† TO 282+91.82, 36.96' L†				62.5	0.5
"SR99SB" 282+91.82, 36.96' L† TO 295+08.59, 33.91' L†			1216.8		31.7
"SR99NB" 283+49.57, 38.62' R† TO 290+22.22, 35.50' R†	672.7		672.7		17.5
"SR99NB" 290+27.25, 69.98' R† TO 291+78.90, 58.82' R†	151.7		151.7		4.0
"SR99NB" 291+78.90, 58.82' R† TO 295+05.05, 49.90' R†	326.1	326.1			4.3
"SR99NB" 295+90.83, 48.32' R† TO 298+01.63, 44.32' R†	210.8				
"SR99NB" 295+90.83, 48.32' R† TO 297+33.05, 45.51' R†		142.2			1.9
"SR99SB" 295+95.64, 34.15' L† TO 296+58.14, 38.16' L†	62.5	62.5			0.8
"SR99NB" 297+32.05, 45.51' R† TO 298+00.63, 44.82' R†			68.6		1.8
"SR99NB" 388+80.50, 37.80' R† TO 389+24.00, 37.80' R†		43.5			0.6
"SR99NB" 393+01.62, 34.56' R† TO 404+91.32, 32.69' R†	1189.7				
"SR99NB" 393+01.62, 34.56' R† TO 404+17.07, 34.26' R†			1115.5		29.0
"SR99SB" 394+06.80, 34.62' L† TO 404+95.77, 32.93' L†			1089.0		28.3
"SR99SB" 394+61.38, 34.08' L† TO 404+95.77, 32.93' L†	1034.4				
"SR99NB" 404+17.07, 34.26' R† TO 404+91.32, 32.69' R†		74.3			1.0
TOTAL	9269.6	1801.7	7447.8	125.0	218.8*

* QUANTITY INCLUDED IN HOT MIX ASPHALT TABLE.

SHOULDER BACKING

LOCATION	TON
"SR99NB" 253+73.93, R† TO 270+01.41, R†	177.0
"SR99NB" 296+15.83, R† TO 389+00.00, R†	1009.7
"SR99SB" 298+06.00, L† TO 299+06.31, L†	10.9
"SR99SB" 299+06.31, L† TO 301+50.00, L†	17.7
"SR99SB" 301+50.00, L† TO 388+50.00, L†	946.1
TOTAL	2161.3

REMOVE TREE (N)

LOCATION	EA
"SR99NB" 251+36, R†	1
"SR99NB" 255+81, R†	1
"SR99NB" 256+93, R†	1
"SR99NB" 256+98, R†	1
"SR99NB" 259+90, R†	1
"SR99NB" 265+90, R†	1
"SR99NB" 269+00, R†	1
"SR99NB" 274+10, R†	1
"SR99NB" 274+71, R†	1
"SR99NB" 276+42, R†	1
"SR99NB" 276+84, R†	1
"SR99SB" 284+25, L†	1
"SR99SB" 284+29, L†	1
"SR99SB" 288+12, L†	1
"SR99SB" 288+31, L†	1
"SR99SB" 288+76, L†	1
"SR99NB" 297+79, R†	1
"SR99NB" 297+93, R†	1
"SR99NB" 300+80, R†	1
"SR99NB" 300+95, R†	1
"SR99SB" 305+96, L†	1
"SR99NB" 310+54, R†	1
"SR99NB" 310+62, R†	1
"SR99SB" 312+69, L†	1
"SR99NB" 313+91, R†	1
"SR99NB" 314+00, R†	1
"SR99NB" 314+06, R†	1
"SR99SB" 319+66, L†	1
"SR99NB" 320+41, R†	1
"SR99NB" 320+53, R†	1
"SR99SB" 323+13, L†	1
"SR99SB" 323+23, L†	1

LOCATION	EA
"SR99NB" 323+75, R†	1
"SR99NB" 323+85, R†	1
"SR99NB" 334+09, R†	1
"SR99NB" 334+20, R†	1
"SR99NB" 341+00, R†	1
"SR99NB" 341+07, R†	1
"SR99NB" 344+29, R†	1
"SR99SB" 347+59, L†	1
"SR99SB" 347+62, L†	1
"SR99NB" 347+88, R†	1
"SR99SB" 350+97, L†	1
"SR99SB" 354+30, L†	1
"SR99SB" 361+40, L†	1
"SR99SB" 364+78, L†	1
"SR99SB" 364+85, L†	1
"SR99NB" 368+27, R†	1
"SR99NB" 368+38, R†	1
"SR99SB" 374+97, L†	1
"SR99SB" 375+00, L†	1
"SR99NB" 375+38, R†	1
"SR99NB" 375+48, R†	1
"SR99SB" 378+46, L†	1
"SR99SB" 381+79, L†	1
"SR99NB" 382+28, R†	1
"SR99NB" 382+36, R†	1
"SR99SB" 385+18, L†	1
"SR99NB" 385+89, R†	1
"SR99NB" 385+96, R†	1
"SR99SB" 396+83, L†	1
"SR99SB" 398+83, L†	1
"SR99SB" 400+48, L†	1

(N) NOT A SEPARATE PAY ITEM. FOR INFORMATION ONLY.

SUMMARY OF QUANTITIES

Q-4

STATE OF CALIFORNIA - DEPARTMENT OF TRANSPORTATION
DESIGN
FUNCTIONAL SUPERVISOR: JUN XU
CALCULATED-DESIGNED BY: TAM LA
CHECKED BY: RODRIGO CRUZ
REVISED BY
DATE REVISED

LAST REVISION
DATE PLOTTED => 28-SEP-2009
TIME PLOTTED => 13:47
06-22-09

BORDER LAST REVISED 4/11/2008
RELATIVE BORDER SCALE IS IN INCHES 0 1 2 3
USERNAME => trrichf
DGN FILE => 644261pq004.dgn
CU 06249
EA 442611

Dist	COUNTY	ROUTE	POST MILES TOTAL PROJECT	SHEET No.	TOTAL SHEETS
06	Fre	99	26.7/30.6	143	242

05-29-09
REGISTERED CIVIL ENGINEER DATE

9-28-09
PLANS APPROVAL DATE

REGISTERED PROFESSIONAL ENGINEER
RODRIGO M. CRUZ
No. 57918
Exp 06/30/10
CIVIL
STATE OF CALIFORNIA

THE STATE OF CALIFORNIA OR ITS OFFICERS OR AGENTS SHALL NOT BE RESPONSIBLE FOR THE ACCURACY OR COMPLETENESS OF SCANNED COPIES OF THIS PLAN SHEET.

TEMPORARY FENCE (TYPE ESA)

TREE No.	LOCATION	DRIP LINE DIAMETER FT	LF
1	"SR99SB" 404+30.00, 92.0′ Lt	30.0	94.3
2	"SR99SB" 404+25.00, 96.0′ Lt	30.0	94.3
3	"SR99SB" 404+25.00, 96.0′ Lt	30.0	94.3
4	"SR99NB" 400+30.00, 66.0′ Rt	20.0	62.8
5	"SR99NB" 401+85.00, 82.0′ Rt	20.0	62.8
6	"SR99NB" 402+62.00, 105.0′ Rt	50.0	157.1
7	"SR99NB" 403+50.00, 107.0′ Rt	15.0	47.1
8	"SR99NB" 404+15.00, 99.0′ Rt	40.0	125.7
9	"SR99NB" 404+40.00, 91.0′ Rt	40.0	125.7
10	"SR99NB" 404+80.00, 75.0′ Rt	15.0	47.1
11	"SR99NB" 404+60.00, 93.0′ Rt	20.0	62.8
12	"SR99NB" 404+70.00, 95.0′ Rt	30.0	94.3
		TOTAL	1068.3

TEMPORARY SILT FENCE

LOCATION*	LF
SR99NB 239+80.00, 34.0′ Rt TO 255+65.00, 42.9′ Rt	1,585.0
SR99NB 240+25.00, 29.0′ Lt TO 294+50.00, 30.8′ Lt	5,425.0
SR99SB 241+00.00, 24.5′ Rt TO 294+50.00, 29.2′ Rt	5,350.0
SR99SB 241+00.00, 33.7′ Lt TO 276+80.00, 34.9′ Lt	3,580.0
SR99NB 256+00.00, 50.7′ Rt TO 278+00.00, 37.5′ RT	2,200.0
SR99NB 281+00.00, 48.9′ Rt TO 283+45.00, 70.2′ Rt	245.0
SR99NB 283+50.00, 38.7′ Rt TO 295+05.00, 53.8′ Rt	1,155.0
SR99SB 281+00.00, 38.7′ Lt TO 295+10.00, 35.1′ Lt	1,410.0
SR99SB 295+95.00, 34.8′ Lt TO 394+00.00, 62.2′ Lt	9,805.0
SR99SB 297+10.00, 24.4′ Rt TO 405+00.00, 30.5′ Rt	10,790.0
SR99NB 296+10.00, 30.9′ Lt TO 404+00.00, 26.2′ Lt	10,790.0
SR99NB 295+90.00, 51.2′ Rt TO 405+00.00, 32.9′ Rt	10,910.0
SR99SB 394+00.00, 33.7′ Lt TO 403+00.00, 35.1′ Lt	900.0
TOTAL	64,145.0

* OFFSET IS FROM THE CUT AND FILL LINE.

FENCE

LOCATION	REMOVE FENCE (TYPE BW) LF	REMOVE FENCE (TYPE WM) LF	CHAIN LINK FENCE (TYPE CL-6) LF
SR99NB 238+93.11, 115.2′ Rt TO 248+09.31, 85.21′ Rt		916.2	916.2
SR99NB 335+20.47, 61.56′ Rt TO 341+63.56, 61.01′ Rt		643.1	643.1
SR99SB 337+37.82, 62.12′ Lt TO 398+29.69, 245.4′ Lt	6183.3		6183.3
SR99SB 398+61.85, 126.3′ Lt TO 405+24.68, 56.93′ Lt	991.5		991.5
TOTAL	7174.8	1559.3	8734.1

TEMPORARY FIBER ROLL

LOCATION	LF	DESCRIPTION
SR99SB 237+00 TO 241+00	910.0	BIOLA JUNCTION OH
SR99SB 237+00 TO 241+00	291.0	HERNDON CANAL BRIDGE
SR99SB 237+00 TO 241+00	300.0	GRANTLAND Ave UC
TOTAL	1501.0	

EROSION CONTROL

DESCRIPTION	EROSION CONTROL (DRILL SEED) ACRE	EROSION CONTROL (COMPOST BLANKET) CY	COMPOST (INCORPORATE) SQYD	(N) PURE LIVE SEED (EROSION CONTROL) LB
SR99NB - DITCH 239+50.00, Rt TO 255+25.00, Rt	-	24.50	-	5.74
SR99NB - BASIN AT GRANTLAND Ave NB OFF-RAMP	0.42	-	2032.82	13.40
SR99SB - DITCH 241+50.00, Lt TO 253+75.00, Lt	-	10.50	-	2.55
SR99SB - BASIN AT GRANTLAND Ave SB ON-RAMP	0.57	-	2758.83	18.18
TOTAL	0.99	35.00	4791.65	39.87

(N) NOT A SEPARATE PAY ITEM. FOR INFORMATION ONLY.

SUMMARY OF QUANTITIES

Q-5

CALCULATED-DESIGNED BY TAM LA
CHECKED BY RODRIGO CRUZ
REVISED BY
DATE REVISED
FUNCTIONAL SUPERVISOR JUN XU
STATE OF CALIFORNIA - DEPARTMENT OF TRANSPORTATION
DESIGN

LAST REVISION DATE PLOTTED => 28-SEP-2009
09-15-09 TIME PLOTTED => 13:47

Dist	COUNTY	ROUTE	POST MILES TOTAL PROJECT	SHEET No.	TOTAL SHEETS
06	Fre	99	26.7/30.6	144	242

REGISTERED ELECTRICAL ENGINEER — 6-29-09 DATE

9-28-09
PLANS APPROVAL DATE

MONA N. ATTALLAH No. 18407 Exp 6/30/10 ELECTRICAL — REGISTERED PROFESSIONAL ENGINEER — STATE OF CALIFORNIA

THE STATE OF CALIFORNIA OR ITS OFFICERS OR AGENTS SHALL NOT BE RESPONSIBLE FOR THE ACCURACY OR COMPLETENESS OF SCANNED COPIES OF THIS PLAN SHEET.

NOTES: (FOR THIS SHEET ONLY)

1 Exist 120/240 V, 1ø, 3-WIRE, TYPE III-AF SERVICE EQUIPMENT ENCLOSURE WITH THE FOLLOWING CIRCUIT BREAKERS:

CTID No. 06420990026981T

AMPERES	VOLTS	POLES	NAME PLATE DESCRIPTION	METER	PHOTOELECTRIC CONTROL TYPE
100	240	3	MAIN BREAKER	NO	——
40	240	2	SPARE *	NO	——
40	240	2	SPARE	NO	——
40	120	1	TMS	NO	——
20	120	1	TDC	NO	——
40	120	1	SPARE	NO	——
20	120	1	SPARE	NO	——

* ADD LABEL

2 Exist MODEL 334 CABINET FOR TMS. MODEL 170E CONTROLLER UNIT WILL BE REPLACED WITH MODEL 2070 CONTROLLER UNIT BY STATE FORCES.

3 LABEL INDUCTIVE LOOP DETECTORS AS SHOWN ON SHEET E-16, DETAIL A. THE CONTRACTOR SHALL TERMINATE DLC AT LOWER INPUT PANEL (TB2) IN MODEL 334 CABINET AS SHOWN ON SHEET E-16, DETAIL A.

4 SPLICE VAULT AS SHOWN ON SHEET E-20.

5. ALL PULL BOXES SHALL BE No. 5(E) UNLESS OTHERWISE NOTED.

6. ALL FIBER OPTIC CONDUIT SHALL BE 6-1½"C AS SHOWN ON SHEET E-19, DETAIL A, UNLESS OTHERWISE NOTED.

7. FOR ACCURATE RIGHT OF WAY AND ACCESS DATA, CONTACT RIGHT OF WAY ENGINEERING AT THE DISTRICT OFFICE.

8. REFER TO SHEET E-22 FOR FIBER OPTIC CABLE REQUIREMENTS.

CABLE SCHEDULE		CONDUIT RUN NUMBER AND SIZE					
AWG	CIRCUIT	1	2	3	4	5	6
		*2"	*1½"	*2"	*2-3"	*2"	*2"
#4	†ms	*2	*2				
#12	†dc	*2		*2			
#8	ltg	*2 **2					
	dlc-DETECTORS				*12	*12	*6

* EXISTING

** RC

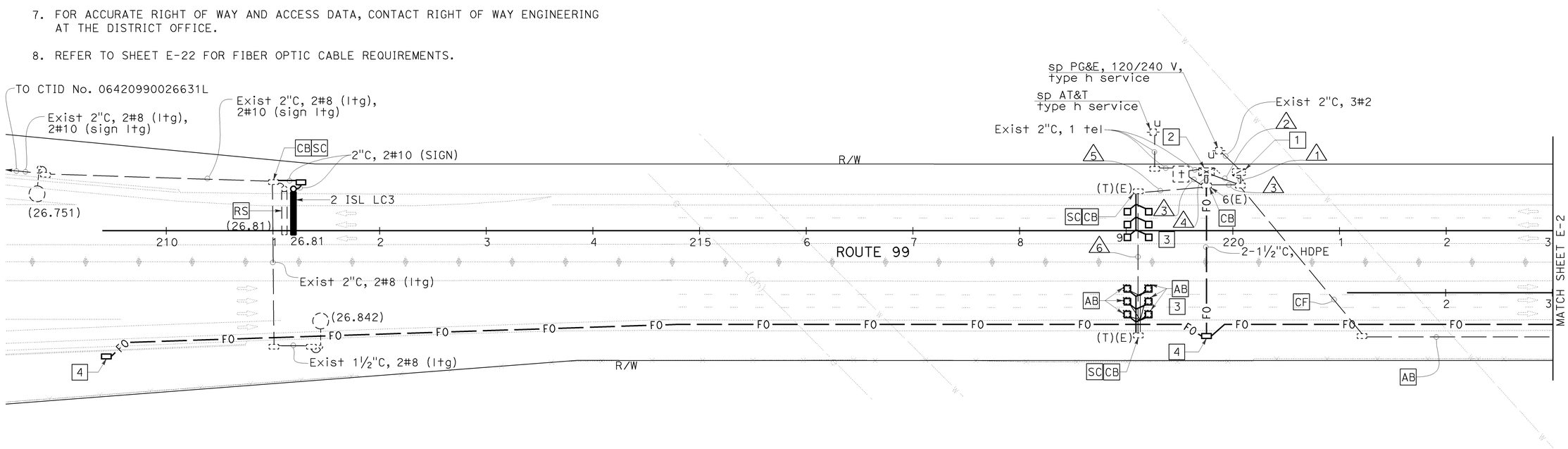

ABBREVIATIONS:

AT&T	AMERICAN TELEPHONE AND TELEGRAPH
CTID	CALTRANS IDENTIFICATION
EQG	EQUIPMENT GROUND
HDPE	HIGH DENSITY POLYETHYLENE
MVDS	MICROWAVE VEHICLE DETECTION SYSTEM
PG&E	PACIFIC GAS AND ELECTRIC COMPANY
SMFO	SINGLEMODE FIBER OPTIC
TCS	TRAFFIC COUNT STATION
TEL	TELEPHONE CABLE
STC	SCREENED TRANSMISSION CABLE

FIBER OPTIC SYSTEM
MODIFY LIGHTING AND SIGN ILLUMINATION
MODIFY TRAFFIC MONITORING STATION (LOCATION 1)

E-1

THIS PLAN IS ACCURATE FOR ELECTRICAL WORK ONLY.

SCALE: 1"=50'

CALCULATED-DESIGNED BY
CHECKED BY
FUNCTIONAL SUPERVISOR: ALI BAKHDOUD
REVISED BY
DATE REVISED
NORMA M. GALLEGOS
MONA ATTALLAH

STATE OF CALIFORNIA - DEPARTMENT OF TRANSPORTATION
ELECTRICAL DESIGN

LAST REVISION | DATE PLOTTED => 28-SEP-2009
07-01-09 | TIME PLOTTED => 14:09

BORDER LAST REVISED 4/11/2008

RELATIVE BORDER SCALE IS IN INCHES 0 1 2 3

USERNAME => trmariak
DGN FILE => 644261ua001.dgn

CU 06391

EA 442611

NOTES: (FOR THIS SHEET ONLY)

1. SPLICE VAULT AS SHOWN ON SHEET E-20.
2. ALL FIBER OPTIC CONDUIT SHALL BE 6-1½"C AS SHOWN ON SHEET E-19, DETAIL A, UNLESS OTHERWISE NOTED.
3. FOR ACCURATE RIGHT OF WAY AND ACCESS DATA, CONTACT RIGHT OF WAY ENGINEERING AT THE DISTRICT OFFICE.
4. REFER TO SHEET E-22 FOR FIBER OPTIC CABLE REQUIREMENTS.

Dist	COUNTY	ROUTE	POST MILES TOTAL PROJECT	SHEET No.	TOTAL SHEETS
06	Fre	99	26.7/30.6	145	242

REGISTERED ELECTRICAL ENGINEER — 6-29-09 DATE

9-28-09
PLANS APPROVAL DATE

MONA N. ATTALLAH No. 18407 Exp. 6/30/10 ELECTRICAL — REGISTERED PROFESSIONAL ENGINEER — STATE OF CALIFORNIA

THE STATE OF CALIFORNIA OR ITS OFFICERS OR AGENTS SHALL NOT BE RESPONSIBLE FOR THE ACCURACY OR COMPLETENESS OF SCANNED COPIES OF THIS PLAN SHEET.

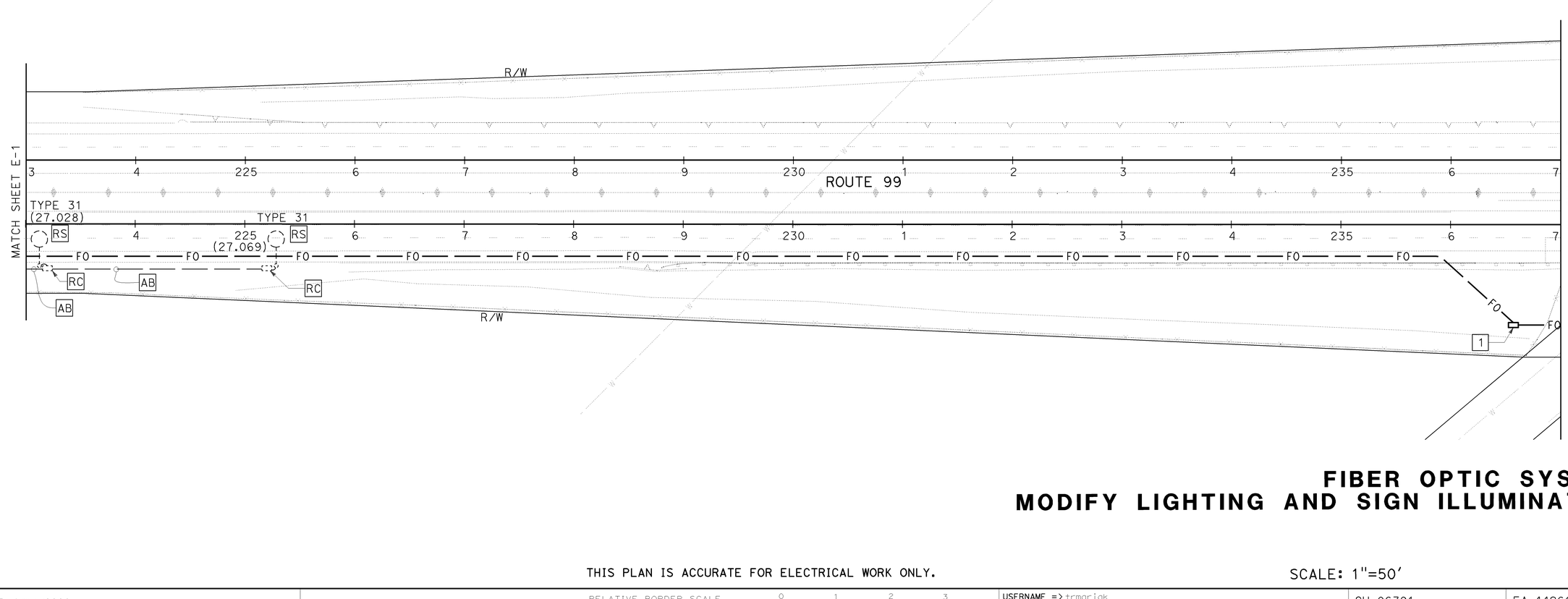

FIBER OPTIC SYSTEM
MODIFY LIGHTING AND SIGN ILLUMINATION

E-2

THIS PLAN IS ACCURATE FOR ELECTRICAL WORK ONLY.

SCALE: 1"=50'

REVISED BY | DATE REVISED

NORMA M. GALLEGOS | MONA ATTALLAH

CALCULATED-DESIGNED BY | CHECKED BY

FUNCTIONAL SUPERVISOR: ALI BAKHDOUD

STATE OF CALIFORNIA - DEPARTMENT OF TRANSPORTATION

Caltrans® ELECTRICAL DESIGN

LAST REVISION | DATE PLOTTED => 28-SEP-2009 | TIME PLOTTED => 14:09 | 07-01-09

BORDER LAST REVISED 4/11/2008

RELATIVE BORDER SCALE IS IN INCHES 0 1 2 3

USERNAME => trmariak
DGN FILE => 644261ua002.dgn

CU 06391

EA 442611

NOTES: (FOR THIS SHEET ONLY)

1. SPLICE VAULT AS SHOWN ON SHEET E-20.
2. ALL PULL BOXES SHALL BE No. 5(E) UNLESS OTHERWISE NOTED.
3. ALL FIBER OPTIC CONDUIT SHALL BE 6-1½"C AS SHOWN ON SHEET E-19, DETAIL A, UNLESS OTHERWISE NOTED.
4. FOR ACCURATE RIGHT OF WAY AND ACCESS DATA, CONTACT RIGHT OF WAY ENGINEERING AT THE DISTRICT OFFICE.
5. REFER TO SHEET E-22 FOR FIBER OPTIC CABLE REQUIREMENTS.

Dist	COUNTY	ROUTE	POST MILES TOTAL PROJECT	SHEET No.	TOTAL SHEETS
06	Fre	99	26.7/30.6	146	242

Mona Attallah 6-29-09
REGISTERED ELECTRICAL ~~ENGINEER~~ DATE

9-28-09
PLANS APPROVAL DATE

REGISTERED PROFESSIONAL ENGINEER
MONA N. ATTALLAH
No. 18407
Exp. 6/30/10
ELECTRICAL
STATE OF CALIFORNIA

THE STATE OF CALIFORNIA OR ITS OFFICERS OR AGENTS SHALL NOT BE RESPONSIBLE FOR THE ACCURACY OR COMPLETENESS OF SCANNED COPIES OF THIS PLAN SHEET.

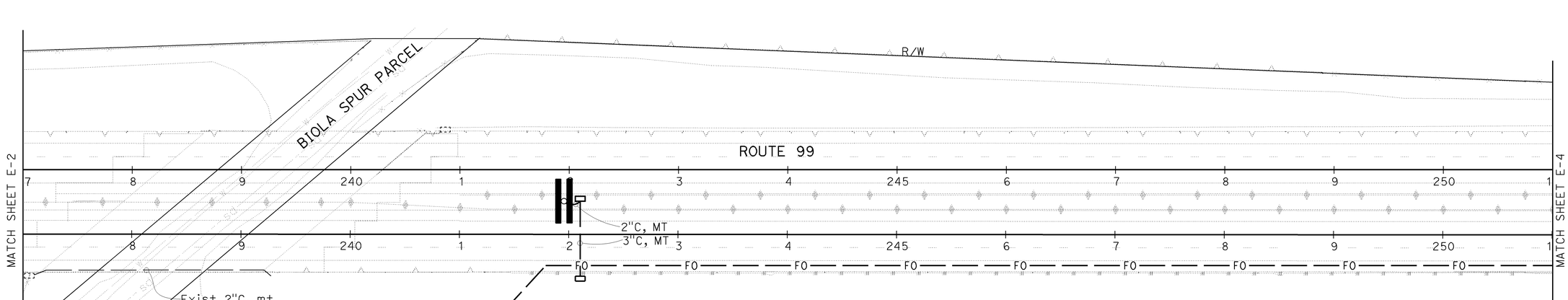

FIBER OPTIC SYSTEM
MODIFY LIGHTING AND SIGN ILLUMINATION

E-3

THIS PLAN IS ACCURATE FOR ELECTRICAL WORK ONLY.

SCALE: 1"=50'

REVISED BY | DATE REVISED

NORMA M. GALLEGOS | MONA ATTALLAH

CALCULATED-DESIGNED BY | CHECKED BY

FUNCTIONAL SUPERVISOR: ALI BAKHDOUD

STATE OF CALIFORNIA - DEPARTMENT OF TRANSPORTATION
ELECTRICAL DESIGN

LAST REVISION | DATE PLOTTED => 28-SEP-2009 | TIME PLOTTED => 14:09
07-01-09

BORDER LAST REVISED 4/11/2008

RELATIVE BORDER SCALE IS IN INCHES 0 1 2 3

USERNAME => trmariak
DGN FILE => 644261ua003.dgn

CU 06391

EA 442611

Dist	COUNTY	ROUTE	POST MILES TOTAL PROJECT	SHEET No.	TOTAL SHEETS
06	Fre	99	26.7/30.6	147	242

REGISTERED ELECTRICAL ENGINEER — 6-29-09 DATE

9-28-09
PLANS APPROVAL DATE

MONA N. ATTALLAH No. 18407 Exp 6/30/10 ELECTRICAL — REGISTERED PROFESSIONAL ENGINEER — STATE OF CALIFORNIA

THE STATE OF CALIFORNIA OR ITS OFFICERS OR AGENTS SHALL NOT BE RESPONSIBLE FOR THE ACCURACY OR COMPLETENESS OF SCANNED COPIES OF THIS PLAN SHEET.

NOTES: (FOR THIS SHEET ONLY)

1 Exist 120/240 V, 1ø, 3-WIRE, TYPE III-AF SERVICE EQUIPMENT ENCLOSURE WITH THE FOLLOWING CIRCUIT BREAKERS:

CTID No. 06420990027640

AMPERES	VOLTS	POLES	NAME PLATE DESCRIPTION	METER	PHOTOELECTRIC CONTROL TYPE
100	240	3	MAIN BREAKER	YES	——
40	240	2	BOOSTER PUMP	YES	——
20	120	1	ICC	YES	——
40	120	1	TCS CABINET	YES	——
* 20	120	1	MVDS	YES	——
——	——	8	SPACES	——	——

* ADD CB

2 Exist MODEL 334 CABINET FOR TRAFFIC CENSUS.

3 INDUCTIVE LOOP DETECTOR SHALL BE PLACED AND IDENTIFIED AS SHOWN ON SHEET E-16, DETAIL B.

4 SPLICE VAULT AS SHOWN ON SHEET E-20.

5 FIBER OPTIC CONDUIT SHALL BE 2-1½"C AS SHOWN ON SHEET E-19, DETAIL B.

6 Exist MVDS. RS SOLAR SYSTEM EQUIPMENT AND ADD CONVENTIONAL POWER EQUIPMENT. REFER TO SHEET E-17.

7. ALL PULL BOXES SHALL BE No. 5(E) UNLESS OTHERWISE NOTED.

8. ALL FIBER OPTIC CONDUIT SHALL BE 6-1½"C AS SHOWN ON SHEET E-19, DETAIL A, UNLESS OTHERWISE NOTED.

9. FOR ACCURATE RIGHT OF WAY AND ACCESS DATA, CONTACT RIGHT OF WAY ENGINEERING AT THE DISTRICT OFFICE.

10. REFER TO SHEET E-22 FOR FIBER OPTIC CABLE REQUIREMENTS.

CABLE SCHEDULE		CONDUIT RUN NUMBER AND SIZE						
AWG	CIRCUIT	1	2	3	4	5	6	7
		*1½"	*1"	*¾"	*1"	*2-3"	*2"	*2"
#8	tcs	*2	*2			*2		
#8	booster pump	*2			*2			
#12	icc	*2		*2				
#8	mvds	2	2				2	2
	DLC-DETECTORS					*8 4	*8 4	*4 2

* EXISTING

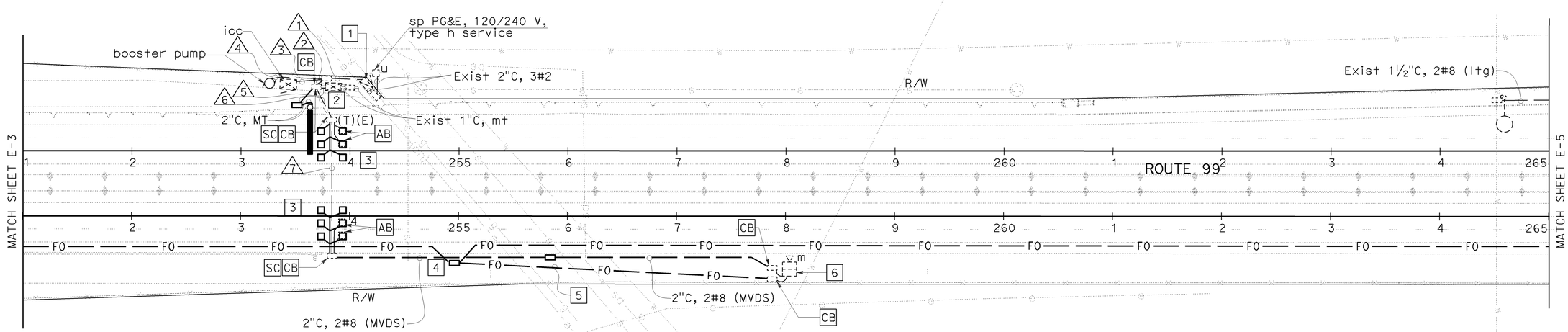

FIBER OPTIC SYSTEM
MODIFY LIGHTING AND SIGN ILLUMINATION
MODIFY MICROWAVE VEHICLE DETECTION SYSTEM (LOCATION 1)
MODIFY TRAFFIC MONITORING STATION (COUNT) (LOCATION 1)

E-4

THIS PLAN IS ACCURATE FOR ELECTRICAL WORK ONLY.

SCALE: 1"=50'

NORMA M. GALLEGOS — CALCULATED-DESIGNED BY
MONA ATTALLAH — CHECKED BY
REVISED BY — DATE REVISED
ALI BAKHDOUD — FUNCTIONAL SUPERVISOR
STATE OF CALIFORNIA - DEPARTMENT OF TRANSPORTATION
ELECTRICAL DESIGN

LAST REVISION DATE PLOTTED => 26-SEP-2009
TIME PLOTTED => 14:44
07-01-09

BORDER LAST REVISED 4/11/2008 — RELATIVE BORDER SCALE IS IN INCHES 0 1 2 3

USERNAME => trmariak
DGN FILE => 644261ua004.dgn

CU 06391 — EA 442611

Dist	COUNTY	ROUTE	POST MILES TOTAL PROJECT	SHEET No.	TOTAL SHEETS
06	Fre	99	26.7/30.6	148	242

Norma Attallah 6-29-09
REGISTERED ELECTRICAL ENGINEER DATE

9-28-09
PLANS APPROVAL DATE

REGISTERED PROFESSIONAL ENGINEER
MONA N. ATTALLAH
No. 18407
Exp. 6/30/10
ELECTRICAL
STATE OF CALIFORNIA

THE STATE OF CALIFORNIA OR ITS OFFICERS OR AGENTS SHALL NOT BE RESPONSIBLE FOR THE ACCURACY OR COMPLETENESS OF SCANNED COPIES OF THIS PLAN SHEET.

NOTES: (FOR THIS SHEET ONLY)

1 Exist 120/240 V, 1ø, 3-WIRE, TYPE III-CF SERVICE EQUIPMENT ENCLOSURE WITH THE FOLLOWING CIRCUIT BREAKERS:

CTID No. 064209900028061T

AMPERES	VOLTS	POLES	NAME PLATE DESCRIPTION	METER	PHOTOELECTRIC CONTROL TYPE
100	240	2	MAIN BREAKER	YES	——
20	120	1	* SPARE	YES	——
70	120	1	SIGNAL	YES	——
30	240	2	FLASHER	YES	——
——	——	2	SPACES	——	——

* ADD LABEL

CTID No. 064209900028061L

AMPERES	VOLTS	POLES	NAME PLATE DESCRIPTION	METER	PHOTOELECTRIC CONTROL TYPE
100	240	2	MAIN BREAKER	YES	——
15	120	1	CONTROL	YES	——
40	240	2	HIGHWAY LIGHTING	YES	IV
30	240	2	SIGN LIGHTING	YES	LC3

2 MODEL 334 CABINET WITH WIRELESS MODEM AND STATE-FURNISHED MODEL 2070 CONTROLLER UNIT FOR TMS.

3 INDUCTIVE LOOP DETECTORS SHALL BE PLACED AND IDENTIFIED AS SHOWN IN DETAIL A ON SHEET E-16. CONTRACTOR SHALL TERMINATE DLC AT LOWER INPUT PANEL (TB2) IN MODEL 334 CABINET AS SHOWN ON SHEET E-16, DETAIL A.

4 SPLICE VAULT AS SHOWN ON SHEET E-20.

5 FIBER OPTIC CONDUIT SHALL BE 2-1½"C AS SHOWN ON SHEET E-19, DETAIL B.

6 Exist 120/240 V, 1ø, 3-WIRE, TYPE III-AF SERVICE EQUIPMENT ENCLOSURE WITH THE FOLLOWING CIRCUIT BREAKERS:

CTID No. 064209900027860L

AMPERES	VOLTS	POLES	NAME PLATE DESCRIPTION	METER	PHOTOELECTRIC CONTROL TYPE
100	240	2	MAIN BREAKER	YES	——
30	120	1	HIGHWAY LIGHTING	YES	——
* 30	120	1	TMS	YES	——
——	——	12	SPACES	——	——

* ADD CB

7 EXISTING MVDS. RS SOLAR SYSTEM EQUIPMENT AND ADD CONVENTIONAL POWER EQUIPMENT. REFER TO SHEET E-17.

8. ALL PULL BOXES SHALL BE No. 5(E) UNLESS OTHERWISE NOTED.

9. ALL FIBER OPTIC CONDUIT SHALL BE 6-1½"C AS SHOWN ON SHEET E-19, DETAIL A, UNLESS OTHERWISE NOTED.

10. FOR ACCURATE RIGHT OF WAY AND ACCESS DATA, CONTACT RIGHT OF WAY ENGINEERING AT THE DISTRICT OFFICE.

11. REFER TO SHEET E-22 FOR FIBER OPTIC CABLE REQUIREMENTS.

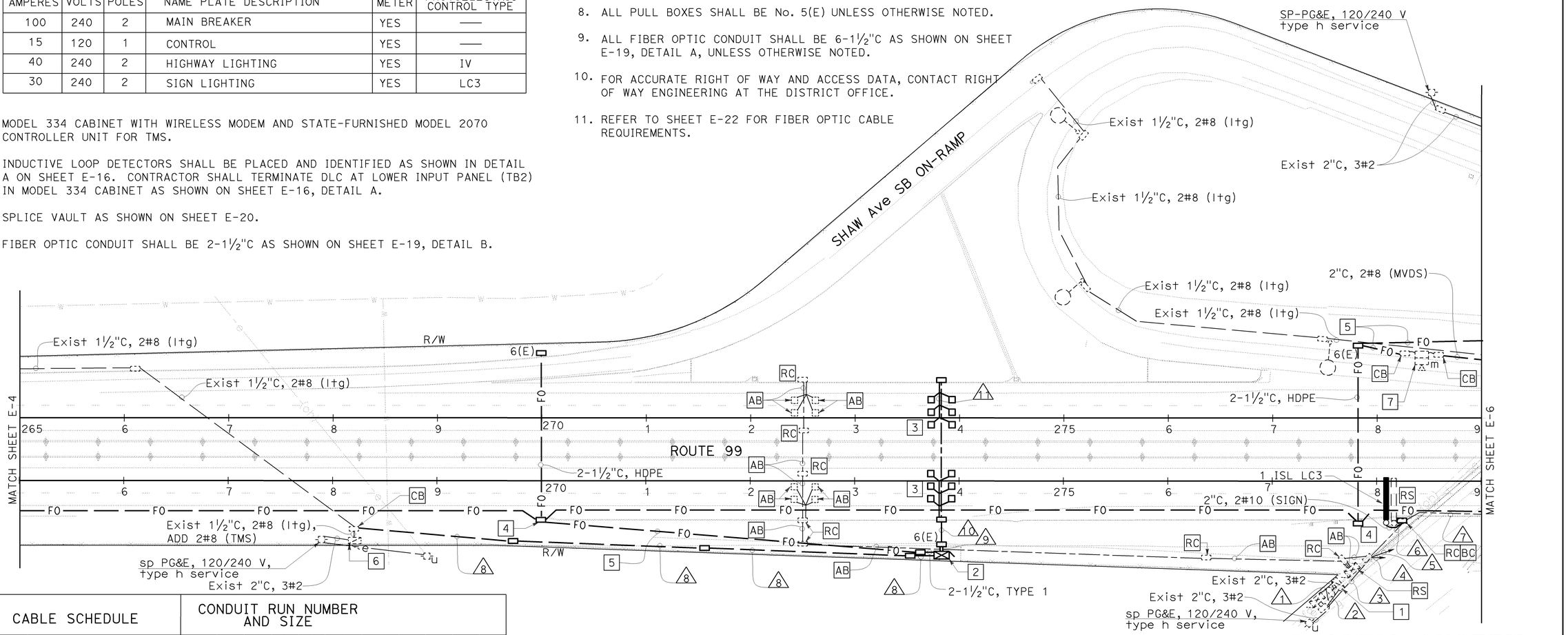

CABLE SCHEDULE		CONDUIT RUN NUMBER AND SIZE										
AWG	CIRCUIT	1	2	3	4	5	6	7	8	9	10	11
		*2"	*2"	*4"	*2"	*2"	*1½"	*1½"	2"	2-3"	2"	3"
#4	332 signal cabinet	*2										
#10	tms		**2	**2								
#10	fb		*2	*2			*2	*2				
#6	ltg		*2	*2			*2	*2				
#10	sign ltg		*2	*2			*2					
	12csc-signals			*2	*1	*1						
#8	TMS								2			
	DLC-DETECTORS									12	12	6

* EXISTING ** RC

THIS PLAN IS ACCURATE FOR ELECTRICAL WORK ONLY.

SCALE: 1"=50'

FIBER OPTIC SYSTEM
MODIFY LIGHTING AND SIGN ILLUMINATION
MODIFY MICROWAVE VEHICLE DETECTION SYSTEM (LOCATION 2)
MODIFY TRAFFIC MONITORING STATION (LOCATION 2)

E-5

LAST REVISION DATE PLOTTED => 28-SEP-2009
07-01-09 TIME PLOTTED => 14:09

REVISED BY | DATE REVISED
NORMA M. GALLEGOS | MONA ATTALLAH
CALCULATED-DESIGNED BY | CHECKED BY
FUNCTIONAL SUPERVISOR | ALI BAKHDOUD
STATE OF CALIFORNIA - DEPARTMENT OF TRANSPORTATION
Caltrans® ELECTRICAL DESIGN

BORDER LAST REVISED 4/11/2008 | RELATIVE BORDER SCALE IS IN INCHES 0 1 2 3 | USERNAME => trmariak DGN FILE => 644261ua005.dgn | CU 06391 | EA 442611

Dist	COUNTY	ROUTE	POST MILES TOTAL PROJECT	SHEET No.	TOTAL SHEETS
06	Fre	99	26.7/30.6	149	242

REGISTERED ELECTRICAL ENGINEER — 6-29-09 DATE

9-28-09 PLANS APPROVAL DATE

REGISTERED PROFESSIONAL ENGINEER — MONA N. ATTALLAH — No. 18407 — Exp 6/30/10 — ELECTRICAL — STATE OF CALIFORNIA

THE STATE OF CALIFORNIA OR ITS OFFICERS OR AGENTS SHALL NOT BE RESPONSIBLE FOR THE ACCURACY OR COMPLETENESS OF SCANNED COPIES OF THIS PLAN SHEET.

NOTES: (FOR THIS SHEET ONLY)

1 Exist 120/240 V, 1ø, 3-WIRE, TYPE III-CF SERVICE EQUIPMENT ENCLOSURE WITH THE FOLLOWING CIRCUIT BREAKERS:

CTID No. 064209900028111T

AMPERES	VOLTS	POLES	NAME PLATE DESCRIPTION	METER	PHOTOELECTRIC CONTROL TYPE
100	240	2	MAIN BREAKER	YES	——
20	120	1	SIGNAL	YES	——
40	120	1	CCTV	YES	——
20	120	1	TDC	YES	——
* 20	120	1	MVDS	YES	——
——	——	2	SPACES	——	——

* ADD CB

CTID No. 064209900028111L

AMPERES	VOLTS	POLES	NAME PLATE DESCRIPTION	METER	PHOTOELECTRIC CONTROL TYPE
100	240	2	MAIN BREAKER	YES	——
15	120	1	CONTROL	YES	——
40	240	2	HIGHWAY LIGHTING	YES	IV
30	240	2	SIGN LIGHTING	YES	LC3

2 SPLICE VAULT AS SHOWN ON SHEET E-20.

3 FIBER OPTIC CONDUIT SHALL BE 2-1½"C AS SHOWN ON SHEET E-19, DETAIL B.

4. ALL PULL BOXES SHALL BE No. 5(E) UNLESS OTHERWISE NOTED.

5. ALL FIBER OPTIC CONDUIT SHALL BE 6-1½"C AS SHOWN ON SHEET E-19, DETAIL A, UNLESS OTHERWISE NOTED.

6. FOR ACCURATE RIGHT OF WAY AND ACCESS DATA, CONTACT RIGHT OF WAY ENGINEERING AT THE DISTRICT OFFICE.

7. REFER TO SHEET E-22 FOR FIBER OPTIC CABLE REQUIREMENTS.

CABLE SCHEDULE		CONDUIT RUN NUMBER AND SIZE										
AWG	CIRCUIT	1	2	3	4	5	6	7	8	9	10	11
		*2"	*2"	*3"	*3"	*3"	*4"	*4"	*2"	*2"	*1½"	2"
#2	332 signal cabinet	*2										
#6	ltg		*2	*2	*2	*2	*2	*2		*2	*2	
#6	sign		*2	*2	*2	*2						
#6	cctv		*2				*2		*2			
#10	tdc		*2	*2	*2	*2						
#8	MVDS		2				2	2		2		2
	12csc-signals			*3	*2	*1	*2	*2				
	dlc-DETECTORS			*8	*4	*4	*4					

* EXISTING

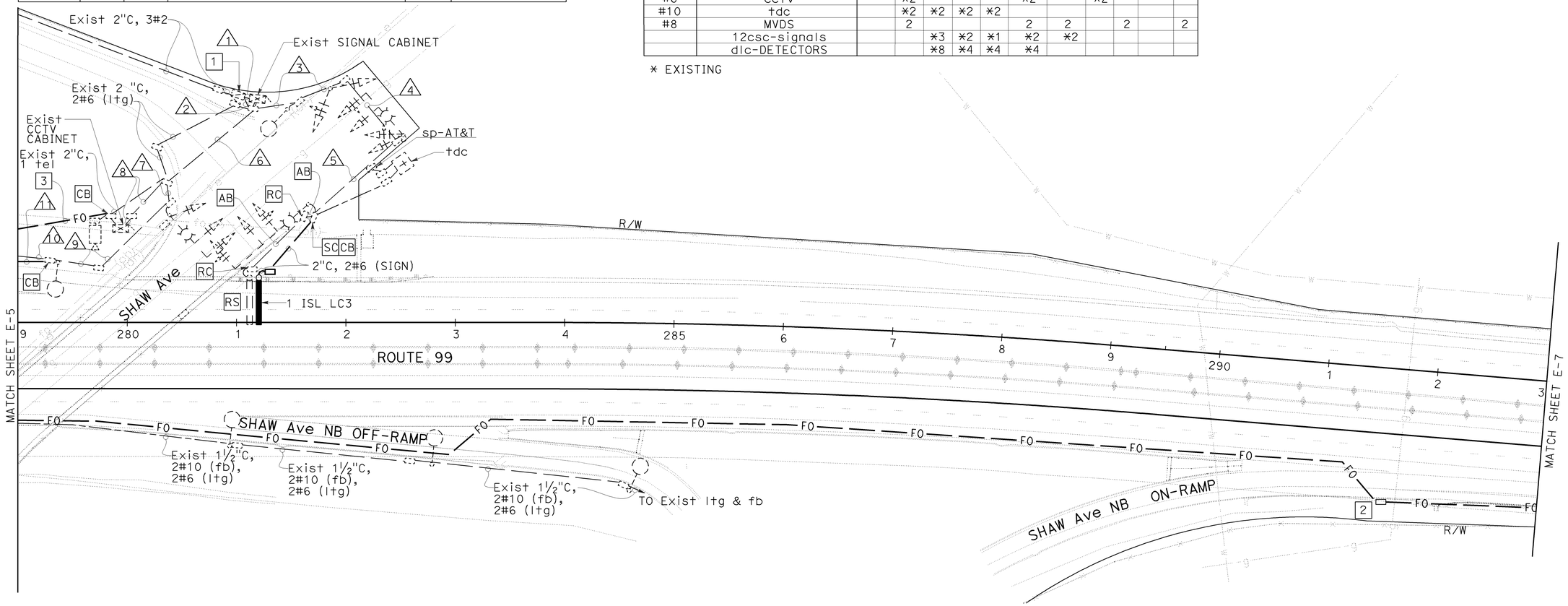

FIBER OPTIC SYSTEM
MODIFY LIGHTING AND SIGN ILLUMINATION

E-6

THIS PLAN IS ACCURATE FOR ELECTRICAL WORK ONLY.

SCALE: 1"=50'

REVISED BY | DATE REVISED

NORMA M. GALLEGOS | MONA ATTALLAH

CALCULATED-DESIGNED BY | CHECKED BY

FUNCTIONAL SUPERVISOR: ALI BAKHDOUD

STATE OF CALIFORNIA - DEPARTMENT OF TRANSPORTATION

ELECTRICAL DESIGN

LAST REVISION | DATE PLOTTED => 28-SEP-2009 | TIME PLOTTED => 14:44 | 07-01-09

BORDER LAST REVISED 4/11/2008

RELATIVE BORDER SCALE IS IN INCHES 0 1 2 3

USERNAME => trmariak
DGN FILE => 644261ua006.dgn

CU 06391

EA 442611

Dist	COUNTY	ROUTE	POST MILES TOTAL PROJECT	SHEET No.	TOTAL SHEETS
06	Fre	99	26.7/30.6	150	242

Mona Attallah 6-29-09
REGISTERED ELECTRICAL ~~ENGINEER~~ DATE

9-28-09
PLANS APPROVAL DATE

REGISTERED PROFESSIONAL ENGINEER
MONA N. ATTALLAH
No. 18407
Exp 6/30/10
ELECTRICAL
STATE OF CALIFORNIA

THE STATE OF CALIFORNIA OR ITS OFFICERS OR AGENTS SHALL NOT BE RESPONSIBLE FOR THE ACCURACY OR COMPLETENESS OF SCANNED COPIES OF THIS PLAN SHEET.

NOTES: (FOR THIS SHEET ONLY)

1 Exist 120/240 V, 1Ø, 3-WIRE, TYPE III-AF SERVICE EQUIPMENT ENCLOSURE WITH THE FOLLOWING CIRCUIT BREAKERS:

CTID No. 064209900285706

AMPERES	VOLTS	POLES	NAME PLATE DESCRIPTION	METER	PHOTOELECTRIC CONTROL TYPE
100	240	3	MAIN BREAKER	2P-NO 1P-YES	——
40	120	1	TCS	YES	——
20	120	1	SPARE	YES	——
40	240	2	HIGHWAY LIGHTING	NO	IV
——	——	9	SPACES	——	——

2 EXISTING MODEL 334 CABINET FOR TRAFFIC CENSUS.

3 SPLICE VAULT AS SHOWN ON SHEET E-20.

4 FIBER OPTIC CONDUIT SHALL BE 2-1½"C AS SHOWN ON SHEET E-19, DETAIL B.

5 INDUCTIVE LOOP DETECTORS AND PIEZO AXLE SENSORS SHALL BE PLACED AND IDENTIFIED AS SHOWN ON SHEET E-16, DETAILS B AND C.

6 FIBER OPTIC CONDUIT SHALL BE 6-1½"C, TYPE 1 AND SHALL BE STRAPPED BEHIND EXISTING TYPE 25 BARRIER AS SHOWN ON SHEET E-21.

7. ALL PULL BOXES SHALL BE No. 5(E) UNLESS OTHERWISE NOTED.

8. ALL FIBER OPTIC CONDUIT SHALL BE 6-1½"C AS SHOWN ON SHEET E-19, DETAIL A, UNLESS OTHERWISE NOTED.

9. FOR ACCURATE RIGHT OF WAY AND ACCESS DATA, CONTACT RIGHT OF WAY ENGINEERING AT THE DISTRICT OFFICE.

10. REFER TO SHEET E-22 FOR FIBER OPTIC CABLE REQUIREMENTS.

CABLE SCHEDULE		CONDUIT RUN NUMBER AND SIZE				
		1	2	3	4	5
AWG	CIRCUIT	*2"	*2"	*4"	2"	3"
#6	tcs	*2	*2	*2		
#8	ltg	*2				
	tel-telephone			*1		
	STC-PIEZO			**10 6	6	3
	DLC-DETECTORS			**4 12	12	6

* EXISTING

** RC

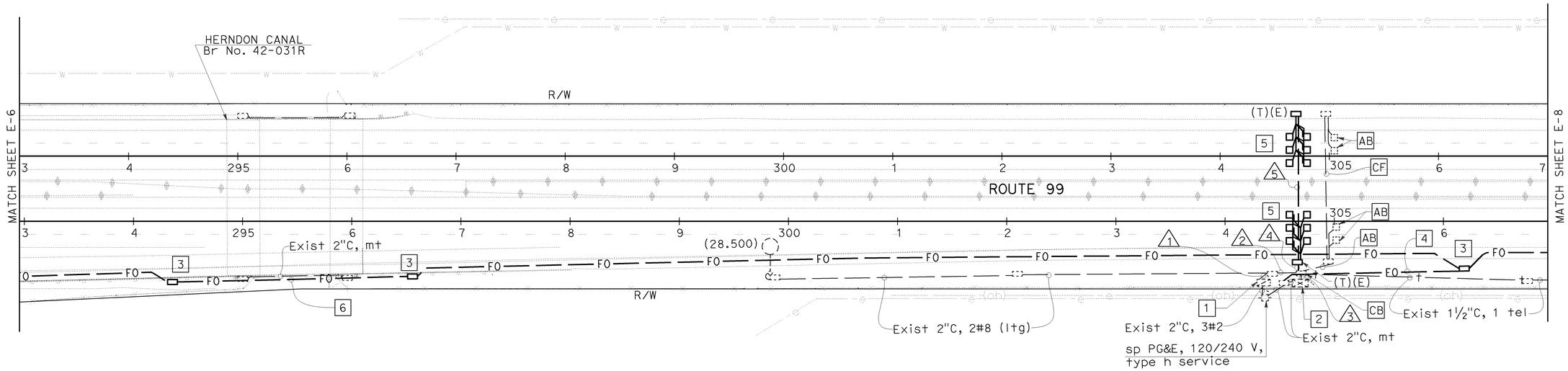

FIBER OPTIC SYSTEM
MODIFY TRAFFIC MONITORING STATION (COUNT) (LOCATION 2)

E-7

THIS PLAN IS ACCURATE FOR ELECTRICAL WORK ONLY.

SCALE: 1"=50'

STATE OF CALIFORNIA - DEPARTMENT OF TRANSPORTATION
Caltrans® ELECTRICAL DESIGN
FUNCTIONAL SUPERVISOR: ALI BAKHDOUD
CALCULATED-DESIGNED BY: NORMA M. GALLEGOS
CHECKED BY: MONA ATTALLAH
REVISED BY / DATE REVISED

LAST REVISION DATE PLOTTED => 28-SEP-2009
TIME PLOTTED => 15:10
07-01-09

BORDER LAST REVISED 4/11/2008

RELATIVE BORDER SCALE IS IN INCHES 0 1 2 3

USERNAME => trrichf
DGN FILE => 644261ua007.dgn

CU 06391

EA 442611

Dist	COUNTY	ROUTE	POST MILES TOTAL PROJECT	SHEET No.	TOTAL SHEETS
06	Fre	99	26.7/30.6	151	242

REGISTERED ELECTRICAL ENGINEER — DATE 6-29-09

9-28-09
PLANS APPROVAL DATE

REGISTERED PROFESSIONAL ENGINEER
MONA N. ATTALLAH
No. 18407
Exp 6/30/10
ELECTRICAL
STATE OF CALIFORNIA

THE STATE OF CALIFORNIA OR ITS OFFICERS OR AGENTS SHALL NOT BE RESPONSIBLE FOR THE ACCURACY OR COMPLETENESS OF SCANNED COPIES OF THIS PLAN SHEET.

NOTES: (FOR THIS SHEET ONLY)

1 Exist 120/240 V, 1ø, 3-WIRE, TYPE III-AF SERVICE EQUIPMENT ENCLOSURE WITH THE FOLLOWING CIRCUIT BREAKERS:

CTID No. 064209900287606

AMPERES	VOLTS	POLES	NAME PLATE DESCRIPTION	METER	PHOTOELECTRIC CONTROL TYPE
200	240	2	MAIN BREAKER	YES	——
80	120	1	CMS	YES	——
80	120	1	CMS	YES	——
80	120	1	CMS	YES	——
80	120	1	CMS	YES	——
40	120	1	CMS CABINET	YES	——
20	120	1	IRRIGATION CONTROLLER	YES	——
* 40	120	1	TMS	YES	——

* ADD CB

2 EXISTING MODEL 334 CABINET FOR CMS.

3 MODEL 334 CABINET WITH WIRELESS MODEM AND STATE-FURNISHED MODEL 2070 CONTROLLER UNIT FOR TMS.

4 LABEL INDUCTIVE LOOP DETECTORS AS SHOWN ON SHEET E-16, DETAIL A. THE CONTRACTOR SHALL TERMINATE DLC AT LOWER INPUT PANEL (TB2) IN MODEL 334 CABINET AS SHOWN ON SHEET E-16, DETAIL A.

5 SPLICE VAULT AS SHOWN ON SHEET E-20.

6 FIBER OPTIC CONDUIT SHALL BE 2-1½"C AS SHOWN ON SHEET E-19, DETAIL B.

7 RL Exist TYPE VDS 30 POLE. REFER TO SHEET E-10 FOR NEW LOCATION.

8. ALL PULL BOXES SHALL BE No. 5(E) UNLESS OTHERWISE NOTED.

9. ALL FIBER OPTIC CONDUIT SHALL BE 6-1½"C AS SHOWN ON SHEET E-19, DETAIL A, UNLESS OTHERWISE NOTED.

10. FOR ACCURATE RIGHT OF WAY AND ACCESS DATA, CONTACT RIGHT OF WAY ENGINEERING AT THE DISTRICT OFFICE.

11. REFER TO SHEET E-22 FOR FIBER OPTIC CABLE REQUIREMENTS.

CABLE SCHEDULE		CONDUIT RUN NUMBER AND SIZE									
AWG	CIRCUIT	1	2	3	4	5	6	7	8	9	10
		*3"	*2"	*4"	*1½"	*3"	2"	2"	2-3"	2"	3"
#8	cms cabinet	*2	*2								
#2	cms	*4		*4							
#2	cms neutral	*2		*2							
#8	cms eqg			*1							
#12	icc	*2			*2						
	harness #4					*2					
	harness #5					*2					
	tel-telephone						*1				
#8	TMS	2						2			
	DLC-DETECTORS								12	12	6

* EXISTING

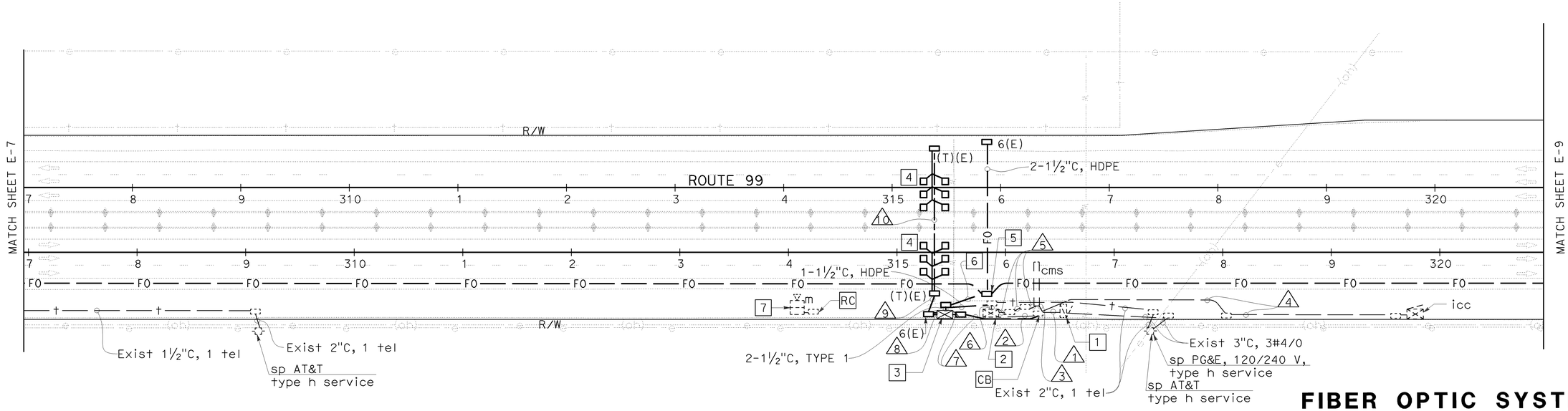

FIBER OPTIC SYSTEM
MODIFY MICROWAVE VEHICLE DETECTION SYSTEM (LOCATION 3)
TRAFFIC MONITORING STATION (LOCATION 1)

E-8

THIS PLAN IS ACCURATE FOR ELECTRICAL WORK ONLY.

SCALE: 1"=50'

REVISED BY | DATE REVISED
NORMA M. GALLEGOS | MONA ATTALLAH
CALCULATED-DESIGNED BY | CHECKED BY
FUNCTIONAL SUPERVISOR: ALI BAKHDOUD
STATE OF CALIFORNIA - DEPARTMENT OF TRANSPORTATION
Caltrans® ELECTRICAL DESIGN

LAST REVISION | DATE PLOTTED => 28-SEP-2009 | TIME PLOTTED => 15:10
07-01-09

BORDER LAST REVISED 4/11/2008 | RELATIVE BORDER SCALE IS IN INCHES 0 1 2 3 | USERNAME => trrichf | DGN FILE => 644261ua008.dgn | CU 06391 | EA 442611

NOTES: (FOR THIS SHEET ONLY)

1. SPLICE VAULT AS SHOWN ON SHEET E-20.
2. ALL PULL BOXES SHALL BE No. 5(E) UNLESS OTHERWISE NOTED.
3. ALL FIBER OPTIC CONDUIT SHALL BE 6-1½"C AS SHOWN ON SHEET E-19, DETAIL A, UNLESS OTHERWISE NOTED.
4. FOR ACCURATE RIGHT OF WAY AND ACCESS DATA, CONTACT RIGHT OF WAY ENGINEERING AT THE DISTRICT OFFICE.
5. REFER TO SHEET E-22 FOR FIBER OPTIC CABLE REQUIREMENTS.

Dist	COUNTY	ROUTE	POST MILES TOTAL PROJECT	SHEET No.	TOTAL SHEETS
06	Fre	99	26.7/30.6	152	242

Mona Attallah 6-29-09
REGISTERED ELECTRICAL ~~ENGINEER~~ DATE

MONA N. ATTALLAH No. 18407 Exp. 6/30/10 ELECTRICAL — REGISTERED PROFESSIONAL ENGINEER — STATE OF CALIFORNIA

9-28-09
PLANS APPROVAL DATE

THE STATE OF CALIFORNIA OR ITS OFFICERS OR AGENTS SHALL NOT BE RESPONSIBLE FOR THE ACCURACY OR COMPLETENESS OF SCANNED COPIES OF THIS PLAN SHEET.

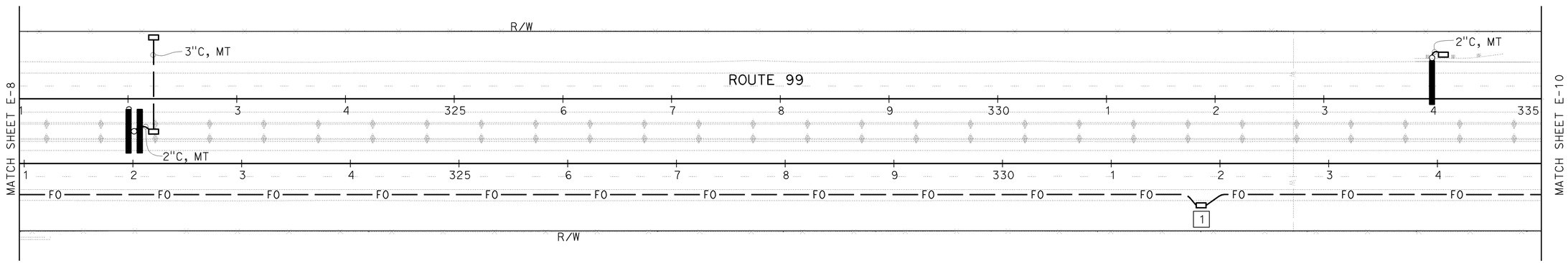

FIBER OPTIC SYSTEM
MODIFY LIGHTING AND SIGN ILLUMINATION

E-9

THIS PLAN IS ACCURATE FOR ELECTRICAL WORK ONLY.

SCALE: 1"=50'

REVISED BY | DATE REVISED

CALCULATED-DESIGNED BY: NORMA M. GALLEGOS
CHECKED BY: MONA ATTALLAH
FUNCTIONAL SUPERVISOR: ALI BAKHDOUD

STATE OF CALIFORNIA - DEPARTMENT OF TRANSPORTATION
Caltrans® ELECTRICAL DESIGN

LAST REVISION | DATE PLOTTED => 28-SEP-2009 | TIME PLOTTED => 15:16
07-01-09

BORDER LAST REVISED 4/11/2008 | RELATIVE BORDER SCALE IS IN INCHES 0 1 2 3 | USERNAME => trrichf | DGN FILE => 644261ua009.dgn | CU 06391 | EA 442611

NOTES: (FOR THIS SHEET ONLY)

1. SPLICE VAULT AS SHOWN ON SHEET E-20.
2. FIBER OPTIC CONDUIT SHALL BE 2-1½"C AS SHOWN ON SHEET E-19, DETAIL B.
3. RELOCATE Exist TYPE VDS 30 POLE FROM SHEET E-8, Sta 314+10. INSTALL 32' Rt FROM ETW. REFER TO DETAILS ON SHEET E-18 AND E-28.
4. ALL PULL BOXES SHALL BE No. 5(E) UNLESS OTHERWISE NOTED.
5. ALL FIBER OPTIC CONDUIT SHALL BE 6-1½"C AS SHOWN ON SHEET E-19, DETAIL A, UNLESS OTHERWISE NOTED.
6. FOR ACCURATE RIGHT OF WAY AND ACCESS DATA, CONTACT RIGHT OF WAY ENGINEERING AT THE DISTRICT OFFICE.
7. REFER TO SHEET E-22 FOR FIBER OPTIC CABLE REQUIREMENTS.

Dist	COUNTY	ROUTE	POST MILES TOTAL PROJECT	SHEET No.	TOTAL SHEETS
06	Fre	99	26.7/30.6	153	242

Mona Attallah 6-29-09
REGISTERED ELECTRICAL ~~ENGINEER~~ DATE

9-28-09
PLANS APPROVAL DATE

REGISTERED PROFESSIONAL ENGINEER
MONA N. ATTALLAH
No. 18407
Exp. 6/30/10
ELECTRICAL
STATE OF CALIFORNIA

THE STATE OF CALIFORNIA OR ITS OFFICERS OR AGENTS SHALL NOT BE RESPONSIBLE FOR THE ACCURACY OR COMPLETENESS OF SCANNED COPIES OF THIS PLAN SHEET.

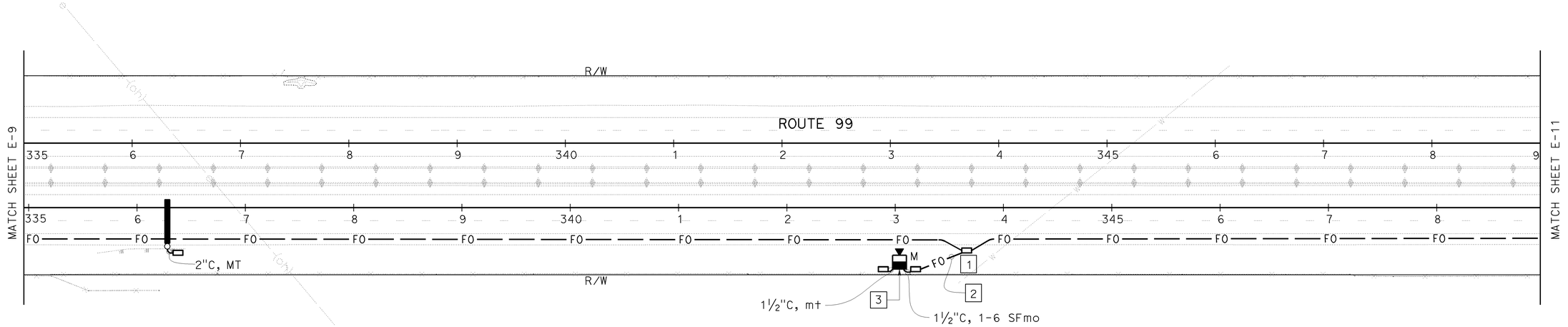

FIBER OPTIC SYSTEM
MODIFY LIGHTING AND SIGN ILLUMINATION
MODIFY MICROWAVE VEHICLE DETECTION SYSTEM
(LOCATION 3)

E-10

THIS PLAN IS ACCURATE FOR ELECTRICAL WORK ONLY.

SCALE: 1"=50'

REVISED BY | DATE REVISED

NORMA M. GALLEGOS | MONA ATTALLAH

CALCULATED-DESIGNED BY | CHECKED BY

FUNCTIONAL SUPERVISOR: ALI BAKHDOUD

STATE OF CALIFORNIA - DEPARTMENT OF TRANSPORTATION
Caltrans® ELECTRICAL DESIGN

LAST REVISION | DATE PLOTTED => 28-SEP-2009 | TIME PLOTTED => 15:10
07-01-09

BORDER LAST REVISED 4/11/2008 | RELATIVE BORDER SCALE IS IN INCHES 0 1 2 3 | USERNAME => trrichf | DGN FILE => 644261ua010.dgn | CU 06391 | EA 442611

NOTES: (FOR THIS SHEET ONLY)

1. ALL FIBER OPTIC CONDUIT SHALL BE 6-1½"C AS SHOWN ON SHEET E-19, DETAIL A, UNLESS OTHERWISE NOTED.
2. FOR ACCURATE RIGHT OF WAY AND ACCESS DATA, CONTACT RIGHT OF WAY ENGINEERING AT THE DISTRICT OFFICE.
3. REFER TO SHEET E-22 FOR FIBER OPTIC CABLE REQUIREMENTS.

Dist	COUNTY	ROUTE	POST MILES TOTAL PROJECT	SHEET No.	TOTAL SHEETS
06	Fre	99	26.7/30.6	154	242

Mona Attallah 6-29-09
REGISTERED ELECTRICAL ~~ENGINEER~~ DATE

9-28-09
PLANS APPROVAL DATE

REGISTERED PROFESSIONAL ENGINEER
MONA N. ATTALLAH
No. 18407
Exp. 6/30/10
ELECTRICAL
STATE OF CALIFORNIA

THE STATE OF CALIFORNIA OR ITS OFFICERS OR AGENTS SHALL NOT BE RESPONSIBLE FOR THE ACCURACY OR COMPLETENESS OF SCANNED COPIES OF THIS PLAN SHEET.

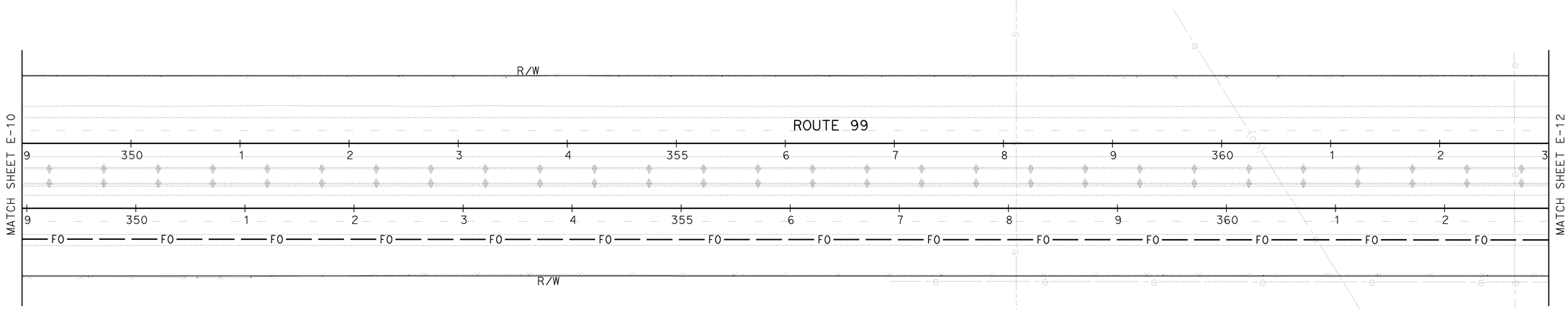

FIBER OPTIC SYSTEM

E-11

THIS PLAN IS ACCURATE FOR ELECTRICAL WORK ONLY.

SCALE: 1"=50'

REVISED BY | DATE REVISED
NORMA M. GALLEGOS | MONA ATTALLAH
CALCULATED-DESIGNED BY | CHECKED BY
FUNCTIONAL SUPERVISOR: ALI BAKHDOUD
STATE OF CALIFORNIA - DEPARTMENT OF TRANSPORTATION
Caltrans® ELECTRICAL DESIGN

LAST REVISION | DATE PLOTTED => 28-SEP-2009 | TIME PLOTTED => 15:10
07-01-09

BORDER LAST REVISED 4/11/2008 | RELATIVE BORDER SCALE IS IN INCHES 0 1 2 3 | USERNAME => trrichf | DGN FILE => 644261ua011.dgn | CU 06391 | EA 442611

NOTES: (FOR THIS SHEET ONLY)

1. SPLICE VAULT AS SHOWN ON SHEET E-20.
2. ALL FIBER OPTIC CONDUIT SHALL BE 6-1½"C AS SHOWN ON SHEET E-19, DETAIL A, UNLESS OTHERWISE NOTED.
3. FOR ACCURATE RIGHT OF WAY AND ACCESS DATA, CONTACT RIGHT OF WAY ENGINEERING AT THE DISTRICT OFFICE.
4. REFER TO SHEET E-22 FOR FIBER OPTIC CABLE REQUIREMENT.

Dist	COUNTY	ROUTE	POST MILES TOTAL PROJECT	SHEET No.	TOTAL SHEETS
06	Fre	99	26.7/30.6	155	242

Mona Attallah 6-29-09
REGISTERED ELECTRICAL ~~ENGINEER~~ DATE

9-28-09
PLANS APPROVAL DATE

REGISTERED PROFESSIONAL ENGINEER
MONA N. ATTALLAH
No. 18407
Exp. 6/30/10
ELECTRICAL
STATE OF CALIFORNIA

THE STATE OF CALIFORNIA OR ITS OFFICERS OR AGENTS SHALL NOT BE RESPONSIBLE FOR THE ACCURACY OR COMPLETENESS OF SCANNED COPIES OF THIS PLAN SHEET.

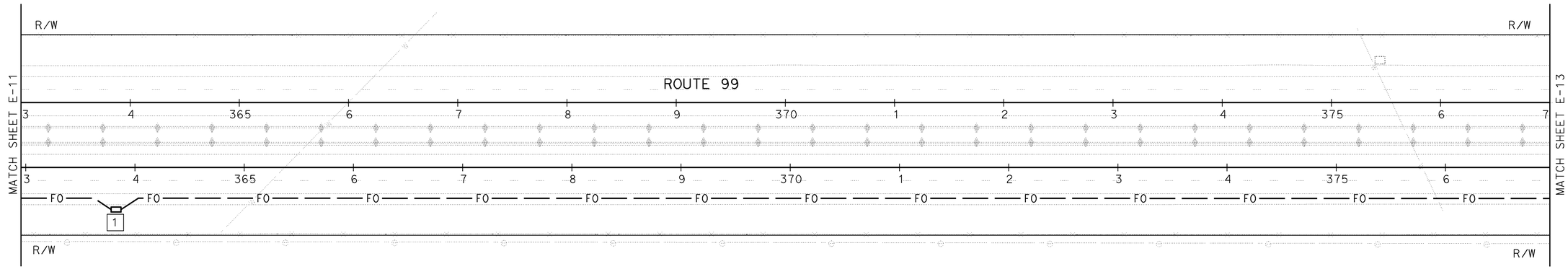

FIBER OPTIC SYSTEM

SCALE: 1"=50'

E-12

THIS PLAN IS ACCURATE FOR ELECTRICAL WORK ONLY.

REVISED BY | DATE REVISED

CALCULATED-DESIGNED BY: NORMA M. GALLEGOS
CHECKED BY: MONA ATTALLAH
FUNCTIONAL SUPERVISOR: ALI BAKHDOUD

STATE OF CALIFORNIA - DEPARTMENT OF TRANSPORTATION
Caltrans® ELECTRICAL DESIGN

LAST REVISION 07-01-09 | DATE PLOTTED => 29-SEP-2009 | TIME PLOTTED => 10:21

BORDER LAST REVISED 4/11/2008

RELATIVE BORDER SCALE IS IN INCHES 0 1 2 3

USERNAME => trphils
DGN FILE => 644261ua012.dgn

CU 06391

EA 442611

Dist	COUNTY	ROUTE	POST MILES TOTAL PROJECT	SHEET No.	TOTAL SHEETS
06	Fre	99	26.7/30.6	156	242

Mona Attallah 6-29-09
REGISTERED ELECTRICAL ~~ENGINEER~~ DATE

9-28-09
PLANS APPROVAL DATE

REGISTERED PROFESSIONAL ENGINEER
MONA N. ATTALLAH
No. 18407
Exp 6/30/10
ELECTRICAL
STATE OF CALIFORNIA

THE STATE OF CALIFORNIA OR ITS OFFICERS OR AGENTS SHALL NOT BE RESPONSIBLE FOR THE ACCURACY OR COMPLETENESS OF SCANNED COPIES OF THIS PLAN SHEET.

NOTES: (FOR THIS SHEET ONLY)

1 Exist 120/240 V, 1ø, 3-WIRE, TYPE III-AF SERVICE EQUIPMENT ENCLOSURE WITH THE FOLLOWING CIRCUIT BREAKERS:

CTID No. 06420990030131L

AMPERES	VOLTS	POLES	NAME PLATE DESCRIPTION	METER	PHOTOELECTRIC CONTROL TYPE
100	240	2	MAIN BREAKER	YES	——
40	240	2	HIGHWAY LIGHTING	YES	IV
30	240	2	SPARE	YES	——
* 40	120	1	TMS	YES	——
* 30	240	2	SIGN LIGHTING	YES	LC3
——	——	7	SPACE	——	——

* ADD CB

2 MODEL 334 CABINET WITH WIRELESS MODEM AND STATE-FURNISHED MODEL 2070 CONTROLLER UNIT FOR TMS.

3 LABEL INDUCTIVE LOOP DETECTORS AS SHOWN ON SHEET E-16, DETAIL A. THE CONTRACTOR SHALL TERMINATE DLC AT LOWER INPUT PANEL (TB2) IN MODEL 334 CABINET AS SHOWN ON SHEET E-16, DETAIL A.

4 SPLICE VAULT AS SHOWN ON SHEET E-20.

5 FIBER OPTIC CONDUIT SHALL BE 2-1½"C AS SHOWN ON SHEET E-19, DETAIL B.

6. ALL PULL BOXES SHALL BE No. 5(E) UNLESS OTHERWISE NOTED.

7. ALL FIBER OPTIC CONDUIT SHALL BE 6-1½"C AS SHOWN ON SHEET E-19, DETAIL A, UNLESS OTHERWISE NOTED.

8. FOR ACCURATE RIGHT OF WAY AND ACCESS DATA, CONTACT RIGHT OF WAY ENGINEERING AT THE DISTRICT OFFICE.

9. REFER TO SHEET E-22 FOR FIBER OPTIC CABLE REQUIREMENTS.

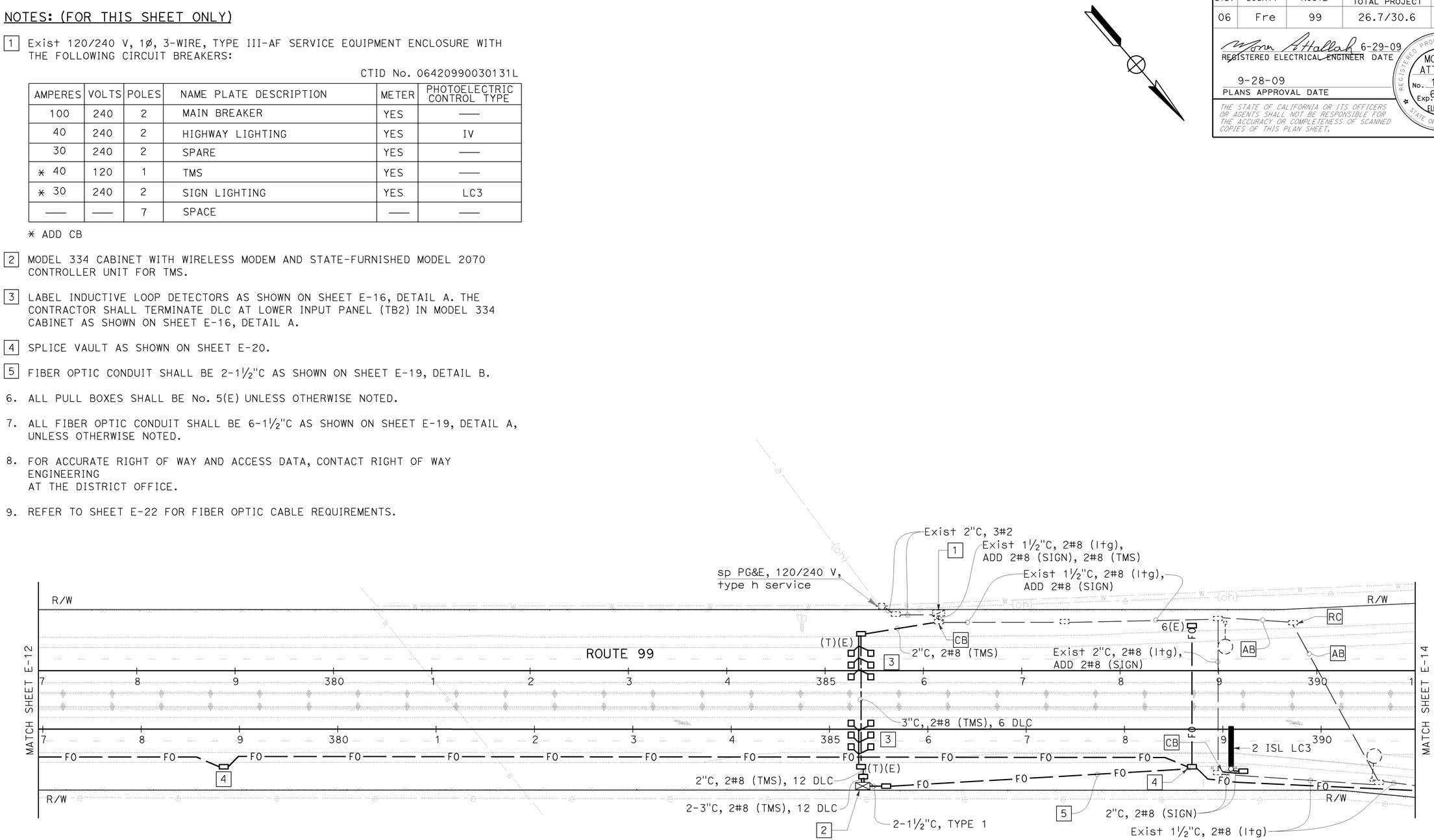

FIBER OPTIC SYSTEM
MODIFY LIGHTING AND SIGN ILLUMINATION
TRAFFIC MONITORING STATION
(LOCATION 2)

E-13

THIS PLAN IS ACCURATE FOR ELECTRICAL WORK ONLY.

SCALE: 1"=50'

REVISED BY | DATE REVISED
NORMA M. GALLEGOS | MONA ATTALLAH
CALCULATED-DESIGNED BY | CHECKED BY
FUNCTIONAL SUPERVISOR: ALI BAKHDOUD
STATE OF CALIFORNIA - DEPARTMENT OF TRANSPORTATION
Caltrans® ELECTRICAL DESIGN

LAST REVISION | DATE PLOTTED => 28-SEP-2009
07-01-09 | TIME PLOTTED => 14:57

BORDER LAST REVISED 4/11/2008 | RELATIVE BORDER SCALE IS IN INCHES 0 1 2 3 | USERNAME => trmartin | DGN FILE => 644261ua013.dgn | CU 06391 | EA 442611

Dist	COUNTY	ROUTE	POST MILES TOTAL PROJECT	SHEET No.	TOTAL SHEETS
06	Fre	99	26.7/30.6	157	242

Mona Attallah 6-29-09
REGISTERED ELECTRICAL ENGINEER DATE

9-28-09
PLANS APPROVAL DATE

REGISTERED PROFESSIONAL ENGINEER
MONA N. ATTALLAH
No. 18407
Exp 6/30/10
ELECTRICAL
STATE OF CALIFORNIA

THE STATE OF CALIFORNIA OR ITS OFFICERS OR AGENTS SHALL NOT BE RESPONSIBLE FOR THE ACCURACY OR COMPLETENESS OF SCANNED COPIES OF THIS PLAN SHEET.

NOTES: (FOR THIS SHEET ONLY)

1. SPLICE VAULT AS SHOWN ON SHEET E-20.
2. Exist SPLICE VAULT.
3. Exist CITY OF FRESNO SPLICE VAULT.
4. Exist STATE FIBER OPTIC HUB.
5. Exist CITY OF FRESNO FIBER OPTIC HUB.
6. ALL PULL BOXES SHALL BE No. 5(E) UNLESS OTHERWISE NOTED.
7. ALL FIBER OPTIC CONDUIT SHALL BE 6-1½"C AS SHOWN ON SHEET E-19, DETAIL A, UNLESS OTHERWISE NOTED.
8. FOR ACCURATE RIGHT OF WAY AND ACCESS DATA, CONTACT RIGHT OF WAY ENGINEERING AT THE DISTRICT OFFICE.
9. REFER TO SHEET E-22 FOR FIBER OPTIC CABLE REQUIRMENTS.

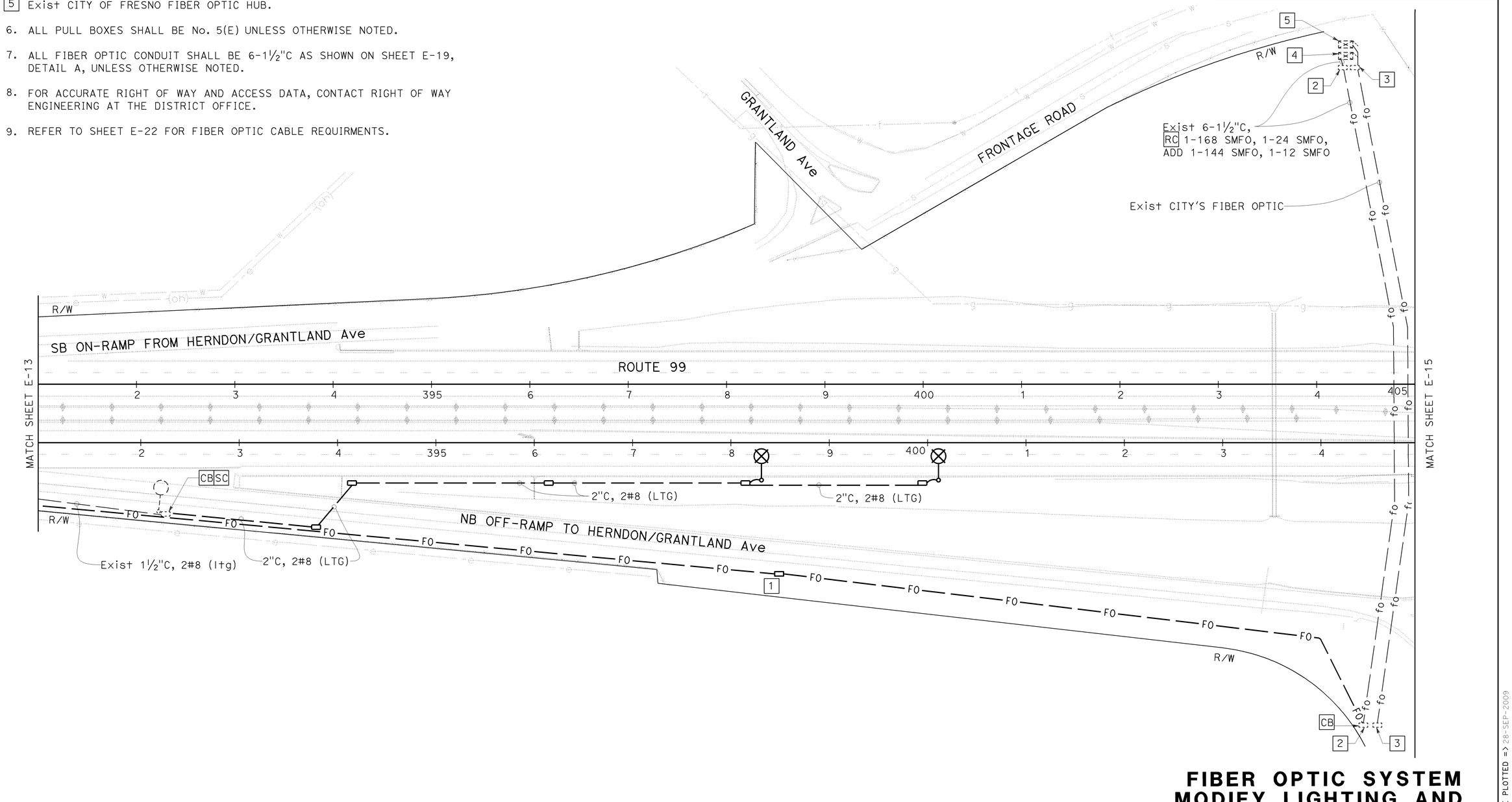

FIBER OPTIC SYSTEM MODIFY LIGHTING AND SIGN ILLUMINATION

SCALE: 1"=50'

E-14

THIS PLAN IS ACCURATE FOR ELECTRICAL WORK ONLY.

STATE OF CALIFORNIA - DEPARTMENT OF TRANSPORTATION
ELECTRICAL DESIGN

CALCULATED-DESIGNED BY: NORMA M. GALLEGOS
CHECKED BY: MONA ATTALLAH
FUNCTIONAL SUPERVISOR: ALI BAKHDOUD
REVISED BY | DATE REVISED

LAST REVISION | DATE PLOTTED => 28-SEP-2009
07-01-09 | TIME PLOTTED => 14:57

BORDER LAST REVISED 4/11/2008

RELATIVE BORDER SCALE IS IN INCHES 0 1 2 3

USERNAME => trmartin
DGN FILE => 644261ua014.dgn

CU 06391

EA 442611

Dist	COUNTY	ROUTE	POST MILES TOTAL PROJECT	SHEET No.	TOTAL SHEETS
06	Fre	99	26.7/30.6	158	242

Mona Attallah 6-29-09
REGISTERED ELECTRICAL ~~ENGINEER~~ DATE

9-28-09
PLANS APPROVAL DATE

MONA N. ATTALLAH No. 18407 Exp 6/30/10 ELECTRICAL — REGISTERED PROFESSIONAL ENGINEER — STATE OF CALIFORNIA

THE STATE OF CALIFORNIA OR ITS OFFICERS OR AGENTS SHALL NOT BE RESPONSIBLE FOR THE ACCURACY OR COMPLETENESS OF SCANNED COPIES OF THIS PLAN SHEET.

NOTES: (FOR THIS SHEET ONLY)

1 Exist 120/240 V, 1Ø, 3-WIRE, TYPE III-AF SERVICE EQUIPMENT ENCLOSURE WITH THE FOLLOWING CIRCUIT BREAKERS:

CTID No. 064209900304801

AMPERES	VOLTS	POLES	NAME PLATE DESCRIPTION	METER	PHOTOELECTRIC CONTROL TYPE
100	240	2	MAIN BREAKER	YES	——
40	240	2	HIGHWAY LIGHTING	YES	IV
30	240	2	SPARE	YES	——
* 20	120	1	COVE LIGHTING	YES	**V
* 15	120	1	CONTROL	YES	——

* ADD CB
** ADD TYPE V PEC

2. ALL PULL BOXES SHALL BE No. 5(E) UNLESS OTHERWISE NOTED.
3. ALL FIBER OPTIC CONDUIT SHALL BE 6-1½"C AS SHOWN ON SHEET E-19, DETAIL A, UNLESS OTHERWISE NOTED.
4. FOR ACCURATE RIGHT OF WAY AND ACCESS DATA, CONTACT RIGHT OF WAY ENGINEERING AT THE DISTRICT OFFICE.

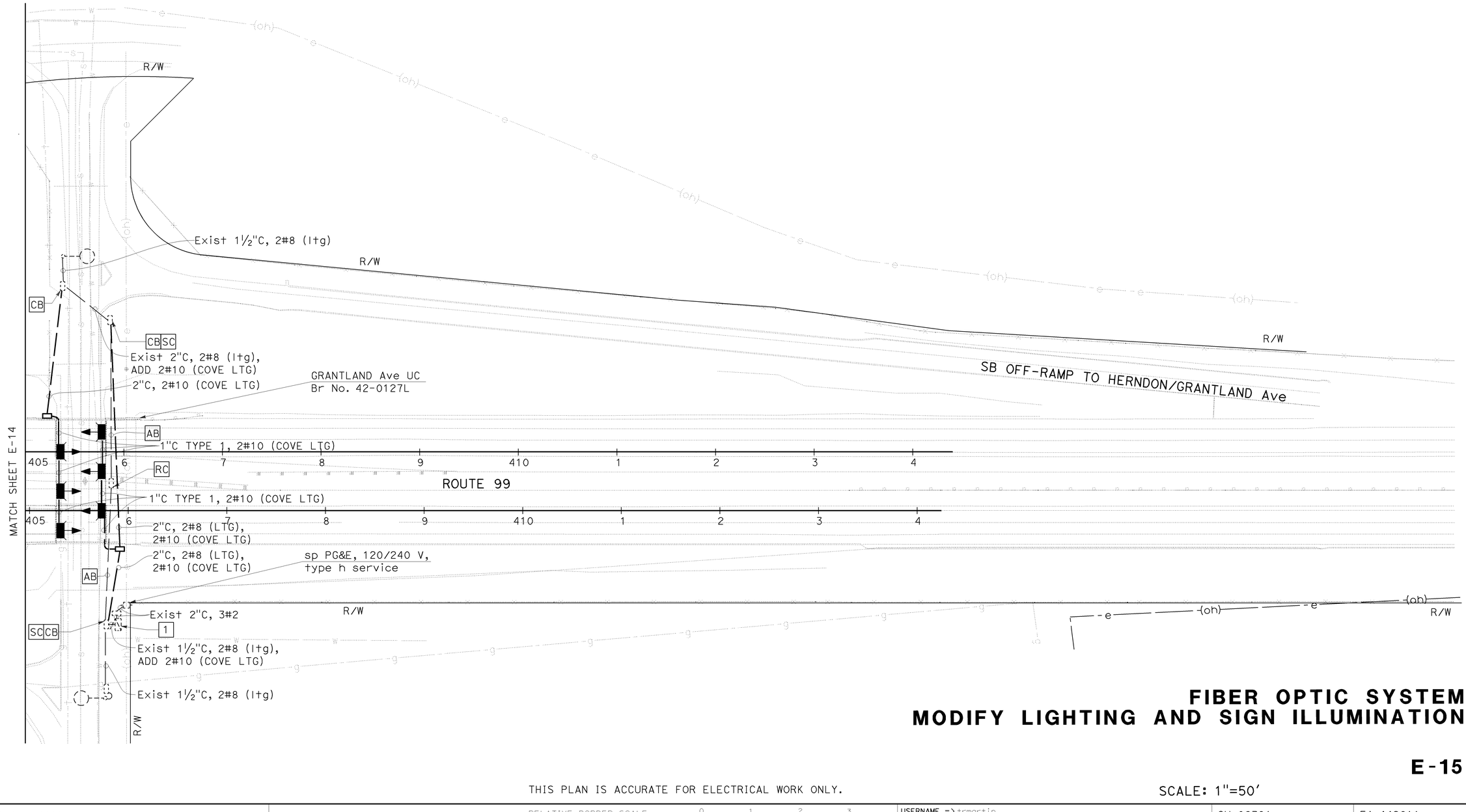

FIBER OPTIC SYSTEM
MODIFY LIGHTING AND SIGN ILLUMINATION

E-15

SCALE: 1"=50'

THIS PLAN IS ACCURATE FOR ELECTRICAL WORK ONLY.

REVISED BY | DATE REVISED

CALCULATED-DESIGNED BY: NORMA M. GALLEGOS
CHECKED BY: MONA ATTALLAH
FUNCTIONAL SUPERVISOR: ALI BAKHDOUD

STATE OF CALIFORNIA - DEPARTMENT OF TRANSPORTATION
ELECTRICAL DESIGN

LAST REVISION | DATE PLOTTED => 28-SEP-2009
07-01-09 | TIME PLOTTED => 14:57

BORDER LAST REVISED 4/11/2008

RELATIVE BORDER SCALE IS IN INCHES 0 1 2 3

USERNAME => trmartin
DGN FILE => 644261ua015.dgn

CU 06391

EA 442611

Dist	COUNTY	ROUTE	POST MILES TOTAL PROJECT	SHEET No.	TOTAL SHEETS
06	Fre	99	26.7/30.6	159	242

REGISTERED ELECTRICAL ENGINEER — 6-29-09 DATE

9-28-09
PLANS APPROVAL DATE

REGISTERED PROFESSIONAL ENGINEER — MONA N. ATTALLAH — No. 18407 — Exp 6/30/10 — ELECTRICAL — STATE OF CALIFORNIA

THE STATE OF CALIFORNIA OR ITS OFFICERS OR AGENTS SHALL NOT BE RESPONSIBLE FOR THE ACCURACY OR COMPLETENESS OF SCANNED COPIES OF THIS PLAN SHEET.

REVISED BY | DATE REVISED

NORMA M. GALLEGOS | MONA ATTALLAH

CALCULATED-DESIGNED BY | CHECKED BY

FUNCTIONAL SUPERVISOR: ALI BAKHDOUD

STATE OF CALIFORNIA - DEPARTMENT OF TRANSPORTATION

Caltrans® ELECTRICAL DESIGN

DLC IDENTIFICATION

D-L-N
- DIRECTION OF TRAFFIC
  - N - NORTHBOUND
  - S - SOUTHBOUND
  - E - EASTBOUND
  - W - WESTBOUND
- 1 - ENTERING
- 2 - LEAVING
- LANE NUMBER

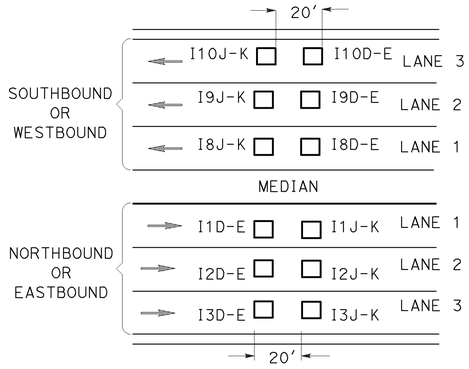

DLC TERMINATION (TB2)

I1D-E
- I - INPUT PANEL (TB2)
- DETECTOR ASSIGNMENT
  - 1 - NORTHBOUND/EASTBOUND LANE 1
  - 2 - NORTHBOUND/EASTBOUND LANE 2
  - 3 - NORTHBOUND/EASTBOUND LANE 3
  - 4 - NORTHBOUND/EASTBOUND LANE 4
  - 5 - NORTHBOUND/EASTBOUND LANE 5
  - 6 - NORTHBOUND/EASTBOUND LANE 6
  - 7 - NORTHBOUND/EASTBOUND LANE 7
  - 8 - SOUTHBOUND/WESTBOUND LANE 1
  - 9 - SOUTHBOUND/WESTBOUND LANE 2
  - 10 - SOUTHBOUND/WESTBOUND LANE 3
  - 11 - SOUTHBOUND/WESTBOUND LANE 4
  - 12 - SOUTHBOUND/WESTBOUND LANE 5
  - 13 - SOUTHBOUND/WESTBOUND LANE 6
  - 14 - SOUTHBOUND/WESTBOUND LANE 7
- D-E - ENTERING
- J-K - LEAVING

TYPICAL
TMS DLC IDENTIFICATION AND TERMINATION
DETAIL A

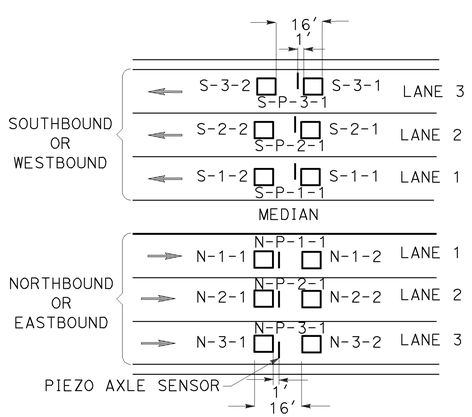

DLC IDENTIFICATION

D-L-N
- DIRECTION OF TRAFFIC
  - N - NORTHBOUND
  - S - SOUTHBOUND
  - E - EASTBOUND
  - W - WESTBOUND
- 1 - ENTERING
- 2 - LEAVING
- LANE NUMBER

PIEZO AXLE SENSOR IDENTIFICATION

D-P-L-1
- DIRECTION OF TRAFFIC
  - N - NORTHBOUND
  - S - SOUTHBOUND
  - E - EASTBOUND
  - W - WESTBOUND
- 1 - FOR ALL PIEZO AXLE SENSORS
- LANE NUMBER
- P - PIEZO AXLE SENSOR

TYPICAL
CENSUS DLC AND PIEZO AXLE SENSOR IDENTIFICATION
DETAIL B

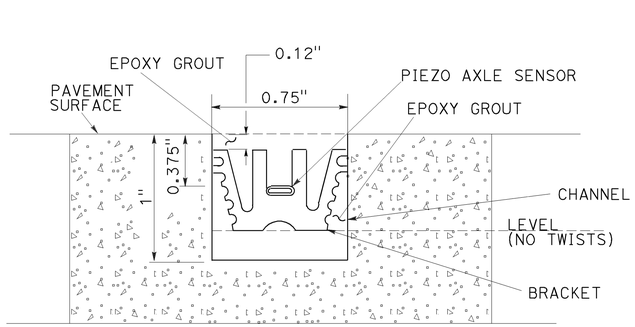

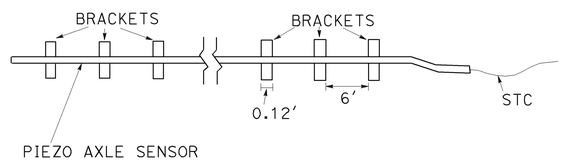

TYPICAL
PIEZO AXLE SENSOR INSTALLATION
DETAIL C

TRAFFIC MONITORING STATION

NO SCALE

E-16

THIS PLAN IS ACCURATE FOR ELECTRICAL WORK ONLY.

LAST REVISION | DATE PLOTTED => 28-SEP-2009
07-01-09 | TIME PLOTTED => 14:57

BORDER LAST REVISED 4/11/2008 | RELATIVE BORDER SCALE IS IN INCHES 0 1 2 3 | USERNAME => trmartin | DGN FILE => 64426lua016.dgn | CU 06391 | EA 442611

Dist	COUNTY	ROUTE	POST MILES TOTAL PROJECT	SHEET No.	TOTAL SHEETS
06	Fre	99	26.7/30.6	160	242

REGISTERED ELECTRICAL ~~ENGINEER~~ DATE 6-29-09

9-28-09
PLANS APPROVAL DATE

REGISTERED PROFESSIONAL ENGINEER
MONA N. ATTALLAH
No. 18407
Exp 6/30/10
ELECTRICAL
STATE OF CALIFORNIA

THE STATE OF CALIFORNIA OR ITS OFFICERS OR AGENTS SHALL NOT BE RESPONSIBLE FOR THE ACCURACY OR COMPLETENESS OF SCANNED COPIES OF THIS PLAN SHEET.

NOTE: (FOR THIS SHEET ONLY)

1. FOR FIBER OPTIC EQUIPMENT AND TERMINATIONS, SEE SHEET E-22 THROUGH E-27.

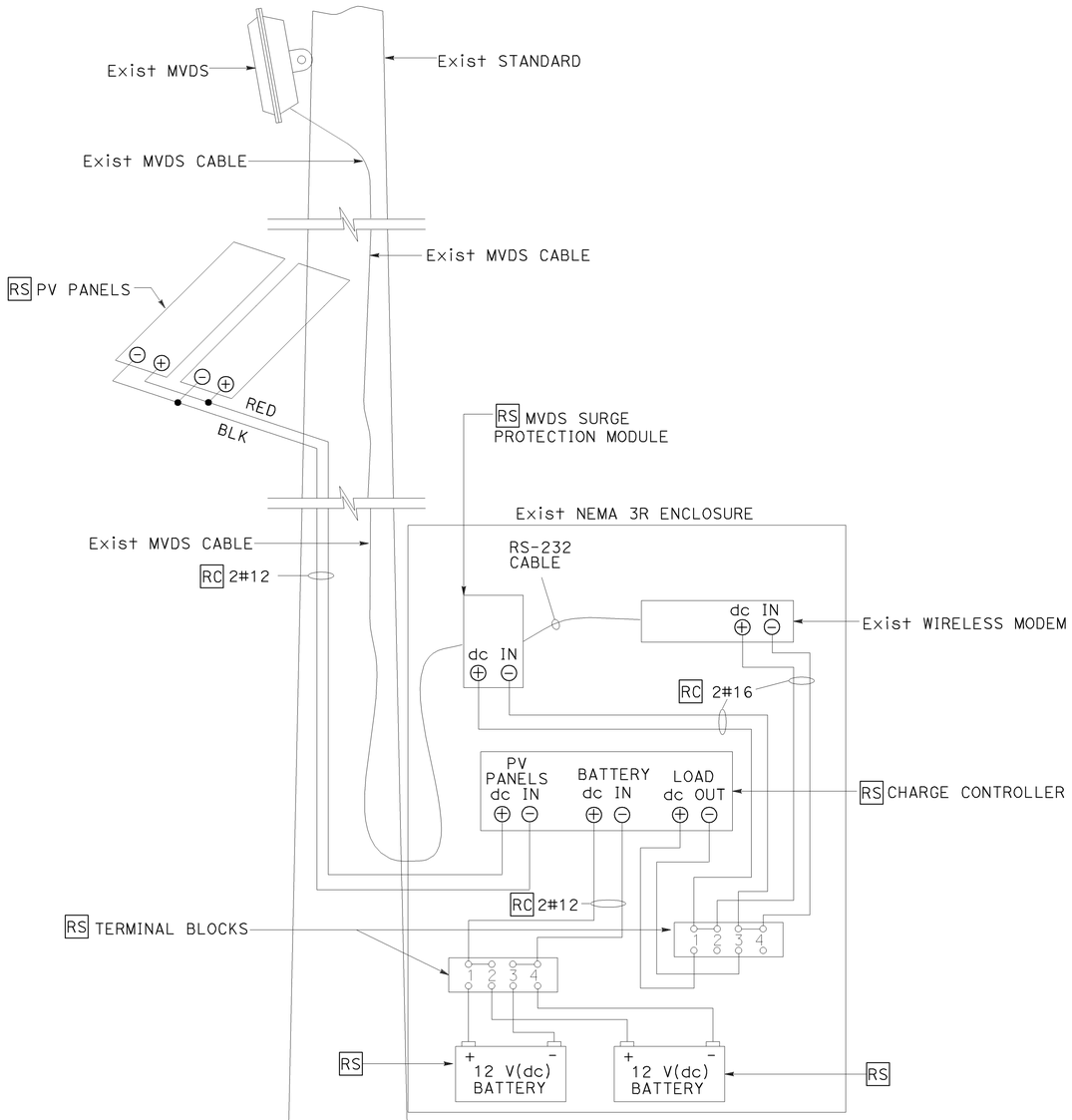

DETAIL A
Exist VDS POLE

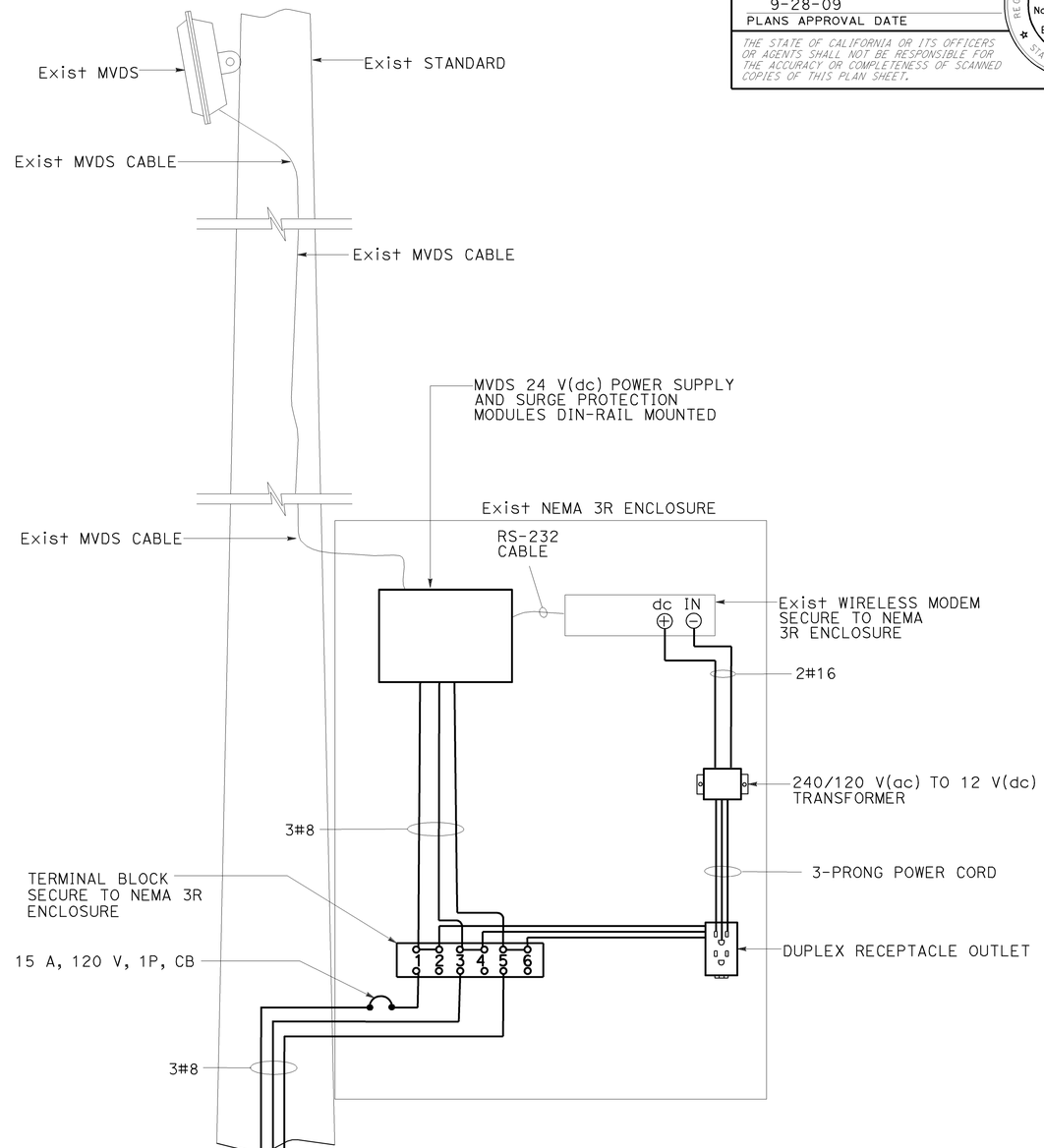

DETAIL B
Exist VDS POLE

MODIFY MICROWAVE VEHICLE DETECTION SYSTEM (LOCATIONS 1 AND 2)

E-17

THIS PLAN IS ACCURATE FOR ELECTRICAL WORK ONLY.

NO SCALE

STATE OF CALIFORNIA - DEPARTMENT OF TRANSPORTATION
Caltrans® ELECTRICAL DESIGN
FUNCTIONAL SUPERVISOR: ALI BAKHDOUD
CALCULATED-DESIGNED BY: NORMA M. GALLEGOS
CHECKED BY: MONA ATTALLAH
REVISED BY
DATE REVISED

LAST REVISION | DATE PLOTTED => 28-SEP-2009 | 07-01-09 | TIME PLOTTED => 14:57

BORDER LAST REVISED 4/11/2008
RELATIVE BORDER SCALE IS IN INCHES 0 1 2 3
USERNAME => trmartin
DGN FILE => 644261ua017.dgn
CU 06391
EA 442611

NOTES: (FOR THIS SHEET ONLY)

1. PV PANEL ARRAY WITH GALVANIZED STEEL MOUNTING BRACKET ORIENTED WITH PANELS FACING DIRECTLY SOUTH.
2. FOR FIBER OPTIC EQUIPMENT AND TERMINATIONS, SEE SHEET E-22 THROUGH E-27.
3. FOR FOUNDATION AND STRUCTURAL DETAILS, SEE SHEETS E-28 AND E-29.

Dist	COUNTY	ROUTE	POST MILES TOTAL PROJECT	SHEET No.	TOTAL SHEETS
06	Fre	99	26.7/30.6	161	242

REGISTERED ELECTRICAL ENGINEER — DATE: 6-29-09

MONA N. ATTALLAH No. 18407 Exp 6/30/10 ELECTRICAL — REGISTERED PROFESSIONAL ENGINEER — STATE OF CALIFORNIA

PLANS APPROVAL DATE: 9-28-09

THE STATE OF CALIFORNIA OR ITS OFFICERS OR AGENTS SHALL NOT BE RESPONSIBLE FOR THE ACCURACY OR COMPLETENESS OF SCANNED COPIES OF THIS PLAN SHEET.

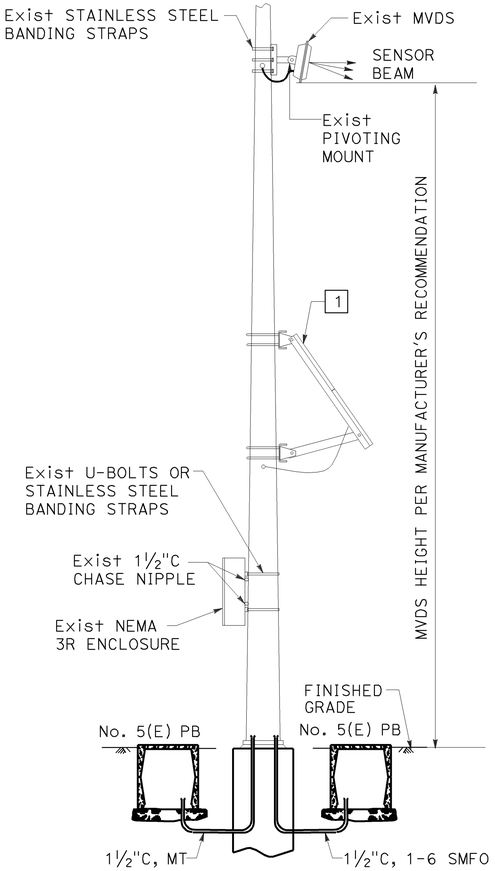

DETAIL A
RELOCATED Exist VDS POLE

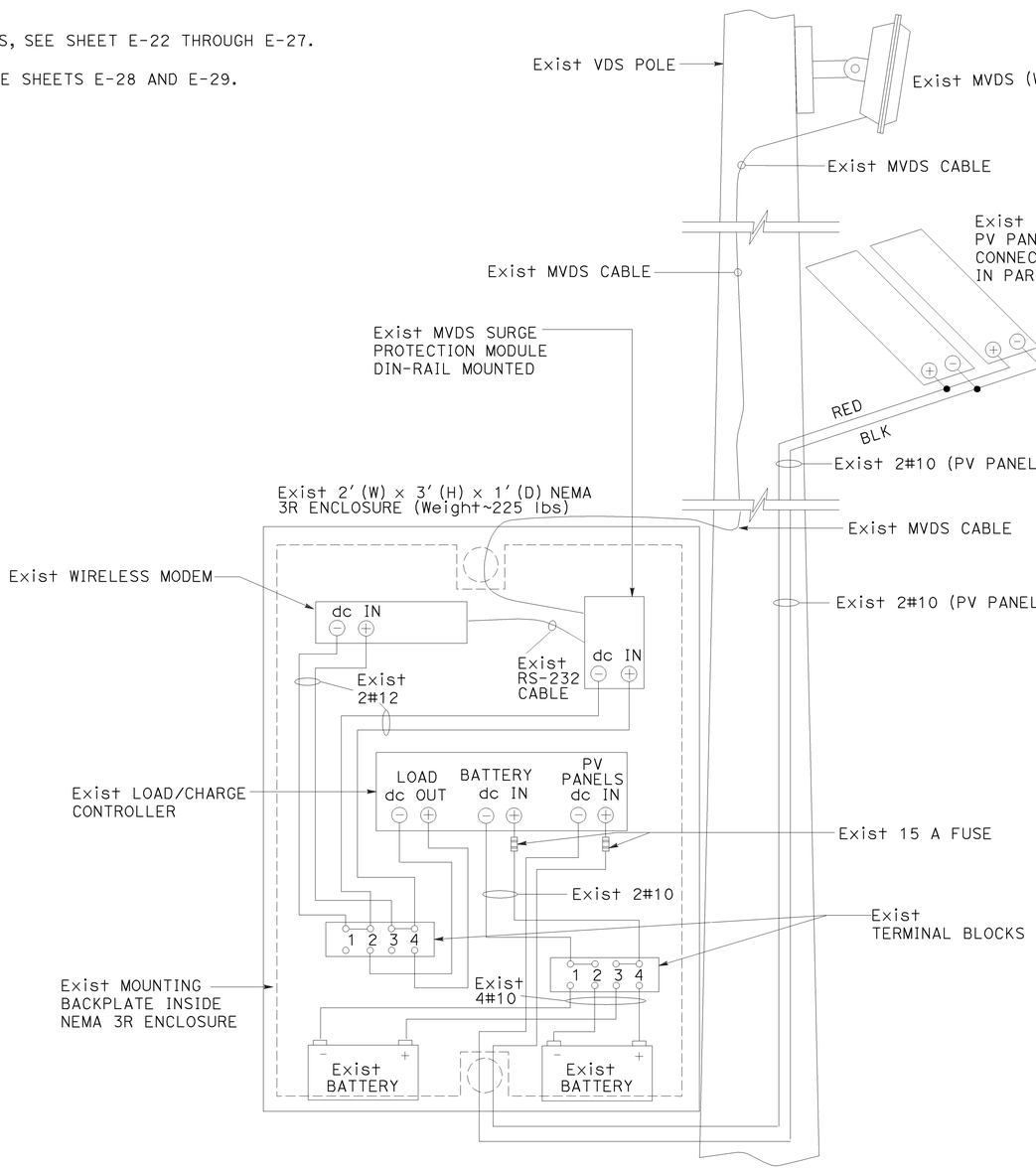

DETAIL B
RELOCATED Exist VDS POLE

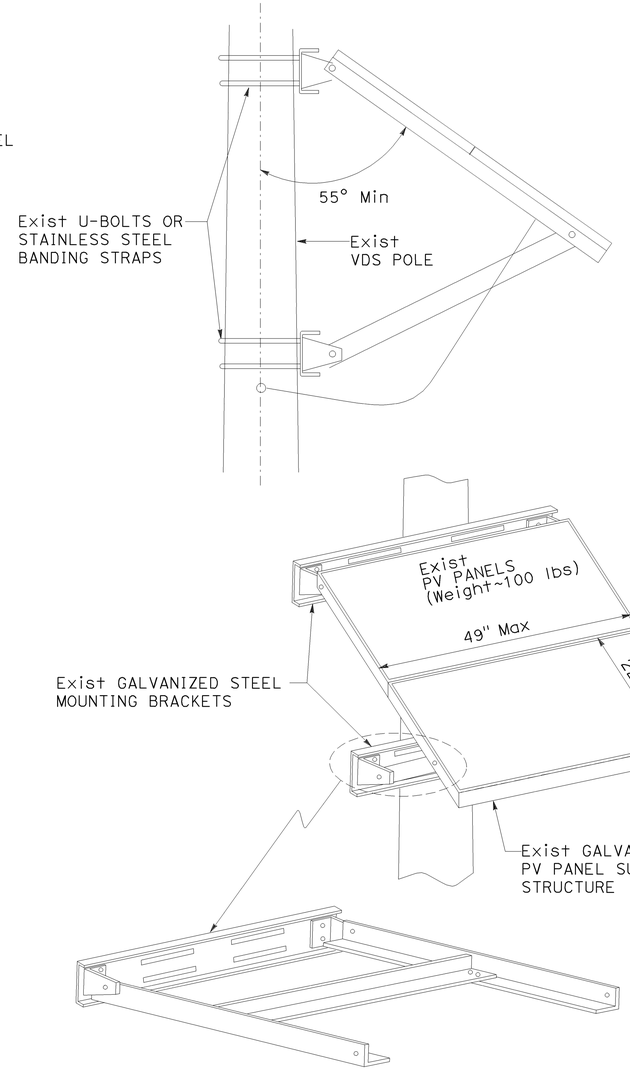

DETAIL C
Exist SOLAR PANELS

MODIFY MICROWAVE VEHICLE DETECTION SYSTEM (LOCATION 3)

E-18

THIS PLAN IS ACCURATE FOR ELECTRICAL WORK ONLY.

NO SCALE

STATE OF CALIFORNIA - DEPARTMENT OF TRANSPORTATION
Caltrans® ELECTRICAL DESIGN
FUNCTIONAL SUPERVISOR: ALI BAKHDOUD
CALCULATED-DESIGNED BY: NORMA M. GALLEGOS
CHECKED BY: MONA ATTALLAH
REVISED BY
DATE REVISED

LAST REVISION — DATE PLOTTED => 28-SEP-2009 — TIME PLOTTED => 14:57 — 07-01-09

BORDER LAST REVISED 4/11/2008 | RELATIVE BORDER SCALE IS IN INCHES 0 1 2 3 | USERNAME => trmartin | DGN FILE => 644261ua018.dgn | CU 06391 | EA 442611

Dist	COUNTY	ROUTE	POST MILES TOTAL PROJECT	SHEET No.	TOTAL SHEETS
06	Fre	99	26.7/30.6	162	242

Mona Attallah 6-29-09
REGISTERED ELECTRICAL ~~ENGINEER~~ DATE

MONA N. ATTALLAH No. 18407 Exp 6/30/10 ELECTRICAL — REGISTERED PROFESSIONAL ENGINEER — STATE OF CALIFORNIA

9-28-09
PLANS APPROVAL DATE

THE STATE OF CALIFORNIA OR ITS OFFICERS OR AGENTS SHALL NOT BE RESPONSIBLE FOR THE ACCURACY OR COMPLETENESS OF SCANNED COPIES OF THIS PLAN SHEET.

NOTES: (FOR THIS SHEET ONLY)

1. ANY FIBER OPTIC CONDUIT INSTALLED WITHIN 3′ OF GUARDRAIL SHALL BE 55" MINIMUM DEPTH TO TOP OF CONDUIT.
2. ALL FIBER OPTIC CONDUITS SHALL BE FITTED WITH UNDERGROUND RATED CONDUIT SPACERS AT INCREMENTS OF 5′.

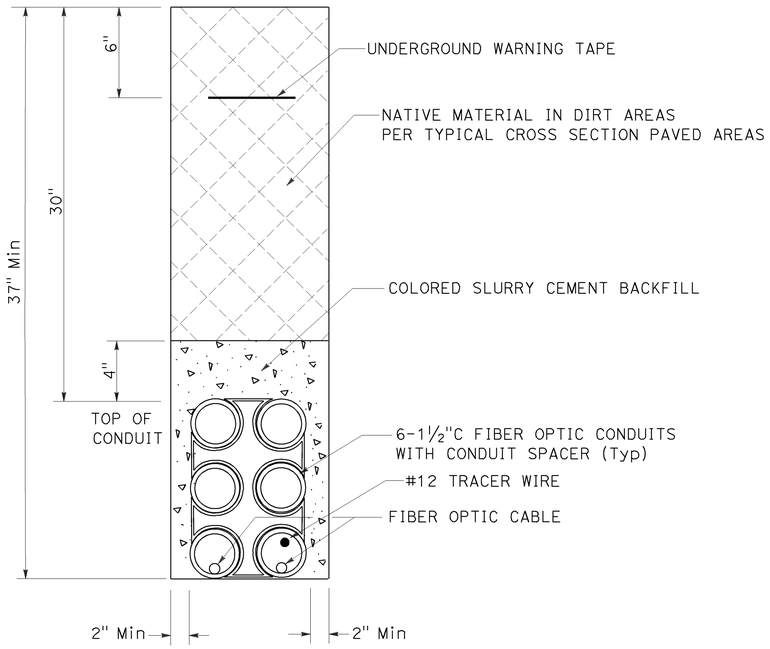

TRENCH IN DIRT/PAVEMENT DETAIL
6-1½" HDPE CONDUIT
DETAIL A

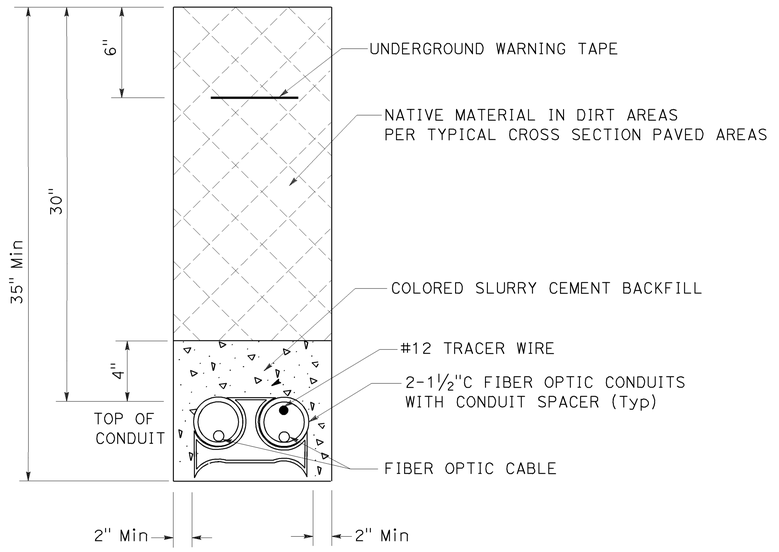

TRENCH IN DIRT/PAVEMENT DETAIL
2-1½" HDPE CONDUIT
DETAIL B

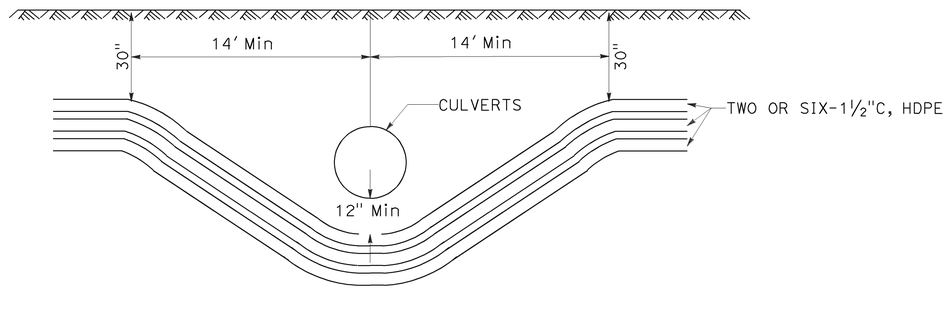

HDPE CONDUIT
DETAIL C

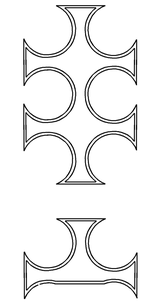

CONDUIT SPACER (Typ)

THIS PLAN IS ACCURATE FOR ELECTRICAL WORK ONLY.

FIBER OPTIC SYSTEM

NO SCALE

E-19

STATE OF CALIFORNIA - DEPARTMENT OF TRANSPORTATION
Caltrans® ELECTRICAL DESIGN
FUNCTIONAL SUPERVISOR: ALI BAKHDOUD
CALCULATED-DESIGNED BY: NORMA M. GALLEGOS
CHECKED BY: MONA ATTALLAH
REVISED BY
DATE REVISED

LAST REVISION | DATE PLOTTED => 28-SEP-2009 | 07-01-09 | TIME PLOTTED => 14:57

Dist	COUNTY	ROUTE	POST MILES TOTAL PROJECT	SHEET No.	TOTAL SHEETS
06	Fre	99	26.7/30.6	163	242

Mona Attallah 6-29-09
REGISTERED ELECTRICAL ENGINEER DATE

9-28-09
PLANS APPROVAL DATE

REGISTERED PROFESSIONAL ENGINEER
MONA N. ATTALLAH
No. 18407
Exp 6/30/10
ELECTRICAL
STATE OF CALIFORNIA

THE STATE OF CALIFORNIA OR ITS OFFICERS OR AGENTS SHALL NOT BE RESPONSIBLE FOR THE ACCURACY OR COMPLETENESS OF SCANNED COPIES OF THIS PLAN SHEET.

NOTES: (FOR THIS SHEET ONLY)

1. GALVANIZED CAST-IN ANGLE FRAME.
2. TWO PIECE TRAFFIC RATED TORSION ASSISTED COVER, WITH PICK SLOTS AND BOLT DOWN HOLES. GALVANIZED AFTER FABRICATION.
3. 12" DIAMETER DRAIN HOLE. LOCATE AT CENTER.
4. 7/8" DIAMETER PULL IRONS (4 EA).
5. 16" x 4" KNOCK-OUTS. (8 EA).
6. VAULT DESIGNED IN ACCORDANCE WITH CURRENT AASHTO TRAFFIC BRIDGE LOADING USING 3.756 kPSI COMPRESSIVE STRENGTH CONCRETE AND 60 kPSI YIELD STRENGTH ASTM A-706 STEEL REINFORCEMENT PER CALCULATIONS.
7. VAULT TO BE PLACED ON A 12" BASE OF CRUSHED ROCK.
8. EACH VAULT SHALL COME PROVIDED WITH TWO SETS BOLT/LID REMOVERS.
9. ALL MOUNTING HARDWARE SHALL BE GALVANIZED OR STAINLESS STEEL.

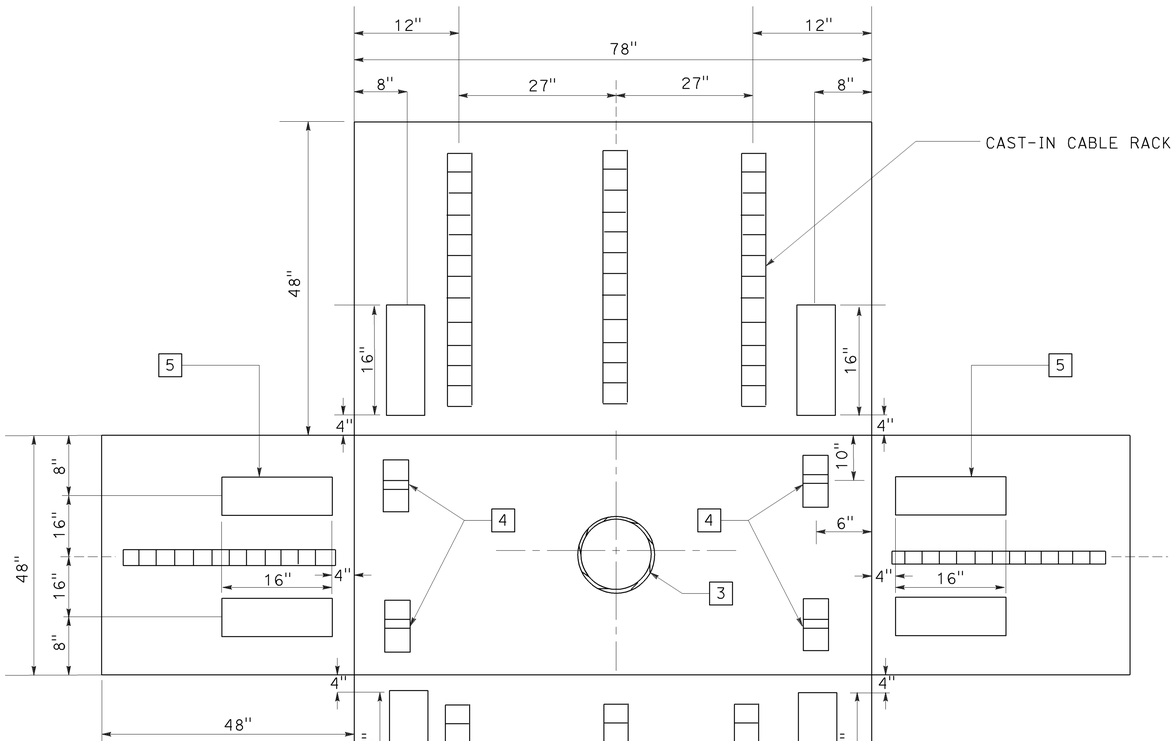

SPLICE VAULT DETAIL
PLAN VIEW

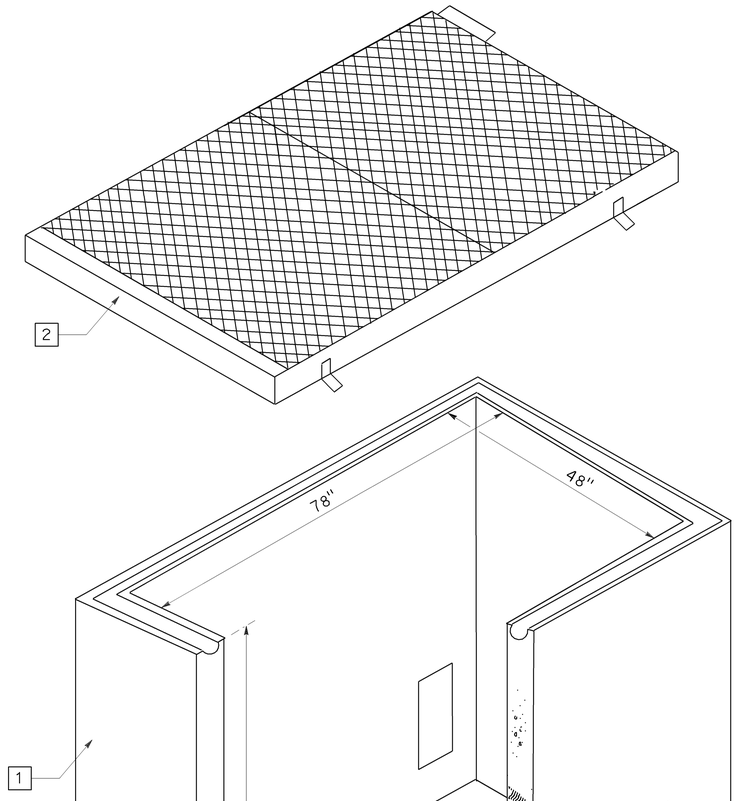

SPLICE VAULT DETAIL
OBLIQUE VIEW

FIBER OPTIC SYSTEM

E-20

NO SCALE

THIS PLAN IS ACCURATE FOR ELECTRICAL WORK ONLY.

STATE OF CALIFORNIA - DEPARTMENT OF TRANSPORTATION
Caltrans® ELECTRICAL DESIGN
FUNCTIONAL SUPERVISOR: ALI BAKHDOUD
CALCULATED-DESIGNED BY
CHECKED BY
NORMA M. GALLEGOS
MONA ATTALLAH
REVISED BY
DATE REVISED

LAST REVISION | DATE PLOTTED => 28-SEP-2009 | TIME PLOTTED => 15:09
07-01-09

BORDER LAST REVISED 4/11/2008

RELATIVE BORDER SCALE IS IN INCHES 0 1 2 3

USERNAME => trmnguye
DGN FILE => 644261ua020.dgn

CU 06391

EA 442611

Dist	COUNTY	ROUTE	POST MILES TOTAL PROJECT	SHEET No.	TOTAL SHEETS
06	Fre	99	26.7/30.6	164	242

REGISTERED ELECTRICAL ENGINEER — 6-29-09 DATE

9-28-09
PLANS APPROVAL DATE

REGISTERED PROFESSIONAL ENGINEER
MONA N. ATTALLAH
No. 18407
Exp 6/30/10
ELECTRICAL
STATE OF CALIFORNIA

THE STATE OF CALIFORNIA OR ITS OFFICERS OR AGENTS SHALL NOT BE RESPONSIBLE FOR THE ACCURACY OR COMPLETENESS OF SCANNED COPIES OF THIS PLAN SHEET.

NOTES: (FOR THIS SHEET ONLY)

1. 90 DEGREE SWEEPS/BENDS WILL NOT BE ALLOWED UNLESS NOTED ON THE PLAN SHEETS.
2. CONDUIT TAPERS INTO AND OUT OF VAULTS ARE TYPICAL.
3. FOR MORE INFORMATION SEE SHEET E-19 AND E-20.
4. CONTRACTOR SHALL FIELD VERIFY EXACT DIMENSIONS PRIOR TO FABRICATION OF ANY MATERIAL.
5. COVERS SHALL BE GALVANIZED AND FABRICATED TO OVERLAP ADJACENT COVERS.
6. ALL MATERIAL USED SHALL BE GALVANIZED AND PAINTED WITH A PRIME COAT AND FINISHED COAT TO MATCH THE STRUCTURE PER STANDARD SPECIFICATIONS.
7. FABRICATE PIPE STRAP TO PROVIDE TIGHT FIT OF CONDUIT TO FACE OF CONCRETE.
8. CONDUIT EXPANSION FITTINGS SHALL BE INSTALLED AT ALL BRIDGE EXPANSION JOINTS PER STANDARD SPECIFICATIONS.

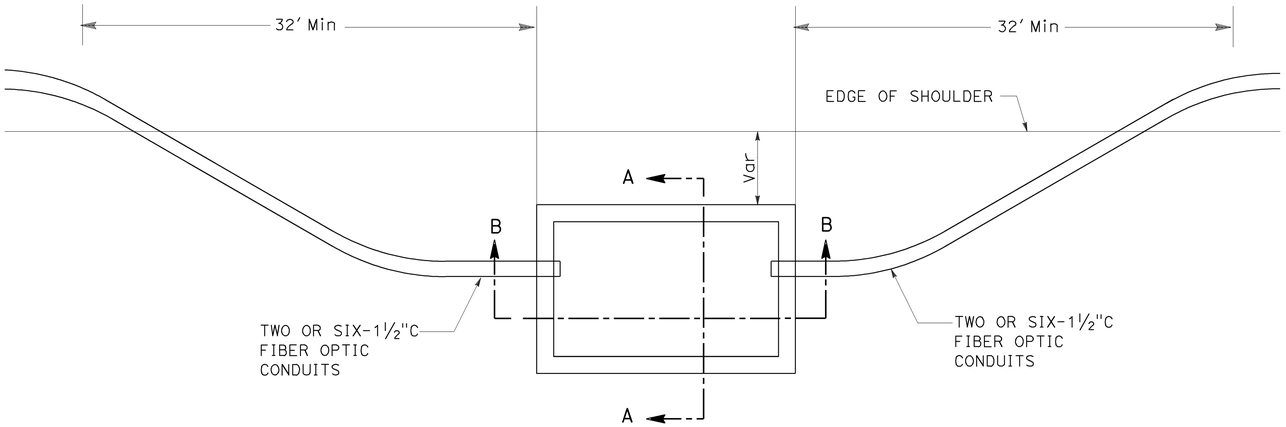

SPLICE VAULT PLAN VIEW

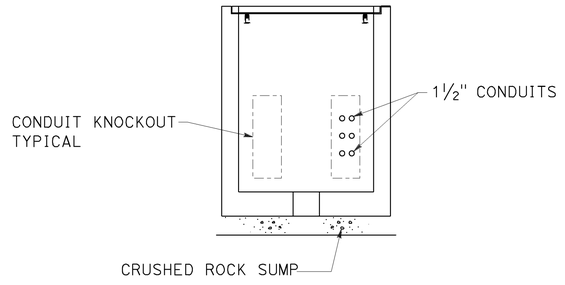

SECTION A-A

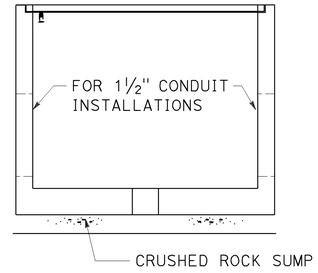

SECTION B-B

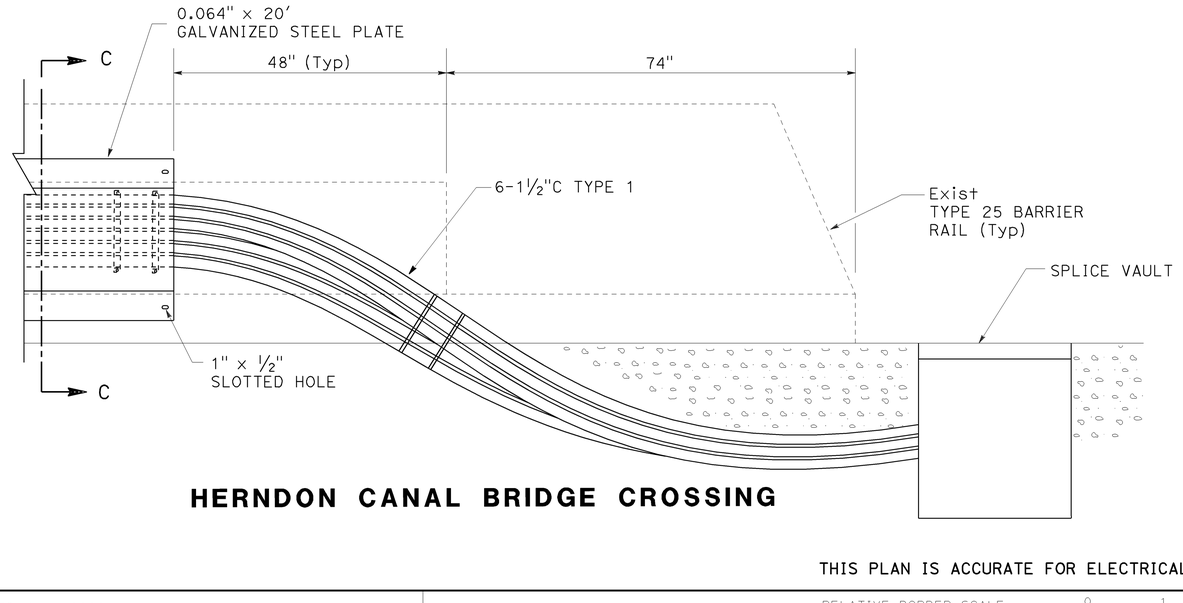

HERNDON CANAL BRIDGE CROSSING

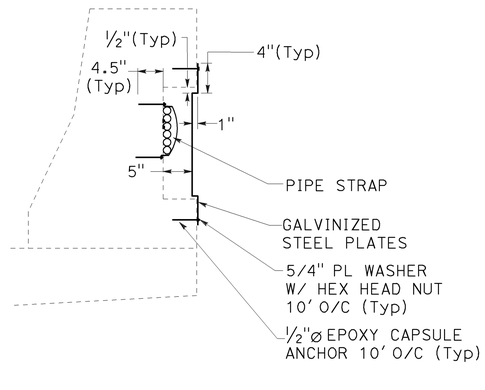

SECTION C-C

THIS PLAN IS ACCURATE FOR ELECTRICAL WORK ONLY.

FIBER OPTIC SYSTEM
E-21

NO SCALE

STATE OF CALIFORNIA - DEPARTMENT OF TRANSPORTATION
ELECTRICAL DESIGN

CALCULATED-DESIGNED BY: NORMA M. GALLEGOS
CHECKED BY: MONA ATTALLAH
FUNCTIONAL SUPERVISOR: ALI BAKHDOUD
REVISED BY / DATE REVISED:

LAST REVISION | DATE PLOTTED => 28-SEP-2009
07-01-09 | TIME PLOTTED => 15:09

BORDER LAST REVISED 4/11/2008

RELATIVE BORDER SCALE IS IN INCHES 0 1 2 3

USERNAME => trmnguye
DGN FILE => 644261ua021.dgn

CU 06391

EA 442611

Dist	COUNTY	ROUTE	POST MILES TOTAL PROJECT	SHEET No.	TOTAL SHEETS
06	Fre	99	26.7/30.6	165	242

Mona Attallah 6-29-09
REGISTERED ELECTRICAL ENGINEER DATE

9-28-09
PLANS APPROVAL DATE

REGISTERED PROFESSIONAL ENGINEER
MONA N. ATTALLAH
No. 18407
Exp. 6/30/10
ELECTRICAL
STATE OF CALIFORNIA

THE STATE OF CALIFORNIA OR ITS OFFICERS OR AGENTS SHALL NOT BE RESPONSIBLE FOR THE ACCURACY OR COMPLETENESS OF SCANNED COPIES OF THIS PLAN SHEET.

LEGEND:

—— EXISTING ELEMENT

● SPLICE FIBER TO FIBER

× CUT END OF FIBER

▫ SC CONNECTOR ON NEW FDU OR ITU

ABBREVIATIONS:

FDU	FIBER DISTRIBUTION UNIT	BL	BLUE
FO	FIBER OPTIC	OR	ORANGE
FOM	FIBER OPTIC MODEM (SF)	GR	GREEN
ITU	INTERCONNECT TERMINATION UNIT	BR	BROWN
MUX	MULTIPLEXER (SF)	SL	SLATE
RX	RECEIVE	WT	WHITE
SC	COMPRESSION CONNECTOR	RD	RED
(SF)	STATE-FURNISHED	BK	BLACK
SMFO	SINGLEMODE FIBER OPTIC CABLE	YL	YELLOW
SV	SPLICE VAULT	VL	VIOLET
TCVR	VIDEO TRANSCEIVER (SF)	RS	ROSE
TX	TRANSMIT	AQ	AQUA

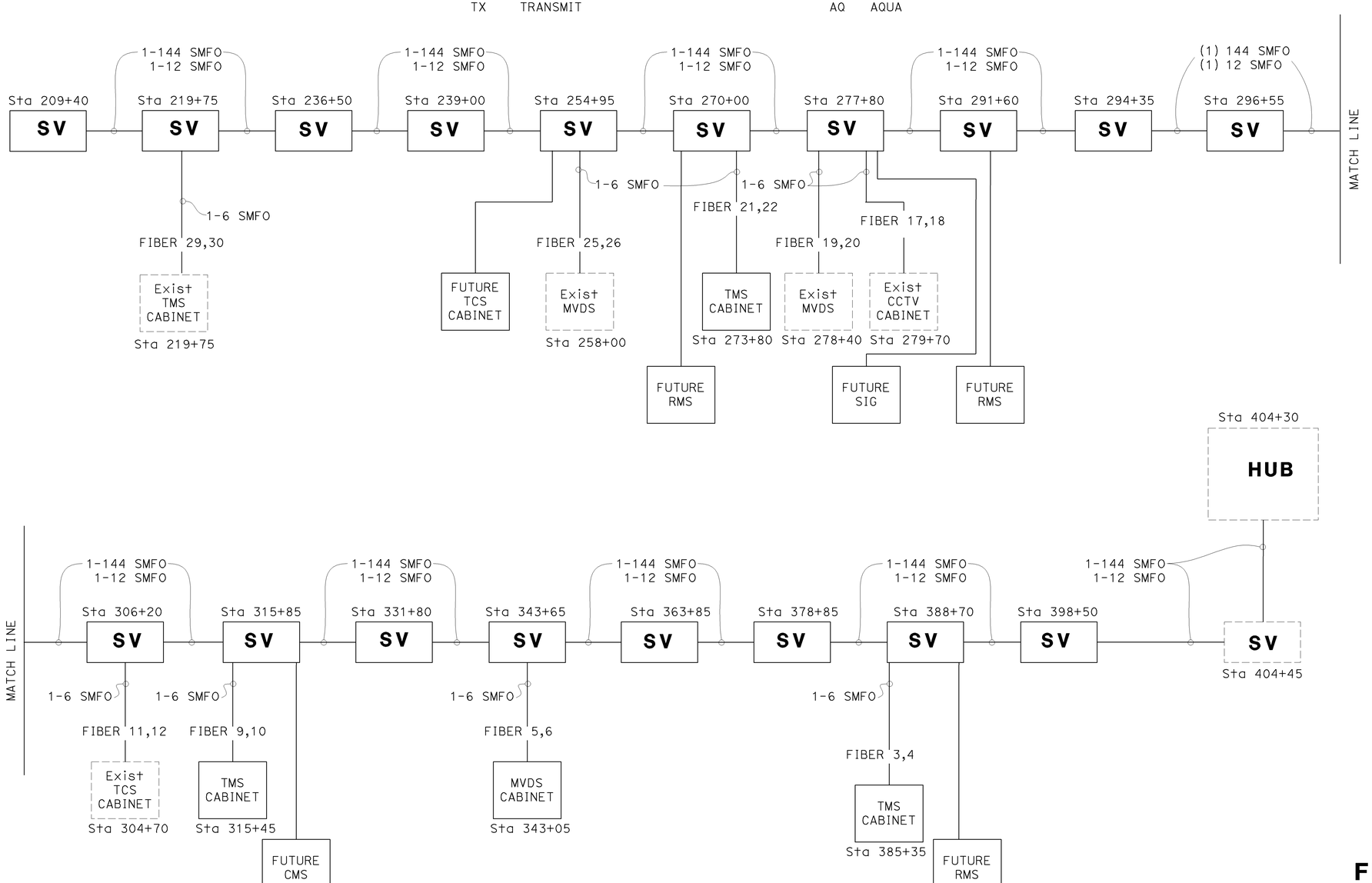

FIBER OPTIC SYSTEM
E-22

NO SCALE

THIS PLAN IS ACCURATE FOR ELECTRICAL WORK ONLY.

STATE OF CALIFORNIA - DEPARTMENT OF TRANSPORTATION
ELECTRICAL DESIGN

FUNCTIONAL SUPERVISOR: ALI BAKHDOUD

CALCULATED-DESIGNED BY: NORMA M. GALLEGOS
CHECKED BY: MONA ATTALLAH

REVISED BY | DATE REVISED

LAST REVISION | DATE PLOTTED => 29-SEP-2009
07-01-09 | TIME PLOTTED => 10:21

BORDER LAST REVISED 4/11/2008

RELATIVE BORDER SCALE IS IN INCHES 0 1 2 3

USERNAME => trphils
DGN FILE => 644261ua022.dgn

CU 06391

EA 442611

Dist	COUNTY	ROUTE	POST MILES TOTAL PROJECT	SHEET No.	TOTAL SHEETS
06	Fre	99	26.7/30.6	166	242

Mona Attallah 6-29-09
REGISTERED ELECTRICAL ~~ENGINEER~~ DATE

9-28-09
PLANS APPROVAL DATE

REGISTERED PROFESSIONAL ENGINEER
MONA N. ATTALLAH
No. 18407
Exp 6/30/10
ELECTRICAL
STATE OF CALIFORNIA

THE STATE OF CALIFORNIA OR ITS OFFICERS OR AGENTS SHALL NOT BE RESPONSIBLE FOR THE ACCURACY OR COMPLETENESS OF SCANNED COPIES OF THIS PLAN SHEET.

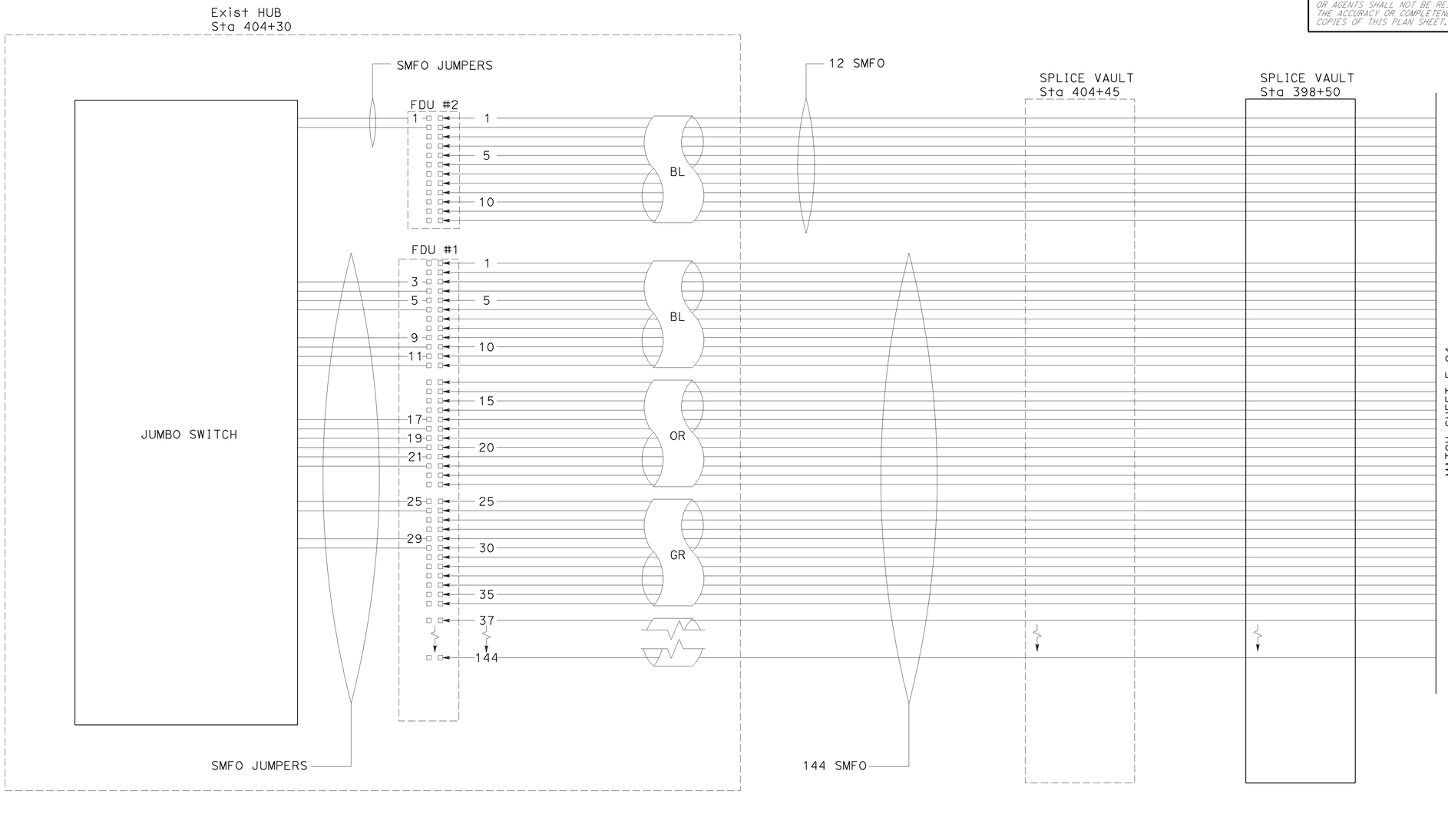

FIBER CABLE BREAKOUT

FIBER OPTIC SYSTEM

E-23

THIS PLAN IS ACCURATE FOR ELECTRICAL WORK ONLY.

NO SCALE

NORMA M. GALLEGOS
MONA ATTALLAH
ALI BAKHDOUD
STATE OF CALIFORNIA - DEPARTMENT OF TRANSPORTATION
ELECTRICAL DESIGN

CALCULATED-DESIGNED BY
CHECKED BY
FUNCTIONAL SUPERVISOR
REVISED BY
DATE REVISED

LAST REVISION 07-01-09
DATE PLOTTED => 28-SEP-2009
TIME PLOTTED => 15:01

BORDER LAST REVISED 4/11/2008
RELATIVE BORDER SCALE IS IN INCHES 0 1 2 3
USERNAME => trliim
DGN FILE => 644261ua023.dgn
CU 06391
EA 442611

Dist	COUNTY	ROUTE	POST MILES TOTAL PROJECT	SHEET No.	TOTAL SHEETS
06	Fre	99	26.7/30.6	167	242

REGISTERED ELECTRICAL ~~ENGINEER~~ DATE 6-29-09

9-28-09
PLANS APPROVAL DATE

REGISTERED PROFESSIONAL ENGINEER
MONA N. ATTALLAH
No. 18407
Exp 6/30/10
ELECTRICAL
STATE OF CALIFORNIA

THE STATE OF CALIFORNIA OR ITS OFFICERS OR AGENTS SHALL NOT BE RESPONSIBLE FOR THE ACCURACY OR COMPLETENESS OF SCANNED COPIES OF THIS PLAN SHEET.

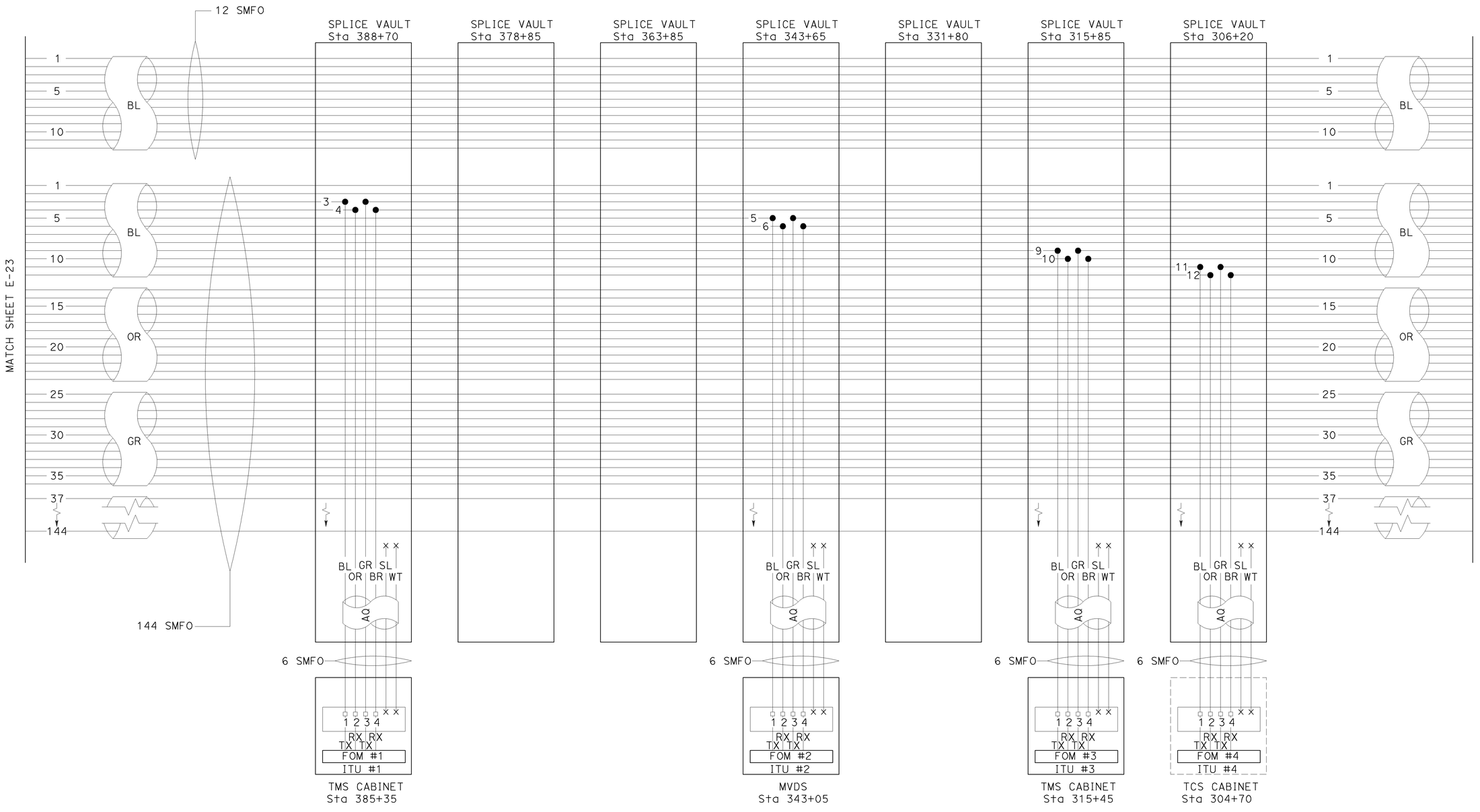

FIBER CABLE BREAKOUT

FIBER OPTIC SYSTEM
E-24

THIS PLAN IS ACCURATE FOR ELECTRICAL WORK ONLY.

NO SCALE

STATE OF CALIFORNIA - DEPARTMENT OF TRANSPORTATION
ELECTRICAL DESIGN
FUNCTIONAL SUPERVISOR: ALI BAKHDOUD
CALCULATED-DESIGNED BY: NORMA M. GALLEGOS
CHECKED BY: MONA ATTALLAH
REVISED BY
DATE REVISED

LAST REVISION DATE PLOTTED => 28-SEP-2009
TIME PLOTTED => 15:01
07-01-09

Dist	COUNTY	ROUTE	POST MILES TOTAL PROJECT	SHEET No.	TOTAL SHEETS
06	Fre	99	26.7/30.6	168	242

REGISTERED ELECTRICAL ~~ENGINEER~~ DATE 6-29-09

9-28-09
PLANS APPROVAL DATE

REGISTERED PROFESSIONAL ENGINEER
MONA N. ATTALLAH
No. 18407
Exp 6/30/10
ELECTRICAL
STATE OF CALIFORNIA

THE STATE OF CALIFORNIA OR ITS OFFICERS OR AGENTS SHALL NOT BE RESPONSIBLE FOR THE ACCURACY OR COMPLETENESS OF SCANNED COPIES OF THIS PLAN SHEET.

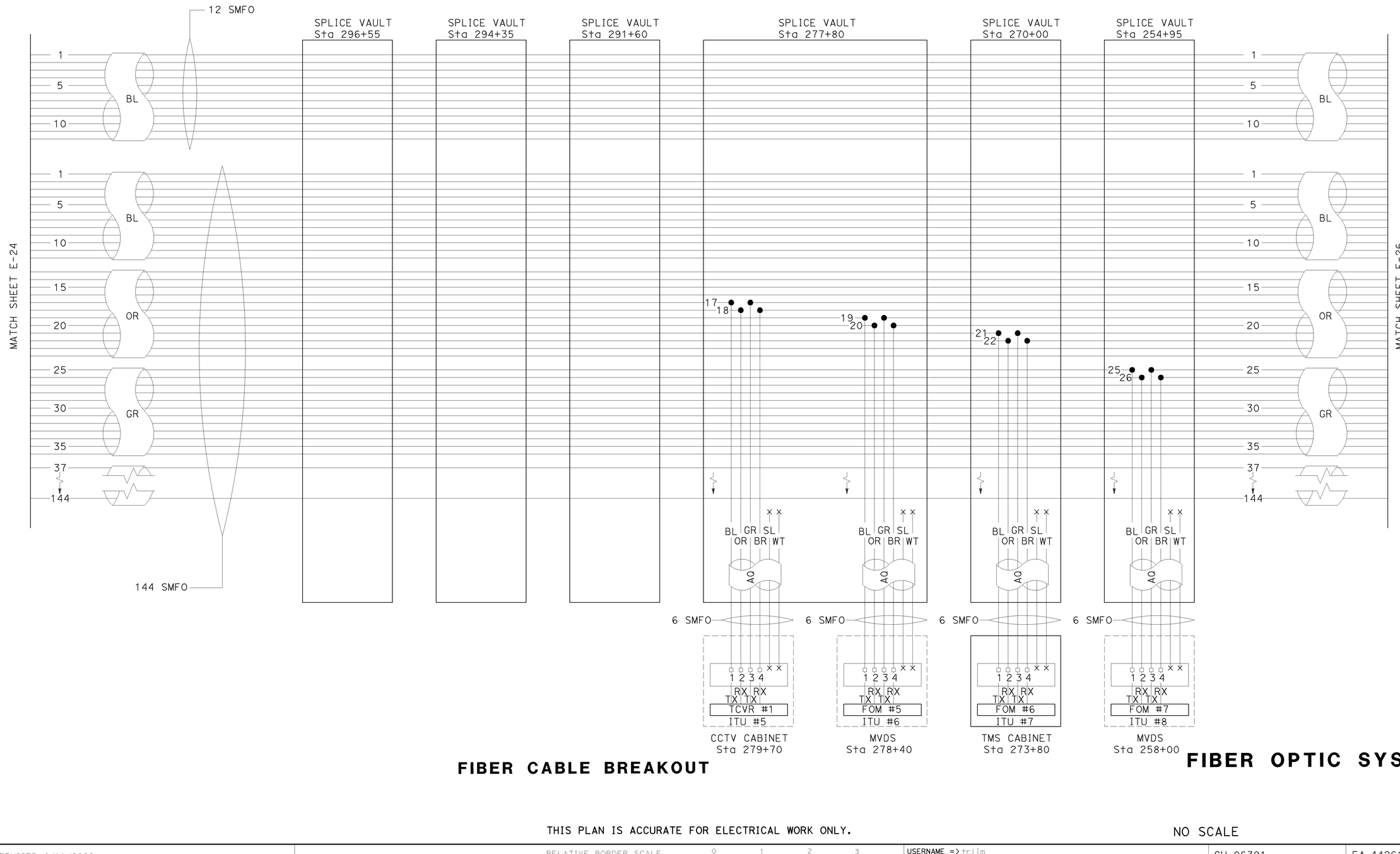

FIBER CABLE BREAKOUT

FIBER OPTIC SYSTEM

E-25

THIS PLAN IS ACCURATE FOR ELECTRICAL WORK ONLY.

NO SCALE

STATE OF CALIFORNIA - DEPARTMENT OF TRANSPORTATION
ELECTRICAL DESIGN
FUNCTIONAL SUPERVISOR: ALI BAKHDOUD
CALCULATED-DESIGNED BY: NORMA M. GALLEGOS
CHECKED BY: MONA ATTALLAH
REVISED BY | DATE REVISED

LAST REVISION | DATE PLOTTED => 28-SEP-2009
07-01-09 | TIME PLOTTED => 15:01

BORDER LAST REVISED 4/11/2008

RELATIVE BORDER SCALE IS IN INCHES 0 1 2 3

USERNAME => trlim
DGN FILE => 644261ua025.dgn

CU 06391

EA 442611

Dist	COUNTY	ROUTE	POST MILES TOTAL PROJECT	SHEET No.	TOTAL SHEETS
06	Fre	99	26.7/30.6	169	242

Mona Attallah 6-29-09
REGISTERED ELECTRICAL ~~ENGINEER~~ DATE

9-28-09
PLANS APPROVAL DATE

REGISTERED PROFESSIONAL ENGINEER
MONA N. ATTALLAH
No. 18407
Exp 6/30/10
ELECTRICAL
STATE OF CALIFORNIA

THE STATE OF CALIFORNIA OR ITS OFFICERS OR AGENTS SHALL NOT BE RESPONSIBLE FOR THE ACCURACY OR COMPLETENESS OF SCANNED COPIES OF THIS PLAN SHEET.

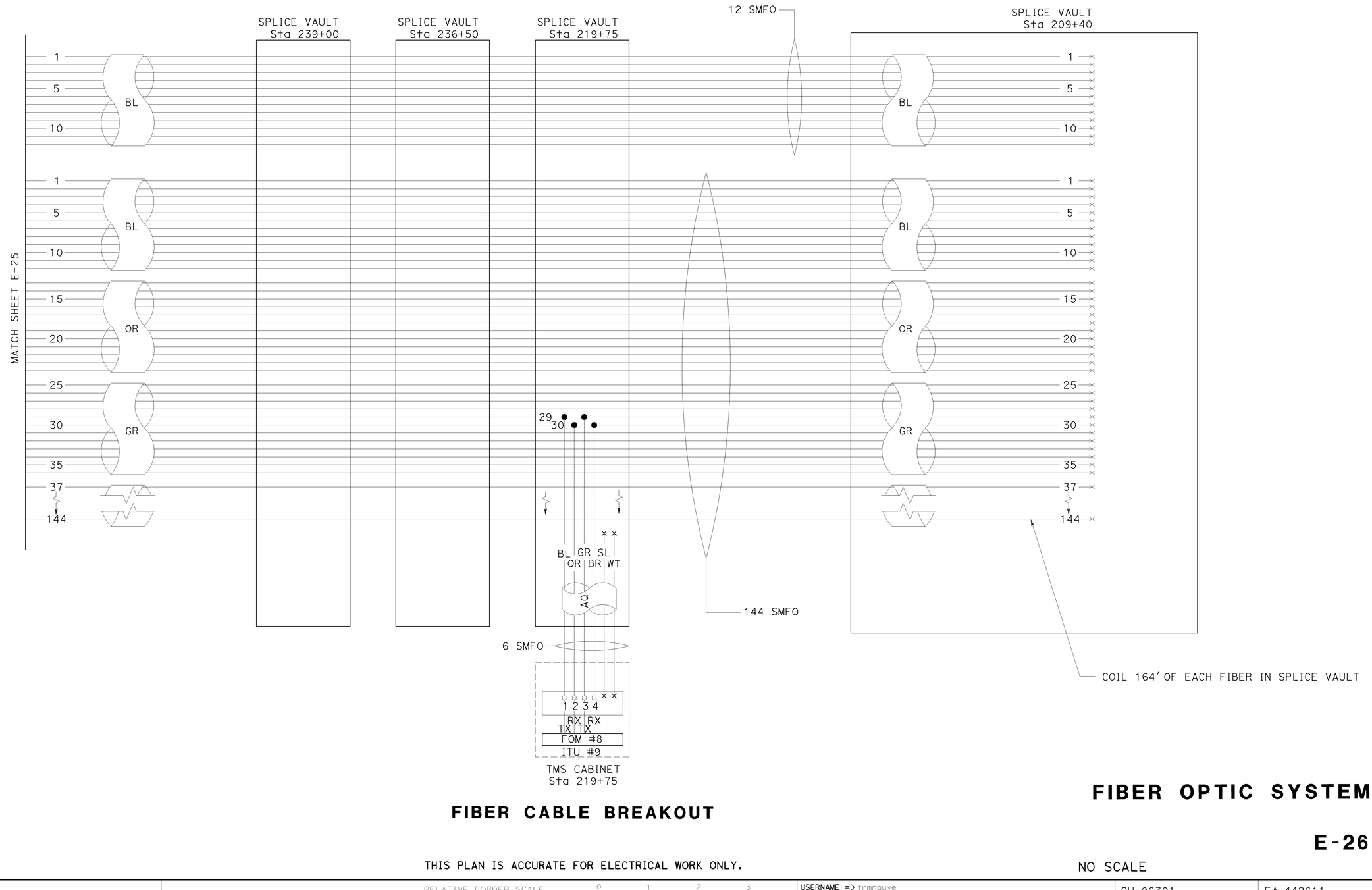

FIBER CABLE BREAKOUT

THIS PLAN IS ACCURATE FOR ELECTRICAL WORK ONLY.

FIBER OPTIC SYSTEM

E-26

NO SCALE

STATE OF CALIFORNIA - DEPARTMENT OF TRANSPORTATION
ELECTRICAL DESIGN
FUNCTIONAL SUPERVISOR: ALI BAKHDOUD
CALCULATED-DESIGNED BY: NORMA M. GALLEGOS
CHECKED BY: MONA ATTALLAH
REVISED BY | DATE REVISED

LAST REVISION | DATE PLOTTED => 28-SEP-2009 | TIME PLOTTED => 15:09
07-01-09

BORDER LAST REVISED 4/11/2008
RELATIVE BORDER SCALE IS IN INCHES 0 1 2 3
USERNAME => trmnguye
DGN FILE => 644261ua026.dgn
CU 06391
EA 442611

NOTE: (FOR THIS SHEET ONLY)

1. ALL SMFO JUMPERS TO BE TERMINATED WITH SC COMPRESSION TYPE CONNECTORS.

Dist	COUNTY	ROUTE	POST MILES TOTAL PROJECT	SHEET No.	TOTAL SHEETS
06	Fre	99	26.7/30.6	170	242

REGISTERED ELECTRICAL ENGINEER — 6-29-09 DATE

9-28-09
PLANS APPROVAL DATE

MONA N. ATTALLAH No. 18407 Exp. 6/30/10 ELECTRICAL — REGISTERED PROFESSIONAL ENGINEER — STATE OF CALIFORNIA

THE STATE OF CALIFORNIA OR ITS OFFICERS OR AGENTS SHALL NOT BE RESPONSIBLE FOR THE ACCURACY OR COMPLETENESS OF SCANNED COPIES OF THIS PLAN SHEET.

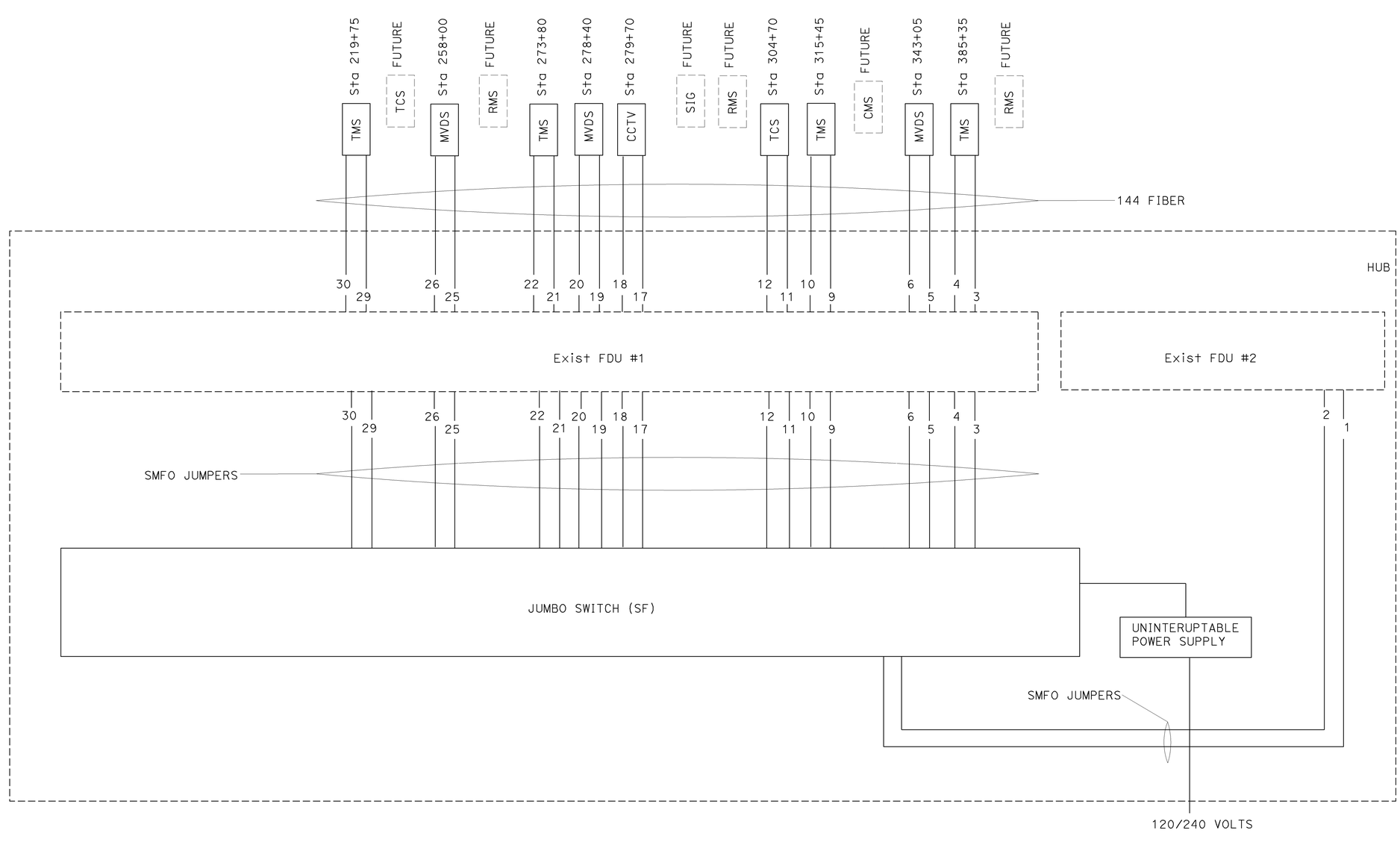

FIBER HUB DETAIL

FIBER OPTIC SYSTEM

E-27

NO SCALE

THIS PLAN IS ACCURATE FOR ELECTRICAL WORK ONLY.

CALCULATED-DESIGNED BY
CHECKED BY
NORMA M. GALLEGOS
MONA ATTALLAH
REVISED BY
DATE REVISED
FUNCTIONAL SUPERVISOR
ALI BAKHDOUD
STATE OF CALIFORNIA - DEPARTMENT OF TRANSPORTATION
ELECTRICAL DESIGN

LAST REVISION DATE PLOTTED => 28-SEP-2009
TIME PLOTTED => 15:10
07-01-09

BORDER LAST REVISED 4/11/2008
RELATIVE BORDER SCALE IS IN INCHES 0 1 2 3
USERNAME => trmnguye
DGN FILE => 644261ua027.dgn
CU 06391
EA 442611

DIST	COUNTY	ROUTE	POST MILES TOTAL PROJECT	SHEET No	TOTAL SHEETS
06	Fre	99	26.7/30.6	171	242

Eliseo Lopez 5/20/09
REGISTERED CIVIL ENGINEER DATE

9-28-09
PLANS APPROVAL DATE

REGISTERED PROFESSIONAL ENGINEER — ELISEO LOPEZ No. C72910 Exp. 12/31/10 CIVIL — STATE OF CALIFORNIA

The State of California or its officers or agents shall not be responsible for the accuracy or completeness of electronic copies of this plan sheet.

CALCULATED/ DESIGNED BY	E. LOPEZ	DATE 5-7-09	DETAILS	A R DUDSAK
CHECKED BY	A. GUTIERREZ	5-7-09	QUANTITIES	E. LOPEZ

PROJECT ENGINEER
ELISEO LOPEZ

STATE OF CALIFORNIA - DEPARTMENT OF TRANSPORTATION
Caltrans
SPECIAL DESIGNS BRANCH

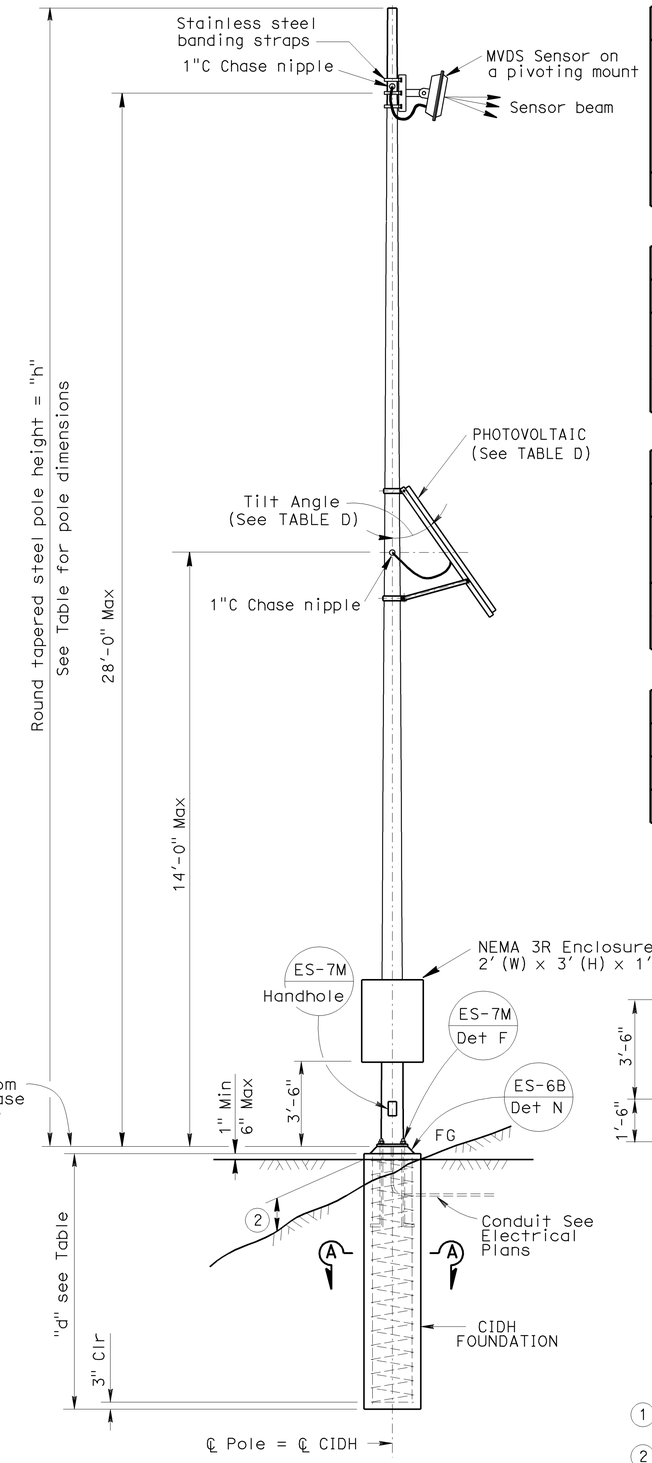

ELEVATION
NO SCALE

NOTE:
THE CONTRACTOR SHALL VERIFY ALL CONTROLLING FIELD DIMENSIONS BEFORE ORDERING OR FABRICATING ANY MATERIAL.

TABLE A

Pole Type	Pole Data: Height "h"	Pole Data: Min OD BASE	Pole Data: Min OD TOP	Pole Data: Thickness	Base Plate Data: "C"	Base Plate Data: Thickness	Base Plate Data: Anchor Bolts SIZE	Base Plate Data: Anchor Bolts BC = BOLT CIRCLE	"d" 2'-0" Ø CIDH Pile: LEVEL GROUND	"d" 2'-0" Ø CIDH Pile: SLOPING GROUND	Structural Steel LBS plus 3.5% Galvanizing
VDS 30	30'	8"	3⅞"	0.1793"	1'-0"	1"	1" x 3'-0 x 4"	11"	10'-0"	12'-0"	475

TABLE B

Attachment	Mounting Height
Enclosure	3'-6" Max bottom Clr
Photovoltaic	14' Max
MVDS	28' Max

TABLE C

Spread Footing		
Ground	Footing Size Length x Width x Depth	Reinforcement Top & Bottom
Level	6'-0" x 6'-0" x 1'-6"	7 - #4
Sloping	7'-0" x 7'-0" x 1'-6"	8 - #4

TABLE D

Photovoltaic Panel Limits	
Panel Size	Tilt Angle
15 ft² Max	40° Min

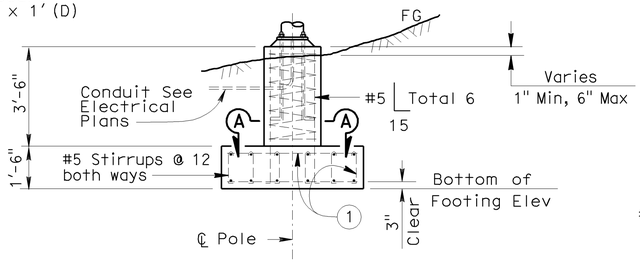

ALTERNATIVE FOOTING ELEVATION
NO SCALE

(1) #4 bars and #5 stirrups (top & bottom) to run both longitudinal and tranverse direction.

(2) 1'-3" Max for sloped finished grade.

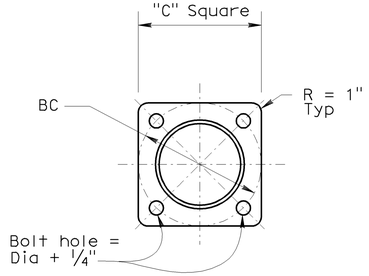

BASE PLATE
SCALE 1½"= 1'

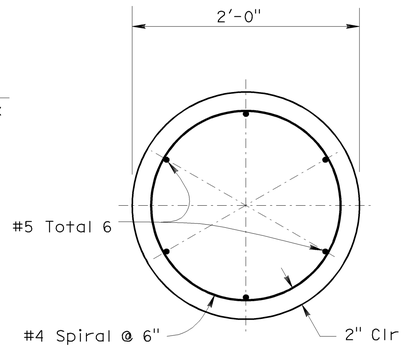

SECTION A-A
SCALE 1½"= 1'

ABBREVIATIONS:
VDS = Vehicle Detection System
MVDS = Microwave Vehicle Detection System

GENERAL NOTES:

SPECIFICATIONS

Design : AASHTO Standard Specifications for Structural Supports for Highway Signs, Luminaires and Traffic Signals dated 2001.

LOADING

Wind Loadings : 100 mph

UNIT STRESSES

Structural Steel : fy = 48,000 psi tapered steel tube
fy = 36,000 psi unless otherwise noted.

Anchor bolts = A307

Reinforced Concrete : f'c = 3,600 psi
fy = 60,000 psi

NOTES:

1. All steel shall be galvanized after fabrication.
2. During pole erection the post shall be raked as necessary with the use of leveling nuts to provide a plumb pole axis.
3. The foundation shall be treated as level ground condition if the slope inclination is flatter than 4H:1V.
4. For devices mounted, mounting heights, and weights of devices mounted see schedule tables on "ELECTRICAL" sheets.
5. For details not shown, see "2006 STANDARD PLANS" and "2006 REVISED STANDARD PLANS".

ELECTRICAL SYSTEMS
MICROWAVE VEHICLE DETECTION SYSTEM
POLE DETAILS
NO SCALE

E-28

LAST REVISION 5-7-09
DATE PLOTTED = 29-SEP-2009
TIME PLOTTED = 10:23

ORIGINAL SCALE IN INCHES FOR REDUCED PLANS 0 1 2 3

USERNAME => trphils
DGN FILE =>spes_des_br_prj/2009sd/06-442611/06-442611_e28.dgn

CU 06 | EA 442611

Dist	COUNTY	ROUTE	POST MILES TOTAL PROJECT	SHEET No.	TOTAL SHEETS
06	Fre	99	26.7/30.6	172	242

Eliseo Lopez 5/20/09
REGISTERED CIVIL ENGINEER DATE

9-28-09
PLANS APPROVAL DATE

REGISTERED PROFESSIONAL ENGINEER — ELISEO LOPEZ No. C72910 Exp.12/31/10 CIVIL — STATE OF CALIFORNIA

THE STATE OF CALIFORNIA OR ITS OFFICERS OR AGENTS SHALL NOT BE RESPONSIBLE FOR THE ACCURACY OR COMPLETENESS OF ELECTRONIC COPIES OF THIS PLAN SHEET.

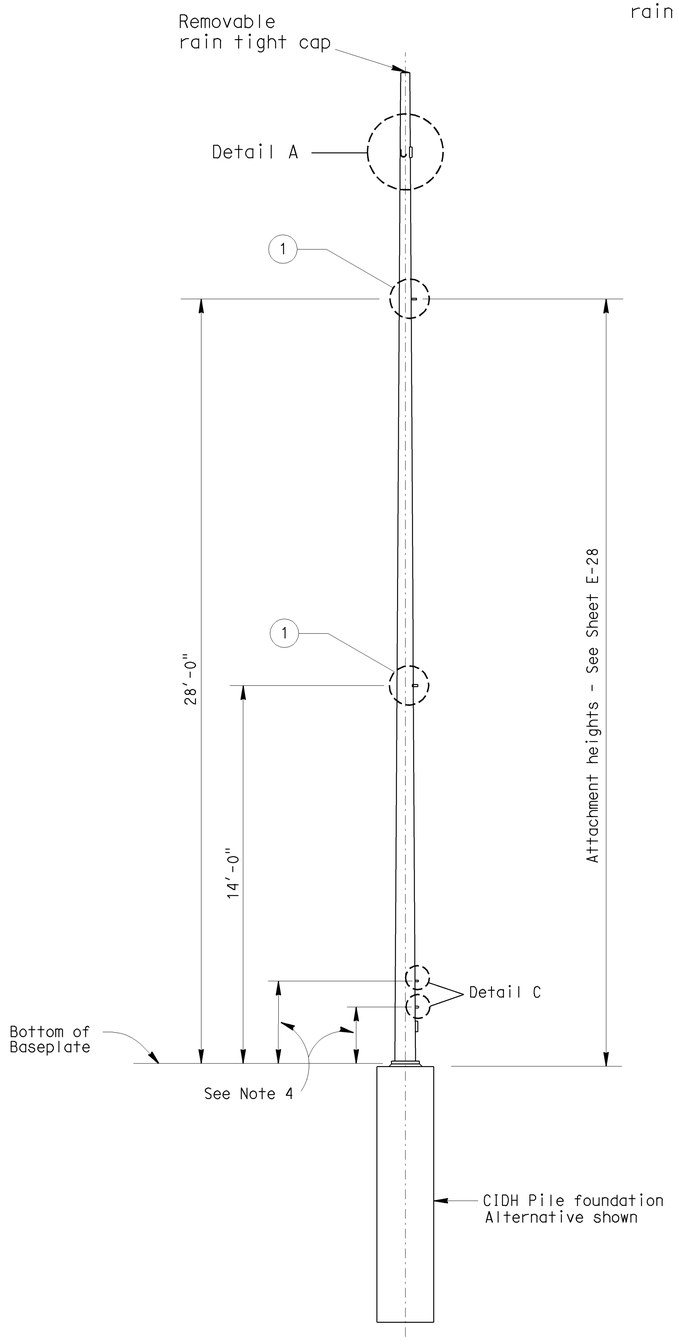

ELEVATION

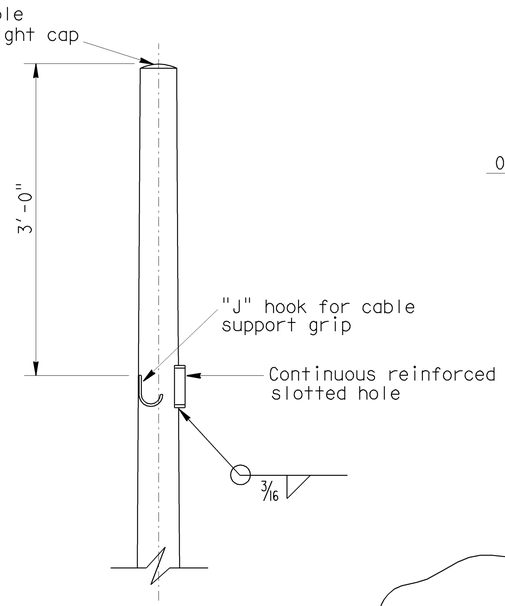

DETAIL A

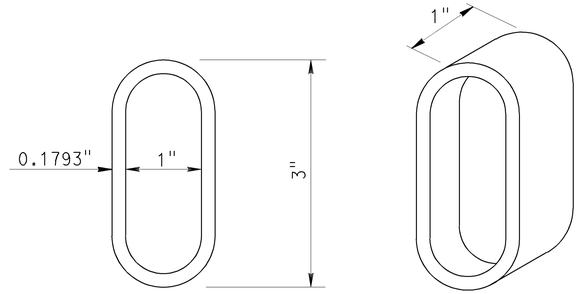

SLOTTED HOLE

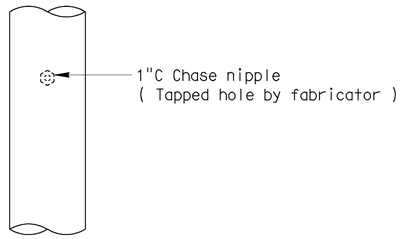

DETAIL B

TYPICAL ELECTRICAL ACCESS DETAIL

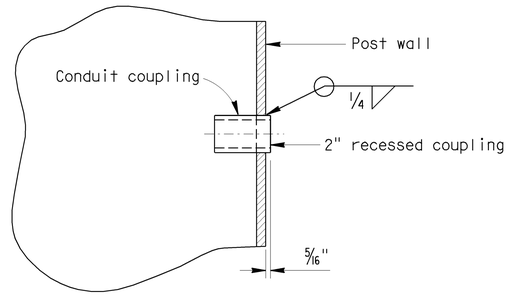

2" RECESSED COUPLING DETAIL C (TYPICAL)

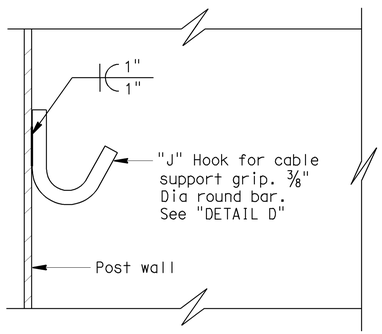

J HOOK DETAIL

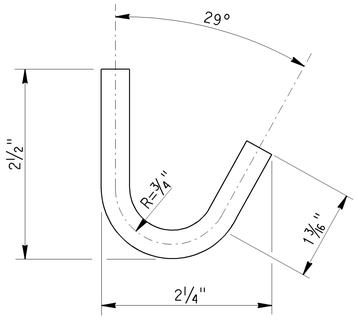

DETAIL D

NOTES:

1. Place all couplings on the same side of pole.
2. Chase nipples and slotted hole shall have a rain tight plug. Plug should only be removed if chase nipple or slotted hole is used.
3. For attachment details, see sheet E-28.
4. Coupling location above ground and spacing shall be verified to match choice of enclosure, prior to fabrication.
5. All attachments, unless otherwise noted, shall be mounted to pole with stainless steel straps or other method without drilling holes in pole. Enclosure may require drilling through post for mounting. Method of mounting enclosure will require Engineer approval.

(1) Drill and tap for 1" Chase nipple and plug with raintight plugs. 1" chase nipple per attachment per pole. (See Detail "B")

NOTE:
THE CONTRACTOR SHALL VERIFY ALL CONTROLLING FIELD DIMENSIONS BEFORE ORDERING OR FABRICATING ANY MATERIAL.

ELECTRICAL SYSTEMS
MICROWAVE VEHICLE DETECTION SYSTEM
POLE DETAILS

NO SCALE

E-29

STATE OF CALIFORNIA - DEPARTMENT OF TRANSPORTATION
Caltrans SIGNS AND OVERHEAD STRUCTURES

PROJECT ENGINEER: ELISEO LOPEZ

		DATE	DETAILS	A R DUDSAK
CALCULATED/ DESIGNED BY	E. LOPEZ	5-7-09	QUANTITIES	E. LOPEZ
CHECKED BY	A. GUTIERREZ	5-7-09		

ORIGINAL SCALE IN INCHES FOR REDUCED PLANS 0 1 2 3

USERNAME => trphils
DGN FILE =>spec_des_br_prj/2009sd/06-442611/06-442611_e29.dgn

CU 06 EA 442611

LAST REVISION 5-7-09 DATE PLOTTED => 29-SEP-2009 TIME PLOTTED => 10:23

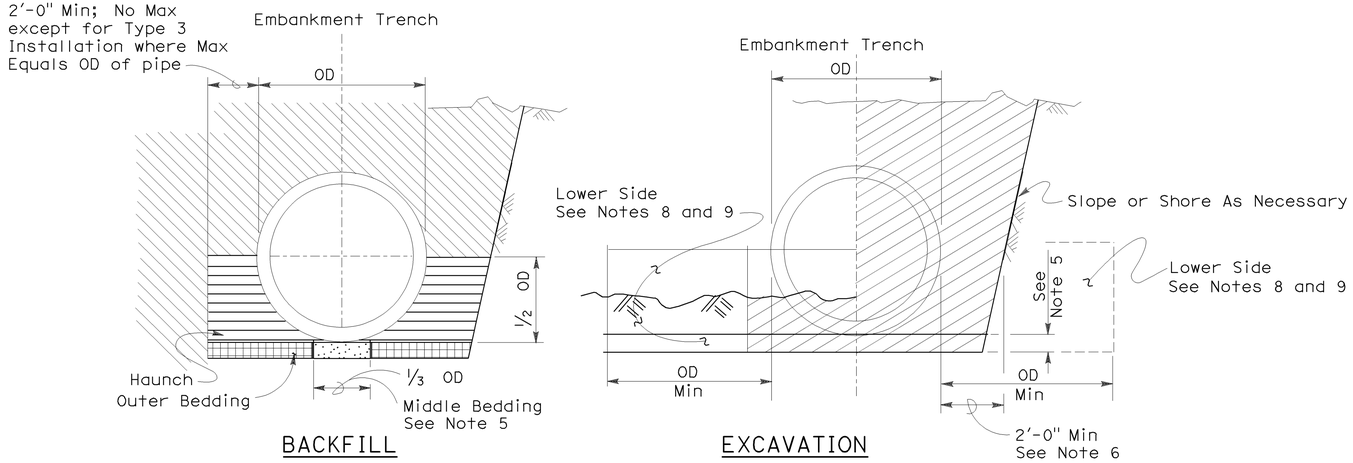

TYPE 1 INSTALLATION:

The haunch and outer bedding shall be compacted to a minimum 90 percent relative compaction. In addition, the minimum sand equivalent in these areas shall be 30 and the maximum percentage passing the 75 μm sieve size shall be 12.

TYPE 2 INSTALLATION:

The haunch and outer bedding shall be compacted to a minimum 90 percent relative compaction. In addition, the minimum sand equivalent in these areas shall be 25.

TYPE 3 INSTALLATION:

The haunch and outer bedding shall be compacted to a minimum 85 percent relative compaction. 90 percent relative compaction will be required where the fill over the pipe is less than 4'-0" or 1/2 OD.

INSTALLATION TYPE 1

MINIMUM CLASS AND D-LOAD	COVER	
	108" Dia AND SMALLER	OVER 108" Dia
Class II 1000D	14.9'	12.9'
Class III 1350D	15.0' - 20.9'	13.0' - 18.9'
Class III Special 1700D	21.0' - 26.9'	19.0' - 24.9'
Class IV 2000D	27.0' - 31.9'	25.0' - 29.9'
Class IV Special 2500D	32.0' - 40.9'	30.0' - 38.9'
Class V 3000D	41.0' - 49.9'	39.0' - 46.9'
Class V Special 3600D	50.0' - 59.0'	47.0' - 58.0'

INSTALLATION TYPE 2

MINIMUM CLASS AND D-LOAD	COVER
Class II 1000D	9.9'
Class III 1350D	10.0'- 14.9'
Class III Special 1700D	15.0' - 19.9'
Class IV 2000D	20.0' - 24.9'
Class IV Special 2500D	25.0' - 31.9'
Class V 3000D	32.0' - 38.9'
Class V Special 3600D	39.0' - 47.0'

INSTALLATION TYPE 3

MINIMUM CLASS AND D-LOAD	COVER	
	48" Dia AND SMALLER	OVER 48" Dia
Class II 1000D	7.9'	5.9'
Class III 1350D	8.0' - 10.9'	6.0' - 8.9'
Class III Special 1700D	11.0' - 14.9'	9.0' - 12.9'
Class IV 2000D	15.0' - 17.9'	13.0' - 15.9'
Class IV Special 2500D	18.0' - 21.9'	16.0' - 19.9'
Class V 3000D	22.0' - 26.9'	20.0' - 24.9'
Class V Special 3600D	30.0' - 33.0'	25.0' - 31.0'

DIST	COUNTY	ROUTE	POST MILES TOTAL PROJECT	SHEET NO.	TOTAL SHEETS
06	Fre	99	26.7/30.6	173	242

REGISTERED CIVIL ENGINEER

REGISTERED PROFESSIONAL ENGINEER
Dallas Forester
No. C37765
Exp. 12-31-06
CIVIL
STATE OF CALIFORNIA

November 17, 2006
PLANS APPROVAL DATE

The State of California or its officers or agents shall not be responsible for the accuracy or completeness of electronic copies of this plan sheet.

To accompany plans dated 9-28-09

NOTES:

1. Unless otherwise shown on the plans or specified in the special provision, the Contractor shall have the option of selecting the class of RCP and the type of installation to be used, provided the height of cover does not exceed the value shown for the RCP selected.
   Example: 24" RCP culvert with maximum cover of 19'-0" the options are:
   a) Class III or stronger with Installation Type 1.
   b) Class III Special or stronger with Installation Type 2.
   c) Class IV Special or stronger with Installation Type 3.
   Cover is defined as the maximum vertical distance from top of the pipe to finished grade within the length of any given culvert.
2. The class of RCP and Installation Type selected shall be the same throughout the length of any given culvert.
3. The "length of any culvert" is defined as the culvert between:
   a) Successive drainage structure (inlets, junction boxes, headwalls, etc.).
   b) A drainage structure and the inlet or outlet end of the culvert.
   c) The inlet and outlet end of the culvert when there are no intervening drainage structures.
4. Oval and arch shaped RCP shall not be used.
5. 1/25 OD Min, not less than 3".
6. Slurry cement backfill may be substituted for backfill in the outer bedding and haunch areas. If slurry is used the outer and middle beddings shall be omitted. Prior to installation the soil under the middle 1/3 of the outside diameter of the pipe shall be softened by scarifying or other means to a minimum depth of 1/25 OD, but not less than 3". Where slurry cement backfill is used clear distance to trench wall may be reduced as set forth in Section 19-3.062 of the Standard Specifications.
7. Backfill shall be placed full width of excavation except where dimensions are shown for backfill width or thickness. Dimensions shown are minimums.
8. Lower side shall be suitable material as determined by the Engineer. Otherwise it shall be considered unsuitable as set forth in Section 19-2.02 of the Standard Specifications. See Note 9.
9. Where the pipe is placed in a trench, if the trench walls are sloped at 5 vertical to 1 horizontal or steeper for at least 90 percent of the trench height or up to not less than 12" from the grading plane, the firmness of the soil in the lower side need not be considered.
10. Non-reinforced precast concrete pipe sizes 3'-0" or smaller may be placed under installation Types 1, 2 or 3.

STATE OF CALIFORNIA
DEPARTMENT OF TRANSPORTATION

EXCAVATION AND BACKFILL CONCRETE PIPE CULVERTS

NO SCALE

RSP A62DA DATED NOVEMBER 17, 2006 SUPERSEDES STANDARD PLAN A62DA DATED MAY 1, 2006 - PAGE 20 OF THE STANDARD PLANS BOOK DATED MAY 2006.

REVISED STANDARD PLAN RSP A62DA

2006 REVISED STANDARD PLAN RSP A62DA

10-26-06

DIST	COUNTY	ROUTE	POST MILES TOTAL PROJECT	SHEET NO.	TOTAL SHEETS
06	Fre	99	26.7/30.6	174	242

Randell D. Hiatt
REGISTERED CIVIL ENGINEER

June 6, 2008
PLANS APPROVAL DATE

REGISTERED PROFESSIONAL ENGINEER — Randell D. Hiatt — No. C50200 — Exp. 6-30-09 — CIVIL — STATE OF CALIFORNIA

The State of California or its officers or agents shall not be responsible for the accuracy or completeness of electronic copies of this plan sheet.

To accompany plans dated 9-28-09

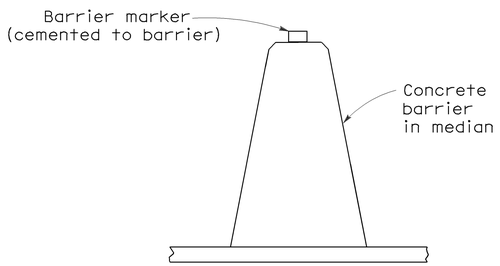

CONCRETE BARRIER TYPE 60 DELINEATION

See Notes 7 and 8

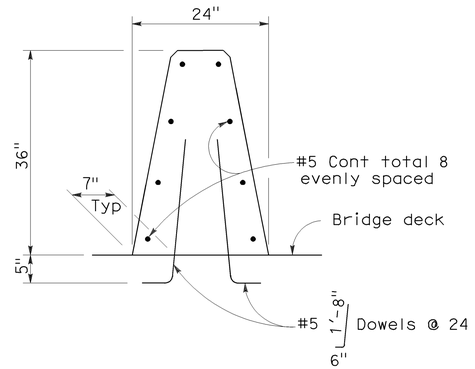

CONCRETE BARRIER TYPE 60A

Details similar to Type 60 except as noted.

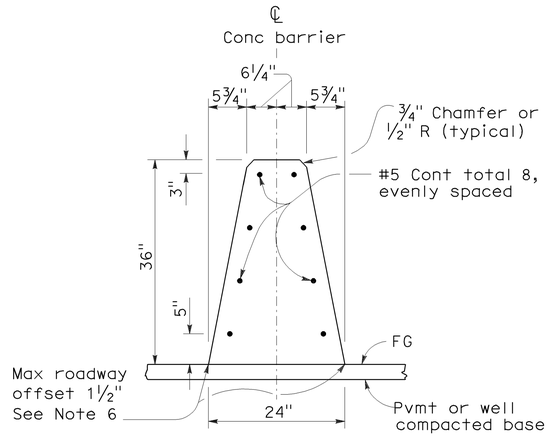

CONCRETE BARRIER TYPE 60

NOTES:

1. See Standard Plan A76B for details of Concrete Barrier Type 60 end anchors, connection to structures and transitions to Concrete Barrier Type 50 and Concrete Barrier Type 60S.
2. See Standard Plan A76C for Concrete Barrier Type 60 transitions at bridge column and sign pedestals.
3. Where glare screen is required on Concrete Barrier Type 60, use Concrete Barrier Type 60G.
4. Where the concrete barrier is added to the face of existing concrete structure, match existing weep holes.
5. Expansion joints in concrete barrier shall be located at all deck, pavement and principal wall joints. Expansion joint filler material shall be the same size as joint or ½" minimum.
6. Where roadway offset is greater than 1½", see Concrete Barrier Type 60C.
7. Barrier delineation to be used when required by the Special Provisions.
8. Spacing of barrier markers to match spacing of raised pavement markers on the adjacent median edgeline pavement delineation.
9. Reinforcing stirrup not required for roadway offsets less than 1'-0".
10. For roadway surfaces offset greater than 1½" to 3", no rebars required. For roadway surfaces offset greater than 3" to 8" use two #4 rebars at 3" above the lower roadway surface. For roadway surfaces offset greater than 8" to 12", use two #4 rebars at 3" above the lower roadway surface and two #4 rebars at 8" above the lower roadway surface. For roadway surfaces offset greater than 12" to 36", use two #4 rebars at 3" above the lower roadway surface and two #4 rebars at every 8" increment vertical spacing above the first two #4 rebars.

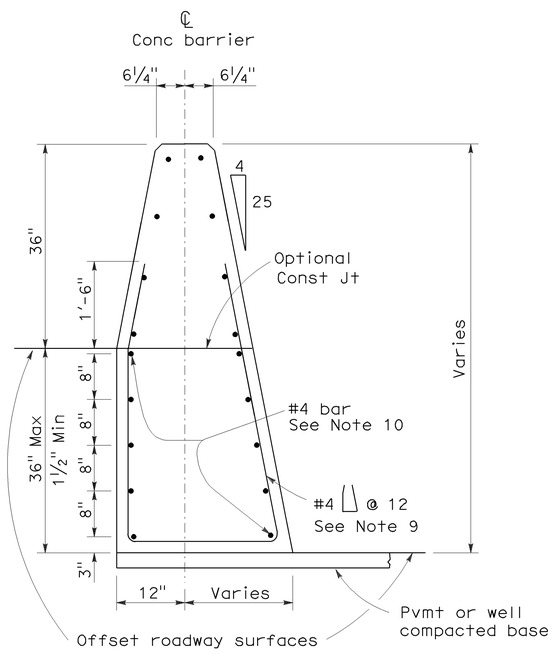

CONCRETE BARRIER TYPE 60C

Details similar to Type 60 except as noted.
Concrete barrier end anchor when necessary.
36" roadway surfaces offset shown.

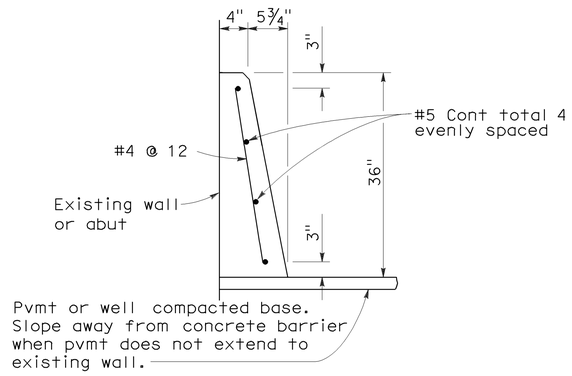

CONCRETE BARRIER TYPE 60D

STATE OF CALIFORNIA
DEPARTMENT OF TRANSPORTATION

CONCRETE BARRIER TYPE 60

NO SCALE

RSP A76A DATED JUNE 6, 2008 SUPERSEDES STANDARD PLAN A76A
DATED MAY 1, 2006 - PAGE 29 OF THE STANDARD PLANS BOOK DATED MAY 2006.

REVISED STANDARD PLAN RSP A76A

2006 REVISED STANDARD PLAN RSP A76A

5-21-08

DIST	COUNTY	ROUTE	POST MILES TOTAL PROJECT	SHEET NO.	TOTAL SHEETS
06	Fre	99	26.7/30.6	175	242

Randell D. Hiatt
REGISTERED CIVIL ENGINEER

June 6, 2008
PLANS APPROVAL DATE

REGISTERED PROFESSIONAL ENGINEER
Randell D. Hiatt
No. C50200
Exp. 6-30-09
CIVIL
STATE OF CALIFORNIA

The State of California or its officers or agents shall not be responsible for the accuracy or completeness of electronic copies of this plan sheet.

To accompany plans dated 9-28-09

NOTES:

1. When necessary to place dike in front of face of guard railing, only Type C dike may be used. For dike details, see Standard Plan A87B.
2. For standard railing post embedment, see Standard Plans A77C3.
3. Guard railing delineation to be used where shown on the Project Plans.
4. When dike or curb is placed under guard railing, the maximum height of the dike or curb shall be 4". Mountable dike should not be used. For dike and curb details, see Revised Standard Plans RSP A87A and Standard Plan A87B.
5. For details of typical distance between the face of rail and hinge point, see Standard Plan A77C3.

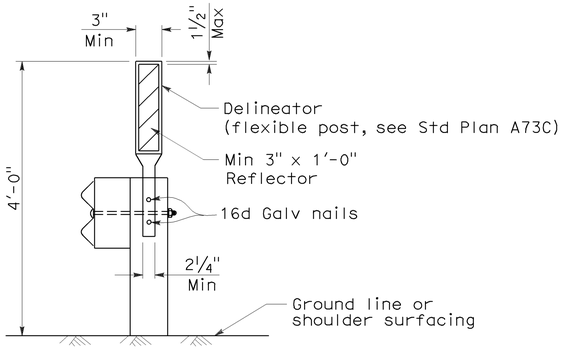

GUARD RAILING DELINEATION
See Note 3

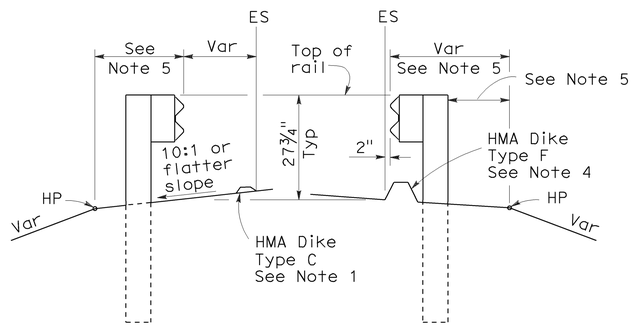

DIKE POSITIONING
See Note 1

STATE OF CALIFORNIA
DEPARTMENT OF TRANSPORTATION

METAL BEAM GUARD RAILING TYPICAL RAILING DELINEATION AND DIKE POSITIONING DETAILS

NO SCALE

RSP A77C4 DATED JUNE 6, 2008 SUPERSEDES STANDARD PLAN A77C4
DATED MAY 1, 2006 - PAGE 47 OF THE STANDARD PLANS BOOK DATED MAY 2006.

REVISED STANDARD PLAN RSP A77C4

2006 REVISED STANDARD PLAN RSP A77C4

12-10-07

DIST	COUNTY	ROUTE	POST MILES TOTAL PROJECT	SHEET NO.	TOTAL SHEETS
06	Fre	99	26.7/30.6	176	242

Randell D. Hiatt
REGISTERED CIVIL ENGINEER

June 6, 2008
PLANS APPROVAL DATE

REGISTERED PROFESSIONAL ENGINEER
Randell D. Hiatt
No. C50200
Exp. 6-30-09
CIVIL
STATE OF CALIFORNIA

The State of California or its officers or agents shall not be responsible for the accuracy or completeness of electronic copies of this plan sheet.

To accompany plans dated 9-28-09

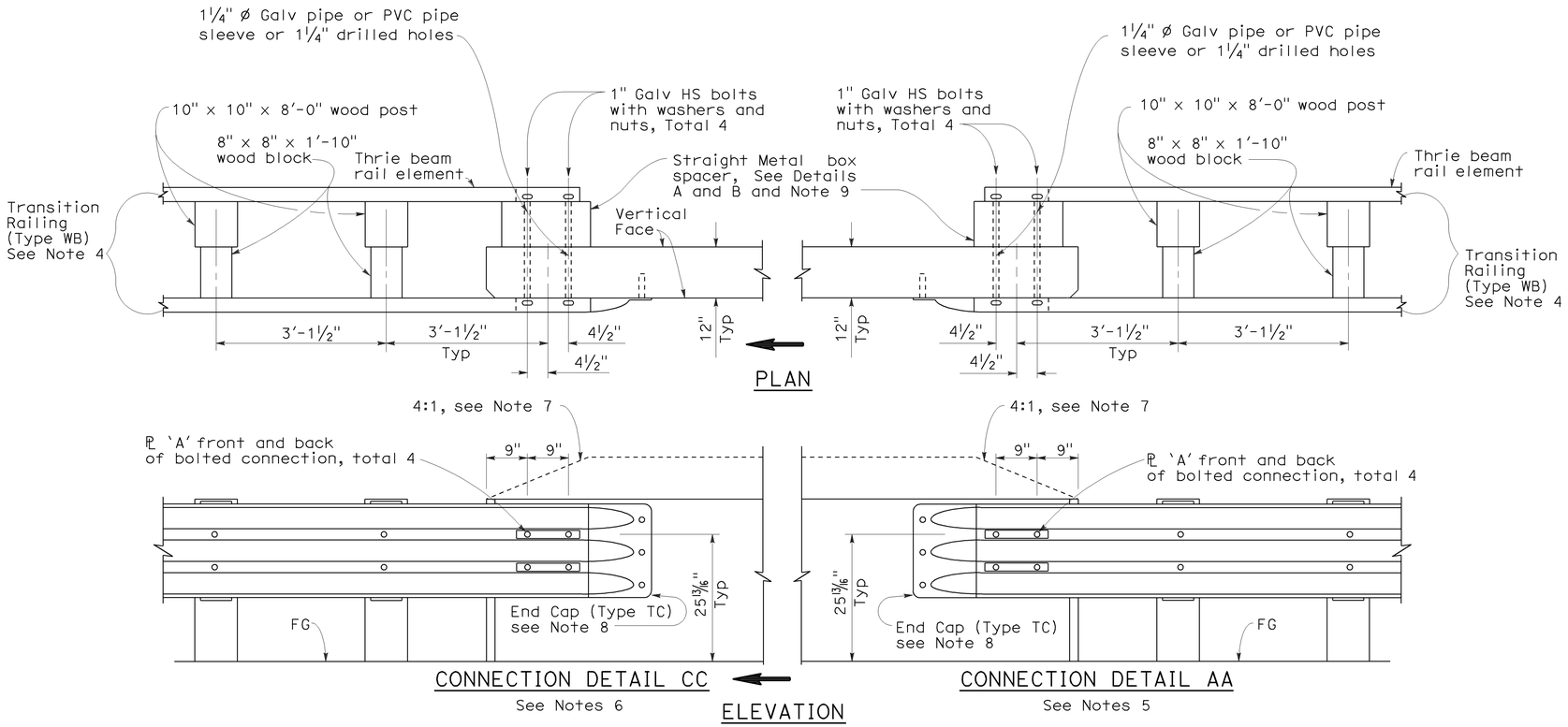

GUARD RAILING CONNECTION TO BRIDGE RAILING WITHOUT SIDEWALK

NOTES:

1. See Revised Standard Plan RSP A77J1 for additional connection details to bridges without sidewalks.
2. Additional details of posts, blocks and hardware are shown on Standard Plan A77B1, A77C1 and A77C2.
3. Direction of adjacent traffic indicated by ⟹.
4. For additional details of Transition Railing (Type WB), see Standard Plan A77J4. Transition Railing (Type WB) transitions the 12 gage w-beam standard railing section of guard railing to a heavier gage nested thrie beam railing section which is connected to the concrete bridge railing.
5. For typical use of Connection Detail AA, see Layout Types 12A and 12B on Revised Standard Plan RSP A77F1, Layout Types 12C and 12D on Standard Plan A77F2, and Layout Type 12E on Revised Standard Plan RSP A77F3.
6. For typical use of Connection Detail CC, see Layout Types 12AA and 12BB on Standard Plan A77F4 and Layout Type 12CC on Standard Plan A77F5.
7. Where the height of the bridge railing exceeds the height of the thrie beam railing by more than 1" at Connection Detail AA and connection Detail CC, taper the top of the end of the bridge railing at 4:1 to match the top elevation of the thrie beam railing.
8. For details of End Cap (Type TC), see Standard Plans A77J4.
9. See Standard Plans A77J4 for additional details regarding depth dimension for straight metal box spacer.

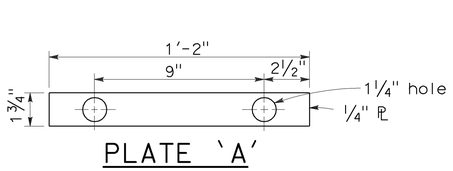

PLATE 'A'

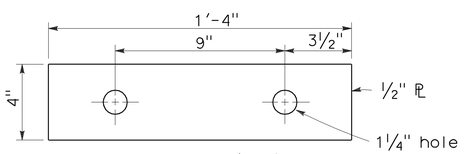

PLATE 'B'
(For backside of connection BB)

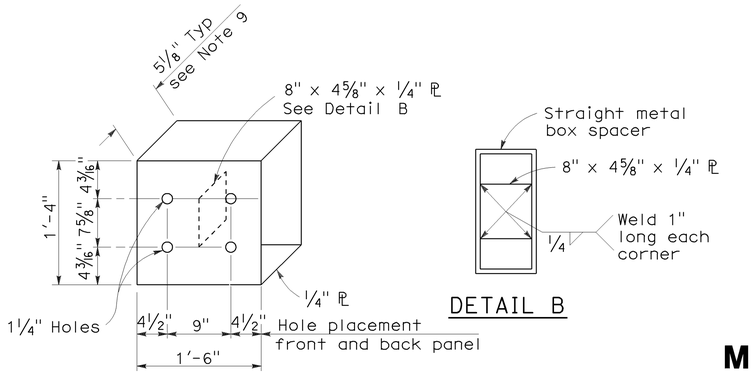

DETAIL A

DETAIL B

STRAIGHT METAL BOX SPACER

STATE OF CALIFORNIA
DEPARTMENT OF TRANSPORTATION

METAL BEAM GUARD RAILING CONNECTIONS TO BRIDGE RAILINGS WITHOUT SIDEWALKS DETAILS No.2

NO SCALE

RSP A77J2 DATED JUNE 6, 2008 SUPERSEDES STANDARD PLAN A77J2
DATED MAY 1, 2006 - PAGE 73 OF THE STANDARD PLANS BOOK DATED MAY 2006.

REVISED STANDARD PLAN RSP A77J2

2006 REVISED STANDARD PLAN RSP A77J2

12-10-07

DIST	COUNTY	ROUTE	POST MILES TOTAL PROJECT	SHEET NO.	TOTAL SHEETS
06	Fre	99	26.7/30.6	177	242

Randell D. Hiatt
REGISTERED CIVIL ENGINEER

June 5, 2009
PLANS APPROVAL DATE

Randell D. Hiatt
No. C50200
Exp. 6-30-09
CIVIL
REGISTERED PROFESSIONAL ENGINEER
STATE OF CALIFORNIA

The State of California or its officers or agents shall not be responsible for the accuracy or completeness of electronic copies of this plan sheet.

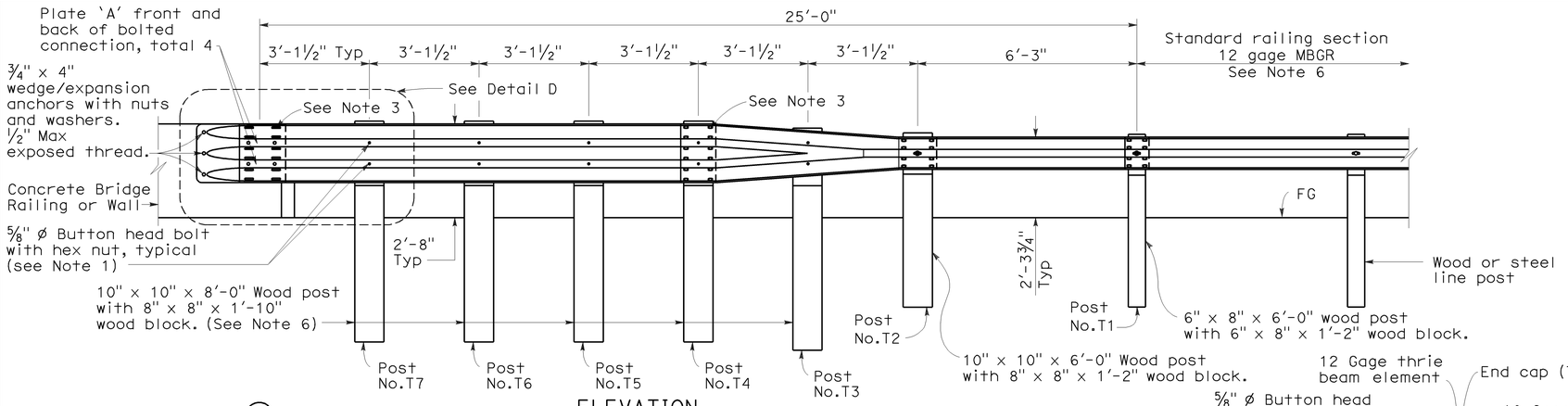

ELEVATION

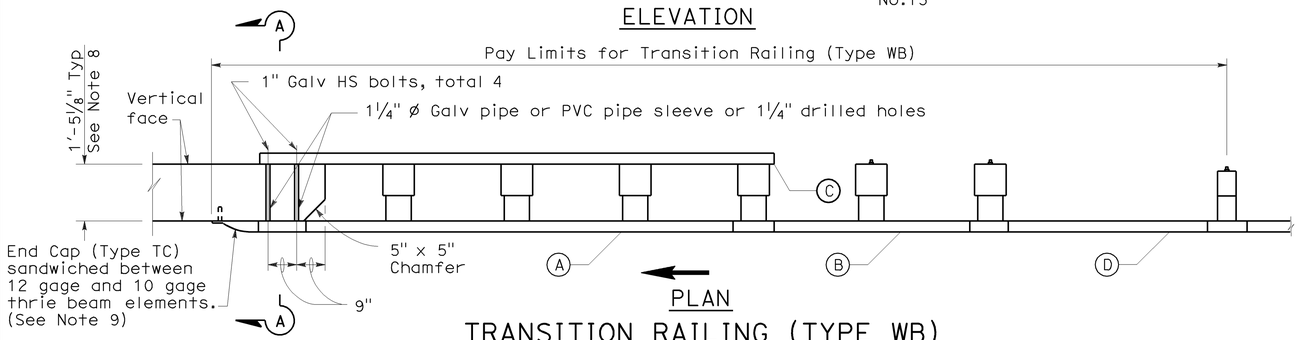

PLAN

TRANSITION RAILING (TYPE WB)

(No Blockout Attachment)

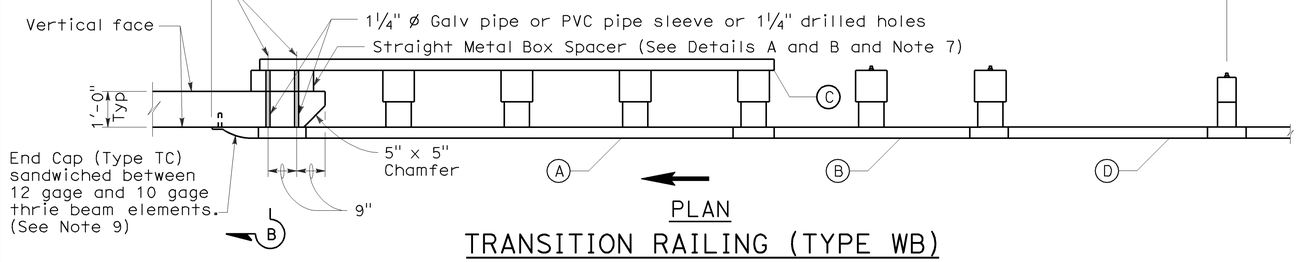

PLAN

TRANSITION RAILING (TYPE WB)

(Blockout Attachment)

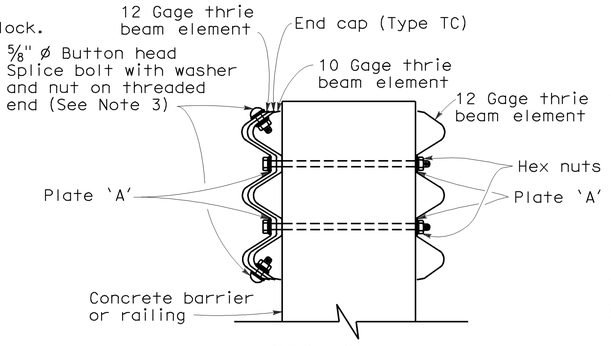

SECTION A-A

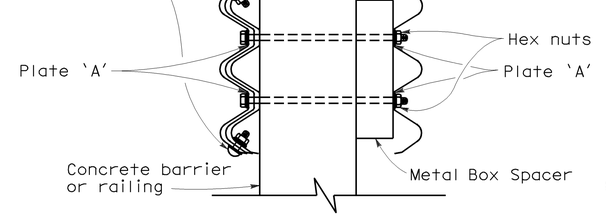

SECTION B-B

LEGEND

- (A) Nested thrie beam elements (one 12 gage element nested over one 10 gage element).
- (B) One 10 gage "W" beam to thrie beam element.
- (C) One 12 gage thrie beam element.
- (D) One 10 gage "W" beam rail element (7'-3½" length)

10 gage = 0.135" thick

12 gage = 0.108" thick

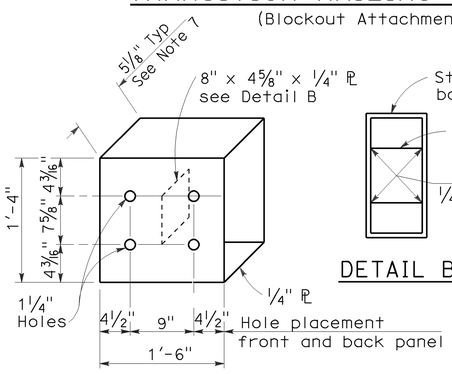

DETAIL A

STRAIGHT METAL BOX SPACER

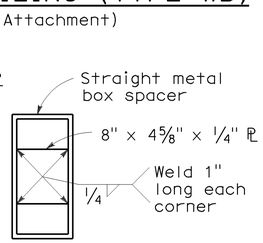

DETAIL B

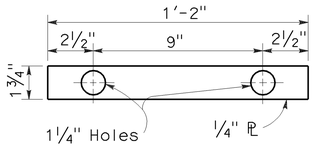

DETAIL C

PLATE 'A'

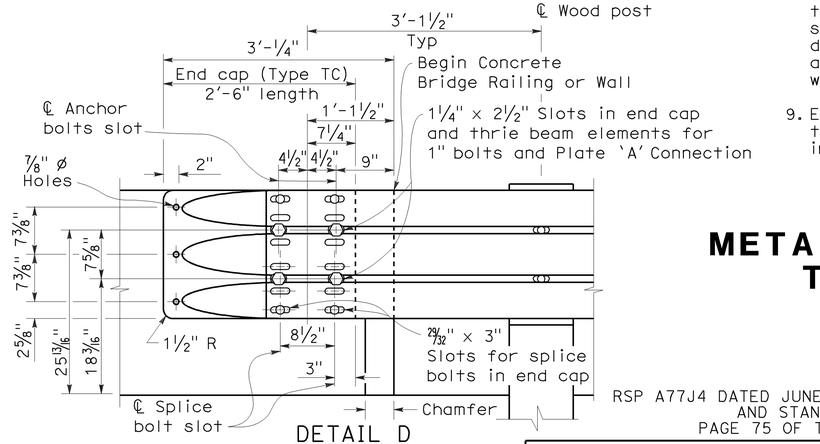

DETAIL D

NOTES:

To accompany plans dated 9-28-09

1. Use 5/8 " ø Button head bolts and hex nuts for connections to posts. No washer on rail face for bolted connections to post.
2. The nested rail elements, end cap, and 'W' beam to thrie beam element may be spliced together prior to bolting the elements to the wood post and concrete barrier or railing.
3. Exterior splice bolt holes for rail element splices at Post No.T4 and the connection to the concrete barrier or railing shall be the standard 29/32 " x 1 1/8 " slot size. Interior splice bolt holes at these locations may be increased up to 1 1/4 " ø. Only the top 2 and the bottom 2 splice bolts with washers and nuts are required for rail splices at Post No.T4 and the connection to the concrete barrier or railing.
4. Direction of adjacent traffic indicated by →.
5. The top elevation of Post Nos.T2 through T7 shall not project more than 1" above the top elevation of the rail element.
6. Typically, the railing connected to Transition Railing (Type WB) will be either standard railing section of metal beam guard railing or an approved Caltrans end treatment attached to Post No.T1.
7. The depth of the metal box spacer varies from the 5 1/8 " to 1 1/2 " and is dependent on the width of the concrete railing or wall. The combined dimension for the depth of the metal box spacer plus the width of railing or wall is typically 17 1/8 ". Where the space between the backside of the concrete railing or wall and the rear thrie beam element is less than 1 1/2 ", metal plates similar to Plate 'A' are to be used as spacers.
8. Where the width of the concrete railing or wall is greater than 17 1/8 ", wood blocks are to be used to fill the space created between the backside of Posts No.4 through No.7 and the rear thrie beam element. These wood blocks shall be 8" in width and 1'-2" in length. The dimension between the front thrie beam element and the rear thrie beam element is to match the width of the concrete railing or wall.
9. End cap may be installed over 12 gage and 10 gage thrie beam elements where transition railing is installed on the departure end of bridge railing.

STATE OF CALIFORNIA
DEPARTMENT OF TRANSPORTATION

METAL BEAM GUARD RAILING TRANSITION RAILING (TYPE WB)

NO SCALE

RSP A77J4 DATED JUNE 5, 2009 SUPERSEDES RSP A77J4 DATED JUNE 6, 2008 AND STANDARD PLAN A77J4 DATED MAY 1, 2006 - PAGE 75 OF THE STANDARD PLANS BOOK DATED MAY 2006.

REVISED STANDARD PLAN RSP A77J4

2006 REVISED STANDARD PLAN RSP A77J4

5-14-09

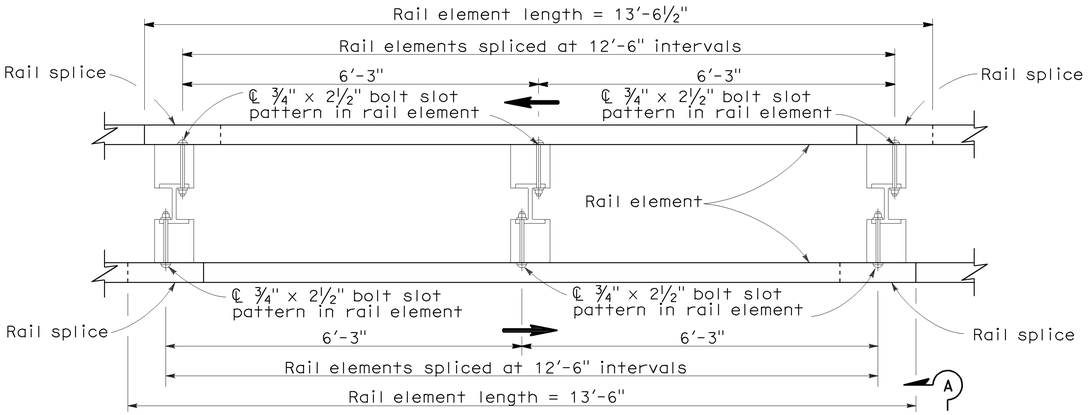

PLAN

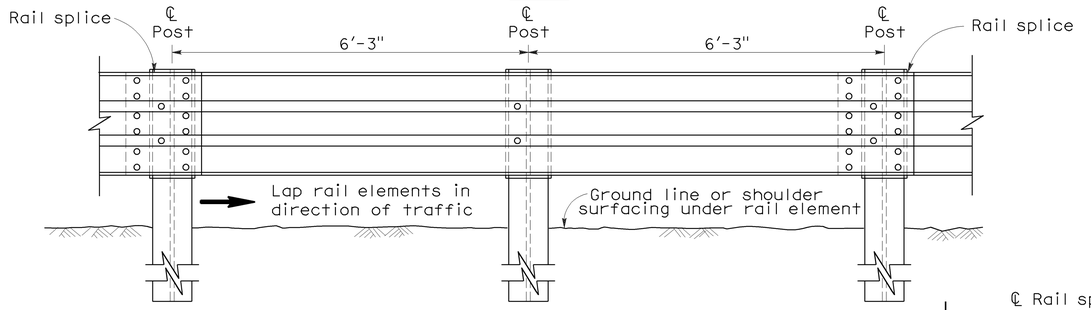

ELEVATION

DOUBLE THRIE BEAM BARRIER

(Steel post with notched wood or notched plastic blocks)
See Note 1

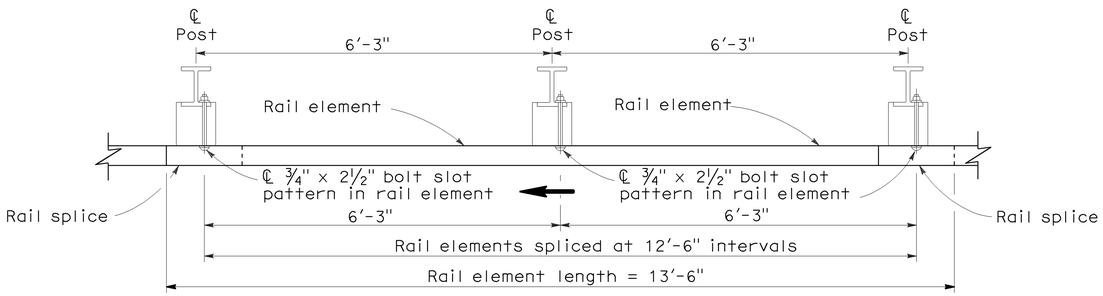

PLAN

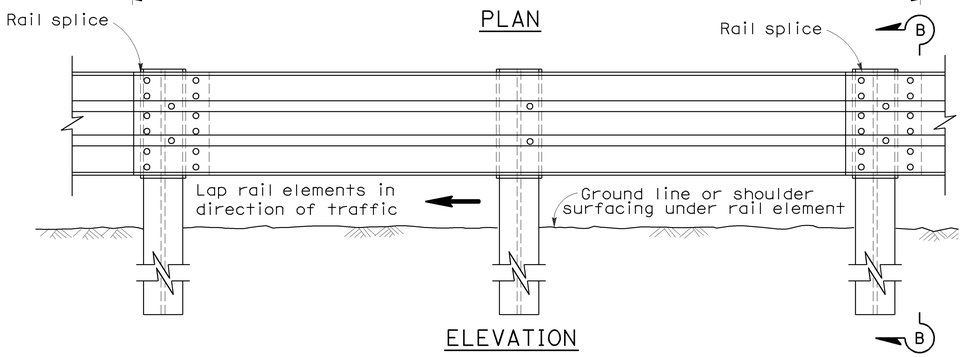

ELEVATION

SINGLE THRIE BEAM BARRIER

(Steel post with notched wood or notched plastic blocks)
See Note 1

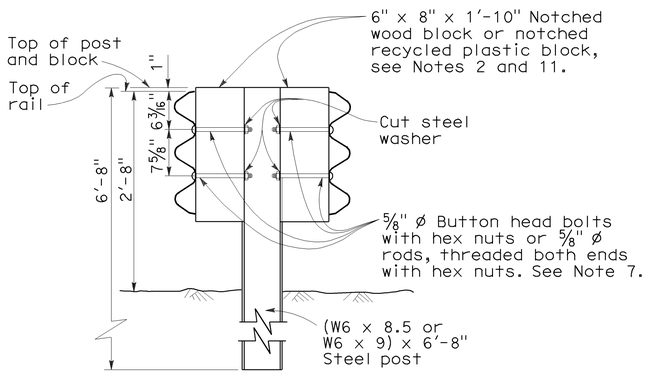

SECTION A-A

TYPICAL STEEL LINE POST INSTALLATION

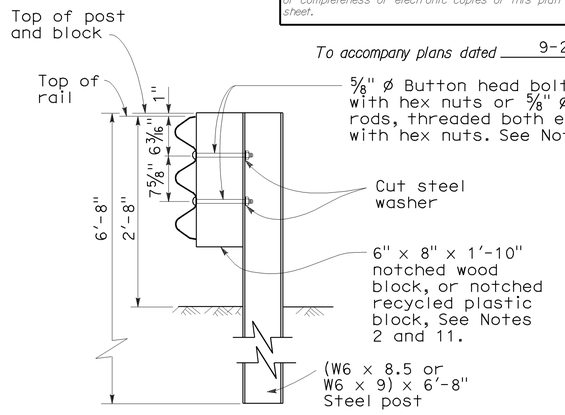

SECTION B-B

TYPICAL STEEL LINE POST INSTALLATION

℄ Rail splice and slots for ⅝" ø button head bolt to connect rail to post and block

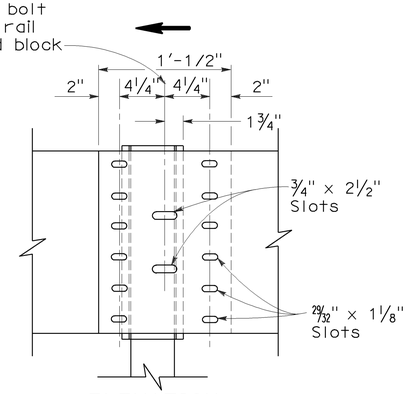

ELEVATION

RAIL ELEMENT SPLICE DETAIL

a) Connect the overlapped ends of the thrie beam rail elements with ⅝" ø x 1⅛" button head oval shoulder bolts inserted into the 29/32" x 1⅛" slots and bolted together with ⅝" ø x 1⅛" recessed hex nuts. Recess of hex nut points toward rail element. A total of 12 bolts and nuts are to be used at each rail splice connection.

b) The ends of the rail elements are to be overlapped in the direction of traffic (see details).

c) Where end cap is to be attached to the end of a rail element, a total of 4 of the above described splice bolts and nuts are to be used. Where a return cap is to be attached to the ends of rail elements, a total of 8 of the above described splice bolts and nuts are to be used.

NOTES:

1. For details of the cross section of the thrie beam rail element and details for wood post with wood block installations, see Standard Plan A78A.
2. For details of standard hardware, posts and blocks used to construct thrie beam barrier, see Revised Standard Plan RSP A78C1 and Standard Plan A78C2.
3. Thrie beam barrier post spacing to be 6′-3" center to center, except as otherwise noted.
4. Top of barrier rail to be 2′-8" above ground line or shoulder surfacing under the rail element.
5. For barrier end treatments and barrier connections, see Standard Plans A78E1, A78E2 and A78E3, Revised Standard Plans RSPs A78F1 and A78F2, Standard Plan A78G and Revised Standard Plan RSP A78H.
6. For connection to Concrete Barrier, see Revised Standard Plan RSP A78I.
7. Attach rail element to block and steel post with 2 bolts or rods on approaching traffic side of block and post web. No washer on rail face for rod or bolted connections to line post.
8. For details of thrie beam barrier on bridges, see Standard Plan A78D2. For details of thrie beam barrier at fixed objects, see Standard Plan A78D1.
9. Direction of traffic indicated by ⟶.
10. Notched face of block faces steel post.

DIST	COUNTY	ROUTE	POST MILES TOTAL PROJECT	SHEET NO.	TOTAL SHEETS
06	Fre	99	26.7/30.6	178	242

Randell D. Hiatt
REGISTERED CIVIL ENGINEER

June 6, 2008
PLANS APPROVAL DATE

REGISTERED PROFESSIONAL ENGINEER — Randell D. Hiatt — No. C50200 — Exp. 6-30-09 — CIVIL — STATE OF CALIFORNIA

The State of California or its officers or agents shall not be responsible for the accuracy or completeness of electronic copies of this plan sheet.

To accompany plans dated 9-28-09

STATE OF CALIFORNIA
DEPARTMENT OF TRANSPORTATION

THRIE BEAM BARRIER STANDARD BARRIER RAILING SECTION (STEEL POST WITH NOTCHED WOOD BLOCK OR NOTCHED RECYCLED PLASTIC BLOCK)

NO SCALE

RSP A78B DATED JUNE 6, 2008 SUPERSEDES STANDARD PLAN A78B
DATED MAY 1, 2006 - PAGE 84 OF THE STANDARD PLANS BOOK DATED MAY 2006.

REVISED STANDARD PLAN RSP A78B

2006 REVISED STANDARD PLAN RSP A78B

5-14-08

DIST	COUNTY	ROUTE	POST MILES TOTAL PROJECT	SHEET No.	TOTAL SHEETS
06	Fre	99	26.7/30.6	179	242

Randell D. Hiatt
REGISTERED CIVIL ENGINEER

June 6, 2008
PLANS APPROVAL DATE

REGISTERED PROFESSIONAL ENGINEER
Randell D. Hiatt
No. C50200
Exp. 6-30-09
CIVIL
STATE OF CALIFORNIA

The State of California or its officers or agents shall not be responsible for the accuracy or completeness of electronic copies of this plan sheet.

To accompany plans dated 9-28-09

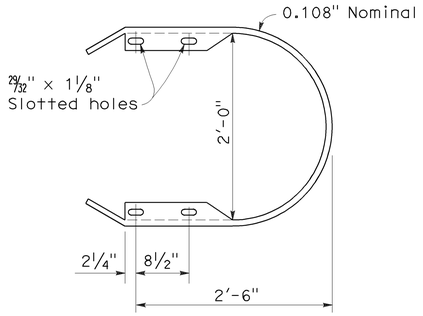

RETURN CAP
(TYPE TA)

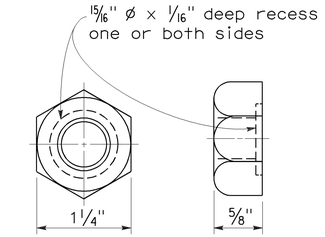

5/8" ø RECESS NUT

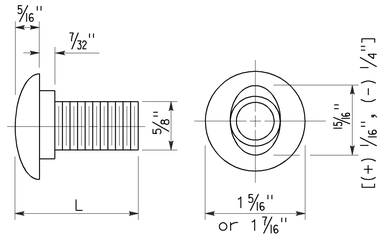

5/8" ø BUTTON HEAD BOLT

L	THREAD LENGTH
1 1/4"	full thread length
2"	full thread length
9 1/2"	4" Min thread length
18"	4" Min thread length

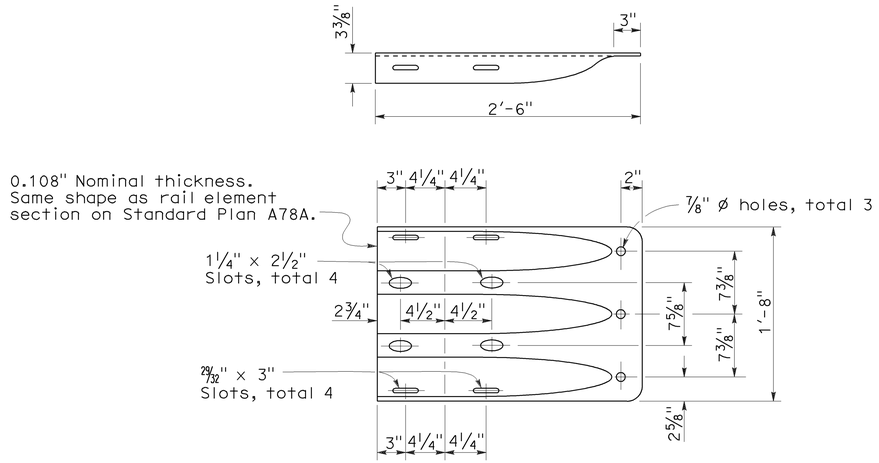

END CAP
(TYPE TC)

STATE OF CALIFORNIA
DEPARTMENT OF TRANSPORTATION

THRIE BEAM BARRIER
STANDARD HARDWARE DETAILS

NO SCALE

RSP A78C1 DATED JUNE 6, 2008 SUPERSEDES STANDARD PLAN A78C1
DATED MAY 1, 2006 - PAGE 85 OF THE STANDARD PLANS BOOK DATED MAY 2006.

REVISED STANDARD PLAN RSP A78C1

2006 REVISED STANDARD PLAN RSP A78C1

4-21-08

DIST	COUNTY	ROUTE	POST MILES TOTAL PROJECT	SHEET NO.	TOTAL SHEETS
06	Fre	99	26.7/30.6	180	242

REGISTERED CIVIL ENGINEER

June 5, 2009
PLANS APPROVAL DATE

REGISTERED PROFESSIONAL ENGINEER — Glenn DeCou — No. C34547 — Exp. 9-30-09 CIVIL — STATE OF CALIFORNIA

The State of California or its officers or agents shall not be responsible for the accuracy or completeness of electronic copies of this plan sheet.

To accompany plans dated 9-28-09

2006 REVISED STANDARD PLAN RSP A85

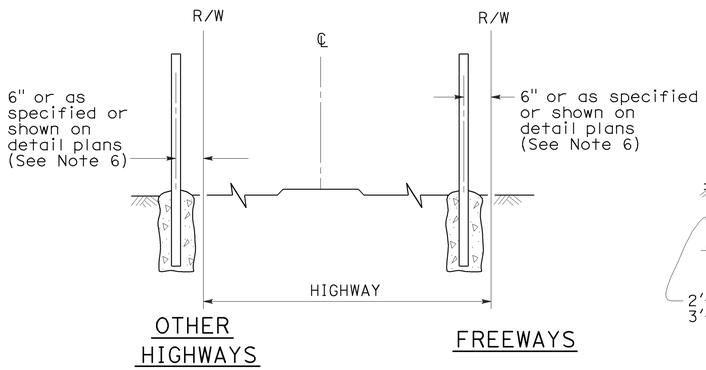

OTHER HIGHWAYS — FREEWAYS

FENCE LOCATION

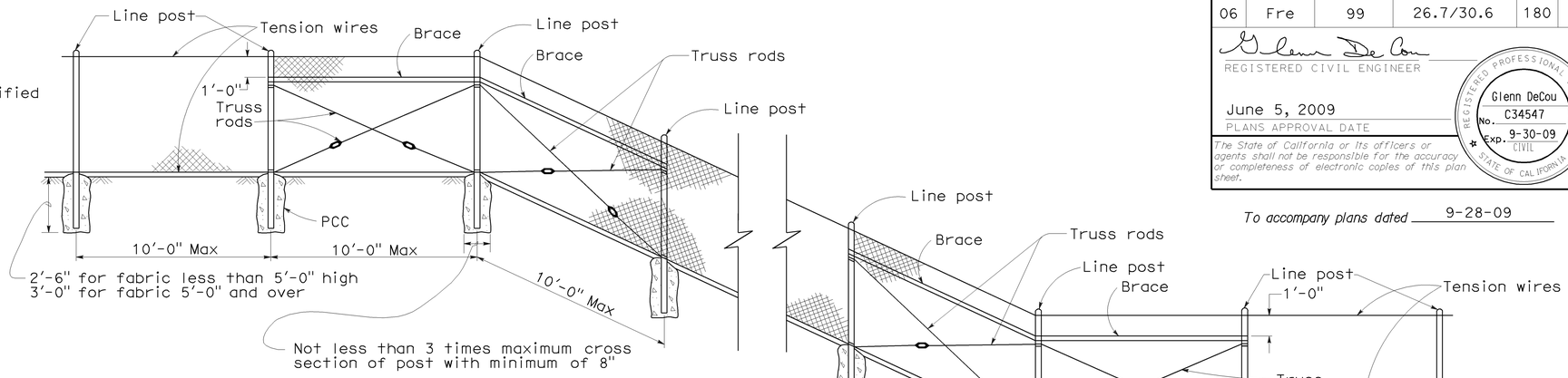

CHAIN LINK FENCE ON SHARP BREAK IN GRADE

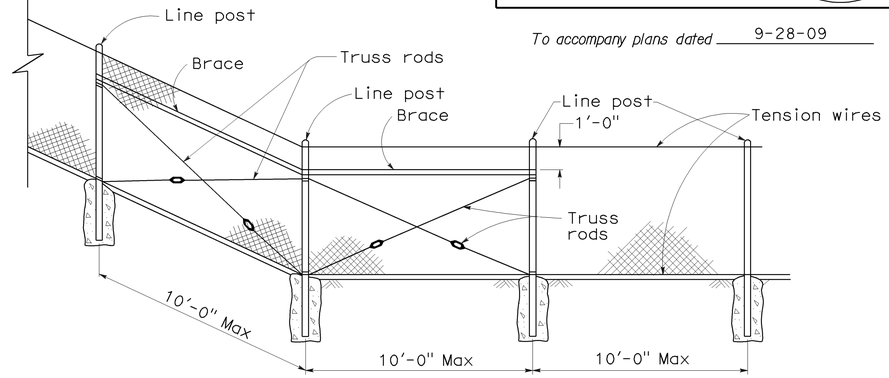

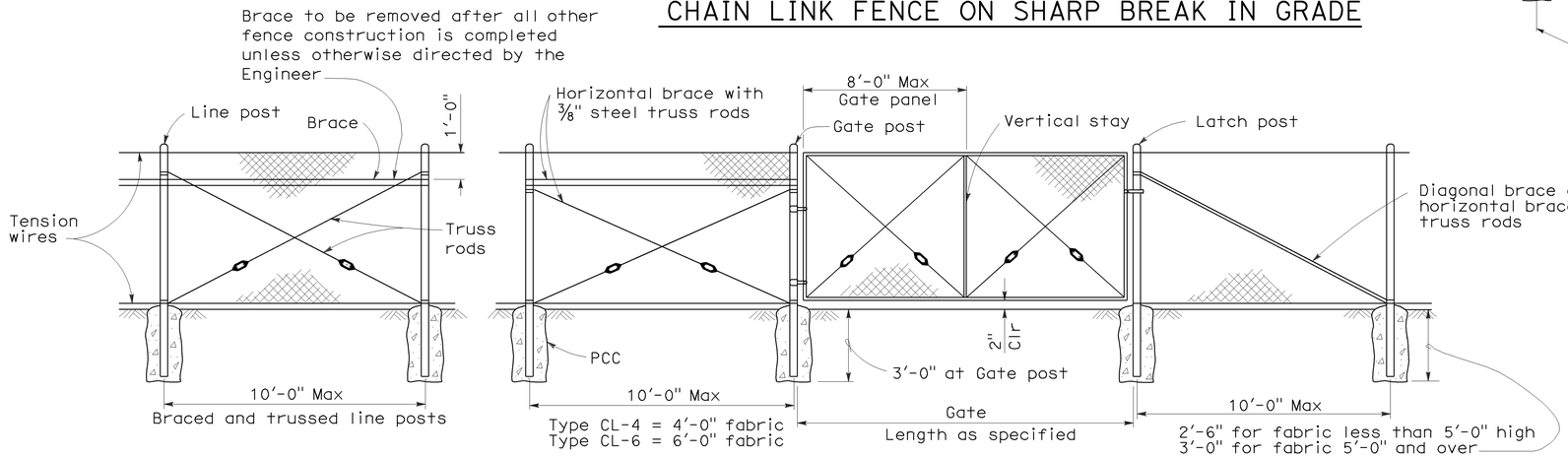

CHAIN LINK GATE INSTALLATION

GATE POST

FENCE HEIGHT	GATE WIDTHS	NOMINAL ID	WEIGHT PER FOOT
6'-0" and Less	Up thru 6'-0"	2½"	4.95 LB
	Over 6'-0" thru 12'-0"	4"	10.79 LB
	Over 12'-0" thru 18'-0"	5"	14.62 LB
	Over 18'-0" to 24'-0" Max	6"	18.97 LB
Over 6'-0"	Up thru 6'-0"	3"	7.58 LB
	Over 6'-0" thru 12'-0"	5"	14.62 LB
	Over 12'-0" thru 18'-0"	6"	18.97 LB
	Over 18'-0" to 24'-0" Max	8"	28.55 LB

Above post dimensions and weights are minimums. Larger sizes may be used on approval of the Engineer.

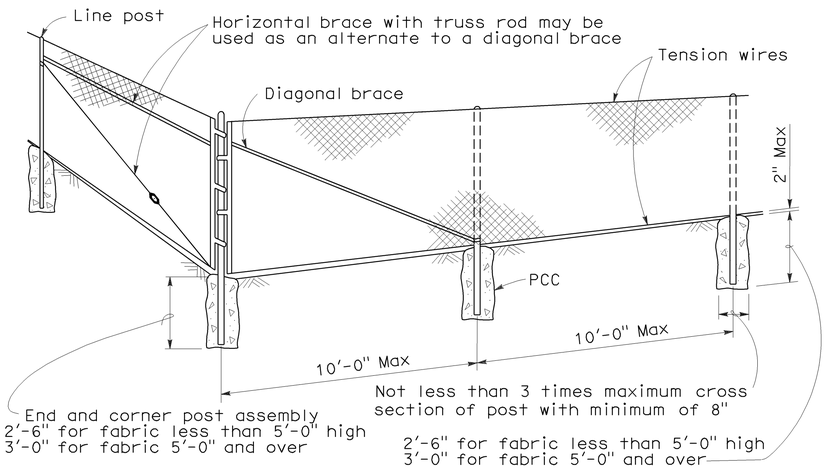

CORNER POST

NOTES:

1. The below table shows examples of post and brace sections which may comply with the Specifications.
2. Sections shown in the tables must also comply with the strength requirements and other provisions of the Specifications.
3. Other sections which comply with the strength requirements and other provisions of the Specifications may be used on approval of the Engineer.
4. Options exercised shall be uniform on any one project.
5. Dimensions shown are nominal.
6. Offset to be 2'-0" at monument locations, measured at right angles to R/W lines. Taper to achieve offset to be at least 20'-0" long.

TYPICAL MEMBER DIMENSIONS (See Notes)

FENCE HEIGHT	LINE POSTS			END, LATCH & CORNER POSTS				BRACES				
	ROUND ID	H	ROLL FORMED	ROUND ID	ROLL FORMED			ROUND ID	H	ROLL FORMED		
6' & less	1½"	1⅞" × 1⅝"	1⅞" × 1⅝"	2"	3½" × 3½"	2" × 1¾"		1¼"	1½" × 1⅝"	1⅝" × 1¼"	1¾" × 1¼"	
Over 6'	2"	2¼" × 2"	2" × 1¾"	2½"	3½" × 3½"	2½" × 2½"		1¼"	1½" × 1⅝"	1⅝" × 1¼"	1¾" × 1¼"	

STATE OF CALIFORNIA
DEPARTMENT OF TRANSPORTATION

CHAIN LINK FENCE

NO SCALE

RSP A85 DATED JUNE 5, 2009 SUPERSEDES STANDARD PLAN A85
DATED MAY 1, 2006 - PAGE 111 OF THE STANDARD PLANS BOOK DATED MAY 2006.

REVISED STANDARD PLAN RSP A85

5-7-09

DIST	COUNTY	ROUTE	POST MILES TOTAL PROJECT	SHEET NO.	TOTAL SHEETS
06	Fre	99	26.7/30.6	181	242

REGISTERED CIVIL ENGINEER

June 5, 2009
PLANS APPROVAL DATE

REGISTERED PROFESSIONAL ENGINEER
Glenn DeCou
No. C34547
Exp. 9-30-09
CIVIL
STATE OF CALIFORNIA

The State of California or its officers or agents shall not be responsible for the accuracy or completeness of electronic copies of this plan sheet.

To accompany plans dated 9-28-09

NOTES:

1. H is 2'-6" for fabric less than 5'-0" high. H is 3'-0" for fabric 5'-0" and over.
2. T is not less than 3 times maximum cross section of post with minimum of 8".
3. Arms with barbed wire to be used where shown on plans.
4. See Revised Standard Plan RSP A85 for Chain Link Fencing dimensions.
5. Reinforcing must comply with ASTM A 706.
6. See Detail A on New Standard Plan NSP A86B for connection at headwall.

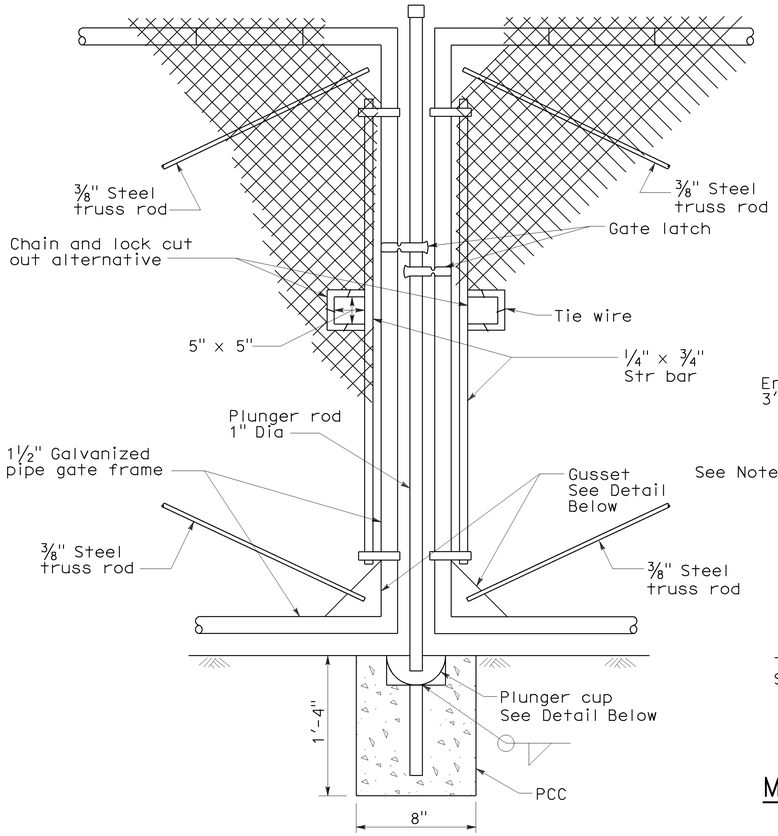

TYPICAL DOUBLE GATE
REMOVABLE CENTER POST

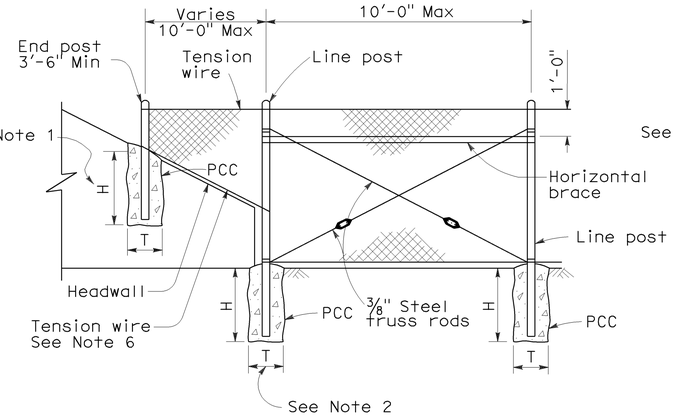

METHOD OF TYING FENCE TO HEADWALL

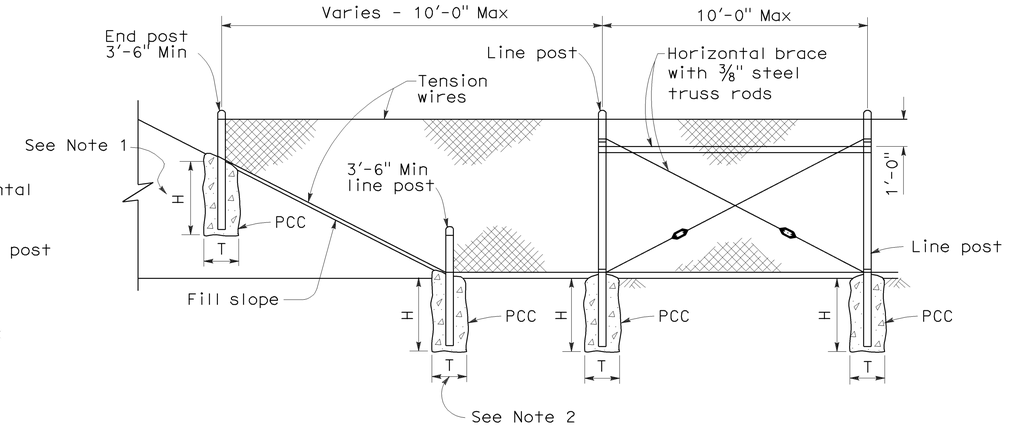

METHOD OF ERECTING FENCE FOR FILL SLOPE

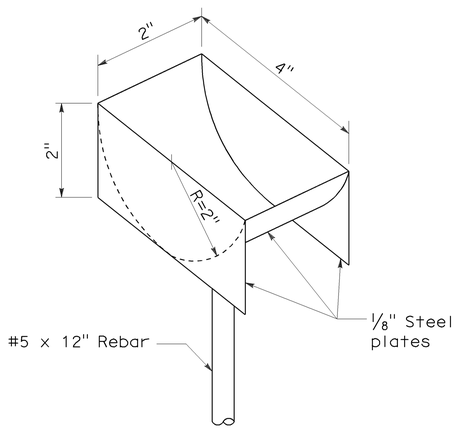

PLUNGER CUP DETAIL

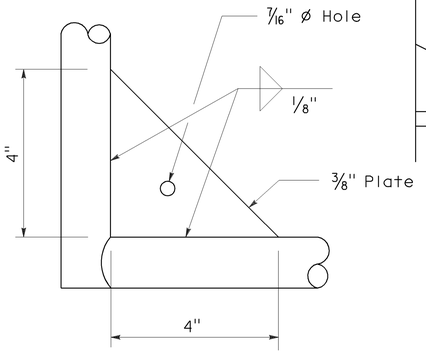

GUSSET DETAIL

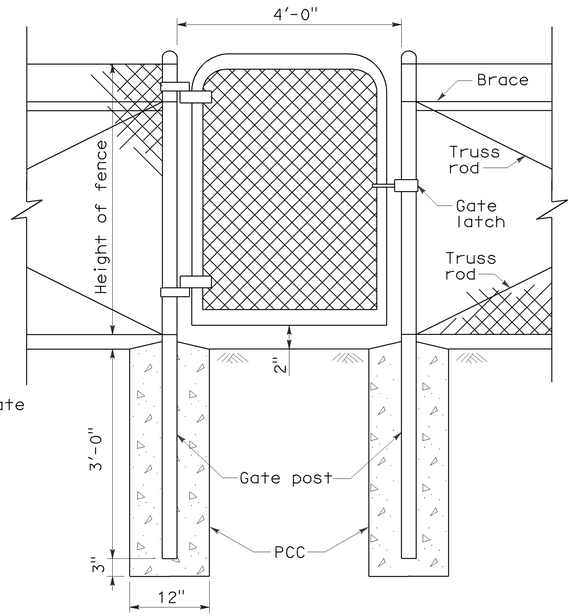

WALK GATE

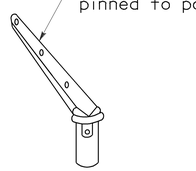

POST TOP END

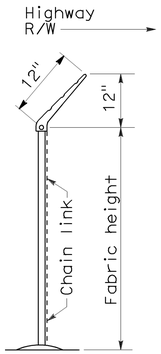

END ELEVATION

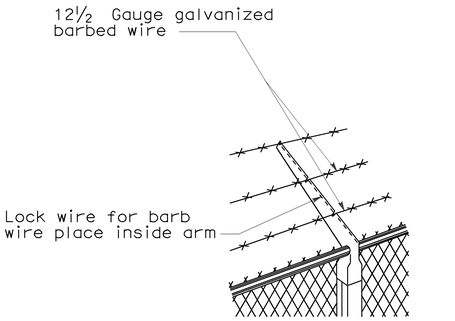

LINE POST TOP
Vertical arms when desired

BARBED WIRE POST TOP
See Note 3

STATE OF CALIFORNIA
DEPARTMENT OF TRANSPORTATION

CHAIN LINK FENCE DETAILS

NO SCALE

NSP A85A DATED JUNE 5, 2009 SUPPLEMENTS THE STANDARD PLANS BOOK DATED MAY 2006.

NEW STANDARD PLAN NSP A85A

2006 NEW STANDARD PLAN NSP A85A

5-7-09

DIST	COUNTY	ROUTE	POST MILES TOTAL PROJECT	SHEET NO.	TOTAL SHEETS
06	Fre	99	26.7/30.6	182	242

Glenn DeCou
REGISTERED CIVIL ENGINEER

June 5, 2009
PLANS APPROVAL DATE

REGISTERED PROFESSIONAL ENGINEER
Glenn DeCou
No. C34547
Exp. 9-30-09
CIVIL
STATE OF CALIFORNIA

The State of California or its officers or agents shall not be responsible for the accuracy or completeness of electronic copies of this plan sheet.

To accompany plans dated 9-28-09

2006 NEW STANDARD PLAN NSP A85B

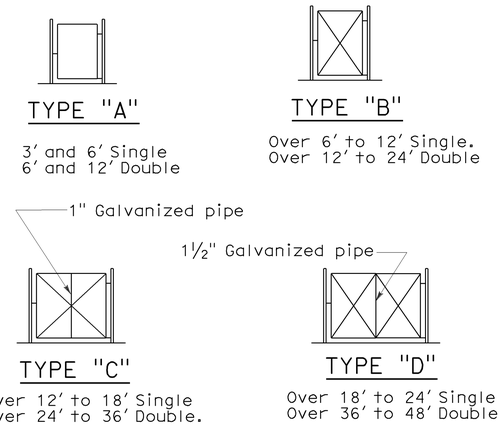

TYPICAL FRAMEWORK SHOWING NUMBER OF BAYS IN GATE

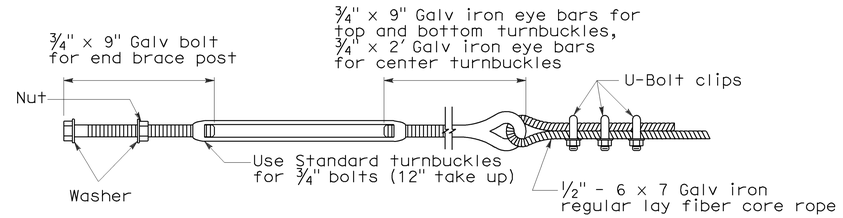

TURNBUCKLE A

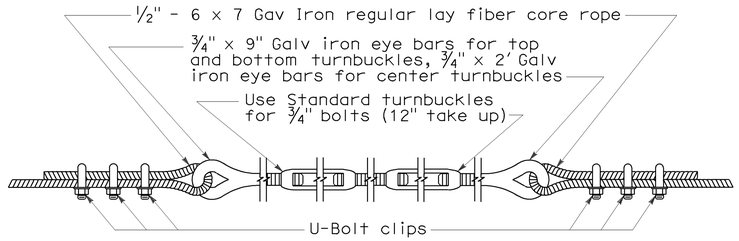

TURNBUCKLE B

NOTES:

1. All material for abutment connection to be galvanized.
2. The chain link fabric shall be replaced by barbed wire strands at 12" maximum centers between the double posts.
3. When the width of the culvert makes it necessary to anchor a post to the top of the culvert, a cast iron shoe or other device approved by the Engineer shall be used.
4. Fencing over stream and around headwall may also use Barbed Wire or Wire Mesh fencing with either wood post or steel post installation.
5. See Revised Standard Plan RSP A85 for Chain Link fence dimensions. See Standard Plan A86 for Barbed Wire and Wire Mesh fence dimensions and for wood post and steel post installation.

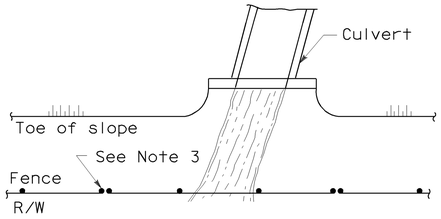

PLAN

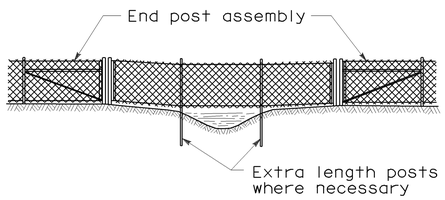

ELEVATION

INSTALLATION OVER STREAM

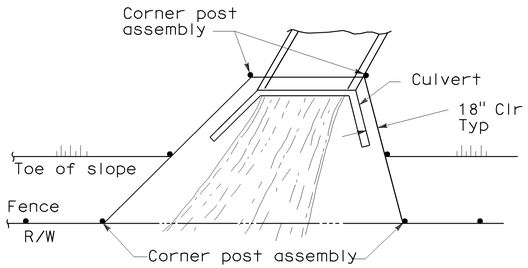

PLAN

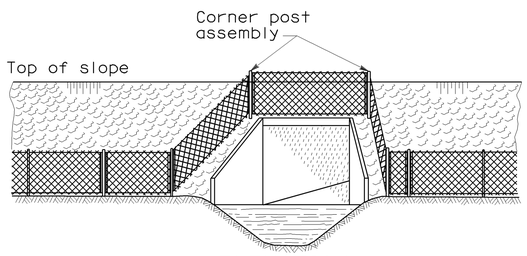

ELEVATION

INSTALLATION AROUND HEADWALL

See Note 4

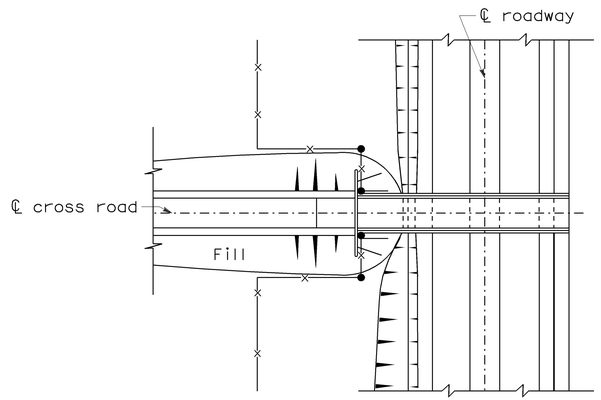

PLAN OF ROADWAY - UNDERPASS

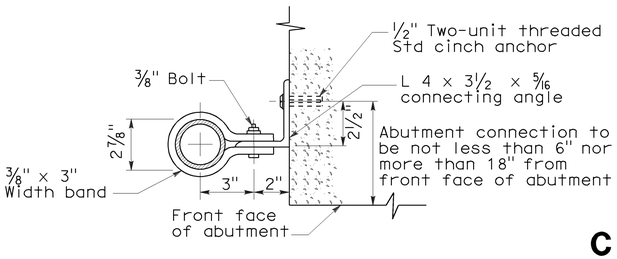

ABUTMENT CONNECTION

TYPICAL INSTALLATION AT BRIDGES

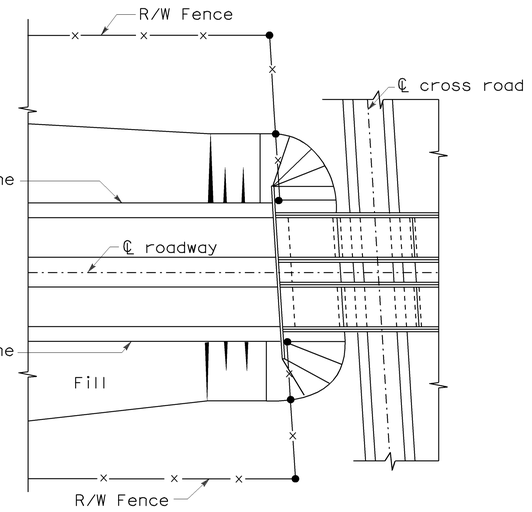

PLAN OF ROADWAY - OVERPASS

STATE OF CALIFORNIA
DEPARTMENT OF TRANSPORTATION

CHAIN LINK FENCE DETAILS

NO SCALE

NSP A85B DATED JUNE 5, 2009 SUPPLEMENTS THE STANDARD PLANS BOOK DATED MAY 2006.

NEW STANDARD PLAN NSP A85B

5-12-09

DIST	COUNTY	ROUTE	POST MILES TOTAL PROJECT	SHEET NO.	TOTAL SHEETS
06	Fre	99	26.7/30.6	183	242

William K. Farnbach
REGISTERED CIVIL ENGINEER

May 15, 2009
PLANS APPROVAL DATE

REGISTERED PROFESSIONAL ENGINEER — William K. Farnbach — No. C49042 — Exp. 9-30-10 CIVIL — STATE OF CALIFORNIA

The State of California or its officers or agents shall not be responsible for the accuracy or completeness of electronic copies of this plan sheet.

To accompany plans dated 9-28-09

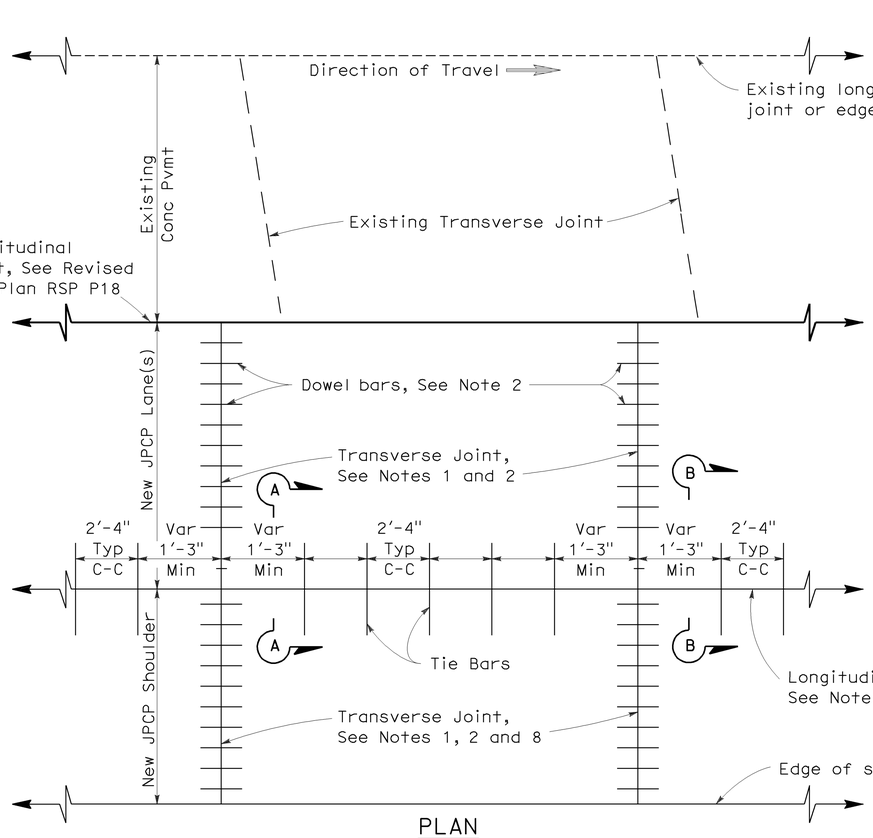

PLAN

LANE/SHOULDER ADDITION OR RECONSTRUCTION

See Notes 6 and 7

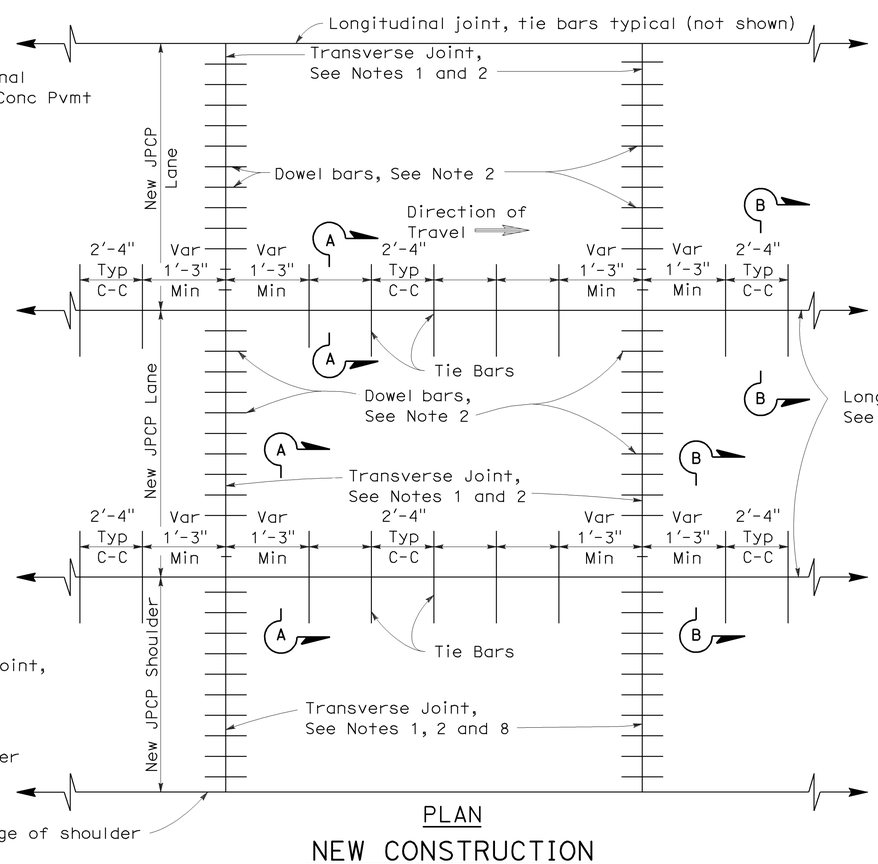

PLAN

NEW CONSTRUCTION

See Notes 6 and 7

NOTES:

1. Transverse joints shall be constructed at right angles to the longitudinal pavement joints in new jointed plain concrete pavement and spaced at successive repeated intervals of 12', 15', 13' and 14'.
2. For transverse joint and dowel bar details not shown, See Revised Standard Plan RSP P10.
3. Construct longitudinal contraction joints as shown in Section A-A when more than one lane or shoulder widths are placed at one time. If constructing one lane at a time, use longitudinal construction joint, as shown in Section B-B.
4. For additional longitudinal joint details, see Revised Standard Plan RSP P18.
5. If fresh concrete is placed adjacent to existing concrete, the top corner of the new hardened concrete does not need to be rounded to the 1/4" radius as shown.
6. Joint spacing patterns do not apply to intersections.
7. Details can also apply to inside widening.
8. Dowel bars may be omitted from shoulders when the shoulder cross slope is not the same as the adjacent traffic lane.

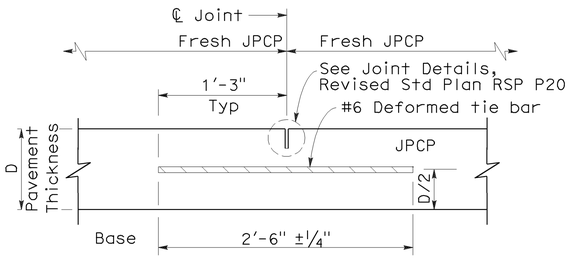

SECTION A-A

LONGITUDINAL CONTRACTION JOINT

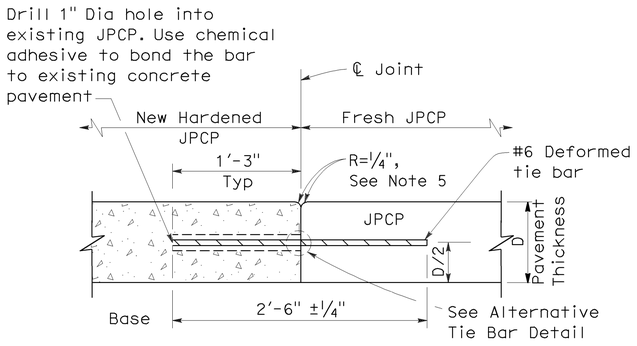

SECTION B-B

LONGITUDINAL CONSTRUCTION JOINT

TIE BAR DETAILS

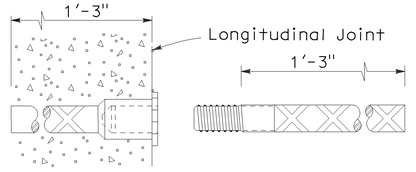

ALTERNATIVE TIE BAR SPLICE DETAIL

(Splice Coupler)

STATE OF CALIFORNIA
DEPARTMENT OF TRANSPORTATION

JOINTED PLAIN CONCRETE PAVEMENT

NO SCALE

RSP P1 DATED MAY 15, 2009 SUPERSEDES STANDARD PLAN P1
DATED MAY 1, 2006 - PAGE 119 OF THE STANDARD PLANS BOOK DATED MAY 2006.

REVISED STANDARD PLAN RSP P1

2006 REVISED STANDARD PLAN RSP P1

5-8-09

DIST	COUNTY	ROUTE	POST MILES TOTAL PROJECT	SHEET NO.	TOTAL SHEETS
06	Fre	99	26.7/30.6	184	242

William K. Farnbach
REGISTERED CIVIL ENGINEER

June 5, 2009
PLANS APPROVAL DATE

REGISTERED PROFESSIONAL ENGINEER
William K. Farnbach
No. C49042
Exp. 9-30-10
CIVIL
STATE OF CALIFORNIA

The State of California or its officers or agents shall not be responsible for the accuracy or completeness of electronic copies of this plan sheet.

To accompany plans dated 9-28-09

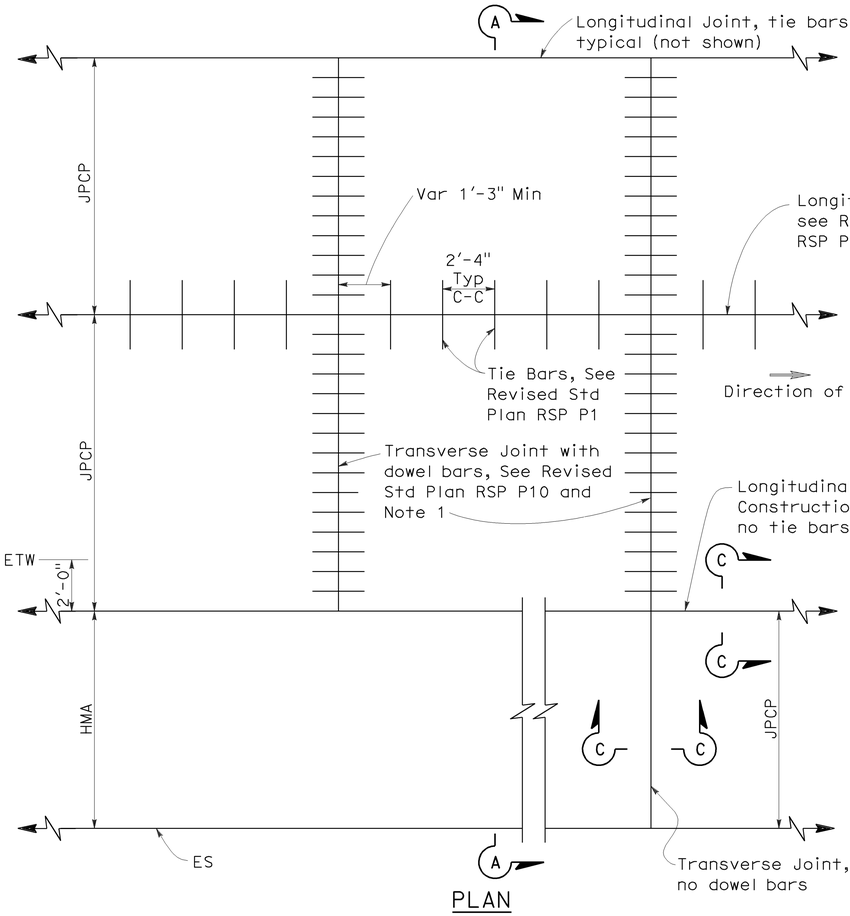

PLAN

NEW CONSTRUCTION

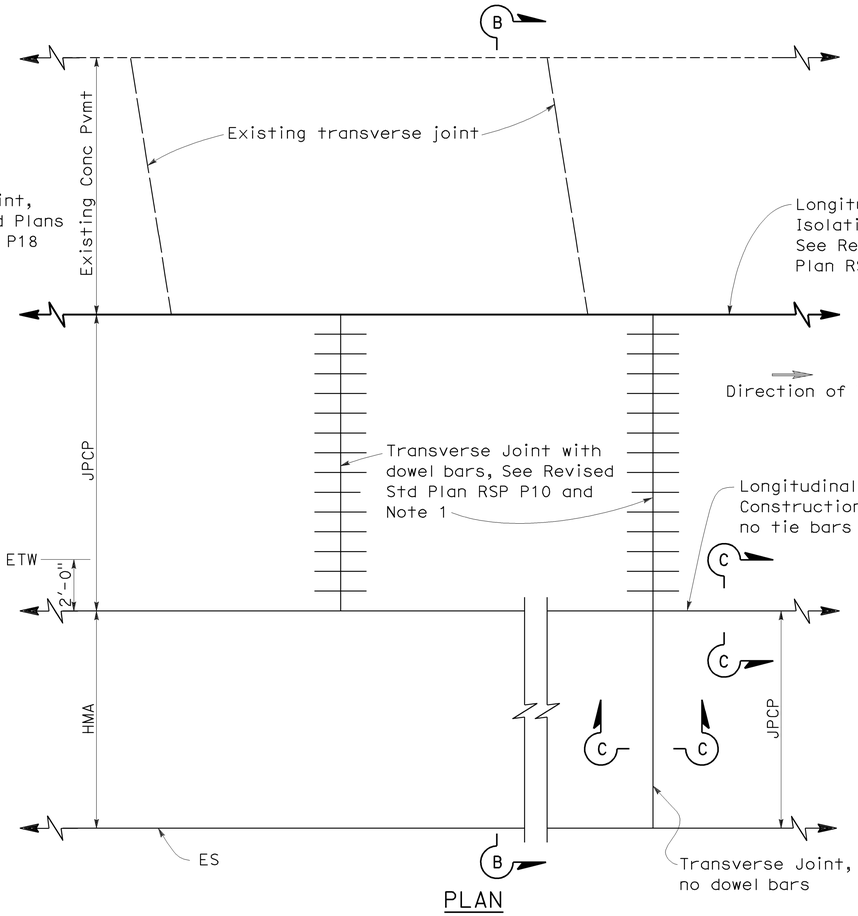

PLAN

LANE/SHOULDER ADDITION OR RECONSTRUCTION

NOTES:

1. Transverse joints shall be constructed at right angles to the longitudinal pavement joints in new Jointed Plain Concrete Pavement and spaced at successive repeated intervals of 12', 15', 13' and 14'.
2. For locations of rumble strips, see project plans. For rumble strip details not shown, see Standard Plans A40A and A40B.
3. Joint spacing patterns do not apply to intersections.

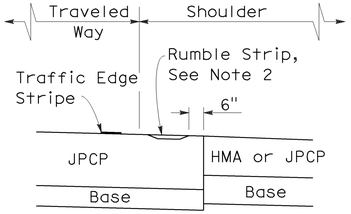

DETAIL "A"

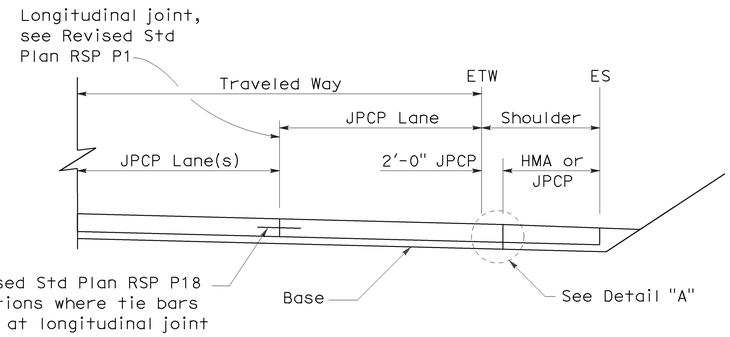

SECTION A-A

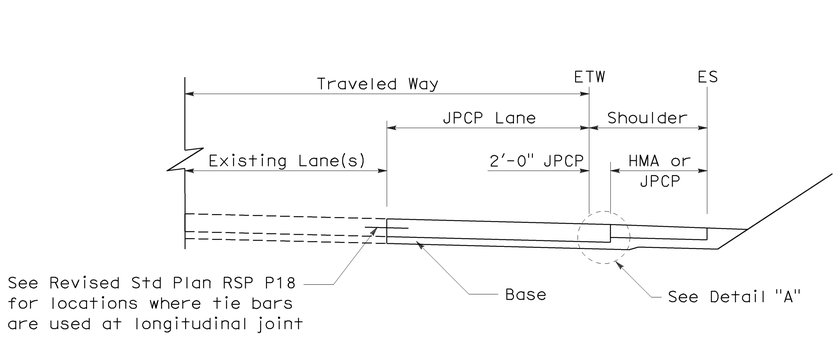

SECTION B-B

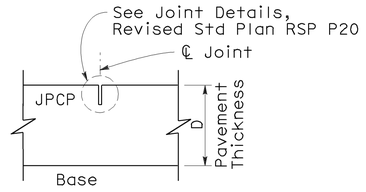

SECTION C-C

TRANSVERSE/LONGITUDINAL JOINT

(no dowel bars/tie bars)

STATE OF CALIFORNIA
DEPARTMENT OF TRANSPORTATION

JOINTED PLAIN CONCRETE PAVEMENT-WIDENED SLAB DETAILS

NO SCALE

RSP P2 DATED JUNE 5, 2009 SUPERCEDES STANDARD PLAN P2
DATED MAY 1, 2006 - PAGE 120 OF THE STANDARD PLANS BOOK DATED MAY 2006.

REVISED STANDARD PLAN RSP P2

2006 REVISED STANDARD PLAN RSP P2

5-19-09

DIST	COUNTY	ROUTE	POST MILES TOTAL PROJECT	SHEET NO.	TOTAL SHEETS
06	Fre	99	26.7/30.6	185	242

William K. Farnbach
REGISTERED CIVIL ENGINEER

May 15, 2009
PLANS APPROVAL DATE

REGISTERED PROFESSIONAL ENGINEER — William K. Farnbach — No. C49042 — Exp. 9-30-10 CIVIL — STATE OF CALIFORNIA

The State of California or its officers or agents shall not be responsible for the accuracy or completeness of electronic copies of this plan sheet.

To accompany plans dated 9-28-09

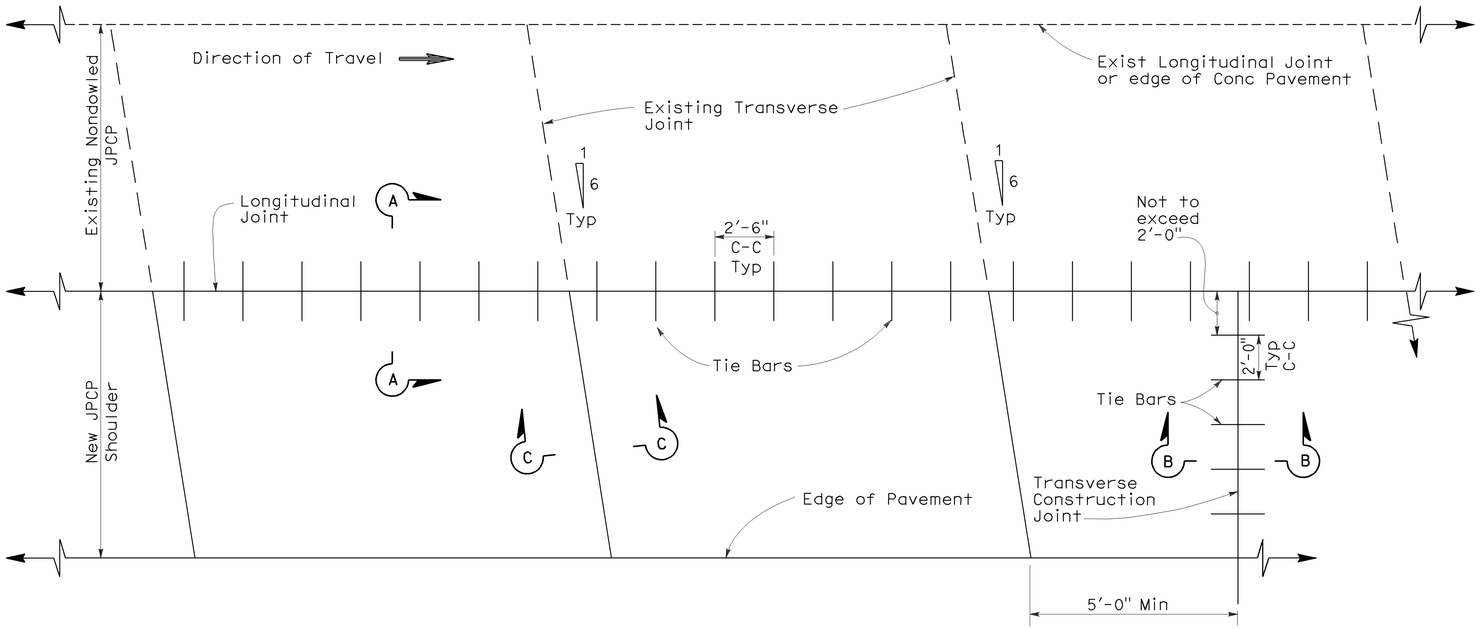

PLAN

NOTES:

1. New transverse contraction joints shall match the skewed offset and spacing of the adjacent existing contraction joints, as shown.
2. Transverse construction joints, with tie bars spaced as shown, shall be installed at the end of paving operations. Transverse construction joints shall be placed at least 5'-0" from any contraction joint.
3. This Standard Plan only applicable for constructing a nondoweled Jointed Plain Concrete Pavement shoulder next to existing nondoweled Jointed Plain Concrete Pavement lane.
4. If fresh concrete is placed adjacent to existing concrete, the top corner of the new hardened concrete does not need to be rounded to the 1/4" radius as shown.

TABLE A

Tie Bar Spacing		
Slab Length	Total Tie Bars per Slab	Clearance Tie Bar to Transverse Joint
9'-0"	3	1'-3"
9'-6"	3	1'-4½"
12'-0"	5	1'-4"
13'-0"	5	1'-10"
14'-0"	5	2'-3¾"
15'-0"	6	1'-8"

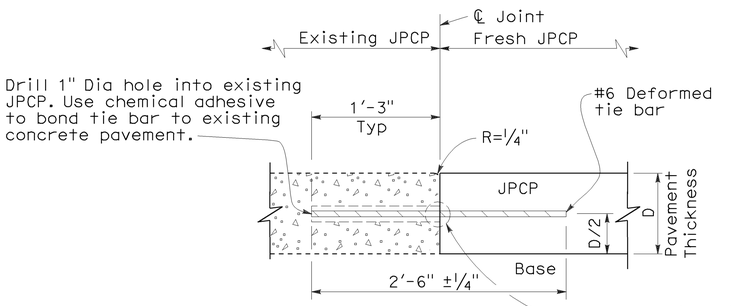

SECTION A-A

LONGITUDINAL JOINT
(Between fresh and hardened concrete)

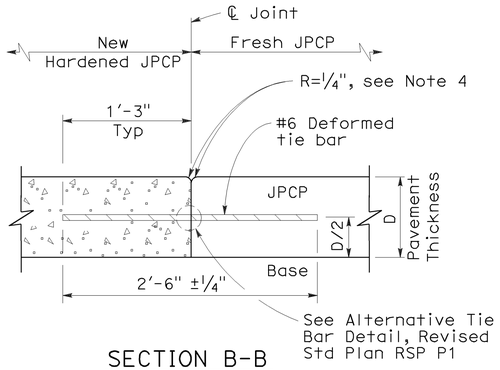

SECTION B-B

TRANSVERSE CONSTRUCTION JOINT

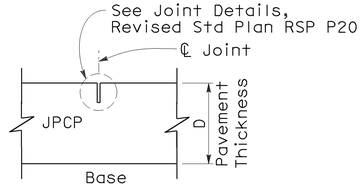

SECTION C-C

TRANSVERSE CONTRACTION JOINT

STATE OF CALIFORNIA
DEPARTMENT OF TRANSPORTATION

JOINTED PLAIN CONCRETE PAVEMENT-NONDOWELED SHOULDER ADDITION/RECONSTRUCTION

NO SCALE

RSP P3 DATED MAY 15, 2009 SUPERSEDES RSP P3 DATED NOVEMBER 17, 2006 AND STANDARD PLAN P3 DATED MAY 1, 2006 - PAGE 121 OF THE STANDARD PLANS BOOK DATED MAY 2006.

REVISED STANDARD PLAN RSP P3

2006 REVISED STANDARD PLAN RSP P3

5-8-09

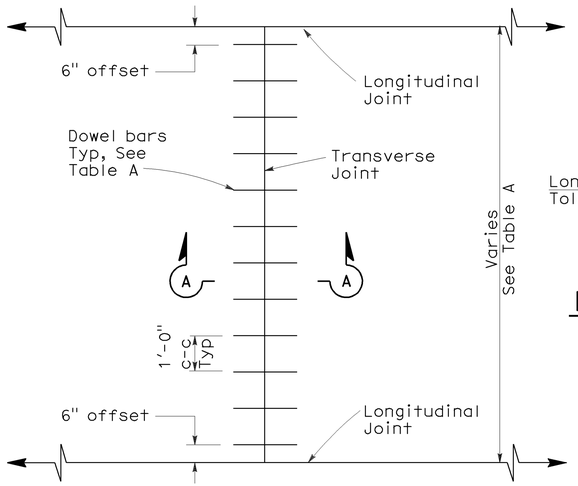

TRANSVERSE JOINT DOWEL BAR LAYOUT

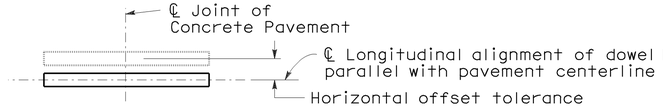

PLAN

HORIZONTAL OFFSET TOLERANCE

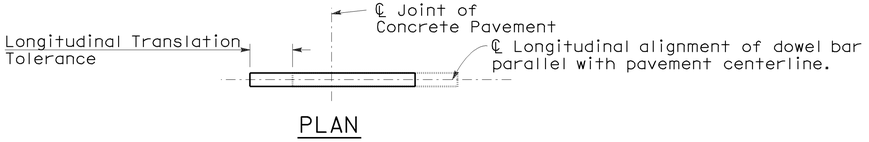

PLAN

LONGITUDINAL TRANSLATION TOLERANCE

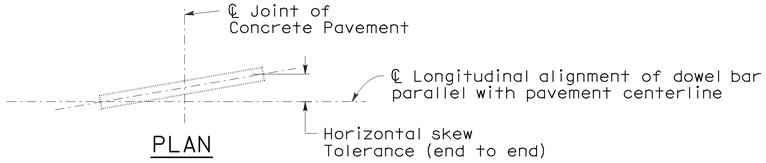

PLAN

HORIZONTAL SKEW TOLERANCE

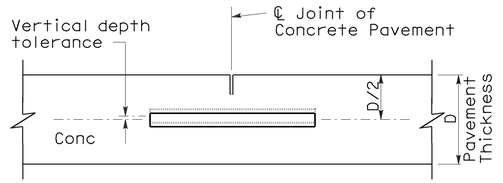

ELEVATION

VERTICAL DEPTH TOLERANCE

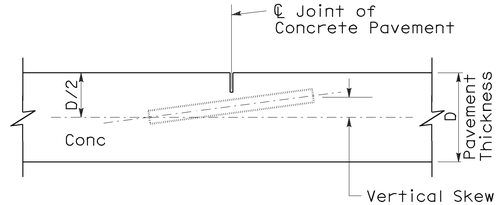

ELEVATION

VERTICAL SKEW TOLERANCE

DIST	COUNTY	ROUTE	POST MILES TOTAL PROJECT	SHEET NO.	TOTAL SHEETS
06	Fre	99	26.7/30.6	186	242

William K. Farnbach
REGISTERED CIVIL ENGINEER

May 15, 2009
PLANS APPROVAL DATE

REGISTERED PROFESSIONAL ENGINEER — William K. Farnbach — No. C49042 — Exp. 9-30-10 CIVIL — STATE OF CALIFORNIA

The State of California or its officers or agents shall not be responsible for the accuracy or completeness of electronic copies of this plan sheet.

To accompany plans dated 9-28-09

NOTES:

1. See Revised Standard Plan RSP P1 for typical dowel bar placement and locations.
2. 1½" Dia smooth dowel bars are to be used with a pavement thickness, D, equal to or greater than 0.70 feet. For pavement thickness, D, less than 0.70 feet, use 1¼" Dia smooth dowel bars.
3. For widths not shown, see Project Plans.
4. If fresh concrete pavement is placed adjacent to existing concrete pavement, the top corner of the existing concrete pavement does not need to be rounded to the ¼" radius, as shown.

TABLE A (See Note 3)

Dowel Bar Transverse Spacing Table	
Width between Longitudinal Joints	Number of Dowels between Longitudinal Joints
14'-0"	14
13'-0"	13
12'-0"	12
11'-0"	11
10'-0"	10
8'-0"	8
5'-0"	5
4'-0"	4

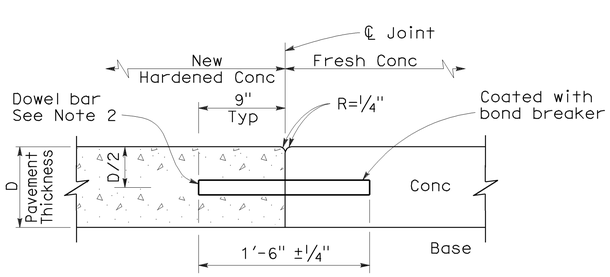

SECTION A-A

TRANSVERSE CONSTRUCTION JOINT DETAIL

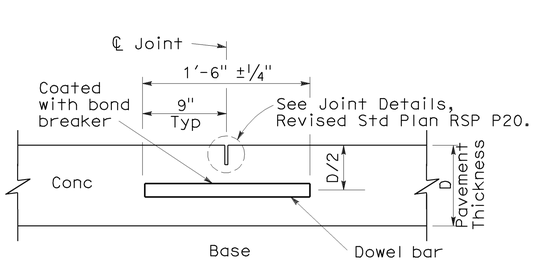

TRANSVERSE CONTRACTION JOINT

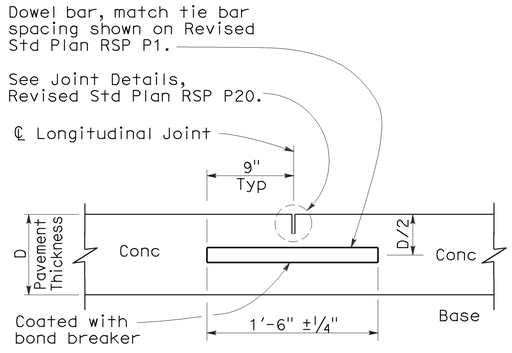

LONGITUDINAL CONTRACTION JOINT WITH DOWEL BARS

(See Revised Std Plan RSP P18)

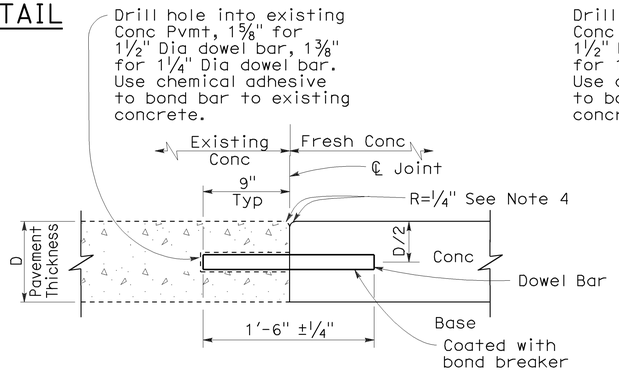

TRANSVERSE CONSTRUCTION JOINT FOR EXISTING CONCRETE PAVEMENT

(Drill and bond locations)

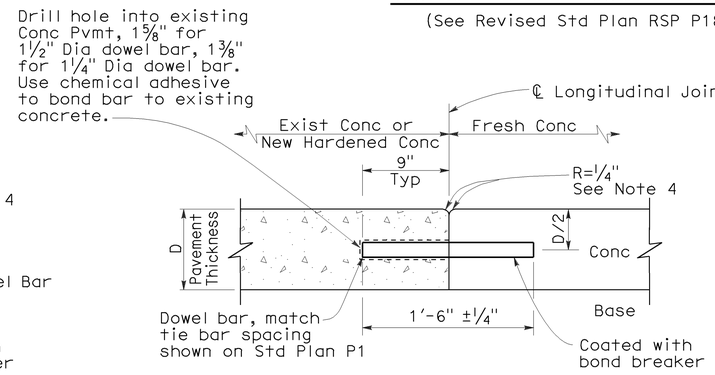

LONGITUDINAL CONSTRUCTION JOINT WITH DOWEL BARS

(See Revised Std Plan RSP P18)

STATE OF CALIFORNIA
DEPARTMENT OF TRANSPORTATION

CONCRETE PAVEMENT-DOWEL BAR DETAILS

NO SCALE

RSP P10 DATED MAY 15, 2009 SUPERSEDES STANDARD PLAN P10
DATED MAY 1, 2006 - PAGE 124 OF THE STANDARD PLANS BOOK DATED MAY 2006.

REVISED STANDARD PLAN RSP P10

2006 REVISED STANDARD PLAN RSP P10

5-8-09

DIST	COUNTY	ROUTE	POST MILES TOTAL PROJECT	SHEET NO.	TOTAL SHEETS
06	Fre	99	26.7/30.6	187	242

William K. Farnbach
REGISTERED CIVIL ENGINEER

May 15, 2009
PLANS APPROVAL DATE

REGISTERED PROFESSIONAL ENGINEER — William K. Farnbach — No. C49042 — Exp. 9-30-10 CIVIL — STATE OF CALIFORNIA

The State of California or its officers or agents shall not be responsible for the accuracy or completeness of electronic copies of this plan sheet.

To accompany plans dated 9-28-09

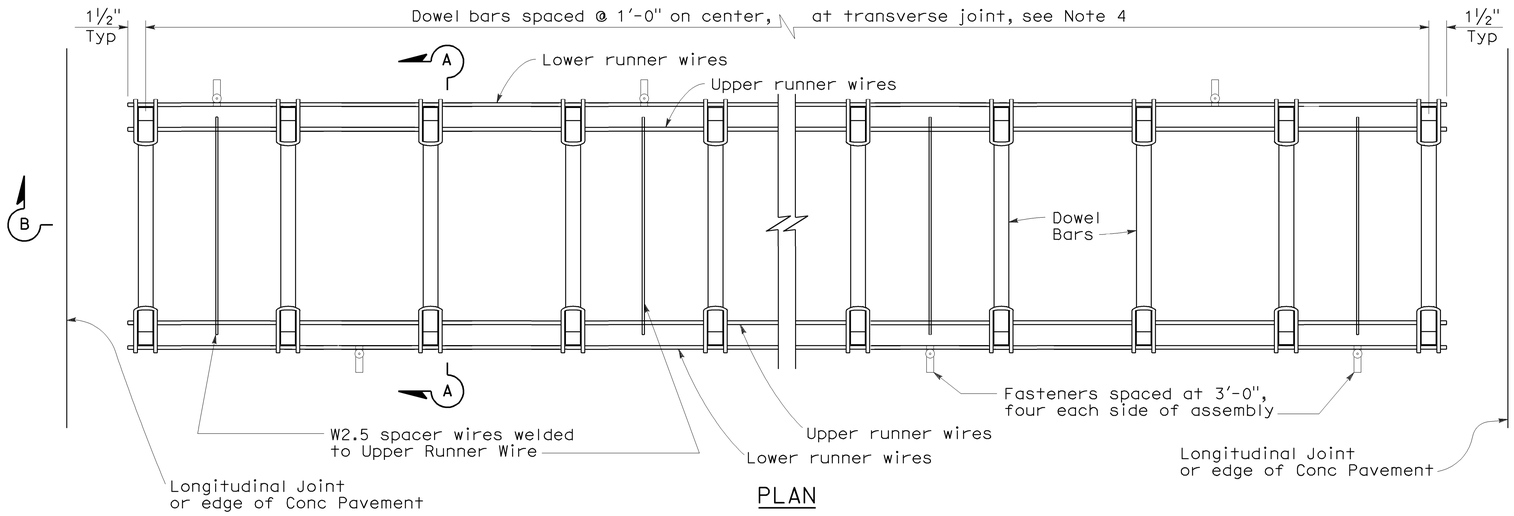

PLAN

DOWEL BAR BASKET (TRANSVERSE JOINT)

See Note 1

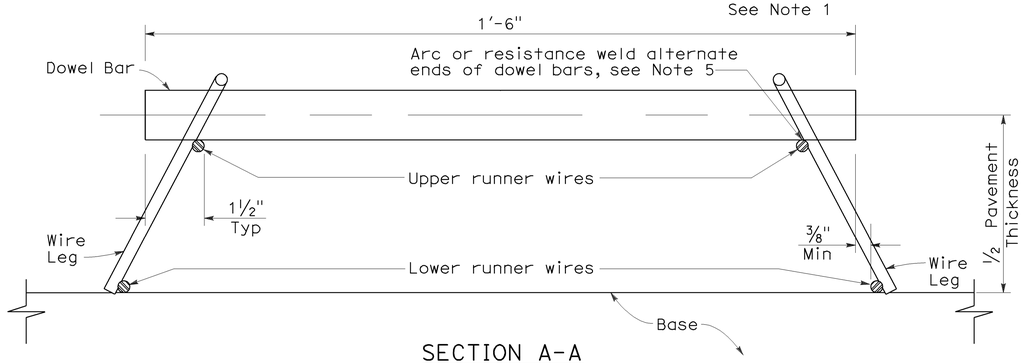

SECTION A-A

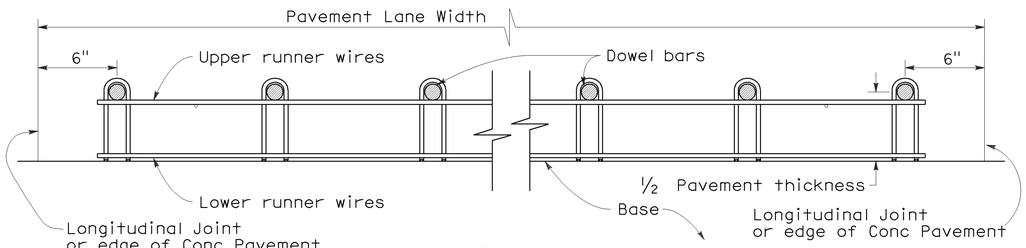

SECTION B-B

See Note 1

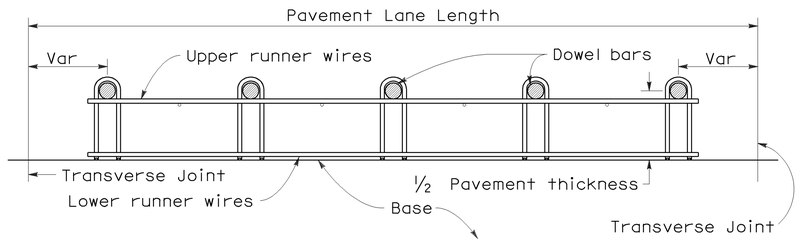

SECTION C-C

See Notes 1 and 4

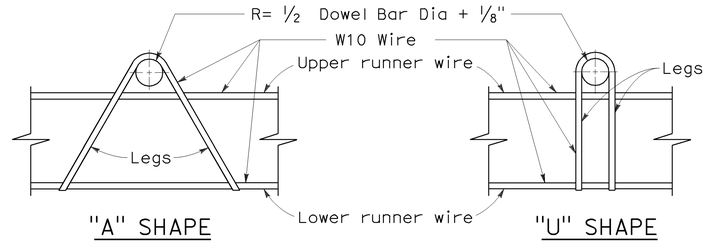

"A" SHAPE "U" SHAPE

ASSEMBLY FRAME DETAILS

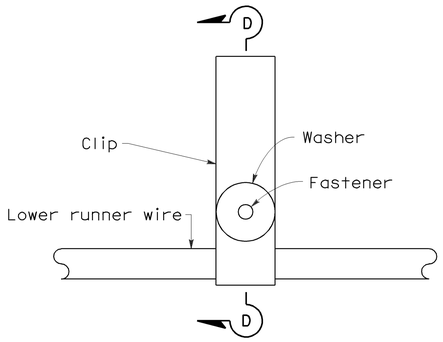

PLAN

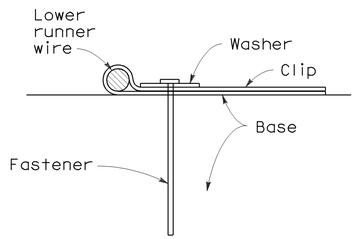

SECTION D-D

FASTENER DETAIL

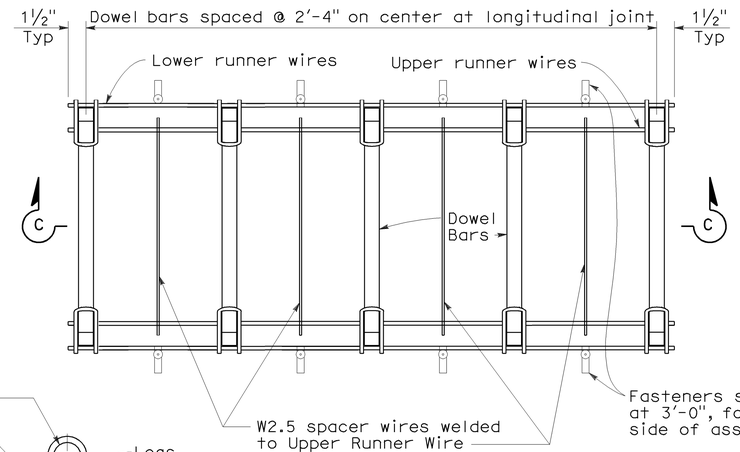

PLAN

DOWEL BAR BASKET (LONGITUDINAL JOINT)

See Note 1

NOTES:

1. "U" frame shape assembly shown. "U" frame shape or "A" frame shape are acceptable.
2. Wire sizes shown are minimum required.
3. All wire intersections are to be resistance welded.
4. Use tie bar spacing for longitudinal dowel bar locations. See Revised Std Plans RSPs P1, P2, and P3 for tie bar requirements.
5. Weld may be at top or bottom of dowel bar.

STATE OF CALIFORNIA
DEPARTMENT OF TRANSPORTATION

CONCRETE PAVEMENT-DOWEL BAR BASKET DETAILS

NO SCALE

RSP P12 DATED MAY 15, 2009 SUPERSEDES RSP P12 DATED NOVEMBER 17, 2006 AND STANDARD PLAN P12 DATED MAY 1, 2006 - PAGE 125 OF THE STANDARD PLANS BOOK DATED MAY 2006.

REVISED STANDARD PLAN RSP P12

2006 REVISED STANDARD PLAN RSP P12

5-8-09

DIST	COUNTY	ROUTE	POST MILES TOTAL PROJECT	SHEET NO.	TOTAL SHEETS
06	Fre	99	26.7/30.6	188	242

Raymond Don Tsztoo
REGISTERED CIVIL ENGINEER

January 18, 2008
PLANS APPROVAL DATE

REGISTERED PROFESSIONAL ENGINEER — Raymond Don Tsztoo — No. C37332 — Exp. 6-30-08 — CIVIL — STATE OF CALIFORNIA

The State of California or its officers or agents shall not be responsible for the accuracy or completeness of electronic copies of this plan sheet.

To accompany plans dated 9-28-09

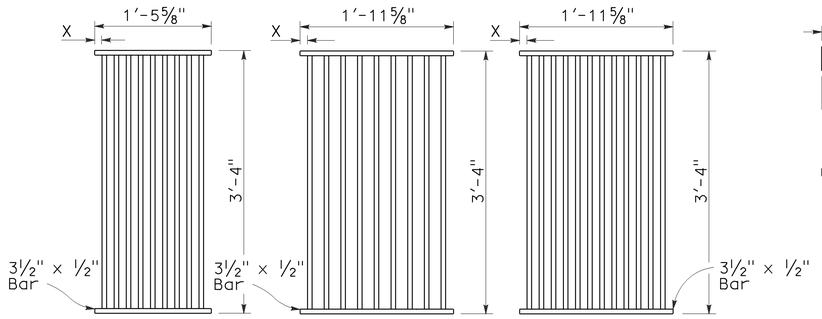

TYPE 18-9

1⅜" Clear spacing. Use within the roadbed on highways where bicycles and pedestrians are excluded.

TYPE 24-9

2" Clear spacing. Use in locations off the roadbed on all types of highways.

TYPE 24-12

1⅜" Clear spacing. Use within the roadbed on highways where bicycles and pedestrians are excluded.

RECTANGULAR GRATE DETAILS

(See table below)

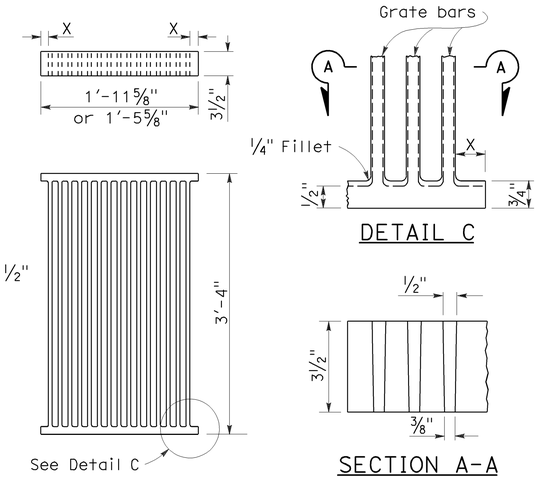

DETAIL C

SECTION A-A

ALTERNATIVE CAST NODULAR IRON GRATE OR CAST STEEL GRATE

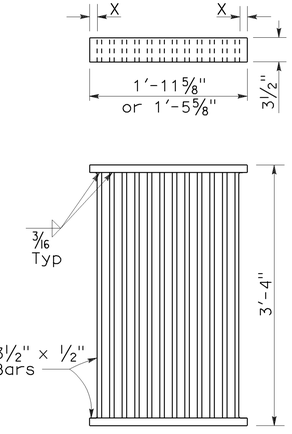

ALTERNATIVE WELDED GRATE

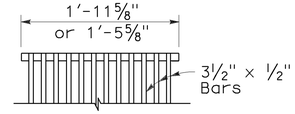

CAST END BLOCK

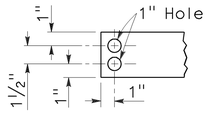

END OF BAR

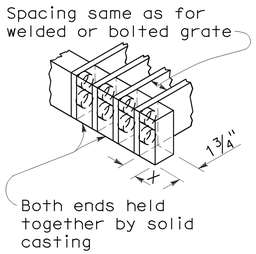

ALTERNATIVE CAST NODULAR IRON OR CAST STEEL END BLOCK GRATE

NOTES:

1. Grate type numbers refer to approximate width of grate in inches and number of bars, respectively.
2. Contractor has the option of using cast nodular iron, cast steel, welded, bolted, or cast end block grate.
3. See Special Provisions for requirements pertaining to galvanizing or asphalt dipping of grates and frames.
4. Rounded top of bars optional on all grates.
5. Pipe inlets with a grate shall be placed so that bars parallel direction of principle surface flow.
6. Full penetration butt welds may be substituted for the fillet welds on all anchors.
7. Standard square, hexagon, round or equivalent headed anchors may be substituted for the right angle hooks on the anchors shown on this plan.
8. Grate and frame weights are based on welded grates (weights of face angles, steps, protection bars, etc. are not included).

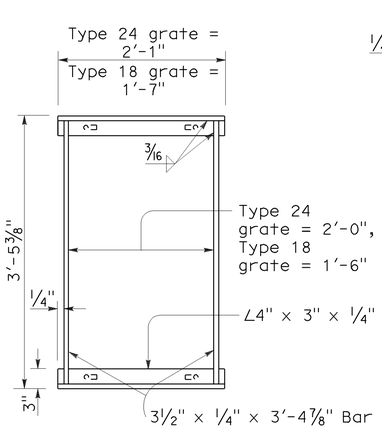

TYPICAL FRAME

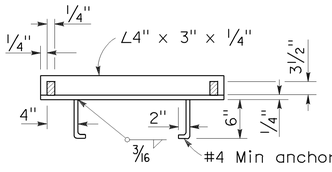

CROSS SECTION
(Thru frame)

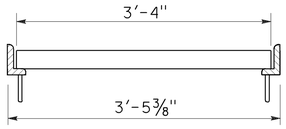

LONGITUDINAL SECTION
(Thru frame and grate)

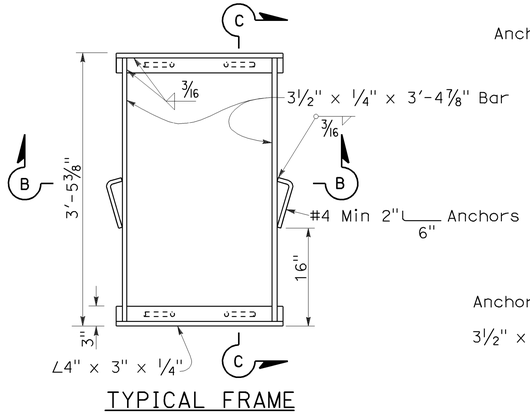

TYPICAL FRAME

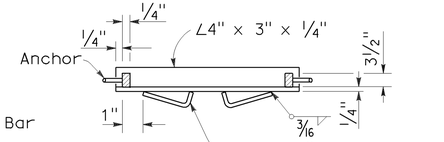

SECTION B-B

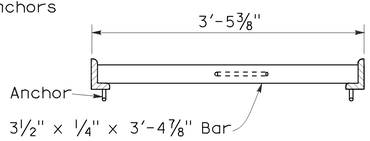

SECTION C-C

ALTERNATIVE ANCHOR FOR RECTANGULAR FRAME

(For details not shown, See Rectangular Frame Details)

RECTANGULAR FRAME DETAILS

(For all rectangular grates)

GRATE BAR SPACING TABLE

TYPE	No. OF BARS	CLEAR BAR SPACING	X
18-9	9	1⅜"	1 1/16"
24-9	9	2"	1⅜16"
24-12	12	1⅜"	1¼"

INLET TYPE	COVER TYPE	WEIGHT LB
OS	PLATE	174
OL-7	PLATE	170
OL-10	PLATE	170
OL-14	PLATE	170
OL-21	PLATE	170
OCP	PLATE	112
OCPI	PLATE	112
OCPI	REDWOOD	42
OMP	PLATE	177
OMPI	PLATE	177

INLET TYPE	GRATE TYPE	No. OF GRATES	WEIGHT LB
GDO	24-12	2	634
GOL-7	24-12	1	326
GOL-10	24-12	1	326
GO,G1,G2,G3,G4 (TYPE 24)	24-9	1	263
	24-12	1	326
G4 (TYPE 18),G5,G6	18-9	1	249
GT1	18-9	2	498
GT2	18-9	2	498
GT3	24-12	2	652
GT4	24-12	2	652
TRASH RACK			22

BASIS FOR MISC IRON & STEEL FINAL PAY WEIGHTS FOR DRAINAGE INLETS

(See General Notes, No 8)

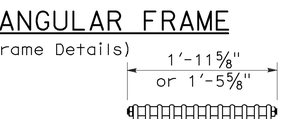

BOLTED END BLOCK

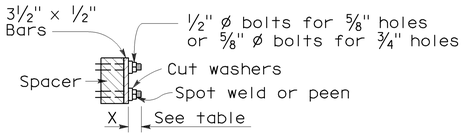

BOLTING DETAIL

ALTERNATIVE BOLTED GRATE

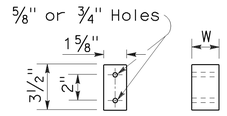

BAR SPACER

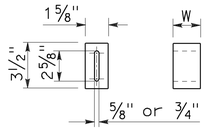

ALTERNATIVE SPACER
W = 1⅜" or 2"

STATE OF CALIFORNIA
DEPARTMENT OF TRANSPORTATION

GRATE DETAILS

NO SCALE

RSP D77A DATED JANUARY 18, 2008 SUPERSEDES STANDARD PLAN D77A DATED MAY 1, 2006 - PAGE 155 OF THE STANDARD PLANS BOOK DATED MAY 2006.

REVISED STANDARD PLAN RSP D77A

2006 REVISED STANDARD PLAN RSP D77A

12-14-07

ANNULAR AND HELICAL PROFILE

COUPLING TYPE	PIPE CORRUGATION	PIPE SIZE	W OR A	PIPE WALL THICKNESS		BAND THICKNESS		BAR AND STRAP (CSP ONLY)				ANGLE						
												DIMENSIONS		BOLTS (No.- Dia)		RIVETS ANGLE TO BAND		SPOT WELDS ANGLE TO BAND
				CSP	CAP	CSP	CAP	STRAP THICKNESS	BOLTS Dia	BAR Dia	BAR YIELD STRENGTH	CSP	CAP	CSP	CAP	CSP	CAP	CSP
TWO PIECE INTEGRAL FLANGE	1½′ × ¼"	6"-10"	7"	0.052"-0.079"	0.048"-0.060"	0.052"	0.060"							2-⅜"	2-⅜"			
		12"-18"	7"	0.052"-0.079"		0.064"								2-½"				
	2⅔" × ½"	12"-24"	7"	0.052"-0.079"	0.060"-0.105"	0.064"	0.060"							2-½"	2-½"			
UNIVERSAL	2⅔" × ½"	THROUGH 36"	12"	0.052"-0.138"	0.060"-0.135"	0.052"	0.060"					2" × 2" × 3/16"	2" × 2" × 3/16"	3-½"	3-½"	3-⅜"	3-⅜"	3-½"
		42"-60"	12"	0.052"-0.168"	0.075"-0.164"	0.052"	0.060"					2" × 2" × 3/16"	2" × 2" × 3/16"	3-½"	3-½"	3-⅜"	3-⅜"	5-½"
		THROUGH 72"	12"	0.052"-0.168"	0.164"	0.052"	0.105"	0.079"	½"	⅞"	32 ksi	2" × 2" × 3/16"	2" × 2" × 3/16"	3-½"	3-½"	3-⅜"	3-⅜"	5-½"
		78"-84"	16¼"	0.168"		0.079"		DOUBLE 0.079"	½"	⅞"	32 ksi							
ANNULAR	2⅔" × ½"	THROUGH 36"	7"	0.064"-0.138"	0.060"-0.135"	0.052"	0.060"	0.079"	½"	⅞"	32 ksi	2" × 2" × 3/16"	2" × 2" × 3/16"	2-½"	2-½"	3-⅜"	3-⅜"	3-½"
		42"-72"	12"	0.064"-0.168"	0.075"-0.164"	0.052"	0.105"	0.079"	½"	⅞"	32 ksi	2" × 2" × 3/16"	2" × 2" × 3/16"	3-½"	3-½"	3-⅜"	3-⅜"	5-½"
		78"-84"	12"	0.168"		0.079"		0.109"	½"	⅞"	45 ksi	2" × 2" × 3/16"		3-½"		3-⅜"		5-½"
	3" × 1"	48"-90"	14"	0.064"-0.109"		0.052"		0.079"	½"	⅞"	32 ksi	2" × 2" × 3/16"		3-½"		3-⅜"		5-½"
		96"-120"	14"	0.079"-0.109"		0.052"		0.109"	½"	⅞"	45 ksi	2" × 2" × 3/16"		3-½"		4-⅜"		
		42"-108"	14"		0.060"-0.135"		0.060"						2" × 2" × 3/16"		3-½"		3-⅜"	
HELICAL	2⅔" × ½"	THROUGH 36"	12"	0.052"-0.138"	0.060"-0.135"	0.052"	0.060"	0.079"	½"	⅞"	32 ksi	2" × 2" × 3/16"	2" × 2" × 3/16"	3-½"	3-½"	3-⅜"	3-⅜"	3-½"
		42"-72"	12"	0.052"-0.168"	0.075"-0.164"	0.052"	0.060"	0.079"	½"	⅞"	32 ksi	2" × 2" × 3/16"	2" × 2" × 3/16"	3-½"	3-½"	3-⅜"	3-⅜"	5-½"
		78"-84"	12"	0.168"		0.079"		0.109"	½"	⅞"	45 ksi	2" × 2" × 3/16"		3-½"		3-⅜"		5-½"
	3" × 1"	48"-90"	14"	0.064"-0.109"		0.052"		0.079"	½"	⅞"	32 ksi	2" × 2" × 3/16"		3-½"		3-⅜"		5-½"
		96"-120"	14"	0.079"-0.109"		0.052"		0.109"	½"	⅞"	45 ksi	2" × 2" × 3/16"		3-½"		4-⅜"		
		42"-108"	14"		0.060"-0.135"		0.060"						2" × 2" × 3/16"		3-½"		3-⅜"	
HUGGER	2⅔" × ½" REROLLED END	12"-54"	4"	0.052"-0.109"		0.052"						2½" × 1½" × 3/16"	2½" × 1½" × 3/16"	1-½"				3-½"
		60"-66"	4"	0.109"		0.064"						2½" × 1½" × 3/16"	2½" × 1½" × 3/16"	1-½"				3-½"
		36"-48"	4"	0.138"		0.064"						2½" × 1½" × 3/16"	2½" × 1½" × 3/16"	1-½"				3-½"
		THROUGH 72"	10½"	0.052"-0.168"		0.052"		0.079"	½"	⅞"	32 ksi							
		78"-84"	10½"	0.168"		0.079"		0.109"	½"	⅞"	45 ksi							
	3" × 1" REROLLED END	48"-90"	10½"	0.064"-0.109"		0.052"		0.079"	½"	⅞"	32 ksi							
		96"-120"	10½"	0.079"-0.109"		0.052"		0.109"	½"	⅞"	45 ksi							
	5" × 1" REROLLED END	48"-66"	7½"	0.064"-0.109"		0.064"		0.079"	½"	⅞"	32 ksi	2½" × 1½" × 3/16"	2½" × 1½" × 3/16"	1-½"				3-½"
		72"-90"	7½"	0.064"-0.079"		0.064"		0.079"	½"	⅞"	32 ksi	2½" × 1½" × 3/16"	2½" × 1½" × 3/16"	1-½"				3-½"
		48"-90"	7½"	0.064"-0.138"		0.064"		0.079"	½"	⅞"	32 ksi							
		48"-120"	12" SEE	0.064"-0.109"		0.064"		0.079"	½"	⅞"	32 ksi							
		48"-84"	12" NOTE	0.138"		0.064"		0.079"	½"	⅞"	32 ksi							
		90"-120"	12" 11	0.138"		0.064"		DOUBLE 0.079"	½"	⅞"	32 ksi							

SPIRAL RIB PROFILE

COUPLING TYPE	PIPE CORRUGATION	PIPE SIZE	W	PIPE WALL THICKNESS		BAND THICKNESS		BAR AND STRAP (SSRP ONLY)				ANGLE						
												DIMENSIONS		BOLTS (No.- Dia)		RIVETS ANGLE TO BAND		SPOT WELDS ANGLE TO BAND
				SSRP	ASRP	SSRP	ASRP	STRAP THICKNESS	BOLTS Dia	BAR Dia	BAR YIELD STRENGTH	SSRP	ASRP	SSRP	ASRP	SSRP	ASRP	SSRP
ANNULAR	2⅔" × ½" * REROLLED END	24"-36"	12"	0.064"-0.109"	0.060"-0.105"	0.052"	0.060"	0.079"	½"	⅞"	32 ksi	2" × 2" × 3/16"	2" × 2" × 3/16"	3-½"	3-½"	3-⅜"	3-⅜"	5-½"
		42"-60"	12"	0.064"-0.109"	0.075"-0.105"	0.052"	0.105"	0.079"	½"	⅞"	32 ksi	2" × 2" × 3/16"	2" × 2" × 3/16"	3-½"	3-½"	3-⅜"	3-⅜"	5-½"
		66"-72"	12"	0.064"-0.109"		0.052"		0.079"	½"	⅞"	32 ksi	2" × 2" × 3/16"	2" × 2" × 3/16"	3-½"	3-½"	3-⅜"	3-⅜"	5-½"
		78"-114"	12"	0.079"-0.109"		0.079"		0.109"	½"	⅞"	45 ksi	2" × 2" × 3/16"	2" × 2" × 3/16"	3-½"	3-½"	3-⅜"	3-⅜"	5-½"
HUGGER	2⅔" × ½" * REROLLED END	24"-72"	10½"	0.064"-0.109"		0.052"		0.079"	½"	⅞"	32 ksi							
		78"-84"	10½"	0.109"		0.079"		0.109"	½"	⅞"	45 ksi							

* See Note 14.

DIST	COUNTY	ROUTE	POST MILES TOTAL PROJECT	SHEET NO.	TOTAL SHEETS
06	Fre	99	26.7/30.6	189	242

Raymond Don Tsztoo
REGISTERED CIVIL ENGINEER

REGISTERED PROFESSIONAL ENGINEER — Raymond Don Tsztoo — No. C37332 — Exp. 6-30-08 — CIVIL — STATE OF CALIFORNIA

June 6, 2008
PLANS APPROVAL DATE

The State of California or its officers or agents shall not be responsible for the accuracy or completeness of electronic copies of this plan sheet.

NOTES:

To accompany plans dated 9-28-09

1. All ferrous metal coupling band connection hardware shall be galvanized or electro-plated in accordance with the Standard Specifications.
2. For helically corrugated coupling bands, the connection angles may be oriented parallel to the pipe axis, provided connecting holes are slotted lengthwise sufficiently to allow adjustment for the helix angle.
3. Tension strap may be connected to band with either spot welds or fillet welds that develop minimum required strength of strap.
4. Use 1¼" gage line dimension on attached angle leg for rivets and spot welds.
5. Band thickness shall not be less than:
   a. 3 standard thicknesses lighter than the thickness of the pipe for Corrugated Steel Pipe.
   b. 2 standard thicknesses lighter than the thickness of the pipe and in no case lighter than 0.060" for Corrugated Aluminum Pipe.
6. Dimensions, thicknesses and strengths shown are minimum.
7. For pipe arches use same width band as for round pipe of equal periphery.
8. Fillet welds of equivalent strenght may be substituted for spot welds or rivets.
9. Spot welds shall develop minimum required strength of strap.
10. Pipe with rerolled ends having at least two 2⅔" × ½" annular corrugations at each end with or without an upturned flange may be connected with any of the annular coupling bands shown for pipe of the same diameter and wall thickness and having 2⅔" × ½" corrugations.
11. In the case of H-12 huggerbands, two piece bands are required for diameters through 96" and three piece bands are required for diameters 102" through 120".
12. Two piece bands are required for pipes greater than 42" diameter.
13. The 2¼" × 2" × 0.109" thick galvanized die-formed angle connector may be used in lieu of the 2" × 2" × 3/16" angle connector for standard joints only on pipes through 72" diameter.
14. All profiles of Spiral Rib Pipe (¾" × ¾" ribs at 7½" pitch and ¾" × 1" ribs at 11½" pitch in both steel and aluminum and ¾" × 1" ribs at 8½" pitch in steel only) shall be manufactured with rerolled ends. Corrugation profile of the rerolled ends shall be 2⅔" × ½" annual corrugations with a minimum of two full corrugations at each end.

STATE OF CALIFORNIA
DEPARTMENT OF TRANSPORTATION

CORRUGATED METAL PIPE COUPLING DETAILS No. 5 STANDARD JOINT

NO SCALE

RSP D97E DATED JUNE 6, 2008 SUPERSEDES STANDARD PLAN D97E
DATED MAY 1, 2006 - PAGE 187 OF THE STANDARD PLANS BOOK DATED MAY 2006.

REVISED STANDARD PLAN RSP D97E

2006 REVISED STANDARD PLAN RSP D97E

4-2-08

DIST	COUNTY	ROUTE	POST MILES TOTAL PROJECT	SHEET NO.	TOTAL SHEETS
06	Fre	99	26.7/30.6	190	242

Raymond Don Tsztoo
REGISTERED CIVIL ENGINEER

June 6, 2008
PLANS APPROVAL DATE

REGISTERED PROFESSIONAL ENGINEER
Raymond Don Tsztoo
No. C37332
Exp. 6-30-08
CIVIL
STATE OF CALIFORNIA

The State of California or its officers or agents shall not be responsible for the accuracy or completeness of electronic copies of this plan sheet.

To accompany plans dated 9-28-09

ANNULAR AND HELICAL PROFILE

COUPLING TYPE	PIPE CORRUGATION	PIPE SIZE	W OR A	PIPE WALL THICKNESS		BAND THICKNESS		BAR AND STRAP (CSP ONLY)			ANGLE						
											DIMENSIONS		BOLTS (No.- Dia)		RIVETS ANGLE TO BAND		SPOT WELDS ANGLE TO BAND
				CSP	CAP	CSP	CAP	STRAP THICKNESS	BOLTS Dia	BAR Dia	CSP	CAP	CSP	CAP	CSP	CAP	CSP
TWO PIECE INTEGRAL FLANGE	1½′ × ¼"	6"	7"	0.064"-0.168"		0.052"							3-⅜"				
	1½′ × ¼"	8"-10"	7"	0.064"-0.168"	0.060"-0.164"	0.064"	0.060"						3-⅜"	3-⅜"			
ANNULAR	2⅔" × ½"	THROUGH 24"	12"	0.064"-0.168"	0.060"-0.164"	0.064"	0.060"				2" × 2" × 3/16"	2" × 2" × 3/16"	3-½"	3-½"	3-⅜"	3-⅜"	3-½"
HUGGER	2⅔" × ½" REROLLED END	THROUGH 24"	10½"	0.064"-0.168"		0.064"		0.079"	½"	⅞"							

SPIRAL RIB PROFILE

COUPLING TYPE	PIPE CORRUGATION	PIPE SIZE	W	PIPE WALL THICKNESS		BAND THICKNESS		BAR AND STRAP (SSRP ONLY)			ANGLE						
											DIMENSIONS		BOLTS (No.- Dia)		RIVETS ANGLE TO BAND		SPOT WELDS ANGLE TO BAND
				SSRP	ASRP	SSRP	ASRP	STRAP THICKNESS	BOLTS Dia	BAR Dia	SSRP	ASRP	SSRP	ASRP	SSRP	ASRP	SSRP
ANNULAR	2⅔" × ½" * REROLLED END	24"	12"	0.064"-0.168"	0.060"-0.164"	0.064"	0.060"				2" × 2" × 3/16"	2" × 2" × 3/16"	3-½"	3-½"	3-⅜"	3-⅜"	3-½"
HUGGER	2⅔" × ½" * REROLLED END	24"	10½"	0.064"-0.168"		0.064"		0.079"	½"	⅞"							

* See Note 12.

NOTES:

1. All ferrous metal coupling band connection hardware shall be galvanized or electro-plated in accordance with the Standard Specifications.
2. For helically corrugated coupling bands, the connection angles may be oriented parallel to the pipe axis, provided connecting holes are slotted lengthwise sufficiently to allow adjustment for the helix angle.
3. Tension strap may be connected to band with either spot welds or fillet welds that develop minimum required strength of strap.
4. Use 1¼" gage line dimension on attached angle leg for rivets and spot welds.
5. Band thickness shall not be less than:
   a. 3 standard thicknesses lighter than the thickness of the pipe for Corrugated Steel Pipe.
   b. 2 standard thicknesses lighter than the thickness of the pipe and in no case lighter than 0.060" for Corrugated Aluminum Pipe.
6. Dimensions, thicknesses and strengths shown are minimum.
7. For pipe arches use same width band as for round pipe of equal periphery.
8. Fillet welds of equivalent strenght may be substituted for spot welds or rivets.
9. Spot welds shall develop minimum required strength of strap.
10. Pipe with rerolled ends having at least two 2⅔" × ½" annular corrugations at each end with or without an upturned flange may be connected with any of the annular coupling bands shown for pipe of the same diameter and wall thickness and having 2⅔" × ½" corrugations.
11. For downdrain applications, two piece integral flange couplers shall have factory applied sleeve type rubber gaskets with a minimum length of 7" measured along the length of the pipe.
12. All profiles of Spiral Rib Pipe (¾" × ¾" ribs at 7½" pitch and ¾" × 1" ribs at 11½" pitch in both steel and aluminum and ¾" × 1" ribs at 8½" pitch in steel only) shall be manufactured with rerolled ends. Corrugation profile of the rerolled ends shall be 2⅔" × ½" annual corrugations with a minimum of two full corrugations at each end.

STATE OF CALIFORNIA
DEPARTMENT OF TRANSPORTATION

CORRUGATED METAL PIPE COUPLING DETAILS No. 7 DOWNDRAIN

NO SCALE

RSP D97G DATED JUNE 6, 2008 SUPERSEDES STANDARD PLAN D97G
DATED MAY 1, 2006 - PAGE 189 OF THE STANDARD PLANS BOOK DATED MAY 2006.

REVISED STANDARD PLAN RSP D97G

2006 REVISED STANDARD PLAN RSP D97G

4-4-08

DIST	COUNTY	ROUTE	POST MILES TOTAL PROJECT	SHEET NO.	TOTAL SHEETS
06	Fre	99	26.7/30.6	191	242

Randell D. Hiatt
REGISTERED CIVIL ENGINEER

June 6, 2008
PLANS APPROVAL DATE

Randell D. Hiatt
No. C50200
Exp. 6-30-09
CIVIL
REGISTERED PROFESSIONAL ENGINEER
STATE OF CALIFORNIA

The State of California or its officers or agents shall not be responsible for the accuracy or completeness of electronic copies of this plan sheet.

To accompany plans dated 9-28-09

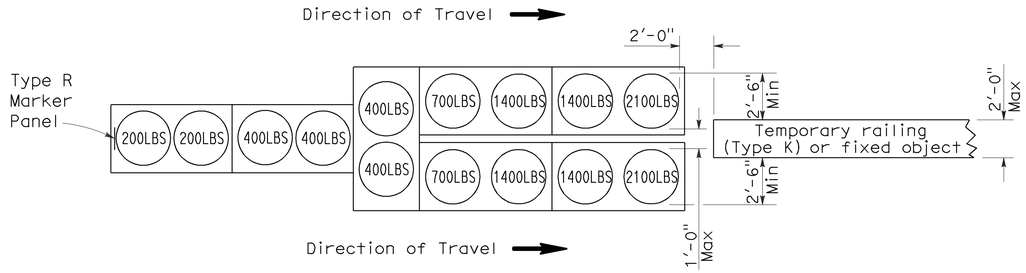

ARRAY 'TU14'

Approach speed 45 mph or more

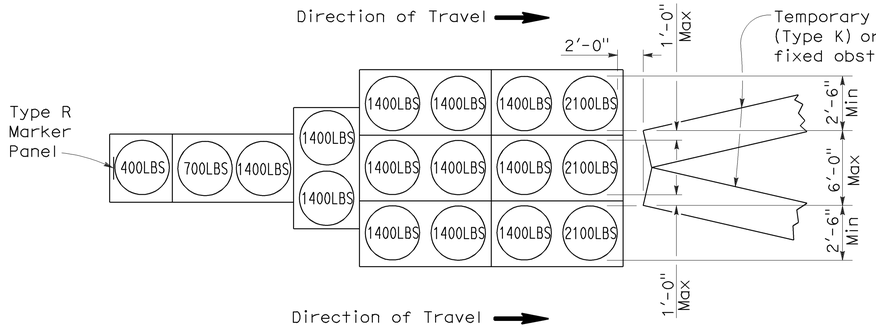

ARRAY 'TU17'

Approach speed less than 45 mph

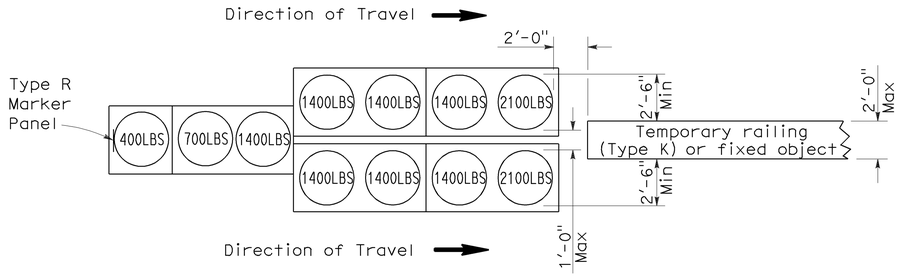

ARRAY 'TU11'

Approach speed less than 45 mph

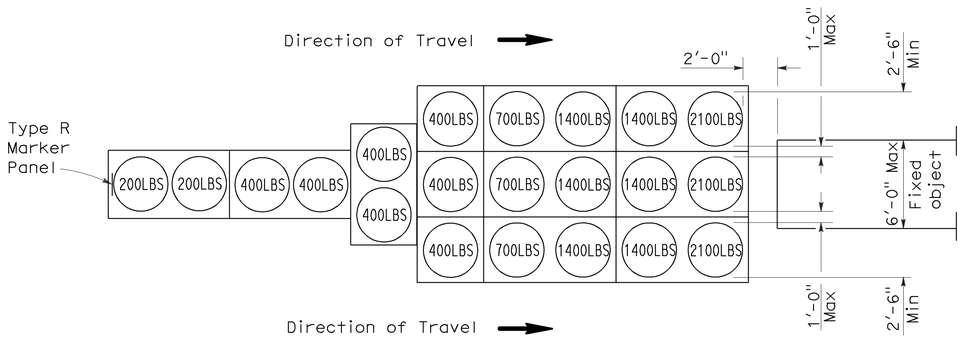

ARRAY 'TU21'

Approach speed 45 mph or more

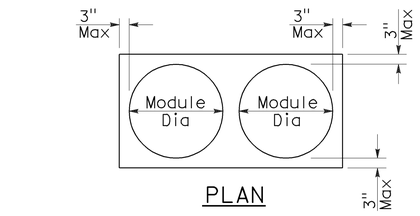

PLAN

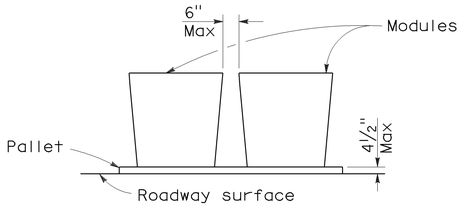

ELEVATION

CRASH CUSHION PALLET DETAIL

See Note 7

NOTES:

1. (XXX) Indicates sand filled module location and weight of sand in pounds for each module. Module spacing is based on the greater diameter of the module.
2. All sand weights are nominal.
3. Temporary crash cushion arrays shall not encroach on the traveled way.
4. Place the top of Type R marker panel 1" below the module lid.
5. Refer to Standard Plan A73B for marker details.
6. Approach speeds indicated conform to NCHRP 350 Report criteria.
7. Use of pallets is optional.

STATE OF CALIFORNIA
DEPARTMENT OF TRANSPORTATION

TEMPORARY CRASH CUSHION, SAND FILLED (UNIDIRECTIONAL)

NO SCALE

RSP T1A DATED JUNE 6, 2008 SUPERSEDES STANDARD PLAN T1A
DATED MAY 1, 2006 - PAGE 211 OF THE STANDARD PLANS BOOK DATED MAY 2006.

REVISED STANDARD PLAN RSP T1A

2006 REVISED STANDARD PLAN RSP T1A

5-15-08

DIST	COUNTY	ROUTE	POST MILES TOTAL PROJECT	SHEET NO.	TOTAL SHEETS
06	Fre	99	26.7/30.6	192	242

Randell D. Hiatt
REGISTERED CIVIL ENGINEER

June 6, 2008
PLANS APPROVAL DATE

REGISTERED PROFESSIONAL ENGINEER
Randell D. Hiatt
No. C50200
Exp. 6-30-09
CIVIL
STATE OF CALIFORNIA

The State of California or its officers or agents shall not be responsible for the accuracy or completeness of electronic copies of this plan sheet.

To accompany plans dated 9-28-09

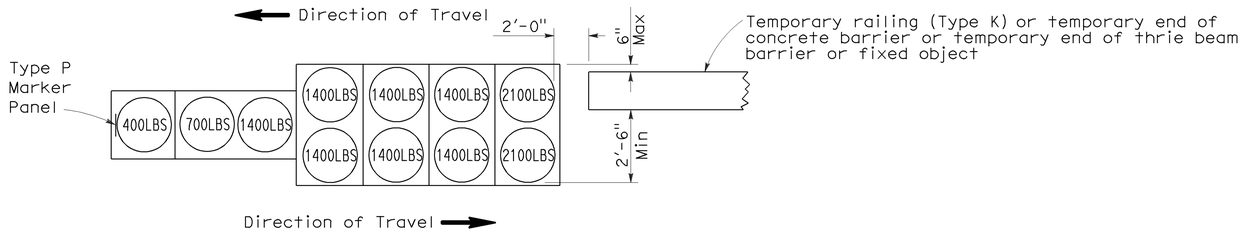

ARRAY 'TB11'

Approach speed less than 45 mph

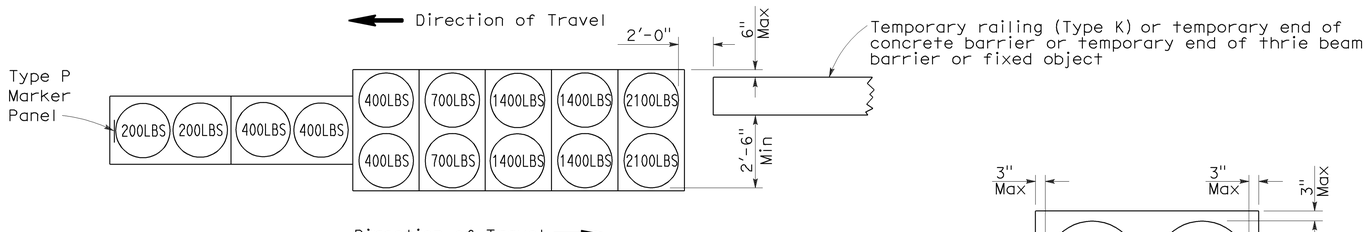

ARRAY 'TB14'

Approach speed 45 mph or more

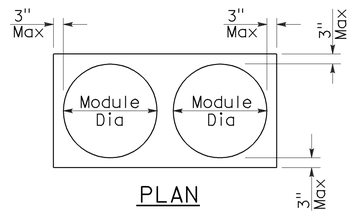

PLAN

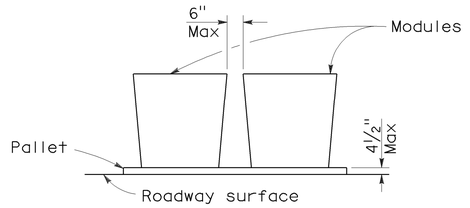

ELEVATION

CRASH CUSHION PALLET DETAIL

See Note 7

NOTES:

1. (XXX) Indicates sand filled module location and weight of sand in pounds for each module. Module spacing is based on the greater diameter of the module.
2. All sand weights are nominal.
3. Temporary crash cushion arrays shall not encroach on the traveled way.
4. Place the Type P marker panel so that the bottom of the panel rests upon the pallet.
5. Refer to Standard Plan A73B for marker details.
6. Approach speeds indicated conform to NCHRP 350 Report criteria.
7. Use of pallets is optional.

STATE OF CALIFORNIA
DEPARTMENT OF TRANSPORTATION

TEMPORARY CRASH CUSHION, SAND FILLED (BIDIRECTIONAL)

NO SCALE

RSP T1B DATED JUNE 6, 2008 SUPERSEDES STANDARD PLAN T1B
DATED MAY 1, 2006 - PAGE 212 OF THE STANDARD PLANS BOOK DATED MAY 2006.

REVISED STANDARD PLAN RSP T1B

2006 REVISED STANDARD PLAN RSP T1B

5-15-08

DIST	COUNTY	ROUTE	POST MILES TOTAL PROJECT	SHEET NO.	TOTAL SHEETS
06	Fre	99	26.7/30.6	193	242

Randell D. Hiatt
REGISTERED CIVIL ENGINEER

June 6, 2008
PLANS APPROVAL DATE

REGISTERED PROFESSIONAL ENGINEER
Randell D. Hiatt
No. C50200
Exp. 6-30-09
CIVIL
STATE OF CALIFORNIA

The State of California or its officers or agents shall not be responsible for the accuracy or completeness of electronic copies of this plan sheet.

To accompany plans dated 9-28-09

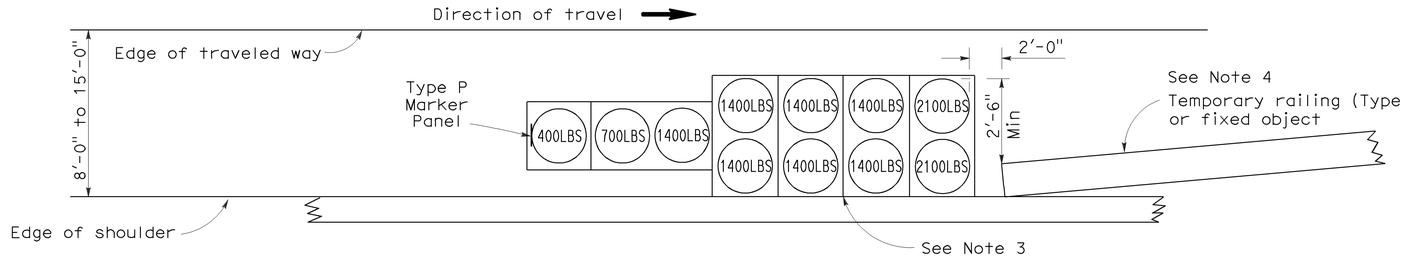

ARRAY 'TS11'

Approach speed less than 45 mph
See Note 9

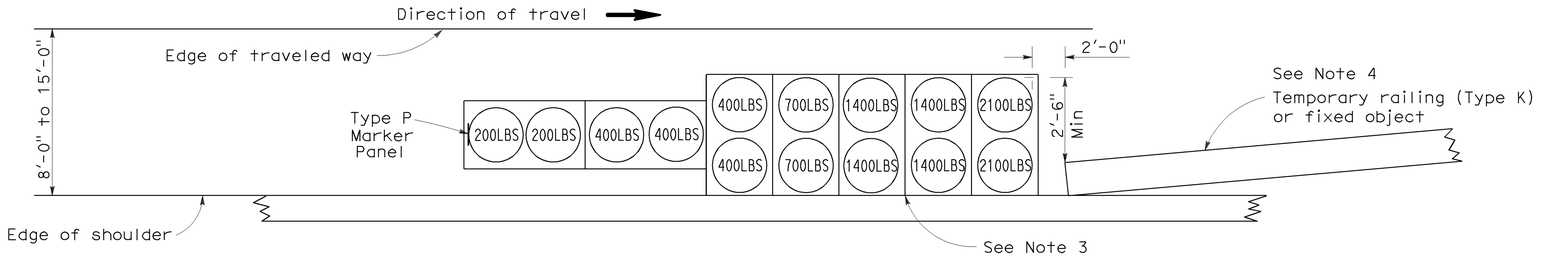

ARRAY 'TS14'

Approach speed 45 mph or more
See Note 9

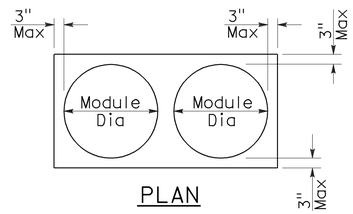

PLAN

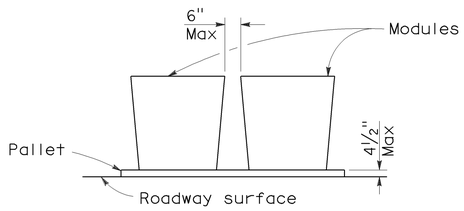

ELEVATION

CRASH CUSHION PALLET DETAIL

See Note 11

NOTES:

1. (XXX) Indicates sand filled module location and weight of sand in pounds for each module. Module spacing is based on the greater diameter of the module.
2. All sand weights are nominal.
3. The temporary crash cushion arrays shown on this plan shall be used only in locations where there will be traffic on one side of the temporary crash cushion array.
4. If the fixed object or approach end of the temporary railing is less than 15'-0" from the edge of traveled way, a temporary crash cushion is required in a construction or work zone.
5. Temporary crash cushion arrays shall not encroach on the traveled way.
6. Arrays for median shoulders shall conform to details shown on this plan for outside shoulders.
7. Place the Type P marker panel so that the bottom of the panel rests upon the pallet and faces traffic.
8. Refer to Standard Plan A73B for marker details.
9. For shoulder widths less than 8'-0", appropriate approved crash cushion protection, other than sand filled modules, shall be provided at fixed objects and at approach ends of temporary railing. The specific type of crash cushion shall be as shown on the project plans or as specified in the Special Provisions, or if not shown on the project plans or specified in the Special Provisions, shall be as approved by the Engineer.
10. Approach speeds indicated conform to NCHRP 350 Report criteria.
11. Use of pallets is optional.

STATE OF CALIFORNIA
DEPARTMENT OF TRANSPORTATION

TEMPORARY CRASH CUSHION, SAND FILLED (SHOULDER INSTALLATIONS)

NO SCALE

RSP T2 DATED JUNE 6, 2008 SUPERSEDES STANDARD PLAN T2
DATED MAY 1, 2006 - PAGE 213 OF THE STANDARD PLANS BOOK DATED MAY 2006.

REVISED STANDARD PLAN RSP T2

2006 REVISED STANDARD PLAN RSP T2

5-15-08

DIST	COUNTY	ROUTE	POST MILES TOTAL PROJECT	SHEET NO.	TOTAL SHEETS
06	Fre	99	26.7/30.6	194	242

Robert B Schott
LICENSED LANDSCAPE ARCHITECT

April 3, 2009
PLANS APPROVAL DATE

The State of California or its officers or agents shall not be responsible for the accuracy or completeness of electronic copies of this plan sheet.

LICENSED LANDSCAPE ARCHITECT — Robert B. Schott 3035 — 11-30-10 Renewal Date — 2-25-09 Date — STATE OF CALIFORNIA

To accompany plans dated 9-28-09

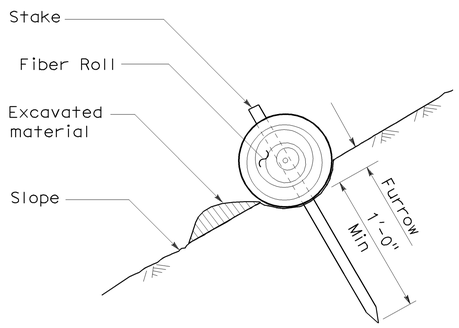

SECTION

TEMPORARY FIBER ROLL (TYPE 1)

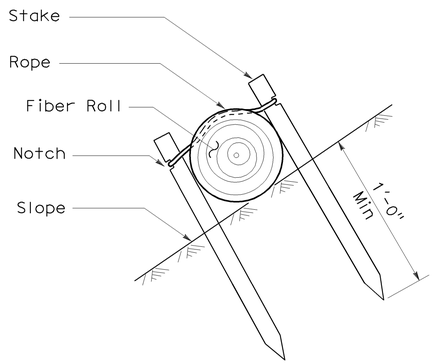

SECTION

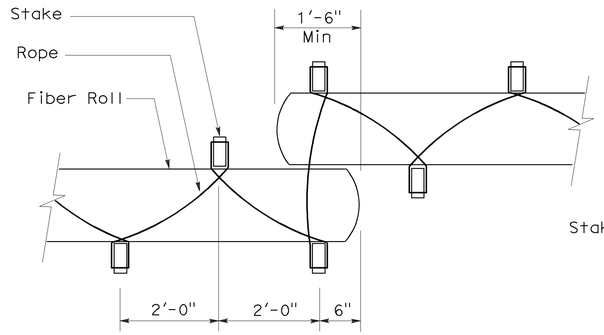

PLAN

TEMPORARY FIBER ROLL (TYPE 2)

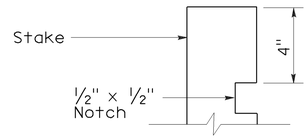

ELEVATION

STAKE NOTCH DETAIL

NOTES:

1. Temporary fiber roll spacing varies depending upon slope inclination.
2. Installations shown in the perspectives are for slope inclination of 10:1 and steeper.

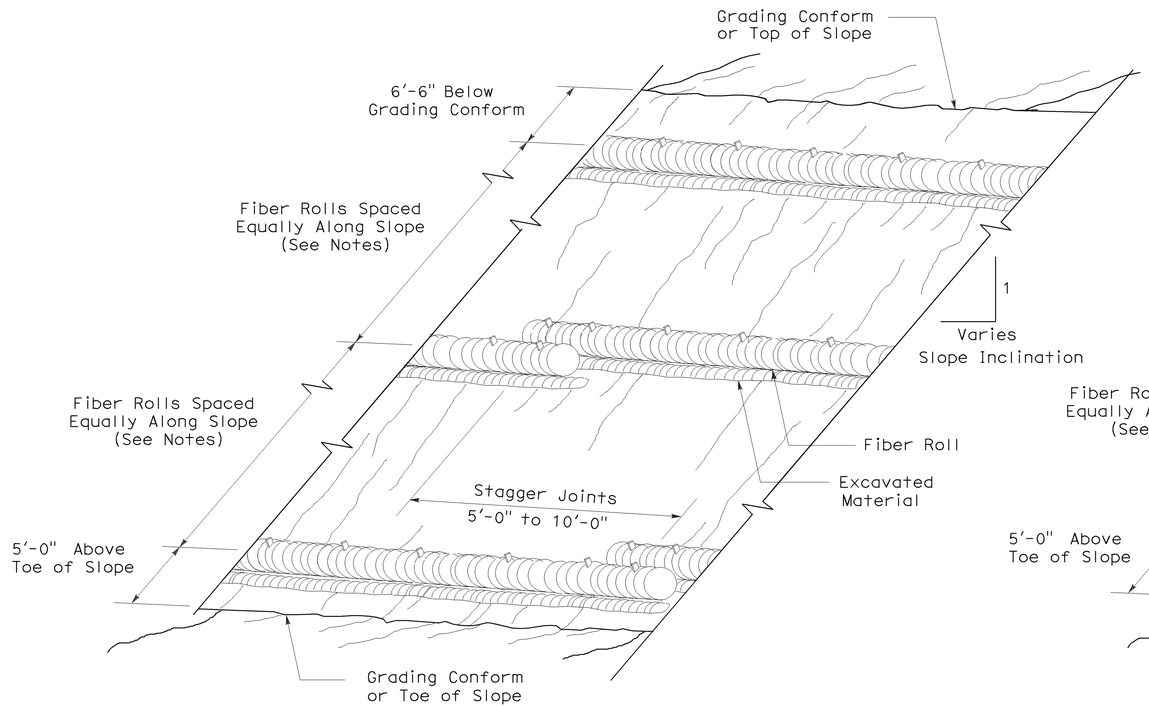

PERSPECTIVE

TEMPORARY FIBER ROLL (TYPE 1)

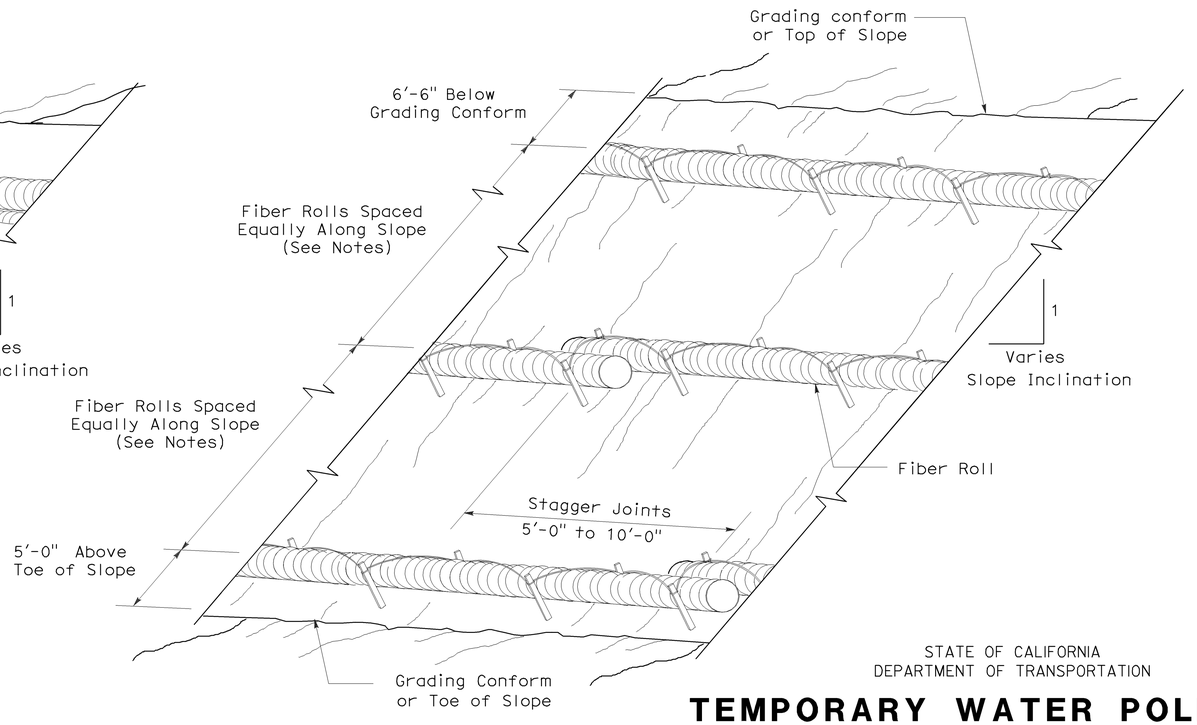

PERSPECTIVE

TEMPORARY FIBER ROLL (TYPE 2)

STATE OF CALIFORNIA
DEPARTMENT OF TRANSPORTATION

TEMPORARY WATER POLLUTION CONTROL DETAILS (TEMPORARY FIBER ROLL)

NO SCALE

RSP T56 DATED APRIL 3, 2009 SUPERSEDES STANDARD PLAN T56
DATED MAY 1, 2006 - PAGE 232 OF THE STANDARD PLANS BOOK DATED MAY 2006.

REVISED STANDARD PLAN RSP T56

2006 REVISED STANDARD PLAN RSP T56

2-23-09

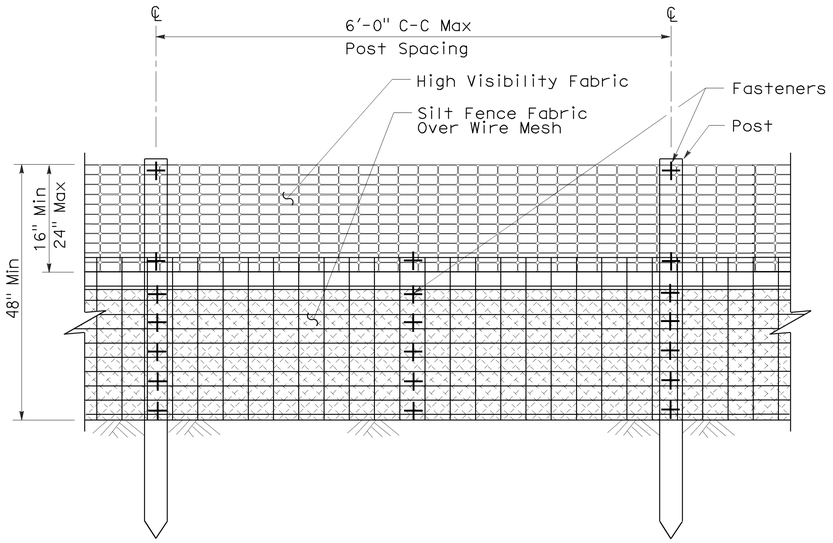

ELEVATION

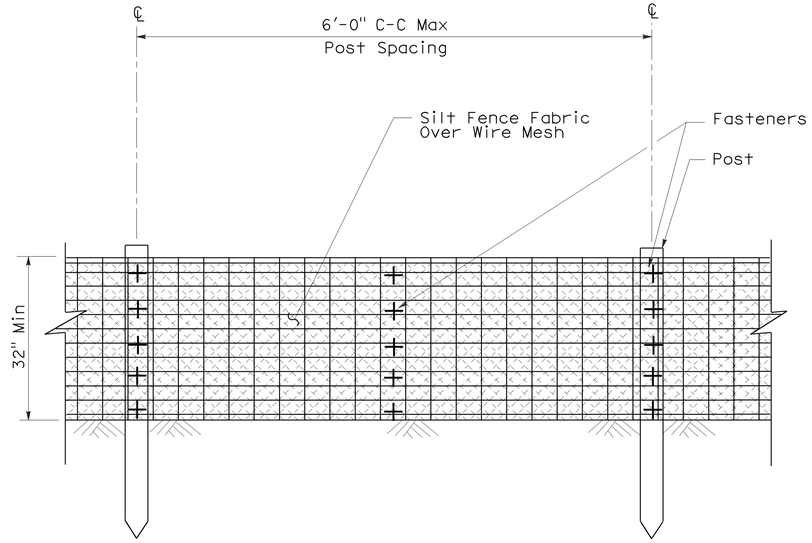

ELEVATION

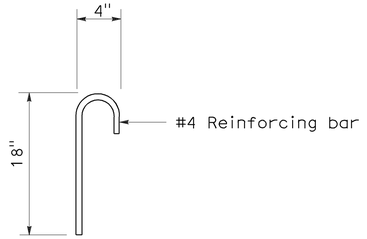

ANCHOR

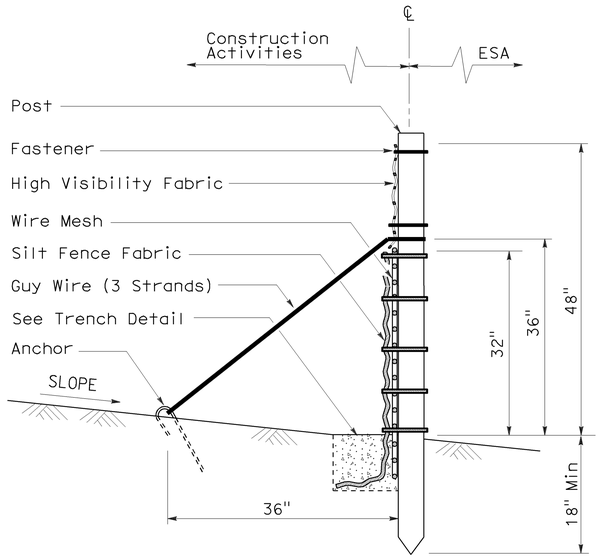

SECTION

TEMPORARY REINFORCED SILT FENCE (TYPE 1)

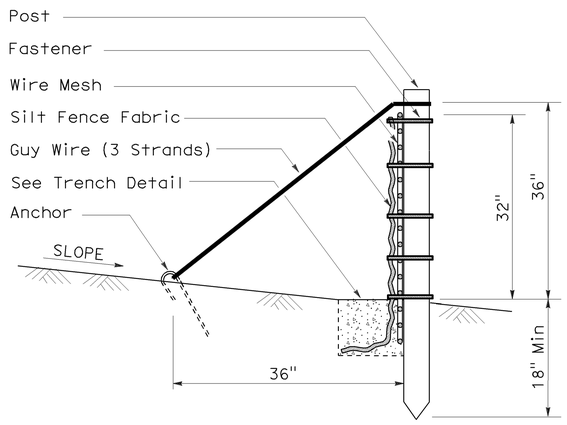

SECTION

TEMPORARY REINFORCED SILT FENCE (TYPE 2)

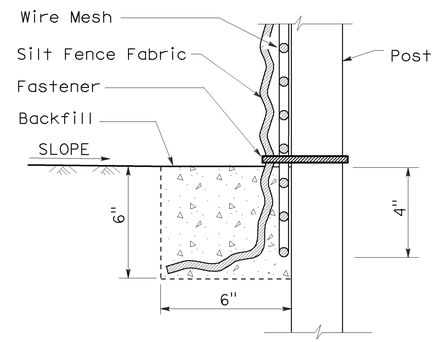

SECTION

TRENCH DETAIL

DIST	COUNTY	ROUTE	POST MILES TOTAL PROJECT	SHEET NO.	TOTAL SHEETS
06	Fre	99	26.7/30.6	195	242

Robert B Schott
LICENSED LANDSCAPE ARCHITECT

April 3, 2009
PLANS APPROVAL DATE

LICENSED LANDSCAPE ARCHITECT
Robert B. Schott 3625
Signature
11-30-10
Renewal Date
2-25-09
Date
STATE OF CALIFORNIA

The State of California or its officers or agents shall not be responsible for the accuracy or completeness of electronic copies of this plan sheet.

To accompany plans dated 9-28-09

STATE OF CALIFORNIA
DEPARTMENT OF TRANSPORTATION

TEMPORARY WATER POLLUTION CONTROL DETAILS (TEMPORARY REINFORCED SILT FENCE)

NO SCALE

NSP T60 DATED APRIL 3, 2009 SUPPLEMENTS
THE STANDARD PLANS BOOK DATED MAY 2006.

NEW STANDARD PLAN NSP T60

2006 NEW STANDARD PLAN NSP T60

1-7-09

DIST	COUNTY	ROUTE	POST MILES TOTAL PROJECT	SHEET NO.	TOTAL SHEETS
06	Fre	99	26.7/30.6	196	242

Robert B Schott
LICENSED LANDSCAPE ARCHITECT

August 15, 2008
PLANS Approval DATE

LICENSED LANDSCAPE ARCHITECT — Robert B. Schott 3825 — Signature — 11-04-08 Renewal Date — 08-11-08 Date — STATE OF CALIFORNIA

The State of California or its officers or agents shall not be responsible for the accuracy or completeness of electronic copies of this plan sheet.

To accompany plans dated 9-28-09

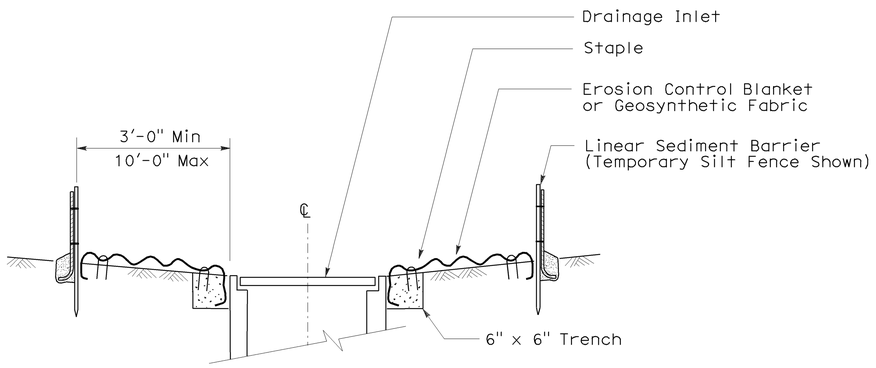

SECTION A-A

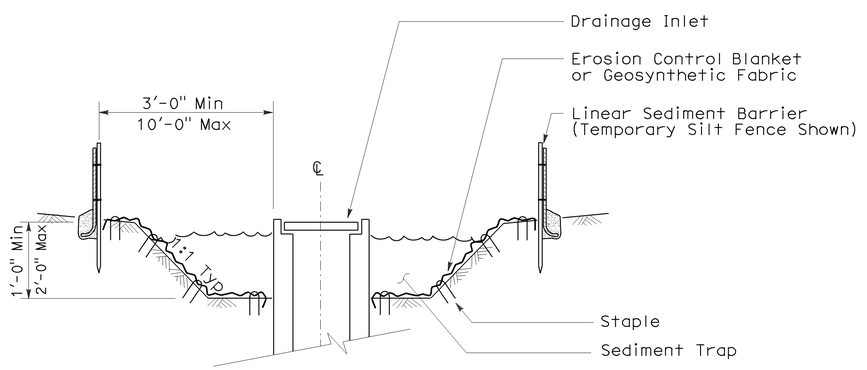

SECTION B-B

NOTES:

1. See Standard Plan T51 for Temporary Silt Fence.
2. Dimensions may vary to fit field conditions.

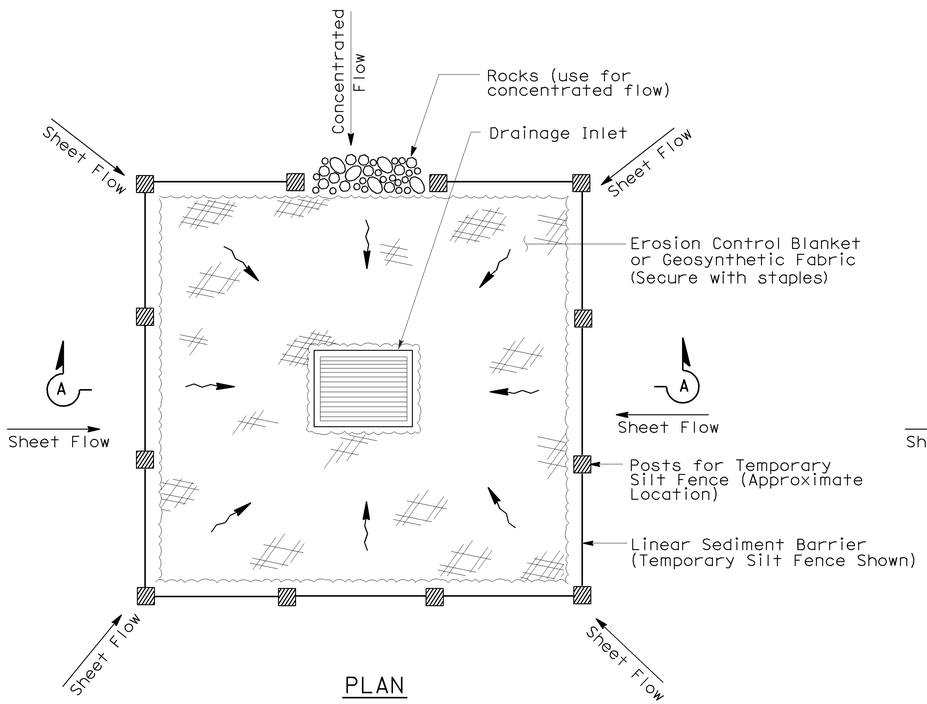

PLAN

TEMPORARY DRAINAGE INLET PROTECTION (TYPE 1)

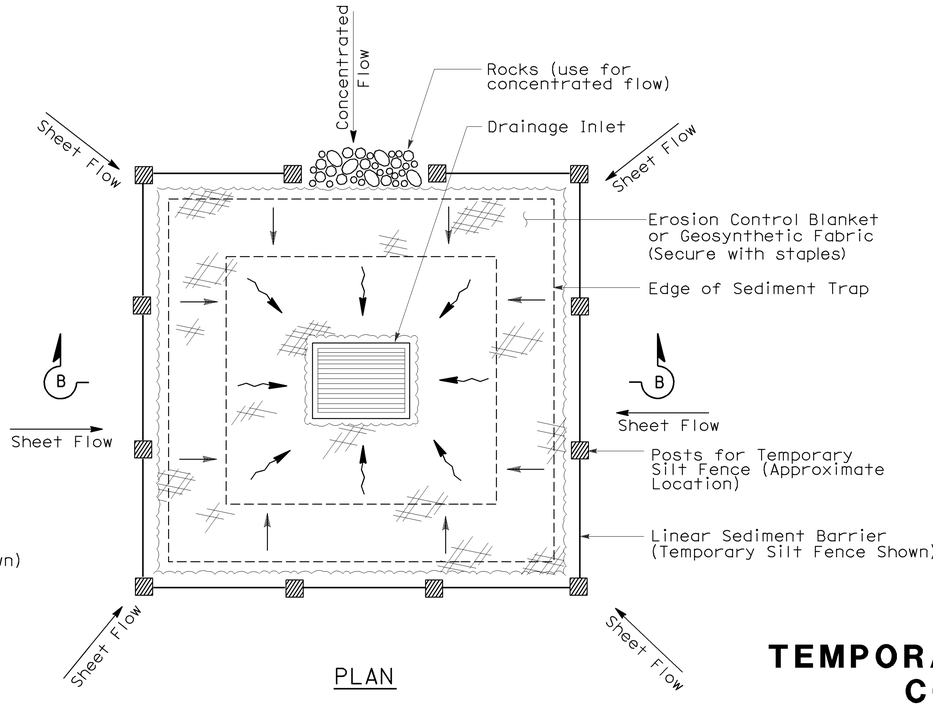

PLAN

TEMPORARY DRAINAGE INLET PROTECTION (TYPE 2) (EXCAVATED SEDIMENT TRAP)

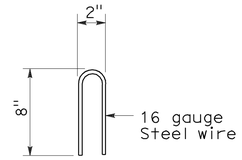

STAPLE DETAIL

STATE OF CALIFORNIA
DEPARTMENT OF TRANSPORTATION

TEMPORARY WATER POLLUTION CONTROL DETAILS (TEMPORARY DRAINAGE INLET PROTECTION)

NO SCALE

NSP T61 DATED AUGUST 15, 2008 SUPPLEMENTS THE STANDARD PLANS BOOK DATED MAY 2006.

NEW STANDARD PLAN NSP T61

2006 NEW STANDARD PLAN NSP T61

7-11-08

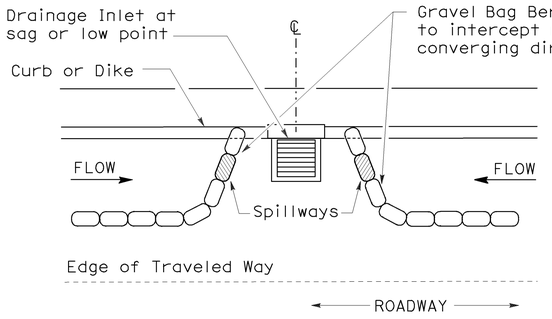

PLAN

CONFIGURATION FOR SAG POINT INLET (GRAVEL BAG BERM)

GRAVEL BAG BERM (TYPE 3A) SPACING TABLE

SLOPE OF ROADWAY (PERCENT)	1 to 3.9	4 to 5.9	6 to 7.9	8 to 10	10+
INTERVAL BETWEEN BERM	100′	75′	50′	25′	12′

For slope of less than 1%, install barriers only if erosion/sediment is prevalent

DIST	COUNTY	ROUTE	POST MILES TOTAL PROJECT	SHEET NO.	TOTAL SHEETS
06	Fre	99	26.7/30.6	197	242

Robert B Schott
LICENSED LANDSCAPE ARCHITECT

August 15, 2008
PLANS APPROVAL DATE

LICENSED LANDSCAPE ARCHITECT Robert B. Schott 3825 Signature 11-04-08 Renewal Date 08-11-08 Date STATE OF CALIFORNIA

The State of California or its officers or agents shall not be responsible for the accuracy or completeness of electronic copies of this plan sheet.

To accompany plans dated 9-28-09

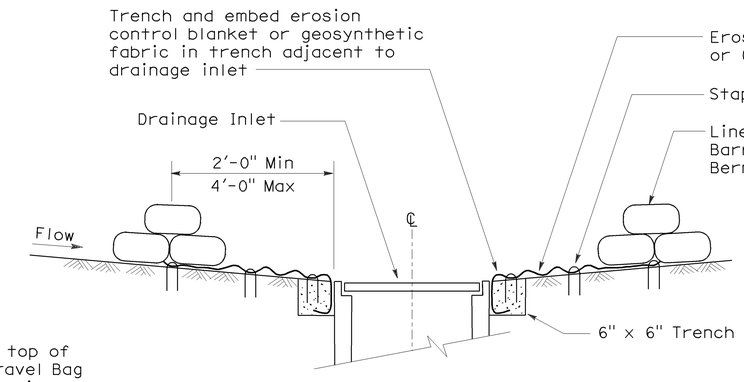

SECTION A-A

NOTES:

1. Place safety cones adjacent to drainage inlet protection.
2. Dimensions may vary to fit field conditions.
3. Install a minimum of 3 gravel bag berms upstream of each drainage inlet to be protected.
4. Position erosion control blanket or geosynthetic fabric at edge of concrete apron and secure in trench.
5. Erosion control blanket or geosynthetic fabric is not required if the area adjacent to the drainage inlet is vegetated or paved.

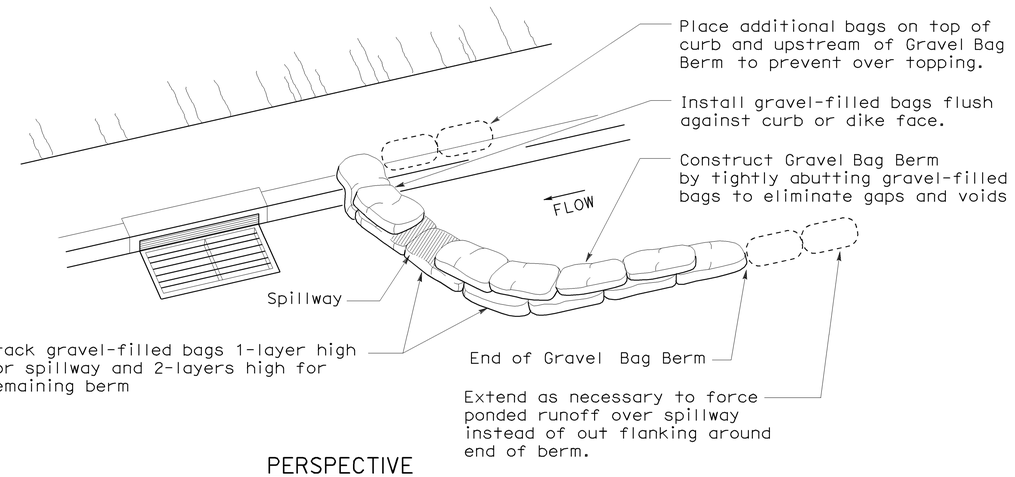

PERSPECTIVE

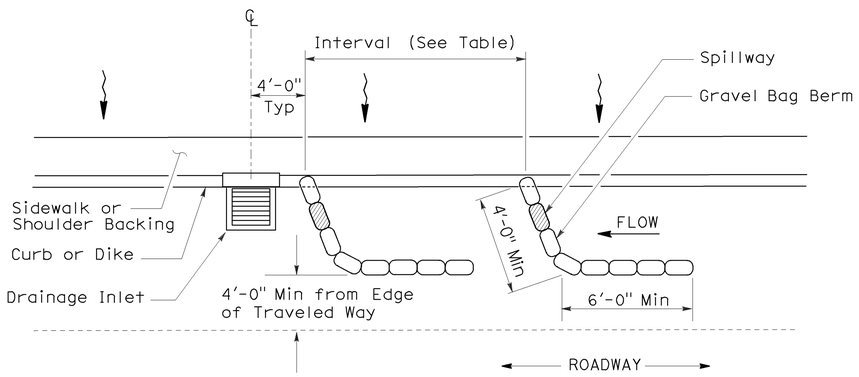

PLAN

TEMPORARY DRAINAGE INLET PROTECTION (TYPE 3A) (GRAVEL BAG BERM)

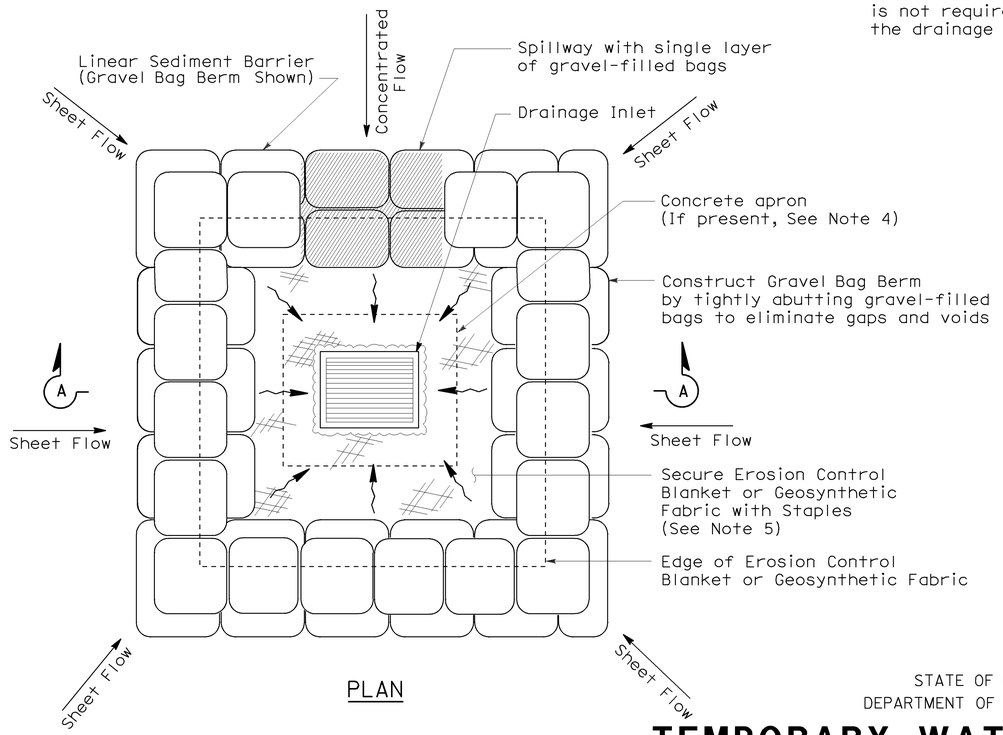

PLAN

TEMPORARY DRAINAGE INLET PROTECTION (TYPE 3B)

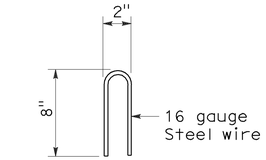

STAPLE DETAIL

STATE OF CALIFORNIA
DEPARTMENT OF TRANSPORTATION

TEMPORARY WATER POLLUTION CONTROL DETAILS (TEMPORARY DRAINAGE INLET PROTECTION)

NO SCALE

NSP T62 DATED AUGUST 15, 2008 SUPPLEMENTS THE STANDARD PLANS BOOK DATED MAY 2006.

NEW STANDARD PLAN NSP T62

2006 NEW STANDARD PLAN NSP T62

7-11-08

DIST	COUNTY	ROUTE	POST MILES TOTAL PROJECT	SHEET NO.	TOTAL SHEETS
06	Fre	99	26.7/30.6	198	242

Robert B Schott
LICENSED LANDSCAPE ARCHITECT

August 15, 2008
PLANS APPROVAL DATE

The State of California or its officers or agents shall not be responsible for the accuracy or completeness of electronic copies of this plan sheet.

LICENSED LANDSCAPE ARCHITECT — Robert B. Schott 3825 — Signature — 11-04-08 Renewal Date — 08-11-08 Date — STATE OF CALIFORNIA

To accompany plans dated 9-28-09

FLEXIBLE SEDIMENT BARRIER SPACING TABLE

SLOPE OF ROADWAY (PERCENT)	0 to 0.9	1 to 1.9	2 to 2.9	3 to 4	5+
INTERVAL BETWEEN BARRIERS	50′	35′	30′	25′	20′
ANGLE FROM FACE OF CURB	70°	70°	70°	45°	45°
SUGGESTED BARRIER LENGTH	6′	6′	6′	6′	6′

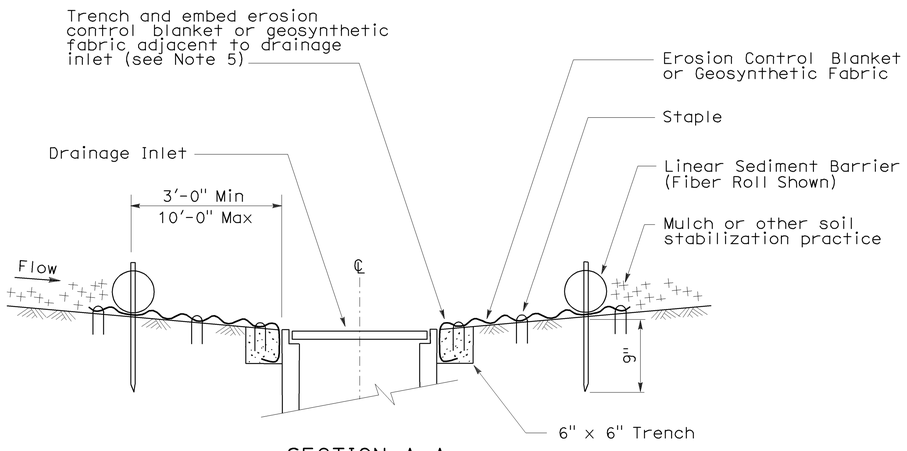

SECTION A-A

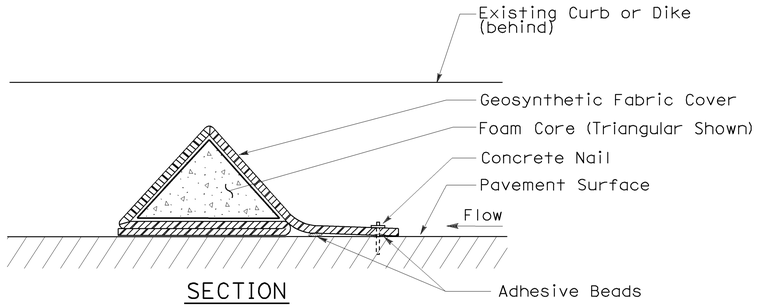

SECTION

FLEXIBLE SEDIMENT BARRIER DETAIL (FOAM BARRIER SHOWN)

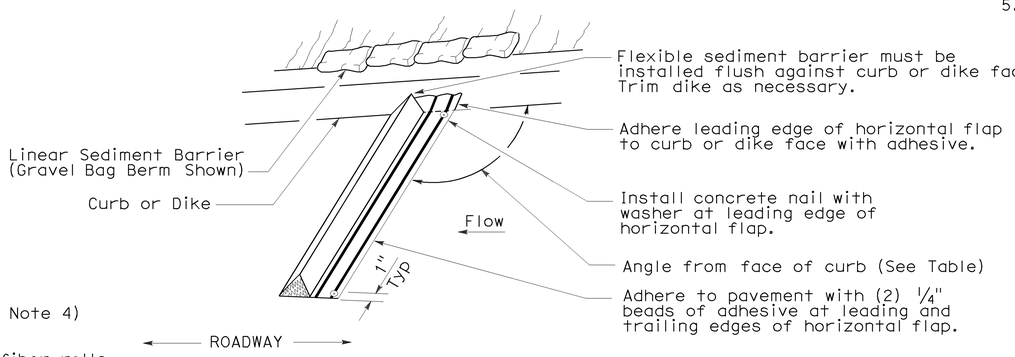

PERSPECTIVE

NOTES:

1. See Standard Plan T51 for Temporary Silt Fence.
2. Dimensions may vary to fit field conditions.
3. Install a minimum of 3 flexible sediment barriers upstream of each drainage inlet to be protected.
4. Position erosion control blanket or geosynthetic fabric at edge of concrete apron and secure in trench.
5. Erosion control blanket or geosynthetic fabric is not required if the area adjacent to the drainage inlet is vegetated.

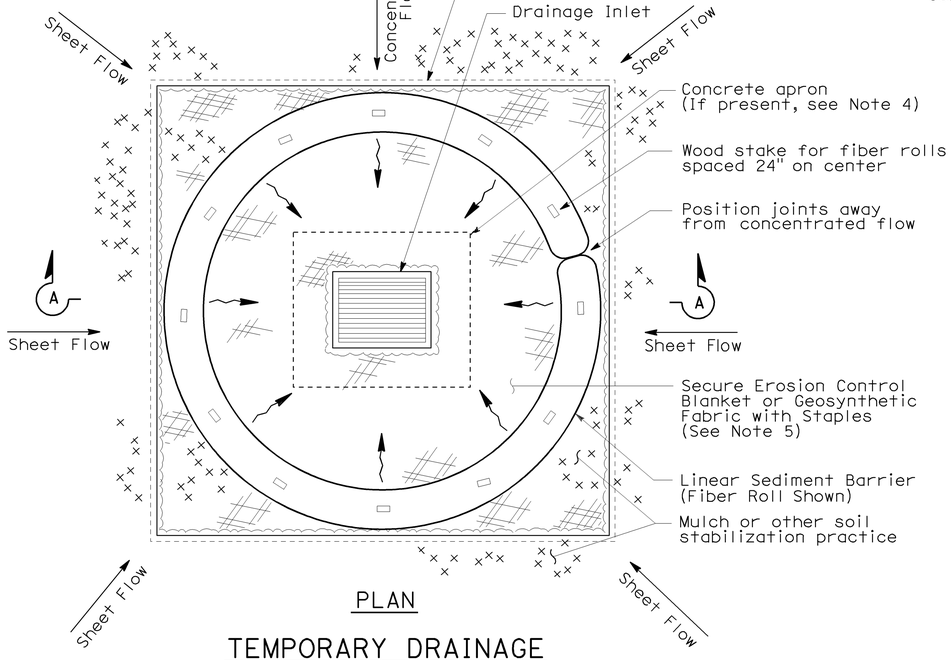

PLAN

TEMPORARY DRAINAGE INLET PROTECTION (TYPE 4A)

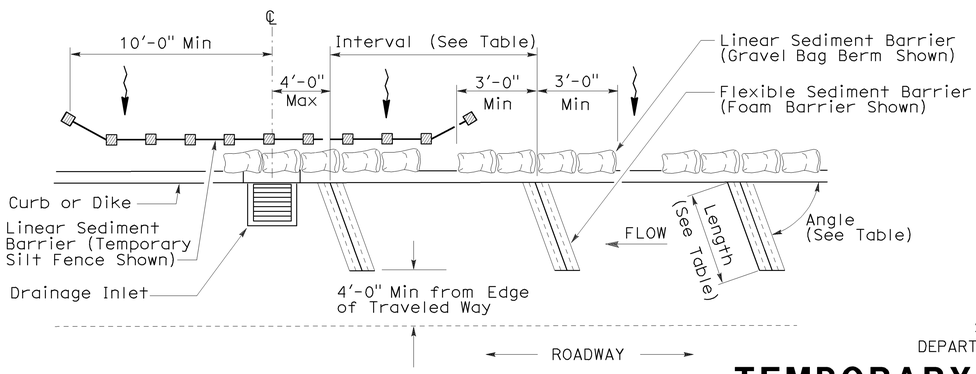

PLAN

TEMPORARY DRAINAGE INLET PROTECTION (TYPE 4B) FLEXIBLE SEDIMENT BARRIER

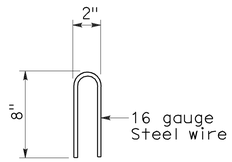

STAPLE DETAIL

STATE OF CALIFORNIA
DEPARTMENT OF TRANSPORTATION

TEMPORARY WATER POLLUTION CONTROL DETAILS (TEMPORARY DRAINAGE INLET PROTECTION)

NO SCALE

NSP T63 DATED AUGUST 15, 2008 SUPPLEMENTS THE STANDARD PLANS BOOK DATED MAY 2006.

NEW STANDARD PLAN NSP T63

2006 NEW STANDARD PLAN NSP T63

7-11-08

DIST	COUNTY	ROUTE	POST MILES TOTAL PROJECT	SHEET NO.	TOTAL SHEETS
06	Fre	99	26.7/30.6	199	242

Robert B Schott
LICENSED LANDSCAPE ARCHITECT

August 15, 2008
PLANS APPROVAL DATE

LICENSED LANDSCAPE ARCHITECT — Robert B. Schott 3825 — Signature — 11-04-08 Renewal Date — 08-11-08 Date — STATE OF CALIFORNIA

The State of California or its officers or agents shall not be responsible for the accuracy or completeness of electronic copies of this plan sheet.

To accompany plans dated 9-28-09

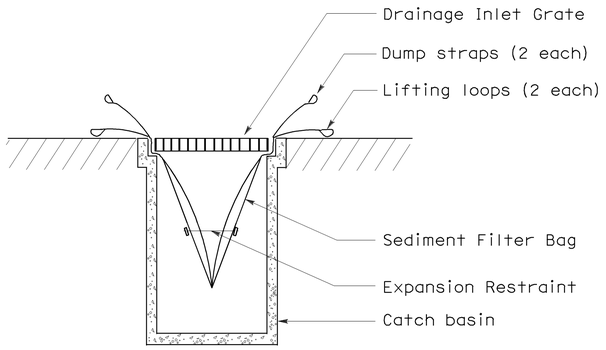

SECTION B-B

SEDIMENT FILTER BAG DETAIL

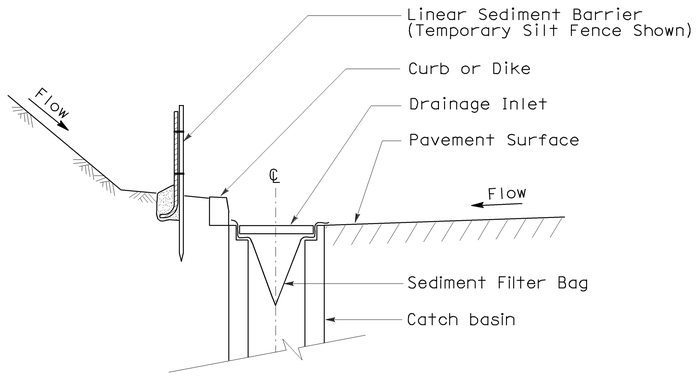

SECTION A-A

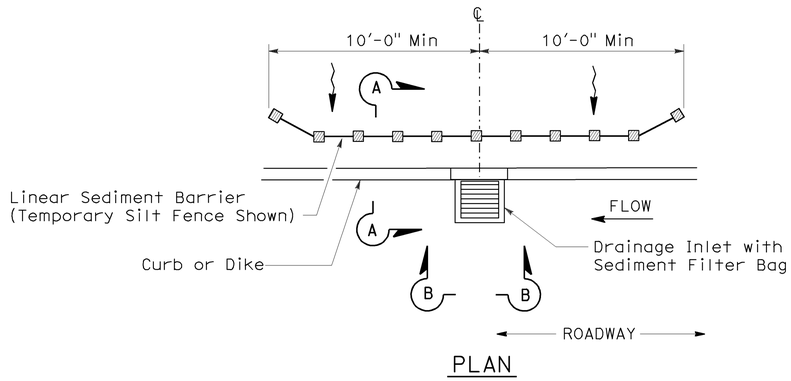

PLAN

TEMPORARY DRAINAGE INLET PROTECTION (TYPE 5) (SEDIMENT FILTER BAG)

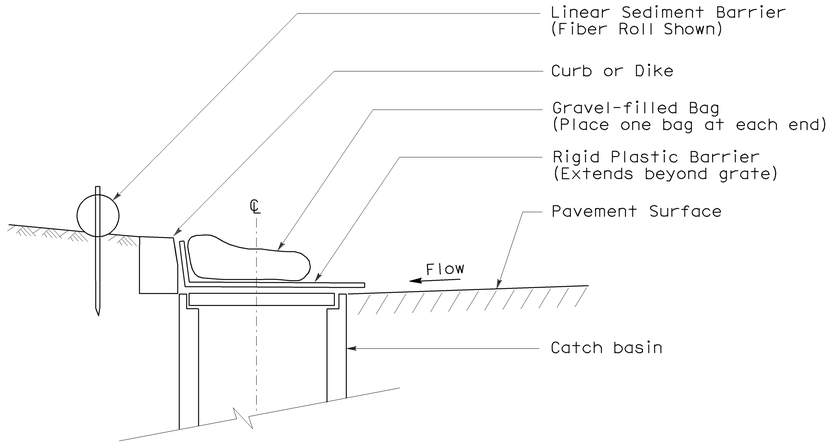

SECTION

TEMPORARY DRAINAGE INLET PROTECTION (TYPE 6A) (CATCH BASIN WITH GRATE)

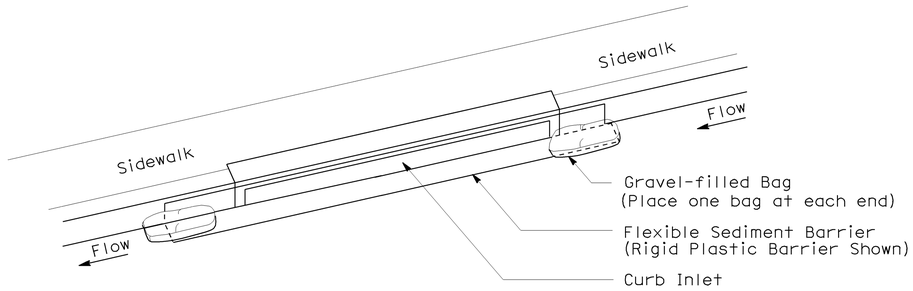

PERSPECTIVE

TEMPORARY DRAINAGE INLET PROTECTION (TYPE 6B) (CURB INLET WITHOUT GRATE)

NOTES:

1. See Standard Plan T51 for Temporary Silt Fence.
2. Dimensions may vary to fit field conditions.

STATE OF CALIFORNIA
DEPARTMENT OF TRANSPORTATION

TEMPORARY WATER POLLUTION CONTROL DETAILS (TEMPORARY DRAINAGE INLET PROTECTION)

NO SCALE

NSP T64 DATED AUGUST 15, 2008 SUPPLEMENTS THE STANDARD PLANS BOOK DATED MAY 2006.

NEW STANDARD PLAN NSP T64

2006 NEW STANDARD PLAN NSP T64

7-11-08

DIST	COUNTY	ROUTE	POST MILES TOTAL PROJECT	SHEET NO.	TOTAL SHEETS
06	Fre	99	26.7/30.6	200	242

Robert B Schott
LICENSED LANDSCAPE ARCHITECT

April 3, 2009
PLANS APPROVAL DATE

LICENSED LANDSCAPE ARCHITECT — Robert B. Schott 3625 — Signature — 11-30-10 Renewal Date — 2-25-09 Date — STATE OF CALIFORNIA

The State of California or its officers or agents shall not be responsible for the accuracy or completeness of electronic copies of this plan sheet.

To accompany plans dated 9-28-09

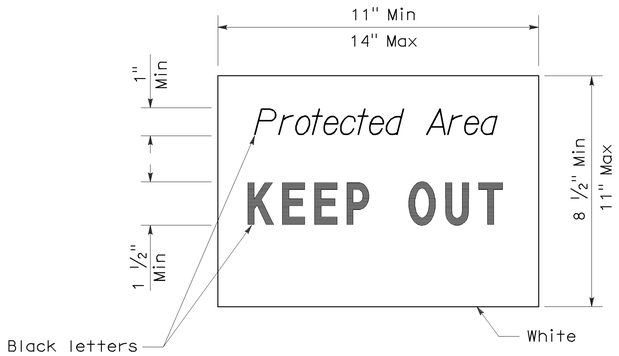

SIGN DETAIL

NOTE:

1. Temporary silt fence and temporary straw bale barrier shown for reference purposes only.

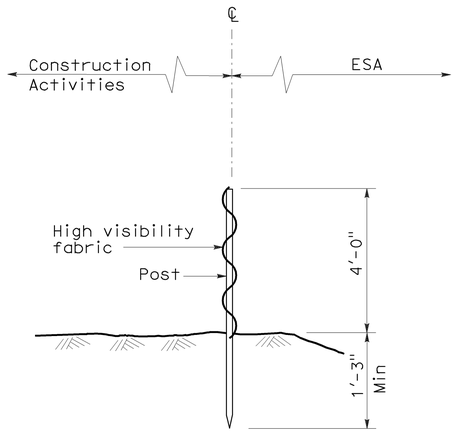

SECTION
TEMPORARY FENCE (TYPE ESA)

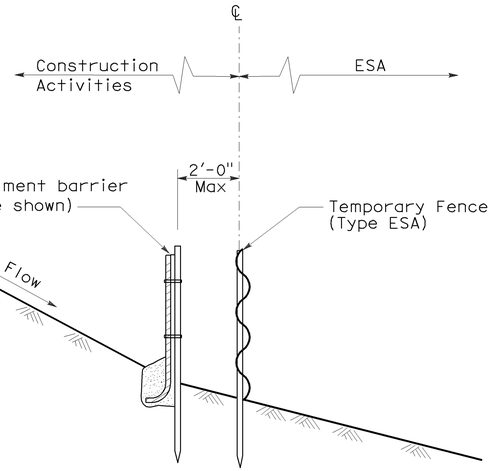

SECTION
PLACEMENT DETAIL
FOR TEMPORARY LINEAR SEDIMENT BARRIER
USED WITH TEMPORARY
FENCE (TYPE ESA)
(See Note 1)

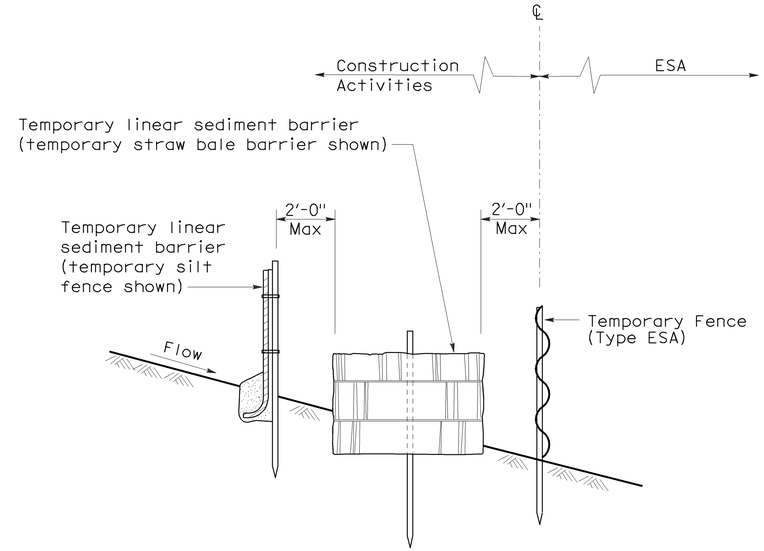

SECTION
PLACEMENT DETAIL
FOR TEMPORARY SILT FENCE
AND TEMPORARY STRAW BALE BARRIER
USED WITH TEMPORARY FENCE (TYPE ESA)
(See Note 1)

STATE OF CALIFORNIA
DEPARTMENT OF TRANSPORTATION

TEMPORARY WATER POLLUTION CONTROL DETAILS [TEMPORARY FENCE (TYPE ESA)]

NO SCALE

NSP T65 DATED APRIL 3, 2009 SUPPLEMENTS
THE STANDARD PLANS BOOK DATED MAY 2006.

NEW STANDARD PLAN NSP T65

2006 NEW STANDARD PLAN NSP T65

1-7-09

DIST	COUNTY	ROUTE	POST MILES TOTAL PROJECT	SHEET NO.	TOTAL SHEETS
06	Fre	99	26.7/30.6	201	242

Jeffery G. McRae
REGISTERED ELECTRICAL ENGINEER

October 5, 2007
PLANS APPROVAL DATE

REGISTERED PROFESSIONAL ENGINEER — Jeffery G. McRae — No. E14512 — Exp. 6-30-08 — ELECTRICAL — STATE OF CALIFORNIA

The State of California or its officers or agents shall not be responsible for the accuracy or completeness of electronic copies of this plan sheet.

To accompany plans dated 9-28-09

ELECTROLIERS

STANDARD TYPES
15, 15D
15 STRUCTURE
21, 21D STRUCTURE
30
31
32
35
36-20A

High mast light pole

Double Arm lighting standard

Existing electrolier

Electrolier foundation (Future installation)

NOTES:

1. Luminaires shall be 310 W HPS when installed on Type 21, 21D, 30, 31, 32, 35 and 36-20A Standards, unless otherwise specified. Luminaires shall be 200 W HPS when installed on other type standards or poles, unless otherwise specified.
2. Luminaires shall be the cutoff type, ANSI Type III medium cutoff lighting distribution, unless otherwise specified.
3. Variations noted adjacent to symbol on project plans.

Electrolier (see project notes or project plans)

Luminaire on wood pole

STANDARD NOTES:

- AB — Abandon. If applied to conduit, remove conductors.
- BC — Install pull box in existing conduit run.
- BP — Pedestrian barricade, type as indicated on plan.
- CB — Install conduit into existing pull box.
- CC — Connect new and existing conduit. Remove existing conductors and install conductors as indicated.
- CF — Conduit to remain for future use. Remove conductors. Install pull wire or rope.
- DH — Detector handhole.
- FA — Foundation to be abandoned.
- IS — Install sign on signal mast arm.
- NS — No slip base on standard.
- PEC — Photoelectric control.
- PEU — Photoelectric unit.
- RC — Equipment or material to be removed and become the property of the Contractor.
- RE — Remove electrolier, fuses and ballast. Tape ends of conductors.
- RL — Relocate equipment.
- RR — Remove and reuse equipment.
- RS — Remove and salvage equipment.
- SC — Splice new to existing conductors.
- SD — Service disconnect.
- SF — Standard to remain for future use. Remove luminaire, pole conductors, fuses and ballast.
- TSP — Telephone service point.

ABBREVIATIONS AND EQUIPMENT DESIGNATIONS

PROPOSED	EXISTING	
BBS	bbs	Battery backup system
BC	bc	Bolt circle
C	C	Conduit
CCTV	cctv	Closed circuit television
CKT	ckt	Circuit
CMS	cms	Changeable message sign
DLC	dlc	Loop detector lead-in cable
EMS	ems	Extinguishable message sign
EVC	evc	Emergency vehicle cable
EVD	evd	Emergency vehicle detector
FB	fb	Flashing beacon
FBCA	fbca	Flashing beacon control assembly
FBS	fbs	Flashing beacon with slip base
FO	fo	Fiber optic
G	G	Ground (Equipment Grounding Conductor)
GFCI	GFCI	Ground fault circuit interrupt
HAR	har	Highway advisory radio
HEX	hex	Hexagonal
HPS	hps	High pressure sodium
IISNS	iisns	Internally illuminated street name sign
ISL	isl	Induction sign lighting
LED	led	Light emitting diode
LMA	lma	Luminaire mast arm
LPS	lps	Low pressure sodium
LTG	ltg	Lighting
LUM	lum	Luminaire
MAT	mat	Mast arm mounting vehicle signal faces, top attachment
MAS	mas	Mast arm mounting vehicle signal faces, side attachment
MAS-4A	mas-4A	Mast arm mounting vehicle signal faces,
MAS-4B	mas-4B	side attachment - 4 signal section
MAS-4C	mas-4C	
MAS-5A	mas-5A	Mast arm mounting vehicle signal faces,
MAS-5B	mas-5B	side attachment - 5 signal section
MC	mc	Mercury contactor
M/M	m/m	Multiple to multiple transformer
MT	mt	Conduit with pull wire or rope only
MTG	mtg	Mounting
	mv	Mercury vapor lighting fixture
N	N	Neutral (Grounded Conductor)
NC	NC	Normally closed
NO	NO	Normally open
PB	pb	Pull box
PEC	pec	Photoelectric control (Type I, II, III, IV or V as shown)
PED	ped	Pedestrian
PEU	peu	Photoelectric unit
PPB	ppb	Pedestrian push button
RL		Relocated equipment
RM	rm	Ramp metering
SB	sb	Slip base
SIC	sic	Signal interconnect cable
SIG	sig	Signal
SMA	sma	Signal mast arm
SNS	sns	Street name sign
SP	sp	Service point
TDC	tdc	Telephone demarcation cabinet
TMS	tms	Traffic monitoring station
TOS	tos	Traffic Operations System
VEH	veh	Vehicle
XFMR	xfmr	Transformer
COMM	comm	Communication
RWIS	rwis	Roadway weather information system

SOFFIT AND WALL MOUNTED LUMINAIRES

- Pendant, 70 W HPS unless otherwise specified.
- Flush, 70 W HPS unless otherwise specified.
- Wall surface, 70 W HPS unless otherwise specified.
- Existing soffit or wall luminaire to remain unmodified.
- (M) Existing soffit or wall luminaire to be modified as specified.

NOTE:
Arrow indicates "street side" of luminaire.

STATE OF CALIFORNIA
DEPARTMENT OF TRANSPORTATION

ELECTRICAL SYSTEMS (SYMBOLS AND ABBREVIATIONS)

NO SCALE

RSP ES-1A DATED OCTOBER 5, 2007 SUPERSEDES STANDARD PLAN ES-1A
DATED MAY 1, 2006 - PAGE 400 OF THE STANDARD PLANS BOOK DATED MAY 2006.

REVISED STANDARD PLAN RSP ES-1A

2006 REVISED STANDARD PLAN RSP ES-1A

7-10-07

DIST	COUNTY	ROUTE	POST MILES TOTAL PROJECT	SHEET NO.	TOTAL SHEETS
06	Fre	99	26.7/30.6	202	242

Jeffery G. McRae
REGISTERED ELECTRICAL ENGINEER

October 5, 2007
PLANS APPROVAL DATE

REGISTERED PROFESSIONAL ENGINEER — Jeffery G. McRae — No. E14512 — Exp. 6-30-08 ELECTRICAL — STATE OF CALIFORNIA

The State of California or its officers or agents shall not be responsible for the accuracy or completeness of electronic copies of this plan sheet.

To accompany plans dated 9-28-09

CONDUIT

PROPOSED	EXISTING	
— — —	— — —	Lighting Conduit, unless otherwise indicated or noted
— - — - —	— - — - —	Traffic signal conduit
—C— —	—c— —	Communication conduit
—T— —	—t— —	Telephone conduit
—F— —	—f— —	Fire alarm conduit
—FO— —	—fo— —	Fiber optic conduit
— — —]	— — —]	Conduit termination (RSP ES-9A C)
R	r	Conduit riser in/on structure or service pole

SERVICE EQUIPMENT

PROPOSED	EXISTING	
—OH—	—oh—	Overhead lines
U	U	Wood pole "U" indicates utility owned
		Pole guy with anchor
		Utility transformer - ground mounted
III		Service equipment enclosure type
		Service equipment enclosure door indicates front of enclosure
T	t	Telephone demarcation cabinet

POLE-MOUNTED SERVICE DESIGNATION

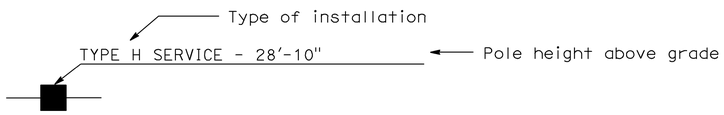

ILLUMINATED OVERHEAD SIGN

PROPOSED	EXISTING	
		Overhead sign - Single post
		Overhead sign - Two post
		Overhead sign - Mounted on structure
		Overhead sign with electrolier

SIGNAL EQUIPMENT

PROPOSED	EXISTING	
		Pedestrian signal face
		Pedestrian push button post
		Pedestrian barricade
		Vehicle signal face (with backplate, 3-Section: red, yellow and green)
		Vehicle signal face with angle visors
PV	PV	Modifications of basic symbols: "L" Indicates all non-arrow sections louvered "LG" Indicates louvered green section only "PV" Indicates 12" programmed visibility sections "8" indicates all 8" sections (only when specified)
		Type 15TS and Vehicle signal face
		Vehicle signal face with red, yellow and green left arrow sections
		Vehicle signal face with red and yellow sections and up green arrow
		Vehicle signal face (5 Section) with red, yellow and green sections and yellow and green right arrows
		Type 1 Standard and attached vehicle signal faces
		Standard with signal mast arm only and attached vehicle signal faces and internally illuminated street name sign
		Type 33 Standard, Left-turn vehicle signal face and sign
		Standard with luminaire and signal mast arms and attached vehicle signal faces
		Cantilever flashing beacon Type 9 Frame, with a sign unless otherwise specified or indicated
		Type 15-FBS Standard with two vehicle signal face sections with lens, backplate and visor with a sign
R	Y	Flashing beacon. One vehicle signal face section with lens, backplate and visor. "R" indicates red indication, "Y" indicates yellow indication
		Controller assembly. Door indicates front of cabinet

SIGNAL EQUIPMENT Cont

PROPOSED	EXISTING	
●	○	Guard post
		Type 1 Standard with "Meter On" sign
		Emergency Vehicle detector

NOTES:

1. All signal sections shall be 12" unless shown otherwise.
2. Signal heads shall be provided with backplates unless shown otherwise.
3. Signal indication shall be LED.

STATE OF CALIFORNIA
DEPARTMENT OF TRANSPORTATION

ELECTRICAL SYSTEMS (SYMBOLS AND ABBREVIATIONS)

NO SCALE

RSP ES-1B DATED OCTOBER 5, 2007 SUPERCEDES STANDARD PLAN ES-1B
DATED MAY 1, 2006 - PAGE 401 OF THE STANDARD PLANS BOOK DATED MAY 2006.

REVISED STANDARD PLAN RSP ES-1B

2006 REVISED STANDARD PLAN RSP ES-1B

7-10-07

DIST	COUNTY	ROUTE	POST MILES TOTAL PROJECT	SHEET NO.	TOTAL SHEETS
06	Fre	99	26.7/30.6	203	242

Jeffery G. McRae
REGISTERED ELECTRICAL ENGINEER

REGISTERED PROFESSIONAL ENGINEER
Jeffery G. McRae
No. E14512
Exp. 6-30-08
ELECTRICAL
STATE OF CALIFORNIA

October 5, 2007
PLANS APPROVAL DATE

The State of California or its officers or agents shall not be responsible for the accuracy or completeness of electronic copies of this plan sheet.

To accompany plans dated 9-28-09

EQUIPMENT IDENTIFICATION

ILLUMINATED SIGN IDENTIFICATION NUMBER:

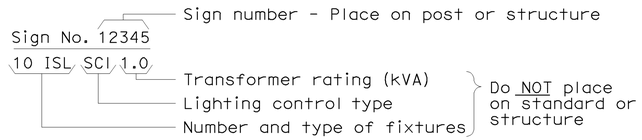

ELECTROLIER OR EQUIPMENT IDENTIFICATION NUMBER:

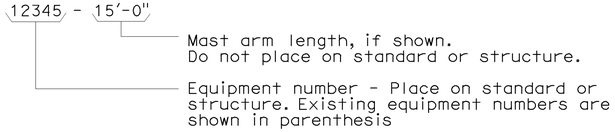

CONDUIT AND CONDUCTOR IDENTIFICATION:

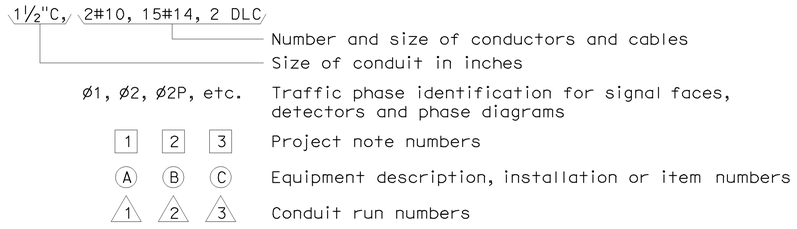

SIGNAL AND LIGHTING STANDARD (TYPICAL DESIGNATION):

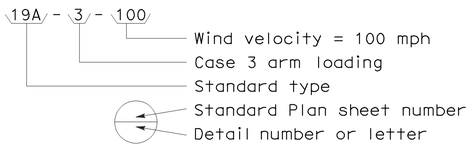

WIRING DIAGRAM LEGEND

P	Pole
CB	Circuit breaker
A	Ampere
V	Volt
M	Metered
UM	Unmetered
NB	Neutral bus
GB	Ground bus
G	Equipment grounding conductor
N	Grounded conductor (Neutral)

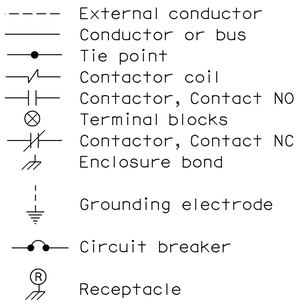

PULL BOXES

PROPOSED EXISTING

Pull box-No. 5 unless otherwise indicated or noted.

Pull box-Additional designations or descriptions

(C) = Communications pull box
(E) = Pull box with extension
(S) = Sprinkler control pull box
(21) = Anchor bolts and conduit for future installation of Type 21 Standard
(T) = Traffic pull box

3 = No. 3½ pull box
5 = No. 5 pull box
6 = No. 6 pull box
7 = No. 7 (Ceiling pull box)
8 = No. 8 (Pendant soffit pull box)
9 = No. 9 pull box
9A = No. 9A pull box

VEHICLE DETECTORS

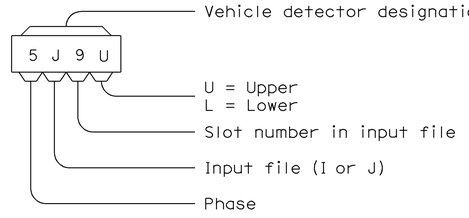

PROPOSED EXISTING

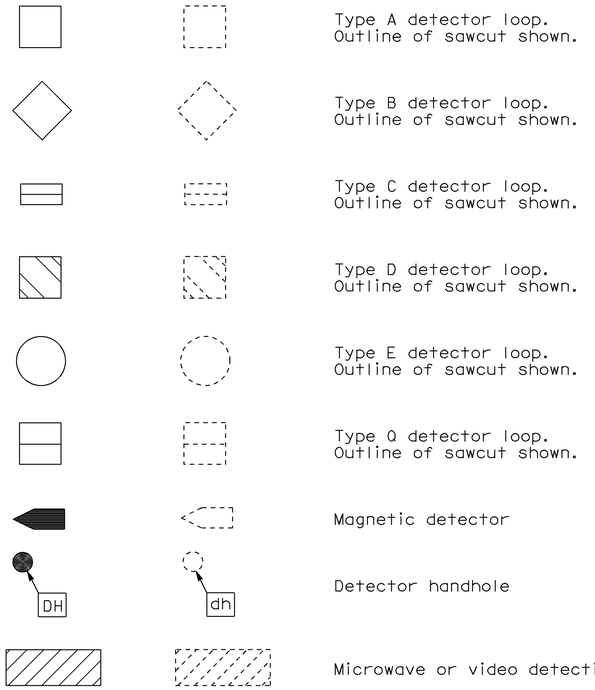

MISCELLANEOUS EQUIPMENT

PROPOSED EXISTING

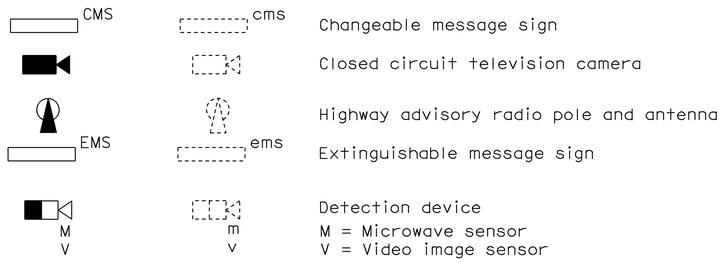

STATE OF CALIFORNIA
DEPARTMENT OF TRANSPORTATION

ELECTRICAL SYSTEMS (SYMBOLS AND ABBREVIATIONS)

NO SCALE

RSP ES-1C DATED OCTOBER 5, 2007 SUPERCEDES STANDARD PLAN ES-1C
DATED MAY 1, 2006 - PAGE 402 OF THE STANDARD PLANS BOOK DATED MAY 2006.

REVISED STANDARD PLAN RSP ES-1C

2006 REVISED STANDARD PLAN RSP ES-1C

7-10-07

DIST	COUNTY	ROUTE	POST MILES TOTAL PROJECT	SHEET NO.	TOTAL SHEETS
06	Fre	99	26.7/30.6	204	242

Jeffery G. McRae
REGISTERED ELECTRICAL ENGINEER

REGISTERED PROFESSIONAL ENGINEER
Jeffery G. McRae
No. E14512
Exp. 6-30-08
ELECTRICAL
STATE OF CALIFORNIA

October 5, 2007
PLANS APPROVAL DATE

The State of California or its officers or agents shall not be responsible for the accuracy or completeness of electronic copies of this plan sheet.

To accompany plans dated 9-28-09

NOTES-TYPE III SERVICE EQUIPMENT ENCLOSURES:

1. Service equipment enclosure and metering equipment shall meet the requirements of the service utility. The meter area shall have a sealable, lockable, weathertight cover that can be removed without the use of tools.

2. Service equipment enclosures shall be factory wired and conform to NEMA standards.

3. Dimensions of service equipment enclosures shall meet the requirements of the service utility.

4. The dead front panels on Type III service equipment enclosures shall have a continuous stainless steel or aluminum piano hinge. The panel in front of the breakers shall be secured with a latch or captive screws. No live parts shall be mounted on the dead front panel.

5. The exterior door shall have provisions for padlocking. The padlock hole shall be a minimum diameter of 7/16".

6. Enclosures housing transformers of more than one kVA shall have effective screened ventilation louver of not less than 50 square inches. Screen shall be stainless steel No. 304, with a No. 10 size mesh. Framed screen shall be secured with at least four bolts.

7. Fasteners on the exterior of the enclosure shall be vandal-resistant and shall not be removable from the exterior. Exterior screws, nuts, bolts and washers shall be stainless steel.

8. Landing lugs for incoming service conductors shall be compatible with either copper or aluminum conductors sized to suit the conductors shown on the plan. Landing lugs shall be copper or tin-plated aluminum. Neutral bus shall be rated for 125 A and be suitable for copper or aluminum conductors unless otherwise specified. The terminal shall include but not be limited to:

   a) Incoming terminals (landing lugs)
   b) Neutral lugs
   c) Solid neutral terminal strip

9. At least 6 standard single pole circuit breaker spaces, 3/4" nominal, shall be provided for branch circuits. Circuit breaker interiors shall be copper. Interiors of enclosure shall accept plug-in or cable-in/cable-out circuit breakers.

10. Control wiring shall be 600 V, 14 stranded machine tool wire. Where subject to flexing, 19 strand wire shall be used.

11. Main bus shall be rated for 125 A and shall be tin-plated copper.

12. A plastic laminated wiring diagram shall be provided with brass mounting eyelets and attached to the inside of the enclosure and the wiring diagram shall be affixed to the interior with a UL or ETL approved method.

13. An engraved phenolic nameplate on the dead front panel indicating the function of each circuit or device shall be installed with stainless steel rivets or stainless steel screws:

    a) Adjacent to the breaker or device with character size a minimum of 1/8".

    b) At the top of the exterior door panel indicating State system number, voltage level and number of phases with character size a minimum of 3/16".

14. The plan shows the approximate location of devices within the enclosure. Components may be rearranged, however, the "working" clearances within the service equipment enclosure shall be maintained.

15. In unpaved areas a raised portland cement concrete pad 2'-0" x 4" x width of foundation shall be constructed in front of new service equipment enclosure installation. Pad shall be set to elevation of foundation.

16. Foundation shall extend 2" minimum beyond edge of service equipment enclosure.

17. Internal bus, where shown, is typical only. Alternative design of proposed service equipment enclosure shall be submitted to the Engineer for approval.

18. Plug-in circuit breakers may be mounted in the vertical or horizontal position. Cable-in/cable-out circuit breakers shall be mounted in the vertical position.

19. Type III-AF and Type III-BF service equipment enclosures shall have the meter viewing windows located on the front side of the service equipment enclosures.

20. Type III-AR and Type III-BR service equipment enclosures shall be similarly constructed as Type III-AF and Type III-BF respectively, except the meter viewing windows shall be located on the back side of the service equipment enclosures.

21. Minimum clearance shall be required for front and back of service equipment enclosure per National Electrical Code, Article 110.26, "Spaces About Electric Equipment (600 Volts, Nominal, or Less)."

STATE OF CALIFORNIA
DEPARTMENT OF TRANSPORTATION

ELECTRICAL SYSTEMS (SERVICE EQUIPMENT NOTES TYPE III SERIES)

NO SCALE

RSP ES-2C DATED OCTOBER 5, 2007 SUPERCEDES STANDARD PLAN ES-2C
DATED MAY 1, 2006 - PAGE 405 OF THE STANDARD PLANS BOOK DATED MAY 2006.

REVISED STANDARD PLAN RSP ES-2C

2006 REVISED STANDARD PLAN RSP ES-2C

7-10-07

DIST	COUNTY	ROUTE	POST MILES TOTAL PROJECT	SHEET NO.	TOTAL SHEETS
06	Fre	99	26.7/30.6	205	242

Jeffery G. McRae
REGISTERED ELECTRICAL ENGINEER

REGISTERED PROFESSIONAL ENGINEER
Jeffery G. McRae
No. E14512
Exp. 6-30-08
ELECTRICAL
STATE OF CALIFORNIA

October 5, 2007
PLANS APPROVAL DATE

The State of California or its officers or agents shall not be responsible for the accuracy or completeness of electronic copies of this plan sheet.

To accompany plans dated 9-28-09

LOOP INSTALLATION PROCEDURE

1. Loops shall be centered in lanes.
2. Saw slots in pavement for loop conductors as shown in details.
3. Distance between side of loop and a lead-in saw cut from adjacent detectors shall be 2'-0" minimum. Distance between lead-in saw cuts shall be 6" minimum.
4. Bottom of saw slot shall be smooth with no sharp edges.
5. Slots shall be washed until clean, blown out and thoroughly dried before installing loop conductors.
6. Adjacent loops on the same sensor unit channel shall be wound in opposite directions.
7. Identify and tag loop circuit pairs in the pull box with loop number, start (S) and finish (F) of conductor. Identify and tag lead-in-cable with sensor number and phase.
8. Install loop conductor in slot using a 3/16" to 1/4" thick wood paddle. Hold loop conductors with wood paddles (at the bottom of the sawed slot) during sealant placement.
9. No more than 2 twisted pairs shall be installed in one sawed slot.
10. Allow additional 5'-0" of slack length of conductor for the lead-in run to pull box.
11. The additional length of each conductor for each loop shall be twisted together into a pair (6 turns per 3'-4" minimum) before being placed in the slot and conduit leading to pull box.
12. Test each loop circuit for continuity, circuit resistance and insulation resistance at the pull box before filling slots.
13. Fill slots as shown in details.
14. Splice loop conductors to lead-in-cable. Splices shall be soldered.
15. End of lead-in-cable and Type 2 loop conductor shall be waterproofed prior to installing in conduit to prevent moisture from entering the cable.
16. Lead-in-cable shall not be spliced between the pull box and the controller cabinet terminals.
17. Test each loop circuit for continuity, circuit resistance and insulation resistance at the controller cabinet location.
18. Where loop conductors are not to be spliced to a lead-in-cable, the ends of the conductors shall be taped and waterproofed with electrical insulating coating.

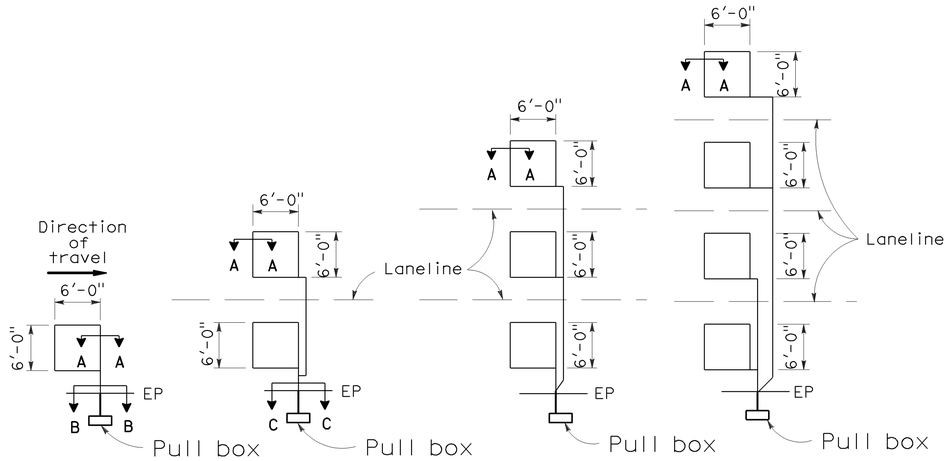

TYPE 1A INSTALLATION | TYPE 2A INSTALLATION | TYPE 3A INSTALLATION | TYPE 4A INSTALLATION

SAWCUT DETAILS

(Type A loop detector configurations illustrated)

1. 1A thru 4A = 1 Type A loop configuration in each lane.
2. 1B thru 4B = 1 Type B loop configuration in each lane.
3. 1C = 1 Type C loop configuration entering lanes as required.
4. 1D thru 4D = 1 Type D loop configuration in each lane.
5. 1E thru 4E = 1 Type E loop configuration in each lane.
6. 1Q thru 4Q = 1 Type Q loop configuration in each lane. (Use Type A, B, C, D, E or Q loop detector configurations only when specified or shown on plans)

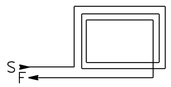

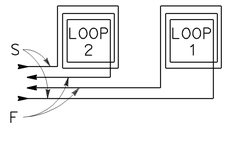

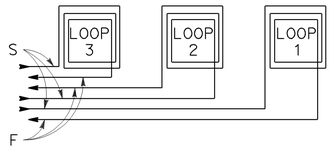

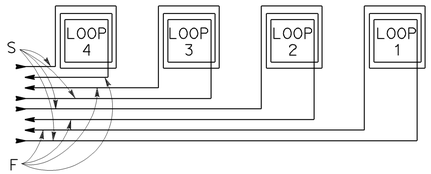

WINDING DETAILS

See Notes 6 and 7

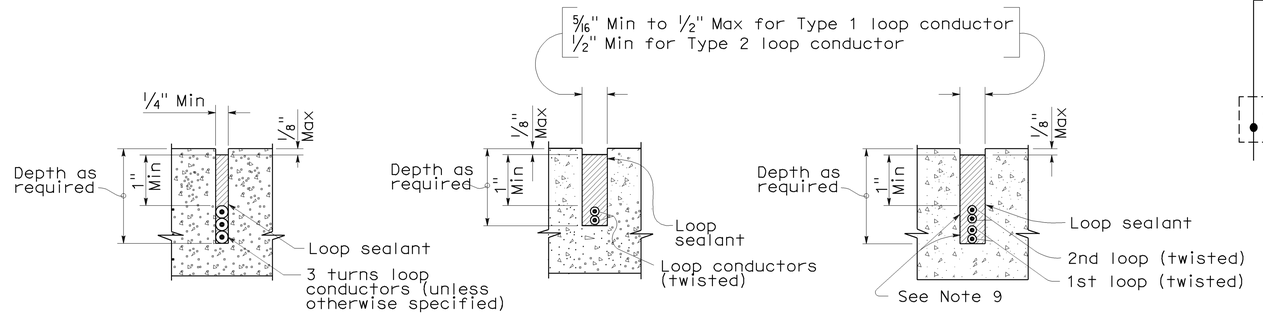

SECTION A-A | SECTION B-B | SECTION C-C

SLOT DETAILS - TYPE 1 AND TYPE 2 LOOP CONDUCTOR

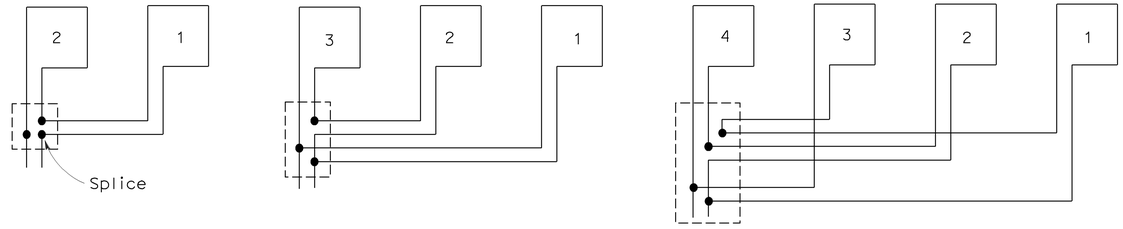

TYPICAL LOOP CONNECTIONS

(Dashed lines represent the pull box)

STATE OF CALIFORNIA
DEPARTMENT OF TRANSPORTATION

ELECTRICAL SYSTEMS (DETECTORS)

NO SCALE

RSP ES-5A DATED OCTOBER 5, 2007 SUPERCEDES STANDARD PLAN ES-5A
DATED MAY 1, 2006 - PAGE 423 OF THE STANDARD PLANS BOOK DATED MAY 2006.

REVISED STANDARD PLAN RSP ES-5A

2006 REVISED STANDARD PLAN RSP ES-5A

8-17-07

DIST	COUNTY	ROUTE	POST MILES TOTAL PROJECT	SHEET NO.	TOTAL SHEETS
06	Fre	99	26.7/30.6	206	242

REGISTERED CIVIL ENGINEER

January 18, 2008
PLANS APPROVAL DATE

REGISTERED PROFESSIONAL ENGINEER — Stanley P. Johnson — No. C57793 — Exp. 03-31-08 — CIVIL — STATE OF CALIFORNIA

The State of California or its officers or agents shall not be responsible for the accuracy or completeness of electronic copies of this plan sheet.

To accompany plans dated 9-28-09

LUMINAIRE ARM DATA

PROJECTED LENGTH	THICKNESS	MINIMUM OD @ POLE	MOUNTING HEIGHT
* 6'-0"	0.1196"	3¼"	36'-9"±
8'-0"		3½"	37'-3"±
10'-0"		3¾"	38'-0"±
12'-0"		3¾"	39'-0"±
15'-0"		4¼"	39'-6"±
** 20'-0"	0.1793"	5"	37'-0"±

* Type 30 - arm length 6'-0" - 15'-0" maximum
** Type 31 - arm lengths 20'-0"

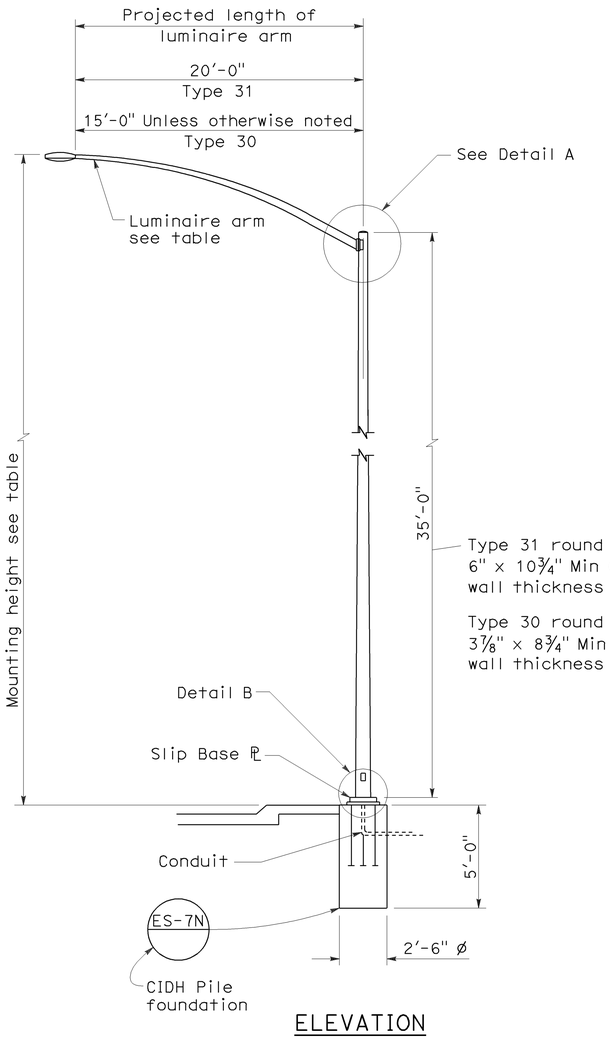

ELEVATION

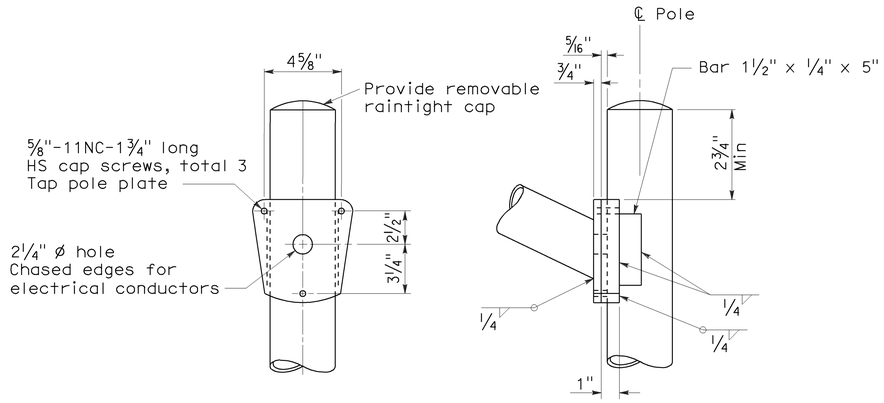

DETAIL A - TYPE 30

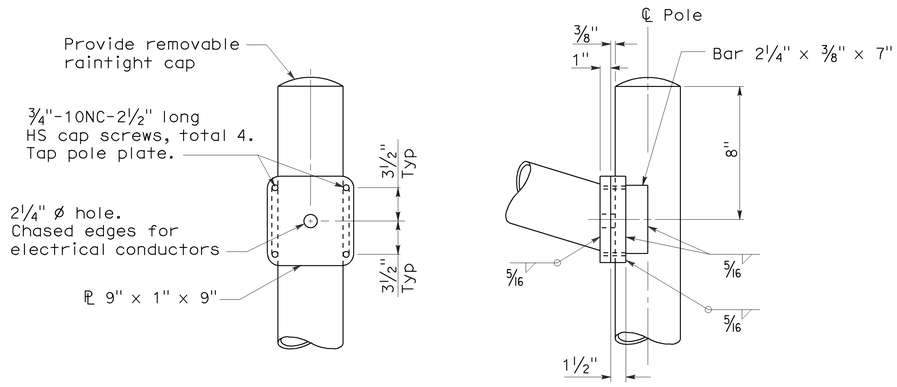

DETAIL A - TYPE 31

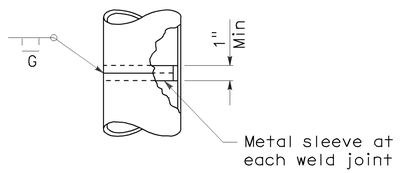

POLE SPLICE

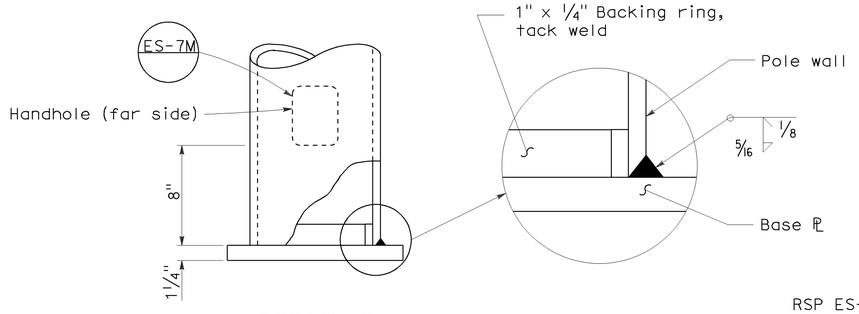

DETAIL B

NOTES:

1. Sheet steel shall have a minimum yield of 48,000 psi.
2. For slip base details see Standard Plan ES-6F.
3. For Type 30 fixed base use Type 15 base plate, and foundation shown on Revised Standard Plan RSP ES-6A. Use 1¼" Dia x 3'-6" x 4" anchor bolts.
4. For Type 31 fixed base use Type 32 base plate, anchor bolts and foundation on Standard Plan ES-6G.
5. Handhole shall be located on downstream side of traffic unless noted otherwise on plans.
6. For additional general notes refer to Standard Plan ES-7M.

STATE OF CALIFORNIA
DEPARTMENT OF TRANSPORTATION

ELECTRICAL SYSTEMS (LIGHTING STANDARD TYPES 30 AND 31)

NO SCALE

RSP ES-6E DATED JANUARY 18, 2008 SUPERCEDES STANDARD PLAN ES-6E DATED MAY 1, 2006 - PAGE 430 OF THE STANDARD PLANS BOOK DATED MAY 2006.

REVISED STANDARD PLAN RSP ES-6E

2006 REVISED STANDARD PLAN RSP ES-6E

11-19-07

DIST	COUNTY	ROUTE	POST MILES TOTAL PROJECT	SHEET NO.	TOTAL SHEETS
06	Fre	99	26.7/30.6	207	242

Jeffery G. McRae
REGISTERED ELECTRICAL ENGINEER

October 5, 2007
PLANS APPROVAL DATE

REGISTERED PROFESSIONAL ENGINEER
Jeffery G. McRae
No. E14512
Exp. 6-30-08
ELECTRICAL
STATE OF CALIFORNIA

The State of California or its officers or agents shall not be responsible for the accuracy or completeness of electronic copies of this plan sheet.

To accompany plans dated 9-28-09

NOTES: (FOR LIGHTING AND SIGN ILLUMINATION CONTROL)

1. The ballast voltages of lighting fixtures and luminaires shall match line service voltages.
2. Voltage rating of photoelectric controls shall conform to the service voltage indicated on the plans.
3. Terminal strip shall be provided for wiring to fixtures.
4. Type SC1A, SC2A, SC3A controls are similar to Types SC1, SC2 and SC3 controls respectively except test switch and wiring are not required.

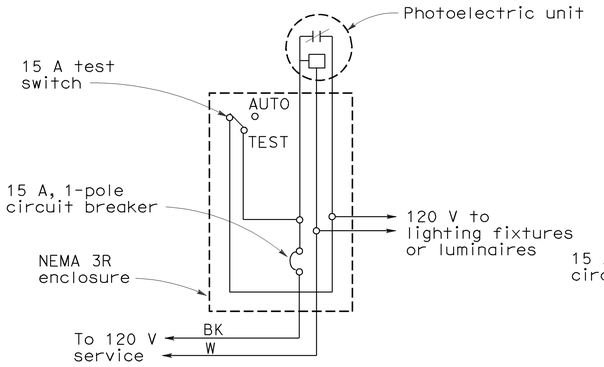

TYPE LC1 CONTROL

For 120 V unswitched circuit with no more than 800 W load.

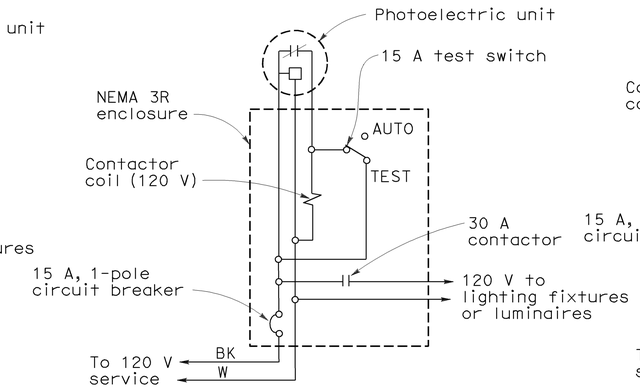

TYPE LC2 CONTROL

For 120 V unswitched circuit

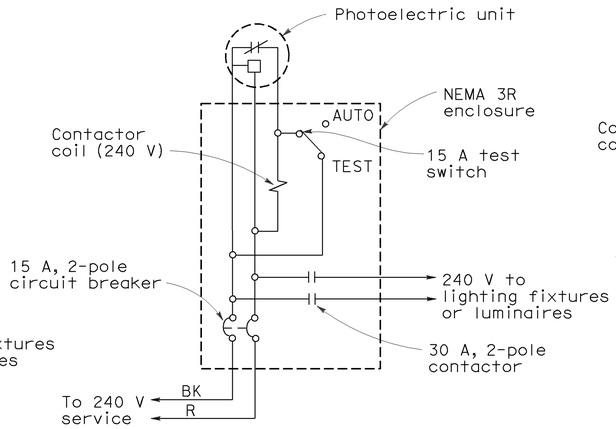

TYPE LC3 CONTROL

For 240 V and 480 V unswitched circuits

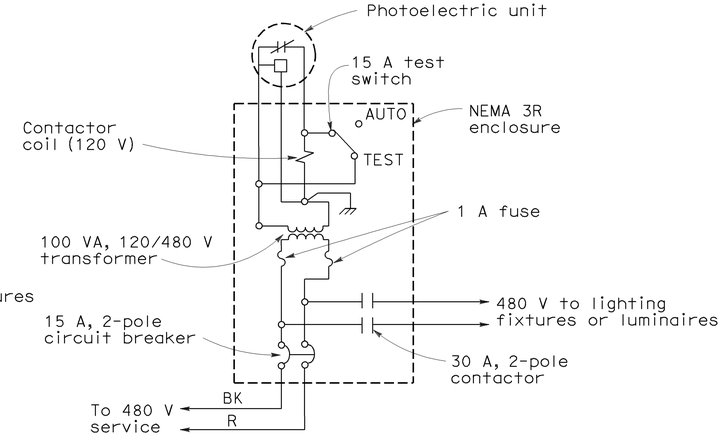

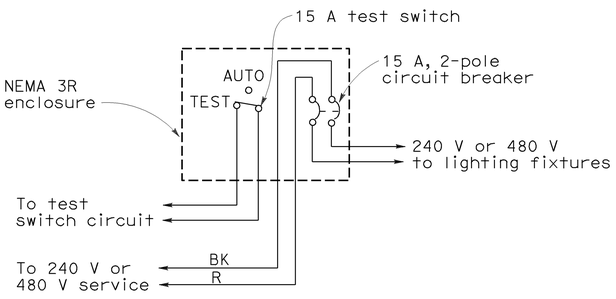

TYPE SC1 CONTROL

For 240 V or 480 V switched circuit, see Note 4 for Type SC1A

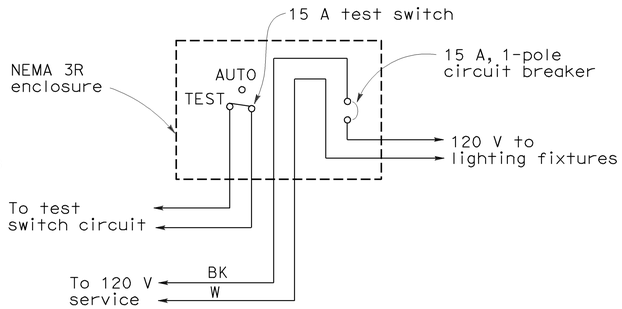

TYPE SC2 CONTROL

For 120 V switched circuit, see Note 4 for Type SC2A

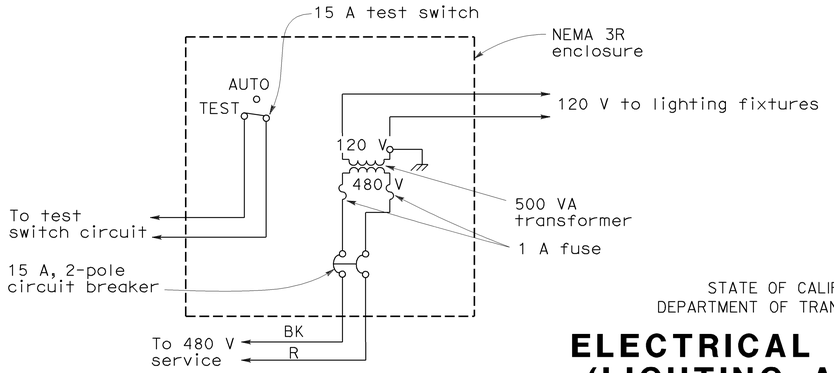

TYPE SC3 CONTROL

For 480 V switched sign circuit, see Note 4 for Type SC3A

STATE OF CALIFORNIA
DEPARTMENT OF TRANSPORTATION

ELECTRICAL SYSTEMS (LIGHTING AND SIGN ILLUMINATION CONTROL)

NO SCALE

RSP ES-15D DATED OCTOBER 5, 2007 SUPERCEDES STANDARD PLAN ES-15D DATED MAY 1, 2006 - PAGE 472 OF THE STANDARD PLANS BOOK DATED MAY 2006.

REVISED STANDARD PLAN RSP ES-15D

2006 REVISED STANDARD PLAN RSP ES-15D

9-10-07

DIST	COUNTY	ROUTE	POST MILES TOTAL PROJECT	SHEET No	TOTAL SHEETS
06	Fre	99	26.7/30.6	208	242

REGISTERED CIVIL ENGINEER — 06-08-09 DATE

9-28-09
PLANS APPROVAL DATE

Ramon S. Reyes No. C63767 Exp. 9-30-10 CIVIL — REGISTERED PROFESSIONAL ENGINEER — STATE OF CALIFORNIA

The State of California or its officers or agents shall not be responsible for the accuracy or completeness of electronic copies of this plan sheet.

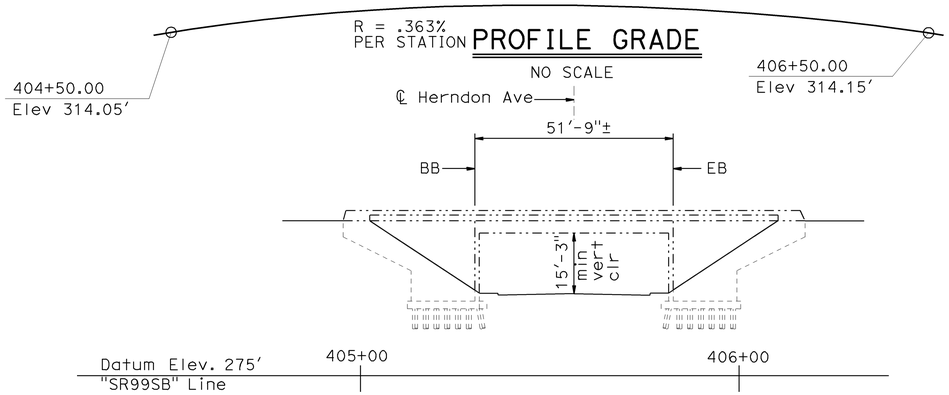

ELEVATION
1" = 20'-0"

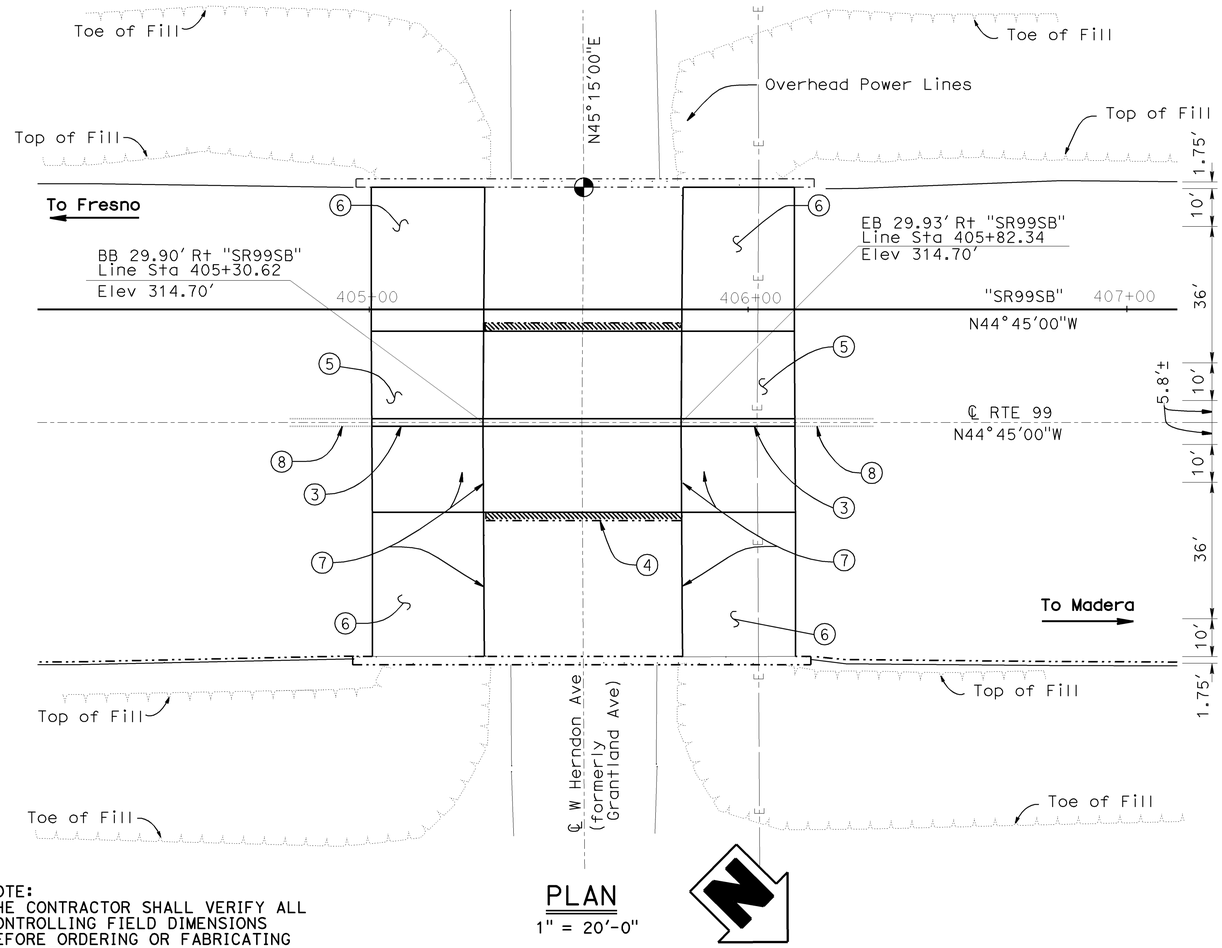

NOTE:
THE CONTRACTOR SHALL VERIFY ALL CONTROLLING FIELD DIMENSIONS BEFORE ORDERING OR FABRICATING ANY MATERIAL.

PLAN
1" = 20'-0"

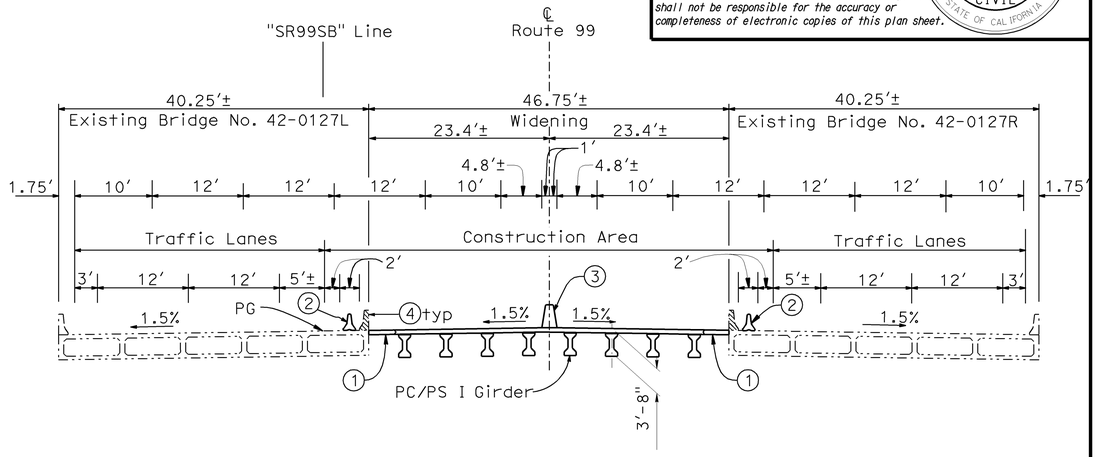

TYPICAL SECTION
1" = 10'-0"

NOTES:

① 3'± Closure Pour
② Temporary Railing (Type K), see "Road Plans"
③ Concrete Barrier (Type 60A)
④ Remove existing Concrete Barrier (Type 27R) and refinish bridge deck
⑤ Structure Approach (Type N(30D))
⑥ Structure Approach (Type R(30D))
⑦ Remove and Replace Joint Seal
⑧ Concrete Barrier (Type 60), see "Road Plans"

LEGEND

▨ Denotes removal of existing Concrete Barrier

-·-·-·- Denotes Existing Structure

QUANTITIES

BRIDGE REMOVAL (PORTION), LOCATION B	1	LS
STRUCTURE EXCAVATION (BRIDGE)	350	CY
STRUCTURE BACKFILL (BRIDGE)	290	CY
PERVIOUS BACKFILL MATERIAL	69	CY
AGGREGATE BASE (APPROACH SLAB)	18	CY
STRUCTURAL CONCRETE, BRIDGE	84	CY
STRUCTURAL CONCRETE, APPROACH SLAB (TYPE N)	104	CY
STRUCTURAL CONCRETE, APPROACH SLAB (TYPE R)	179	CY
PAVING NOTCH EXTENSION	127	CF
DRILL AND BOND DOWEL	105	LF
FURNISH PRECAST PRESTRESSED CONCRETE GIRDER (50'-60')	8	EA
ERECT PRECAST PRESTRESSED CONCRETE GIRDER	8	EA
REFINISH BRIDGE DECK	149	SQFT
JOINT SEAL (MR½")	255	LF
BAR REINFORCING STEEL (BRIDGE)	20,100	LB
CONCRETE BARRIER (TYPE 60A)	112	LF

Rodney Simmons
DESIGN ENGINEER

	BY	CHECKED	LOAD & RESISTANCE FACTOR DESIGN	LIVE LOADING: HL93 W/"LOW-BOY"; PERMIT DESIGN VEHICLE
DESIGN	C. Cowden	D. Murray		
DETAILS	C. Schellenger	C. Cowden	LAYOUT BY X	CHECKED X
QUANTITIES	C. Cowden	M. Schott	SPECIFICATIONS BY X	PLANS AND SPECS COMPARED X

ORIGINAL SCALE IN INCHES FOR REDUCED PLANS 0 1 2 3

STATE OF CALIFORNIA
DEPARTMENT OF TRANSPORTATION

DIVISION OF ENGINEERING SERVICES
STRUCTURE DESIGN
DESIGN BRANCH 17

CU 06249
EA 442611

BRIDGE NO. 42-0127
POST MILE 30.5

GRANTLAND AVE UC (WIDEN)
GENERAL PLAN

DISREGARD PRINTS BEARING EARLIER REVISION DATES →

REVISION DATES: 1-15-09 | 1-28-09 | 6-05-09

SHEET 1 OF 9

STRUCTURES DESIGN GENERAL PLAN SHEET (ENGLISH) (REV.07-24-06)

FILE => 42-0127-a-gp.dgn

USERNAME => Friemond DATE PLOTTED => 28-SEP-2009 TIME PLOTTED => 12:53

DIST	COUNTY	ROUTE	POST MILES TOTAL PROJECT	SHEET No	TOTAL SHEETS
06	Fre	99	26.7/30.6	209	242

06-08-09
REGISTERED CIVIL ENGINEER DATE

Ramon S. Reyes
No. C63767
Exp. 9-30-10
CIVIL
REGISTERED PROFESSIONAL ENGINEER
STATE OF CALIFORNIA

9-28-09
PLANS APPROVAL DATE

The State of California or its officers or agents shall not be responsible for the accuracy or completeness of electronic copies of this plan sheet.

INDEX TO PLANS

SHEET NO.	SHEET TITLE
1	GENERAL PLAN
2	INDEX TO PLANS
3	ABUTMENT LAYOUT
4	ABUTMENT DETAILS
5	EXCAVATION AND BACKFILL LIMITS
6	TYPICAL SECTION
7	GIRDER LAYOUT
8	APPROACH SLAB TYPE N(30D)
9	APPROACH SLAB TYPE R(30D)

STANDARD PLANS DATED MAY 2006

A10A	ACRONYMS AND ABBREVIATIONS (A-L)
A10B	ACRONYMS AND ABBREVIATIONS (M-Z)
A62C	LIMITS OF PAYMENT FOR EXCAVATION AND BACKFILL-BRIDGE
RSP A76A	CONCRETE BARRIER TYPE 60
B0-1	BRIDGE DETAILS
B0-3	BRIDGE DETAILS
B0-5	BRIDGE DETAILS
B0-13	BRIDGE DETAILS
B7-1	BOX GIRDER DETAILS
RSP B6-21	JOINT SEALS (MAXIMUM MOVEMENT RATING = 2")
T3	TEMPORARY RAILING (TYPE K)

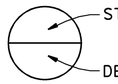

GENERAL NOTES
LOAD AND RESISTANCE FACTOR DESIGN

DESIGN: AASHTO LRFD Design Specifications, Third edition with interims through 2006 and the California Amendments the v3.06.01.

SEISMIC DESIGN:
Caltrans Seismic Design Criteria (SDC), Version 1.4 dated June 2006

DEAD LOAD:
Includes 35 psf for future wearing surface.

LIVE LOADING:
HL93 and permit design load.

SEISMIC
LOADING: SDC ARS Curve for soil profile D (M=6.5± .25)
Peak Rock Acceleration = 0.2 g

CONCRETE:
fy = 60 ksi
f'c = see "Concrete Strength and Type Limits"
n = 8
See prestressing notes.

STRUCTURAL STEEL (new construction):
fy = ASTM A709 Grade 50

STRUCTURAL STEEL
(assumed for evaluation of existing structure):
ASTM A7
fy = 39 ksi

Existing Structural Concrete, Bridge
Precast I Girders
Structural Concrete, Bridge (4 ksi, at 28 days)

CONCRETE STRENGTH AND TYPE LIMITS

NO SCALE

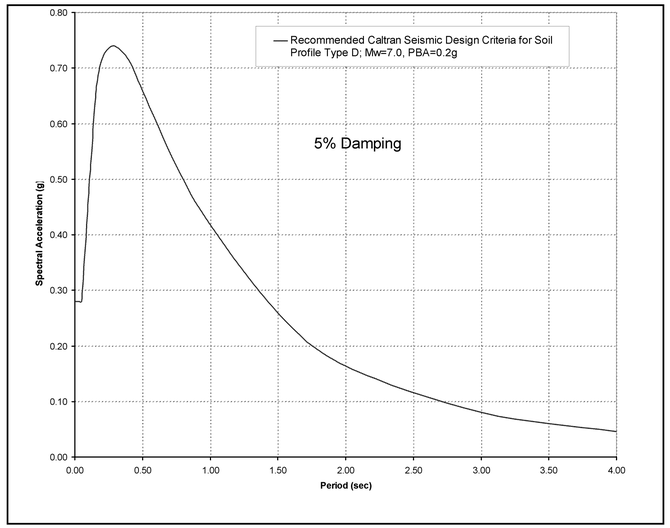

ACCELERATION RESPONSE SPECTRA

NO SCALE

DESIGN	BY Cory Cowden	CHECKED Dave Murray	STATE OF CALIFORNIA DEPARTMENT OF TRANSPORTATION	DIVISION OF ENGINEERING SERVICES STRUCTURE DESIGN DESIGN BRANCH 17	BRIDGE NO. 42-0127
DETAILS	BY Craig Schellenger	CHECKED Cory Cowden			POST MILE 30.5
QUANTITIES	BY Cory Cowden	CHECKED Matt Schott			

GRANTLAND AVE UC (WIDEN)
INDEX TO PLANS

STRUCTURES DESIGN DETAIL SHEET (ENGLISH) (REV. 10/25/05)

ORIGINAL SCALE IN INCHES FOR REDUCED PLANS 0 1 2 3

CU 06
EA 442611

DISREGARD PRINTS BEARING EARLIER REVISION DATES →

REVISION DATES: 2-25-09 | 6-08-09

SHEET 2 OF 9

FILE => 42-0127-a-itp.dgn

USERNAME => trlenord DATE PLOTTED => 28-SEP-2009 TIME PLOTTED => 12:54

DIST	COUNTY	ROUTE	POST MILES TOTAL PROJECT	SHEET No	TOTAL SHEETS
06	Fre	99	26.7/30.6	210	242

06-08-09
REGISTERED CIVIL ENGINEER DATE

9-28-09
PLANS APPROVAL DATE

Ramon S. Reyes
No. C63767
Exp. 9-30-10
CIVIL
REGISTERED PROFESSIONAL ENGINEER
STATE OF CALIFORNIA

The State of California or its officers or agents shall not be responsible for the accuracy or completeness of electronic copies of this plan sheet.

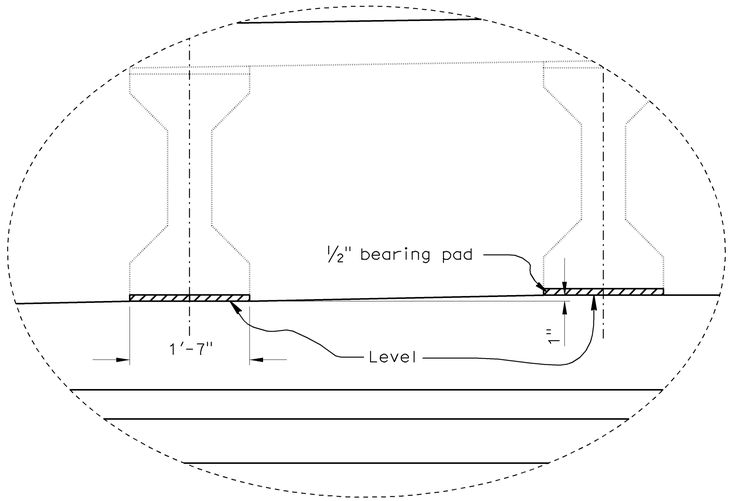

DETAIL A
1" = 1'-0"

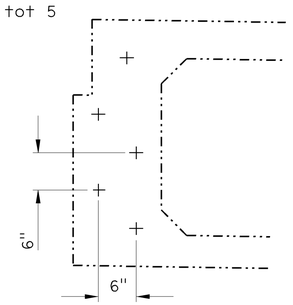

END DIAPHRAGM DOWEL LAYOUT
1" = 1'-0"

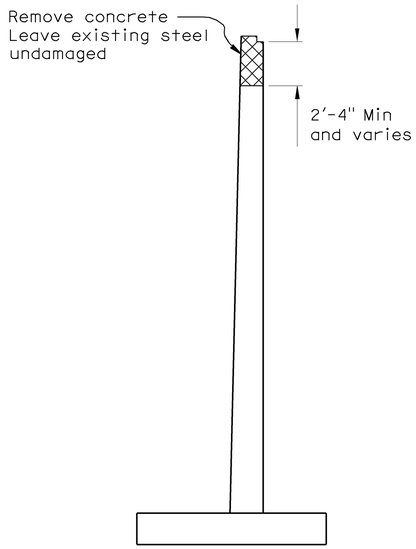

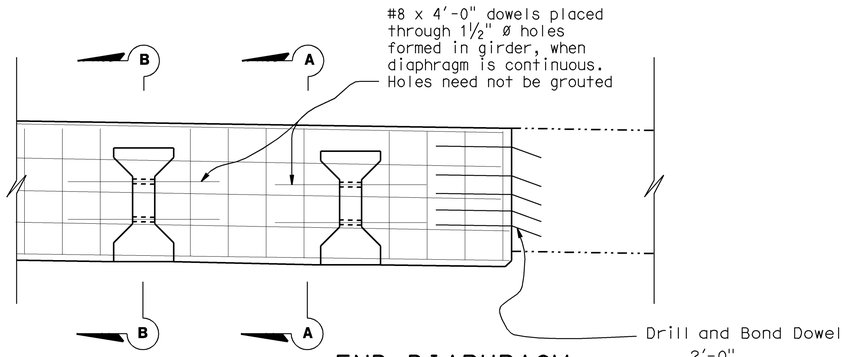

END DIAPHRAGM
½" = 1'-0"

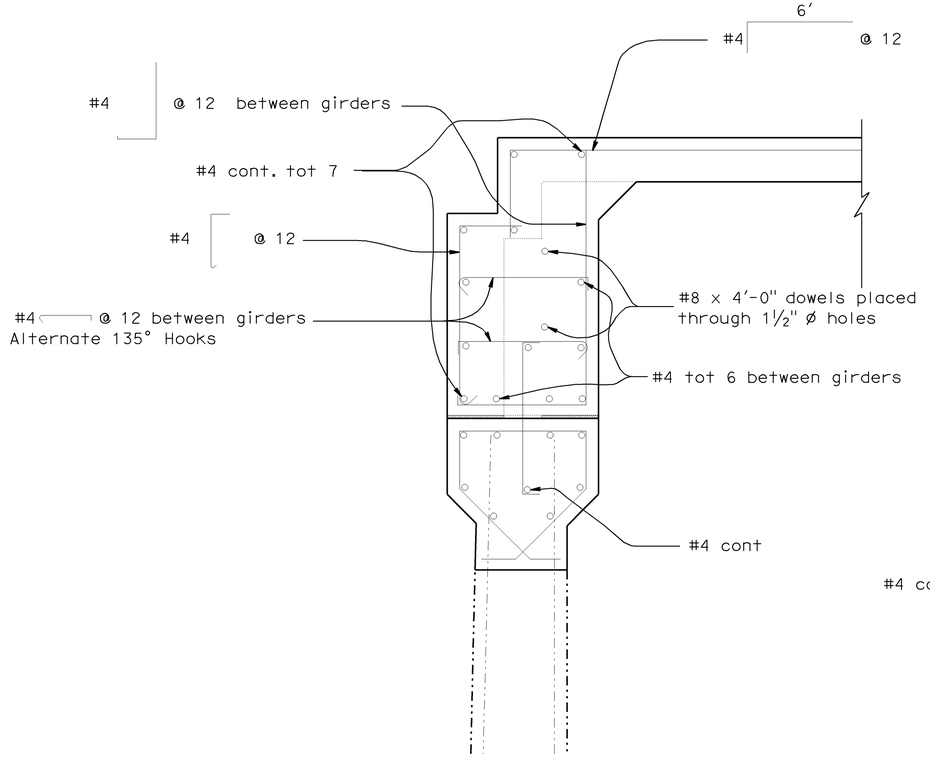

DIAPHRAGM SECTION A-A
1 "= 1'-0"

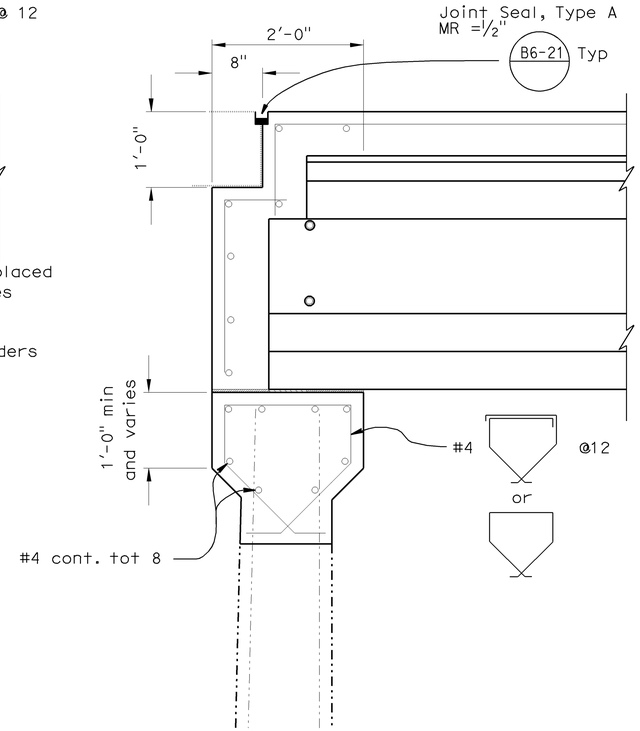

ABUTMENT SECTION B-B
1 "= 1'-0"

DESIGN	BY Cory Cowden	CHECKED Dave Murray	STATE OF CALIFORNIA DEPARTMENT OF TRANSPORTATION	DIVISION OF ENGINEERING SERVICES STRUCTURE DESIGN DESIGN BRANCH 17	BRIDGE NO. 42-0127
DETAILS	BY Craig Schellenger	CHECKED Cory Cowden			POST MILE 30.5
QUANTITIES	BY Cory Cowden	CHECKED Matt Schott			

GRANTLAND AVE UC (WIDEN)
ABUTMENT DETAILS

STRUCTURES DESIGN DETAIL SHEET (ENGLISH) (REV. 10/25/05)

ORIGINAL SCALE IN INCHES FOR REDUCED PLANS 0 1 2 3

CU 06
EA 442611

DISREGARD PRINTS BEARING EARLIER REVISION DATES →

REVISION DATES: X

SHEET 4 OF 9

FILE => 42-0127-f-a01-dt01.dgn

USERNAME => rtrenard DATE PLOTTED => 28-SEP-2009 TIME PLOTTED => 12:54

DIST	COUNTY	ROUTE	POST MILES TOTAL PROJECT	SHEET No	TOTAL SHEETS
06	Fre	99	26.7/30.6	211	242

06-08-09
REGISTERED CIVIL ENGINEER DATE

Ramon S. Reyes
No. C63767
Exp. 9-30-10
CIVIL
REGISTERED PROFESSIONAL ENGINEER
STATE OF CALIFORNIA

9-28-09
PLANS APPROVAL DATE

The State of California or its officers or agents shall not be responsible for the accuracy or completeness of electronic copies of this plan sheet.

LEGEND

½" x 6" x 19" elastomeric bearing pad

½" expanded polystyrene

Indicates existing structure

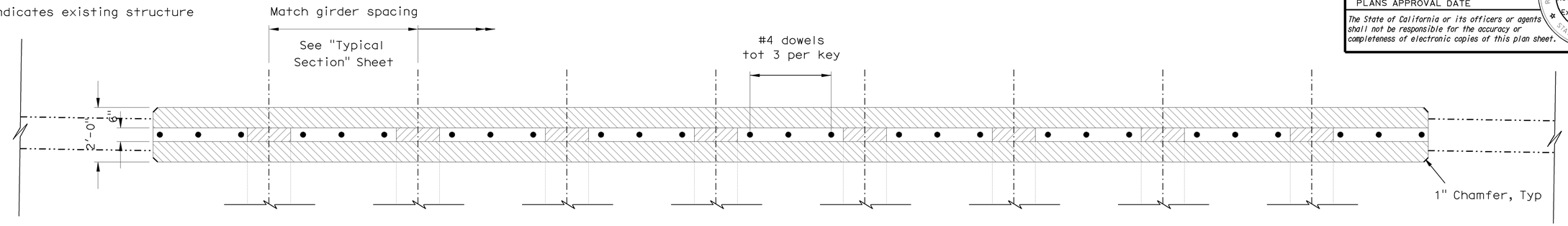

ABUTMENT PLAN
½"=1'-0"

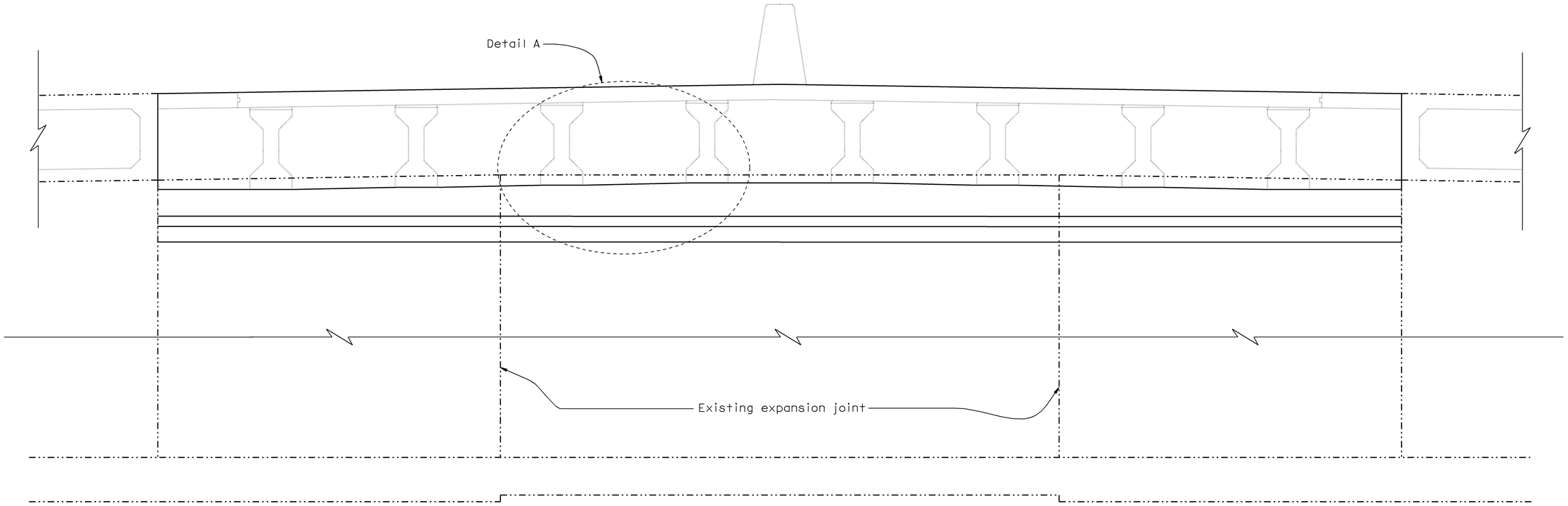

ABUTMENT ELEVATION
½"=1'-0"

DESIGN	BY Cory Cowden	CHECKED Dave Murray	STATE OF CALIFORNIA DEPARTMENT OF TRANSPORTATION	DIVISION OF ENGINEERING SERVICES STRUCTURE DESIGN DESIGN BRANCH 17	BRIDGE NO. 42-0127	GRANTLAND AVE UC (WIDEN)
DETAILS	BY Craig Schellenger	CHECKED Cory Cowden			POST MILE 26.3/30.7	ABUTMENT LAYOUT
QUANTITIES	BY Cory Cowden	CHECKED Matt Schott				

STRUCTURES DESIGN DETAIL SHEET (ENGLISH) (REV. 10/25/05)

ORIGINAL SCALE IN INCHES FOR REDUCED PLANS 0 1 2 3

CU 06
EA 442611

DISREGARD PRINTS BEARING EARLIER REVISION DATES

REVISION DATES										SHEET	OF
4-16-09	6-08-09									3	9

FILE => 42-0127-f_a01-1o01.dgn

USERNAME => friemond DATE PLOTTED => 28-SEP-2009 TIME PLOTTED => 12:54

DIST	COUNTY	ROUTE	POST MILES TOTAL PROJECT	SHEET No	TOTAL SHEETS
06	Fre	99	26.7/30.6	212	242

REGISTERED CIVIL ENGINEER — 06-08-09 DATE

Ramon S. Reyes No. C63767 Exp. 9-30-10 CIVIL — REGISTERED PROFESSIONAL ENGINEER — STATE OF CALIFORNIA

9-28-09
PLANS APPROVAL DATE

The State of California or its officers or agents shall not be responsible for the accuracy or completeness of electronic copies of this plan sheet.

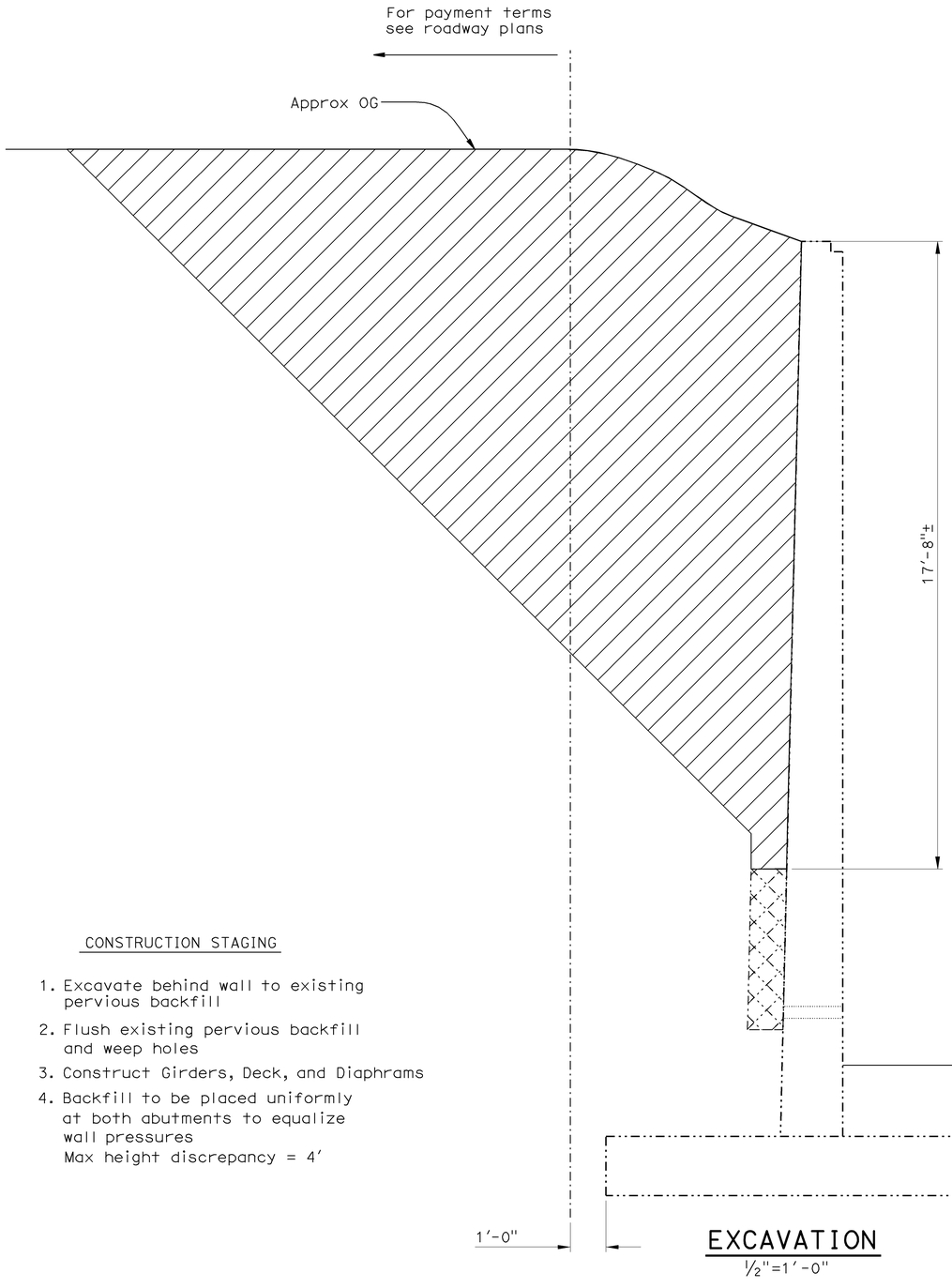

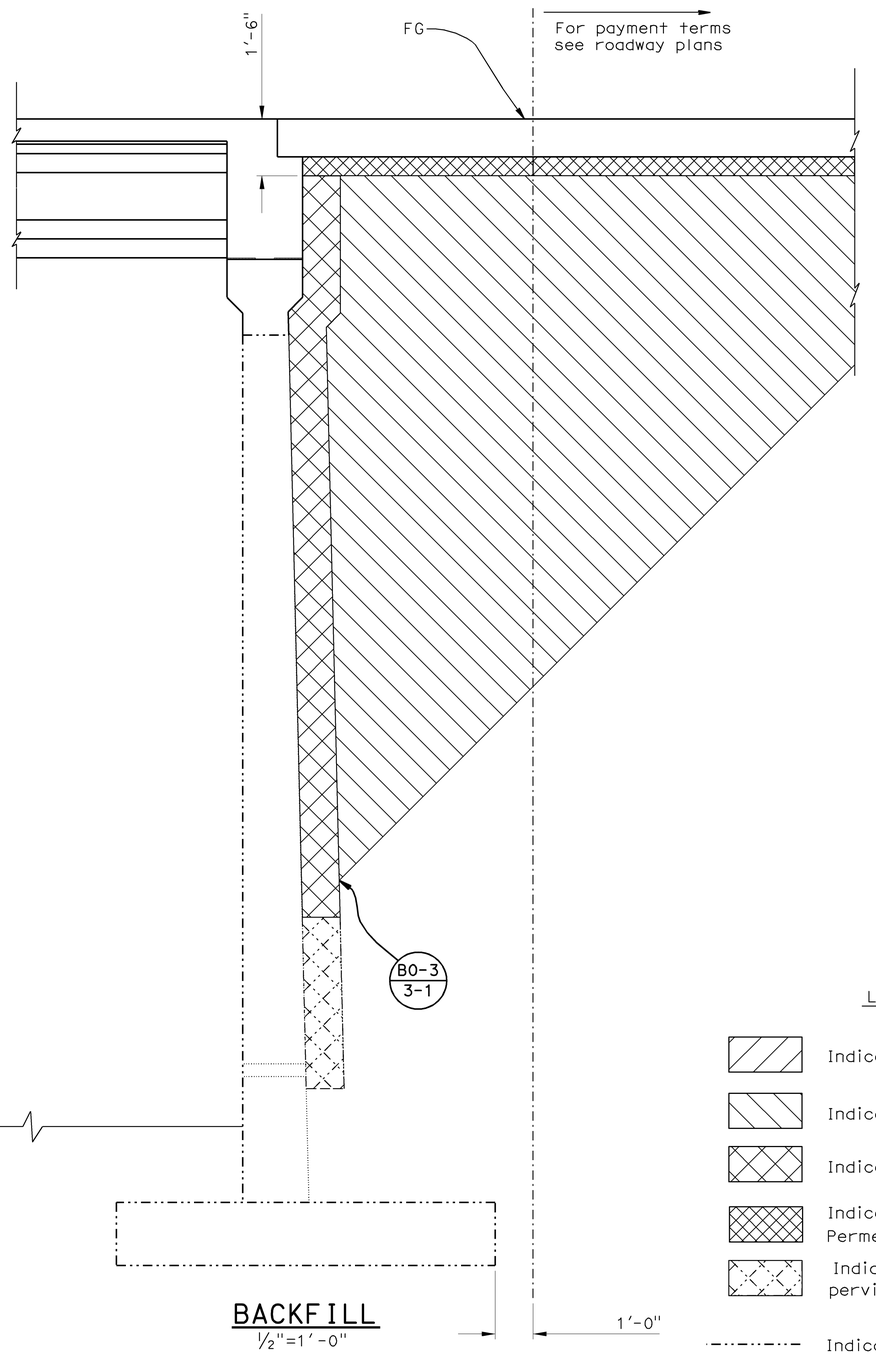

CONSTRUCTION STAGING

1. Excavate behind wall to existing pervious backfill
2. Flush existing pervious backfill and weep holes
3. Construct Girders, Deck, and Diaphrams
4. Backfill to be placed uniformly at both abutments to equalize wall pressures
   Max height discrepancy = 4'

LEGEND

- Indicates limits of structure excavation (Bridge)
- Indicates limits of structure backfill (Bridge)
- Indicates limits of pervious backfill
- Indicates limits of Treated Permeable Base
- Indicates limits of existing pervious backfill
- Indicates existing structure

	BY	CHECKED
DESIGN	Cory Cowden	Dave Murray
DETAILS	Craig Schellenger	Cory Cowden
QUANTITIES	Cory Cowden	Matt Schott

STATE OF CALIFORNIA
DEPARTMENT OF TRANSPORTATION

DIVISION OF ENGINEERING SERVICES
STRUCTURE DESIGN
DESIGN BRANCH 17

BRIDGE NO. 42-0127
POST MILE 30.5

GRANTLAND AVE UC (WIDEN)
EXCAVATION AND BACKFILL LIMITS

STRUCTURES DESIGN DETAIL SHEET (ENGLISH) (REV. 10/25/05)

ORIGINAL SCALE IN INCHES FOR REDUCED PLANS 0 1 2 3

CU 06
EA 442611

DISREGARD PRINTS BEARING EARLIER REVISION DATES →

REVISION DATES										SHEET	OF
X										5	9

FILE => 42-0127-g-excbf.dgn

USERNAME => rtriendord DATE PLOTTED => 28-SEP-2009 TIME PLOTTED => 12:54

DIST	COUNTY	ROUTE	POST MILES TOTAL PROJECT	SHEET No	TOTAL SHEETS
06	Fre	99	26.7/30.6	213	242

06-08-09
REGISTERED CIVIL ENGINEER DATE

Ramon S. Reyes
No. C63767
Exp. 9-30-10
CIVIL
REGISTERED PROFESSIONAL ENGINEER
STATE OF CALIFORNIA

9-28-09
PLANS APPROVAL DATE

The State of California or its officers or agents shall not be responsible for the accuracy or completeness of electronic copies of this plan sheet.

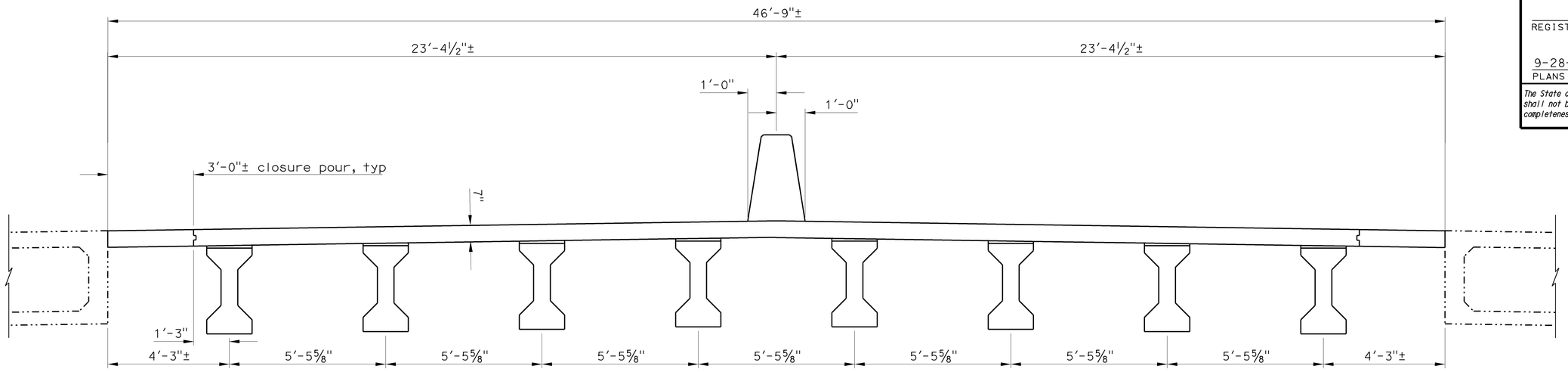

TYPICAL SECTION
½"=1'-0"

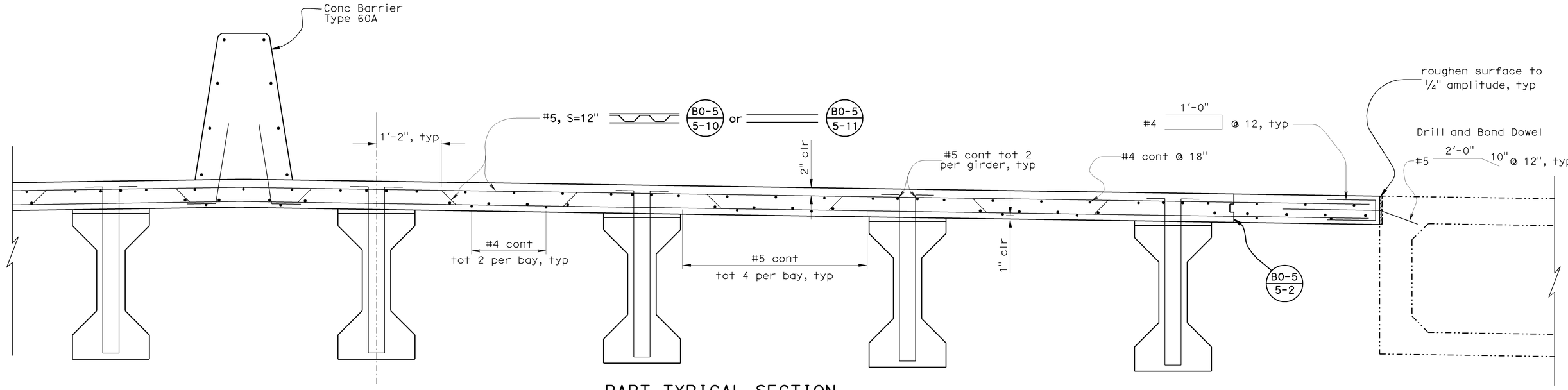

PART TYPICAL SECTION
1"=1'-0"

DESIGN	BY Cory Cowden	CHECKED Dave Murray	STATE OF CALIFORNIA DEPARTMENT OF TRANSPORTATION	DIVISION OF ENGINEERING SERVICES STRUCTURE DESIGN DESIGN BRANCH 17	BRIDGE NO. 42-0127	GRANTLAND AVE UC (WIDEN)
DETAILS	BY Craig Schellenger	CHECKED Cory Cowden			POST MILE 30.5	TYPICAL SECTION
QUANTITIES	BY Cory Cowden	CHECKED Matt Schott				

STRUCTURES DESIGN DETAIL SHEET (ENGLISH) (REV. 10/25/05)

ORIGINAL SCALE IN INCHES FOR REDUCED PLANS 0 1 2 3

CU 06
EA 442611

DISREGARD PRINTS BEARING EARLIER REVISION DATES →

REVISION DATES: X

SHEET 6 OF 9

FILE => 42-0127-k-ts01.dgn

USERNAME => rtriebord DATE PLOTTED => 28-SEP-2009 TIME PLOTTED => 12:54

DIST	COUNTY	ROUTE	POST MILES TOTAL PROJECT	SHEET No	TOTAL SHEETS
06	Fre	99	26.7/30.6	214	242

REGISTERED CIVIL ENGINEER 06-08-09 DATE

9-28-09
PLANS APPROVAL DATE

REGISTERED PROFESSIONAL ENGINEER
Ramon S. Reyes
No. C63767
Exp. 9-30-10
CIVIL
STATE OF CALIFORNIA

The State of California or its officers or agents shall not be responsible for the accuracy or completeness of electronic copies of this plan sheet.

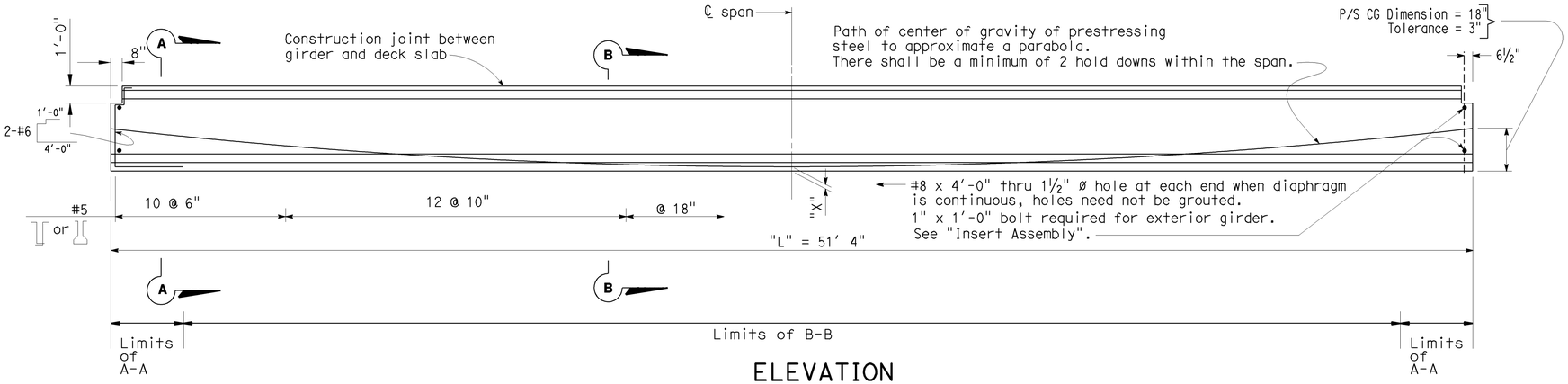

ELEVATION

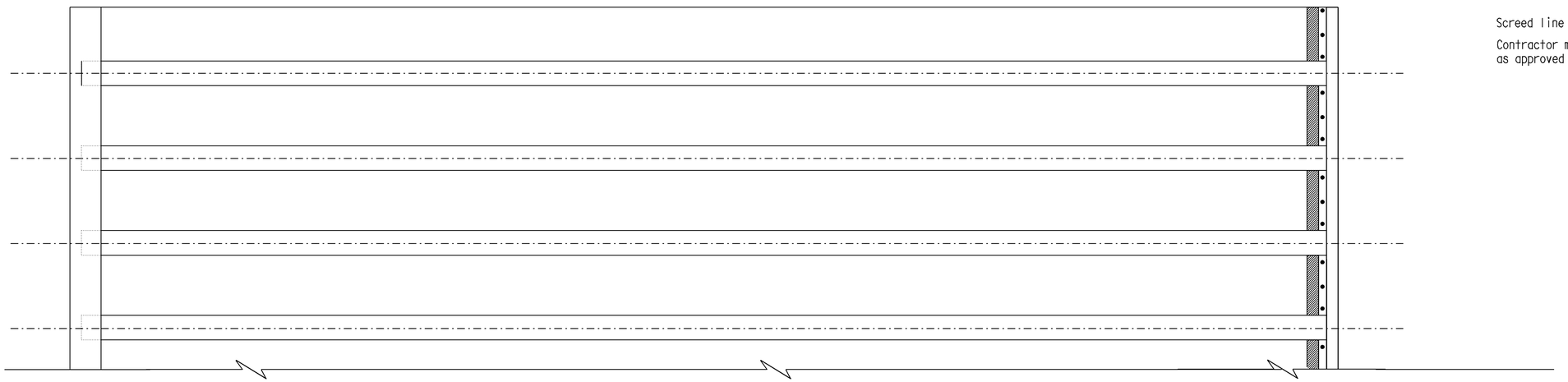

PLAN

PRESTRESSING NOTES

JACKING FORCE (P): The manufacture jacking force required at point of control along the span. The jacking force does not include any fabrication specific losses.

CONCRETE STRENGTH: f'ci (Ksi) is at time of initial stressing. f'c (ksi) is at 28 days

DEFLECTION COMPONENTS: Informational - to be used in setting screed line elevations.

Screed line elevations for deck concrete will be determined by the Engineer.

Contractor may interpolate "P" and "X" values between limits shown, as approved by the Engineer.

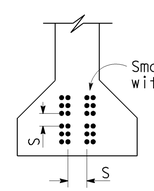

CLEARANCES FOR PRETENSIONED STRANDS

1. Strands may be bundled in groups consisting of 3 vertically 2 horizontally, and separated at the ends.
2. The min distance "S" between groups or individual strands is 1½" for ⅜" strands, 1¾" for 7/16" strands and ½" strands, 2" for 0.6" strands.
3. "S" is measured between centers of adjacent strands.
4. Approval of Engineer is required for deviation.

Girder location or designation and length	Jacking Force (P) in Kips "X"		Concrete Strength (Ksi) f'ci	f'c	Deflection Components in Inches ① Deck DL	② Rail DL
51' 4"	3.5"	460	5	6	.31"	.02"
	5.5"	500				

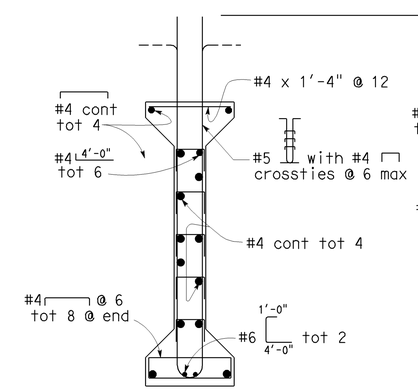

SECTION A-A

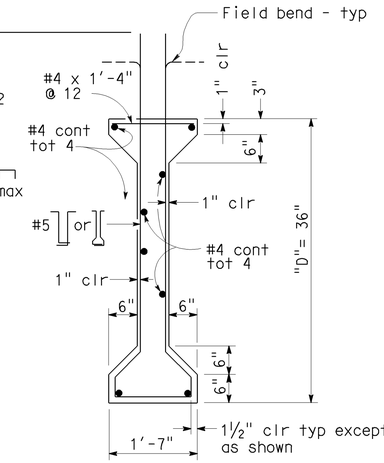

SECTION B-B

DESIGN	BY Cory Cowden	CHECKED Dave Murray	
DETAILS	BY Craig Schellenger	CHECKED Cory Cowden	
QUANTITIES	BY Cory Cowden	CHECKED Matt Schott	

STATE OF CALIFORNIA
DEPARTMENT OF TRANSPORTATION

DIVISION OF ENGINEERING SERVICES
STRUCTURE DESIGN
DESIGN BRANCH 17

BRIDGE NO. 42-0127
POST MILE 30.5

GRANTLAND AVE UC (WIDEN)
GIRDER LAYOUT

STRUCTURES DESIGN DETAIL SHEET (ENGLISH) (REV. 10/25/05)

ORIGINAL SCALE IN INCHES FOR REDUCED PLANS 0 1 2 3

CU 06
EA 442611

DISREGARD PRINTS BEARING EARLIER REVISION DATES 6-08-09

REVISION DATES

SHEET 7 OF 9

FILE => 42-0127-l-glo.dgn

USERNAME => trlenard DATE PLOTTED => 28-SEP-2009 TIME PLOTTED => 12:54

DIST.	COUNTY	ROUTE	POST MILES TOTAL PROJECT	SHEET No	TOTAL SHEETS
06	Fre	99	26.7/30.6	215	242

06-08-09
REGISTERED CIVIL ENGINEER DATE

9-28-09
PLANS APPROVAL DATE

Ramon S. Reyes No. C63767 Exp. 9-30-10 CIVIL — REGISTERED PROFESSIONAL ENGINEER — STATE OF CALIFORNIA

The State of California or its officers or agents shall not be responsible for the accuracy or completeness of electronic copies of this plan sheet.

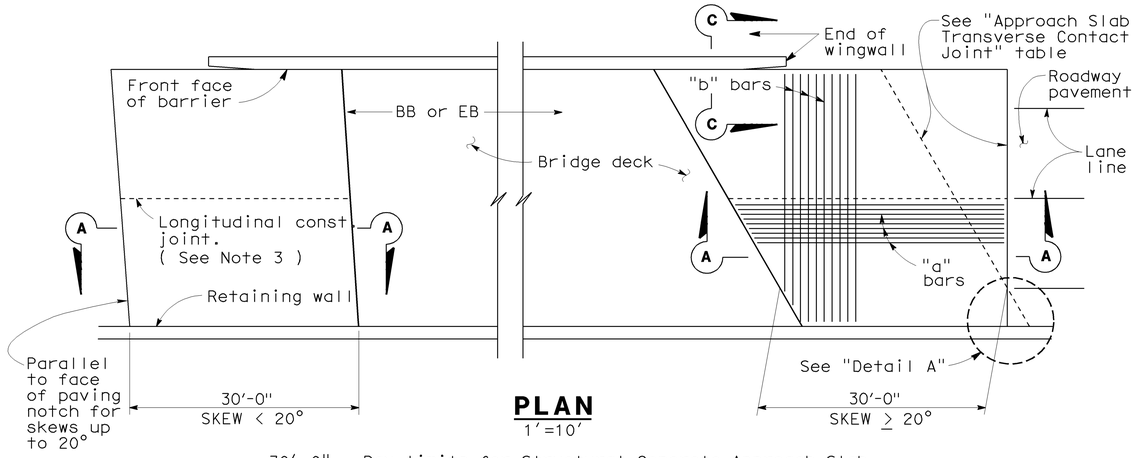

PLAN
1'=10'

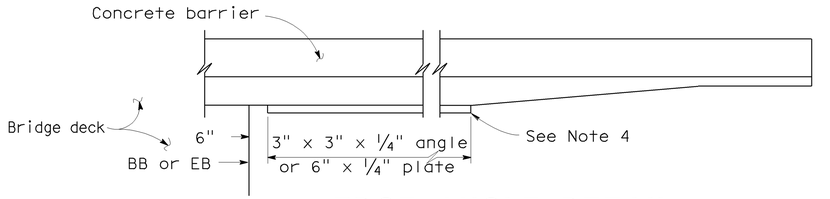

EDGE ANGLE DETAIL
½"=1'-0"

APPROACH SLAB TRANSVERSE CONTACT JOINT		
APPROACH SKEW	WITH AC ROADWAY PAVEMENT	WITH PCC ROADWAY PAVEMENT
< 20°	Parallel to face of paving notch	Parallel to face of paving notch
20°- 45°	Parallel to face of P N use (Detail A)	Stagger lines 24' to 36' apart
> 45°	Parallel to face of P N use (Detail A)	Stagger at each lane line

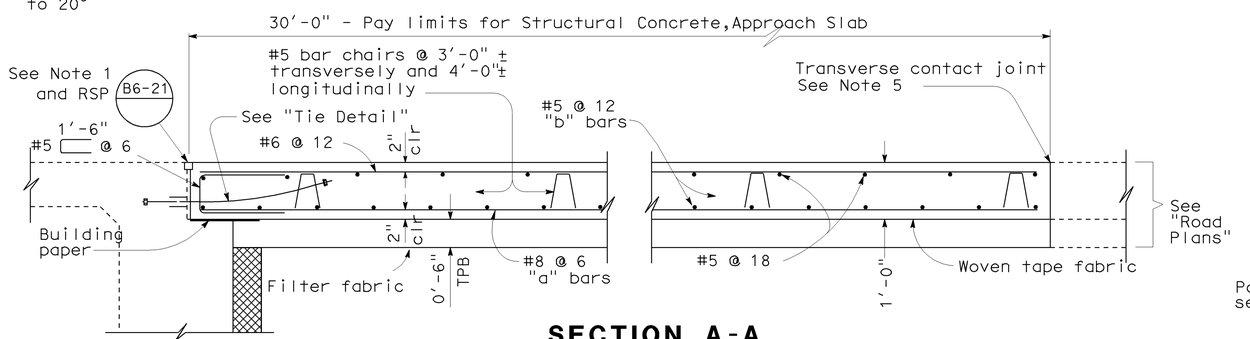

SECTION A-A
¾"=1'-0"

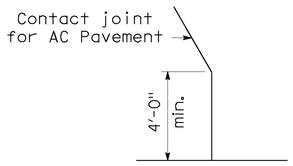

DETAIL A
No Scale

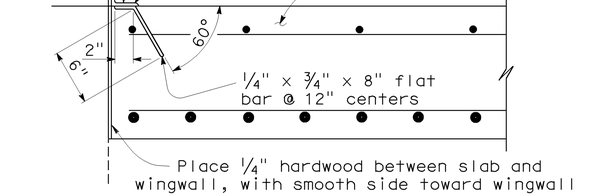

***(TO BE USED WITH TYPE 25 OR TYPE 27 CONCRETE BARRIER)**

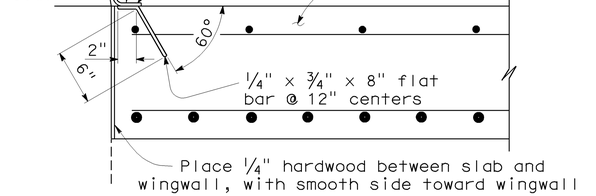

***(TO BE USED WITH TYPE 732 OR TYPE 736 CONCRETE BARRIER)**

DETAIL B
1½"=1'-0"

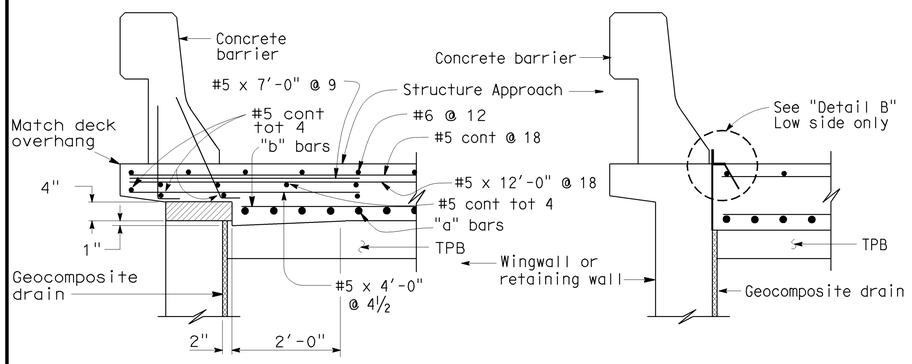

SECTION C-C
¾"=1'-0"
(Type E-1 to be used, unless otherwise shown on plans)

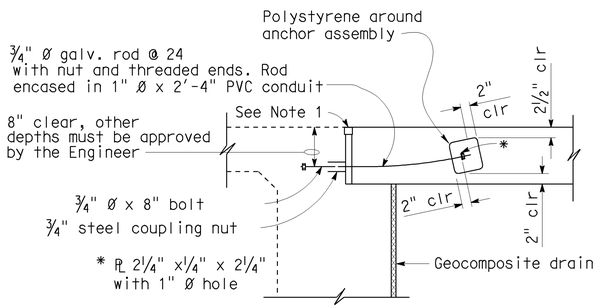

TIE DETAIL
¾"=1'-0"

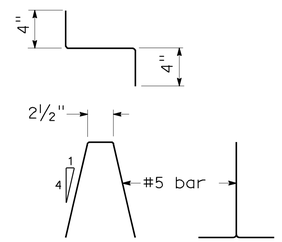

BAR CHAIR DETAIL
1½"=1'-0"

NOTES:

1. For details not noted or shown, see Structure Plans.
2.
3. Longitudinal construction joints, when permitted by the Engineer, shall be located on lane lines.
4. End angle or plate at beginning of barrier transition, end of wingwall or end of structure approach, as applicable.
5. For transverse contact joint with new PCC paving, refer to Standard Plan P10.
6. At the contractor's option, approach slab transverse reinforcement may be placed parallel to paving notch. Spacing of transverse reinforcement is measured along ℄ roadway.

▨ Polystyrene to be removed.

DESIGN	BY CORY COWDEN	CHECKED DAVID MURRAY	STATE OF CALIFORNIA DEPARTMENT OF TRANSPORTATION	DIVISION OF ENGINEERING SERVICES STRUCTURE DESIGN DESIGN BRANCH 17	BRIDGE NO. 42-0127	GRANTLAND AVE UC (WIDEN)	
DETAILS	BY CORY COWDEN	CHECKED RAMON REYES			POST MILE 26.6/30.7	STRUCTURE APPROACH TYPE N(30D)	
QUANTITIES	BY CORY COWDEN	CHECKED MATT SCHOTT					

STRUCTURES DESIGN DETAIL SHEET (ENGLISH) (REV. 10/25/05)

ORIGINAL SCALE IN INCHES FOR REDUCED PLANS 0 1 2 3

CU 06
EA 442611

DISREGARD PRINTS BEARING EARLIER REVISION DATES →

REVISION DATES										SHEET	OF
6-08-09										8	9

FILE => 42-0127-s-san30.dgn

USERNAME => trlenard DATE PLOTTED => 28-SEP-2009 TIME PLOTTED => 12:54

DIST	COUNTY	ROUTE	POST MILES TOTAL PROJECT	SHEET No	TOTAL SHEETS
06	Fre	99	26.7/30.6	216	242

REGISTERED CIVIL ENGINEER — 06-08-09 DATE

Ramon S. Reyes No. C63767 Exp. 9-30-10 CIVIL — REGISTERED PROFESSIONAL ENGINEER — STATE OF CALIFORNIA

9-28-09
PLANS APPROVAL DATE

The State of California or its officers or agents shall not be responsible for the accuracy or completeness of electronic copies of this plan sheet.

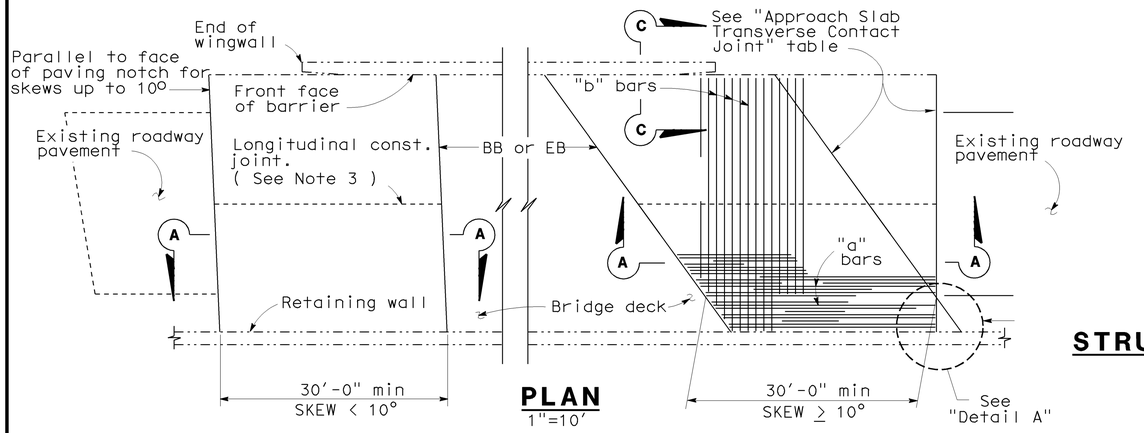

PLAN
1"=10'

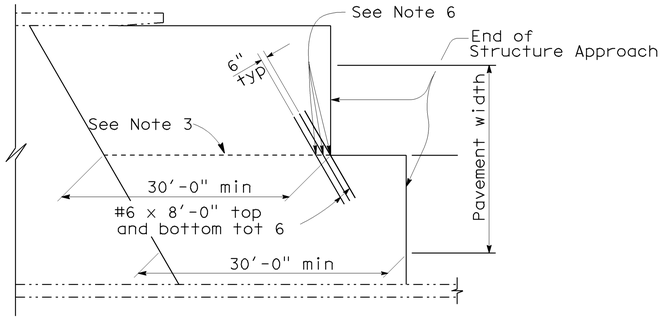

STRUCTURE APPROACH - END STAGGER DETAIL
No Scale

APPROACH SLAB TRANSVERSE CONTACT JOINT		
APPROACH SKEW	WITH AC ROADWAY PAVEMENT	WITH PCC ROADWAY PAVEMENT
< 10°	Parallel to face of paving notch	Parallel to face of paving notch
10° - 45°	Parallel to face of P N use (Detail A)	Stagger lines 24' to 36' apart
> 45°	Parallel to face of P N use (Detail A)	Stagger at each lane line

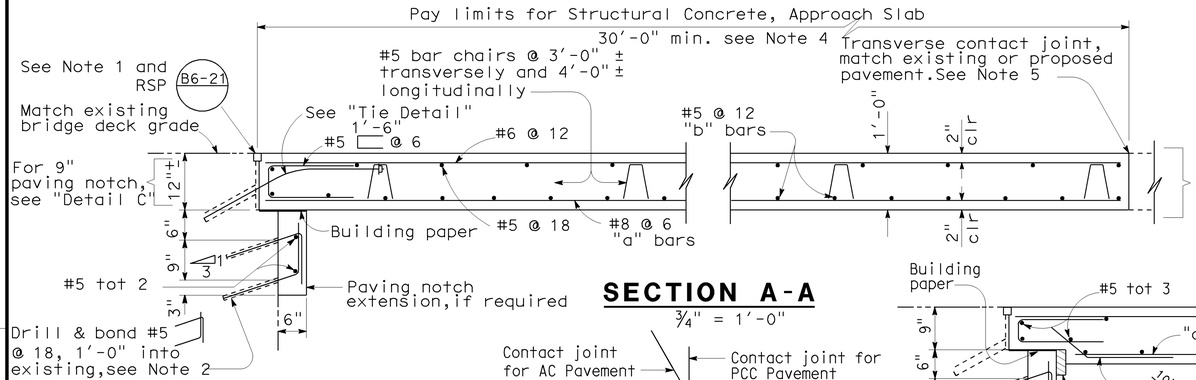

SECTION A-A
¾" = 1'-0"

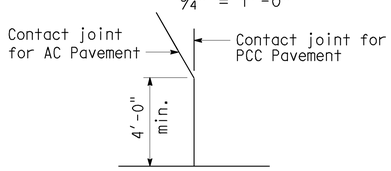

DETAIL A
No Scale

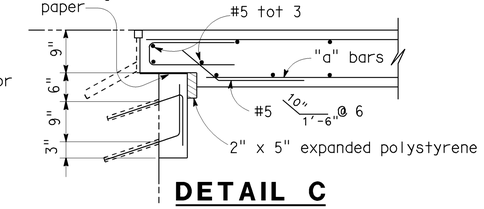

DETAIL C
¾" = 1'-0"

NOTE: For details not shown,see "Section A-A".

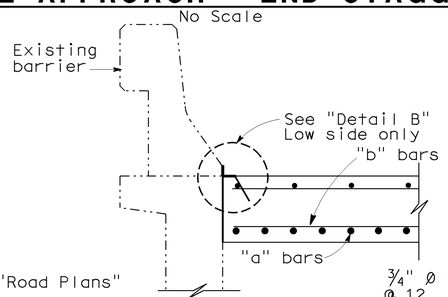

SECTION C-C
¾" = 1'-0"

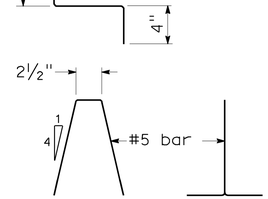

BAR CHAIR DETAIL
1½" = 1'-0"

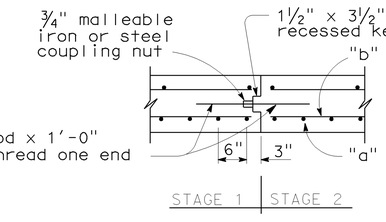

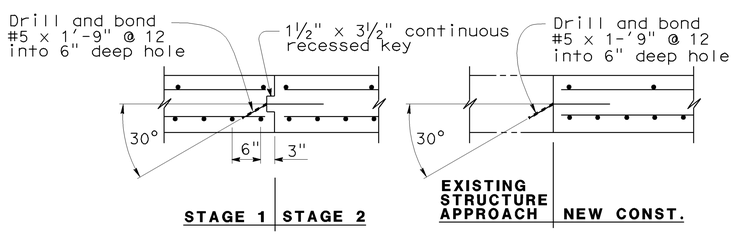

LONGITUDINAL CONSTRUCTION JOINT ALTERNATIVES
¾" = 1'-0"

NOTES:

1. For details not shown or noted,see Structure Plans. Adjust bar reinforcement to clear a sawcut for sealed joint,when required.
2. Space to avoid existing prestress anchorages and main reinforcement.
3. Longitudinal construction joints,when permitted by the Engineer,shall be located on lane lines.
4. Transverse contact joint shall be a minimum of 5'-0" from an existing or constructed weakened plane joint.
5. For transverse contact joint with new PCC paving. refer to Standard Plan P10.
6. Couplers are required for stage construction.
7. End angle or plate at beginning of barrier transition, end of wingwall or end of structure approach as applicable.

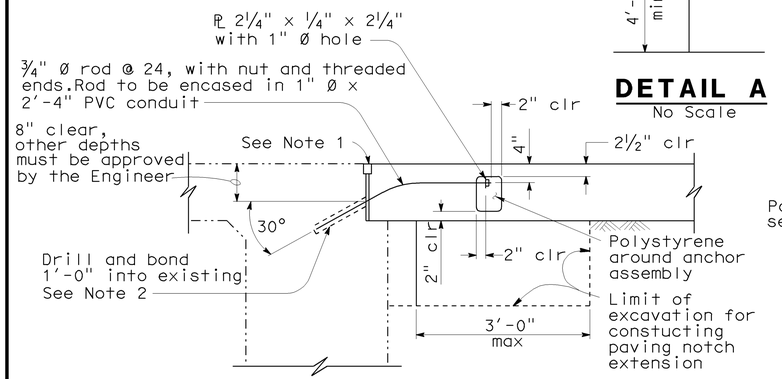

TIE DETAIL
¾" = 1'-0"

NOTE:
THE CONTRACTOR SHALL VERIFY ALL CONTROLLING FIELD DIMENSIONS BEFORE ORDERING OR FABRICATING ANY MATERIAL.

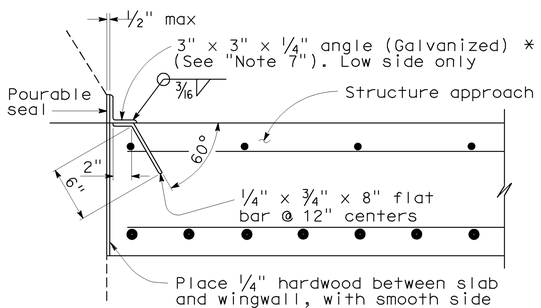

*(TO BE USED WITH TYPE 25 OR TYPE 27 CONCRETE BARRIER)

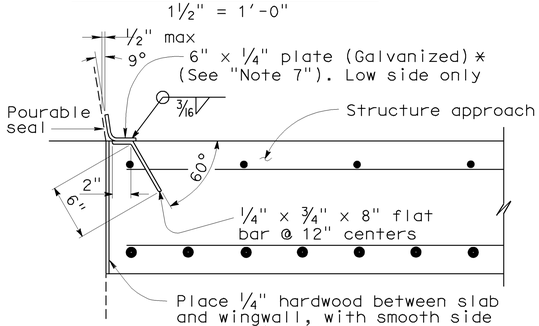

*(TO BE USED WITH TYPE 732 OR TYPE 736 CONCRETE BARRIER)

DETAIL B
1½" = 1'-0"

DESIGN	BY CORY COWDEN	CHECKED DAVID MURRAY	STATE OF CALIFORNIA DEPARTMENT OF TRANSPORTATION	DIVISION OF ENGINEERING SERVICES STRUCTURE DESIGN DESIGN BRANCH 17	BRIDGE NO. 42-0127	GRANTLAND AVE UC (WIDEN)	
DETAILS	BY CORY COWDEN	CHECKED RAMON REYES			POST MILE 26.6/30.7	STRUCTURE APPROACH TYPE R(30D)	
QUANTITIES	BY CORY COWDEN	CHECKED MATT SCHOTT					

STRUCTURES DESIGN DETAIL SHEET (ENGLISH) (REV. 10/25/05)

ORIGINAL SCALE IN INCHES FOR REDUCED PLANS 0 1 2 3

CU 06249
EA 442611

DISREGARD PRINTS BEARING EARLIER REVISION DATES →

REVISION DATES: 6-08-09

SHEET 9 OF 9

FILE => 42-0127-s-sar30.dgn

USERNAME => trlenord DATE PLOTTED => 28-SEP-2009 TIME PLOTTED => 12:54

DIST	COUNTY	ROUTE	POST MILES TOTAL PROJECT	SHEET No	TOTAL SHEETS
06	Fre	99	26.7/30.6	217	242

REGISTERED CIVIL ENGINEER — 06-08-09 DATE

9-28-09
PLANS APPROVAL DATE

REGISTERED PROFESSIONAL ENGINEER — RAMON S. REYES No. C63767 Exp. 9-31-10 CIVIL — STATE OF CALIFORNIA

The State of California or its officers or agents shall not be responsible for the accuracy or completeness of electronic copies of this plan sheet.

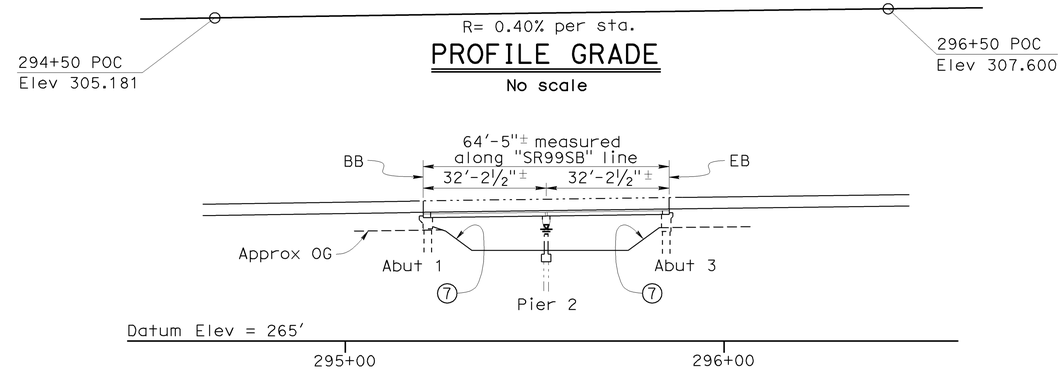

PROFILE GRADE

No scale

ELEVATION

1" = 20'-0"

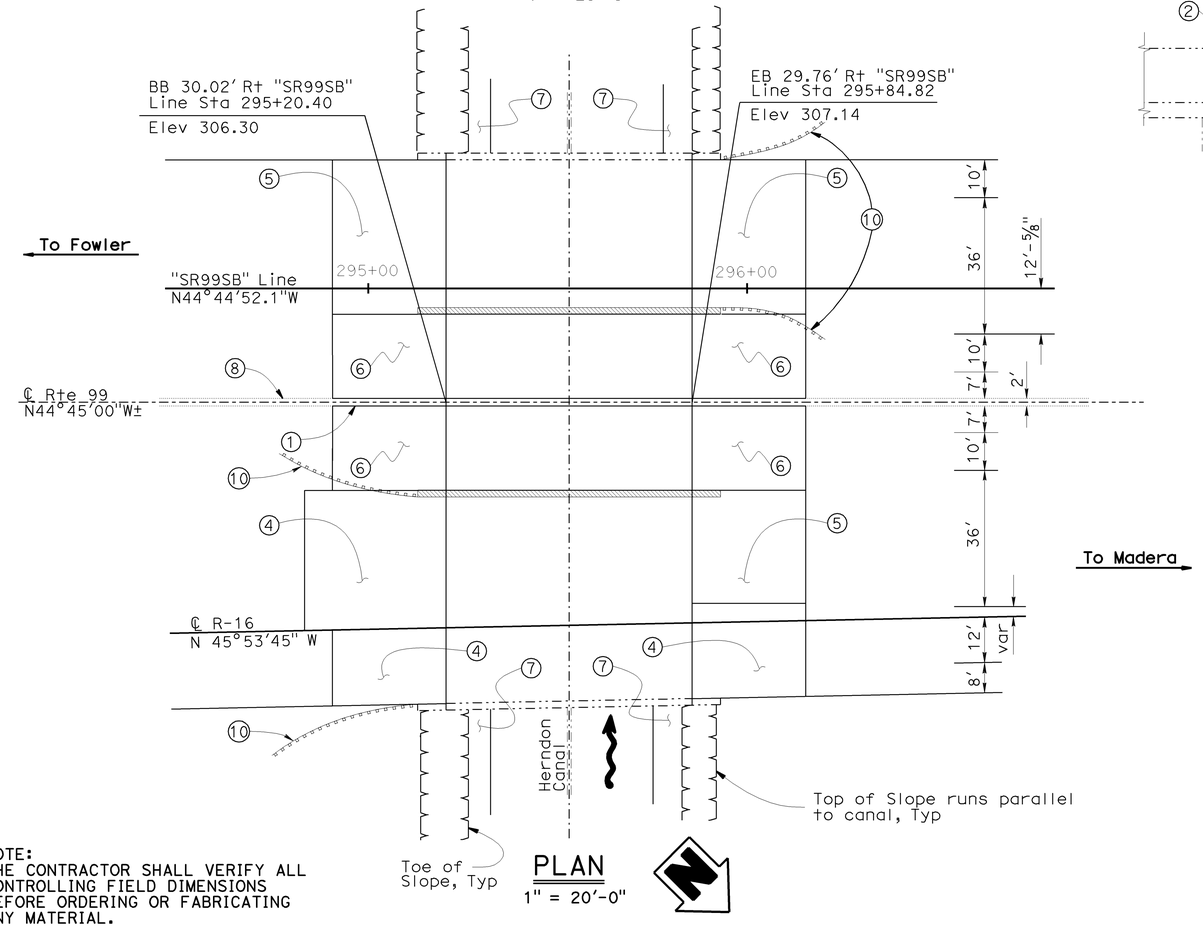

PLAN

1" = 20'-0"

NOTE:
THE CONTRACTOR SHALL VERIFY ALL CONTROLLING FIELD DIMENSIONS BEFORE ORDERING OR FABRICATING ANY MATERIAL.

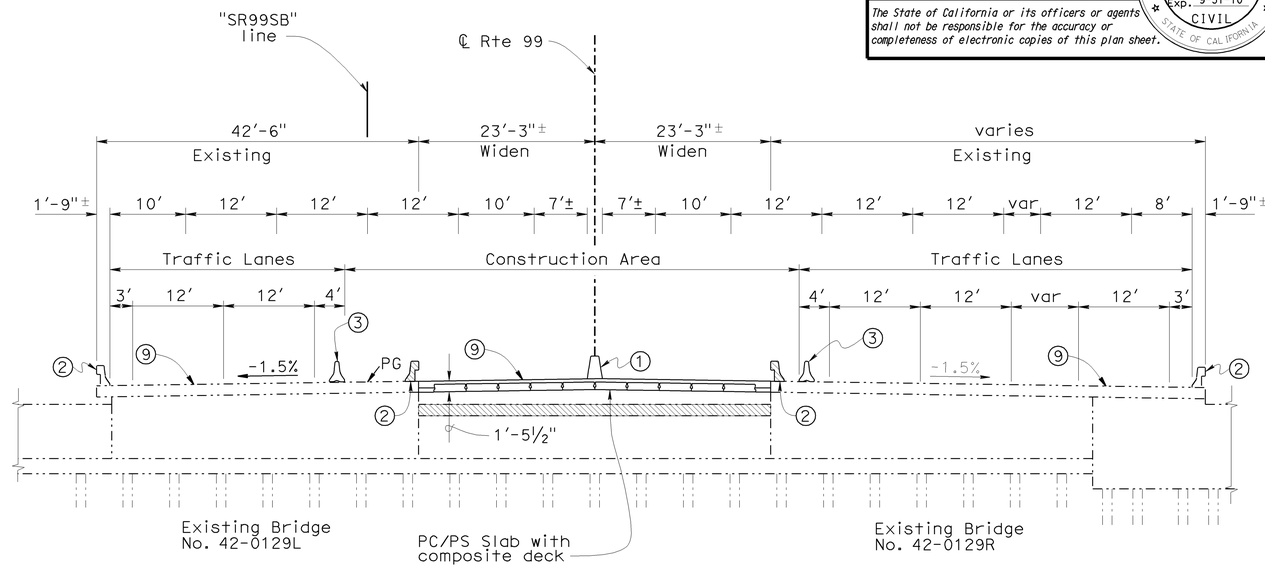

TYPICAL SECTION

1" = 10'-0"

Notes

1. Concrete Barrier (Type 60A)
2. Existing Concrete Barrier (Type 25)
3. Temporary Railing (Type K), see "Road Plans"
4. Existing Structural Approach
5. Structural Approach, Type R(30D)
6. Structural Approach, Type N(30D), widening only
7. Existing Slope Paving
8. Concrete Barrier (Type 60A), see "Road Plans"
9. ¾" Polyester Concrete overlay
10. Existing Metal Beam Guard Railing

—— Denotes new structure
-·-·- Denotes existing structure
▨ Denotes existing Barrier Rail, Wingwalls and Pier wall to be removed

QUANTITIES

PREPARE CONCRETE BRIDGE DECK SURFACE	9,160	SQFT
BRIDGE REMOVAL (PORTION), LOCATION A	1	LS
STRUCTURE EXCAVATION (BRIDGE)	36	CY
STRUCTURE BACKFILL (BRIDGE)	24	CY
AGGREGATE BASE (APPROACH SLAB)	13	CY
24" CAST-IN-DRILLED-HOLE CONCRETE PILING	313	LF
STRUCTURAL CONCRETE, BRIDGE	102	CY
STRUCTURAL CONCRETE, APPROACH SLAB (TYPE N)	104	CY
STRUCTURAL CONCRETE, APPROACH SLAB (TYPE R)	125	CY
PAVING NOTCH EXTENSION	81	CF
DRILL AND BOND DOWEL	148	LF
FURNISH PRECAST PRESTRESSED CONCRETE SLAB (TYPE SI)	3,000	SQFT
ERECT PRECAST PRESTRESSED CONCRETE DECK UNIT	20	EA
FURNISH POLYESTER CONCRETE OVERLAY	573	CF
PLACE POLYESTER CONCRETE OVERLAY	9,160	SQFT
JOINT SEAL (MR½")	286	LF
BAR REINFORCING STEEL (BRIDGE)	25,140	LB
CONCRETE BARRIER (TYPE 60A)	124	LF
PUBLIC SAFETY PLAN	1	LS

Rodney Simmons
DESIGN ENGINEER

	BY	CHECKED
DESIGN	M. Schott	C. Cowden
DETAILS	M. Schott	R. Reyes
QUANTITIES	M. Schott	C. Cowden

LOAD & RESISTANCE FACTOR DESIGN — LIVE LOADING: HL93 W/"LOW-BOY"; PERMIT DESIGN VEHICLE

LAYOUT: BY M. Schott — CHECKED X

SPECIFICATIONS: BY X — PLANS AND SPECS COMPARED X

ORIGINAL SCALE IN INCHES FOR REDUCED PLANS 0 1 2 3

STATE OF CALIFORNIA
DEPARTMENT OF TRANSPORTATION

DIVISION OF ENGINEERING SERVICES
STRUCTURE DESIGN
DESIGN BRANCH 17

CU 06
EA 442611

BRIDGE NO. 42-0129
POST MILE 28.4

HERNDON CANAL BRIDGE (WIDEN)
GENERAL PLAN

DISREGARD PRINTS BEARING EARLIER REVISION DATES →

REVISION DATES: 6-08-09

SHEET 1 OF 13

STRUCTURES DESIGN GENERAL PLAN SHEET (ENGLISH) (REV.07-24-06)

FILE => 42-0129-a-gp.dgn

USERNAME => rrmorlok DATE PLOTTED => 30-SEP-2009 TIME PLOTTED => 08:42

DIST	COUNTY	ROUTE	POST MILES TOTAL PROJECT	SHEET No	TOTAL SHEETS
06	Fre	99	26.7/30.6	218	242

06-08-09
REGISTERED CIVIL ENGINEER DATE

RAMON S. REYES
No. C63767
Exp. 9-31-10
CIVIL
REGISTERED PROFESSIONAL ENGINEER
STATE OF CALIFORNIA

9-28-09
PLANS APPROVAL DATE

The State of California or its officers or agents shall not be responsible for the accuracy or completeness of electronic copies of this plan sheet.

GENERAL NOTES
LOAD AND RESISTANCE FACTOR DESIGN

DESIGN:
AASHTO LRFD Bridge Design Specifications, Third edition with the California Amendments v3.06.01.

SEISMIC DESIGN:
Caltrans Seismic Design Criteria (SDC), Version 1.4 dated June 2006

LIVE LOADING:
HL93 and permit design load.

CONCRETE:
fy = 60 ksi
f'c = 5.0 ksi
n = 8
See prestressing notes.

STRUCTURAL STEEL (new construction):
fy = ASTM A709 Grade 50

STRUCTURAL STEEL
(assumed for evaluation of existing structure):
ASTM A7
fy = 39 ksi

SUPERSTRUCTURE CONSTRUCTION SEQUENCE

1. PC/PS Slabs
2. Deck/Closure pour
3. Barrier

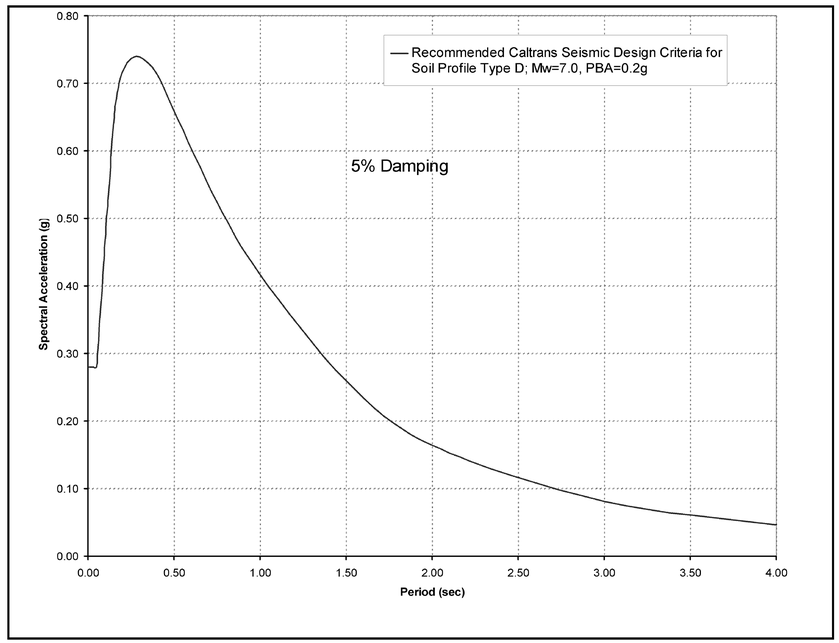

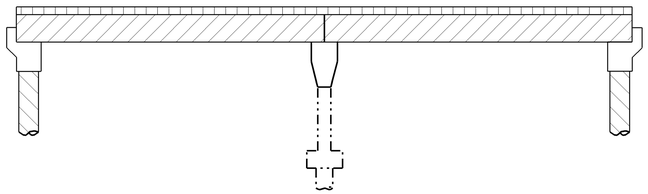

Structural Concrete, Bridge

Structural Concrete, Bridge (f'c=4000psi @ 28 days)

Structural Concrete, CIDH Piles

Precast Prestressed slab units see "Precast Concrete Slabs" Sheet for concrete strengths

CONCRETE STRENGTH AND TYPE LIMITS
No Scale

STANDARD PLANS DATED MAY 2006

	A10A	ACRONYMS AND ABBREVIATIONS (SHEET 1 OF 2)
	A10B	ACRONYMS AND ABBREVIATIONS (SHEET 2 OF 2)
	A62C	LIMITS OF PAYMENT FOR EXCAVATION AND BACKFILL BRIDGE
RSP	A76A	CONCRETE BARRIER TYPE 60
	B0-1	BRIDGE DETAILS
	B0-3	BRIDGE DETAILS
	B0-5	BRIDGE DETAILS
	B0-13	BRIDGE DETAILS
	B2-3	16" AND 24" CAST-IN-DRILLED-HOLE CONCRETE PILE
RSP	B6-21	JOINT SEALS (MAXIMUM MOVEMENT RATING = 2")

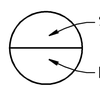

STANDARD PLAN SHEET NO.

DETAIL NO.

INDEX TO PLANS

Sheet No.	Title
1	GENERAL PLAN
2	INDEX TO PLANS
3	FOUNDATION PLAN
4	ABUTMENT LAYOUT
5	ABUTMENT DETAILS
6	PIER LAYOUT
7	PIER DETAILS
8	TYPICAL SECTION
9	PRESTRESSED CONCRETE SLABS
10	ADDITIONAL DECK REINFORCEMENT
11	STRUCTURE APPROACH TYPE N(30S)
12	STRUCTURE APPROACH TYPE R(30S)
13	LOG OF TEST BORINGS 1 OF 1

DECK CONTOURS
Match existing grade and cross slope

PILE DATA TABLE

PILE DATA						
Location	Pile Type	Design Loading (kips)	Nominal Resistance (kips) Compression	Nominal Resistance (kips) Tension	Design Tip Elevations	Specified Tip Elevation
Abut 1	24" CIDH	100.66	202	N/A	(a) 261 (b) 286	261
Abut 3	24" CIDH	100.66	202	N/A	(a) 262 (b) 287	262

NOTES:

1. The Design Tip Elevation is controlled by: (a) Compression (Service Limit) and (b) Settlement
2. The Specified Tip Elevation recommended herein shall not be raised
3. Skin friction is used to determine the Design Tip Elevation controlled by compression and settlement

DESIGN	BY M. Schott	CHECKED C. Cowden	STATE OF CALIFORNIA DEPARTMENT OF TRANSPORTATION	DIVISION OF ENGINEERING SERVICES STRUCTURE DESIGN DESIGN BRANCH 17	BRIDGE NO. 42-0129	HERNDON CANAL BRIDGE (WIDEN)	
DETAILS	BY S. Dutta	CHECKED M. Schott			POST MILE 28.4	INDEX TO PLANS	
QUANTITIES	BY M. Schott	CHECKED C. Cowden		CU 06 EA 442611			

STRUCTURES DESIGN DETAIL SHEET (ENGLISH) (REV. 10/25/05)

ORIGINAL SCALE IN INCHES FOR REDUCED PLANS 0 1 2 3

DISREGARD PRINTS BEARING EARLIER REVISION DATES →

REVISION DATES: 01/28/09 | 02/02/09 | 4-15-09 | 5-21-09

SHEET 2 OF 13

FILE => 42-0129-a-itp.dgn

USERNAME => rtriehard DATE PLOTTED => 28-SEP-2009 TIME PLOTTED => 13:55

DIST	COUNTY	ROUTE	POST MILES TOTAL PROJECT	SHEET No	TOTAL SHEETS
06	Fre	99	26.7/30.6	219	242

REGISTERED CIVIL ENGINEER — 06-08-09 DATE

9-28-09
PLANS APPROVAL DATE

The State of California or its officers or agents shall not be responsible for the accuracy or completeness of electronic copies of this plan sheet.

REGISTERED PROFESSIONAL ENGINEER — Ramon Reyes — No. C63767 — Exp 09-31-2010 — CIVIL — STATE OF CALIFORNIA

Bridge Location # 42-0129L

① - 34.16 Lt. "SR99SB" Line, Sta.295+20.36, Elev.=305.47 ±
② - 34.20 Lt. "SR99SB" Line, Sta.295+84.75, Elev.=306.25 ±
③ - 4.80 Lt. "SR99SB" Line, Sta.295+20.56, Elev.=306.04 ±
④ - 4.75 Lt. "SR99SB" Line, Sta.295+84.69, Elev.=306.79 ±

Bridge Location # 42-0129R

⑤ - 54.93 Rt. "SR99SB" Line, Sta.295+20.25, Elev.=306.04 ±
⑥ - 54.87 Rt. "SR99SB" Line, Sta.295+84.77, Elev.=306.83 ±
⑦ -109.07 Rt. "SR99SB" Line, Sta.295+20.37, Elev.=305.23 ±
⑧ -107.92 Rt. "SR99SB" Line, Sta.295+84.63, Elev.=306.07 ±

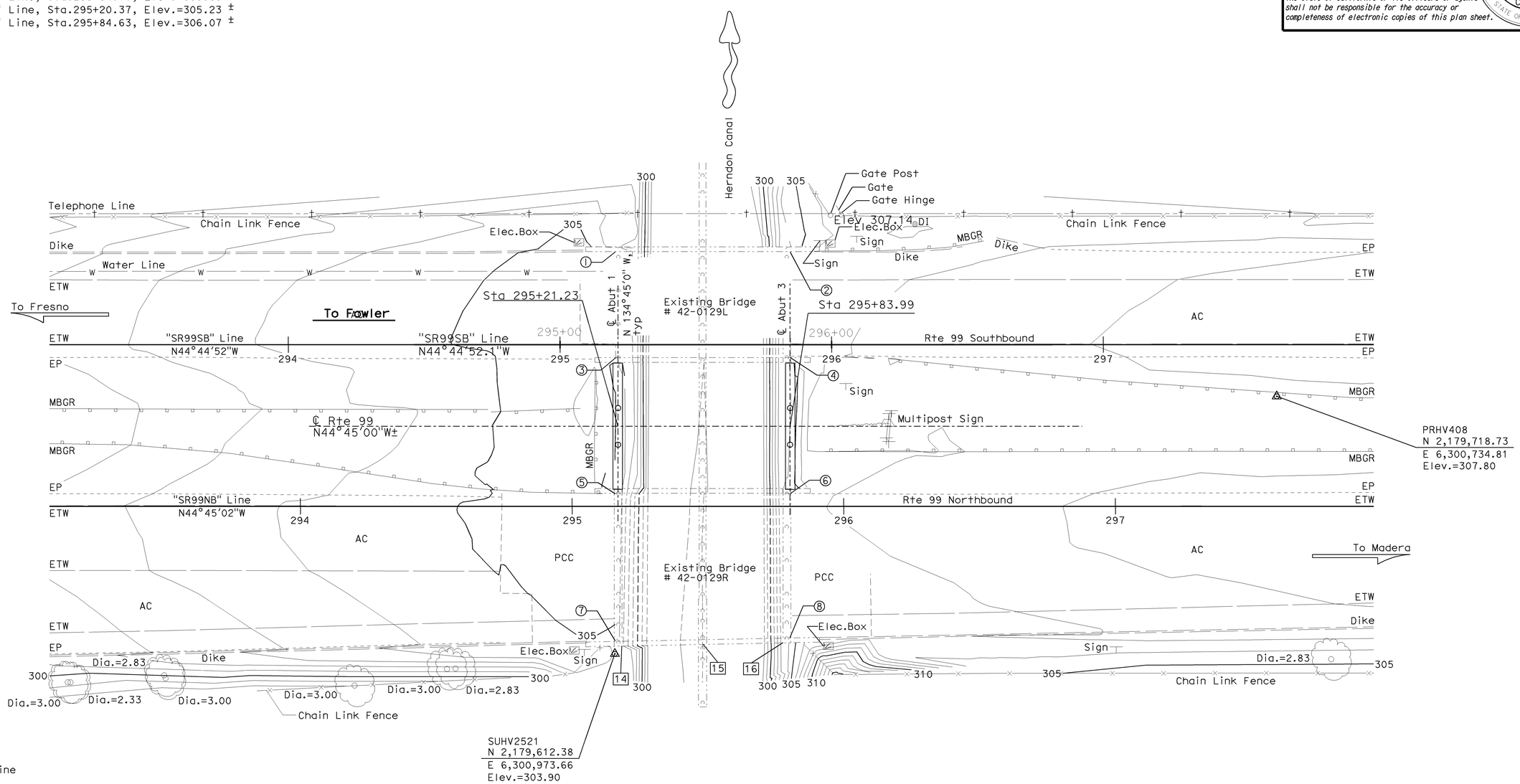

SURVEY CONTROL

PRHV408
Fnd 1" IP w/ RCTP
40.49 FT Lt. "SR99NB" Line
Sta. 297+59.40
N 2,179,718.73
E 6,300,734.81
Elev. = 307.80

SUHV2521
Fnd 1" IP w/ RCTP
54.27 FT Rt. "SR99NB" Line
Sta. 295+15.72
N 2,179,612.38
E 6,300,973.66
Elev. = 303.90

Note:
All Utility Lines Per District Utility Plan

PRELIMINARY INVESTIGATION SECTION						DESIGN	BY Matt Schott	CHECKED Cory Cowden
SCALE 1"=20'	VERT.DATUM NAVD88	PHOTOGRAMMETRY AS OF: X				DETAILS	BY Matt Schott	CHECKED Ramon Reyes
	HORZ.DATUM NAD83	SURVEYED BY District	CHECKED	BY C.Fassett 3/2009		QUANTITIES	BY Matt Schott	CHECKED Cory Cowden
	ALIGNMENT TIES Dist.Traverse Sheet	DRAFTED BY J.Martinez 3/2009	CHECKED	BY L.Lew 3/2009				

STATE OF CALIFORNIA
DEPARTMENT OF TRANSPORTATION

DIVISION OF ENGINEERING SERVICES
STRUCTURE DESIGN
DESIGN BRANCH 17

CU 06
EA 442611

BRIDGE NO. 42-0129
POST MILE 28.4

HERNDON CANAL BRIDGE
FOUNDATION PLAN NO.1

STRUCTURES FOUNDATION PLAN SHEET (ENGLISH) (REV. 10/25/05)

ORIGINAL SCALE IN INCHES FOR REDUCED PLANS 0 1 2 3

DISREGARD PRINTS BEARING EARLIER REVISION DATES →

REVISION DATES: 4/6/09 4/15/09

SHEET 3 OF 13

FILE => 42-0129-e-fp01.dgn

USERNAME => trlenard DATE PLOTTED => 28-SEP-2009 TIME PLOTTED => 13:55

Note:

1. For Additional details see "Abutment Details" sheet
2. Match existing cross slope

Denotes Limits of Removal for existing concrete

DIST	COUNTY	ROUTE	POST MILES TOTAL PROJECT	SHEET No	TOTAL SHEETS
06	Fre	99	26.7/30.6	220	242

06-08-09
REGISTERED CIVIL ENGINEER DATE

RAMON S. REYES No. C63767 Exp. 9-31-10 CIVIL — REGISTERED PROFESSIONAL ENGINEER — STATE OF CALIFORNIA

9-28-09
PLANS APPROVAL DATE

The State of California or its officers or agents shall not be responsible for the accuracy or completeness of electronic copies of this plan sheet.

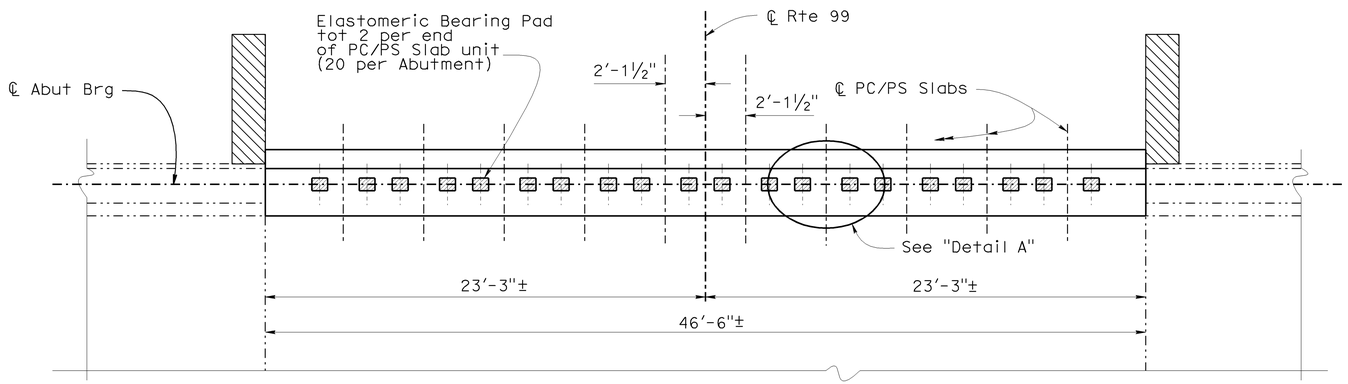

PLAN

¼" = 1'-0"

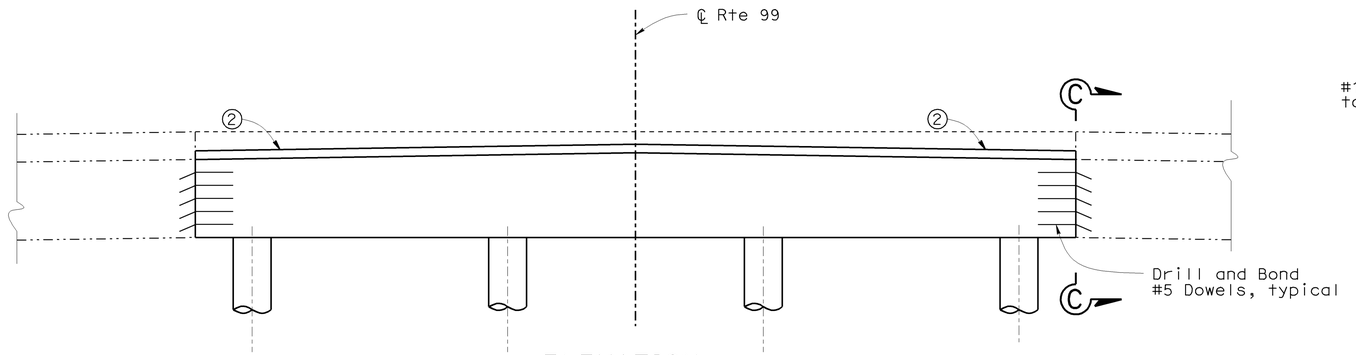

ELEVATION

¼" = 1'-0"

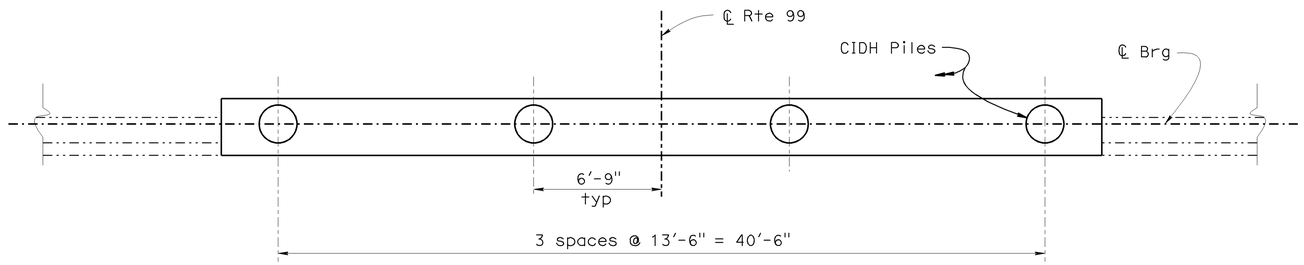

PILE LAYOUT

¼" = 1'-0"

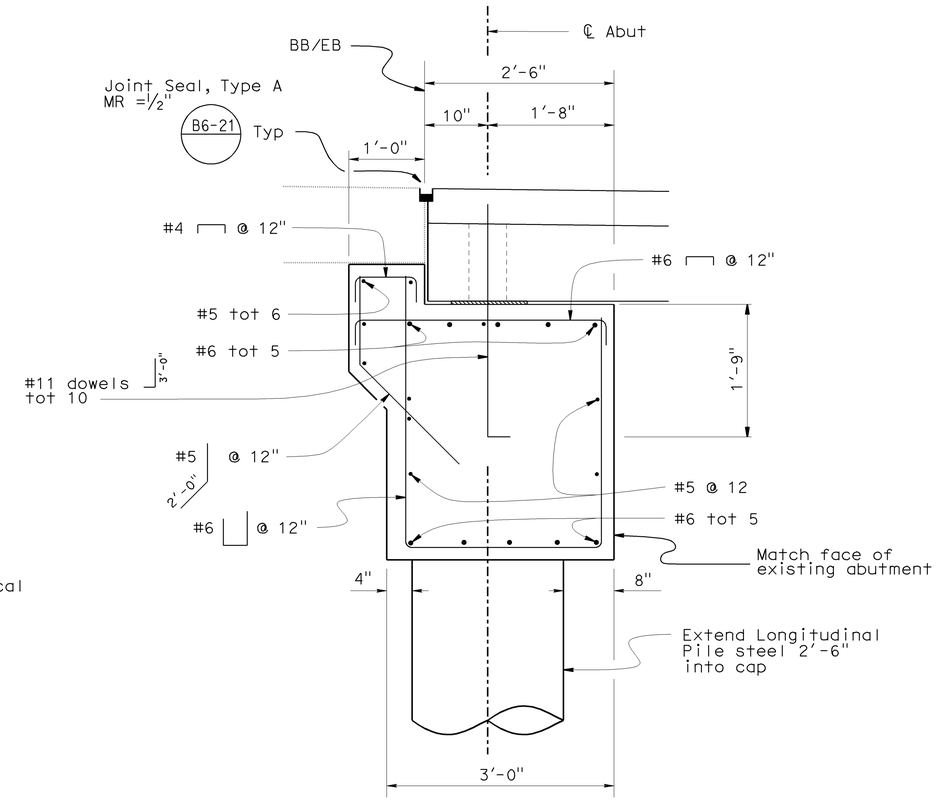

TYPICAL SECTION

1 " = 1'-0"

(Abut 1 shown, Abut 3 similar)

NOTE:
THE CONTRACTOR SHALL VERIFY ALL CONTROLLING FIELD DIMENSIONS BEFORE ORDERING OR FABRICATING ANY MATERIAL.

	BY	CHECKED
DESIGN	M. Schott	C. Cowden
DETAILS	S. Dutta	M. Schott
QUANTITIES	M. Schott	C. Cowden

STATE OF CALIFORNIA
DEPARTMENT OF TRANSPORTATION

DIVISION OF ENGINEERING SERVICES
STRUCTURE DESIGN
DESIGN BRANCH 17

BRIDGE NO. 42-0129
POST MILE 28.4

HERNDON CANAL BRIDGE (WIDEN)
ABUTMENT LAYOUT

STRUCTURES DESIGN DETAIL SHEET (ENGLISH) (REV. 10/25/05)

ORIGINAL SCALE IN INCHES FOR REDUCED PLANS 0 1 2 3

CU 06
EA 442611

DISREGARD PRINTS BEARING EARLIER REVISION DATES

REVISION DATES: 01/27/09 | 4-16-09 | 5-21-09

SHEET 4 OF 13

FILE => 42-0129-f-abutlay.dgn

USERNAME => rtrinard DATE PLOTTED => 28-SEP-2009 TIME PLOTTED => 13:55

DIST	COUNTY	ROUTE	POST MILES TOTAL PROJECT	SHEET No	TOTAL SHEETS
06	Fre	99	26.7/30.6	221	242

REGISTERED CIVIL ENGINEER — 06-08-09 DATE

RAMON S. REYES No. C63767 Exp. 9-31-10 CIVIL — REGISTERED PROFESSIONAL ENGINEER — STATE OF CALIFORNIA

9-28-09
PLANS APPROVAL DATE

The State of California or its officers or agents shall not be responsible for the accuracy or completeness of electronic copies of this plan sheet.

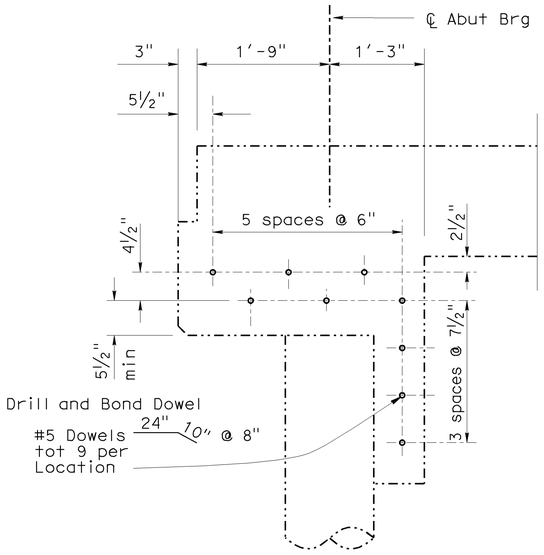

SECTION C-C

1 " = 1'-0"

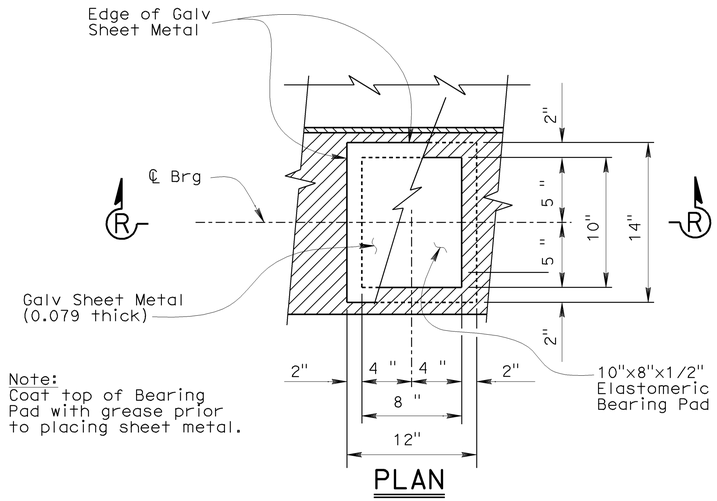

Note:
Coat top of Bearing Pad with grease prior to placing sheet metal.

PLAN

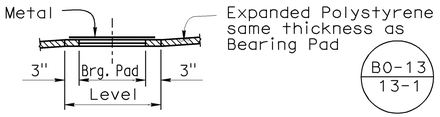

BO-13 / 13-1

SECTION R-R

No Scale

BEARING PAD DETAIL

No Scale
Details typical at all bearing pads

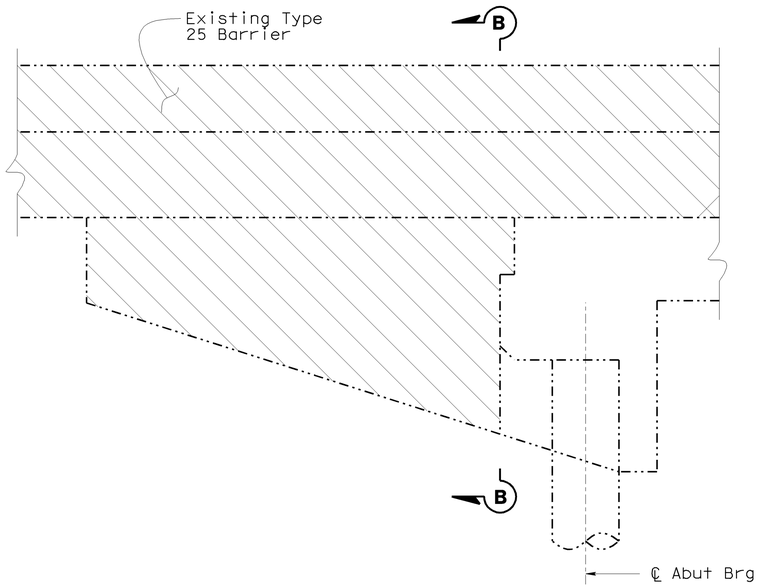

WINGWALL CONCRETE REMOVAL

¾" = 1'-0"

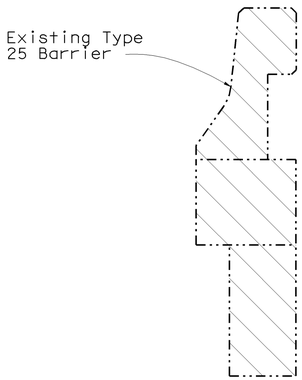

SECTION B-B

¾" = 1'-0"

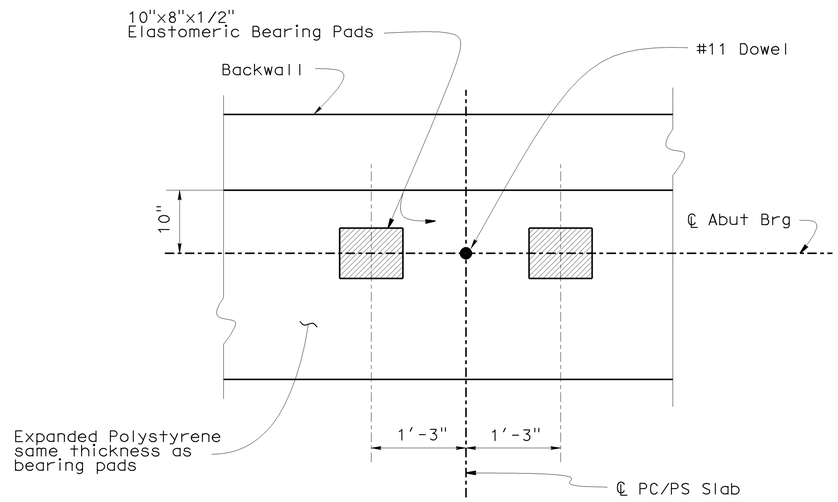

DETAIL A

1 " = 1'-0"

NOTE:
THE CONTRACTOR SHALL VERIFY ALL CONTROLLING FIELD DIMENSIONS BEFORE ORDERING OR FABRICATING ANY MATERIAL.

DESIGN	BY M.Schott	CHECKED C. Cowden	STATE OF CALIFORNIA DEPARTMENT OF TRANSPORTATION	DIVISION OF ENGINEERING SERVICES STRUCTURE DESIGN DESIGN BRANCH 17	BRIDGE NO. 42-0129	HERNDON CANAL BRIDGE (WIDEN)
DETAILS	BY S. Dutta	CHECKED M. Schott			POST MILE 28.4	ABUTMENT DETAILS
QUANTITIES	BY M. Schott	CHECKED C. Cowden				

STRUCTURES DESIGN DETAIL SHEET (ENGLISH) (REV. 10/25/05)

ORIGINAL SCALE IN INCHES FOR REDUCED PLANS 0 1 2 3

CU 06
EA 442611

DISREGARD PRINTS BEARING EARLIER REVISION DATES →

REVISION DATES: 01/29/09 | 5-21-09

SHEET 5 OF 13

FILE => 42-0129-g-abutdet.dgn

USERNAME => rriverord DATE PLOTTED => 28-SEP-2009 TIME PLOTTED => 13:55

DIST	COUNTY	ROUTE	POST MILES TOTAL PROJECT	SHEET No	TOTAL SHEETS
06	Fre	99	26.7/30.6	222	242

06-08-09
REGISTERED CIVIL ENGINEER DATE

9-28-09
PLANS APPROVAL DATE

RAMON S. REYES
No. C63767
Exp. 9-31-10
CIVIL
REGISTERED PROFESSIONAL ENGINEER
STATE OF CALIFORNIA

The State of California or its officers or agents shall not be responsible for the accuracy or completeness of electronic copies of this plan sheet.

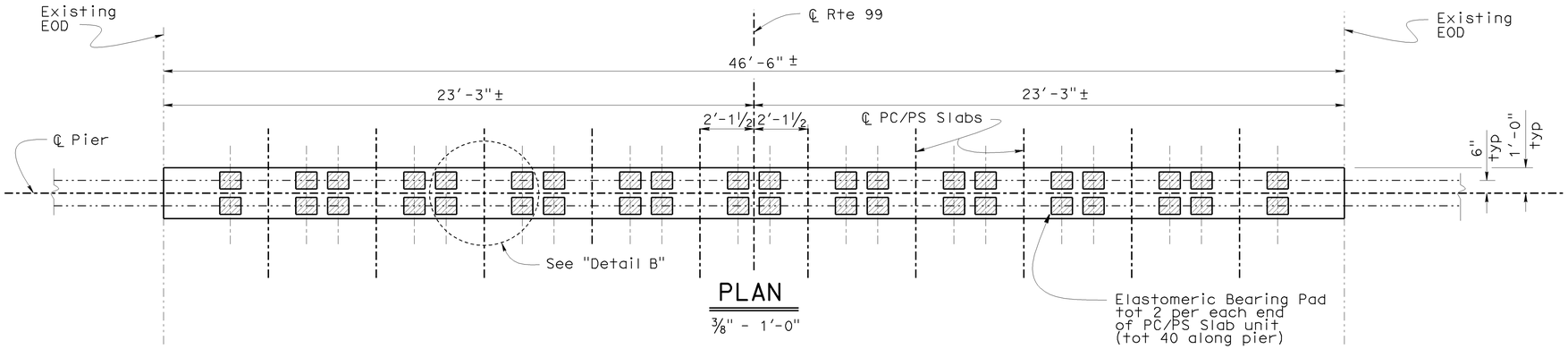

PLAN
⅜" - 1′-0"

Notes:

1. For Additional Details, see "Pier Details" sheet

-·-·-·- Denotes existing structure

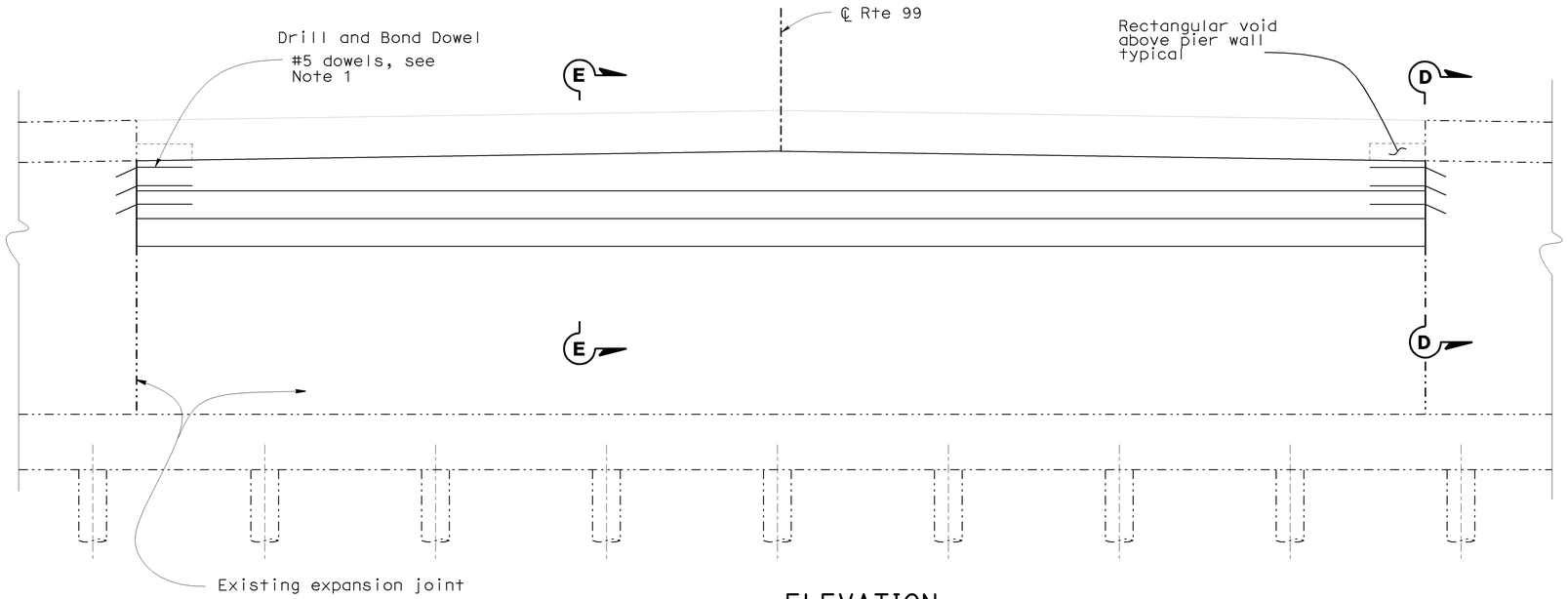

ELEVATION
⅜" - 1′-0"

NOTE:
THE CONTRACTOR SHALL VERIFY ALL CONTROLLING FIELD DIMENSIONS BEFORE ORDERING OR FABRICATING ANY MATERIAL.

DESIGN	BY M. Schott	CHECKED C. Cowden	STATE OF CALIFORNIA DEPARTMENT OF TRANSPORTATION	DIVISION OF ENGINEERING SERVICES STRUCTURE DESIGN DESIGN BRANCH 17	BRIDGE NO. 42-0129	HERNDON CANAL BRIDGE (WIDEN)	
DETAILS	BY S. Dutta	CHECKED M. Schott			POST MILE 28.4	PIER LAYOUT	
QUANTITIES	BY M. Schott	CHECKED C. Cowden					

STRUCTURES DESIGN DETAIL SHEET (ENGLISH) (REV. 10/25/05)

ORIGINAL SCALE IN INCHES FOR REDUCED PLANS 0 1 2 3

CU 06
EA 442611

DISREGARD PRINTS BEARING EARLIER REVISION DATES →

REVISION DATES										SHEET	OF
01/22/09	5-21-09									6	13

FILE => 42-0129-h-per__lay.dgn

USERNAME => trlenard DATE PLOTTED => 28-SEP-2009 TIME PLOTTED => 13:55

DIST	COUNTY	ROUTE	POST MILES TOTAL PROJECT	SHEET No	TOTAL SHEETS
06	Fre	99	26.7/30.6	223	242

06-08-09
REGISTERED CIVIL ENGINEER DATE

RAMON S. REYES
No. C63767
Exp. 9-31-10
CIVIL
REGISTERED PROFESSIONAL ENGINEER
STATE OF CALIFORNIA

9-28-09
PLANS APPROVAL DATE

The State of California or its officers or agents shall not be responsible for the accuracy or completeness of electronic copies of this plan sheet.

Notes

1. For bearing pad detail see "ABUTMENT DETAILS" sheet

Denotes Limits of Removal of existing concrete

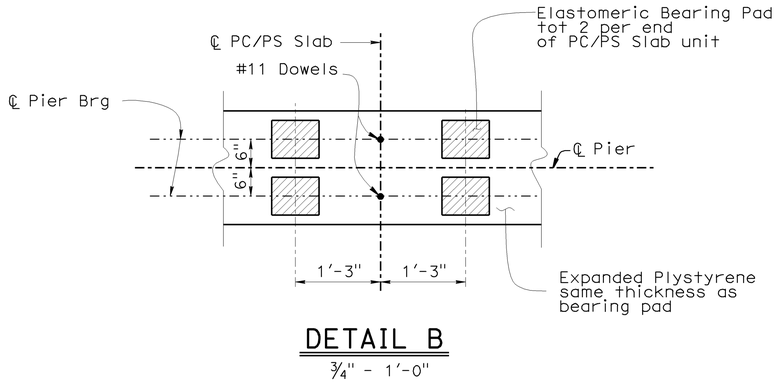

DETAIL B

3/4" - 1'-0"

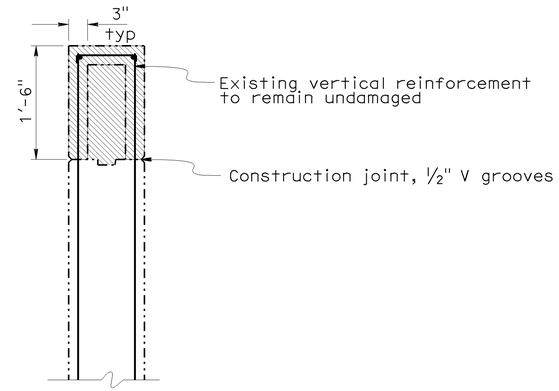

PIER WALL CONCRETE REMOVAL

1" - 1'-0"

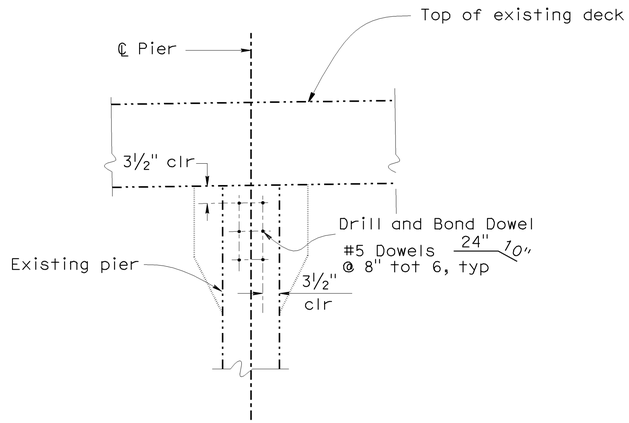

SECTION D-D

3/4" - 1'-0"

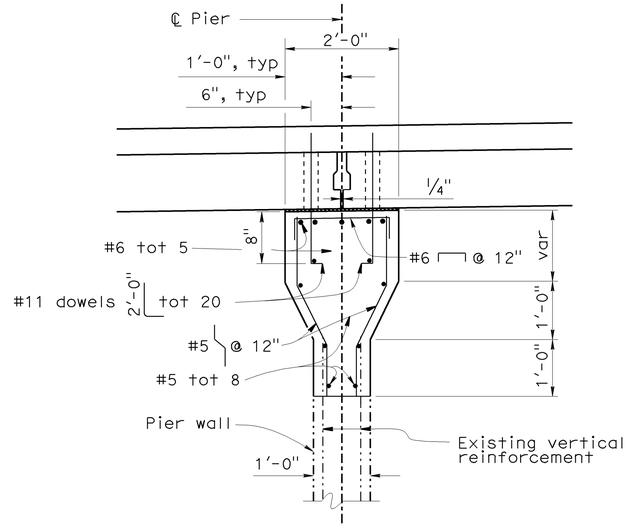

SECTION E-E

3/4" - 1'-0"

DESIGN	BY M. Schott	CHECKED C. Cowden	STATE OF CALIFORNIA DEPARTMENT OF TRANSPORTATION	DIVISION OF ENGINEERING SERVICES STRUCTURE DESIGN DESIGN BRANCH 17	BRIDGE NO. 42-0129	HERNDON CANAL BRIDGE (WIDEN) PIER DETAILS	
DETAILS	BY S. Dutta	CHECKED M. Schott			POST MILE 28.4		
QUANTITIES	BY M. Schott	CHECKED C. Cowden		CU 06 EA 442611	DISREGARD PRINTS BEARING EARLIER REVISION DATES →	REVISION DATES 01/27/09	SHEET 7 OF 13

STRUCTURES DESIGN DETAIL SHEET (ENGLISH) (REV. 10/25/05)

ORIGINAL SCALE IN INCHES FOR REDUCED PLANS 0 1 2 3

FILE => 42-0129-h-perdet.dgn

USERNAME => rtriebord DATE PLOTTED => 28-SEP-2009 TIME PLOTTED => 13:55

DIST	COUNTY	ROUTE	POST MILES TOTAL PROJECT	SHEET No	TOTAL SHEETS
06	Fre	99	26.7/30.6	224	242

REGISTERED CIVIL ENGINEER — 06-08-09 DATE

RAMON S. REYES No. C63767 Exp. 9-31-10 CIVIL — REGISTERED PROFESSIONAL ENGINEER — STATE OF CALIFORNIA

9-28-09
PLANS APPROVAL DATE

The State of California or its officers or agents shall not be responsible for the accuracy or completeness of electronic copies of this plan sheet.

Notes:

① Match existing grade and cross slope

② To be placed prior to placement of deck concrete

③ ¾" polyester Concrete overlay

Denotes existing structure

For additional details see "Prestressed Concrete slabs" sheet

Denotes Limits of Removal of existing concrete

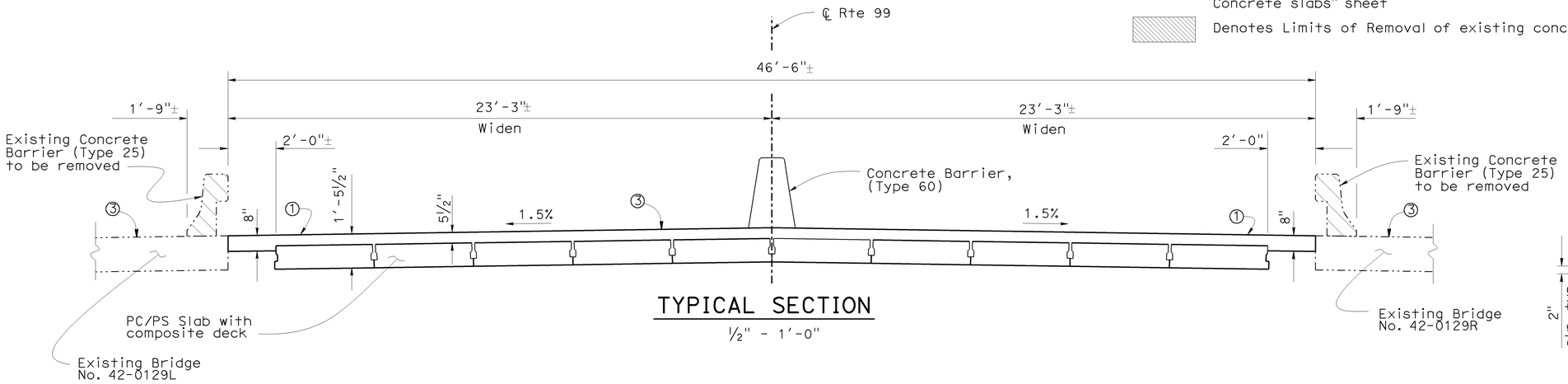

TYPICAL SECTION

½" - 1'-0"

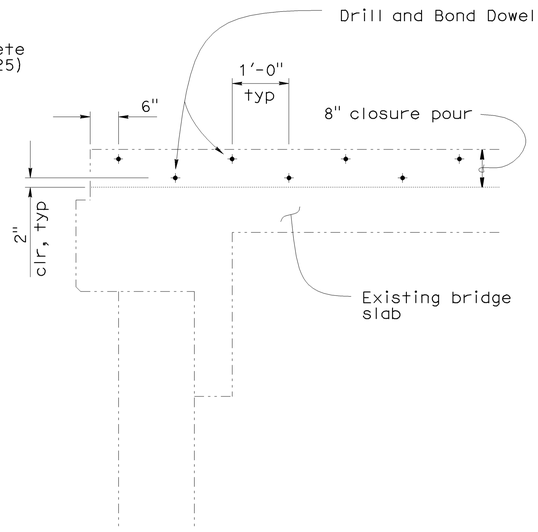

SECTION E-E

¾" - 1'-0"

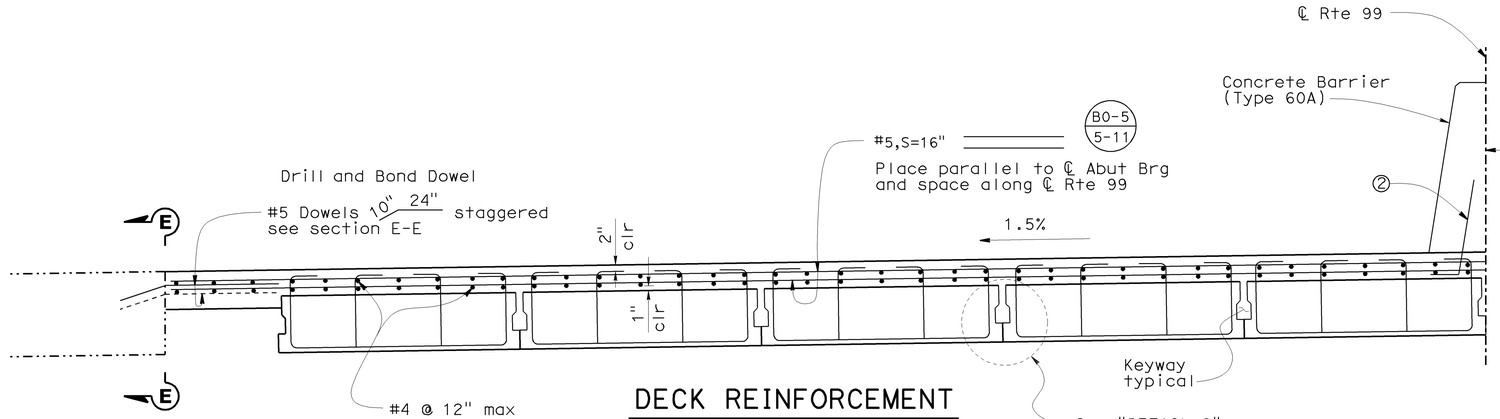

DECK REINFORCEMENT

¾" - 1'-0"

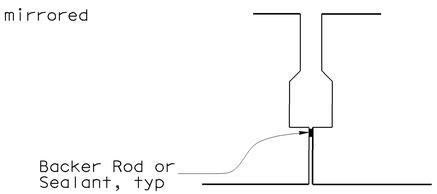

DETAIL C

No Scale

NOTE:
THE CONTRACTOR SHALL VERIFY ALL CONTROLLING FIELD DIMENSIONS BEFORE ORDERING OR FABRICATING ANY MATERIAL.

DESIGN	BY M. Schott	CHECKED C. Cowden	STATE OF CALIFORNIA DEPARTMENT OF TRANSPORTATION	DIVISION OF ENGINEERING SERVICES STRUCTURE DESIGN DESIGN BRANCH 17	BRIDGE NO. 42-0129	HERNDON CANAL BRIDGE (WIDEN)	
DETAILS	BY S. Dutta	CHECKED M. Schott			POST MILE 28.4	TYPICAL SECTION	
QUANTITIES	BY M. Schott	CHECKED C. Cowden					

STRUCTURES DESIGN DETAIL SHEET (ENGLISH) (REV. 10/25/05)

ORIGINAL SCALE IN INCHES FOR REDUCED PLANS 0 1 2 3

CU 06
EA 442611

DISREGARD PRINTS BEARING EARLIER REVISION DATES →

REVISION DATES: 01/27/09

SHEET 8 OF 13

FILE => 42-0129-k-typsec.dgn

USERNAME => trlenord DATE PLOTTED => 28-SEP-2009 TIME PLOTTED => 13:55

DIST	COUNTY	ROUTE	POST MILES TOTAL PROJECT	SHEET No	TOTAL SHEETS
06	Fre	99	26.7/30.6	225	242

REGISTERED CIVIL ENGINEER — 06-08-09 DATE

9-28-09
PLANS APPROVAL DATE

RAMON S. REYES No. C63767 Exp. 9-31-10 CIVIL — REGISTERED PROFESSIONAL ENGINEER — STATE OF CALIFORNIA

The State of California or its officers or agents shall not be responsible for the accuracy or completeness of electronic copies of this plan sheet.

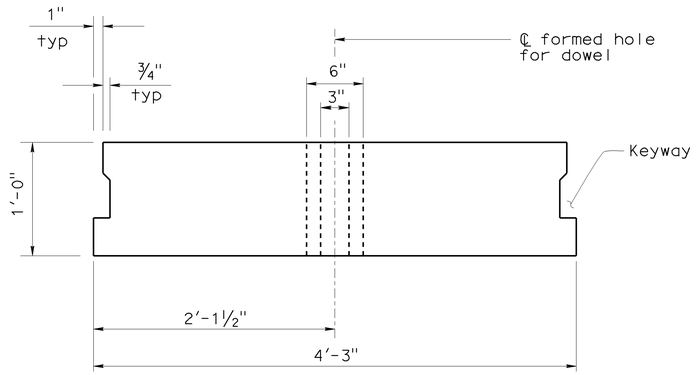

TYPICAL SECTION

1½" = 1'-0"

Notes:

1. Concrete Strength: f'ci is at time of initial stressing, f'c is at 28 days.
2. Deflection components: Informational - to be used in setting screed line elevations.
3. Screed line elevations for the concrete will be determined by the Engineer.
4. Prestressing strands shall be 0.6" ø 270 ksi low relaxation.
5. Strand location may be adjusted as approved by Engineer.
6. Grout holes after placing girders.

Number of 0.6" ø Strands	Pjack	Concrete Strength (ksi)		Dead Load Deflection Components at Midspan (ft)	
		f'ci (Slab)	f'c (Slab)	Deck	Barrier
10	43.94 kips/strand = 439.4 kips	4.0	5.0	0.19	0.01

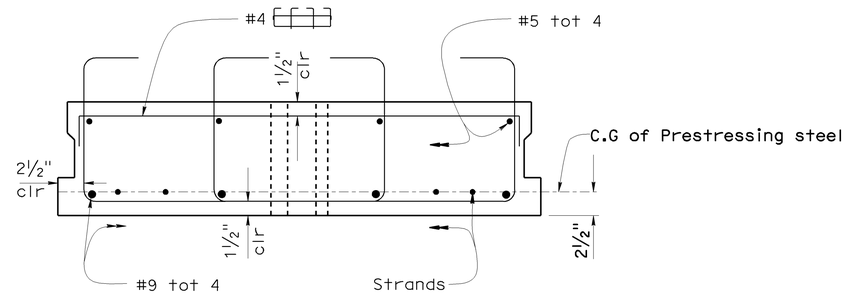

SLAB UNITS

TYPICAL REINFORCEMENT

1½" - 1'-0"

LONGITUDINAL SECTION

½" = 1'-0"

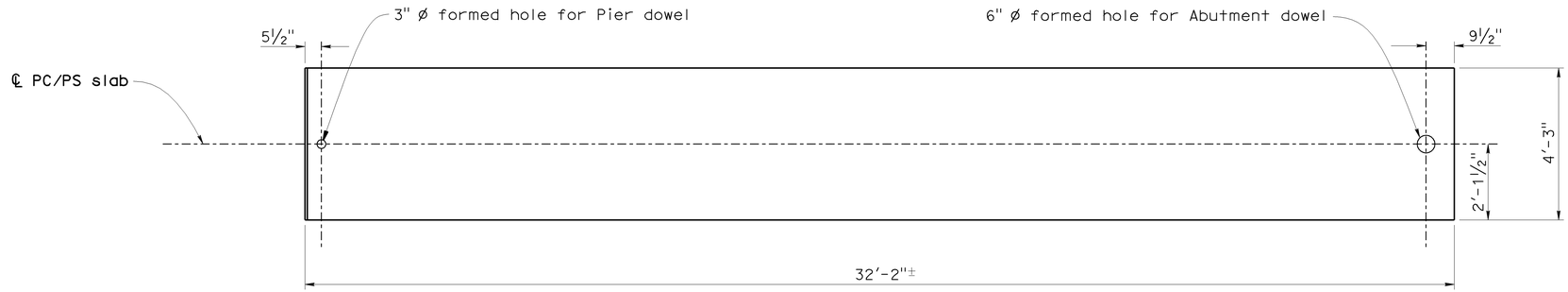

PLAN

½" = 1'-0"

DESIGN	BY M. Schott	CHECKED C. Cowden	STATE OF CALIFORNIA DEPARTMENT OF TRANSPORTATION	DIVISION OF ENGINEERING SERVICES STRUCTURE DESIGN DESIGN BRANCH 17	BRIDGE NO. 42-0129	HERNDON CANAL BRIDGE (WIDEN) PRESTRESSED CONCRETE SLABS	
DETAILS	BY S. Dutta	CHECKED M. Schott			POST MILE 28.4		
QUANTITIES	BY M. Schott	CHECKED C. Cowden					

STRUCTURES DESIGN DETAIL SHEET (ENGLISH) (REV. 10/25/05)

ORIGINAL SCALE IN INCHES FOR REDUCED PLANS 0 1 2 3

CU 06
EA 442611

DISREGARD PRINTS BEARING EARLIER REVISION DATES →

REVISION DATES										SHEET	OF
01/25/09	5-21-09									9	13

FILE => 42-0129-o-prestgir.dgn

USERNAME => rtriebord DATE PLOTTED => 28-SEP-2009 TIME PLOTTED => 13:55

DIST	COUNTY	ROUTE	POST MILES TOTAL PROJECT	SHEET No	TOTAL SHEETS
06	Fre	99	26.7/30.6	226	242

06-08-09
REGISTERED CIVIL ENGINEER DATE

RAMON S. REYES
No. C63767
Exp. 9-31-10
CIVIL
REGISTERED PROFESSIONAL ENGINEER
STATE OF CALIFORNIA

9-28-09
PLANS APPROVAL DATE

The State of California or its officers or agents shall not be responsible for the accuracy or completeness of electronic copies of this plan sheet.

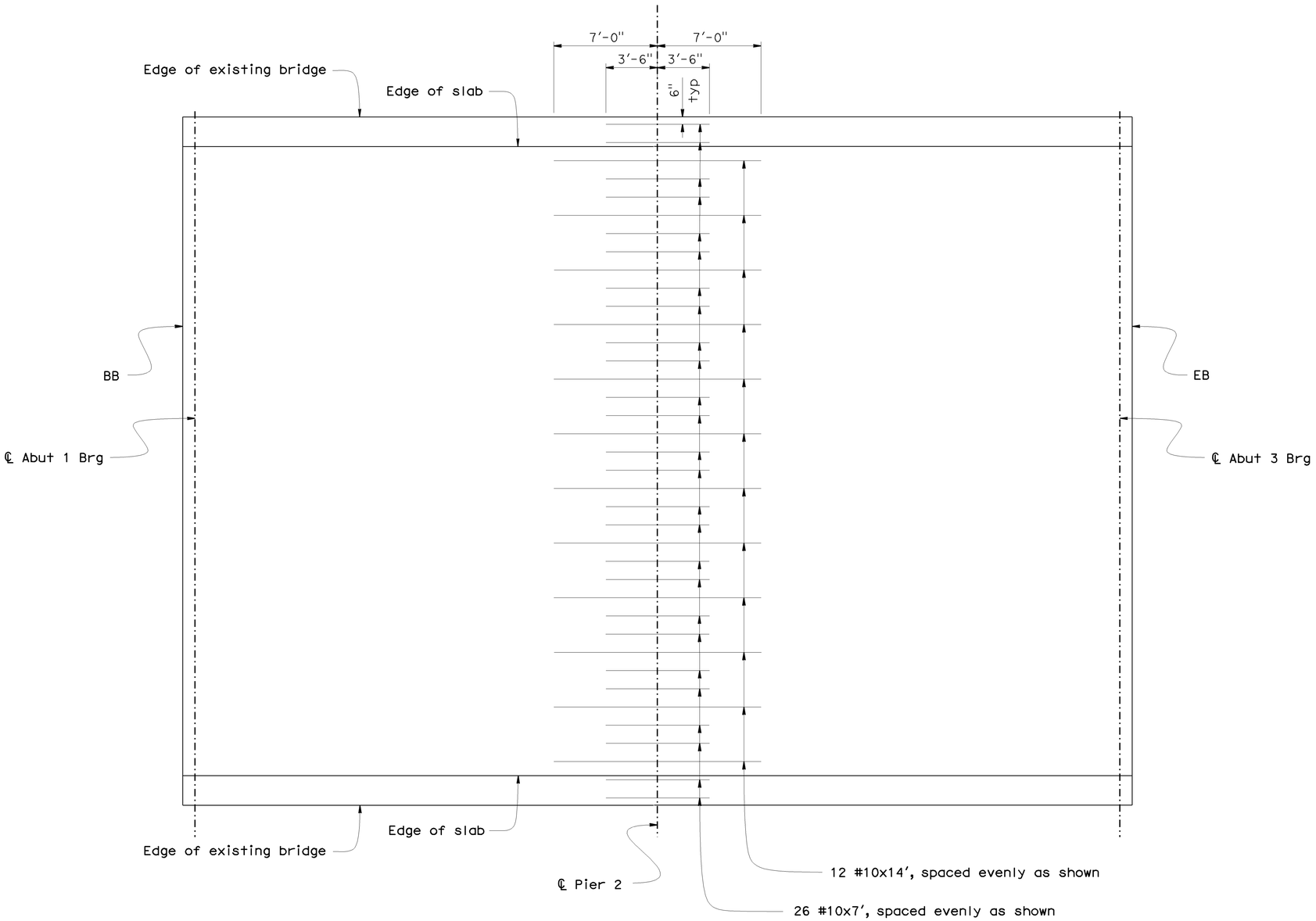

NEGATIVE MOMENT REINFORCEMENT

1/4" = 1'-0"

DESIGN	BY M. Schott	CHECKED C. Cowden	STATE OF CALIFORNIA DEPARTMENT OF TRANSPORTATION	DIVISION OF ENGINEERING SERVICES STRUCTURE DESIGN DESIGN BRANCH 17	BRIDGE NO. 42-0129	HERNDON CANAL BRIDGE (WIDEN)
DETAILS	BY S. Dutta	CHECKED M. Schott			POST MILE 28.4	ADDITIONAL DECK RIENFORCEMENT
QUANTITIES	BY M. Schott	CHECKED C. Cowden				

STRUCTURES DESIGN DETAIL SHEET (ENGLISH) (REV. 10/25/05)

ORIGINAL SCALE IN INCHES FOR REDUCED PLANS 0 1 2 3

CU 06
EA 442611

DISREGARD PRINTS BEARING EARLIER REVISION DATES →

REVISION DATES: 01/27/09

SHEET 10 OF 13

FILE => 42-0129-p-adgirref.dgn

USERNAME => trlehord DATE PLOTTED => 28-SEP-2009 TIME PLOTTED => 13:56

DIST	COUNTY	ROUTE	POST MILES TOTAL PROJECT	SHEET No	TOTAL SHEETS
06	Fre	99	26.7/30.6	227	242

06-08-09
REGISTERED CIVIL ENGINEER DATE

9-28-09
PLANS APPROVAL DATE

RAMON S. REYES
No. C63767
Exp. 9-31-10
CIVIL
REGISTERED PROFESSIONAL ENGINEER
STATE OF CALIFORNIA

The State of California or its officers or agents shall not be responsible for the accuracy or completeness of electronic copies of this plan sheet.

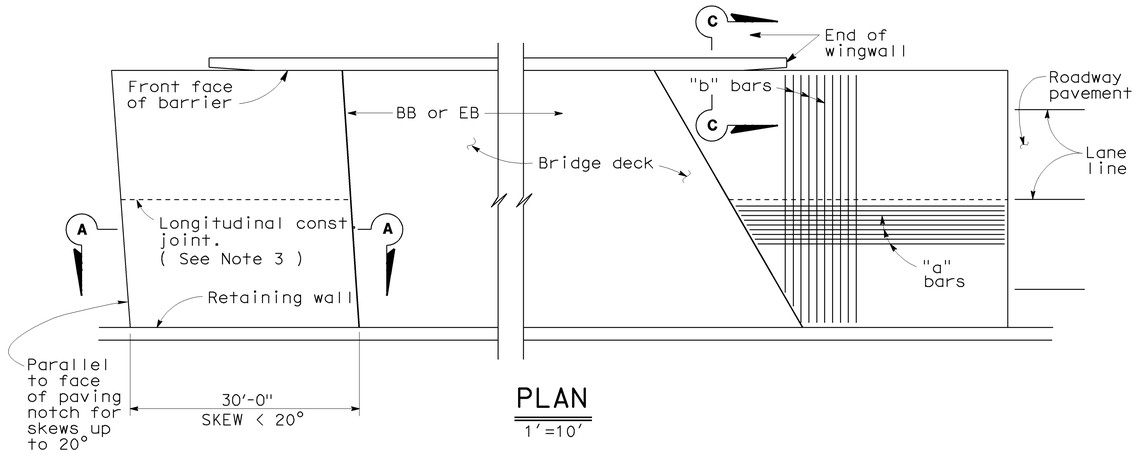

PLAN
1'=10'

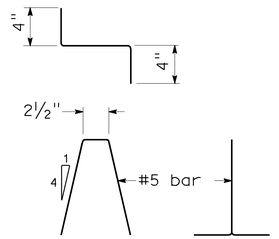

BAR CHAIR DETAIL
1½"=1'-0"

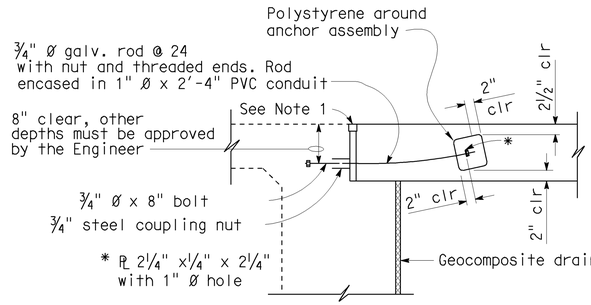

TIE DETAIL
¾"=1'-0"

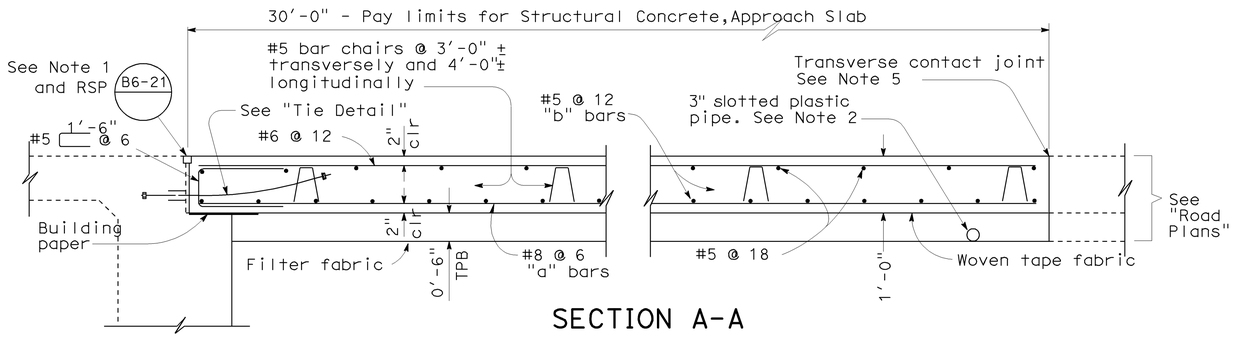

SECTION A-A
¾"=1'-0"

NOTES:

1. For details not noted or shown, see Structure Plans.
2. Longitudinal construction joints, when permitted by the Engineer, shall be located on lane lines.
3. For transverse contact joint with new PCC paving, refer to Standard Plan P10.
4. At the contractor's option, approach slab transverse reinforcement may be placed parallel to paving notch. Spacing of transverse reinforcement is measured along ℄ roadway.

▨ Polystyrene to be removed.

DESIGN	BY M. Schott	CHECKED C. Cowden	STATE OF CALIFORNIA DEPARTMENT OF TRANSPORTATION	DIVISION OF ENGINEERING SERVICES STRUCTURE DESIGN DESIGN BRANCH 17	BRIDGE NO. 42-0129	HERNDON CANAL BRIDGE (WIDEN)	
DETAILS	BY S. Dutta	CHECKED M. Schott			POST MILE 28.4	STRUCTURE APPROACH TYPE N(30D)	
QUANTITIES	BY M. Schott	CHECKED C. Cowden					

STRUCTURES DESIGN DETAIL SHEET (ENGLISH) (REV. 10/25/05)

ORIGINAL SCALE IN INCHES FOR REDUCED PLANS 0 1 2 3

CU 06
EA 442611

DISREGARD PRINTS BEARING EARLIER REVISION DATES →

REVISION DATES: 07/29/09 6-09-09

SHEET 11 OF 13

FILE => 42-0129-r-n(30s).dgn

USERNAME => trlenord DATE PLOTTED => 28-SEP-2009 TIME PLOTTED => 13:56

DIST	COUNTY	ROUTE	POST MILES TOTAL PROJECT	SHEET No	TOTAL SHEETS
06	Fre	99	26.7/30.6	228	242

REGISTERED CIVIL ENGINEER — 06-08-09 DATE

RAMON S. REYES No. C63767 Exp. 9-31-10 CIVIL — REGISTERED PROFESSIONAL ENGINEER — STATE OF CALIFORNIA

9-28-09
PLANS APPROVAL DATE

The State of California or its officers or agents shall not be responsible for the accuracy or completeness of electronic copies of this plan sheet.

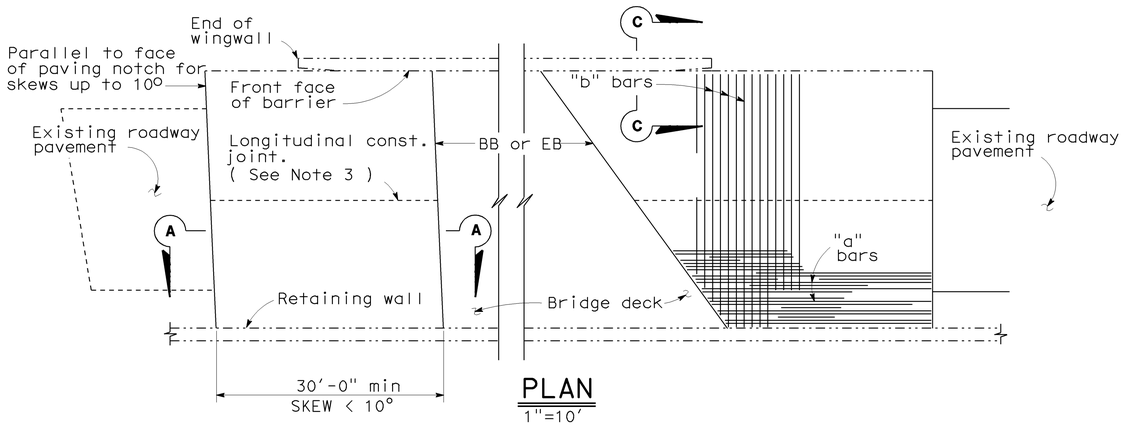

PLAN
1"=10'

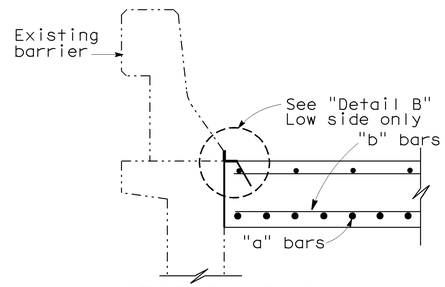

SECTION C-C
¾" = 1'-0"

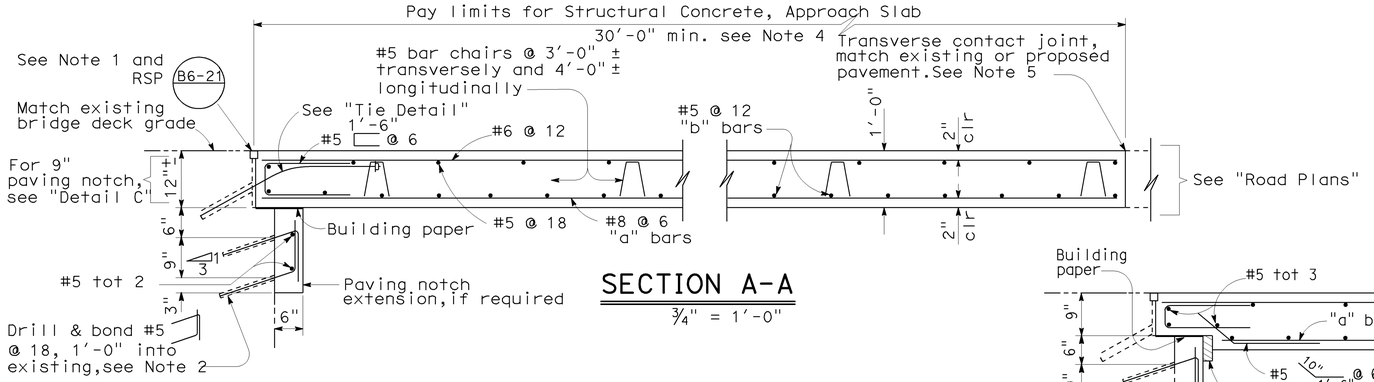

SECTION A-A
¾" = 1'-0"

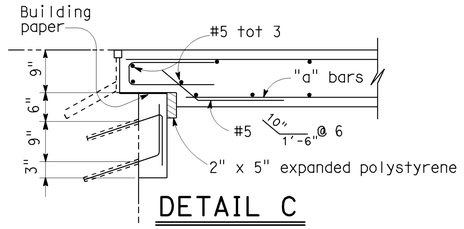

DETAIL C
¾" = 1'-0"

NOTE: For details not shown,see "Section A-A".

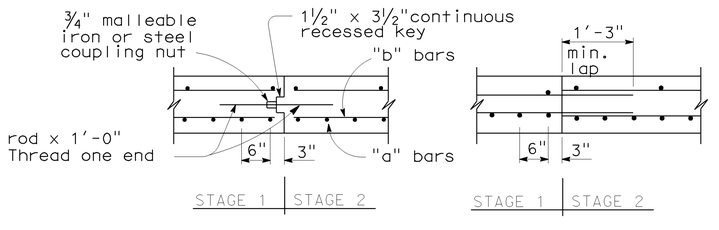

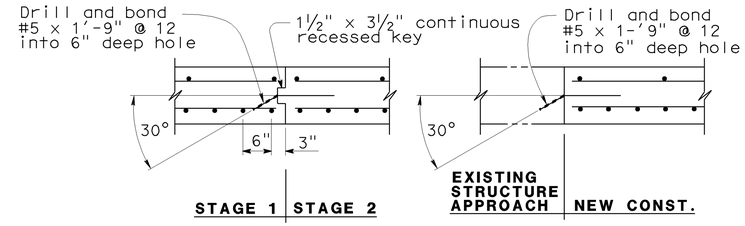

LONGITUDINAL CONSTRUCTION JOINT ALTERNATIVES
¾" = 1'-0"

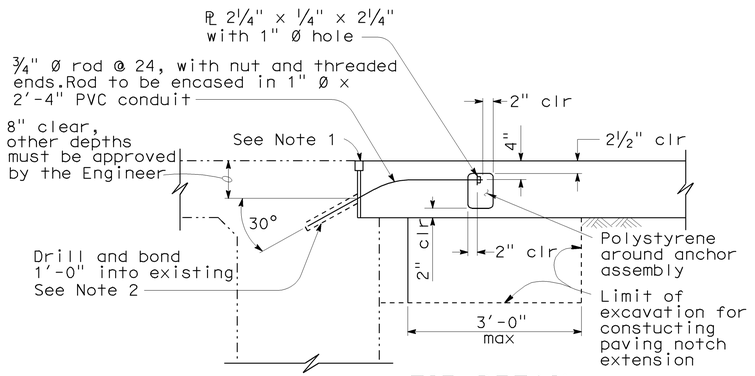

TIE DETAIL
¾" = 1'-0"

NOTE:
THE CONTRACTOR SHALL VERIFY ALL CONTROLLING FIELD DIMENSIONS BEFORE ORDERING OR FABRICATING ANY MATERIAL.

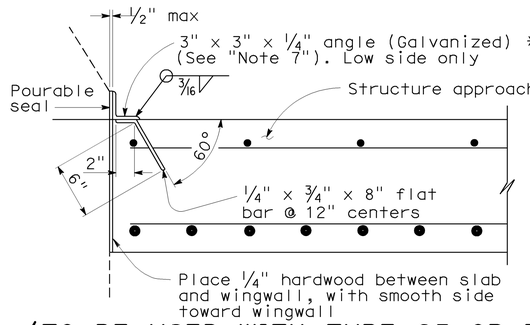

*(TO BE USED WITH TYPE 25 OR TYPE 27 Concrete Barrier)
DETAIL B
1½" = 1'-0"

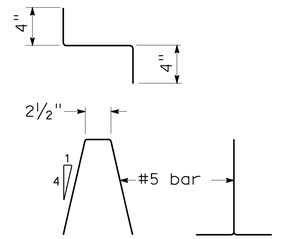

BAR CHAIR DETAIL
1½" = 1'-0"

NOTES:

1. For details not shown or noted,see Structure Plans. Adjust bar reinforcement to clear a sawcut for sealed joint,when required.
2. Space to avoid existing prestress anchorages and main reinforcement.
3. Longitudinal construction joints,when permitted by the Engineer,shall be located on lane lines.
4. Transverse contact joint shall be a minimum of 5'-0" from an existing or constructed weakened plane joint.
5. For transverse contact joint with new PCC paving. refer to Standard Plan P10.
6. Couplers are required for stage construction.
7. End angle or plate at beginning of barrier transition, end of wingwall or end of structure approach as applicable.

DESIGN	BY M. Schott	CHECKED C. Cowden	STATE OF CALIFORNIA DEPARTMENT OF TRANSPORTATION	DIVISION OF ENGINEERING SERVICES STRUCTURE DESIGN DESIGN BRANCH 17	BRIDGE NO. 42-0129 / POST MILE 28.4
DETAILS	BY S. Dutta	CHECKED M. Schott			
QUANTITIES	BY M. Schott	CHECKED C. Cowden			

HERNDON CANAL BRIDGE (WIDEN)
STRUCTURE APPROACH TYPE R(30D)

STRUCTURES DESIGN DETAIL SHEET (ENGLISH) (REV. 10/25/05)

ORIGINAL SCALE IN INCHES FOR REDUCED PLANS 0 1 2 3

CU 06
EA 442611

DISREGARD PRINTS BEARING EARLIER REVISION DATES →

REVISION DATES: 01/27/09

SHEET 12 OF 13

FILE => 42-0129-s-n(30s).dgn

USERNAME => friehard DATE PLOTTED => 28-SEP-2009 TIME PLOTTED => 13:56

BRIDGE DEPARTMENT

DESIGNED BY SWIGLER HANSEN 2ND
DRAWN BY SUZUKI 2ND CHECK
CHECKED BY M. HEARST

Approved for Construction by Carl L. Compagno
Chief, Bridge Design Branch

DESIGN PILE LOADING: 45T
ACTUAL NO. PILES: 56
TYPE PILE USED: Cast-in-drilled-hole
PILE DIAMETER: 16"
LINEAL FT. PILE, "AS BUILT": 1195.9
LINEAL FT. PILE, ON PLANS: 1190

DATE APPROVED AUGUST 1 1960

AS BUILT

Corrections By R. E. Hawkamp
Date December 9 1958

AS BUILT PLANS
Contract No. 59-67010
Date Completed
Document No. 600pg 197

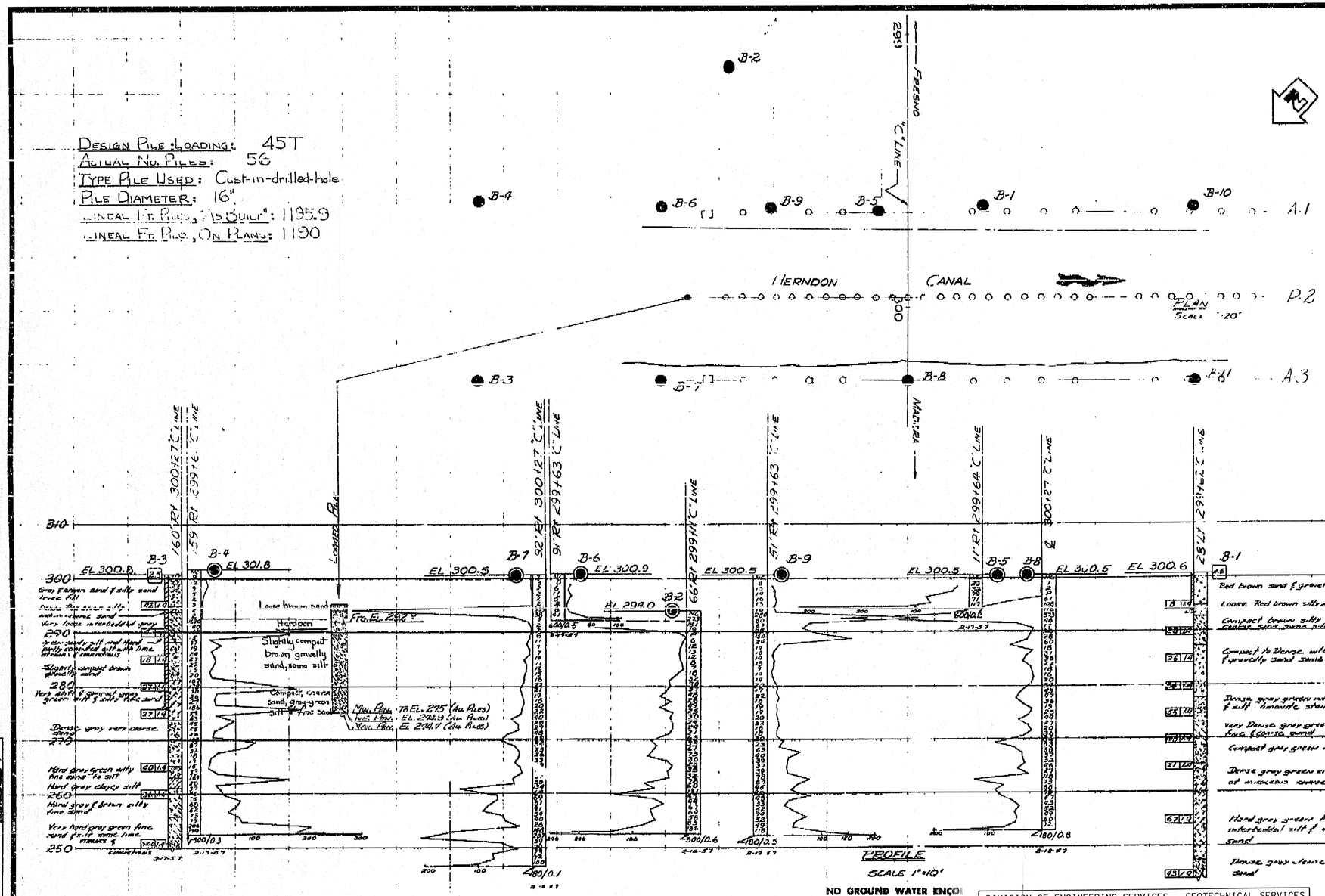

CLASSIFICATION OF MATERIAL BASED ON STANDARD GRADE SIZE LIMITS

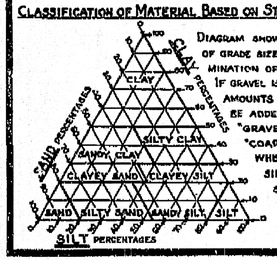

DIAGRAM SHOWING THE BASIS FOR ESTIMATES OF GRADE SIZE DISTRIBUTION USED IN DETERMINATION OF CLASS NAMES. IF GRAVEL IS PRESENT IN APPRECIABLE AMOUNTS THE TERM "GRAVELLY" MAY BE ADDED TO THE CLASS NAME, VIZ. "GRAVELLY SAND." THE TERMS "COARSE", "MEDIUM" AND "FINE" WHEN USED TO DESCRIBE SAND, SILT AND GRAVEL REFER TO STANDARD GRADE SIZE LIMITS.

LEGEND OF EARTH MATERIALS

- GRAVEL
- SAND
- SILT
- CLAY
- SANDY CLAY OR CLAYEY SAND
- SANDY SILT OR SILTY SAND
- SILTY CLAY OR CLAYEY SILT
- PEAT AND/OR ORGANIC MATTER
- FILL MATERIAL
- IGNEOUS ROCK
- SEDIMENTARY ROCK
- METAMORPHIC ROCK

LEGEND OF B

- PLAN OF ANY BORING
- PENETROMETER
- 2½" CONE PENETROMETER
- SAMPLER BORING (DRY)
- ROTARY BORING (WET)
- AUGER BORING (DRY)
- JET BORING
- CORE BORING
- TEST PIT

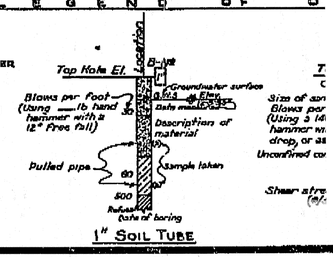

DIVISION OF ENGINEERING SERVICES - GEOTECHNICAL SERVICES

As-Built Log of Test Borings sheet is considered an informational document only. As such, the State of California registration seal with signature, license number and registration certificate expiration date confirm that this is a true and accurate copy of the original document. This drawing is available and presented only for the convenience of any bidder, contractor or other interested party.

DIST.	COUNTY	ROUTE	POST MILES-TOTAL PROJECT	Sheet No.	Total Sheets
06	Fre	99	26.7/30.6	229	242

REGISTERED CIVIL ENGINEER — DATE 2/9/09

HERNDON CANAL BRIDGE (CENTER WIDEN)
LOG OF TEST BORINGS

NOTE: A COPY OF THIS LOG OF TEST BORINGS IS AVAILABLE AT OFFICE OF STRUCTURE MAINTENANCE AND INVESTIGATIONS, SACRAMENTO, CALIFORNIA

CU: 06
EA: 442611

BRIDGE No. 42-0129
Sheet 13 of 13

To accompany plans dated 9-28-09

REGISTERED PROFESSIONAL ENGINEER
Thomas Naxin Song
No. C69325
Exp. 6-30-10
CIVIL
STATE OF CALIFORNIA

NOTES

The contractor's attention is directed to Section 2, Article (c) of the Standard Specifications and to the Special Provisions accompanying this set of plans.
Classification of earth material as shown on this sheet is based upon field inspection and is not to be construed to imply mechanical analysis.

STATE OF CALIFORNIA
DEPARTMENT OF PUBLIC WORKS
DIVISION OF HIGHWAYS

HERNDON CANAL

LOG OF TEST BORINGS

SCALE As Shown	BRIDGE 42-129	FILE E-42	DRAWING C5333-5

PR-5333-2

185

FILENAME => 42-0129-z-ltb01.tif

DIST	COUNTY	ROUTE	POST MILES TOTAL PROJECT	SHEET No	TOTAL SHEETS
06	Fre	99	26.7/30.6	230	242

REGISTERED CIVIL ENGINEER — 06/08/09 DATE

9-28-09
PLANS APPROVAL DATE

The State of California or its officers or agents shall not be responsible for the accuracy or completeness of electronic copies of this plan sheet.

REGISTERED PROFESSIONAL ENGINEER — Ramon Reyes — No. C63767 — Exp. 09-30-2010 — CIVIL — STATE OF CALIFORNIA

R = 0.40% per Sta

POC 237+00
Elev 327.00

PROFILE GRADE

POC 240+60
Elev 326.30

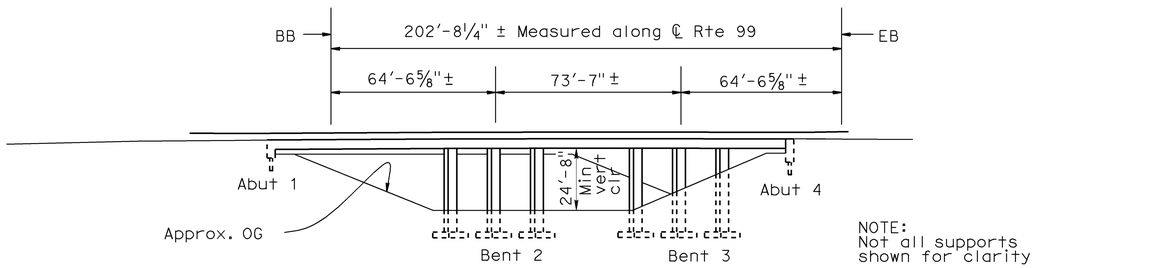

ELEVATION

1" = 30′-0"

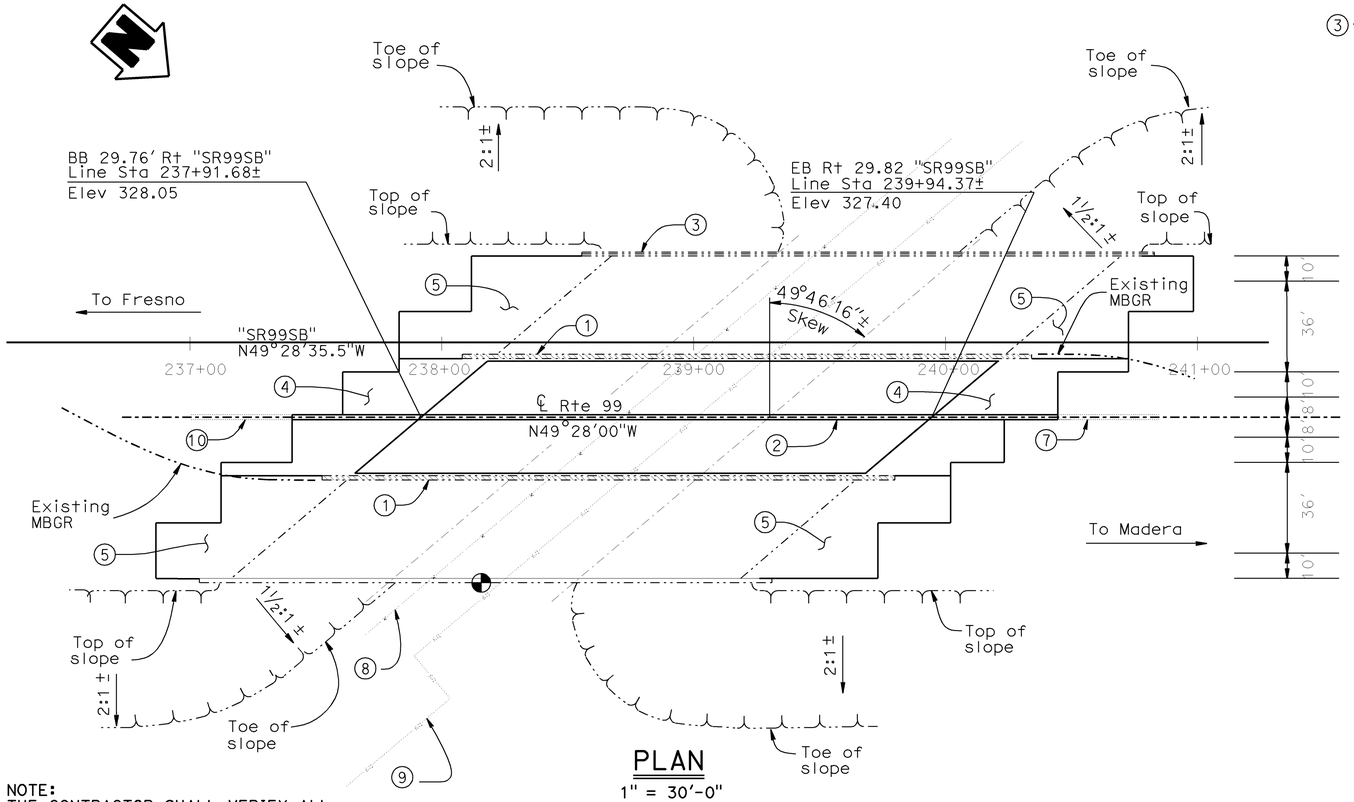

PLAN

1" = 30′-0"

NOTE:
THE CONTRACTOR SHALL VERIFY ALL CONTROLLING FIELD DIMENSIONS BEFORE ORDERING OR FABRICATING ANY MATERIAL.

QUANTITIES

PREPARE CONCRETE BRIDGE DECK SURFACE	25,600	SQFT
BRIDGE REMOVAL (PORTION), LOCATION C	1	LS
STRUCTURE EXCAVATION (BRIDGE)	680	CY
STRUCTURE BACKFILL (BRIDGE)	485	CY
AGGREGATE BASE (APPROACH SLAB)	27	CY
24" CAST-IN-DRILLED-HOLE CONCRETE PILING	853	LF
STRUCTURAL CONCRETE, BRIDGE FOOTING	96	CY
STRUCTURAL CONCRETE, BRIDGE	720	CY
STRUCTURAL CONCRETE, APPROACH SLAB (TYPE N)	148	CY
STRUCTURAL CONCRETE, APPROACH SLAB (TYPE R)	270	CY
PAVING NOTCH EXTENSION	189	CF
DRILL AND BOND DOWEL	303	LF
FURNISH POLYESTER CONCRETE OVERLAY	1,597	CF
PLACE POLYESTER CONCRETE OVERLAY	25,600	SQFT
JOINT SEAL (MR½")	395	LF
BAR REINFORCING STEEL (BRIDGE)	235,000	LB
CONCRETE BARRIER (TYPE 60A)	263	LF
PUBLIC SAFETY PLAN	1	LS

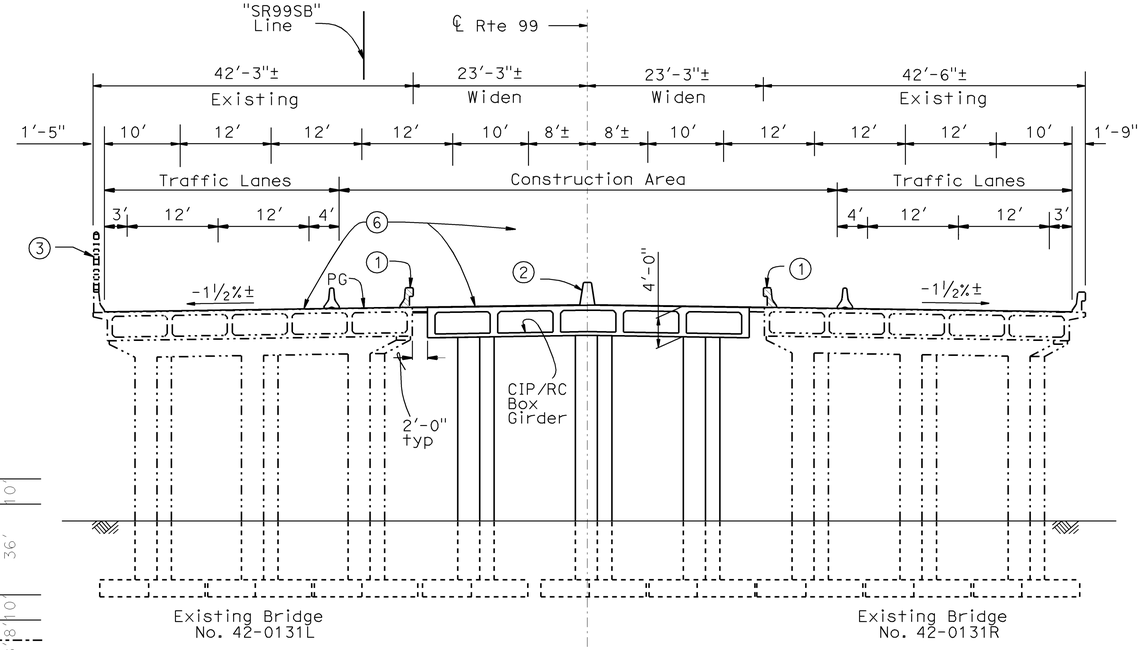

TYPICAL SECTION

1" = 10′-0"

NOTES:

1. Existing Concrete Barrier Type 25R
2. Concrete Barrier Type 60A
3. Existing soundwall
4. Structure Approach Type N (30D)
5. Structure Approach Type R (30D)
6. ¾" Polyester Concrete Overlay
7. Concrete Barrier Type 60, see "Road Plans"
8. 14" Water main, City of Fresno
9. 42" Rubber gasket reinforced concrete pipe, Fresno Metropolitan Flood Control District
10. Existing Concrete Barrier Type 50, see "Road Plans"

Indicates Concrete Removal

DESIGN	BY Ramon Reyes	CHECKED Matthew Schott	LOAD & RESISTANCE FACTOR DESIGN	LIVE LOADING: HL93 W/"LOW-BOY"; PERMIT DESIGN VEHICLE			
DETAILS	BY Craig Schellenger	CHECKED Ramon Reyes	LAYOUT	BY Ramon Reyes	CHECKED Matthew Schott		
QUANTITIES	BY Cory Cowden	CHECKED Matthew Schott	SPECIFICATIONS	BY X	PLANS AND SPECS COMPARED X		

Rodney Simmons
DESIGN ENGINEER

STATE OF CALIFORNIA
DEPARTMENT OF TRANSPORTATION

DIVISION OF ENGINEERING SERVICES
STRUCTURE DESIGN
DESIGN BRANCH 17

BRIDGE NO. 42-0131
POST MILE 27.3

BIOLA JUNCTION OH (WIDEN)
GENERAL PLAN

STRUCTURES DESIGN GENERAL PLAN SHEET (ENGLISH) (REV. 10/25/05)

ORIGINAL SCALE IN INCHES FOR REDUCED PLANS 0 1 2 3

CU 06
EA 442611

DISREGARD PRINTS BEARING EARLIER REVISION DATES →

REVISION DATES: 1-04-09 | 1-27-09 | 2-25-09 | 4-15-09 | 6-05-09

SHEET 1 OF 13

FILE => 42-0131rl-a-gp.dgn

STRUCTURES DESIGN GENERAL PLAN SHEET (ENGLISH) (REV.07-24-06)

USERNAME => p:\rmoriok DATE PLOTTED => 30-SEP-2009 TIME PLOTTED => 08:42

DIST	COUNTY	ROUTE	POST MILES TOTAL PROJECT	SHEET No	TOTAL SHEETS
06	Fre	99	26.7/30.6	231	242

06/08/09
REGISTERED CIVIL ENGINEER DATE

Ramon Reyes
No. C63767
Exp 09-30-2010
CIVIL
REGISTERED PROFESSIONAL ENGINEER
STATE OF CALIFORNIA

9-28-09
PLANS APPROVAL DATE

The State of California or its officers or agents shall not be responsible for the accuracy or completeness of electronic copies of this plan sheet.

INDEX TO PLANS

SHEET NO.	SHEET TITLE
1	GENERAL PLAN
2	INDEX TO PLANS
3	FOUNDATION PLAN
4	ABUTMENT LAYOUT
5	BENT LAYOUT
6	BENT DETAILS NO. 1
7	TYPICAL SECTION
8	DECK DETAILS
9	GIRDER LAYOUT
10	GIRDER REINFORCEMENT
11	STRUCTURE APPROACH TYPE N
12	STRUCTURE APPROACH TYPE R
13	LOG OF TEST BORINGS

STANDARD PLANS DATED MAY 2006

A10A	ACRONYMS AND ABBREVIATIONS (A-L)
A10B	ACRONYMS AND ABBREVIATIONS (M-Z)
A62C	LIMITS OF PAYMENT FOR EXCAVATION AND BACKFILL-BRIDGE
RSP A76A	CONCRETE BARRIER TYPE 60
B0-1	BRIDGE DETAILS
B0-3	BRIDGE DETAILS
B0-5	BRIDGE DETAILS
B0-13	BRIDGE DETAILS
B7-1	BOX GIRDER DETAILS
B8-5	CAST-IN-PLACE PRESTRESSED GIRDER DETAILS
B11-53	CONCRETE BARRIER TYPE 25
RSP B6-21	JOINT SEALS (MAXIMUM MOVEMENT RATING = 2")

STANDARD PLAN SHEET NO.

DETAIL NO.

GENERAL NOTES
LOAD AND RESISTANCE FACTOR DESIGN

DESIGN: AASHTO LRFD Design Specifications, Third edition with the California Amendments the v3.06.01.

SEISMIC DESIGN:
Caltrans Seismic Design Criteria (SDC), Version 1.4 dated June 2006

DEAD LOAD:
Includes 35 psf for future wearing surface.

LIVE LOADING:
HL93 and permit design load.

CONCRETE:
fy = 60 ksi
f'c = 5.0 ksi
n = 8
See prestressing notes.

STRUCTURAL STEEL (new construction):
fy = ASTM A709 Grade 50

STRUCTURAL STEEL
(assumed for evaluation of existing structure):
ASTM A7
fy = 39 ksi

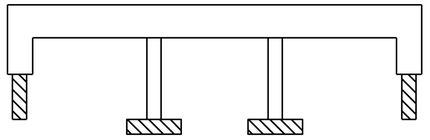

Structural Concrete, Bridge (5000 psi @ 28 days)

Structural Concrete, Bridge Footing

SPREAD FOOTING TABLE

Location	Service	Strength	Extreme Event
	Permissable Net Contact Stress (Settlement) (ksf)	Factored Gross Nominal Bearing Resistance Øb = 0.45 (ksf)	Factored Gross Nominal Bearing Resistance Øb = 1.00 (ksf)
Bent 2	6.1	17.1	38
Bent 3	6.1	17.1	38

PILE DATA TABLE

LOCATION	PILE TYPE	NOMINAL RESISTANCE (kips)		DESIGN TIP (ft)	SPECIFIED TIP ELEVATION (ft)
		COMP	TENSION		
Abutment 1	24" DIA CIDH	180	0	277*	277
Abutment 4	24" DIA CIDH	180	0	277*	277

* Design tip elevation is controlled by Compression.

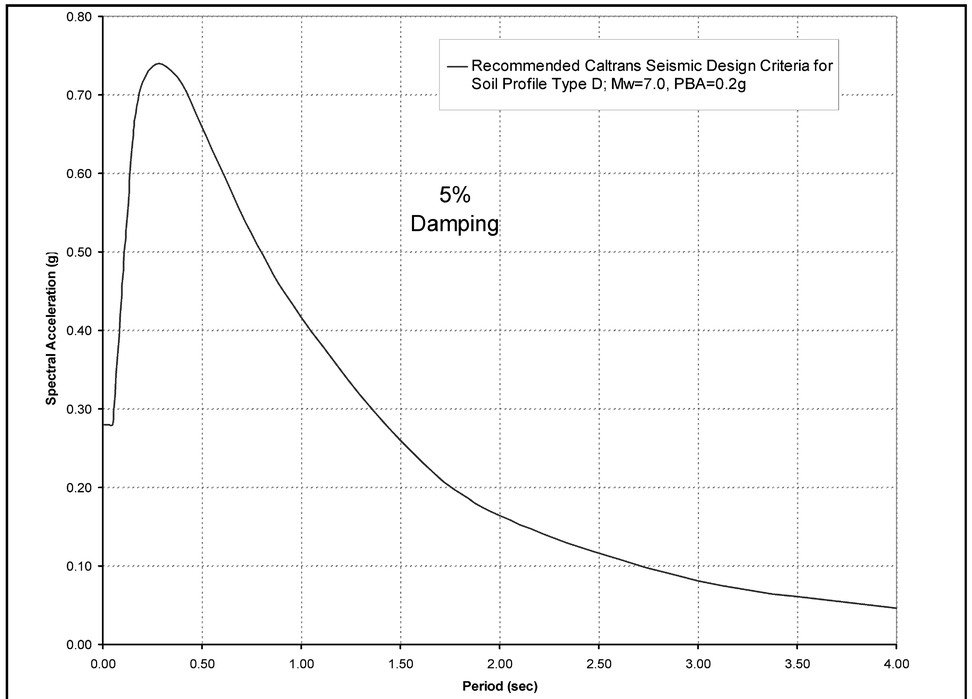

DESIGN	BY Ramon Reyes	CHECKED Matthew Schott	STATE OF CALIFORNIA DEPARTMENT OF TRANSPORTATION	DIVISION OF ENGINEERING SERVICES STRUCTURE DESIGN DESIGN BRANCH 17	BRIDGE NO. 42-0131
DETAILS	BY Craig Schellenger	CHECKED Ramon Reyes			POST MILE 27.3
QUANTITIES	BY Cory Cowden	CHECKED Matthew Schott			

BIOLA JUNCTION OH (WIDEN)
INDEX TO PLANS

STRUCTURES DESIGN DETAIL SHEET (ENGLISH) (REV. 10/25/05)

ORIGINAL SCALE IN INCHES FOR REDUCED PLANS 0 1 2 3

CU 06
EA 442611

DISREGARD PRINTS BEARING EARLIER REVISION DATES

REVISION DATES: 7-31-09 6-05-09

SHEET 2 OF 13

FILE => 42-0131r1-a-itp.dgn

USERNAME => ttriemond DATE PLOTTED => 28-SEP-2009 TIME PLOTTED => 13:56

Bridge Location # 42-0131L (Calculated)

① - 6.33 Rt. "SR99SB" Line, Sta.238+19.26, Elev.=327.21 ±
② - 6.36 Rt. "SR99SB" Line, Sta.240+21.94, Elev.=326.67 ±
③ - 36.13 Lt. "SR99SB" Line, Sta.240+72.18, Elev.=325.67 ±
④ - 36.17 Lt. "SR99SB" Line, Sta.238+69.50, Elev.=326.67 ±

Bridge Location # 42-0131R (Calculated)

⑤ - 95.31 Rt. "SR99SB" Line, Sta.237+14.03, Elev.=326.33 ±
⑥ - 95.34 Rt. "SR99SB" Line, Sta.239+16.71, Elev.=326.60 ±
⑦ - 52.85 Lt. "SR99SB" Line, Sta.239+66.96, Elev.=327.02 ±
⑧ - 52.82 Lt. "SR99SB" Line, Sta.237+64.28, Elev.=327.32 ±

DIST	COUNTY	ROUTE	POST MILES TOTAL PROJECT	SHEET No	TOTAL SHEETS
06	Fre	99	26.7/30.6	232	242

REGISTERED CIVIL ENGINEER 06/08/09 DATE

9-28-09
PLANS APPROVAL DATE

REGISTERED PROFESSIONAL ENGINEER Ramon Reyes No. C63767 Exp. 09-30-2010 CIVIL STATE OF CALIFORNIA

The State of California or its officers or agents shall not be responsible for the accuracy or completeness of electronic copies of this plan sheet.

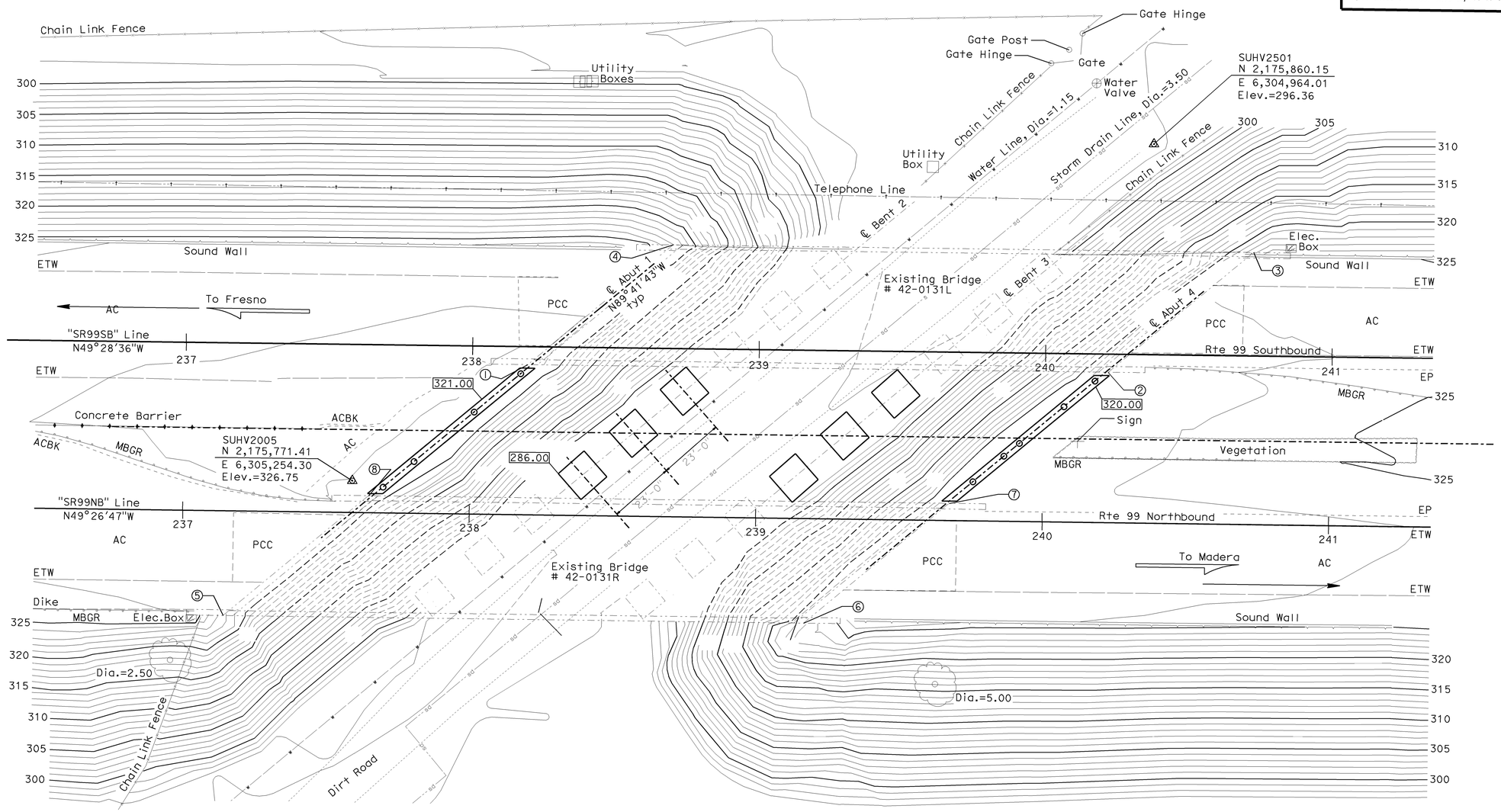

SURVEY CONTROL

SUHV2005
Fnd 1" IP w/ Red Plug
11.11 FT Lt. "SR99NB" Line
Sta. 237+59.06
N 2,175,771.41
E 6,305,254.30
Elev. = 326.75

SUHV2501
Fnd 1" IP w/ RCTP
132.42 FT Lt. "SR99NB" Line
Sta. 240+37.31
N 2,175,860.15
E 6,304,964.01
Elev. = 296.36

Note:
Utility Lines Per District Utility Plan
XXX.XX Indicates elevation at bottom of footing

PRELIMINARY INVESTIGATION SECTION

SCALE 1"=20'	VERT.DATUM NAVD88	PHOTOGRAMMETRY AS OF: X			
	HORZ.DATUM NAD83	SURVEYED	BY District	CHECKED	BY C.Fassett 3/2009
ALIGNMENT TIES Dist.Traverse Sheet		DRAFTED	BY J.Martinez 3/2009	CHECKED	BY L.Lew 3/2009

STRUCTURES FOUNDATION PLAN SHEET (ENGLISH) (REV. 10/25/05)

DESIGN	BY Ramon Reyes	CHECKED Matthew Schott
DETAILS	BY Craig Schellenger	CHECKED Ramon Reyes
QUANTITIES	BY Cory Cowden	CHECKED Matthew Schott

ORIGINAL SCALE IN INCHES FOR REDUCED PLANS 0 1 2 3

STATE OF CALIFORNIA
DEPARTMENT OF TRANSPORTATION

DIVISION OF ENGINEERING SERVICES
STRUCTURE DESIGN
DESIGN BRANCH 17

CU 06
EA 442601

BRIDGE NO. 42-0131
POST MILE 27.31

BIOLA JUNCTION OC (WIDEN)
FOUNDATION PLAN NO.1

DISREGARD PRINTS BEARING EARLIER REVISION DATES

REVISION DATES 4/6/09 4/17/09 6/05/09

SHEET 3 OF 13

FILE => 42-0131rl-e-fpl01.dgn

USERNAME => trphils DATE PLOTTED => 29-SEP-2009 TIME PLOTTED => 10:23

DIST	COUNTY	ROUTE	POST MILES TOTAL PROJECT	SHEET No	TOTAL SHEETS
06	Fre	99	26.7/30.6	233	242

REGISTERED CIVIL ENGINEER 06/08/09 DATE

9-28-09
PLANS APPROVAL DATE

The State of California or its officers or agents shall not be responsible for the accuracy or completeness of electronic copies of this plan sheet.

REGISTERED PROFESSIONAL ENGINEER
Ramon Reyes
No. C63767
Exp. 09-30-2010
CIVIL
STATE OF CALIFORNIA

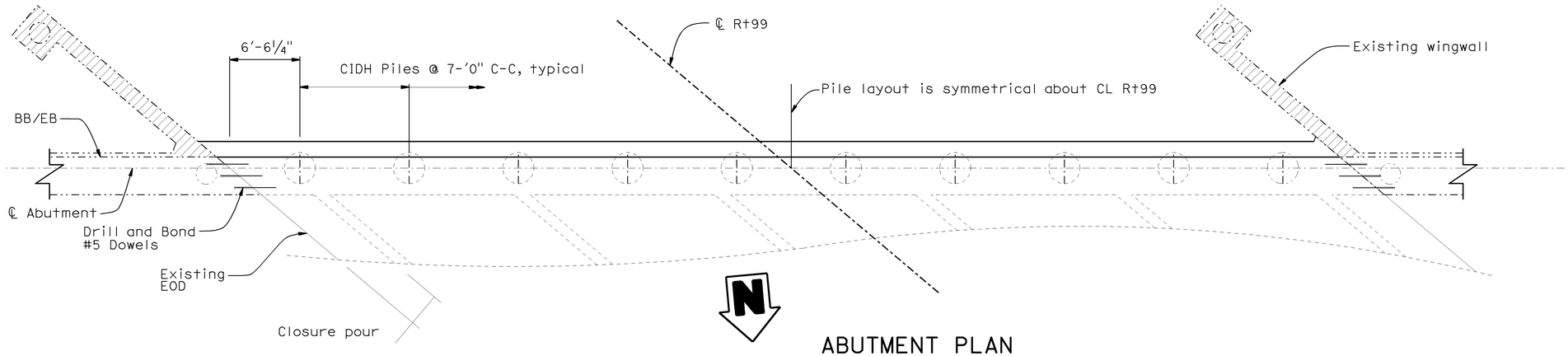

ABUTMENT PLAN

¼" = 1'-0"

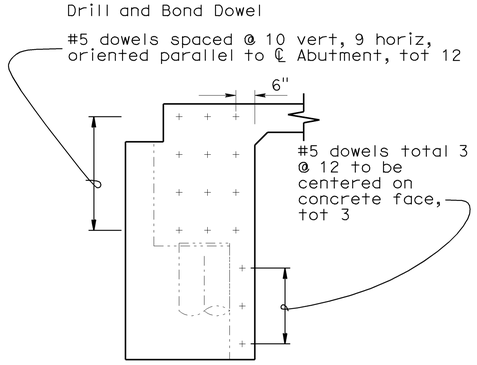

ABUTMENT DOWEL LAYOUT

½= 1'-0"

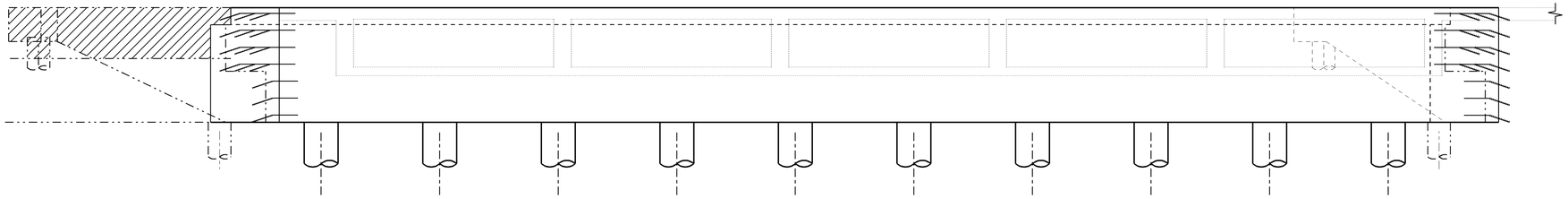

ABUTMENT ELEVATION

¼" = 1'-0"

Notes:

1. Drill and bond dowels placed parallel to ℄ Abutment See ABUTMENT DOWEL LAYOUT
2. Existing and new concrete barriers not shown for clarity

—·—·—·— Denotes existing structure

1 3/8 18" Typical for all Drill and Bond dowels

Indicates limits of concrete removal 3'-0" below new finished grade.

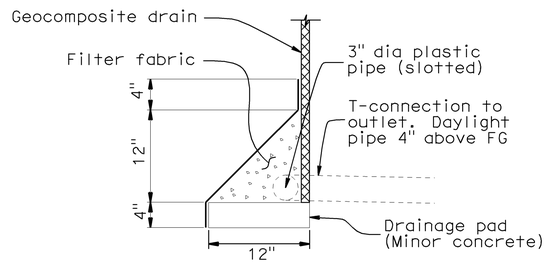

DRAINAGE DETAIL

No Scale

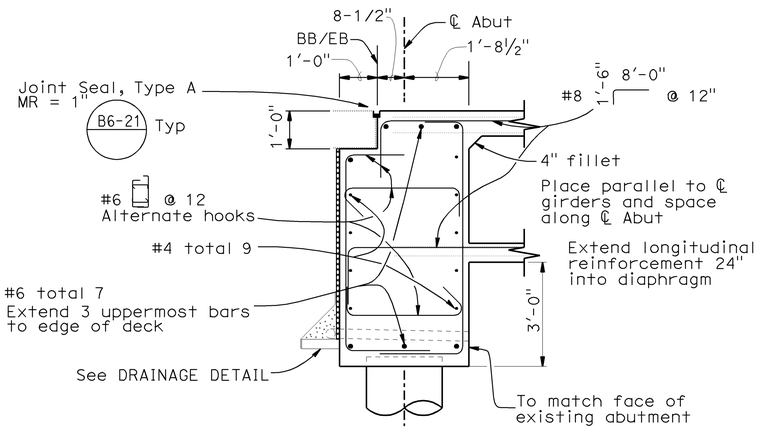

ABUTMENT DIAPHRAGM SECTION

½" = 1'-0"

NOTE:
THE CONTRACTOR SHALL VERIFY ALL CONTROLLING FIELD DIMENSIONS BEFORE ORDERING OR FABRICATING ANY MATERIAL.

	BY	CHECKED
DESIGN	Ramon Reyes	Matthew Schott
DETAILS	Craig Schellenger	Ramon Reyes
QUANTITIES	Cory Cowden	Matthew Schott

STATE OF CALIFORNIA
DEPARTMENT OF TRANSPORTATION

DIVISION OF ENGINEERING SERVICES
STRUCTURE DESIGN
DESIGN BRANCH 17

BRIDGE NO. 42-0131
POST MILE 27.3

BIOLA JUNCTION OH (WIDEN)
ABUTMENT LAYOUT

STRUCTURES DESIGN DETAIL SHEET (ENGLISH) (REV. 10/25/05)

ORIGINAL SCALE IN INCHES FOR REDUCED PLANS 0 1 2 3

CU 06
EA 442611

DISREGARD PRINTS BEARING EARLIER REVISION DATES

REVISION DATES 2-23-09

SHEET 4 OF 13

FILE => 42-0131rl-f-a01.dgn

USERNAME => trlenard DATE PLOTTED => 28-SEP-2009 TIME PLOTTED => 13:36

DIST	COUNTY	ROUTE	POST MILES TOTAL PROJECT	SHEET No	TOTAL SHEETS
06	Fre	99	26.7/30.6	234	242

06/08/09
REGISTERED CIVIL ENGINEER DATE

9-28-09
PLANS APPROVAL DATE

REGISTERED PROFESSIONAL ENGINEER
Ramon Reyes
No. C63767
Exp 09-30-2010
CIVIL
STATE OF CALIFORNIA

The State of California or its officers or agents shall not be responsible for the accuracy or completeness of electronic copies of this plan sheet.

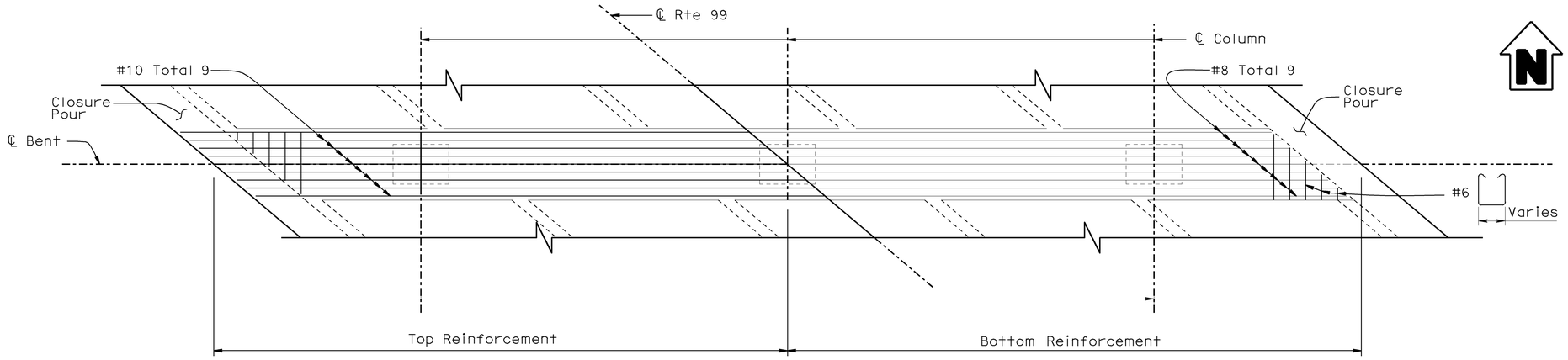

PLAN
1/4" = 1'-0"

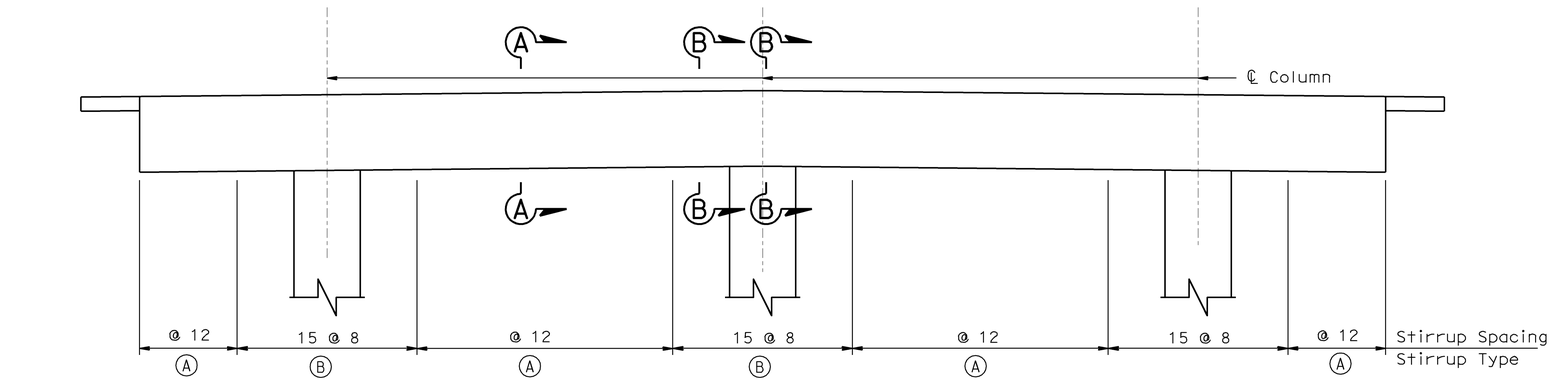

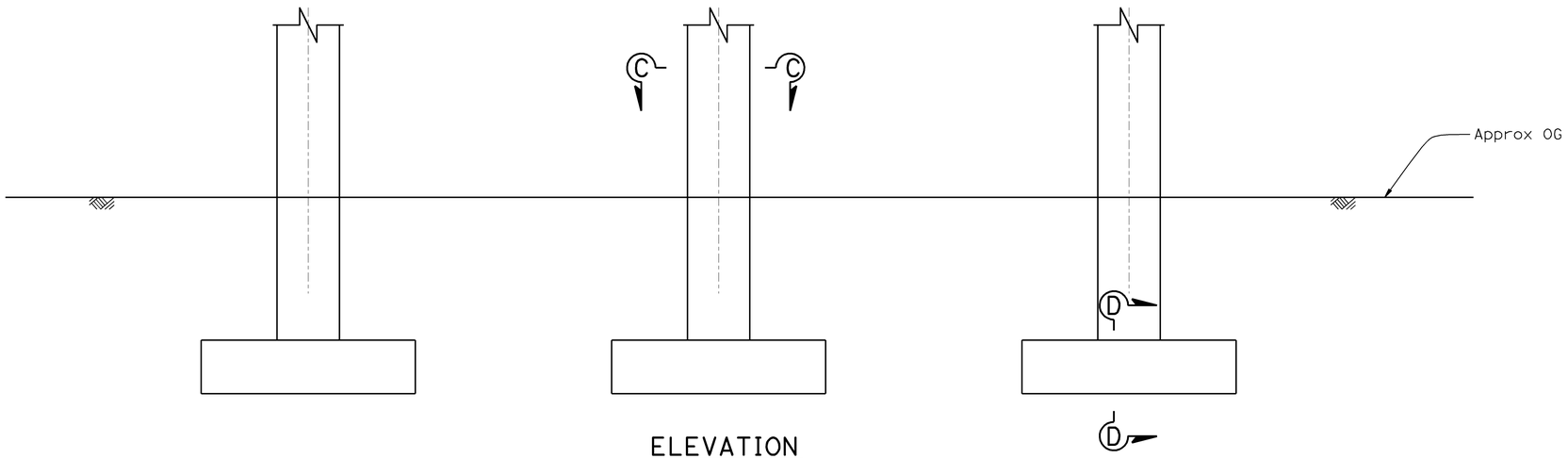

ELEVATION
1/4" = 1'-0"

NOTES:

1. For Sections A-A, B-B, C-C and D-D see "BENT DETAILS" sheet
2. Details and reinforcement are symmetrical about ℄ Bridge except as noted
3. Only staggered "ultimate" butt splice are allowed in main bent reinforcement

(A) Denotes stirrup type

(B) Denotes stirrup type

NOTE:
THE CONTRACTOR SHALL VERIFY ALL CONTROLLING FIELD DIMENSIONS BEFORE ORDERING OR FABRICATING ANY MATERIAL.

DESIGN	BY Ramon Reyes	CHECKED Matthew Schott	STATE OF CALIFORNIA DEPARTMENT OF TRANSPORTATION
DETAILS	BY Craig Schellenger	CHECKED Ramon Reyes	
QUANTITIES	BY Cory Cowden	CHECKED Matthew Schott	

DIVISION OF ENGINEERING SERVICES
STRUCTURE DESIGN
DESIGN BRANCH 17

BRIDGE NO. 42-0131
POST MILE 27.3

BIOLA JUNCTION OH (WIDEN)
BENT LAYOUT

STRUCTURES DESIGN DETAIL SHEET (ENGLISH) (REV. 10/25/05)

ORIGINAL SCALE IN INCHES FOR REDUCED PLANS 0 1 2 3

CU 06
EA 442611

DISREGARD PRINTS BEARING EARLIER REVISION DATES →

REVISION DATES: 2-24-09, 4-17-09

SHEET 5 OF 13

FILE => 42-0131r1-h-b01-lo01.dgn

USERNAME => trlehord DATE PLOTTED => 28-SEP-2009 TIME PLOTTED => 13:36

DIST	COUNTY	ROUTE	POST MILES TOTAL PROJECT	SHEET No	TOTAL SHEETS
06	Fre	99	26.7/30.6	235	242

06/08/09
REGISTERED CIVIL ENGINEER DATE

9-28-09
PLANS APPROVAL DATE

Ramon Reyes
No. C63767
Exp 09-30-2010
CIVIL
REGISTERED PROFESSIONAL ENGINEER
STATE OF CALIFORNIA

The State of California or its officers or agents shall not be responsible for the accuracy or completeness of electronic copies of this plan sheet.

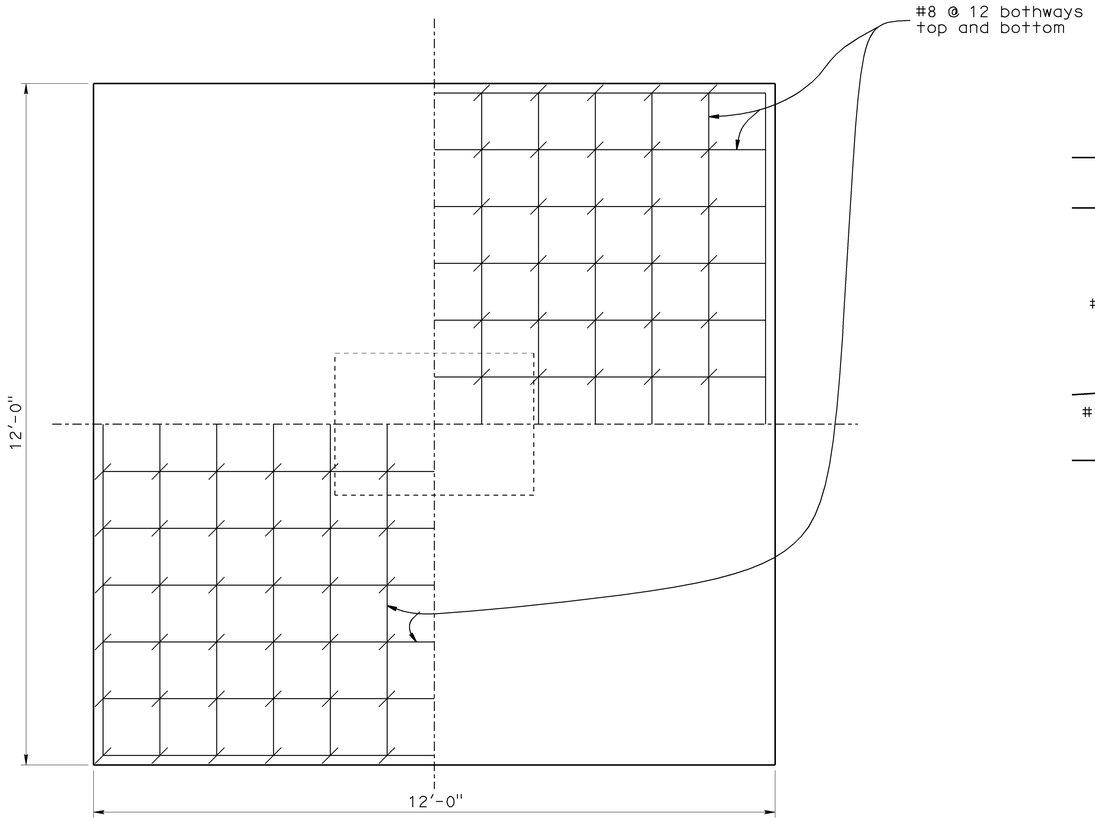

FOOTING PLAN
¾" = 1'-0"

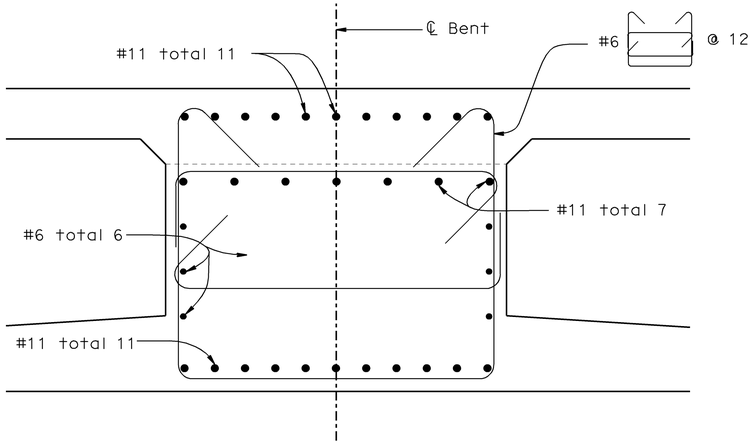

SECTION A-A
1" = 1'-0"

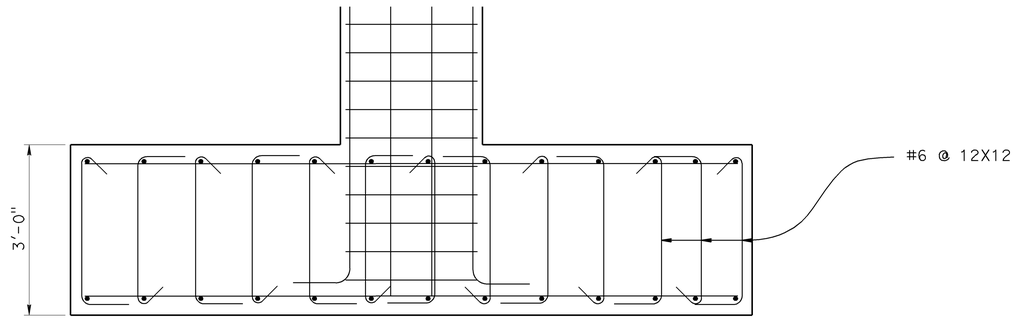

SECTION D-D
¾" = 1'-0"

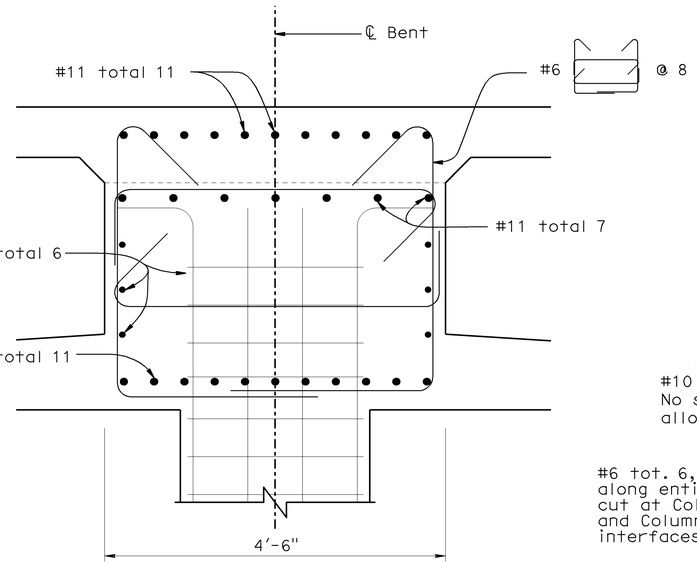

SECTION B-B
1" = 1'-0"

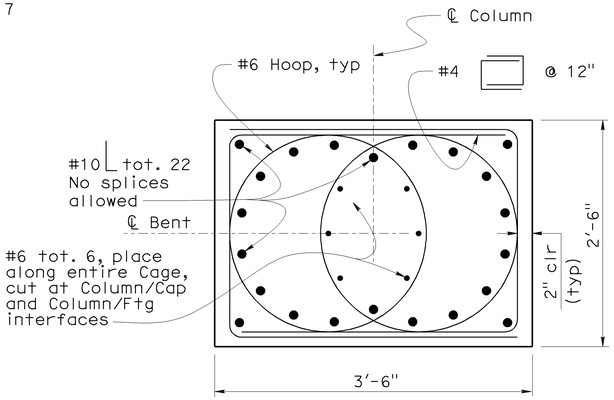

SECTION C-C
1" =1'-0"

NOTE:
THE CONTRACTOR SHALL VERIFY ALL CONTROLLING FIELD DIMENSIONS BEFORE ORDERING OR FABRICATING ANY MATERIAL.

DESIGN	BY Ramon Reyes	CHECKED Matthew Schott	STATE OF CALIFORNIA DEPARTMENT OF TRANSPORTATION
DETAILS	BY Craig Schellenger	CHECKED Ramon Reyes	
QUANTITIES	BY Cory Cowden	CHECKED Matthew Schott	

DIVISION OF ENGINEERING SERVICES
STRUCTURE DESIGN
DESIGN BRANCH 17

CU 06
EA 442611

BRIDGE NO. 42-0131
POST MILE 27.3

BIOLA JUNCTION OH (WIDEN)
BENT DETAILS

STRUCTURES DESIGN DETAIL SHEET (ENGLISH) (REV. 10/25/05)

ORIGINAL SCALE IN INCHES FOR REDUCED PLANS 0 1 2 3

DISREGARD PRINTS BEARING EARLIER REVISION DATES →

REVISION DATES: 2-16-09, 2-24-09, 4-16-09

SHEET 6 OF 13

FILE => 42-0131r1-h-bd01-dt01.dgn

USERNAME => trlehord DATE PLOTTED => 28-SEP-2009 TIME PLOTTED => 13:36

DIST	COUNTY	ROUTE	POST MILES TOTAL PROJECT	SHEET No	TOTAL SHEETS
06	Fre	99	26.7/30.6	236	242

06/08/09
REGISTERED CIVIL ENGINEER DATE

9-28-09
PLANS APPROVAL DATE

The State of California or its officers or agents shall not be responsible for the accuracy or completeness of electronic copies of this plan sheet.

REGISTERED PROFESSIONAL ENGINEER
Ramon Reyes
No. C63767
Exp 09-30-2010
CIVIL
STATE OF CALIFORNIA

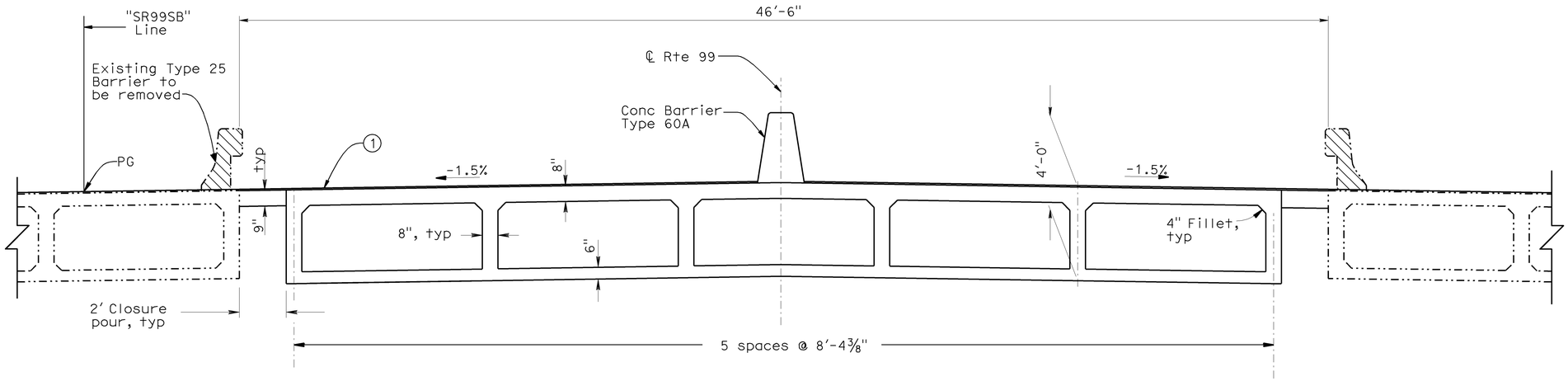

TYPICAL SECTION

3/8" = 1'-0"

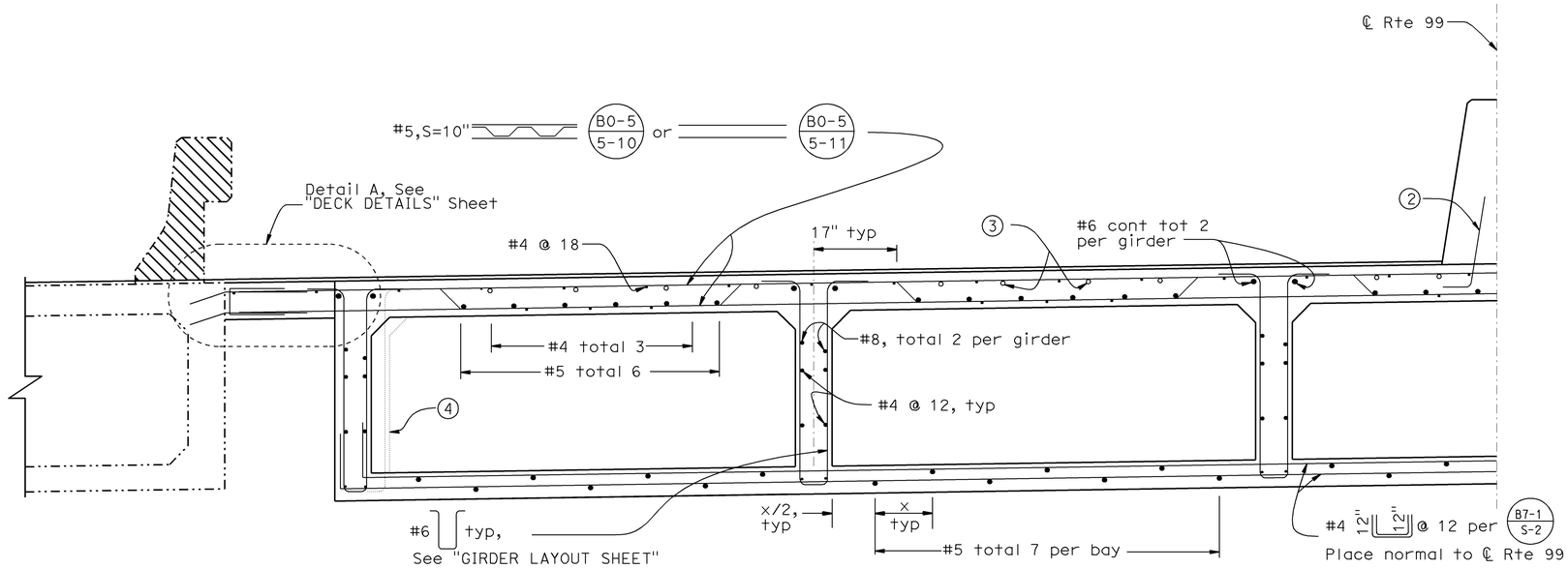

PART TYPICAL SECTION

3/4" = 1'-0"

FALSEWORK RELEASE

Alternative 1:

Falsework shall be released as soon as permitted by the specifications. Closure pour shall not be placed sooner than 60 days after the false-work has been released.

Alternative 2:

Falsework shall not be released less than 28 days after the last concrete has been placed. Closure pour shall not be placed sooner than 14 days after the falsework has been released.

When Falsework Release Alternative 2 is used, camber values are 0.75 times those shown.

NOTES:

1. Match existing grade and cross slope
2. To be in place prior to placement of deck concrete
3. Denotes additional reinforcement, See "GIRDER REINFORCEMENT SHEET"
4. Denotes ext girder flare at abutments and bent caps. Stirrup width and longitudinal reinforcement to follow flare

18" / 8" 3 1 Typical for all drill & bond dowels

Denotes existing structure

NOTE:
THE CONTRACTOR SHALL VERIFY ALL CONTROLLING FIELD DIMENSIONS BEFORE ORDERING OR FABRICATING ANY MATERIAL.

DESIGN	BY Ramon Reyes	CHECKED Matthew Schott	STATE OF CALIFORNIA DEPARTMENT OF TRANSPORTATION	DIVISION OF ENGINEERING SERVICES STRUCTURE DESIGN DESIGN BRANCH 17	BRIDGE NO. 42-0131
DETAILS	BY Craig Schellenger	CHECKED Ramon Reyes			POST MILE 27.3
QUANTITIES	BY Cory Cowden	CHECKED Matthew Schott		CU 06 EA 442611	

BIOLA JUNCTION OH (WIDEN)

TYPICAL SECTION

STRUCTURES DESIGN DETAIL SHEET (ENGLISH) (REV. 10/25/05)

ORIGINAL SCALE IN INCHES FOR REDUCED PLANS 0 1 2 3

DISREGARD PRINTS BEARING EARLIER REVISION DATES →

REVISION DATES: 1-24-08 | 11-14-08 | 2-06-09 | 2-13-09 | 2-17-09 | 2-24-09 | 4-15-09 | 5-26-09

SHEET 7 OF 13

FILE => 42-0131rl-k-ts01.dgn

USERNAME => trlehord DATE PLOTTED => 28-SEP-2009 TIME PLOTTED => 13:36

DIST	COUNTY	ROUTE	POST MILES TOTAL PROJECT	SHEET No	TOTAL SHEETS
06	Fre	99	26.7/30.6	237	242

REGISTERED CIVIL ENGINEER 06/08/09 DATE

9-28-09
PLANS APPROVAL DATE

REGISTERED PROFESSIONAL ENGINEER
Ramon Reyes
No. C63767
Exp. 09-30-2010
CIVIL
STATE OF CALIFORNIA

The State of California or its officers or agents shall not be responsible for the accuracy or completeness of electronic copies of this plan sheet.

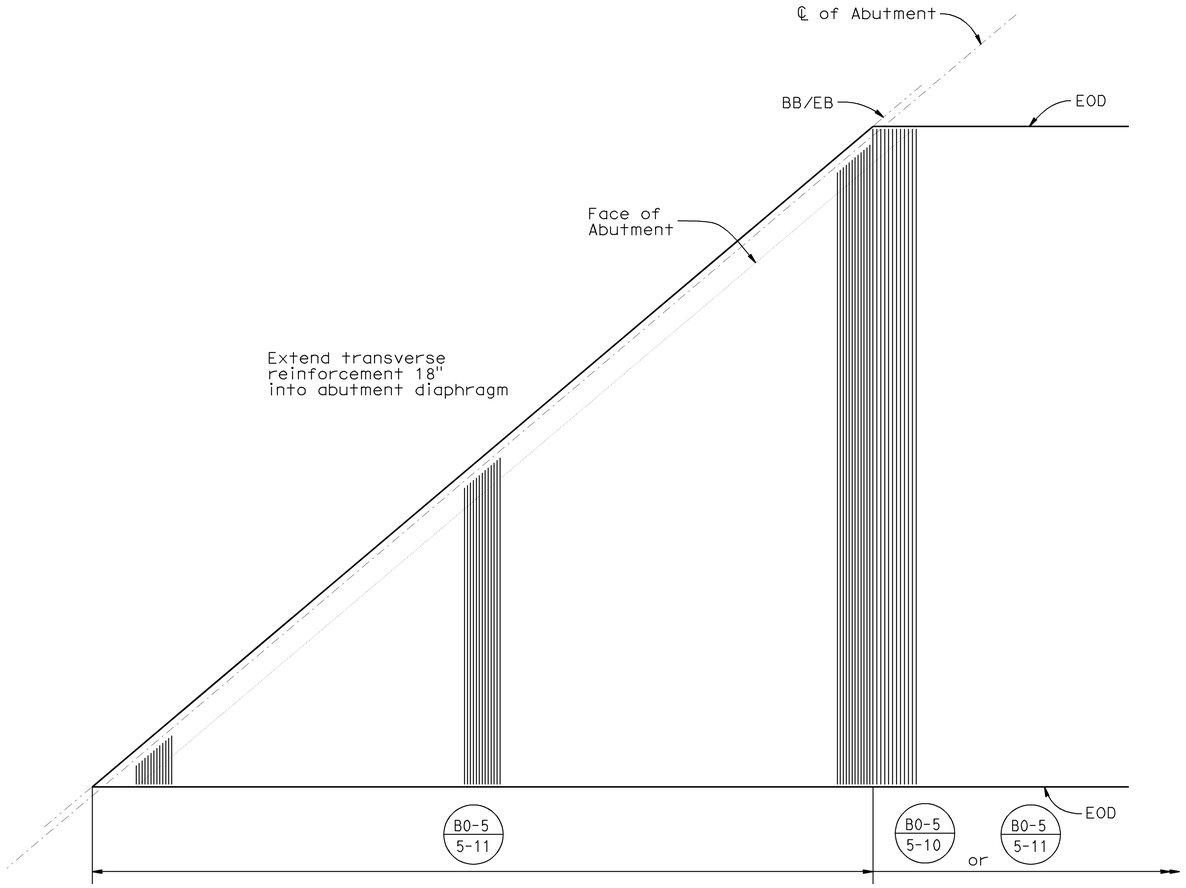

TRANSVERSE REINFORCEMENT AT ABUTMENT

NO SCALE

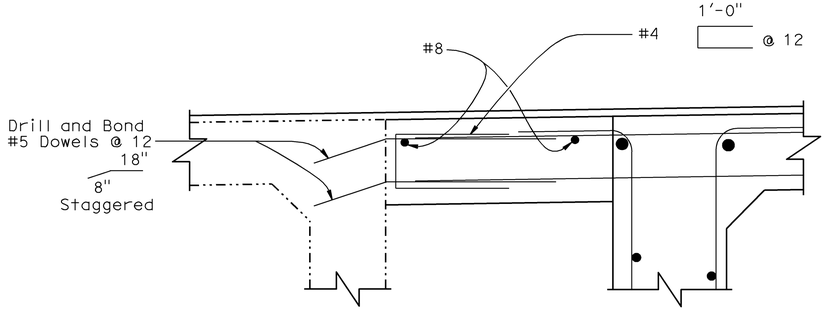

DETAIL A

1½" = 1'-0"

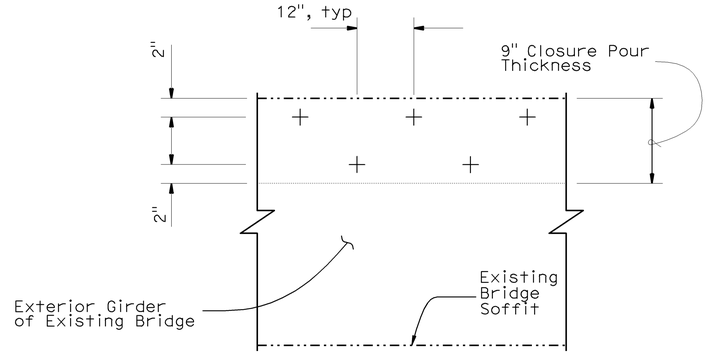

DOWEL LAYOUT

NO SCALE

NOTES:

18" 3/8" 1 Typical for all drill & bond dowels

-··-··- Denotes existing structure

NOTE:
THE CONTRACTOR SHALL VERIFY ALL CONTROLLING FIELD DIMENSIONS BEFORE ORDERING OR FABRICATING ANY MATERIAL.

	BY	CHECKED
DESIGN	Ramon Reyes	Matthew Schott
DETAILS	Craig Schellenger	Ramon Reyes
QUANTITIES	Cory Cowden	Matthew Schott

STATE OF CALIFORNIA
DEPARTMENT OF TRANSPORTATION

DIVISION OF ENGINEERING SERVICES
STRUCTURE DESIGN
DESIGN BRANCH 17

BRIDGE NO. 42-0131
POST MILE 27.3

BIOLA JUNCTION OH (WIDEN)
DECK DETAILS

STRUCTURES DESIGN DETAIL SHEET (ENGLISH) (REV. 10/25/05)

ORIGINAL SCALE IN INCHES FOR REDUCED PLANS 0 1 2 3

CU 06
EA 442611

DISREGARD PRINTS BEARING EARLIER REVISION DATES

REVISION DATES 2-17-09 2-25-09

SHEET 8 OF 13

FILE => 42-0131rl-l-dd01.dgn

USERNAME => trlenard DATE PLOTTED => 28-SEP-2009 TIME PLOTTED => 13:56

DIST	COUNTY	ROUTE	POST MILES TOTAL PROJECT	SHEET No	TOTAL SHEETS
06	Fre	99	26.7/30.6	238	242

06/08/09
REGISTERED CIVIL ENGINEER DATE

Ramon Reyes
No. C63767
Exp 09-30-2010
CIVIL
REGISTERED PROFESSIONAL ENGINEER
STATE OF CALIFORNIA

9-28-09
PLANS APPROVAL DATE

The State of California or its officers or agents shall not be responsible for the accuracy or completeness of electronic copies of this plan sheet.

NOTE: For additional information see "DECK DETAILS" sheet

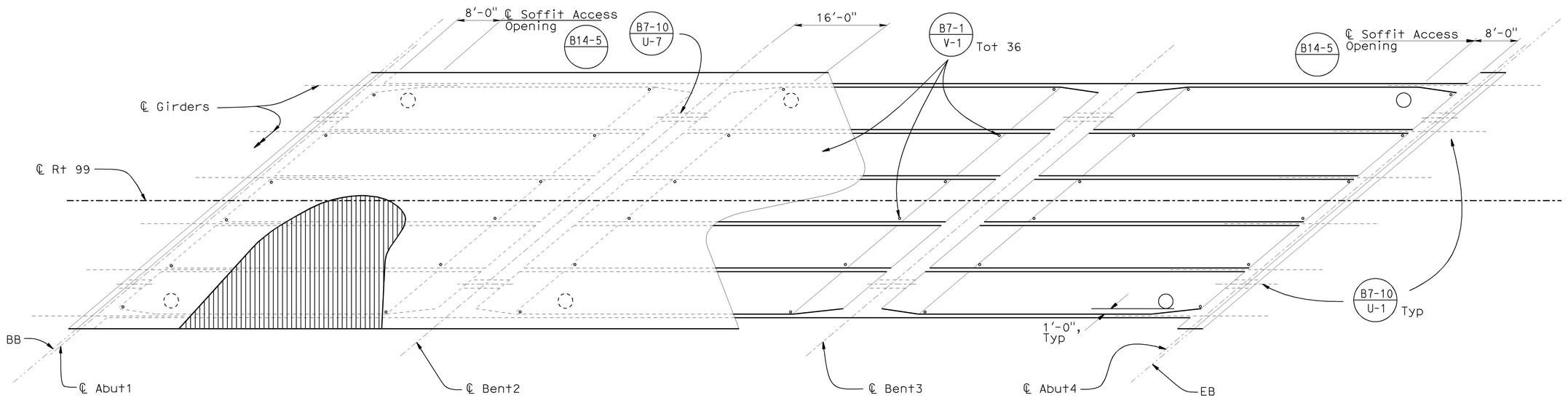

GIRDER LAYOUT
1" = 10'-0"

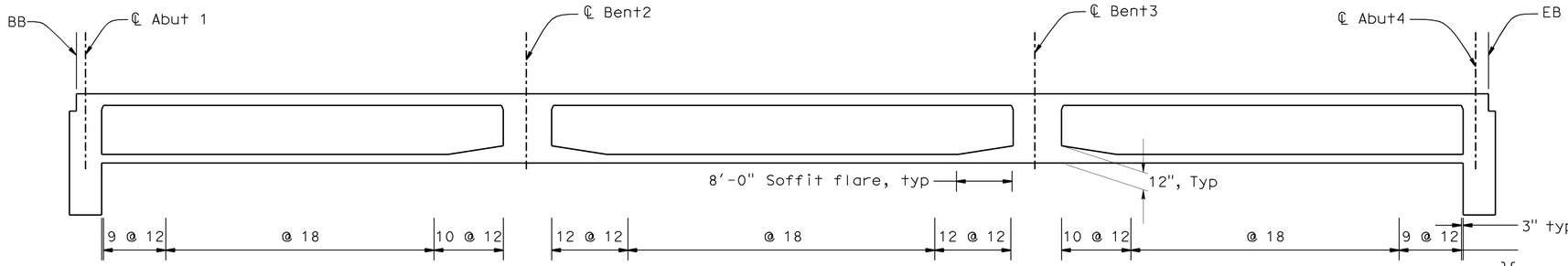

Note: Stirrups oriented perpendicular to and spaced along ℄ girder

LONGITUDINAL SECTION
1" = 10'-0" Horizontal
1/4" = 1'-0" Vertical

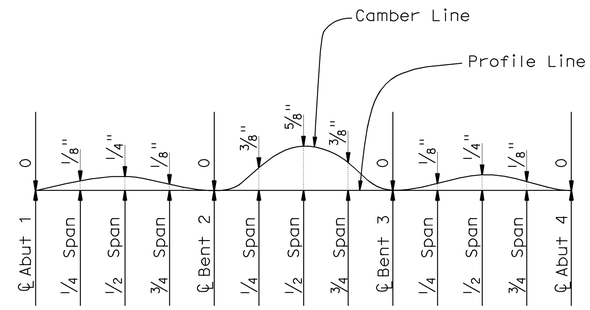

CAMBER DIAGRAM
1" = 10'-0"
* Does not include settlement resulting from falsework

NOTE:
THE CONTRACTOR SHALL VERIFY ALL CONTROLLING FIELD DIMENSIONS BEFORE ORDERING OR FABRICATING ANY MATERIAL.

DESIGN	BY Ramon Reyes	CHECKED Matthew Schott	STATE OF CALIFORNIA DEPARTMENT OF TRANSPORTATION	DIVISION OF ENGINEERING SERVICES STRUCTURE DESIGN DESIGN BRANCH 17	BRIDGE NO. 42-0131	BIOLA JUNCTION OH (WIDEN)
DETAILS	BY Craig Schellenger	CHECKED Ramon Reyes			POST MILE 27.3	GIRDER LAYOUT
QUANTITIES	BY Cory Cowden	CHECKED Matthew Schott		CU 06 EA 442611		

STRUCTURES DESIGN DETAIL SHEET (ENGLISH) (REV. 10/25/05)

ORIGINAL SCALE IN INCHES FOR REDUCED PLANS 0 1 2 3

DISREGARD PRINTS BEARING EARLIER REVISION DATES →

REVISION DATES: 2-24-09

SHEET 9 OF 13

FILE => 42-0131r1-1-glo01.dgn

USERNAME => trlenard DATE PLOTTED => 28-SEP-2009 TIME PLOTTED => 13:36

DIST	COUNTY	ROUTE	POST MILES TOTAL PROJECT	SHEET No	TOTAL SHEETS
06	Fre	99	26.7/30.6	239	242

06/08/09
REGISTERED CIVIL ENGINEER DATE

Ramon Reyes
No. C63767
Exp 09-30-2010
CIVIL
REGISTERED PROFESSIONAL ENGINEER
STATE OF CALIFORNIA

9-28-09
PLANS APPROVAL DATE

The State of California or its officers or agents shall not be responsible for the accuracy or completeness of electronic copies of this plan sheet.

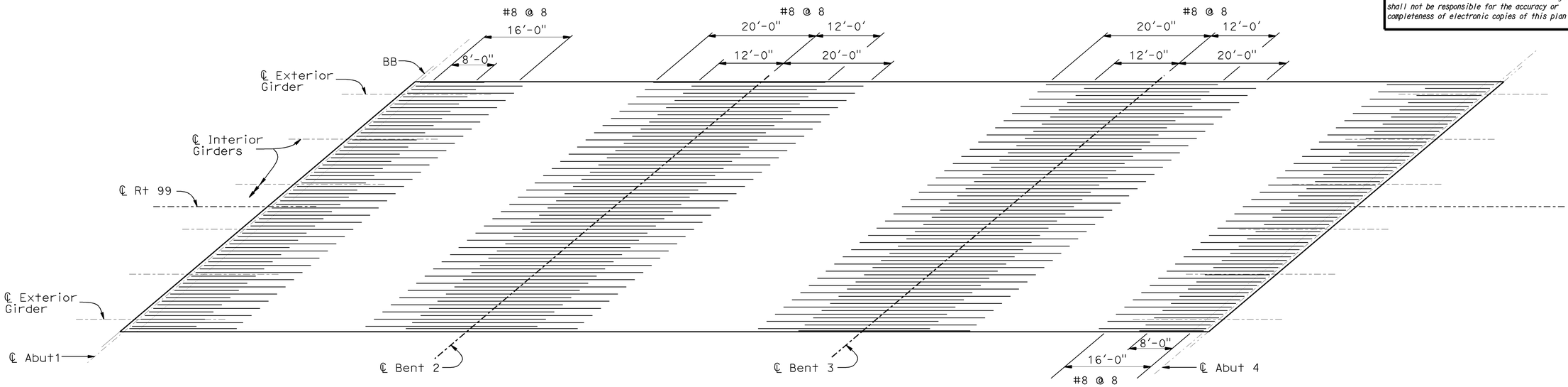

TOP LONGITUDINAL REINFORCEMENT

1" = 10'-0"

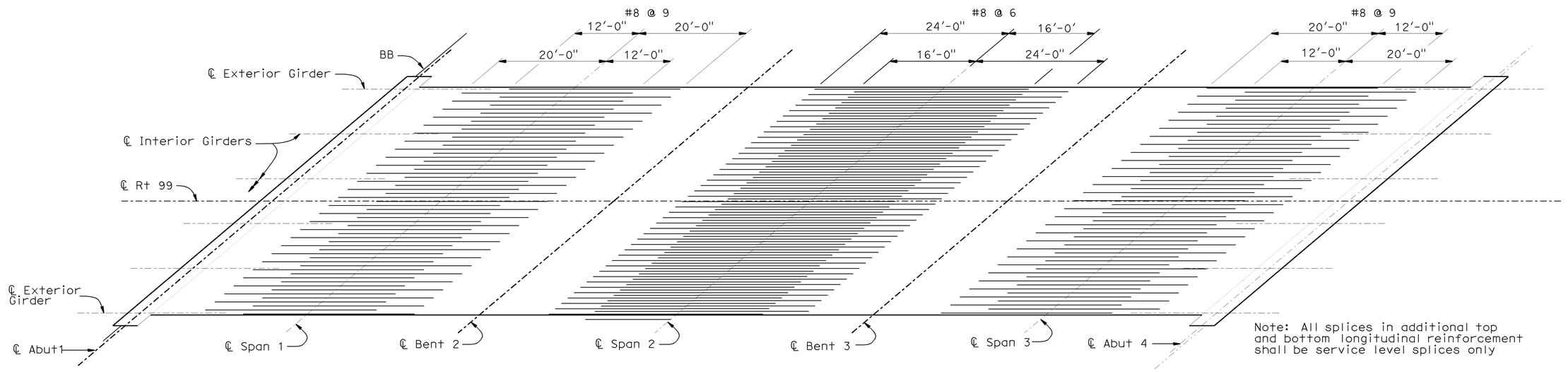

BOTTOM LONGITUDINAL REINFORCEMENT

1" = 10'-0"

NOTE:
THE CONTRACTOR SHALL VERIFY ALL CONTROLLING FIELD DIMENSIONS BEFORE ORDERING OR FABRICATING ANY MATERIAL.

DESIGN	BY Ramon Reyes	CHECKED Matthew Schott	STATE OF CALIFORNIA DEPARTMENT OF TRANSPORTATION	DIVISION OF ENGINEERING SERVICES STRUCTURE DESIGN DESIGN BRANCH 17	BRIDGE NO. 42-0131	BIOLA JUNCTION OH (WIDEN)
DETAILS	BY Craig Schellenger	CHECKED Ramon Reyes			POST MILE 27.3	GIRDER REINFORCEMENT
QUANTITIES	BY Cory Cowden	CHECKED Matthew Schott				

STRUCTURES DESIGN DETAIL SHEET (ENGLISH) (REV. 10/25/05)

ORIGINAL SCALE IN INCHES FOR REDUCED PLANS 0 1 2 3

CU 06
EA 442611

DISREGARD PRINTS BEARING EARLIER REVISION DATES →

REVISION DATES: 2-25-09 | 2-24-09

SHEET 10 OF 13

FILE => 42-0131rl-o-gir_rf.dgn

USERNAME => trlenard DATE PLOTTED => 28-SEP-2009 TIME PLOTTED => 13:56

DIST	COUNTY	ROUTE	POST MILES TOTAL PROJECT	SHEET No	TOTAL SHEETS
06	Fre	99	26.7/30.6	240	242

06/08/09
REGISTERED CIVIL ENGINEER DATE

Ramon Reyes
No. C63767
Exp 09-30-2010
CIVIL
REGISTERED PROFESSIONAL ENGINEER
STATE OF CALIFORNIA

9-28-09
PLANS APPROVAL DATE

The State of California or its officers or agents shall not be responsible for the accuracy or completeness of electronic copies of this plan sheet.

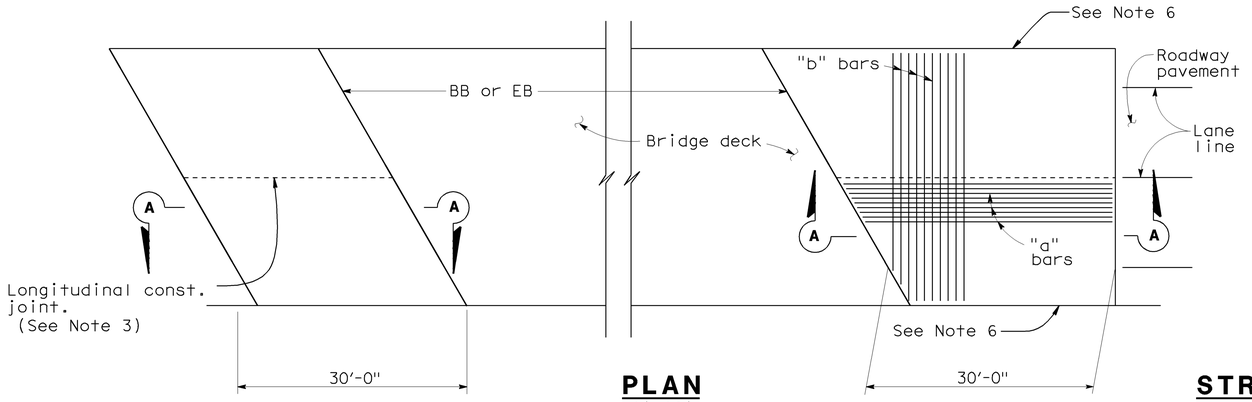

PLAN
1'=10'

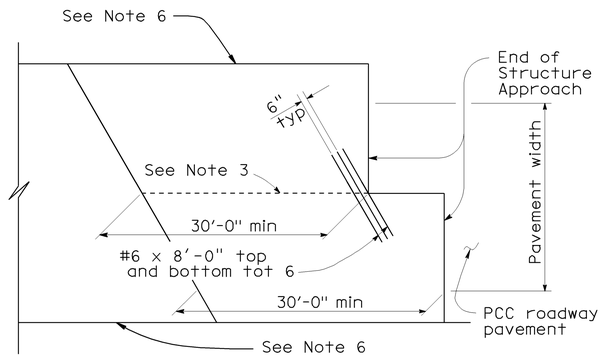

STRUCTURE APPROACH - END STAGGER DETAIL
No Scale

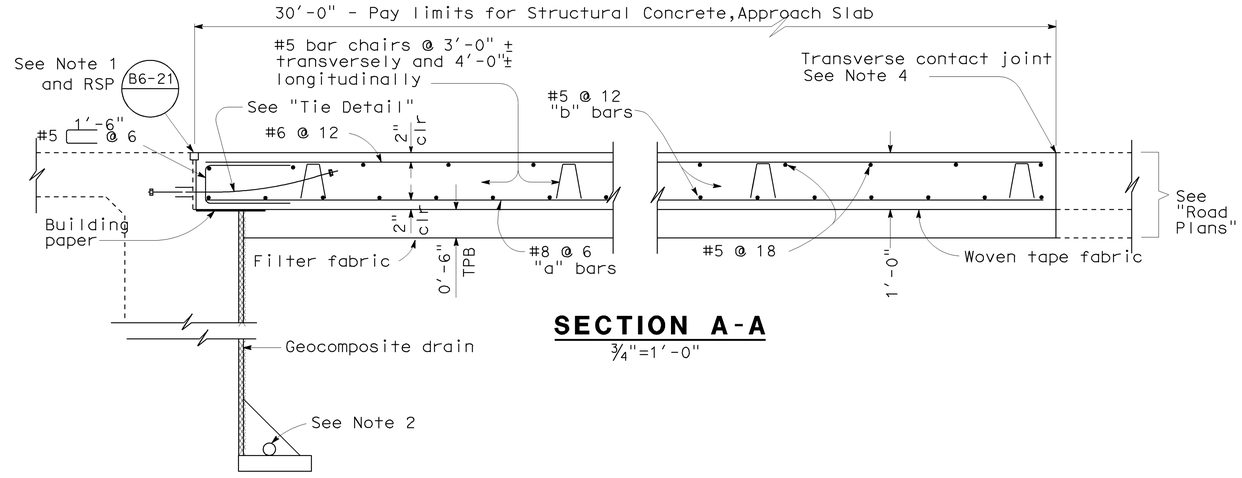

SECTION A-A
¾"=1'-0"

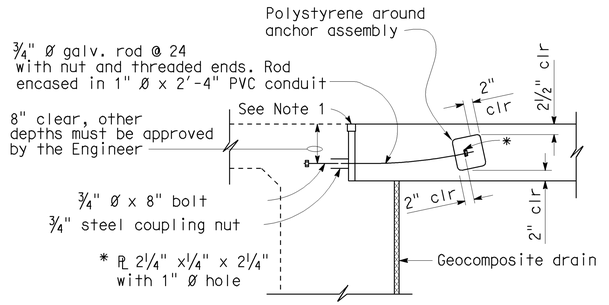

TIE DETAIL
¾"=1'-0"

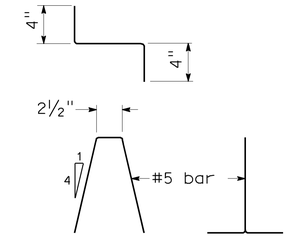

BAR CHAIR DETAIL
1½"=1'-0"

NOTE:
THE CONTRACTOR SHALL VERIFY ALL CONTROLLING FIELD DIMENSIONS BEFORE ORDERING OR FABRICATING ANY MATERIAL.

NOTES:

1. For details not noted or shown, see Structure Plans.
2. For drainage details, see "ABUTMENT LAYOUT SHEET"
3. Longitudinal construction joints, when permitted by the Engineer, shall be located on lane lines.
4. For transverse contact joint with new PCC paving, refer to Standard Plan P10.
5. At the contractor's option, approach slab transverse reinforcement may be placed parallel to paving notch. Spacing of transverse reinforcement is measured along ℄ roadway.
6. Limits of Structure Approach Type N(30D) Transverse reinforcement shall extend into adjacent approach slab

	BY	CHECKED
DESIGN	Ramon Reyes	Matthew Schott
DETAILS	Craig Schellenger	Ramon Reyes
QUANTITIES	Cory Cowden	Matthew Schott

STATE OF CALIFORNIA
DEPARTMENT OF TRANSPORTATION

DIVISION OF ENGINEERING SERVICES
STRUCTURE DESIGN
DESIGN BRANCH 17

CU 06
EA 442611

BRIDGE NO. 42-0131
POST MILE 27.3

BIOLA JUNCTION OH (WIDEN)
STRUCTURE APPROACH TYPE N(30D)

STRUCTURES DESIGN DETAIL SHEET (ENGLISH) (REV. 10/25/05)

ORIGINAL SCALE IN INCHES FOR REDUCED PLANS 0 1 2 3

DISREGARD PRINTS BEARING EARLIER REVISION DATES →

REVISION DATES: 2-04-09 | 2-05-09 | 2/13/09 | 6-05-09

SHEET 11 OF 13

FILE => 42-0131rl-s-san30d.dgn

USERNAME = trlenard DATE PLOTTED => 28-SEP-2009 TIME PLOTTED => 13:36

DIST.	COUNTY	ROUTE	MILE POST TOTAL PROJECT	SHEET NO.	TOTAL SHEETS
06	Fre	99	26.7/30.6	241	242

REGISTERED ENGINEER - CIVIL

9-28-09
PLANS APPROVAL DATE

The State of California or its officers or agents shall not be responsible for the accuracy or completeness of electronic copies of this plan sheet.

REGISTERED PROFESSIONAL ENGINEER — Ramon Reyes — No. C63767 — Exp. 09-30-2010 — CIVIL — STATE OF CALIFORNIA

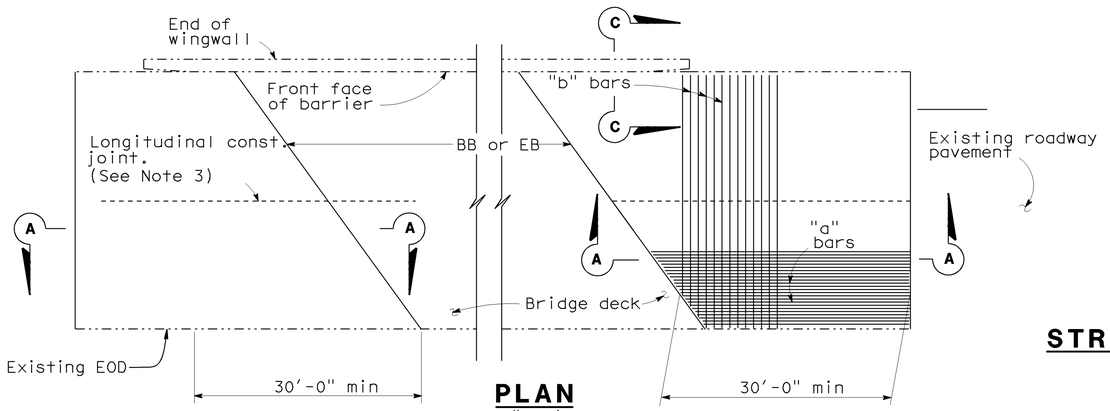

PLAN
1"=10'

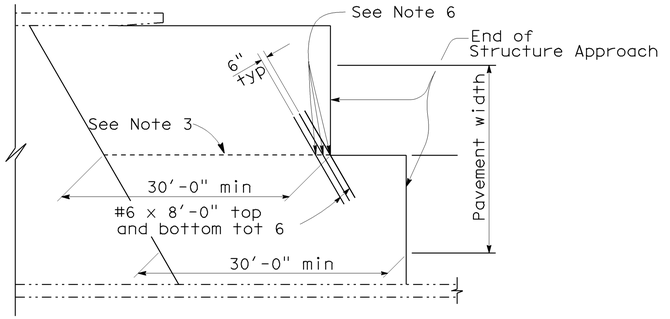

STRUCTURE APPROACH - END STAGGER DETAIL
No Scale

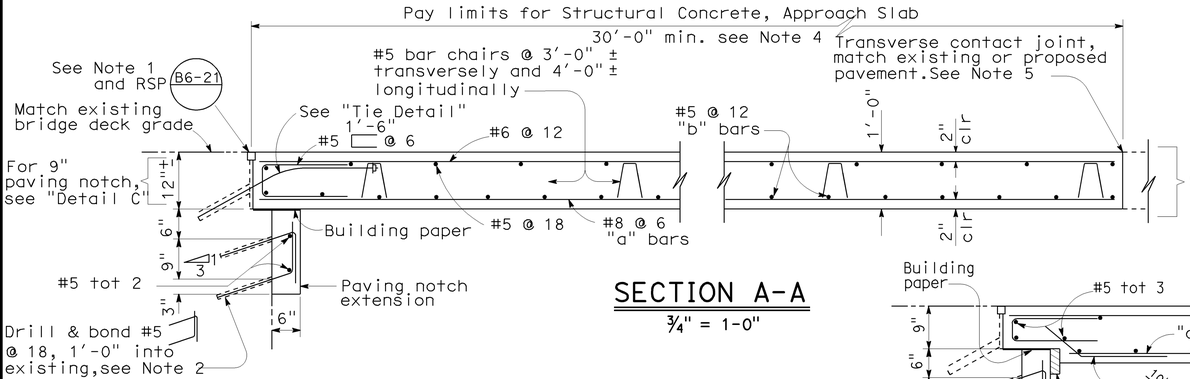

SECTION A-A
¾" = 1-0"

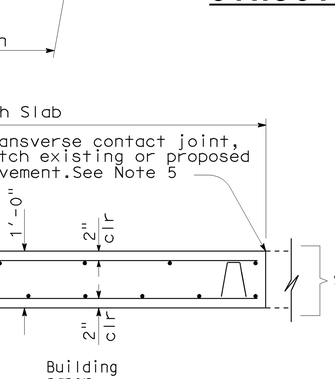

SECTION C-C
¾" = 1'-0"

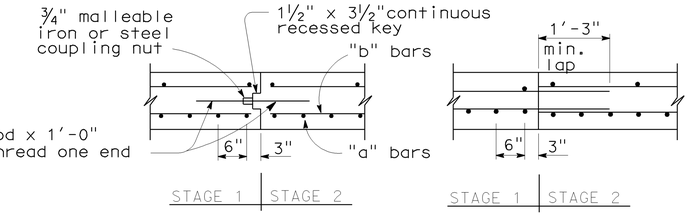

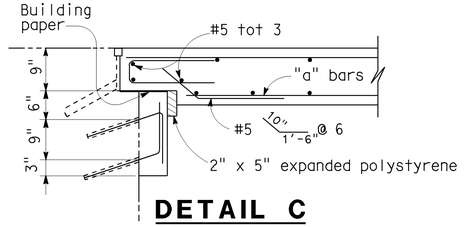

DETAIL C
¾" = 1'-0"

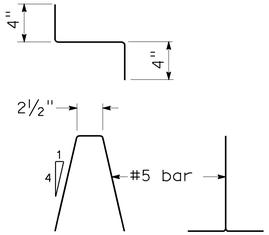

BAR CHAIR DETAIL
1½" = 1'-0"

NOTE: For details not shown,see "Section A-A".

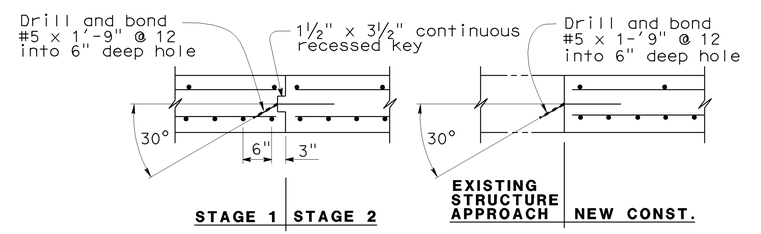

LONGITUDINAL CONSTRUCTION JOINT ALTERNATIVES
¾" = 1'-0"

NOTES:

1. For details not shown or noted,see Structure Plans. Adjust bar reinforcement to clear a sawcut for sealed joint,when required.
2. Space to avoid existing prestress anchorages and main reinforcement.
3. Longitudinal construction joints,when permitted by the Engineer,shall be located on lane lines.
4. Transverse contact joint shall be a minimum of 5'-0" from an existing or constructed weakened plane joint.
5. For transverse contact joint with new PCC paving. refer to Standard Plan P10.
6. Couplers are required for stage construction.
7. End angle or plate at beginning of barrier transition, end of wingwall or end of structure approach as applicable.

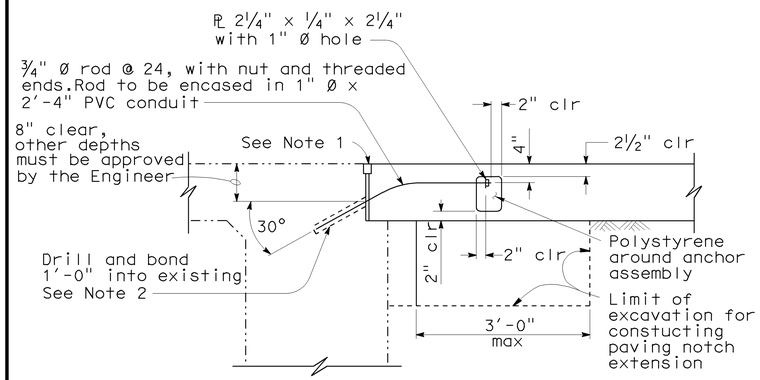

TIE DETAIL
¾" = 1'-0"

NOTE:

THE CONTRACTOR SHALL VERIFY ALL CONTROLLING FIELD DIMENSIONS BEFORE ORDERING OR FABRICATING ANY MATERIAL.

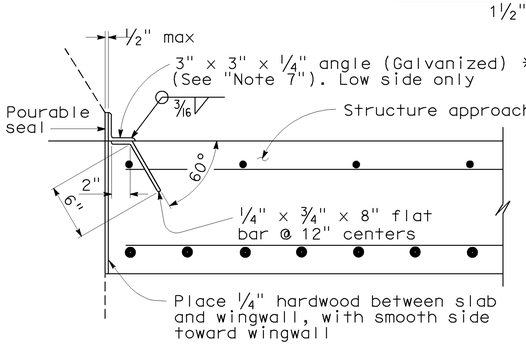

***(TO BE USED WITH TYPES 25, 27 OR SIMILIAR CONCRETE BARRIER)**

DETAIL B
1½" = 1'-0"

DESIGN	BY Ramon Reyes	CHECKED Matthew Schott	STATE OF CALIFORNIA DEPARTMENT OF TRANSPORTATION	DIVISION OF ENGINEERING SERVICES STRUCTURE DESIGN DESIGN BRANCH 17	BRIDGE NO. 42-0131	BIOLA JUNCTION OH (WIDEN)	
DETAILS	BY Craig Schellenger	CHECKED Ramon Reyes			POST MILE 27.3	STRUCTURE APPROACH TYPE R(30D)	
QUANTITIES	BY Cory Cowden	CHECKED Matthew Schott					

STRUCTURES DESIGN DETAIL SHEET (ENGLISH) (REV. 10/25/05)

ORIGINAL SCALE IN INCHES FOR REDUCED PLANS 0 1 2 3

CU 06
EA 442611

DISREGARD PRINTS BEARING EARLIER REVISION DATES →

REVISION DATES: 2-04-09 | 2-13-09 | 6-05-09

SHEET 12 OF 13

FILE => 42-0131rl-s-sar30d.dgn

USERNAME => trlenord DATE PLOTTED => 28-SEP-2009 TIME PLOTTED => 13:36

F-0194(4)

FED ROAD DIV No	STATE	PROJ No	FISCAL YEAR	SHEET No	TOTAL SHEETS
7	CAL.			156	210

DIST	COUNTY	ROUTE	SECTION	SHEET No	TOTAL SHEETS
VI	FRE	99	C	7	7

BRIDGE ENGINEER — CIVIL ENGINEER — LICENSE

DATE APPROVED AUGUST 1 1958

DESIGN PILE LOADING 45 T.
TYPE PILE CONCRETE, C.I.D.H.
DIAMETER 16-in.
TOTAL NUMBER OF PILES 36
LINEAL FT. PILES, "AS BUILT" 1671.8
LINEAL FT. PILES, ON PLANS 1610

NOTE: PILE REINFORCEMENT EXTENDED 12' ± INTO ORIGINAL GROUND.

AS BUILT PLANS
Contract No. 59-67c10
Date Completed
Document No. 60000997

AS BUILT
Corrections By R.E. Hawkins
Date March 31, 1959

BRIDGE DEPARTMENT

CHECKED

Approval Recommended by

CLASSIFICATION OF MATERIAL BASED ON STANDARD GRADE SIZE LIMITS

DIAGRAM SHOWING THE BASIS FOR ESTIMATES OF GRADE SIZE DISTRIBUTION USED IN DETERMINATION OF CLASS NAMES.
IF GRAVEL IS PRESENT IN APPRECIABLE AMOUNTS THE TERM "GRAVELLY" MAY BE ADDED TO THE CLASS NAME, VIZ, "GRAVELLY SAND." THE TERMS "COARSE", "MEDIUM" AND "FINE" WHEN USED TO DESCRIBE SAND, SILT AND GRAVEL REFER TO STANDARD GRADE SIZE LIMITS.

LEGEND OF EARTH MATERIALS

- GRAVEL
- SAND
- SILT
- CLAY
- SANDY CLAY OR CLAYEY SAND
- SANDY SILT OR SILTY SAND
- SILTY CLAY OR CLAYEY SILT
- PEAT AND/OR ORGANIC MATTER
- FILL MATERIAL
- IGNEOUS ROCK
- SEDIMENTARY ROCK
- METAMORPHIC ROCK

LEGEND OF B

- PLAN OF ANY BORING
- PENETROMETER
- 2¼" CONE PENETROMETER
- SAMPLER BORING (DRY)
- ROTARY BORING (WET)
- AUGER BORING (DRY)
- JET BORING
- CORE BORING
- TEST PIT

1" SOIL TUBE

DIVISION OF ENGINEERING SERVICES - GEOTECHNICAL SERVICES

As-Built Log of Test Borings sheet is considered an informational document only. As such, the State of California registration seal with signature, license number and registration certificate expiration date confirm that this is a true and accurate copy of the original document. This drawing is available and presented only for the convenience of any bidder, contractor or other interested party.

DIST.	COUNTY	ROUTE	POST MILES-TOTAL PROJECT	Sheet No.	Total Sheets
06	Fre	99	26.7/30.6	242	242

REGISTERED CIVIL ENGINEER — DATE 2/9/09

REGISTERED PROFESSIONAL ENGINEER
Qiang Huang
No. C055671
Exp. 12-31-10
CIVIL
STATE OF CALIFORNIA

BIOLA JUNCTION OH (WIDEN)
LOG OF TEST BORINGS

NOTE: A COPY OF THIS LOG OF TEST BORINGS IS AVAILABLE AT OFFICE OF STRUCTURE MAINTENANCE AND INVESTIGATIONS, SACRAMENTO, CALIFORNIA

CU: 06
EA: 442611

BRIDGE No. 42-0131

Sheet 13 of 13

To accompany plans dated 9-28-09

NOTES

The contractor's attention is directed to Section 2, Article (c) of the Standard Specifications and to the Special Provisions accompanying this set of plans.

Classification of earth material as shown on this sheet is based upon field inspection and is not to be construed to imply mechanical analysis.

STATE OF CALIFORNIA
DEPARTMENT OF PUBLIC WORKS
DIVISION OF HIGHWAYS

BIOLA JUNCTION O.H.

LOG OF TEST BORINGS

SCALE As Shown | BRIDGE 42-131 R/L | FILE E-42 | DRAWING C-5197-7

PREL. DRAWING No P 5197 +0

PR-5197-3

FILENAME => 42-0131rl-z-ltb01.tif