INFORMATION HANDOUT

For Contract No. 06-434014
At 06-Tul-65-R15.1/18.0

Identified by
Project ID 0600000967

PERMITS

California Department of Fish and Wildlife - Streambed Alteration Agreement dated July 1, 2015

U.S. Fish and Wildlife Service - Biological Opinion, dated September 13, 2004, amended January 31, 2008

United States Army Corps of Engineers - dated August 19, 2015

WATER QUALITY

Central Valley Regional Water Quality Control Board, October 9, 2015

MATERIALS INFORMATION

Geotechnical Design Report - Changeable Message Sign dated March 17, 2015

Manufacturer's drawings for Alternative Flared Terminal System

Water Source Information

List of existing traffic management system elements

CALIFORNIA DEPARTMENT OF FISH AND WILDLIFE
REGION 4 - CENTRAL REGION
1234 EAST SHAW AVENUE
FRESNO, CALIFORNIA 93710

STREAMBED ALTERATION AGREEMENT
NOTIFICATION NO. 1600-2015-0048-R4
POPLAR DITCH – TULARE COUNTY

CALIFORNIA DEPARTMENT OF TRANSPORTATION
CALTRANS DISTRICT 6
JAVIER ALMAGUER
855 M STREET, SUITE 200
FRESNO, CALIFORNIA 93721

TUL-65 TERRA BELLA EXPRESSWAY SEGMENT 1 (PROJECT)

This Streambed Alteration Agreement (Agreement) is entered into between the California Department of Fish and Wildlife (CDFW) and the California Department of Transportation (referred to as Permittee), represented by Javier Almaguer.

RECITALS

WHEREAS, pursuant to Fish and Game Code (FGC) section 1602, Permittee notified CDFW on March 16, 2015, that Permittee intends to complete the Project described herein.

WHEREAS, pursuant to FGC section 1603, CDFW has determined that the Project could substantially adversely affect existing fish or wildlife resources and has included Protective Measures in this Agreement necessary to protect those resources.

WHEREAS, Permittee has reviewed this Agreement and accepts its terms and conditions, including the Protective Measures to protect fish and wildlife resources.

NOW THEREFORE, Permittee agrees to complete the Project in accordance with this Agreement.

PROJECT LOCATION

The Project will occur on the west side of State Route (SR) 65 at post mile (PM) 17.70 where it crosses Poplar Ditch between Porterville and Terra Bella, in Tulare County, California; NE ¼ of Section 3, Township 31 South, Range 24 East, USGS 7.5 Minute Quad Map Porterville, MDB & M; Latitude 36.04518° N, Longitude -119.0398° W. (Figure 1)

PROJECT DESCRIPTION

The Project includes activities related to extend the box culvert at Poplar Ditch to accommodate the widening of SR 65 from the current two lanes to a four-lane expressway for Segment 1. Poplar Ditch is located where SR 65 currently tapers down from four lanes to the north to two lanes to the south.

The Project is limited to:

- Poplar Ditch currently has a double box culvert than needs to be extended by approximately 13 feet on the western side. Each cell is 5 feet wide and 4 feet high. The work will start by removing the existing 4-foot long, 4-foot high, and 0.8-foot thick headwall by cutting it away from the existing culvert. All demolition debris will be captured, collected, and removed from the Project area to an appropriate facility. In order to install the extension, 16 cubic yards of earth along the channel will be cut to clear an area 18 feet across the channel and 20 feet long. The culvert extension will be cast-in-place and will require 12 cubic yards of concrete. A new headwall with the same dimensions as the removed headwall will be constructed, and 4-foot high by 7-foot long wing walls will be added on each side. The headwall and wing walls will be cast-in-place and will require 4 cubic yards of concrete. Backfill around the culvert will require 14 cubic yards of the native cut material. The excess 2 cubic yards of cut will be removed from the Project area, but may be used elsewhere in the SR 65 expressway.

- Work will be done when the drainage is naturally dry, so no stream diversion will be required. No trees will be cut or removed as a result of Project implementation. All work will be done during daylight hours.

- Equipment to be used will include: an asphalt paver/roller, backhoe, Bidwell and roller screeds, bobcat, bulldozer/loader, chainsaw, compressor, concrete truck, concrete mixer, crane, dump truck, excavator, flatbed truck, fork lift, frontend loader, genie man lift, grader, haul truck, motor grader, paint/striping truck, pavement roller, pile driver/drill rig, pump truck, Redi-mix truck, roller/compactor, saw cutting/stripping equipment, scraper, shoulder paver, truck with seed sprayer, and water truck.

PROJECT IMPACTS

The Project will result in approximately 0.137 acres of temporary impacts over 20 linear feet of stream, and 0.007 acres (320 square feet) of permanent impacts to habitat over 13 linear feet of stream. Other potential impacts related to disturbance during Project implementation include but are not limited to those resulting from noise, vibration, trampling/crushing, erosion, and surface water contact with new concrete or other construction-related materials.

This Agreement is intended to avoid, minimize, and mitigate adverse impacts to the fish and wildlife resources that occupy the Project area and the adjacent habitat. Absent implementation of the Protective Measures required by this Agreement the Federal endangered and State threatened San Joaquin kit fox (*Vulpes macrotis mutica*) and the

State species of special concern American badger (*Taxidea taxus*), as well as other birds, mammals, fish, reptiles, amphibians, invertebrates, and plants that compose the local ecosystem, could potentially be impacted.

MEASURES TO PROTECT FISH AND WILDLIFE RESOURCES

1. Administrative Measures

Permittee shall meet each administrative Protective Measure described below.

1.1 Documentation at Project Site. Permittee shall make this Agreement, any extensions and amendments to this Agreement, and all related notification materials and California Environmental Quality Act (CEQA) documents, readily available at the Project site at all times and shall be presented to CDFW personnel or personnel from another State, Federal, or local agency upon request.

1.2 Providing Agreement to Persons at Project Site. Permittee shall provide copies of this Agreement and any extensions and amendments to this Agreement to all persons who will be working on the Project at the Project site on behalf of Permittee, including but not limited to contractors, subcontractors, inspectors, and monitors.

1.3 Notification of Conflicting Provisions. Permittee shall notify CDFW if Permittee determines or learns that a Protective Measure in this Agreement might conflict with a provision imposed on the Project by another local, State, or Federal agency. In that event, CDFW shall contact Permittee to resolve any conflict.

1.4 Project Site Entry. Permittee agrees that CDFW personnel may enter the Project site at any time to verify compliance with this Agreement.

1.5 Legal Obligations. This Agreement does not exempt Permittee from complying with all other applicable local, State, and Federal law, or other legal obligations.

1.6 Unauthorized Take. This Agreement does not authorize the "take" (defined in Fish and Game Code Section 86 as to hunt, pursue, catch, capture, or kill; or attempt to hunt, pursue, catch, capture, or kill) of State- or Federally-listed threatened or endangered species. Any such take shall require separate permitting as may be required.

1.7 Property Not Owned by Permittee. To the extent that the Protective Measures of this Agreement provide for activities that require Permittee to enter on another owner's property, they are agreed to with the understanding that Permittee possesses the legal right to so enter.

1.8 Work Schedule. Permittee shall submit a work schedule to CDFW prior to beginning any activities covered by this Agreement. Permittee shall also notify CDFW upon the completion of the activities covered by this Agreement.

1.9 Training. Prior to starting any activity within the stream bed or bank, all employees, contractors, and visitors who will be present during Project activities shall receive training from a qualified individual on the contents of this Agreement, the resources at stake, and the legal consequences of noncompliance.

2 Avoidance and Minimization Measures

To avoid or minimize adverse impacts to fish and wildlife resources identified above, Permittee shall implement each Protective Measure listed below.

2.1 Construction/Work Hours. All work activities shall be confined to daylight hours. For purposes of this Agreement, "daylight hours" are defined as that daytime period between sunrise and sunset.

2.2 Flagging/Fencing. Prior to any activity within the CDFW jurisdictional area, Permittee shall identify the limits of the required access routes and encroachment. These "work area" limits shall be identified with brightly-colored flagging/fencing. Work completed under this Agreement shall be limited to this defined area only. Flagging/fencing shall be maintained in good repair for the duration of the Project. All CDFW jurisdictional areas beyond the identified work area limits shall be considered Environmentally Sensitive Areas (ESA) and shall not be disturbed.

2.3 Listed Species.

(a) This Agreement does not allow for the take of any State- or Federally-listed threatened or endangered species. Liability for any take of such listed species remains the separate responsibility of Permittee for the duration of the Project.

(b) Permittee affirms that no take of State-listed species shall occur as a result of this Project and will take prudent measures to ensure that all take is avoided. Permittee acknowledges and fully understands that it does not have State incidental take authority. A Biological Opinion on the Proposed Widening of the Terra Bella Expressway (State Route 64, Tulare County, California 1-1-04-F-0235) has been issued to the US Department of Transportation, and addresses impacts to federally listed species. If any State-listed threatened or endangered species occurs within the proposed work area or could be impacted by the work proposed, and thus taken as a result of Project activities, Permittee is responsible for obtaining and complying with any required State endangered species permit before proceeding with this Project.

(c) Permittee shall immediately notify CDFW of the discovery of any such threatened or endangered species prior to and/or during Project implementation.

(d) Pre-activity surveys for sensitive status species shall be conducted by a qualified biologist within 30 days prior to commencement of the Project.

Surveys shall be conducted on the Project site and all access routes to avoid and minimize incidental take, confirm previous observations, identify any areas potentially occupied by listed or sensitive species, and clearly mark all resources to be avoided by Project activities. If any State- or Federally-listed threatened or endangered animal species are found or could be impacted by the work proposed the Permittee shall notify CDFW of the discovery prior to commencement of any activity. An amended Agreement and/or a State Incidental Take Permit may be necessary and a new CEQA analysis may need to be conducted, before work can begin.

(e) San Joaquin Kit Fox: Prior to the start of Project activities, a qualified biologist shall perform transect surveys of the Project work area and a 250-foot buffer, to identify potential dens and other kit fox sign. During Project implementation, Permittee shall follow all requirements in the United States Fish and Wildlife Service (USFWS) "USFWS Standardized Recommendations for the Protection of the Endangered San Joaquin Kit Fox Prior to or During Ground Disturbance" (http://www.fws.gov/sacramento/es/Survey-Protocols-Guidelines/Documents/kitfox_standard_rec_2011.pdf). A qualified biological monitor shall be available on-site during all Project-related activities that could impact the species. If kit fox are found on or adjacent to the Project site, all activity shall cease until a qualified biologist confirms that the individual(s) has left of its own volition.

If San Joaquin kit fox dens are found, they shall be avoided by appropriate distances (potential or atypical den = 50 feet; known den = 100 feet; pupping den = 250 feet). During reconnaissance-level surveys the den will be treated as a known den unless sign associated with natal/pupping activity is observed. If any occupied San Joaquin kit fox pupping dens are subsequently discovered, Permittee shall stop work and contact CDFW for further guidance. Absolutely no disturbance to known San Joaquin kit fox dens shall occur and no work shall occur within the above buffers without contacting CDFW and obtaining written authorization to do so. Permittee is advised that an Incidental Take Permit for San Joaquin kit fox may first be required for such activities.

(f) American Badger: Any American badger detected within the Project area during Project-related activities shall be allowed to move out of the work area of its own volition. If American badger is detected denning on or immediately adjacent to the Project site, Permittee shall consult with CDFW to determine whether the animal(s) may be evicted from the den. Eviction of badgers will not be approved by CDFW unless it is confirmed that no dependent young are present.

2.4 Fish and Wildlife.

(a) If any fish or wildlife is encountered during the course of Project activities, said fish or wildlife shall be allowed to leave the Project area unharmed.

(b) All pipes with inside diameter openings greater than 1.5 inches and smaller than 12 inches shall be capped or otherwise covered prior to being left overnight. If an animal is found in any pipe, the pipe shall be avoided and the animal(s) left to leave of their own accord. If a listed species is found occupying a pipe, all activities with the potential to affect the listed species occupying the pipe, as determined by a qualified biologist and confirmed by CDFW, shall be suspended immediately. Work shall not resume without CDFW written concurrence.

(c) All trenches, holes, and other excavations with sidewalls steeper than a 1:1 (45 degree) slope and 2 feet deep or less shall be covered when workers or equipment are not actively working in the excavation or shall have an escape ramp of earth or a non-slip material with a 1:1 (45 degree) slope or flatter.

(d) All trenches, holes, and other excavations with sidewalls steeper than a 1:1 (45 degree) slope and greater than 2 feet deep shall be covered when workers or equipment are not actively working in the excavation and at the end of each work day.

(e) A qualified biologist shall inspect all excavations (covered or open) for entrapped wildlife at the beginning, middle, and end of each day until the excavation is backfilled, including weekends and any non-work days.

(f) A qualified biologist shall inspect all excavated holes and trenches for entrapped wildlife immediately before the excavation is backfilled.

(g) The outer 2 feet of excavation covers shall conform to solid ground so that gaps do not occur between the cover and the ground. Covering such gaps with dirt or laying covers on excavated soil shall <u>not</u> satisfy this requirement. The outer 2 feet of cover material shall be semi-rigid and secured to the ground to preclude wildlife from lifting the edge (hardware cloth shall be used unless another material is approved in advance by CDFW). The edges of the covers shall be secured with re-bar, minimum 10-inch soil staples, or similar means every 12 inches to prevent wildlife from lifting the edges.

(h) All trash shall be removed from the site daily. No pets shall be permitted to be at the site during construction.

(i) Pursuant to FGC Sections 3503 and 3503.5, it is unlawful to take, possess, or destroy the nest or eggs of any bird or bird-of-prey. To protect nesting birds, no Project activity shall be completed from March 1 through August 31 unless the following <u>Avian Nesting Surveys</u> are completed by a qualified biologist within 30 days prior to commencing Project activities.

<u>Raptors</u>: Survey for nesting activity of raptors within a 500-foot radius of the site. Surveys shall be conducted at appropriate nesting times and concentrate on trees with the potential to support raptor nests. If any active nests are observed, these nests and nest trees shall be

designated an ESA and protected with a minimum 500-foot buffer until young have fledged and are no longer reliant on the nest site or parental care.

Other Avian Species: Survey for nesting activity within a 250-foot radius of the defined work area. If any nesting activity is found, these nests shall be designated an ESA and protected with a minimum 250-foot buffer until young have fledged and are no longer reliant on the nest site or parental care.

CDFW may consider variances from these buffers when there is a compelling biological or ecological reason to do so, such as when the Project area would be concealed from a nest site by topography.

2.5 Vegetation.

(a) No trees or shrubs shall be removed or disturbed from Project implementation.

(b) Removal and trimming of herbaceous vegetation shall be limited to the minimal amount necessary to complete the Project.

(c) Vegetation or material removed from the Project site shall be disposed of at an appropriate and legal off-site location where the material cannot enter the stream channel. No such material shall be stockpiled in the streambed, banks, or channel.

(d) All disturbed invasive, nonnative plant species shall be removed from the Project site. Any Vinca, Cape or German ivy, Castor bean, Arundo, or other exotic plant species shall be bagged and appropriately disposed of in a landfill. Exotic species shall not be used in mulching, composting, or otherwise placed in or around the Project site.

(e) Heavy equipment and other machinery shall be inspected for the presence of undesirable species and cleaned prior to on-site use to reduce the risk of introducing exotic plant species into the Project site.

2.6 Vehicles and Equipment.

(a) Vehicles and heavy equipment shall only be operated within naturally dry portions of the stream.

(b) Any equipment or vehicles driven and/or operated in or adjacent to the stream shall be checked and maintained daily to prevent leaks of materials that, if introduced to water, could be deleterious to aquatic or terrestrial life.

(c) Staging and storage areas for equipment, materials, fuels, lubricants, and solvents shall be located outside of the stream channel and banks. Stationary equipment such as motors, pumps, generators, compressors and

welders, located within or adjacent to the stream, shall be positioned over drip-pans. Vehicles shall be moved away from the stream prior to refueling and lubrication.

2.7 Fill/Spoil.

(a) Spoil storage sites shall not be located within the stream, or where spoil will be washed into the stream. Rock, gravel, and/or other materials shall not be imported into or moved within the bed or banks of the stream, except as otherwise addressed in this Agreement.

(b) Fill shall be limited to the minimal amount necessary to accomplish the agreed activities. Excess fill material shall be moved off-site at Project completion.

2.8 Erosion.

(a) No work shall occur during or within 24 hours following significant rainfall events, defined as ¼ inch or more of rain in a 24-hour period.

(b) All disturbed soils within the Project site shall be stabilized to reduce erosion potential, both during and following Project implementation. Temporary erosion control devices, such as straw bales, silt fencing, and sand bags, may be used, as appropriate, to prevent siltation of the stream. To minimize the risk of ensnaring and strangling wildlife, coir rolls, erosion control mats or blankets, straw or fiber wattles, or similar erosion control products shall be composed entirely of natural-fiber, biodegradable materials. Permittee shall not use "photodegradable" or other plastic erosion control materials.

2.9 Pollution.

(a) Permittee and all contractors shall be subject to the water pollution regulations found in Fish and Game Code sections 5650 and 12015.

(b) The Permittee shall install the necessary containment structures to control the placement of wet concrete and to prevent it from entering into the channel outside of those structures. No concrete shall be poured below the top of bank if the 5-day weather forecast indicates any chance of rain. At all times when the Permittee is pouring or working with wet concrete there shall be a designated monitor to inspect the containment structures and ensure that no concrete or other debris enters into the channel outside of those structures. Poured concrete shall be isolated from surface waters and allowed to dry/cure for a minimum of 30 days or until the pH as tested with tap water does not exceed 9.5. Any rain water that comes into contact with the concrete structures shall be contained and isolated from stream flows; the water pH shall be tested, and water shall be removed from the site and disposed of lawfully if the pH exceeds 9.5. Permittee shall submit to CDFW the methods

and results of all pH testing, including measurements that demonstrate a pH at or below 9.5 as tested prior to removing the containment structures.

(c) Raw cement, concrete or washings thereof, asphalt, drilling fluids or lubricants, paint or other coating material, oil or other petroleum products, or any other substances that could be hazardous to fish or wildlife resulting from or disturbed by Project-related activities, shall be prevented from contaminating the soil and/or entering the "Waters of the State".

(d) An Emergency Response Plan shall be prepared and submitted to CDFW for approval prior to the start of Project activities, and kept on-site during all phases of the Project. The Plan shall identify the actions that shall be taken in the event of a spill of petroleum products, concrete, contaminated soil, or other material harmful to fish, plants, or aquatic life. Emergency response materials shall be kept at the site and readily available to allow rapid containment and cleanup of any spilled material. In the event that a spill occurs, all Project activities shall immediately cease until cleanup of the spilled materials is completed. CDFW shall be notified immediately by Permittee of any spills. The Emergency Response Plan may be part of a document required by another permitting agency, such as a Water Pollution Control Program; however, the Emergency Response Plan shall be clearly identified and readily available to staff in the event of an emergency situation, and accessible during inspection of the site by CDFW personnel.

(e) All Project-generated debris, building materials, and rubbish shall be removed from the stream and from areas where such materials could be washed into the stream.

2.10 Structures. Permittee shall confirm that all structures and installed features are designed (i.e., size and alignment), constructed, and maintained such that they will not fail, will accommodate high flows, and will not cause long- term changes in water flows that adversely modify the existing upstream or downstream channel bed/bank contours, increase sediment deposition, or cause significant new erosion.

3 Compensatory Measures

To compensate for adverse impacts to fish and wildlife resources identified above that cannot be avoided or minimized, Permittee shall implement each Protective Measure listed below.

3.1 Revegetation and Restoration.

(a) Any exposed slopes or exposed areas created by Project activities shall be seeded (with weed-free straw or mulch) with a blend of a minimum of three (3) locally native grass species. One (1) or two (2) sterile non-native perennial grass species may be added to the seed mix provided that amount does not exceed 25 percent of the total seed mix by count. Locally native

- An Emergency Response Plan, submitted to CDFW at least two (2) weeks prior to the start of Project activities (Avoidance and Minimization Measure 2.9(d)).

- A seed mixture to be used to control erosion, submitted to CDFW for approval prior to application (Compensatory Measure 3.1(a)).

- A Final Project Report to be submitted within 30 days after the Project is completed. The final report shall summarize the Project and address the implementation of each Protective Measure included in this Agreement. Before, during, and after photo documentation of the Project site shall be included in the report.

CONTACT INFORMATION

Any communication that Permittee or CDFW submits to the other shall be in writing and any communication or documentation shall be delivered to the address below by U.S. mail, fax, or email, or to such other address as Permittee or CDFW specifies by written notice to the other. Permittee shall submit all schedules, survey results, reports, and/or plans required by this Agreement in hard copy to the address below; Permittee may also submit those materials electronically by email to the CDFW contact identified below (or subsequent contact) **and** to R4LSA@wildlife.ca.gov.

To Permittee:

California Department of Transportation (Caltrans)
Todd Barosso
855 M Street, Suite 200
Fresno, California 93721
(559) 445-6258
Fax: (559) 445-6260
todd.barosso@dot.ca.gov

To CDFW:

California Department of Fish and Wildlife
Region 4 - Central Region
1234 East Shaw Avenue
Fresno, California 93710
Attn: Lake and Streambed Alteration Program – Laura Peterson-Diaz
Notification No. 1600-2015-0048-R4
Phone: (559) 243-4017 extension 225
Fax: (559) 243-4020
laura.peterson-diaz@wildlife.ca.gov

LIABILITY

Permittee shall be solely liable for any violations of this Agreement, whether committed by Permittee or any person acting on behalf of Permittee, including its officers, employees, representatives, agents or contractors and subcontractors, to complete the Project or any activity related to it that this Agreement authorizes.

This Agreement does not constitute CDFW's endorsement of, or require Permittee to proceed with the Project. The decision to proceed with the Project is Permittee's alone.

SUSPENSION AND REVOCATION

CDFW may suspend or revoke in its entirety this Agreement if it determines that Permittee or any person acting on behalf of Permittee, including its officers, employees, representatives, agents, or contractors and subcontractors, is not in compliance with this Agreement.

Before CDFW suspends or revokes this Agreement, it shall provide Permittee written notice by certified or registered mail that it intends to suspend or revoke. The notice shall state the reason(s) for the proposed suspension or revocation, provide Permittee an opportunity to correct any deficiency before CDFW suspends or revokes this Agreement, and include instructions to Permittee, if necessary, including but not limited to a directive to immediately cease the specific activity or activities that caused CDFW to issue the notice.

ENFORCEMENT

Nothing in this Agreement precludes CDFW from pursuing an enforcement action against Permittee instead of, or in addition to, suspending or revoking this Agreement.

Nothing in this Agreement limits or otherwise affects CDFW's enforcement authority or that of its enforcement personnel.

OTHER LEGAL OBLIGATIONS

This Agreement does not relieve Permittee or any person acting on behalf of Permittee, including its officers, employees, representatives, agents, or contractors and subcontractors, from obtaining any other permits or authorizations that might be required under other Federal, State, or local laws or regulations before beginning the Project or an activity related to it.

This Agreement does not relieve Permittee or any person acting on behalf of Permittee, including its officers, employees, representatives, agents, or contractors and subcontractors, from complying with other applicable statutes in the FGC including, but not limited to, FGC sections 2050 *et seq*. (threatened and endangered species), 3503 (bird nests and eggs), 3503.5 (birds of prey), 5650 (water pollution), 5652 (refuse disposal into water), 5901 (fish passage), 5937 (sufficient water for fish), and 5948 (obstruction of stream).

Nothing in this Agreement authorizes Permittee or any person acting on behalf of Permittee, including its officers, employees, representatives, agents, or contractors and subcontractors, to trespass.

AMENDMENT

CDFW may amend this Agreement at any time during its term if CDFW determines the amendment is necessary to protect an existing fish or wildlife resource.

Permittee may amend this Agreement at any time during its term, provided the amendment is mutually agreed to in writing by CDFW and Permittee. To request an amendment, Permittee shall submit to CDFW a completed CDFW "Request to Amend Lake or Streambed Alteration" form and include with the completed form payment of the corresponding amendment fee identified in CDFW's fee schedule at the time of the request (see Cal. Code Regs., Title 14, § 699.5).

TRANSFER AND ASSIGNMENT

This Agreement may not be transferred or assigned to another entity, and any purported transfer or assignment of this Agreement to another entity shall not be valid or effective, unless the transfer or assignment is requested by Permittee in writing, as specified below, and thereafter CDFW approves the transfer or assignment in writing.

The transfer or assignment of this Agreement to another entity shall constitute a minor amendment, and therefore to request a transfer or assignment, Permittee shall submit to CDFW a completed CDFW "Request to Amend Lake or Streambed Alteration" form and include with the completed form payment of the minor amendment fee identified in CDFW's fee schedule at the time of the request (see Cal. Code Regs., Title 14, § 699.5).

EXTENSIONS

In accordance with FGC section 1605(b), Permittee may request one (1) extension of this Agreement, provided the request is made prior to the expiration of this Agreement's term. To request an extension, Permittee shall submit to CDFW a completed CDFW "Request to Extend Lake or Streambed Alteration" form and include with the completed form payment of the extension fee identified in CDFW's fee schedule at the time of the request (see Cal. Code Regs., Title 14, § 699.5). CDFW shall process the extension request in accordance with FGC 1605(b) through (e).

If Permittee fails to submit a request to extend this Agreement prior to its expiration, Permittee must submit a new notification and notification fee before beginning or continuing the Project this Agreement covers (FGC, § 1605, subd. (f)).

EFFECTIVE DATE

This Agreement becomes effective on the date of CDFW's signature, which shall be: 1) after Permittee's signature; 2) after CDFW complies with all applicable requirements

under the California Environmental Quality Act (CEQA); and 3) after payment of the applicable FGC section 711.4 filing fee listed at http://www.wildlife.ca.gov/habcon/ceqa/ceqa_changes.html.

TERM

This Agreement shall remain in effect for three (3) years beginning on the date signed by CDFW, unless it is terminated or extended before then. All provisions in this Agreement shall remain in force throughout its term. Permittee shall remain responsible for implementing any provisions specified herein to protect fish and wildlife resources after this Agreement expires or is terminated, as FGC section 1605(a)(2) requires.

CALIFORNIA ENVIRONMENTAL QUALITY ACT (CEQA) COMPLIANCE

In approving this Agreement, CDFW is independently required to assess the applicability of CEQA. The features of this Agreement shall be considered as part of the overall Project description.

Permittee's concurrence signature on this Agreement serves as confirmation to CDFW that the activities conducted under the terms of this Agreement are consistent with the Project as described in the CEQA Environmental Impact Report prepared by the California Department of Transportation as the Lead Agency for the Terra Bella Expressway Project (State Clearinghouse No. 2004041130) certified on June 30, 2005. A copy of the Environmental Impact Report was provided to CDFW by Permittee.

CDFW, as a CEQA Responsible Agency, shall draft Findings and submit a Notice of Determination to the State Clearinghouse upon signing this Agreement.

EXHIBITS

The document listed below is included as an exhibit to this Agreement and is incorporated herein by reference.

Figure 1. Project Location USGS Quad Map.

AUTHORITY

If the person signing this Agreement (signatory) is doing so as a representative of Permittee, the signatory hereby acknowledges that he or she is doing so on Permittee's behalf and represents and warrants that he or she has the authority to legally bind Permittee to the provisions herein.

AUTHORIZATION

This Agreement authorizes only the Project described herein. If Permittee begins or completes a Project different from the Project this Agreement authorizes, Permittee may be subject to civil or criminal prosecution for failing to notify CDFW in accordance with FGC section 1602.

CONCURRENCE

The undersigned accepts and agrees to comply with all the provisions of this Agreement.

FOR CALIFORNIA DEPARTMENT OF TRANSPORTATION

Javier Almaguer — 6/30/2015

Javier Almaguer — Date

Branch Chief – Caltrans Central Region Biology South

FOR CALIFORNIA DEPARTMENT OF FISH AND WILDLIFE

Terry Palmisano — 7/01/2015

for Gerald Hatler — Date

Acting Regional Manager - Central Region

Prepared by: Laura Peterson-Diaz
Environmental Scientist

Figure 1

Exhibit A

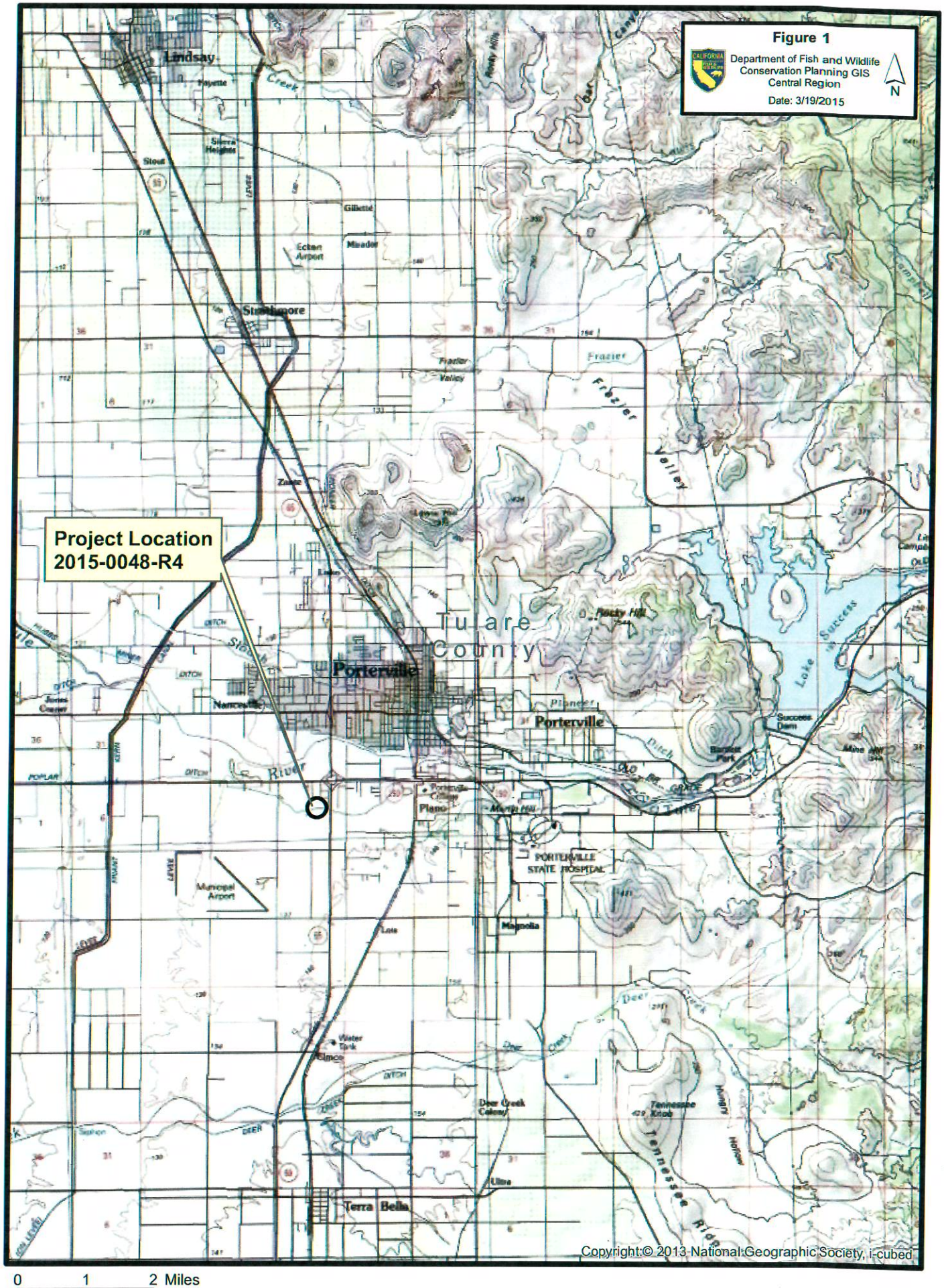
Figure 1
Department of Fish and Wildlife
Conservation Planning GIS
Central Region
Date: 3/19/2015
N
Project Location
2015-0048-R4
Lindsay
Strathmore
Porterville
Tulare
County
Porterville
Plano
PORTERVILLE
STATE HOSPITAL
Magnolia
Terra Bella
Municipal
Airport
Lake Success
Frazier Valley
Copyright:© 2013 National Geographic Society, i-cubed
0 1 2 Miles

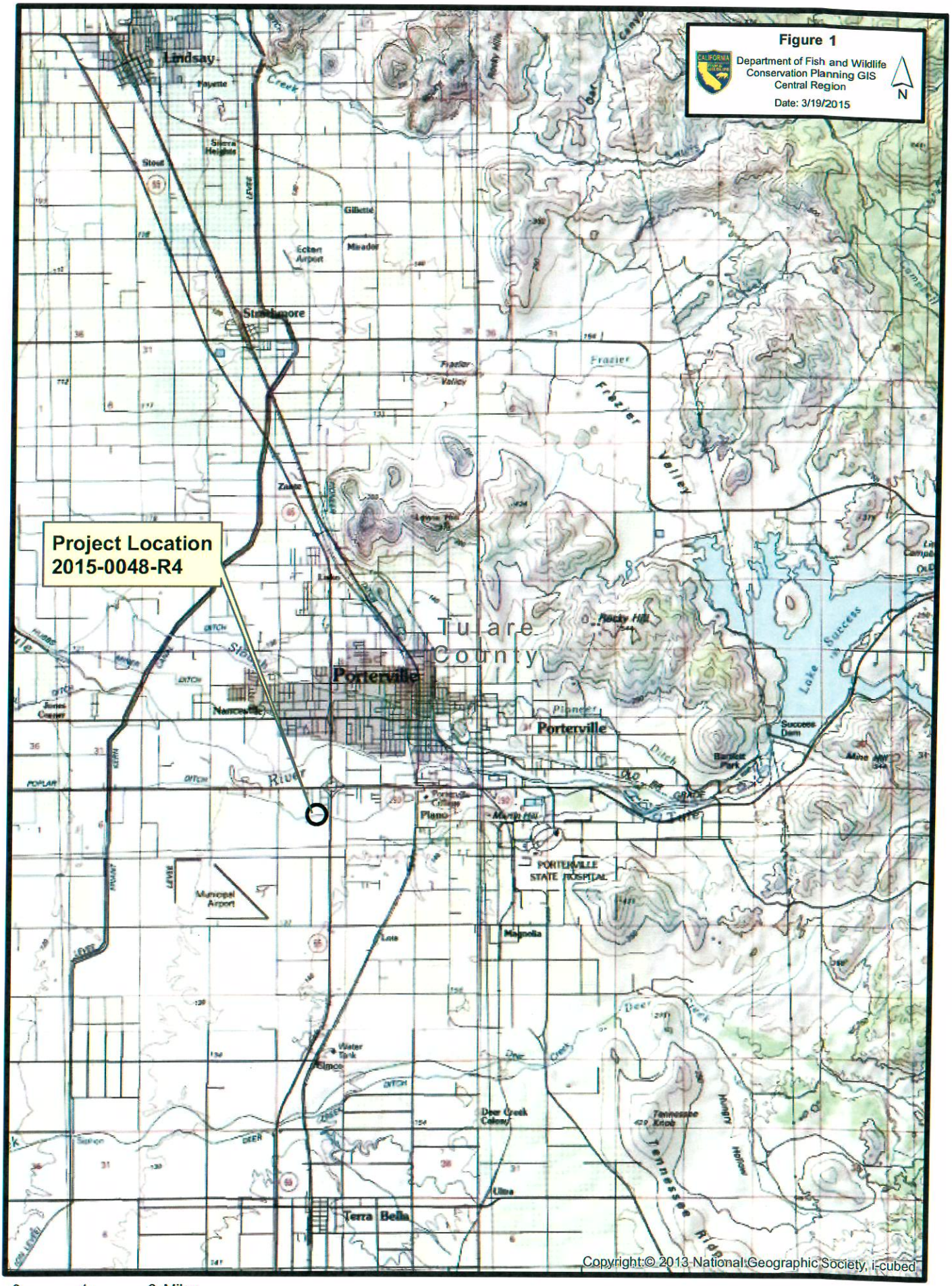
Figure 1
Department of Fish and Wildlife
Conservation Planning GIS
Central Region
Date: 3/19/2015
N
Project Location
2015-0048-R4
Lindsay
Strathmore
Porterville
Tulare County
Terra Bella
Copyright:© 2013 National Geographic Society, i-cubed
0 1 2 Miles

Walsh

COPY FOR YOUR INFORMATION

United States Department of the Interior

FISH AND WILDLIFE SERVICE
Sacramento Fish and Wildlife Office
2800 Cottage Way, Room W-2605
Sacramento, California 95825-1846

In reply refer to:
1-1-04-F-0235

SEP 13 2004

Mr. Gene K. Fong
Division Administrator
U.S. Department of Transportation
Federal Highway Administration
650 Capitol Mall, Suite 4-100
Sacramento, CA 95814

Subject: Biological Opinion on the Proposed Widening of the Terra Bella Expressway (State Route 65), Tulare County, California

Dear Mr. Fong:

This responds to your June 22, 2004, request for formal consultation with the U.S. Fish and Wildlife Service (Service) regarding the proposed widening of the Terra Bella Expressway/State Route 65 located in Tulare County, California. Your request for formal consultation was received in our office on June 22, 2004. This document represents the Service's biological opinion on the effects of the proposed action on the endangered San Joaquin kit fox (*Vulpes macrotis mutica*), the threatened valley elderberry longhorn beetle (*Desmocerus californicus dimorphus*), and the threatened vernal pool fairy shrimp (*Branchinecta lynchi*), in accordance with section 7 of the Endangered Species Act of 1973, as amended (Act).

This biological opinion is based on information provided in the following documents: (1) *Terra Bella Expressway Project Biological Assessment* prepared by the U.S. Department of Transportation and Caltrans, and dated May 18, 2004; (2) *Recovery Plan for Upland Species of the San Joaquin Valley, California*, prepared by the Service, and dated September 30, 1998; and (3) other information available to the Service.

Consultation History

December 3, 2002: Service biologist, Gary Burton, visited the site with Caltrans personnel and Dr. David Germano, a professor at California State University – Bakersfield. Mr. Burton determined that the project site had suitable kit fox habitat and kit fox had been recently observed in the vicinity of the project. Mr. Burton recommended a compensation ratio of 1.1:1 for loss of kit fox agricultural habitat in Tulare County. For fairy shrimp compensation, Mr. Burton

TAKE PRIDE IN AMERICA

recommended compensation ratios of 2:1 for preservation and 1:1 for restoration.

June 22, 2004: Service received letter and biological assessment from the Federal Highway Administration (FHWA) initiating formal consultation.

BIOLOGICAL OPINION

Description of Proposed Action

The proposed project lies on the San Joaquin Valley floor in southern Tulare County along State Route (SR) 65 between the Kern/Tulare County line and SR 190, at the southern limits of the city of Porterville. The project is bordered on the east by valley foothills and the Sequoia National Forest. The action area is defined as the actual project footprint, 76.2 meter (250 feet) buffer area to the east and west of the SR 65 centerline to accommodate potential project modifications, and a 3.2-kilometer (2-mile) distance from the centerline of the road for the length of the project. This distance is based on the requirement of the protocol spotlight survey for the kit fox, the affected species with the largest home range. The action area is comprised primarily of agricultural land, with the remaining land being right-of-way, commercial/residential development, limited riparian habitat, and a small oil field.

Caltrans, in cooperation with the FHWA, proposes to widen a 29 kilometer (18 mile) segment of SR 65 from a two-lane to a four-lane expressway with an 18.6 meter (61 feet) median. SR 65 would transition from a two-lane expressway at the Kern/Tulare County line to a four-lane expressway near SR 190 in Tulare County. The current 55 miles per hour (mph) posted speed limit within the proposed project area is expected to increase to 65 mph. The new alignment would be constructed east of the existing route for the first 24.5 kilometers (15.2 miles) from the south, then shift west of the existing route for the remaining distance. Other proposed activities include intersection improvements, minor highway realignment, bridge construction and modification at White River and Deer Creek, right-of-way acquisition, shoulder widening with rumble strips, an asphalt concrete overlay, culverts, and guardrails. A detailed list of construction equipment likely to be used is provided within the biological assessment. Construction is scheduled to begin July 2009 and finish July 2012.

The proposed project includes the following conservation measures:

San Joaquin Kit Fox

1. Caltrans will conduct pre-construction surveys prior to ground disturbance to search for kit fox presence within the project area.

2. All employees, subcontractors, and contractor's representatives on the project site will receive a one-hour kit fox specific training provided by the State prior to performing on-site work.

3. Construction activities will be conducted during daytime hours to avoid disruption of kit fox nocturnal activities.

4. Caltrans will implement the contract provision for San Joaquin kit fox protection, as provided in Appendix H of the Biological Assessment.

5. Caltrans will compensate for permanent loss of foraging habitat by acquiring land at a ratio of 1.1 to 1. Temporary loss of foraging habitat will be compensated at a ratio of 0.5 to 1. This will result in the acquisition of a total of 485 acres at a Service-approved site.

Valley Elderberry Longhorn Beetle

1. Elderberry shrubs within the project impact area will be transplanted to another suitable site approved by the Service, in accordance with the Service's 1999 *Conservation Guidelines for the Valley Elderberry Longhorn Beetle* (Guidelines).

2. Elderberry plants and native plant seedlings will be planted at the approved site according to the ratios established in the Guidelines, and based on surveys conducted within one year of construction. The current condition of the elderberry plants would result in the planting of 130 elderberry plants and 138 associated native plants. At the time of construction (five years from the present), it is estimated there will be an additional 24 stems needing compensation. This would result in 84 (if the stems have exit holes) or 42 (if the stems do not have exit holes) additional elderberries, with corresponding associated native plantings being 168 or 42, respectively.

Vernal Pool Fairy Shrimp

1. Seasonal pools and roadside puddles identified within the action area will be designated as Environmentally Sensitive Areas, and will be enclosed within a temporary fence to avoid disturbance during construction activities.

2. Caltrans will compensate for the permanent loss of fairy shrimp habitat at a ratio of 2 to 1 for the preservation component, and a ratio of 1 to 1 for the creation component. Therefore, credits equivalent to 2.1 acres will be purchased.

Status of the Species

San Joaquin Kit Fox

The San Joaquin kit fox was listed as endangered on March 11, 1967 (32 **FR** 4001) and listed by the State of California as a threatened species on June 27, 1971. Critical habitat has not been proposed or designated. The San Joaquin kit fox is a small canid, with an average body length of 20 inches and weighing about 5 pounds. They are lightly built, with long legs and large ears. Pelage color ranges from tan to buffy gray in the summer to silvery gray in the winter. The belly is whitish and the tail is black-tipped. Kit foxes are active year round, and are primarily nocturnal. The grizzled

coloration and black-tipped tail aid in distinguishing the San Joaquin kit fox from the much larger (4-5 kilogram; 9-11 pound) red fox (*Vulpes vulpes*). Gray foxes (*Urocyon cinereoargenteus*) are similar in coloration to the San Joaquin kit fox, but are heavier (about 3.6 kilograms; 8 pounds) and have a dark stripe running along the top of their tail (Grinnell *et al.* 1937).

In the San Joaquin Valley before 1930, the range of the San Joaquin kit fox extended from southern Kern County north to Tracy, San Joaquin County, on the west side, and near La Grange, Stanislaus County, on the east side (Grinnell *et al.* 1937). Historically, the animal occurred in several San Joaquin Valley native plant communities. In the southernmost portion of the range, these communities included Valley Sink Scrub, Valley Saltbrush Scrub, Upper Sonoran Subshrub Scrub, and Annual Grassland. San Joaquin kit foxes also exhibit a capacity to utilize habitats that have been altered by humans. The animals are present in many oil fields, grazed pasture lands, and "wind farms" (Cypher 2000). Kit foxes can inhabit the margins and fallow lands near irrigated row crops, orchards, and vineyards, and may forage occasionally in these agricultural areas. The San Joaquin kit fox seems to prefer more gentle terrain and decreases in abundance as terrain ruggedness increases (Grinnell *et al.* 1937; Morrell 1972; Warrick and Cypher 1999).

Dens are used by the kit fox for temperature regulation, shelter from adverse environmental conditions, and escape from predators. Kit foxes excavate their own dens, use those constructed by other animals, and use human-made structures (culverts, abandoned pipelines, and banks in sumps or roadbeds). Kit foxes often change dens and may use many dens throughout the year; however, evidence that a den is being used by kit foxes may be absent. San Joaquin kit foxes have multiple dens within their home range and individual animals have been reported to use up to 70 different dens (Hall 1983). At the Naval Petroleum Reserve, individual kit foxes used an average of 11.8 dens per year (Koopman *et al.* 1998). Kit foxes are subject to competitive exclusion or predation by other species, such as the non-native red fox, coyote (*Canis latrans*), domestic dog (*Canis familiaris*), bobcat (*Felis rufus*), and large raptors. Den switching by the kit fox may be a function of predator avoidance, local food availability, or external parasite infestations in dens (Egoscue 1956).

The diet of the San Joaquin kit fox varies geographically, seasonally, and annually, based on temporal and spatial variation in abundance of potential prey. In the southern portion of their range, kangaroo rats (*Dipodomys* spp.), pocket mice (*Perognathus* spp.), white-footed mice (*Peromyscus* spp.), and other nocturnal rodents comprise about one-third or more of their diets. Kit foxes also prey on California ground squirrels (*Spermophilus beecheyi*), black-tailed hares (*Lepus californicus*), San Joaquin antelope squirrels (*Ammospermophilus nelsoni*), desert cottontails (*Sylvilagus audubonii*), ground-nesting birds, and insects.

The diets and habitats selected by coyotes and kit foxes living in the same areas are often quite similar. Hence, the potential for resource competition between these species may be quite high when prey resources are scarce such as during droughts, which are quite common in semi-arid, central California. Competition for resources between coyotes and kit foxes may result in kit fox mortalities. Coyote-related injuries accounted for 50-87 percent of the mortalities of radio-collared kit foxes at Camp Roberts, the Carrizo Plain Natural Area, the Lokern Natural Area, and the Naval Petroleum Reserves (Cypher and Scrivner 1992; Standley *et al.* 1992).

San Joaquin kit foxes are primarily nocturnal, although individuals are occasionally observed resting or playing (mostly pups) near their dens during the day (Grinnell *et al.* 1937). Kit foxes occupy home ranges that vary in size from 4.3-11.6 square kilometers (1.7-4.5 square miles) (White and Ralls 1993). Each home range is usually occupied by a mated pair of kit foxes and their current litter of pups. Other adults, usually offspring from previous litters, also may be present (Koopman *et al.* 1998), but individuals often move independently within their home range (Cypher 2000). Average distances traveled each night range from 9.4-14.6 kilometers (5.8-9.1 miles) and are greatest during the breeding season (Cypher 2000).

Kit foxes maintain core home range areas that are exclusive to mated pairs and their offspring (White and Ralls 1993; Spiegel 1996; White and Garrott 1999). This territorial spacing behavior eventually limits the number of foxes that can inhabit an area owing to shortages of available space and/or per capita prey. Hence, as habitat is fragmented or destroyed, the carrying capacity of an area is reduced and a larger proportion of the population is forced to disperse. Increased dispersal generally leads to lower survival rates and, in turn, decreased abundance because greater than 65 percent of dispersing juvenile foxes die within 10 days of leaving their natal range (Koopman *et al.* 1998).

San Joaquin kit foxes usually breed in December and January, and are primarily monogamous. After a gestation of 48-54 days, pups are born during late January-March (Zoellick *et al.* 1987). Mean litter sizes reported for San Joaquin kit foxes include 2.0 on the Carrizo Plain (White and Ralls 1993), 3.0 at Camp Roberts (Spencer *et al.* 1992), 3.7 in the Lokern area (Spiegel and Tom 1996), and 3.8 at the Naval Petroleum Reserve (Cypher *et al.* 2000). Pups begin appearing above ground at about age 3-4 weeks, and are weaned at age 6-8 weeks. Reproductive rates of adult San Joaquin kit foxes vary annually with environmental conditions, particularly food availability. Annual rates range from 0-100 percent, and reported mean rates include 61 percent at the Naval Petroleum Reserve (Cypher *et al.* 2000), 64 percent in the Lokern area (Spiegel and Tom 1996), and 32 percent at Camp Roberts (Spencer *et al.* 1992).

Although some yearling female kit foxes will produce young, most do not reproduce until age 2 years (Spencer *et al.* 1992; Spiegel and Tom 1996; Cypher *et al.* 2000). Some young of both sexes, but particularly females, may delay dispersal, and may assist their parents in raising the following year's litter of pups (Spiegel and Tom 1996). Juvenile San Joaquin kit foxes begin dispersing as early as June with a peak dispersal occurring in July. The age at dispersal ranges from 4-32 months (Cypher 2000). Among juvenile kit foxes surviving to July 1 at the Naval Petroleum Reserve, 49 percent of the males dispersed from natal home ranges while 24 percent of the females dispersed (Koopman *et al.* 2000). Among dispersing kit foxes, 87 percent dispersed during their first year of age. Some kit foxes delay dispersal and may inherit their natal home range. Dispersal distances of up to 123 kilometers (76.3 miles) have been documented for the San Joaquin kit fox (Scrivner *et al.* 1987).

Mean annual survival rates reported for adult San Joaquin kit foxes include 0.44 at the Naval Petroleum Reserve (Cypher *et al.* 2000), 0.53 at Camp Roberts (Standley *et al.* 1992), 0.56 at the Lokern area (Spiegel and Disney 1996), and 0.60 on the Carrizo Plain (Ralls and White 1995). However, survival rates widely vary among years (Spiegel and Disney 1996; Cypher *et al.* 2000). Mean survival rates for juvenile San Joaquin kit foxes (<1 year old) are lower than rates for adults.

Survival to age 1 year was 0.14 at the Naval Petroleum Reserve (Cypher *et al.* 2000), 0.20 at Camp Roberts (Standley *et al.* 1992), and 0.21 on the Carrizo Plain (Ralls and White 1995). For both adults and juveniles, survival rates of males and females are similar. San Joaquin kit foxes may live to ten years in captivity (McGrew 1979) and eight years in the wild (Berry *et al.* 1987), but most kit foxes do not live past 2-3 years of age.

Several species prey upon San Joaquin kit foxes. Other predators, such as coyotes, bobcats, non-native red foxes, badgers (*Taxidea taxus*), and golden eagles (*Aquila chrysaetos*) will kill kit foxes. Badgers, coyotes, and red foxes also may compete for den sites.

Since the listing of the San Joaquin kit fox in 1967, several other threats that limit and/or regulate their populations have been identified. These threats are described in the following paragraphs:

1) Loss of San Joaquin kit fox habitat: Less than 20 percent of the habitat within the historical range of the kit fox remained when the subspecies was listed as federally endangered in 1967, and there has been substantial net loss of habitat since that time. Historically, San Joaquin kit foxes occurred throughout California's Central Valley and adjacent foothills. Extensive land conversions in the Central Valley began as early as the mid-1800s with the Arkansas Reclamation Act. By the 1930s, the range of the kit fox had been reduced to the southern and western parts of the San Joaquin Valley (Grinnell *et al.* 1937). The primary factor contributing to this restricted distribution was the conversion of native habitat to irrigated cropland, industrial uses (e.g., hydrocarbon extraction), and urbanization (Laughrin 1970; Jensen 1972; Morrell 1972, 1975). Approximately one-half of the natural communities in the San Joaquin Valley were tilled or developed by 1958 (Service 1980).

This rate of loss accelerated following the completion of the Central Valley Project and the State Water Project, which diverted and imported new water supplies for irrigated agriculture. Approximately 1.97 million acres of habitat, or about 66,000 acres per year, were converted in the San Joaquin region between 1950 and 1980. The counties specifically noted as having the highest wildland conversion rates included Kern, Tulare, Kings, and Fresno, all of which are occupied by kit foxes. From 1959 to 1969 alone, an estimated 34 percent of natural lands were lost within the then-known kit fox range (Laughrin 1970).

By 1979, only approximately 370,000 acres out of a total of approximately 8.5 million acres on the San Joaquin Valley floor remained as non-developed land (Service 1980; Williams 1985). Data from the California Department of Fish and Game (1985) and Service file information indicate that between 1977 and 1988, essential habitat for the blunt-nosed leopard lizard (*Gambelia sila*), a species that occupies habitat that is also suitable for kit foxes, declined by about 80 percent – from 311, 680 acres to 63,060 acres, an average of about 22,000 acres per year (Biological Opinion for the Interim Water Contract Renewal, Ref. No. 1-1-00-F-0056, February 29, 2000). Virtually all of the documented loss of essential habitat was the result of conversion to irrigated agriculture.

During 1990 to 1996, a gross total of approximately 71,500 acres of habitat were converted to farmland in 30 counties (total area 23.1 million acres) within the Conservation Program Focus area of the Central Valley Project. This figure includes 42,250 acres of grazing land and 28,854 acres of "other" land, which is predominantly comprised of native habitat. During this same time period,

approximately 101,700 acres were converted to urban land use within the Conservation Program Focus area. This figure includes 49,705 acres of farmland, 20,476 acres of grazing land, and 31,366 acres of the "other" land described above. Because these assessments included a substantial portion of the Central Valley and adjacent foothills, they provide the best scientific and commercial information currently available regarding the patterns and trends of land conversion within the kit fox's geographic range. In summary, more than one million acres of suitable habitat for kit foxes have been converted to agricultural, municipal, or industrial uses since the listing of the kit fox. In contrast, less than 500,000 acres have been preserved and/or are subject to community-level conservation efforts designed, at least in part, to further the conservation of the kit fox.

Land conversions contribute to declines in kit fox abundance through direct and indirect mortalities, displacement, reduction of prey populations and denning sites, changes in the distribution and abundance of larger canids that compete with kit foxes for resources, and reductions in carrying capacity. Kit foxes may be buried in their dens during land conversion activities, or permanently displaced from areas where structures are erected or the land is intensively irrigated (Jensen 1972; Morrell 1975). Furthermore, even moderate fragmentation or loss of habitat may significantly impact the abundance and distribution of kit foxes. The California Energy Commission found that the relative abundance of kit foxes was lower in oil-developed habitat than in nearby undeveloped habitat on the Lokern (Spiegel 1996). Researchers from both studies inferred that the most significant effect of oil development was the lowered carrying capacity for populations of both foxes and their prey species owing to the changes in habitat characteristics or the loss and fragmentation of habitat (Spiegel 1996).

Dens are essential for the survival and reproduction of kit foxes which use them year-round for shelter and escape, and in the spring for rearing young. Kit foxes generally have dozens of dens scattered throughout their territories. However, land conversion reduces the number of typical, earthen dens available to kit foxes. For example, the average density of typical, earthen kit fox dens at the Naval Petroleum Reserve was negatively correlated with the intensity of petroleum development (Zoellick *et al.* 1987), and almost 20 percent of the dens in developed areas were found to be in well casings, culverts, abandoned pipelines, oil well cellars, or in the banks of sumps or roads (O'Farrell 1984). These results are important because the California Energy Commission found that, even though kit foxes frequently used pipes and culverts as dens in oil-developed areas of western Kern County, only earthen dens were used to birth and wean pups (Spiegel 1996). Therefore, the fragmentation of habitat and destruction of earthen dens could adversely impact the reproductive success of kit foxes. Furthermore, the destruction of earthen dens may also affect kit fox survival by reducing the number and distribution of escape refuges from predators.

Land conversions and associated human activities can lead to widespread changes in the availability and composition of mammalian prey for kit foxes. For example, oil field disturbances in western Kern County have resulted in shifts in the small mammal community from the primarily granivorous species (e.g., *Dipodomys*) that are the staple prey of kit foxes, to species adapted to early successional stages and disturbed areas (e.g., California ground squirrels) (Spiegel 1996). Since more than 70 percent of the diet of kit foxes usually consist of abundant leporids (*Lepus*, *Sylvilagus*) and rodents (e.g., *Dipodomys* spp.), and kit foxes often continue to feed on their staple prey during ephemeral periods of prey scarcity, such changes in the availability and/or selection of foraging sites

by kit foxes could influence their reproductive rates, which are strongly influenced by food supply and which decrease during periods of prey scarcity (White and Garrott 1999).

Land conversions and associated human activities have led to changes in the distribution and abundance of coyotes, which compete with kit foxes for resources. Coyotes occur in most areas with abundant populations of kit foxes and, during the past few decades, coyote abundance has increased in many areas owing to a decrease in ranching operations, favorable landscape changes, and reduced control efforts (Orloff *et al.* 1986; Cypher and Scrivner 1992; White and Ralls 1993). Increases in coyote abundance coincided with decreases in the abundance of kit foxes in these same areas, and coyotes were responsible for 50-87 percent of fox deaths in the declining populations (Cypher and Scrivner 1992; Disney and Spiegel 1992; Standley *et al.* 1992; Ralls and White 1995). Land-use changes also contributed to the expansion of non-native red foxes into areas inhabited by kit foxes. Historically, the geographic range of the red fox did not overlap with that of the San Joaquin kit fox. By the 1970s, however, introduced and escaped red foxes had established breeding populations in many areas inhabited by San Joaquin kit foxes (Lewis *et al.* 1993). The larger and more aggressive red foxes are known to kill kit foxes (Ralls and White 1995), and could displace them.

Extensive habitat destruction and fragmentation have contributed to smaller, more isolated populations of kit foxes. Small populations have a higher probability of extinction than larger populations because their low abundance renders them susceptible to stochastic (i.e., random) events such as high variability in age and sex ratios, and catastrophes such as floods, droughts, or disease epidemics (Lande 1988; Frankham and Ralls 1998; Saccheri *et al.* 1998). Similarly, isolated populations are more susceptible to extirpation by accidental or natural catastrophes because their recolonization has been hindered. These chance events can adversely affect small, isolated populations with devastating results, as evidenced by the decimation of the sole colony of black-footed ferrets (*Mustela nigripes*) following its infection with canine distemper. Extirpation can even occur when the members of a small population are healthy, because whether the population increases or decreases in size is less dependent on the age-specific probabilities of survival and reproduction than on raw chance (sampling probabilities). Owing to the probabilistic nature of extinction, many small populations will eventually lose out and go extinct when faced with these stochastic risks. Oil fields in the southern half of the San Joaquin Valley also continue to be an area of expansion and development activity. This expansion is reasonably certain to increase in the near future owing to market-driven increases in the price of oil. The cumulative and long-term effects of oil extraction activities on kit fox populations are not fully known, but recent studies indicate that moderate- to high-density oil fields may contribute to a decrease in carrying capacity for kit foxes owing to habitat loss or changes in habitat characteristics (Spiegel 1996; Warrick and Cypher 1999).

2) Competitive Interactions with Other Canids: The diets and habitats selected by coyotes and kit foxes living in the same areas are often quite similar (White *et al.* 1995; Cypher and Spencer 1998). Therefore, the potential for resource competition between these species may be quite high when prey resources are scarce such as during droughts, which are quite common in semi-arid, central California). Coyotes may attempt to lessen resource competition with kit foxes by killing them. Coyote-related injuries accounted for 50-87 percent of the mortalities of radio-collared kit foxes (Cypher and Scrivner 1992; Standley *et al.* 1992; Ralls and White 1995; Spiegel 1996). Coyote-related deaths of adult foxes appear to be largely additive (i.e., in addition to deaths caused

by other mortality factors such as disease and starvation) rather than compensatory (i.e., tending to replace deaths due to other mortality factors) (White and Garrott 1999). Hence, the survival rates of adult foxes decrease significantly as the proportion of mortalities caused by coyotes increase (Cypher and Spencer 1998), and increases in coyote abundance may contribute to significant declines in kit fox abundance (Cypher and Scrivner 1992; Ralls and White 1995; White *et al.* 1996). There is some evidence that the proportion of juvenile kit foxes killed by coyotes increases as kit fox density increases (White and Garrott 1999). This density-dependent relationship would provide a feedback mechanism that reduces the amplitude of kit fox population dynamics and keeps foxes at lower densities than they might otherwise attain.

The increased abundance and distribution of non-native red foxes will also likely adversely impact the status of kit foxes because they are closer morphologically and taxonomically, and would likely have higher dietary overlap than coyotes, potentially resulting in more intense competition for resources. Two documented deaths of kit foxes due to red foxes have been reported (Ralls and White 1995), and red foxes appear to be displacing kit foxes in the northwestern part of their range (Lewis *et al.* 1993). A telemetry study of sympatric red foxes and kit foxes in the Lost Hills area has detected spatial segregation between these species, suggesting that kit foxes may avoid or be excluded from red fox-inhabited areas (P. Kelly pers. comm. recorded in 1-1-03-F-0343). Such avoidance would limit the resources available to local populations of kit foxes and possibly result in decreased kit fox abundance and distribution.

3) Disease: Wildlife diseases do not appear to be a primary mortality factor that consistently limits kit fox populations throughout their range (McCue and O'Farrell 1988). However, central California has a high incidence of wildlife rabies cases, and high seroprevalences of canine distemper virus and canine parvovirus indicate that kit fox populations have been exposed to these diseases (McCue and O'Farrell 1988). Disease outbreaks, therefore, could potentially cause substantial mortality or contribute to reduced fertility in seropositive females. For example, there are some indications that rabies virus may have contributed to a catastrophic decrease in kit fox abundance at Camp Roberts, San Luis Obispo County, California, during the early 1900s. San Luis Obispo County had the highest incidence of wildlife rabies cases in California during 1989 to 1991, and striped skunks (*Mephitis mephitis*) were the primary vector (Barrett 1990; Schultz and Barrett 1991). A rabid skunk was trapped at Camp Roberts during 1989 and two foxes were found dead due to rabies in 1990 (Standley *et al.* 1992). Captures of kit foxes during annual live trapping sessions at Camp Roberts decreased from 103 to 20 individuals during 1988 to 1991. Captures of kit foxes were positively correlated with captures of skunks during 1988 to 1997, suggesting that some factor(s) such as rabies virus was contributing to concurrent decreases in the abundances of these species. Also, captures of kit foxes at Camp Roberts were negatively correlated with the proportion of skunks that were rabid when trapped by County Public Health Department personnel two years previously. These data suggest that a rabies outbreak may have occurred in the skunk population and spread into the fox population. A similar time lag in disease transmission and subsequent population reductions were observed in Ontario, Canada, although in this instance the transmission was from red foxes to striped skunks (Macdonald and Voigt 1985).

4) Pesticides and rodenticides: Pesticides and rodenticides pose a threat to kit foxes through direct or secondary poisoning. Kit foxes may be killed if they ingest rodenticide in a bait application, or if they eat a rodent that has consumed the bait. Even sublethal doses of rodenticides may lead to the

death of these animals by impairing their ability to escape predators or find food. Pesticides and rodenticides may also indirectly affect the survival of kit foxes by reducing the abundances of their staple prey species. For example, the California ground squirrel, which is the staple prey of kit foxes in the northern portion of their range, was thought to have been eliminated from Contra Costa County in 1975, after extensive rodent eradication programs. Field observations indicated that the long-term use of ground squirrel poisons in this county severely reduced kit fox abundance through secondary poisoning and the suppression of populations of its staple prey (Orloff *et al.* 1986).

Kit foxes occupying habitats adjacent to agricultural lands are also likely to come into contact with insecticides applied to crops, owing to runoff or aerial drift. Kit foxes could be affected through direct contact with sprays and treated soils, or through consumption of contaminated prey. Data from the California Department of Pesticide Regulation indicate that acephate, aldicarb, azinphos methyl, bendiocarb, carbofuran, chlorpyrifos, endosulfan, s-fenvalerate, naled, parathion, permethrin, phorate, and trifluralin are used within one mile of kit fox habitat. A wide variety of crops, as well as buildings, Christmas tree plantations, commercial/industrial areas, greenhouses, nurseries, landscape maintenance, ornamental turf, rangeland, rights of way, and uncultivated agricultural and non-agricultural land, occur in close proximity to San Joaquin kit fox habitat.

Efforts have been underway to reduce the risk of rodenticides to kit foxes (Service in litt. 1993). The Federal government began controlling the use of rodenticides in 1972 with a ban of Compound 1080 on Federal lands pursuant to Executive Order. Above-ground application of strychnine within the geographic ranges of listed species was prohibited in 1988. A July 28, 1992, biological opinion regarding the Animal Damage Control (now known as Wildlife Services) Program by the U.S. Department of Agriculture found that this program was likely to jeopardize the continued existence of the kit fox owing to the potential for rodent control activities to take the fox. As a result, several reasonable and prudent measures were implemented, including a ban on the use of M-44 devices, toxicants, and fumigants within the recognized occupied range of the kit fox. Also, the only chemical authorized for use by Wildlife Services within the occupied range of the kit fox was zinc phosphide, a compound known to be minimally toxic to kit foxes.

To date, no specific research has been conducted on the effects of different pesticide or rodent control programs on the kit fox. A September 22, 1993, biological opinion with Environmental Protection Agency ("EPA") regarding the regulation of pesticide use (31 registered chemicals) through administration of the Federal Insecticide, Fungicide, and Rodenticide Act found that use of the following chemicals would likely jeopardize the continued existence of the kit fox: 1) aluminum and magnesium phosphide fumigants, 2) chlorophacinone anticoagulants, 3) diphacinone anticoagulants, 4) pival anticoagulants, 5) potassium nitrate and sodium nitrate gas cartridges, and 6) sodium cyanide capsules. Reasonable and prudent alternatives to avoid jeopardy included restricting the use of aluminum/magnesium phosphide and potassium/sodium nitrate within the geographic range of the kit fox to qualified individuals, and prohibiting the use of chlorophacinone, diphacinone, pival, and sodium cyanide within the geographic range of the kit fox, with certain exceptions (e.g., agricultural areas that are greater than 1 mile from any kit fox habitat). However, the EPA's position on the use of rodenticides within the geographic range of the kit fox is that rodent control compounds will have no adverse effects on the kit fox provided that EPA-registered compounds are applied with strict observance of EPA-approved label restrictions. Even the minimal evidence

provided above tends to refute this position.

5) Section 9 Violations and Noncompliance with the Terms and Conditions of Existing Biological Opinions: The intentional or unintentional destruction of areas occupied by kit foxes is an issue of serious concern. Section 9 of the Act prohibits the "take" (e.g., harm, harass, pursue, injure, kill) of federally-listed wildlife species. "Harm" (i.e., "take") is further defined to include habitat modification or degradation that kills or injures wildlife by impairing essential behavioral patterns including breeding, feeding, or sheltering. Congress established two provisions (sections 7 and 10) that allow for the "incidental take" of listed species of wildlife by Federal agencies, non-Federal government agencies, and private interests. Incidental take is defined as "incidental to, and not the purpose of, the carrying out of an otherwise lawful activity." Such take requires a permit from the Secretary of the Interior that anticipates a specific level of take for each listed species. If no permit is obtained for the incidental take of listed species, the individuals or entities responsible for these actions could be liable under the enforcement provisions of section 9 of the Act if any unauthorized take occurs. There are numerous examples of potential section 9 violations and noncompliance with the terms and conditions of existing biological opinions.

6) Risk of Chance Extinction Owing to Small Population Size, Isolation, and High Natural Fluctuations in Abundance: Historically, kit foxes may have existed in a metapopulation structure of core and satellite populations, some of which periodically experienced local extinction and recolonization. Today's populations exist in an environment drastically different from the historic one however, and extensive habitat fragmentation results in geographic isolation, smaller population sizes, and reduced genetic exchange among populations, all of which increase the vulnerability of kit fox populations to extirpation. Populations of kit foxes are extremely susceptible to the risks associated with small population size and isolation because they are characterized by marked instability in population density. For example, the relative abundance of kit foxes at the Naval Petroleum Reserve decreased ten-fold during 1981 to 1983, increased seven-fold during 1991 to 1994, and then decreased two-fold during 1995 (Cypher and Scrivner 1992; Cypher and Spencer 1998).

Many populations of kit fox are at risk of chance extinction owing to small population size and isolation. This risk has been prominently illustrated during recent, drastic declines in the populations of kit foxes at Camp Roberts and Fort Hunter Liggett. Captures of kit foxes during annual live trapping sessions at Camp Roberts decreased from 103 to 20 individuals during 1988 to 1991. This decrease continued through 1997, when only three kit foxes were captured (White *et al.* 2000). A similar decrease in kit fox abundance occurred at nearby (approximately 20 km) Fort Hunter Liggett, and only 2 kit foxes have been observed on this installation since 1995 (L. Clark pers. comm.). It is unlikely that the current low abundances of kit foxes at Camp Roberts and Fort Hunter Liggett will increase substantially in the near future, owing to the limited potential for recruitment. The chance of substantial immigration is low because the nearest core population on the Carrizo Plain is distant (greater than 80 km) and separated from these installations by barriers to fox movement such as roads, developments, and irrigated agricultural areas. Also, there is a relatively high abundance of sympatric predators and competitors on these installations that contribute to low survival rates for kit foxes and, as a result, may limit population growth (White *et al.* 2000). Hence, these populations may be on the verge of extinction.

The destruction and fragmentation of habitat could also eventually lead to reduced genetic variation in populations of kit foxes that are small and geographically isolated. Preliminary genetic assessments indicate that historic gene flow among populations was quite high, with effective dispersal rates of at least one to 4 dispersers per generation (M. Schwartz pers. comm.). This level of genetic dispersal should allow for local adaptation while preventing the loss of any rare alleles. Based on these results, it is likely that northern populations of kit foxes were once panmictic (i.e., randomly mating in a genetic sense), or nearly so, with southern populations; there were no major barriers to dispersal among populations. Current levels of gene flow also appear to be adequate; however, extensive habitat loss and fragmentation continue to form more or less geographically distinct populations of foxes, which could potentially reduce genetic exchange among them. An increase in inbreeding and the loss of genetic variation could increase the extinction risk for small, isolated populations of kit foxes by interacting with demography to reduce fecundity, juvenile survival, and lifespan (Lande 1988; Frankham and Ralls 1998; Saccheri *et al.* 1998). Populations that may be showing the initial signs of genetic isolation are the Lost Hills area and populations in the Salinas-Pajaro River watershed (i.e., Camp Roberts and Fort Hunter Liggett). Preliminary estimates of the mean number of alleles per locus from foxes in these populations indicate that allelic diversity is lower than expected. Although these results may, in part, be due to the small number of foxes sampled in these areas, they may also be indicative of a loss of genetic diversity resulting from genetic drift, or a loss of alleles that is exacerbated in small populations. Further sampling and analyses are necessary to adequately assess the effects of these potential genetic bottlenecks.

Arid systems are characterized by unpredictable fluctuations in precipitation, which lead to high-frequency, high-amplitude fluctuations in the abundance of mammalian prey for kit foxes (Goldingay *et al.* 1997; White and Garrott 1999; Cypher *et al.* 2000). Because the reproductive and neonatal survival rates of kit foxes are strongly depressed at low prey densities (White and Ralls 1993; White and Garrott 1999), periods of prey scarcity owing to drought or excessive rain events can contribute to population crashes and marked instability in the abundance and distribution of kit foxes (White and Garrott 1999), increasing the extinction risk for small, isolated populations.

Valley Elderberry Longhorn Beetle

The valley elderberry longhorn beetle was listed as a federally threatened species on August 8, 1980 (45 **FR** 52803). The beetle was first described in the early 1900's and was later determined to be endemic to moist valley oak woodlands along the margins of rivers and streams in the Sacramento and San Joaquin Valleys of California. Two areas along the American River in the Sacramento metropolitan area have been designated as critical habitat for the valley elderberry longhorn beetle (45 **FR** 52803). In addition, an area along Putah Creek, Solano County, and the area west of Nimbus Dam along the American River Parkway, Sacramento County, are considered essential habitat (Service 1984). The beetle is facultatively dependent on its host plant, the elderberry (*Sambucus* spp.), which is a locally common component of the remaining riparian forests and savannah areas and, to a lesser extent, the mixed chaparral-foothill woodlands of the Central Valley.
Adults are generally present on elderberry shrubs from March through June. During this period, the adults mate, and the females lay eggs on living elderberry plants. The female generally lays eggs either singularly, or in small groups, in crevices in the bark or at the junctures of stems and leaves along the trunk of the plant. Presumably, eggs hatch shortly after they are laid and the larvae bore

into the pith of larger stems and roots where they remain until they mature. Just prior to the pupal stage, larvae open an emergence hole in the bark and then return to the pith to pupate. Use of the elderberry shrubs by the beetle is rarely apparent as the only exterior evidence of the shrub's use by the beetle is the "exit hole" created by the larvae just prior to the pupal stage. Larvae appear to be distributed primarily in elderberry stems that are one inch in diameter or greater at ground level.

Habitat destruction was the primary factor contributing to the need to federally list the beetle. Riparian forests, the primary habitat for the beetle, have been severely depleted throughout the Central Valley over the last two centuries (Katibah 1984; Thompson 1961; Roberts *et al.* 1977). The 1984 recovery plan attributed the loss and alteration of this riparian habitat to agricultural conversion, grazing, levee construction, stream and river channelization, removal of riparian vegetation, riprapping of shoreline, recreation, and industrial and urban development (Service 1984). The beetle probably occurs naturally at low densities, with limited dispersal capability (Barr 1991; Collinge *et al.* 2001; Huxel 2000). This makes the beetle extremely vulnerable to the negative effects associated with habitat loss and fragmentation. Small, isolated subpopulations are susceptible to extirpation from random demographic, environmental, and/or genetic effects (Shaffer 1981; Lande 1988; Primack 1998). A large area of habitat may support a single large population, whereas smaller subpopulations result from habitat fragmentation and isolation. These subpopulations may tend to lose genetic variability through genetic drift. This generally leads to inbreeding depression and a lack of adaptive flexibility. Ultimately, these smaller populations are more vulnerable to random fluctuations in reproductive and mortality rates, and are more likely to be extirpated by random environmental factors. Barr (1991) found that small, isolated habitat remnants were less likely to be occupied by beetles than larger patches, indicating that beetle subpopulations are extirpated from small habitat fragments, or may be unable to recolonize isolated patches of habitat. Barr (1991) and Collinge *et al.* (2001) consistently found beetle exit holes occurring in clumps of elderberry bushes rather than isolated bushes, suggesting that isolated shrubs do not typically provide long-term viable habitat for this species. Huxel (2000) used computer simulations of colonization and extinction patterns for the beetle, based on differing dispersal distances, and found that short dispersal simulations best matched census data in terms of site occupancy. This suggests that, in the natural system, dispersal, and thus colonization, is limited to nearby sites.

Habitat fragmentation not only isolates small populations, but it also increases the interface between habitat and urban or agricultural land, thereby increasing negative edge effects such as the invasion of nonnative species (Huxel 2000; Soule 1990) and pesticide contamination (Barr 1991). Recent evidence indicates that the invasive Argentine ant (*Linepithema humile*) poses a risk to the long-term survival of the beetle. Surveys along Putah Creek found beetle presence where Argentine ants were not present or had recently colonized, and beetle absence from otherwise suitable sites where Argentine ants had become established (Huxel 2000). The Argentine ant has been expanding its range throughout California since its introduction around 1907, especially in riparian woodlands associated with perennial streams (Holway 1995; Ward 1987). Huxel (2000) states that, given the potential for Argentine ants to spread with the aid of human activities such as movement of plant nursery stock and agricultural products, this species may come to infest most drainages in the Central Valley along the valley floor, where the beetle is found.

Direct spraying and pesticide drift in or near riparian areas is likely to adversely affect the beetle and its habitat. Pesticides have been identified as one of a number of potential causes of pollinator

species' declines, and declines of other insects beneficial to agriculture (Ingraham *et al.* 1996). Although there have been no studies specifically focusing on the effects of pesticides on the beetle, it is likely that the beetle, typically occurring adjacent to agricultural lands, may have suffered pesticide-induced declines as well.

Overgrazing by livestock damages or destroys elderberry plants and inhibits regeneration of seedlings. Cattle readily forage on new growth of elderberry, which may explain the absence of beetles at manicured elderberry stands (Service 1984). Habitat fragmentation exacerbates problems related to exotic species invasion and cattle overgrazing by increasing the edge to interior ratio of habitat patches, facilitating the penetration of these influences.

Vernal Pool Fairy Shrimp

The vernal pool fairy shrimp was listed as threatened on September 19, 1994. The vernal pool fairy shrimp inhabits vernal pools with clear to tea-colored water, most commonly in grass- or mud-bottomed swales, basalt flow depression pools in unplowed grasslands, or even sandstone rock outcrops or alkaline vernal pools. Vernal pool fairy shrimp have delicate elongate bodies, large stalked compound eyes, no carapace, and 11 pairs of swimming legs. They swim or glide gracefully upside-down by means of complex, wavelike beating movements. Fairy shrimp feed on algae, bacteria, protozoa, rotifers, and detritus. The females carry eggs in an oval or elongate ventral brood sac. The eggs are either dropped to the pool bottom or remain in the brood sac until the female dies and sinks. The dormant cysts are capable of withstanding heat, cold, and prolonged desiccation. When the pools refill in the same or subsequent seasons, some of the cysts may hatch. The cyst bank in the soil may therefore be comprised of cysts from several years of breeding (Donald 1983). The early stages of the fairy shrimp develop rapidly into adults and can mature quickly, allowing populations to persist in short-lived shallow pools (Simovich *et al.* 1992).

The vernal pool fairy shrimp is known from 321 extant occurrences extending from the Stillwater Plain in Shasta County through most of the length of the Central Valley to Pinnacles in San Benito County (Eng *et al.* 1990; Fugate 1992; Sugnet and Associates 1993). Eight additional disjunctive clusters of occurrences exist: seventeen near Soda Lake in San Luis Obispo County; one in Ventura County; one on the Santa Rosa Plateau in Riverside County; one near Rancho California in Riverside County; one in Napa County; one in Sutter County; one in El Dorado County; and one on the Agate Desert near Medford, Oregon. The genetic characteristics of these species, as well as ecological conditions, such as watershed continuity, indicate that populations of vernal pool crustaceans are defined by pool complexes rather than by individual vernal pools (Fugate 1992). Therefore, the most accurate indication of the distribution and abundance of these species is the number of inhabited vernal pool complexes.

A Service analysis of a report by Holland (1978) estimated that between 60 and 85 percent of the area within the Central Valley of California that once supported vernal pools had been destroyed by 1973. In the ensuing 30 years, threats to this habitat type have continued and resulted in a substantial amount of vernal pool habitat being converted for human uses in spite of Federal regulations implemented to protect wetlands. For example, the Corps Sacramento District Office has authorized the filling of 189 hectares (467 acres) of wetlands between 1987 and 1992 pursuant to Nationwide

Permit 26 (Service 1992). The Service estimates that a majority of these wetlands losses within the Central Valley involved vernal pools, the endemic habitat for the vernal pool fairy shrimp.

The Corps has several thousand vernal pools under its jurisdiction (Coe 1988), which includes most of the known vernal pool fairy shrimp occurrences. It is estimated that within 20 years human activities will destroy 60 to 70 percent of the remaining vernal pools (Coe 1988). In addition to direct habitat loss, vernal pool fairy shrimp habitat also has been and continues to be highly fragmented throughout their ranges due to conversion of natural habitat for urban and agricultural uses. This fragmentation results in small isolated vernal pool fairy shrimp populations. Ecological theory predicts that such populations will be highly susceptible to extirpation due to chance events, inbreeding depression, or additional environmental disturbance (Gilpin and Soulé 1986; Goodman 1987). If an extirpation event occurs in a population that has been fragmented, the opportunities for recolonization would be greatly reduced due to physical (geographic) isolation from potential source populations.

The primary historic dispersal method for the vernal pool fairy shrimp likely was large-scale flooding resulting from winter and spring rains that allowed the animals to colonize different individual vernal pools and other vernal pool complexes (J. King, pers. comm., 1995). Waterfowl and shorebirds may now be the primary dispersal agents for the vernal pool fairy shrimp. The eggs of this crustacean are either ingested (Swanson *et al.* 1974; Driver 1981; Ahl 1991) and/or adhere to the legs and feathers, where they are transported to new habitats. Dispersal during flooding is currently non-functional due to the construction of dams, levees, and other flood control measures, and widespread urbanization within significant portions of the range of this species.

The vernal pool fairy shrimp is threatened by a variety of other human-caused activities. Their habitats have been lost through direct destruction and modification due to filling, grading, disking, leveling, and other activities. In addition, vernal pools have been affected by a variety of anthropogenic modifications to upland habitats and watersheds. These activities, primarily urban development, water supply/flood control projects, land conversion for agriculture, off-road vehicle use, certain mosquito abatement measures, and pesticide/herbicide use can lead to disturbance of natural flood regimes, changes in water table depth, alterations of the timing and duration of vernal pool inundation, introduction of non-native plants and animals, and water pollution. These indirect actions can result in adverse effects to vernal pool species.

Environmental Baseline

The San Joaquin kit fox, valley elderberry longhorn beetle, and vernal pool fairy shrimp are affected by the existing SR 65, which has diminished habitat quality and has created a potential movement barrier. This interregional route is used frequently by large trucks, slow-moving farm equipment, and commuter vehicles. During the peak traveling season, this corridor also serves recreational vehicles traveling to Kings Canyon and Sequoia National Parks. With a 55-mph speed limit, crossing the road is dangerous for kit foxes and can create a barrier to movement. Oil run-off from the road may be degrading habitat quality for the vernal pool fairy shrimp.

<u>San Joaquin Kit Fox</u>

Potential kit fox dens were not observed within the project footprint or within a 76.2 meter (250 feet) buffer east and west of the SR 65 centerline. However, based on kit fox observations and suitability of habitat, it is likely that kit fox use the project area for movement and foraging. In the 1970s, local observations of the San Joaquin kit fox near the Porterville area were common. From 1971 to 1987, a long-time resident of Porterville reported numerous sightings of kit fox and/or their dens within or adjacent to the project area. A former California Department of Fish and Game biologist also reported numerous sightings of kit fox and/or their dens from 1977-1988. In 1988, during biotic surveys within the Porterville area, an active kit fox den complex was reported adjacent to the project area. In April 1989, kit fox surveys were conducted at the Porterville Airport, located approximately 1.6 km (1 mile) west of the project area. An adult kit fox along with several tracks were observed approximately 3.2 km (2 miles) west of the project area. More recent kit fox observations occurred during spotlight surveys between 2001 and 2003, where a total of 14 kit foxes were observed in orchards approximately 3.2 km (2 miles) east of SR 65 and south of Porterville. The number of kit fox observations surrounding the City of Porterville indicates the presence of a satellite population.

Valley Elderberry Longhorn Beetle

Three projects within the City of Porterville have resulted in the incidental take of elderberry bushes and in subsequent compensation. The widening of Indiana Street resulted in the incidental take of 30 elderberry plants and the planting of 160 elderberry seedlings and 104 associated native trees and shrubs. The Orange Avenue Neighborhood Improvement Project required the transplantation of five elderberry shrubs, as well as the planting of 158 elderberry seedlings/cuttings. The widening of Plano Street bridge resulted in the transplantation of six elderberry plants and the planting of 78 elderberry seedlings/cuttings. A mitigation site has been created within the City of Porterville, adjacent to Porter Slough and the Tule River, for the compensation required by these three projects and other future projects. Valley elderberry longhorn beetles have been observed on the mitigation site (R. Rouda pers. comm.)

Given the observations of the beetle within Porterville, the biology and ecology of this species, and the presence of suitable habitat on-site, the Service believes the beetle is reasonably certain to occur within the action area. A total of 14 elderberry shrubs with 62 stems measuring one inch or greater in diameter at ground level were identified at Deer Creek, White River, and south of White River. A potential exit hole was documented on one stem. Two of the shrubs occur 20 meters (65 feet) and 46 meters (150 feet) beyond the project area, respectively, and can be avoided during construction activities. On July 15, 2003, a fire occurred within Caltrans' right-of-way (ROW) east of SR 65 and south of White River. The incident was caused by a truck hauling wood cargo, which ignited from the exhaust, and projected out of the open truck bed into the ROW. Two of the 14 elderberry shrubs were burned.

Vernal Pool Fairy Shrimp

A partial wet season protocol survey was conducted for 12 pools and puddles from February to April 2002. In July 2002, a complete dry season protocol survey was also conducted for these 12 pools and puddles. Vernal pool fairy shrimp were observed in all of these pools and puddles, and versatile fairy shrimp (*Branchinecta lindahli*) were observed in three of the puddles. A complete first year

wet season protocol survey was conducted from December 2002 to April 2003 for an additional six pools and puddles not identified in the previous years. Versatile fairy shrimp were observed in one of the six pools. The presence of the vernal pool fairy shrimp was inferred by Caltrans for these six pools and puddles. Due to design modifications at the intersections, a survey was conducted to evaluate the potential habitat for the vernal pool fairy shrimp in May 2003. A total of 19 new pools were observed near five intersections. The presence of the vernal pool fairy shrimp was inferred by Caltrans in these 19 pools based on similar habitat features as, and close proximity to, pools where vernal pool fairy shrimp had been observed in the previous year.

Effects of the Proposed Action

San Joaquin Kit Fox

The proposed project will result in the permanent loss of 132 hectares (325 acres) of suitable San Joaquin kit fox foraging habitat. Permanent impacts include the removal of ROW and/or agricultural land to accommodate the new roadbed, intersection improvements, county/frontage roads, and proposed new ROW limits. Temporary disturbances will affect 81 hectares (200 acres) of foraging habitat.

Vehicle strikes may be more likely as a result of the proposed project. Currently, kit fox are exposed to the traffic along the existing SR 65; however, crossing the additional two lanes and 18.6 meter (61 foot) open median may result in increased mortality. Additionally, the posted speed limit is expected to increase from 55 mph to 65 mph. One dead San Joaquin kit fox was observed in the middle of McFarland Woody Road east of SR 65 in Kern County, apparently struck by a vehicle. This sighting is approximately 16 kilometers (10 miles) south of the project area.

San Joaquin kit fox mortality and injury occurs when the animals attempt to cross roads and are hit by cars, trucks, or motorcycles. The majority of strikes likely occur at night when the animals are most active. Driver visibility also is lower at night increasing the potential for strikes. Such strikes are usually fatal for an animal the size of a kit fox. Thus, vehicle strikes are a direct source of mortality for the San Joaquin kit fox. If vehicle strikes are sufficiently frequent in a given locality, they could result in reduced kit fox abundance. The death of kit foxes during the November-January breeding season could result in reduced reproductive success. Death of females during gestation or prior to pup weaning could result in the loss of an entire litter of young, and therefore, reduced recruitment of new individuals into the population.

Occurrences of vehicle strikes involving San Joaquin kit foxes have been well documented, and such strikes occur throughout the range of the species. Sources of kit fox mortality were examined during 1980-1995 at the Naval Petroleum Reserves in California in western Kern County (Cypher *et al.* 2000). During this period, 341 adult San Joaquin kit foxes were monitored using radio telemetry, and 225 of these animals were recovered dead. Of these, 20 were struck by vehicles; 9% of adult kit mortalities were attributed to vehicles, and 6% of all monitored adults were killed by vehicles. During this same period, 184 juvenile (<1 year old) kit foxes were monitored. Of these, 142 were recovered dead and 11 were killed by vehicles; 8% of juvenile kit fox mortalities were attributed to vehicles and 6% of all monitored juveniles were killed by vehicles. For both adults and juveniles,

vehicle strikes accounted for less than 10% of all San Joaquin kit fox deaths in most years. However, in some years, vehicles accounted for about 20% of deaths.

In areas of western Kern County, 49 kit foxes were radio-collared in the highly developed Midway-Sunset oil field, and 54 kit foxes were radio-collared in the Lokern Natural Area, a nearby undeveloped area, during 1989-1993 (Spiegel and Disney 1996). Of these animals, 60 were recovered dead; 1 (2%) was killed by a vehicle, and it was found in an undeveloped area along the access road adjacent to the California aqueduct. However, 6 non-collared kit foxes were killed by vehicles on the access road. Forty-one San Joaquin kit foxes were radio-collared and monitored during 1989-1991 on the Carrizo Plain Natural Area in eastern San Luis Obispo County (Ralls and White 1995). Twenty-two were found dead; 1 (5%) was attributed to a vehicle strike. At Camp Roberts in Monterey and San Luis Obispo counties, 94 San Joaquin kit foxes were radio-collared during 1988-1992 (Standley *et al.* 1992). Forty-nine were found dead and 2 were attributed to vehicle strikes; 4% of the deaths were caused by vehicles and 2% of all monitored kit foxes were killed by vehicles.

In the City of Bakersfield, 113 San Joaquin kit foxes were radio-collared and monitored during 1997-2000 (Cypher 2000). Thirty-five were recovered dead (23 adults and 12 pups); 9 adults (39%) and 6 pups (50%) were attributed to vehicle strikes. At this urban site, coyotes and bobcats are rare, and vehicles are the primary source of kit fox mortality. However, survival rates are higher than rates among kit foxes in non-urban areas, and vehicles do not appear to be limiting the population size.

The local and range-wide effects of vehicle strikes on San Joaquin kit foxes have not been adequately assessed. Vehicle strikes appear to occur most frequently where roads transverse areas where kit foxes are abundant. However, the linear quantity of roads in a given area may not be directly related to the number of vehicle strikes in a given area, as exemplified by the situation at the Naval Petroleum Reserve. The type of road (e.g., number of lanes), traffic volume, and average speed of vehicles likely all influence the number of San Joaquin kit fox/vehicle strikes. The number of strikes likely increases with road size, traffic volume, and average speed (Clevenger and Waltho 1999). Another factor influencing the number of vehicles striking San Joaquin kit foxes, but for which little data are available, is the frequency with which the animals cross roads and are therefore at risk. The proportion of successful road crossings by these animals likely declines with increasing road size, traffic volume and density, and vehicle speeds. The proportion of San Joaquin kit foxes successfully crossing roads may increase in areas where they obtain more experience crossing roads, such as in and near urban areas.

The potential for increased mortality on the expanded SR 65 creates a barrier to kit fox dispersal, further fragmenting remaining habitat. Knapp (1978) monitored movements of radio-collared San Joaquin kit foxes in the vicinity of Interstate 5 in Kern County. Many of the foxes used areas within 3 kilometers (2 miles) of the highway, and most exhibited movement and home range patterns that parallel the highway, but did not cross it. Only on two occasions were animals located on the opposite side of the highway from their primary area of use. Interstate 5 appears to fragment the habitat by restricting the movement of the San Joaquin kit fox.

In addition to limiting access to habitat patches, roads also may reduce the suitability of habitat for

San Joaquin kit foxes by fragmentation into patches too small for their effective use by the animals. As a habitat patch decreases in size, the number of San Joaquin kit foxes the patch can support also decreases. This increases the probability that the animals will be extirpated from each patch. The possibility for recolonization will depend upon the nature of the factors, e.g., roads, canals, development, etc., that are causing the fragmentation. Estimates of home range size for the San Joaquin kit fox vary from 4.3 square kilometers (1.7 square miles) to 11.6 square kilometers (4.5 square miles) (White and Ralls 1993). Typically, a mated pair will share a home range. If a habitat fragment is too small to support a home range, it may be abandoned by the animals.

Fragmentation factors that effectively isolate patches and limit access also constitute barriers to San Joaquin kit fox movements, dispersal, and gene flow. Movements and dispersal corridors are critical to kit fox population dynamics, particularly because the animals currently persist as metapopulations with multiple disjunct population centers. Movement and dispersal corridors are important for alleviating over-crowding and intraspecific competition during years when San Joaquin kit fox abundance is high, and are also important for facilitating the recolonization of areas where the animal has been extirpated. Movement between population centers maintains gene flow and reduces genetic isolation. Genetically isolated populations are at greater risk of deleterious genetic effects such as inbreeding and genetic drift.

Construction, maintenance, and operational activities associated with roads may result in a disturbance effect on nearby San Joaquin kit foxes. During construction, kit foxes may become inadvertently trapped in steep-walled holes or trenches, and subsequently injured or killed if not discovered by workers, or harassed when workers try to coax the fox into vacating. San Joaquin kit foxes will often use culverts, pipes, or similar structures for dens; injury, death, or harassment could result if a fox begins to inhabit one of these structures. Kit fox habitat could be disturbed by construction worker encroachment or damage from project-related vehicles. The kit fox and its associated predators may be attracted to the project area by discarded food items, increasing the likelihood of death, injury, or harassment. Light from the project area may make the kit fox more visible to predators, and may interfere with the kit fox's foraging ability.

Disturbance can result from noise, vibration, odors, or human activity, particularly during the night when kit foxes are maximally active. Disturbance may affect the kit foxes by interfering with sensory perception, which could interfere with their ability to locate prey, pups, or mates, or detect approaching predators. Disturbance could induce stress which may affect physiological parameters or behavior. The resulting effects could include increased energetic requirements, decreased reproductive output, decreased immunological functions, altered space use patterns, displacement, or possibly death. Observations from a variety of sources and situations suggest that San Joaquin kit foxes may not be significantly affected by disturbance, even when the source is prolonged or continuous (Cypher 2000). However, individual animals may be more affected than others, and it is unknown whether disturbance may result in reduced local abundance.

An increase in the ambient noise level is not, in itself, likely to cause direct harm to kit foxes. No specific research has been performed on this species but a "safe, short-term level" for humans has been determined to be 75 decibels (dBA) (NIH 1990; Burglund and Lindvall 1995). The mechanisms leading to permanent hearing damage are the same for all mammals (NIH 1990).

However, the enlarged pinna and reduced tragi of kit foxes indicate that hearing is more acute than in humans (Jameson and Peeters 1988). Hearing loss in humans has been correlated with cognitive dysfunction (NIH 1990). However, variation in response to intense noise has been found to vary, in humans, by as much as 30 to 50 dBA between individuals (NIH 1990). Similar variation has been found in animal studies as well (NIH 1990). Younger animals have been shown to be more susceptible to noise-induced hearing loss (NIH 1990). The ability to habituate to noise appears to vary widely between species (NPS 1990). Typical construction machinery produces noise in the range of 75 dBA (arc-welder) to 85 dBA (bulldozer) (Burglund and Lindvall 1995). Long-term noise levels of 85 dBA are recognized to cause permanent hearing damage in humans (NIH 1990). Noise at the 85 dBA level has been correlated with hypertension in Rhesus monkeys (*Macaca fasicularis*) (Cornman 2001). Increased reproductive failure in laboratory mice (*Mus musculus*) was found to occur after a level of 82-85 dBA for one week (Cornman 2001). Hearing loss from motorcycle traffic has been documented for the kangaroo rat (*Dipodomys* species) (Bondello and Brattstrom 1979) and desert kangaroo rats (*Dipodomys deserti*) showed a significant reduction in reaction distance to the sidewinder (*Crotalus cerastes*) after exposure to 95 dBA (Cornman 2001). Other desert mammals appear to sustain the same impacts from noise (Bondello and Brattstrom 1979). Aircraft noise has produced accelerated heart-rates in pronghorn (*Antilocapra americana*), bighorn sheep (*Ovis canadensis*), and elk (*Cervus elaphus*) (U.S. National Park Service (NPS) 1994).

Harassment from long-term noise may cause kit foxes to eventually vacate the project site and adjacent areas. Grizzly bears (*Ursus arctos*), mountain goats (*Oreamnos canadensis*), caribou (*Rangifer* species), and bighorn sheep (*Ovis* spp.) have all been found to abandon foraging or calving areas in response to aircraft noise (NPS 1994).

The presence of roads in an area could result in the introduction of chemical contaminants to the site. Contaminants could be introduced in several ways. Substances used in road building materials or to recondition roads can leach out or wash off roads adjacent habitat. Vehicle exhaust emissions can include hazardous substances which may concentrate in soils along roads. Heavy metals such as lead, aluminum, iron, cadmium, copper, manganese, titanium, nickel, zinc, and boron are all emitted in vehicle exhaust (Trombulak and Frissell 2000). Concentrations of organic pollutants (eg., dioxins, polychlorinated biphenyls) are higher in soils along roads (Benfenati *et al.* 1992). Ozone levels are higher in the air near roads (Trombulak and Frissell 2000). Vehicles may leak hazardous substances such as motor oil and antifreeze. Although the quantity leaked by a given vehicle may be minute, these substances can accumulate on roads and then get washed into the adjacent environment by runoff during rain storms. An immense variety of substances could be introduced during accidental spills of materials. Such spills can result from small containers falling off passing vehicles, or from accidents resulting in whole loads being spilled. Large spills may be partially or completely mitigated by clean-up efforts, depending on the substance.

San Joaquin kit foxes using areas adjacent to roads could be exposed to any contaminants that are present at the site. Exposure pathways could include inhalation, dermal contact, direct ingestion, ingestion of contaminated soil or plants, or consumption of contaminated prey. Exposure to contaminants could cause short- or long-term morbidity, possibly resulting in reduced productivity or mortality. Carcinogenic substances could cause genetic damage resulting in sterility, reduced productivity, or reduced fitness among progeny. Contaminants also may have the same effect on kit

fox prey species. This could result in reduced prey abundance and diminished local carrying capacity for the kit fox.

Little information is available on the effects of contaminants on the San Joaquin kit fox. The effects may be difficult to detect. Morbidity or mortality likely would occur after the animals had left the contaminated site, and more subtle effects such as genetic damage could only be detected through intensive study and monitoring. However, effects have been detected on some occasions. At the Naval Petroleum Reserve, 3 kit foxes are known to have been killed by drowning in spills of crude oil (Cypher *et al.* 2000). Spiegel and Disney (1996) reported that a kit fox was found covered with crude oil at the Midway-Sunset oil field, and this individual died despite treatment. Such spills potentially can cause local reductions in the abundance of kit foxes and their prey.

Roads can facilitate the invasion and establishment by species not native to the area. Disturbance and alteration of habitat adjacent to roads may create favorable conditions for non-native plants and animals, which can then spread along roadsides and into adjacent habitat. Non-native animals may use modified habitats adjacent to the road to disperse into kit fox habitat. These exotic animals could compete with kit foxes for resources such as food or dens, or directly injure or kill kit foxes. Non-native plants and animals may reduce habitat quality for kit foxes or their prey, and reduce the productivity or the local carrying capacity for the kit fox. Introductions of non-native species could cause kit foxes to alter behavioral patterns by avoiding or abandoning areas near road (Cypher 2000).

Disturbed areas adjacent to roads provide favorable habitat conditions for a number of non-native plant species. Some of these taxa are aggressively invasive and they can alter natural communities and potentially affect habitat quality. A problematic species within the range of the San Joaquin kit fox is yellow star thistle (*Centaurea melitensis*). Dense stands of this plant can form along roadsides and then spread into adjacent habitat. This plant displaces native vegetation, competes with native plants for resources, does not appear to be used by kit fox prey, and may be difficult for kit foxes to move through due its large size (up to 1 meter or 3.3 feet tall) and numerous sharp spines (Cypher 2000). Other species that may disperse along roads and invade adjacent habitat include mustards (*Brassica* species) and Russian thistle (*Salsola tragus*) (Tellman 1997). Disturbed soils and reduced competition from native plants are some of the conditions that facilitate invasion along roads by non-native plant species. Nitrogen from vehicle exhaust is deposited in habitats adjacent to roads, and the resulting enhanced nitrogen levels appear to promote growth of non-native species, particularly exotic grasses (Weiss 1999). These grasses, such as red brome (*Bromus madritensis rubens*), create dense ground cover in the San Joaquin Valley, and this dense cover appears to reduce habitat quality for various small mammal species, such as kangaroo rats, which are an important prey for kit foxes (Goldingay *et al.* 1997; Cypher 2000).

Roads may serve as travel corridors for non-native red foxes. Red foxes can kill San Joaquin kit foxes (Ralls and White 1995), and likely compete with kit foxes for food and dens. Red foxes are infrequently observed in large blocks of undisturbed habitat within the range of the San Joaquin kit fox, possibly due to the absence of permanent water or the presence of coyotes which prey upon red foxes. Along roads, water availability may be higher due to pooling of precipitation runoff or anthropogenic development, and coyotes may be less abundant due to the presence of humans. Roads may facilitate movements of red foxes and increase access to kit fox habitat.

Valley Elderberry Longhorn Beetle

The proposed action will adversely affect the beetle by the stress, damage, and mortality that could be caused from the transplanting of 12 shrubs, with as many as 86 stems measuring 1.0 inch or greater in diameter at ground level. Elderberry plants which are too small to be likely supportive of larval beetles may be destroyed without transplantation or compensation. However, were they not destroyed, such small plants could potentially grow larger and produce stems capable of serving as habitat for the beetle.

Benefits to the beetle include the creation of additional habitat through the compensation measures proposed in the project. The habitat available at the compensation site will be more conducive to beetle recovery because of the habitat quality, and the reduced risk from vehicle-related catastrophes, such as the fire incident described in the Environmental Baseline section, where two elderberry plants were burned.

Vernal Pool Fairy Shrimp

A total of 32 pools and puddles will be permanently filled as a result of the proposed action, resulting in the removal of 0.3 hectares (0.7 acres) of fairy shrimp habitat, death of vernal pool fairy shrimp in the destroyed habitat, and habitat fragmentation. Benefits to the vernal pool fairy shrimp include the purchase of credits equivalent to 0.8 hectares (2.1 acres) at a Service-approved mitigation bank. This habitat will be of higher quality than the pools and puddles along SR 65, since this existing habitat is adjacent to a heavily-traveled road and susceptible to associated hazards.

Cumulative Effects

Cumulative effects include the effects of future State, Tribal, local or private actions affecting listed species and their critical habitat that are reasonably certain to occur in the action area considered in this biological opinion. Future Federal actions that are unrelated to the proposed action are not considered in this section because they require separate consultation pursuant to section 7 of the Act.

In general, many agricultural activities occur without Federal consultation and these activities are expected to continue on the agricultural lands adjacent to SR 65. Certain agricultural practices, such as disking, can destroy kit fox dens and reduce their prey base. Destruction of adjacent riparian habitat can eliminate habitat essential for the survival and recovery of the valley elderberry longhorn beetle. Since fairy shrimp can exist in puddles that would appear to be unlikely habitat, these pools may be filled and vernal pool fairy shrimp may be killed as a consequence. Agricultural land may also be converted to different land uses. The Draft Terra Bella/Ducor Community Plan includes proposed amendments to four elements of the Tulare County General Plan: 1) Land Use Element, 2) Circulation Element, 3) Urban Boundaries Element, and 4) Open Space Element. Potential effects include conversion of prime farmland due to projected community growth. Mitigation measures are addressed within the community plan. Loss of farmland can reduce denning and foraging habitat for the kit fox, and can increase kit fox encounters with human activities. Also, in the southern portion of the City of Porterville, the Porterville Developmental Center is going to be expanded to include six new residential units, a recreation complex, and a protective services building. This expansion

will encroach on agricultural and non-native grassland communities, thereby removing additional San Joaquin kit fox foraging habitat. Several elderberry shrubs also exist within the project area and will be impacted by project construction.

Conclusion

After reviewing the current status of the San Joaquin kit fox, valley elderberry longhorn beetle, and vernal pool fairy shrimp, the environmental baseline for the action area, the effects of the proposed widening of SR 65 in Tulare County, California, and cumulative effects, it is the Service's biological opinion that the proposed project is not likely to jeopardize the continued existence of the San Joaquin kit fox, the valley elderberry longhorn beetle, or the vernal pool fairy shrimp. The proposed project involves the expansion of an existing road, which has degraded the environmental baseline in the action area, and the negative effects of the proposed project are sufficiently offset by conservation measures to avoid jeopardy to the San Joaquin kit fox, the valley elderberry longhorn beetle, or the vernal pool fairy shrimp. The proposed project is not likely to affect critical habitat for the kit fox, as none has been proposed or designated, or the beetle or the vernal pool fairy shrimp, as the designated or proposed critical habitat is not located within the action area.

INCIDENTAL TAKE STATEMENT

Section 9(a)(1) of the Act and Federal regulation pursuant to section 4(d) of the Act prohibit the take of endangered and threatened fish and wildlife species without special exemption. Take is defined as harass, harm, pursue, hunt, shoot, wound, kill, trap, capture or collect, or to attempt to engage in any such conduct. Harass is defined by the Service as an intentional or negligent act or omission which creates the likelihood of injury to a listed species by annoying it to such an extent as to significantly disrupt normal behavioral patterns which include, but are not limited to, breeding, feeding, or sheltering. Harm is defined by the Service to include significant habitat modification or degradation that results in death or injury to listed species by impairing behavioral patterns including breeding, feeding, or sheltering. Incidental take is defined as take that is incidental to, and not the purpose of, the carrying out of an otherwise lawful activity. Under the terms of section 7(b)(4) and section 7(o)(2), taking that is incidental to and not intended as part of the agency action is not considered to be prohibited taking under the Act, provided that such taking is in compliance with this incidental take statement.

The measures described below are non-discretionary, and must be implemented by the agency so that they become binding conditions of any grant or permit issued to the applicant, as appropriate, in order for the exemption in section 7(o)(2) to apply. The FHWA has a continuing duty to regulate the activity covered by this incidental take statement. If FHWA (1) fails to require its representatives to adhere to the terms and conditions of the incidental take statement through enforceable terms that are added to the permit, contract, or grant document, and/or (2) fails to retain oversight to ensure compliance with these terms and conditions, the protective coverage of section 7(o)(2) may lapse.

Amount or Extent of Take

San Joaquin Kit Fox

The Service expects that incidental take of San Joaquin kit foxes will be difficult to detect or quantify for the following reasons: (1) their relatively small body size makes the finding of a dead specimen unlikely, (2) losses may be masked by seasonal fluctuations in numbers or other causes, and (3) the species occurs in dens and burrows. Due to the difficulty in quantifying the number of San Joaquin kit foxes that will be taken as a result of the proposed action, the Service is quantifying take incidental to the project as the number of acres within the project area that is inhabited by this animal. Therefore, the Service anticipates that incidental take of all San Joaquin kit foxes that inhabit 213 hectares (525 acres) will occur as a result of the proposed action. The incidental take will be in the form of harm and harassment.

Valley Elderberry Longhorn Beetle

The Service has determined that implementation of the proposed project will result in the incidental take of all beetles inhabiting 12 elderberry shrubs containing 86 stems measuring 1.0 inch or greater in diameter at ground level. This incidental take allowance takes into consideration the project schedule (construction will not begin for five years) and additional stem growth that may occur prior to construction. The incidental take will be in the form of death, injury, harassment, or harm.

Vernal Pool Fairy Shrimp

The Service anticipates incidental take of the vernal pool fairy shrimp will be difficult to detect or quantify for the following reasons: (1) the aquatic nature of the organisms and their relatively small body size make the finding of a dead specimen unlikely, (2) losses may be masked by seasonal fluctuations in numbers or other causes, and (3) the species occurs in habitat that makes them difficult to detect. Therefore, the Service is quantifying take incidental from the proposed project as the number of acres of occupied habitat that will be destroyed as a result of the proposed action. The Service estimates that all vernal pool fairy shrimp inhabiting 32 pools and puddles, totaling 0.3 hectares (0.7 acres), will be subject to incidental take as a result of the proposed action. The incidental take will be in the form of death, injury, harm, or harassment.

Upon implementation of the following reasonable and prudent measures, incidental take associated with the project on the San Joaquin kit fox, valley elderberry longhorn beetle, and vernal pool fairy shrimp will become exempt from the prohibitions described under section 9 of the Act.

Effect of the Take

The Service has determined that this level of anticipated take is not likely to result in jeopardy to the San Joaquin kit fox, valley elderberry longhorn beetle, or vernal pool fairy shrimp. The conservation measures of the proposed project will reduce the likelihood of kit fox encounters during project construction, and the compensation incorporated within the conservation measures will enhance the survival and recovery of the kit fox, beetle, and fairy shrimp.

Reasonable and Prudent Measures

The following reasonable and prudent measures are necessary and appropriate to minimize the effect of the proposed project on the San Joaquin kit fox and the valley elderberry longhorn beetle. No reasonable and prudent measures are necessary to minimize effects to the vernal pool fairy shrimp.

1. Caltrans shall implement the conservation measures as described in the biological assessment and this biological opinion.

2. Caltrans shall minimize adverse effects to the San Joaquin kit fox.

3. Caltrans shall minimize adverse effects to the valley elderberry longhorn beetle.

4. Caltrans shall ensure compliance with this biological opinion.

Terms and Conditions

In order to be exempt from the prohibitions of section 9 of the Act, FHWA shall ensure Caltrans complies with the following terms and conditions, which implement the reasonable and prudent measures described above. These terms and conditions are nondiscretionary.

1. The following Terms and Conditions implement Reasonable and Prudent Measure One (1):

   a. Caltrans shall minimize the potential for take of listed species resulting from project-related activities by implementing the conservation measures as described in the biological assessment, and the *Description of the Proposed Action* section of this biological opinion.

   b. Caltrans shall include a copy of this biological opinion within its solicitations for construction of the proposed project making the prime contractor responsible for implementing all requirements and obligations included within the biological opinion, and to educate and inform all other contractors involved in the project about the requirements of the biological opinion. A copy of the solicitations containing the biological opinion also shall be provided to the Chief of Endangered Species (Central Valley) at the SFWO.

   c. A qualified biologist shall be on-site during all activities that could result in the take of listed species. The qualifications of the biologist(s) shall be presented to the Service for review and approval at least 30 calendar days prior to any groundbreaking at the project site. The biologist(s) shall be given the authority to stop any work that may result in the take of listed species. If the biologist(s) exercises this authority, the Service and the California Department of Fish and Game (CDFG) shall be notified by telephone and electronic mail within one (1) working day. The Service contact is the Chief of Endangered Species Division (Central Valley) at the SFWO at telephone (916) 414-6600.

d. A worker training program about species covered in this biological opinion shall be conducted prior to groundbreaking at the project site and must be attended by construction and other on-site personnel. The program shall consist of a brief presentation by the on-site biologist to explain listed species concerns to all contractors, their employees, and agency personnel involved in the project. The program shall include a description of the species covered in this biological opinion, and their habitat needs; an explanation of the status of these species and their protection under the Act; and a description of the measures being taken to reduce effects to these species during project construction and implementation. Caltrans shall submit written proof of the training to the Chief of the Endangered Species Division (Central Valley) at the SFWO within ten (10) working days from the completion of the training.

2. The following Terms and Conditions implement Reasonable and Prudent Measure Two (2):

a. To the maximum extent practicable, Caltrans shall incorporate adequately sized culverts under the road, overpasses, or other measures, to assist San Joaquin kit foxes in safely crossing the widened SR 65. Within 60 calendar days of the issuance of this biological opinion, Caltrans shall provide the Service with an adequate report on which of these measures they will implement or the reasons why they will not be implemented.

b. All project-related traffic shall be restricted to established roads, construction areas, and other designated areas. These areas also should be included in preconstruction surveys and, to the maximum extent possible, should be established in locations disturbed by previous activities to prevent further adverse effects. Project-related vehicles shall observe a 20-mph speed limit within construction areas, except on County roads, and State and Federal highways. Off-road traffic outside of designated project areas shall be prohibited.

c. To prevent inadvertent entrapment of San Joaquin kit fox during the construction phase of the project, all excavated, steep-walled holes or trenches more than 0.61 m (2 ft.) deep shall be covered at the close of each working day by plywood or similar materials, or provided with one or more escape ramps constructed of earth fill or wooden planks. Before such holes or trenches are filled, they must be thoroughly inspected for trapped animals. If at any time a trapped listed animal is discovered, the on-site biologist should immediately place escape ramps or other appropriate structures to allow the animal to escape, or the Service and/or California Department of Fish and Game shall be contacted by telephone for guidance. The Service shall be notified of the incident by telephone and electronic mail within one (1) working day.

d. San Joaquin kit foxes are attracted to den-like structures such as pipes, and may enter stored pipe, becoming trapped or injured. All construction pipes, culverts, or similar structures with a diameter of 10.16 centimeters (4 inches) or greater that are stored at a construction site for one or more overnight periods must be thoroughly inspected for

kit foxes before the pipe is subsequently buried, capped, or otherwise used or moved in any way. If a kit fox is discovered inside a pipe, that section of pipe shall not be moved until the Service has been consulted by telephone. If necessary, and under the direct supervision of the on-site biologist, the pipe may be moved once to remove it from the path of construction activity, until the fox has escaped.

e. All construction activities shall cease at least 30 minutes before sunset and shall not resume prior to at least 30 minutes before sunrise.

f. High visibility orange-colored fencing at least 5 feet tall shall be placed along sensitive areas to prevent encroachment of construction personnel onto these areas during project work activities. Such fencing shall be inspected and maintained daily until completion of the project. The fencing will be removed only when all construction equipment is removed from the site.

g. To eliminate an attraction to predators of the San Joaquin kit fox, all food-related trash items, such as wrappers, cans, bottles, and food scraps, must be disposed in closed containers and removed at the end of each working day from the entire project site.

h. To avoid injury or death of the San Joaquin kit fox, except for Federal, state, and local law enforcement, or authorized security personnel, no firearms shall be permitted on the project site.

i. To prevent harassment, mortality, or destruction of dens, canine or feline pets shall not be allowed on the project site.

j. Use of rodenticides and herbicides at the project shall be utilized in such a manner to prevent primary or secondary poisoning of San Joaquin kit foxes, and/or the depletion of prey populations on which they depend. All uses of such compounds shall observe label and other restrictions mandated by the U.S. Environmental Protection Agency, California Department of Food and Agriculture, and other appropriate State and Federal regulations, as well as additional project-related restrictions deemed necessary by the Service or the California Department of Fish and Game.

k. Upon completion of the project, all San Joaquin kit fox habitat subject to temporary ground disturbances, including storage and staging areas, temporary roads, et cetera must be re-contoured, if appropriate, and revegetated with locally collected (e.g., within 10 miles of the project site) seeds and/or cuttings of appropriate native plant species to promote restoration of the area to pre-project conditions. An area subject to "temporary" disturbance means any area that is disturbed during the project, but that after project completion will not be subject to further disturbance, and has the potential to be revegetated. Caltrans shall ensure the methods and plant species used to revegetate have been approved by the Service. The on-site biologist shall ensure that areas subject to temporary disturbance have been adequately restored, and that

this information is included within the final reports described in 4.c. of the *Terms and Conditions* of this biological opinion.

l. As described in the biological assessment and the project description of this biological opinion, the 458 acres designated for San Joaquin kit fox habitat compensation must be managed by a third party management organization approved by the Service. Caltrans shall adhere to the *Sacramento Fish and Wildlife Service Selected Review Criteria for Conservation Banks and Section 7 Off Site Compensation* (August 4, 2004 Draft Guidance). The conservation easement shall be recorded at the appropriate County of Tulare office within six months of the initial groundbreaking at the project site. The conservation easement, including a title report for the land area, shall be reviewed and approved by the Service prior to recording. A true copy of the recorded easement/deed shall be provided to the Service within 30 days after recordation. Standard examples of conservation easements are available from the Service upon request. The easement must include, but not be limited to, provisions and responsibilities of the permittee for the protection of the San Joaquin kit fox, including any future transfers of the easements or fee interests that may be anticipated.

The conservation easement must specify the purposes for which it is established (i.e., to maintain habitat in perpetuity for the San Joaquin kit fox). These documents must include a list of prohibited activities that are inconsistent with the maintenance of the preserves and the suitability of the listed species habitats, including, but not limited to:

i. leveling, grading, or otherwise altering the existing topography, including the exploration for, or development of, mineral extraction within the preserves;

ii. landscaping, plowing, discing, or cultivation of the preserves;

iii. activities that interfere with the natural hydrology of the preserves, including irrigation, excessive pumping of groundwater, manipulation or blockage of natural drainages, or placement of storm water drains within the preserves;

iv. carrying out activities that may degrade water quality within the preserves and the watershed, including but not limited to: use of herbicides, pesticides, or rodenticides, or weed abatement activities within the preserves, and failure to adequately treat water entering the preserves from major outside sources;

v. discharging, dumping, disposing, storing, placing or burning of any trash, refuse, rubbish, grass clippings, cuttings, debris, household or industrial wastes, dredged or fill materials, furniture, or vehicles, within the preserves;

vi. placement of any structures or building of additional roads within the preserves;

vii. operating, riding, or using off-road or motorized vehicles within the preserves, except as needed for normal grazing practices and for conducting monitoring and surveys as specified in the management plan;

viii. killing, removing, or altering existing trees, shrubs, or other native vegetation within the preserve, or planting of non-native vegetation within the preserves; or planting of any vegetation at such a density as to interfere with the use of the preserve by the San Joaquin kit fox;

ix. use of lighting in the preserve or directing lighting into the preserve from the project site;

x. fire protection activities and any and all uses which may adversely affect the preserves must be identified in the conservation easement or the management plan and must be approved by the Service prior to implementation.

3. The following Term and Condition implements Reasonable and Prudent Measure Three (3):

a. Caltrans shall implement the measures described in the Service's 1999 *Conservation Guidelines for the Valley Elderberry Longhorn Beetle.*

4. The following Terms and Conditions implement Reasonable and Prudent Measure Four (4):

a. If requested, during or upon completion of construction activities, the on-site biologist or Caltrans shall accompany the Service or CDFG personnel on an on-site inspection of the site to review project effects to listed species and their habitats.

b. FHWA must ensure Caltrans provides the Service with annual reports to describe the progress of implementation of all the Terms and Conditions of this biological opinion. The first report is due January 31, the first year after groundbreaking, and annually thereafter until all Terms and Conditions are completed, as stated in writing by the Service.

c. Caltrans shall submit a post-construction compliance report prepared by the monitoring biologists to the Sacramento Fish and Wildlife Office (SFWO) within 30 calendar days of the completion of construction activity or within 30 days of any break in construction activity lasting more than 30 days. This report shall detail (1) dates that construction occurred; (2) pertinent information concerning the success of the project in meeting compensation and other conservation measures; (3) an explanation of failure to meet such measures, if any; (4) known project effects on listed species, if any; (5) occurrences of incidental take of any listed species; and (6) other pertinent information.

Reporting Requirements

The Service's Law Enforcement Division and the SFWO are to be notified within one (1) working day of the finding of any dead listed wildlife species or any unanticipated harm to listed wildlife species. The Service contact persons for reporting are the Chief, Endangered Species Division (Central Valley) at (916) 414-6620 and Resident Agent-in-Charge at (916) 414-6660.

Any contractor or employee who, during routine operations and maintenance activities, inadvertently kills or injures a listed wildlife species must immediately report the incident to their representative. This representative must contact the Service's Law Enforcement Division and the CDFG. The CDFG contact for immediate assistance is the State Dispatcher at (916) 445-0045.

CONSERVATION RECOMMENDATIONS

Section 7(a)(1) of the Act directs Federal agencies to utilize their authorities to further the purposes of the Act by carrying out conservation programs for the benefit of endangered and threatened species. Conservation recommendations are discretionary agency activities that can be implemented to further the purposes of the Act, such as preservation of endangered species habitat, implementation of recovery actions, or development of information and databases. Our conservation recommendations are as follows:

1. The FHWA should assist the Service, through personnel and funding, in gathering additional data on the reproduction, demography, and dispersal of the San Joaquin kit fox, and implementing recovery strategies.

2. The FHWA should actively protect and create additional habitat for the San Joaquin kit fox throughout Tulare County, and can help maintain movement corridors.

3. The FHWA should participate in planning for regional habitat conservation plans for the San Joaquin kit fox.

4. The FHWA and Caltrans should research and implement roadway designs and structures that are more conducive to safe wildlife dispersal, such as wildlife overpasses, underpasses, fencing, and medians.

5. As the recovery plan for federally listed vernal flora and fauna is developed, the FWHA should assist the Service in its implementation.

6. When designing projects, FHWA and Caltrans should assign highest priority to alternatives that completely avoid adverse effects to listed species.

7. FHWA and Caltrans should actively promote alternative forms of transportation to alleviate the increased need for road expansions (and consequent increased loss of habitat) required by higher traffic volumes.

In order for the Service to be kept informed of actions minimizing or avoiding adverse effects or benefiting listed species or their habitats, the Service requests notification of the implementation of any conservation recommendations.

REINITIATION – CLOSING STATEMENT

This concludes formal consultation on the SR 65 project in Tulare County, California, as outlined in the request and associated documents. As provided in 50 CFR §402.16, reinitiation of formal consultation is required where discretionary Federal agency involvement or control over the action has been maintained (or is authorized by law) and if: 1) the amount or extent of incidental take is exceeded; 2) new information reveals effects of the agency action that may affect listed species or critical habitat in a manner or to an extent not considered in this opinion; 3) the agency action is subsequently modified in a manner that causes an effect to the listed species or critical habitat that was not considered in this opinion; or 4) a new species is listed or critical habitat designated that may be affected by the action. In instances where the amount or extent of incidental take is exceeded, any operations causing such take must cease pending reinitiation.

If you have any questions regarding this biological opinion on the proposed widening of SR 65 in Tulare County, California, please contact Amy Welsh or Susan Jones, Chief of our San Joaquin Valley Branch, at (916) 414-6630.

Sincerely,

for Kenneth Sanchez
Acting Field Supervisor

Enclosures - 1999 Conservation Guidelines for the Valley Elderberry Longhorn Beetle
Sacramento Fish and Wildlife Service Selected Review Criteria for Conservation Banks and Section 7 Off Site Compensation (August 4, 2004 Draft Guidance)

cc:
Central Region Biology Branch, Caltrans, Fresno, California (Attn: Tamra Nunes)
California Department of Fish and Game, Fresno, California (Attn: Annette Tenneboe)

Literature Cited

Ahl, J. S. B. 1991. Factors affecting contributions of the tadpole shrimp, *Lepidurus packardi*, to its oversummering egg reserves. Hydrobiologia 212:137-143.

Barr, C.B. 1991. The distribution, habitat, and status of the valley elderberry longhorn beetle *Desmocerus californicus dimorphus* Fisher (Insecta: Coleoptera: Cerambycidae). United States Fish and Wildlife Service, Sacramento, California. 134 pp.

Barrett, L. 1990. Annual review of animal rabies in California. California Vet 44:52-54.

Benfenati, E., S. Valzacchi, G. Maniani, L. Airoldi, and R. Farnelli. 1992. PCDD, PCDF, PCB, cadmium, and lead in roadside soil: relationship between road distance and concentration. Chemosphere 24:1077-1083.

Berry, W.H., J.H. Scrivner, T.P. O'Farrell, C.E. Harris, T.T. Kato, and P.M. McCue. 1987. Sources and rates of mortality of the San Joaquin kit fox, Naval Petroleum Reserve, #1, Kern County, CA, 1980-1986. Report No. EGG 10282-2177, EG&G Energy Measurements, Goleta, California. 34 pp.

Bondello, M., and B. Brattstrom. 1979. The experimental effects of off-road vehicle sounds on three species of vertebrates. Report to the Bureau of Land Management.

Burglund, B., and T. Lindvall. 1995. Effects of community noise. Archives of the Center for Sensory Research 2:1-195.

California Department of Fish and Game. 1985. Blunt-nosed leopard lizard essential habitat update, July 1, 1984 – September 30, 1985. Job EF84 II-1. California Department of Fish and Game, Sacramento, California.

Clevenger, A.P., and N. Waltho. 1999. Dry culvert use and design considerations for small- and medium-sized mammal movement across a major transportation corridor. Pages 263-278, *in* G.L. Evink, P. Garrett, and D. Zeigler (eds.). Proceedings of the third international conference on wildlife ecology and transportation. FL-ER-73-99, Florida Department of Transportation, Tallahassee, Florida.

Coe, T. 1988. The application of Section 404 of the Clean Water Act to Vernal Pools. Pages 356-358, *in* J. A. Kusler, S. Daly, and G. Brooks (eds.). Urban Wetlands. Proceedings of the National Wetland Symposium. Oakland, California.

Collinge, S.K., M. Holyoak, J.T. Marty, and C.B. Barr. 2001. Riparian habitat fragmentation and population persistence of the threatened valley elderberry longhorn beetle in central California. Biological Conservation 100:103-113.

Cornman, D. 2001. Effects of noise on wildlife. Nature Sound Society. San Francisco State University, San Francisco, California.

Cypher, B.L. 2000. Effects of roads on San Joaquin kit foxes: a review and synthesis of existing data. Endangered Species Recovery Program, California State University, Fresno, California.

Cypher, B.L., and J.H. Scrivner. 1992. Coyote control to protect endangered San Joaquin kit foxes at the Naval Petroleum Reserves, California. Pages 42-47, *in* J.E. Borrecco and R.E. Marsh (eds.). Proceedings of the 15th Vertebrate Pest Conference, March 1992, Newport Beach, California. University of California, Davis, California.

Cypher, B.L., and K.A. Spencer. 1998. Competitive interactions between coyotes and San Joaquin kit foxes. Journal of Mammalogy 79:204-214.

Cypher, B.L., G.D. Warrick, M.R.M. Otten, T.P. O'Farrell, W.H. Berry, E.C. Harris, T.T. Kato, P.M. McCue, J.H. Scrivner, and B.W. Zoellick. 2000. Population dynamics of San Joaquin kit foxes at the Naval Petroleum Reserve in California. Wildlife Monographs 145. 43 pp.

Donald, D. B. 1983. Erratic occurrence of anostracans in a temporary pond: colonization and extinction or adaptation to variations in annual weather? Canadian Journal of Zoology 61:1492-1498.

Driver, E. A. 1981. Caloric value of pond invertebrates eaten by ducks. Freshwater Biology 11:579-581.

Egoscue, H.J. 1956. Preliminary studies of the kit fox in Utah. Journal of Mammalogy 37:351-357.

Eng, L. L., D. Belk, and C. H. Erickson. 1990. California Anostraca: Distribution, habitat, and status. Journal of Crustacean Biology 10:247-277.

Frankham, R., and K. Ralls. 1998. Inbreeding leads to extinction. Nature 241:441-442.

Fugate, M. L. 1992. Speciation in the fairy shrimp genus *Branchinecta* (Crustacea: Anostraca) from North America. Ph.D. dissertation. Department of Biology, University of California, Riverside, California.

Gilpin, M. E. and M. E. Soule. 1986. Minimum viable populations: processes of species extinction. Pages 18-34, *in* M. E. Soule (ed.). Conservation biology: the science of scarcity and diversity. Sinauer Associates, Inc., Sunderland, Massachusetts.

Goldingay, R.L., P.A. Kelly, and D.F. Williams. 1997. The kangaroo rats of California: endemism and conservation of keystone species. Pacific Conservation Biology 3:47-60.

Goodman, D. 1987. The demography of chance extinction. Pages 11-19, *in* M. E. Soule (ed.). Conservation biology: the science of scarcity and diversity. Sinauer Associates, Inc., Sunderland, Massachusetts.

Grinnell, J., J.S. Dixon, and J.M. Linsdale. 1937. Fur-bearing mammals of California. Volume 2. University of California Press. Berkeley, California.

Hall, H.M. 1983. Status of the kit fox at the Bethany wind turbine generating (WTG) project site, Alameda County, California. California Department of Fish and Game, Sacramento, California.

Holland, R. F. 1978. The geographic and edaphic distribution of vernal pools in the Great Central Valley, California. California Native Plant Society, Special Publ. 4:1-12.

Holway, D.A. 1995. Distribution of the Argentine ant (*Linepithema humile*) in northern California. Conservation Biology 9:1634-1637.

Huxel, G.R. 2000. Effects of Argentine ant on the threatened valley elderberry longhorn beetle. Biological Invasions 2:81-85.

Ingraham, M., G.P. Nathan, and S. Bachman. 1996. Impending pollination crisis threatens biodiversity and agriculture. Tropinet 7:1.

Jameson, E.W., and H.J. Peeters. 1988. California Mammals. University of California Press, Berkeley, California.

Jensen, C.C. 1972. San Joaquin kit fox distribution. Unpublished Report, U.S. Fish and Wildlife Service, Sacramento, California. 18 pp.

Katibah, E.F. 1984. A Brief History of Riparian Forests in the Central Valley of California. Pp. 23-29, *in* R.E. Warner and K.M. Hendrix, (eds.). California riparian systems ecology, conservation, and productive management. University of California Press, Berkeley, California. 191 pp.

Knapp, D.K. 1978. Effects of agricultural development in Kern County, California, on the San Joaquin kit fox in 1977. Final Report Project E-1-1, Jov V-1.21, California Department of Fish and Game, Non-Game Wildlife Investigations, Sacramento, California.

Koopman, M.E., J.H. Scrivner, and T.T. Kato. 1998. Patterns of den use by San Joaquin kit foxes. Journal of Wildlife Management 62:373-379.

Lande, R. 1988. Genetics and demography in biological conservation. Science 241:1455-1460.

Laughrin, L. 1970. San Joaquin kit fox, its distribution and abundance. Wildlife Management Branch Administrative Report 70-2. California Department of Fish and Game, Sacramento, California.

Lewis, J.C., K.L. Sallee, and R.T. Golightly, Jr. 1993. Introduced red fox in California. Rep. 93-10, California Department of Fish and Game, Nongame Bird and Mammal Section, Sacramento, California. 70 pp.

MacDonald, D.W., and D.R. Voigt. 1985. The biological basis of rabies models. Pages 71-108, *in* P.J. Bacon (ed.). Population dynamics of rabies in wildlife. Academic Press, London, Great Britain.

McCue, P.M., and T.P. O'Farrell. 1988. Serological survey for selected diseases in the endangered San Joaquin kit fox (*Vulpes macrotis mutica*). Journal of Wildlife Disease 24:274-281.

McGrew, J.C. 1979. *Vulpes macrotis*. Mammal Species 123:1-6.

Morrell, S.H. 1972. Life history of the San Joaquin kit fox. California Department of Fish and Game 58:162-174.

_____. 1975. San Joaquin kit fox distribution and abundance in 1975. Admin. Rep. No. 75-3, California Department of Fish and Game, Wildlife Management Branch, Sacramento, California. 28 pp.

National Institute of Health (NIH). 1990. Noise and hearing loss. NIH Consensus Statement 8:1-24.

National Park Service (NPS). 1994. Report on effects of aircraft overflights on the National Park System. Report to Congress. Technical Report No. NPSD1062. Washington, D.C.

O'Farrell, T.P. 1984. Conservation of the endangered San Joaquin kit fox *Vulpes macrotis mutica* on the Naval Petroleum Reserves, California. Acta Zool. Fennica 172:207-208.

Orloff, S.G., F. Hall, and L. Spiegel. 1986. Distribution and habitat requirements of the San Joaquin kit fox in the northern extreme of their range. Transactions Western Section Wildlife Society 22:60-70.

Primack, R.B. 1998. Essentials of Conservation Biology. Second Edition. Sinaur Associates. Sunderland, Massachusetts.

Ralls, K., and P.J. White. 1995. Predation on San Joaquin kit foxes by larger canids. Journal of Mammalogy 76:723-729.

Roberts, W.G., J.G. Howe, and J. Major. 1977. A survey of riparian forest flora and fauna in California. Pp. 3-20, *in* A. Sands (ed.). Riparian Forests in California: their Ecology and Conservation. University of California, Davis, California.

Saccheri, I., M. Kuussaari, M. Kankare, P. Vikman, W. Fortelius, and I. Hanski. 1998. Inbreeding and extinction in a butterfly population. Nature 392:491-494.

Schultz, L.J., and L.R. Barrett. 1991. Controlling rabies in California 1990. California Vet 45:36-40.

Scrivner, J.H., T.P. O'Farrell, and T.T. Kato. 1987. Dispersal of San Joaquin kit fox, *Vulpes macrotis mutica*, on Naval Petroleum Reserve #1, Kern County, California. Report No. EGG 10282-2190, EG&G Energy Measurements, Goleta, California. 32 pp.

Shaffer, M.L. 1981. Minimum population sizes for species conservation. Bioscience 31:131-134.

Simovich, M. A., R. C. Brusca and J. L. King. 1992. Invertebrate survey, PGT-PG&E/Bechtel Pipeline Expansion Project.

Soule, M. 1990. The onslaught of alien species and other challenges in the coming decades. Conservation Biology 4:233-239.

Spencer, K.A., W.H. Berry, W.G. Standley, and T.P. O'Farrell. 1992. Reproduction of the San Joaquin kit fox on Camp Roberts Army National Guard Training Site, California. U.S. Department of Energy Topical Report No. EGG 10617-2154.

Spiegel, L.K. 1996. Studies of the San Joaquin kit fox in undeveloped and oil-developed areas. California Energy Commission Pub. No. P700-96-003. California Energy Commission Publication Unit, Sacramento, California.

Spiegel, L.K., and M. Disney. 1996. Mortality sources and survival rates of San Joaquin kit foxes in oil-developed and undeveloped lands of southwestern Kern County, California. Pages 71-92, *in* L.K. Spiegel (ed.). Studies of the San Joaquin kit fox in undeveloped and oil-developed areas. California Energy Commission, Sacramento, California.

Spiegel, L.K., and J. Tom. 1996. Reproduction of San Joaquin kit fox in undeveloped and oil-developed habitats of Kern County, California. Pages 53-69, *in* L.K. Spiegel (ed.). Studies of the San Joaquin kit fox in undeveloped and oil-developed areas. California Energy Commission, Sacramento, California.

Standley, W.G., W.H. Berry, T.P. O'Farrell, and T.T. Kato. 1992. Mortality of San Joaquin kit fox (*Vulpes velox macrotis*) at Camp Roberts Army National Guard Training Site, California. U.S. Department of Energy Topical Report No. EGG 10617-2157, EG&G/EM Santa Barbara Operations, National Technical Information Service, Springfield, Virginia.

Sugnet and Associates. 1993. Preliminary compilation of documented distribution, fairy shrimp and tadpole shrimp proposed for listing. Roseville, California.

Swanson, G. A., M. I. Meyer, and J. R. Serie. 1974. Feeding ecology of breeding blue-winged teals. Journal of Wildlife Management 38:396-407.

Tellman, B. 1997. Exotic pest plant introduction in the American southwest. Desert Plants 13:3-10.

Thompson, K. 1961. Riparian forests of the Sacramento Valley, California. Annals of the Association of American Geographers 51:294-315.

Trombulak, S.C., and C.A. Frissell. 2000. The ecological effects of roads on terrestrial and aquatic communities: a review. Conservation Biology 14:18-30.

U.S. Fish and Wildlife Service (Service). 1980. Blunt-nosed leopard lizard recovery plan. Portland, Oregon. 319 pp.

_____. 1984. Valley elderberry longhorn beetle recovery plan. Portland, Oregon. 62 pp.

_____. 1992. Wetland losses within northern California from projects authorized under Nationwide Permit No. 26. Sacramento Field Office, Sacramento, California.

_____. 1993 in litt. Effects of 16 vertebrate control agents on threatened and endangered species. Biological Opinion, Washington, D.C. 172 pp.

Ward, P.S. 1987. Distribution of the introduced Argentine ant (*Iridomyrex humilis*) in natural habitats of the lower Sacramento valley and its effects on the indigenous ant fauna. Hilgardia 55:1-16.

Warrick, G.D. and B.L. Cypher. 1999. Variation in the body mass of San Joaquin kit foxes. Journal of Mammalogy 80:972-979.

Weiss, S.B. 1999. Cars, cows, and checkerspot butterflies: nitrogen deposition and management of nutrient-poor grasslands for a threatened species. Conservation Biology 13:1476-1486.

White, P.J., and R.A. Garrott. 1999. Population dynamics of kit foxes. Canadian Journal of Zoology 77:486-493.

White, P.J., and K. Ralls. 1993. Reproduction and spacing patterns of kit foxes relative to changing prey availability. Journal of Wildlife Management 57:861-867.

White, P.J., C.A. Vanderbilt-White, and K. Ralls. 1996. Functional and numerical responses of kit foxes to a short-term decline in mammalian prey. Journal of Mammalogy 77:370-376.

White, P.J., W.H. Berry, J.J. Eliason, and M.T. Hanson. 2000. Catastrophic decrease in an isolated population of kit foxes. Southwestern Naturalist 45:204-211.

Williams, D.F. 1985. A review of the population status of the Tipton kangaroo rat, *Dipodomys nitratoides nitratoides*. U.S. Fish and Wildlife Service, Sacramento, California. 44 pp.

Zoellick, B.W., T.P. O'Farrell, P.M. McCue, C.E. Harris, and T.T. Kato. 1987. Reproduction of the San Joaquin kit fox on Naval Petroleum Reserve #1, Elk Hills, California 1980-1985. U.S. Department of Energy Topical Report No. EGG 10282-2144.

PERSONAL COMMUNICATION

Clark, L. February 15, 2000. Wildlife Biologist, Fort Hunter Liggett. Pers. comm. to P. White, U.S. Fish and Wildlife Service, Sacramento, California.

Kelly, P. April 6, 2000. Endangered Species Recovery Program, Fresno, California. Pers. comm. to P. White, U.S. Fish and Wildlife Service, Sacramento, California.

King, J. 1995. Section of Evolution & Ecology, University of California, Davis.

Rouda, R. March 18, 2004. City of Porterville. Pers. comm. to A. Welsh, U.S. Fish and Wildlife Service, Sacramento, California.

Schwartz, M. March 23, 2000. University of Montana, Missoula. Pers. comm. to P. White, U.S. Fish and Wildlife Service, Sacramento, California.

DEPARTMENT OF THE ARMY
U.S. ARMY CORPS OF ENGINEERS, SACRAMENTO DISTRICT
1325 J STREET
SACRAMENTO CA 95814-2922

REPLY TO
ATTENTION OF

August 19, 2015

Regulatory Division (SPK-2003-00340)

California Department of Transportation, District 6
Attn: Mr. Jim Bane
2015 East Shields Ave, Suite 100
Fresno, California 93726-5428

Dear Mr. Bane:

We are responding to your June 15, 2015, request for a Department of the Army permit for the SR65 Terra Bella Expressway Segment 1 (EA 06-43401) project. **This letter contains minor corrections (shown in bold font), and supersedes the letter sent from our office on August 12, 2015.** This project involves work, including discharges of dredged or fill material, in waters of the United States associated with the widening of State Route 65 from a two lane highway, to a four lane expressway between PM 15.1 to PM 18.0. The approximately 80-acre site is located on State Route (SR) 65 approximately 0.3 miles south of the SR65 and SR190 interchange, Sections 34 and 3, Township 31 South, Range 24 East, Mount Diablo Meridian, Latitude 36.028123°, Longitude -119.039610°, Tulare County, California.

Based on the information you provided, the proposed activity, which will result in the permanent loss of approximately 0.007 acre of an ephemeral stream, 0.054 acre of seasonal wetland, and temporary impacts to approximately **0.045** acre of ephemeral stream, is authorized by Nationwide Permit Number 14. However, until water quality certification under Section 401 of the Clean Water Act has been issued or waived for the activity, this authorization is denied without prejudice. Once you receive water quality certification or waiver thereof, the activity is authorized and the work may proceed subject to the conditions of certification, if any, and the NWP. You must comply with the general terms and conditions listed on the NWP information sheet and applicable regional conditions. Information on the NWP and regional conditions are available on our website at *http://www.spk.usace.army.mil/Missions/Regulatory/Permitting/NationwidePermits.aspx*. In addition, you work must comply with the following special conditions:

Within 30 days after completion of the authorized work, you must sign the enclosed Compliance Certification and return it to this office.

Special Conditions

1. This Corps permit does not authorize you to take an endangered species, in particular vernal pool fairy shrimp (*Branchinecta lynchi*), or designated critical

habitat. In order to legally take a listed species, you must have separate authorization under the Endangered Species Act (e.g., an Endangered Species Act Section 10 permit, or a Biological Opinion under Endangered Species Act Section 7, with "incidental take" provisions with which you must comply). The enclosed Fish and Wildlife Service Biological Opinion (Number I-I-04-F-0235, dated September 13, 2004 and Amendment (Number 81420-2008-F-0792 dated January 31, 2008)), contains mandatory terms and conditions to implement the reasonable and prudent measures that are associated with "incidental take" that is also specified in the Biological Opinion. Your authorization under this Corps permit is conditional upon your compliance with all of the mandatory terms and conditions associated with "incidental take" of the attached Biological Opinion, which terms and conditions are incorporated by reference in this permit. Failure to comply with the terms and conditions associated with incidental take of the Biological Opinion, where a take of the listed species occurs, would constitute an unauthorized take, and it would also constitute non-compliance with your Corps permit. The U. S. Fish and Wildlife Service is the appropriate authority to determine compliance with the terms and conditions of its Biological Opinion, and with the Endangered Species Act. You must comply with all conditions of this Biological Opinion and Amendment, including those ascribed to **Caltrans**.

2. You shall restore all temporary impacts to waters of the U.S. and adjacent upland areas within 50 feet of waters of the U.S. to their original contour and condition within 60 days following completion of construction activities.

3. Within 60 days following construction activities, you shall submit pre- and post-construction site photographs of the project **(aerial photos are not required)**, showing the work conducted. The camera positions and view angles of pre- and post-construction photographs shall be identified on a map, aerial photo, or project drawing. Construction locations shall include all major project features and waters of the U.S., including restoration areas.

This verification is valid until March 18, 2017, when the existing NWP's are scheduled to be modified, reissued, or revoked. Furthermore, if you commence or are under contract to commence this activity before the date the NWP is modified, reissued, or revoked, you will have 12 months from the date of the modification, reissuance or revocation of the NWP to complete the activity under the present terms and conditions. Failure to comply with the general and regional conditions of this NWP, or the project-specific special conditions of this authorization, may result in the suspension or revocation of your authorization.

We would appreciate your feedback. At your earliest convenience, please tell us how we are doing by completing the customer survey from the link on our website, listed below.

Please refer to identification number SPK-2003-00340 in any correspondence concerning this project. If you have any questions, please contact Evan G. Kreklow

Carnes at our California South Regulatory Branch, 1325 J Street, Room 1350, Sacramento, California 95814-2922, by email at *Evan.G.Carnes@usace.army.mil*, or telephone at 916-557-7506. For more information regarding our program, please visit our website at *www.spk.usace.army.mil/Missions/Regulatory.aspx*.

Sincerely,

Kathleen A. Dadey, Ph.D.
Chief, California South Branch
Regulatory Division

Enclosures

cc: (w/o encls)
Ms. Leana Rosetti, U.S. Environmental Protection Agency, Region IX,
Rosetti.Leana@epa.gov
Mr. Thomas Leeman, U.S. Fish and Wildlife Service, San Joaquin Valley Division,
Thomas_Leeman@fws.gov
Mr. Matthew Scroggins, Central Valley Regional Water Quality Control Board,
MScroggins@waterboards.ca.gov
Mr. Javier Almaguer, Caltrans, Region 6,
Javier.Almaguer@dot.ca.gov
Mr. Todd Barosso, Caltrans, Region 6,
Todd.Barosso@dot.ca.gov

Central Valley Regional Water Quality Control Board

9 October 2015

Javier Almaguer, Central Region Biology Chief
California Department of Transportation
1234 E. Shaw Ave.
Fresno, CA 93710

CLEAN WATER ACT §401 TECHNICALLY CONDITIONED WATER QUALITY CERTIFICATION FOR DISCHARGE OF DREDGED AND/OR FILL MATERIALS FOR THE TERRA BELLA EXPRESSWAY SEGMENT 1, WDID#5C54CR00074, TULARE COUNTY

This Order responds to the 12 June 2015 application submitted by California Department of Transportation (Applicant) for the Water Quality Certification of a transportation project permanently impacting 0.061 acres of waters of the United States.

This Order serves as certification of the subject Project permitted by the United States Army Corps of Engineers' Nationwide Permit 14 under § 401 of the Clean Water Act, and a Waste Discharge Requirement under the Porter-Cologne Water Quality Control Act and State Water Resources Control Board Order 2003-0017-DWQ.

WATER QUALITY CERTIFICATION STANDARD CONDITIONS:

1. This Certification is subject to modification or revocation upon administrative or judicial review, including review and amendment pursuant to § 13330 of the California Water Code and § 3867 of Title 23 of the California Code of Regulations (23 CCR).

2. This Certification is not intended and shall not be construed to apply to any discharge from any activity involving a hydroelectric facility requiring a Federal Energy Regulatory Commission (FERC) license or an amendment to a FERC license unless the pertinent certification application was filed pursuant to 23 CCR § 3855(b) and the application specifically identified that a FERC license or amendment to a FERC license for a hydroelectric facility was being sought.

3. The validity of any non-denial certification action shall be conditioned upon total payment of the full fee required under 23 CCR § 3860.

4. In the event of any violation or threatened violation of the conditions of this Certification, the violation or threatened violation shall be subject to any remedies, penalties, process, or sanctions as provided for under State law and § 401 (d) of the federal Clean Water Act. The applicability of any State law authorizing remedies, penalties, process, or sanctions for the violation or threatened violation constitutes a limitation necessary to ensure compliance with this Certification.

WATER QUALITY CERTIFICATION GENERAL CONDITIONS:

1. Certification is valid for the duration of the Terra Bella Expressway Segment 1 (Project) described in the attached "Project Information Sheet." This Certification is no longer valid if the Project (as summarized in the "Project Information Sheet" and described in the water quality certification

application) is modified, or coverage under the project permit issued by the U.S. Army Corps of Engineers pursuant to § 404 of the Clean Water Act has expired.

2. The Applicant shall provide a Notice of Completion (NOC) no later than 30 days after the Project completion. The NOC shall demonstrate that the Project has been carried out in accordance with the Project description in the Certification and in any approved amendments. The NOC shall include a map of the Project location(s), including final boundaries of any on-site restoration area(s), if appropriate, and representative pre and post construction photographs. Each photograph shall include a descriptive title, date taken, photographic site, and photographic orientation.

3. All reports, notices, or other documents required by this Certification or requested by the Central Valley Water Board shall be signed by a person described below or by a duly authorized representative of that person.

   a. For a corporation: by a responsible corporate officer such as (1) a president, secretary, treasurer, or vice president of the corporation in charge of a principal business function; (2) any other person who performs similar policy or decision-making functions for the corporation; or (3) the manager of one or more manufacturing, production, or operating facilities if *authority* to sign documents has been assigned or delegated to the manager in accordance with corporate procedures.

   b. For a partnership or sole proprietorship: by a general partner or the proprietor.

   c. For a municipality, State, federal, or other public agency: by either a principal executive officer or ranking elected official.

4. Any person signing a document under General Condition No. 3 shall make the following certification, whether written or implied:

   "I certify under penalty of law that this document and all attachments were prepared under my direction or supervision in accordance with a system designed to assure that qualified personnel properly gathered and evaluated the information submitted. Based on my inquiry of the person or persons who manage the system, or those persons directly responsible for gathering the information, the information submitted is, to the best of my knowledge and belief, true, accurate, and complete. I am aware there are significant penalties for submitting false information, including the possibility of fine and imprisonment for knowing violations."

ADDITIONAL TECHNICALLY CONDITIONED CERTIFICATION CONDITIONS:

In addition to the standard and general conditions above, the Applicant shall satisfy the following:

1. The Applicant shall notify the Central Valley Water Board in writing **seven days** prior to beginning any in-water activities.

2. Except for activities permitted by the U.S. Army Corps of Engineers under § 404 of the Clean Water Act, soil, silt, or other organic materials shall not be placed where such materials could pass into surface water or surface water drainage courses.

3. All areas disturbed by Project activities shall be protected from washout or erosion.

4. The Applicant shall maintain a copy of this Certification and supporting documentation (Project Information Sheet) at the Project site during construction for review by site personnel and agencies. All personnel (employees, contractors, and subcontractors) performing work on the

proposed Project shall be adequately informed and trained regarding the conditions of this Certification.

5. An effective combination of erosion and sediment control Best Management Practices (BMPs) shall be implemented and adequately working during all phases of construction.

6. All temporarily affected areas shall be restored to pre-construction contours and conditions upon completion of construction activities.

7. The Applicant shall perform surface water sampling: 1) when performing any in-water work; 2) in the event that Project activities result in any materials reaching surface waters or; 3) when any activities result in the creation of a visible plume in surface waters. Pollutants shall be analyzed using the analytical methods described in 40 Code of Federal Regulations Part 136; where no methods are specified for a given pollutant, the method shall be approved by Central Valley Water Board staff. The following monitoring shall be conducted immediately upstream out of the influence of the Project and approximately 300 feet downstream of the active work area. Sampling results shall be submitted to this office by the first day of the second month following sampling. The sampling frequency and monitoring locations may be modified for certain projects with written permission from the Central Valley Water Board Executive Officer.

Parameter	Unit	Type of Sample	Frequency of Sample
Turbidity	NTU	Grab	Every 4 hours during in-water work
Settleable Material	ml/L	Grab	Same as above
pH	Standard units	Grab	Daily during concrete activity
Visible construction related pollutants	Observation	Visible Inspections	Continuous throughout the construction period

8. Activities shall not cause in surface waters:

   (a) where natural turbidity is between 0 and 5 Nephelometric Turbidity Units (NTUs), increases exceeding 1 NTU;

   (b) where natural turbidity is between 5 and 50 NTUs, increases exceeding 20 percent;

   (c) where natural turbidity is between 50 and 100 NTUs, increases exceeding 10 NTUs;

   (d) where natural turbidity is greater than 100 NTUs, increases exceeding 10 percent.

   In determining compliance with the above limits, appropriate averaging periods may be applied provided that beneficial uses will be fully protected. Averaging periods may only be used with prior permission of the Central Valley Water Board Executive Officer.

9. Activities shall not cause settleable material to exceed 0.1 ml/L in surface waters as measured in surface waters downstream from the Project.

10. Activities shall not cause the pH in surface waters to be depressed below 6.5 nor raised above 8.3.

11. The discharge of petroleum products or other excavated materials to surface water is prohibited. Activities shall not cause visible oil, grease, or foam in the work area or downstream. The Applicant shall notify the Central Valley Water Board immediately of any spill of petroleum products or other organic or earthen materials.

12. Prior to arrival at the project site and prior to leaving the project site, construction equipment that may contain invasive plants and/or seeds shall be cleaned to reduce the spreading of noxious weeds.

13. The Applicant shall notify the Central Valley Water Board immediately if any of the above conditions are violated, along with a description of measures it is taking to remedy the violation.

14. The Applicant shall comply with all California Department of Fish and Game Code § 1600 requirements for the Project.

15. The Applicant must obtain coverage under the NPDES General Permit for Storm Water Discharges Associated with Construction Activities issued by the State Water Resources Control Board for any project disturbing an area of one acre or greater.

16. In the event of any violation or threatened violation of the conditions of this Certification, the violation or threatened violation shall be subject to any remedies, penalties, process, or sanctions as provided for under State law and § 401 (d) of the federal Clean Water Act. The applicability of any State law authorizing remedies, penalties, process, or sanctions for the violation or threatened violation constitutes a limitation necessary to ensure compliance with this Certification.

17. If the Applicant or a duly authorized representative of the Applicant fails or refuses to furnish technical or monitoring reports, as required under this Certification, or falsifies any information provided in the monitoring reports, the Applicant will be subject to civil liability, for each day of violation, or criminal liability.

18. In response to a suspected violation of any condition of this Certification, the Central Valley Water Board may require the Applicant to furnish, under penalty of perjury, any technical or monitoring reports the Central Valley Water Board deems appropriate, provided that the burden, including cost of the reports, shall be in reasonable relationship to the need for the reports and the benefits to be obtained from them.

19. The Applicant shall allow staff of the Central Valley Water Board, or an authorized representative(s), upon the presentation of credentials and other documents, as may be required by law, to enter the Project premises for inspection, including taking photographs and securing copies of project-related records, for the purpose of assuring compliance with this Certification and determining the ecological success of the Project.

CENTRAL VALLEY WATER BOARD CONTACT PERSON:

Debra Mahnke, Water Resource Control Engineer
1685 E Street
Fresno, CA 93706
(559) 445-6281
debra.mahnke@waterboards.ca.gov

WATER QUALITY CERTIFICATION:

I hereby issue an order certifying that the proposed discharge from the California Department of Transportation Terra Bella Expressway Segment 1, WDID 5C54CR00074, will comply with the applicable provisions of § 301 ("Effluent Limitations"), § 302 ("Water Quality Related Effluent Limitations"), § 303 ("Water Quality Standards and Implementation Plans"), § 306 ("National Standards of Performance"), and § 307 ("Toxic and Pretreatment Effluent Standards") of the Clean Water Act. This discharge is also regulated under State Water Resources Control Board Water Quality Order No. 2003-0017 DWQ "Statewide General Waste Discharge Requirements For Dredged Or Fill Discharges That Have Received State Water Quality Certification."

Except insofar as may be modified by any preceding conditions, all certification actions are contingent on (a) the discharge being limited to and all proposed mitigation being completed in strict compliance with the Applicant's project description, the attached "Project Information Sheet," and the Applicant's water quality certification application; and (b) compliance with all applicable requirements of the Central Valley Water Board's *Water Quality Control Plan for the Tulare Lake Basin,* Second Edition, revised January 2004.

Any person aggrieved by this action may petition the State Water Resources Control Board to review the action in accordance with California Water Code § 13320 and California Code of Regulations, title 23, § 2050 and following. The State Water Resources Control Board must receive the petition by 5:00 p.m., 30 days after the date of this action, except that if the thirtieth day following the date of this action falls on a Saturday, Sunday, or state holiday, the petition must be received by the State Water Resources Control Board by 5:00 p.m. on the next business day. Copies of the law and regulations applicable to filing petitions may be found on the Internet at: http://www.waterboards.ca.gov/public_notices/petitions/water_quality or will be provided upon request.

Clay L. Rodgers

for Pamela C. Creedon
Executive Officer

Enclosure: Water Quality Order No. 2003-0017 DWQ
Attachment: Project Information Sheet

cc: Jason Brush, Supervisor, Wetlands Regulatory Office, U.S. Environmental Protection Agency, Region 9, San Francisco (email)
Kate Dadey, Sacramento South Branch Chief, Regulatory Unit, Department of the Army, Corps of Engineers, Sacramento
Bill Orme, Water Quality Certification Unit Chief, Division of Water Quality, State Water Resources Control Board, Sacramento (email)
Jeffrey Single, Regional Manager, San Joaquin Valley-Southern Sierra Region, California Department of Fish and Wildlife, Fresno

PROJECT INFORMATION SHEET

Application Date: 12 June 2015

Applicant: California Department of Transportation

Applicant Representatives: Javier Almaguer, Central Section Biology Chief
Todd Barosso, Project Biologist

Project Name: Terra Bella Expressway Segment 1

Application Number: WDID 5C54CR00074

Type of Project: Transportation

Project Location: SR 65 between Porterville and Terra Bella
Sections 3, 10, and 15, Township 22 South, Range 27 East, MDB&M.
Latitude: 36.048469° and Longitude: -119.039299° to Latitude: 35.96845 ° and Longitude: -119.053435°

Project Duration: The Project is tentatively scheduled to begin in May 2016 and be completed in 210 working days. The schedule may be adjusted to avoid or minimize environmental impacts.

County: Tulare

Receiving Water: Popular Ditch and seasonal wetlands, Tulare Lake Hydrologic Basin, South Valley Floor Hydrologic Unit #558.20, Tule Delta HA

Water Body Type: Un-vegetated streambed

Designated Beneficial Uses: The *Water Quality Control Plan for the Tulare Lake Basin,* Second Edition, revised January 2004 (Basin Plan), has designated beneficial uses for surface and ground waters within the region. Beneficial uses that could be impacted by the project include, but are not limited to: Municipal and Domestic Water Supply (MUN); Agricultural Supply (AGR); Industrial Supply (IND); Hydropower Generation (POW); Groundwater Recharge (GWR); Water Contact Recreation (REC-1); Non-Contact Water Recreation (REC-2); Warm Freshwater Habitat (WARM); Cold Freshwater Habitat (COLD); Preservation of Biological Habitats of Special Significance (BIOL); Rare, Threatened, or Endangered Species (RARE); Migration of Aquatic Organisms (MIGR); Spawning, Reproduction, and/or Early Development (SPWN); and Wildlife Habitat (WILD). A comprehensive and specific list of the beneficial uses applicable for the project area can be found at http://www.waterboards.ca.gov/centralvalley/water_issues/basin_plans/index.shtml.

Project Description: The Project consists of widening a two lane highway to a four lane expressway.

Preliminary Water Quality Concerns: Construction activities may impact surface waters with increased turbidity and settleable matter.

Proposed Mitigation to Address Concerns: The Project was designed to reduce not only impacts to waters but also to minimize the effects of erosion. A 150-foot buffer from any active water course will be used in regards to fueling, washing, and storing of equipment to avoid potential water pollution. A Storm Water Pollution Prevention Plan in conjunction with all applicable best management practices will be used pre and post construction. Work in the surface waters will occur during the dry months.

Fill/Excavation Area: Approximately 0.054 acres of seasonal wetlands and 0.007 acres (13 linear feet) of un-vegetated streambed (ditch) will be permanently impacted by placement of approximately 30 cubic yards of clean fill/sand and concrete. The Project will also temporarily impact 0.045 acres (190 linear feet) of un-vegetated streambed that will be restored to original condition.

Dredge Volume: None

U.S. Army Corps of Engineers Permit Number: Nationwide Permit 14

Department of Fish and Wildlife Streambed Alteration Agreement: The Applicant applied for a Streambed Alteration Agreement on 16 March 2015.

Status of CEQA Compliance: The Department of Fish and Wildlife approved a Categorical Exemption and filed a Notice of Exemption on 4 May 2010 (State Clearinghouse Number SCH 2010058057).

The California Department of Transportation approved a Mitigated Negative Declaration on 5 July 2005 and issued a Notice of Determination (State Clearinghouse Number SCH 2004041130).

As a Responsible Agency under California Environmental Quality Act (CEQA), the Central Valley Water Board reviewed the Environmental Impact Report and found that the Project impacts to water quality were adequately addressed. Mitigation for impacts to water quality is discussed in the "Proposed Mitigation to Address Concerns" section above and the "Compensatory Mitigation" section below.

Compensatory Mitigation: The applicant purchased 2.1 acres of seasonal wetland credits from the Sand Creek Conservation Bank to mitigate for 0.054 acres of impacts to the seasonal wetlands. No mitigation is required for the 0.07 acres of permanent impacts to the ditch. Temporarily impacted areas will be restored to pre-Project condition.

Application Fee Provided: Total fees of $2,119 have been submitted as required by 23 CCR §3833(b)(3)(A) and by 23 CCR §2200(e). Additional fees of $622 must be submitted before this certification is valid.

STATE WATER RESOURCES CONTROL BOARD

WATER QUALITY ORDER NO. 2003 - 0017 - DWQ

STATEWIDE GENERAL WASTE DISCHARGE REQUIREMENTS FOR DREDGED OR FILL DISCHARGES THAT HAVE RECEIVED STATE WATER QUALITY CERTIFICATION (GENERAL WDRs)

The State Water Resources Control Board (SWRCB) finds that:

1. Discharges eligible for coverage under these General WDRs are discharges of dredged or fill material that have received State Water Quality Certification (Certification) pursuant to federal Clean Water Act (CWA) section 401.

2. Discharges of dredged or fill material are commonly associated with port development, stream channelization, utility crossing land development, transportation water resource, and flood control projects. Other activities, such as land clearing, may also involve discharges of dredged or fill materials (e.g., soil) into waters of the United States.

3. CWA section 404 establishes a permit program under which the U.S. Army Corps of Engineers (ACOE) regulates the discharge of dredged or fill material into waters of the United States.

4. CWA section 401 requires every applicant for a federal permit or license for an activity that may result in a discharge of pollutants to a water of the United States (including permits under section 404) to obtain Certification that the proposed activity will comply with State water quality standards. In California, Certifications are issued by the Regional Water Quality Control Boards (RWQCB) or for multi-Region discharges, the SWRCB, in accordance with the requirements of California Code of Regulations (CCR) section 3830 et seq. The SWRCB's water quality regulations do not authorize the SWRCB or RWQCBs to waive certification, and therefore, these General WDRs do not apply to any discharge authorized by federal license or permit that was issued based on a determination by the issuing agency that certification has been waived. Certifications are issued by the RWQCB or SWRCB before the ACOE may issue CWA section 404 permits. Any conditions set forth in a Certification become conditions of the federal permit or license if and when it is ultimately issued.

5. Article 4, of Chapter 4 of Division 7 of the California Water Code (CWC), commencing with section 13260(a), requires that any person discharging or proposing to discharge waste, other than to a community sewer system, that could affect the quality of the waters of the State,[1] file a report of waste discharge (ROWD). Pursuant to Article 4, the RWQCBs are required to prescribe waste discharge requirements (WDRs) for any proposed or existing discharge unless WDRs are waived pursuant to CWC section 13269. These General WDRs fulfill the requirements of Article 4 for proposed dredge or fill discharges to waters of the United States that are regulated under the State's CWA section 401 authority.

---

[1] "Waters of the State" as defined in CWC Section 13050(e)

6. These General WDRs require compliance with all conditions of Certification orders to ensure that water quality standards are met.

7. The U.S. Supreme Court decision of *Solid Waste Agency of Northern Cook County v. U.S. Army Corps of Engineers*, 531 U.S. 159 (2001) (the *SWANCC* decision) called into question the extent to which certain "isolated" waters are subject to federal jurisdiction. The SWRCB believes that a Certification is a valid and enforceable order of the SWRCB or RWQCBs irrespective of whether the water body in question is subsequently determined not to be federally jurisdictional. Nonetheless, it is the intent of the SWRCB that all Certification conditions be incorporated into these General WDRs and enforceable hereunder even if the federal permit is subsequently deemed invalid because the water is not deemed subject to federal jurisdiction.

8. The beneficial uses for the waters of the State include, but are not limited to, domestic and municipal supply, agricultural and industrial supply, power generation, recreation, aesthetic enjoyment, navigation, and preservation and enhancement of fish, wildlife, and other aquatic resources.

9. Projects covered by these General WDRs shall be assessed a fee pursuant to Title 23, CCR section 3833.

10. These General WDRs are exempt from the California Environmental Quality Act (CEQA) because (a) they are not a "project" within the meaning of CEQA, since a "project" results in a direct or indirect physical change in the environment (Title 14, CCR section 15378); and (b) the term "project" does not mean each separate governmental approval (Title 14, CCR section 15378(c)). These WDRs do not authorize any specific project. They recognize that dredge and fill discharges that need a federal license or permit must be regulated under CWA section 401 Certification, pursuant to CWA section 401 and Title 23, CCR section 3855, et seq. Certification and issuance of waste discharge requirements are overlapping regulatory processes, which are both administered by the SWRCB and RWQCBs. Each project subject to Certification requires independent compliance with CEQA and is regulated through the Certification process in the context of its specific characteristics. Any effects on the environment will therefore be as a result of the certification process, not from these General WDRs. (Title 14, CCR section 15061(b)(3)).

11. Potential dischargers and other known interested parties have been notified of the intent to adopt these General WDRs by public hearing notice.

12. All comments pertaining to the proposed discharges have been heard and considered at the November 4, 2003 SWRCB Workshop Session.

13. The RWQCBs retain discretion to impose individual or General WDRs or waivers of WDRs in lieu of these General WDRs whenever they deem it appropriate. Furthermore, these General WDRs are not intended to supersede any existing WDRs or waivers of WDRs issued by a RWQCB.

IT IS HEREBY ORDERED that WDRs are issued to all persons proposing to discharge dredged or fill material to waters of the United States where such discharge is also subject to the water quality certification requirements of CWA section 401 of the federal Clean Water Act (Title 33 United States Code section 1341), and such certification has been issued by the applicable RWQCB or the SWRCB, unless the applicable RWQCB notifies the applicant that its discharge will be regulated through WDRs or waivers of WDRs issued by the RWQCB. In order to meet the provisions contained in Division 7 of CWC and regulations adopted thereunder, dischargers shall comply with the following:

1. Dischargers shall implement all the terms and conditions of the applicable CWA section 401 Certification issued for the discharge. This provision shall apply irrespective of whether the federal license or permit for which the Certification was obtained is subsequently deemed invalid because the water body subject to the discharge has been deemed outside of federal jurisdiction.

2. Dischargers are prohibited from discharging dredged of fill material to waters of the United States without first obtaining Certification from the applicable RWQCB or SWRCB.

CERTIFICATION

The undersigned, Clerk to the Board, does hereby certify that the foregoing is a full, true, and correct copy of an order duly and regularly adopted at a meeting of the State Water Resources Control Board held on November 19, 2003.

AYE: Arthur G. Baggett, Jr.
Peter S. Silva
Richard Katz
Gary M. Carlton
Nancy H. Sutley

NO: None.

ABSENT: None.

ABSTAIN: None.

Debbie Irvin
Clerk to the Board

State of California
DEPARTMENT OF TRANSPORTATION

California State Transportation Agency

Serious Drought.
Help Save Water!

Memorandum

To: MR. ABDUL BAKER
DESIGN SENIOR
PROJECT DEVELOPMENT
DISTRICT DESIGN 1, BRANCH A

Date: March 17, 2015

File: 06-TUL-65- PM – 17.37
ID: 0600000967
EA: 06-43401
Changeable Message
Sign (CMS)

Project Engineer – Eltahir Ataelgeed

From: **DEPARTMENT OF TRANSPORTATION**
DIVISION OF ENGINEERING SERVICES
OFFICE OF GEOTECHNICAL DESIGN NORTH (OGDN)

Subject: **GEOTECHNICAL DESIGN REPORT (GDR) – CHANGEABLE MESSAGE SIGN**

INTRODUCTION

This Geotechnical Design Report (GDR) is presented in response to the request dated February 17, 2015 to provide foundation recommendations regarding the installation of a Changeable Message Sign (CMS). The proposed location of the CMS is on State Route 65 Post Mile 17.37. In general, CMS signs are supported on a CIDH pile per the 2010 Caltrans Standard Plans (S116). Design data for the proposed sign is presented in Table 1 below.

Table 1 - Design Data for Proposed Changeable Message Signs

Highway	Post Mile	Direction	Pile Type	Pile Diameter (in)	Pile Length (ft)	Ground Condition
65	17.37	FNBT	CIDH	60	22.0	Level

FSBT: Facing north bound traffic.

The purpose of the investigation is to determine if the standard plan design at this site is adequate from a geotechnical point of view.

Pertinent Reports and Investigations

The following publications were reviewed to assist in the assessment of site conditions:

- Project Plans and Details, District Design.
- Foundation Investigation (Report), RTE 196/Akers St. UC. PM R5.0/R8.8 (Br. No. 46-0251.), dated 8/29/1997
- 1998 LOTB, Tule River Bridge (Replace) RTE 65, PM 18.7, (Br. 46-0259)
- 1953 LOTB, Tule River Bridge (Original) RTE 65, (Br. 46-0163)
- Google Earth Satellite Maps.
- 2010 Geologic Map of California
- State Department of Water Resources (DWR) Groundwater Data Library.

SITE GEOLOGY

The site is situated on the Tule River flood plan that is located in southeastern San Joaquin Valley. Near surface Pleistocene and Holocene soils underlie the flood plain and the site. Based on the Tule River Bridge boring logs (Tule River located 7500 ft north of the site) the soils consist primarily of interbeds of fine and coarse granular river channel deposits inter-dispersed in lesser amounts of fine grained overbank and/or lake deposits. Based on our knowledge of the regional soil conditions we believe that the type of soils at the site should be similar although the distribution might be different. A summary of the upper 75 feet of the more recent borings is provided below. The four bridge borings ranged in depth from 146 ft to 172 ft.

At the Tule River Bridge site the upper approximate 25 ft consists mainly of loose to medium dense silty sand, poorly graded sand and clayey sand (avg. N=8 b/f). From 25 ft to 35-40 ft a dense to very dense gravel is present (avg. N=63 b/f). Below to a depth of 75 ft the soils consist mainly of medium dense sandy silt and lesser amounts of medium dense sand and clayey silt (avg. N=25 b/f). Note: Soil classification was based on the Soil and Rock Logging Classification Manual, 2010 Ed. Hammer correction for N-values are not known. A correction factor of 1 was assumed.

GROUNDWATER CONDITION

Groundwater data (Ref. Bridge borings) show groundwater at a depth of 12 ft (9/1953) and 9.8ft (7/1998). Historical Department of Water Resources (DWR) water well data (1944-2008 and 2012-2014) show the groundwater periodically fluctuating between a depth of 13.4 ft and 119 ft. The overall trend for this 64 year period was that the water table (WT) was above the proposed CMS pile tip elevation most of the time up to 1987 and beyond to 2014 the WT was below the pile tip elevation.

The pattern in the rise and fall of the groundwater table is expected to be in concert with the regions seasonal cycle, agricultural activities that include well pumping, irrigation, water release from dams and soil permeability. In the long term the water table will be affected by climate change.

SEISMIC CONDITION

Based on seismic evaluation and considering the depth of groundwater and soil conditions the liquefaction potential at the site is impact deemed insignificant.

SOIL CORROSION

The soil corrosion potential at the site is not known. A soil sample will be collected at the site for testing. A corrosion report will be subsequently provided.

FOUNDATION RECOMMANDATIONS

The proposed 500 CMS Sign may be supported by a CIDH pile foundation as described in the 2010 Standard Plan (Pile diameter 5 ft and a pile length 22 ft).

CONSTRUCTION CONSIDERATIONS

The most recent groundwater data show groundwater below the recommended CIDH pile tip elevation. However, historic data show the groundwater level at times was above the proposed pile tip depth. In the case that the groundwater elevation is above the pile tip elevation at the time of construction, the pile construction shall be by Wet Specification method.

Temporary casing may be needed due to sandy materials presented at the site. Touching the walls of the shaft during placement of the steel reinforcement should be avoided to not exacerbate soil unraveling.

If you have any questions regarding this report please contact William Bertucci (916) 203-7992 or John Huang (916) 227-1037.

Report by:

for Bertucci

WILLIAM BERTUCCI
Associate Engineering Geologist
Office of Geotechnical Design – North
Geotechnical Services
Division of Engineering Services

JOHN HUANG
Senior Materials and Research Engineer
Office of Geotechnical Design – North
Geotechnical Services
Division of Engineering Services

REGISTERED PROFESSIONAL ENGINEER
QIANG HUANG
No. C035671
Exp. 12/31/16
CIVIL
STATE OF CALIFORNIA

Attachment: 1998 Log of Test Borings, Tule River Bridge Replace (42-0259)
1953 Log of Test Borings, Tule River Bridge Original (46-0163)

cc: District Project Manager – Sam Sherman
District Design Senior – Abdul Baker
District Project Engineer – Eltahir Ataelgeed
Project Coordination Engineer – Peggy Lim
District Environmental Planning – Jaycee Azevedo
District Materials Engineer – Doug Lambert
GS Corporate

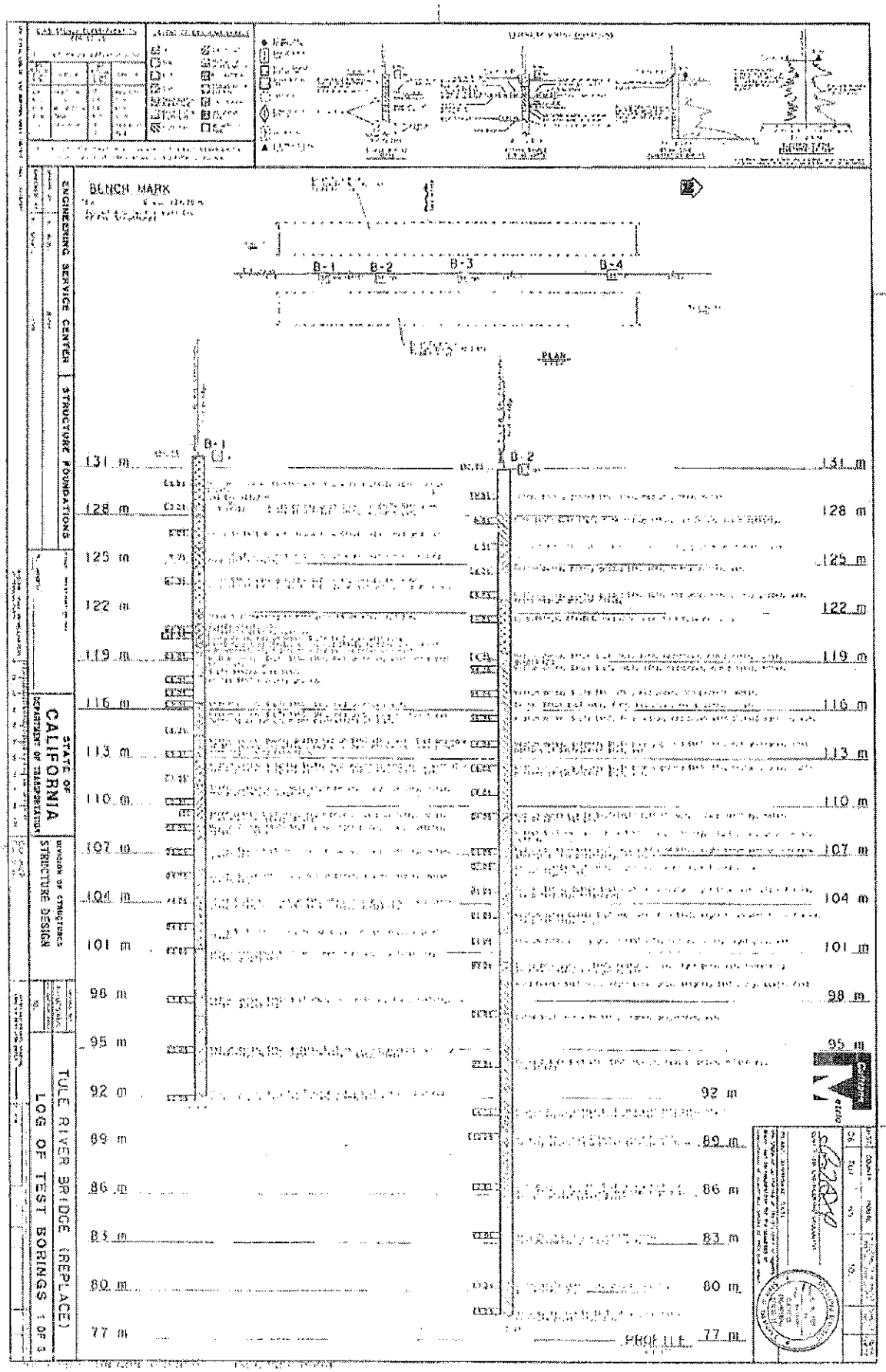
BENCH MARK
B-1
B-2
B-3
B-4
PLAN
B-1
B-2
131 m
128 m
125 m
122 m
119 m
116 m
113 m
110 m
107 m
104 m
101 m
98 m
95 m
92 m
89 m
86 m
83 m
80 m
77 m
PROFILE
ENGINEERING SERVICE CENTER
STRUCTURE FOUNDATIONS
STATE OF CALIFORNIA
DEPARTMENT OF TRANSPORTATION
DIVISION OF STRUCTURES
STRUCTURE DESIGN
TULE RIVER BRIDGE (REPLACE)
LOG OF TEST BORINGS 1 OF 3

BENCH MARK

FOR PLAN VIEW, SEE "LOG OF TEST BORINGS", SHEET 1 OF 3.

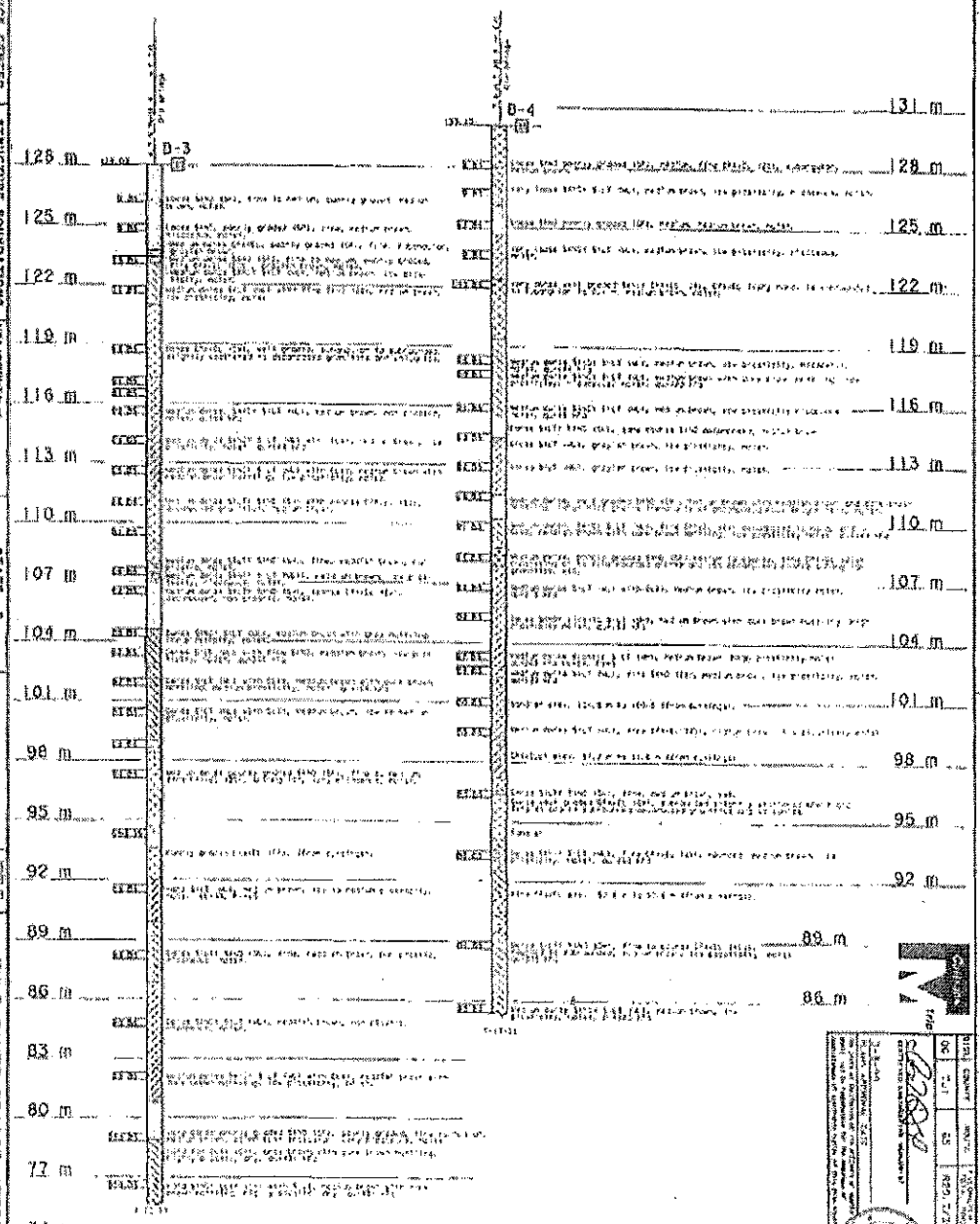

ENGINEERING SERVICE CENTER | STRUCTURE FOUNDATIONS

STATE OF CALIFORNIA
DEPARTMENT OF TRANSPORTATION

DIVISION OF STRUCTURES
STRUCTURE DESIGN 9

TULE RIVER BRIDGE (REPLACE)

LOG OF TEST BORINGS 2 OF 3

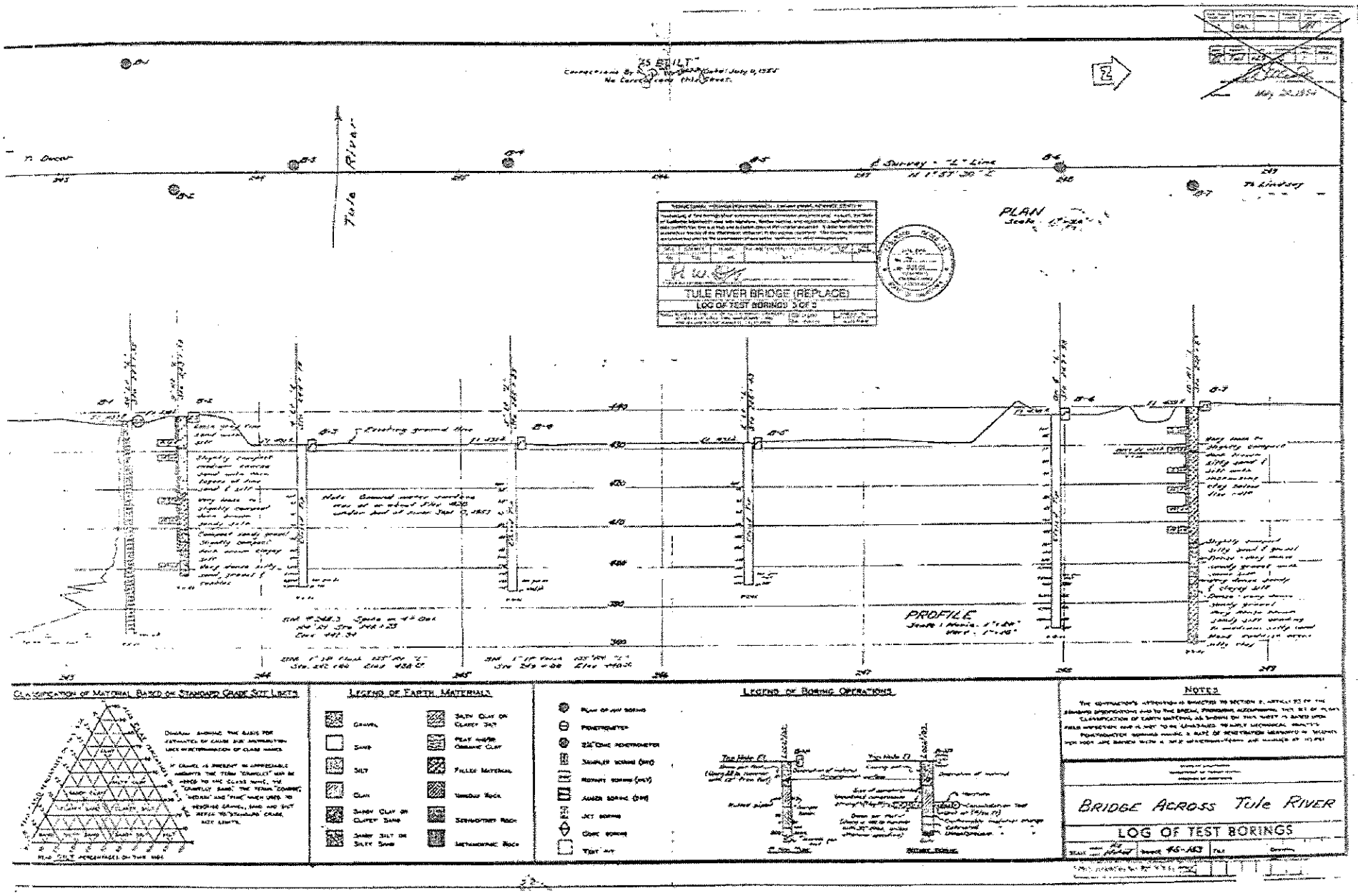

"AS BUILT"
Tule River
PLAN
TULE RIVER BRIDGE (REPLACE)
LOG OF TEST BORINGS 3 OF 3
PROFILE
CLASSIFICATION OF MATERIAL BASED ON STANDARD GRADE SIZE LIMITS
LEGEND OF EARTH MATERIALS
GRAVEL
SAND
SILT
CLAY
SANDY CLAY OR CLAYEY SAND
SANDY SILT OR SILTY SAND
SILTY CLAY OR CLAYEY SILT
PEAT AND/OR ORGANIC CLAY
FILLED MATERIAL
VARIOUS ROCK
SEDIMENTARY ROCK
METAMORPHIC ROCK
LEGEND OF BORING OPERATIONS
NOTES
BRIDGE ACROSS TULE RIVER
LOG OF TEST BORINGS

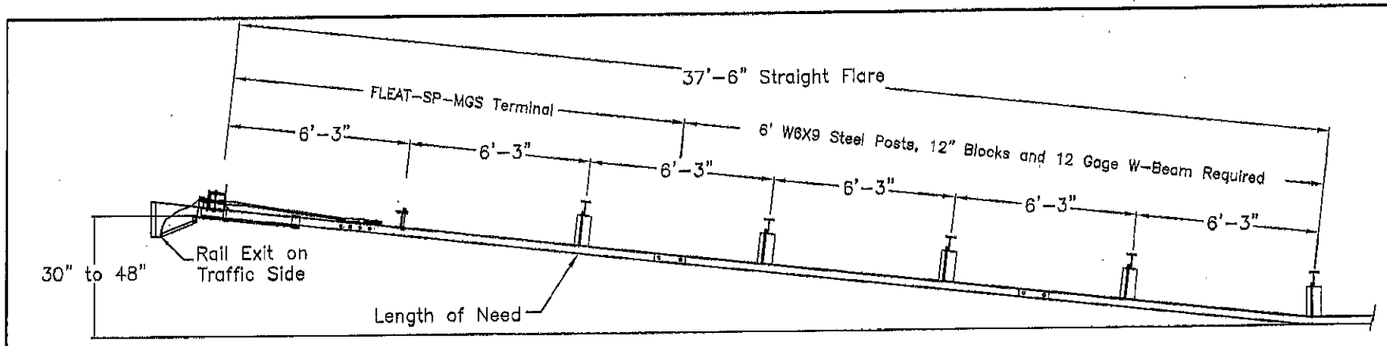

PLAN

TRAFFIC

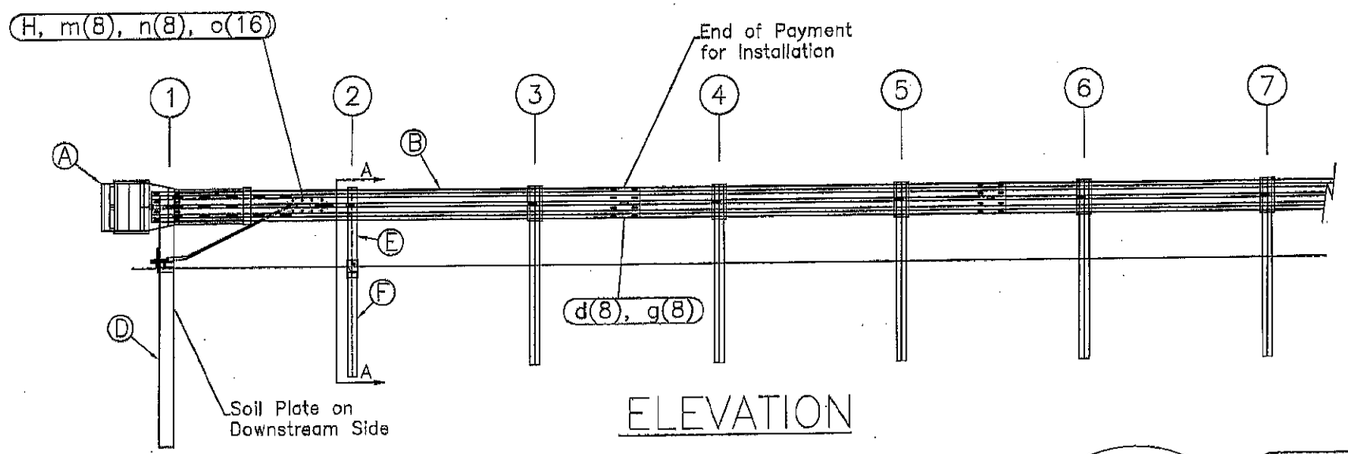

ELEVATION

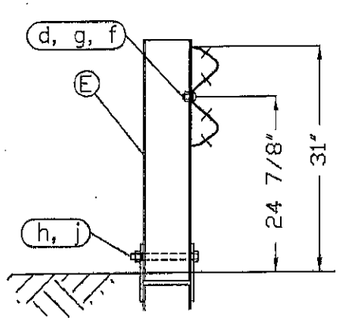

SECTION A–A
Post #2

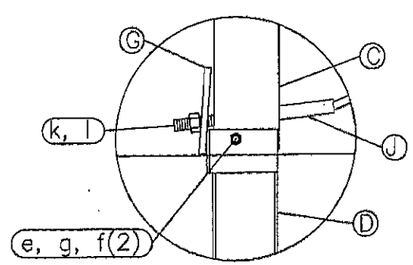

Post #1 Connection Detail

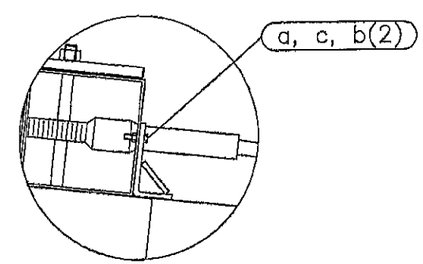

Impact Head Connection Detail

ITEM	QTY	BILL OF MATERIALS	ITEM NO.
A	1	IMPACT HEAD	F3000
B	1	W-BEAM GUARDRAIL END SECTION, 12 Ga.	MGS-SF1303
C	1	FIRST POST TOP (6X6X⅜" Tube)	TPHP1A
D	1	FIRST POST BOTTOM (6' W6X15)	TPHP1B
E	1	SECOND POST ASSEMBLY TOP	UHP2A
F	1	SECOND POST ASSEMBLY BOTTOM	HP3B
G	1	BEARING PLATE	E750
H	1	CABLE ANCHOR BOX	S760
J	1	BCT CABLE ANCHOR ASSEMBLY	E770
		HARDWARE (ALL DIMENSIONS IN INCHES)	
a	2	5/16 x 1 HEX BOLT GRD 5	B5160104A
b	4	5/16 WASHER	W0516
c	2	5/16 HEX NUT	N0516
d	9	5/8 Dia. x 1 1/4 SPLICE BOLT (POST #2)	B580122
e	1	5/8 Dia. x 9 HEX BOLT GRD 5	B580904A
f	3	5/8 WASHER	W050
g	10	5/8 Dia. H.G.R NUT	N050
h	1	3/4 Dia. x 8 1/2 HEX BOLT GRD A449	B340854A
j	1	3/4 Dia. HEX NUT	N030
k	2	1 ANCHOR CABLE HEX NUT	N100
l	2	1 ANCHOR CABLE WASHER	W100
m	8	CABLE ANCHOR BOX SHOULDER BOLT	SB58A
n	8	1/2 A325 STRUCTURAL NUT	N055A
o	16	1 1/16 OD x 9/16 ID A325 STR. WASHER	W050A

GENERAL NOTES:
1. All bolts, nuts, cable assemblies, cable anchors and bearing plates shall be galvanized.
2. The lower sections of the Posts 1&2 shall not protrude more than 4 in above the ground (measured along a 5' cord). Site grading may be necessary to meet this requirement.
3. The lower sections of the hinged posts should not be driven with the upper post attached. If the post is placed in a drilled hole, the backfill material must be satisfactorily compacted to prevent settlement.
4. When competent rock is encountered, a 12" Ø post hole, 20 in. deep cored into the rock surface may be used if approved by the engineer for post 1. Granular material will be placed in the bottom of the hole, approximately 2.5" deep to provide drainage. The first post can be field cut to length, placed in the hole and backfilled with suitable backfill. The soil plate may be trimmed if required.
5. The breakaway cable assembly must be taut. A locking device (vice grips or channel lock pliers) should be used to prevent the cable from twisting when tightening nuts.

RSI
Road Systems, Inc.
Big Spring, TX
Phone: 432-263-2435
or Phone: 330-346-0721

FLEAT-SP-MGS Terminal
Midwest Guardrail System
31" Top of Rail

Sheet: 1
Date: 02/24/10
By: JRR
Drawing Name: FLT-SP-S-MGS
Scale: None
Rev: 0

Appendix A - System Configuration, 37' 6" MGS

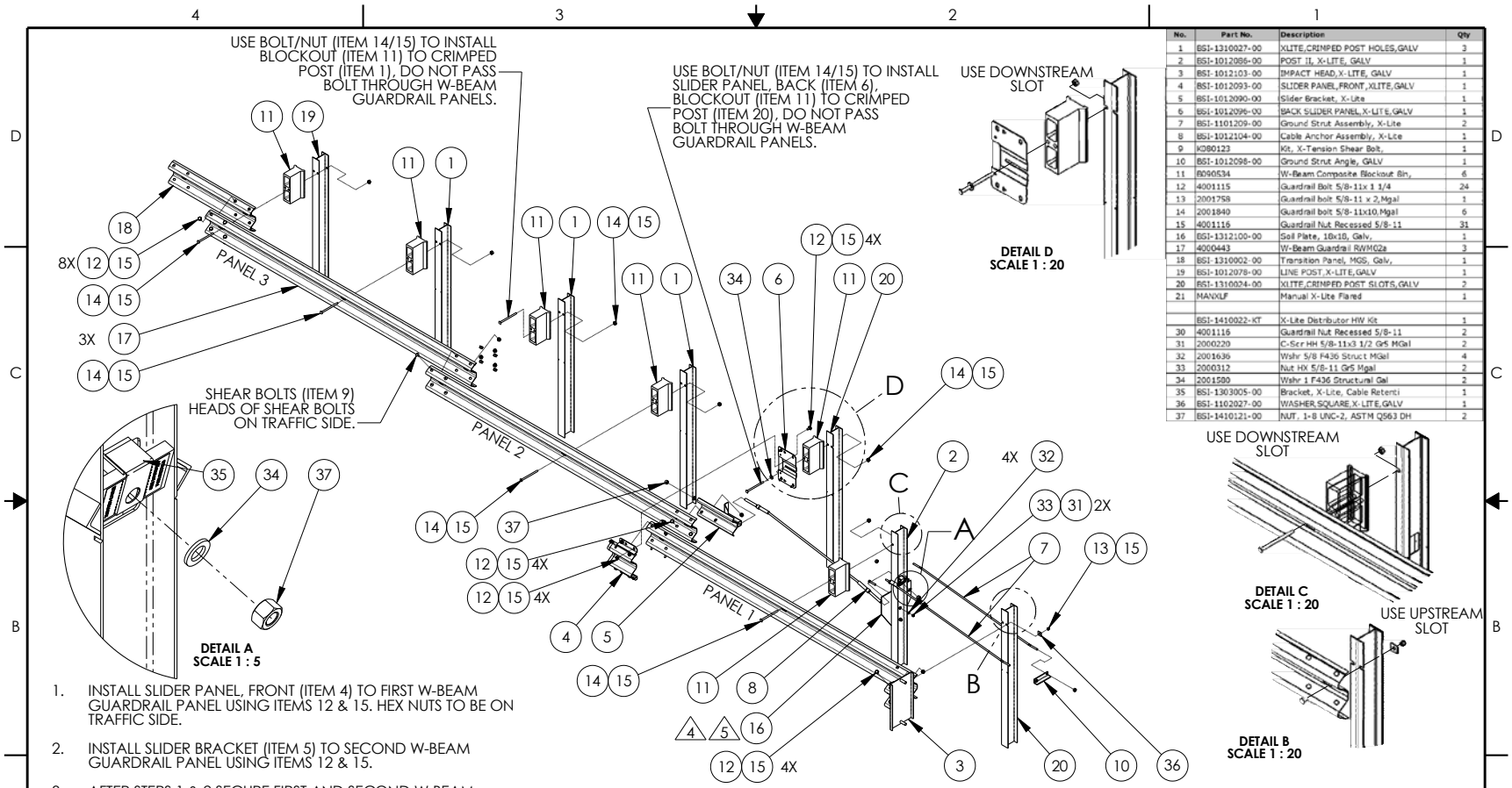

No.	Part No.	Description	Qty
1	BSI-1310027-00	XLITE,CRIMPED POST HOLES,GALV	3
2	BSI-1012086-00	POST II, X-LITE, GALV	1
3	BSI-1012103-00	IMPACT HEAD,X-LITE, GALV	1
4	BSI-1012093-00	SLIDER PANEL,FRONT,XLITE,GALV	1
5	BSI-1012090-00	Slider Bracket, X-Lite	1
6	BSI-1012096-00	BACK SLIDER PANEL,X-LITE,GALV	1
7	BSI-1101209-00	Ground Strut Assembly, X-Lite	2
8	BSI-1012104-00	Cable Anchor Assembly, X-Lite	1
9	K080123	Kit, X-Tension Shear Bolt,	1
10	BSI-1012098-00	Ground Strut Angle, GALV	1
11	B090534	W-Beam Composite Blockout Bln,	6
12	4001115	Guardrail Bolt 5/8-11x 1 1/4	24
13	2001758	Guardrail bolt 5/8-11 x 2,Mgal	1
14	2001840	Guardrail bolt 5/8-11x10,Mgal	6
15	4001116	Guardrail Nut Recessed 5/8-11	31
16	BSI-1312100-00	Soil Plate, 10x10, Galv,	1
17	4000443	W-Beam Guardrail RWM02a	3
18	BSI-1310002-00	Transition Panel, MGS, Galv,	1
19	BSI-1012078-00	LINE POST,X-LITE,GALV	1
20	BSI-1310024-00	XLITE,CRIMPED POST SLOTS,GALV	2
21	MANXLF	Manual X-Lite Flared	1
	BSI-1410022-KT	X-Lite Distributor HW Kit	1
30	4001116	Guardrail Nut Recessed 5/8-11	2
31	2000220	C-Scr HH 5/8-11x3 1/2 Gr5 MGal	2
32	2001636	Wshr 5/8 F436 Struct MGal	4
33	2000312	Nut HX 5/8-11 Gr5 Mgal	2
34	2001500	Wshr 1 F436 Structural Gal	2
35	BSI-1303005-00	Bracket, X-Lite, Cable Retenti	1
36	BSI-1102027-00	WASHER,SQUARE,X-LITE,GALV	1
37	BSI-1410121-00	NUT, 1-8 UNC-2, ASTM Q563 DH	2

1. INSTALL SLIDER PANEL, FRONT (ITEM 4) TO FIRST W-BEAM GUARDRAIL PANEL USING ITEMS 12 & 15. HEX NUTS TO BE ON TRAFFIC SIDE.
2. INSTALL SLIDER BRACKET (ITEM 5) TO SECOND W-BEAM GUARDRAIL PANEL USING ITEMS 12 & 15.
3. AFTER STEPS 1 & 2 SECURE FIRST AND SECOND W-BEAM GUARDRAIL PANEL USING ITEMS 6, 12 & 15. HEX NUTS TO BE ON TRAFFIC SIDE.
4. IF ROCK OR STIFF SOIL IS ENCOUNTERED, THE POST AND SOIL PLATE MAY BE INSTALLED BY AUGERING AND BACKFILLING THE HOLE. EXTRA CARE MUST BE TAKEN TO PREVENT SETTLEMENT OR LATERAL DISPLACEMENT OF THE POST. BACKFILL MATERIAL SHALL BE COMPACTED TO OPTIMUM COMPACTION.
5. IF ROCK IS ENCOUNTERED, THE SOIL PLATE MAY BE MODIFIED IF APPROVED BY THE PROJECT ENGINEER.

© 2010 BARRIER SYSTEMS INC. THE INFORMATION CONTAINED IN THIS DRAWING IS THE SOLE PROPERTY OF BARRIER SYSTEMS INC. ANY REPRODUCTION IN PART OR WHOLE WITHOUT THE WRITTEN PERMISSION OF BARRIER SYSTEMS INC. IS PROHIBITED.

APPROVALS

DRAWN BY:	JMT
DRAWN DATE:	10/09/13
APPR'D BY:	GAD
APPR'D DATE:	10/09/13

UNLESS OTHERWISE SPECIFIED DIMENSIONS ARE IN INCHES. TOLERANCES ARE:
FRACTIONS ±1/16 DECIMAL .XX = ±.03 .XXX = ±.010 ANGLES ±1/2°
INTERPRET DIMENSIONS AND TOLERANCES PER ASME Y14.5-1994

THIRD ANGLE PROJECTION

DO NOT SCALE DRAWING

REV	ECN#	DATE
F	2540	12/12/14
E	2533	12/01/12
D	2444	09/26/14
C	2253	03/25/14
B	2220	01/23/14
A	2165	11/13/13
0	2151	10/09/13

LINDSAY™ TRANSPORTATION SOLUTIONS

BARRIER SYSTEMS
180 River Road
Rio Vista, CA 94571
Tel: 888-800-3691
www.barriersystemsinc.com

TITLE
X-LITE SYSTEM ASSEMBLY FLARED TRANSITION TO MGS

SIZE B | DWG NO. XLFSUS-MGS | REV. F
SCALE 1:40 | SHEET 1 OF 2

Doc. B100108

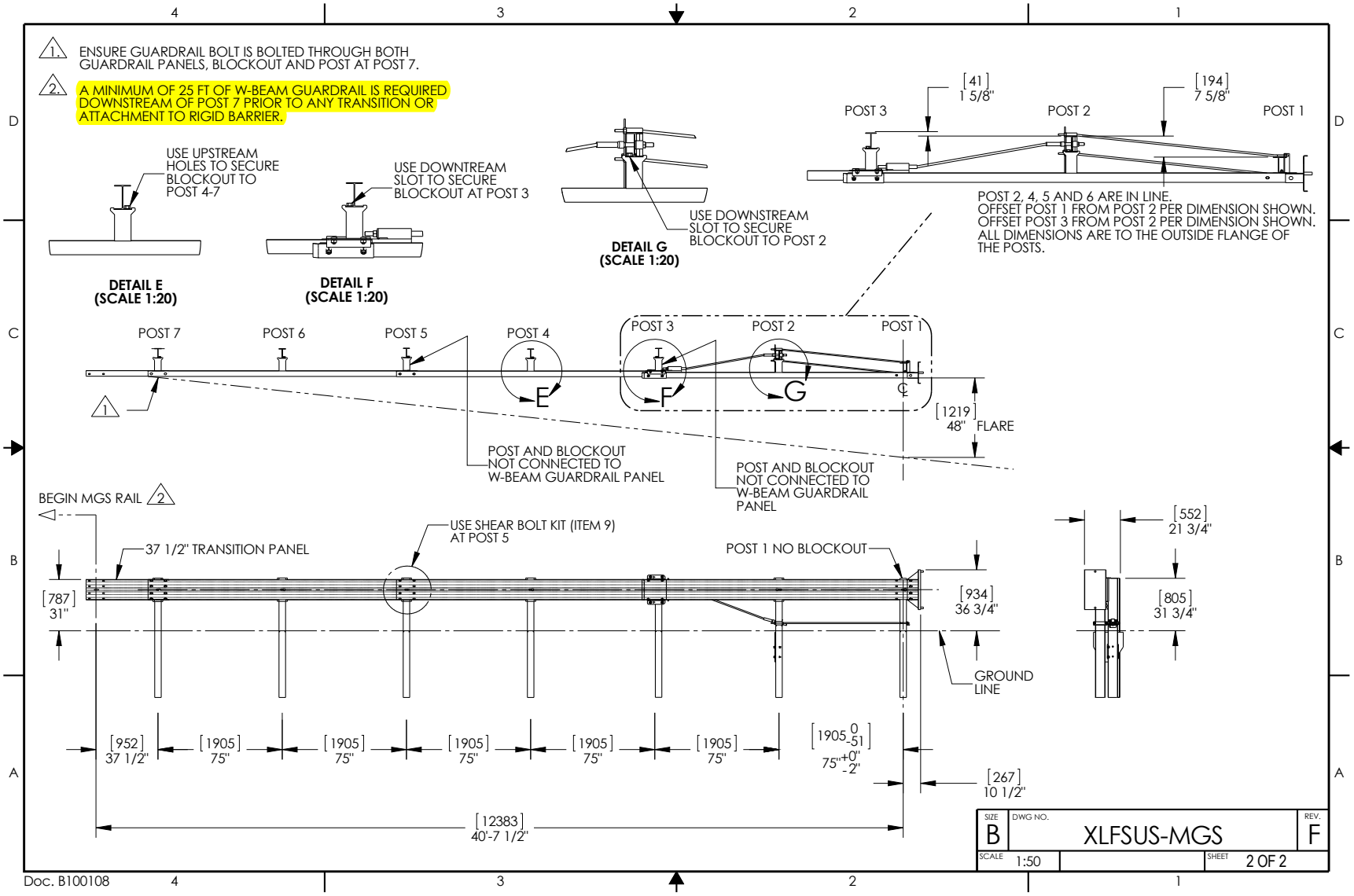
1. ENSURE GUARDRAIL BOLT IS BOLTED THROUGH BOTH GUARDRAIL PANELS, BLOCKOUT AND POST AT POST 7.
2. A MINIMUM OF 25 FT OF W-BEAM GUARDRAIL IS REQUIRED DOWNSTREAM OF POST 7 PRIOR TO ANY TRANSITION OR ATTACHMENT TO RIGID BARRIER.
USE UPSTREAM HOLES TO SECURE BLOCKOUT TO POST 4-7
DETAIL E (SCALE 1:20)
USE DOWNTREAM SLOT TO SECURE BLOCKOUT AT POST 3
DETAIL F (SCALE 1:20)
USE DOWNSTREAM SLOT TO SECURE BLOCKOUT TO POST 2
DETAIL G (SCALE 1:20)
[41] 1 5/8"
[194] 7 5/8"
POST 3
POST 2
POST 1
POST 2, 4, 5 AND 6 ARE IN LINE.
OFFSET POST 1 FROM POST 2 PER DIMENSION SHOWN.
OFFSET POST 3 FROM POST 2 PER DIMENSION SHOWN.
ALL DIMENSIONS ARE TO THE OUTSIDE FLANGE OF THE POSTS.
POST 7
POST 6
POST 5
POST 4
POST 3
POST 2
POST 1
E
F
G
[1219] 48" FLARE
POST AND BLOCKOUT NOT CONNECTED TO W-BEAM GUARDRAIL PANEL
POST AND BLOCKOUT NOT CONNECTED TO W-BEAM GUARDRAIL PANEL
BEGIN MGS RAIL
37 1/2" TRANSITION PANEL
USE SHEAR BOLT KIT (ITEM 9) AT POST 5
POST 1 NO BLOCKOUT
[787] 31"
[934] 36 3/4"
GROUND LINE
[552] 21 3/4"
[805] 31 3/4"
[952] 37 1/2"
[1905] 75"
[1905] 75"
[1905] 75"
[1905] 75"
[1905] 75"
[1905 0 -51] 75" +0" -2"
[267] 10 1/2"
[12383] 40'-7 1/2"
SIZE B
DWG NO. XLFSUS-MGS
REV. F
SCALE 1:50
SHEET 2 OF 2
Doc. B100108

ITEM NO.	PART NUMBER	DESCRIPTION	QTY	UOM
1	BSI-1301252-KT	X-Tension Terminal Comp, 31 in	1	EACH
2	K070202	X-Tension Hardware Kit, GT,	1	EACH
3	K070206	X-Tension System Hardware Kit,	1	EACH
4	K070210	X-Tension GT Guardrail	1	EACH
5	B061100	BSI, I-Beam Post, Middle, X350	1	EACH
6	MANXT1	X-TENSION Installation Manual	1	EACH

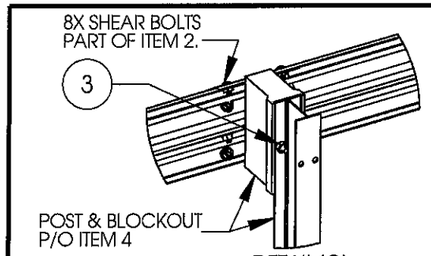

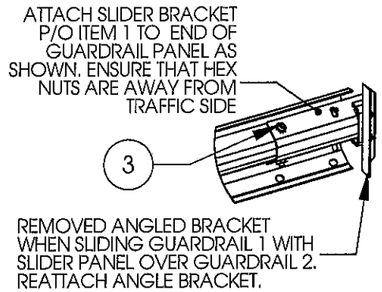

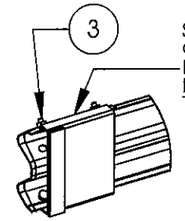

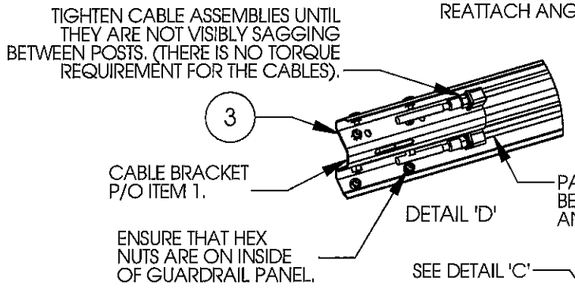

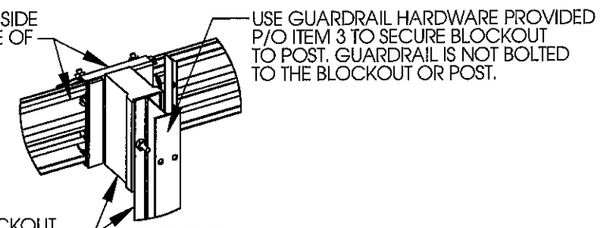

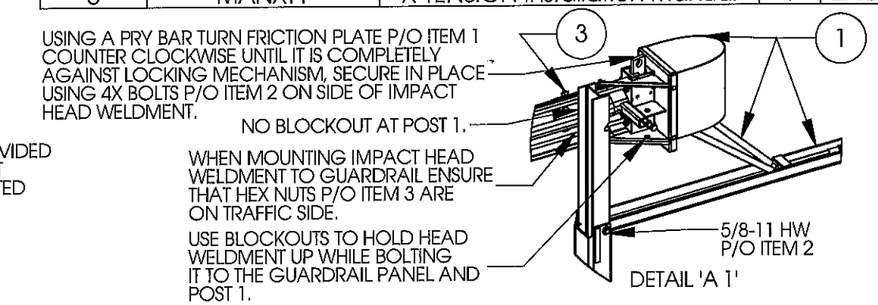

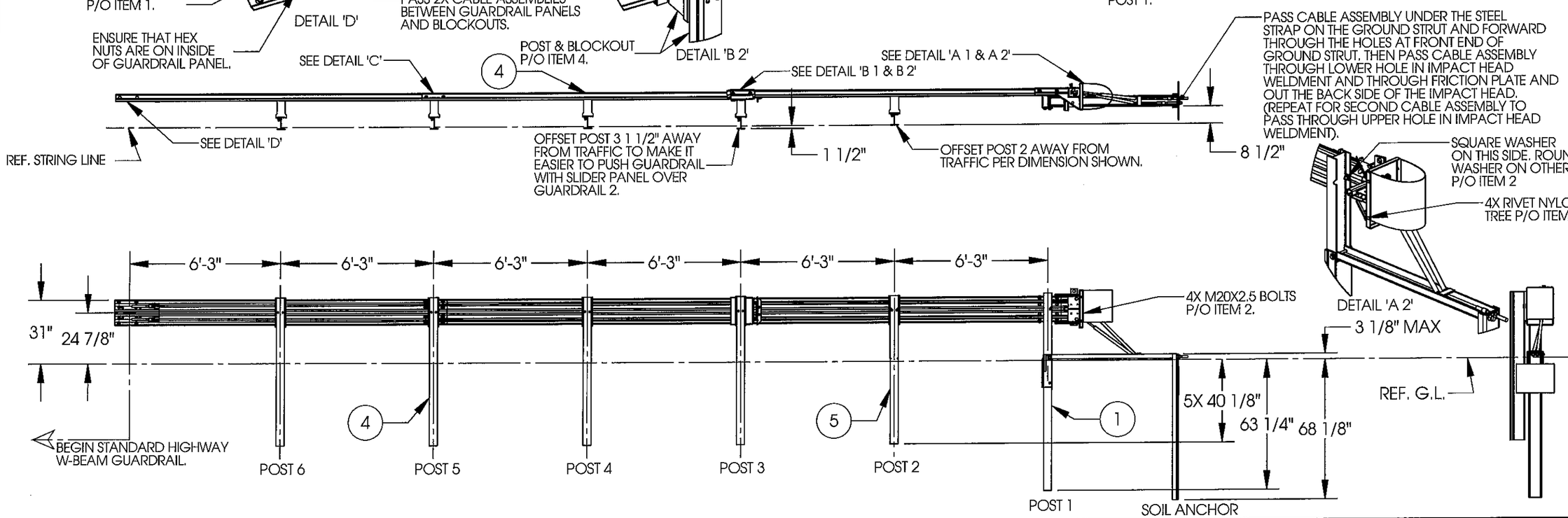

NOTES: UNLESS OTHERWISE SPECIFIED.

1. SYSTEM TO BE INSTALLED PER MANUFACTURER SPECIFICATIONS.
2. ONLY TIGHTEN THE CABLE ASSEMBLIES USING THE NUTS AT THE CABLE BRACKET (SEE DETAIL 'D'). DO NOT TIGHTEN THE CABLES AT THE FRONT OF THE GROUND ANCHOR.
3. WHEN DRIVING STEEL POST, ENSURE THAT A DRIVING CAP WITH TIMBER OR PLASTIC INSERT IS USED TO PREVENT DAMAGE TO THE GALVANIZING TO THE TOP OF THE POST.

© 2012 BARRIER SYSTEMS INC. THE INFORMATION CONTAINED IN THIS DRAWING IS THE SOLE PROPERTY OF BARRIER SYSTEMS INC. ANY REPRODUCTION IN PART OR WHOLE WITHOUT THE WRITTEN PERMISSION OF BARRIER SYSTEMS INC. IS PROHIBITED.

UNLESS OTHERWISE SPECIFIED DIMENSIONS ARE IN INCHES. TOLERANCES ARE:
FRACTIONS ±1/16 DECIMAL .XX = ±.03 .XXX = ±.010 ANGLES ±1/2°
INTERPRET DIMENSIONS AND TOLERANCES PER ASME Y14.5-1994

THIRD ANGLE PROJECTION

DO NOT SCALE DRAWING

APPROVALS	
DRAWN BY:	NMV
DRAWN DATE:	2/08/13
APPR'D BY:	JMT
APPR'D DATE:	2/08/13

REV	ECN#	DATE
B	2067	05/02/13
A	2022	2/08/13

LINDSAY™ TRANSPORTATION SOLUTIONS

BARRIER SYSTEMS INC.
3333 Vaca Valley Parkway Ste 800
Vacaville, CA 95688
Tel: 888-800-3691
www.barriersystemsinc.com

TITLE
X-TENSION GUARDRAIL TERMINAL SYSTEM STEEL POST WITH COMPOSITE BLOCKOUT 31" RAIL HEIGHT

SIZE	DWG NO.	REV.
B	XTGTSS5	B

SCALE 1:50 SHEET 1 OF 1

Doc. B100108

Last Saved by: jeff.thompson; Friday, May 03, 2013 1:23:29 PM

Ataelgeed, Eltahir@DOT

From: Dawood, Sofian@DOT
Sent: Monday, December 14, 2015 8:39 AM
To: Ataelgeed, Eltahir@DOT
Subject: FW: 06-34301 Recycled Water for Construction on State Route Tulare 65 PM 15.1- PM 18

Chris Bowen [(559) 488-4181] should be listed as the District 6 irrigation water manager
Sean Wirth should be listed as the local supervisor responsible for the recycled water system.
Carlos Lomeli [(559) 488-4180] should be listed as the Maintenance Area Superintendent.

From: Lomeli, Carlos@DOT
Sent: Monday, December 14, 2015 8:01 AM
To: Dawood, Sofian@DOT <sofian.dawood@dot.ca.gov>
Subject: RE: 06-34301 Recycled Water for Construction on State Route Tulare 65 PM 15.1- PM 18

Chris Bowen should be listed as the District 6 irrigation water manager
Sean Wirth should be listed as the local supervisor responsible for the recycled water system.
Carlos Lomeli should be listed as the Maintenance Area Superintendent.

CARLOS LOMELÍ
Highway Superintendent
California Department of Transportation, District 6
Maintenance Division, Fresno Area
P.O. Box 12616
Fresno, CA 93778-2616
(559) 488-4180 office
(559) 240-0070 mobile
carlos.lomeli@dot.ca.gov

www.dot.ca.gov/dist6

Provide a safe, sustainable, integrated and efficient transportation system to enhance California's economy and livability

---

From: Dawood, Sofian@DOT
Sent: Thursday, December 10, 2015 11:16 AM
To: Lomeli, Carlos@DOT <carlos.lomeli@dot.ca.gov>
Cc: Bowen, Chris C@DOT <Chris.bowen@dot.ca.gov>; Ataelgeed, Eltahir@DOT <eltahir.ataelgeed@dot.ca.gov>; Dhillon, Pawanjit K@DOT <pawanjit.dhillon@dot.ca.gov>; Baker, Abdul H@DOT <abdul.baker@dot.ca.gov>
Subject: 06-34301 Recycled Water for Construction on State Route Tulare 65 PM 15.1- PM 18

Hi Carlos,

Element	County	Route	PostMile	DetectorType	Location	Direction
TCS	TUL	65	15.525	L-P-L	NORTH OF AVE. 112 (06-434014)	NB/SB
TCS	TUL	65	17.342	Hose	SOUTH OF JCT. RTE. 190 (06-434014)	NB/SB
TCS	TUL	65	17.926	Hose	NB OFF TO RTE 190	NB
TCS	TUL	65	18	Loop	SB ON FROM EB RTE 190	SB

L-P-L LOOP PIEZO LOOP

OperationDate	Status
	EXISTING
	EXISTING
	EXISTING
	EXISTING