| Dist | COUNTY | ROUTE | POST MILES TOTAL PROJECT | SHEET No. | TOTAL SHEETS |
|---|---|---|---|---|---|
| 06 | Tul | 65 | R15.1/18.0 | 3 | 324 |

E. Ataelgeed 03-21-16
REGISTERED CIVIL ENGINEER DATE

6-20-16
PLANS APPROVAL DATE

REGISTERED PROFESSIONAL ENGINEER
ELTAHIR K. ATAELGEED
No. 76374
Exp. 12-31-16
CIVIL
STATE OF CALIFORNIA

*THE STATE OF CALIFORNIA OR ITS OFFICERS OR AGENTS SHALL NOT BE RESPONSIBLE FOR THE ACCURACY OR COMPLETENESS OF SCANNED COPIES OF THIS PLAN SHEET.*

**NOTE:**

FOR ACCURATE RIGHT OF WAY DATA, CONTACT RIGHT OF WAY ENGINEERING AT THE DISTRICT OFFICE.

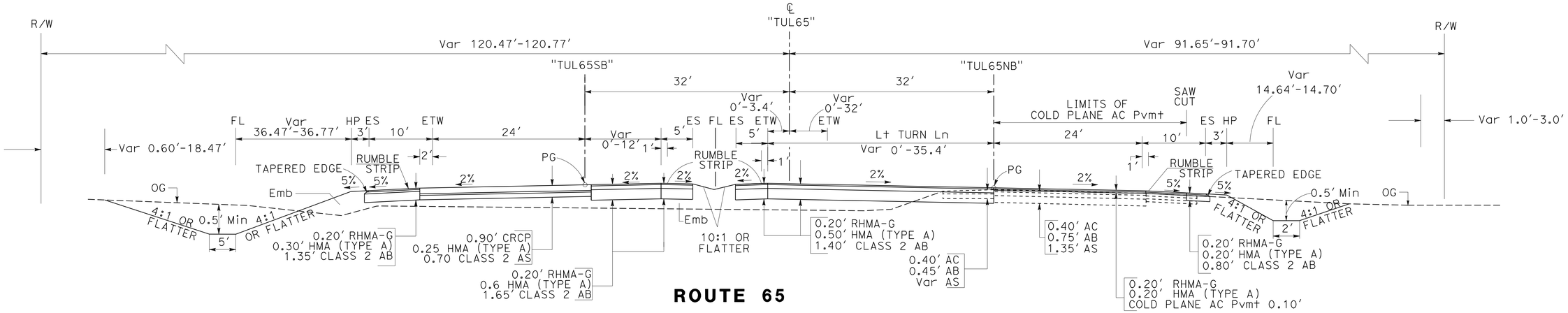


STA 1150+17.40 TO STA 1152+40.04 "TUL 65"
SOUTHBOUND

**ROUTE 65**

STA 1147+12.07 TO STA ~~1151+56.65~~ 1155+24.88 "TUL 65"
NORTHBOUND

1

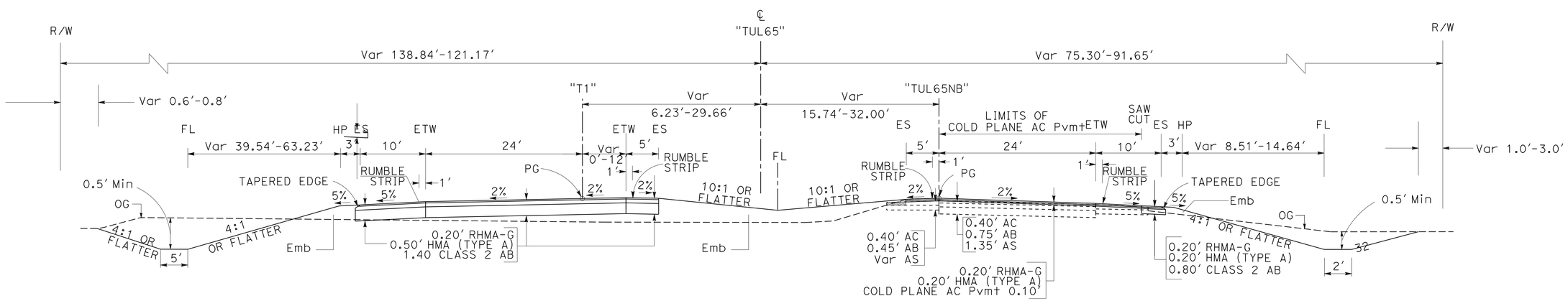


STA 1137+07.45 TO STA 1150+19.15 "TUL 65"
SOUTHBOUND

**ROUTE 65**

STA 1137+07.45 TO STA 1147+12.07 "TUL 65"
NORTHBOUND

# TYPICAL CROSS SECTIONS

NO SCALE **X-2**

1 **REPLACED PER ADDENDUM No. 1 DATED OCTOBER 7, 2016**

STATE OF CALIFORNIA - DEPARTMENT OF TRANSPORTATION
Caltrans
**DESIGN**

FUNCTIONAL SUPERVISOR: ABDUL BAKER
CALCULATED-DESIGNED BY: ELTAHIR ATAELGEED
CHECKED BY: ABDUL BAKER
REVISED BY
DATE REVISED

LAST REVISION 03-18-16
DATE PLOTTED => 05-OCT-2016
TIME PLOTTED => 15:16

| Dist | COUNTY | ROUTE | POST MILES TOTAL PROJECT | SHEET No. | TOTAL SHEETS |
|---|---|---|---|---|---|
| 06 | Tul | 65 | R15.1/18.0 | 4 | 324 |

E. Ataelgeed 03-21-16
REGISTERED CIVIL ENGINEER DATE

6-20-16
PLANS APPROVAL DATE

REGISTERED PROFESSIONAL ENGINEER
ELTAHIR K. ATAELGEED
No. 76374
Exp. 12-31-16
CIVIL
STATE OF CALIFORNIA

*THE STATE OF CALIFORNIA OR ITS OFFICERS OR AGENTS SHALL NOT BE RESPONSIBLE FOR THE ACCURACY OR COMPLETENESS OF SCANNED COPIES OF THIS PLAN SHEET.*

NOTE:

FOR ACCURATE RIGHT OF WAY DATA, CONTACT RIGHT OF WAY ENGINEERING AT THE DISTRICT OFFICE.

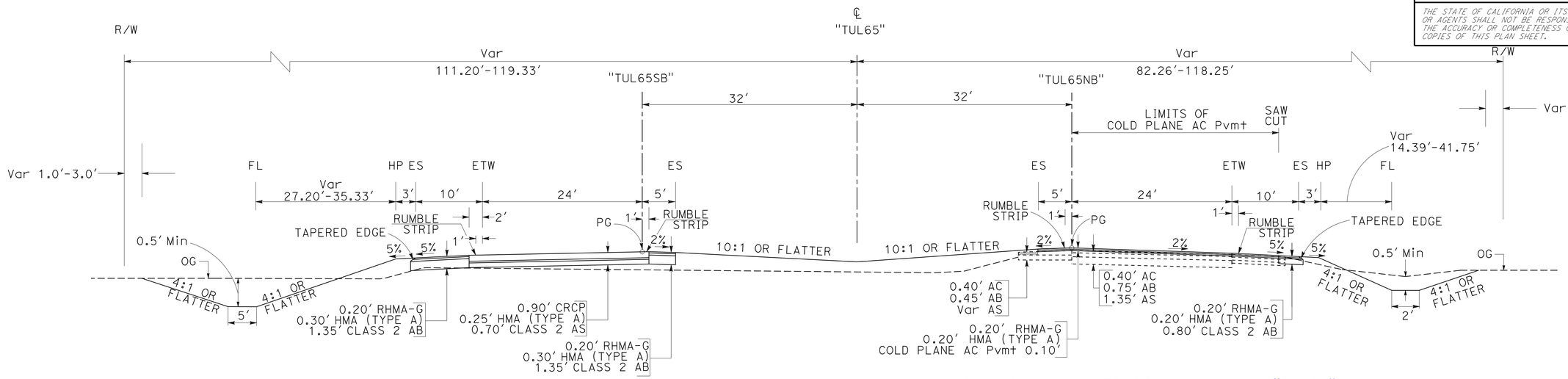


STA 1161+02.31 TO STA 1169+45.91 "TUL65"
STA 1188+79.93 TO STA 1222+27.95 "TUL65"
STA 1241+63.39 TO STA 1271+50.00 "TUL65"

SOUTHBOUND

**ROUTE 65**

STA 1243+89.64 TO STA 1268+50.00 "TUL65"
STA 1191+06.47 TO STA 1224+56.12 "TUL65"
STA 1168+78.64 TO STA 1171+72.46 "TUL65"

NORTHBOUND

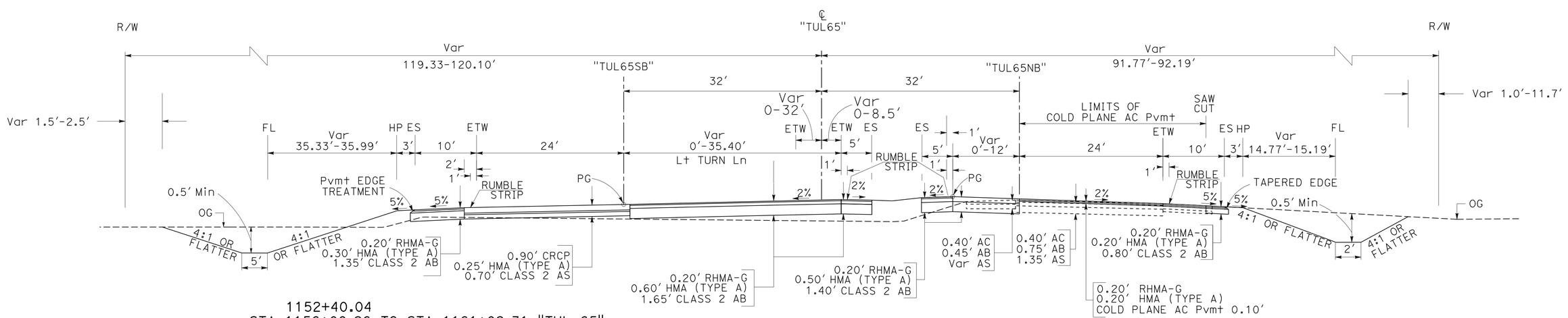


1152+40.04
STA ~~1156+08.26~~ TO STA 1161+02.31 "TUL 65"
SOUTHBOUND

1

**ROUTE 65**

STA 1155+24.88 TO STA 1168+78.64 "TUL 65"
NORTHBOUND

# TYPICAL CROSS SECTIONS

NO SCALE **X-3**

1 **REPLACED PER ADDENDUM No. 1 DATED OCTOBER 7, 2016**

REVISED BY | DATE REVISED
ELTAHIR ATAELGEED | ABDUL BAKER
CALCULATED-DESIGNED BY | CHECKED BY
FUNCTIONAL SUPERVISOR: ABDUL BAKER
STATE OF CALIFORNIA - DEPARTMENT OF TRANSPORTATION
Caltrans
DESIGN

LAST REVISION 03-18-16 | DATE PLOTTED => 05-OCT-2016 | TIME PLOTTED => 15:16

| Dist | COUNTY | ROUTE | POST MILES TOTAL PROJECT | SHEET No. | TOTAL SHEETS |
|---|---|---|---|---|---|
| 06 | Tul | 65 | R15.1/18.0 | 5 | 324 |

E. Ataelgeed 03-21-16
REGISTERED CIVIL ENGINEER DATE

6-20-16
PLANS APPROVAL DATE

REGISTERED PROFESSIONAL ENGINEER
ELTAHIR K. ATAELGEED
No. 76374
Exp. 12-31-16
CIVIL
STATE OF CALIFORNIA

*THE STATE OF CALIFORNIA OR ITS OFFICERS OR AGENTS SHALL NOT BE RESPONSIBLE FOR THE ACCURACY OR COMPLETENESS OF SCANNED COPIES OF THIS PLAN SHEET.*

NOTE:

FOR ACCURATE RIGHT OF WAY DATA, CONTACT RIGHT OF WAY ENGINEERING AT THE DISTRICT OFFICE.

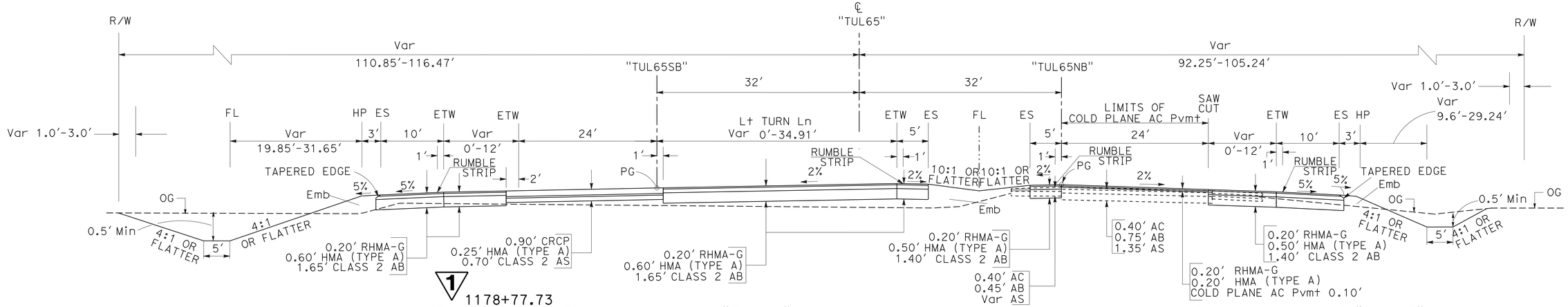


1
1178+77.73
STA ~~1182+58.36~~ TO STA 1188+79.93 "TUL 65"
STA ~~1235+52.83~~ TO STA 1241+63.39 "TUL 65"
1231+48.92 SOUTHBOUND

**ROUTE 65**

STA 1181+74.67 TO STA 1191+06.47 "TUL 65"
STA 1234+69.85 TO STA 1243+89.64 "TUL 65"
NORTHBOUND

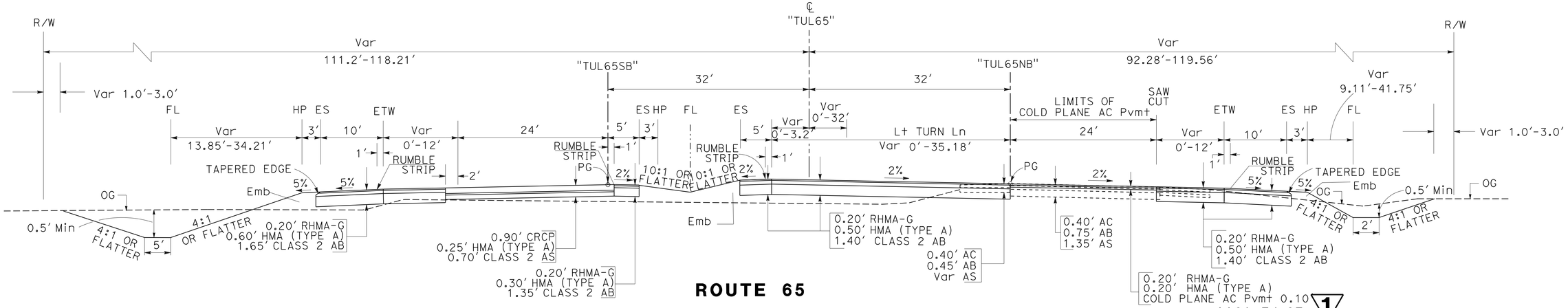


**ROUTE 65**

STA 1169+45.91 TO STA 1178+77.73 "TUL 65"
STA 1222+27.95 TO STA 1231+48.92 "TUL 65"

SOUTHBOUND

1
1181+74.67
STA 1171+72.46 TO STA ~~1177+94.44~~ "TUL 65"
STA 1224+56.12 TO STA ~~1230+65.30~~ "TUL 65"
1234+69.85

NORTHBOUND

1 **REPLACED PER ADDENDUM No. 1 DATED OCTOBER 7, 2016**

# TYPICAL CROSS SECTIONS

NO SCALE **X-4**

REVISED BY | DATE REVISED
ELTAHIR ATAELGEED | ABDUL BAKER
CALCULATED-DESIGNED BY | CHECKED BY
FUNCTIONAL SUPERVISOR: ABDUL BAKER
STATE OF CALIFORNIA - DEPARTMENT OF TRANSPORTATION
Caltrans® DESIGN

LAST REVISION | DATE PLOTTED => 05-OCT-2016 | TIME PLOTTED => 15:16
03-18-16

| Dist | COUNTY | ROUTE | POST MILES TOTAL PROJECT | SHEET No. | TOTAL SHEETS |
|---|---|---|---|---|---|
| 06 | Tul | 65 | R15.1/18.0 | 67 | 324 |

E. Ataelgeed 03-21-16
REGISTERED CIVIL ENGINEER DATE

6-20-16
PLANS APPROVAL DATE

REGISTERED PROFESSIONAL ENGINEER
ELTAHIR K. ATAELGEED
No. 76374
Exp. 12-31-16
CIVIL
STATE OF CALIFORNIA

*THE STATE OF CALIFORNIA OR ITS OFFICERS OR AGENTS SHALL NOT BE RESPONSIBLE FOR THE ACCURACY OR COMPLETENESS OF SCANNED COPIES OF THIS PLAN SHEET.*

# DRAINAGE QUANTITIES

| DRAINAGE PLAN SHEET No. | DRAINAGE SYSTEM No. ⬡ | DRAINAGE UNIT No. ○ | REMOVE CULVERT LF | REMOVE HEADWALL EA | HEIGHT OF INLET "H" (N) LF | ~~MINOR CONCRETE (MINOR STRUCTURE)~~ STRUCTURAL CONCRETE DRAINAGE INLET CY | STRUCTURAL CONCRETE, HEADWALL CY | BAR REINFORCING STEEL LB | HEIGHT OF HEADWALL "H" (N) LF | 24" RCP LF | 24" SSRP (0.064" THICK) LF | APC 18" LF | APC 24" LF | AFES 18" EA | AFES 24" EA | ~~STRUCTURAL CONCRETE, BOX CULVERT~~ CY | BAR REINFORCING STEEL (BOX CULVERT) LB | Misc IRON AND STEEL LB | RSP (150 lb, CLASS III, METHOD B) CY | RSP FABRIC (CLASS 8) SQYD | DESCRIPTION | STATION | DRAINAGE PLAN SHEET No. | DRAINAGE SYSTEM No. ⬡ | DRAINAGE UNIT No. ○ |
|---|---|---|---|---|---|---|---|---|---|---|---|---|---|---|---|---|---|---|---|---|---|---|---|---|---|
| D-1 | 1 | a | | 1 | | | | | | | | | | | | | | | | | | 1126+20.00 "TUL65" | D-1 | 1 | a |
| | | b | 67.4 | | | | | | | | | | | | | | | | | | REMOVE 24" CMP | | | | b |
| | | c | | | | | | | | | | | 101.6 | | | | | | | | | | | | c |
| | | d | | | | | | | | | | | | | 1 | | | | | | | | | | d |
| | | e | | 1 | | | | | | | | | | | | | | | | | | | | | e |
| | | f | | | | | | | | | | | | | 1 | | | | | | | | | | f |
| D-1 | 2 | a | | 1 | | | | | | | | | | | | | | | | | | 1129+00.00 "TUL65" | D-1 | 2 | a |
| | | b | 70.3 | | | | | | | | | | | | | | | | | | | | | | b |
| | | c | | 1 | | | | | | | | | | | | | | | | | | | | | c |
| | | d | | | | | | | | | | | | | 1 | | | | | | | | | | d |
| | | e | | | | | | | | | | | | | 1 | | | | | | | | | | e |
| | | f | | | | | | | | | | | 101.3 | | | | | | | | | | | | f |
| D-2 | 3 | a | | | 4.88 | 1.4 | | | | | | | | | | | | 263.0 | | | TYPE G1 DI, GRATE TYPE 24-9 | 1142+60.00 "TUL65" | D-2 | 3 | a |
| | | b | | | | | | | | | | | 126.1 | | | | | | | | | | | | b |
| | | c | | | | | | | | | | | | | 1 | | | | | | | | | | c |
| D-3 | 4 | a | | | | ~~10.4~~ | 10.4 | 234 | 9 | | | | | | | | | | | | HW | 1148+61.00 "Tul65" | D-3 | 4 | a |
| | | b | | | | | | | | | | | | | | 187.7 | 44,935.2 | | | | 3'x7'x189.6' DOUBLE RCB CULVERT | | | | b |
| | | c | | | | ~~10.4~~ | 10.4 | 234 | 9 | | | | | | | | | | | | HW | | | | c |
| D-3 | 5 | a | | | 4.74 | 1.3 | | | | | | | | | | | | 263.0 | | | TYPE G1 DI, GRATE TYPE 24-9 | STA 1150+60.00 "TUL65" | D-3 | 5 | a |
| | | b | | | | | | | | | | 94.7 | | | | | | | | | | | | | b |
| | | c | | | | | | | | | | | | 1 | | | | | | | | | | | c |
| D-4 | 6 | a | | | 3.37 | 1.0 | | | | | | | | | | | | 263.0 | | | TYPE G1 DI, GRATE TYPE 24-9 | 1161+00.00 "Tul65" | D-4 | 6 | a |
| | | b | | | | | | | | | | | 97.3 | | | | | | | | | | | | b |
| | | c | | | | | | | | | | | | | 1 | | | | | | | | | | c |
| D-4 | 7 | a | | | 3.00 | 1.0 | | | | | | | | | | | | 263.0 | | | TYPE G1 DI, GRATE TYPE 24-9 | 1169+00.00 "TUL65" | D-4 | 7 | a |
| | | b | | | | | | | | | | | 99.8 | | | | | | | | SEE DD-2 FOR MINOR Conc (BACKFILL) | | | | b |
| | | c | | | | | | | | | | | | | 1 | | | | | | | | | | c |
| D-5 | 8 | a | | | 4.90 | 1.4 | | | | | | | | | | | | 263.0 | | | TYPE G1 DI, GRATE TYPE 24-9 | 1176+00.00 "TUL65" | D-5 | 8 | a |
| | | b | | | | | | | | | | | 87.8 | | | | | | | | | | | | b |
| | | c | | | | | | | | | | | | | 1 | | | | | | | | | | c |
| SHEET TOTAL | | | 137.7 | 4 | | ~~26.9~~ 6.1 | 20.8 | 468 | | | | 94.7 | 613.9 | 1 | 8 | 187.7 | 44,935.2 | 1315.0 | | | | | | | |

1 REPLACED PER ADDENDUM No. 1 DATED OCTOBER 7, 2016

**DRAINAGE QUANTITIES**
**DQ-1**

STATE OF CALIFORNIA - DEPARTMENT OF TRANSPORTATION
Caltrans
DESIGN

FUNCTIONAL SUPERVISOR: ABDUL BAKER
CALCULATED-DESIGNED BY: ELTAHIR ATAELGEED
CHECKED BY: ABDUL BAKER
REVISED BY
DATE REVISED

LAST REVISION 03-18-16
DATE PLOTTED => 05-OCT-2016
TIME PLOTTED => 15:16

| Dist | COUNTY | ROUTE | POST MILES TOTAL PROJECT | SHEET No. | TOTAL SHEETS |
|---|---|---|---|---|---|
| 06 | Tul | 65 | R15.1/18.0 | 68 | 324 |

E. Ataelgeed 03-21-16
REGISTERED CIVIL ENGINEER DATE

6-20-16
PLANS APPROVAL DATE

REGISTERED PROFESSIONAL ENGINEER
ELTAHIR K. ATAELGEED
No. 76374
Exp. 12-31-16
CIVIL
STATE OF CALIFORNIA

*THE STATE OF CALIFORNIA OR ITS OFFICERS OR AGENTS SHALL NOT BE RESPONSIBLE FOR THE ACCURACY OR COMPLETENESS OF SCANNED COPIES OF THIS PLAN SHEET.*

# DRAINAGE QUANTITIES

| DRAINAGE PLAN SHEET No. | DRAINAGE SYSTEM No. ⬡ | DRAINAGE UNIT No. ○ | REMOVE INLET (EA) | REMOVE CULVERT (LF) | REMOVE HEADWALL (EA) | HEIGHT OF INLET "H" (N) (LF) | ~~MINOR CONCRETE (MINOR STRUCTURE)~~ STRUCTURAL CONCRETE DRAINAGE INLET (CY) ▽1 | STRUCTURAL CONCRETE, HEADWALL (CY) ▽1 | BAR REINFORCING STEEL (LB) ▽1 | HEIGHT OF HEADWALL "H" (N) (LF) | 24" RCP (LF) | 24" SSRP (0.064" THICK) (LF) | APC 18" (LF) | APC 24" (LF) | AFES 18" (EA) | AFES 24" (EA) ▽1 | STRUCTURAL CONCRETE, BOX CULVERT (CY) | BAR REINFORCING STEEL (BOX CULVERT) (LB) | Misc IRON AND STEEL (LB) | RSP (150 lb, CLASS III, METHOD B) (CY) | RSP FABRIC (CLASS 8) (SQYD) | DESCRIPTION | STATION | DRAINAGE PLAN SHEET No. | DRAINAGE SYSTEM No. ⬡ | DRAINAGE UNIT No. ○ |
|---|---|---|---|---|---|---|---|---|---|---|---|---|---|---|---|---|---|---|---|---|---|---|---|---|---|---|
| D-5 | 9 | a | | | | 4.0 | 1.5 | | | | | | | | | | | | 239.0 | | | TYPE GO DI, GRATE TYPE 24-12X | 107+95.80 "AVE128" | D-5 | 9 | a |
| | | b | | | | | | | | | | | 63.5 | | | | | | | | | | | | | b |
| | | c | 1 | | | | | | | | | | | | | | | | | | | | | | | c |
| | | d | | 34 | | | | | | | | | | | | | | | | | | REMOVE 24" CMP | | | | d |
| | | e | 1 | | | | | | | | | | | | | | | | | | | | | | | e |
| | | f | | | | 4.0 | 1.5 | | | | | | | | | | | | 239.0 | | | TYPE GO DI, GRATE TYPE 24-12X | | | | f |
| | | g | | | | | | | | | | | 110.8 | | | | | | | | | | | | | g |
| | | h | | | | | | | | | | | | | | | | | | 0.4 | 4 | | | | | h |
| | | i | | | | | | | | | | | | | 1 | | | | | | | | | | | i |
| D-6 | 10 | a | | | 1 | | | | | | | | | | | | | | | | | | 1193+49.60 "Tul 65" | D-6 | 10 | a |
| | | b | | | | | | | | | | 24.4 | | | | | | | | | | EXTEND Exist 24" CMP | | | | b |
| | | c | | | | | | | | | | | | | | 1 | | | | | | | | | | c |
| D-7 | 11 | a | | | | 3.0 | 1.0 | | | | | | | | | | | | 263.0 | | | TYPE G1 DI, GRATE TYPE 24-9 | 1202+00.00 "Tul 65" | D-7 | 11 | a |
| | | b | | | | | | | | | | | | 97.6 | | | | | | | | | | | | b |
| | | c | | | | | | | | | | | | | | 1 | | | | | | | | | | c |
| D-7 | 12 | a | | | 1 | | | | | | | | | | | | | | | | | REMOVE HW | 1206+65.71 "Tul 65" | D-7 | 12 | a |
| | | b | | | | | | | | | | 23.1 | | | | | | | | | | EXTEND 24" CMP | | | | b |
| | | c | | | | | | | | | | | | | | 1 | | | | | | | | | | c |
| D-8 | 13 | a | | | | 3.17 | 1.0 | | | | | | | | | | | | 263.0 | | | TYPE G1 DI, GRATE TYPE 24-9 | 1217+80.00 "Tul 65" | D-8 | 13 | a |
| | | b | | | | | | | | | | | | 95.5 | | | | | | | | | | | | b |
| | | c | | | | | | | | | | | | | | 1 | | | | | | | | | | c |
| D-8 | 14 | a | | | | 3.0 | 1.0 | | | | | | | | | | | | 263.0 | | | TYPE G1 DI, GRATE TYPE 24-9 | 1223+00.00 "Tul 65" | D-8 | 14 | a |
| | | b | | | | | | | | | | | | 94.8 | | | | | | | | | | | | b |
| | | c | | | | | | | | | | | | | | 1 | | | | | | | | | | c |
| D-8 | 15 | a | | | | | ~~10.4~~ | 10.4 | 234 | 9 | | | | | | | | | | | | HW | STA 1226+50.00 "Tul 65" | D-8 | 15 | a |
| | | b | | | | | | | | | | | | | | | 255.3 | 29,174.4 | | | | 3'x7'x202.6' DOUBLE RCB CULVERT | | | | b |
| | | c | | | | | ~~10.4~~ | 10.4 | 234 | 9 | | | | | | | | | | | | HW | | | | c |
| D-9 | 16 | a | | | | 4.5 | 1.6 | | | | | | | | | | | | 239.0 | | | TYPE GO DI, GRATE TYPE 24-12X | 89+31.16 "AVE136" 32' Rt | D-9 | 16 | a |
| | | b | | | | | | | | | | | | 45.5 | | | | | | | | | 88+96.85 "AVE136" 0.00' Lt | | | b |
| | | c | | 45.7 | | | | | | | | | | | | | | | | | | 18" CLASS III RCP | | | | c |
| | | d | 1 | | | | | | | | | | | | | | | | | | | CITY STD CATCH BASIN | | | | d |
| SHEET TOTAL | | | 3 | 79.7 | 2 | | ~~28.4~~ 7.6 | 20.8 | 468 | | | 47.5 | 174.3 | 333.2 | 1 | 5 | 255.3 | 29,174.4 | 1506.0 | 0.4 | 4 | | | | | |

▽1 **REPLACED PER ADDENDUM No. 1 DATED OCTOBER 7, 2016**

## DRAINAGE QUANTITIES
## DQ-2

STATE OF CALIFORNIA - DEPARTMENT OF TRANSPORTATION
Caltrans® DESIGN

FUNCTIONAL SUPERVISOR: ABDUL BAKER
CALCULATED-DESIGNED BY: ELTAHIR ATAELGEED
CHECKED BY: ABDUL BAKER
REVISED BY / DATE REVISED

LAST REVISION 03-18-16
DATE PLOTTED => 05-OCT-2016
TIME PLOTTED => 15:16

| Dist | COUNTY | ROUTE | POST MILES TOTAL PROJECT | SHEET No. | TOTAL SHEETS |
|---|---|---|---|---|---|
| 06 | Tul | 65 | R15.1/18.0 | 69 | 324 |

E Ataelgeed 03-21-16
REGISTERED CIVIL ENGINEER DATE

6-20-16
PLANS APPROVAL DATE

REGISTERED PROFESSIONAL ENGINEER
ELTAHIR K. ATAELGEED
No. 76374
Exp. 12-31-16
CIVIL
STATE OF CALIFORNIA

*THE STATE OF CALIFORNIA OR ITS OFFICERS OR AGENTS SHALL NOT BE RESPONSIBLE FOR THE ACCURACY OR COMPLETENESS OF SCANNED COPIES OF THIS PLAN SHEET.*

# 1 DRAINAGE QUANTITIES

| DRAINAGE PLAN SHEET No. | DRAINAGE SYSTEM No. ⬡ | DRAINAGE UNIT No. ○ | REMOVE INLET (EA) | REMOVE CULVERT (LF) | REMOVE HEADWALL (EA) | CONCRETE BACKFILL (PIPE TRENCH) (CY) | HEIGHT OF INLET "H" (N) (LF) | ~~MINOR CONCRETE (MINOR STRUCTURE)~~ STRUCTURAL CONCRETE, DRAINAGE INLET (CY) 1 | STRUCTURAL CONCRETE, HEADWALL (CY) 1 | BAR REINFORCING STEEL (LB) 1 | HEIGHT OF HEADWALL "H" (N) (LF) | 24" RCP (LF) | 24" SSRP (0.064" THICK) (LF) | APC 18" (LF) | APC 24" (LF) | AFES 18" (EA) | AFES 24" (EA) | STRUCTURAL CONCRETE, BOX CULVERT (CY) 1 | STRUCTURAL CONCRETE, JUNCTION STRUCTURE (CY) | MANHOLE FRAME AND COVER (EA) | BAR REINFORCING STEEL (BOX CULVERT) (LB) | Misc IRON AND STEEL (LB) | RSP (150 lb, CLASS III, METHOD B) (CY) | RSP FABRIC (CLASS 8) (SQYD) | DESCRIPTION | STATION | DRAINAGE PLAN SHEET No. | DRAINAGE SYSTEM No. ⬡ | DRAINAGE UNIT No. ○ |
|---|---|---|---|---|---|---|---|---|---|---|---|---|---|---|---|---|---|---|---|---|---|---|---|---|---|---|---|---|---|
| D-9 | 16 | e | | | | | 4.50 | 1.6 | | | | | | | | | | | | | | 239.0 | | | TYPE GO DI, GRATE TYPE 24-12X | 89+31.16 "AVE136" 32' Rt | | | |
| | | f | | | | | | | | | | | | | | | | | 2.5 | 1 | | | | | | | | | |
| | | g | | | | | | | | | | | | | 12.1 | | | | | | | | | | | | | | |
| D-9 | 17 | a | | | | | 3.00 | 1.0 | | | | | | | | | | | | | | 263.0 | | | TYPE G1 DI, GRATE TYPE 24-9 | STA 1240+00.00 "TUL65" | D-9 | 17 | a |
| | | b | | | | | | | | | | | | | 109.7 | | | | | | | | | | | | | | b |
| | | c | | | | | | | | | | | | | | | 1 | | | | | | | | | | | | c |
| D-9 | 18 | a | | | | | | | | | | | | | | | 1 | | | | | | | | | STA 1244+00.00 "TUL65" | D-9 | 18 | a |
| | | b | | | | | | | | | | | | | 95.9 | | | | | | | | | | | | | | b |
| | | c | | | | | 4.85 | 1.5 | | | | | | | | | | | | | | 263.0 | | | TYPE G1 DI, GRATE TYPE 24-9 | | | | c |
| D-10 | 19 | a | | | | | | | | | | | | | | | 1 | | | | | | | | | STA 1253+60.00 "TUL65" | D-10 | 19 | a |
| | | b | | | | 10.8 | | | | | | 184.1 | | | | | | | | | | | | | | | | | b |
| | | c | | | | | | | | | | | | | | | 1 | | | | | | | | | | | | c |
| D-11 | 20 | a | | | 1 | | | | | | | | | | | | | | | | | | | | | STA 1263+85.68 "TUL65" | D-11 | 20 | a |
| | | b | | | | | | | | | | | | | | | | 13.1 | | | 5109.0 | | | | EXTEND DOUBLE RBC CULVERT 5'x4'x13' | | | | b |
| | | c | | | | | | | 19.7 | 224 | | | | | | | | ~~19.7~~ | | | | | | | HW | | | | c |
| DQ-3 | | | | | 1 | 10.8 | | 4.1 | 19.7 | 224 | | 184.1 | | | 217.7 | | 4 | 13.1 ~~32.8~~ | 2.5 | 1 | 5,109.0 | 765.0 | | | | | | | |
| DQ-2 | | | 3 | 79.7 | 2 | | | 7.6 ~~28.4~~ | 20.8 | 468 | | | 47.5 | 174.3 | 333.2 | 1 | 5 | 255.3 | | | 29,174.4 | 1,506.0 | 0.4 | 4 | | | | | |
| DQ-1 | | | | 137.7 | 4 | | | 6.1 ~~26.9~~ | 20.8 | 468 | | | | 94.7 | 613.9 | 1 | 8 | 187.7 | | | 44,935.2 | 1,315.0 | | | | | | | |
| TOTAL | | | 3 | 217.4 | 7 | *10.8 | | ~~59.4~~ 17.8 | 61.3 | 1160 | | 184.1 | 47.5 | 269.0 | 1,164.8 | 2 | 17 | ~~475.8~~ 456.1 | 2.5 | 1 | 79,218.6 | 3,586.0 | 0.4 | 4 | | | | | |

* INCLUDED IN Conc BACKFILL (PIPE TRENCH) TABLE ON SHEET Q-2

## ALLOWABLE PIPE MATERIAL AND PROTECTION (ALTERNATIVE PIPE CULVERT)

| DESIGNATION | POLYMERIC SHEET C+d SSRP SIZE (Inches) | POLYMERIC SHEET C+d SSRP THICKNESS (Inches) | PLASTIC* SMOOTH In+ | RCP SEE Std Specs |
|---|---|---|---|---|
| APC Dia | 18" | 0.064" | 18" | 18" |
| APC Dia | 24" | 0.064" | 24" | 24" |

(*) SEE STANDARD SPECIFICATION FOR AVAILABLE AND ALLOWABLE PLASTIC PIPE SIZES.

## ALLOWABLE MATERIAL (AFES)

| DESIGNATION | CONCRETE SEE Std Specs | STEEL SIZE (Inches) | STEEL THICKNESS (Inches) |
|---|---|---|---|
| AFES Dia | 18" | 18" | 0.064" |
| AFES Dia | 24" | 24" | 0.064" |

1 REPLACED PER ADDENDUM No. 1 DATED OCTOBER 7, 2016

## DRAINAGE QUANTITIES DQ-3

ELTAHIR ATAELGEED — ABDUL BAKER — REVISED BY — DATE REVISED
CALCULATED-DESIGNED BY — CHECKED BY
FUNCTIONAL SUPERVISOR — ABDUL BAKER
STATE OF CALIFORNIA - DEPARTMENT OF TRANSPORTATION — Caltrans — DESIGN

LAST REVISION 03-18-16 — DATE PLOTTED => 05-OCT-2016 — TIME PLOTTED => 15:16

| Dist | COUNTY | ROUTE | POST MILES TOTAL PROJECT | SHEET No. | TOTAL SHEETS |
|---|---|---|---|---|---|
| 06 | Tul | 65 | R15.1/18.0 | 170 | 324 |

E. Ataelgeed 03-21-16
REGISTERED CIVIL ENGINEER DATE

6-20-16
PLANS APPROVAL DATE

REGISTERED PROFESSIONAL ENGINEER
ELTAHIR K. ATAELGEED
No. 76374
Exp. 12-31-16
CIVIL
STATE OF CALIFORNIA

*THE STATE OF CALIFORNIA OR ITS OFFICERS OR AGENTS SHALL NOT BE RESPONSIBLE FOR THE ACCURACY OR COMPLETENESS OF SCANNED COPIES OF THIS PLAN SHEET.*

# ROADWAY QUANTITIES

| LOCATION | DIRECTION | ROADWAY EXCAVATION | EMBANKMENT (N) | IMPORTED BORROW | RHMA (GAP GRADED) | HMA (TYPE A) | TACK COAT | CLASS 2 AGGREGATE BASE | CRCP | CLASS 2 AS | BAR REINFORCING STEEL (N) |
|---|---|---|---|---|---|---|---|---|---|---|---|
| | | CY | CY | CY | TON | TON | TON | CY | CY | CY | LB |
| Sta 1135+00.00 - 1271+50.00 "TUL65" | SB & NB | | | 22,010.00 | | | 116.9 | | 11,148.10 | 8,285.48 | 811,693.00 |
| Sta 1121+00.00 - 1134+50.00 "D1" | SB & NB | 2,336.17 | 435.52 | | | 1,580.53 | | 1,610.01 | | | |
| Sta 1125+00.00 - 1150+16.21 "T1" | | 9,458.10 | 7,252.57 | | 1,396.68 | 4,334.53 | | 5,886.36 | | | |
| Sta 1125+00.00 - 1268+50.00 "TUL65N1" | | 14,942.22 | 4,865.91 | | 9,686.38 | 13,503.21 | | 10,596.06 | | | |
| Sta 1150+17.40 - 1271+50.00 "TUL65S1" | | 17,141.05 | 53,907.20 | | 3,619.67 | 14,787.40 | | 14,079.42 | | | |
| Sta 1251+00.00 - 1265+00.00 "TUL65" | SB & NB | | | | | | | | | | |
| Sta 1264+50.00 - 1279+00.00 "D2" | | 1,588.35 | 61.71 | | | 1,129.52 | | 1,121.30 | | | |
| Sta 1264+50.00 - 1270+50.00 "D3" | | 955.38 | 1.41 | | | 628.76 | | 643.80 | | | |
| Sta 100+45.00 - 108+45.00 "Ave124" | EB & WB | 2,862.53 | 18.46 | | 645.70 | 1,001.97 | | 1,979.16 | | | |
| Sta 97+33.00 - 115+66.00 "Ave128" | EB & WB | 5,657.35 | 36.96 | | 1497.08 | 2,323.06 | | 4,569.73 | | | |
| Sta 72+69.30 - 89+32.00 "Ave136" | EB & WB | 6,034.86 | 69.69 | | 1,687.32 | 2,618.27 | | 5,171.89 | | | |
| TAPERED EDGE Sta 1125+00 - 1271+50 "TUL65" NB & SB | | | | | 135.99 | 1318.43 | | 1,488.71 | | | |
| TOTAL | | 60,976.01 | 66,649.43 | 22,010.00 | 18,668.82 | 43,225.68 | 116.9 | 47,146.44 | 11,148.1 | 8,285.48 | 811,693.00 |

(N) NOT A SEPARATE PAY ITEM, FOR INFORMATION ONLY.

# COLD PLANE ASPHALT CONCRETE PAVEMENT

| LOCATION | DIRECTION | COLD PLANE AC Pvmt | |
|---|---|---|---|
| | | SQYD | |
| Sta 1125+00.00 - 1151+56.20 "TUL65" | NB | 9,141.4 | |
| Sta 1155+18.77 - 1179+16.67 "TUL65" | NB | 10,822.5 | |
| Sta 1181+35.21 - 1231+87.97 "TUL65SB" | NB | ~~38,905.9~~ | 22,624.5 |
| Sta 1234+28.68 - 1268+48.06 "TUL65SB" | NB | 12,929.0 | |
| TOTAL | | ~~71,798.8~~ | |
| | | 55,517.4 | |

1

# SHOULDER RUMBLE STRIP (Conc PAVEMENT, GROUND-IN INDENTATIONS)

| LOCATION | DIRECTION | STATION |
|---|---|---|
| | | Lt |
| Sta 1150+17.08 - 1152+40.04 "TUL65SB" | SB | 2.2 |
| Sta 1156+08.26 - 1169+45.91 "TUL65SB" | SB | 13.4 |
| Sta 1188+79.93 - 1222+27.95 "TUL65SB" | SB | 33.5 |
| Sta 1241+63.39 - 1271+50.00 "TUL65SB" | SB | 29.9 |
| TOTAL | | 79.0 |

# SHOULDER RUMBLE STRIP (HMA,GROUND-IN INDENTATIONS)

| LOCATION | DIRECTION | STATION | |
|---|---|---|---|
| | | Rt | Lt |
| Sta 1125+00.00 - 1151+56.65 "TUL65NB" | NB | 26.6 | |
| Sta 1134+07.45 - 1147+12.07 "TUL65NB" | NB | | 13.0 |
| Sta 1156+00.49 - 1171+72.46 "TUL65NB" | NB | 15.7 | |
| Sta 1168+78.64 - 1173+55.16 "TUL65NB" | NB | | 4.8 |
| Sta 1181+38.00 - 1226+26.47 "TUL65NB" | NB | | 44.9 |
| Sta 1191+06.47 - 1224+56.13 "TUL65NB" | NB | 33.5 | |
| Sta 1234+29.43 - 1268+50.00 "TUL65NB" | NB | | 34.2 |
| Sta 1243+89.64 - 1268+50.00 "TUL65NB" | NB | 24.6 | |
| Sta 1125+00.00 - 1150+17.08 "T1" | SB | | 25.2 |
| Sta 1134+75.12 - 1150+17.08 "T1" | SB | 15.4 | |
| Sta 1161+02.31 - 1179+18.00 "TUL65SB" | SB | 18.1 | |
| Sta 1187+23.53 - 1231+88.43 "TUL65SB" | SB | 44.6 | |
| Sta 1241+16.63 - 1271+50.00 "TUL65SB" | SB | 30.3 | |
| SUBTOTAL | | 208.8 | 122.1 |
| TOTAL | | 330.9 | |

# DESTROY WELL, REMOVE SIGN SURVEY MONUMENTS, DETECTABLE WARNING SERVICE

| PLAN SHEET No. | LOCATION | DESTROY WELL | REMOVE SIGN STRUCTURE | DETECTABLE WARNING SURFACE | SURVEY MONUMENT (TYPE D) |
|---|---|---|---|---|---|
| | | EA | EA | SQFT | EA |
| U-3 | Sta 103+62.12, 87.30 Lt "AVE124" | 1 | | | |
| U-3 | Sta 103+58.72, 67.28 Lt "AVE124" | 1 | | | |
| U-6 | Sta 1196+64.78, 77.63 Lt "TUL65" | | 1 | | |
| U-8 | Sta 1219+94.57, 73.62 Lt "TUL65" | 1 | | | |
| U-11 | Sta 1264+36.11, 95.84 Lt "TUL65" | 1 | | | |
| L-5 | Sta 1179+57.33, 86.70 Rt "TUL65" | | | | 1 |
| L-9 | Sta 1233+53.75, 103.41 Rt "TUL65" | | | | 1 |
| L-5 | Sta 1179+56 - 1181+00.00 "TUL65" | | | 327.4 | |
| L-9 | Sta 1232+27 - 1233+91.50 "TUL65" | | | 306.4 | |
| TOTAL | | 4 | 1 | 633.8 | 2 |

# REMOVE AC SURFACING

| LOCATION | DIRECTION | AREA |
|---|---|---|
| | | SQFT |
| Sta 1134+75.17-1147+31.12 "TUL65 N1" | NB | 4655.9 |
| Sta 1166+16.07-1174+30.72 "TUL65 N1" | NB | 7595.8 |
| Sta 1180+94.01-1227+14.07 "TUL65 N1" | NB | 34,200.4 |
| Sta 1233+89.20-1260+03.71 "TUL65 N1" | NB & SB | 43,714.2 |
| Sta 1259+95.49-1269+11.66 "TUL65 S1" | SB | 14,540.8 |
| Sta 1264+43.90 - 1279+00.00 "D2" | DETOUR | 21,225.8 |
| Sta 1264+41.80 - 1270+95.15 "D3" | DETOUR | 10,368.8 |
| TOTAL | | 136,301.7 |

1 REPLACED PER ADDENDUM No. 1 DATED OCTOBER 7, 2016

# SUMMARY OF QUANTITIES

Q-1

REVISED BY | DATE REVISED
ELTAHIR ATAELGEED | ABDUL BAKER
CALCULATED-DESIGNED BY | CHECKED BY
FUNCTIONAL SUPERVISOR: ABDUL BAKER
STATE OF CALIFORNIA - DEPARTMENT OF TRANSPORTATION
Caltrans
DESIGN

LAST REVISION 03-18-16 | DATE PLOTTED => 05-OCT-2016 | TIME PLOTTED => 15:17

| Dist | COUNTY | ROUTE | POST MILES TOTAL PROJECT | SHEET No. | TOTAL SHEETS |
|---|---|---|---|---|---|
| 05 | Tul | 65 | R15.1/18.0 | 188 | 324 |

REGISTERED ELECTRICAL ENGINEER DATE 6-1-16

PLANS APPROVAL DATE 6-20-16

REGISTERED PROFESSIONAL ENGINEER DANIEL THANH VO No. 17408 Exp 9-30-16 ELECTRICAL STATE OF CALIFORNIA

*THE STATE OF CALIFORNIA OR ITS OFFICERS OR AGENTS SHALL NOT BE RESPONSIBLE FOR THE ACCURACY OR COMPLETENESS OF SCANNED COPIES OF THIS PLAN SHEET.*

## LEGEND: (FOR SHEETS E-5 TO SHEETS E-14)

1 120/240 V, 1Ø, 3-WIRE, TYPE III-CF SERVICE EQUIPMENT ENCLOSURE WITH THE FOLLOWING CIRCUIT BREAKERS:

Ctid No. 06460650016102T

| AMPERES | VOLTS | POLES | NAMEPLATE | METER | PHOTOELECTRIC CONTROL TYPE |
|---|---|---|---|---|---|
| 100 | 240 | 2 | MAIN BREAKER | YES | —— |
| 60 | 120 | 1 | TRAFFIC SIGNAL | YES | —— |
| 20 | 120 | 1 | FLASHING BEACON | YES | —— |
| 20 | 120 | 1 | SPARE | YES | —— |
| 40 | 240 | 2 | SPARE | YES | —— |
| —— | —— | 6 | SPACES | —— | —— |

Ctid No. 06460650016102L

| AMPERES | VOLTS | POLES | NAMEPLATE | METER | PHOTOELECTRIC CONTROL TYPE |
|---|---|---|---|---|---|
| 100 | 240 | 2 | MAIN BREAKER | YES | —— |
| 30 | 240 | 2 | HIGHWAY LIGHTING | YES | IV |
| 20 | 120 | 1 | SPARE | YES | —— |
| 40 | 240 | 2 | SPARE | YES | —— |
| —— | —— | 6 | SPACES | —— | —— |

SERVICE EQUIPMENT ENCLOSURE INSTALLED IN STAGE CONSTRUCTION 2B TO BE USED FOR ULTIMATE TRAFFIC SIGNAL AND LIGHTING. SEE SHEET E-12.

2 DEPARTMENT-FURNISHED MODEL 2070E CONTROLLER ASSEMBLY. INSTALL BBS, WIRELESS MODEM, C11 WIRING HARNESS, AND VIVDA EQUIPMENT. EQUIPMENT INSTALLED IN STAGE CONTRUCTION 2B MUST BE USED FOR ULTIMATE TRAFFIC SIGNAL AND LIGHTING. SEE SHEET E-12.

3 285′ TO LIMIT LINE.

4 242′ TO LIMIT LINE.

5 550′ TO LIMIT LINE.

6 1000′ TO LIMIT LINE.

7 No. 5 (T)(E) PULL BOXES AS NECESSARY TO MAINTAIN 200′ MAXIMUM SPACING.

8 INSTALL D3-1 SIGN ON SIGNAL POLE.

9 INSTALL R73-3 (CA) SIGN ON SMA.

10 INSTALL W3-3 SIGN ON SMA.

11 REFER TO SIGN PLANS FOR SIGN DETAILS.

12 SEE DETAIL C ON SHEET E-30 FOR LEFT TURN DETECTOR LOOP SPACING.

13 COVER Sig HEAD.

14 3"C, 4-12CSC, 2-3CSC, 6 DLC, 2#6

15 4-12CSC, 2-3CSC, 3 DLC, 2#6,1#8 (G)

16 TO FB APPROXIMATELY 640′

17 2-12CSC, 2-3CSC, 3 DLC, 2#6, 1#8 (G)

18 1"C, 3 DLC

19 Exist MODEL 2070E CONTROLLER ASSEMBLY INSTALLED IN STAGE CONSTRUCTION TO REMAIN. ~~RC~~ Exist VIVDA EQUIPMENT.

20 2-12CSC, 1#8 (G) RS 1

21 AB Exist 3"C, RR 4-12CSC, 2-3CSC, 4 DLC, 2#6

RC

22 3"C, 4-12CSC, 2-3CSC, 6 DLC, 2#8. ADD 2-12CSC, 2#6

23 Exist 4-12CSC, 2-3CSC, 3 DLC, 2#6, 1#8 (G). ADD 2-12CSC, 2-3CSC, 2 VIVDA CABLE, 2#6

24 Exist 4-12CSC, 2-3CSC, 3 DLC, 2#6, 1#8 (G). ADD 1-12CSC, 2-3CSC, 2 VIVDA CABLE, 2#6

25 Exist 2-12CSC, 2-3CSC, 3 DLC, 2#6, 1#8 (G). ADD 1-3CSC, 2#6

26 3 POINT LATCH, HANDLE, AND LOCK COVER ON SERVICE EQUIPMENT ENCLOSURE AS SHOWN OF DETAIL A ON SHEET E-31.

27 Exist 2-12CSC, 2-3CSC, 3 DLC, 2#6, 1#8 (G), RC 3 DLC. ADD 2#6

28 1-12CSC, 1 VIVDA CABLE, 1#8 (G)

29 2#6, 1#8 (G)

30 Exist 2-4"C, 8-12CSC, 8-3CSC, 16 DLC, 1#8 (G). ADD 4-12CSC, 2-3CSC, 6 DLC

31 3"C, 6-12CSC, 4-3CSC, 4 DLC, 2 VIVDA CABLE

32 2-4"C, 6-12CSC, 4-3CSC, 4 DLC, 2 VIVDA CABLE

33 Exist EQUIPMENT INSTALLED IN STAGE CONSTRUCTION TO REMAIN.

34 UNCOVER Sig HEAD.

## POLE AND EQUIPMENT SCHEDULE

| No. | STANDARD TYPE | STANDARD SMA | STANDARD LMA | Veh Sig Mtg MAST ARM | Veh Sig Mtg POLE | Ped Sig Mtg | APS Ø | APS ARROW | LED LUM (WATT) | SPECIAL REQUIREMENTS |
|---|---|---|---|---|---|---|---|---|---|---|
| A | 1-A | | | | TV-2-T | SP-1-T | 2 | → | | |
| B | 29-5-100 | 55′ | 15′ | MAS MAS | SV-1-T | SP-1-T | 2 | ← | 165 | F=15′ 8 9 11 |
| C | 1-A | | | | TV-2-T | SP-1-T | 4 | → | | |
| D | 29-5-100 | 55′ | 15′ | MAS MAS | SV-1-T | SP-1-T | 4 | ← | 165 | F=17′ 8 11 |
| E | 1-A | | | | TV-2-T | SP-1-T | 6 | → | | |
| F | 29-5-100 | 55′ | 15′ | MAS MAS | SV-1-T | SP-1-T | 6 | ← | 165 | F=15′ 8 9 11 |
| G | 1-A | | | | TV-2-T | SP-1-T | 8 | → | | |
| H | 29-5-100 | 55′ | 15′ | MAS MAS | SV-1-T | SP-1-T | 8 | ← | 165 | F=17′ 8 11 |
| I | 19-2-100 | 25′ | 15′ | MAS | SV-1-T | | | | 165 | |
| J | 19-2-100 | 25′ | 15′ | MAS | SV-1-T | | | | 165 | |
| K | TYPE 9B FB | | | MAT MAT | | | | | | 10 11 |

## CONDUIT AND CONDUCTOR SCHEDULE

| CONDUCTOR DESIGNATION | | | CONDUIT RUN NUMBER AND SIZE | | | | | | | | | | | |
|---|---|---|---|---|---|---|---|---|---|---|---|---|---|---|
| CABLE TYPE | POLE | PHASE | 1 | 2 | 3 | 4 | 5 | 6 | 7 | 8 | 9 | 10 | 11 | 12 |
| | | | 2-4" | 4" | 4" | 4" | 4" | 4" | 4" | 4" | 4" | 4" | 4" | 4" |
| VEH-PED 12CSC | A | 7,8,8P 2 | 1 1 | 1 1 | | | | | | | | | | |
| | B | 4,7,4P 2 | 1 1 | 1 1 | 1 1 | | | | | | | | | |
| | C | 1,2,2P 4 | 1 1 | 1 1 | 1 1 | 1 1 | | | | | | | | |
| | D | 6,6P 4 | 1 1 | 1 1 | 1 1 | 1 1 | 1 1 | 1 1 | | | | | | |
| | E | 3,4,4P 6 | 1 1 | | | | | | 1 1 | 1 1 | 1 1 | 1 1 | 1 1 | 1 1 |
| | F | 3,8,8P 6 | 1 1 | | | | | | | 1 1 | 1 1 | 1 1 | 1 1 | 1 1 |
| | G | 5,6,6P 8 | 1 1 | | | | | | | | 1 1 | 1 1 | 1 1 | 1 1 |
| | H | 2,2P 8 | 1 1 | | | | | | | | | | | 1 1 |
| PBA 3CSC | I | 5 | 1 | | | | | | | | | | 1 1 | |
| | J | 1 | 1 | 1 1 | 1 1 | 1 1 | | | | | | | | |
| | | SUBTOTAL | 10 8 | 5 4 | 4 3 | 3 2 | 2 1 | 1 1 | 0 0 | 1 1 | 2 2 | 3 3 | 4 3 | 5 4 |

| AWG | CIRCUIT | 1 | 2 | 3 | 4 | 5 | 6 | 7 | 8 | 9 | 10 | 11 | 12 |
|---|---|---|---|---|---|---|---|---|---|---|---|---|---|
| | APS CABLE | | 2 | | 2 | | | 2 | | 2 | | | 2 |
| #6 | LIGHTING | | 2 | 2 | 2 | 2 | 2 | | | 2 | 2 | 2 | 2 |
| #6 | FB | | 2 | 2 | 2 | | | | | | 2 | 2 | 2 |
| | | | | | | | | | | | | | |

| | PHASE | 1 | 2 | 3 | 4 | 5 | 6 | 7 | 8 | 9 | 10 | 11 | 12 |
|---|---|---|---|---|---|---|---|---|---|---|---|---|---|
| DLC | Ø1 | 2 | | | | | | | | | | 2 | 2 |
| | Ø2 | 4 | 4 | 4 | 4 | | | | | | | | |
| | Ø2 MID | 1 | 1 | 1 | 1 | | | | | | | | |
| | Ø2 ADV | 1 | 1 | 1 | 1 | | | | | | | | |
| | Ø3 | 2 | 2 | | | | | | | | | | |
| | Ø4 | 3 | 3 | 3 | 3 | 3 | 3 | 3 | | | | | |
| | Ø4 MID | 1 | 1 | 1 | 1 | 1 | 1 | 1 | | | | | |
| | Ø5 | 2 | 2 | 2 | 2 | 2 | | | | | | | |
| | Ø6 | 4 | | | | | | | | | 4 | 4 | 4 |
| | Ø6 MID | 1 | | | | | | | | | 1 | 1 | 1 |
| | Ø6 ADV | 1 | | | | | | | | | 1 | 1 | 1 |
| | Ø7 | 2 | 2 | 2 | 2 | 2 | 2 | 2 | | | | | |
| | Ø8 | 3 | 3 | | | | | | | | | | |
| | Ø8 ADV | 1 | 1 | | | | | | | | | | |
| | SUBTOTAL | 28 | 20 | 14 | 14 | 8 | 6 | 6 | | | 6 | 8 | 8 |

△△ Exist CONDUIT INSTALLED IN STAGE CONSTRUCTION 2B TO REMAIN.
RC Exist CONDUCTORS. FURNISH AND INSTALL CONDUCTORS AS SHOWN.

1 **REPLACED PER ADDENDUM No. 1 DATED OCTOBER 7, 2016**

*APPROVED FOR ELECTRICAL WORK ONLY*

# LEGEND AND SCHEDULES

# E-4

STATE OF CALIFORNIA - DEPARTMENT OF TRANSPORTATION
Caltrans® ELECTRICAL DESIGN
FUNCTIONAL SUPERVISOR: ALI BAKHDOUD
CALCULATED-DESIGNED BY: DANIEL VO
CHECKED BY: MONA ATTALLAH
REVISED BY / DATE REVISED

LAST REVISION 06-20-16
DATE PLOTTED => 05-OCT-2016
TIME PLOTTED => 15:17

| Dist | COUNTY | ROUTE | POST MILES TOTAL PROJECT | SHEET No. | TOTAL SHEETS |
|---|---|---|---|---|---|
| 06 | Tul | 65 | R15.1/18.0 | 191 | 324 |

REGISTERED ELECTRICAL ENGINEER 6-1-16 DATE

6-20-16
PLANS APPROVAL DATE

REGISTERED PROFESSIONAL ENGINEER DANIEL THANH VO No. 17408 Exp. 9-30-16 ELECTRICAL STATE OF CALIFORNIA

*THE STATE OF CALIFORNIA OR ITS OFFICERS OR AGENTS SHALL NOT BE RESPONSIBLE FOR THE ACCURACY OR COMPLETENESS OF SCANNED COPIES OF THIS PLAN SHEET.*

## NOTES:

1. FOR ACCURATE RIGHT OF WAY DATA, CONTACT RIGHT OF WAY ENGINEERING AT THE DISTRICT OFFICE.
2. COORDINATE Sig PHASE MODIFICATION WITH THE ENGINEER.
3. SEE SHEET E-4 FOR LEGEND AND SCHEULES.
4. SEE SES SHEETS FOR TEMPORARY WOOD POLE DETAILS.
5. SEE SHEET E-12 FOR LOCATION OF PROPOSED TRAFFIC Sig EQUIPMENT.
6. (1) RC STAGE CONSTRUCTION Sig AND Ltg EQUIPMENT, AND RS VIVDA EQUIPMENT AFTER STAGE CONSTRUCTION IS COMPLETED.

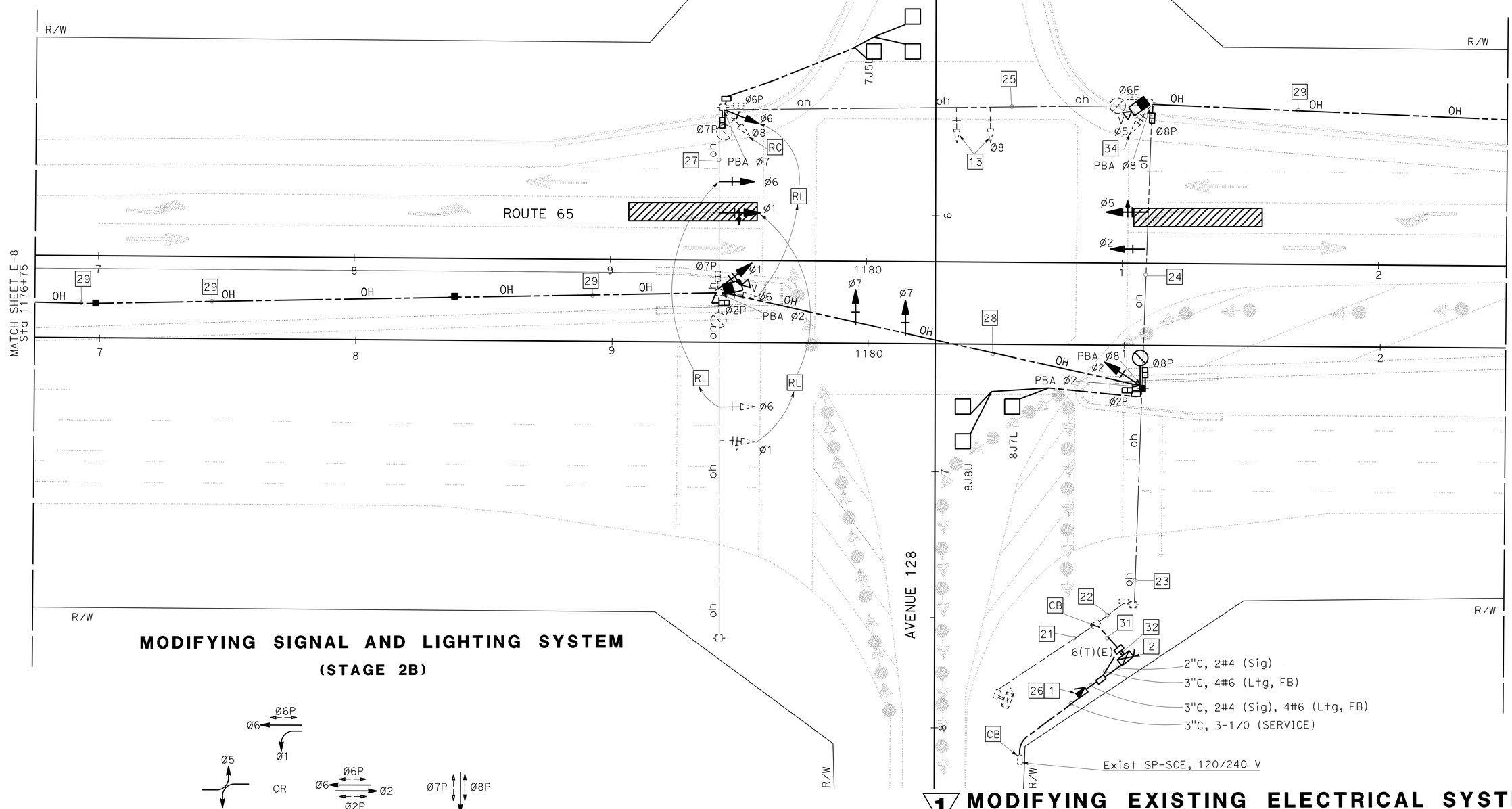


## MODIFYING SIGNAL AND LIGHTING SYSTEM

### (STAGE 2B)

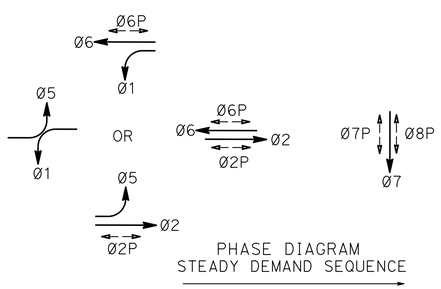


## (1) MODIFYING EXISTING ELECTRICAL SYSTEM

~~TEMPORARY SIGNAL SYSTEM~~

## (1) REPLACED PER ADDENDUM No. 1 DATED OCTOBER 7, 2016

SCALE: 1"=20'

**E-7**

*APPROVED FOR ELECTRICAL WORK ONLY*

STATE OF CALIFORNIA - DEPARTMENT OF TRANSPORTATION
Caltrans ELECTRICAL DESIGN

FUNCTIONAL SUPERVISOR: ALI BAKHDOUD
CALCULATED-DESIGNED BY: DANIEL VO
CHECKED BY: MONA ATTALLAH
REVISED BY / DATE REVISED

LAST REVISION DATE PLOTTED => 06-OCT-2016
TIME PLOTTED => 15:17
06-20-16

| Dist | COUNTY | ROUTE | POST MILES TOTAL PROJECT | SHEET No. | TOTAL SHEETS |
|---|---|---|---|---|---|
| 06 | Tul | 65 | R15.1/18.0 | 192 | 324 |

REGISTERED ELECTRICAL ENGINEER 6-1-16 DATE

6-20-16
PLANS APPROVAL DATE

REGISTERED PROFESSIONAL ENGINEER DANIEL THANH VO No. 17408 Exp. 9-30-16 ELECTRICAL STATE OF CALIFORNIA

*THE STATE OF CALIFORNIA OR ITS OFFICERS OR AGENTS SHALL NOT BE RESPONSIBLE FOR THE ACCURACY OR COMPLETENESS OF SCANNED COPIES OF THIS PLAN SHEET.*

NOTES:

1. FOR ACCURATE RIGHT OF WAY DATA, CONTACT RIGHT OF WAY ENGINEERING AT THE DISTRICT OFFICE.
2. COORDINATE Sig PHASE MODIFICATION WITH THE ENGINEER.
3. SEE SHEET E-4 FOR LEGEND AND SCHEDULES.
4. SEE SES SHEETS FOR TEMPORARY WOOD POLE DETAILS.
5. RC STAGE CONSTRUCTION Sig EQUIPMENT AFTER STAGING IS COMPLETED. (1)

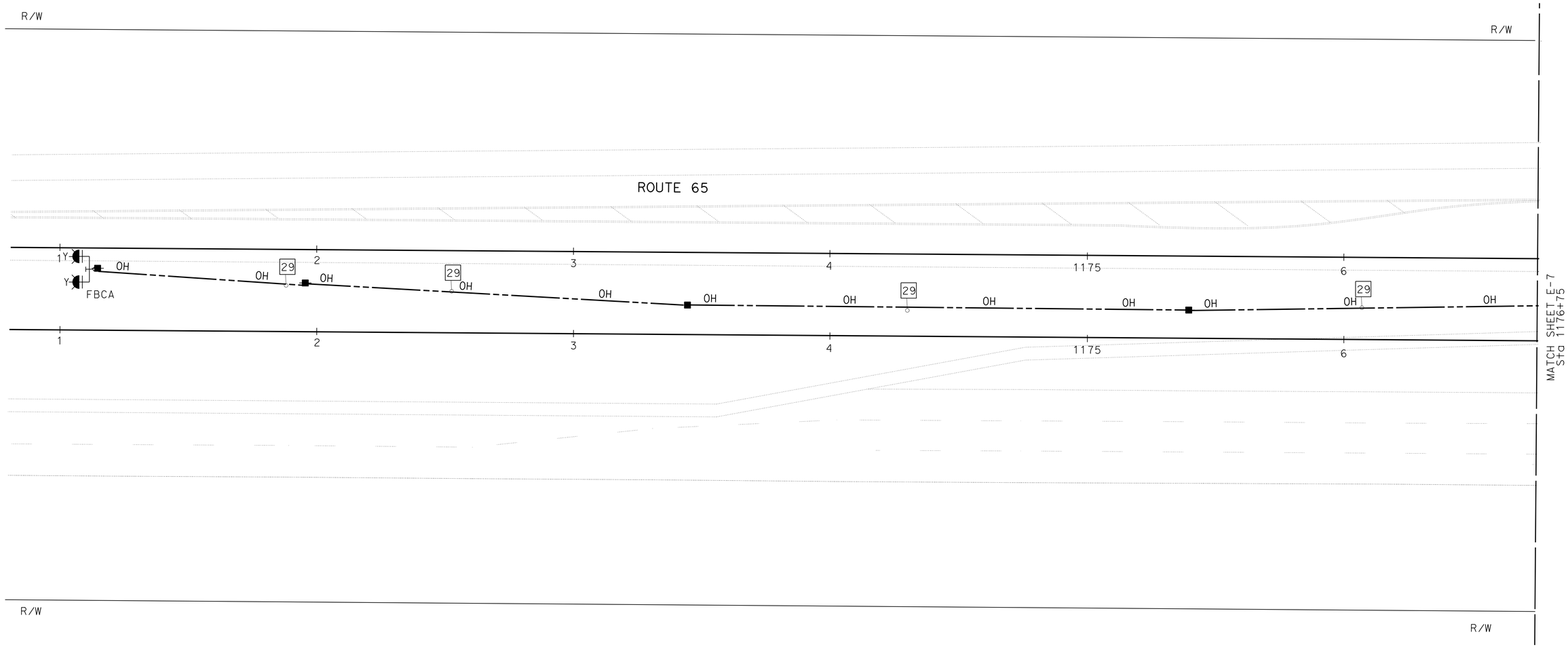


**MODIFYING SIGNAL AND LIGHTING SYSTEM**

**(STAGE 2B)**

(1) **REPLACED PER ADDENDUM No. 1 DATED OCTOBER 7, 2016**

*APPROVED FOR ELECTRICAL WORK ONLY*

**MODIFYING EXISTING ELECTRICAL SYSTEM** (1)
~~**TEMPORARY SIGNAL SYSTEM**~~

SCALE: 1"=20'

**E-8**

STATE OF CALIFORNIA - DEPARTMENT OF TRANSPORTATION
Caltrans ELECTRICAL DESIGN

FUNCTIONAL SUPERVISOR: ALI BAKHDOUD
CALCULATED-DESIGNED BY: DANIEL VO
CHECKED BY: MONA ATTALLAH
REVISED BY
DATE REVISED

LAST REVISION 06-20-16
DATE PLOTTED => 06-OCT-2016
TIME PLOTTED => 10:48

| Dist | COUNTY | ROUTE | POST MILES TOTAL PROJECT | SHEET No. | TOTAL SHEETS |
|---|---|---|---|---|---|
| 06 | Tul | 65 | R15.1/18.0 | 193 | 324 |

REGISTERED ELECTRICAL ENGINEER 6-1-16 DATE

6-20-16
PLANS APPROVAL DATE

REGISTERED PROFESSIONAL ENGINEER DANIEL THANH VO No. 17408 Exp 9-30-16 ELECTRICAL STATE OF CALIFORNIA

*THE STATE OF CALIFORNIA OR ITS OFFICERS OR AGENTS SHALL NOT BE RESPONSIBLE FOR THE ACCURACY OR COMPLETENESS OF SCANNED COPIES OF THIS PLAN SHEET.*

NOTES:

1. FOR ACCURATE RIGHT OF WAY DATA, CONTACT RIGHT OF WAY ENGINEERING AT THE DISTRICT OFFICE.
2. COORDINATE Sig PHASE MODIFICATION WITH THE ENGINEER.
3. SEE SHEET E-4 FOR LEGEND AND SCHEDULES.
4. SEE SES SHEETS FOR TEMPORARY WOOD POLE DETAILS.
5. RC STAGE CONSTRUCTION Sig EQUIPMENT AFTER STAGING IS COMPLETED.

1

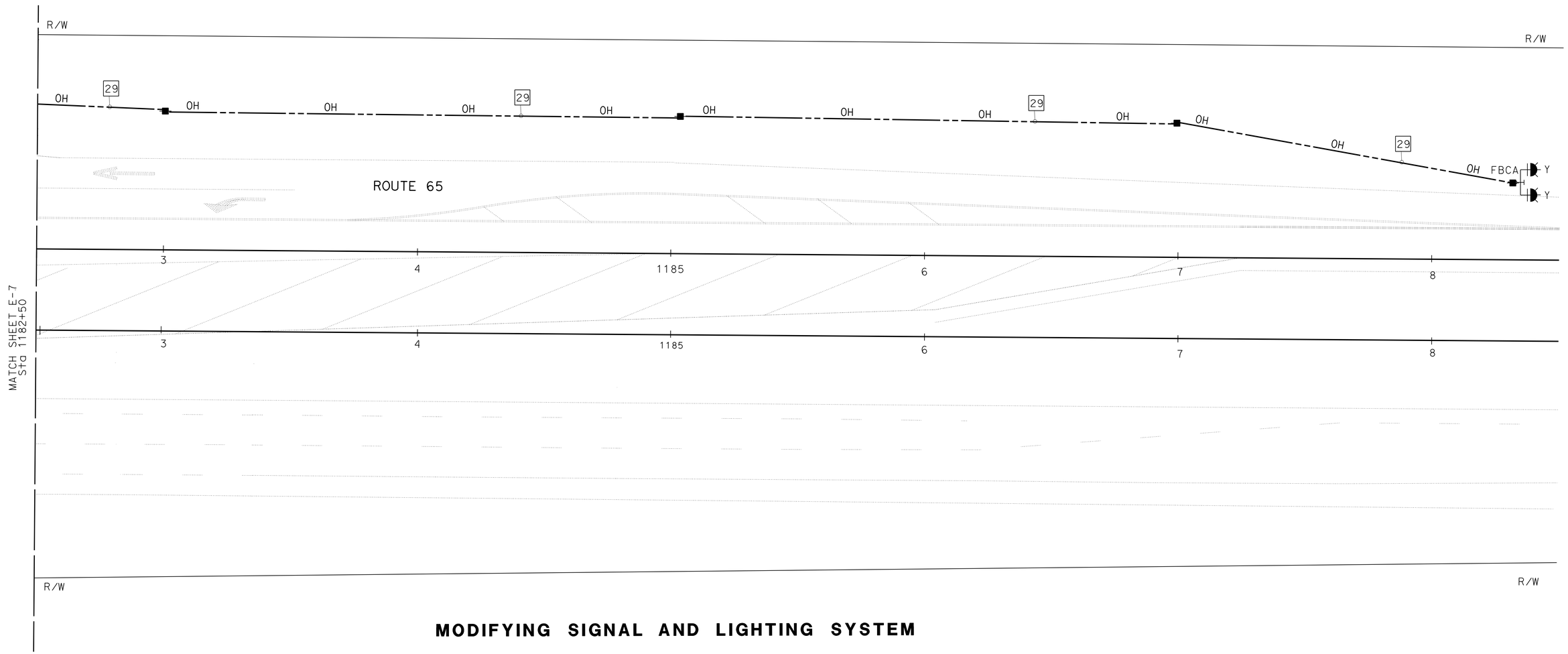


**MODIFYING SIGNAL AND LIGHTING SYSTEM**

**(STAGE 2B)**

1 **REPLACED PER ADDENDUM No. 1 DATED OCTOBER 7, 2016**

*APPROVED FOR ELECTRICAL WORK ONLY*

**MODIFYING EXISTING ELECTRICAL SYSTEM**

SCALE: 1"=20'

**E-9**

STATE OF CALIFORNIA - DEPARTMENT OF TRANSPORTATION
Caltrans ELECTRICAL DESIGN

FUNCTIONAL SUPERVISOR: ALI BAKHDOUD
CALCULATED-DESIGNED BY: DANIEL VO
CHECKED BY: MONA ATTALLAH
REVISED BY
DATE REVISED

LAST REVISION DATE PLOTTED => 05-OCT-2016
06-20-16 TIME PLOTTED => 15:17

| Dist | COUNTY | ROUTE | POST MILES TOTAL PROJECT | SHEET No. | TOTAL SHEETS |
|---|---|---|---|---|---|
| 06 | Tul | 65 | R15.1/18.0 | 194 | 324 |

REGISTERED ELECTRICAL ENGINEER 6-1-16 DATE

6-20-16
PLANS APPROVAL DATE

REGISTERED PROFESSIONAL ENGINEER DANIEL THANH VO No. 17408 Exp. 9-30-16 ELECTRICAL STATE OF CALIFORNIA

*THE STATE OF CALIFORNIA OR ITS OFFICERS OR AGENTS SHALL NOT BE RESPONSIBLE FOR THE ACCURACY OR COMPLETENESS OF SCANNED COPIES OF THIS PLAN SHEET.*

NOTES:

1. FOR ACCURATE RIGHT OF WAY DATA, CONTACT RIGHT OF WAY ENGINEERING AT THE DISTRICT OFFICE.
2. COORDINATE Sig PHASE MODIFICATION WITH THE ENGINEER.
3. SEE SHEET E-4 FOR LEGEND AND SCHEDULES.

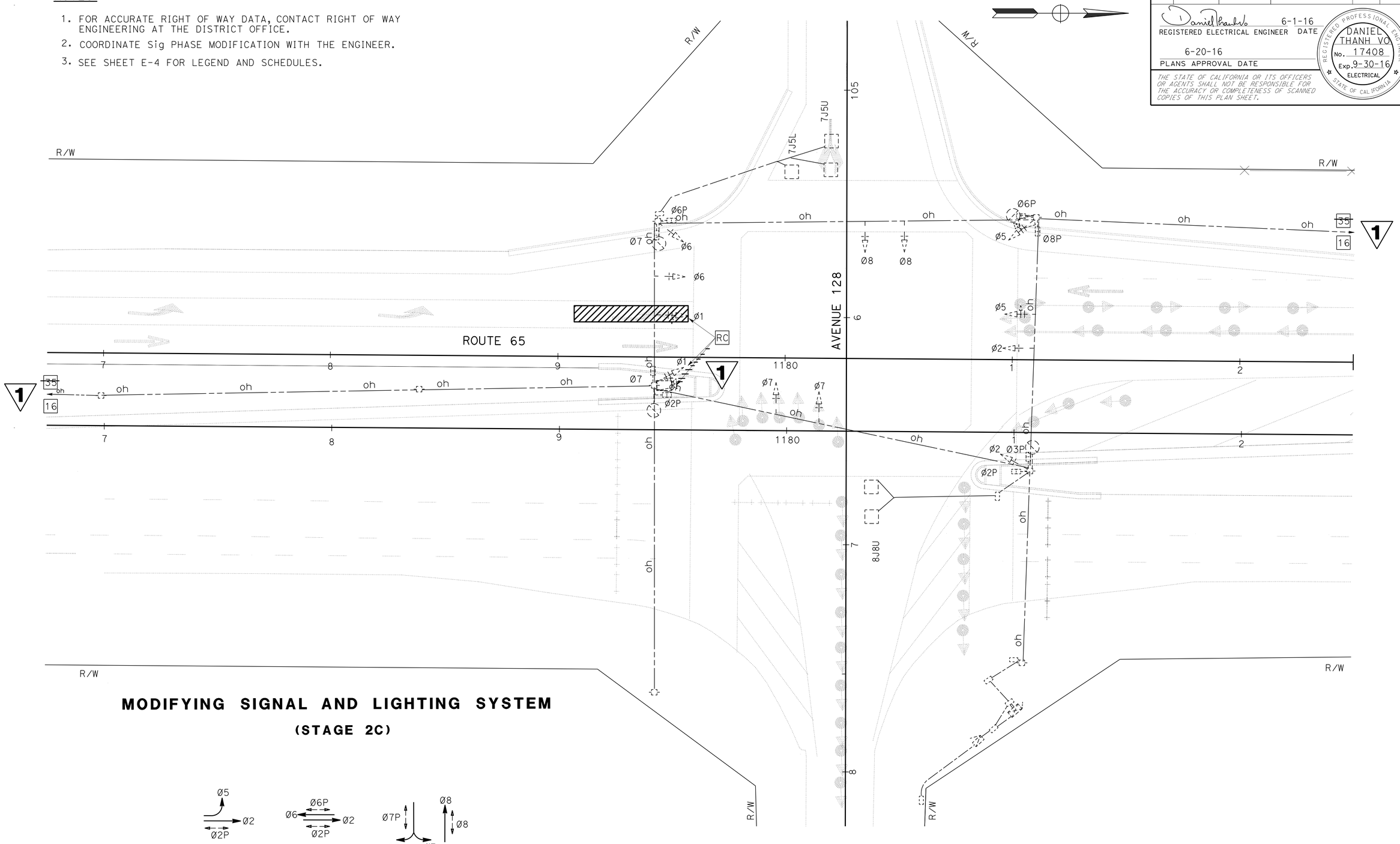


## MODIFYING SIGNAL AND LIGHTING SYSTEM

(STAGE 2C)




PHASE DIAGRAM
STEADY DEMAND SEQUENCE

1 **REPLACED PER ADDENDUM No. 1 DATED OCTOBER 7, 2016**

## MODIFYING EXISTING ELECTRICAL SYSTEM

SCALE: 1"=20'

*APPROVED FOR ELECTRICAL WORK ONLY*

**E-10**

STATE OF CALIFORNIA - DEPARTMENT OF TRANSPORTATION
Caltrans ELECTRICAL DESIGN

FUNCTIONAL SUPERVISOR: ALI BAKHDOUD
CALCULATED-DESIGNED BY: DANIEL VO
CHECKED BY: MONA ATTALLAH
REVISED BY
DATE REVISED

LAST REVISION 06-20-16 | DATE PLOTTED => 05-OCT-2016 | TIME PLOTTED => 15:17

| Dist | COUNTY | ROUTE | POST MILES TOTAL PROJECT | SHEET No. | TOTAL SHEETS |
|---|---|---|---|---|---|
| 06 | Tul | 65 | R15.1/18.0 | 199 | 324 |

REGISTERED ELECTRICAL ENGINEER — DATE 6-1-16

PLANS APPROVAL DATE 6-20-16

REGISTERED PROFESSIONAL ENGINEER — DANIEL THANH VO — No. 17408 — Exp. 9/30/16 — ELECTRICAL — STATE OF CALIFORNIA

*THE STATE OF CALIFORNIA OR ITS OFFICERS OR AGENTS SHALL NOT BE RESPONSIBLE FOR THE ACCURACY OR COMPLETENESS OF SCANNED COPIES OF THIS PLAN SHEET.*

## LEGEND: (FOR SHEET E-16 TO SHEET E-24)

1. 120/240 V, 1ø, 3-WIRE, TYPE III-CF SERVICE EQUIPMENT ENCLOSURE WITH THE FOLLOWING CIRCUIT BREAKERS:

Ctid No. 06460650017120T

| AMPERES | VOLTS | POLES | NAMEPLATE | METER | PHOTOELECTRIC CONTROL TYPE |
|---|---|---|---|---|---|
| 100 | 240 | 2 | MAIN BREAKER | YES | —— |
| 60 | 120 | 1 | TRAFFIC SIGNAL | YES | —— |
| 20 | 120 | 1 | FLASHING BEACON | YES | —— |
| 20 | 120 | 1 | SPARE | YES | —— |
| 40 | 240 | 2 | SPARE | YES | —— |
| —— | —— | 6 | SPACES | —— | —— |

Ctid No. 06460650017120L

| AMPERES | VOLTS | POLES | NAMEPLATE | METER | PHOTOELECTRIC CONTROL TYPE |
|---|---|---|---|---|---|
| 100 | 240 | 2 | MAIN BREAKER | YES | —— |
| 30 | 240 | 2 | HIGHWAY LIGHTING | YES | IV |
| 20 | 120 | 1 | SPARE | YES | —— |
| 40 | 240 | 2 | SPARE | YES | —— |
| —— | —— | 6 | SPACES | —— | —— |

SERVICE EQUIPMENT ENCLOSURE INSTALLED IN STAGE CONSTRUCTION 2B MUST BE USED FOR ULTIMATE MODIFY SIGNAL AND LIGHTING. SEE SHEET E-22

2. 120/240 V, 1ø, 3-WIRE, TYPE III-BF SERVICE EQUIPMENT ENCLOSURE WITH THE FOLLOWING CIRCUIT BREAKERS:

Ctid No. 06460650017122T

| AMPERES | VOLTS | POLES | NAMEPLATE | METER | PHOTOELECTRIC CONTROL TYPE |
|---|---|---|---|---|---|
| 100 | 240 | 2 | MAIN BREAKER | YES | —— |
| 20 | 120 | 1 | RWIS | YES | —— |
| 40 | 240 | 2 | CMS | YES | —— |
| 40 | 120 | 1 | CMS CABINET | YES | —— |
| 40 | 120 | 1 | TMS CABINET | YES | —— |
| —— | —— | 6 | SPACES | —— | —— |

SERVICE EQUIPMENT ENCLOSURE INSTALLED IN STAGE CONSTRUCTION 2B MUST BE USED FOR ULTIMATE TRAFFIC OPERTION SYSTEM. SEE SHEET E-22

3. DEPARTMENT-FURNISHED MODEL 2070E CONTROLLER ASSEMBLY. FURNISH AND INSTALL BBS, WIRELESS MODEM, C11 WIRING HARNESS, AND VIVDA EQUIPMENT. EQUIPMENT INSTALLED IN STAGE CONTRUCTION 2B MUST BE USED FOR ULTIMATE MODIFY SIGNAL AND LIGHTING. SEE SHEET E-22.
4. SCE APPROVED PB.
5. SEE DETAIL C ON SHEET E-30 FOR LEFT TURN DETECTOR LOOP SPACING.
6. 285′ TO LIMIT LINE.
7. No. 5 (T)(E) PULL BOXES AS NECESSARY TO MAINTAIN 200′ MAXIMUM SPACING.
8. 242′ TO LIMIT LINE.
9. 560′ TO LIMIT LINE.
10. 1000′ TO LIMIT LINE.
11. INSTALL R73-3 (CA) SIGN ON SMA.
12. INSTALL D3-1 SIGN ON SIGNAL POLE.
13. INSTALL W3-3 SIGN ON SMA.
14. REFER TO SIGN PLANS FOR SIGN DETAILS.
15. SEE SHEET E-25 FOR CONTINUATION.
16. COVER Sig HEAD.
17. 3"C, 2-12CSC, 2#6
18. 2-12CSC, 2#6, 1#8 (G)
19. Exist 3"C, 2-12CSC, 2#6, ADD 1-12CSC, 2 DLC
20. Exist 2-12CSC, 2#6, 1#8 (G) ADD 1-12CSC, 2 DLC
21. 1-12CSC, 2#6, 1#8 (G)
22. Exist MODEL 2070E CONTROLLER ASSEMBLY INSTALLED IN STAGE CONSTRUCTION TO REMAIN. ~~RC~~ Exist VIVDA EQUIPMENT.
23. Exist EQUIPMENT INSTALLED IN STAGE CONSTRUCTION TO REMAIN.
24. TO FB APPROXIMATELY 640′.
25. AB Exist 3"C, RR 3-12CSC, 2#6
26. Exist 3-12CSC, 2#6, 1#8 (G) ADD 3-12CSC, 2#6, 4 DLC, 2 VIVDA CABLE
27. Exist 1-12CSC, 2#6, 1#8 (G), ADD 1-12CSC, 2#6, 2 DLC, 1 VIVDA CABLE
28. Exist 1-12CSC, 2#6, ADD 1-12CSC, 2#6, 1#8 (G) 1 VIVDA CABLE
29. 2-12CSC, 2#6, 1#8 (G)
30. 1-12CSC, 1#8 (G)
31. 3 POINT LATCH, HANDLE, AND LOCK COVER ON SERVICE EQUIPMENT ENCLOSURE AS SHOWN OF DETAIL A ON SHEET E-28.
32. 2#6, 1#8 (G)
33. 3"C, 6-12CSC, 4 DLC, 2 VIVDA CABLE, 4#6
34. 2-4"C, 6-12CSC, 4 DLC, 2 VIVDA CABLE, 4#6

## POLE AND EQUIPMENT SCHEDULE

| No. | STANDARD TYPE | STANDARD SMA | STANDARD LMA | Veh Sig Mtg MAST ARM | Veh Sig Mtg POLE | Ped Sig Mtg | APS ø | APS ARROW | LED Lum (WATT) | SPECIAL REQUIREMENTS |
|---|---|---|---|---|---|---|---|---|---|---|
| A | 1-A | | | | TV-2-T | SP-1-T | 4 | → | | |
| B | 29-5-100 | 55′ | 15′ | MAS MAS | SV-1-T | SP-1-T | 4 | ← | 165 | F=15′ 12 14 |
| C | 1-A | | | | TV-2-T | SP-1-T | 6 | → | | |
| D | 61-5-100 | 65′ | 15′ | MAS MAS | SV-1-T | SP-1-T | 6 | ← | 165 | F=18′ 11 12 14 |
| E | 1-A | | | | TV-2-T | SP-1-T | 8 | → | | |
| F | 29-5-100 | 55′ | 15′ | MAS MAS | SV-1-T | SP-1-T | 8 | ← | 165 | F=15′ 12 14 |
| G | 1-A | | | | TV-2-T | SP-1-T | 2 | → | | |
| H | 61-5-100 | 65′ | 15′ | MAS MAS | SV-1-T | SP-1-T | 2 | ← | 165 | F=18′ 11 12 14 |
| I | 19-2-100 | 20′ | 15′ | MAS | SV-1-T | | | | 165 | |
| J | 19-2-100 | 20′ | 15′ | MAS | SV-1-T | | | | 165 | |
| K | TYPE 9B FB | | | MAT MAT | | | | | | 13 14 |

## CONDUIT AND CONDUCTOR SCHEDULE

| CONDUCTOR DESIGNATION: CABLE TYPE | POLE | PHASE | CONDUIT RUN NUMBER AND SIZE: 1 (2-4") | 2 (4") | 3 (4") | 4 (4") | 5 (4") | 6 (4") | 7 (4") | 8 (4") | 9 (4") | 10 (4") | 11 (4") | 12 (2") | 13 (2") | 14 (2") | 15 (2") | 16 (3") |
|---|---|---|---|---|---|---|---|---|---|---|---|---|---|---|---|---|---|---|
| VEH-PED/ 12CSC | A | 1,2,2P 4 | 1 1 | 1 1 | | | | | | | | | | | | | | |
| | B | 6,6P 4 | 1 1 | 1 1 | 1 1 | 1 1 | | | | | | | | | | | | |
| | C | 3,4,4P 6 | 1 1 | 1 1 | 1 1 | 1 1 | 1 1 | | | | | | | | | | | |
| | D | 3,8,8P 6 | 1 1 | 1 1 | 1 1 | 1 1 | 1 1 | 1 1 | | | | | | | | | | |
| | E | 5,6,6P 8 | 1 1 | | | | | | | 1 1 | 1 1 | 1 1 | 1 1 | 1 1 | | | | |
| | F | 2,2P 8 | 1 1 | | | | | | | | | 1 1 | 1 1 | 1 1 | | | | |
| | G | 7,8,8P 2 | 1 1 | | | | | | | | | | 1 1 | 1 1 | | | | |
| | H | 4,7,4P 2 | 1 1 | | | | | | | | | | | 1 1 | | | | |
| PBA 3CSC | I | 5 | 1 | | | | | | | | 1 | 1 | 1 | 1 | | | | |
| | J | 1 | 1 | 1 | 1 | | | | | | | | | | | | | |
| | | SUBTOTAL | 10 8 | 5 4 | 4 3 | 3 3 | 2 2 | 1 1 | 0 0 | 1 1 | 2 1 | 3 | | 4 3 | 5 4 | | | |
| AWG | | CIRCUIT | | | | | | | | | | | | | | | | |
| | | APS CABLE | | 2 | | | 2 | | 2 | | | 2 | | 2 | | | | |
| #6 | | LIGHTING | | 2 | 2 | 2 | | | 2 | 2 | 2 | 2 | 2 | 2 | 2 | 2 | | |
| #6 | | FB | | 2 | | | | | | 2 | 2 | 2 | 2 | 2 | 2 | 2 | | |
| #4 | | SIGNAL | | | | | | | | | | | | | | 2 | | |
| #6 | | RWIS | | | | | | | | | | | | | | | 2 | 2 |
| #2 | | CMS SIGN | | | | | | | | | | | | | | | 3 | 3 |
| #4 | | CMS CABINET | | | | | | | | | | | | | | | 2 | 2 |
| #4 | | TMS CABINET | | | | | | | | | | | | | | | 2 | 2 |
| DLC | | PHASE | | | | | | | | | | | | | | | | |
| | | ø1 | 2 | | | | | | | | 2 | 2 | 2 | 2 | | | | |
| | | ø2 | 4 | 4 | | | | | | | | | | | | | | |
| | | ø2 MID | 1 | 1 | | | | | | | | | | | | | | |
| | | ø2 ADV | 1 | 1 | | | | | | | | | | | | | | |
| | | ø3 | 2 | | | | | | | | | | 2 | 2 | | | | |
| | | ø4 | 3 | 3 | 3 | 3 | 3 | | | | | | | | | | | |
| | | ø4 ADV | 1 | 1 | 1 | 1 | 1 | | | | | | | | | | | |
| | | ø5 | 2 | 2 | 2 | | | | | | | | | | | | | |
| | | ø6 | 4 | 4 | 4 | 4 | 4 | 4 | 4 | | | | | | | | | |
| | | ø6 MID | 1 | 1 | 1 | 1 | 1 | 1 | 1 | | | | | | | | | |
| | | ø6 ADV | 1 | 1 | 1 | 1 | 1 | 1 | 1 | | | | | | | | | |
| | | ø7 | 2 | 2 | 2 | 2 | 2 | | | | | | | | | | | |
| | | ø8 | 4 | | | | | | | | | | 4 | 4 | | | | |
| | | ø8 ADV | 1 | | | | | | | | | | 1 | 1 | | | | |
| | | SUBTOTAL | 29 | 20 | 14 | 12 | 12 | 6 | 6 | | 2 | 2 | 9 | 9 | | | | |

△△ Exist CONDUIT INSTALLED IN STAGE CONSTRUCTION 2B TO REMAIN.
RC Exist CONDUCTORS. FURNISH AND INSTALL CONDUCTORS AS SHOWN.

△1 **REPLACED PER ADDENDUM No. 1 DATED OCTOBER 7, 2016**

*APPROVED FOR ELECTRICAL WORK ONLY*

# LEGEND AND SCHEDULES

E-15

STATE OF CALIFORNIA - DEPARTMENT OF TRANSPORTATION — Caltrans ELECTRICAL DESIGN

FUNCTIONAL SUPERVISOR: ALI BAKHDOUD

CALCULATED-DESIGNED BY: DANIEL VO — CHECKED BY: MONA ATTALLAH

REVISED BY — DATE REVISED

LAST REVISION DATE PLOTTED => 05-OCT-2016 — TIME PLOTTED => 15:17

| Dist | COUNTY | ROUTE | POST MILES TOTAL PROJECT | SHEET No. | TOTAL SHEETS |
|---|---|---|---|---|---|
| 06 | Tul | 65 | R15.1/18.0 | 201 | 324 |

REGISTERED ELECTRICAL ENGINEER — DATE: 6-1-16

PLANS APPROVAL DATE: 6-20-16

REGISTERED PROFESSIONAL ENGINEER — DANIEL THANH VO — No. 17408 — Exp. 9/30/16 — ELECTRICAL — STATE OF CALIFORNIA

*THE STATE OF CALIFORNIA OR ITS OFFICERS OR AGENTS SHALL NOT BE RESPONSIBLE FOR THE ACCURACY OR COMPLETENESS OF SCANNED COPIES OF THIS PLAN SHEET.*

## NOTES:

1. FOR ACCURATE RIGHT OF WAY DATA, CONTACT RIGHT OF WAY ENGINEERING AT THE DISTRICT OFFICE.
2. COORDINATE Sig PHASE MODIFICATION WITH THE ENGINEER.
3. SEE SHEET E-15 FOR LEGEND AND SCHEDULES.
4. SEE SES SHEETS FOR TEMPORARY WOOD POLE DETAILS.
5. SEE SHEET E-22 FOR LOCATION OF PROPOSED TRAFFIC Sig EQUIPMENT.
6. RC STAGE CONSTRUCTION Sig AND Ltg EQUIPMENT, AND RS VIVDA EQUIPMENT AFTER STAGE CONSTRUCTION IS COMPLETED.

1

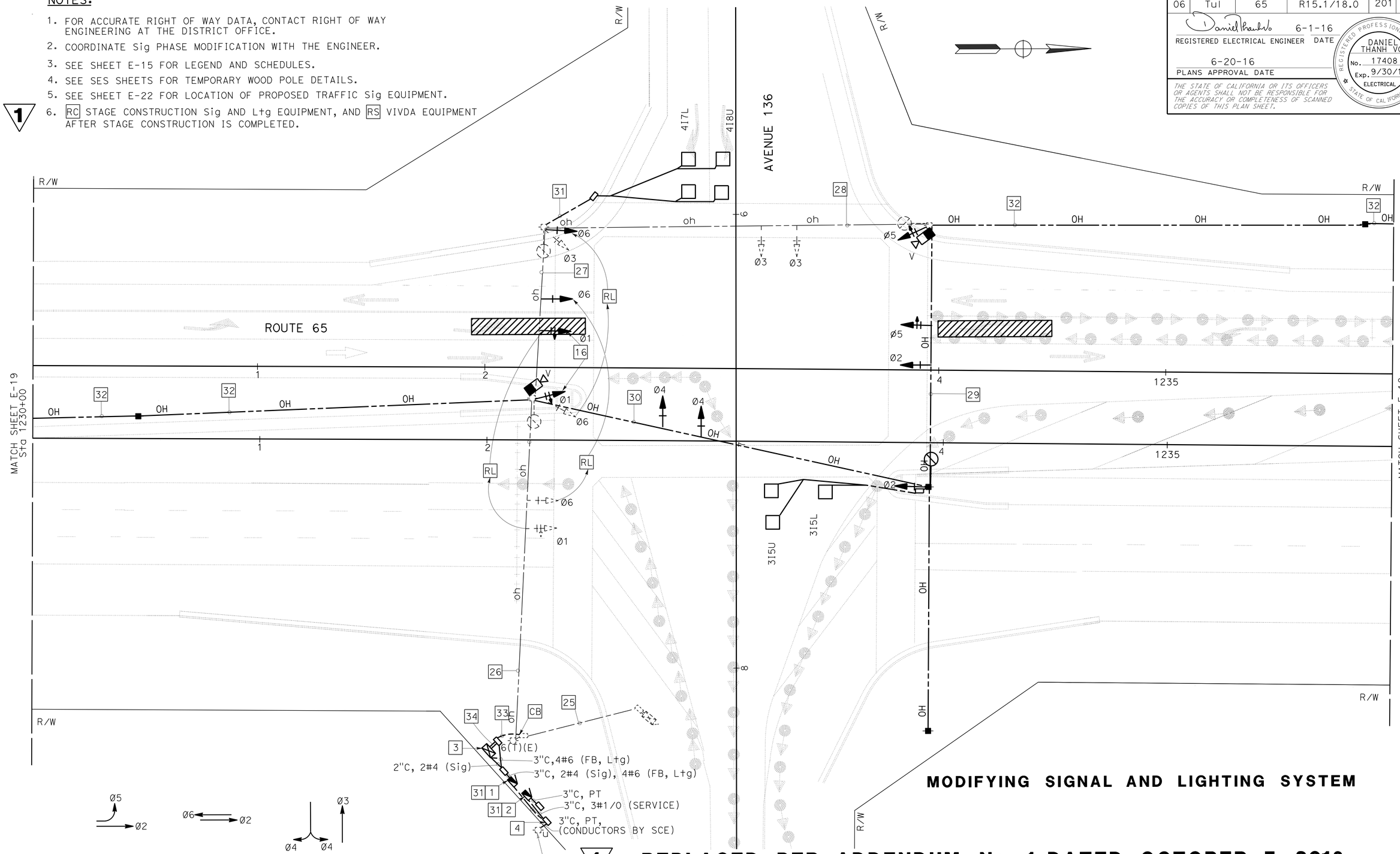


**MODIFYING SIGNAL AND LIGHTING SYSTEM**

1 **REPLACED PER ADDENDUM No. 1 DATED OCTOBER 7, 2016**
**(STAGE 2B)**

**MODIFYING EXISTING ELECTRICAL SYSTEM**

**E-17**

*APPROVED FOR ELECTRICAL WORK ONLY*

SCALE: 1"=20'

STATE OF CALIFORNIA - DEPARTMENT OF TRANSPORTATION
Caltrans ELECTRICAL DESIGN

FUNCTIONAL SUPERVISOR: ALI BAKHDOUD
CALCULATED-DESIGNED BY: DANIEL VO
CHECKED BY: MONA ATTALLAH
REVISED BY / DATE REVISED

LAST REVISION — DATE PLOTTED => 05-OCT-2016 — TIME PLOTTED => 15:17 — 06-20-16

| Dist | COUNTY | ROUTE | POST MILES TOTAL PROJECT | SHEET No. | TOTAL SHEETS |
|---|---|---|---|---|---|
| 06 | Tul | 65 | R15.1/18.0 | 202 | 324 |

REGISTERED ELECTRICAL ENGINEER 6-1-16 DATE

6-20-16
PLANS APPROVAL DATE

REGISTERED PROFESSIONAL ENGINEER DANIEL THANH VO No. 17408 Exp. 9/30/16 ELECTRICAL STATE OF CALIFORNIA

*THE STATE OF CALIFORNIA OR ITS OFFICERS OR AGENTS SHALL NOT BE RESPONSIBLE FOR THE ACCURACY OR COMPLETENESS OF SCANNED COPIES OF THIS PLAN SHEET.*

## NOTES:

1. FOR ACCURATE RIGHT OF WAY DATA, CONTACT RIGHT OF WAY ENGINEERING AT THE DISTRICT OFFICE.
2. COORDINATE Sig PHASE MODIFICATION WITH THE ENGINEER.
3. SEE SHEET E-15 FOR LEGEND AND SCHEDULES.
4. SEE SES SHEETS FOR TEMPORARY WOOD POLE DETAILS.
5. (1) RC STAGE CONSTRUCTION Sig EQUIPMENT AFTER STAGING IS COMPLETED.

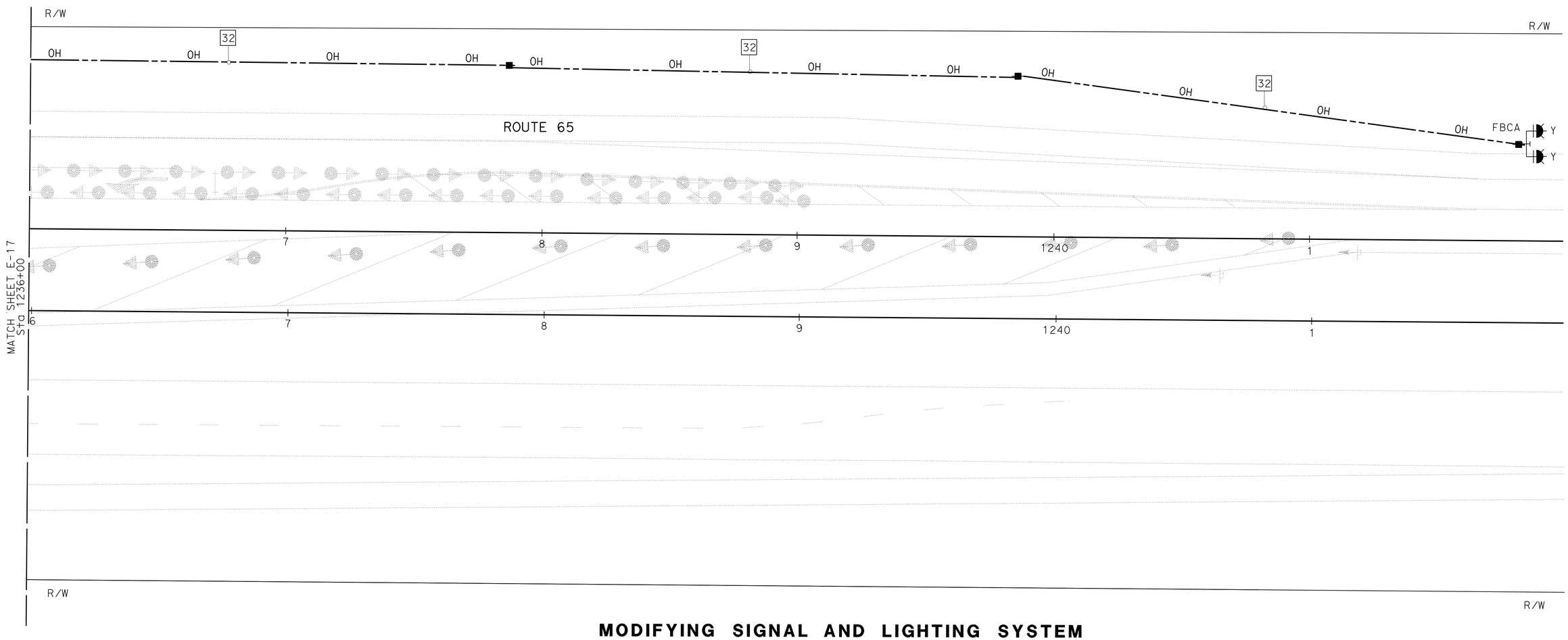


**MODIFYING SIGNAL AND LIGHTING SYSTEM**

**(STAGE 2B)**

(1) **REPLACED PER ADDENDUM No. 1 DATED OCTOBER 7, 2016**

*APPROVED FOR ELECTRICAL WORK ONLY*

**MODIFYING EXISTING ELECTRICAL SYSTEM**

**E-18**

SCALE: 1"=20'

STATE OF CALIFORNIA - DEPARTMENT OF TRANSPORTATION
Caltrans ELECTRICAL DESIGN

FUNCTIONAL SUPERVISOR: ALI BAKHDOUD
CALCULATED-DESIGNED BY: DANIEL VO
CHECKED BY: MONA ATTALLAH
REVISED BY
DATE REVISED

LAST REVISION DATE PLOTTED => 05-OCT-2016
06-20-16 TIME PLOTTED => 15:17

| Dist | COUNTY | ROUTE | POST MILES TOTAL PROJECT | SHEET No. | TOTAL SHEETS |
|---|---|---|---|---|---|
| 06 | Tul | 65 | R15.1/18.0 | 203 | 324 |

REGISTERED ELECTRICAL ENGINEER 6-1-16 DATE

6-20-16
PLANS APPROVAL DATE

REGISTERED PROFESSIONAL ENGINEER DANIEL THANH VO No. 17408 Exp. 9/30/16 ELECTRICAL STATE OF CALIFORNIA

*THE STATE OF CALIFORNIA OR ITS OFFICERS OR AGENTS SHALL NOT BE RESPONSIBLE FOR THE ACCURACY OR COMPLETENESS OF SCANNED COPIES OF THIS PLAN SHEET.*

NOTES:

1. FOR ACCURATE RIGHT OF WAY DATA, CONTACT RIGHT OF WAY ENGINEERING AT THE DISTRICT OFFICE.
2. COORDINATE Sig PHASE MODIFICATION WITH THE ENGINEER.
3. SEE SHEET E-15 FOR LEGEND AND SCHEDULES.
4. SEE SES SHEETS FOR TEMPORARY WOOD POLE DETAILS.
5. RC STAGE CONSTRUCTION Sig EQUIPMENT AFTER STAGING IS COMPLETED.

1

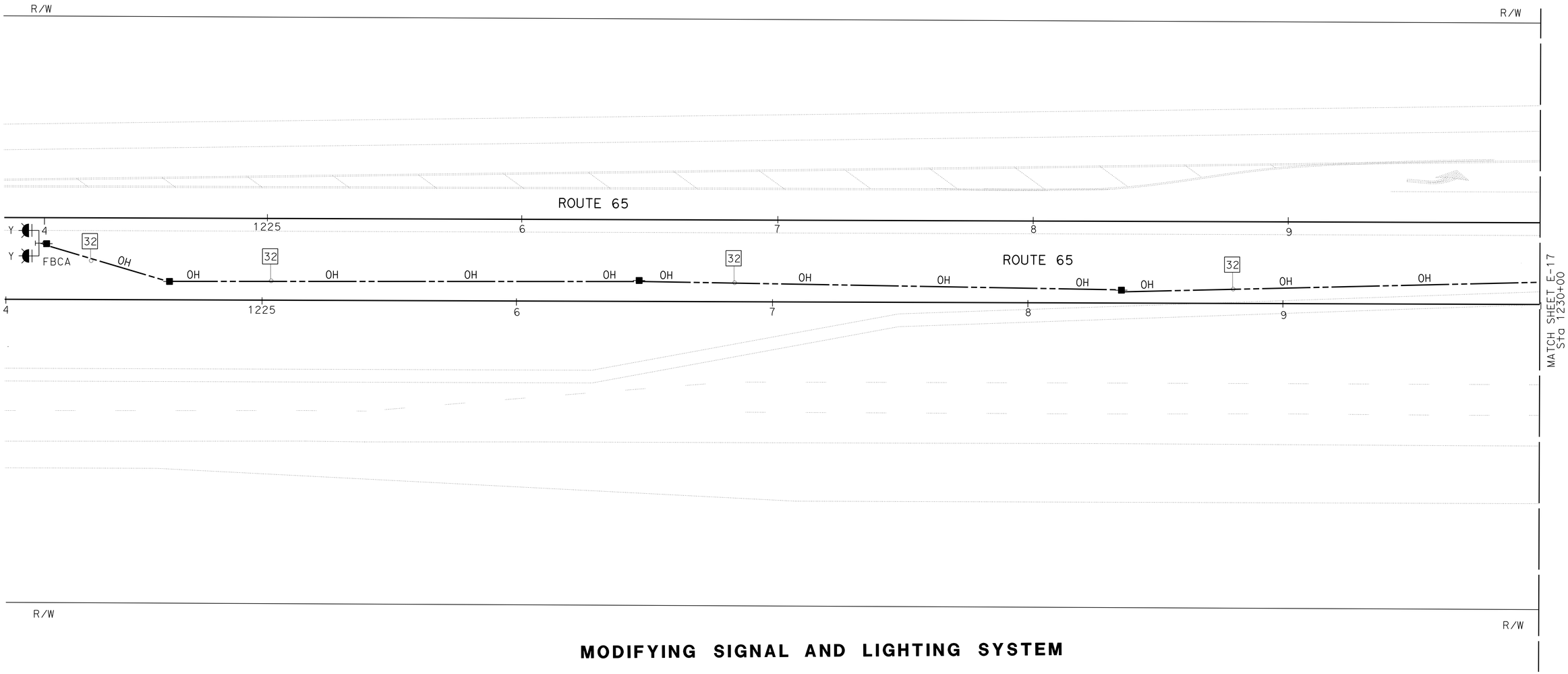


**MODIFYING SIGNAL AND LIGHTING SYSTEM**

**(STAGE 2B)**

1 **REPLACED PER ADDENDUM No. 1 DATED OCTOBER 7, 2016**

**MODIFYING EXISTING ELECTRICAL SYSTEM**

**E-19**

*APPROVED FOR ELECTRICAL WORK ONLY*

SCALE: 1"=20'

STATE OF CALIFORNIA - DEPARTMENT OF TRANSPORTATION
Caltrans ELECTRICAL DESIGN

FUNCTIONAL SUPERVISOR: ALI BAKHDOUD
CALCULATED-DESIGNED BY: DANIEL VO
CHECKED BY: MONA ATTALLAH
REVISED BY / DATE REVISED

LAST REVISION 06-20-16 | DATE PLOTTED => 05-OCT-2016 | TIME PLOTTED => 15:17

| Dist | COUNTY | ROUTE | POST MILES TOTAL PROJECT | SHEET No. | TOTAL SHEETS |
|---|---|---|---|---|---|
| 06 | Tul | 65 | R15.1/18.0 | 204 | 324 |

REGISTERED ELECTRICAL ENGINEER 6-1-16 DATE

6-20-16
PLANS APPROVAL DATE

REGISTERED PROFESSIONAL ENGINEER DANIEL THANH VO No. 17408 Exp. 9/30/16 ELECTRICAL STATE OF CALIFORNIA

*THE STATE OF CALIFORNIA OR ITS OFFICERS OR AGENTS SHALL NOT BE RESPONSIBLE FOR THE ACCURACY OR COMPLETENESS OF SCANNED COPIES OF THIS PLAN SHEET.*

**NOTE:**

1. FOR ACCURATE RIGHT OF WAY DATA, CONTACT RIGHT OF WAY ENGINEERING AT THE DISTRICT OFFICE.
2. COORDINATE Sig PHASE MODIFICATION WITH THE ENGINEER.
3. SEE SHEET E-15 FOR LEGEND AND SCHEDULES.

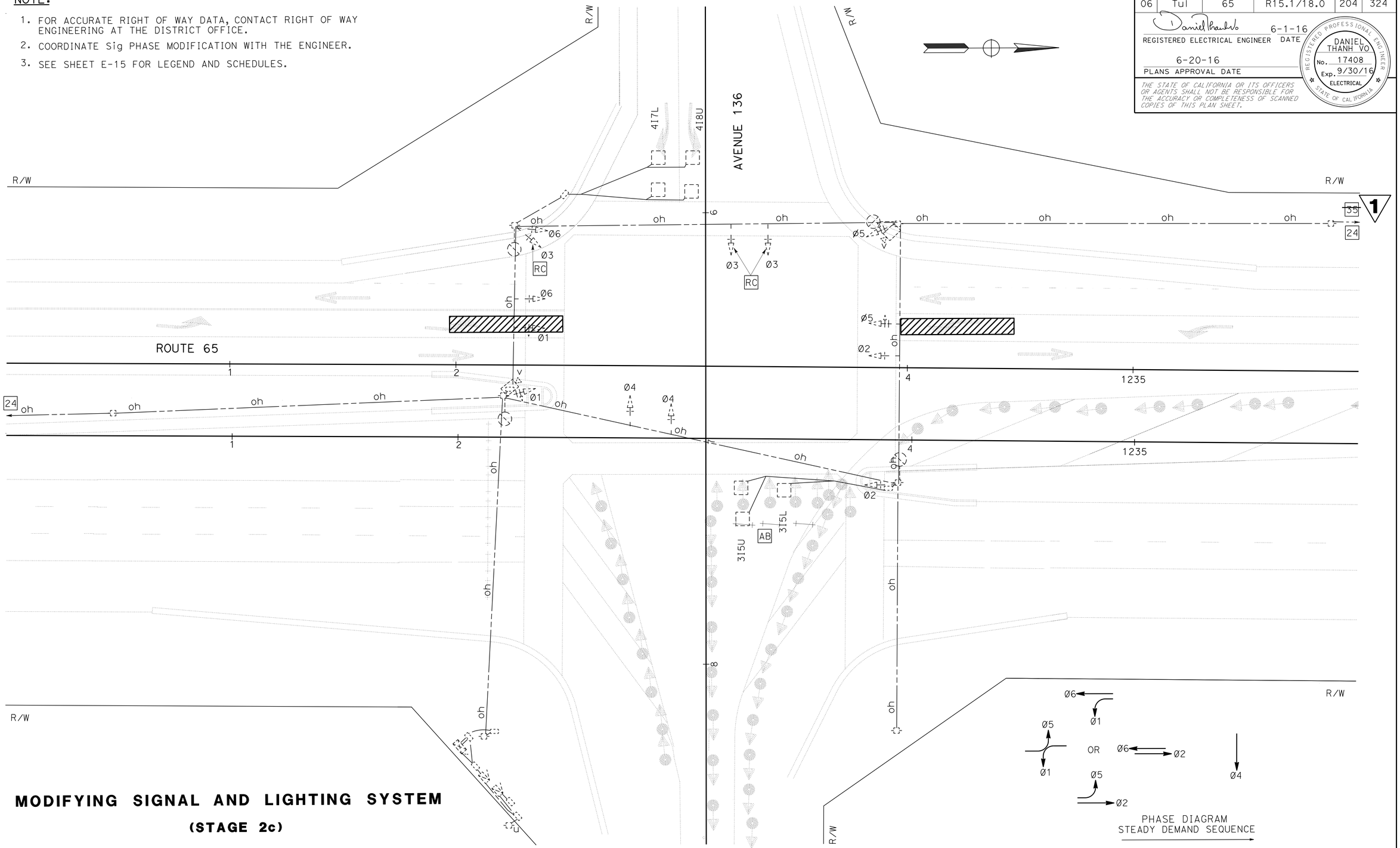


**MODIFYING SIGNAL AND LIGHTING SYSTEM**

**(STAGE 2c)**

1 **REPLACED PER ADDENDUM No. 1 DATED OCTOBER 7, 2016**

*APPROVED FOR ELECTRICAL WORK ONLY*

**MODIFYING EXISTING ELECTRICAL SYSTEM**

**E-20**

SCALE: 1"=20'

STATE OF CALIFORNIA - DEPARTMENT OF TRANSPORTATION
Caltrans ELECTRICAL DESIGN

FUNCTIONAL SUPERVISOR: ALI BAKHDOUD
CALCULATED-DESIGNED BY: DANIEL VO
CHECKED BY: MONA ATTALLAH
REVISED BY / DATE REVISED

LAST REVISION / DATE PLOTTED => 06-OCT-2016
06-20-16 / TIME PLOTTED => 15:17

# 1 ADDED PER ADDENDUM No. 1 DATED OCTOBER 7, 2016

| Dist | COUNTY | ROUTE | POST MILES TOTAL PROJECT | SHEET No. | TOTAL SHEETS |
|---|---|---|---|---|---|
| 06 | Tul | 65 | R15.1/18.0 | 288A | 324 |

REGISTERED ELECTRICAL ENGINEER

October 30, 2015
PLANS APPROVAL DATE

Theresa Aziz Gabriel No. E15129 Exp. 6-30-16 ELECTRICAL — REGISTERED PROFESSIONAL ENGINEER — STATE OF CALIFORNIA

*THE STATE OF CALIFORNIA OR ITS OFFICERS OR AGENTS SHALL NOT BE RESPONSIBLE FOR THE ACCURACY OR COMPLETENESS OF SCANNED COPIES OF THIS PLAN SHEET.*

TO ACCOMPANY PLANS DATED 6-20-16

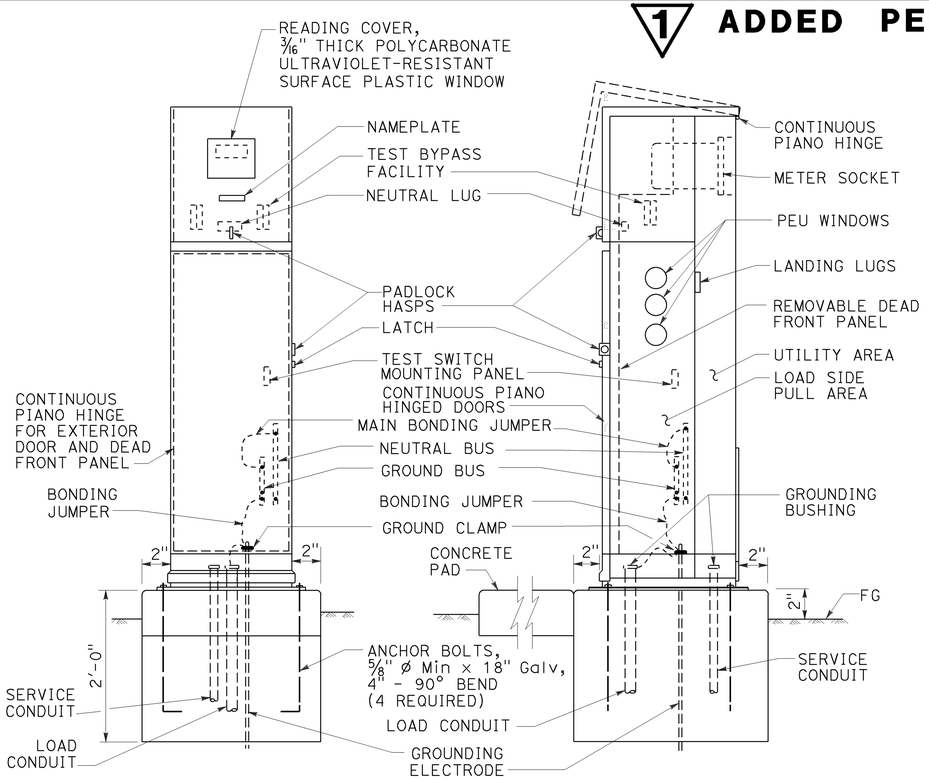


## TYPE III-BF SERVICE EQUIPMENT ENCLOSURE (TYPICAL)

DETAIL A

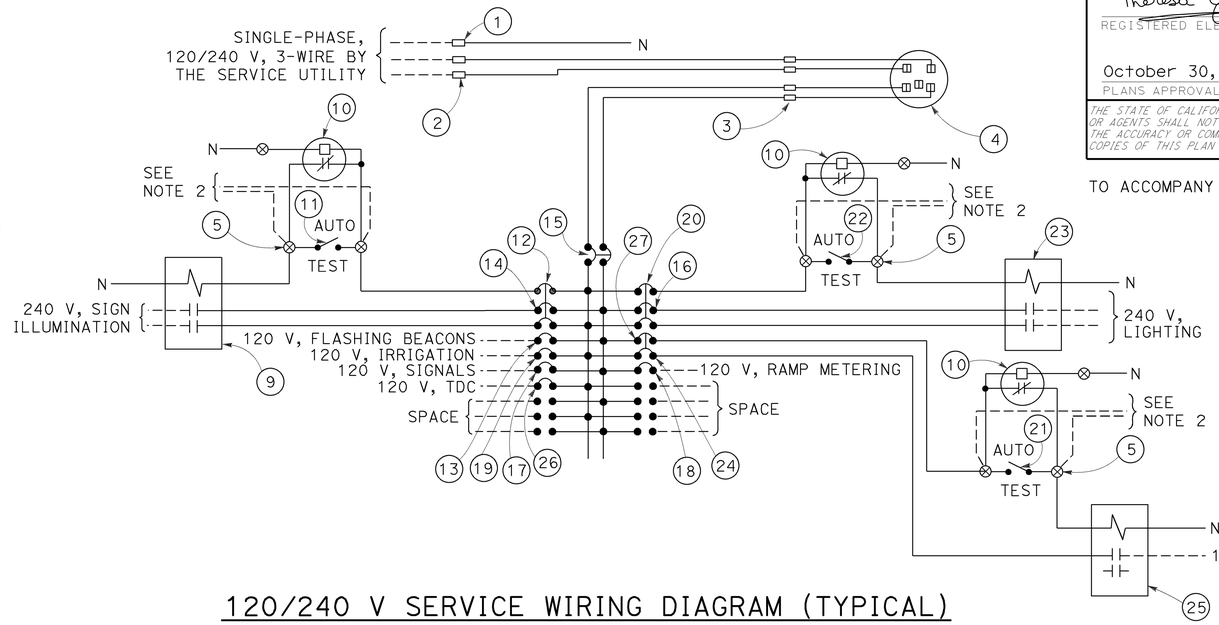


## 120/240 V SERVICE WIRING DIAGRAM (TYPICAL)

DETAIL C

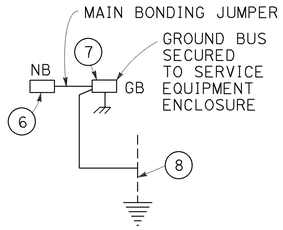


DETAIL D

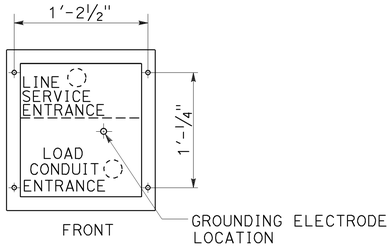


## BASE FOR TYPE III-B SERVICE EQUIPMENT ENCLOSURE

DETAIL B

### TYPE III-B SERVICE EQUIPMENT ENCLOSURE LEGEND (120/240 V)

| ITEM | COMPONENT | NAMEPLATE DESCRIPTION | ITEM | COMPONENT | NAMEPLATE DESCRIPTION |
|---|---|---|---|---|---|
| 1 | NEUTRAL LUG | | 14 | 30 A, 240 V, 2P, CB | SIGN ILLUMINATION |
| 2 | LANDING LUG | | 15 | 100 A, 240 V, 2P, CB | MAIN BREAKER |
| 3 | TEST BYPASS FACILITY | | 16 | 30 A, 240 V, 2P, CB | LIGHTING |
| 4 | METER SOCKET AND SUPPORT | | 17 | 50 A, 120 V, 1P, CB | SIGNALS |
| 5 | TERMINAL BLOCKS | | 18 | 30 A, 120 V, 1P, CB | RAMP METERING |
| 6 | NEUTRAL BUS | | 19 | 20 A, 120 V, 1P, CB | IRRIGATION |
| 7 | GROUND BUS | | 20 | 15 A, 120 V, 1P, CB | LIGHTING CONTROL |
| 8 | GROUNDING ELECTRODE | | 21 | 15 A, 1P, TEST SWITCH | IISNS TEST SWITCH |
| 9 | 30 A, 2P, NO CONTACTOR | SIGN ILLUMINATION | 22 | 15 A, 1P, TEST SWITCH | LIGHTING TEST SWITCH |
| 10 | PHOTOELECTRIC UNIT (NOTE 4) | PEU | 23 | 60 A, 2P, NO CONTACTOR | LIGHTING |
| 11 | 15 A, 1P, TEST SWITCH | SIGN ILLUMINATION TEST SWITCH | 24 | 15 A, 120 V, 1P, CB | IISNS |
| 12 | 15 A, 120 V, 1P, CB | SIGN ILLUMINATION CONTROL | 25 | 30 A, 2P, NO CONTACTOR | IISNS |
| 13 | 15 A, 120 V, 1P, CB | FLASHING BEACON | 26 | 20 A, 120 V, IP, CB | TELEPHONE DEMARCATION CABINET |
| | | | 27 | 15 A, 120 V, 1P, CB | IISNS CONTROL |

### NOTES:

1. Unless otherwise indicated on the plans, service equipment items shall be provided for each service equipment enclosure as shown.
2. Connect to remote test switch mounted on lighting standards, sign post or structure when required.
3. Items 1 and 6 shall be isolated from the service equipment enclosure.
4. Type V photoelectric control shall be used unless otherwise indicated on the plans.
5. Item 12, 20 and 27 shall be ganged operated CB.

STATE OF CALIFORNIA
DEPARTMENT OF TRANSPORTATION

# ELECTRICAL SYSTEMS (SERVICE EQUIPMENT ENCLOSURE AND TYPICAL WIRING DIAGRAM, TYPE III-B SERIES)

NO SCALE

RSP ES-2E DATED OCTOBER 30, 2015 SUPERSEDES STANDARD PLAN ES-2E DATED MAY 20, 2011 - PAGE 432 OF THE STANDARD PLANS BOOK DATED 2010.

**REVISED STANDARD PLAN RSP ES-2E**

2010 REVISED STANDARD PLAN RSP ES-2E

8-20-15

# 1 ADDED PER ADDENDUM No. 1 DATED OCTOBER 7, 2016

| DIST | COUNTY | ROUTE | POST MILES TOTAL PROJECT | SHEET NO. | TOTAL SHEETS |
|---|---|---|---|---|---|
| 06 | Tul | 65 | R15.1/18.0 | 315A | 324 |

Theresa Gabriel
REGISTERED ELECTRICAL ENGINEER

April 15, 2016
PLANS APPROVAL DATE

REGISTERED PROFESSIONAL ENGINEER
Theresa Aziz Gabriel
No. E15129
Exp. 6-30-16
ELECTRICAL
STATE OF CALIFORNIA

*THE STATE OF CALIFORNIA OR ITS OFFICERS OR AGENTS SHALL NOT BE RESPONSIBLE FOR THE ACCURACY OR COMPLETENESS OF SCANNED COPIES OF THIS PLAN SHEET.*

TO ACCOMPANY PLANS DATED 6-20-16

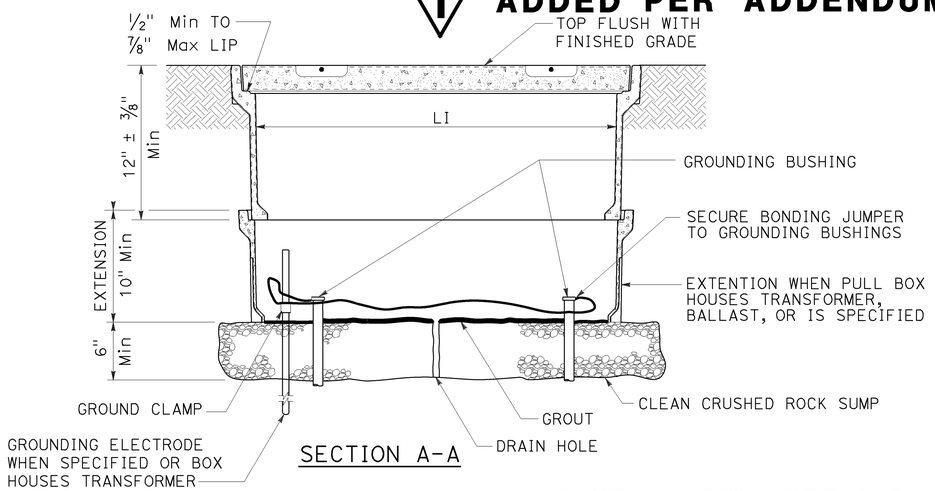


SECTION A-A

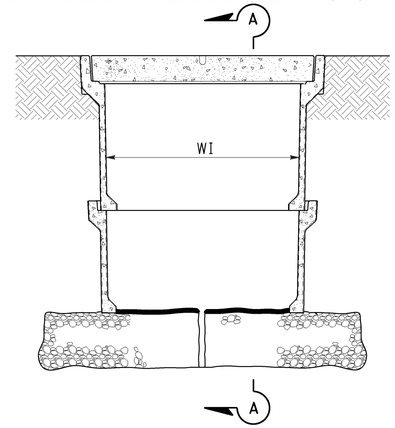


SIDE VIEW

## INSTALLATION DETAILS

### DETAIL A

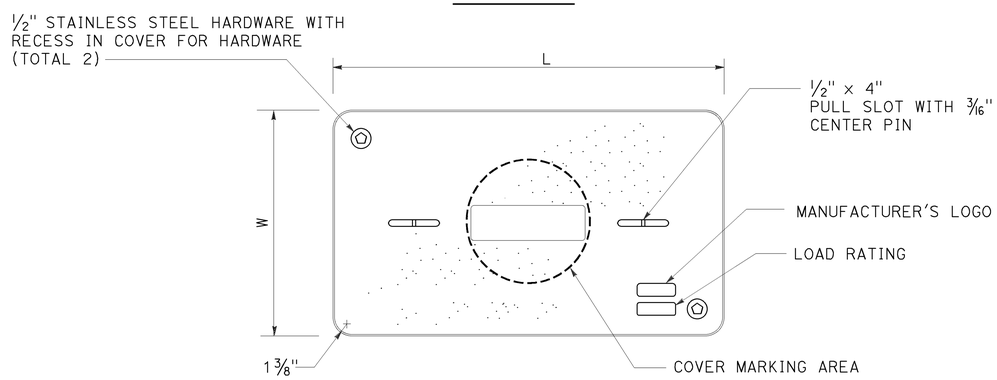


COVER TOP VIEW

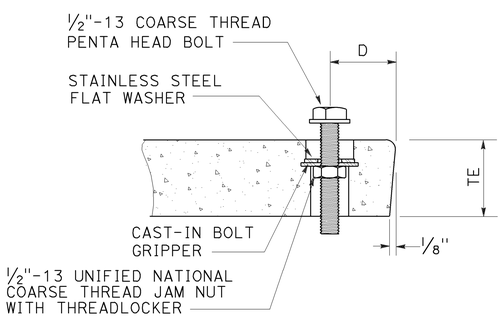


TYPICAL COVER CAPTIVE BOLT

OR SIMILAR

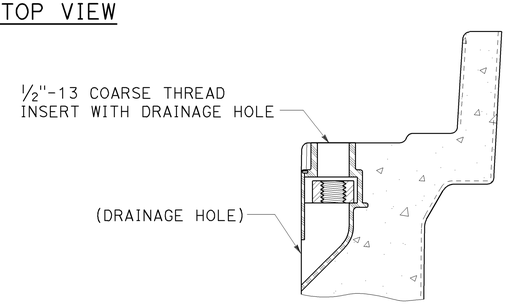


TYPICAL THREADED INSERT

OR SIMILAR

NOTES:

1. The nominal dimensions of the opening in which the cover sets shall be the same as the cover dimensions except the length and width dimensions shall be 1/8" greater.
2. Covers and boxes shall be interchangeable with California standard male and female gages. When interchanged with a standard male or female gage, the top surfaces shall be flush within 1/8". Top outside radius of covers and pull boxes shall have a 1/8" radius.
3. Dimensions for the cover for non-traffic pull box are nominal values.

DIMENSION TABLE

| PULL BOX | PULL BOX | | | | | COVER | | | | |
|---|---|---|---|---|---|---|---|---|---|---|
| | MINIMUM DEPTH BOX | MINIMUM DEPTH EXTENSION | MINIMUM WEIGHT | LI Min | WI Min | TE | D | L | W | MINIMUM WEIGHT |
| No. 3 1/2 | 12" | N/A | 40 lb | 1' - 3" | 9" | 1 3/4" | 1 3/4" | 1'-3 1/4" - 1'-3 3/8" | 10" - 10 1/8" | 30 lb |
| No. 5 | 12" | 10" | 55 lb | 1' - 8" | 11" | 2" | 1 3/4" | 1'-11 1/4" | 1'-1 3/4" | 60 lb |
| No. 6 | 12" | 10" | 70 lb | 2' - 4 1/4" | 1' - 3 1/4" | 2" | 2" | 2'-6 1/2" | 1'-5 1/2" | 85 lb |

STATE OF CALIFORNIA
DEPARTMENT OF TRANSPORTATION

# ELECTRICAL SYSTEMS (NON-TRAFFIC PULL BOX)

NO SCALE

RSP ES-8A DATED APRIL 15, 2016 SUPERSEDES RSP ES-8A DATED OCTOBER 30, 2015 AND RSP ES-8A DATED JULY 19, 2013 AND RSP ES-8A DATED JANUARY 20, 2012 THAT SUPPLEMENTS THE STANDARD PLANS BOOK DATED 2010.

**REVISED STANDARD PLAN RSP ES-8A**

2010 REVISED STANDARD PLAN RSP ES-8A

1-22-16