Dist	COUNTY	ROUTE	POST MILES TOTAL PROJECT	SHEET No.	TOTAL SHEETS
06	Ker	119	R10.0/R13.3	27	158

REGISTERED CIVIL ENGINEER 8-25-14 DATE

3-9-15
PLANS APPROVAL DATE

REGISTERED PROFESSIONAL ENGINEER HARJINDER DHILLON No. 68254 Exp. 9-30-15 CIVIL STATE OF CALIFORNIA

THE STATE OF CALIFORNIA OR ITS OFFICERS OR AGENTS SHALL NOT BE RESPONSIBLE FOR THE ACCURACY OR COMPLETENESS OF SCANNED COPIES OF THIS PLAN SHEET.

NOTE:

FOR ACCURATE RIGHT OF WAY DATA,
CONTACT RIGHT OF WAY ENGINEERING AT THE DISTRICT OFFICE.

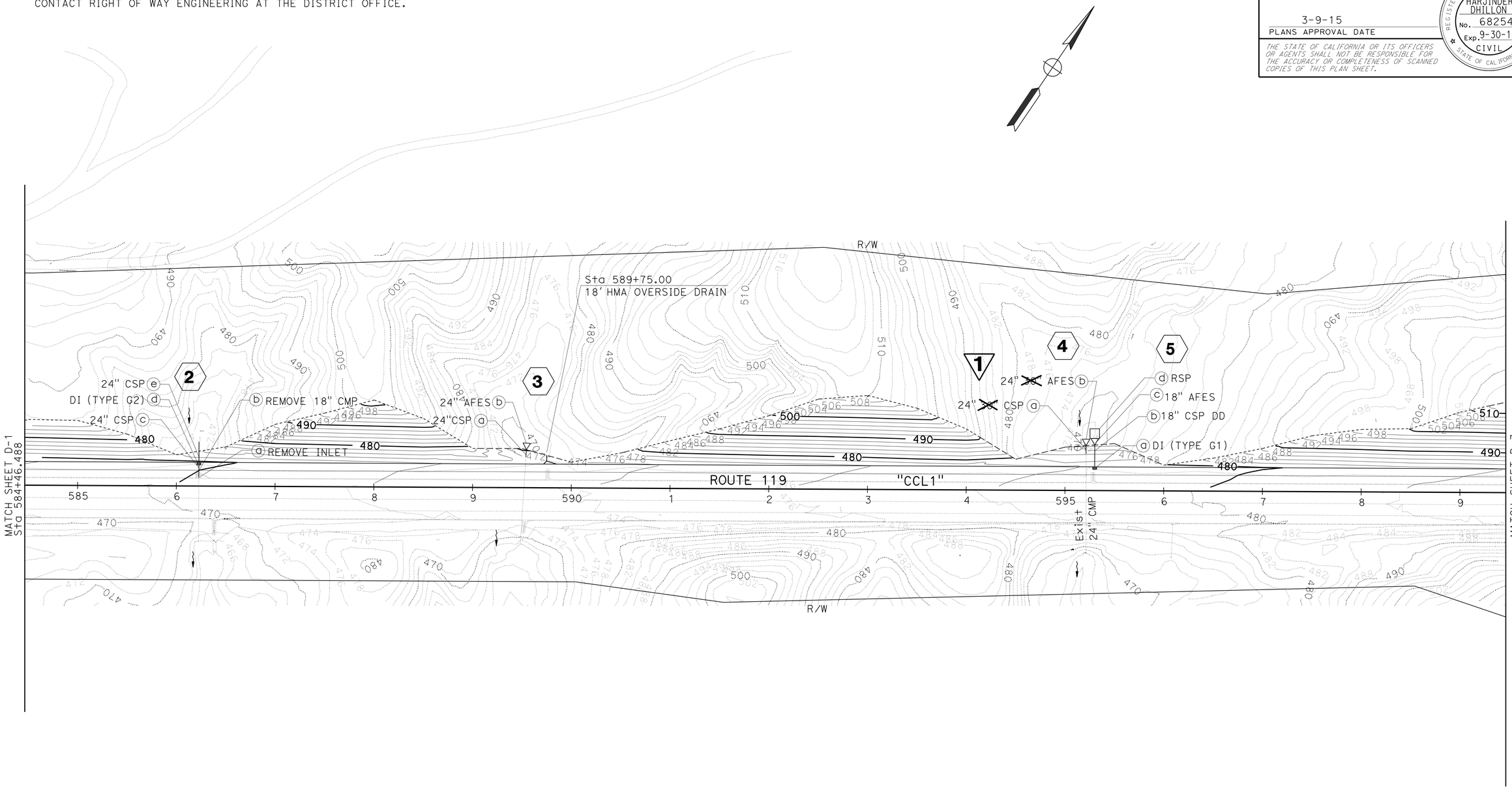

1 REPLACED PER ADDENDUM No. 1 DATED JULY 10, 2015

DRAINAGE PLAN D-2

SCALE: 1" = 50'

APPROVED FOR DRAINAGE WORK ONLY

STATE OF CALIFORNIA - DEPARTMENT OF TRANSPORTATION
Caltrans DESIGN

FUNCTIONAL SUPERVISOR: DAVID SANGHA
CALCULATED-DESIGNED BY: HARJINDER DHILLON
CHECKED BY: CARMELITA BELLE
REVISED BY
DATE REVISED

LAST REVISION 01-12-15
DATE PLOTTED => 08-JUL-2015
TIME PLOTTED => 10:35

Dist	COUNTY	ROUTE	POST MILES TOTAL PROJECT	SHEET No.	TOTAL SHEETS
06	Ker	119	R10.0/R13.3	58	158

REGISTERED CIVIL ENGINEER 8-25-14 DATE

3-9-15
PLANS APPROVAL DATE

REGISTERED PROFESSIONAL ENGINEER HARJINDER DHILLON No. 68254 Exp. 9-30-15 CIVIL STATE OF CALIFORNIA

THE STATE OF CALIFORNIA OR ITS OFFICERS OR AGENTS SHALL NOT BE RESPONSIBLE FOR THE ACCURACY OR COMPLETENESS OF SCANNED COPIES OF THIS PLAN SHEET.

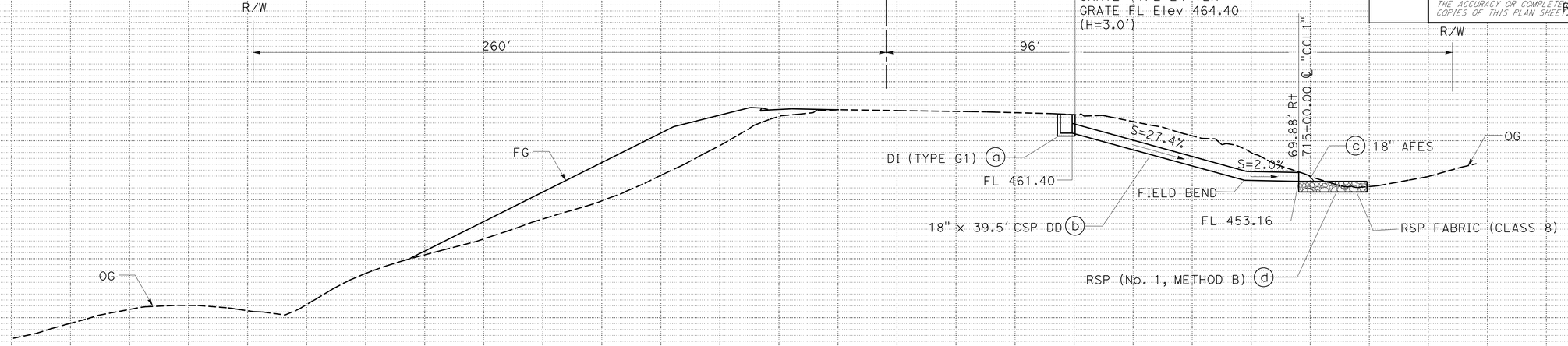

DRAINAGE SYSTEM No. 45

Sta 715+00.00

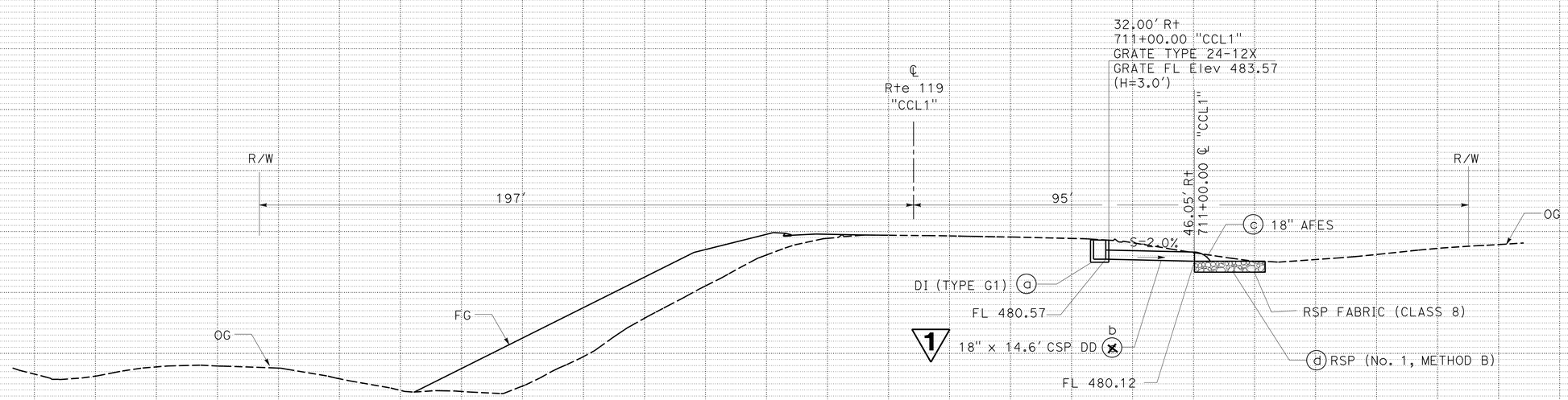

DRAINAGE SYSTEM No. 44

Sta 711+00.00

1 **REPLACED PER ADDENDUM No. 1 DATED JULY 10, 2015**

DRAINAGE PROFILES

SCALE: Horiz 1"=10′
Vert 1"=10′

DP-21

REVISED BY | DATE REVISED
HARJINDER DHILLON | CARMELITA BELLE
CALCULATED-DESIGNED BY | CHECKED BY
FUNCTIONAL SUPERVISOR: DAVID SANGHA
STATE OF CALIFORNIA - DEPARTMENT OF TRANSPORTATION
DESIGN
Caltrans

LAST REVISION 10-31-14 | DATE PLOTTED => 08-JUL-2015 | TIME PLOTTED => 10:35

Dist	COUNTY	ROUTE	POST MILES TOTAL PROJECT	SHEET No.	TOTAL SHEETS
06	Ker	119	R10.0/R13.3	66	158

REGISTERED CIVIL ENGINEER 8-25-14 DATE

3-9-15
PLANS APPROVAL DATE

REGISTERED PROFESSIONAL ENGINEER HARJINDER DHILLON No. 68254 Exp. 9-30-15 CIVIL STATE OF CALIFORNIA

THE STATE OF CALIFORNIA OR ITS OFFICERS OR AGENTS SHALL NOT BE RESPONSIBLE FOR THE ACCURACY OR COMPLETENESS OF SCANNED COPIES OF THIS PLAN SHEET.

NOTES:

1. (N) NOT A SEPARATE PAY ITEM, FOR INFORMATION ONLY.
2. 24" RCP SHALL BE SMOOTH WALL.
3. ALTERNATIVE FLARED END SECTION ALLOWABLE MATERIAL:
   CONCRETE
   METAL

DRAINAGE QUANTITIES

DRAINAGE PLAN SHEET No.	DRAINAGE SYSTEM No. ⬡	STATION	DRAINAGE UNIT No. ◯	REMOVE PIPE	REMOVE INLET	REMOVE FES	CAP INLET	18" CSP DD (.109" THICK)	RCP 24" RCP	RCP Max COVER (N)	CSP (.109" THICK) 18"	24"	30"	36"	42"	48"	CSP (.138" THICK) 72"	AFES 18"	24"	30"	36"	42"	48"	72"	RSP (No. 1, METHOD B)	RSP FABRIC (CLASS 8)	CONCRETE BACKFILL (PIPE TRENCH)	DI (N) DESIGN, H	DI MINOR CONCRETE (MINOR STRUCTURE)	DI (N) FRAME AND GRATE	DI Misc IRON AND STEEL	REMOVE HEADWALL	REMOVE WINGWALL	DESCRIPTION	DRAINAGE UNIT No. ◯	DRAINAGE SYSTEM No. ⬡
				LF	EA	EA	EA	LF	LF	LF	LF	LF	LF	LF	LF	LF	LF	EA	EA	EA	EA	EA	EA	EA	CY	SQYD	CY	FT	CY	EA	LB	EA	EA			
D-1	1	578+00.00	a																									3.0	1.0	1	239.0			DI (TYPE G1), GRATE (TYPE 24-12X)	a	1
			b					22.5																										18" x 22.5' CSP DD	b	
			c															1																18" AFES	c	
			d																						2.5	8.0								RSP, RSP FABRIC	d	
D-1	56	575+70.00	a																													1		REMOVE HEADWALL	a	56
			b																														1	REMOVE WINGWALL	b	
			c														32.8																	72" x 32.8' CSP	c	
			d																					1										72" AFES	d	
D-2	2	586+22.75	a		1																													REMOVE INLET	a	2
			b	37.5																														REMOVE PIPE	b	
			c									12.1																						24" x 12.1' CSP	c	
			d																									3.6	1.5	1	239.0			DI (TYPE G2), GRATE (TYPE 24-12X)	d	
			e									20.0																						24" x 20.0' CSP	e	
D-2	3	589+50.00	a									7.7																						24" x 7.7' CSP	a	3
			b																1															24" AFES	b	
D-2	4	595+21.00	a									14.1	~~14.1~~																					24" x 14.1' CSP	a	4
			b																1															24" AFES	b	
D-2	5	595+30.00	a																									3.0	1.0	1	239.0			DI (TYPE G1), GRATE (TYPE 24-12X)	a	5
			b					27.0																										18" x 27.0' CSP DD	b	
			c															1																18" AFES	c	
			d																						2.5	8.0								RSP, RSP FABRIC	d	
		SUBTOTAL		37.5	1			49.5				~~39.8~~ 53.9	~~14.1~~ 0				32.8	2	2					1	5.0	16.0			3.5		717.0	1	1			

1

1 REPLACED PER ADDENDUM No. 1 DATED JULY 10, 2015

DRAINAGE QUANTITIES
DQ-1

STATE OF CALIFORNIA - DEPARTMENT OF TRANSPORTATION
Caltrans® DESIGN

FUNCTIONAL SUPERVISOR: DAVID SANGHA
CALCULATED-DESIGNED BY: CARMELITA BELLE
CHECKED BY: HARJINDER DHILLON
REVISED BY
DATE REVISED

LAST REVISION 03-01-15 | DATE PLOTTED => 08-JUL-2015 | TIME PLOTTED => 10:35

Dist	COUNTY	ROUTE	POST MILES TOTAL PROJECT	SHEET No.	TOTAL SHEETS
06	Ker	119	R10.0/R13.3	68	158

REGISTERED CIVIL ENGINEER 8-25-14 DATE

3-9-15
PLANS APPROVAL DATE

REGISTERED PROFESSIONAL ENGINEER HARJINDER DHILLON No. 68254 Exp. 9-30-15 CIVIL STATE OF CALIFORNIA

THE STATE OF CALIFORNIA OR ITS OFFICERS OR AGENTS SHALL NOT BE RESPONSIBLE FOR THE ACCURACY OR COMPLETENESS OF SCANNED COPIES OF THIS PLAN SHEET.

DRAINAGE QUANTITIES

DRAINAGE PLAN SHEET No.	DRAINAGE SYSTEM No. ⬡	STATION	DRAINAGE UNIT No. ◯	REMOVE PIPE (LF)	REMOVE INLET (EA)	REMOVE FES (EA)	CAP INLET (EA)	18" CSP DD (.109" THICK) (LF)	RCP 24" RCP (LF)	RCP Max COVER (N) (LF)	CSP (.109" THICK) 18" (LF)	CSP 24" (LF)	CSP 30" (LF)	CSP 36" (LF)	CSP 42" (LF)	CSP 48" (LF)	CSP (.138" THICK) 72" (LF)	AFES 18" (EA)	AFES 24" (EA)	AFES 30" (EA)	AFES 36" (EA)	AFES 42" (EA)	AFES 48" (EA)	AFES 72" (EA)	RSP (No. 1, METHOD B) (CY)	RSP FABRIC (CLASS 8) (SQYD)	CONCRETE BACKFILL (PIPE TRENCH) (CY)	DI (N) DESIGN, H (FT)	DI MINOR CONCRETE (MINOR STRUCTURE) (CY)	DI (N) FRAME AND GRATE (EA)	DI Misc IRON AND STEEL (LB)	REMOVE HEADWALL (EA)	REMOVE WINGWALL (EA)	DESCRIPTION	DRAINAGE UNIT No. ◯	DRAINAGE SYSTEM No. ⬡
D-5	14	630+50.00	a																									3.0	1.0	1	239.0			DI (TYPE G1), GRATE (TYPE 24-12X)	a	14
			b					14.0																										18" x 14.0′ CSP DD	b	
			c															1																18" AFES	c	
			d																						2.5	8.0								RSP, RSP FABRIC	d	
D-5	15	634+92.50	a		1																													REMOVE INLET	a	15
			b	32.3																														REMOVE PIPE	b	
			c			1																												REMOVE FES	c	
			d									15.0															4.0				~~500.0~~			24" x 15.0′ CSP	d	
			e																									2.8	1.3	1	239.0			DI (TYPE G2), GRATE (TYPE 24-12X)	e	
			f									25.8																						24" x 25.75′ CSP	f	
			g																									2.0	1.0	1	239.0			DI (TYPE G1), GRATE (TYPE 24-12X)	g	
D-5	16	639+34.50	a																									2.8	1.3	1	239.0			DI (TYPE G2), GRATE (TYPE 24-12X)	a	16
D-6	17	645+25.00	a																									3.0	1.0	1	239.0			DI (TYPE G1), GRATE (TYPE 24-12X)	a	17
			b					17.9																										18" x 17.9′ CSP DD	b	
			c															1																18" AFES	c	
			d																						2.5	8.0								RSP, RSP FABRIC	d	
D-6	18	645+42.00	a			1																												REMOVE FES	a	18
			b									10.6																						24" x 10.6′ CSP	b	
			c																1															24" AFES	c	
D-6	19	652+33.30	a			1																												REMOVE FES	a	19
			b									18.8																						24" x 18.8′ CSP	b	
			c																1															24" AFES	c	
D-6	20	654+00.00	a																									3.0	1.0	1	239.0			DI (TYPE G1), GRATE (TYPE 24-12X)	a	20
			b					41.5																										18" x 41.5′ CSP DD	b	
			c															1																18" AFES	c	
			d																						2.5	8.0								RSP, RSP FABRIC	d	
		SUBTOTAL		32.3	1	3		73.4				70.2						3	2						7.5	24.0	4.0		~~5.6~~		~~1934.0~~					
																													6.6		1434.0					

1 REPLACED PER ADDENDUM No. 1 DATED JULY 10, 2015

DRAINAGE QUANTITIES
DQ-3

STATE OF CALIFORNIA - DEPARTMENT OF TRANSPORTATION
Caltrans DESIGN

HARJINDER DHILLON | REVISED BY
CARMELITA BELLE | DATE REVISED
CALCULATED-DESIGNED BY
CHECKED BY
FUNCTIONAL SUPERVISOR
DAVID SANGHA

LAST REVISION 03-01-15 | DATE PLOTTED => 08-JUL-2015 | TIME PLOTTED => 10:35

Dist	COUNTY	ROUTE	POST MILES TOTAL PROJECT	SHEET No.	TOTAL SHEETS
06	Ker	119	R10.0/R13.3	75	158

REGISTERED CIVIL ENGINEER 8-25-14 DATE

3-9-15
PLANS APPROVAL DATE

REGISTERED PROFESSIONAL ENGINEER HARJINDER DHILLON No. 68254 Exp. 9-30-15 CIVIL STATE OF CALIFORNIA

THE STATE OF CALIFORNIA OR ITS OFFICERS OR AGENTS SHALL NOT BE RESPONSIBLE FOR THE ACCURACY OR COMPLETENESS OF SCANNED COPIES OF THIS PLAN SHEET.

DRAINAGE QUANTITIES

DRAINAGE PLAN SHEET No.	DRAINAGE SYSTEM No. ⬡	STATION	DRAINAGE UNIT No. ◯	REMOVE PIPE	REMOVE INLET	REMOVE FES	CAP INLET	18" CSP DD (.109" THICK)	RCP 24" RCP	RCP Max COVER (N)	CSP (.109" THICK) 18"	24"	30"	36"	42"	48"	CSP (.138" THICK) 72"	AFES 18"	24"	30"	36"	42"	48"	72"	RSP (No. 1, METHOD B)	RSP FABRIC (CLASS 8)	CONCRETE BACKFILL (PIPE TRENCH)	DI (N) DESIGN, H	MINOR CONCRETE (MINOR STRUCTURE)	DI (N) FRAME AND GRATE	Misc IRON AND STEEL	REMOVE HEADWALL	REMOVE WINGWALL	DESCRIPTION	DRAINAGE UNIT No. ◯	DRAINAGE SYSTEM No. ⬡
				LF	EA	EA	EA	LF	LF	LF	LF	LF	LF	LF	LF	LF	LF	EA	EA	EA	EA	EA	EA	EA	CY	SQYD	CY	FT	CY	EA	LB	EA	EA			
			a																									3	1.0	1	239.0			DI (TYPE G1), GRATE (TYPE 24-12X)	a	
			b					41.8																										18" x 41.8' CSP DD	b	
D-11	53	730+60.00	c															1																18" AFES	c	53
			d																						2.5	8.0								RSP, RSP FABRIC	d	
			a																									3.8	2.0	1	478.0			DI (TYPE GT3), GRATE (TYPE 24-12X)	a	
D-12	54	736+00.00	b						54.4	15.2																								24" x 54.4' RCP	b	54
			c																									4.7	2.1	1	478.0			DI (TYPE G2), GRATE (TYPE 24-12X)	c	
			d						400.0	13.5																								24" x 400.0' RCP	d	
			a				1																											CAP INLET	a	
D-12	55	740+02.00	b						16.0	11.8																								24" x 16.0' RCP	b	55
			c																									4.1	1.6	1	239.0			DI (TYPE G2), GRATE (TYPE 24-12X)	c	
			d	81.6																														REMOVE PIPE	d	
		1	e									66.3																						24" x 66.3' CSP	e	
			f																1															24" AFES	f	
			g																						4.0	12.0								RSP, RSP FABRIC	g	
		SUBTOTAL		81.6			1	41.8	470.4			66.3						1							6.5	20.0			6.7		1,434.0					
												53.9																								
DQ-1 Sht SUBTOTAL				37.5	1			49.5				~~39.8~~	~~14.1~~				32.8	2	2					1	5.0	16.0			3.5		717.0	1	1			
DQ-2 Sht SUBTOTAL						1		89.0				21.7			14.6	18.1		3	2			1	1		7.5	24.0			4.9		956.0					
DQ-3 Sht SUBTOTAL				32.3	1	3		73.4				70.2						3	2						7.5	24.0	4.0	6.6	~~5.6~~		~~1,934.0~~			1,434.0		
DQ-4 Sht SUBTOTAL						2		158.5					10.5	8.6				4		1	1				10.0	32.0			4.0		956.0					
DQ-5 Sht SUBTOTAL						1		201.7				7.1						5	1						12.5	40.0			5.0		1,195.0					
DQ-6 Sht SUBTOTAL						1		229.5			10.5	5.1						5	1						14.0	44.0			4.0		956.0					
DQ-7 Sht SUBTOTAL								162.4				13.1						5	1						12.5	40.0			5.0		1,195.0					
DQ-8 Sht SUBTOTAL						1		216.3								14.3		4					1		10.0	32.0			4.0		956.0					
DQ-9 Sht SUBTOTAL								68.1				17.8						2	1						5.0	16.0			2.0		478.0					
DQ-10 Sht SUBTOTAL				81.6			1	41.8	470.4			66.3						1							6.5	20.0			6.7		1,434.0					
TOTAL				~~69.8~~	2	9	1	1,290.2	470.4		10.5	~~241.1~~	~~24.6~~	8.6	14.6	32.4	32.8	34	10	1	1	1	2	1	90.5	288.0	4.0		~~44.7~~		~~10,777.0~~	1	1			
			1	151.4							1	255.2	10.5															1	45.7		10,277.0					

1 REPLACED PER ADDENDUM No. 1 DATED JULY 10, 2015

DRAINAGE QUANTITIES
DQ-10

STATE OF CALIFORNIA - DEPARTMENT OF TRANSPORTATION
Caltrans DESIGN

FUNCTIONAL SUPERVISOR: DAVID SANGHA
CALCULATED-DESIGNED BY: HARJINDER DHILLON
CHECKED BY: CARMELITA BELLE
REVISED BY
DATE REVISED

LAST REVISION 03-01-15 | DATE PLOTTED => 08-JUL-2015 | TIME PLOTTED => 10:36

Dist	COUNTY	ROUTE	POST MILES TOTAL PROJECT	SHEET No.	TOTAL SHEETS
06	Ker	119	R10.0/R13.3	97	158

Hassan Taha 4-14-14
REGISTERED CIVIL ENGINEER DATE

3-9-15
PLANS APPROVAL DATE

REGISTERED PROFESSIONAL ENGINEER HASSAN M. TAHA No. 60130 Exp. 06/30/16 CIVIL STATE OF CALIFORNIA

THE STATE OF CALIFORNIA OR ITS OFFICERS OR AGENTS SHALL NOT BE RESPONSIBLE FOR THE ACCURACY OR COMPLETENESS OF SCANNED COPIES OF THIS PLAN SHEET.

TEMPORARY PAVEMENT DELINEATION QUANTITIES

SHEET No.	ROUTE	LOCATION	DETAIL No.	TEMPORARY PAVEMENT MARKER	TEMPORARY TRAFFIC STRIPE (TAPE)	REMOVE PAVEMENT MARKER	REMOVE THERMOPLASTIC TRAFFIC STRIPE	
							WHITE	YELLOW (HAZARDOUS WASTE)
				EA	LF	EA	LF	LF
TH-1 TO TH-6	Route 119	579+00 to 651+28	6			118		1807
TH-1 TO TH-7	Route 119	579+00 to 673+20	22	788	18,840			
TH-6 TO TH-7	Route 119	651+28 to 673+20	22			186		4384
TH-6 TO TH-7	Route 119	651+28 to 673+20	27B		2192			
TH-6 TO TH-7	Route 119	655+70 to 673+20	12			37	438	
TH-7 TO TH-8	Route 119	673+20 to 674+74	27C		39		39	
TH-8	Route 119	674+74 to 679+60	22	24	972			
TH-8 TO TH-11	Route 119	674+74 to 721+70	27B		4696			
TH-9 TO TH-11	Route 119	693+50 to 720+34	12			57	671	
TH-11 TO TH-12	Route 119	721+70 to 736+00	6			31		358
TH-11 TO TH-12	Route 119	721+70 to 741+00	22	164	3860			
TH-12	Route 119	736+00 to 741+00	19			36		625
TOTAL				~~996~~ 976	~~30,560~~ 30,599	465*	~~1109~~ 1,148	7174*

1 1 1

* INCLUDE IN PAVEMENT DELINEATION QUANTITIES SHEET.

CHANNELIZER (SURFACE MOUNTED)

SHEET No.	CHANNELIZER (SURFACE MOUNTED)
	EA
TH-7	8
TH-12	7
TOTAL	15

TEMPORARY RAILING (TYPE K)

SHEET No.	LOCATION		TEMPORARY RAILING (TYPE K)
	STA TO STA		LF
TH-1 TO TH-7	574+60	673+10	9,850
TH-8 TO TH-12	674+70	744+20	6,950
TOTAL			16,800

STATIONARY MOUNTED CONSTRUCTION AREA SIGNS (TRAFFIC HANDLING)*

SHEET No.	SIGN No.	SIGN CODE	SIGN MESSAGE	PANEL SIZE	No. OF POST AND SIZE	No. OF SIGNS
TH-12	A	W21-5b	SHOULDER CLOSED AHEAD	36" x 36"	1-4" x 4"	1
	B	C30A (CA)	SHOULDER CLOSED	36" x 36"	1-4" x 4"	1

* SEE SHEET CS-1 FOR ADDITIONAL CONSTRUCTION AREA SIGNS.

TEMPORARY CRASH CUSHION MODULE

SHEET No.	EA
TH-7	14
TH-12	14
TOTAL	28

1 REPLACED PER ADDENDUM No. 1 DATED JULY 10, 2015

TRAFFIC HANDLING QUANTITIES

THQ-1

STATE OF CALIFORNIA - DEPARTMENT OF TRANSPORTATION
TRAFFIC DESIGN
FUNCTIONAL SUPERVISOR: MOHAMMAD QATAMI
CALCULATED-DESIGNED BY: HASSAN TAHA
CHECKED BY: SANDY LE
REVISED BY / DATE REVISED

LAST REVISION 12-10-14 | DATE PLOTTED => 08-JUL-2015 | TIME PLOTTED => 10:36

Dist	COUNTY	ROUTE	POST MILES TOTAL PROJECT	SHEET No.	TOTAL SHEETS
06	Ker	119	R10.0/R13.3	110	158

REGISTERED CIVIL ENGINEER 4-14-14 DATE

3-9-15
PLANS APPROVAL DATE

REGISTERED PROFESSIONAL ENGINEER HASSAN M. TAHA No. 60130 Exp. 06/30/16 CIVIL STATE OF CALIFORNIA

THE STATE OF CALIFORNIA OR ITS OFFICERS OR AGENTS SHALL NOT BE RESPONSIBLE FOR THE ACCURACY OR COMPLETENESS OF SCANNED COPIES OF THIS PLAN SHEET.

PAVEMENT DELINEATION QUANTITIES

SHEET No.	ROUTE	LOCATION	DIRECTION	DETAIL No.	PAVEMENT MARKER (RETROREFLECTIVE)		THERMOPLASTIC TRAFFIC STRIPE						REMOVE PAVEMENT MARKER	REMOVE THERMOPLASTIC TRAFFIC STRIPE		THERMOPLASTIC PAVEMENT MARKING		REMOVE THERMOPLASTIC PAVEMENT MARKING
					TYPE D	TYPE G	4" SOLID	4" (BROKEN 12-3)	4" (BROKEN 36-12)	6" (BROKEN 8-4)	6" SOLID	8" SOLID		WHITE	YELLOW (HAZARDOUS WASTE)			
					EA	EA	LF	LF	LF	LF	LF	LF	EA	LF	LF	DESCRIPTION	SQFT	SQFT
PD-1	Route 119	574+00 to 579+00		29									44		2,000	3 - TYPE III (PD-1)	126	
PD-1	Route 119	574+00 to 580+80	NB	38		29						680				2 - BIKE LANE AR (PD-1)	14	
PD-1	Route 119	574+00 to 580+80	NB	38		29						680				2 - BIKE (PD-1)	42	
PD-1	Route 119	575+00 to 582+00	SB	27B			700									3 - TYPE VI (PD-8)	126	
PD-1	Route 119	575+00 to 580+80	SB	39							580					3 - TYPE VI (PD-9)	126	126
PD-1	Route 119	580+80 to 582+00	SB	39A						120						2 - TYPE III (PD-12)	84	
PD-1	Route 119	580+80 to 582+00	SB	39A						120						1 - TYPE III (PD-12)		42
PD-1 TO PD-6	Route 119	575+00 to 651+28	SB	27B										7,628				
PD-1 TO PD-7	Route 119	574+00 to 673+20		29	830		39,680											
PD-1 TO PD-7	Route 119	575+00 to 672+40	NB	27B			9,740							9,740				
PD-1 TO PD-7	Route 119	575+00 to 673+20	SB	12		206			9,820									
PD-1 TO PD-7	Route 119	582+00 to 673+20	SB	27B			9,120											
PD-7 TO PD-8	Route 119	672+40 to 673+74	SB	27C				134										
PD-7 TO PD-8	Route 119	673+20 to 674+74	NB	27C				154										
PD-8 TO PD-9	Route 119	674+74 to 691+85	SB	12		37			1,711									
PD-8 TO PD-9	Route 119	674+74 to 695+11		19									132		2,546			
PD-8 TO PD-11	Route 119	679+57 to 720+00	SB	12									85	1,011				
PD-8 TO PD-12	Route 119	674+74 to 744+54	SB	27B			6,980							6,980				
PD-8 TO PD-12	Route 119	674+74 to 743+65	NB	27B			6,891							6,891				
PD-8 TO PD-12	Route 119	674+74 to 744+54		29	584		27,920											
PD-8 TO PD-12	Route 119	683+12 to 744+54	NB	12		129			6,142									
PD-9	Route 119	691+85 to 695+11	SB	12									8	82				
PD-8 TO PD-11	Route 119	679+00 to 720+34		22									348		8,268			
PD-9 TO PD-11	Route 119	720+34 to 722+90		19									20		320			
PD-12	Route 119	741+00 to 744+54		22									32		708			
PD-12	Route 119	737+58 to 744+54	SB	38		30						696						
PD-12	Route 119	742+00 to 744+54	SB	38									12	508				
PD-12	Route 119	743+65 to 744+54	SB	27C										18				
PD-12	Route 119	743+65 to 744+54	SB	27C				89										
							101,031			240	580							
SUBTOTAL					1414	460	~~134,462~~	377	17,673			2056	680	32,857	13,842		518	168
SUBTOTAL FROM THQ-1													465	~~1,109~~	7,174		537	159
TOTAL					1874		~~134,462~~	377	17,673	240	580	2056	1145	~~33,966~~	21,016		1055	327
						1	101,031						1,148	34,005	1			

1 REPLACED PER ADDENDUM No. 1 DATED JULY 10, 2015

PAVEMENT DELINEATION QUANTITIES

PDQ-1

STATE OF CALIFORNIA - DEPARTMENT OF TRANSPORTATION
Caltrans
TRAFFIC DESIGN

FUNCTIONAL SUPERVISOR: MOHAMMED QATAMI
CALCULATED-DESIGNED BY: HASSAN TAHA
CHECKED BY: SANDY LE
REVISED BY
DATE REVISED

LAST REVISION 12-10-14
DATE PLOTTED => 08-JUL-2015
TIME PLOTTED => 10:36

Dist	COUNTY	ROUTE	POST MILES TOTAL PROJECT	SHEET No.	TOTAL SHEETS
06	Ker	119	R10.0/R13.3	112	158

REGISTERED CIVIL ENGINEER 3-9-14 DATE

3-9-15
PLANS APPROVAL DATE

REGISTERED PROFESSIONAL ENGINEER HARJINDER DHILLON No. 68254 Exp. 9-30-15 CIVIL STATE OF CALIFORNIA

THE STATE OF CALIFORNIA OR ITS OFFICERS OR AGENTS SHALL NOT BE RESPONSIBLE FOR THE ACCURACY OR COMPLETENESS OF SCANNED COPIES OF THIS PLAN SHEET.

ROADWAY QUANTITIES

SHEET No.	LOCATION/DESCRIPTION 1	ROADWAY EXCAVATION	ROADWAY EXCAVATION (TYPE Z-2) AERIALLY DEPOSITED LEAD	CLASS 2 AGGREGATE BASE	HMA (TYPE A)	RHMA-OPEN GRADED (OPEN GRADED FRICTION COURSE)	CENTER LINE RUMBLE STRIP (HMA, GROUND-IN INDENTATIONS)	TACK COAT	EMBANKMENT (N)
		CY	CY	CY	TON	TON	STA	TON	CY
L-1 TO L-12	Sta 573+51 TO Sta 745+11 "CCL1" (SEE EARTHWORK TABLE)	87,030	5170	17,700	14,382	1,770	176	30	57,872
Q-1	HMA DIKE TABLE				446				
Q-2	PLACE HMA (Misc AREA) TABLE				41				
	TOTAL	87,030	5170	17,700	~~14,869~~ 14,396 1	1,770	176	30	

(N) NOT A SEPARATE PAY ITEM, FOR INFORMATION ONLY.

HMA DIKE

SHEET No.	STATION		PLACE HMA DIKE (TYPE E)	* HMA (TYPE A)
	FROM	TO	LF	TON
L-1 TO L-7	574+45	673+26	9938	262
L-8 TO L-12	674+70	744+91	7040	184
TOTAL			16,978	* 446

* INCLUDED IN ROADWAY QUANTITIES TABLE

EARTHWORK 1

SHEET No.	LOCATION/DESCRIPTION	EXCAVATION	(N) EMBANKMENT
		CY	CY
L-1	Sta 573+51 TO Sta 584+50 "CCL1"	6,098	3,470
L-2	Sta 584+50 TO Sta 599+50 "CCL1"	12,883	247
L-3	Sta 599+50 TO Sta 614+50 "CCL1"	5,010	7,867
L-4	Sta 614+50 TO Sta 629+50 "CCL1"	9,875	2,826
L-5	Sta 629+50 TO Sta 644+50 "CCL1"	15,939	466
L-6	Sta 644+50 TO Sta 659+50 "CCL1"	2,299	10,622
L-7	Sta 659+50 TO Sta 674+50 "CCL1"	1,362	1,427
L-8	Sta 674+50 TO Sta 689+50 "CCL1"	1,790	403
L-9	Sta 689+50 TO Sta 704+50 "CCL1"	1,182	10,031
L-10	Sta 704+50 TO Sta 719+50 "CCL1"	1,341	5,598
L-11	Sta 719+50 TO Sta 734+50 "CCL1"	5,810	14,868
L-12	Sta 734+50 TO Sta 745+11 "CCL1"	28,611	50
TOTAL		92,200 *	

(N) NOT A SEPARATE PAY ITEM, FOR INFORMATION ONLY.
* INCLUDED QUANTITY FOR ROADWAY EXCAVATION AND ROADWAY EXCAVATION (TYPE Z-2) AERIALLY DEPOSITED LEAD. SEE ROADWAY QUANTITIES TABLE. 1

1 REPLACED PER ADDENDUM No. 1 DATED JULY 10, 2015

SUMMARY OF QUANTITIES
Q-1

STATE OF CALIFORNIA - DEPARTMENT OF TRANSPORTATION
Caltrans DESIGN
FUNCTIONAL SUPERVISOR DAVID SANGHA
CALCULATED-DESIGNED BY HARJINDER DHILLON
CHECKED BY CARMELITA BELLE
REVISED BY
DATE REVISED

LAST REVISION 03-09-15
DATE PLOTTED => 08-JUL-2015
TIME PLOTTED => 10:36