INFORMATION HANDOUT

For Contract No. 06-360234
At 06-Tul-99-35.2/R37.3

Identified by
Project ID 0612000241

MATERIALS INFORMATION

1. Manufacturer Drawing for Alternative Flared Terminal System
2. Water Source Information
3. Geotechnical Design Report dated January 26, 2012

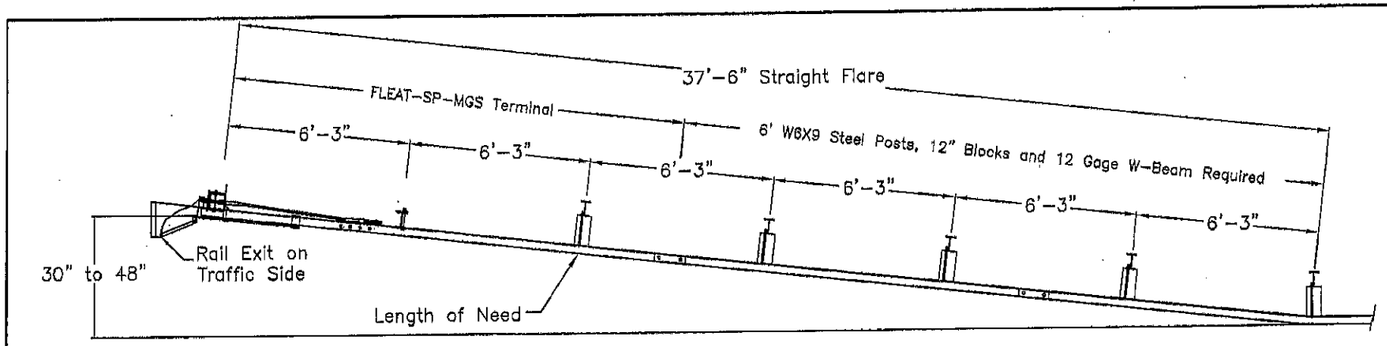

PLAN

TRAFFIC

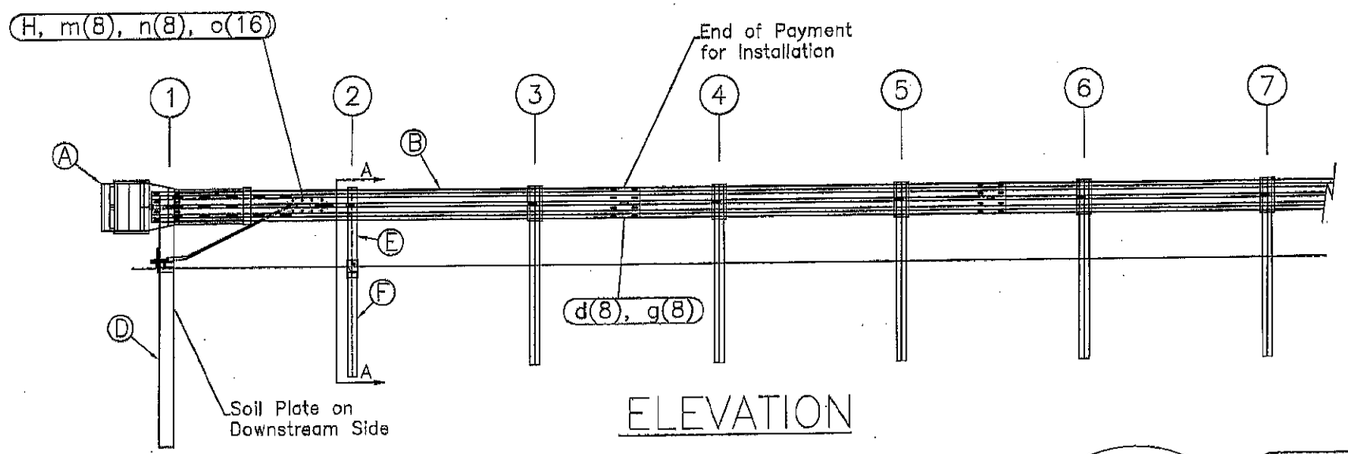

ELEVATION

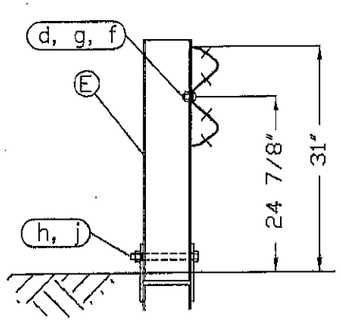

SECTION A–A
Post #2

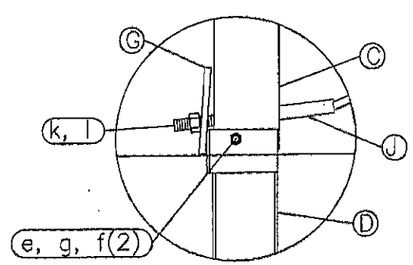

Post #1 Connection Detail

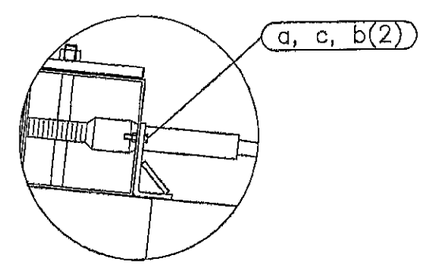

Impact Head Connection Detail

ITEM	QTY	BILL OF MATERIALS	ITEM NO.
A	1	IMPACT HEAD	F3000
B	1	W-BEAM GUARDRAIL END SECTION, 12 Ga.	MGS-SF1303
C	1	FIRST POST TOP (6X6X⅜" Tube)	TPHP1A
D	1	FIRST POST BOTTOM (6' W6X15)	TPHP1B
E	1	SECOND POST ASSEMBLY TOP	UHP2A
F	1	SECOND POST ASSEMBLY BOTTOM	HP3B
G	1	BEARING PLATE	E750
H	1	CABLE ANCHOR BOX	S760
J	1	BCT CABLE ANCHOR ASSEMBLY	E770
		HARDWARE (ALL DIMENSIONS IN INCHES)	
a	2	5/16 x 1 HEX BOLT GRD 5	B5160104A
b	4	5/16 WASHER	W0516
c	2	5/16 HEX NUT	N0516
d	9	5/8 Dia. x 1 1/4 SPLICE BOLT (POST #2)	B580122
e	1	5/8 Dia. x 9 HEX BOLT GRD 5	B580904A
f	3	5/8 WASHER	W050
g	10	5/8 Dia. H.G.R NUT	N050
h	1	3/4 Dia. x 8 1/2 HEX BOLT GRD A449	B340854A
j	1	3/4 Dia. HEX NUT	N030
k	2	1 ANCHOR CABLE HEX NUT	N100
l	2	1 ANCHOR CABLE WASHER	W100
m	8	CABLE ANCHOR BOX SHOULDER BOLT	SB58A
n	8	1/2 A325 STRUCTURAL NUT	N055A
o	16	1 1/16 OD x 9/16 ID A325 STR. WASHER	W050A

GENERAL NOTES:
1. All bolts, nuts, cable assemblies, cable anchors and bearing plates shall be galvanized.
2. The lower sections of the Posts 1&2 shall not protrude more than 4 in above the ground (measured along a 5' cord). Site grading may be necessary to meet this requirement.
3. The lower sections of the hinged posts should not be driven with the upper post attached. If the post is placed in a drilled hole, the backfill material must be satisfactorily compacted to prevent settlement.
4. When competent rock is encountered, a 12" Ø post hole, 20 in. deep cored into the rock surface may be used if approved by the engineer for post 1. Granular material will be placed in the bottom of the hole, approximately 2.5" deep to provide drainage. The first post can be field cut to length, placed in the hole and backfilled with suitable backfill. The soil plate may be trimmed if required.
5. The breakaway cable assembly must be taut. A locking device (vice grips or channel lock pliers) should be used to prevent the cable from twisting when tightening nuts.

RSI
Road Systems, Inc.
Big Spring, TX
Phone: 432-263-2435
or Phone: 330-346-0721

FLEAT-SP-MGS Terminal
Midwest Guardrail System
31" Top of Rail

Sheet: 1
Date: 02/24/10
By: JRR
Drawing Name: FLT-SP-S-MGS
Scale: None
Rev: 0

OFFSET NOTES:
1) POST OFFSET DIMENSIONS ARE GIVEN TO THE CENTER OF THE TRAFFIC FACE OF POSTS, EXCEPT AT POSTS #7 & #8, WHERE DIMENSION IS TO CENTER OF THE TRAFFIC FACE OF THE BLOCKOUTS.
2) GUARDRAIL BETWEEN POST 1-7 IS ON A STRAIGHT LINE FLARE.

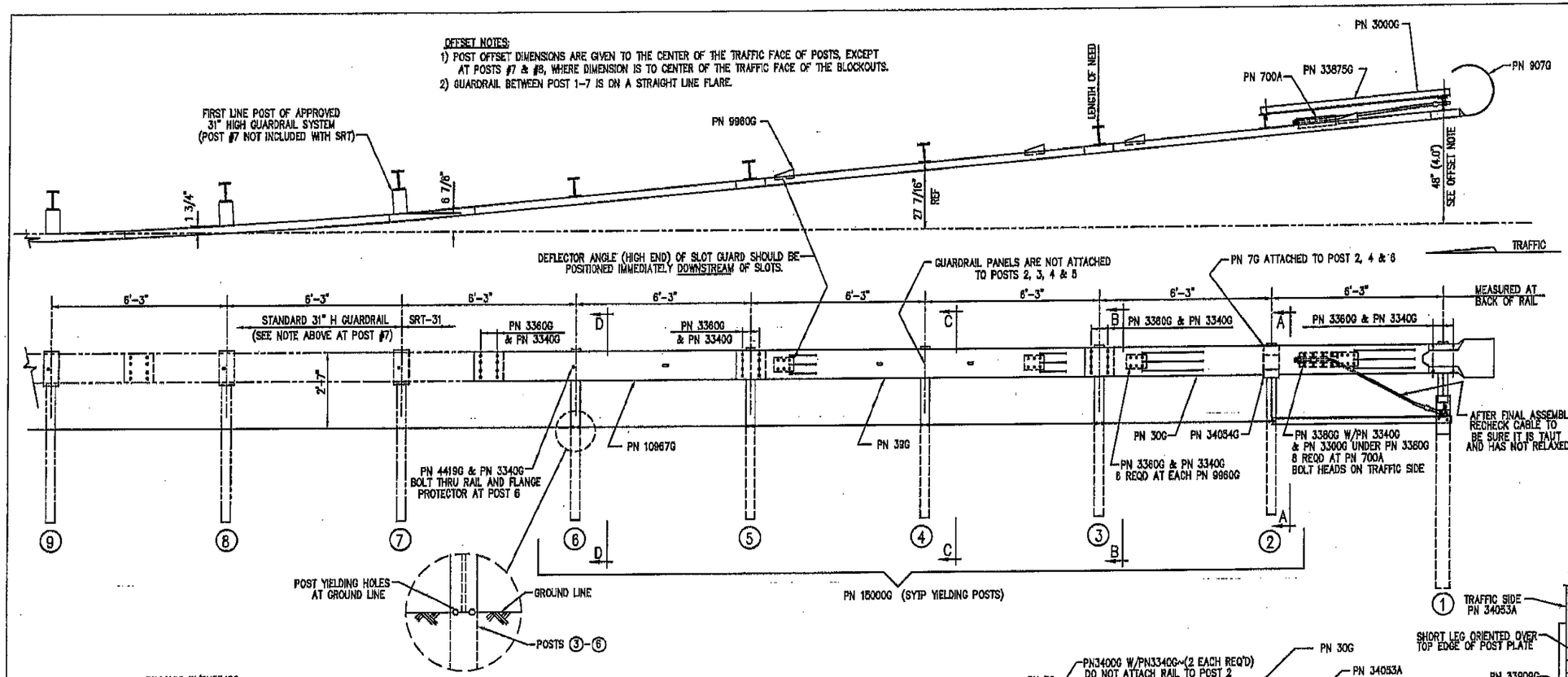

BILL OF MATERIAL

PN	QTY	DESCRIPTION
7G	3	12/6"/FLG PROTECTOR (AT POST 2, 4 & 6)
30G	1	12/12'6/S SRT-1 (GUARDRAIL)
39G	1	12/12'6/S SRT-2 (GUARDRAIL)
700A	1	CABLE ANCHOR BRACKET
907G	1	12/BUFFER/ROLLED (TERMINAL)
3000G	1	3/4 x 6'-6" CABLE
HARDWARE		
3240G	2	5/16" WASHER (AT POST 1)
3245G	2	5/16" HEX NUT (AT POST 1)
3300G	12	5/8" WASHER
3340G	67	5/8" HEX HGR NUT
3360G	52	5/8"ø x 1 1/4" HGR SPLICE BOLT
3380G	8	5/8"ø x 1 1/2" HEX HD BOLT
3400G	4	5/8"ø x 2" HGR POST BOLT (AT POSTS 1, 2 & 4)
3391G	2	5/8"ø x 1 3/4" HEX BOLT (A325) (AT STRUT)
3900G	2	1" WASHER (AT CABLE)
3910G	2	1" HEX NUT (AT CABLE)
4211G	2	5/16"ø x 1 3/4" HEX BOLT (AT POST 1)
4419G	1	5/8"ø x 1 3/4" COUNTERSUNK HD BOLT (AT POST 6)
9960G	4	SLOT GUARD BRACKET
10967G	1	12/9'4.5/3'1.5/S SRT-3 (GUARDRAIL)
15000G	5	6'-0" SYP POST (W6 X 8.5)
33909G	1	CABLE ANCHOR BRACKET (AT POST 1)
33875G	1	ANGLE STRUT 3 x 3 x 1/4
34052A	1	CR POST 1 BOT (W6 x 15)
34053A	1	CR POST 1 TOP (W6 x 8.5)
34054G	1	POST SHELF ANGLE (AT POST 2)

REV.	CHK'D	BY	DATE	REMARKS
4	BT	LH	10/6/10	OFFSET POSTS #7 & #8
3	BT	LH	2/26/09	REVISED HARDWARE
2	SG	LH	7/28/08	REVISED POST #1 LENGTH IN GROUND
1	SG	LH	1/16/08	REVISED HARDWARE QUANTITY IN BILL OF MATERIAL

SRT-31

SLOTTED RAIL TERMINAL SRT-31 (31" H)
ERECTION DETAILS
(3 PANELS, CR AND SYT POSTS)

DRAWN	BT
CHECKED	SG
SCALE	NTS
DATE	10/30/07
ENG. FILE #	SS436-01E
SHT.No.	E1 OF 1
DRAWING NO.	SS 436
REV.	4

The drawings and the information shown thereon are copyrighted by Trinity Highway Products (2010) and the sole property of Trinity Highway Products. Neither the drawings nor such information is to be used for any purpose other than that for which it was specifically furnished from Trinity Highway Products, LLC., nor is any reproduction authorized without written permission.

TRINITY HIGHWAY PRODUCTS, LLC.
2525 STEMMONS FREEWAY
DALLAS, TX 75207

ITEM NO.	PART NUMBER	DESCRIPTION	QTY	UOM
1	BSI-1301252-KT	X-Tension Terminal Comp, 31 in	1	EACH
2	K070202	X-Tension Hardware Kit, GT,	1	EACH
3	K070206	X-Tension System Hardware Kit,	1	EACH
4	K070210	X-Tension GT Guardrail	1	EACH
5	B061100	BSI, I-Beam Post, Middle, X350	1	EACH
6	MANXT1	X-TENSION Installation Manual	1	EACH

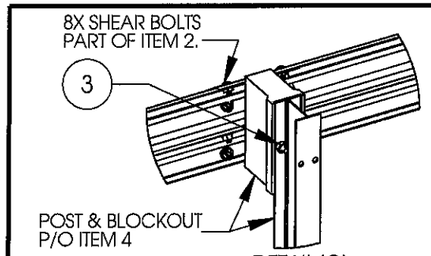

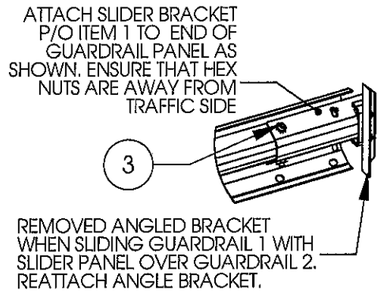

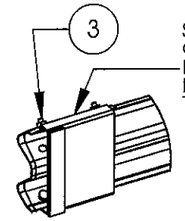

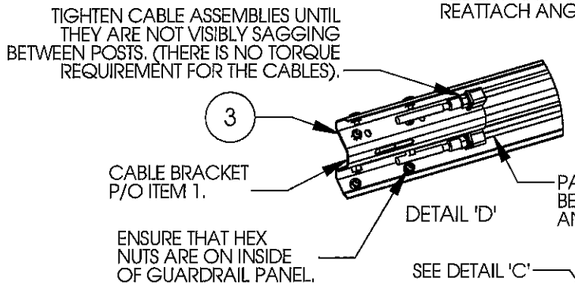

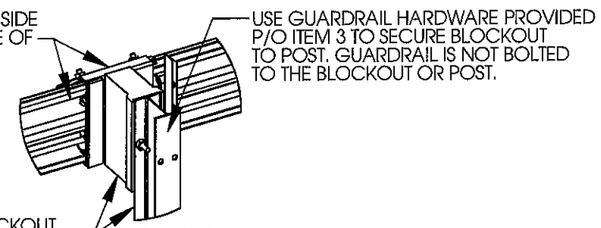

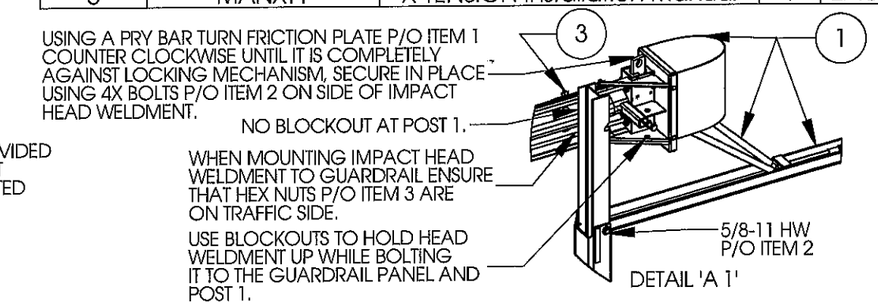

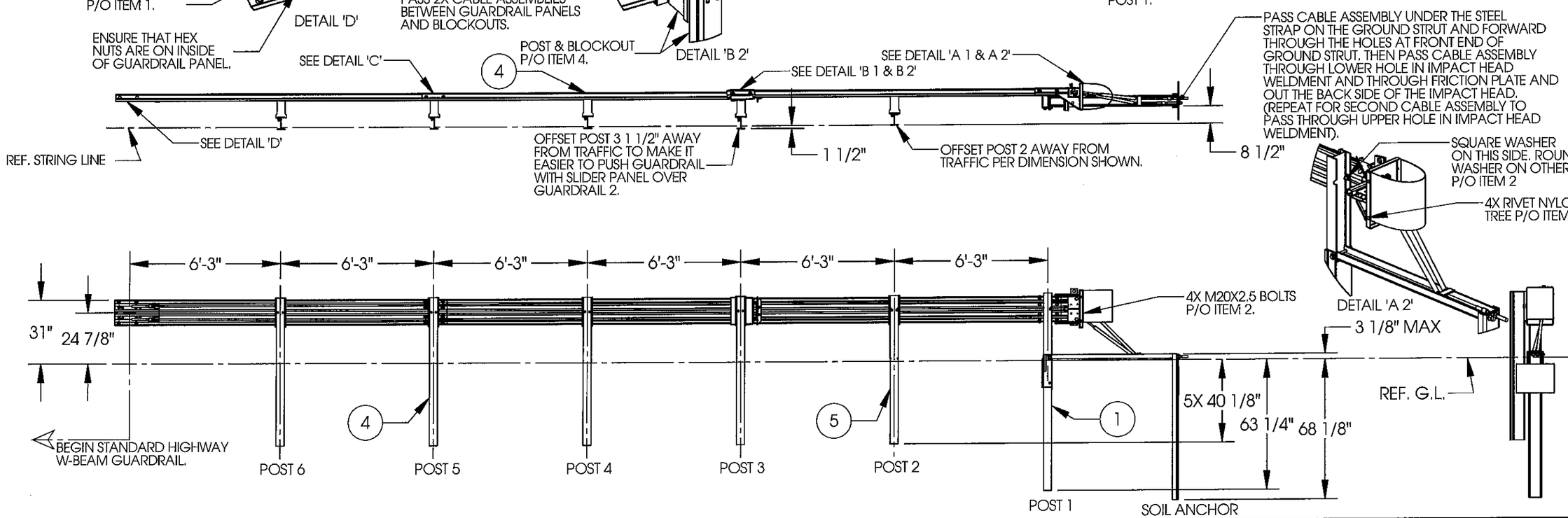

NOTES: UNLESS OTHERWISE SPECIFIED.

1. SYSTEM TO BE INSTALLED PER MANUFACTURER SPECIFICATIONS.
2. ONLY TIGHTEN THE CABLE ASSEMBLIES USING THE NUTS AT THE CABLE BRACKET (SEE DETAIL 'D'). DO NOT TIGHTEN THE CABLES AT THE FRONT OF THE GROUND ANCHOR.
3. WHEN DRIVING STEEL POST, ENSURE THAT A DRIVING CAP WITH TIMBER OR PLASTIC INSERT IS USED TO PREVENT DAMAGE TO THE GALVANIZING TO THE TOP OF THE POST.

© 2012 BARRIER SYSTEMS INC. THE INFORMATION CONTAINED IN THIS DRAWING IS THE SOLE PROPERTY OF BARRIER SYSTEMS INC. ANY REPRODUCTION IN PART OR WHOLE WITHOUT THE WRITTEN PERMISSION OF BARRIER SYSTEMS INC. IS PROHIBITED.

UNLESS OTHERWISE SPECIFIED DIMENSIONS ARE IN INCHES. TOLERANCES ARE:
FRACTIONS ±1/16 DECIMAL .XX = ±.03 .XXX = ±.010 ANGLES ±1/2°
INTERPRET DIMENSIONS AND TOLERANCES PER ASME Y14.5-1994

THIRD ANGLE PROJECTION

DO NOT SCALE DRAWING

APPROVALS	
DRAWN BY:	NMV
DRAWN DATE:	2/08/13
APPR'D BY:	JMT
APPR'D DATE:	2/08/13

REV	ECN#	DATE
B	2067	05/02/13
A	2022	2/08/13

LINDSAY™ TRANSPORTATION SOLUTIONS

BARRIER SYSTEMS INC.
3333 Vaca Valley Parkway Ste 800
Vacaville, CA 95688
Tel: 888-800-3691
www.barriersystemsinc.com

TITLE
X-TENSION GUARDRAIL TERMINAL SYSTEM STEEL POST WITH COMPOSITE BLOCKOUT 31" RAIL HEIGHT

SIZE	DWG NO.	REV.
B	XTGTSS5	B

SCALE 1:50 SHEET 1 OF 1

Doc. B100108

Last Saved by: jeff.thompson; Friday, May 03, 2013 1:23:29 PM

Phatharanavik, Pat@DOT

From: Shankar, Udaya Y@DOT
Sent: Monday, March 09, 2015 3:12 PM
To: Phatharanavik, Pat@DOT
Cc: Velazco, David@DOT
Subject: Water Usage Cost
Attachments: Water Charge Estimator -.pdf

Pat,

I talked to Mike Morton from Cal water in Visalia and they do supply water for our job. From their website, I have estimated water usage for this job (see attachment). Normally, they do not give out any approval letter, but the water is available for the project.

Sam Shankar
Design C
(559) 243-8049

Phatharanavik, Pat@DOT

From: Shankar, Udaya Y@DOT
Sent: Thursday, June 25, 2015 8:46 AM
To: Phatharanavik, Pat@DOT
Subject: RE: 06-360231-Tul 99-Water Conservation

CalWater
Customer Center

216 North Valley Oaks Drive
Visalia, CA 93292

(559) 624-1600 Customer Service
(559) 624-1650 Operations Center

From: Phatharanavik, Pat@DOT
Sent: Tuesday, June 23, 2015 11:13 AM
To: Shankar, Udaya Y@DOT; Velazco, David@DOT
Subject: 06-360231-Tul 99-Water Conservation

Sam/David,

Do you have contact phone number, email address of Mike Morton at Cal Water in Visalia (see attached file)? I need to have them on Information Handout.

Pat Phatharanavik, P.E.
California Department of Transportation
Central Region – Office Engineer
Phone (559) 243-3514
Fax (559) 243-3560

Water Charge Estimator

To estimate your monthly water-related charges, enter the information below and click "Estimate Charge."

Service Area * Select your service area

Meter Size * Select your meter size

Water usage *

Monthly in Ccf (hundreds of cubic feet)

Estimate Charge

1 Ccf = 748 gallons

ITEM	DETAIL	CHARGE
Meter	8 - inch meter	$ 574.91
Quantity charge (Tier 1)	$1.3035 x 11 Ccf	$ 14.34
Quantity charge (Tier 2)	$1.3301 x 18 Ccf	$ 23.94
Quantity charge (Tier 3)	$1.4898 x 5871 Ccf	$ 8,746.62
Other Charges and Credits	$0.09830 x 5900 Ccf	$ 579.97
Rate Support Fund surcharge	$ 0.01 x 5900 Ccf	$ 59.00
CPUC fee	1.5% x above charges	$ 149.98
LIRA quantity surcharge	$ 0.072 x 5900 Ccf	$ 424.80
PBOP amoritization surcharge	$ 0.004 x 5900 Ccf	$ 23.60
	TOTAL :	$ 10,597.16

Your water rate tiers are as follows
Tier 1: For the first 11 Ccf -- $1.3035
Tier 2: From 12 to 29 Ccf -- $1.3301
Tier 3: For all over 29 Ccf -- $1.4898

Please note that your actual bill will vary from this estimate. This estimate reflects *only* the costs for water; your bill may include additional billable items such as city services, garbage collection, service line insurance, taxes, and additional surcharges. If you have any questions, please contact your local district office.

Service Area * Visalia
Water Usage * 5900 Ccf

Latest News

02.24 Torrance Main Replacement Project Complete

02.24 San Carlos Main Replacement Projects to Improve Local Water System Reliability, Fire Protection

Inside Cal Water

Q&A Forum
Contact Us

Corporate Website

Corporate Information
Investor Relations
Stock Information
Sustainability Policy
Employment Opportunities

© 1998–2015 California Water Service Group. All Rights Reserved. Privacy Terms of Use

M e m o r a n d u m

Flex your power!
Be energy efficient!

To: MR. GURBHAY BRAR
Design Senior, Branch C
Office of Design IV
Project Development Division

Attention: David Velazco

Date: January 26, 2012

File: 06-TUL-99
PM 35.3/37.3
EA 06-360221
ID 0600020590
Overhead Signs

From: **DEPARTMENT OF TRANSPORTATION**
DIVISION OF ENGINEERING SERVICES
GEOTECHNICAL SERVICES – MS 5

Subject: Geotechnical Design Report

Introduction

This Geotechnical Design Report (GDR) has been prepared to provide recommendations for five overhead signs to be constructed as part of the State Route (SR) 99 Middle Segment Widening project. The project is located between SR 198 and Ave 272, south of the City of Visalia in Tulare County, California. A Vicinity Map is presented on **Plate No 1**.

The purpose of this report is to document and discuss subsurface geotechnical conditions for the project site, provide analyses of anticipated site conditions as they pertain to the project described herein, and to recommend design and construction criteria for the project.

Existing Facilities and Proposed Improvements

Within the project limits, SR 99 is a four lane freeway that travels in a general northwest/southeast direction. The highway has 12 foot wide travel lanes and 4 foot wide paved shoulders and is constructed at grade.

The SR 99 Middle Segment Widening project proposes to widen SR 99 from 4 to 6 lanes. As part of the project, five overhead signs are proposed. Overhead sign design data is presented in **Table 1.** A Site Plan is presented on **Plate No 2**.

Table 1. Overhead Sign Design Data

Sign Designation	Approx. STA (ft)	Direction	Pedestal Type	Post Type	Pile Diameter (in)	Pile Length (ft)	Ground Condition
I	244+00	FNBT	Round	VI	60	22	Level
II	294+00	FNBT	Round	VI	60	22	Level
III	338+00	FNBT	Round	VI	60	22	Level
IV	324+31	FSBT	Round	VIII	60	23	Level
V	337+32	FSBT	Round	VII	60	25	Level

FNTB: Facing north bound traffic. FSBT: Facing south bound traffic.

Pertinent Reports and Investigations

The following publications were reviewed to assist in the assessment of site conditions:

- Overhead Sign Plans and Details, D6 Design, undated.
- As-Built Log-of-Test-Borings, Ave 280 OC, Br. No. 46-0195, PM 36.41.
- As-Built Log-of-Test-Borings, Midvalley OH, Br. No. 46C-0053, PM 36.41.
- As-Built Log-of-Test-Borings, Packwood Cr. Bridge, Br. No. 46-0013, PM 34.92.
- Preliminary Foundation Report, Tulare 99 Widening, 8/30/2007.
- Foundation Report, Tulare 99 Widening, CMS, 7/29/2011.

Geotechnical Conditions

Subsurface Soils

According to the as-built LOTB for bridges in the project area, the subsurface soils consist of fine to coarse sand, silty fine to coarse sand, sand with silt, silty clayey sand, and sandy silt. The soil density ranges from very loose to dense and generally increases with depth.

Ground Water

Ground water was encountered in as-built borings for bridges in the project vicinity, and ranged from 39 feet to 59 feet below the ground surface. Ground water data is presented in **Table 2**.

Table 2. Ground Water Data

Structure	Date of Record	Ground Water Elevation (ft)	Ground Water Depth (ft)
Ave 280 OC	5/10/1958	233.6	59.3
Midvalley OH	5/3/1958	233.4	59
Packwood Cr. Bridge	8/14/1958	258.3	39

Ground water is not anticipated during drilling of the CIDH piles. However, ground water conditions can be expected to fluctuate in response to seasons, storm events, and other factors. Localized saturated conditions or perched groundwater conditions near the ground surface should be anticipated during and following periods of heavy precipitation.

Geotechnical Recommendations

The following recommendations are based on the project plans and cross sections, communication with the D6 Office of Design, a review of previous reports for this project, and subsurface conditions as determined from as-built boring data for structures in the project area.

A review of the as-built boring information indicates that the soil conditions satisfy the current standard plan overhead sign requirements. Additionally, existing overhead sign structures in the project area were reviewed and appear to be performing favorably.

Based on the reviews described above, it is recommended that the proposed overhead signs be constructed on standard plan foundations using a pile diameter of 60 inches and lengths of 22, 23 or 25 feet (as specified in Table 1 of this report).

Construction Considerations

- All earthwork should conform to current CT Standard Specifications.
- According to as-built boring data, layers of loose granular material may be encountered while drilling the CIDH piles. As such, temporary casing may be needed to control caving. To develop the required pile capacity, the temporary must be removed during concrete placement.
- Ground water is not anticipated during construction of the CIDH piles. However, localized saturated conditions or perched groundwater conditions near the ground surface should be anticipated during and following periods of heavy precipitation.

Project Information

Standard Special Provision S5-280, "Project Information", discloses to bidders and contractors a list of pertinent information available for their inspection prior to bid opening. The following is an excerpt from SSP S5-280 disclosing information originating from Geotechnical Services. Items listed to be included in the Information Handout will be provided in Acrobat (.pdf) format to the addressee(s) of this report via electronic mail.

Data and information attached with the project plans are:

A. None.

Data and Information included in the Information Handout provided to the bidders and Contractors are:

A. Geotechnical Design Report for EA 06-360221, dated 1/26/2012.

Data and Information available for inspection at the District Office:

A. None.

Data and Information available for inspection at the Transportation Laboratory are:

A. None.

The analyses, conclusions, and recommendations contained in this report are based upon site conditions that we observed at the time of our investigation, data from our subsurface exploration, and our current understanding of proposed project. We have assumed that the information obtained from our limited subsurface exploration is representative of subsurface conditions throughout the site. If the scope of the proposed project changes from that described in this report, the recommendations should be reviewed by this Office.

If there are any questions or comments in regards to this report, please contact Ben Barnes at 916-227-1039.

BENJAMIN M. BARNES, PE
Transportation Engineer
Office of Geotechnical Design North
Branch E

Attachments:
Plate No. 1: Vicinity Map
Plate No. 2: Site Plan
Appendix A: As-Built LOTB

c: Qiang Huang (Geotechnical Services, OGDN-E)
Phillip Sanchez (D6 Project Manager)
Shira Rajendra (Geotechnical Services, Corporate Unit)
District Construction R.E. Pending
Ted Mooradian (D6 District Materials Engineer)

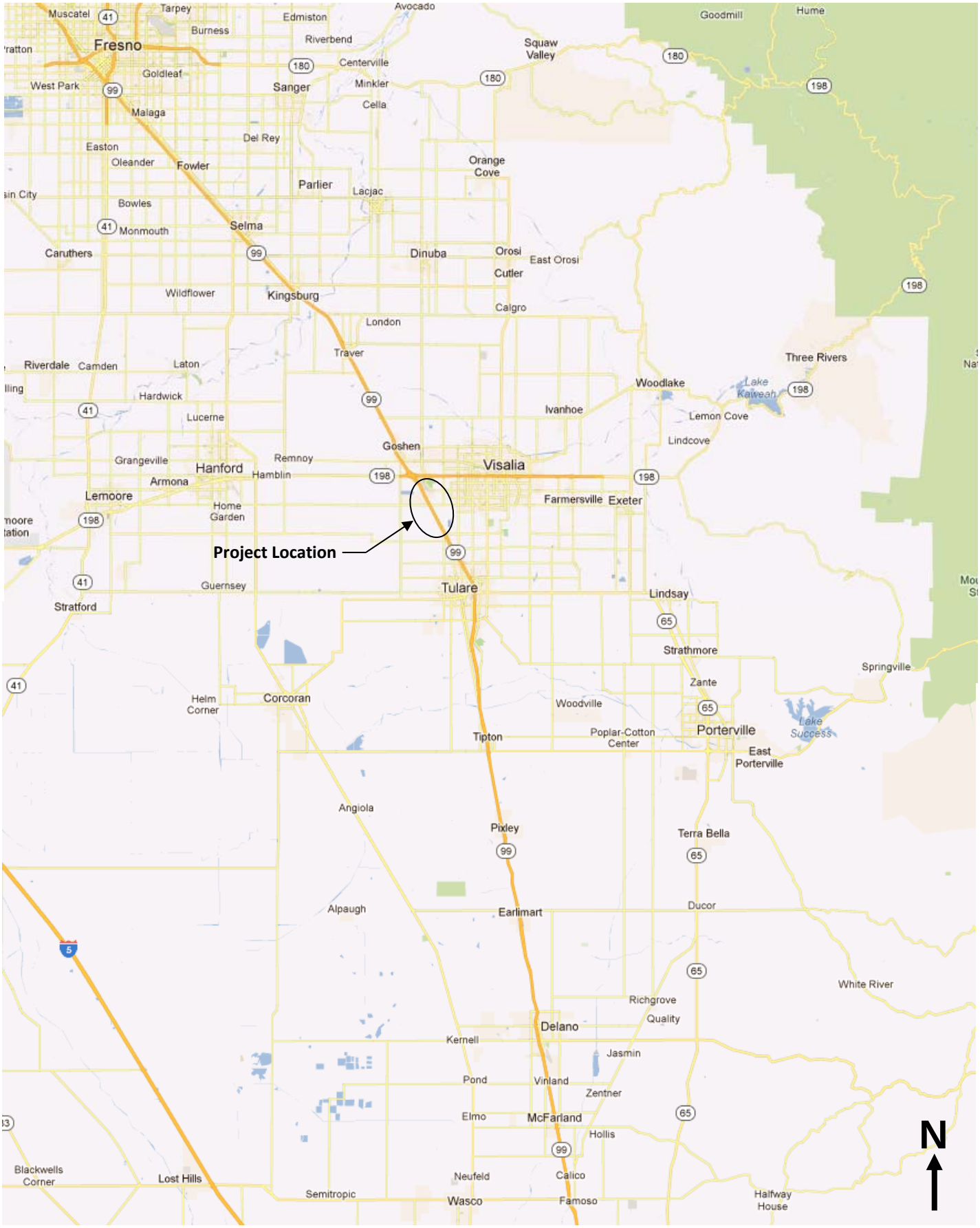

Caltrans	Division of Engineering Services Geotechnical Services Office of Geotechnical Design - North	EA 06-360221	VICINITY MAP	Plate No. 1
		ID 06000205901	06-TUL-99 PM 35.3/37.3	

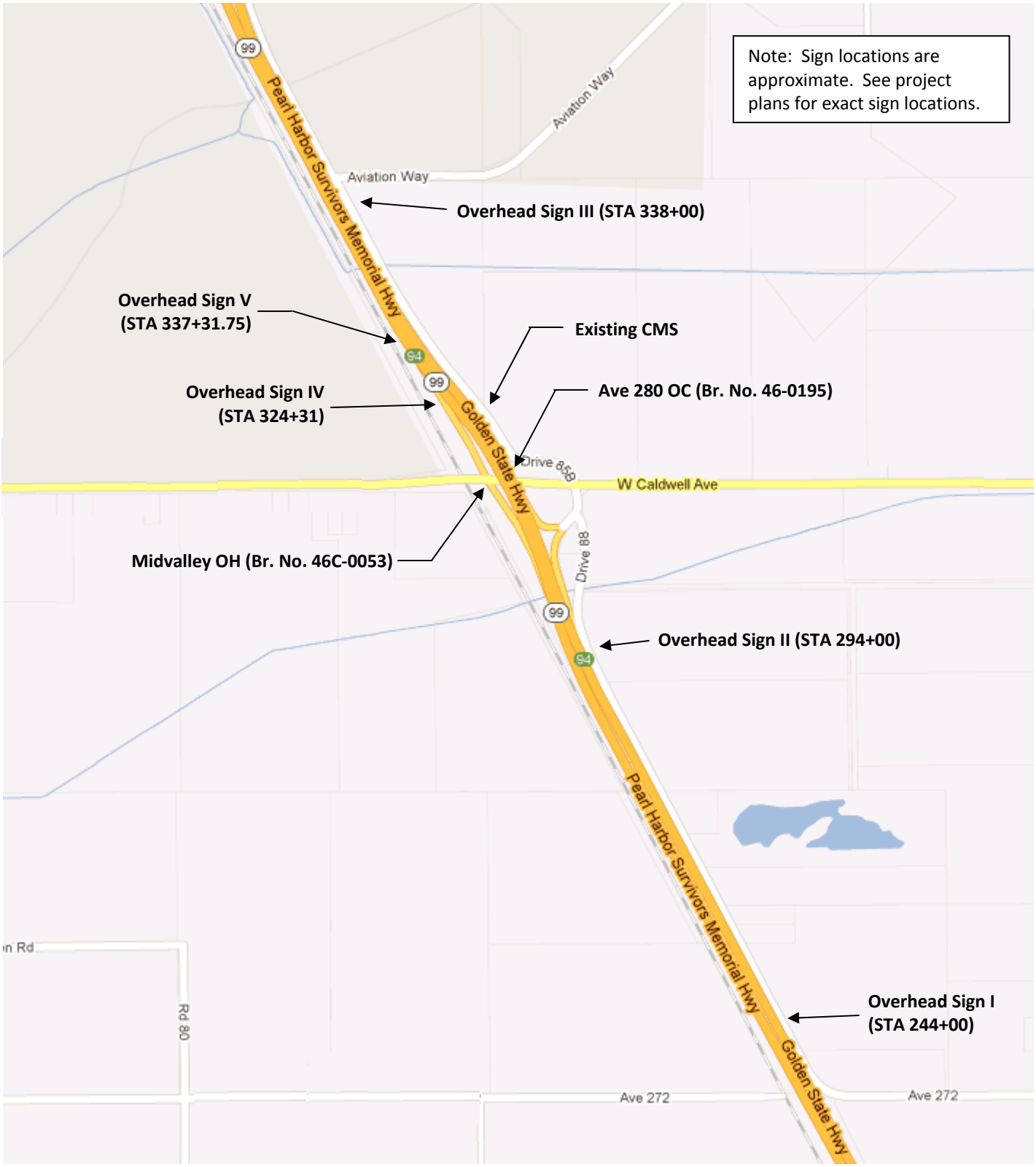

N

Caltrans	Division of Engineering Services Geotechnical Services Office of Geotechnical Design - North	EA 06-360221	SIGN LOCATIONS	Plate No. 2
		ID 06000205901	06-TUL-99 PM 35.3/37.3	

APPENDIX A

As-Built LOTB

Bridge	Bridge No.
Ave 280 OC	46-0195
Midvalley OH	46C-0053
Packwood Creek Bridge	46-0013

FED. ROAD DIV. NO.	STATE	PROJ. NO.	FISCAL YEAR	SHEET No.	TOTAL SHEETS
7	CAL.			161	174

F-0176(8)

DIST.	COUNTY	ROUTE	SECTION	SHEET No.	TOTAL SHEETS
VI	Tul				

Bridge Engineer — Civil Engineer—License 5335

Date Approved OCTOBER 6 1959

BRIDGE DEPARTMENT

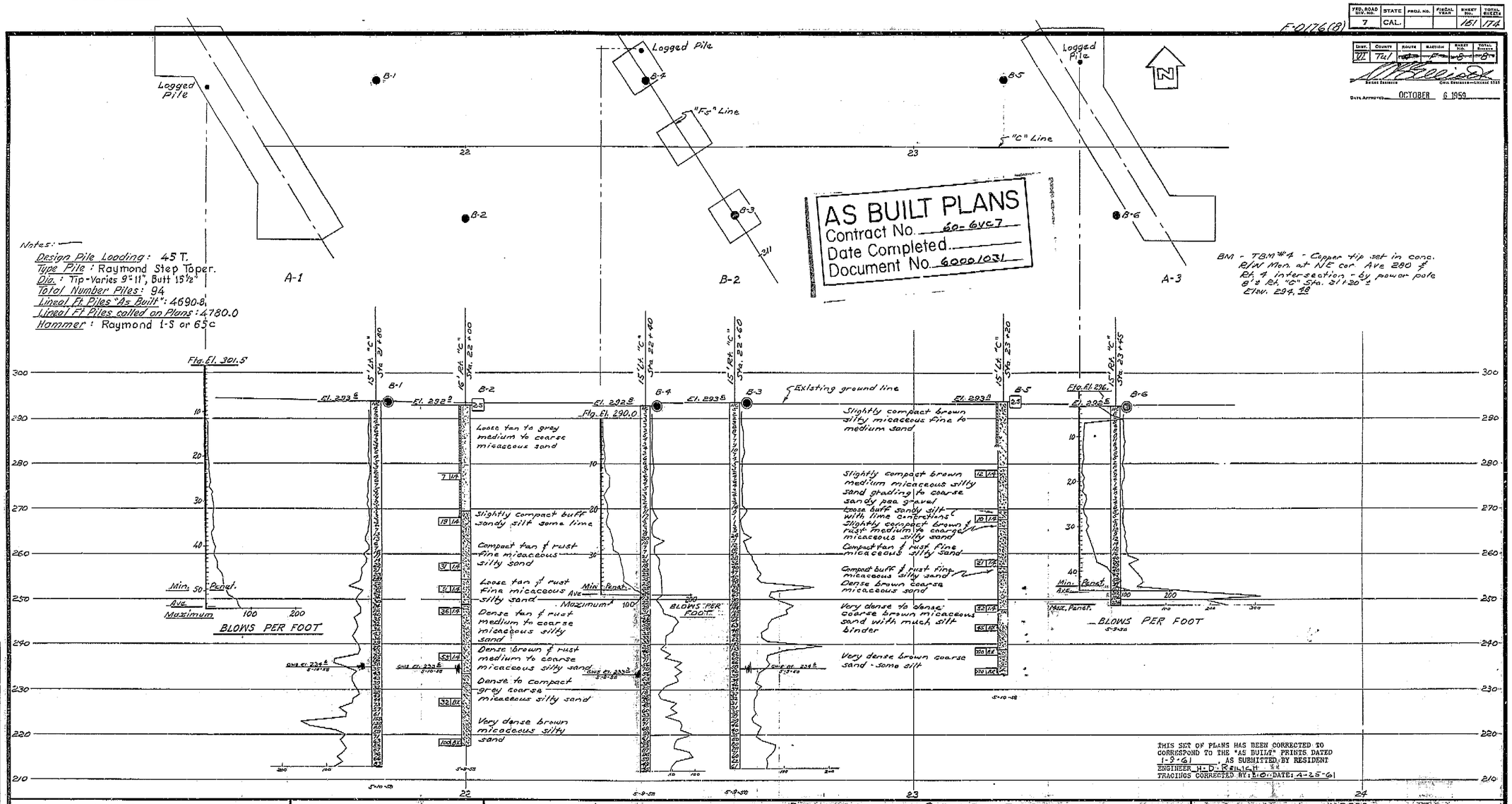

FIELD STUDY: W. J. Pelli 7-25-58
DRAWN: W. M. Hearney 7-25-58
CHECKED: R. C. Harris 7-23-58
Approval Recommended: Bridge Engineer
Civil Engineer—License 5335

161

CLASSIFICATION OF MATERIAL BASED ON STANDARD GRADE SIZE LIMITS

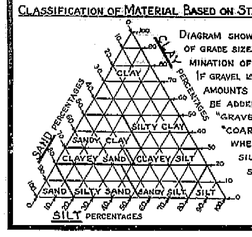

DIAGRAM SHOWING THE BASIS FOR ESTIMATES OF GRADE SIZE DISTRIBUTION USED IN DETERMINATION OF CLASS NAMES.

IF GRAVEL IS PRESENT IN APPRECIABLE AMOUNTS THE TERM "GRAVELLY" MAY BE ADDED TO THE CLASS NAME, VIZ. "GRAVELLY SAND". THE TERMS "COARSE", "MEDIUM" AND "FINE" WHEN USED TO DESCRIBE SAND, SILT AND GRAVEL REFER TO STANDARD GRADE SIZE LIMITS.

LEGEND OF EARTH MATERIALS

- GRAVEL
- SAND
- SILT
- CLAY
- SANDY CLAY OR CLAYEY SAND
- SANDY SILT OR SILTY SAND
- SILTY CLAY OR CLAYEY SILT
- PEAT AND/OR ORGANIC MATTER
- FILL MATERIAL
- IGNEOUS ROCK
- SEDIMENTARY ROCK
- METAMORPHIC ROCK

LEGEND OF BORING OPERATIONS

- PLAN OF ANY BORING
- PENETROMETER
- 2¼" CONE PENETROMETER
- SAMPLER BORING (DRY)
- ROTARY BORING (WET)
- AUGER BORING (DRY)
- JET BORING
- CORE BORING
- TEST PIT

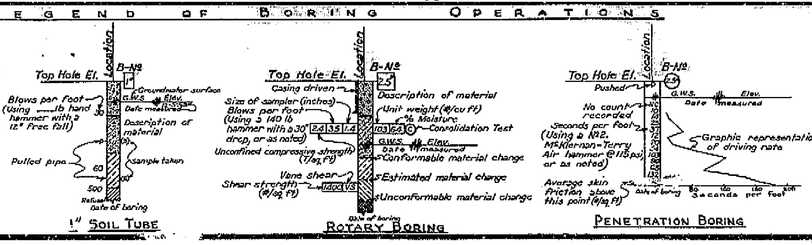

NOTES

The contractor's attention is directed to Section 2, Article (c) of the Standard Specifications and to the Special Provisions accompanying this set of plans.

Classification of earth material as shown on this sheet is based upon field inspection and is not to be construed to imply mechanical analysis.

STATE OF CALIFORNIA
DEPARTMENT OF PUBLIC WORKS
DIVISION OF HIGHWAYS

AVENUE 280 OVERCROSSING

LOG OF TEST BORINGS

SCALE	BRIDGE	FILE	DRAWING
1" = 10'	46-195		C-6022-8

PREL. DRAWING NO. P-6022/10

198

I HEREBY CERTIFY THAT THIS IS A TRUE AND ACCURATE COPY OF THE ABOVE DOCUMENT TAKEN UNDER MY DIRECTION AND CONTROL ON THIS DATE IN SACRAMENTO, CALIFORNIA PURSUANT TO AUTHORIZATION BY THE DIRECTOR OF PUBLIC WORKS.

DATE _____ SIGNATURE _____ TITLE _____

ClibPDF - www.fastio.com

FED. ROAD DIV. NO.	STATE	PROJ. NO.	FISCAL YEAR	SHEET NO.	TOTAL SHEETS
7	CAL.			168	174

F-0176(8)

DIST.	COUNTY	ROUTE	SECTION	SHEET NO.	TOTAL SHEETS
VI	Tul	4	F	7	7

DATE APPROVED OCTOBER 8 1959

BRIDGE DEPARTMENT

NOTES:

Design Pile Loading: 45 T
Type Pile: Raymond Step Taper
Diameter: Tip-Varies 8"-11" Butt 15½"
Total Number Piles: 42
Lineal Ft. Piles "As Built": 2065.4
Lineal Ft. Piles called for on Plans: 2000.
Hammer: Raymond 1-S & 65-C
Remarks: No pile logged at Abut. 1

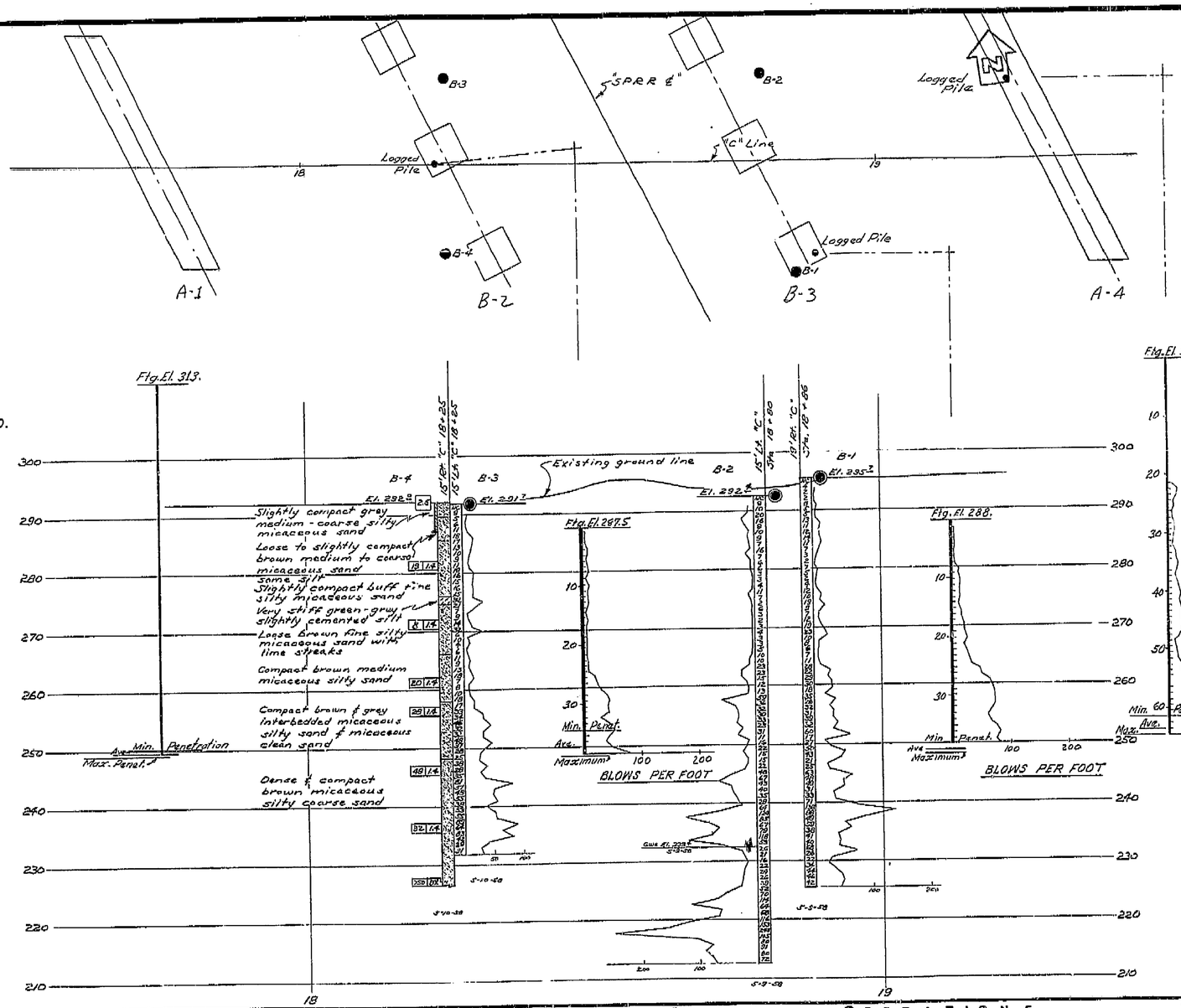

AS BUILT PLANS
Contract No.
Date Completed
Document No. 16

THIS SET OF PLANS HAS BEEN CORRECTED TO CORRESPOND TO THE "AS BUILT" PRINTS DATED , AS SUBMITTED BY RESIDENT ENGINEER
TRACINGS CORRECTED BY: DATE:

FIELD STUDY	by: J. Fall	
DRAWN	by: M. Heaney	5-27-58
CHECKED	by: J. Pate	5-28-58
Approved Recommended by		

CLASSIFICATION OF MATERIAL BASED ON STANDARD GRADE SIZE LIMITS

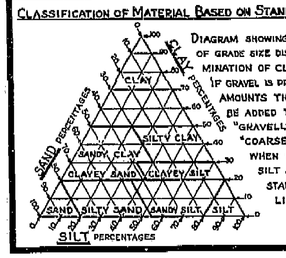

DIAGRAM SHOWING THE BASIS FOR ESTIMATES OF GRADE SIZE DISTRIBUTION USED IN DETERMINATION OF CLASS NAMES. IF GRAVEL IS PRESENT IN APPRECIABLE AMOUNTS THE TERM "GRAVELLY" MAY BE ADDED TO THE CLASS NAME, VIZ. "GRAVELLY SAND." THE TERMS "COARSE," "MEDIUM" AND "FINE" WHEN USED TO DESCRIBE SAND, SILT AND GRAVEL REFER TO STANDARD GRADE SIZE LIMITS.

LEGEND OF EARTH MATERIALS

- Gravel
- Sand
- Silt
- Clay
- Sandy Clay or Clayey Sand
- Sandy Silt or Silty Sand
- Silty Clay or Clayey Silt
- Peat and/or Organic Matter
- Fill Material
- Igneous Rock
- Sedimentary Rock
- Metamorphic Rock

LEGEND OF BORING OPERATIONS

- Plan of any boring
- Penetrometer
- 2¼" Cone Penetrometer
- Sampler boring (dry)
- Rotary boring (wet)
- Auger boring (dry)
- Jet boring
- Core boring
- Test pit

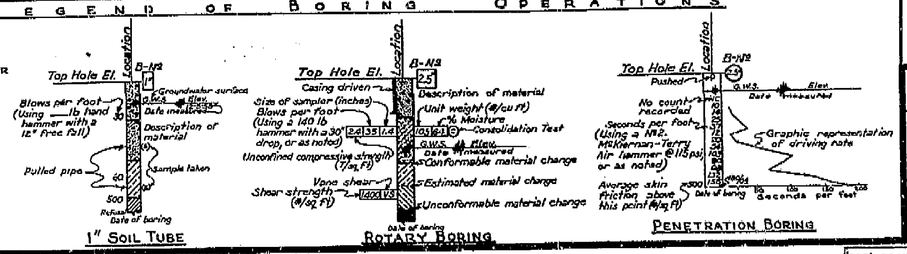

NOTES

The contractor's attention is directed to Section 2, Article (c) of the Standard Specifications and to the Special Provisions accompanying this set of plans.
Classification of earth material as shown on this sheet is based upon field inspection and is not to be construed to imply mechanical analysis.

STATE OF CALIFORNIA
DEPARTMENT OF PUBLIC WORKS
DIVISION OF HIGHWAYS

MIDVALLEY OVERHEAD

LOG OF TEST BORINGS

SCALE 1" = 10'	BRIDGE 46C-53	FILE E46	DRAWING C-6024-B

PREL. DRAWING NO. P-6024 | 9

168

I HEREBY CERTIFY THAT THIS IS A TRUE AND ACCURATE COPY OF THE ABOVE DOCUMENT TAKEN UNDER MY DIRECTION AND CONTROL ON THIS DATE IN SACRAMENTO, CALIFORNIA PURSUANT TO AUTHORITATION BY THE DIRECTOR OF PUBLIC WORKS.

DATE SIGNATURE TITLE

ClibPDF - www.fastio.com

FED. ROAD DIV. No.	STATE	PROJ. No.	FISCAL YEAR	SHEET No.	TOTAL SHEETS
7	CAL.			153	174

F-0176 (8)

DIST.	COUNTY	ROUTE	SECTION	SHEET No.	TOTAL SHEETS
VI	Tul	1		7	7

BRIDGE ENGINEER — CHIEF ENGINEER-CHIEF DIVISION

DATE APPROVED OCTOBER 6 1959

BRIDGE DEPARTMENT

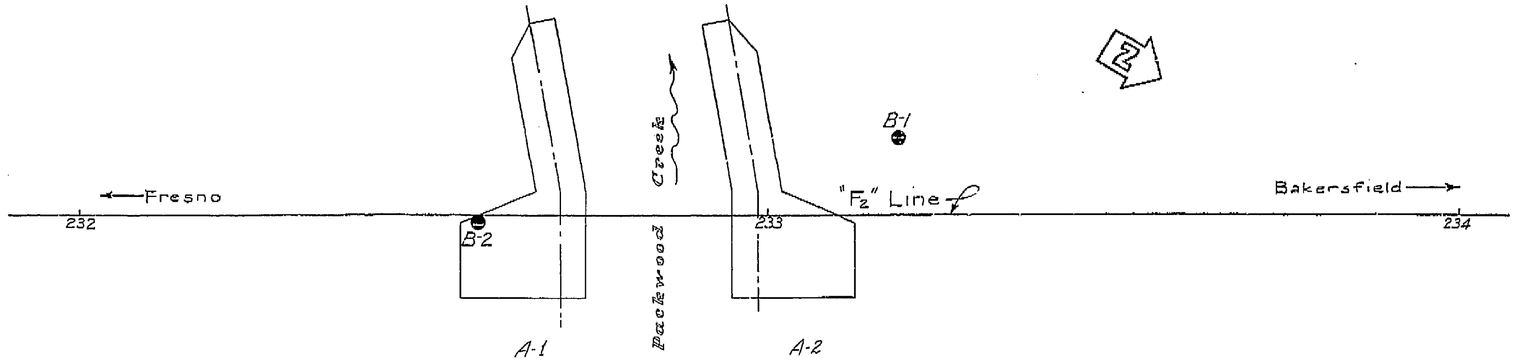

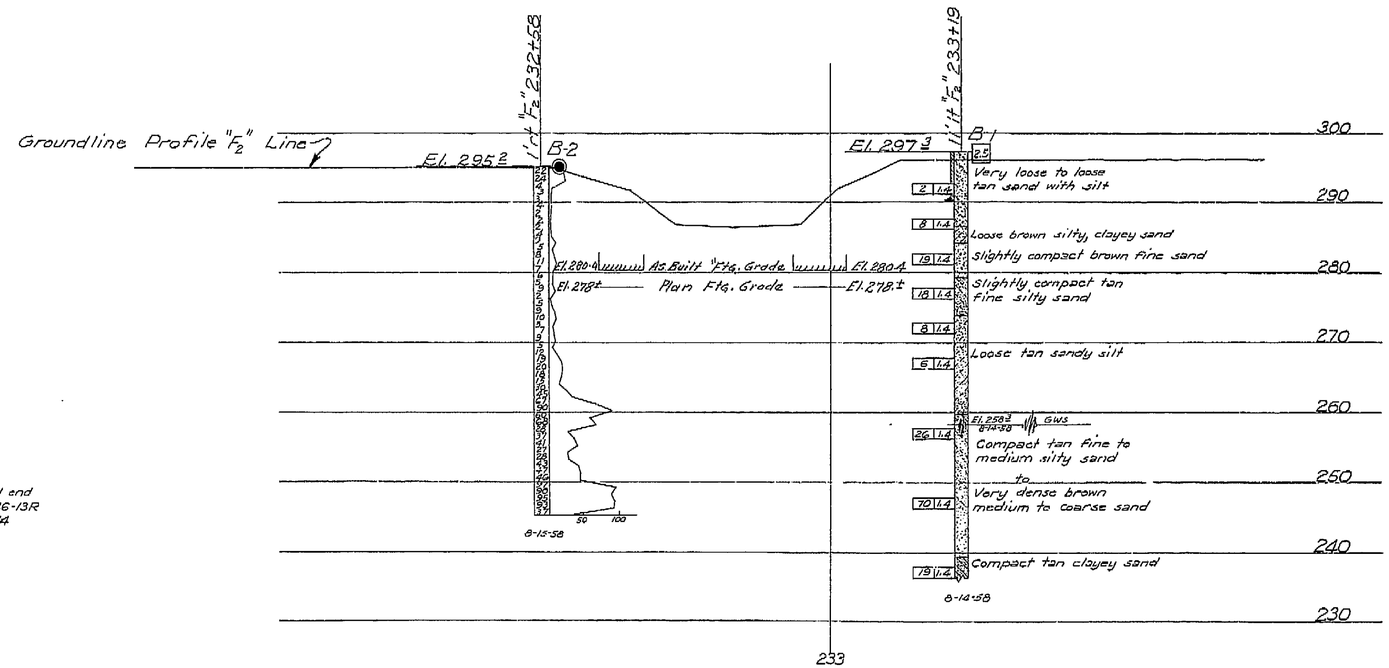

BM A"

Chiseled "a" in N end W. curb Br. # 46-13R 15' rt "F2" 233+14 Elev. 299.76

AS BUILT PLANS
Contract No. 60-6VC7
Date Completed
Document No. 60001031

THIS SET OF PLANS HAS BEEN CORRECTED TO CORRESPOND TO THE "AS BUILT" PRINTS DATED 1-9-61, AS SUBMITTED BY RESIDENT ENGINEER H. D. REILICH
TRACINGS CORRECTED BY: R.O. DATE: 4-26-61

FIELD STUDY	H. Nelson	8-58
DRAWN	H. Baron	8-58
CHECKED	H. Nelson	8-58

Approved Recommended by: [signature] Chief Bridge Engineer

CLASSIFICATION OF MATERIAL BASED ON STANDARD GRADE SIZE LIMITS

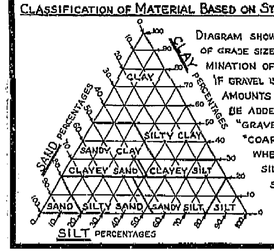

DIAGRAM SHOWING THE BASIS FOR ESTIMATES OF GRADE SIZE DISTRIBUTION USED IN DETERMINATION OF CLASS NAMES. IF GRAVEL IS PRESENT IN APPRECIABLE AMOUNTS THE TERM "GRAVELLY" MAY BE ADDED TO THE CLASS NAME, VIZ. "GRAVELLY SAND." THE TERMS "COARSE", "MEDIUM" AND "FINE" WHEN USED TO DESCRIBE SAND, SILT AND GRAVEL, REFER TO STANDARD GRADE SIZE LIMITS.

LEGEND OF EARTH MATERIALS

- GRAVEL
- SAND
- SILT
- CLAY
- SANDY CLAY OR CLAYEY SAND
- SANDY SILT OR SILTY SAND
- SILTY CLAY OR CLAYEY SILT
- PEAT AND/OR ORGANIC MATTER
- FILL MATERIAL
- IGNEOUS ROCK
- SEDIMENTARY ROCK
- METAMORPHIC ROCK

LEGEND OF BORING OPERATIONS

- PLAN OF ANY BORING
- PENETROMETER
- 2¼" CONE PENETROMETER
- SAMPLER BORING (DRY)
- ROTARY BORING (WET)
- AUGER BORING (DRY)
- JET BORING
- CORE BORING
- TEST PIT

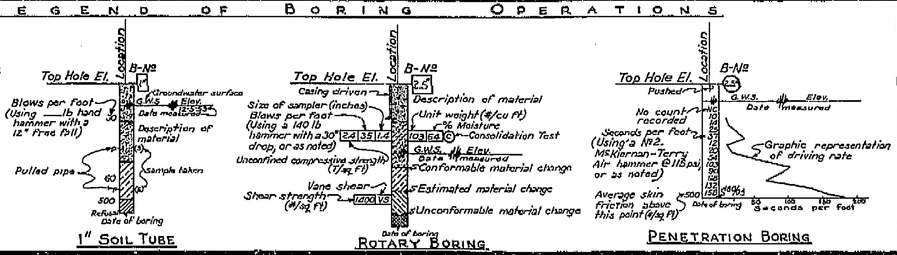

NOTES

The contractor's attention is directed to Section 2, Article (c) of the Standard Specifications and to the Special Provisions accompanying this set of plans.

Classification of earth material as shown on this sheet is based upon field inspection and is not to be construed to imply mechanical analysis.

STATE OF CALIFORNIA
DEPARTMENT OF PUBLIC WORKS
DIVISION OF HIGHWAYS

PACKWOOD CREEK BRIDGE WIDENING

LOG OF TEST BORINGS

SCALE	BRIDGE	FILE	DRAWING
1"=10'	46-13L	E-46	0-6123-7

PREL. DRAWING No. P-6123 9 20

153

225

I HEREBY CERTIFY THAT THIS IS A TRUE AND ACCURATE COPY OF THE ABOVE DOCUMENT TAKEN UNDER MY DIRECTION AND CONTROL ON THIS DATE IN SACRAMENTO, CALIFORNIA PURSUANT TO AUTHORIZATION BY THE DIRECTOR OF PUBLIC WORKS.

DATE ____ SIGNATURE ____ TITLE ____

ClibPDF - www.fastio.com