Dist	COUNTY	ROUTE	POST MILES TOTAL PROJECT	SHEET No.	TOTAL SHEETS
06	Tul	99	R37.3/41.3	1	346

INDEX OF PLANS

SHEET No.	DESCRIPTION
1	TITLE AND LOCATION MAP
2-5	TYPICAL CROSS SECTIONS
6	KEY MAP AND LINE INDEX
7-22	LAYOUTS
23-33	SUPERELEVATION DIAGRAMS AND PROFILES
34-40	CONSTRUCTION DETAILS
41-42	EROSION CONTROL QUANTITIES
43-57	DRAINAGE PROFILES, DETAILS AND QUANTITIES
58-59	STAGE CONSTRUCTION PLANS
60-95	TRAFFIC HANDLING PLANS AND QUANTITIES
96-97	DETOUR LAYOUTS
98	CONSTRUCTION AREA SIGNS
99-132	PAVEMENT DELINEATION PLANS, SIGN PLANS, DETAILS AND QUANTITIES
133-141	PLANT REMOVAL PLANS
142-147	SUMMARY OF QUANTITIES
148-167	ELECTRICAL PLANS
168-221	REVISED AND NEW STANDARD PLANS

STRUCTURE PLANS

222-231	GOSHEN OVERCROSSING PUMPING
232-254	NORTH GOSHEN OVERHEAD (WIDEN)
255-266	MILL CREEK BRIDGE (WIDEN)
267-298	WEST VISALIA OVERHEAD (WIDEN)
299-323	ROUTE 99/198 EAST SEPARATION (WIDEN)
324-346	ROUTE 99/198 WEST SEPARATION (WIDEN)

THE STANDARD PLANS LIST APPLICABLE TO THIS CONTRACT IS INCLUDED IN THE NOTICE TO BIDDERS AND SPECIAL PROVISIONS BOOK.

STATE OF CALIFORNIA
DEPARTMENT OF TRANSPORTATION

PROJECT PLANS FOR CONSTRUCTION ON
STATE HIGHWAY

IN TULARE COUNTY
NEAR GOSHEN
FROM 0.9 MILE SOUTH OF WEST VISALIA OVERHEAD TO 0.2 MILE NORTH OF NORTH GOSHEN OVERHEAD

TO BE SUPPLEMENTED BY STANDARD PLANS DATED MAY 2006

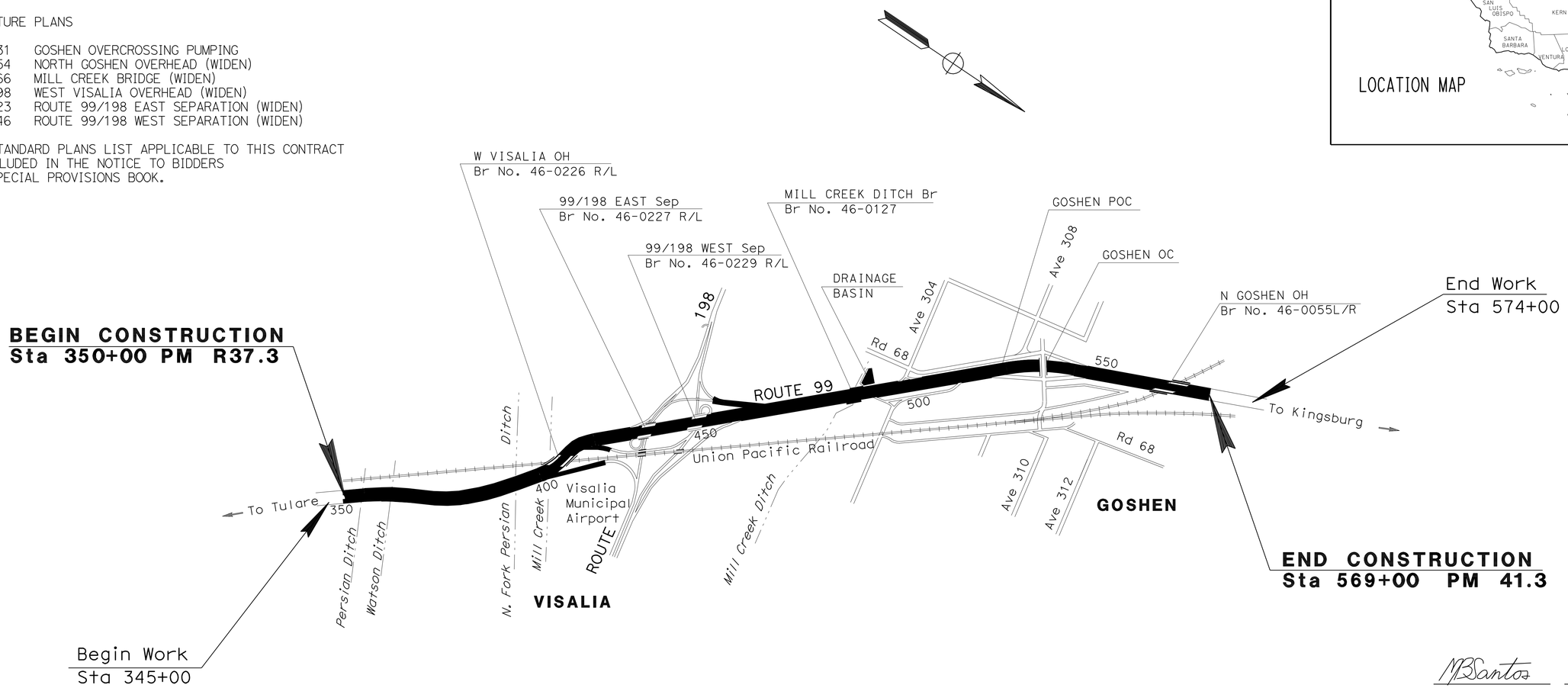

LOCATION MAP

NO SCALE

THE CONTRACTOR SHALL POSSESS THE CLASS (OR CLASSES) OF LICENSE AS SPECIFIED IN THE "NOTICE TO BIDDERS."

MBSantos 12-19-11
PROJECT ENGINEER DATE
REGISTERED CIVIL ENGINEER

April 16, 2012
PLANS APPROVAL DATE

REGISTERED PROFESSIONAL ENGINEER MIGUELITO B. SANTOS No. 65598 Exp. 09/30/13 CIVIL STATE OF CALIFORNIA

THE STATE OF CALIFORNIA OR ITS OFFICERS OR AGENTS SHALL NOT BE RESPONSIBLE FOR THE ACCURACY OR COMPLETENESS OF SCANNED COPIES OF THIS PLAN SHEET.

CONTRACT No.	06-360214
PROJECT ID	0600020408

PROJECT MANAGER: PHILLIP SANCHEZ
DESIGN ENGINEER: GURBHAY BRAR

LAST REVISION 12-19-11 DATE PLOTTED => 19-APR-2012 TIME PLOTTED => 12:50

Dist	COUNTY	ROUTE	POST MILES TOTAL PROJECT	SHEET No.	TOTAL SHEETS
06	Tul	99	R37.3/41.3	2	346

REGISTERED CIVIL ENGINEER — DATE 12-15-11

4-16-12
PLANS APPROVAL DATE

REGISTERED PROFESSIONAL ENGINEER MIGUELITO B. SANTOS No. 65598 Exp. 09/30/13 CIVIL STATE OF CALIFORNIA

THE STATE OF CALIFORNIA OR ITS OFFICERS OR AGENTS SHALL NOT BE RESPONSIBLE FOR THE ACCURACY OR COMPLETENESS OF SCANNED COPIES OF THIS PLAN SHEET.

NOTES:

1. DIMENSIONS OF THE PAVEMENT STRUCTURES (STRUCTURAL SECTIONS) ARE SUBJECT TO TOLERANCES SPECIFIED IN THE STANDARD SPECIFICATIONS.
2. SUPERELEVATION AS SHOWN OR AS DIRECTED BY THE ENGINEER.
3. EXACT LOCATIONS FOR INDIVIDUAL SLAB REPLACEMENT ARE SHOWN IN THE SUMMARY OF QUANTITIES SHEET.
4. EXACT LOCATIONS AND TYPE OF DIKES ARE SHOWN ON THE LAYOUT AND IN THE SUMMARY OF QUANTITIES SHEETS.
5. SEE STRUCTURE PLANS FOR APPROACH SLAB RECONSTRUCTION LIMITS.
6. EXACT LOCATIONS FOR CB, CB WILDLIFE PASSAGE WAY, FENCE, MBGR, AND DTBB ARE SHOWN ON THE LAYOUT SHEETS AND IN THE SUMMARY OF QUANTITIES SHEETS.
7. EXACT LOCATION AND DETAIL FOR SIDE DITHCES ARE SHOWN ON LAYOUT PLANS AND DRAINAGE DETAILS.
8. FOR ACCURATE RIGHT OF WAY DATA, CONTACT RIGHT OF WAY ENGINEERING AT THE DISTRICT OFFICE.
9. INSTALL SAFETY EDGE AT EDGE OF SHOULDER WHERE NO DIKES ARE INSTALLED.
10. INSTALL MBGR 29" HIGH. SEE SHEET C-4 FOR DETAILS.

DESIGN DESIGNATION

2019 ADT	72,000
2039 ADT	108,500
DHV	10,800
D	67%
T	14%
TI	16

Exist Pvmt STRUCTURE SECTIONS

LOCATIONS	THICKNESS				
	TRAVEL WAY			SHOULDERS	
	AC	PCC	CTS/CTB	AC	AB/AS
STA 350+00 TO 402+96	0.50′	0.75′	0.33′	0.55′	0.45′
STA 404+66 TO 442+41		0.75′	0.45′	0.35′	0.80′
STA 444+57 TO 460+00	0.50′	0.75′	0.33′	0.55′	0.45′
STA 460+00 TO 564+00	0.60′	0.68′	0.33′	0.50′	0.25′

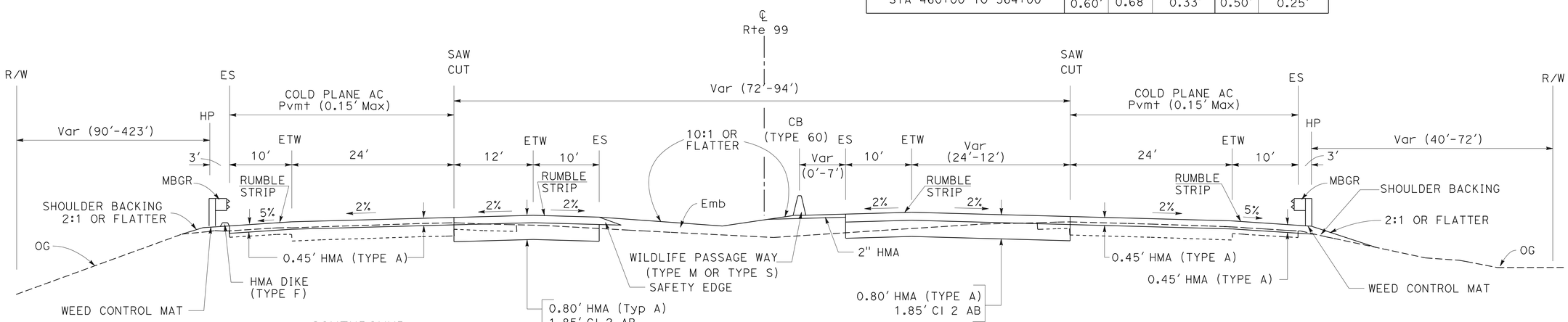

SOUTHBOUND
STA 379+00 to STA 400+69
STA 445+28 to STA 463+00

ROUTE 99

NORTHBOUND
STA 379+00 to STA 402+96
STA 444+57 to STA 460+00

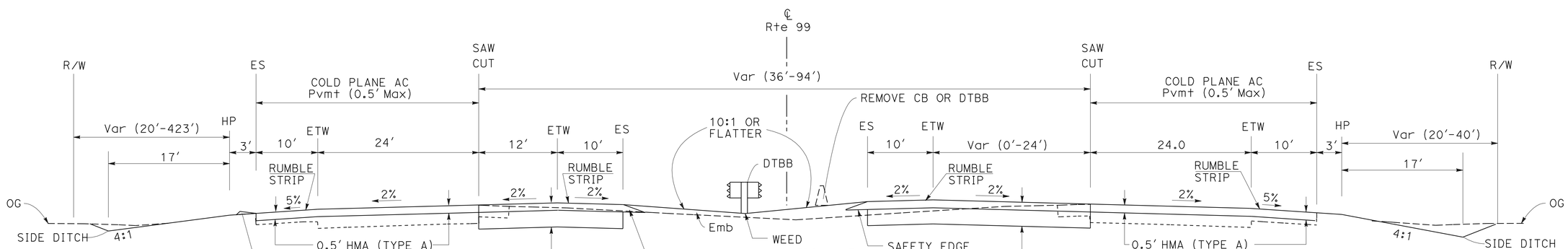

SOUTHBOUND
STA 350+00 to STA 379+00

ROUTE 99

NORTHBOUND
STA 350+00 to STA 379+00

TYPICAL CROSS SECTIONS

NO SCALE

X-1

STATE OF CALIFORNIA - DEPARTMENT OF TRANSPORTATION
Caltrans®
DESIGN

FUNCTIONAL SUPERVISOR: GURBHAY BRAR
CALCULATED-DESIGNED BY: MIGUELITO SANTOS
CHECKED BY: DAVID VELAZCO
REVISED BY
DATE REVISED

LAST REVISION 12-19-11 | DATE PLOTTED => 19-APR-2012 | TIME PLOTTED => 11:13

Dist	COUNTY	ROUTE	POST MILES TOTAL PROJECT	SHEET No.	TOTAL SHEETS
06	Tul	99	R37.3/41.3	3	346

REGISTERED CIVIL ENGINEER 12-15-11 DATE

4-16-12
PLANS APPROVAL DATE

REGISTERED PROFESSIONAL ENGINEER MIGUELITO B. SANTOS No. 65598 Exp. 09/30/13 CIVIL STATE OF CALIFORNIA

THE STATE OF CALIFORNIA OR ITS OFFICERS OR AGENTS SHALL NOT BE RESPONSIBLE FOR THE ACCURACY OR COMPLETENESS OF SCANNED COPIES OF THIS PLAN SHEET.

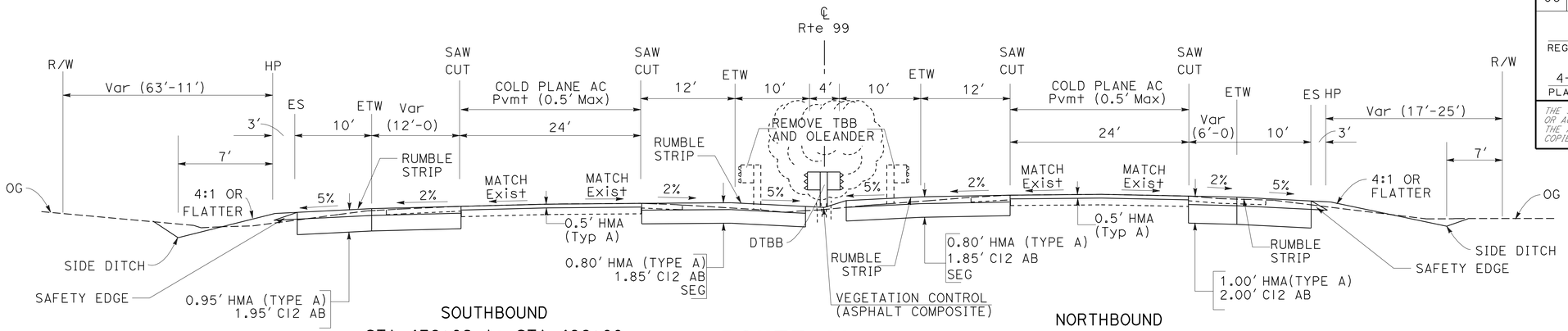

SOUTHBOUND
STA 476+82 to STA 496+00

ROUTE 99

NORTHBOUND
STA 476+82 to STA 479+86

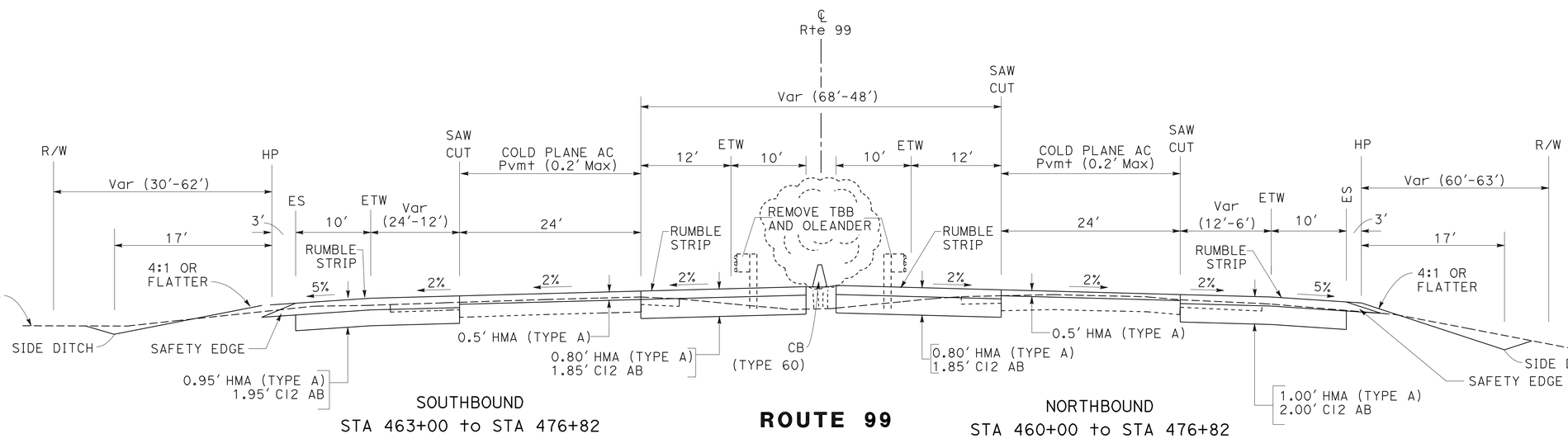

SOUTHBOUND
STA 463+00 to STA 476+82

ROUTE 99

NORTHBOUND
STA 460+00 to STA 476+82

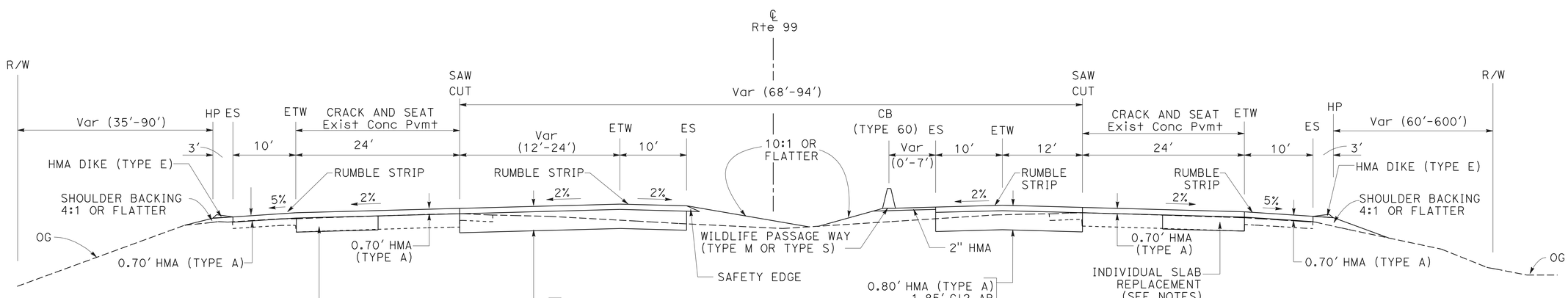

SOUTHBOUND
STA 404+66 to STA 429+78
STA 432+80 to STA 442+41

ROUTE 99

NORTHBOUND
STA 406+93 to STA 428+85
STA 431+96 to STA 441+75

TYPICAL CROSS SECTIONS

NO SCALE

X-2

STATE OF CALIFORNIA - DEPARTMENT OF TRANSPORTATION
DESIGN
FUNCTIONAL SUPERVISOR: GURBHAY BRAR
CALCULATED-DESIGNED BY: MIGUELITO SANTOS
CHECKED BY: DAVID VELAZCO
REVISED BY
DATE REVISED

LAST REVISION 12-19-11
DATE PLOTTED => 19-APR-2012
TIME PLOTTED => 11:13

Dist	COUNTY	ROUTE	POST MILES TOTAL PROJECT	SHEET No.	TOTAL SHEETS
06	Tul	99	R37.3/41.3	4	346

REGISTERED CIVIL ENGINEER 12-15-11 DATE

4-16-12
PLANS APPROVAL DATE

REGISTERED PROFESSIONAL ENGINEER MIGUELITO B. SANTOS No. 65598 Exp. 09/30/13 CIVIL STATE OF CALIFORNIA

THE STATE OF CALIFORNIA OR ITS OFFICERS OR AGENTS SHALL NOT BE RESPONSIBLE FOR THE ACCURACY OR COMPLETENESS OF SCANNED COPIES OF THIS PLAN SHEET.

(*) PLACE SEG (SUBGRADE ENHANCEMENT GEOTEXTILE)

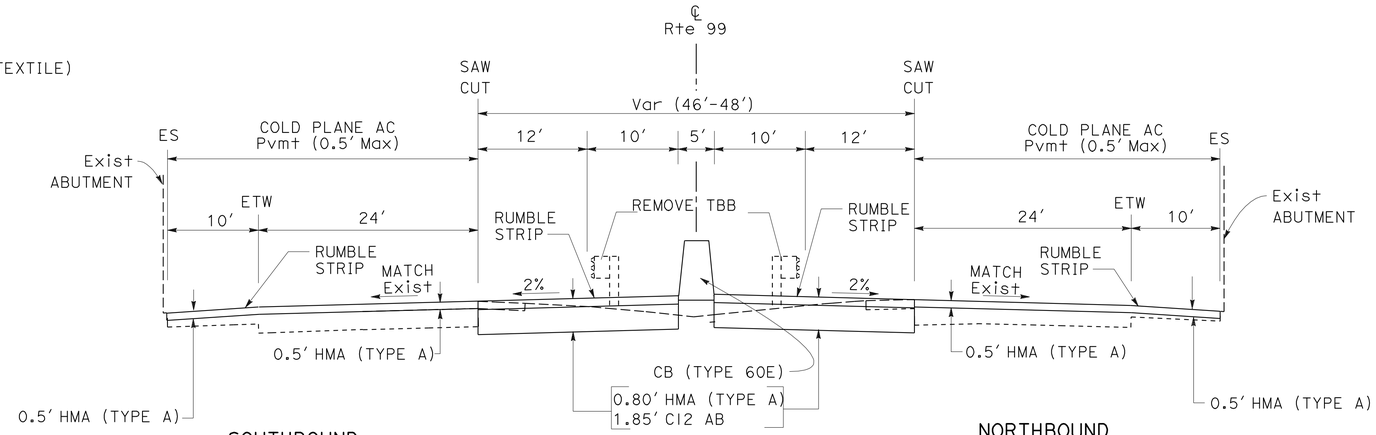

SOUTHBOUND
STA 536+59 to STA 538+54

ROUTE 99

NORTHBOUND
STA 536+57 to STA 538+56

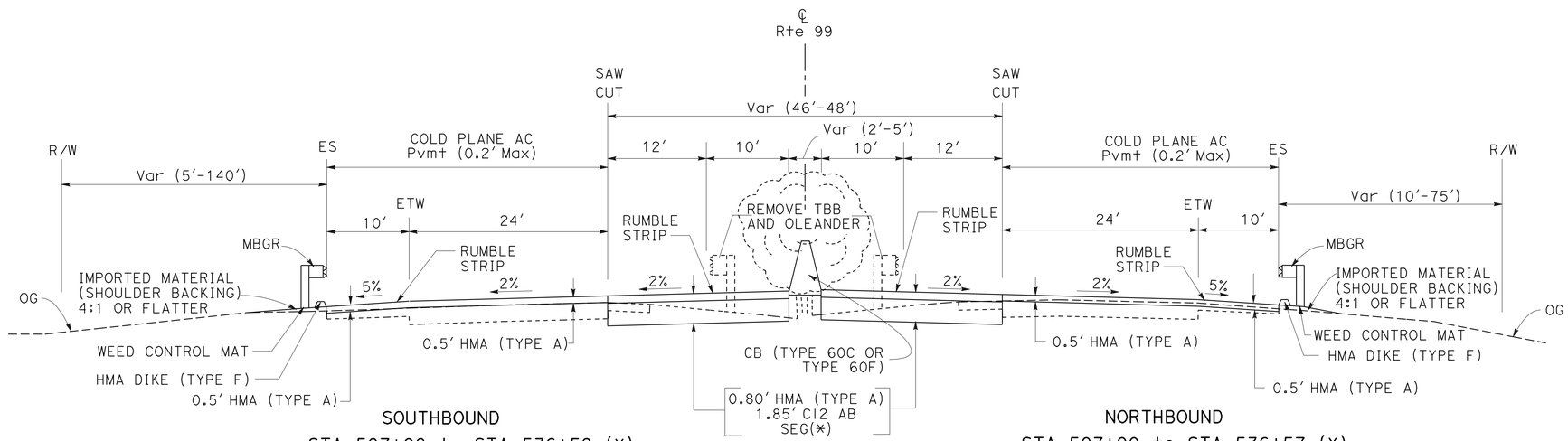

SOUTHBOUND
STA 507+00 to STA 536+59 (*)
STA 538+54 to STA 555+42
STA 557+61 TO STA 564+00

ROUTE 99

NORTHBOUND
STA 507+00 to STA 536+57 (*)
STA 538+56 to STA 555+05
STA 557+24 to STA 564+00

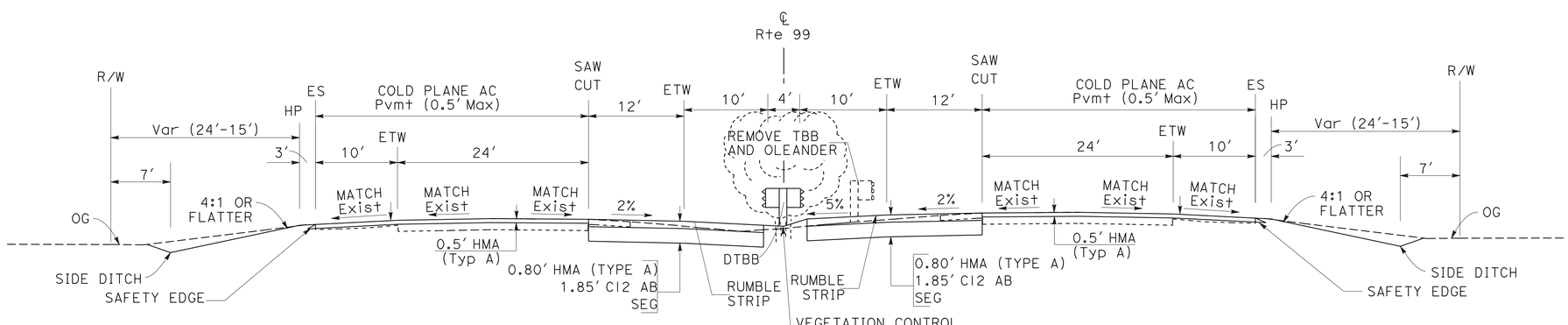

SOUTHBOUND
STA 496+00 to STA 507+00

ROUTE 99

NORTHBOUND
STA 479+86 to STA 507+00

TYPICAL CROSS SECTIONS

NO SCALE

X-3

STATE OF CALIFORNIA - DEPARTMENT OF TRANSPORTATION
DESIGN

FUNCTIONAL SUPERVISOR: GURBHAY BRAR
CALCULATED-DESIGNED BY: MIGUELITO SANTOS
CHECKED BY: DAVID VELAZCO
REVISED BY
DATE REVISED

LAST REVISION 12-19-11
DATE PLOTTED => 19-APR-2012
TIME PLOTTED => 11:13

Dist	COUNTY	ROUTE	POST MILES TOTAL PROJECT	SHEET No.	TOTAL SHEETS
06	Tul	99	R37.3/41.3	5	346

REGISTERED CIVIL ENGINEER 12-15-11 DATE

4-16-12
PLANS APPROVAL DATE

REGISTERED PROFESSIONAL ENGINEER MIGUELITO B. SANTOS No. 65598 Exp. 09/30/13 CIVIL STATE OF CALIFORNIA

THE STATE OF CALIFORNIA OR ITS OFFICERS OR AGENTS SHALL NOT BE RESPONSIBLE FOR THE ACCURACY OR COMPLETENESS OF SCANNED COPIES OF THIS PLAN SHEET.

COLD PLANE AND OVERLAY

LOCATION	FROM	TO	COLD PLANE AC	HMA (Typ A) OVERLAY
Rte 99 NB Conn TO EB 198 (RAMP 1)	STA 407+00.00	STA 410+72.36		0.35′
Rte 99 NB Conn TO WB 198 (RAMP 2)	STA 418+00.00	STA 424+28.55		0.30′
Rte 99 NB Conn FROM EB 198 (RAMP 3)	STA 420+72.91	STA 426+75.00		0.35′
Rte 99 SB Conn FROM EB 198 (RAMP 4)	STA 428+52.00	STA 433+40.54	0.10′	0.30′
Rte 99 SB Conn FROM WB 198 (RAMP 5)	STA 447+25.00	STA 453+61.17	0.10′	0.50′
Rte 99 SB Conn TO EB/WB 198 (RAMP 6)	STA 450+90.40	STA 453+15.40	0.10′	0.25′
Rte 99 NB Conn TO WB 198 (RAMP 7)	STA 448+36.68	STA 460+00.00		0.35′

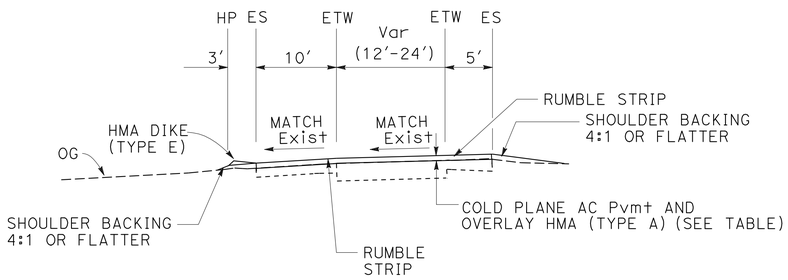

TYPICAL RAMP SECTION

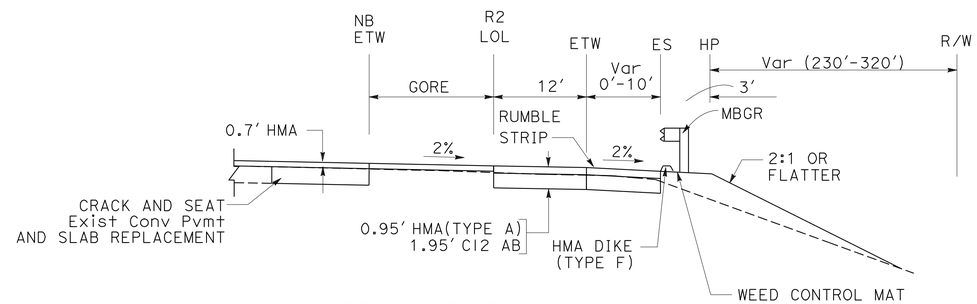

NB CONNECTOR

Rte 99 NB Conn to WB 198 (RAMP 2)
410+81 ℄ Rte 99 71.30 Lt TO STA 418+00

* FROM STA 418+00 TO STA 424+28.55, OVERLAY Exist Pvmt (SEE TABLE)

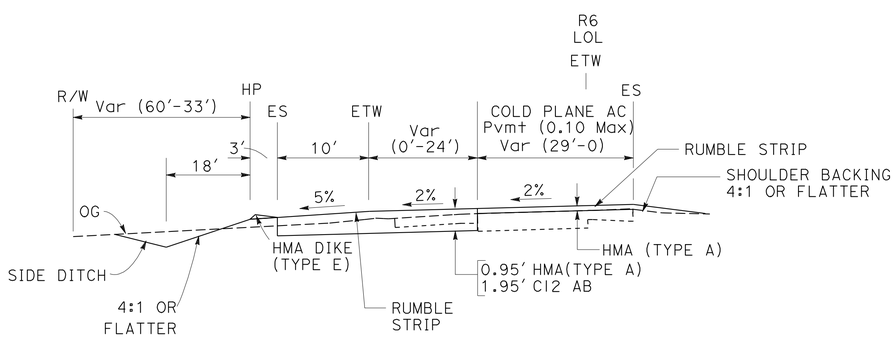

SB CONNECTOR

Rte 99 SB Conn to Rte 198 (RAMP 6)
STA 453+15.4 to STA 463+00

* FROM STA 450+90.4 TO STA 453+15.4, OVERLAY Exist Pvmt (SEE TABLE)

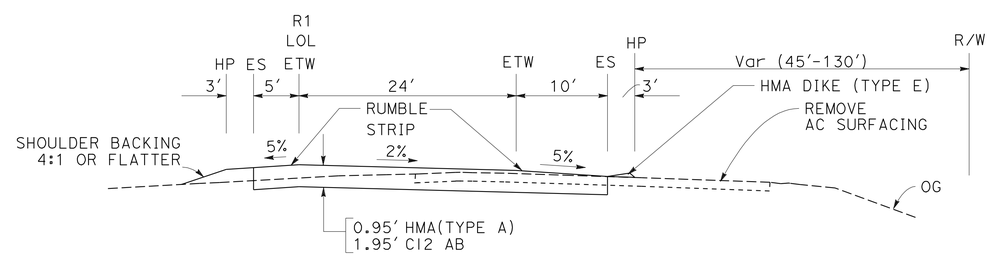

NB CONNECTOR

Rte 99 NB Conn to EB 198 (RAMP 1)
STA 390+76 to STA 407+00

* FROM STA 407+00 TO STA 410+72.36, OVERLAY Exist Pvmt (SEE TABLE)

TYPICAL CROSS SECTIONS

NO SCALE

X-4

STATE OF CALIFORNIA - DEPARTMENT OF TRANSPORTATION
Caltrans®
DESIGN
FUNCTIONAL SUPERVISOR: GURBHAY BRAR
CALCULATED-DESIGNED BY: MIGUELITO SANTOS
CHECKED BY: DAVID VELAZCO
REVISED BY
DATE REVISED

LAST REVISION 12-19-11
DATE PLOTTED => 19-APR-2012
TIME PLOTTED => 11:13

Dist	COUNTY	ROUTE	POST MILES TOTAL PROJECT	SHEET No.	TOTAL SHEETS
06	Tul	99	R37.3/41.3	6	346

MBSantos 12-15-11
REGISTERED CIVIL ENGINEER DATE

4-16-12
PLANS APPROVAL DATE

REGISTERED PROFESSIONAL ENGINEER
MIGUELITO B. SANTOS
No. 65598
Exp. 09/30/13
CIVIL
STATE OF CALIFORNIA

THE STATE OF CALIFORNIA OR ITS OFFICERS OR AGENTS SHALL NOT BE RESPONSIBLE FOR THE ACCURACY OR COMPLETENESS OF SCANNED COPIES OF THIS PLAN SHEET.

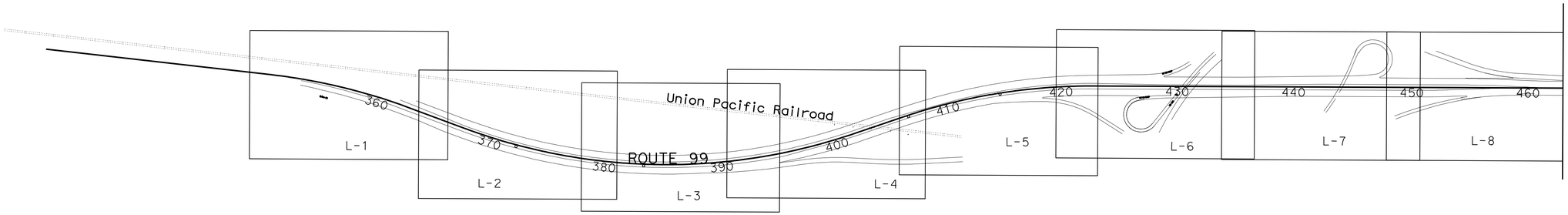

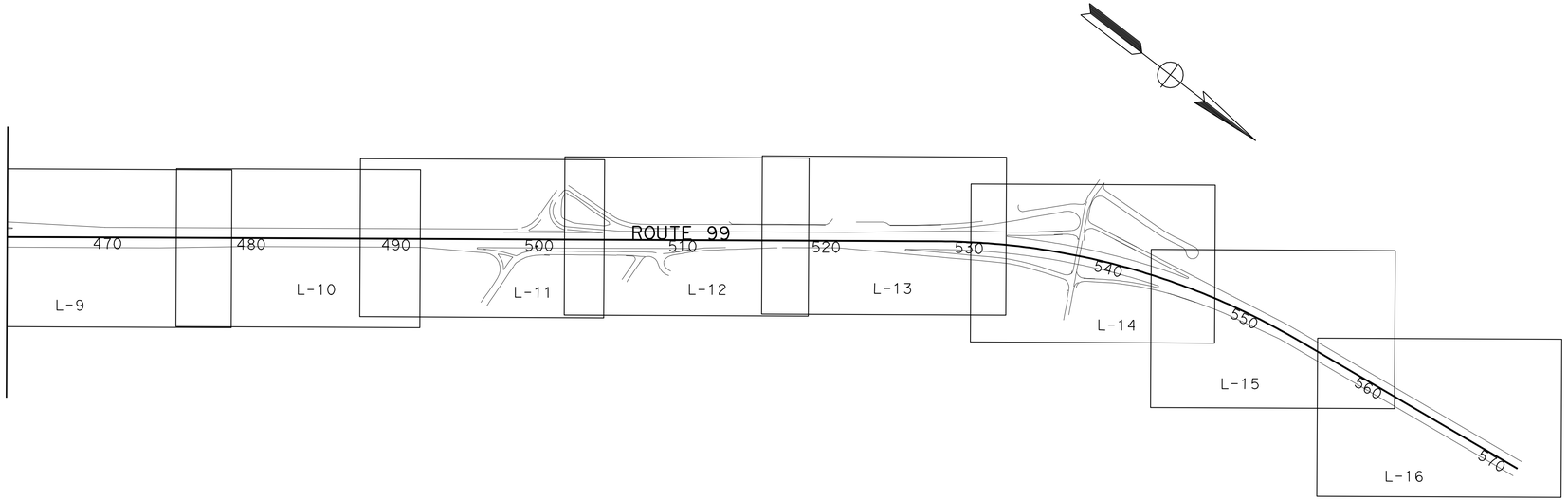

NO SCALE

KEY MAP AND LINE INDEX

K-1

STATE OF CALIFORNIA - DEPARTMENT OF TRANSPORTATION
Caltrans
DESIGN

FUNCTIONAL SUPERVISOR: GURBHAY BRAR
CALCULATED-DESIGNED BY: MIGUELITO SANTOS
CHECKED BY: DAVID VELAZCO
REVISED BY
DATE REVISED

LAST REVISION 12-19-11
DATE PLOTTED => 19-APR-2012
TIME PLOTTED => 11:13

Dist	COUNTY	ROUTE	POST MILES TOTAL PROJECT	SHEET No.	TOTAL SHEETS
06	Tul	99	R37.3/41.3	7	346

REGISTERED CIVIL ENGINEER — DATE 12-15-11

4-16-12
PLANS APPROVAL DATE

REGISTERED PROFESSIONAL ENGINEER MIGUELITO B. SANTOS No. 65598 Exp. 09/30/13 CIVIL STATE OF CALIFORNIA

THE STATE OF CALIFORNIA OR ITS OFFICERS OR AGENTS SHALL NOT BE RESPONSIBLE FOR THE ACCURACY OR COMPLETENESS OF SCANNED COPIES OF THIS PLAN SHEET.

NOTES:
1. FOR ACCURATE RIGHT OF WAY DATA, CONTACT RIGHT OF WAY ENGINEERING AT THE DISTRICT OFFICE.
2. CONCRETE BARRIER WILDLIFE PASSAGEWAY TYPE M AND TYPE S TYPICALLY USED FOR CROSSING OF MEDIUM AND SMALL SIZE ANIMALS TO BE SPACED 2500 FT AND 150 FT RESPECTIVELY. SEE QUANTITY SHEETS FOR LOCATIONS.
3. CRACK EXISTING CONCRETE PAVEMENT ACTIVITIES APPLY TO TRAVEL LANES ONLY AND OVERLAY APPLY TO TRAVEL LANES AND SHOULDERS.
4. AFTS = ALTERNATIVE FLARED TERMINAL SYSTEM

LEGEND:
- COLD PLANE 0.50' AC (Max) & OVERLAY 0.50' HMA
- COLD PLANE 0.15' AC (Max) & OVERLAY 0.45' HMA
- CRACK Exist Conc Pvmt & OVERLAY 0.70' HMA (SEE NOTE 3)
- COLD PLANE 0.20' AC (Max) & OVERLAY 0.50' HMA
- MINOR Conc (STAMPED Conc)
- OBLITERATE SURFACING
- No. DRAINAGE SYSTEM NUMBER
- xx DRAINAGE ITEM
- DITCH FLOWLINE

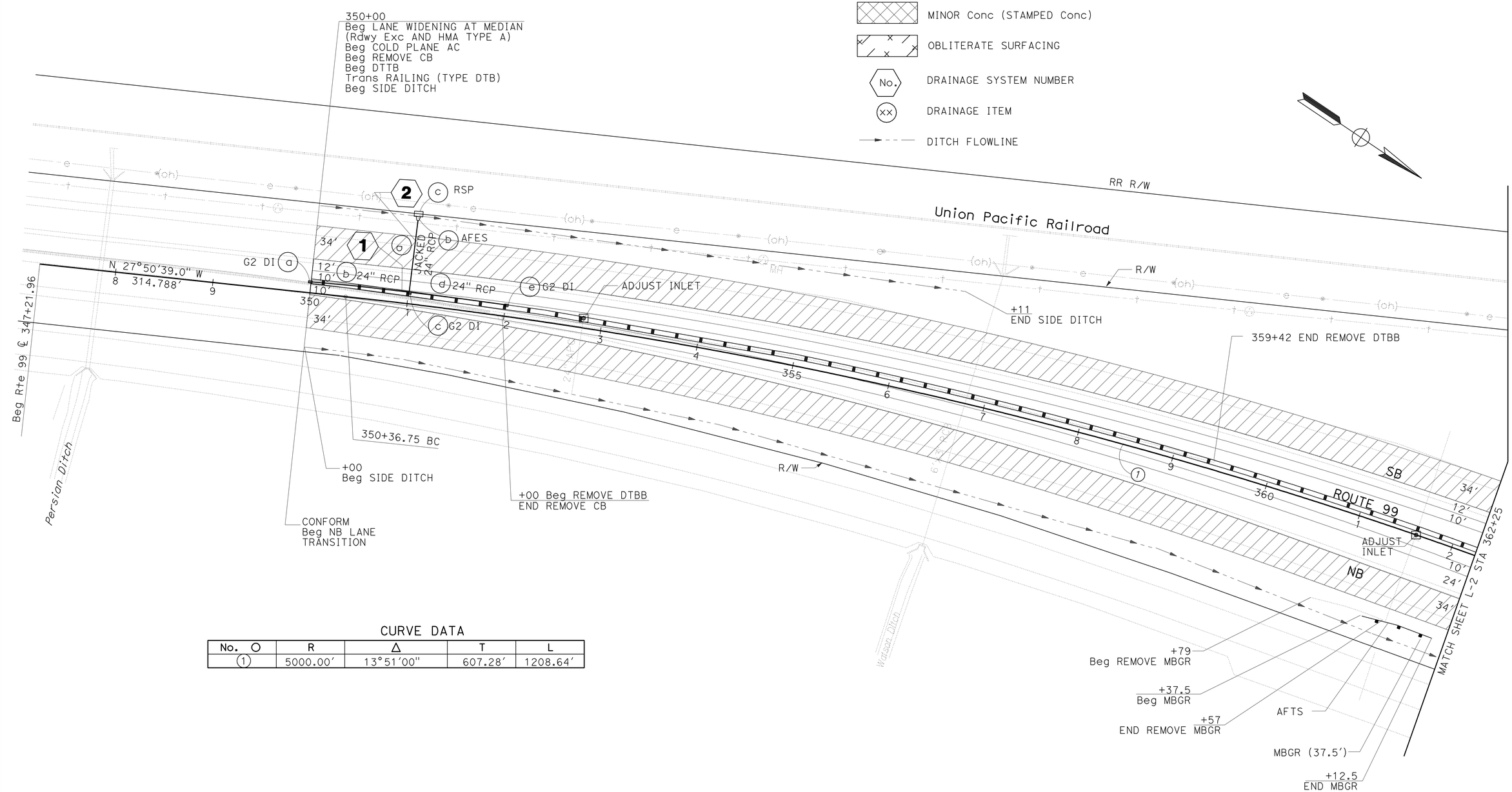

CURVE DATA

No. ○	R	Δ	T	L
1	5000.00'	13°51'00"	607.28'	1208.64'

LAYOUT L-1

SCALE: 1" = 50'

STATE OF CALIFORNIA - DEPARTMENT OF TRANSPORTATION
Caltrans®
DESIGN

FUNCTIONAL SUPERVISOR: GURBHAY BRAR
CALCULATED-DESIGNED BY: MIGUELITO SANTOS
CHECKED BY: DAVID VELAZCO
REVISED BY
DATE REVISED

LAST REVISION 12-19-11
DATE PLOTTED => 19-APR-2012
TIME PLOTTED => 11:13

Dist	COUNTY	ROUTE	POST MILES TOTAL PROJECT	SHEET No.	TOTAL SHEETS
06	Tul	99	R37.3/41.3	8	346

REGISTERED CIVIL ENGINEER 12-15-11 DATE

4-16-12
PLANS APPROVAL DATE

REGISTERED PROFESSIONAL ENGINEER MIGUELITO B. SANTOS No. 65598 Exp. 09/30/13 CIVIL STATE OF CALIFORNIA

THE STATE OF CALIFORNIA OR ITS OFFICERS OR AGENTS SHALL NOT BE RESPONSIBLE FOR THE ACCURACY OR COMPLETENESS OF SCANNED COPIES OF THIS PLAN SHEET.

NOTE: FOR ACCURATE RIGHT OF WAY DATA, CONTACT RIGHT OF WAY ENGINEERING AT THE DISTRICT OFFICE.

CURVE DATA

No.	R	△	T	L
2	5000.00′	38°57′21"	1768.42′	3399.54′

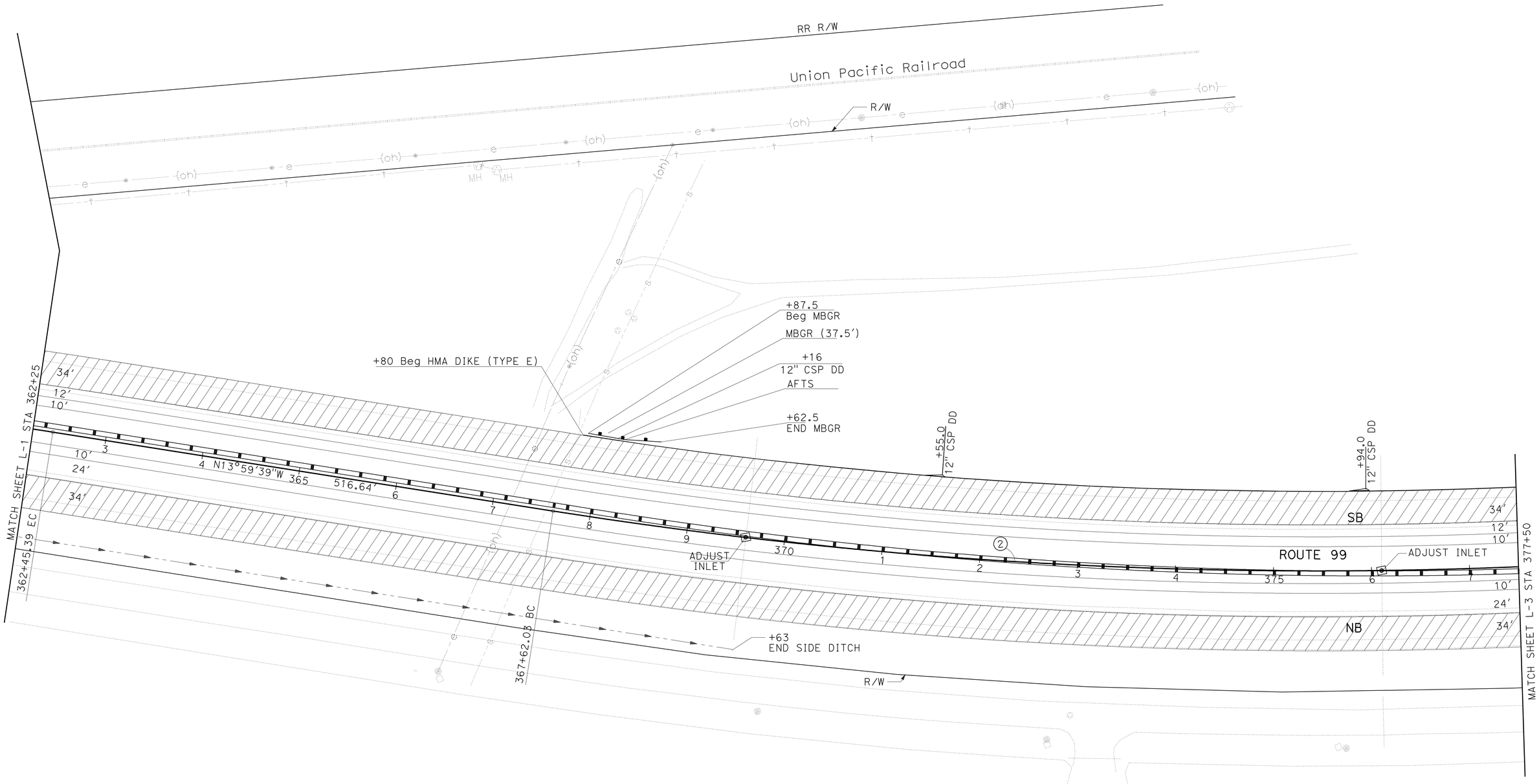

LAYOUT L-2

SCALE: 1"=50′

STATE OF CALIFORNIA - DEPARTMENT OF TRANSPORTATION

DESIGN

FUNCTIONAL SUPERVISOR: GURBHAY BRAR

CALCULATED-DESIGNED BY: MIGUELITO SANTOS

CHECKED BY: DAVID VELAZCO

REVISED BY

DATE REVISED

LAST REVISION 12-19-11

DATE PLOTTED => 19-APR-2012

TIME PLOTTED => 11:13

Dist	COUNTY	ROUTE	POST MILES TOTAL PROJECT	SHEET No.	TOTAL SHEETS
06	Tul	99	R37.3/41.3	9	346

REGISTERED CIVIL ENGINEER 12-15-11 DATE

4-16-12
PLANS APPROVAL DATE

REGISTERED PROFESSIONAL ENGINEER MIGUELITO B. SANTOS No. 65598 Exp. 09/30/13 CIVIL STATE OF CALIFORNIA

THE STATE OF CALIFORNIA OR ITS OFFICERS OR AGENTS SHALL NOT BE RESPONSIBLE FOR THE ACCURACY OR COMPLETENESS OF SCANNED COPIES OF THIS PLAN SHEET.

NOTE: FOR ACCURATE RIGHT OF WAY DATA, CONTACT RIGHT OF WAY ENGINEERING AT THE DISTRICT OFFICE.

CURVE DATA

No. ○	R	△	T	L
2	5000.00′	38°57′21″	1768.42′	3399.54′
3	5059.00′	4°31′10″	199.63′	399.06′

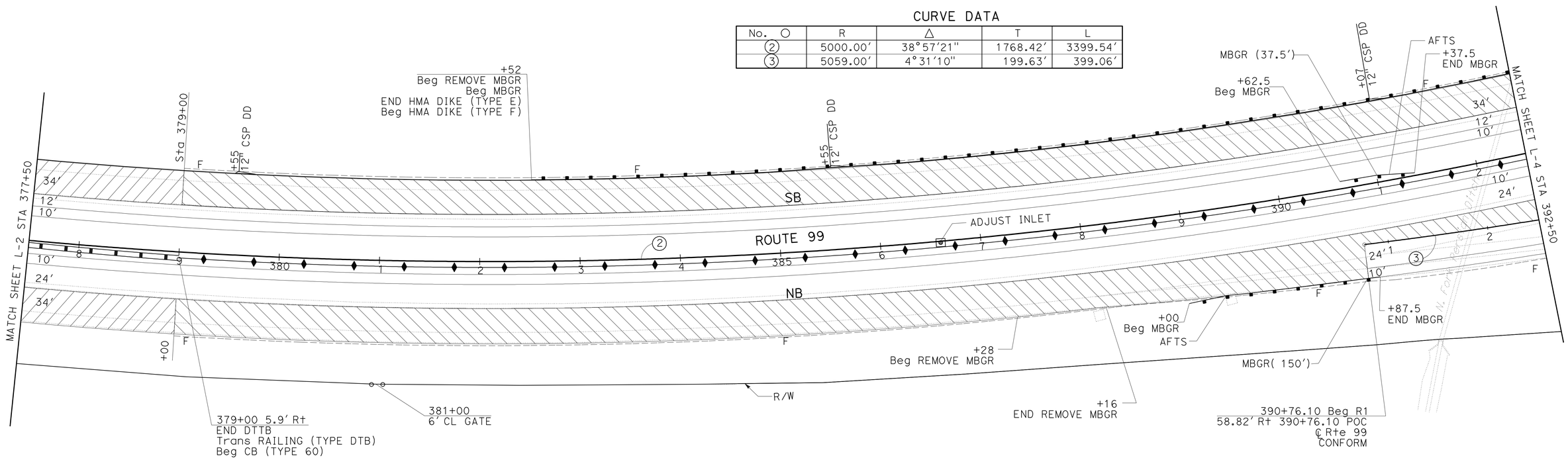

LAYOUT L-3

SCALE: 1" = 50′

STATE OF CALIFORNIA - DEPARTMENT OF TRANSPORTATION
DESIGN
Caltrans

FUNCTIONAL SUPERVISOR: GURBHAY BRAR
CALCULATED-DESIGNED BY: MIGUELITO SANTOS
CHECKED BY: DAVID VELAZCO
REVISED BY
DATE REVISED

LAST REVISION 12-19-11
DATE PLOTTED => 19-APR-2012
TIME PLOTTED => 11:14

Dist	COUNTY	ROUTE	POST MILES TOTAL PROJECT	SHEET No.	TOTAL SHEETS
06	Tul	99	R37.3/41.3	10	346

REGISTERED CIVIL ENGINEER 12-15-11 DATE

4-16-12
PLANS APPROVAL DATE

REGISTERED PROFESSIONAL ENGINEER MIGUELITO B. SANTOS No. 65598 Exp. 09/30/13 CIVIL STATE OF CALIFORNIA

THE STATE OF CALIFORNIA OR ITS OFFICERS OR AGENTS SHALL NOT BE RESPONSIBLE FOR THE ACCURACY OR COMPLETENESS OF SCANNED COPIES OF THIS PLAN SHEET.

NOTE: FOR ACCURATE RIGHT OF WAY DATA, CONTACT RIGHT OF WAY ENGINEERING AT THE DISTRICT OFFICE.

CURVE DATA

No. ○	R	Δ	T	L
2	5000.00′	38°57′21"	1768.42′	3399.54′
3	5059.00′	4°31′10"	199.63′	399.06′
4	2700.00′	10°52′34"	257.03′	512.52′
5	4400.00′	5°48′02"	222.91′	445.45′
6	5000.00′	18°59′30"	836.34′	1657.34′

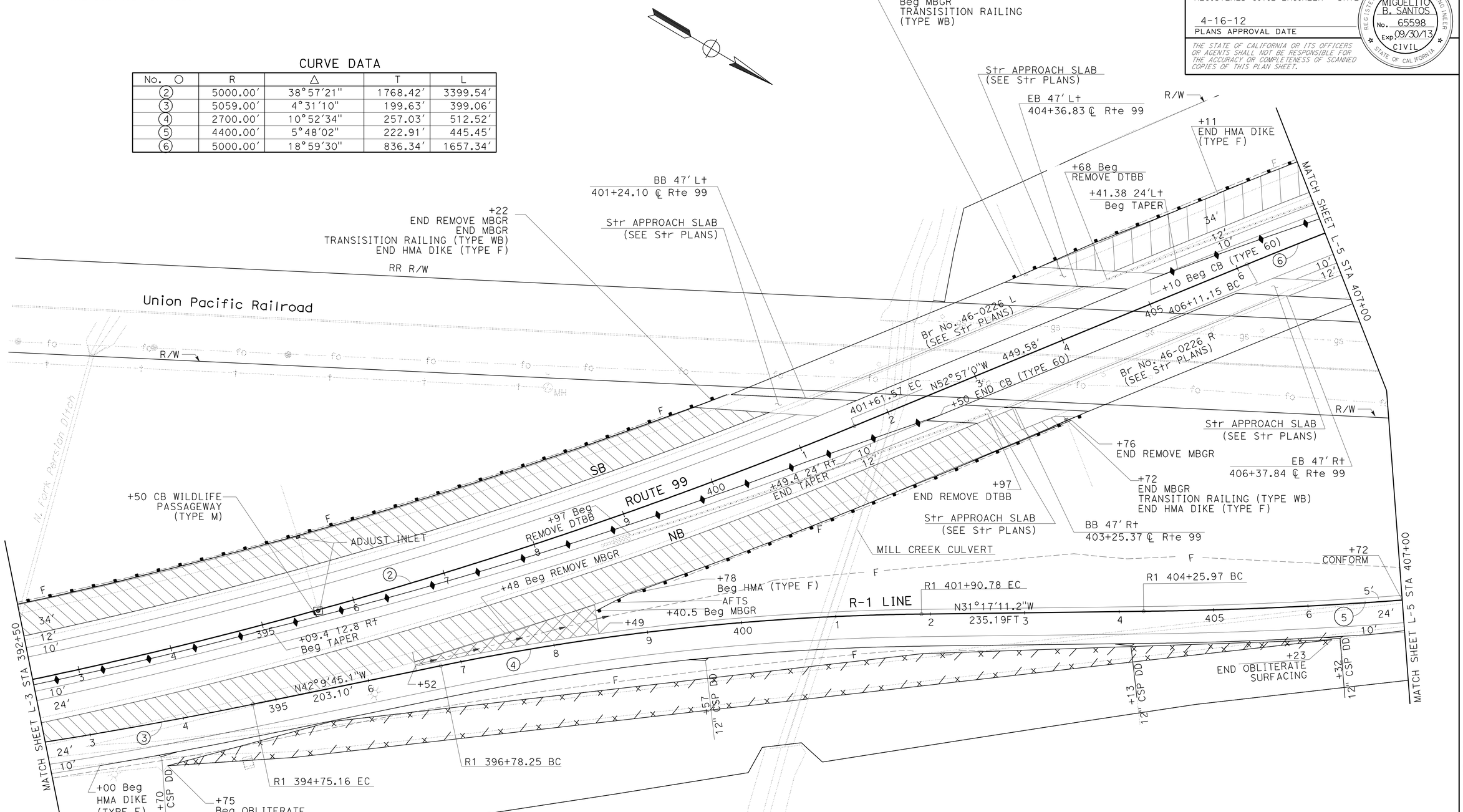

LAYOUT L-4

SCALE: 1" = 50′

STATE OF CALIFORNIA - DEPARTMENT OF TRANSPORTATION
DESIGN

FUNCTIONAL SUPERVISOR: GURBHAY BRAR
CALCULATED-DESIGNED BY: MIGUELITO SANTOS
CHECKED BY: DAVID VELAZCO
REVISED BY / DATE REVISED

LAST REVISION 12-19-11
DATE PLOTTED => 19-APR-2012
TIME PLOTTED => 11:14

Dist	COUNTY	ROUTE	POST MILES TOTAL PROJECT	SHEET No.	TOTAL SHEETS
06	Tul	99	R37.3/41.3	11	346

REGISTERED CIVIL ENGINEER 12-15-11 DATE

4-16-12
PLANS APPROVAL DATE

REGISTERED PROFESSIONAL ENGINEER MIGUELITO B. SANTOS No. 65598 Exp. 09/30/13 CIVIL STATE OF CALIFORNIA

THE STATE OF CALIFORNIA OR ITS OFFICERS OR AGENTS SHALL NOT BE RESPONSIBLE FOR THE ACCURACY OR COMPLETENESS OF SCANNED COPIES OF THIS PLAN SHEET.

NOTE: FOR ACCURATE RIGHT OF WAY DATA, CONTACT RIGHT OF WAY ENGINEERING AT THE DISTRICT OFFICE.

CURVE DATA

No. ○	R	△	T	L
5	4400.00′	5°48′02″	222.91′	445.45′
6	5000.00′	18°59′30″	836.34′	1657.34′
7	4941.75′	5°0′46″	216.32′	432.36′
8	850.00′	34°36′41″	264.84′	513.47′

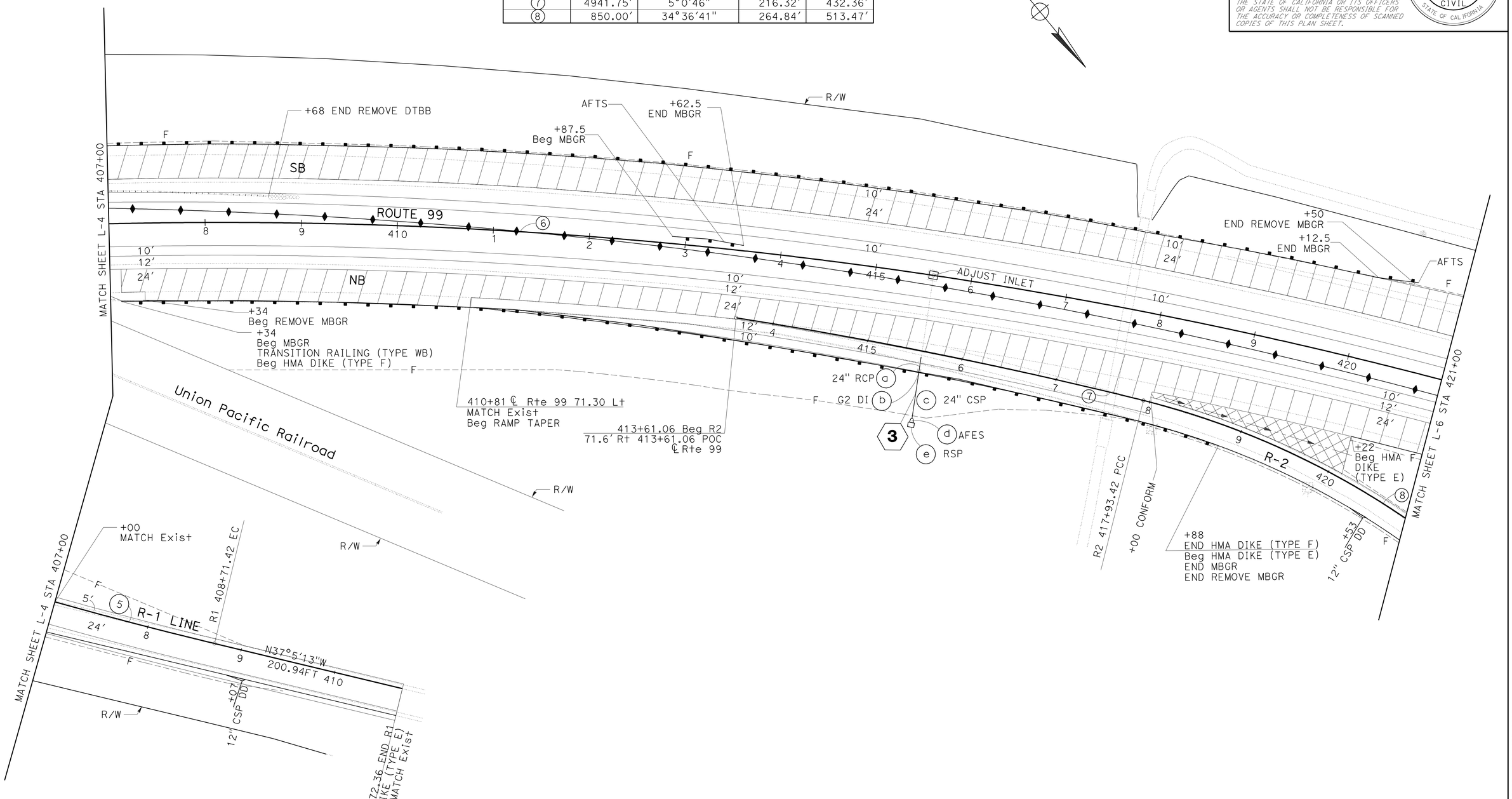

LAYOUT L-5

SCALE: 1" = 50′

STATE OF CALIFORNIA - DEPARTMENT OF TRANSPORTATION
Caltrans
DESIGN

FUNCTIONAL SUPERVISOR: GURBHAY BRAR
CALCULATED-DESIGNED BY: MIGUELITO SANTOS
CHECKED BY: DAVID VELAZCO
REVISED BY
DATE REVISED

LAST REVISION 12-19-11
DATE PLOTTED => 19-APR-2012
TIME PLOTTED => 11:14

Dist	COUNTY	ROUTE	POST MILES TOTAL PROJECT	SHEET No.	TOTAL SHEETS
06	Tul	99	R37.3/41.3	12	346

REGISTERED CIVIL ENGINEER 12-15-11 DATE

4-16-12
PLANS APPROVAL DATE

REGISTERED PROFESSIONAL ENGINEER MIGUELITO B. SANTOS No. 65598 Exp. 09/30/13 CIVIL STATE OF CALIFORNIA

THE STATE OF CALIFORNIA OR ITS OFFICERS OR AGENTS SHALL NOT BE RESPONSIBLE FOR THE ACCURACY OR COMPLETENESS OF SCANNED COPIES OF THIS PLAN SHEET.

NOTE: FOR ACCURATE RIGHT OF WAY DATA, CONTACT RIGHT OF WAY ENGINEERING AT THE DISTRICT OFFICE.

CURVE DATA

No. ○	R	Δ	T	L
6	5000.00′	18°59′30"	836.34′	1657.34′
8	850.00′	34°36′41"	264.84′	513.47′
9	3000.00′	3°11′29"	83.57′	167.10′
10	550.00′	31°42′39"	156.21′	304.40′
11	3000.00′	3°11′29"	83.57′	167.10′
12	154.25′	66°22′43"	100.90′	178.70′
13	150.00′	162°14′59"	960.61′	424.77′
14	2050.00′	15°54′25"	286.411′	569.14′

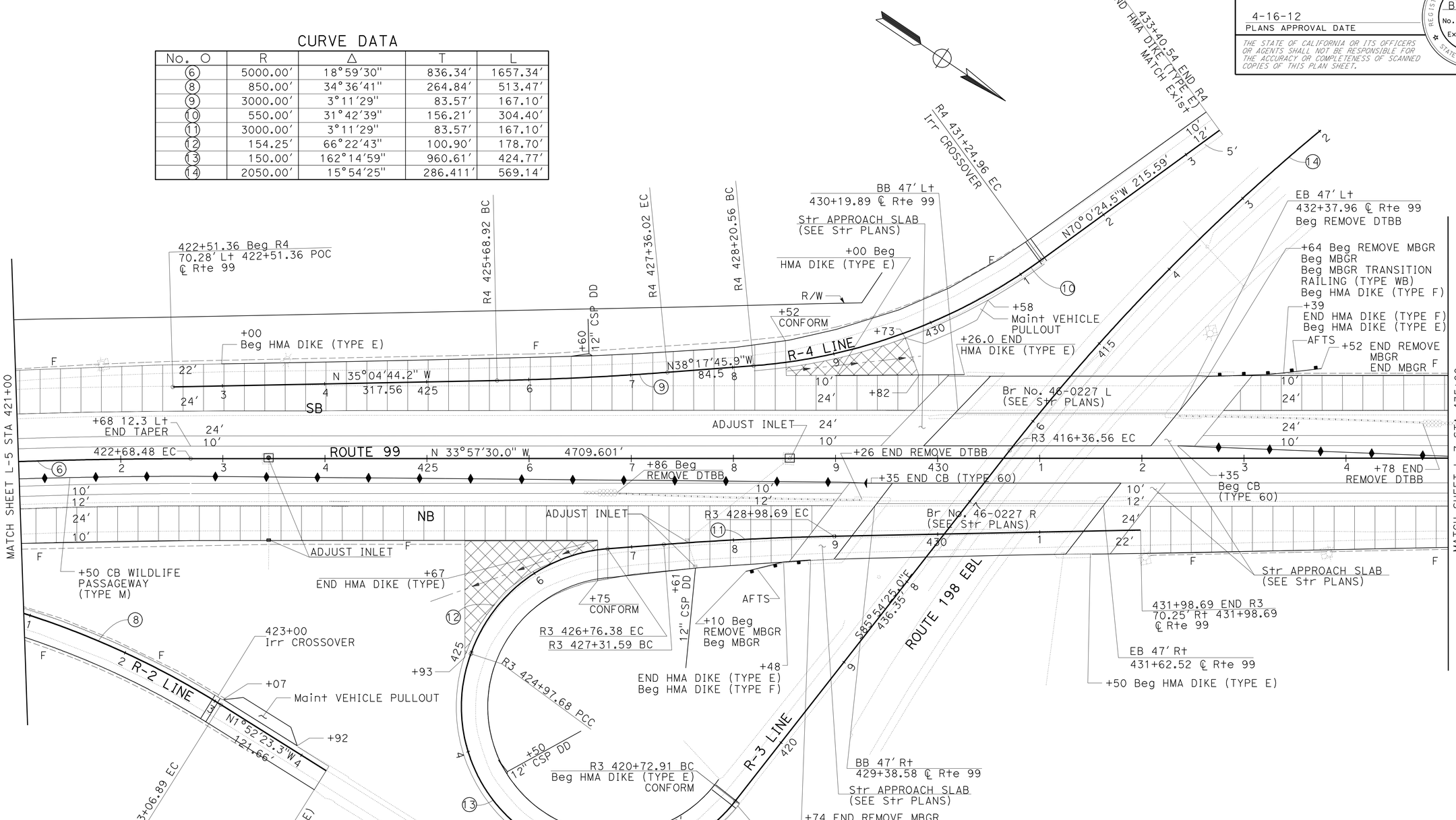

SCALE: 1" = 50′

LAYOUT L-6

STATE OF CALIFORNIA - DEPARTMENT OF TRANSPORTATION
Caltrans DESIGN

FUNCTIONAL SUPERVISOR: GURBHAY BRAR
CALCULATED-DESIGNED BY: MIGUELITO SANTOS
CHECKED BY: DAVID VELAZCO
REVISED BY
DATE REVISED

LAST REVISION 12-19-11
DATE PLOTTED => 19-APR-2012
TIME PLOTTED => 11:14

Dist	COUNTY	ROUTE	POST MILES TOTAL PROJECT	SHEET No.	TOTAL SHEETS
06	Tul	99	R37.3/41.3	13	346

REGISTERED CIVIL ENGINEER 12-15-11 DATE

4-16-12
PLANS APPROVAL DATE

REGISTERED PROFESSIONAL ENGINEER MIGUELITO B. SANTOS No. 65598 Exp. 09/30/13 CIVIL STATE OF CALIFORNIA

THE STATE OF CALIFORNIA OR ITS OFFICERS OR AGENTS SHALL NOT BE RESPONSIBLE FOR THE ACCURACY OR COMPLETENESS OF SCANNED COPIES OF THIS PLAN SHEET.

NOTE: FOR ACCURATE RIGHT OF WAY DATA, CONTACT RIGHT OF WAY ENGINEERING AT THE DISTRICT OFFICE.

CURVE DATA

No. O	R	Δ	T	L
15	3000.40′	3°11′29"	83.57′	167.10′
16	160.00′	243°21′49"	259.25′	679.60′
17	1838.00′	17°47′15"	287.62′	570.61′

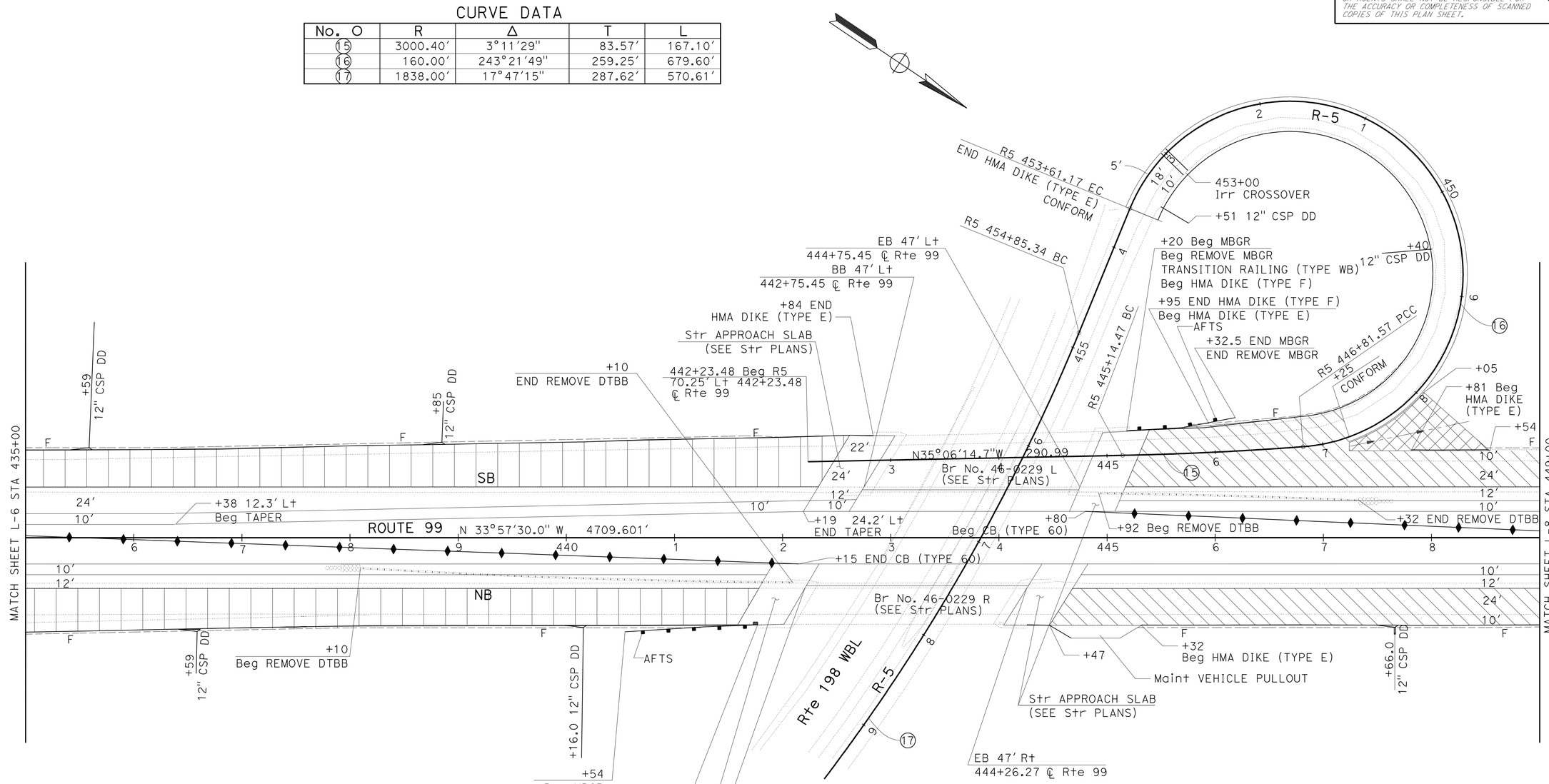

SCALE: 1" = 50′

LAYOUT L-7

STATE OF CALIFORNIA - DEPARTMENT OF TRANSPORTATION
DESIGN

FUNCTIONAL SUPERVISOR: GURBHAY BRAR
CALCULATED-DESIGNED BY: MIGUELITO SANTOS
CHECKED BY: DAVID VELAZCO
REVISED BY
DATE REVISED

LAST REVISION 12-19-11
DATE PLOTTED => 19-APR-2012
TIME PLOTTED => 11:14

Dist	COUNTY	ROUTE	POST MILES TOTAL PROJECT	SHEET No.	TOTAL SHEETS
06	Tul	99	R37.3/41.3	14	346

REGISTERED CIVIL ENGINEER 12-15-11 DATE

4-16-12
PLANS APPROVAL DATE

REGISTERED PROFESSIONAL ENGINEER MIGUELITO B. SANTOS No. 65598 Exp. 09/30/13 CIVIL STATE OF CALIFORNIA

THE STATE OF CALIFORNIA OR ITS OFFICERS OR AGENTS SHALL NOT BE RESPONSIBLE FOR THE ACCURACY OR COMPLETENESS OF SCANNED COPIES OF THIS PLAN SHEET.

NOTE: FOR ACCURATE RIGHT OF WAY DATA, CONTACT RIGHT OF WAY ENGINEERING AT THE DISTRICT OFFICE.

CURVE DATA

No. ○	R	Δ	T	L
18	3000.00′	19°56′06″	527.23′	1043.80′
19	1600.00′	17°2′14″	239.65′	475.77′

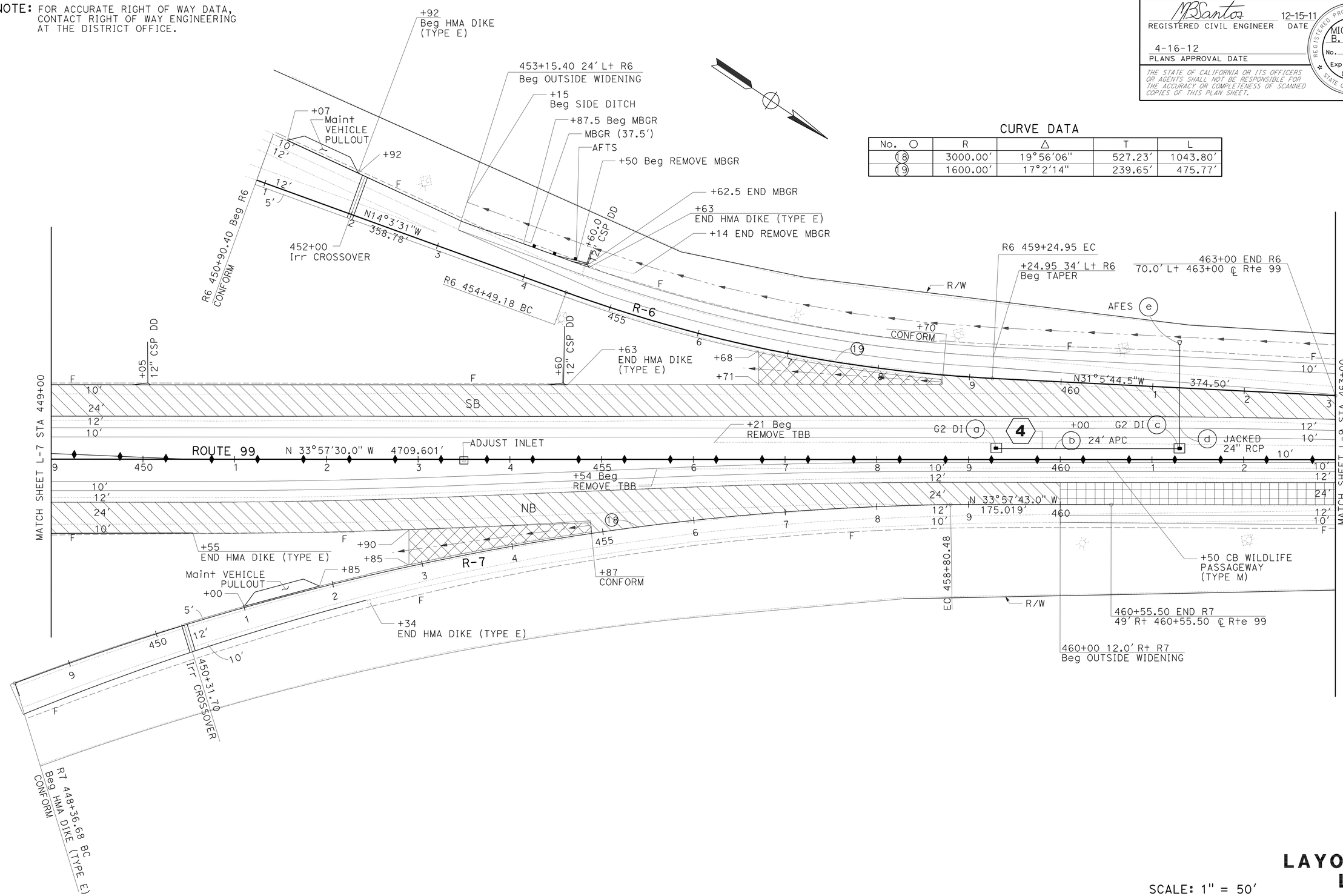

SCALE: 1" = 50′

LAYOUT L-8

STATE OF CALIFORNIA - DEPARTMENT OF TRANSPORTATION
DESIGN

FUNCTIONAL SUPERVISOR: GURBHAY BRAR
CALCULATED-DESIGNED BY: MIGUELITO SANTOS
CHECKED BY: DAVID VELAZCO
REVISED BY
DATE REVISED

LAST REVISION 12-19-11
DATE PLOTTED => 19-APR-2012
TIME PLOTTED => 11:14

Dist	COUNTY	ROUTE	POST MILES TOTAL PROJECT	SHEET No.	TOTAL SHEETS
06	Tul	99	R37.3/41.3	15	346

REGISTERED CIVIL ENGINEER — DATE 12-15-11

4-16-12
PLANS APPROVAL DATE

REGISTERED PROFESSIONAL ENGINEER MIGUELITO B. SANTOS No. 65598 Exp. 09/30/13 CIVIL STATE OF CALIFORNIA

THE STATE OF CALIFORNIA OR ITS OFFICERS OR AGENTS SHALL NOT BE RESPONSIBLE FOR THE ACCURACY OR COMPLETENESS OF SCANNED COPIES OF THIS PLAN SHEET.

NOTE: FOR ACCURATE RIGHT OF WAY DATA, CONTACT RIGHT OF WAY ENGINEERING AT THE DISTRICT OFFICE.

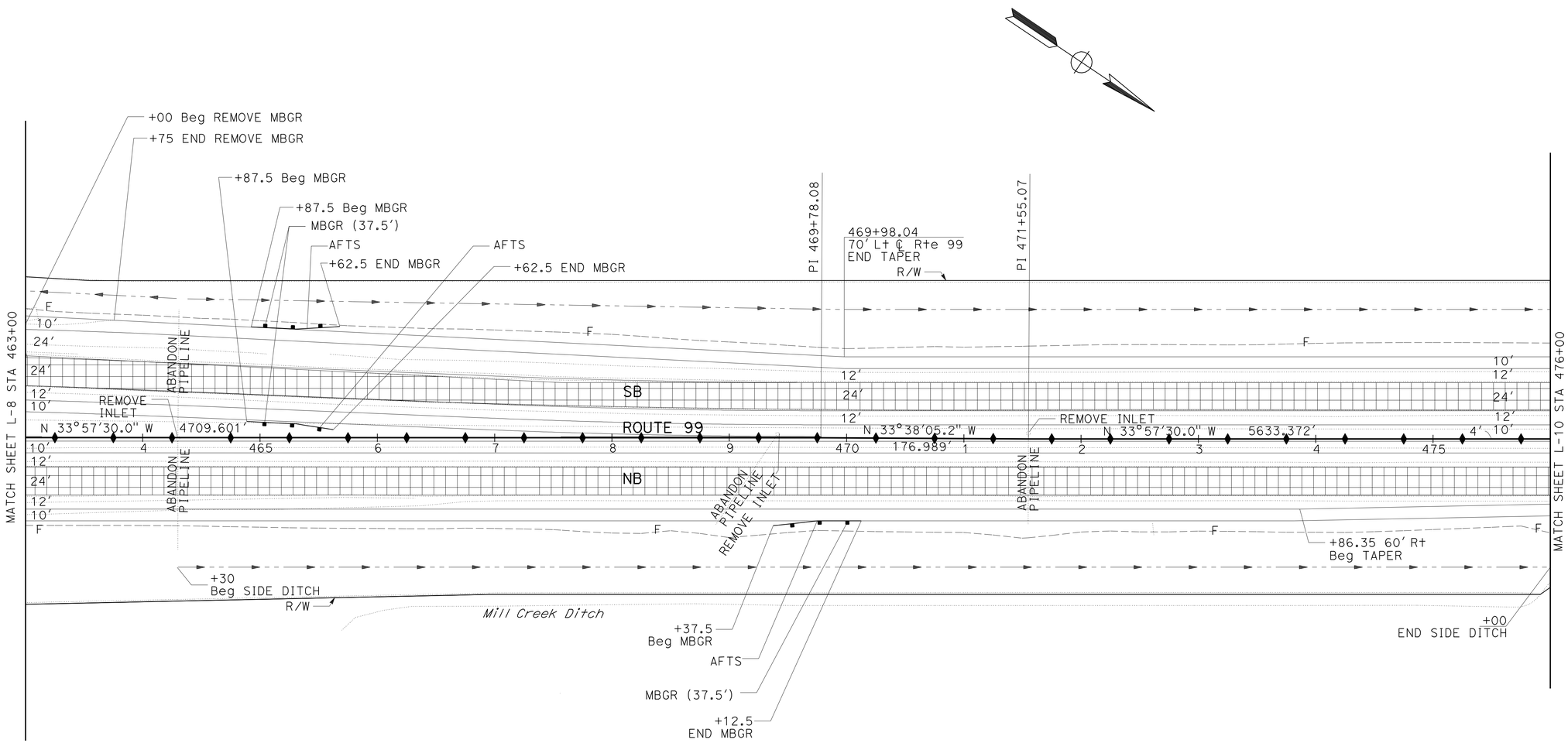

SCALE: 1" = 50'

LAYOUT L-9

STATE OF CALIFORNIA - DEPARTMENT OF TRANSPORTATION
Caltrans®
DESIGN

FUNCTIONAL SUPERVISOR: GURBHAY BRAR
CALCULATED-DESIGNED BY: MIGUELITO SANTOS
CHECKED BY: DAVID VELAZCO
REVISED BY
DATE REVISED

LAST REVISION 12-19-11
DATE PLOTTED => 19-APR-2012
TIME PLOTTED => 11:14

Dist	COUNTY	ROUTE	POST MILES TOTAL PROJECT	SHEET No.	TOTAL SHEETS
06	Tul	99	R37.3/41.3	16	346

REGISTERED CIVIL ENGINEER — DATE 12-15-11

4-16-12
PLANS APPROVAL DATE

REGISTERED PROFESSIONAL ENGINEER MIGUELITO B. SANTOS No. 65598 Exp. 09/30/13 CIVIL STATE OF CALIFORNIA

THE STATE OF CALIFORNIA OR ITS OFFICERS OR AGENTS SHALL NOT BE RESPONSIBLE FOR THE ACCURACY OR COMPLETENESS OF SCANNED COPIES OF THIS PLAN SHEET.

NOTE: FOR ACCURATE RIGHT OF WAY DATA, CONTACT RIGHT OF WAY ENGINEERING AT THE DISTRICT OFFICE.

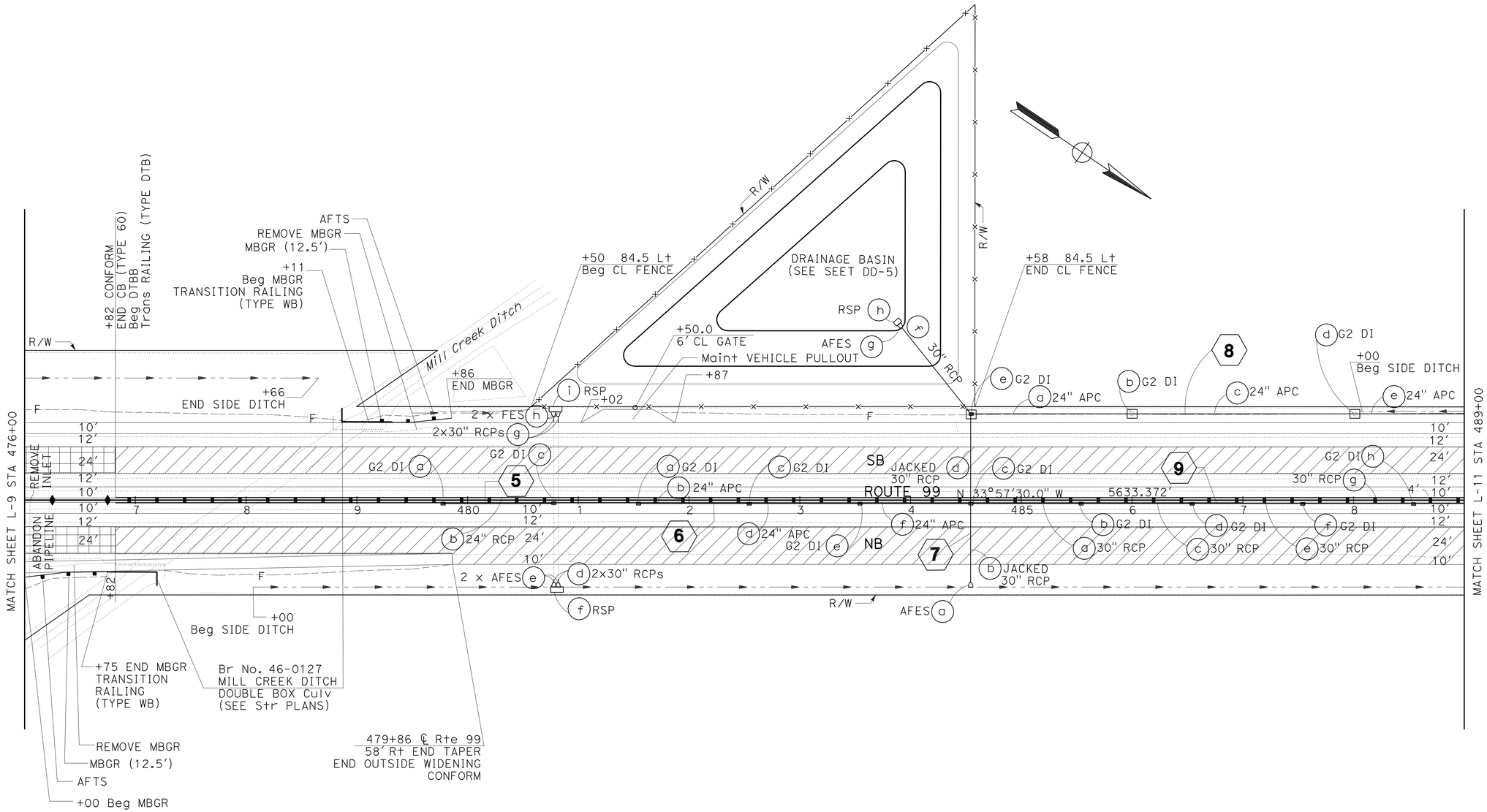

SCALE: 1" = 50'

LAYOUT L-10

STATE OF CALIFORNIA - DEPARTMENT OF TRANSPORTATION
Caltrans
DESIGN

FUNCTIONAL SUPERVISOR: GURBHAY BRAR
CALCULATED-DESIGNED BY: MIGUELITO SANTOS
CHECKED BY: DAVID VELAZCO
REVISED BY
DATE REVISED

LAST REVISION 12-19-11 | DATE PLOTTED => 19-APR-2012 | TIME PLOTTED => 11:14

Dist	COUNTY	ROUTE	POST MILES TOTAL PROJECT	SHEET No.	TOTAL SHEETS
06	Tul	99	R37.3/41.3	17	346

REGISTERED CIVIL ENGINEER 12-15-11 DATE

4-16-12
PLANS APPROVAL DATE

REGISTERED PROFESSIONAL ENGINEER MIGUELITO B. SANTOS No. 65598 Exp. 09/30/13 CIVIL STATE OF CALIFORNIA

THE STATE OF CALIFORNIA OR ITS OFFICERS OR AGENTS SHALL NOT BE RESPONSIBLE FOR THE ACCURACY OR COMPLETENESS OF SCANNED COPIES OF THIS PLAN SHEET.

NOTE: FOR ACCURATE RIGHT OF WAY DATA, CONTACT RIGHT OF WAY ENGINEERING AT THE DISTRICT OFFICE.

(X) POTHOLE LOCATIONS

STA	OFFSET	DEPTH	UTILITY TYPE
499+55	17' Lt	> 10'	Telephone Line

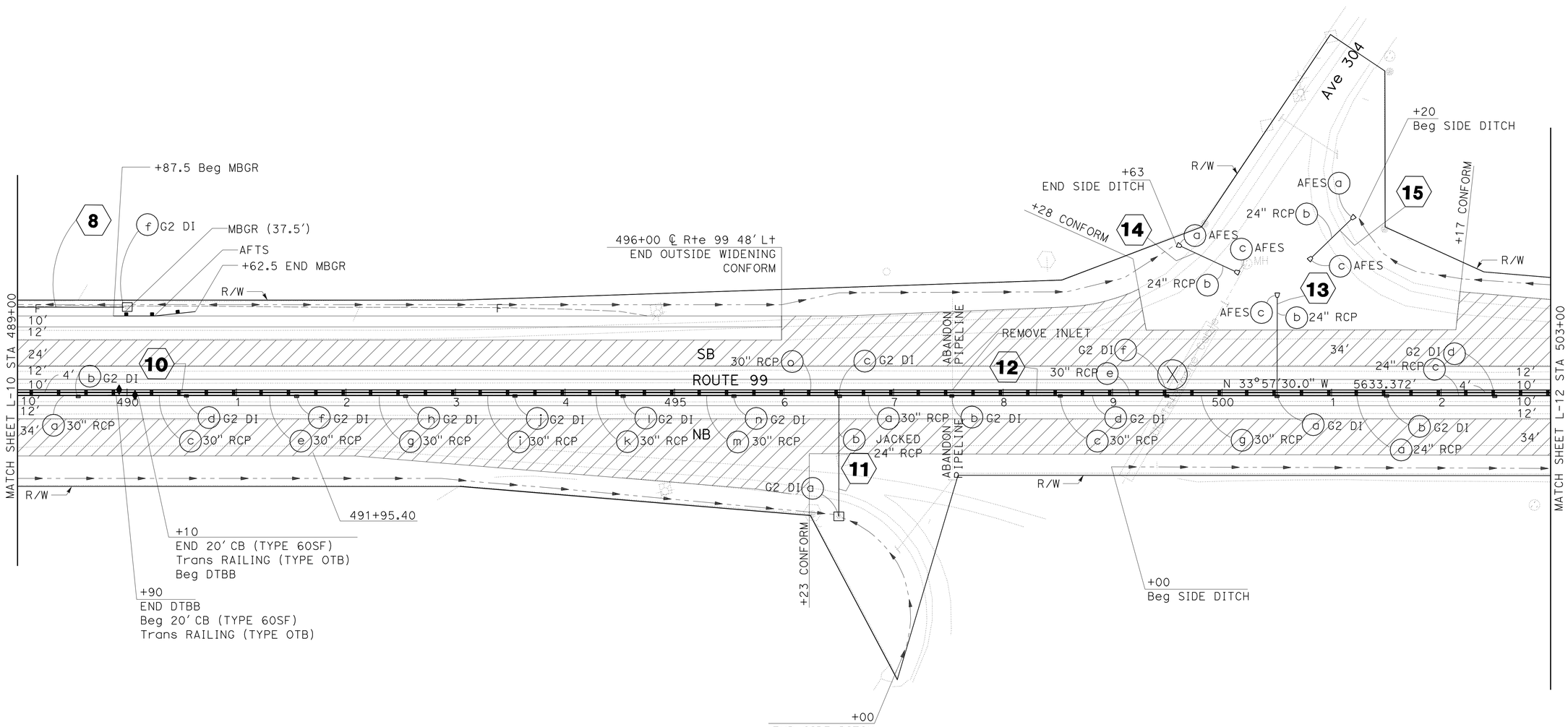

LAYOUT

SCALE: 1" = 50'

L-11

STATE OF CALIFORNIA - DEPARTMENT OF TRANSPORTATION
Caltrans®
DESIGN

FUNCTIONAL SUPERVISOR: GURBHAY BRAR
CALCULATED-DESIGNED BY: MIGUELITO SANTOS
CHECKED BY: DAVID VELAZCO
REVISED BY
DATE REVISED

LAST REVISION 12-19-11 | DATE PLOTTED => 19-APR-2012 | TIME PLOTTED => 11:14

Dist	COUNTY	ROUTE	POST MILES TOTAL PROJECT	SHEET No.	TOTAL SHEETS
06	Tul	99	R37.3/41.3	18	346

REGISTERED CIVIL ENGINEER 12-15-11 DATE

4-16-12
PLANS APPROVAL DATE

REGISTERED PROFESSIONAL ENGINEER MIGUELITO B. SANTOS No. 65598 Exp. 09/30/13 CIVIL STATE OF CALIFORNIA

THE STATE OF CALIFORNIA OR ITS OFFICERS OR AGENTS SHALL NOT BE RESPONSIBLE FOR THE ACCURACY OR COMPLETENESS OF SCANNED COPIES OF THIS PLAN SHEET.

NOTE: FOR ACCURATE RIGHT OF WAY DATA, CONTACT RIGHT OF WAY ENGINEERING AT THE DISTRICT OFFICE.

POTHOLE LOCATIONS

STA	OFFSET	DEPTH	UTILITY TYPE
507+48	11' Lt	5' 4"	GAS LINE
507+38	3' Rt	> 6'	WATER LINE

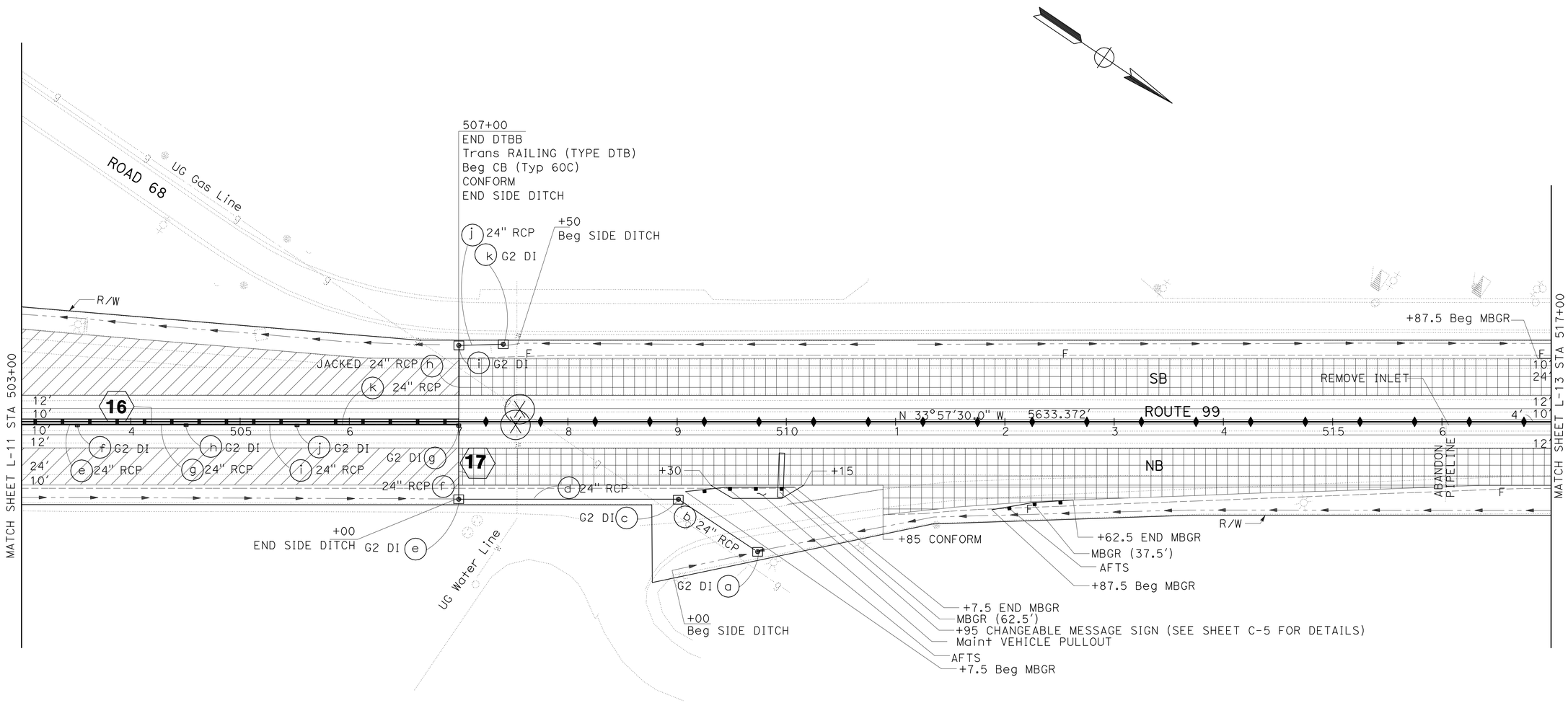

LAYOUT

SCALE: 1" = 50'

L-12

STATE OF CALIFORNIA - DEPARTMENT OF TRANSPORTATION
DESIGN
Caltrans

FUNCTIONAL SUPERVISOR: GURBHAY BRAR
CALCULATED-DESIGNED BY: MIGUELITO SANTOS
CHECKED BY: DAVID VELAZCO
REVISED BY
DATE REVISED

LAST REVISION 12-19-11
DATE PLOTTED => 19-APR-2012
TIME PLOTTED => 11:14

Dist	COUNTY	ROUTE	POST MILES TOTAL PROJECT	SHEET No.	TOTAL SHEETS
06	Tul	99	R37.3/41.3	19	346

REGISTERED CIVIL ENGINEER — DATE 12-15-11

4-16-12
PLANS APPROVAL DATE

REGISTERED PROFESSIONAL ENGINEER MIGUELITO B. SANTOS No. 65598 Exp 09/30/13 CIVIL STATE OF CALIFORNIA

THE STATE OF CALIFORNIA OR ITS OFFICERS OR AGENTS SHALL NOT BE RESPONSIBLE FOR THE ACCURACY OR COMPLETENESS OF SCANNED COPIES OF THIS PLAN SHEET.

NOTE: FOR ACCURATE RIGHT OF WAY DATA, CONTACT RIGHT OF WAY ENGINEERING AT THE DISTRICT OFFICE.

POTHOLE LOCATIONS

STA	OFFSET	DEPTH	UTILITY TYPE
524+40	15′ Lt	> 6′	Water Line
526+60	4′ Lt	5′ 2"	Gas Line

CURVE DATA

No.	R	Δ	T	L
20	5000.00′	29°58′58"	1338.94′	2616.49′

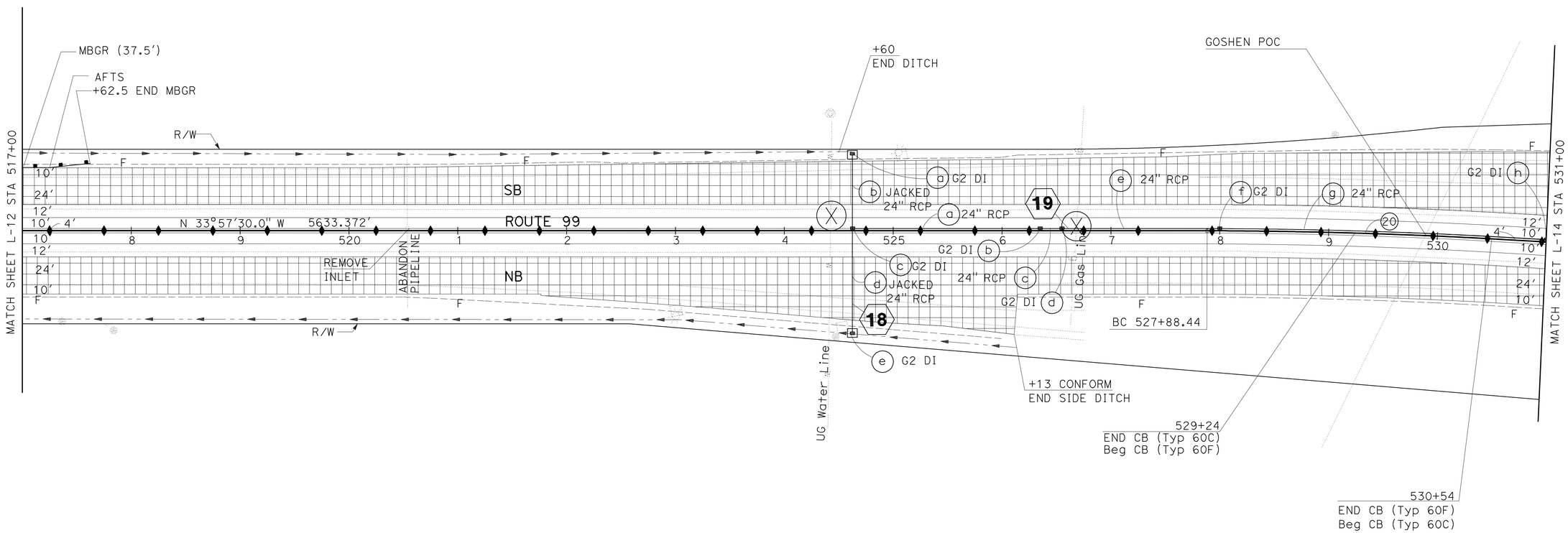

LAYOUT

SCALE: 1" = 50′

L-13

STATE OF CALIFORNIA - DEPARTMENT OF TRANSPORTATION
Caltrans
DESIGN

MIGUELITO SANTOS — REVISED BY
DAVID VELAZCO — DATE REVISED
GURBHAY BRAR — FUNCTIONAL SUPERVISOR
CALCULATED-DESIGNED BY
CHECKED BY

LAST REVISION 12-19-11 | DATE PLOTTED => 19-APR-2012 | TIME PLOTTED => 11:14

Dist	COUNTY	ROUTE	POST MILES TOTAL PROJECT	SHEET No.	TOTAL SHEETS
06	Tul	99	R37.3/41.3	20	346

REGISTERED CIVIL ENGINEER 12-15-11 DATE

4-16-12
PLANS APPROVAL DATE

REGISTERED PROFESSIONAL ENGINEER MIGUELITO B. SANTOS No. 65598 Exp. 09/30/13 CIVIL STATE OF CALIFORNIA

THE STATE OF CALIFORNIA OR ITS OFFICERS OR AGENTS SHALL NOT BE RESPONSIBLE FOR THE ACCURACY OR COMPLETENESS OF SCANNED COPIES OF THIS PLAN SHEET.

NOTE: FOR ACCURATE RIGHT OF WAY DATA, CONTACT RIGHT OF WAY ENGINEERING AT THE DISTRICT OFFICE.

CURVE DATA

No. O	R	Δ	T	L
20	5000.00′	29°58′58″	1338.94′	2616.49′

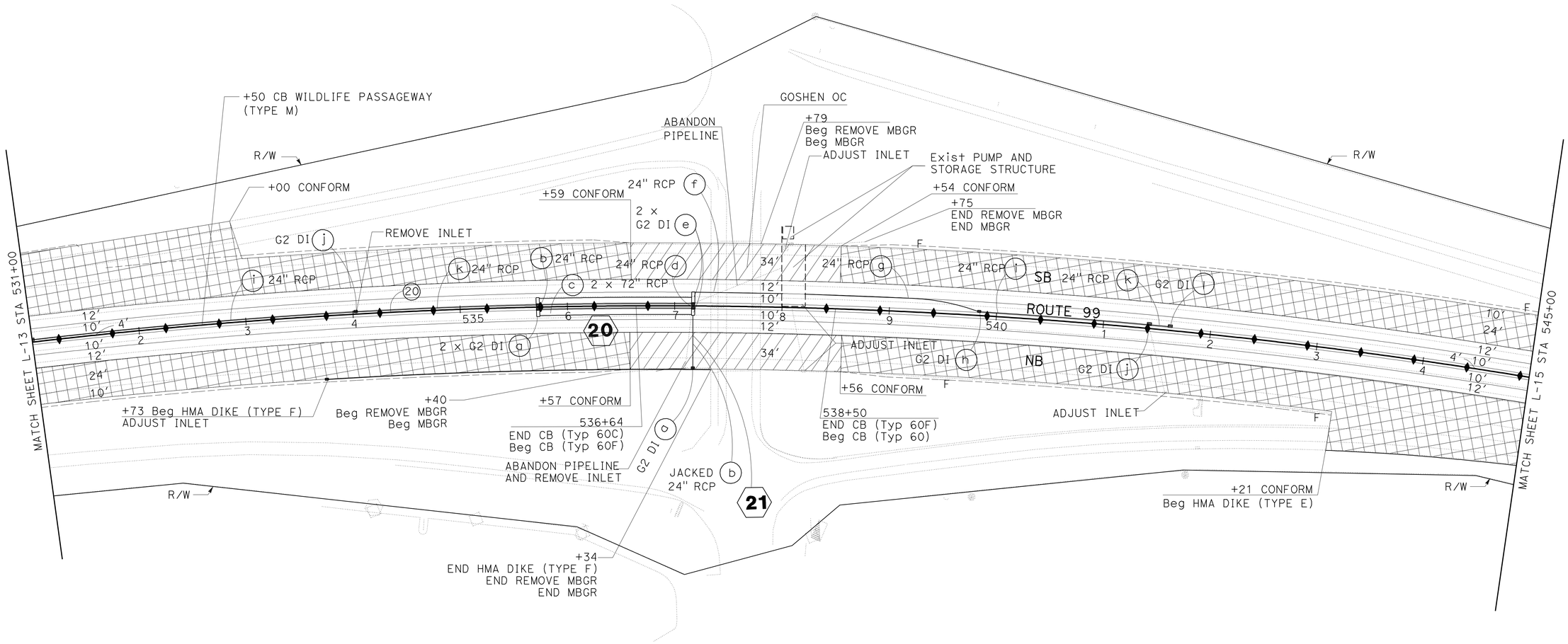

LAYOUT

SCALE: 1" = 50′

L-14

STATE OF CALIFORNIA - DEPARTMENT OF TRANSPORTATION
Caltrans
DESIGN

FUNCTIONAL SUPERVISOR: GURBHAY BRAR
CALCULATED-DESIGNED BY: MIGUELITO SANTOS
CHECKED BY: DAVID VELAZCO
REVISED BY
DATE REVISED

LAST REVISION DATE PLOTTED => 19-APR-2012
TIME PLOTTED => 13:00

Dist	COUNTY	ROUTE	POST MILES TOTAL PROJECT	SHEET No.	TOTAL SHEETS
06	Tul	99	R37.3/41.3	21	346

REGISTERED CIVIL ENGINEER — DATE 12-15-11

4-16-12
PLANS APPROVAL DATE

REGISTERED PROFESSIONAL ENGINEER — MIGUELITO B. SANTOS — No. 65598 — Exp. 09/30/13 — CIVIL — STATE OF CALIFORNIA

THE STATE OF CALIFORNIA OR ITS OFFICERS OR AGENTS SHALL NOT BE RESPONSIBLE FOR THE ACCURACY OR COMPLETENESS OF SCANNED COPIES OF THIS PLAN SHEET.

NOTE: FOR ACCURATE RIGHT OF WAY DATA, CONTACT RIGHT OF WAY ENGINEERING AT THE DISTRICT OFFICE.

CURVE DATA

No. O	R	Δ	T	L
20	5000.00′	29°58′58″	1338.94′	2616.49′

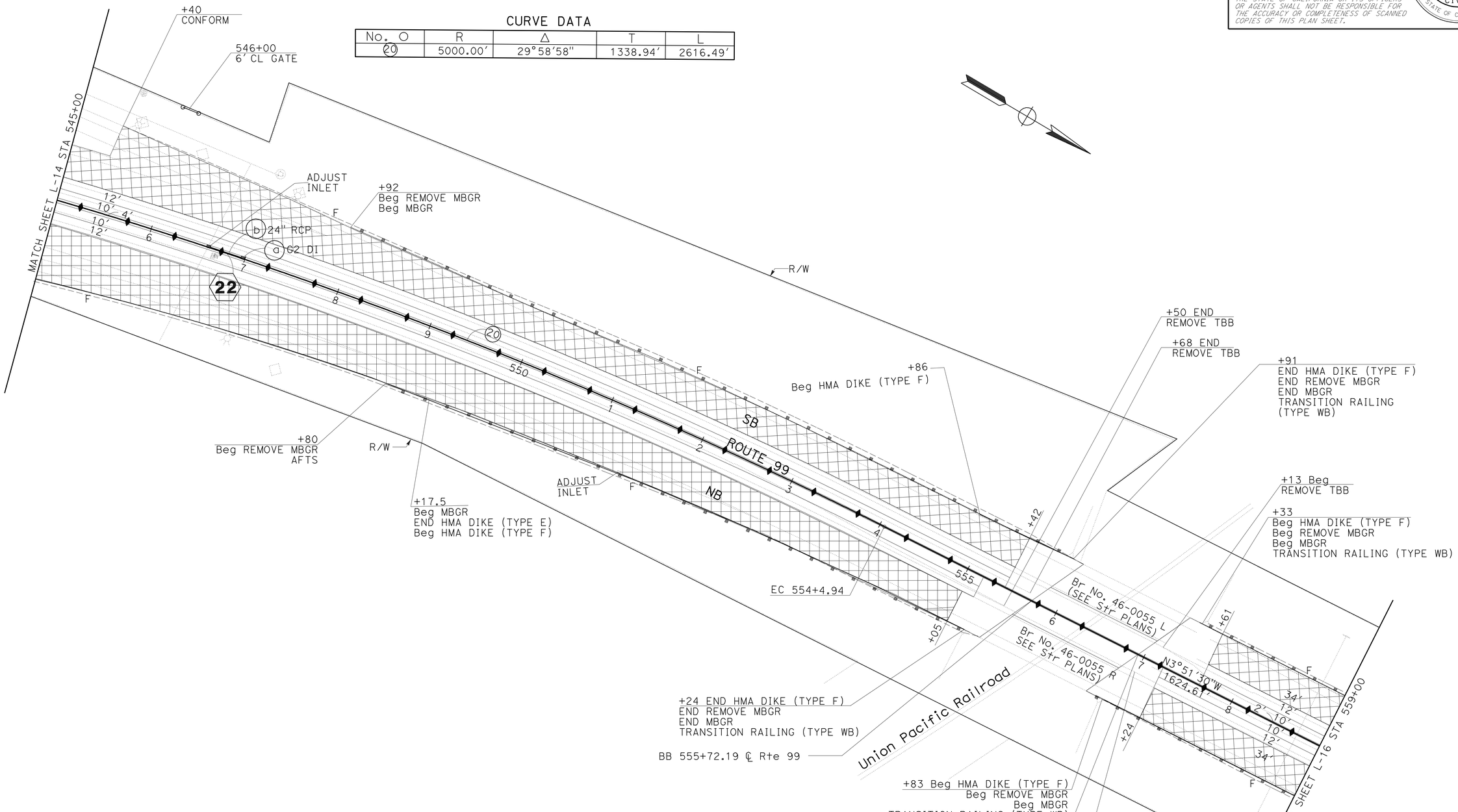

LAYOUT L-15

SCALE: 1" = 50′

REVISED BY	DATE REVISED

CALCULATED-DESIGNED BY	CHECKED BY
MIGUELITO SANTOS	DAVID VELAZCO

FUNCTIONAL SUPERVISOR: GURBHAY BRAR

STATE OF CALIFORNIA - DEPARTMENT OF TRANSPORTATION — DESIGN — Caltrans

LAST REVISION 12-19-11 | DATE PLOTTED => 19-APR-2012 | TIME PLOTTED => 13:00

Dist	COUNTY	ROUTE	POST MILES TOTAL PROJECT	SHEET No.	TOTAL SHEETS
06	Tul	99	R37.3/41.3	22	346

MBSantos 12-15-11
REGISTERED CIVIL ENGINEER DATE

4-16-12
PLANS APPROVAL DATE

REGISTERED PROFESSIONAL ENGINEER MIGUELITO B. SANTOS No. 65598 Exp. 09/30/13 CIVIL STATE OF CALIFORNIA

THE STATE OF CALIFORNIA OR ITS OFFICERS OR AGENTS SHALL NOT BE RESPONSIBLE FOR THE ACCURACY OR COMPLETENESS OF SCANNED COPIES OF THIS PLAN SHEET.

NOTE: FOR ACCURATE RIGHT OF WAY DATA, CONTACT RIGHT OF WAY ENGINEERING AT THE DISTRICT OFFICE.

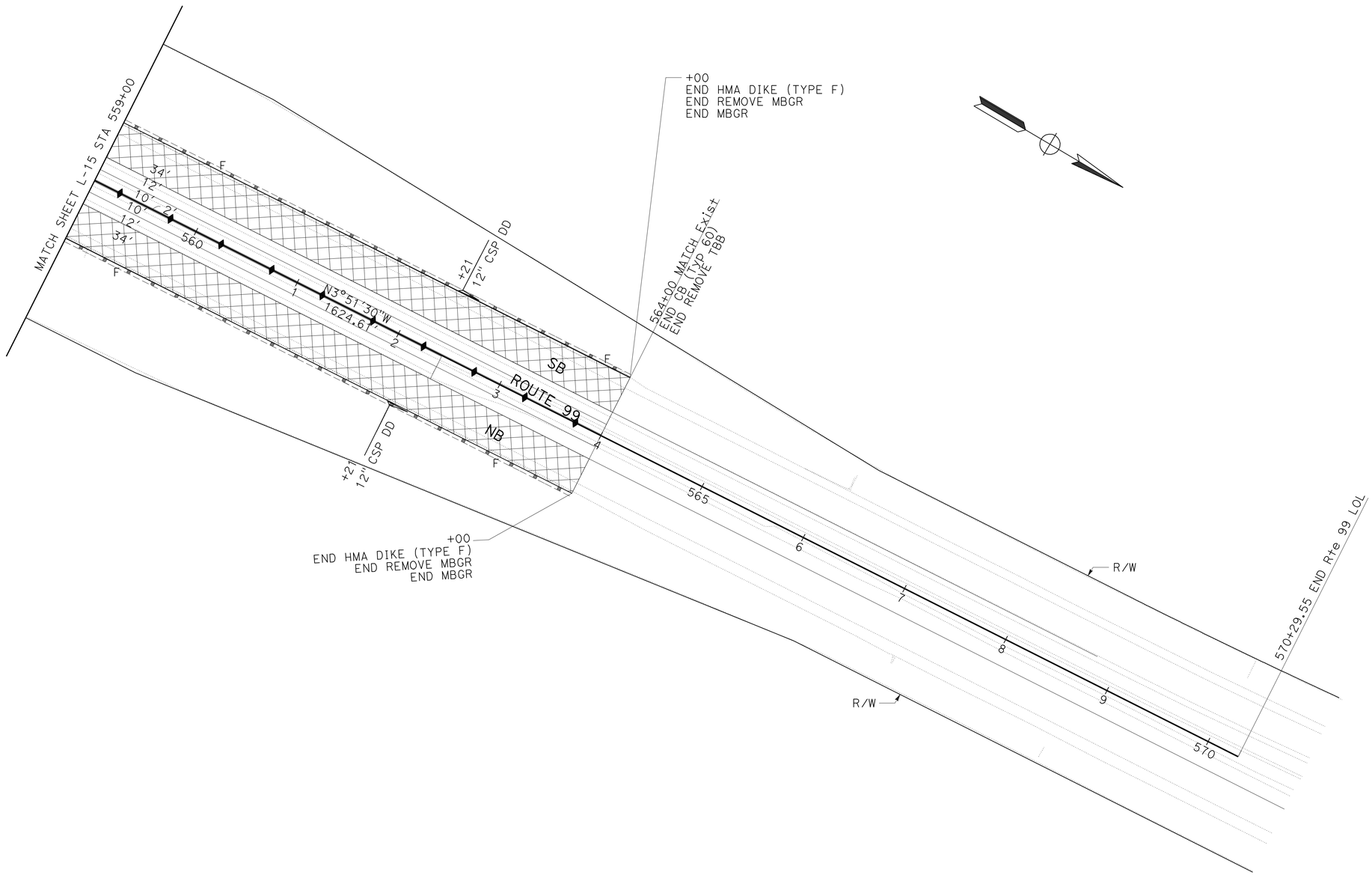

LAYOUT

SCALE: 1" = 50' **L-16**

STATE OF CALIFORNIA - DEPARTMENT OF TRANSPORTATION
Caltrans
DESIGN

FUNCTIONAL SUPERVISOR: GURBHAY BRAR
CALCULATED-DESIGNED BY: MIGUELITO SANTOS
CHECKED BY: DAVID VELAZCO
REVISED BY
DATE REVISED

LAST REVISION 12-19-11
DATE PLOTTED => 19-APR-2012
TIME PLOTTED => 12:52

Dist	COUNTY	ROUTE	POST MILES TOTAL PROJECT	SHEET No.	TOTAL SHEETS
06	Tul	99	R37.3/41.3	23	346

REGISTERED CIVIL ENGINEER — DATE 12-15-11

4-16-12
PLANS APPROVAL DATE

REGISTERED PROFESSIONAL ENGINEER MIGUELITO B. SANTOS No. 65598 Exp. 09/30/13 CIVIL STATE OF CALIFORNIA

THE STATE OF CALIFORNIA OR ITS OFFICERS OR AGENTS SHALL NOT BE RESPONSIBLE FOR THE ACCURACY OR COMPLETENESS OF SCANNED COPIES OF THIS PLAN SHEET.

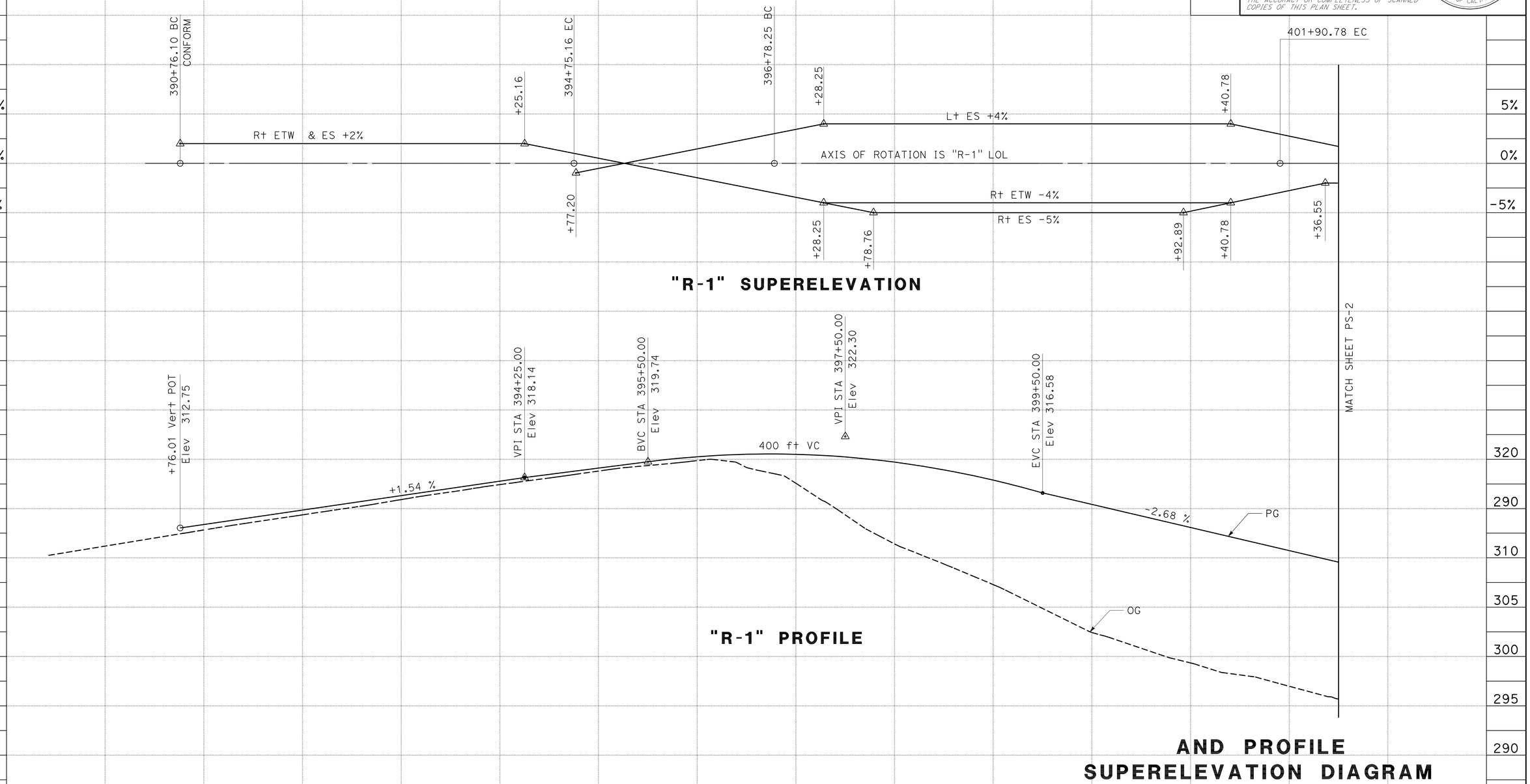

AND PROFILE SUPERELEVATION DIAGRAM

SCALE: Horiz 1" = 50'
Vert 1" = 5'

PS-1

STATION	391	392	393	394	395	396	397	398	399	400	401	402	TOTAL
CY Exc													
CY Emb													

STATE OF CALIFORNIA - DEPARTMENT OF TRANSPORTATION
Caltrans®
DESIGN

FUNCTIONAL SUPERVISOR: GURBHAY BRAR
CALCULATED-DESIGNED BY: MIGUELITO SANTOS
CHECKED BY: DAVID VELAZCO
REVISED BY
DATE REVISED

LAST REVISION 12-19-11
DATE PLOTTED => 19-APR-2012
TIME PLOTTED => 13:00

Dist	COUNTY	ROUTE	POST MILES TOTAL PROJECT	SHEET No.	TOTAL SHEETS
06	Tul	99	R37.3/41.3	24	346

REGISTERED CIVIL ENGINEER — DATE 12-15-11

4-16-12
PLANS APPROVAL DATE

REGISTERED PROFESSIONAL ENGINEER MIGUELITO B. SANTOS No. 65598 Exp. 09/30/13 CIVIL STATE OF CALIFORNIA

THE STATE OF CALIFORNIA OR ITS OFFICERS OR AGENTS SHALL NOT BE RESPONSIBLE FOR THE ACCURACY OR COMPLETENESS OF SCANNED COPIES OF THIS PLAN SHEET.

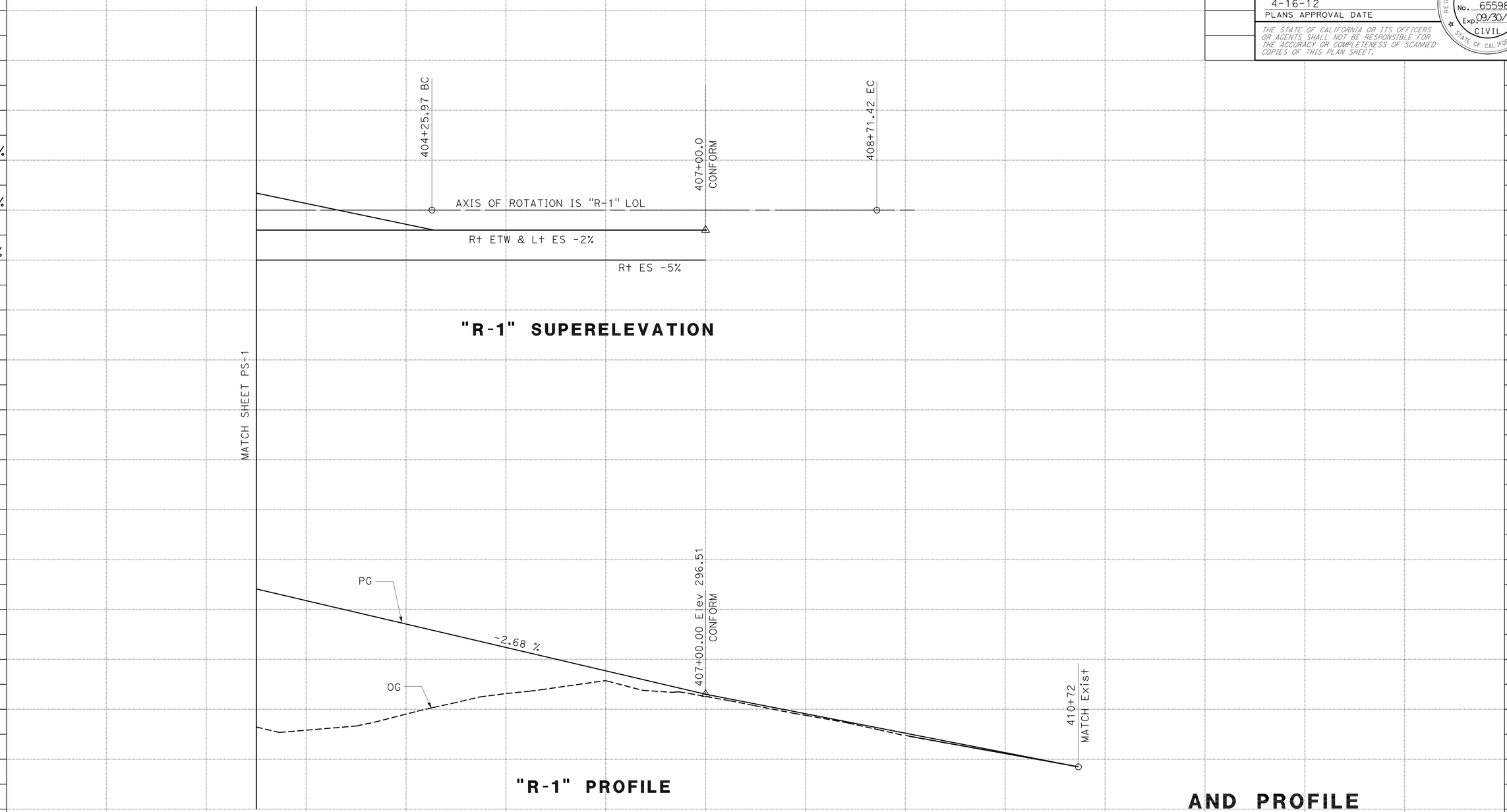

AND PROFILE SUPERELEVATION DIAGRAM

SCALE: Horiz 1" = 50'
Vert 1" = 5'

PS-2

STATION	402	403	404	405	406	407	408	409	410	411	412	TOTAL
CY Exc												
CY Emb												

STATE OF CALIFORNIA - DEPARTMENT OF TRANSPORTATION
Caltrans
DESIGN

FUNCTIONAL SUPERVISOR: GURBHAY BRAR
CALCULATED-DESIGNED BY: MIGUELITO SANTOS
CHECKED BY: DAVID VELAZCO
REVISED BY
DATE REVISED

LAST REVISION 12-19-11
DATE PLOTTED => 19-APR-2012
TIME PLOTTED => 13:00

Dist	COUNTY	ROUTE	POST MILES TOTAL PROJECT	SHEET No.	TOTAL SHEETS
06	Tul	99	R37.3/41.3	25	346

MBSantos 12-15-11
REGISTERED CIVIL ENGINEER DATE

4-16-12
PLANS APPROVAL DATE

REGISTERED PROFESSIONAL ENGINEER MIGUELITO B. SANTOS No. 65598 Exp. 09/30/13 CIVIL STATE OF CALIFORNIA

THE STATE OF CALIFORNIA OR ITS OFFICERS OR AGENTS SHALL NOT BE RESPONSIBLE FOR THE ACCURACY OR COMPLETENESS OF SCANNED COPIES OF THIS PLAN SHEET.

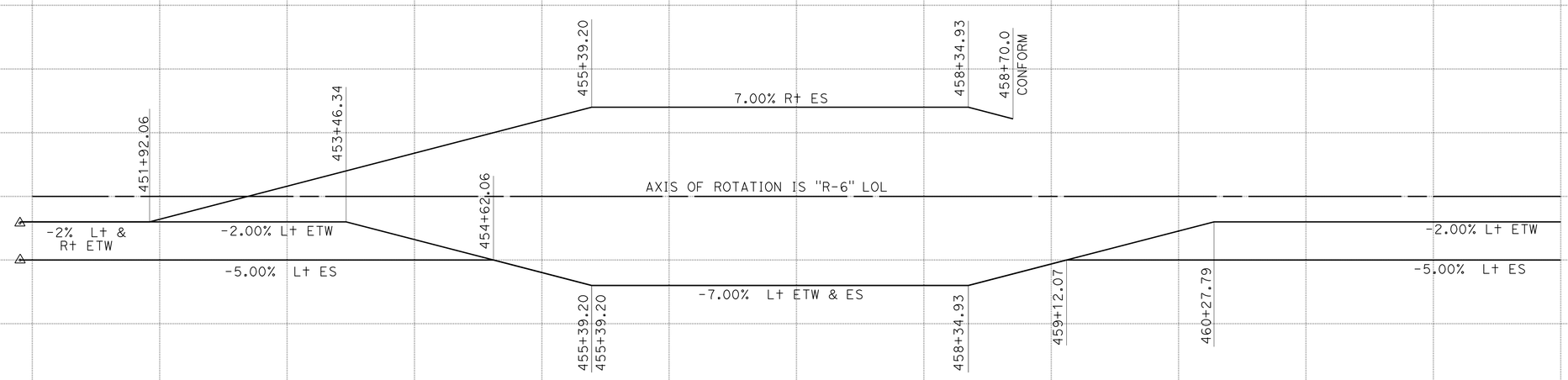

"R-6" SUPERELEVATION

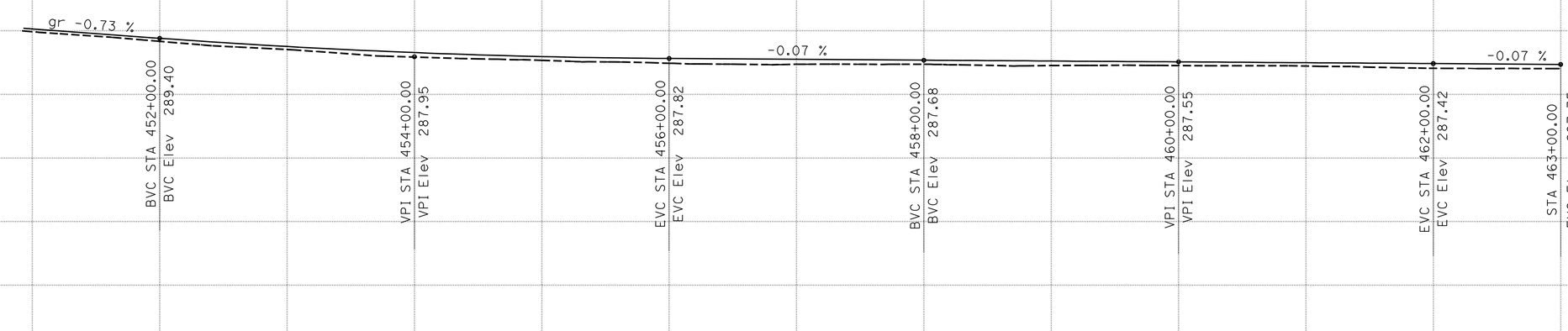

"R-6" PROFILE

AND PROFILE
SUPERELEVATION DIAGRAM

SCALE: Horiz 1" = 50'
Vert 1" = 5'

PS-3

STATION	451	452	453	454	455	456	457	458	459	460	461	462	463	467	TOTAL
CY Exc															
CY Emb															

STATE OF CALIFORNIA - DEPARTMENT OF TRANSPORTATION
Caltrans
DESIGN

FUNCTIONAL SUPERVISOR: GURBHAY BRAR
CALCULATED-DESIGNED BY: MIGUELITO SANTOS
CHECKED BY: DAVID VELAZCO
REVISED BY
DATE REVISED

LAST REVISION 12-19-11
DATE PLOTTED => 19-APR-2012
TIME PLOTTED => 13:00

Dist	COUNTY	ROUTE	POST MILES TOTAL PROJECT	SHEET No.	TOTAL SHEETS
06	Tul	99	R37.3/41.3	26	346

REGISTERED CIVIL ENGINEER 12-15-11 DATE

4-16-12
PLANS APPROVAL DATE

REGISTERED PROFESSIONAL ENGINEER MIGUELITO B. SANTOS No. 65598 Exp. 09/30/13 CIVIL STATE OF CALIFORNIA

THE STATE OF CALIFORNIA OR ITS OFFICERS OR AGENTS SHALL NOT BE RESPONSIBLE FOR THE ACCURACY OR COMPLETENESS OF SCANNED COPIES OF THIS PLAN SHEET.

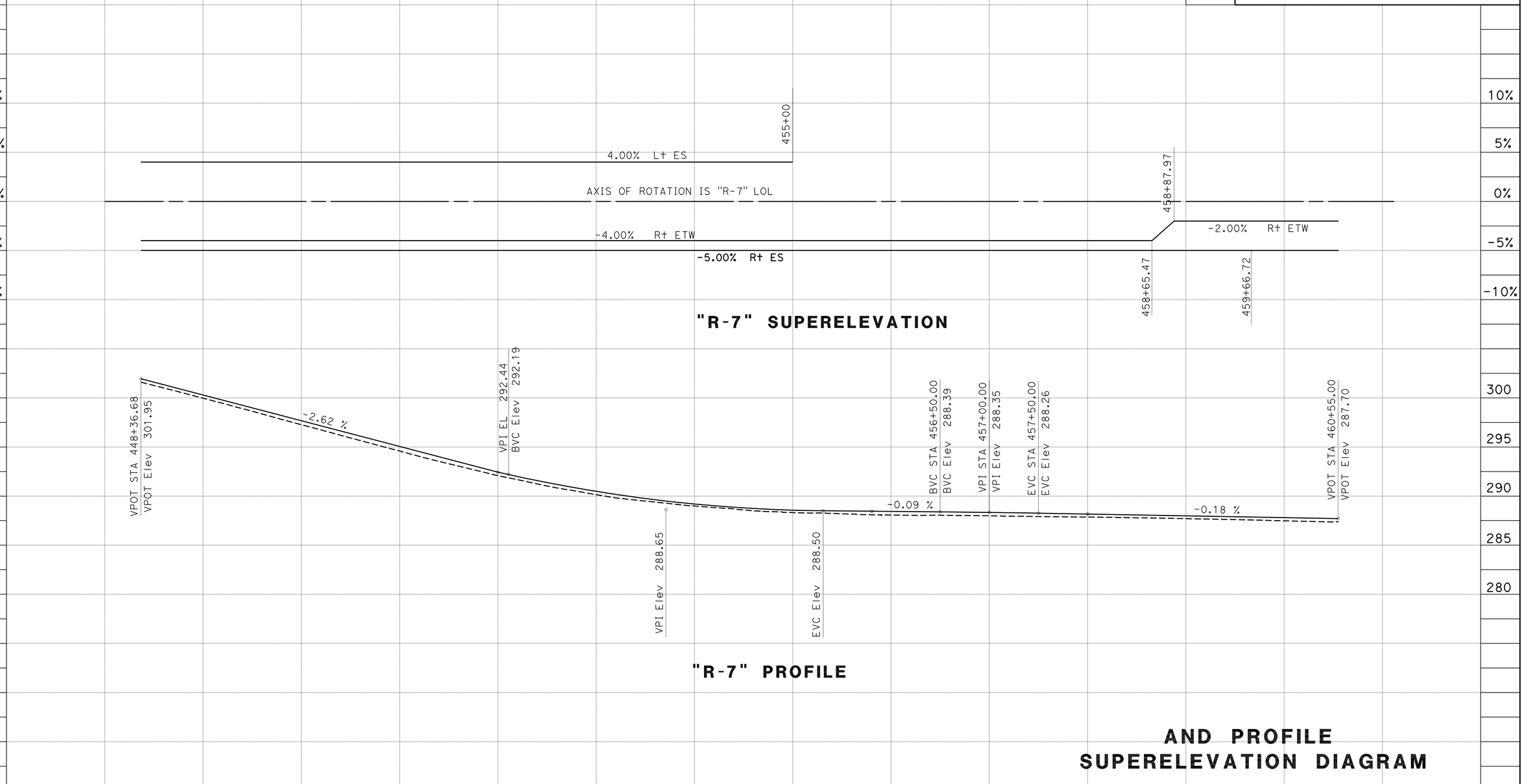

AND PROFILE SUPERELEVATION DIAGRAM

SCALE: Horiz 1" = 50'
Vert 1" = 5'

PS-4

STATION	448	449	450	451	452	453	454	455	456	457	458	459	460	461	TOTAL
CY Exc															
CY Emb															

REVISED BY | DATE REVISED
MIGUELITO SANTOS | DAVID VELAZCO
CALCULATED-DESIGNED BY | CHECKED BY
FUNCTIONAL SUPERVISOR: GURBHAY BRAR
STATE OF CALIFORNIA - DEPARTMENT OF TRANSPORTATION
Caltrans
DESIGN

LAST REVISION 12-19-11 | DATE PLOTTED => 19-APR-2012 | TIME PLOTTED => 13:00

Dist	COUNTY	ROUTE	POST MILES TOTAL PROJECT	SHEET No.	TOTAL SHEETS
06	Tul	99	R37.3/41.3	27	346

REGISTERED CIVIL ENGINEER 12-15-11 DATE

4-16-12
PLANS APPROVAL DATE

REGISTERED PROFESSIONAL ENGINEER MIGUELITO B. SANTOS No. 65598 Exp. 09/30/13 CIVIL STATE OF CALIFORNIA

THE STATE OF CALIFORNIA OR ITS OFFICERS OR AGENTS SHALL NOT BE RESPONSIBLE FOR THE ACCURACY OR COMPLETENESS OF SCANNED COPIES OF THIS PLAN SHEET.

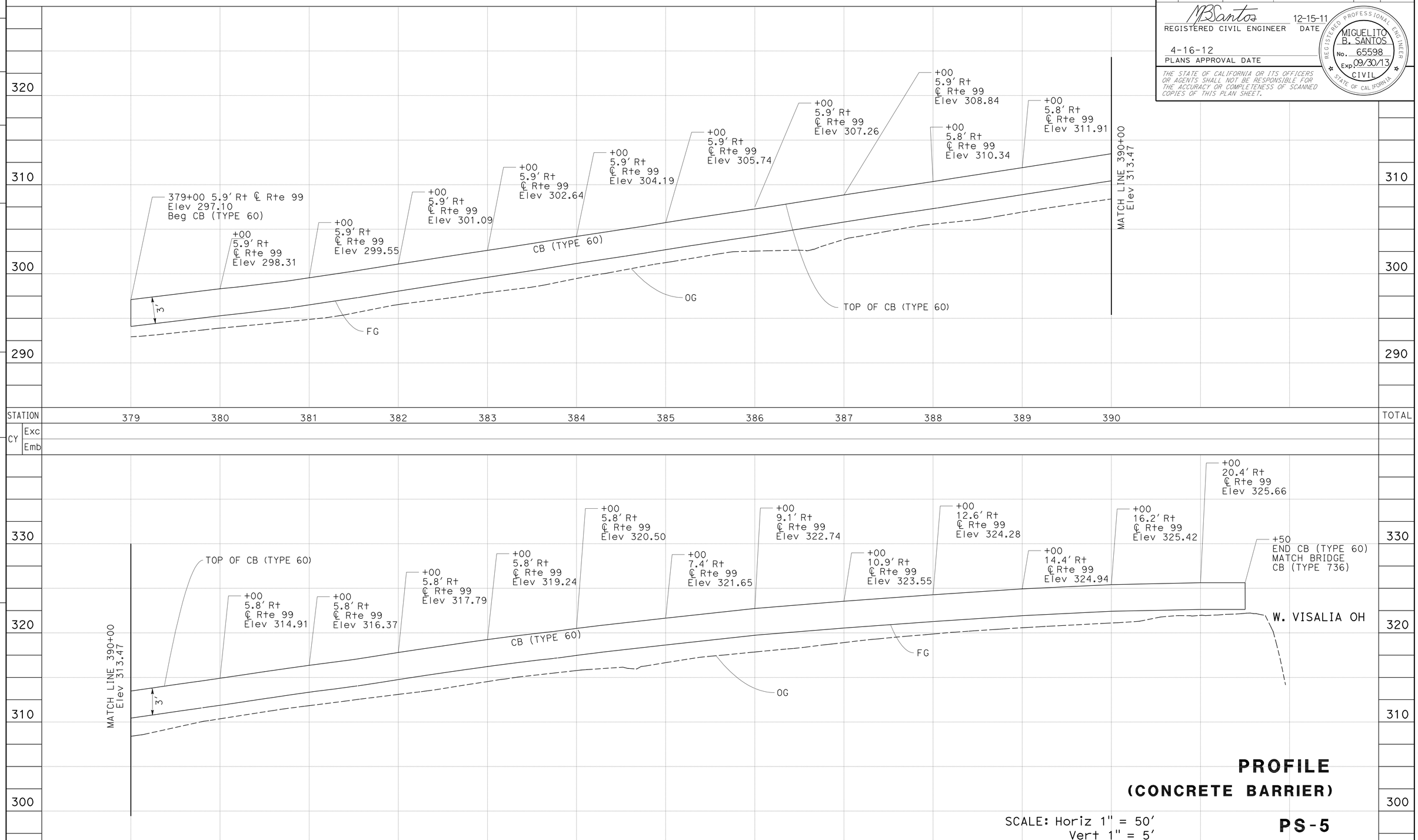

PROFILE
(CONCRETE BARRIER)

SCALE: Horiz 1" = 50′
Vert 1" = 5′

PS-5

REVISED BY | DATE REVISED
MIGUELITO SANTOS | DAVID VELAZCO
CALCULATED-DESIGNED BY | CHECKED BY
FUNCTIONAL SUPERVISOR: GURBHAY BRAR

STATE OF CALIFORNIA - DEPARTMENT OF TRANSPORTATION
Caltrans
DESIGN

LAST REVISION 12-19-11 | DATE PLOTTED => 19-APR-2012 | TIME PLOTTED => 13:00

Dist	COUNTY	ROUTE	POST MILES TOTAL PROJECT	SHEET No.	TOTAL SHEETS
06	Tul	99	R37.3/41.3	28	346

REGISTERED CIVIL ENGINEER 12-15-11 DATE

4-16-12
PLANS APPROVAL DATE

REGISTERED PROFESSIONAL ENGINEER MIGUELITO B. SANTOS No. 65598 Exp. 09/30/13 CIVIL STATE OF CALIFORNIA

THE STATE OF CALIFORNIA OR ITS OFFICERS OR AGENTS SHALL NOT BE RESPONSIBLE FOR THE ACCURACY OR COMPLETENESS OF SCANNED COPIES OF THIS PLAN SHEET.

PROFILE
(CONCRETE BARRIER)

SCALE: Horiz 1" = 50'
Vert 1" = 5'

PS-6

REVISED BY | DATE REVISED

MIGUELITO SANTOS | DAVID VELAZCO

CALCULATED-DESIGNED BY | CHECKED BY

FUNCTIONAL SUPERVISOR: GURBHAY BRAR

STATE OF CALIFORNIA - DEPARTMENT OF TRANSPORTATION

Caltrans® DESIGN

LAST REVISION 12-19-11 | DATE PLOTTED => 19-APR-2012 | TIME PLOTTED => 13:00

Dist	COUNTY	ROUTE	POST MILES TOTAL PROJECT	SHEET No.	TOTAL SHEETS
06	Tul	99	R37.3/41.3	29	346

REGISTERED CIVIL ENGINEER 12-15-11 DATE

4-16-12
PLANS APPROVAL DATE

REGISTERED PROFESSIONAL ENGINEER MIGUELITO B. SANTOS No. 65598 Exp. 09/30/13 CIVIL STATE OF CALIFORNIA

THE STATE OF CALIFORNIA OR ITS OFFICERS OR AGENTS SHALL NOT BE RESPONSIBLE FOR THE ACCURACY OR COMPLETENESS OF SCANNED COPIES OF THIS PLAN SHEET.

PROFILE
(CONCRETE BARRIER)

SCALE: Horiz 1" = 50'
Vert 1" = 5'

PS-7

REVISED BY | DATE REVISED

MIGUELITO SANTOS | DAVID VELAZCO

CALCULATED-DESIGNED BY | CHECKED BY

FUNCTIONAL SUPERVISOR: GURBHAY BRAR

STATE OF CALIFORNIA - DEPARTMENT OF TRANSPORTATION

Caltrans® DESIGN

LAST REVISION 12-19-11 | DATE PLOTTED => 19-APR-2012 | TIME PLOTTED => 13:00

Dist	COUNTY	ROUTE	POST MILES TOTAL PROJECT	SHEET No.	TOTAL SHEETS
06	Tul	99	R37.3/41.3	30	346

REGISTERED CIVIL ENGINEER 12-15-11 DATE

4-16-12
PLANS APPROVAL DATE

REGISTERED PROFESSIONAL ENGINEER MIGUELITO B. SANTOS No. 65598 Exp. 09/30/13 CIVIL STATE OF CALIFORNIA

THE STATE OF CALIFORNIA OR ITS OFFICERS OR AGENTS SHALL NOT BE RESPONSIBLE FOR THE ACCURACY OR COMPLETENESS OF SCANNED COPIES OF THIS PLAN SHEET.

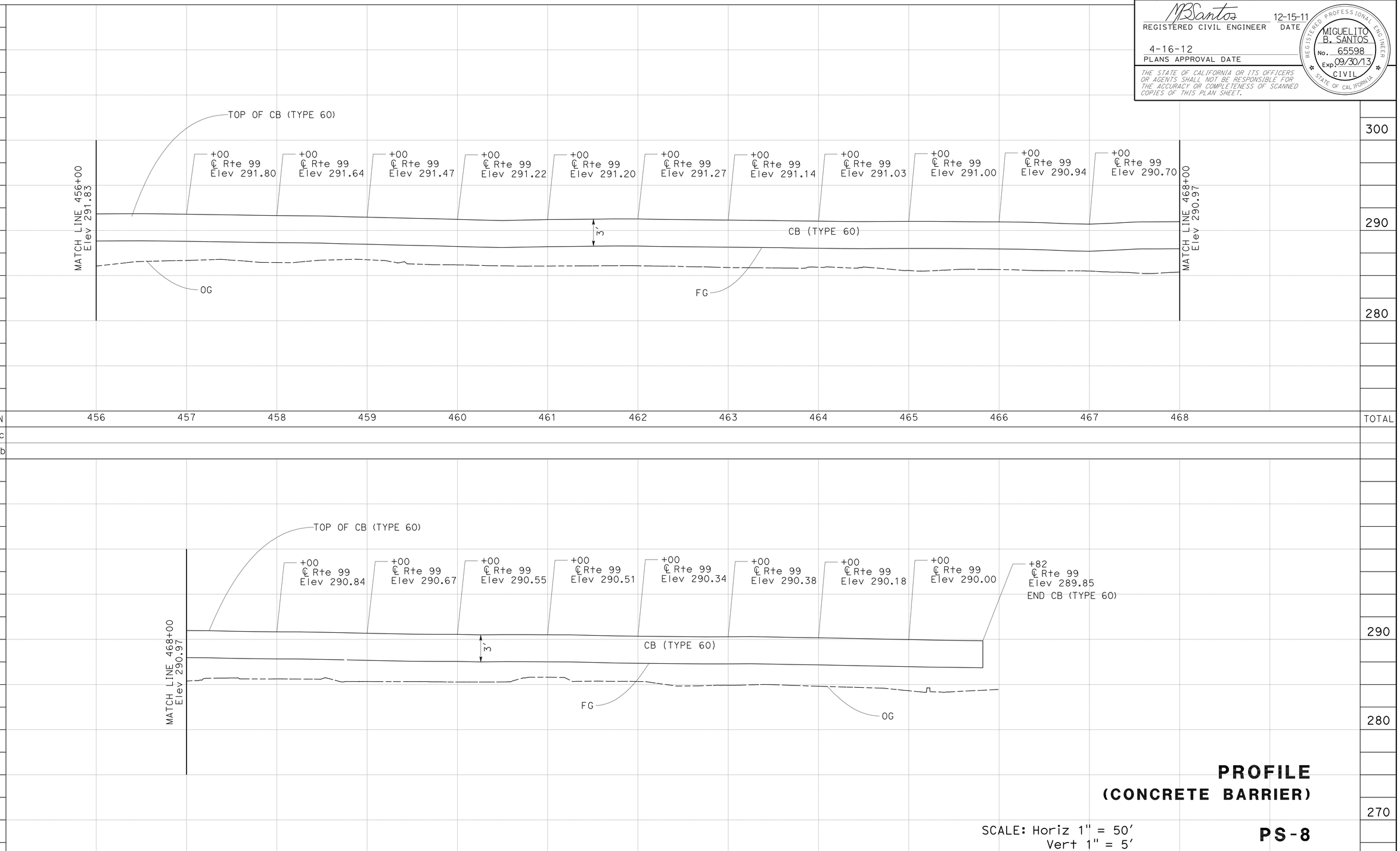

PROFILE
(CONCRETE BARRIER)

SCALE: Horiz 1" = 50'
Vert 1" = 5'

PS-8

REVISED BY | DATE REVISED
MIGUELITO SANTOS | DAVID VELAZCO
CALCULATED-DESIGNED BY | CHECKED BY
FUNCTIONAL SUPERVISOR: GURBHAY BRAR

STATE OF CALIFORNIA - DEPARTMENT OF TRANSPORTATION
Caltrans
DESIGN

LAST REVISION 12-19-11 | DATE PLOTTED => 19-APR-2012 | TIME PLOTTED => 13:00

Dist	COUNTY	ROUTE	POST MILES TOTAL PROJECT	SHEET No.	TOTAL SHEETS
06	Tul	99	R37.3/41.3	31	346

REGISTERED CIVIL ENGINEER 12-15-11 DATE

4-16-12
PLANS APPROVAL DATE

REGISTERED PROFESSIONAL ENGINEER MIGUELITO B. SANTOS No. 65598 Exp. 09/30/13 CIVIL STATE OF CALIFORNIA

THE STATE OF CALIFORNIA OR ITS OFFICERS OR AGENTS SHALL NOT BE RESPONSIBLE FOR THE ACCURACY OR COMPLETENESS OF SCANNED COPIES OF THIS PLAN SHEET.

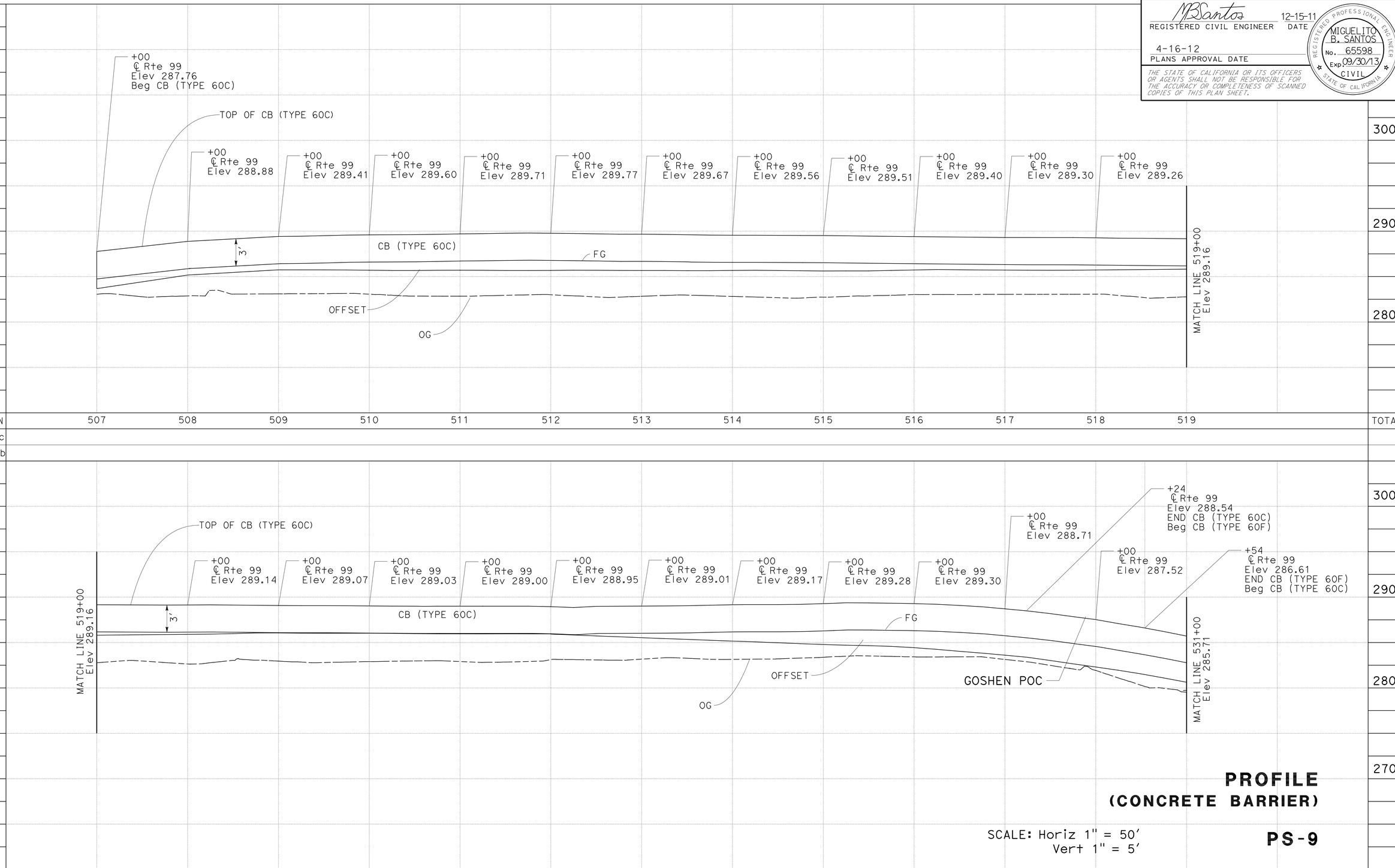

PROFILE
(CONCRETE BARRIER)

SCALE: Horiz 1" = 50'
Vert 1" = 5'

PS-9

REVISED BY | DATE REVISED

MIGUELITO SANTOS | DAVID VELAZCO

CALCULATED-DESIGNED BY | CHECKED BY

FUNCTIONAL SUPERVISOR: GURBHAY BRAR

STATE OF CALIFORNIA - DEPARTMENT OF TRANSPORTATION

Caltrans® **DESIGN**

LAST REVISION 12-19-11 | DATE PLOTTED => 19-APR-2012 | TIME PLOTTED => 13:00

Dist	COUNTY	ROUTE	POST MILES TOTAL PROJECT	SHEET No.	TOTAL SHEETS
06	Tul	99	R37.3/41.3	32	346

MBSantos 12-15-11
REGISTERED CIVIL ENGINEER DATE

4-16-12
PLANS APPROVAL DATE

REGISTERED PROFESSIONAL ENGINEER MIGUELITO B. SANTOS No. 65598 Exp. 09/30/13 CIVIL STATE OF CALIFORNIA

THE STATE OF CALIFORNIA OR ITS OFFICERS OR AGENTS SHALL NOT BE RESPONSIBLE FOR THE ACCURACY OR COMPLETENESS OF SCANNED COPIES OF THIS PLAN SHEET.

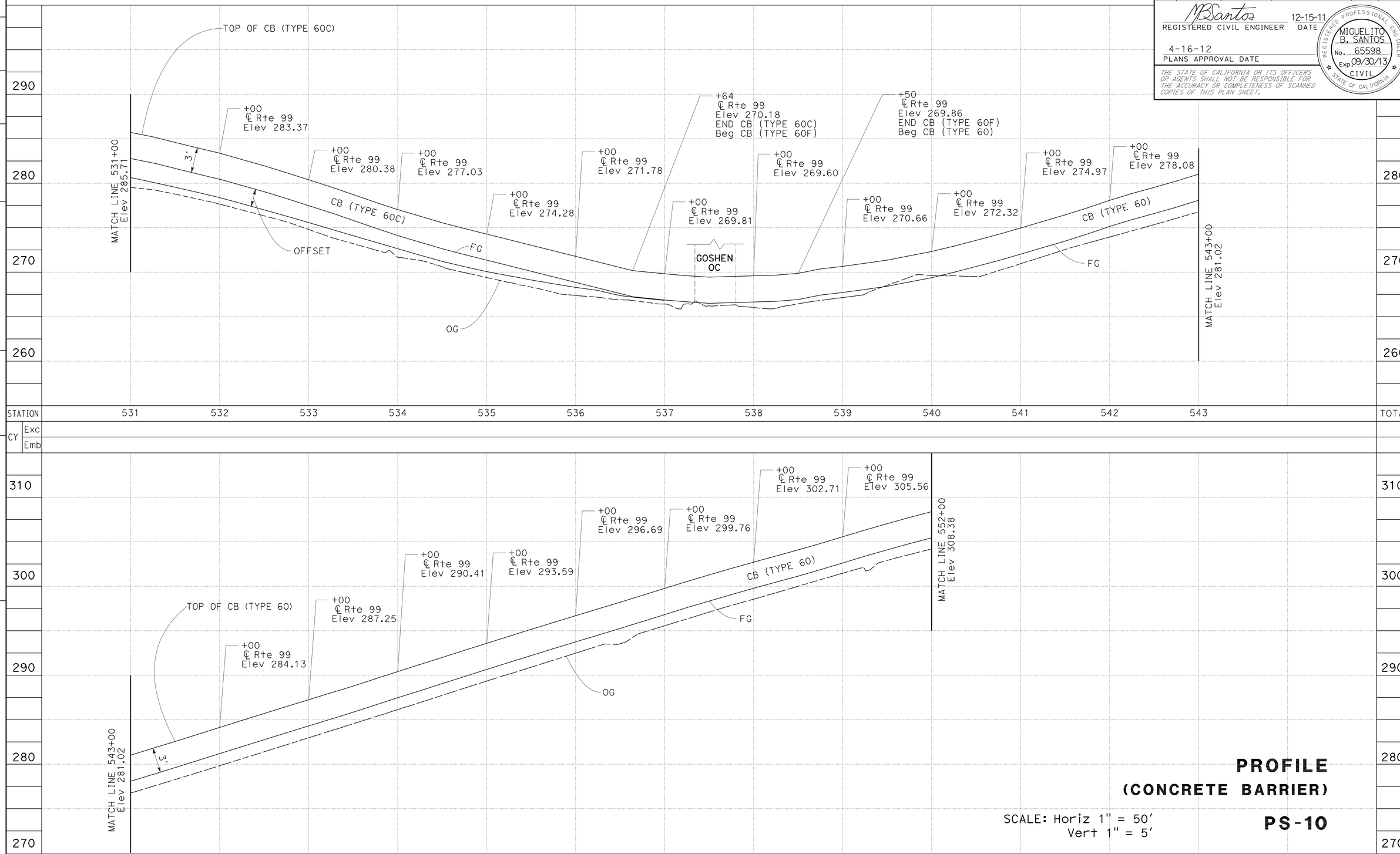

PROFILE
(CONCRETE BARRIER)

SCALE: Horiz 1" = 50'
Vert 1" = 5'

PS-10

REVISED BY | DATE REVISED
MIGUELITO SANTOS | DAVID VELAZCO
CALCULATED-DESIGNED BY | CHECKED BY
FUNCTIONAL SUPERVISOR: GURBHAY BRAR

STATE OF CALIFORNIA - DEPARTMENT OF TRANSPORTATION
Caltrans DESIGN

LAST REVISION 12-19-11 | DATE PLOTTED => 19-APR-2012 | TIME PLOTTED => 13:00

Dist	COUNTY	ROUTE	POST MILES TOTAL PROJECT	SHEET No.	TOTAL SHEETS
06	Tul	99	R37.3/41.3	33	346

MBSantos 12-15-11
REGISTERED CIVIL ENGINEER DATE

4-16-12
PLANS APPROVAL DATE

REGISTERED PROFESSIONAL ENGINEER
MIGUELITO B. SANTOS
No. 65598
Exp. 09/30/13
CIVIL
STATE OF CALIFORNIA

THE STATE OF CALIFORNIA OR ITS OFFICERS OR AGENTS SHALL NOT BE RESPONSIBLE FOR THE ACCURACY OR COMPLETENESS OF SCANNED COPIES OF THIS PLAN SHEET.

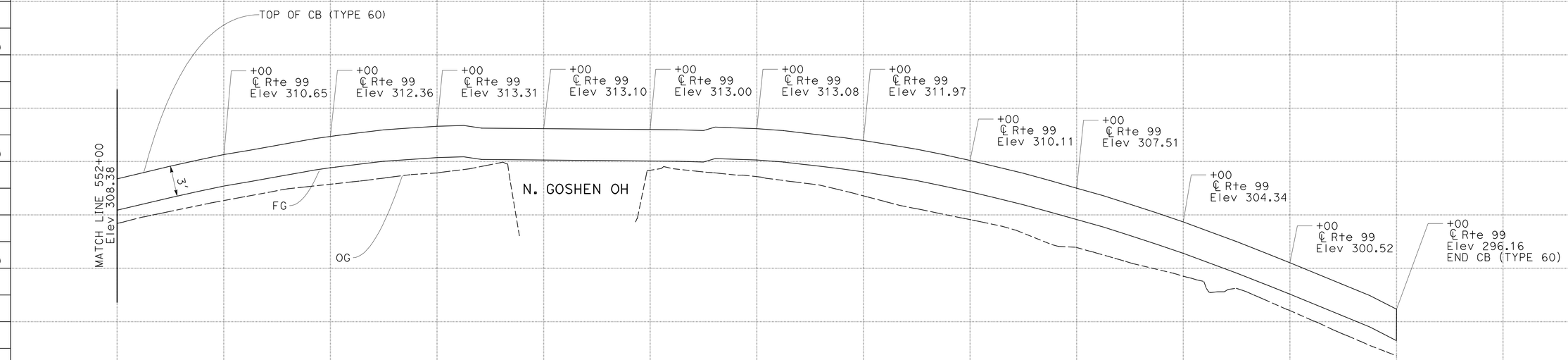

PROFILE
(CONCRETE BARRIER)

SCALE: Horiz 1" = 50'
Vert 1" = 5'

PS-11

STATION	552	553	554	555	556	557	558	559	560	561	562	563	564	TOTAL
CY Exc														
CY Emb														

STATE OF CALIFORNIA - DEPARTMENT OF TRANSPORTATION
Caltrans
DESIGN

FUNCTIONAL SUPERVISOR: GURBHAY BRAR
CALCULATED-DESIGNED BY: MIGUELITO SANTOS
CHECKED BY: DAVID VELAZCO
REVISED BY
DATE REVISED

LAST REVISION 12-19-11
DATE PLOTTED => 19-APR-2012
TIME PLOTTED => 13:00

Dist	COUNTY	ROUTE	POST MILES TOTAL PROJECT	SHEET No.	TOTAL SHEETS
06	Tul	99	R37.3/41.3	34	346

REGISTERED CIVIL ENGINEER 12-15-11 DATE

4-16-12
PLANS APPROVAL DATE

REGISTERED PROFESSIONAL ENGINEER MIGUELITO B. SANTOS No. 65598 Exp. 09/30/13 CIVIL STATE OF CALIFORNIA

THE STATE OF CALIFORNIA OR ITS OFFICERS OR AGENTS SHALL NOT BE RESPONSIBLE FOR THE ACCURACY OR COMPLETENESS OF SCANNED COPIES OF THIS PLAN SHEET.

LEGEND

- DIRECTION OF TRAVEL
- HMA (TYPE A)
- ALTERNATIVE FLARED END TERMINAL SECTION

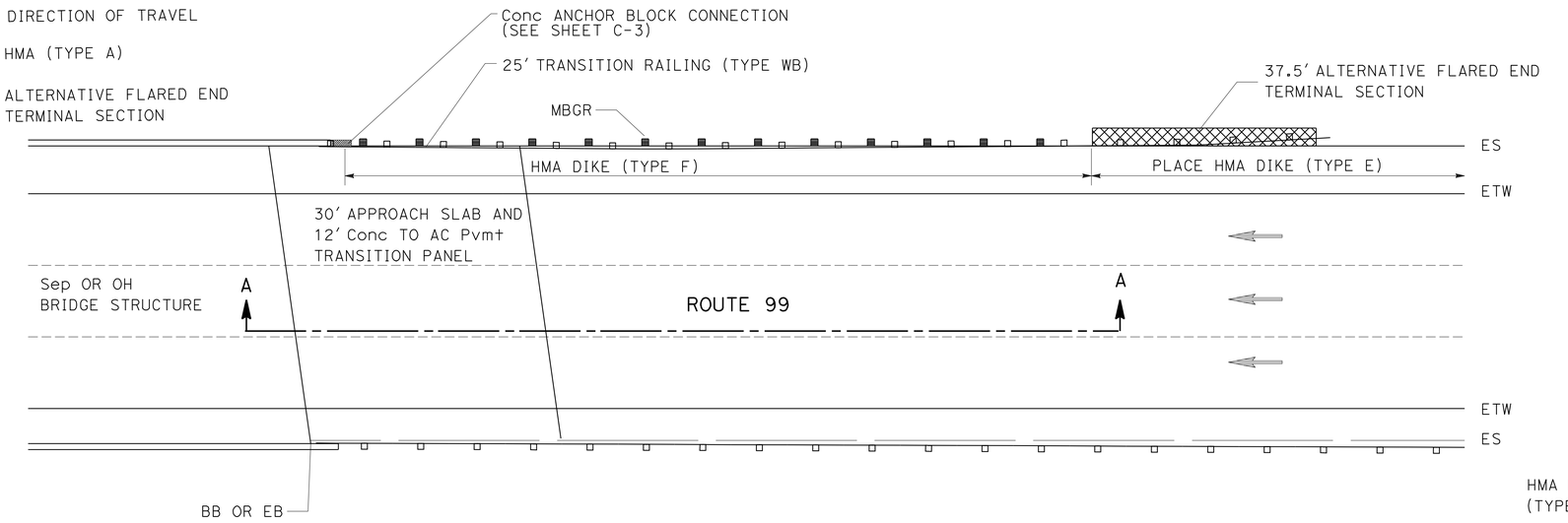

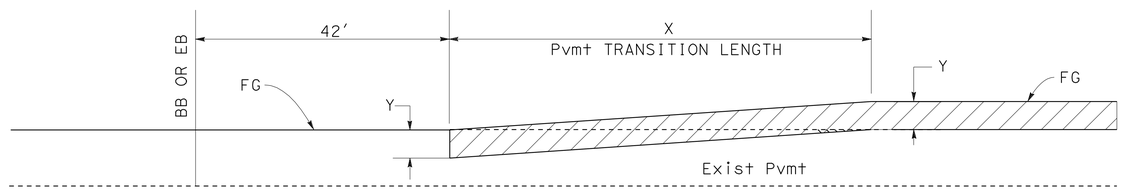

SECTION A-A

TABLE A

Y	X
0.30'	150'
0.70'	350'

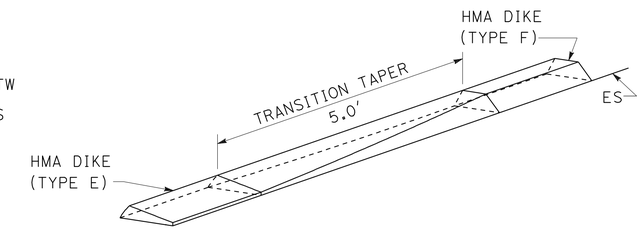

HMA DIKE TRANSITION DETAILS (TYPE E TO TYPE F)

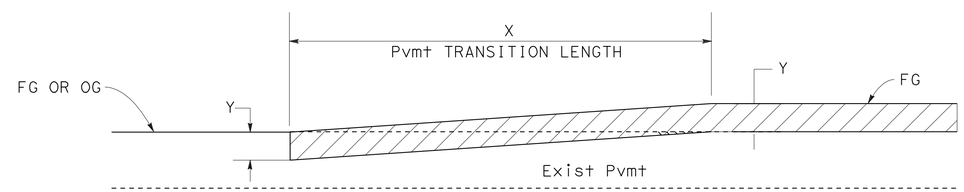

STA 379+00, 476+82, 564+00
(SEE TABLE A FOR X-Y DATA)

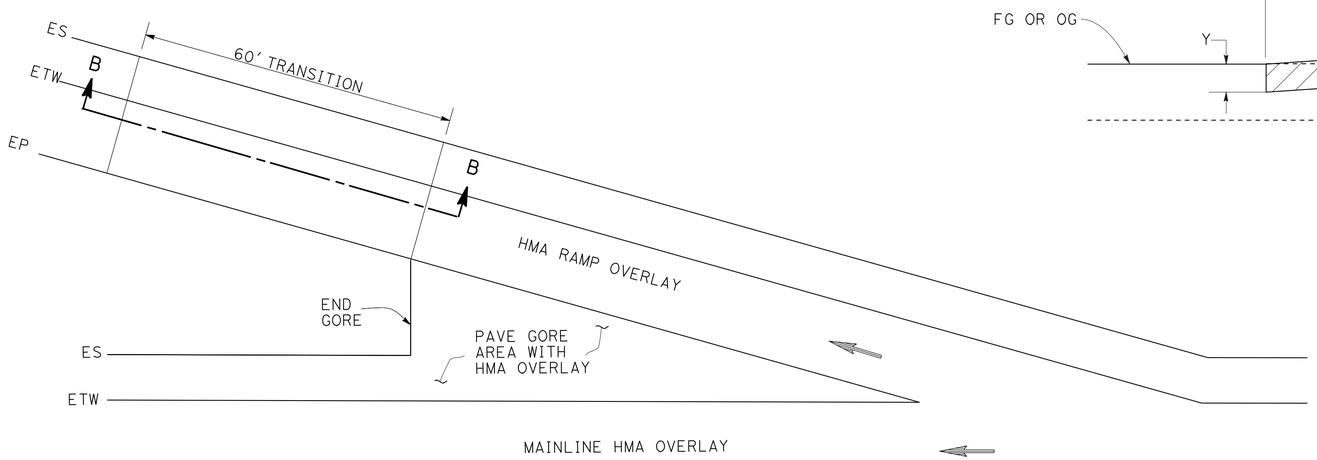

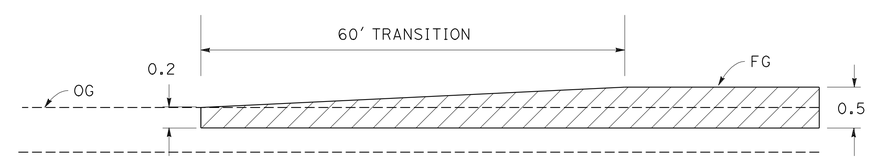

SECTION B-B

RAMP TERMINI DETAILS

Ave 304 NB ON-RAMP
GOSHEN OC ON & OFF RAMPS

CONSTRUCTION DETAILS

NO SCALE

C-1

STATE OF CALIFORNIA - DEPARTMENT OF TRANSPORTATION
Caltrans DESIGN

FUNCTIONAL SUPERVISOR: GURBHAY BRAR
MIGUELITO SANTOS / DAVID VELAZCO
CALCULATED-DESIGNED BY / CHECKED BY
REVISED BY / DATE REVISED

LAST REVISION 12-19-11
DATE PLOTTED => 19-APR-2012
TIME PLOTTED => 13:00

Dist	COUNTY	ROUTE	POST MILES TOTAL PROJECT	SHEET No.	TOTAL SHEETS
06	Tul	99	R37.3/41.3	35	346

REGISTERED CIVIL ENGINEER 12-15-11 DATE

4-16-12
PLANS APPROVAL DATE

REGISTERED PROFESSIONAL ENGINEER MIGUELITO B. SANTOS No. 65598 Exp. 09/30/13 CIVIL STATE OF CALIFORNIA

THE STATE OF CALIFORNIA OR ITS OFFICERS OR AGENTS SHALL NOT BE RESPONSIBLE FOR THE ACCURACY OR COMPLETENESS OF SCANNED COPIES OF THIS PLAN SHEET.

NOTES:

1. ALL RAIL ELEMENTS ARE 12.5′ LONG.
2. SEE Std PLANS FOR DETAILS NOT SHOWN.

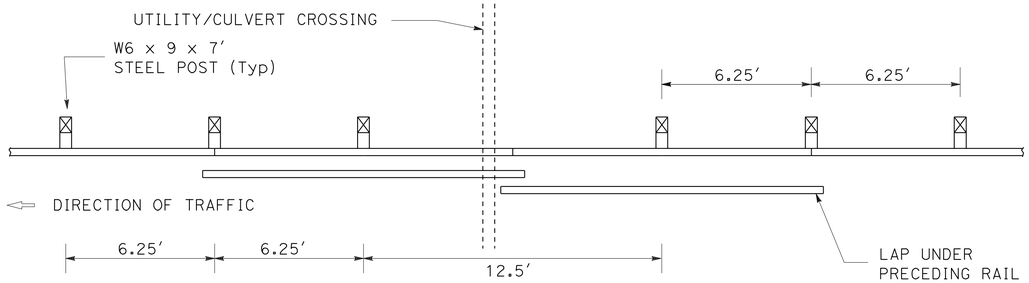

PLAN

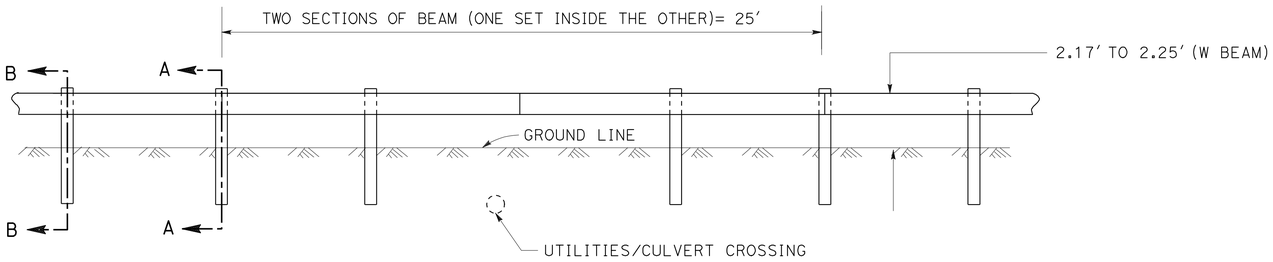

ELEVATION

CASE 1 - SPLICE BETWEEN POSTS

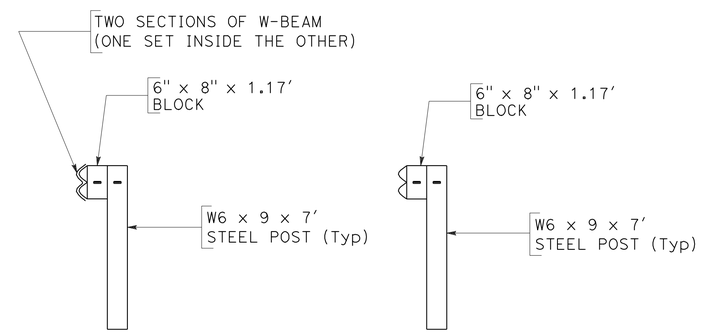

SECTION A-A SECTION B-B

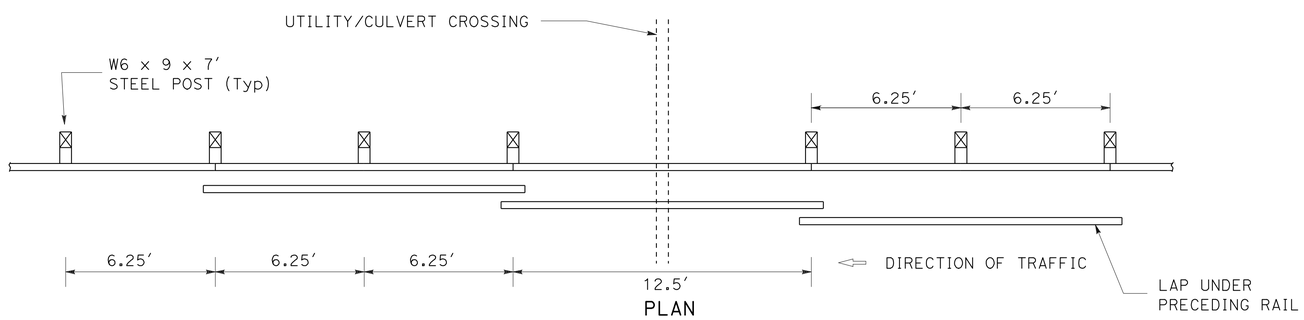

PLAN

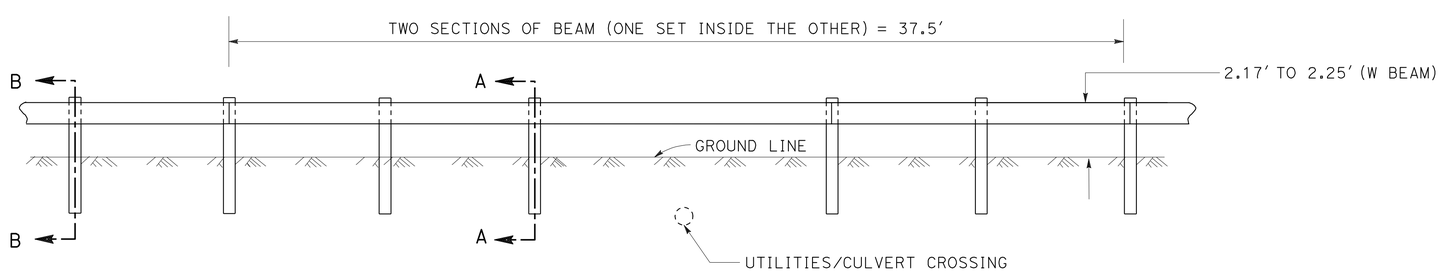

ELEVATION

CASE 2 - SPLICE AT POSTS
NESTED GUARDRAIL

CONSTRUCTION DETAILS

NO SCALE

C-2

STATE OF CALIFORNIA - DEPARTMENT OF TRANSPORTATION
DESIGN
Caltrans

FUNCTIONAL SUPERVISOR: GURBHAY BRAR
CALCULATED-DESIGNED BY: MIGUELITO SANTOS
CHECKED BY: DAVID VELAZCO
REVISED BY
DATE REVISED

LAST REVISION 12-19-11
DATE PLOTTED => 19-APR-2012
TIME PLOTTED => 13:00

Dist	COUNTY	ROUTE	POST MILES TOTAL PROJECT	SHEET No.	TOTAL SHEETS
06	Tul	99	R37.3/41.3	36	346

REGISTERED CIVIL ENGINEER — DATE 12-15-11

4-16-12
PLANS APPROVAL DATE

REGISTERED PROFESSIONAL ENGINEER MIGUELITO B. SANTOS No. 65598 Exp. 09/30/13 CIVIL STATE OF CALIFORNIA

THE STATE OF CALIFORNIA OR ITS OFFICERS OR AGENTS SHALL NOT BE RESPONSIBLE FOR THE ACCURACY OR COMPLETENESS OF SCANNED COPIES OF THIS PLAN SHEET.

NOTES:

1. FOR DETAILS NOT SHOWN, SEE STANDARD PLANS.
2. DEPENDENT DIMENSIONS WILL BE VERIFIED IN THE FIELD BEFORE FABRICATING ANY END CONNECTION TO CONFORM WITH EXISTING PAVED CONDITIONS.
3. ALL PLATES AND BOLTS ARE GALVANIZED.
4. FOR TRANSITION RAILING (TYPE WB), SEE Std PLAN A77J4

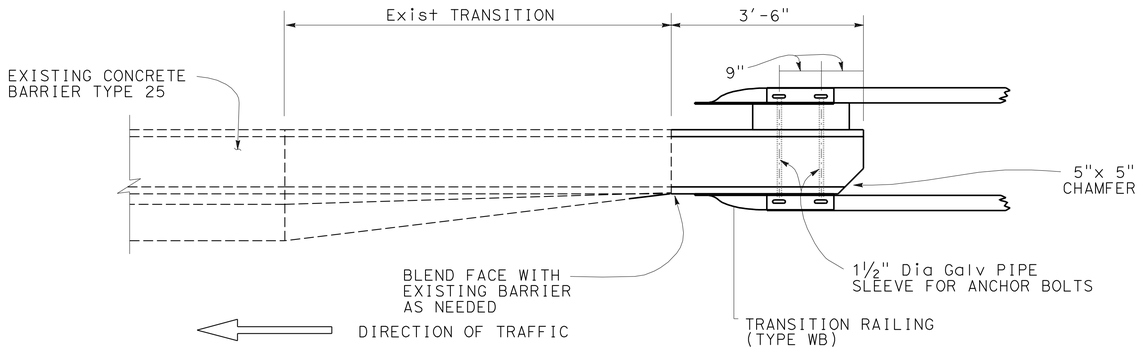

PLAN
NO SCALE

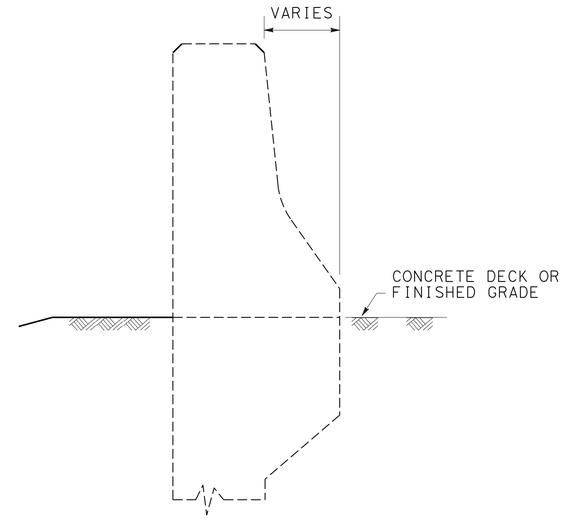

SECTION B-B
NO SCALE

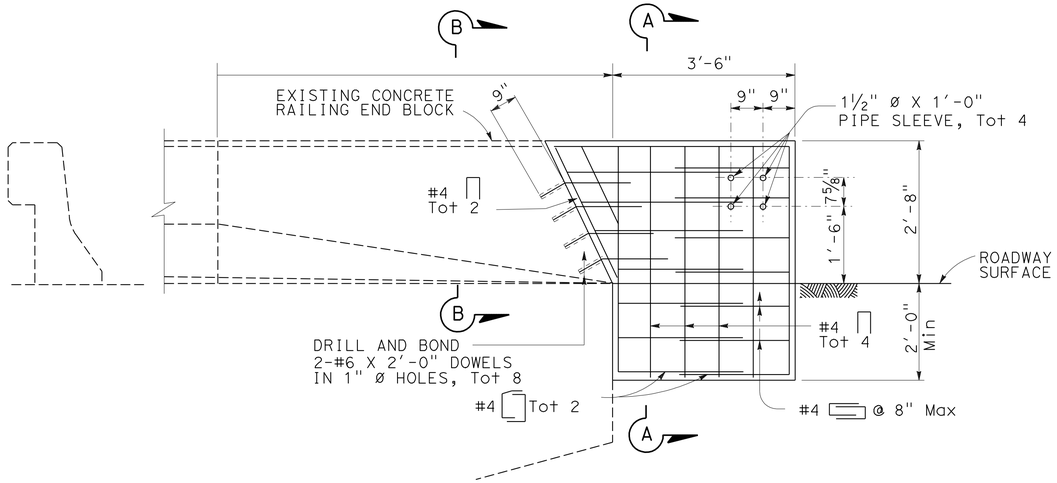

ELEVATION
NO SCALE

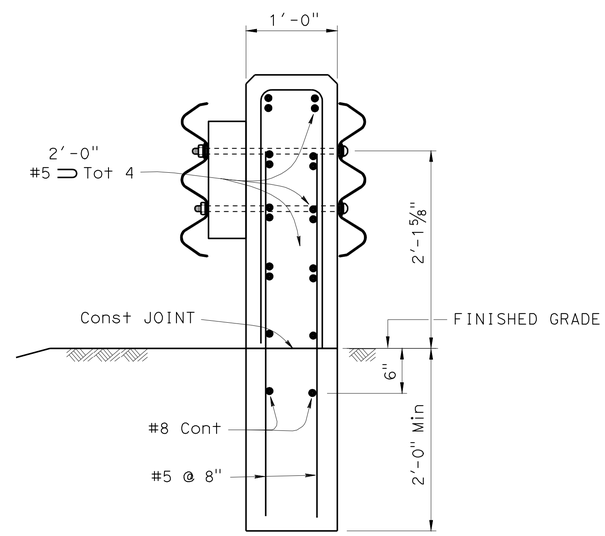

SECTION A-A
NO SCALE

LOCATIONS:
W. VISALIA OH
Rte 99/198 EAST SEPARATION
Rte 99/198 WEST SEPARATION
N. GOSHEN OH

CONCRETE ANCHOR BLOCK CONNECTION FOR BARRIER RAILING TYPE 25 CONSTRUCTION DETAILS

NO SCALE

C-3

REVISED BY | DATE REVISED
MIGUELITO SANTOS | DAVID VELAZCO
CALCULATED-DESIGNED BY | CHECKED BY
FUNCTIONAL SUPERVISOR | GURBHAY BRAR

STATE OF CALIFORNIA - DEPARTMENT OF TRANSPORTATION
Caltrans
DESIGN

LAST REVISION 12-19-11 | DATE PLOTTED => 19-APR-2012 | TIME PLOTTED => 13:01

Dist	COUNTY	ROUTE	POST MILES TOTAL PROJECT	SHEET No.	TOTAL SHEETS
06	Tul	99	R37.3/41.3	37	346

REGISTERED CIVIL ENGINEER 12-15-11 DATE

4-16-12
PLANS APPROVAL DATE

REGISTERED PROFESSIONAL ENGINEER MIGUELITO B. SANTOS No. 65598 Exp. 09/30/13 CIVIL STATE OF CALIFORNIA

THE STATE OF CALIFORNIA OR ITS OFFICERS OR AGENTS SHALL NOT BE RESPONSIBLE FOR THE ACCURACY OR COMPLETENESS OF SCANNED COPIES OF THIS PLAN SHEET.

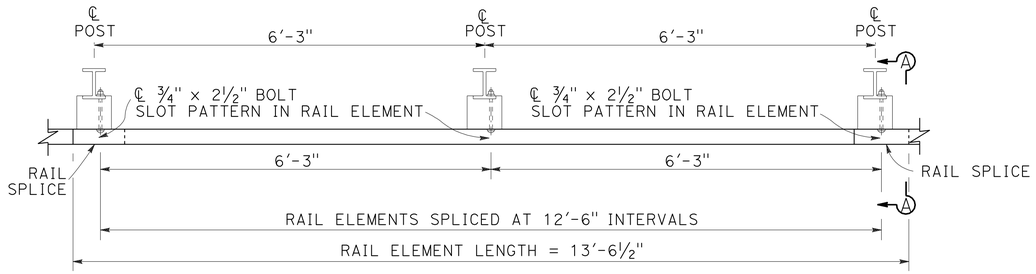

PLAN

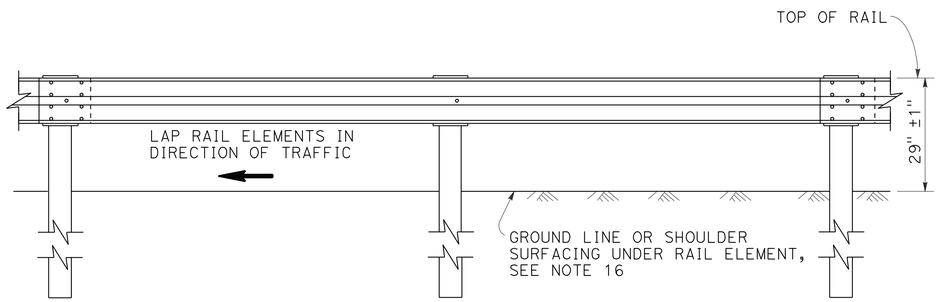

ELEVATION

METAL BEAM GUARD RAILING WITH STEEL POSTS AND NOTCHED WOOD OR NOTCHED RECYCLED PLASTIC BLOCKS

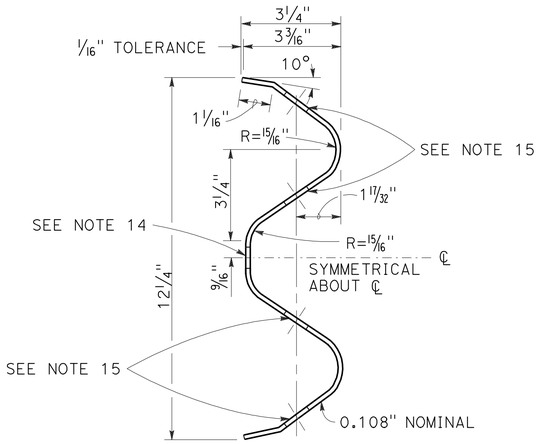

SECTION THRU RAIL ELEMENT

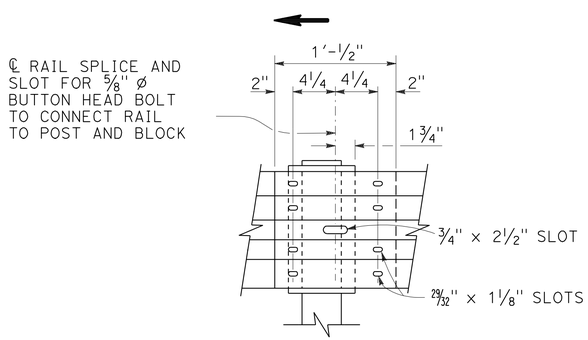

ELEVATION

RAIL ELEMENT SPLICE DETAIL

A) CONNECT THE OVER LAPPED END OF THE RAIL ELEMENTS WITH ⅝" ø X 1⅜" BUTTON HEAD OVAL SHOULDER SPLICE BOLTS INSERTED INTO THE 29⁄32" X 1⅛" SLOTS AND BOLTED TOGETHER WITH ⅝" ø RECESSED HEX NUTS. RECESS OF HEX NUT POINTS TOWARD RAIL ELEMENT. A TOTAL OF 8 BOLTS AND NUTS ARE TO BE USED AT EACH RAIL SPLICE CONNECTION.

B) THE ENDS OF THE RAIL ELEMENTS ARE TO BE OVERLAPPED IN THE DIRECTION OF TRAFFIC (SEE DETAILS).

C) WHERE END CAP IS TO BE ATTACHED TO THE END OF A RAIL ELEMENT, A TOTAL OF 4 OF THE ABOVE DESCRIBED SPLICE BOLTS AND NUTS ARE TO BE USED.

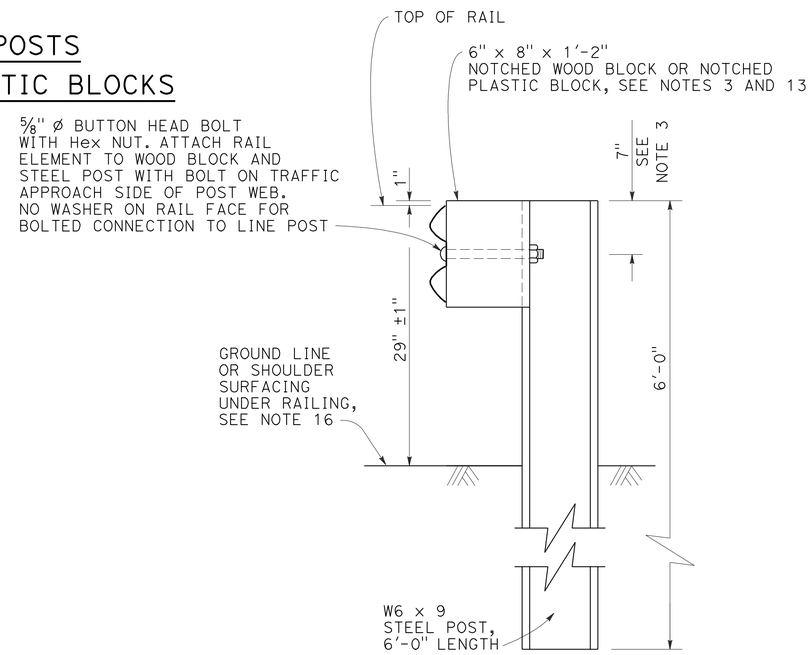

SECTION A-A

TYPICAL STEEL LINE POST INSTALLATION

See Note 4

NOTES:

1. FOR DETAILS OF WOOD POST INSTALLATIONS, SEE STANDARD PLAN A77A1.
2. FOR DETAILS OF STANDARD HARDWARE USED TO CONSTRUCT GUARD RAILING, SEE STANDARD PLAN A77B1.
3. FOR DETAILS OF STEEL POSTS AND NOTCHED WOOD BLOCKS USED TO CONSTRUCT GUARD RAILING, SEE STANDARD PLAN A77C2.
4. FOR ADDITIONAL INSTALLATION DETAILS, SEE STANDARD PLAN A77C3.
5. GUARD RAILING POST SPACING TO BE 6'-3" CENTER TO CENTER, EXCEPT AS OTHERWISE NOTED.
6. FOR GUARD RAILING TYPICAL LAYOUTS, SEE THE A77E, A77F AND A77G SERIES OF STANDARD PLANS.
7. TO CONNECT RAILING TO TERMINAL SYSTEM END TREATMENT, TRANSITION THE TOP OF RAILING HEIGHT AT A RATIO OF 120:1 TO TERMINAL SYSTEM END TREATMENT HEIGHT PLUS ONE 12'-6" STANDARD RAILING SECTION AT THE TRANSITIONED HEIGHT FOR A HORIZONTAL CONNECTION TO THE END TREATMENT.
8. FOR GUARD RAILING END ANCHOR DETAILS, SEE STANDARD PLANS A77H1 AND A77I2.
9. FOR DETAILS OF GUARD RAILING TRANSITION TO BRIDGE RAILING, SEE STANDARD PLAN A77J4.
10. FOR ADDITIONAL DETAILS OF GUARD RAILING CONNECTION TO BRIDGE RAILINGS, SEE STANDARD PLANS A77J1, A77J2 AND A77K1.
11. FOR DIKE POSITIONING AND GUARD RAILING DELINEATION DETAILS, SEE STANDARD PLAN A77C4.
12. DIRECTION OF ADJACENT TRAFFIC INDICATED BY ⟶ .
13. NOTCHED FACE OF BLOCK FACES STEEL POST.
14. SLOTTED HOLE FOR BOLTED CONNECTION OF RAIL ELEMENT TO BLOCK AND POST. SEE "SECTION THRU RAIL ELEMENT".
15. SLOTTED HOLES FOR SPLICE BOLTS TO OVERLAP ENDS OF RAIL ELEMENT. SEE "SECTION THRU RAIL ELEMENT".
16. INSTALL POSTS IN SOIL.

METAL BEAM GUARD RAILING STANDARD RAILING SECTION (STEEL POST WITH NOTCHED WOOD OR NOTCHED RECYCLED PLASTIC BLOCK)

CONSTRUCTION DETAILS

NO SCALE

C-4

STATE OF CALIFORNIA - DEPARTMENT OF TRANSPORTATION
Caltrans DESIGN
FUNCTIONAL SUPERVISOR: GURBHAY BRAR
CALCULATED-DESIGNED BY: MIGUELITO SANTOS
CHECKED BY: DAVID VELAZCO
REVISED BY
DATE REVISED

LAST REVISION 12-19-11
DATE PLOTTED => 19-APR-2012
TIME PLOTTED => 13:01

Dist	COUNTY	ROUTE	POST MILES TOTAL PROJECT	SHEET No.	TOTAL SHEETS
06	Tul	99	R37.3/41.3	38	346

REGISTERED CIVIL ENGINEER — DATE 12-15-11

4-16-12
PLANS APPROVAL DATE

REGISTERED PROFESSIONAL ENGINEER MIGUELITO B. SANTOS No. 65598 Exp. 09/30/13 CIVIL STATE OF CALIFORNIA

THE STATE OF CALIFORNIA OR ITS OFFICERS OR AGENTS SHALL NOT BE RESPONSIBLE FOR THE ACCURACY OR COMPLETENESS OF SCANNED COPIES OF THIS PLAN SHEET.

NOTES:
1. REFER TO LAYOUT SHEETS FOR LOCATION OF SCUPPERS. PLACE SCUPPERS AT 50′ ON CENTER. SCUPPERS OPENING LENGTH ALONG CENTERLINE IS 2′-6″.

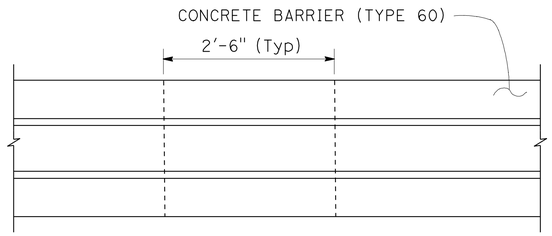

PLAN

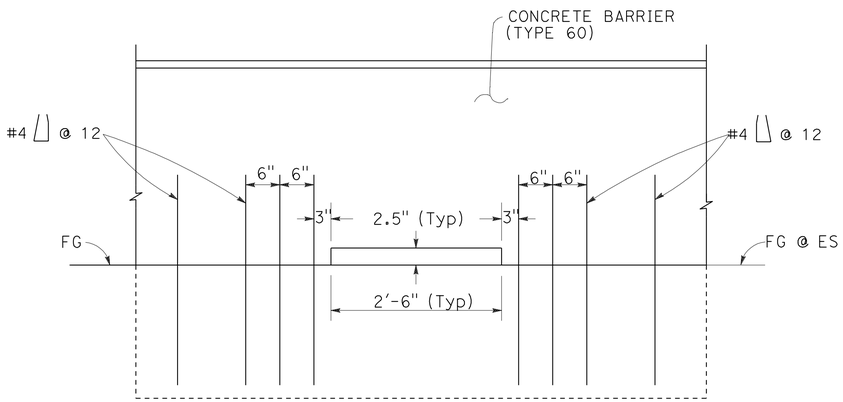

ELEVATION

SCUPPER DETAILS

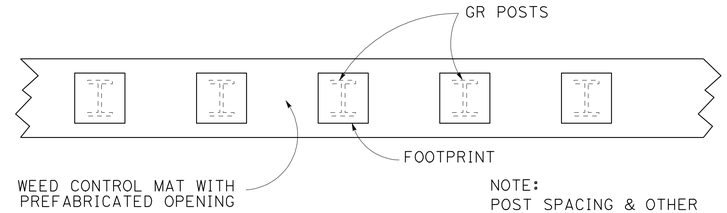

PLAN

NOTE:
POST SPACING & OTHER DIMENSIONS TO BE VERIFIED IN THE FIELD BY THE CONTRACTOR

GUARD RAILING WEED CONTROL MAT (FIBER)

AT STEEL POST

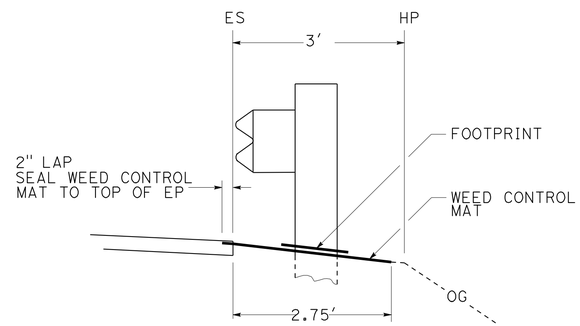

GUARD RAILING WEED CONTROL MAT (FIBER)

WITHOUT DIKE

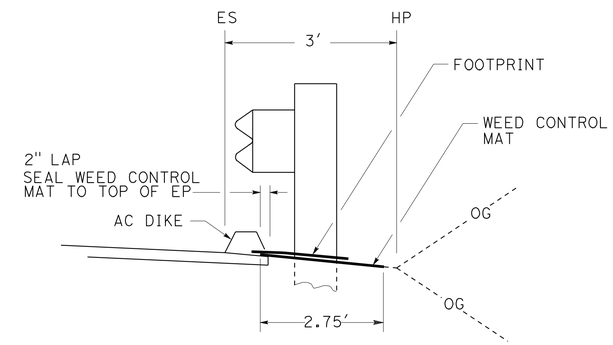

GUARD RAILING WEED CONTROL MAT (FIBER)

WITH DIKE

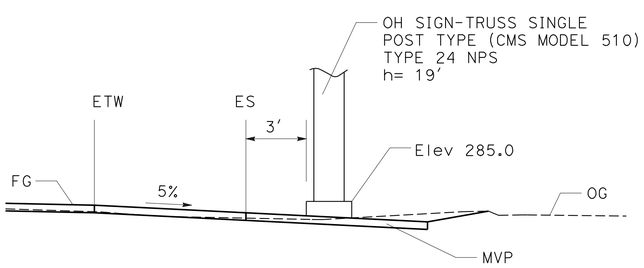

OH SIGN-TRUSS SINGLE POST TYPE

STA 509+90

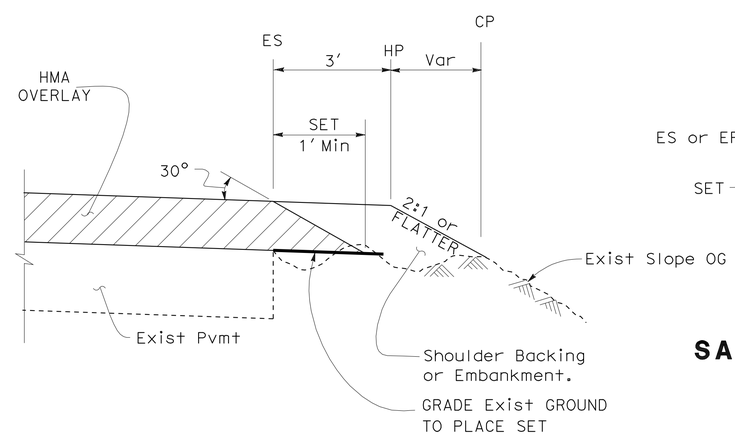

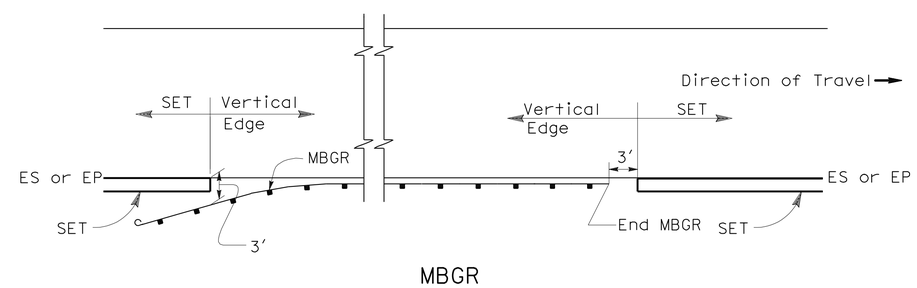

MBGR

SAFETY EDGE TREATMENT (SET)

CONSTRUCTION DETAILS

NO SCALE

C-5

STATE OF CALIFORNIA - DEPARTMENT OF TRANSPORTATION
DESIGN
Caltrans

FUNCTIONAL SUPERVISOR: GURBHAY BRAR
CALCULATED-DESIGNED BY: MIGUELITO SANTOS
CHECKED BY: DAVID VELAZCO
REVISED BY
DATE REVISED

LAST REVISION 12-19-11
DATE PLOTTED => 19-APR-2012
TIME PLOTTED => 13:01

Dist	COUNTY	ROUTE	POST MILES TOTAL PROJECT	SHEET No.	TOTAL SHEETS
06	Tul	99	R37.3/41.3	39	346

REGISTERED CIVIL ENGINEER 12-15-11 DATE

4-16-12
PLANS APPROVAL DATE

REGISTERED PROFESSIONAL ENGINEER MIGUELITO B. SANTOS No. 65598 Exp. 09/30/13 CIVIL STATE OF CALIFORNIA

THE STATE OF CALIFORNIA OR ITS OFFICERS OR AGENTS SHALL NOT BE RESPONSIBLE FOR THE ACCURACY OR COMPLETENESS OF SCANNED COPIES OF THIS PLAN SHEET.

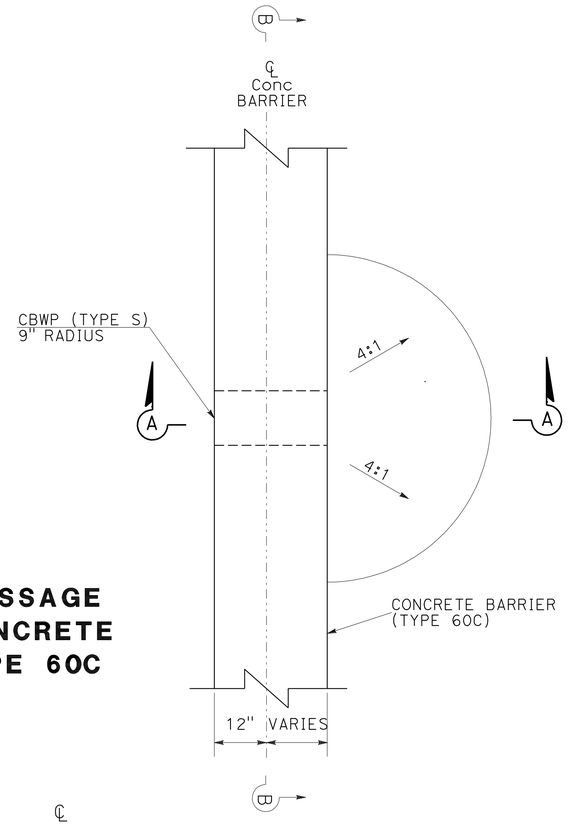

WILDLIFE PASSAGE WAY AT CONCRETE BARRIER TYPE 60C

PLAN

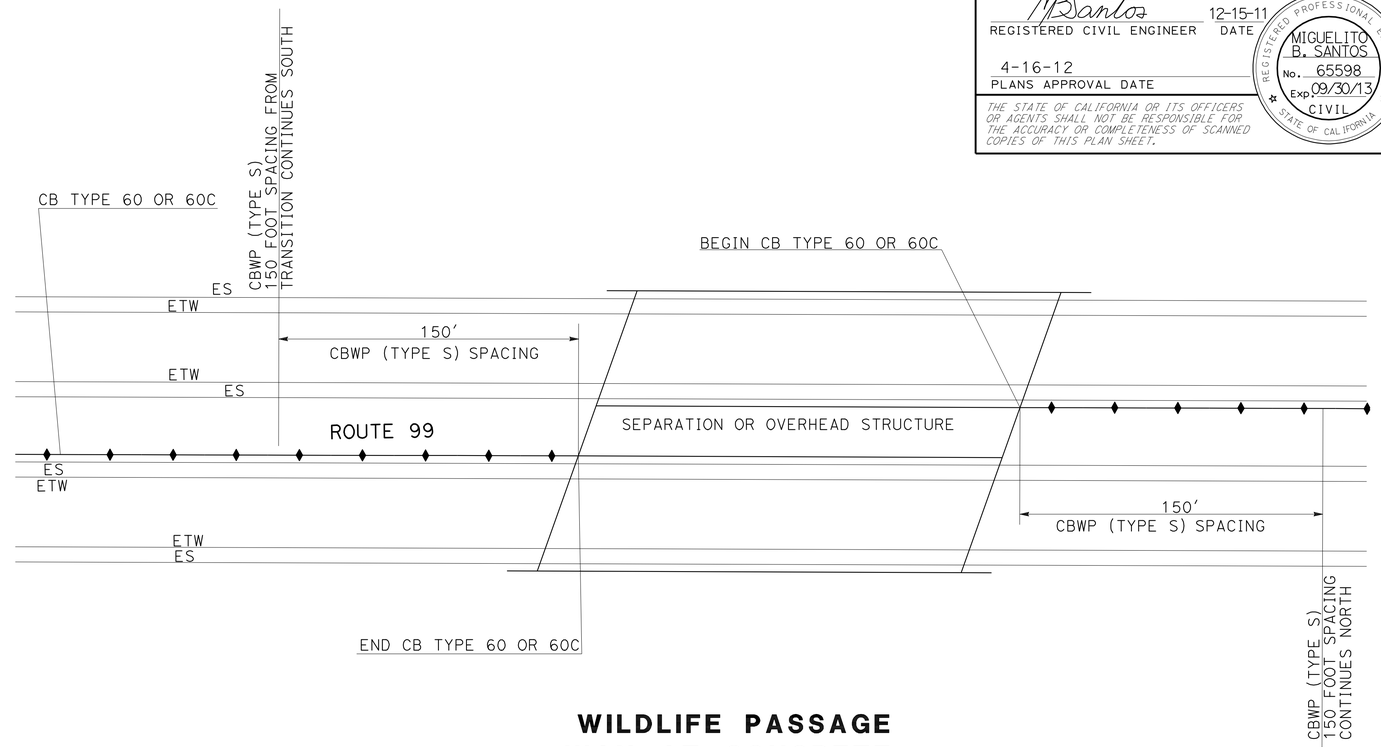

WILDLIFE PASSAGE WAY AT CONCRETE BARRIER TYPE 60

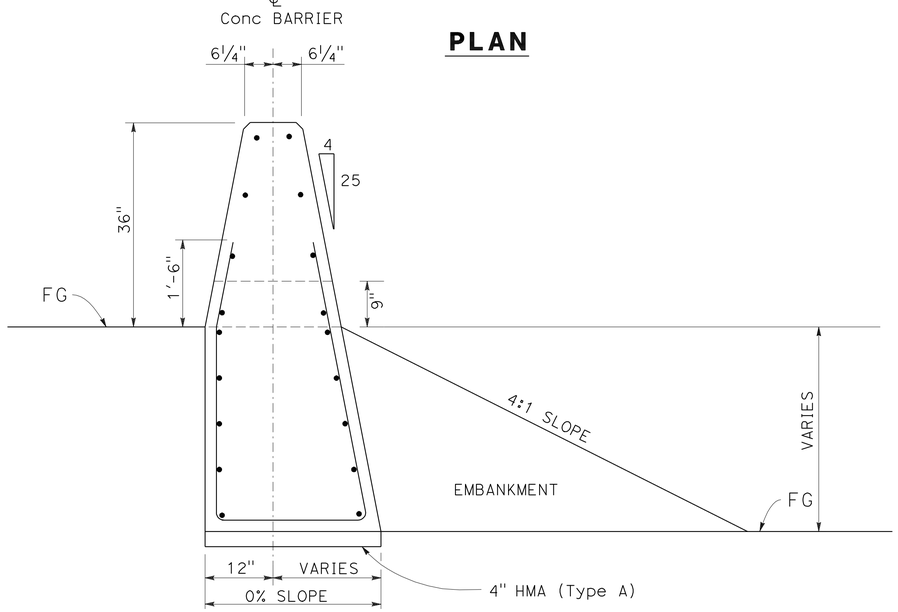

SECTION A-A
(CB TYPE 60C SHOWN)

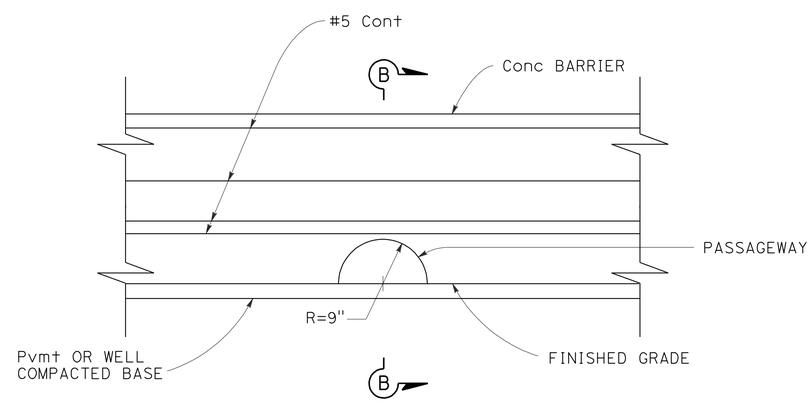

ELEVATION

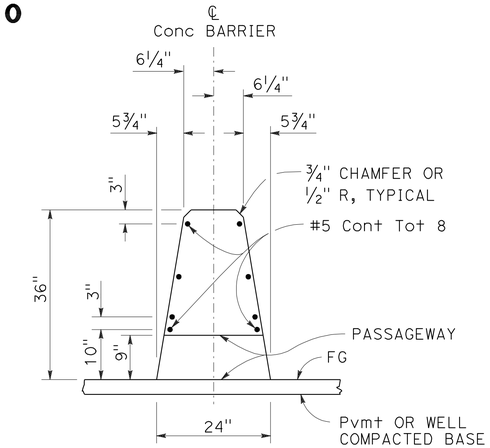

SECTION B-B
(Concrete Barrier Type 60 shown)

CONSTRUCTION DETAILS

NO SCALE

C-6

STATE OF CALIFORNIA - DEPARTMENT OF TRANSPORTATION
Caltrans® DESIGN

FUNCTIONAL SUPERVISOR: GURBHAY BRAR
CALCULATED-DESIGNED BY: MIGUELITO SANTOS
CHECKED BY: DAVID VELAZCO
REVISED BY
DATE REVISED

LAST REVISION 12-19-11
DATE PLOTTED => 19-APR-2012
TIME PLOTTED => 13:01

Dist	COUNTY	ROUTE	POST MILES TOTAL PROJECT	SHEET No.	TOTAL SHEETS
06	Tul	99	R37.3/41.3	40	346

REGISTERED CIVIL ENGINEER — DATE 12-15-11

4-16-12
PLANS APPROVAL DATE

REGISTERED PROFESSIONAL ENGINEER MIGUELITO B. SANTOS No. 65598 Exp. 09/30/13 CIVIL STATE OF CALIFORNIA

THE STATE OF CALIFORNIA OR ITS OFFICERS OR AGENTS SHALL NOT BE RESPONSIBLE FOR THE ACCURACY OR COMPLETENESS OF SCANNED COPIES OF THIS PLAN SHEET.

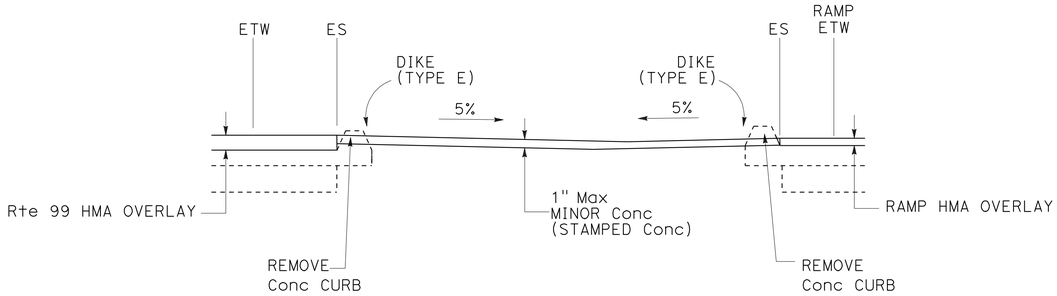

SECTION A-A

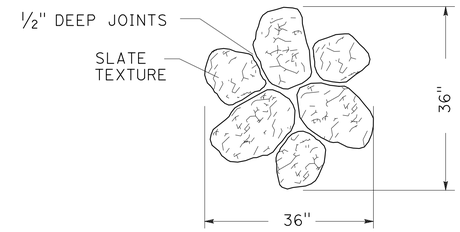

PLAN
RANDOM STONE PATTERN
(ALL LOCATIONS)

* BRICKFORM (CREATIVE IMAGE TEXTURE MATS TM-200)

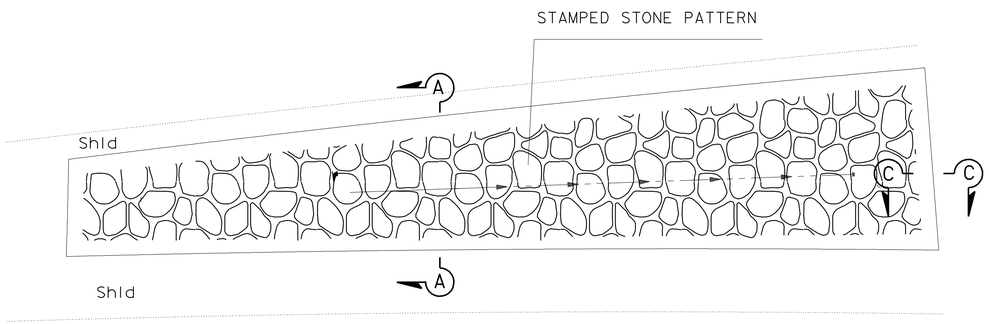

PLAN

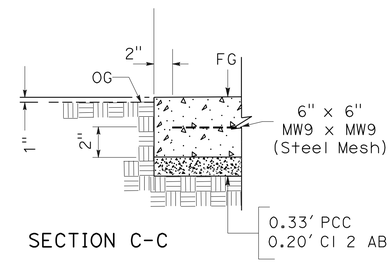

SECTION C-C

MINOR Conc (STAMPED Conc) TYPICAL ROUTE 99/198 INTERCHANGE GORE DETAILS

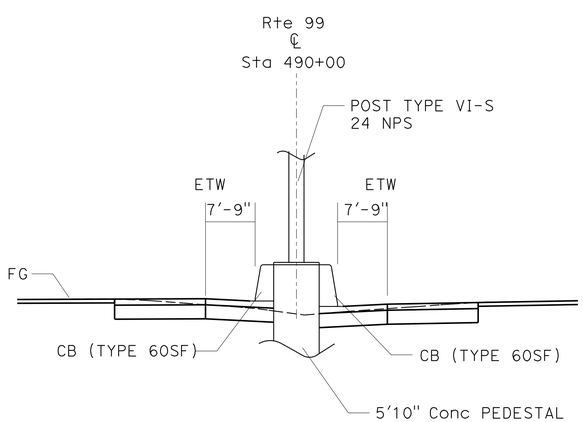

SECTION B-B

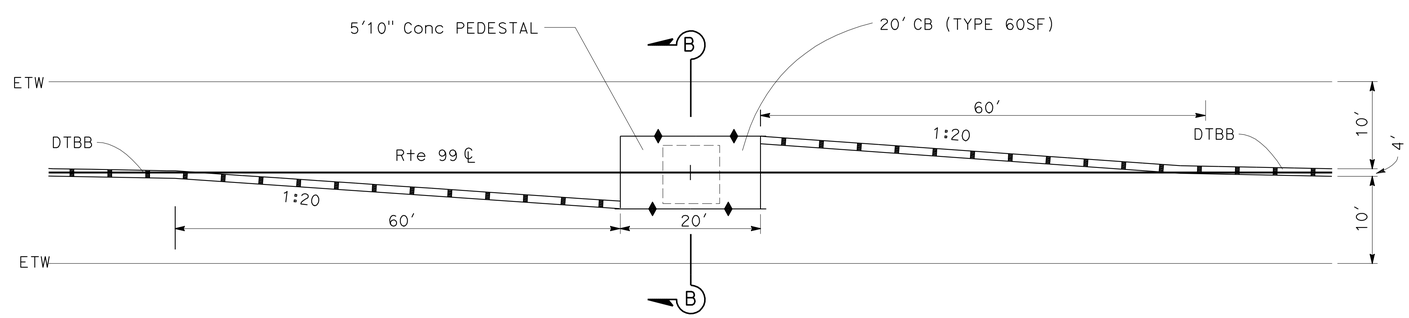

PLAN

MEDIAN BARRIER AT STATION 490+00

CONSTRUCTION DETAILS

NO SCALE

C-7

STATE OF CALIFORNIA - DEPARTMENT OF TRANSPORTATION
Caltrans DESIGN

FUNCTIONAL SUPERVISOR: GURBHAY BRAR
CALCULATED-DESIGNED BY: MIGUELITO SANTOS
CHECKED BY: DAVID VELAZCO
REVISED BY
DATE REVISED

LAST REVISION 12-19-11
DATE PLOTTED => 19-APR-2012
TIME PLOTTED => 13:03

Dist	COUNTY	ROUTE	POST MILES TOTAL PROJECT	SHEET No.	TOTAL SHEETS
06	Tul	99	R37.3/41.3	41	346

LICENSED LANDSCAPE ARCHITECT

4-16-12
PLANS APPROVAL DATE

LICENSED LANDSCAPE ARCHITECT MICHAEL W. MILLS No. 4178 Expiration Date 11/30/12 Renewal Date 12/13/11 Date STATE OF CALIFORNIA

THE STATE OF CALIFORNIA OR ITS OFFICERS OR AGENTS SHALL NOT BE RESPONSIBLE FOR THE ACCURACY OR COMPLETENESS OF SCANNED COPIES OF THIS PLAN SHEET.

EROSION CONTROL QUANTITIES

LOCATION		EROSION CONTROL (BONDED FIBER MATRIX)	EROSION CONTROL (COMPOST BLANKET)	FIBER ROLLS	(N) BONDED FIBER	(N) PURE LIVE SEED (SLOPE MEASUREMENT)	(N) FERTILIZER
		ACRE	CY	LF	LB	LB	LB
350+00.00 TO 403+25.37 Rte 99	MEDIAN	4.1	-	-	2050.0	172.5	4100.0
404+36.83 TO 429+93.70 Rte 99	MEDIAN	2.5	-	-	1250.0	102.9	2500.0
431+69.77 TO 442+75.45 Rte 99	MEDIAN	1.1	-	-	550.0	44.8	1100.0
444+26.27 TO 468+36.31 Rte 99	MEDIAN	1.5	-	-	750.0	63.5	1500.0
392+93.47 TO 409+03.82 R1	Lt, Rt	-	141.9	-	-	88.4	-
410+59.71 TO 417+59.89 Rte 99	Lt	-	48.6	-	-	30.3	-
451+29.58 TO 524+62.49 Rte 99	Rt	-	630.8	-	-	393.0	-
454+87.12 TO 529+67.80 Rte 99	Lt	-	629.0	-	-	391.8	-
480+57.42 TO 484+58.01 Rte 99	BASIN	-	111.9	-	-	69.7	-
401+24.10 Rte 99	Lt	-	-	180.9	-	-	-
401+24.10 Rte 99	MEDIAN	-	-	301.8	-	-	-
403+25.37 Rte 99	Rt	-	-	169.5	-	-	-
404+36.83 Rte 99	Lt	-	-	108.8	-	-	-
404+36.83 Rte 99	MEDIAN	-	-	303.6	-	-	-
406+37.84 Rte 99	Rt	-	-	198.0	-	-	-
429+45.67 Rte 99	Rt	-	-	120.7	-	-	-
429+45.67 Rte 99	MEDIAN	-	-	126.3	-	-	-
429+93.70 Rte 99	Lt	-	-	115.9	-	-	-
431+69.77 Rte 99	Rt	-	-	121.2	-	-	-
431+69.77 Rte 99	MEDIAN	-	-	128.5	-	-	-
432+15.13 Rte 99	Lt	-	-	99.0	-	-	-
442+20.27 Rte 99	Rt	-	-	109.1	-	-	-
442+20.27 Rte 99	MEDIAN	-	-	156.3	-	-	-
442+75.45 Rte 99	Lt	-	-	105.9	-	-	-
444+26.27 Rte 99	Rt	-	-	76.9	-	-	-
444+26.27 Rte 99	MEDIAN	-	-	154.1	-	-	-
444+75.45 Rte 99	Lt	-	-	103.8	-	-	-
TOTAL		9.2	1562.2	2680.2			

(N) - NOT A SEPARATE PAY ITEM, FOR INFORMATION ONLY

REMOVE EXISTING VEGETATION

LOCATION	(N) TREES	(N) OLEANDER
	EA	LF
5.41' Lt Rte 99 459+52.34	1	
9.46' Lt Rte 99 460+01.92	1	
75.89' Rt Rte 99 465+81.34	1	
81.09' Lt Rte 99 471+70.78	1	
75.50' Rt Rte 99 473+22.77	1	
84.72' Rt Rte 99 475+16.35	1	
89.00' Rt Rte 99 475+92.42	1	
73.10' Rt Rte 99 477+36.87	1	
72.37' Rt Rte 99 477+56.91	1	
MEDIAN Rte 99 460+00 TO 564+00		9294

(N) - NOT A SEPARATE PAY ITEM, FOR INFORMATION ONLY

IRRIGATION CROSSOVERS

LOCATION		SIDE		CONDUIT TYPE (5)		(N) WATER LINE CROSSOVER	(N) SPRINKLER CONTROL CROSSOVER
LINE	STATION	Lt	Rt	SIZE (INCH) 8		SIZE (INCH)	SIZE (INCH)
				LENGTH (LF)			
R-2	423+00.00	-	-	34		3	2
R-3	420+75.00	-	-	34		3	2
R-4	431+24.96	-	-	34		3	2
R-5	453+00.00	-	-	34		3	2
R-6	452+00.00	-	-	57		3	2
R-7	450+31.70	-	-	34		3	2
TOTAL				227			

(N) - NOT A SEPARATE PAY ITEM FOR INFORMATION ONLY
X - DENOTES REQUIREMENT

CONDUIT TYPE:

(Applicable when circled below and shown under the 'CONDUIT TYPE' column heading)

1 BITUMINOUS COATED CORRUGATED STEEL PIPE (0.064 INCH THICK)
2 CORRUGATED STEEL PIPE (0.064 INCH THICK)
3 CORRUGATED HIGH DENSITY POLYETHYLENE PIPE
4 ALTERNATIVE CONDUIT
(5) WELDED STEEL PIPE

EROSION CONTROL QUANTITIES

ECQ-1

STATE OF CALIFORNIA - DEPARTMENT OF TRANSPORTATION
Caltrans® LANDSCAPE ARCHITECTURE
SENIOR LANDSCAPE ARCHITECT: ELBERT COX
CALCULATED-DESIGNED BY: MICHAEL MILLS
CHECKED BY: CHARLES LA RUE
REVISED BY
DATE REVISED

LAST REVISION 12-13-11
DATE PLOTTED => 24-APR-2012
TIME PLOTTED => 07:01

Dist	COUNTY	ROUTE	POST MILES TOTAL PROJECT	SHEET No.	TOTAL SHEETS
06	Tul	99	R37.3/41.3	42	346

LICENSED LANDSCAPE ARCHITECT

4-16-12
PLANS APPROVAL DATE

LICENSED LANDSCAPE ARCHITECT MICHAEL W. MILLS No. 4178 Expiration Date 11/30/12 Renewal Date 12/13/11 Date STATE OF CALIFORNIA

THE STATE OF CALIFORNIA OR ITS OFFICERS OR AGENTS SHALL NOT BE RESPONSIBLE FOR THE ACCURACY OR COMPLETENESS OF SCANNED COPIES OF THIS PLAN SHEET.

TEMPORARY FENCE (TYPE ESA)

LOCATION	SHEET	LF
42.5′ Lt R-7 450+81.39	PR-1	160
29.0′ Lt R-7 452+00.00	PR-1	160
78.3′ Rt Rte 99 480+57.70	PR-3	130
78.1′ Rt Rte 99 481+99.09	PR-3	130
72.0′ Rt Rte 99 484+27.17	PR-3	113
80.6′ Rt Rte 99 484+53.34	PR-3	75
74.5′ Rt Rte 99 485+75.67	PR-3	136
78.8′ Rt Rte 99 486+45.60	PR-3	128
81.9′ Rt Rte 99 488+38.72	PR-3	122
78.3′ Rt Rte 99 490+49.91	PR-4	130
81.3′ Rt Rte 99 492+73.34	PR-4	112
81.8′ Rt Rte 99 517+64.66	PR-6	124
78.7′ Rt Rte 99 521+43.57	PR-6	126
81.0′ Rt Rte 99 523+18.27	PR-6	112
96.1′ Rt Rte 99 524+52.75	PR-6	112
101.5′ Rt Rte 99 546+03.48	PR-8	112
94.3′ Lt Rte 99 547+22.56	PR-8	160
98.7′ Rt Rte 99 547+41.29	PR-8	142
98.8′ Rt Rte 99 548+33.65	PR-8	144
106.1′ Rt Rte 99 549+57.18	PR-8	132
90.3′ Rt Rte 99 550+47.04	PR-8	116
88.5′ Rt Rte 99 550+80.50	PR-8	116
TOTAL		2,792

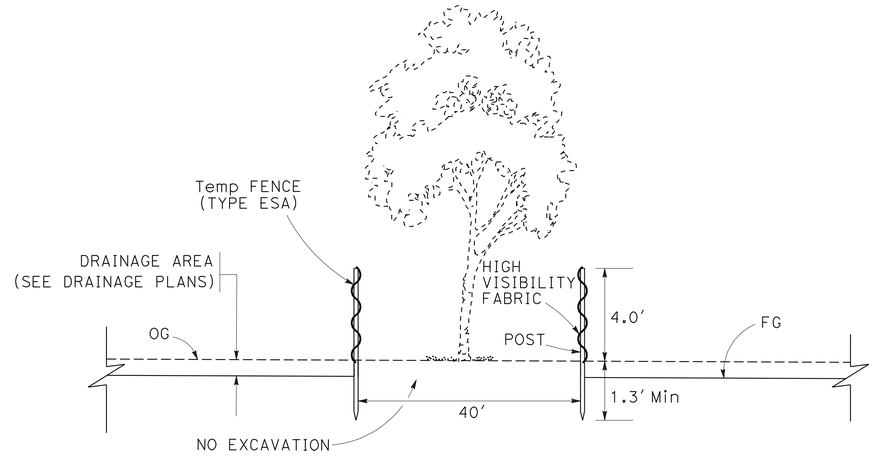

SECTION A-A

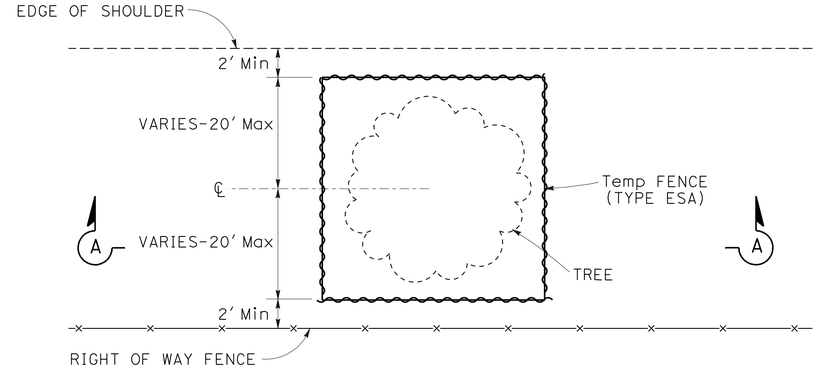

PLAN

Temp FENCE (TYPE ESA)

EROSION CONTROL QUANTITIES

ECQ-2

STATE OF CALIFORNIA - DEPARTMENT OF TRANSPORTATION
Caltrans® LANDSCAPE ARCHITECTURE

SENIOR LANDSCAPE ARCHITECT: ELBERT COX
CALCULATED-DESIGNED BY: MICHAEL MILLS
CHECKED BY: CHARLES LA RUE
REVISED BY
DATE REVISED

LAST REVISION 12-13-11
DATE PLOTTED => 19-APR-2012
TIME PLOTTED => 11:00

Dist	COUNTY	ROUTE	POST MILES TOTAL PROJECT	SHEET No.	TOTAL SHEETS
06	Tul	99	R37.3/41.3	43	346

REGISTERED CIVIL ENGINEER 12-15-11 DATE

4-16-12
PLANS APPROVAL DATE

REGISTERED PROFESSIONAL ENGINEER MIGUELITO B. SANTOS No. 65598 Exp. 09/30/13 CIVIL STATE OF CALIFORNIA

THE STATE OF CALIFORNIA OR ITS OFFICERS OR AGENTS SHALL NOT BE RESPONSIBLE FOR THE ACCURACY OR COMPLETENESS OF SCANNED COPIES OF THIS PLAN SHEET.

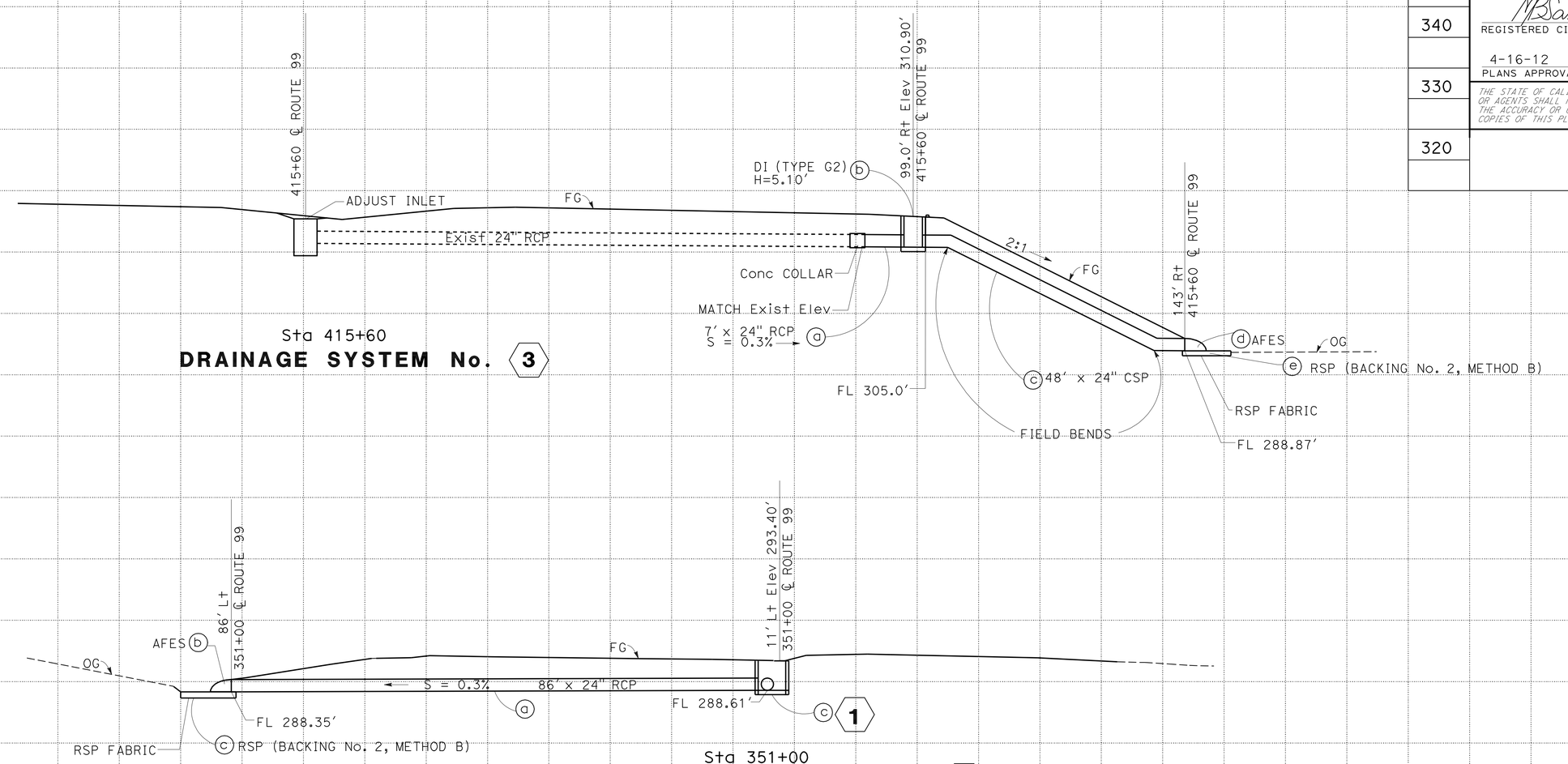

Sta 415+60

DRAINAGE SYSTEM No. 3

Sta 351+00

DRAINAGE SYSTEM No. 2

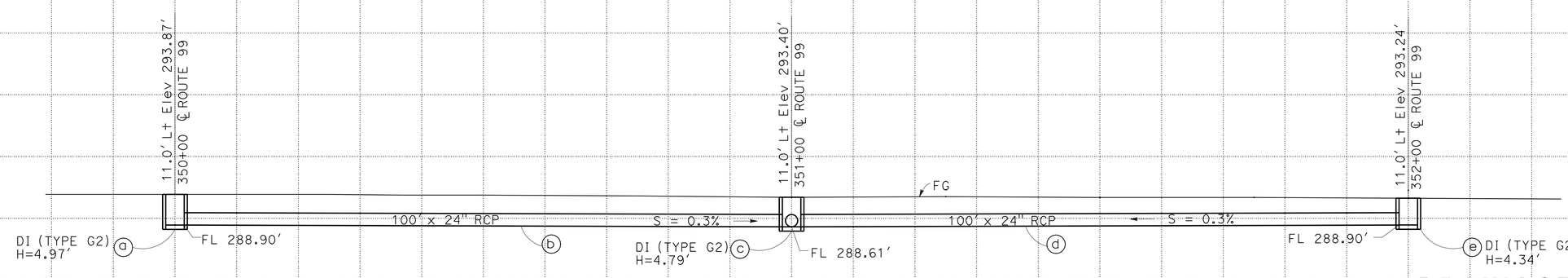

Sta 350+00 to Sta 352+00

DRAINAGE SYSTEM No. 1

DRAINAGE PROFILES

SCALE: Horiz 1" = 10'
Vert 1" = 10'

DP-1

REVISED BY | DATE REVISED
DAVID VELAZCO | MIGUELITO SANTOS
CALCULATED-DESIGNED BY | CHECKED BY
FUNCTIONAL SUPERVISOR: GURBHAY BRAR
STATE OF CALIFORNIA - DEPARTMENT OF TRANSPORTATION
DESIGN
Caltrans

LAST REVISION 12-19-11 | DATE PLOTTED => 19-APR-2012 | TIME PLOTTED => 11:00

Dist	COUNTY	ROUTE	POST MILES TOTAL PROJECT	SHEET No.	TOTAL SHEETS
06	Tul	99	R37.3/41.3	44	346

REGISTERED CIVIL ENGINEER 12-15-11 DATE

4-16-12
PLANS APPROVAL DATE

REGISTERED PROFESSIONAL ENGINEER MIGUELITO B. SANTOS No. 65598 Exp. 09/30/13 CIVIL STATE OF CALIFORNIA

THE STATE OF CALIFORNIA OR ITS OFFICERS OR AGENTS SHALL NOT BE RESPONSIBLE FOR THE ACCURACY OR COMPLETENESS OF SCANNED COPIES OF THIS PLAN SHEET.

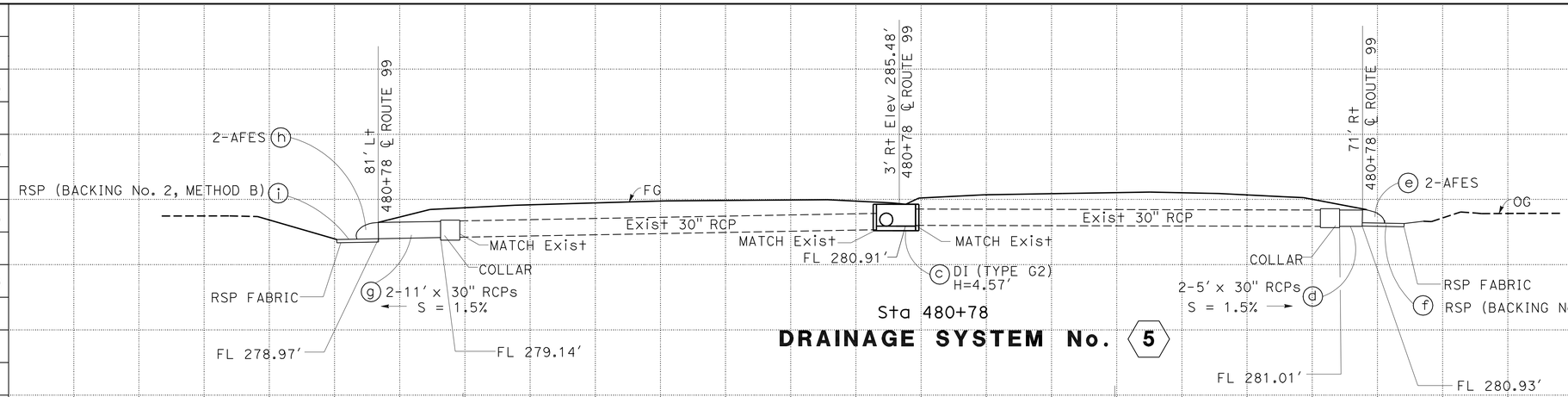

Sta 480+78

DRAINAGE SYSTEM No. 5

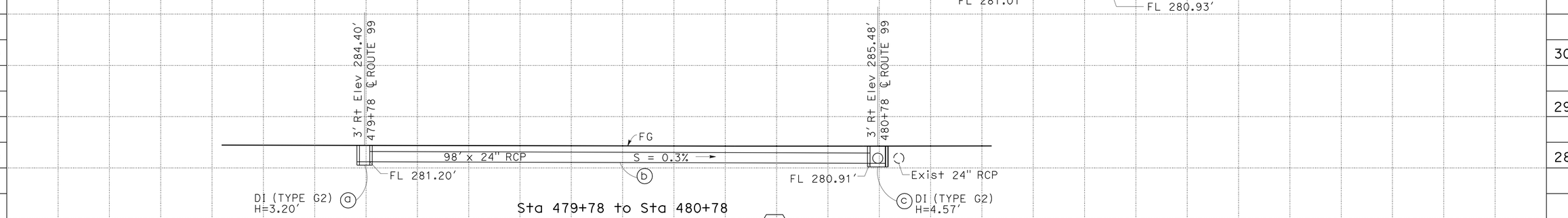

Sta 479+78 to Sta 480+78

DRAINAGE SYSTEM No. 5

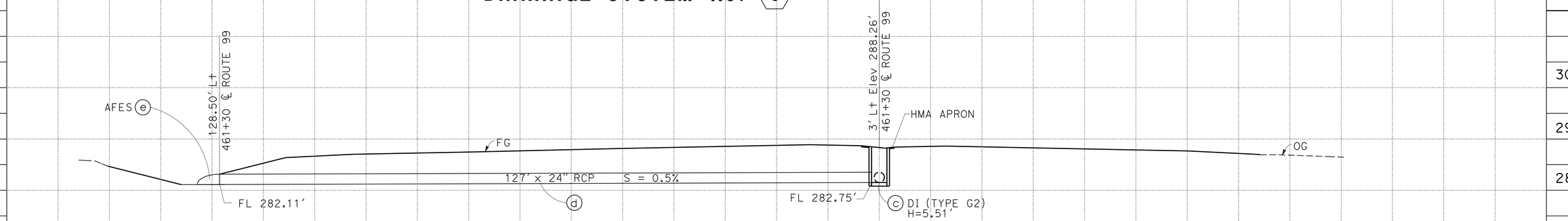

Sta 461+30

DRAINAGE SYSTEM No. 4

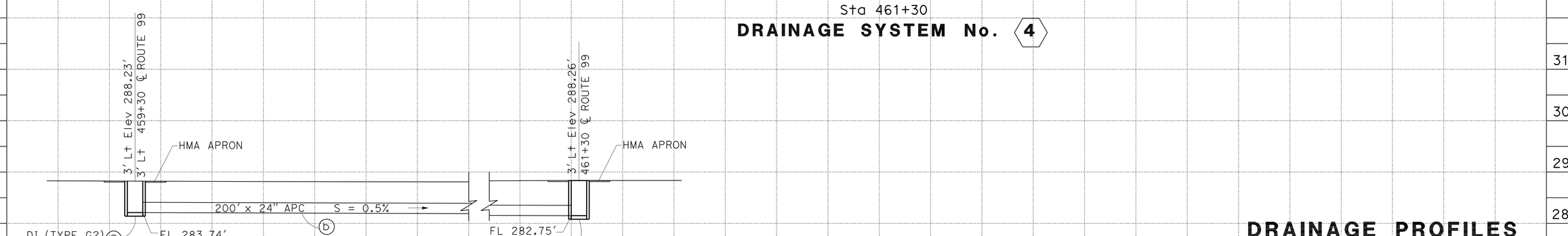

Sta 459+30 to Sta 461+30

DRAINAGE SYSTEM No. 4

DRAINAGE PROFILES

SCALE: Horiz 1" = 10'
Vert 1" = 10'

DP-2

STATE OF CALIFORNIA - DEPARTMENT OF TRANSPORTATION
Caltrans
DESIGN

FUNCTIONAL SUPERVISOR: GURBHAY BRAR
CALCULATED-DESIGNED BY: DAVID VELAZCO
CHECKED BY: MIGUELITO SANTOS
REVISED BY
DATE REVISED

LAST REVISION 12-19-11 DATE PLOTTED => 19-APR-2012 TIME PLOTTED => 11:00

Dist	COUNTY	ROUTE	POST MILES TOTAL PROJECT	SHEET No.	TOTAL SHEETS
06	Tul	99	R37.3/41.3	45	346

MBSantos 12-15-11
REGISTERED CIVIL ENGINEER DATE

4-16-12
PLANS APPROVAL DATE

REGISTERED PROFESSIONAL ENGINEER MIGUELITO B. SANTOS No. 65598 Exp. 09/30/13 CIVIL STATE OF CALIFORNIA

THE STATE OF CALIFORNIA OR ITS OFFICERS OR AGENTS SHALL NOT BE RESPONSIBLE FOR THE ACCURACY OR COMPLETENESS OF SCANNED COPIES OF THIS PLAN SHEET.

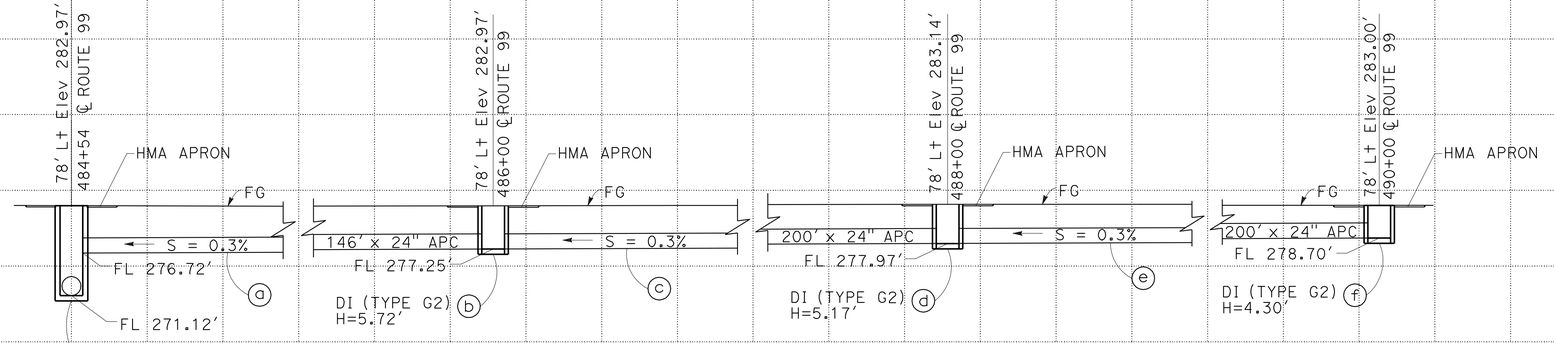

Sta 484+54 TO Sta 490+00

DRAINAGE SYSTEM No. 8

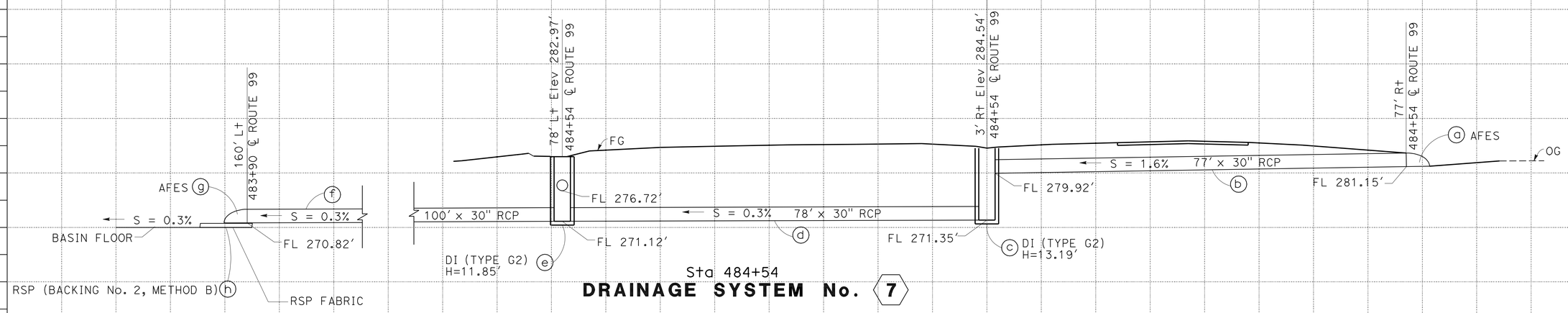

Sta 484+54

DRAINAGE SYSTEM No. 7

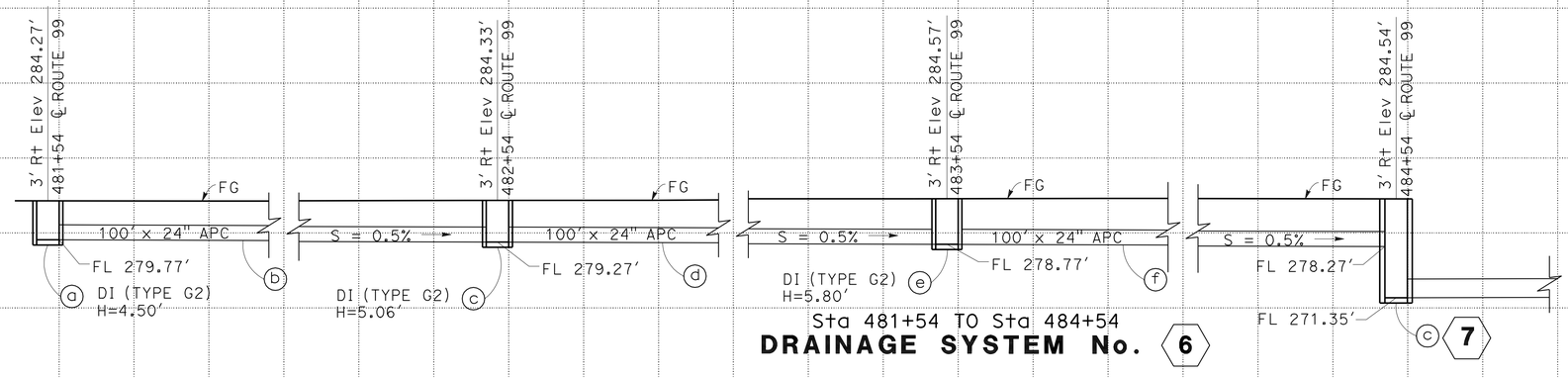

Sta 481+54 TO Sta 484+54

DRAINAGE SYSTEM No. 6

DRAINAGE PROFILES

SCALE: Horiz 1" = 10'
Vert 1" = 10'

DP-3

DAVID VELAZCO
MIGUELITO SANTOS
GURBHAY BRAR
DESIGN

REVISED BY | DATE REVISED
CALCULATED-DESIGNED BY | CHECKED BY
FUNCTIONAL SUPERVISOR

STATE OF CALIFORNIA - DEPARTMENT OF TRANSPORTATION
Caltrans

LAST REVISION 12-19-11 | DATE PLOTTED => 19-APR-2012 | TIME PLOTTED => 11:00

Dist	COUNTY	ROUTE	POST MILES TOTAL PROJECT	SHEET No.	TOTAL SHEETS
06	Tul	99	R37.3/41.3	46	346

REGISTERED CIVIL ENGINEER — DATE 12-15-11

4-16-12
PLANS APPROVAL DATE

REGISTERED PROFESSIONAL ENGINEER MIGUELITO B. SANTOS No. 65598 Exp. 09/30/13 CIVIL STATE OF CALIFORNIA

THE STATE OF CALIFORNIA OR ITS OFFICERS OR AGENTS SHALL NOT BE RESPONSIBLE FOR THE ACCURACY OR COMPLETENESS OF SCANNED COPIES OF THIS PLAN SHEET.

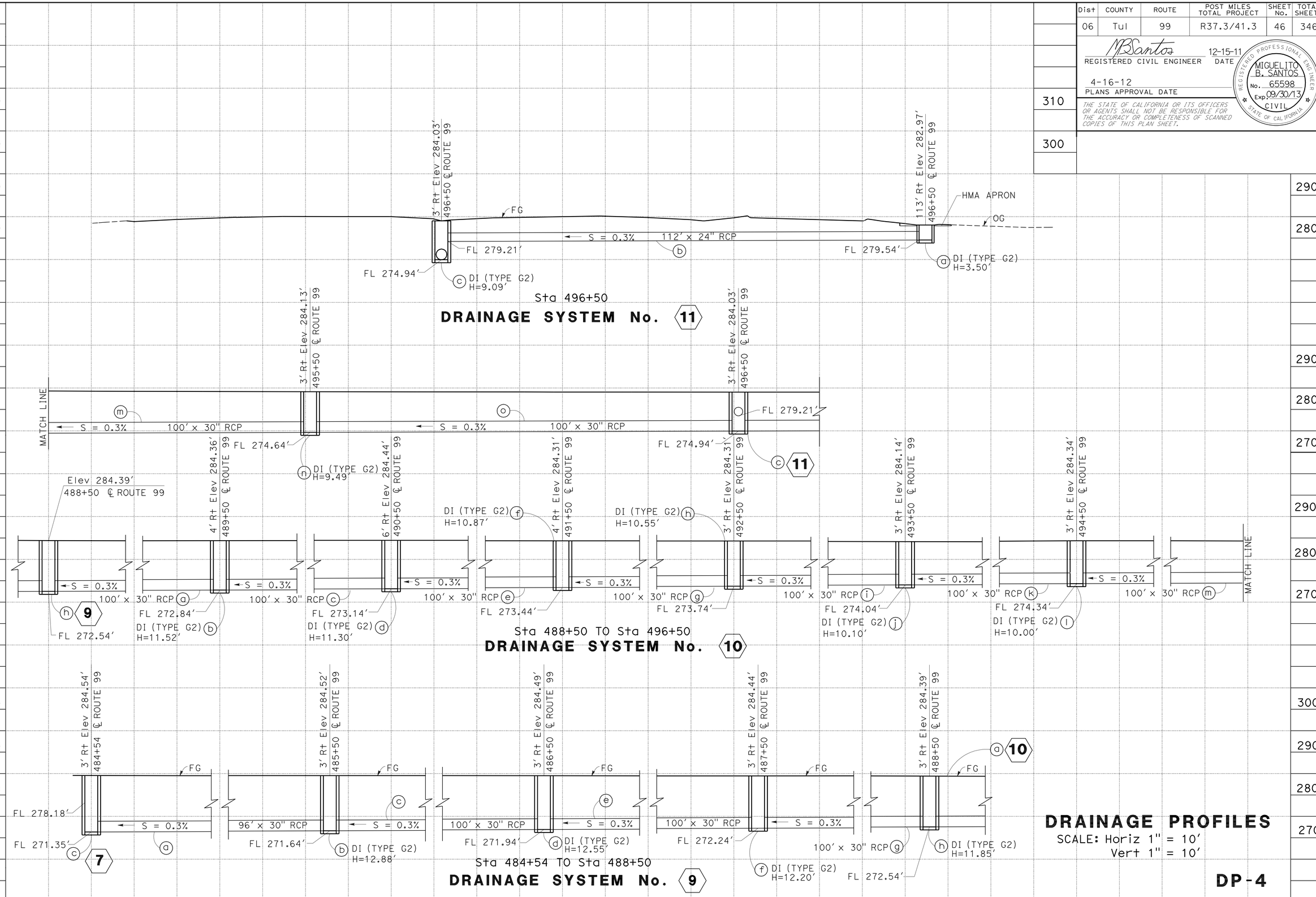

REVISED BY | DATE REVISED
DAVID VELAZCO | MIGUELITO SANTOS
CALCULATED-DESIGNED BY | CHECKED BY
FUNCTIONAL SUPERVISOR: GURBHAY BRAR
STATE OF CALIFORNIA - DEPARTMENT OF TRANSPORTATION
Caltrans DESIGN

LAST REVISION 12-19-11 | DATE PLOTTED => 19-APR-2012 | TIME PLOTTED => 11:00

Dist	COUNTY	ROUTE	POST MILES TOTAL PROJECT	SHEET No.	TOTAL SHEETS
06	Tul	99	R37.3/41.3	47	346

MBSantos 12-15-11
REGISTERED CIVIL ENGINEER DATE

4-16-12
PLANS APPROVAL DATE

REGISTERED PROFESSIONAL ENGINEER MIGUELITO B. SANTOS No. 65598 Exp. 09/30/13 CIVIL STATE OF CALIFORNIA

THE STATE OF CALIFORNIA OR ITS OFFICERS OR AGENTS SHALL NOT BE RESPONSIBLE FOR THE ACCURACY OR COMPLETENESS OF SCANNED COPIES OF THIS PLAN SHEET.

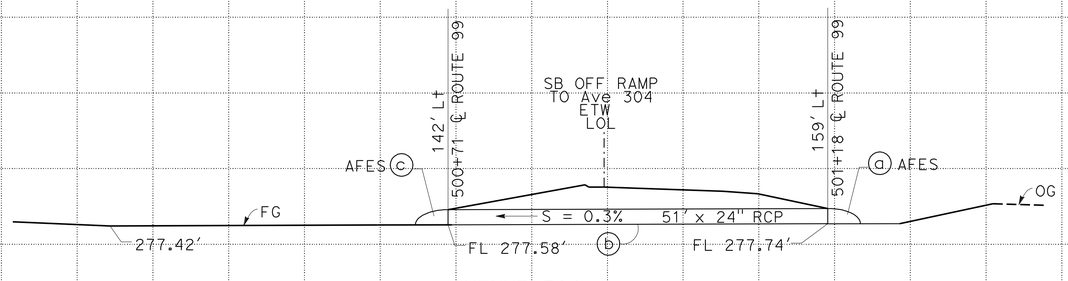

AVENUE 304
DRAINAGE SYSTEM No. 15

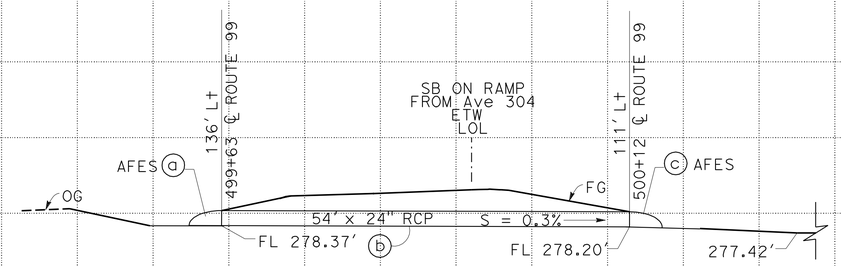

AVENUE 304
DRAINAGE SYSTEM No. 14

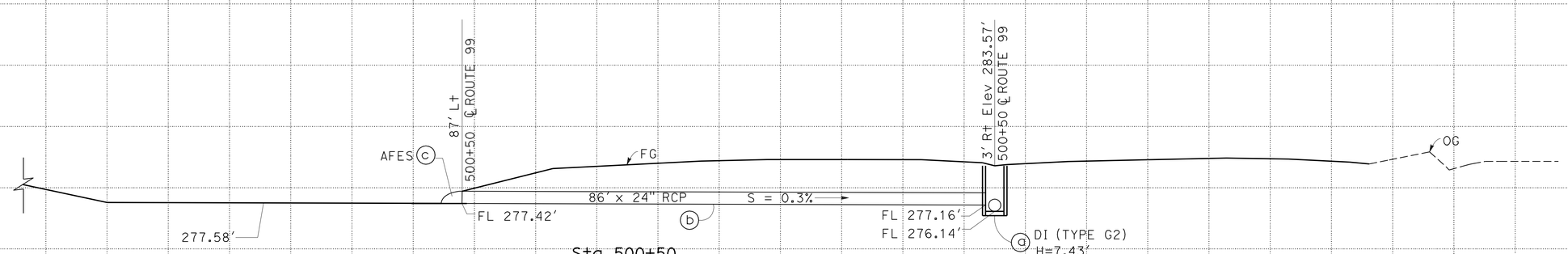

Sta 500+50
DRAINAGE SYSTEM No. 13

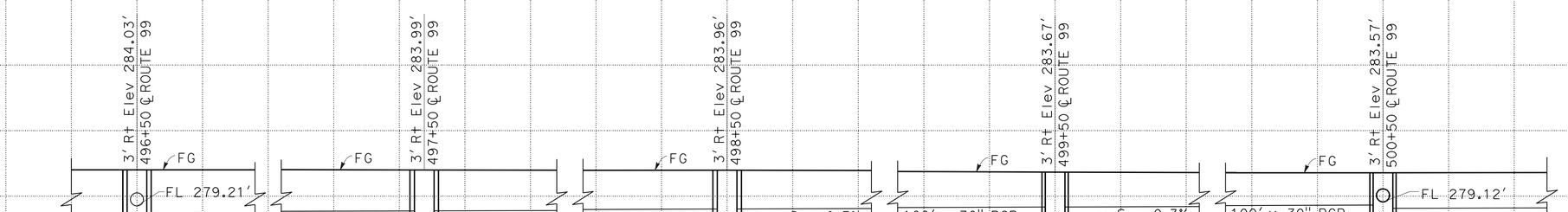

Sta 496+50 TO Sta 500+50
DRAINAGE SYSTEM No. 12

DRAINAGE PROFILES
SCALE: Horiz 1" = 10'
Vert 1" = 10'

DP-5

REVISED BY | DATE REVISED
DAVID VELAZCO | MIGUELITO SANTOS
CALCULATED-DESIGNED BY | CHECKED BY
FUNCTIONAL SUPERVISOR: GURBHAY BRAR
STATE OF CALIFORNIA - DEPARTMENT OF TRANSPORTATION
Caltrans DESIGN

LAST REVISION 12-19-11 | DATE PLOTTED => 19-APR-2012 | TIME PLOTTED => 11:00

Dist	COUNTY	ROUTE	POST MILES TOTAL PROJECT	SHEET No.	TOTAL SHEETS
06	Tul	99	R37.3/41.3	48	346

REGISTERED CIVIL ENGINEER — DATE 12-15-11

4-16-12
PLANS APPROVAL DATE

REGISTERED PROFESSIONAL ENGINEER — MIGUELITO B. SANTOS — No. 65598 — Exp. 09/30/13 — CIVIL — STATE OF CALIFORNIA

THE STATE OF CALIFORNIA OR ITS OFFICERS OR AGENTS SHALL NOT BE RESPONSIBLE FOR THE ACCURACY OR COMPLETENESS OF SCANNED COPIES OF THIS PLAN SHEET.

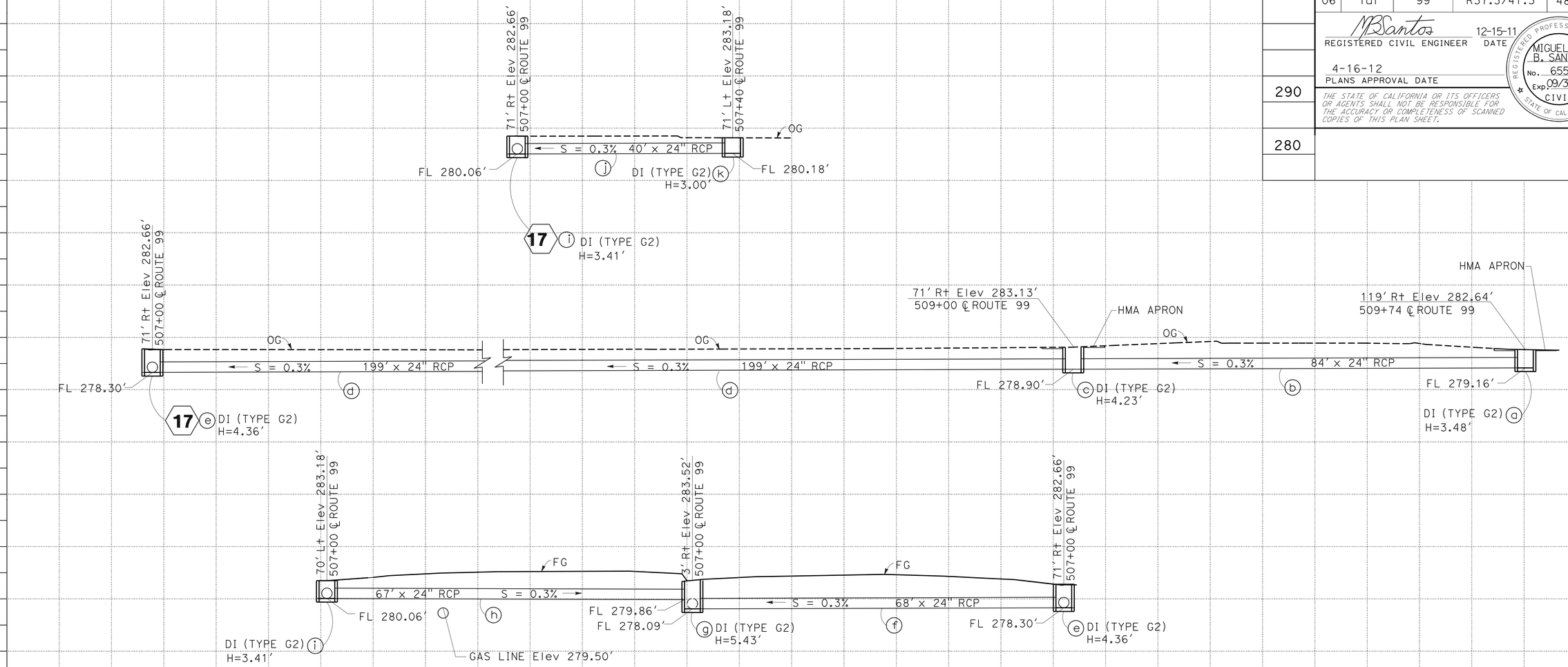

Sta 507+00
DRAINAGE SYSTEM No. 17

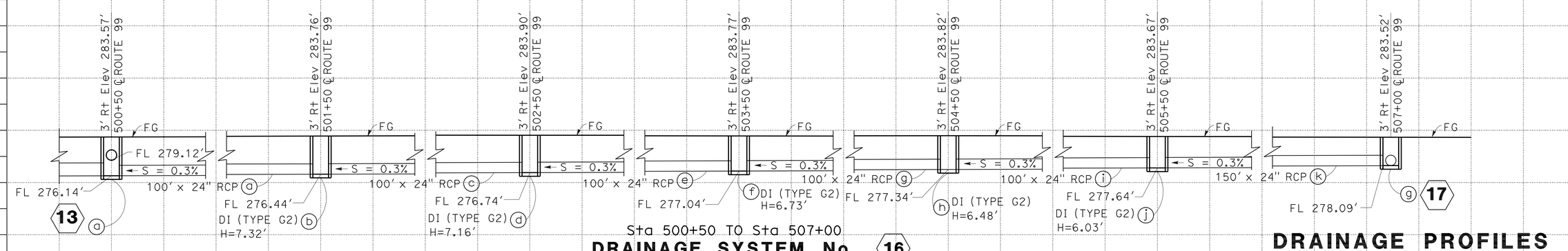

Sta 500+50 TO Sta 507+00
DRAINAGE SYSTEM No. 16

DRAINAGE PROFILES

SCALE: Horiz 1" = 10'
Vert 1" = 10'

DP-6

STATE OF CALIFORNIA - DEPARTMENT OF TRANSPORTATION
Caltrans® DESIGN

FUNCTIONAL SUPERVISOR: GURBHAY BRAR
CALCULATED-DESIGNED BY: DAVID VELAZCO
CHECKED BY: MIGUELITO SANTOS
REVISED BY / DATE REVISED

LAST REVISION 12-19-11
DATE PLOTTED => 19-APR-2012
TIME PLOTTED => 11:00

Dist	COUNTY	ROUTE	POST MILES TOTAL PROJECT	SHEET No.	TOTAL SHEETS
06	Tul	99	R37.3/41.3	49	346

REGISTERED CIVIL ENGINEER — DATE 12-15-11

4-16-12
PLANS APPROVAL DATE

REGISTERED PROFESSIONAL ENGINEER — MIGUELITO B. SANTOS — No. 65598 — Exp. 09/30/13 — CIVIL — STATE OF CALIFORNIA

THE STATE OF CALIFORNIA OR ITS OFFICERS OR AGENTS SHALL NOT BE RESPONSIBLE FOR THE ACCURACY OR COMPLETENESS OF SCANNED COPIES OF THIS PLAN SHEET.

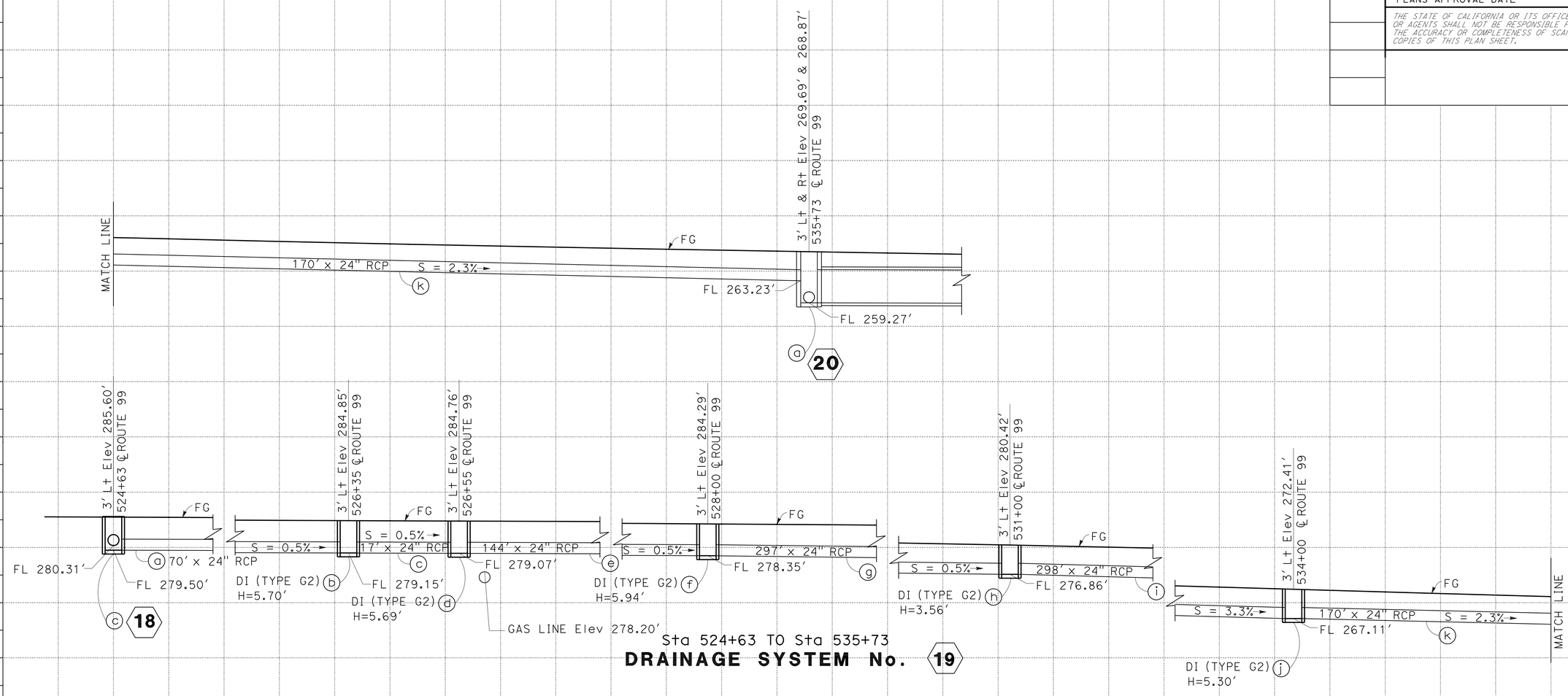

DRAINAGE PROFILES

SCALE: Horiz 1" = 10'
Vert 1" = 10'

DP-7

STATE OF CALIFORNIA - DEPARTMENT OF TRANSPORTATION
DESIGN
FUNCTIONAL SUPERVISOR: GURBHAY BRAR
CALCULATED-DESIGNED BY: DAVID VELAZCO
CHECKED BY: MIGUELITO SANTOS
REVISED BY
DATE REVISED

LAST REVISION DATE PLOTTED => 19-APR-2012
12-19-11 TIME PLOTTED => 11:00

Dist	COUNTY	ROUTE	POST MILES TOTAL PROJECT	SHEET No.	TOTAL SHEETS
06	Tul	99	R37.3/41.3	50	346

REGISTERED CIVIL ENGINEER 12-15-11 DATE

4-16-12
PLANS APPROVAL DATE

REGISTERED PROFESSIONAL ENGINEER MIGUELITO B. SANTOS No. 65598 Exp. 09/30/13 CIVIL STATE OF CALIFORNIA

THE STATE OF CALIFORNIA OR ITS OFFICERS OR AGENTS SHALL NOT BE RESPONSIBLE FOR THE ACCURACY OR COMPLETENESS OF SCANNED COPIES OF THIS PLAN SHEET.

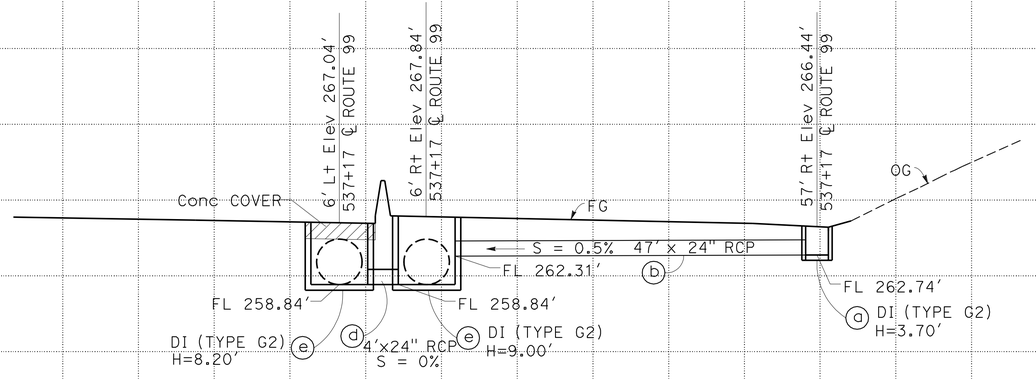

Sta 537+17
DRAINAGE SYSTEM No. 21

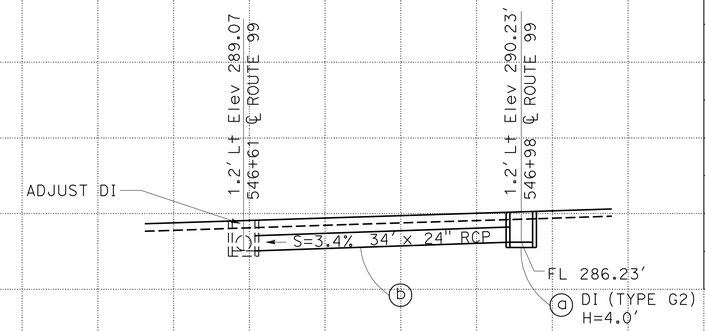

Sta 546+61 TO Sta 546+98
DRAINAGE SYSTEM No. 22

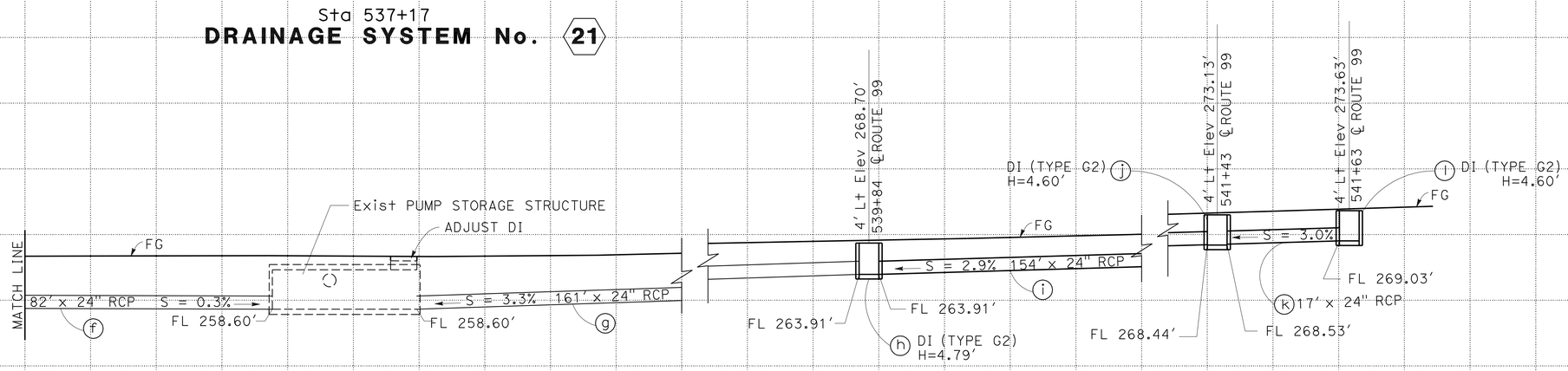

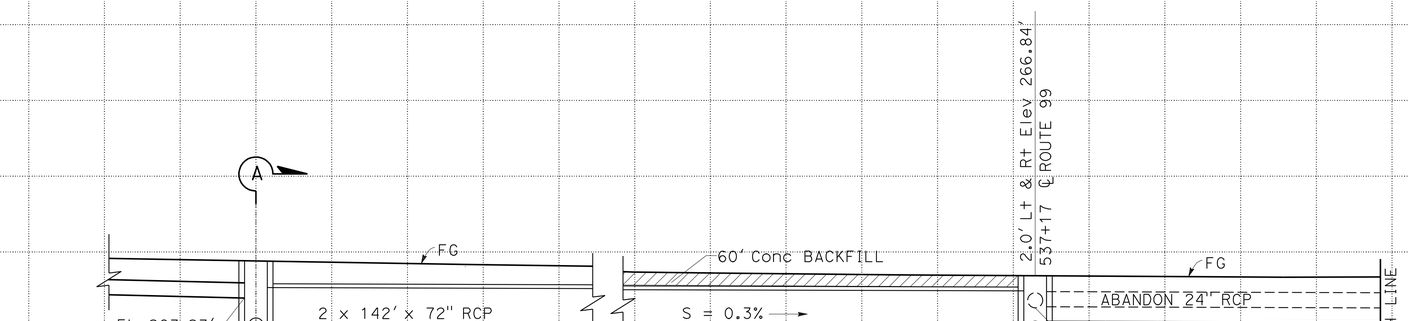

Sta 535+73 TO Sta 541+63
DRAINAGE SYSTEM No. 20

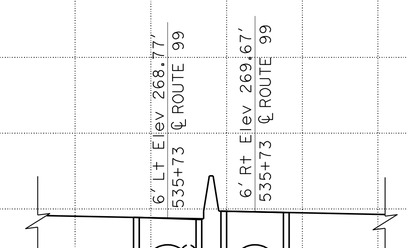

SECTION A-A

DRAINAGE PROFILES

SCALE: Horiz 1" = 10'
Vert 1" = 10'

DP-8

STATE OF CALIFORNIA - DEPARTMENT OF TRANSPORTATION
DESIGN
Caltrans

FUNCTIONAL SUPERVISOR: GURBHAY BRAR
CALCULATED-DESIGNED BY: DAVID VELAZCO
CHECKED BY: MIGUELITO SANTOS
REVISED BY
DATE REVISED

LAST REVISION 12-19-11 | DATE PLOTTED => 19-APR-2012 | TIME PLOTTED => 11:00

Dist	COUNTY	ROUTE	POST MILES TOTAL PROJECT	SHEET No.	TOTAL SHEETS
06	Tul	99	R37.3/41.3	51	346

REGISTERED CIVIL ENGINEER 12-15-11 DATE

4-16-12
PLANS APPROVAL DATE

REGISTERED PROFESSIONAL ENGINEER MIGUELITO B. SANTOS No. 65598 Exp. 09/30/13 CIVIL STATE OF CALIFORNIA

THE STATE OF CALIFORNIA OR ITS OFFICERS OR AGENTS SHALL NOT BE RESPONSIBLE FOR THE ACCURACY OR COMPLETENESS OF SCANNED COPIES OF THIS PLAN SHEET.

NOTE: EXIST INLET LOCATIONS ALSO IN MEDIAN, TO BE RAISED TO GRADE

LEGEND

Exist APRON

Exist CONCRETE

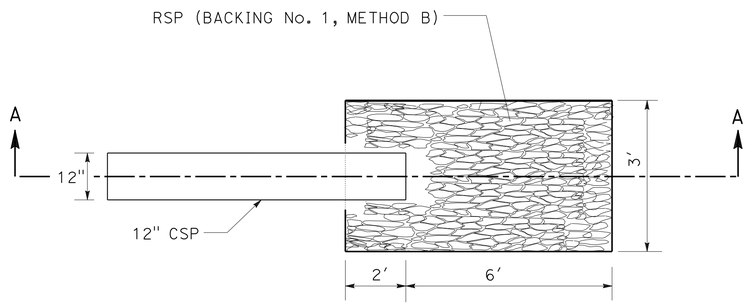

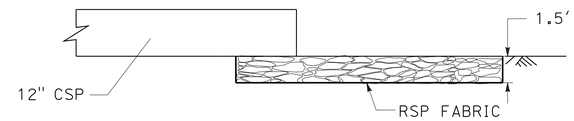

SECTION A-A

ROCK SLOPE PROTECTION FOR DOWNDRAINS

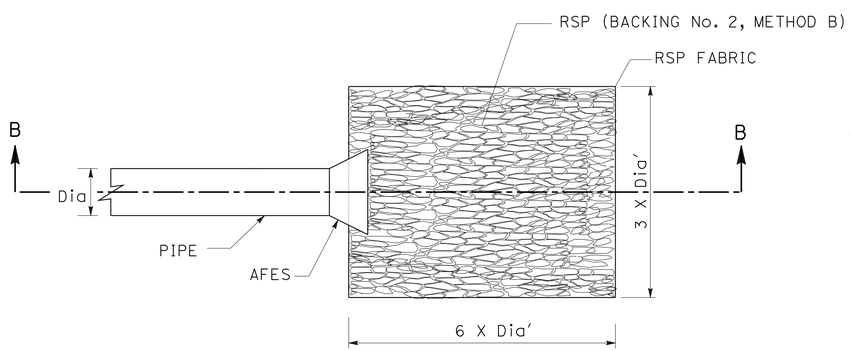

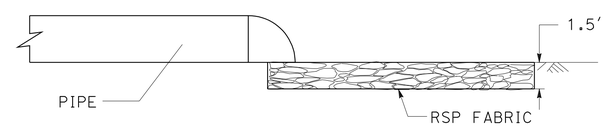

SECTION B-B

ROCK SLOPE PROTECTION

DRAINAGE DETAILS

NO SCALE

DD-1

STATE OF CALIFORNIA - DEPARTMENT OF TRANSPORTATION

Caltrans®

DESIGN

FUNCTIONAL SUPERVISOR: GURBHAY BRAR

CALCULATED-DESIGNED BY: DAVID VELAZCO

CHECKED BY: MIGUELITO SANTOS

REVISED BY

DATE REVISED

LAST REVISION 12-19-11

DATE PLOTTED => 19-APR-2012
TIME PLOTTED => 11:00

Dist	COUNTY	ROUTE	POST MILES TOTAL PROJECT	SHEET No.	TOTAL SHEETS
06	Tul	99	R37.3/41.3	52	346

REGISTERED CIVIL ENGINEER 12-15-11 DATE

4-16-12
PLANS APPROVAL DATE

REGISTERED PROFESSIONAL ENGINEER MIGUELITO B. SANTOS No. 65598 Exp. 09/30/13 CIVIL STATE OF CALIFORNIA

THE STATE OF CALIFORNIA OR ITS OFFICERS OR AGENTS SHALL NOT BE RESPONSIBLE FOR THE ACCURACY OR COMPLETENESS OF SCANNED COPIES OF THIS PLAN SHEET.

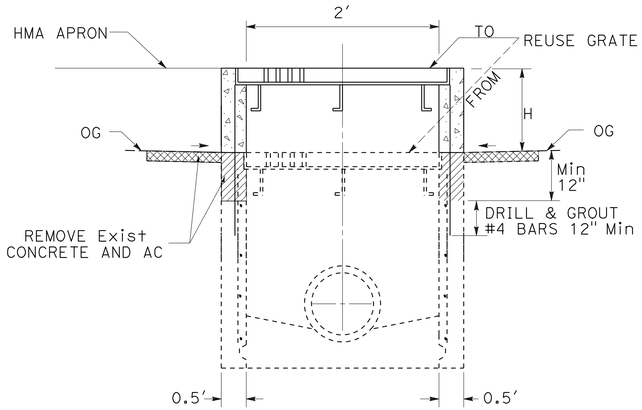

ADJUST INLET

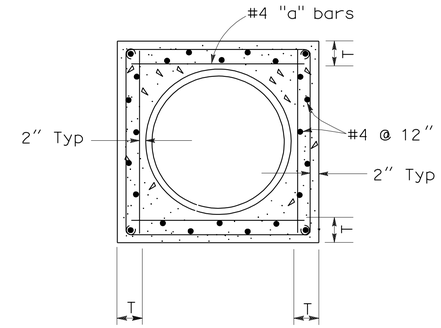

SECTION C-C

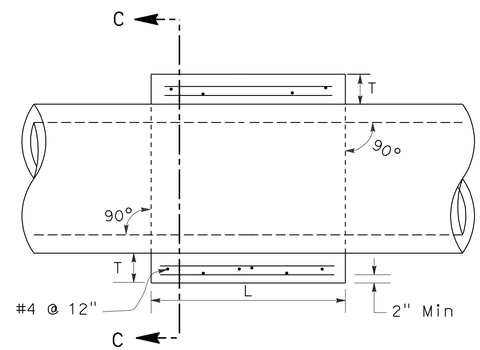

TYPICAL CONCRETE COLLAR

NOTES:

1. WHERE PIPE OF DIFFERENT DIAMETERS ARE JOINED WITH A CONCRETE COLLAR. "L" SHALL BE THOSE OF THE LARGER PIPE. D=D1 OR D2 WHICHEVER IS GREATER.
2. JOIN PIPES AT INVERTS WHERE THE SLOPE OF THE DOWNSTREAM PIPE IS GREATER THAN THE SLOPE OF THE UPSTREAM PIPE. AND JOIN PIPES AT SOFFIT WHERE THE SLOPE OF THE UPSTREAM PIPE IS GREATER THAN THE SLOPE OF THE DOWNSTREAM PIPE.
3. "b" BARS TO BE LOCKED AROUND LONGITUDUNAL REINFORCEMENT. ROTATE BARS AS NECESSARY.
4. CONCRETE COLLAR SHOWN IS ADEQUATE FOR UP TO 40 FEET OF FILL.
5. FOR PIPE SIZE NOT LISTED USE NEXT LARGER.

D	L	T	"a"
12"	1.0'	4"	@12"
18"	1.0'	5"	@12"
24"	1.0'	6"	@12"
30"	1.0'	7"	@12"

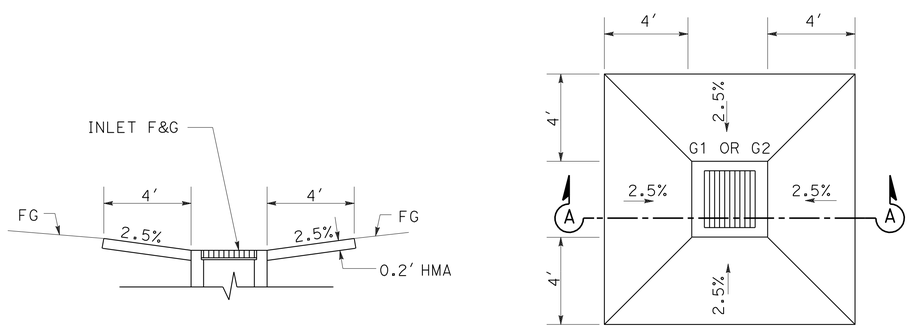

SECTION A-A PLAN

TYPICAL HMA APRON

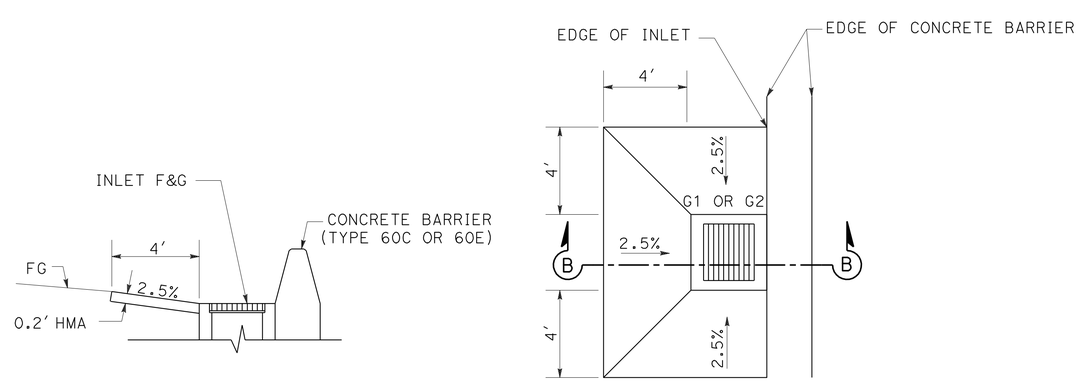

SECTION B-B PLAN

TYPICAL HMA APRON AT EDGE OF CONCRETE BARRIER

DRAINAGE DETAILS
NO SCALE
DD-2

STATE OF CALIFORNIA - DEPARTMENT OF TRANSPORTATION
Caltrans
DESIGN

REVISED BY	DATE REVISED
DAVID VELAZCO	MIGUELITO SANTOS
CALCULATED-DESIGNED BY	CHECKED BY
FUNCTIONAL SUPERVISOR	GURBHAY BRAR

LAST REVISION 12-19-11 | DATE PLOTTED => 19-APR-2012 | TIME PLOTTED => 11:01

Dist	COUNTY	ROUTE	POST MILES TOTAL PROJECT	SHEET No.	TOTAL SHEETS
06	Tul	99	R37.3/41.3	53	346

REGISTERED CIVIL ENGINEER — DATE 12-15-11

4-16-12
PLANS APPROVAL DATE

REGISTERED PROFESSIONAL ENGINEER — MIGUELITO B. SANTOS — No. 65598 — Exp. 09/30/13 — CIVIL — STATE OF CALIFORNIA

THE STATE OF CALIFORNIA OR ITS OFFICERS OR AGENTS SHALL NOT BE RESPONSIBLE FOR THE ACCURACY OR COMPLETENESS OF SCANNED COPIES OF THIS PLAN SHEET.

CURVE DATA

No. (#)	R	Δ	T	L	N	E
1	10′	138°19′23″	26.27′	24.14′	2006231.33	6438898.76
2	10′	89°57′54″	9.99′	15.70′	2006452.13	6438750.07
3	10′	131°42′43″	22.31′	22.99′	2006319.81	6438553.32

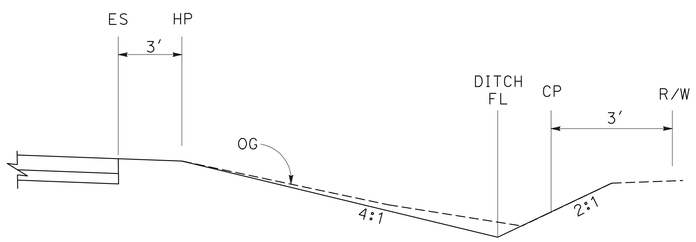

SIDE DITCH

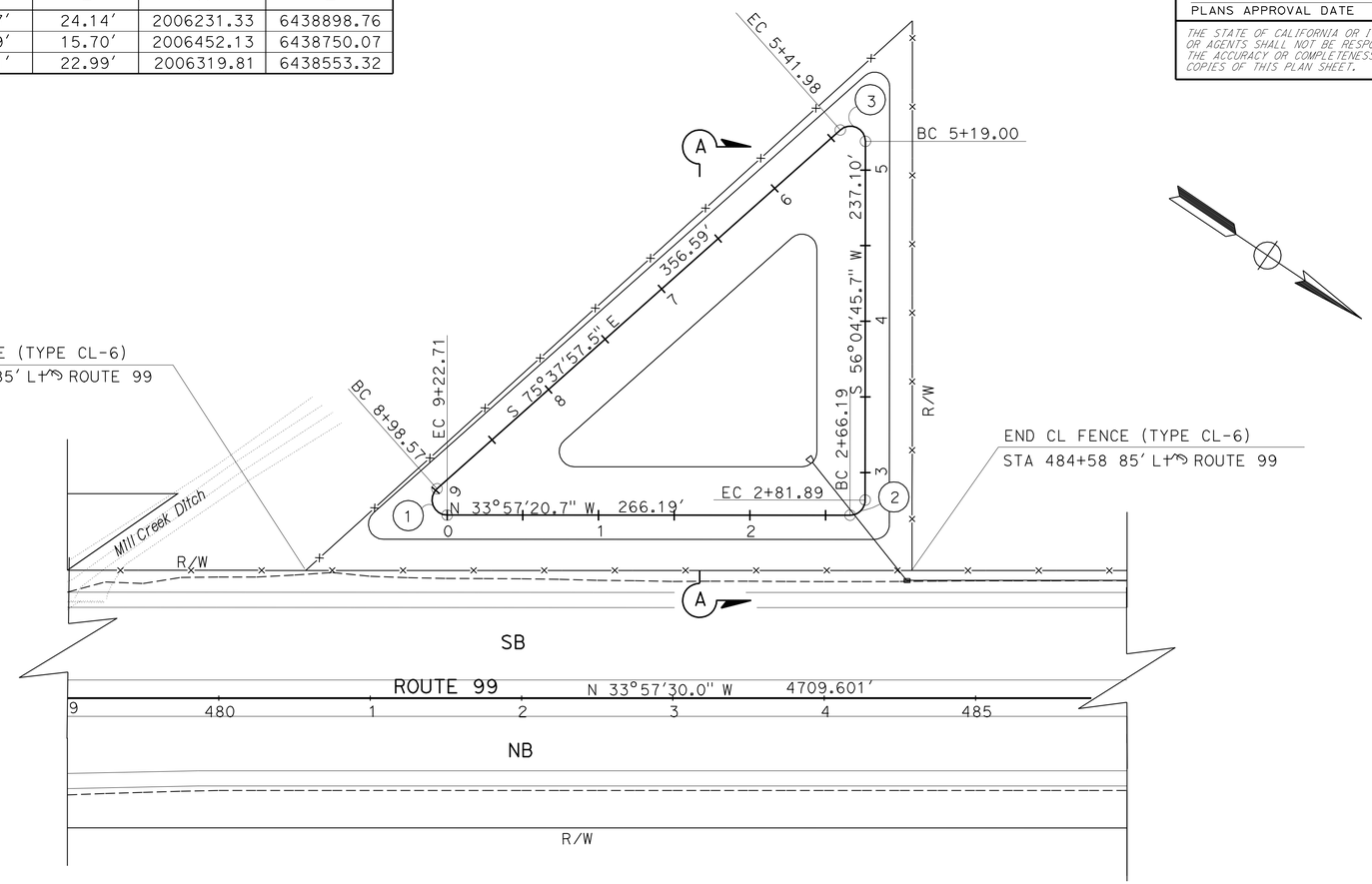

BASIN DETAIL

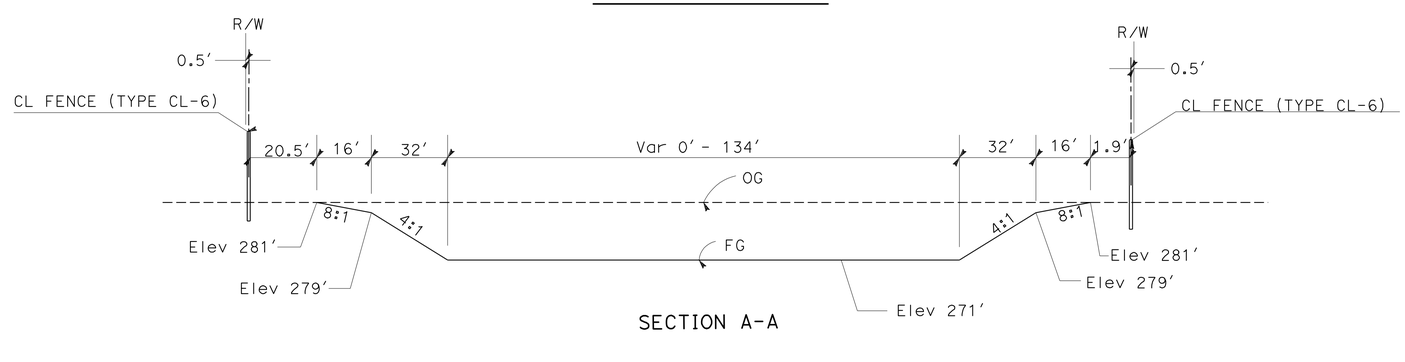

SECTION A-A

DRAINAGE DETAILS
DD-3

NO SCALE

STATE OF CALIFORNIA - DEPARTMENT OF TRANSPORTATION
DESIGN
Caltrans

FUNCTIONAL SUPERVISOR: GURBHAY BRAR
CALCULATED-DESIGNED BY: DAVID VELAZCO
CHECKED BY: MIGUELITO SANTOS
REVISED BY
DATE REVISED

LAST REVISION 12-19-11
DATE PLOTTED => 19-APR-2012
TIME PLOTTED => 11:01

Dist	COUNTY	ROUTE	POST MILES TOTAL PROJECT	SHEET No.	TOTAL SHEETS
06	Tul	99	R37.3/41.3	54	346

REGISTERED CIVIL ENGINEER 12-15-11 DATE

4-16-12
PLANS APPROVAL DATE

REGISTERED PROFESSIONAL ENGINEER MIGUELITO B. SANTOS No. 65598 Exp. 09/30/13 CIVIL STATE OF CALIFORNIA

THE STATE OF CALIFORNIA OR ITS OFFICERS OR AGENTS SHALL NOT BE RESPONSIBLE FOR THE ACCURACY OR COMPLETENESS OF SCANNED COPIES OF THIS PLAN SHEET.

DRAINAGE QUANTITIES

DRAINAGE SYSTEM No.	DRAINAGE UNIT	FRAMES & COVERS (N) TYPE 24-12	MISCELLANEOUS IRON & STEEL	MINOR CONCRETE (MINOR STRUCTURE)	"H" (N)	PLACE HMA (MISCELLANEOUS AREA)	HOT MIX ASPHALT (TYPE A)	24" RCP	JACKED 24" RCP	24" APC	30" RCP	JACKED 30" RCP	24" CSP (0.079" THICK)	72" RCP	24" AFES	30" AFES	Conc BACKFILL (PIPE TRENCH)	RSP FABRIC CLASS 8	RSP (BACKING No. 2, METHOD B)	DESCRIPTION	LOCATION	DRAINAGE PLAN SHEET No.	DRAINAGE SYSTEM No.	DRAINAGE UNIT
		EA	LB	CY	FT	SQYD	TON	LF	LF	LF	LF	LF	LF	LF	EA	EA	CY	SQYD	CY					
1	a	1	326	1.81	4.97															TYPE G2 INLET	350+00 11' Lt ℄ ROUTE 99	DP-1	1	a
	b							100												24" RCP				b
	c	1	326	1.77	4.79															TYPE G2 INLET	351+00 11' Lt ℄ ROUTE 99			c
	d							100												24" RCP				d
	e	1	326	1.65	4.34															TYPE G2 INLET	352+00 11' Lt ℄ ROUTE 99			e
2	a								86											JACKED 24" RCP		DP-1	2	a
	b														1					24" AFES	351+00 86' Lt ℄ ROUTE 99			b
	c																	15	4	ROCK ENERGY DISSIPATOR				c
3	a							7												24" RCP		DP-1	3	a
	b	1	326	1.85	5.10															TYPE G2 INLET	415+60 99' Lt ℄ ROUTE 99			b
	c												48							24" CSP				c
	d														1					24" AFES	415+60 150' Lt ℄ ROUTE 99			d
	e																	15	4	ROCK ENERGY DISSIPATOR				e
4	a	1	326	1.69	4.49	13	1.8													TYPE G2 INLET WITH APRON	459+30 3' Lt ℄ ROUTE 99	DP-2	4	a
	b									200										24" APC				b
	c	1	326	1.95	5.51	13	1.8													TYPE G2 INLET WITH APRON	461+30 3' Lt ℄ ROUTE 99			c
	d								127											JACKED 24" RCP				d
	e														1					24" AFES	461+30 128.5' Lt ℄ ROUTE 99			e
5	a	1	326	1.36	3.20															TYPE G2 INLET	479+78 3' Rt ℄ ROUTE 99	DP-2	5	a
	b							98												24" RCP				b
	c	1	326	1.71	4.57															TYPE G2 INLET	480+78 3' Rt ℄ ROUTE 99			c
	d										10									2 - 30" RCPs				d
	e															2				2 - 30" AFESs	480+78 81' Lt ℄ ROUTE 99			e
	f																	42	13	ROCK ENERGY DISSIPATOR				f
	g										22									2 - 30" RCPs				g
	h															2				2 - 30" AFESs				h
	i																	42	13	ROCK ENERGY DISSIPATOR				i
6	a	1	326	1.69	4.50															TYPE G2 INLET	481+54 3' Rt ℄ ROUTE 99	DP-3	6	a
	b									100										24" APC				b
	c	1	326	1.84	5.06															TYPE G2 INLET	482+54 3' Rt ℄ ROUTE 99			c
	d									100										24" APC				d
	e	1	326	2.02	5.80															TYPE G2 INLET	483+54 3' Rt ℄ ROUTE 99			e
	f									100										24" APC				f
7	a															1				30" AFES	484+54 77' Rt ℄ ROUTE 99	DP-3	7	a
	b											77								JACKED 30" RCP				b
	c	1	326	5.32	13.19															TYPE G2 INLET	484+54 3' Rt ℄ ROUTE 99			c
	d											78								JACKED 30" RCP				d
	e	1	326	4.85	11.85															TYPE G2 INLET	484+54 78' Lt ℄ ROUTE 99			e
	f										100									30" RCP				f
	g															1				30" AFES	483+90 160' Lt ℄ ROUTE 99			g
	h																	15	4	ROCK ENERGY DISSIPATOR				h
8	a									146										24" APC		DP-3	8	a
	b	1	326	2.00	5.72	13	1.8													TYPE G2 INLET	486+00 78' Lt ℄ ROUTE 99			b
	c									200										24" APC				c
	d	1	326	1.86	5.17	13	1.8													TYPE G2 INLET	488+00 78' Lt ℄ ROUTE 99			d
	e									198										24" APC				e
	f	1	326	1.64	4.30	13	1.8													TYPE G2 INLET	490+00 78' Lt ℄ ROUTE 99			f
SUBTOTAL			5,216	35.01		65	9.0	305	213	1,046	132	155	48		3	6		129	38					

(N) = NOT A SEPARATE PAY ITEM, FOR INFORMATION ONLY.

APC ALLOWABLE PIPE MATERIAL

DESCRIPTION	TYPE	
	RCP	*HDPE (TYPE S)
(SIZE)	(INCH)	(INCH)
24"	24"	24"

*HDPE = HIGH DENSITY POLYETHYLENE CORRUGATED PIPE, SMOOTH INTERIOR

DRAINAGE QUANTITIES
DQ-1

STATE OF CALIFORNIA - DEPARTMENT OF TRANSPORTATION
DESIGN
Caltrans
FUNCTIONAL SUPERVISOR: GURBHAY BRAR
CALCULATED-DESIGNED BY: DAVID VELAZCO
CHECKED BY: MIGUELITO SANTOS
REVISED BY
DATE REVISED

LAST REVISION 12-19-11
DATE PLOTTED => 19-APR-2012
TIME PLOTTED => 11:01

Dist	COUNTY	ROUTE	POST MILES TOTAL PROJECT	SHEET No.	TOTAL SHEETS
06	Tul	99	R37.3/41.3	55	346

REGISTERED CIVIL ENGINEER 12-15-11 DATE

4-16-12
PLANS APPROVAL DATE

REGISTERED PROFESSIONAL ENGINEER MIGUELITO B. SANTOS No. 65598 Exp. 09/30/13 CIVIL STATE OF CALIFORNIA

THE STATE OF CALIFORNIA OR ITS OFFICERS OR AGENTS SHALL NOT BE RESPONSIBLE FOR THE ACCURACY OR COMPLETENESS OF SCANNED COPIES OF THIS PLAN SHEET.

DRAINAGE QUANTITIES

DRAINAGE SYSTEM No.	DRAINAGE UNIT	FRAMES & COVERS (N) TYPE 24-12	MISCELLANEOUS IRON & STEEL	MINOR CONCRETE (MINOR STRUCTURE)	"H" (N)	PLACE HMA (MISCELLANEOUS AREA)	HOT MIX ASPHALT (TYPE A)	24" RCP	JACKED 24" RCP	24" APC	30" RCP	JACKED 30" RCP	24" CSP (0.079" THICK)	72" RCP	24" AFES	30" AFES	Conc BACKFILL (PIPE TRENCH)	RSP FABRIC	RSP (BACKING No. 2, METHOD B)	DESCRIPTION	LOCATION	DRAINAGE PLAN SHEET No.	DRAINAGE SYSTEM No.	DRAINAGE UNIT
		EA	LB	CY	FT	SQYD	TON	LF	LF	LF	LF	LF	LF	LF	EA	EA	CY	SQYD	CY					
9	a										96									30" RCP		DP-4	9	a
	b	1	326	5.21	12.88															TYPE G2 INLET	485+50 3' R+ ℄ ROUTE 99			b
	c										100									30" RCP				c
	d	1	326	5.09	12.55															TYPE G2 INLET	486+50 3' R+ ℄ ROUTE 99			d
	e										100									30" RCP				e
	f	1	326	4.97	12.20															TYPE G2 INLET	487+50 3' R+ ℄ ROUTE 99			f
	g										100									30" RCP				g
	h	1	326	4.84	11.85															TYPE G2 INLET	488+58 3' R+ ℄ ROUTE 99			h
10	a										100									30" RCP		DP-4	10	a
	b	1	326	4.73	11.52															TYPE G2 INLET	489+50 3' R+ ℄ ROUTE 99			b
	c										100									30" RCP				c
	d	1	326	4.65	11.30															TYPE G2 INLET	490+50 3' R+ ℄ ROUTE 99			d
	e										100									30" RCP				e
	f	1	326	4.49	10.87															TYPE G2 INLET	491+50 3' R+ ℄ ROUTE 99			f
	g										100									30" RCP				g
	h	1	326	4.38	10.55															TYPE G2 INLET	492+50 3' R+ ℄ ROUTE 99			h
	i										100									30" RCP				i
	j	1	326	4.22	10.10															TYPE G2 INLET	493+50 3' R+ ℄ ROUTE 99			j
	k										100									30" RCP				k
	l	1	326	4.18	10.00															TYPE G2 INLET	494+50 3' R+ ℄ ROUTE 99			l
	m										100									30" RCP				m
	n	1	326	4.00	9.49															TYPE G2 INLET	495+50 3' R+ ℄ ROUTE 99			n
	o										100									30" RCP				o
11	a	1	326	1.44	3.50	13	1.8													TYPE G2 INLET	496+50 3' R+ ℄ ROUTE 99	DP-4	11	a
	b								112											JACKED 24" RCP				b
	c	1	326	3.86	9.09															TYPE G2 INLET	496+50 113' R+ ℄ ROUTE 99			c
12	a										100									30" RCP		DP-5	12	a
	b	1	326	3.73	8.74															TYPE G2 INLET	497+50 3' R+ ℄ ROUTE 99			b
	c										100									30" RCP				c
	d	1	326	3.62	8.42															TYPE G2 INLET	498+50 3' R+ ℄ ROUTE 99			d
	e										100									30" RCP				e
	f	1	326	2.54	7.83															TYPE G2 INLET	499+50 3' R+ ℄ ROUTE 99			f
	g										100									30" RCP				g
13	a	1	326	2.44	7.43															TYPE G2 INLET	500+50 3' R+ ℄ ROUTE 99	DP-5	13	a
	b								86											JACKED 24" RCP				b
	c														1					24" AFES	500+50 87' L+ ℄ROUTE 99			c
14	a														1					24" AFES	499+63 136' L+ ℄ROUTE 99	DP-5	14	a
	b							54												24" APC				b
	c														1					24" AFES	500+12 111' L+ ℄ROUTE 99			c
15	a														1					24" AFES	501+18 159' L+ ℄ROUTE 99	DP-5	15	a
	b							51												24" APC				b
	c														1					24" AFES	500+71 142' L+ ℄ROUTE 99			c
SUBTOTAL			5,542	68.39		13	1.8	105	198		1,596				5									

(N) = NOT A SEPARATE PAY ITEM, FOR INFORMATION ONLY.

STATE OF CALIFORNIA - DEPARTMENT OF TRANSPORTATION
Caltrans
DESIGN

FUNCTIONAL SUPERVISOR: GURBHAY BRAR
CALCULATED-DESIGNED BY: DAVID VELAZCO
CHECKED BY: MIGUELITO SANTOS
REVISED BY
DATE REVISED

DRAINAGE QUANTITIES
DQ-2

LAST REVISION 12-19-11
DATE PLOTTED => 19-APR-2012
TIME PLOTTED => 11:01

Dist	COUNTY	ROUTE	POST MILES TOTAL PROJECT	SHEET No.	TOTAL SHEETS
06	Tul	99	R37.3/41.3	56	346

REGISTERED CIVIL ENGINEER 12-15-11 DATE

4-16-12
PLANS APPROVAL DATE

REGISTERED PROFESSIONAL ENGINEER MIGUELITO B. SANTOS No. 65598 Exp. 09/30/13 CIVIL STATE OF CALIFORNIA

THE STATE OF CALIFORNIA OR ITS OFFICERS OR AGENTS SHALL NOT BE RESPONSIBLE FOR THE ACCURACY OR COMPLETENESS OF SCANNED COPIES OF THIS PLAN SHEET.

DRAINAGE QUANTITIES

DRAINAGE SYSTEM No.	DRAINAGE UNIT	FRAMES & COVERS (N) TYPE 24-12	MISCELLANEOUS IRON & STEEL	MINOR CONCRETE * (MINOR STRUCTURE)	"H" (N)	PLACE HMA (Misc AREA) **	HMA (TYPE A) **	24" RCP	JACKED 24" RCP	24" APC	30" RCP	JACKED 30" RCP	24" CSP (0.079" THICK)	72" RCP	24" AFES	30" AFES	Conc BACKFILL (PIPE TRENCH)	RSP RSP FABRIC ***	RSP (BACKING No. 2, METHOD B)	DESCRIPTION	LOCATION	DRAINAGE PLAN SHEET No.	DRAINAGE SYSTEM No.	DRAINAGE UNIT
		EA	LB	CY	FT	SQYD	TON	LF	LF	LF	LF	LF	LF	LF	EA	EA	CY	SQYD	CY					
16	a							100												24" RCP		DP-6	16	a
	b	1	326	2.41	7.32															TYPE G2 INLET	501+50 3' R+ ℄ ROUTE 99			b
	c							100												24" RCP				c
	d	1	326	2.37	7.16															TYPE G2 INLET	502+50 3' R+ ℄ ROUTE 99			d
	e							100												24" RCP				e
	f	1	326	2.26	6.73															TYPE G2 INLET	503+50 3' R+ ℄ ROUTE 99			f
	g							100												24" RCP				g
	h	1	326	2.20	6.48															TYPE G2 INLET	504+50 3' R+ ℄ ROUTE 99			h
	i							100												24" RCP				i
	j	1	326	2.08	6.03															TYPE G2 INLET	505+50 3' R+ ℄ ROUTE 99			j
	k							150												24" RCP				k
17	a	1	326	1.43	3.48	13	1.8													TYPE G2 INLET	509+74 119' R+ ℄ ROUTE 99	DP-6	17	a
	b							84												24" RCP				b
	c	1	326	1.62	4.23	13	1.8													TYPE G2 INLET	509+01 71' R+ ℄ ROUTE 99			c
	d							199												24" RCP				d
	e	1	326	1.66	4.36															TYPE G2 INLET	507+00 71' R+ ℄ ROUTE 99			e
	f								68											JACKED 24" RCP				f
	g	1	326	1.93	5.43															TYPE G2 INLET	507+00 3' R+ ℄ ROUTE 99			g
	h								67											JACKED 24" RCP				h
	i	1	326	1.41	3.41															TYPE G2 INLET	507+00 70' L+ ℄ ROUTE 99			i
	j							40												24" RCP				j
	k	1	326	1.31	3.00															TYPE G2 INLET	507+41 71' L+ ℄ ROUTE 99			k
18	a	1	326	1.41	3.40	13	1.8													TYPE G2 INLET	524+63 71' L+ ℄ ROUTE 99	DP-7	18	a
	b								66											JACKED 24" RCP				b
	c	1	326	2.10	6.10															TYPE G2 INLET	524+63 3' L+ ℄ ROUTE 99			c
	d								97											JACKED 24" RCP				d
	e	1	326	0.95	2.40	13	1.8													TYPE G1 INLET	524+63 96' R+ ℄ ROUTE 99			e
19	a							70												24" RCP		DP-7	19	a
	b	1	326	2.00	5.70															TYPE G2 INLET	526+35 3' L+ ℄ ROUTE 99			b
	c							17												24" RCP				c
	d	1	326	2.00	5.69															TYPE G2 INLET	526+55 3' L+ ℄ ROUTE 99			d
	e							144												24" RCP				e
	f	1	326	2.06	5.94															TYPE G2 INLET	528+00 3' L+ ℄ ROUTE 99			f
	g							297												24" RCP				g
	h	1	326	1.45	3.56															TYPE G2 INLET	531+00 3' L+ ℄ ROUTE 99			h
	i							298												24" RCP				i
	j	1	326	1.90	5.30															TYPE G2 INLET	534+00 3' L+ ℄ ROUTE 99			j
	k							170												24" RCP				k
20	a	2	652	8.34	Var															2 - TYPE G2 INLETS	535+73 6' L+ & R+ ℄ ROUTE 99	DP-8	20	a
	b							4												24" RCP				b
	c													284			22			2 - 72" RCPs & Conc COVER				c
	f							82												24" RCP & ABANDON PIPE				f
	g							161												24" RCP				g
	h	1	326	1.77	4.79															TYPE G2 INLET	539+84 4' L+ ℄ ROUTE 99			h
	i							154												24" RCP				i
	j	1	326	1.72	4.60															TYPE G2 INLET	541+43 4' L+ ℄ ROUTE 99			j
	k							17												24" RCP				k
	l	1	326	1.72	4.60															TYPE G2 INLET	541+63 4' L+ ℄ ROUTE 99			l
21	a	1	326	1.49	3.70															TYPE G2 INLET	537+17 57' R+ ℄ ROUTE 99	DP-8	21	a
	b								47											24" RCP				b
	d							4												JACKED 24" RCP				d
	e	2	652	7.37	Var															2 - TYPE G2 INLETS	537+17 6' L+ & R+ ℄ ROUTE 99			e
22	a	1	326	1.57	4.00															TYPE G2 INLET	546+98 1' L+ ℄ ROUTE 99	DP-8	22	a
	b							34												24" RCP				b
SUBTOTAL			9,128	58.53		52	7.2	2,425	345					284										
TOTAL			19,886	162		130	18	2,835	756	1,046	1,728	155	48	284	8	6	22	129	38					

* QUANTITY INCLUDED IN MINOR Conc (MINOR Str) TABLE ON SHEET Q-2.
** QUANTITIES INCLUDED IN ROADWAY QUANTITIES SUMMARY TABLE ON SHEET Q-1.
*** QUANTITY INCLUDED IN CMP DOWNDRAIN TABLE ON SHEET DQ-4.
(N) NOT A SEPARATE PAY ITEM, FOR INFORMATION ONLY.

DRAINAGE QUANTITIES
DQ-3

STATE OF CALIFORNIA - DEPARTMENT OF TRANSPORTATION
Caltrans
DESIGN

FUNCTIONAL SUPERVISOR: GURBHAY BRAR
CALCULATED-DESIGNED BY: DAVID VELAZCO
CHECKED BY: MIGUELITO SANTOS
REVISED BY
DATE REVISED

LAST REVISION 12-19-11
DATE PLOTTED => 19-APR-2012
TIME PLOTTED => 11:01

Dist	COUNTY	ROUTE	POST MILES TOTAL PROJECT	SHEET No.	TOTAL SHEETS
06	Tul	99	R37.3/41.3	57	346

REGISTERED CIVIL ENGINEER 12-15-11 DATE

4-16-12
PLANS APPROVAL DATE

REGISTERED PROFESSIONAL ENGINEER MIGUELITO B. SANTOS No. 65598 Exp. 09/30/13 CIVIL STATE OF CALIFORNIA

THE STATE OF CALIFORNIA OR ITS OFFICERS OR AGENTS SHALL NOT BE RESPONSIBLE FOR THE ACCURACY OR COMPLETENESS OF SCANNED COPIES OF THIS PLAN SHEET.

CORRUGATED METAL PIPE DOWNDRAIN

LOCATION	12" ENTRANCE TAPER	12" CSP DOWNDRAIN (0.079" THICK)	12" ANCHOR ASSEMBLY	REMOVE DOWNDRAIN (#)	REMOVE ENTRANCE TAPER	RSP	
						RSP FABRIC CLASS 8	(BACKING No.1, METHOD B)
STATION	EA	LF	EA	LF	EA	SQYD	CY
368+16 Rte 99, SB Rt SHOULDER	1	15	1	15	1	7.33	1.33
371+55 Rte 99, SB Rt SHOULDER	1	45	3	45	1	7.33	1.33
375+94 Rte 99, SB Rt SHOULDER	1	45	3	45	1	7.33	1.33
379+55 Rte 99, SB Rt SHOULDER	1	15	1	15	1	7.33	1.33
385+55 Rte 99, SB Rt SHOULDER	1	45	3	45	1	7.33	1.33
391+07 Rte 99, SB Rt SHOULDER	1	75	5	75	1	7.33	1.33
393+70 R-1, Rt SHOULDER	1	90	6	90	1	7.33	1.33
399+57 R-1, Rt SHOULDER	1	120	8	120	1	7.33	1.33
404+13 R-1, Rt SHOULDER	1	60	4	60	1	7.33	1.33
406+32 R-1, Rt SHOULDER	1	45	4	45	1	7.33	1.33
420+53 R-2, Rt SHOULDER	1	45	4	45	1	7.33	1.33
423+50 R-3, Rt SHOULDER	1	90	6	90	1	7.33	1.33
427+61 R-3, Rt SHOULDER	1	120	8	120	1	7.33	1.33
426+60 R-4, Rt SHOULDER	1	45	3	45	1	7.33	1.33
435+59 Rte 99, SB Rt SHOULDER	1	120	8	120	1	7.33	1.33
436+59 Rte 99, NB Rt SHOULDER	1	45	3	45	1	7.33	1.33
438+85 Rte 99, SB Rt SHOULDER	1	45	3	45	1	7.33	1.33
440+16 Rte 99, NB Rt SHOULDER	1	120	8	120	1	7.33	1.33
450+40 R-5, Rt SHOULDER	1	45	3	45	1	7.33	1.33
453+51 R-5, Rt SHOULDER	1	30	2	30	1	7.33	1.33
447+66 Rte 99, NB Rt SHOULDER	1	45	3	45	1	7.33	1.33
450+05 Rte 99, SB Rt SHOULDER	1	45	3	45	1	7.33	1.33
454+60 Rte 99, SB Rt SHOULDER	1	60	4	60	1	7.33	1.33
562+21 Rte 99, SB Rt SHOULDER	1	60	4	60	1	7.33	1.33
562+21 Rte 99, NB Rt SHOULDER	1	60	4	60	1	7.33	1.33
TOTAL QUANTITY FROM SHEET DQ-3						129	
TOTAL	25	1530	104		25	313	33.25

(#) THE QUANTITY LISTED IS FOR INFORMATION ONLY. ITEM TO BE PAID IN LUMP SUM.

ROADWAY EXCAVATION (SIDEDITCHES)

LOCATIONS	CY
SB STA 350+00 TO STA 356+11	91
NB STA 350+00 TO STA 369+63	291
RAMP 6 STA 453+15 TO SB 478+66	378
NB STA 464+30 TO STA 476+00	174
NB STA 478+00 TO STA 497+00	282
SB STA 488+00 TO STA 499+63	173
NB STA 499+00 TO STA 507+00	119
SB STA 501+20 TO STA 507+00	86
SB STA 507+50 TO STA 524+60	254
NB STA 509+00 TO STA 526+13	254
TOTAL	2,102 *

* QUANTITY INCLUDED IN ROADWAY Exc QUANTITIES SUMMARY TABLE ON SHEET Q-1.

DRAINAGE QUANTITIES
DQ-4

STATE OF CALIFORNIA - DEPARTMENT OF TRANSPORTATION
Caltrans DESIGN

FUNCTIONAL SUPERVISOR: GURBHAY BRAR
CALCULATED-DESIGNED BY: DAVID VELAZCO
CHECKED BY: MIGUELITO SANTOS
REVISED BY
DATE REVISED

LAST REVISION 12-19-11 | DATE PLOTTED => 19-APR-2012 | TIME PLOTTED => 11:01

Dist	COUNTY	ROUTE	POST MILES TOTAL PROJECT	SHEET No.	TOTAL SHEETS
06	Tul	99	R37.3/41.3	58	346

REGISTERED CIVIL ENGINEER 12-15-11 DATE

4-16-12
PLANS APPROVAL DATE

REGISTERED PROFESSIONAL ENGINEER MIGUELITO B. SANTOS No. 65598 Exp. 09/30/13 CIVIL STATE OF CALIFORNIA

THE STATE OF CALIFORNIA OR ITS OFFICERS OR AGENTS SHALL NOT BE RESPONSIBLE FOR THE ACCURACY OR COMPLETENESS OF SCANNED COPIES OF THIS PLAN SHEET.

NOTES:

STAGE 1:

PHASE 1 - CONSTRUCT 8′ INSIDE LANE.
WIDEN BRIDGE.

PHASE 2 - PLACE K-RAIL ON NEWLY CONSTRUCTED 8′ LANE AND COMPLETE ALL WORK IN THE MEDIAN.

STAGE 2:

PHASE 1 - COLD PLANE & OVERLAY Exist TRAVEL LANES.

LEGEND

— CONSTRUCTION THIS STAGE

— CONSTRUCTION COMPLETED

TABLE A

STATION LOCATIONS	* HMA THICKNESS AT THIS STAGE
SB 350+00 TO 379+00, 476+82 TO 507+00, & 536+59 TO 538+54 NB 350+00 TO 379+00, 476+82 TO 507+00, & 536+57 TO 538+56	0.80′
SB 379+00 TO 400+69 & 445+28 TO 463+00 NB 379+00 TO 402+96 & 444+57 TO 460+00	0.50′
SB 463+00 TO 476+82, 507+00 TO 536+59, 538+54 TO 555+42, & 557+61 TO 564+00 NB 460+00 TO 476+82, 507+00 TO 536+57, 538+56 TO 555+05, & 557+24 TO 564+00	0.50′
SB 404+66 TO 429+78 & 432+80 TO 442+41 NB 406+93 TO 428+85 & 431+96 TO 441+75	0.10′

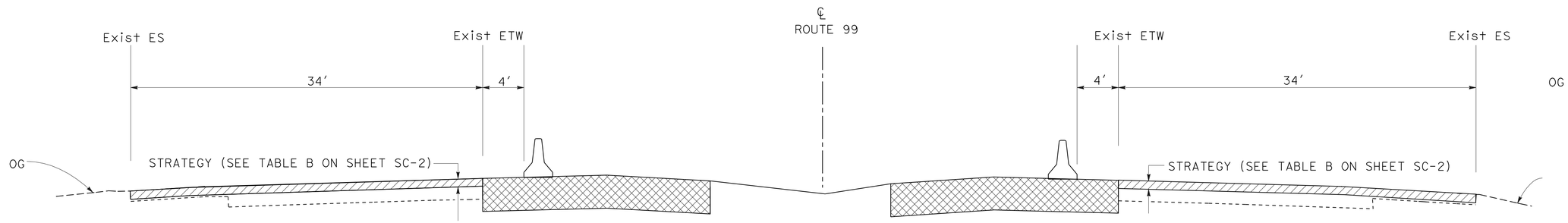

STAGE 2
(PHASE 1)

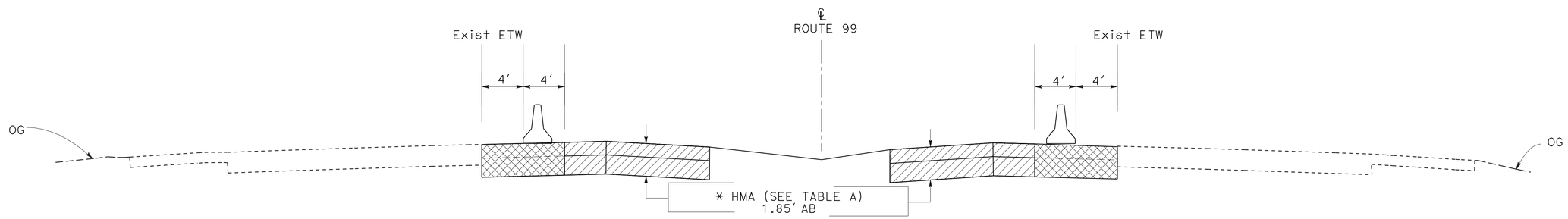

STAGE 1
(PHASE 2)

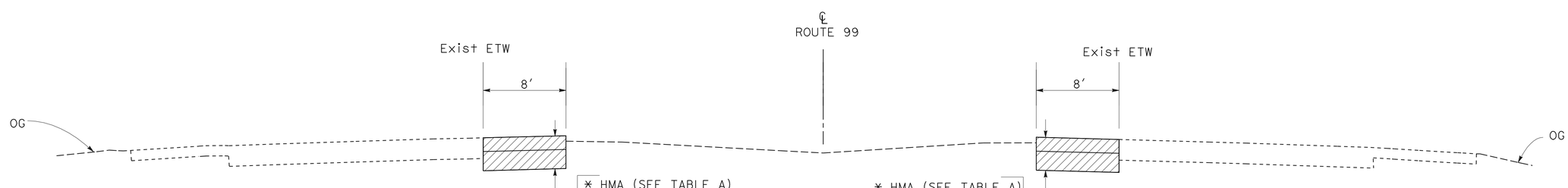

STAGE 1
(PHASE 1)

NO SCALE

STAGE CONSTRUCTION

SC-1

STATE OF CALIFORNIA - DEPARTMENT OF TRANSPORTATION
Caltrans®
DESIGN

FUNCTIONAL SUPERVISOR: GURBHAY BRAR
CALCULATED-DESIGNED BY: MIGUELITO SANTOS
CHECKED BY: DAVID VELAZCO
REVISED BY
DATE REVISED

LAST REVISION 12-19-11
DATE PLOTTED => 19-APR-2012
TIME PLOTTED => 11:01

Dist	COUNTY	ROUTE	POST MILES TOTAL PROJECT	SHEET No.	TOTAL SHEETS
06	Tul	99	R37.3/41.3	59	346

REGISTERED CIVIL ENGINEER — DATE 12-15-11

4-16-12
PLANS APPROVAL DATE

REGISTERED PROFESSIONAL ENGINEER MIGUELITO B. SANTOS No. 65598 Exp. 09/30/13 CIVIL STATE OF CALIFORNIA

THE STATE OF CALIFORNIA OR ITS OFFICERS OR AGENTS SHALL NOT BE RESPONSIBLE FOR THE ACCURACY OR COMPLETENESS OF SCANNED COPIES OF THIS PLAN SHEET.

NOTES:

STAGE 2:

PHASE 2 - OVERLAY ENTIRE ROADBED.

STAGE 3 - PLACE K-RAIL AND CONSTRUCT AUXILARY LANES, SHOULDERS, & RAMPS.

STAGE 4 - OVERLAY ENTIRE ROADBED WITH FINAL LIFT OF 0.15'. CONSTRUCT SHOULDER BACKING.

LEGEND

— CONSTRUCTION THIS STAGE

— CONSTRUCTION COMPLETE

TABLE B

STATION LOCATIONS	PROPOSED Pvmt REHAB	STRATEGY AT STAGE 2 (PHASE 1)	* HMA AT STAGE 2 (PHASE 2)	# HMA AT STAGE 4
SB 350+00 TO 379+00, 476+82 TO 507+00, & 536+59 TO 538+54 NB 350+00 TO 379+00, 476+82 TO 507+00, & 536+57 TO 538+56	COLD PLANE 0.50' HMA OVERLAY 0.50'	COLD PLANE 0.50' & OVERLAY 0.50'	0	0
SB 379+00 TO 400+69 & 445+28 TO 463+00 NB 379+00 TO 402+96 & 444+57 TO 460+00	COLD PLANE 0.15' HMA OVERLAY 0.45'	COLD PLANE 0.15' & OVERLAY 0.15'	0.15'	0.15'
SB 463+00 TO 476+82, 507+00 TO 536+59, 538+54 TO 555+42, & 557+61 TO 564+00 NB 460+00 TO 476+82, 507+00 TO 536+57, 538+56 TO 555+05, & 557+24 TO 564+00	COLD PLANE 0.20' HMA OVERLAY 0.50'	COLD PLANE 0.20' & OVERLAY 0.20'	0.15'	0.15'
SB 404+66 TO 429+78 & 432+80 TO 442+41 NB 406+93 TO 428+85 & 431+96 TO 441+75	CRACK & SEAT PCC HMA OVERLAY 0.70'	CRACK, SEAT, & OVERLAY 0.55'	0.55'	0.15'

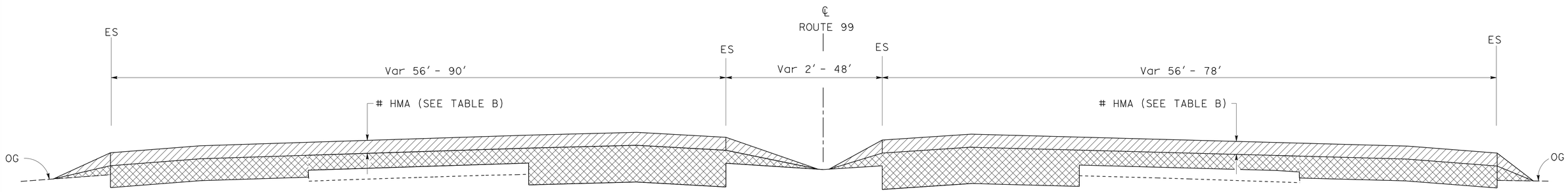

STAGE 4

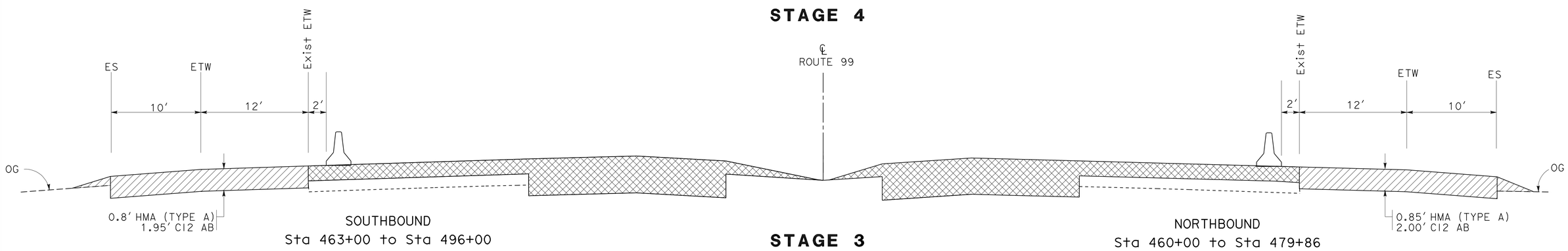

STAGE 3

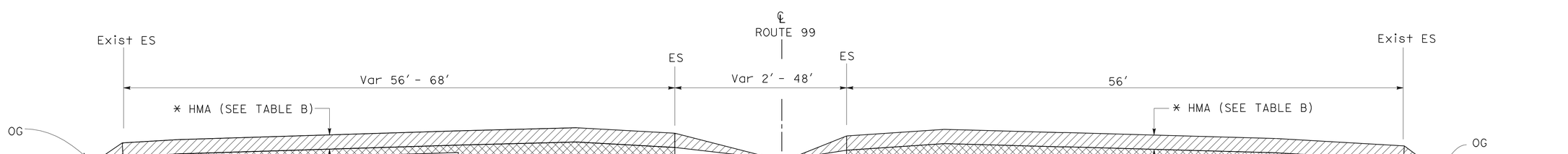

STAGE 2
(PHASE 2)

STAGE CONSTRUCTION

NO SCALE

SC-2

STATE OF CALIFORNIA - DEPARTMENT OF TRANSPORTATION

DESIGN

FUNCTIONAL SUPERVISOR: GURBHAY BRAR

CALCULATED-DESIGNED BY: MIGUELITO SANTOS

CHECKED BY: DAVID VELAZCO

REVISED BY / DATE REVISED

LAST REVISION 12-19-11

DATE PLOTTED => 19-APR-2012
TIME PLOTTED => 11:01

Dist	COUNTY	ROUTE	POST MILES TOTAL PROJECT	SHEET No.	TOTAL SHEETS
06	Tul	99	R37.3/41.3	60	346

Sandy L Le 12-14-11
REGISTERED CIVIL ENGINEER DATE

4-16-12
PLANS APPROVAL DATE

REGISTERED PROFESSIONAL ENGINEER SANDY L. LE No. 67065 Exp. 9/30/12 CIVIL STATE OF CALIFORNIA

THE STATE OF CALIFORNIA OR ITS OFFICERS OR AGENTS SHALL NOT BE RESPONSIBLE FOR THE ACCURACY OR COMPLETENESS OF SCANNED COPIES OF THIS PLAN SHEET.

LEGEND

- DIRECTION OF TRAFFIC
- LIMITS OF DESIGNATED TRAFFIC STRIPING DETAIL
- (XX) CONSTRUCTION AREA SIGN No.
- ROADSIDE SIGN ONE-POST
- XX TRAFFIC STRIPE DETAIL No.
- CHANNELIZERS (SURFACED MOUNTED)
- Temp RAILING (TYPE K)
- Temp CRASH CUSHION ARRAY "TS14"
- LL LANE LINE

NOTES:

1. ALL TEMPORARY WARNING SIGNS SHALL HAVE BLACK LEGEND ON ORANGE BACKGROUND
2. CALIFORNIA CODE ARE DESIGNATED BY (CA). OTHERWISE, FEDERAL (MUTCD) CODES ARE SHOWN
3. FOR ADDITIONAL CONSTRUCTION AREA SIGNS REFER TO CONSTRUCTION AREA SIGNS SHEET
4. COVER ALL CONFLICTING SIGNS AND REMOVE ALL CONFLICTING PAVEMENT DELINEATION
5. EXACT LOCATIONS OF CONSTRUCTION AREA SIGNS TO BE DETERMINED BY THE ENGINEER

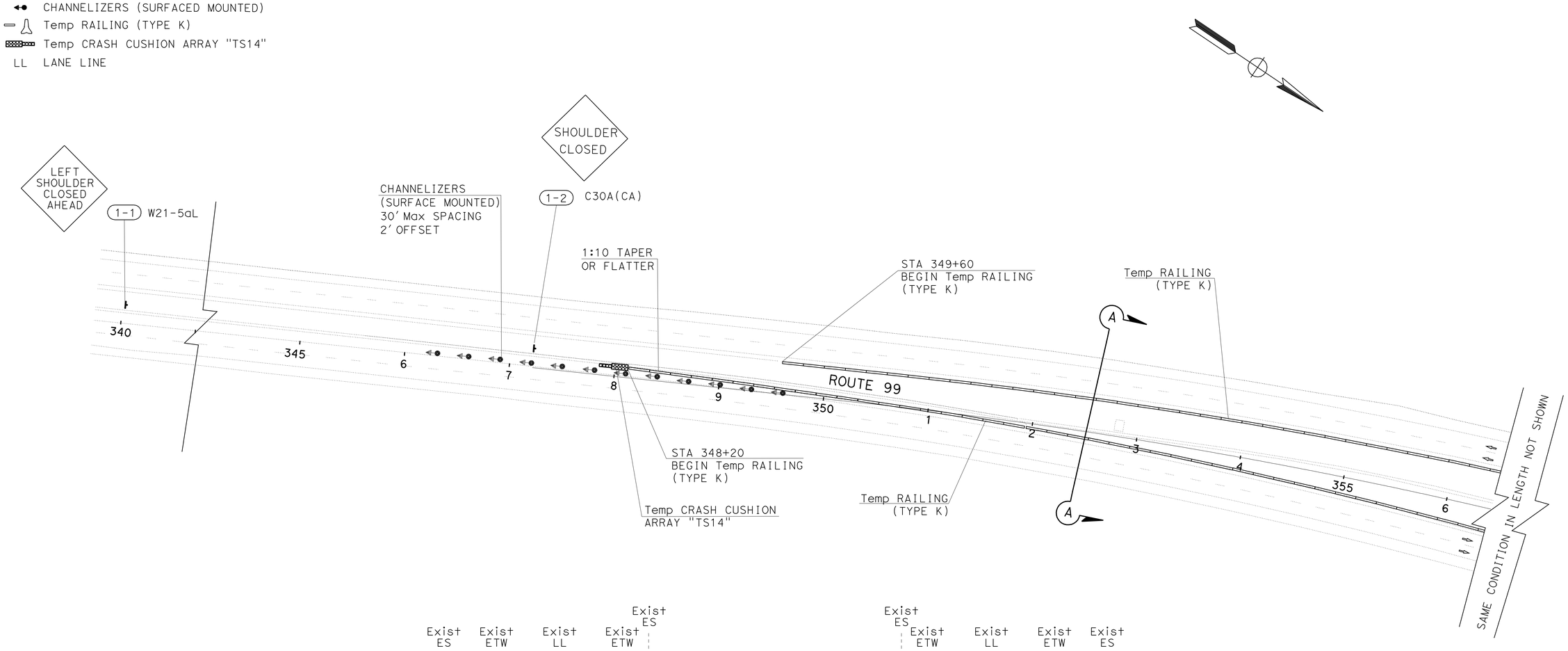

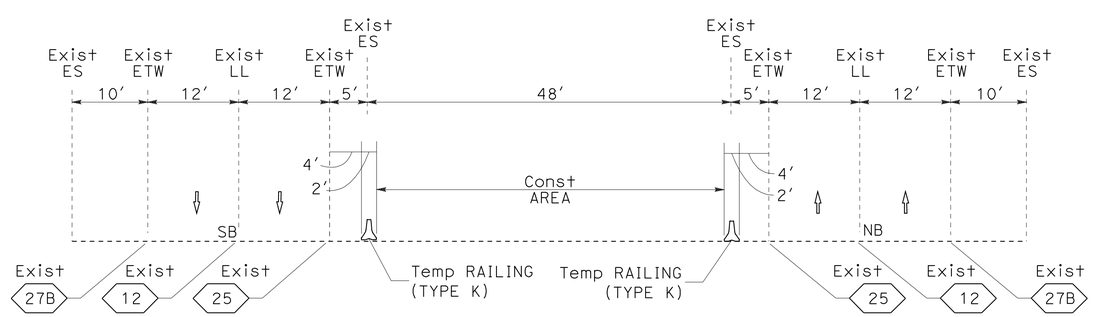

SECTION A-A
NO SCALE

TRAFFIC HANDLING PLAN
(STAGE 1 PHASE 2)

SCALE:1" = 50'

TH-1

APPROVED FOR TRAFFIC HANDLING WORK ONLY

STATE OF CALIFORNIA - DEPARTMENT OF TRANSPORTATION
Caltrans
TRAFFIC DESIGN
FUNCTIONAL SUPERVISOR: MOHAMMED QATAMI
CALCULATED-DESIGNED BY: HASSAN TAHA
CHECKED BY: SANDY LE
REVISED BY
DATE REVISED

LAST REVISION 12-14-11
DATE PLOTTED => 19-APR-2012
TIME PLOTTED => 10:54

Dist	COUNTY	ROUTE	POST MILES TOTAL PROJECT	SHEET No.	TOTAL SHEETS
06	Tul	99	R37.3/41.3	61	346

Sandy L Le 12-14-11
REGISTERED CIVIL ENGINEER DATE

4-16-12
PLANS APPROVAL DATE

REGISTERED PROFESSIONAL ENGINEER
SANDY L. LE
No. 67065
Exp. 9/30/12
CIVIL
STATE OF CALIFORNIA

THE STATE OF CALIFORNIA OR ITS OFFICERS OR AGENTS SHALL NOT BE RESPONSIBLE FOR THE ACCURACY OR COMPLETENESS OF SCANNED COPIES OF THIS PLAN SHEET.

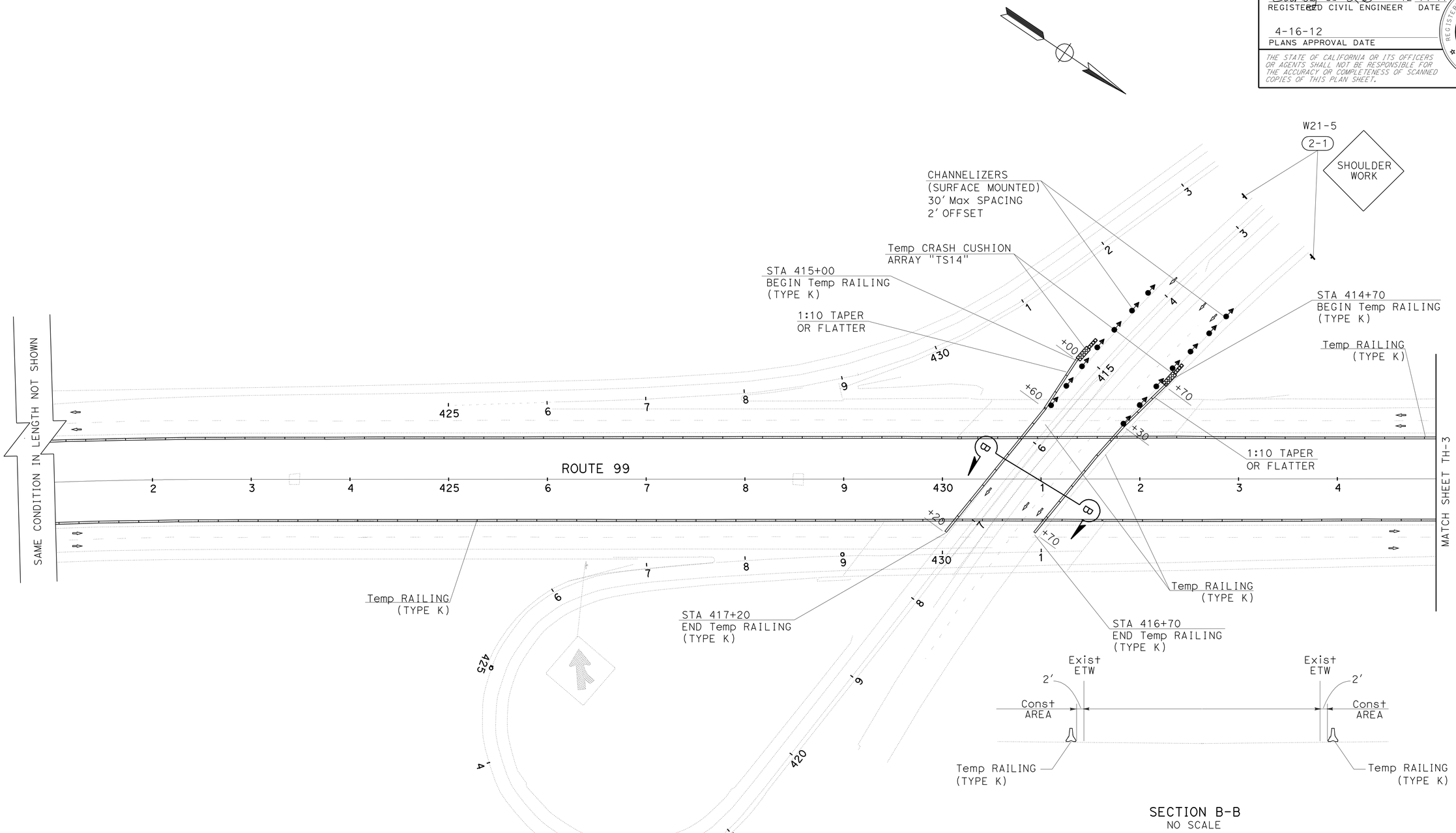

SECTION B-B
NO SCALE

TRAFFIC HANDLING PLAN

(STAGE 1 PHASE 2)

SCALE:1" = 50'

TH-2

APPROVED FOR TRAFFIC HANDLING WORK ONLY

STATE OF CALIFORNIA - DEPARTMENT OF TRANSPORTATION
Caltrans
TRAFFIC DESIGN

FUNCTIONAL SUPERVISOR: MOHAMMED QATAMI
CALCULATED-DESIGNED BY: SANDY LE
CHECKED BY: HASSAN TAHA
REVISED BY
DATE REVISED

LAST REVISION 12-14-11
DATE PLOTTED => 19-APR-2012
TIME PLOTTED => 10:54

Dist	COUNTY	ROUTE	POST MILES TOTAL PROJECT	SHEET No.	TOTAL SHEETS
06	Tul	99	R37.3/41.3	62	346

Sandy L Le 12-14-11
REGISTERED CIVIL ENGINEER DATE

4-16-12
PLANS APPROVAL DATE

REGISTERED PROFESSIONAL ENGINEER
SANDY L. LE
No. 67065
Exp. 9/30/12
CIVIL
STATE OF CALIFORNIA

THE STATE OF CALIFORNIA OR ITS OFFICERS OR AGENTS SHALL NOT BE RESPONSIBLE FOR THE ACCURACY OR COMPLETENESS OF SCANNED COPIES OF THIS PLAN SHEET.

SECTION C-C
NO SCALE

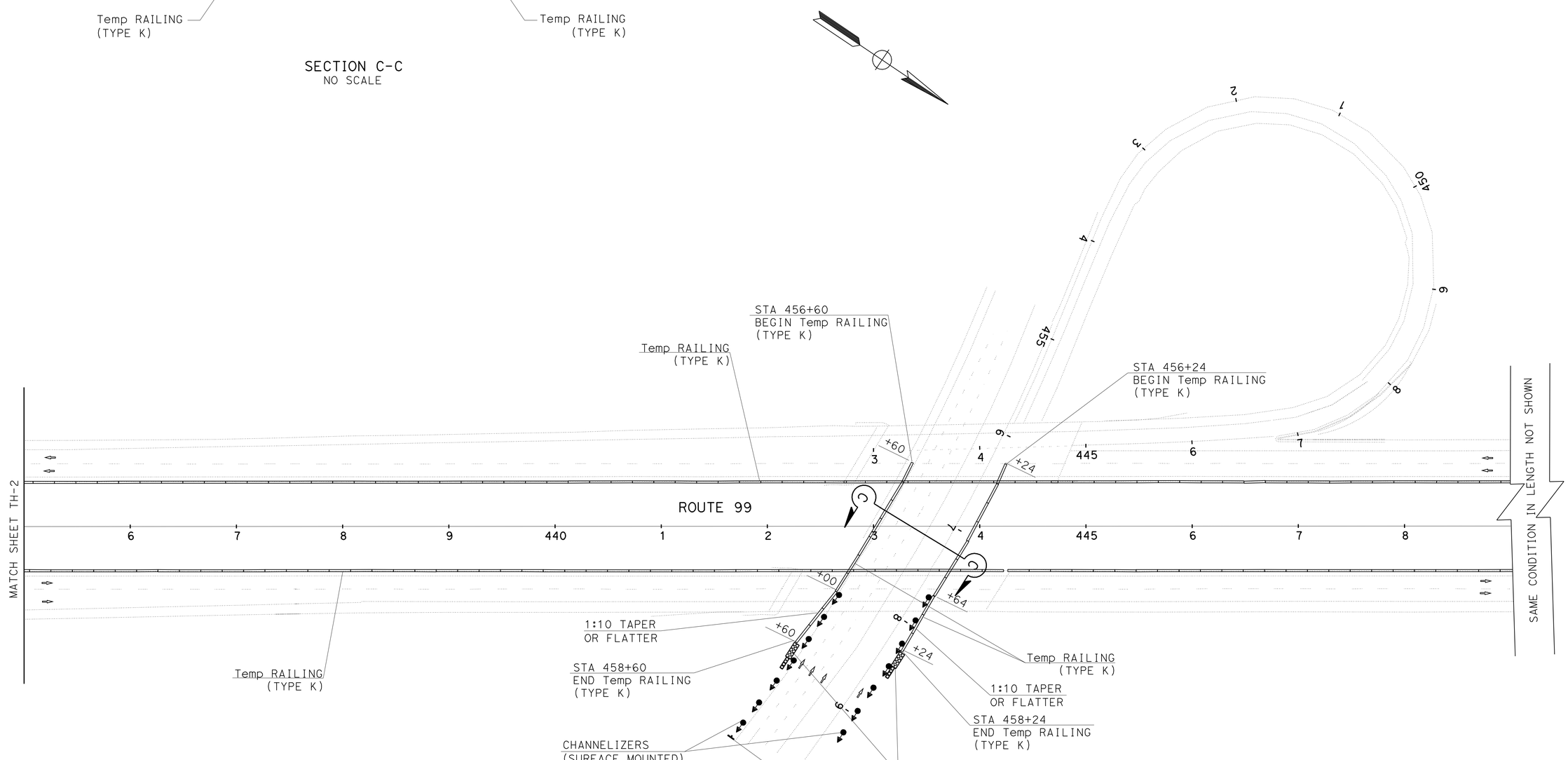

APPROVED FOR TRAFFIC HANDLING WORK ONLY

TRAFFIC HANDLING PLAN
(STAGE 1 PHASE 2)

SCALE:1" = 50'

TH-3

STATE OF CALIFORNIA - DEPARTMENT OF TRANSPORTATION
Caltrans
TRAFFIC DESIGN

FUNCTIONAL SUPERVISOR: MOHAMMED QATAMI
CALCULATED-DESIGNED BY: SANDY LE
CHECKED BY: HASSAN TAHA
REVISED BY
DATE REVISED

LAST REVISION 12-14-11
DATE PLOTTED => 19-APR-2012
TIME PLOTTED => 10:54

Dist	COUNTY	ROUTE	POST MILES TOTAL PROJECT	SHEET No.	TOTAL SHEETS
06	Tul	99	R37.3/41.3	63	346

Sandy L Le 12-14-11
REGISTERED CIVIL ENGINEER DATE

4-16-12
PLANS APPROVAL DATE

REGISTERED PROFESSIONAL ENGINEER
SANDY L. LE
No. 67065
Exp. 9/30/12
CIVIL
STATE OF CALIFORNIA

THE STATE OF CALIFORNIA OR ITS OFFICERS OR AGENTS SHALL NOT BE RESPONSIBLE FOR THE ACCURACY OR COMPLETENESS OF SCANNED COPIES OF THIS PLAN SHEET.

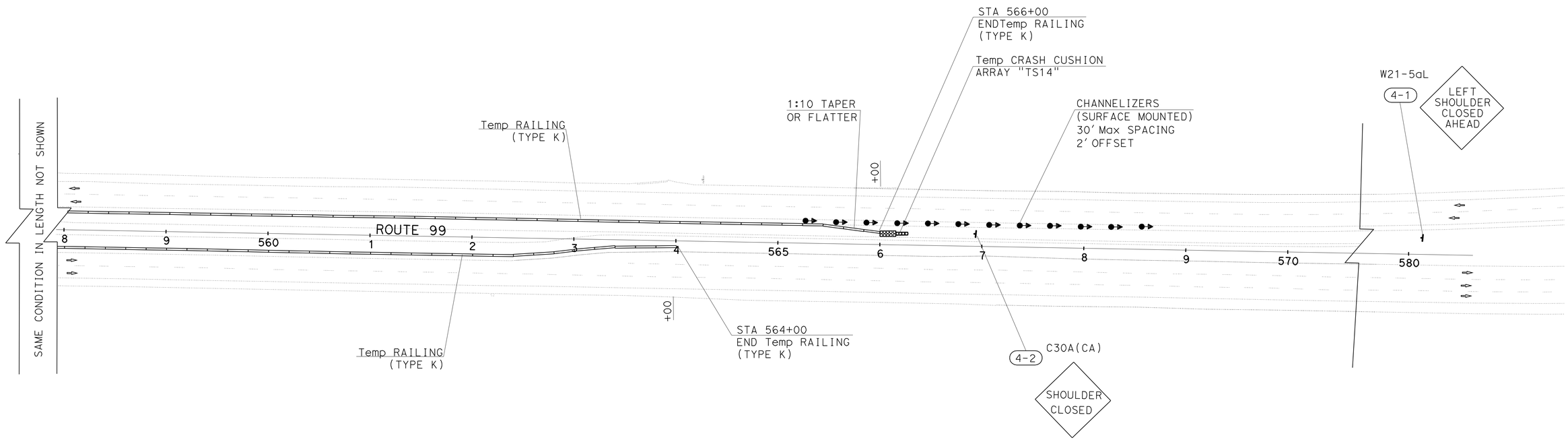

TRAFFIC HANDLING PLAN
(STAGE 1 PHASE 2)

SCALE:1" = 50'

TH-4

APPROVED FOR TRAFFIC HANDLING WORK ONLY

STATE OF CALIFORNIA - DEPARTMENT OF TRANSPORTATION
Caltrans
TRAFFIC DESIGN

FUNCTIONAL SUPERVISOR: MOHAMMED QATAMI
CALCULATED-DESIGNED BY: SANDY LE
CHECKED BY: HASSAN TAHA
REVISED BY
DATE REVISED

LAST REVISION DATE PLOTTED => 19-APR-2012
TIME PLOTTED => 10:54

Dist	COUNTY	ROUTE	POST MILES TOTAL PROJECT	SHEET No.	TOTAL SHEETS
06	Tul	99	R37.3/41.3	64	346

Sandy L Le 12-14-11
REGISTERED CIVIL ENGINEER DATE

4-16-12
PLANS APPROVAL DATE

REGISTERED PROFESSIONAL ENGINEER
SANDY L. LE
No. 67065
Exp. 9/30/12
CIVIL
STATE OF CALIFORNIA

THE STATE OF CALIFORNIA OR ITS OFFICERS OR AGENTS SHALL NOT BE RESPONSIBLE FOR THE ACCURACY OR COMPLETENESS OF SCANNED COPIES OF THIS PLAN SHEET.

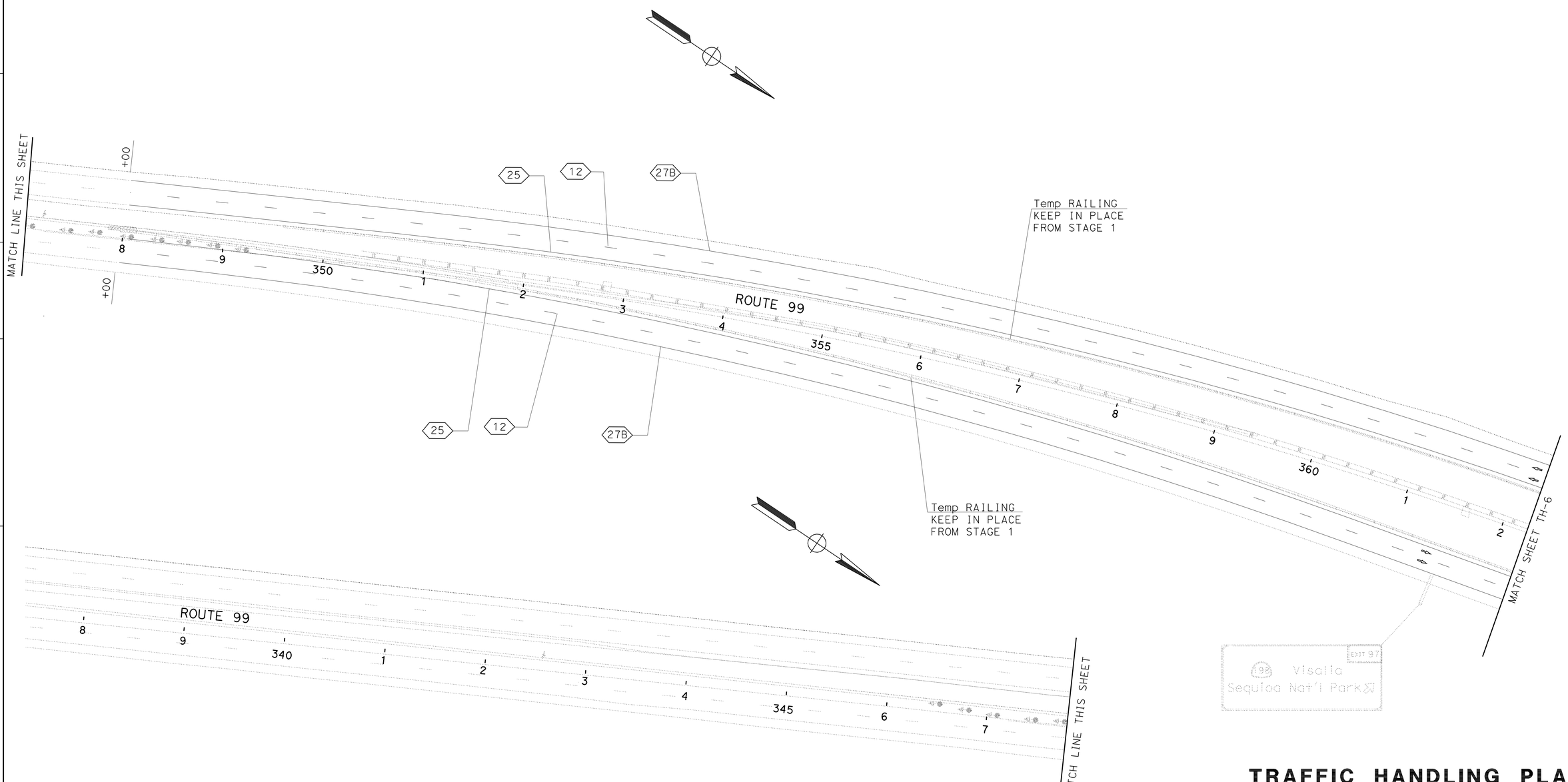

TRAFFIC HANDLING PLAN
(STAGE 2 PHASE 1)

SCALE:1" = 50'

TH-5

APPROVED FOR TRAFFIC HANDLING WORK ONLY

STATE OF CALIFORNIA - DEPARTMENT OF TRANSPORTATION
Caltrans
TRAFFIC DESIGN

FUNCTIONAL SUPERVISOR: MOHAMMED QATAMI
CALCULATED-DESIGNED BY: SANDY LE
CHECKED BY: HASSAN TAHA
REVISED BY
DATE REVISED

LAST REVISION 12-14-11
DATE PLOTTED => 19-APR-2012
TIME PLOTTED => 10:54

Dist	COUNTY	ROUTE	POST MILES TOTAL PROJECT	SHEET No.	TOTAL SHEETS
06	Tul	99	R37.3/41.3	65	346

Sandy L Le 12-14-11
REGISTERED CIVIL ENGINEER DATE

4-16-12
PLANS APPROVAL DATE

REGISTERED PROFESSIONAL ENGINEER
SANDY L. LE
No. 67065
Exp. 9/30/12
CIVIL
STATE OF CALIFORNIA

THE STATE OF CALIFORNIA OR ITS OFFICERS OR AGENTS SHALL NOT BE RESPONSIBLE FOR THE ACCURACY OR COMPLETENESS OF SCANNED COPIES OF THIS PLAN SHEET.

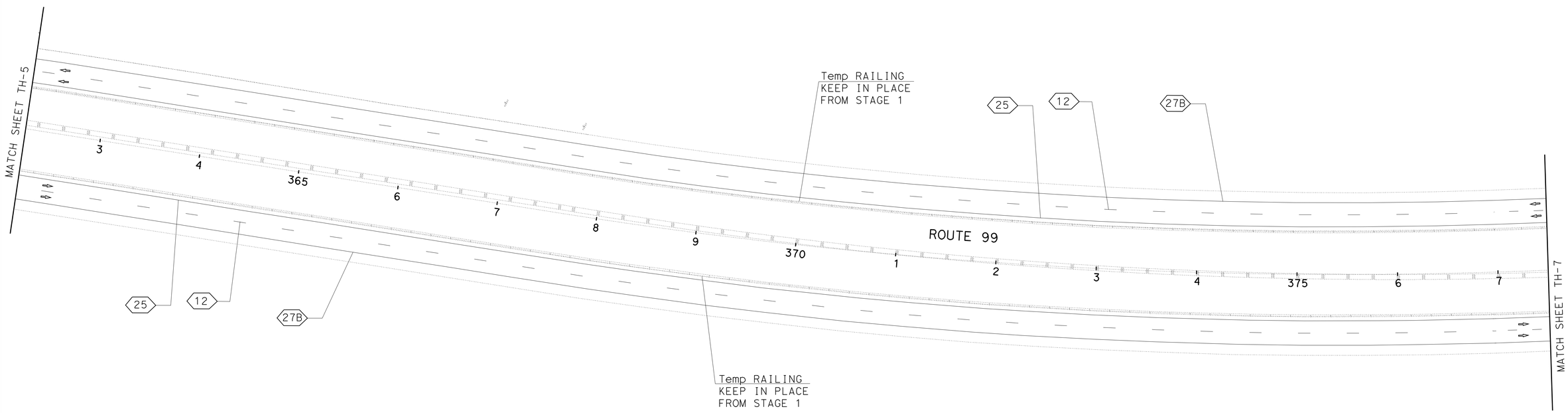

TRAFFIC HANDLING PLAN

(STAGE 2 PHASE 1)

SCALE:1" = 50'

TH-6

APPROVED FOR TRAFFIC HANDLING WORK ONLY

STATE OF CALIFORNIA - DEPARTMENT OF TRANSPORTATION
Caltrans
TRAFFIC DESIGN

FUNCTIONAL SUPERVISOR: MOHAMMED QATAMI

CALCULATED-DESIGNED BY: SANDY LE
CHECKED BY: HASSAN TAHA

REVISED BY
DATE REVISED

LAST REVISION 12-14-11
DATE PLOTTED => 19-APR-2012
TIME PLOTTED => 10:54

Dist	COUNTY	ROUTE	POST MILES TOTAL PROJECT	SHEET No.	TOTAL SHEETS
06	Tul	99	R37.3/41.3	66	346

Sandy L Le 12-14-11
REGISTERED CIVIL ENGINEER DATE

4-16-12
PLANS APPROVAL DATE

REGISTERED PROFESSIONAL ENGINEER
SANDY L. LE
No. 67065
Exp. 9/30/12
CIVIL
STATE OF CALIFORNIA

THE STATE OF CALIFORNIA OR ITS OFFICERS OR AGENTS SHALL NOT BE RESPONSIBLE FOR THE ACCURACY OR COMPLETENESS OF SCANNED COPIES OF THIS PLAN SHEET.

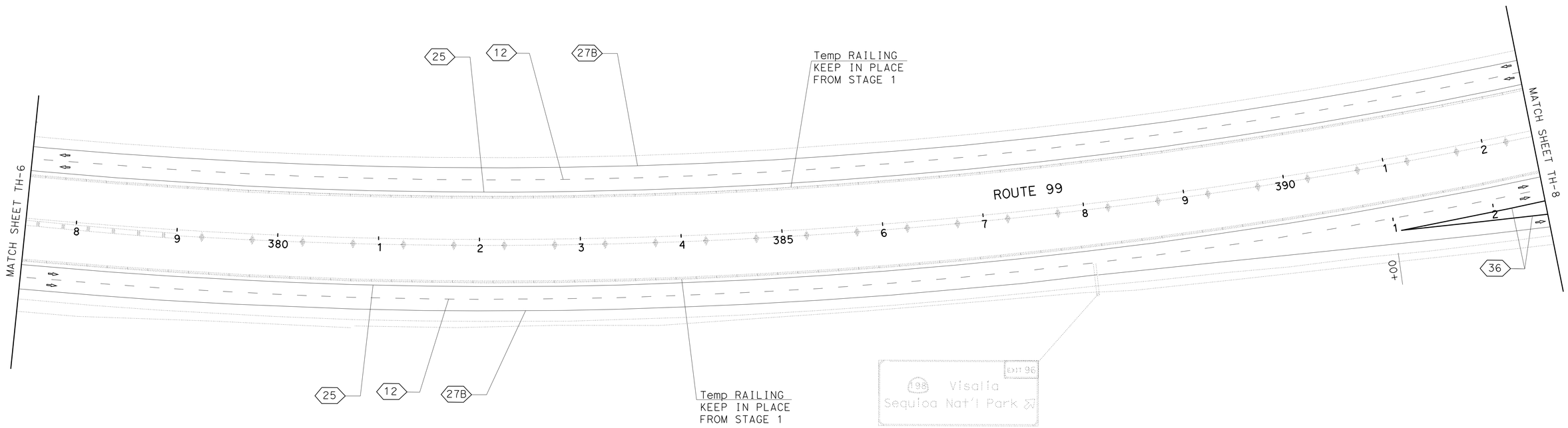

TRAFFIC HANDLING PLAN

(STAGE 2 PHASE 1)

SCALE:1" = 50'

TH-7

APPROVED FOR TRAFFIC HANDLING WORK ONLY

STATE OF CALIFORNIA - DEPARTMENT OF TRANSPORTATION
Caltrans®
TRAFFIC DESIGN

FUNCTIONAL SUPERVISOR: MOHAMMED QATAMI

CALCULATED-DESIGNED BY: SANDY LE
CHECKED BY: HASSAN TAHA

REVISED BY
DATE REVISED

LAST REVISION 12-14-11
DATE PLOTTED => 19-APR-2012
TIME PLOTTED => 10:54

Dist	COUNTY	ROUTE	POST MILES TOTAL PROJECT	SHEET No.	TOTAL SHEETS
06	Tul	99	R37.3/41.3	67	346

Sandy L Le 12-14-11
REGISTERED CIVIL ENGINEER DATE

4-16-12
PLANS APPROVAL DATE

REGISTERED PROFESSIONAL ENGINEER
SANDY L. LE
No. 67065
Exp. 9/30/12
CIVIL
STATE OF CALIFORNIA

THE STATE OF CALIFORNIA OR ITS OFFICERS OR AGENTS SHALL NOT BE RESPONSIBLE FOR THE ACCURACY OR COMPLETENESS OF SCANNED COPIES OF THIS PLAN SHEET.

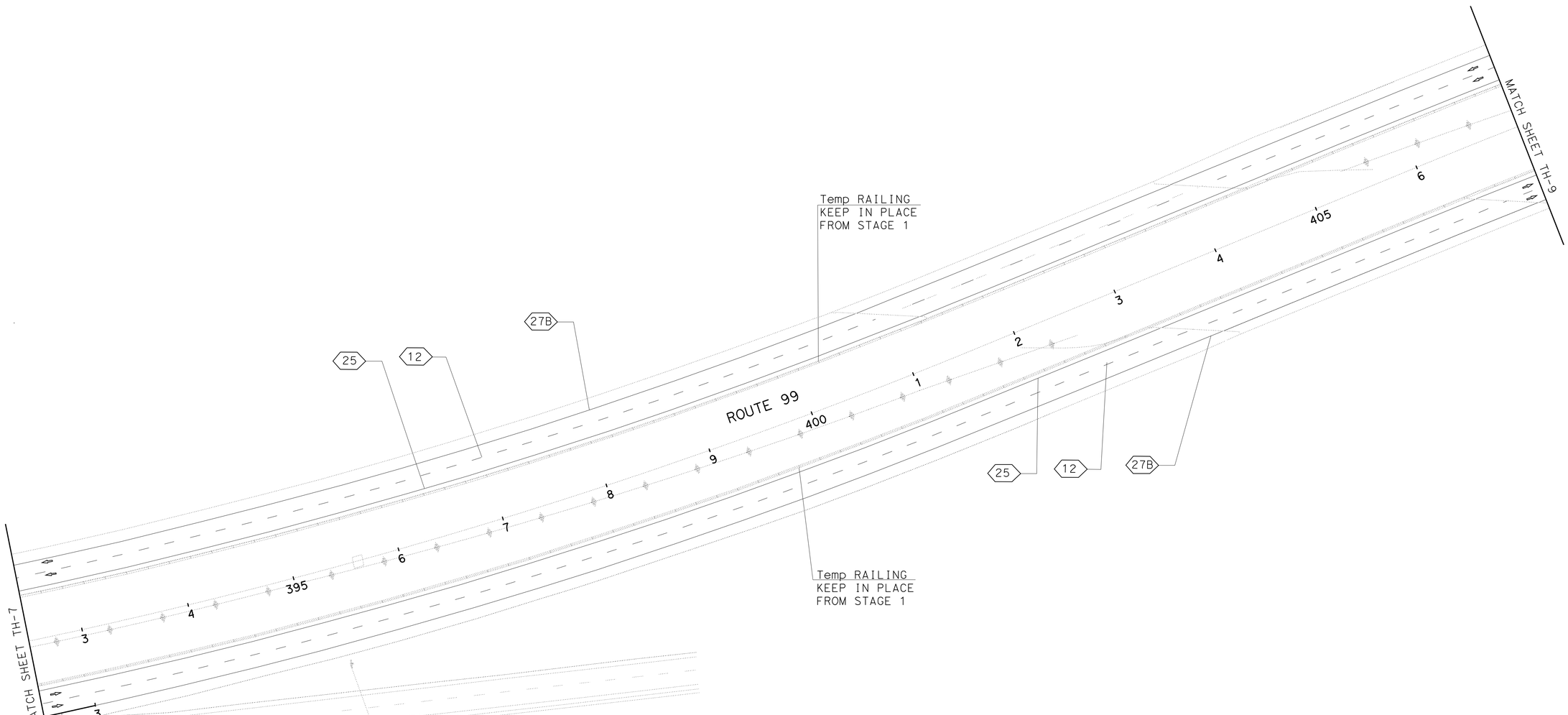

TRAFFIC HANDLING PLAN
(STAGE 2 PHASE 1)
SCALE:1" = 50'

TH-8

APPROVED FOR TRAFFIC HANDLING WORK ONLY

STATE OF CALIFORNIA - DEPARTMENT OF TRANSPORTATION
Caltrans
TRAFFIC DESIGN

FUNCTIONAL SUPERVISOR: MOHAMMED QATAMI
CALCULATED-DESIGNED BY: SANDY LE
CHECKED BY: HASSAN TAHA
REVISED BY
DATE REVISED

LAST REVISION 12-14-11
DATE PLOTTED => 19-APR-2012
TIME PLOTTED => 10:54

Dist	COUNTY	ROUTE	POST MILES TOTAL PROJECT	SHEET No.	TOTAL SHEETS
06	Tul	99	R37.3/41.3	68	346

Sandy L Le 12-14-11
REGISTERED CIVIL ENGINEER DATE

4-16-12
PLANS APPROVAL DATE

REGISTERED PROFESSIONAL ENGINEER
SANDY L. LE
No. 67065
Exp. 9/30/12
CIVIL
STATE OF CALIFORNIA

THE STATE OF CALIFORNIA OR ITS OFFICERS OR AGENTS SHALL NOT BE RESPONSIBLE FOR THE ACCURACY OR COMPLETENESS OF SCANNED COPIES OF THIS PLAN SHEET.

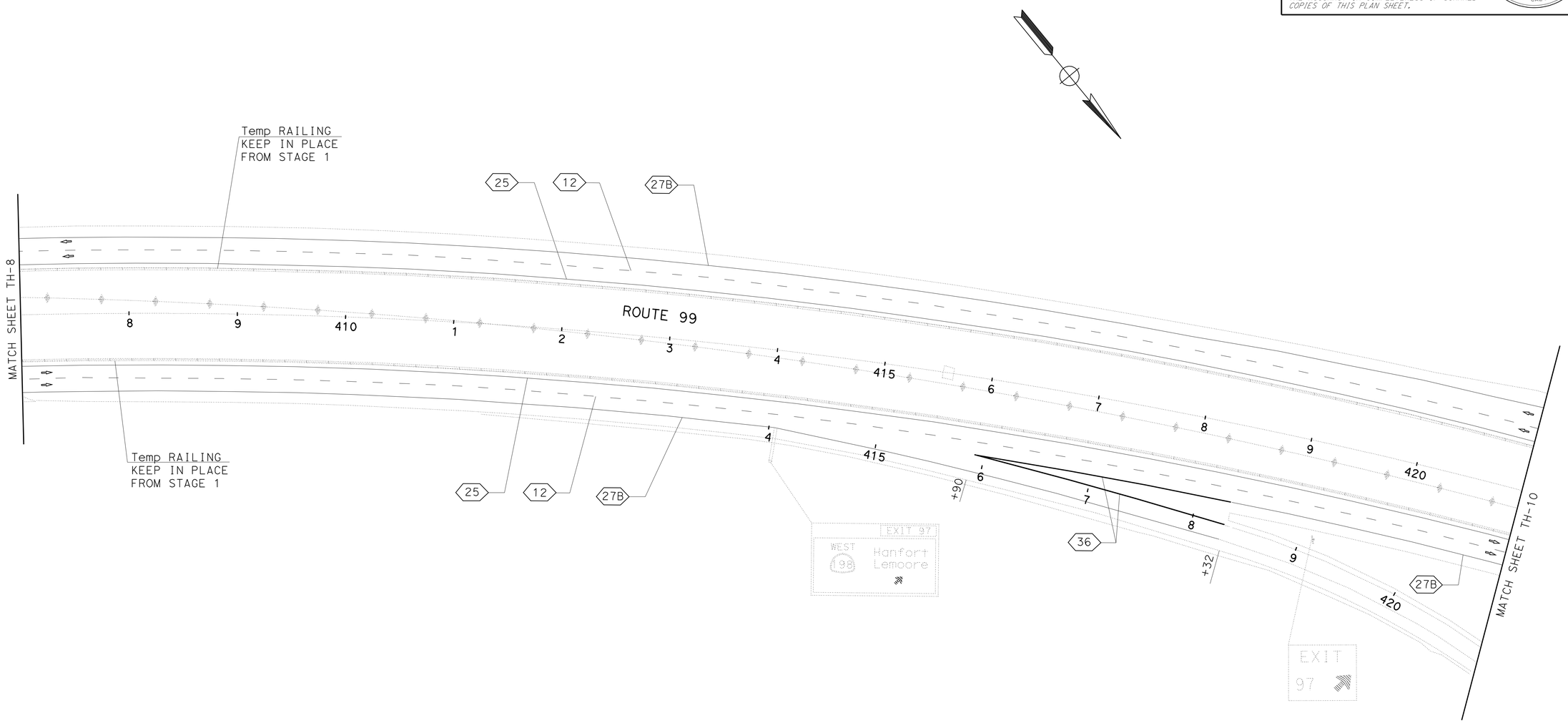

TRAFFIC HANDLING PLAN
(STAGE 2 PHASE 1)

SCALE:1" = 50'

TH-9

APPROVED FOR TRAFFIC HANDLING WORK ONLY

STATE OF CALIFORNIA - DEPARTMENT OF TRANSPORTATION
Caltrans®
TRAFFIC DESIGN

FUNCTIONAL SUPERVISOR: MOHAMMED QATAMI
CALCULATED-DESIGNED BY: SANDY LE
CHECKED BY: HASSAN TAHA
REVISED BY
DATE REVISED

LAST REVISION 12-14-11
DATE PLOTTED => 19-APR-2012
TIME PLOTTED => 10:55

Dist	COUNTY	ROUTE	POST MILES TOTAL PROJECT	SHEET No.	TOTAL SHEETS
06	Tul	99	R37.3/41.3	69	346

Sandy L Le 12-14-11
REGISTERED CIVIL ENGINEER DATE

4-16-12
PLANS APPROVAL DATE

REGISTERED PROFESSIONAL ENGINEER
SANDY L. LE
No. 67065
Exp. 9/30/12
CIVIL
STATE OF CALIFORNIA

THE STATE OF CALIFORNIA OR ITS OFFICERS OR AGENTS SHALL NOT BE RESPONSIBLE FOR THE ACCURACY OR COMPLETENESS OF SCANNED COPIES OF THIS PLAN SHEET.

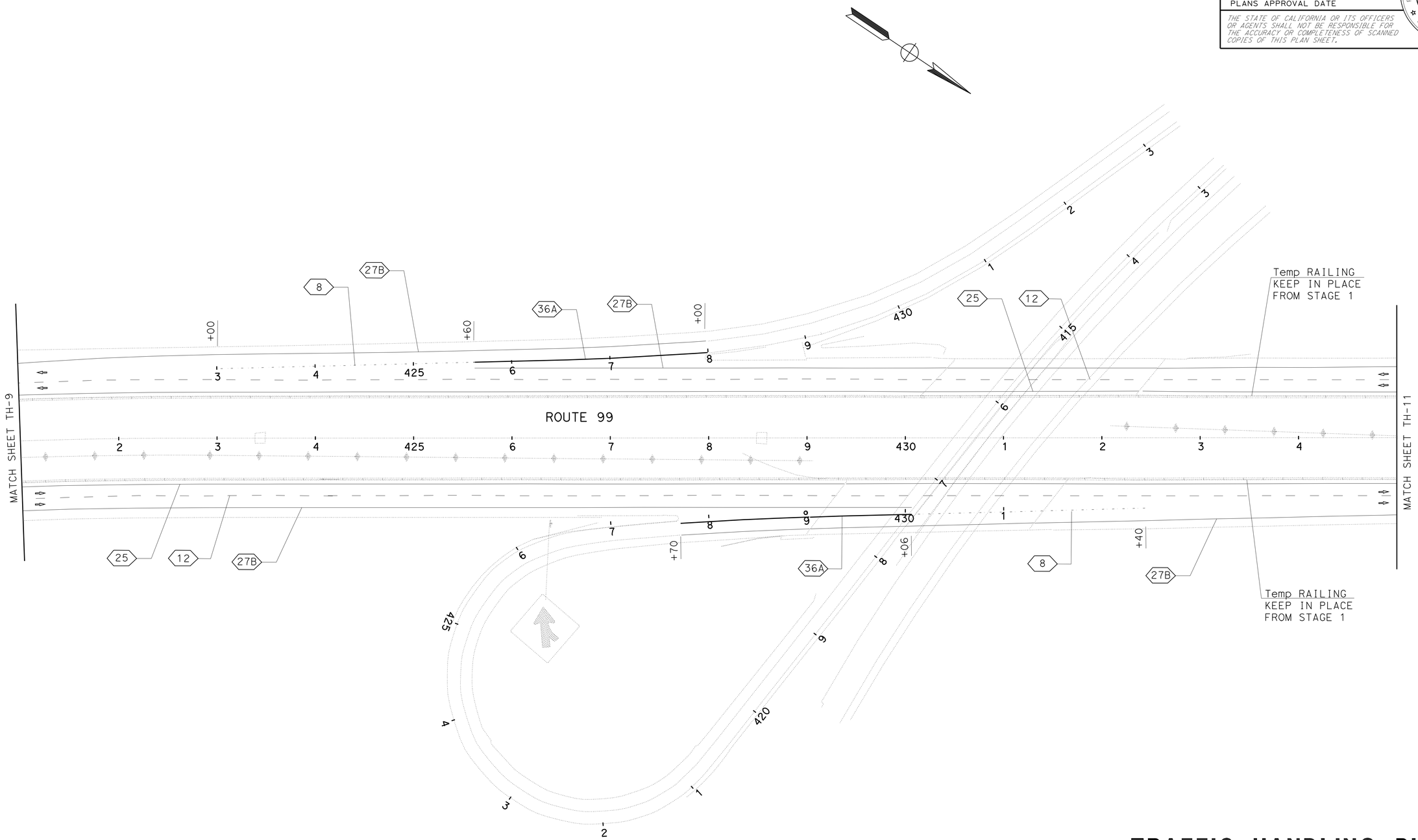

TRAFFIC HANDLING PLAN

(STAGE 2 PHASE 1)

SCALE:1" = 50'

TH-10

APPROVED FOR TRAFFIC HANDLING WORK ONLY

REVISED BY	DATE REVISED

CALCULATED-DESIGNED BY: SANDY LE
CHECKED BY: HASSAN TAHA
FUNCTIONAL SUPERVISOR: MOHAMMED QATAMI

STATE OF CALIFORNIA - DEPARTMENT OF TRANSPORTATION
Caltrans
TRAFFIC DESIGN

LAST REVISION 12-14-11
DATE PLOTTED => 19-APR-2012
TIME PLOTTED => 10:55

Dist	COUNTY	ROUTE	POST MILES TOTAL PROJECT	SHEET No.	TOTAL SHEETS
06	Tul	99	R37.3/41.3	70	346

Sandy L Le 12-14-11
REGISTERED CIVIL ENGINEER DATE

4-16-12
PLANS APPROVAL DATE

REGISTERED PROFESSIONAL ENGINEER
SANDY L. LE
No. 67065
Exp. 9/30/12
CIVIL
STATE OF CALIFORNIA

THE STATE OF CALIFORNIA OR ITS OFFICERS OR AGENTS SHALL NOT BE RESPONSIBLE FOR THE ACCURACY OR COMPLETENESS OF SCANNED COPIES OF THIS PLAN SHEET.

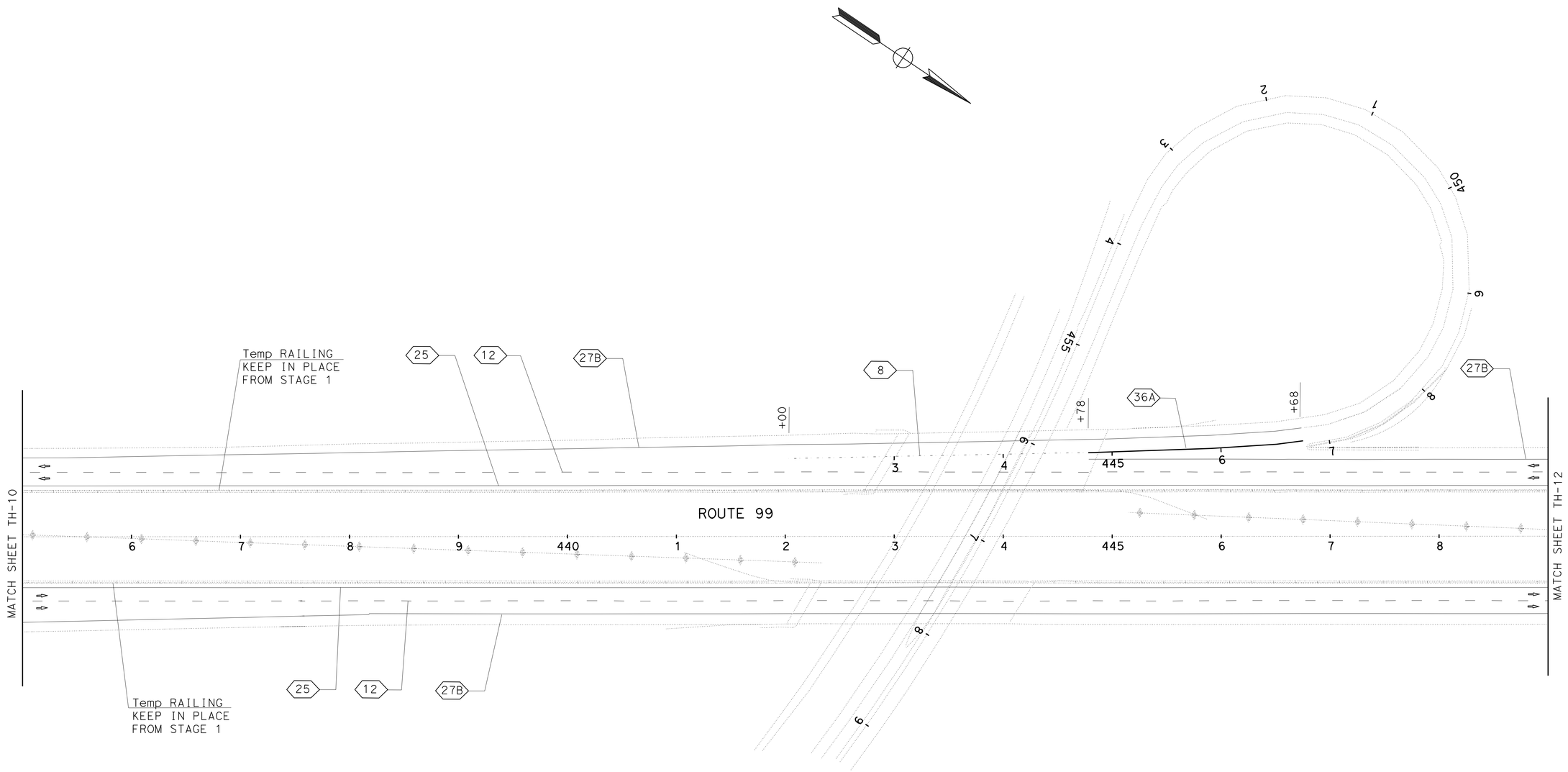

TRAFFIC HANDLING PLAN

(STAGE 2 PHASE 1)

SCALE:1" = 50'

TH-11

APPROVED FOR TRAFFIC HANDLING WORK ONLY

STATE OF CALIFORNIA - DEPARTMENT OF TRANSPORTATION
Caltrans
TRAFFIC DESIGN

FUNCTIONAL SUPERVISOR: MOHAMMED QATAMI
CALCULATED-DESIGNED BY: SANDY LE
CHECKED BY: HASSAN TAHA
REVISED BY
DATE REVISED

LAST REVISION 12-14-11
DATE PLOTTED => 19-APR-2012
TIME PLOTTED => 10:55

Dist	COUNTY	ROUTE	POST MILES TOTAL PROJECT	SHEET No.	TOTAL SHEETS
06	Tul	99	R37.3/41.3	71	346

Sandy L Le 12-14-11
REGISTERED CIVIL ENGINEER DATE

4-16-12
PLANS APPROVAL DATE

REGISTERED PROFESSIONAL ENGINEER
SANDY L. LE
No. 67065
Exp. 9/30/12
CIVIL
STATE OF CALIFORNIA

THE STATE OF CALIFORNIA OR ITS OFFICERS OR AGENTS SHALL NOT BE RESPONSIBLE FOR THE ACCURACY OR COMPLETENESS OF SCANNED COPIES OF THIS PLAN SHEET.

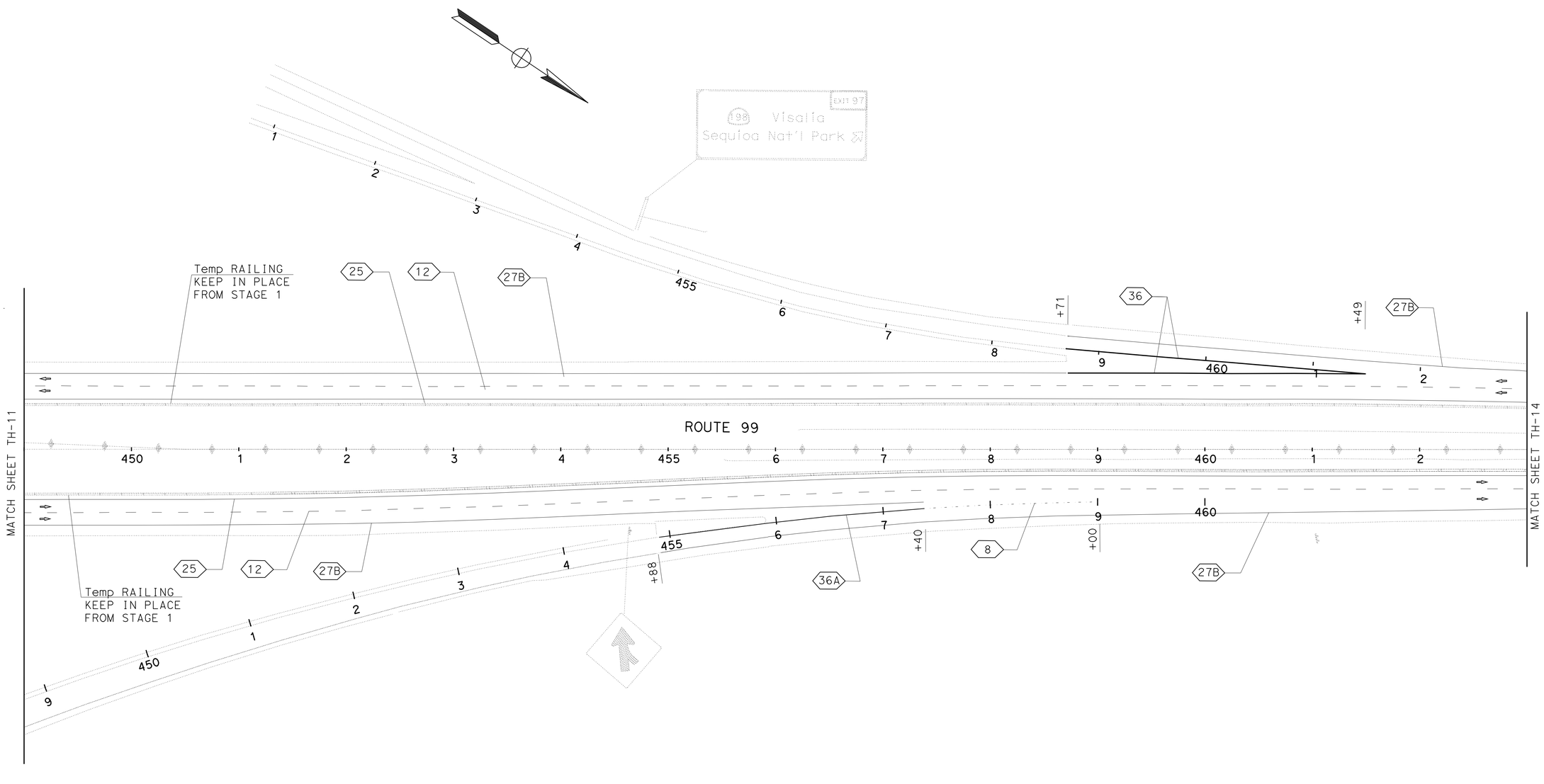

TRAFFIC HANDLING PLAN
(STAGE 2 PHASE 1)

SCALE:1" = 50'

TH-12

APPROVED FOR TRAFFIC HANDLING WORK ONLY

STATE OF CALIFORNIA - DEPARTMENT OF TRANSPORTATION
Caltrans
TRAFFIC DESIGN

FUNCTIONAL SUPERVISOR: MOHAMMED QATAMI
CALCULATED-DESIGNED BY: SANDY LE
CHECKED BY: HASSAN TAHA
REVISED BY
DATE REVISED

LAST REVISION 12-14-11
DATE PLOTTED => 19-APR-2012
TIME PLOTTED => 10:55

Dist	COUNTY	ROUTE	POST MILES TOTAL PROJECT	SHEET No.	TOTAL SHEETS
06	Tul	99	R37.3/41.3	72	346

Sandy L Le 12-14-11
REGISTERED CIVIL ENGINEER DATE

4-16-12
PLANS APPROVAL DATE

REGISTERED PROFESSIONAL ENGINEER
SANDY L. LE
No. 67065
Exp. 9/30/12
CIVIL
STATE OF CALIFORNIA

THE STATE OF CALIFORNIA OR ITS OFFICERS OR AGENTS SHALL NOT BE RESPONSIBLE FOR THE ACCURACY OR COMPLETENESS OF SCANNED COPIES OF THIS PLAN SHEET.

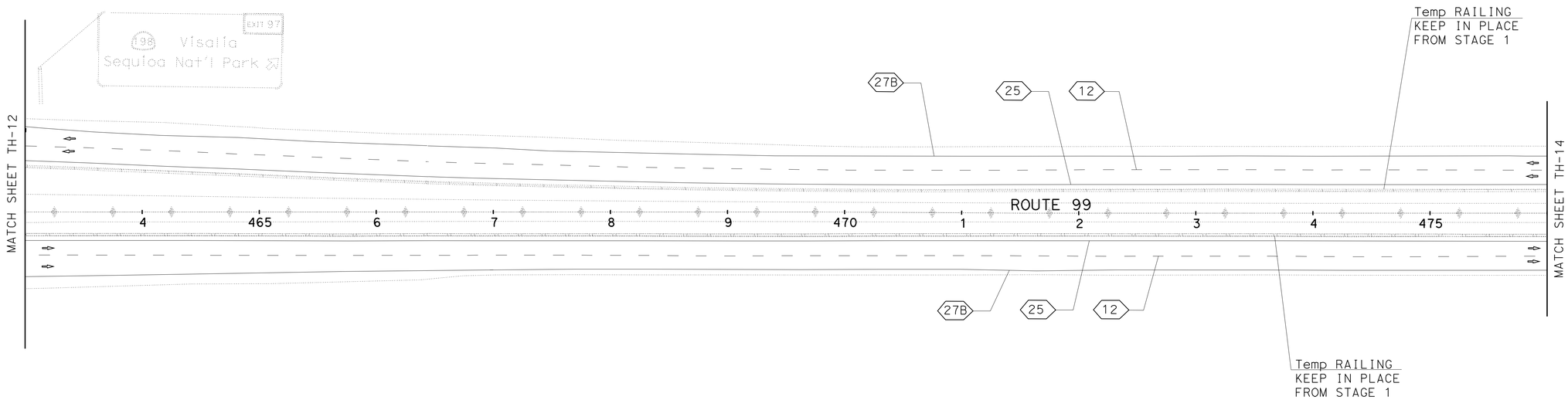

TRAFFIC HANDLING PLAN

(STAGE 2 PHASE 1)

SCALE:1" = 50′

TH-13

APPROVED FOR TRAFFIC HANDLING WORK ONLY

STATE OF CALIFORNIA - DEPARTMENT OF TRANSPORTATION
Caltrans
TRAFFIC DESIGN

FUNCTIONAL SUPERVISOR: MOHAMMED QATAMI
CALCULATED-DESIGNED BY: SANDY LE
CHECKED BY: HASSAN TAHA
REVISED BY
DATE REVISED

LAST REVISION 12-14-11
DATE PLOTTED => 19-APR-2012
TIME PLOTTED => 10:55

Dist	COUNTY	ROUTE	POST MILES TOTAL PROJECT	SHEET No.	TOTAL SHEETS
06	Tul	99	R37.3/41.3	73	346

Sandy L Le 12-14-11
REGISTERED CIVIL ENGINEER DATE

4-16-12
PLANS APPROVAL DATE

REGISTERED PROFESSIONAL ENGINEER
SANDY L. LE
No. 67065
Exp. 9/30/12
CIVIL
STATE OF CALIFORNIA

THE STATE OF CALIFORNIA OR ITS OFFICERS OR AGENTS SHALL NOT BE RESPONSIBLE FOR THE ACCURACY OR COMPLETENESS OF SCANNED COPIES OF THIS PLAN SHEET.

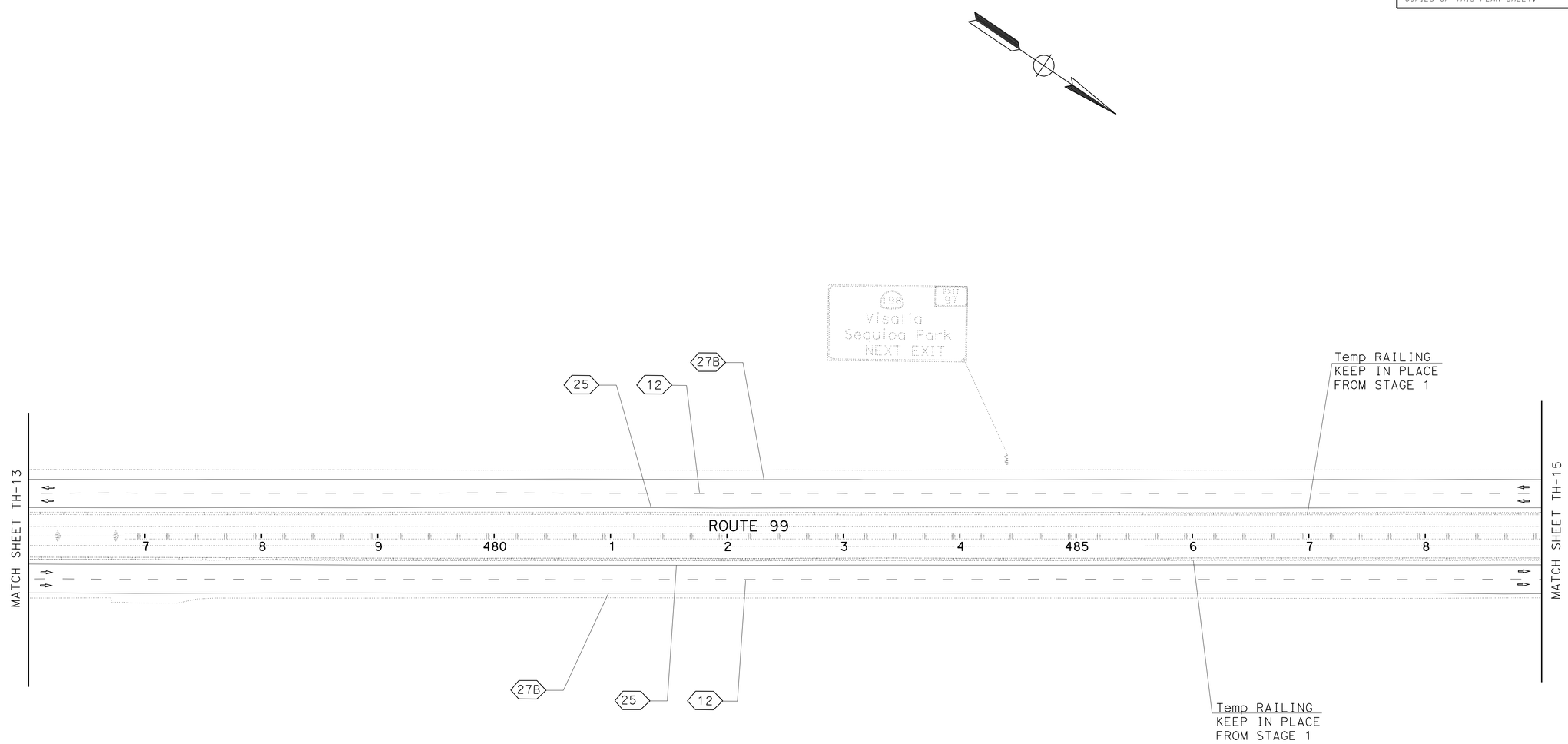

TRAFFIC HANDLING PLAN

(STAGE 2 PHASE 1)

SCALE:1" = 50'

TH-14

APPROVED FOR TRAFFIC HANDLING WORK ONLY

STATE OF CALIFORNIA - DEPARTMENT OF TRANSPORTATION
Caltrans
TRAFFIC DESIGN

FUNCTIONAL SUPERVISOR: MOHAMMED QATAMI
CALCULATED-DESIGNED BY: SANDY LE
CHECKED BY: HASSAN TAHA
REVISED BY
DATE REVISED

LAST REVISION 12-14-11
DATE PLOTTED => 19-APR-2012
TIME PLOTTED => 10:55

Dist	COUNTY	ROUTE	POST MILES TOTAL PROJECT	SHEET No.	TOTAL SHEETS
06	Tul	99	R37.3/41.3	74	346

Sandy L Le 12-14-11
REGISTERED CIVIL ENGINEER DATE

4-16-12
PLANS APPROVAL DATE

REGISTERED PROFESSIONAL ENGINEER
SANDY L. LE
No. 67065
Exp. 9/30/12
CIVIL
STATE OF CALIFORNIA

THE STATE OF CALIFORNIA OR ITS OFFICERS OR AGENTS SHALL NOT BE RESPONSIBLE FOR THE ACCURACY OR COMPLETENESS OF SCANNED COPIES OF THIS PLAN SHEET.

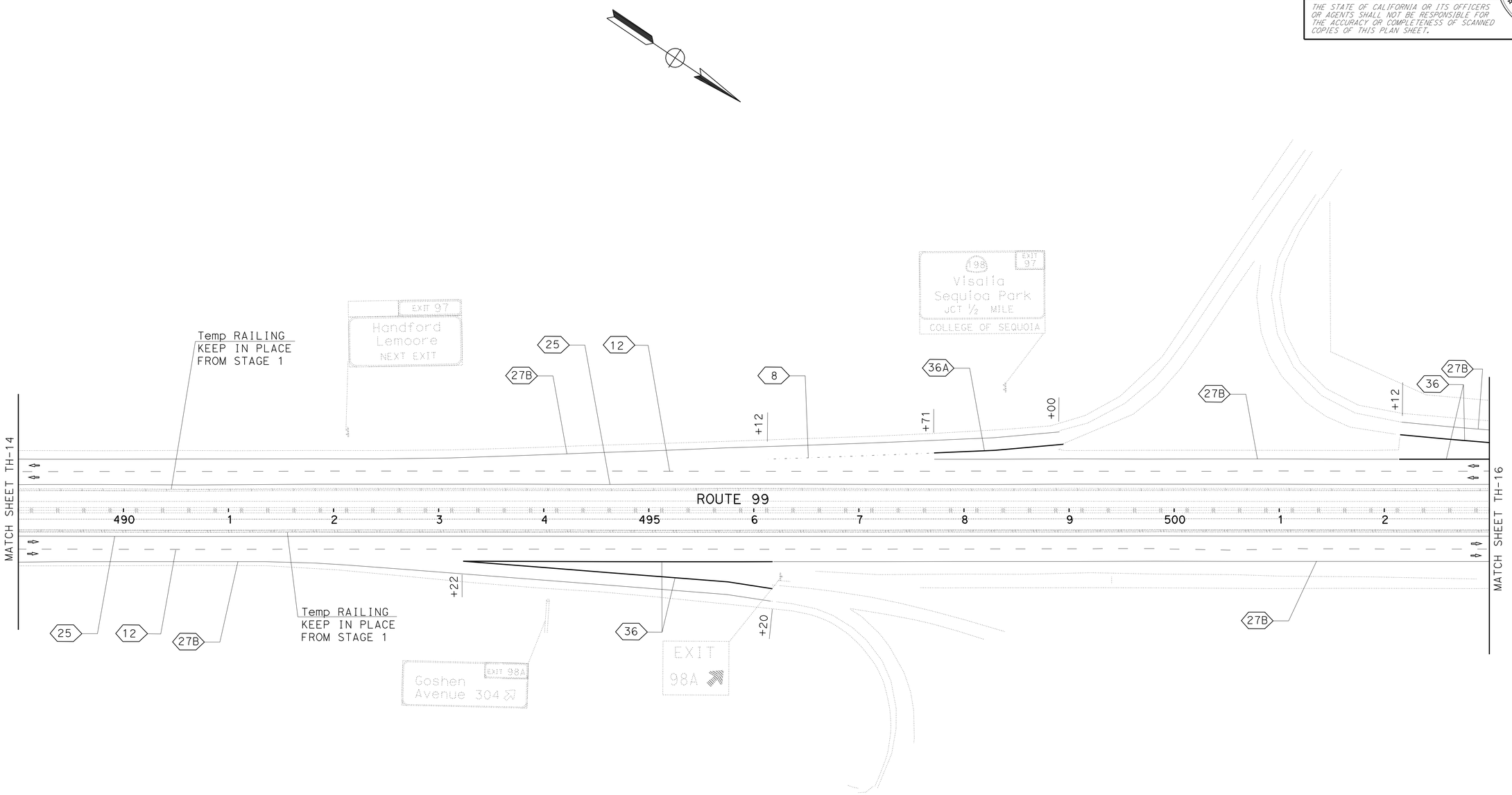

TRAFFIC HANDLING PLAN
(STAGE 2 PHASE 1)

SCALE:1" = 50′ **TH-15**

APPROVED FOR TRAFFIC HANDLING WORK ONLY

STATE OF CALIFORNIA - DEPARTMENT OF TRANSPORTATION
Caltrans
TRAFFIC DESIGN

FUNCTIONAL SUPERVISOR: MOHAMMED QATAMI
CALCULATED-DESIGNED BY: SANDY LE
CHECKED BY: HASSAN TAHA
REVISED BY
DATE REVISED

LAST REVISION 12-14-11
DATE PLOTTED => 19-APR-2012
TIME PLOTTED => 10:55

Dist	COUNTY	ROUTE	POST MILES TOTAL PROJECT	SHEET No.	TOTAL SHEETS
06	Tul	99	R37.3/41.3	75	346

Sandy L Le 12-14-11
REGISTERED CIVIL ENGINEER DATE

4-16-12
PLANS APPROVAL DATE

REGISTERED PROFESSIONAL ENGINEER
SANDY L. LE
No. 67065
Exp. 9/30/12
CIVIL
STATE OF CALIFORNIA

THE STATE OF CALIFORNIA OR ITS OFFICERS OR AGENTS SHALL NOT BE RESPONSIBLE FOR THE ACCURACY OR COMPLETENESS OF SCANNED COPIES OF THIS PLAN SHEET.

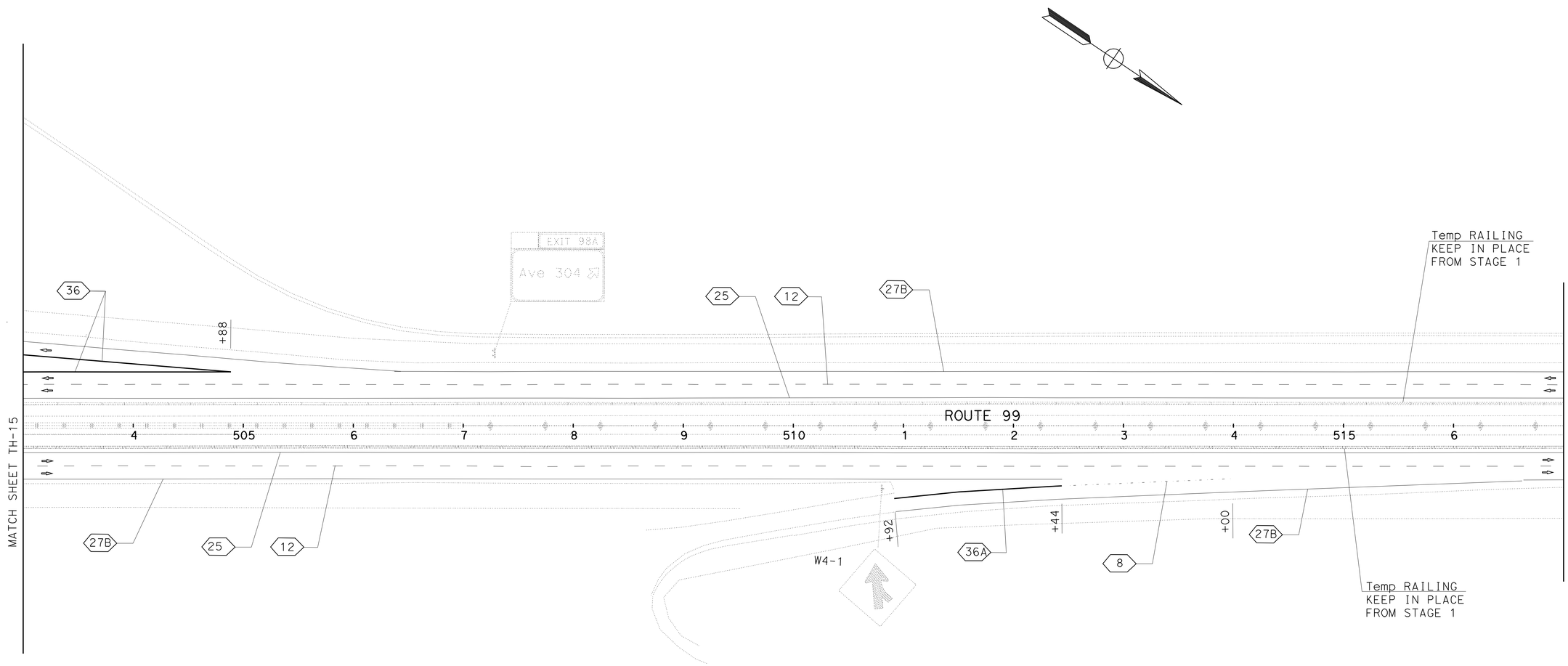

TRAFFIC HANDLING PLAN
(STAGE 2 PHASE 1)

SCALE:1" = 50′ **TH-16**

APPROVED FOR TRAFFIC HANDLING WORK ONLY

STATE OF CALIFORNIA - DEPARTMENT OF TRANSPORTATION
Caltrans
TRAFFIC DESIGN

FUNCTIONAL SUPERVISOR: MOHAMMED QATAMI
CALCULATED-DESIGNED BY: SANDY LE
CHECKED BY: HASSAN TAHA
REVISED BY
DATE REVISED

LAST REVISION 12-14-11
DATE PLOTTED => 19-APR-2012
TIME PLOTTED => 10:55

Dist	COUNTY	ROUTE	POST MILES TOTAL PROJECT	SHEET No.	TOTAL SHEETS
06	Tul	99	R37.3/41.3	76	346

Sandy L Le 12-14-11
REGISTERED CIVIL ENGINEER DATE

4-16-12
PLANS APPROVAL DATE

REGISTERED PROFESSIONAL ENGINEER
SANDY L. LE
No. 67065
Exp. 9/30/12
CIVIL
STATE OF CALIFORNIA

THE STATE OF CALIFORNIA OR ITS OFFICERS OR AGENTS SHALL NOT BE RESPONSIBLE FOR THE ACCURACY OR COMPLETENESS OF SCANNED COPIES OF THIS PLAN SHEET.

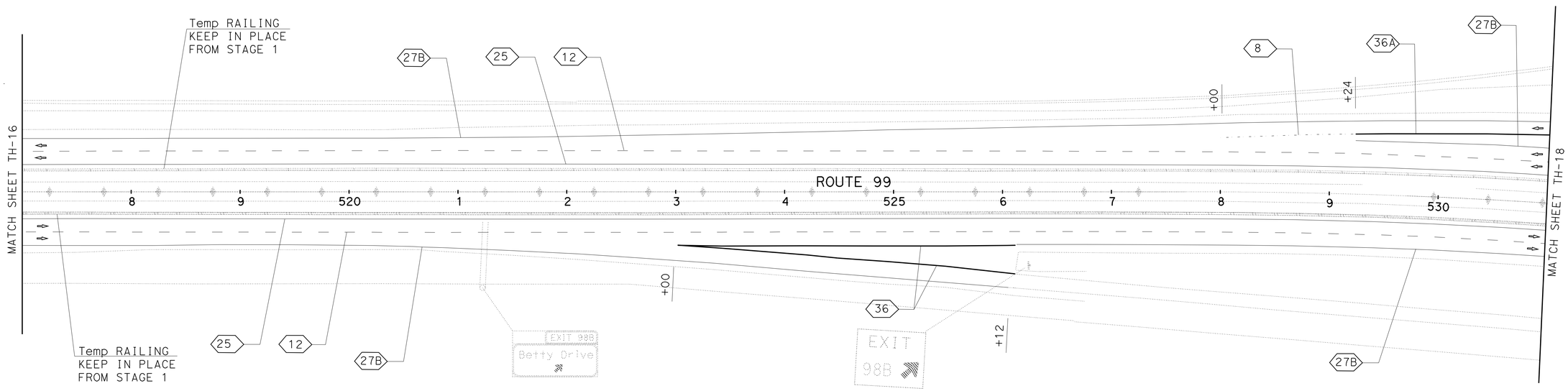

APPROVED FOR TRAFFIC HANDLING WORK ONLY

TRAFFIC HANDLING PLAN
(STAGE 2 PHASE 1)

SCALE:1" = 50'

TH-17

STATE OF CALIFORNIA - DEPARTMENT OF TRANSPORTATION
Caltrans
TRAFFIC DESIGN

FUNCTIONAL SUPERVISOR: MOHAMMED QATAMI
CALCULATED-DESIGNED BY: SANDY LE
CHECKED BY: HASSAN TAHA
REVISED BY
DATE REVISED

LAST REVISION 12-14-11
DATE PLOTTED => 19-APR-2012
TIME PLOTTED => 10:55

Dist	COUNTY	ROUTE	POST MILES TOTAL PROJECT	SHEET No.	TOTAL SHEETS
06	Tul	99	R37.3/41.3	77	346

Sandy L Le 12-14-11
REGISTERED CIVIL ENGINEER DATE

4-16-12
PLANS APPROVAL DATE

REGISTERED PROFESSIONAL ENGINEER
SANDY L. LE
No. 67065
Exp. 9/30/12
CIVIL
STATE OF CALIFORNIA

THE STATE OF CALIFORNIA OR ITS OFFICERS OR AGENTS SHALL NOT BE RESPONSIBLE FOR THE ACCURACY OR COMPLETENESS OF SCANNED COPIES OF THIS PLAN SHEET.

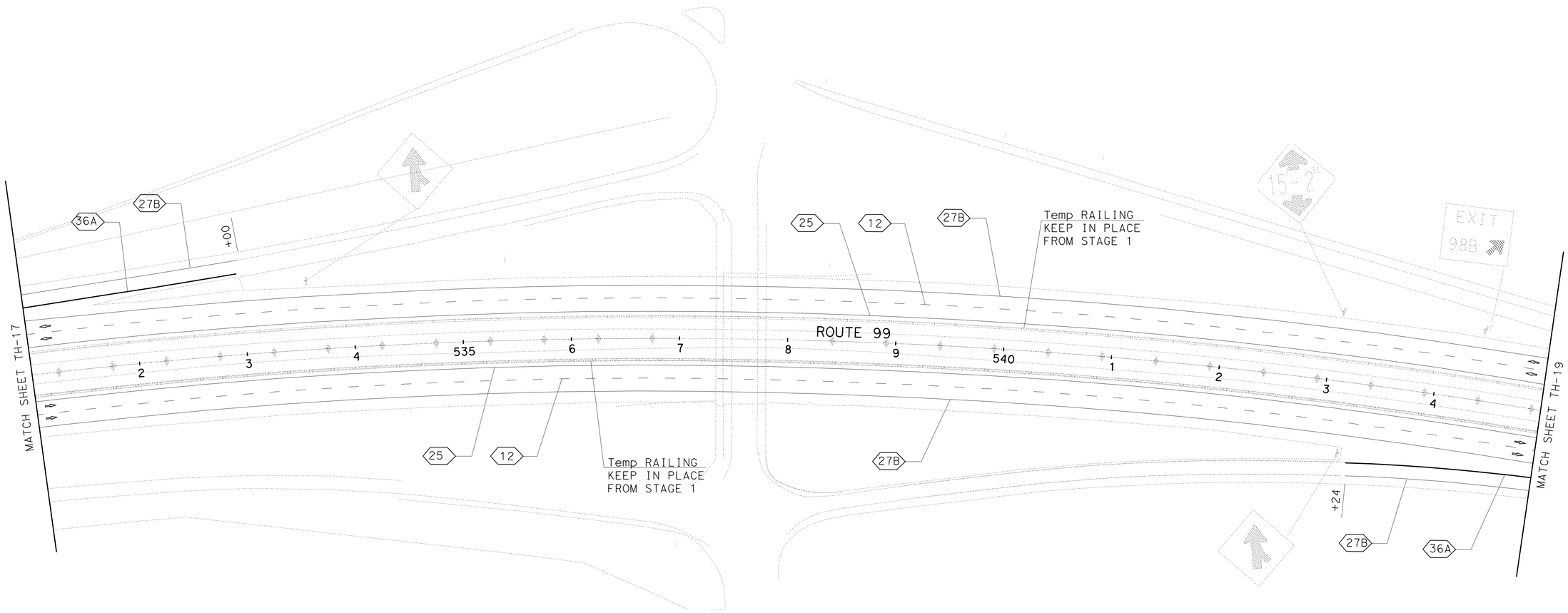

TRAFFIC HANDLING PLAN
(STAGE 2 PHASE 1)

SCALE:1" = 50'

TH-18

APPROVED FOR TRAFFIC HANDLING WORK ONLY

STATE OF CALIFORNIA - DEPARTMENT OF TRANSPORTATION
Caltrans
TRAFFIC DESIGN

FUNCTIONAL SUPERVISOR: MOHAMMED QATAMI
CALCULATED-DESIGNED BY: SANDY LE
CHECKED BY: HASSAN TAHA
REVISED BY
DATE REVISED

LAST REVISION 12-14-11
DATE PLOTTED => 19-APR-2012
TIME PLOTTED => 10:55

Dist	COUNTY	ROUTE	POST MILES TOTAL PROJECT	SHEET No.	TOTAL SHEETS
06	Tul	99	R37.3/41.3	78	346

Sandy L Le 12-14-11
REGISTERED CIVIL ENGINEER DATE

4-16-12
PLANS APPROVAL DATE

REGISTERED PROFESSIONAL ENGINEER
SANDY L. LE
No. 67065
Exp. 9/30/12
CIVIL
STATE OF CALIFORNIA

THE STATE OF CALIFORNIA OR ITS OFFICERS OR AGENTS SHALL NOT BE RESPONSIBLE FOR THE ACCURACY OR COMPLETENESS OF SCANNED COPIES OF THIS PLAN SHEET.

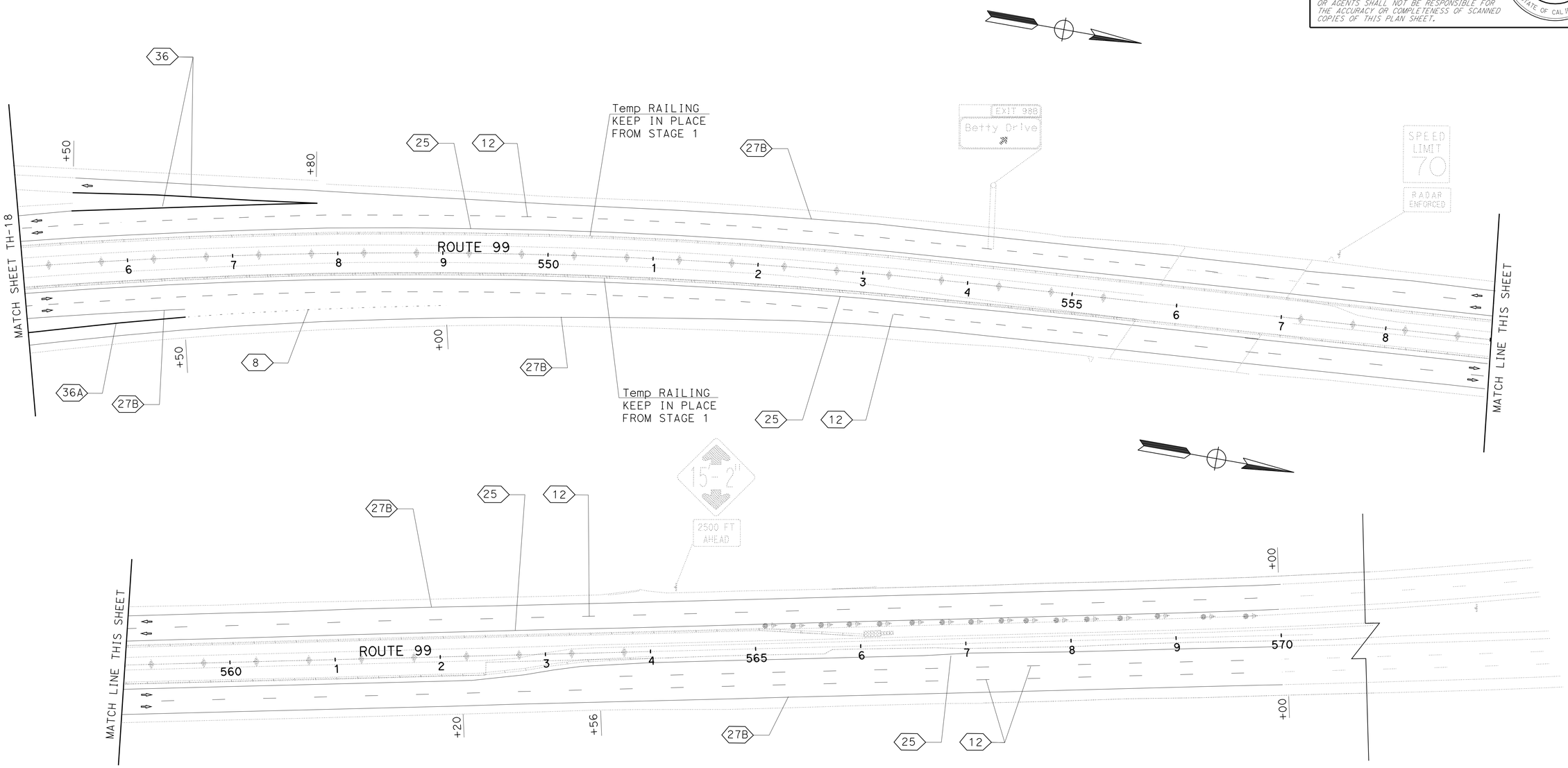

TRAFFIC HANDLING PLAN
(STAGE 2 PHASE 1)

SCALE:1" = 50′ **TH-19**

APPROVED FOR TRAFFIC HANDLING WORK ONLY

STATE OF CALIFORNIA - DEPARTMENT OF TRANSPORTATION
Caltrans
TRAFFIC DESIGN

FUNCTIONAL SUPERVISOR: MOHAMMED QATAMI
CALCULATED-DESIGNED BY: SANDY LE
CHECKED BY: HASSAN TAHA
REVISED BY
DATE REVISED

LAST REVISION 12-14-11
DATE PLOTTED => 19-APR-2012
TIME PLOTTED => 10:55

Dist	COUNTY	ROUTE	POST MILES TOTAL PROJECT	SHEET No.	TOTAL SHEETS
06	Tul	99	R37.3/41.3	79	346

Sandy L Le 12-14-11
REGISTERED CIVIL ENGINEER DATE

4-16-12
PLANS APPROVAL DATE

REGISTERED PROFESSIONAL ENGINEER
SANDY L. LE
No. 67065
Exp. 9/30/12
CIVIL
STATE OF CALIFORNIA

THE STATE OF CALIFORNIA OR ITS OFFICERS OR AGENTS SHALL NOT BE RESPONSIBLE FOR THE ACCURACY OR COMPLETENESS OF SCANNED COPIES OF THIS PLAN SHEET.

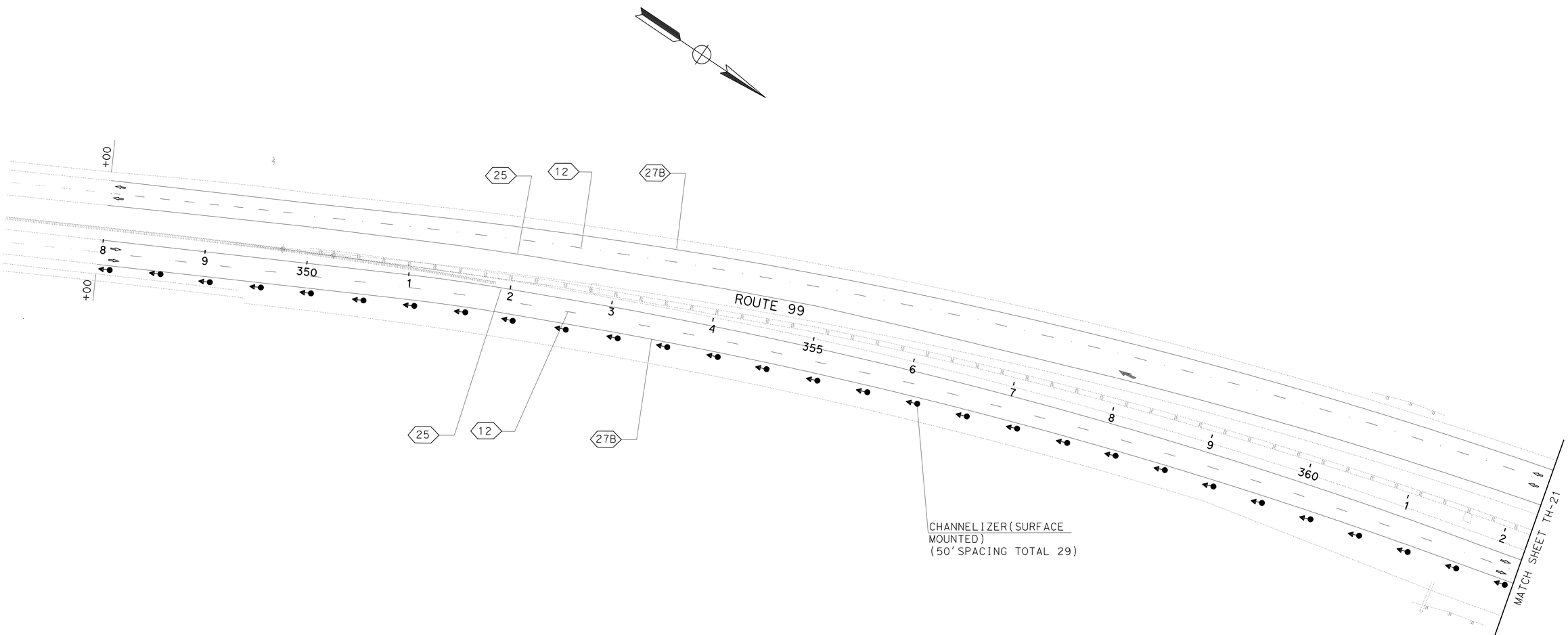

TRAFFIC HANDLING PLAN
(STAGE 3)

SCALE:1" = 50'

TH-20

APPROVED FOR TRAFFIC HANDLING WORK ONLY

STATE OF CALIFORNIA - DEPARTMENT OF TRANSPORTATION
Caltrans
TRAFFIC DESIGN

FUNCTIONAL SUPERVISOR: MOHAMMED QATAMI
CALCULATED-DESIGNED BY: SANDY LE
CHECKED BY: HASSAN TAHA
REVISED BY
DATE REVISED

LAST REVISION 12-14-11
DATE PLOTTED => 19-APR-2012
TIME PLOTTED => 10:55

Dist	COUNTY	ROUTE	POST MILES TOTAL PROJECT	SHEET No.	TOTAL SHEETS
06	Tul	99	R37.3/41.3	80	346

Sandy L Le 12-14-11
REGISTERED CIVIL ENGINEER DATE

4-16-12
PLANS APPROVAL DATE

REGISTERED PROFESSIONAL ENGINEER
SANDY L. LE
No. 67065
Exp. 9/30/12
CIVIL
STATE OF CALIFORNIA

THE STATE OF CALIFORNIA OR ITS OFFICERS OR AGENTS SHALL NOT BE RESPONSIBLE FOR THE ACCURACY OR COMPLETENESS OF SCANNED COPIES OF THIS PLAN SHEET.

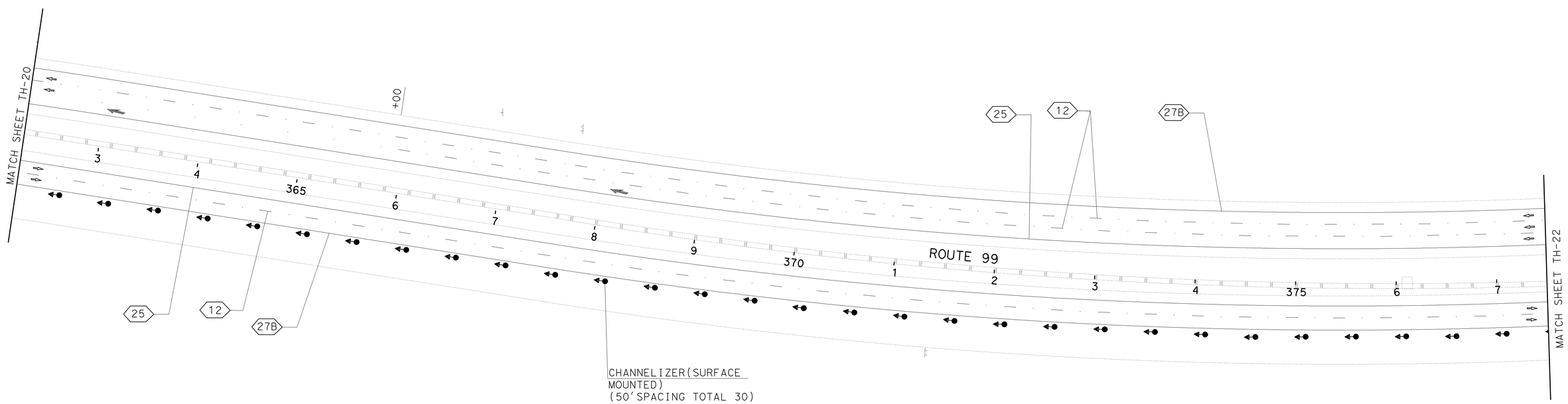

TRAFFIC HANDLING PLAN
(STAGE 3)

SCALE:1" = 50'

TH-21

APPROVED FOR TRAFFIC HANDLING WORK ONLY

STATE OF CALIFORNIA - DEPARTMENT OF TRANSPORTATION
Caltrans®
TRAFFIC DESIGN

FUNCTIONAL SUPERVISOR: MOHAMMED QATAMI

CALCULATED-DESIGNED BY: SANDY LE
CHECKED BY: HASSAN TAHA

REVISED BY
DATE REVISED

LAST REVISION 12-14-11
DATE PLOTTED => 19-APR-2012
TIME PLOTTED => 10:55

Dist	COUNTY	ROUTE	POST MILES TOTAL PROJECT	SHEET No.	TOTAL SHEETS
06	Tul	99	R37.3/41.3	81	346

Sandy L Le 12-14-11
REGISTERED CIVIL ENGINEER DATE

4-16-12
PLANS APPROVAL DATE

REGISTERED PROFESSIONAL ENGINEER
SANDY L. LE
No. 67065
Exp. 9/30/12
CIVIL
STATE OF CALIFORNIA

THE STATE OF CALIFORNIA OR ITS OFFICERS OR AGENTS SHALL NOT BE RESPONSIBLE FOR THE ACCURACY OR COMPLETENESS OF SCANNED COPIES OF THIS PLAN SHEET.

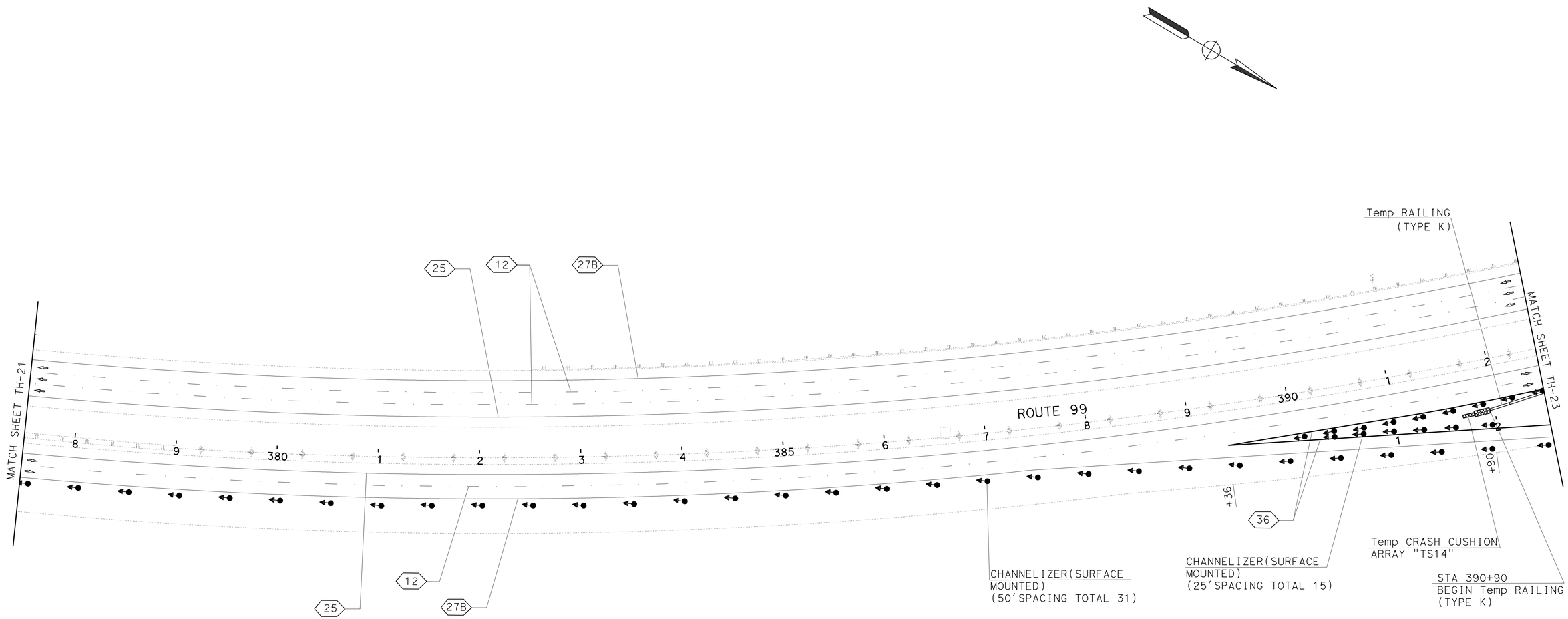

TRAFFIC HANDLING PLAN
(STAGE 3)

SCALE:1" = 50'

TH-22

APPROVED FOR TRAFFIC HANDLING WORK ONLY

STATE OF CALIFORNIA - DEPARTMENT OF TRANSPORTATION
Caltrans
TRAFFIC DESIGN

FUNCTIONAL SUPERVISOR: MOHAMMED QATAMI
CALCULATED-DESIGNED BY: SANDY LE
CHECKED BY: HASSAN TAHA
REVISED BY
DATE REVISED

LAST REVISION 12-14-11
DATE PLOTTED => 19-APR-2012
TIME PLOTTED => 10:56

Dist	COUNTY	ROUTE	POST MILES TOTAL PROJECT	SHEET No.	TOTAL SHEETS
06	Tul	99	R37.3/41.3	82	346

Sandy L Le 12-14-11
REGISTERED CIVIL ENGINEER DATE

4-16-12
PLANS APPROVAL DATE

REGISTERED PROFESSIONAL ENGINEER
SANDY L. LE
No. 67065
Exp. 9/30/12
CIVIL
STATE OF CALIFORNIA

THE STATE OF CALIFORNIA OR ITS OFFICERS OR AGENTS SHALL NOT BE RESPONSIBLE FOR THE ACCURACY OR COMPLETENESS OF SCANNED COPIES OF THIS PLAN SHEET.

SECTION D-D
NO SCALE

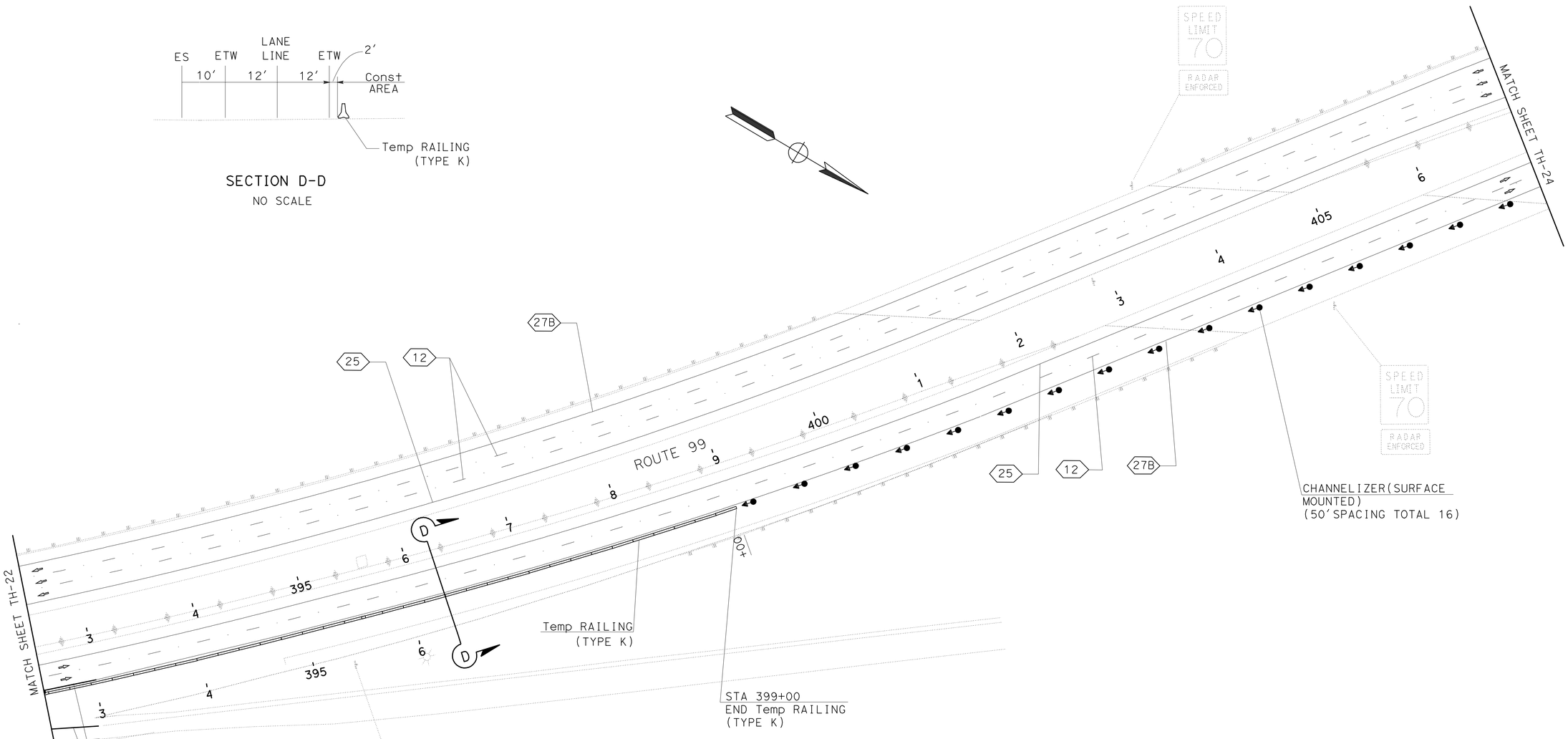

TRAFFIC HANDLING PLAN
(STAGE 3)

SCALE:1" = 50'

TH-23

APPROVED FOR TRAFFIC HANDLING WORK ONLY

STATE OF CALIFORNIA - DEPARTMENT OF TRANSPORTATION
Caltrans
TRAFFIC DESIGN

FUNCTIONAL SUPERVISOR: MOHAMMED QATAMI
CALCULATED-DESIGNED BY: SANDY LE
CHECKED BY: HASSAN TAHA
REVISED BY
DATE REVISED

LAST REVISION 12-14-11
DATE PLOTTED => 19-APR-2012
TIME PLOTTED => 10:56

Dist	COUNTY	ROUTE	POST MILES TOTAL PROJECT	SHEET No.	TOTAL SHEETS
06	Tul	99	R37.3/41.3	83	346

Sandy L Le 12-14-11
REGISTERED CIVIL ENGINEER DATE

4-16-12
PLANS APPROVAL DATE

REGISTERED PROFESSIONAL ENGINEER
SANDY L. LE
No. 67065
Exp. 9/30/12
CIVIL
STATE OF CALIFORNIA

THE STATE OF CALIFORNIA OR ITS OFFICERS OR AGENTS SHALL NOT BE RESPONSIBLE FOR THE ACCURACY OR COMPLETENESS OF SCANNED COPIES OF THIS PLAN SHEET.

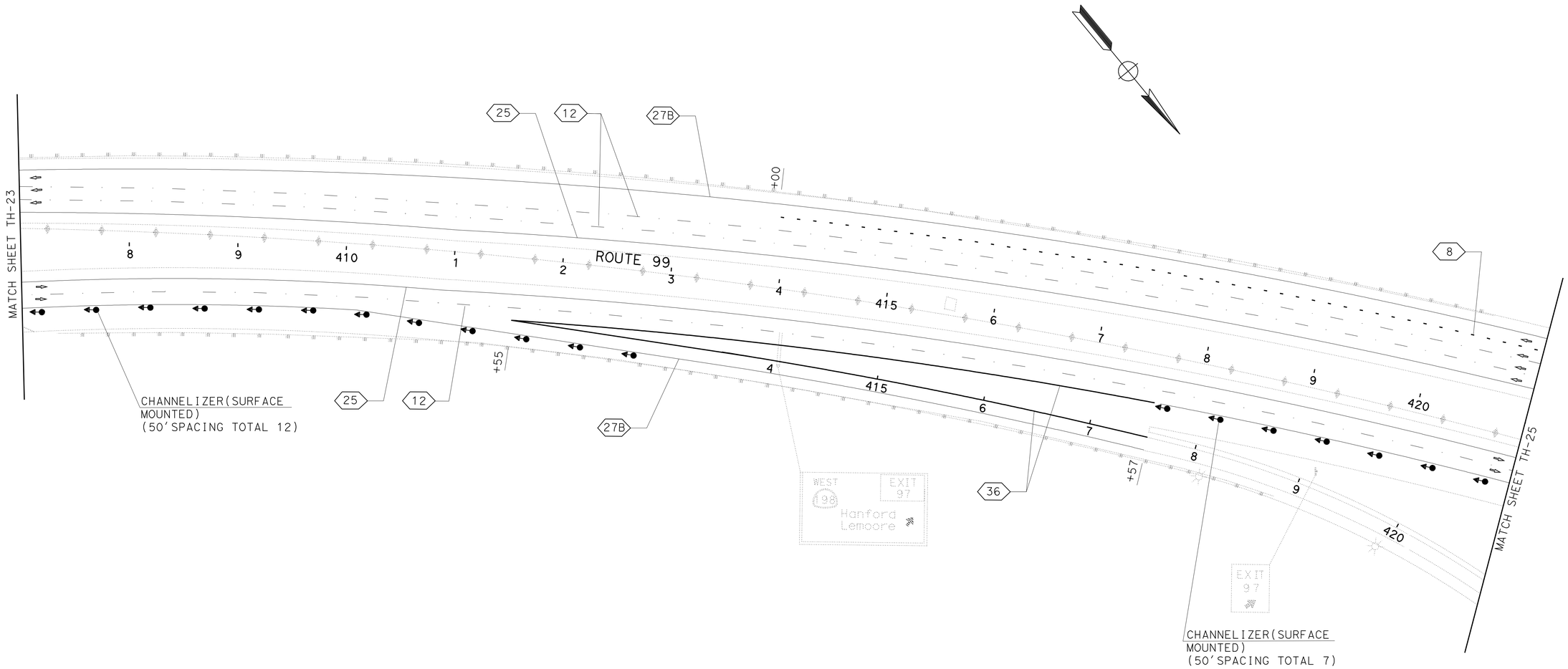

TRAFFIC HANDLING PLAN
(STAGE 3)

SCALE:1" = 50'

TH-24

APPROVED FOR TRAFFIC HANDLING WORK ONLY

STATE OF CALIFORNIA - DEPARTMENT OF TRANSPORTATION
Caltrans
TRAFFIC DESIGN

FUNCTIONAL SUPERVISOR: MOHAMMED QATAMI
CALCULATED-DESIGNED BY: SANDY LE
CHECKED BY: HASSAN TAHA
REVISED BY
DATE REVISED

LAST REVISION 12-14-11
DATE PLOTTED => 19-APR-2012
TIME PLOTTED => 10:56

Dist	COUNTY	ROUTE	POST MILES TOTAL PROJECT	SHEET No.	TOTAL SHEETS
06	Tul	99	R37.3/41.3	84	346

Sandy L Le 12-14-11
REGISTERED CIVIL ENGINEER DATE

4-16-12
PLANS APPROVAL DATE

REGISTERED PROFESSIONAL ENGINEER
SANDY L. LE
No. 67065
Exp. 9/30/12
CIVIL
STATE OF CALIFORNIA

THE STATE OF CALIFORNIA OR ITS OFFICERS OR AGENTS SHALL NOT BE RESPONSIBLE FOR THE ACCURACY OR COMPLETENESS OF SCANNED COPIES OF THIS PLAN SHEET.

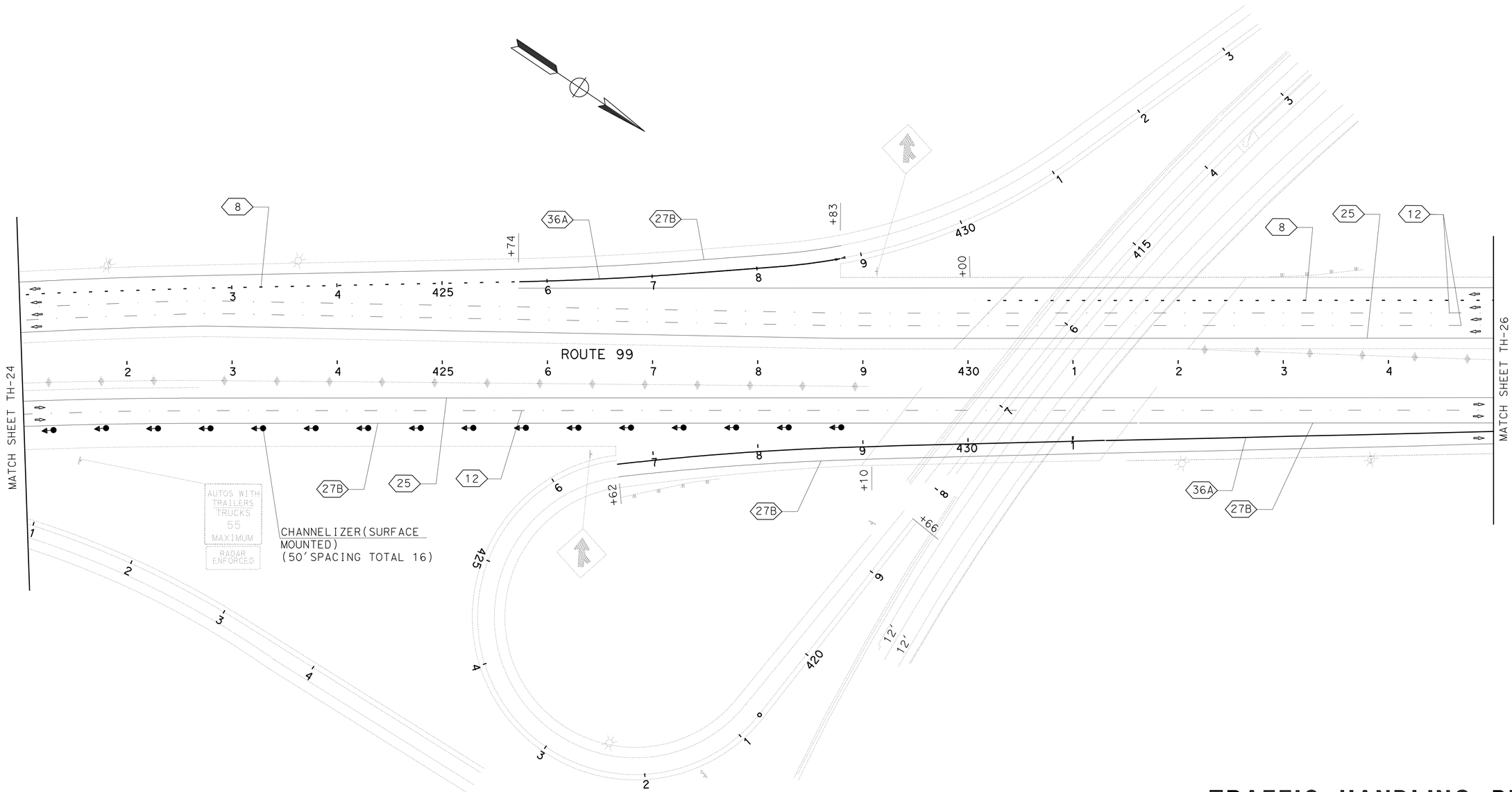

TRAFFIC HANDLING PLAN
(STAGE 3)

SCALE:1" = 50'

TH-25

APPROVED FOR TRAFFIC HANDLING WORK ONLY

STATE OF CALIFORNIA - DEPARTMENT OF TRANSPORTATION
Caltrans
TRAFFIC DESIGN

FUNCTIONAL SUPERVISOR: MOHAMMED QATAMI
CALCULATED-DESIGNED BY: SANDY LE
CHECKED BY: HASSAN TAHA
REVISED BY
DATE REVISED

LAST REVISION 12-14-11
DATE PLOTTED => 19-APR-2012
TIME PLOTTED => 10:56

Dist	COUNTY	ROUTE	POST MILES TOTAL PROJECT	SHEET No.	TOTAL SHEETS
06	Tul	99	R37.3/41.3	85	346

Sandy L Le 12-14-11
REGISTERED CIVIL ENGINEER DATE

4-16-12
PLANS APPROVAL DATE

REGISTERED PROFESSIONAL ENGINEER
SANDY L. LE
No. 67065
Exp. 9/30/12
CIVIL
STATE OF CALIFORNIA

THE STATE OF CALIFORNIA OR ITS OFFICERS OR AGENTS SHALL NOT BE RESPONSIBLE FOR THE ACCURACY OR COMPLETENESS OF SCANNED COPIES OF THIS PLAN SHEET.

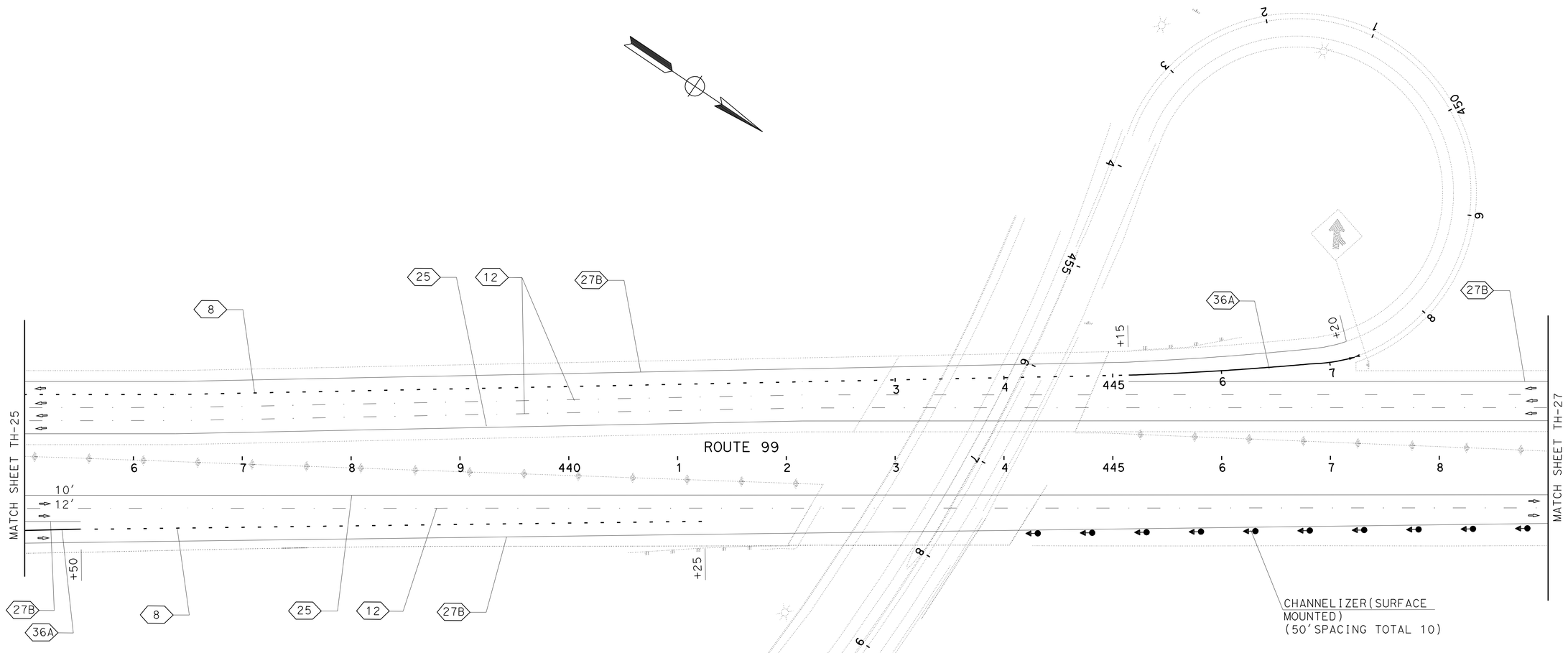

TRAFFIC HANDLING PLAN
(STAGE 3)

SCALE:1" = 50'

TH-26

APPROVED FOR TRAFFIC HANDLING WORK ONLY

STATE OF CALIFORNIA - DEPARTMENT OF TRANSPORTATION
Caltrans
TRAFFIC DESIGN

FUNCTIONAL SUPERVISOR: MOHAMMED QATAMI
CALCULATED-DESIGNED BY: SANDY LE
CHECKED BY: HASSAN TAHA
REVISED BY
DATE REVISED

LAST REVISION 12-14-11
DATE PLOTTED => 19-APR-2012
TIME PLOTTED => 10:56

BORDER LAST REVISED 7/2/2010
USERNAME => s123631
DGN FILE => 0600020408md026.dgn
RELATIVE BORDER SCALE IS IN INCHES 0 1 2 3
UNIT 1513
PROJECT NUMBER & PHASE 06000204081

Dist	COUNTY	ROUTE	POST MILES TOTAL PROJECT	SHEET No.	TOTAL SHEETS
06	Tul	99	R37.3/41.3	86	346

Sandy L Le 12-14-11
REGISTERED CIVIL ENGINEER DATE

4-16-12
PLANS APPROVAL DATE

REGISTERED PROFESSIONAL ENGINEER
SANDY L. LE
No. 67065
Exp. 9/30/12
CIVIL
STATE OF CALIFORNIA

THE STATE OF CALIFORNIA OR ITS OFFICERS OR AGENTS SHALL NOT BE RESPONSIBLE FOR THE ACCURACY OR COMPLETENESS OF SCANNED COPIES OF THIS PLAN SHEET.

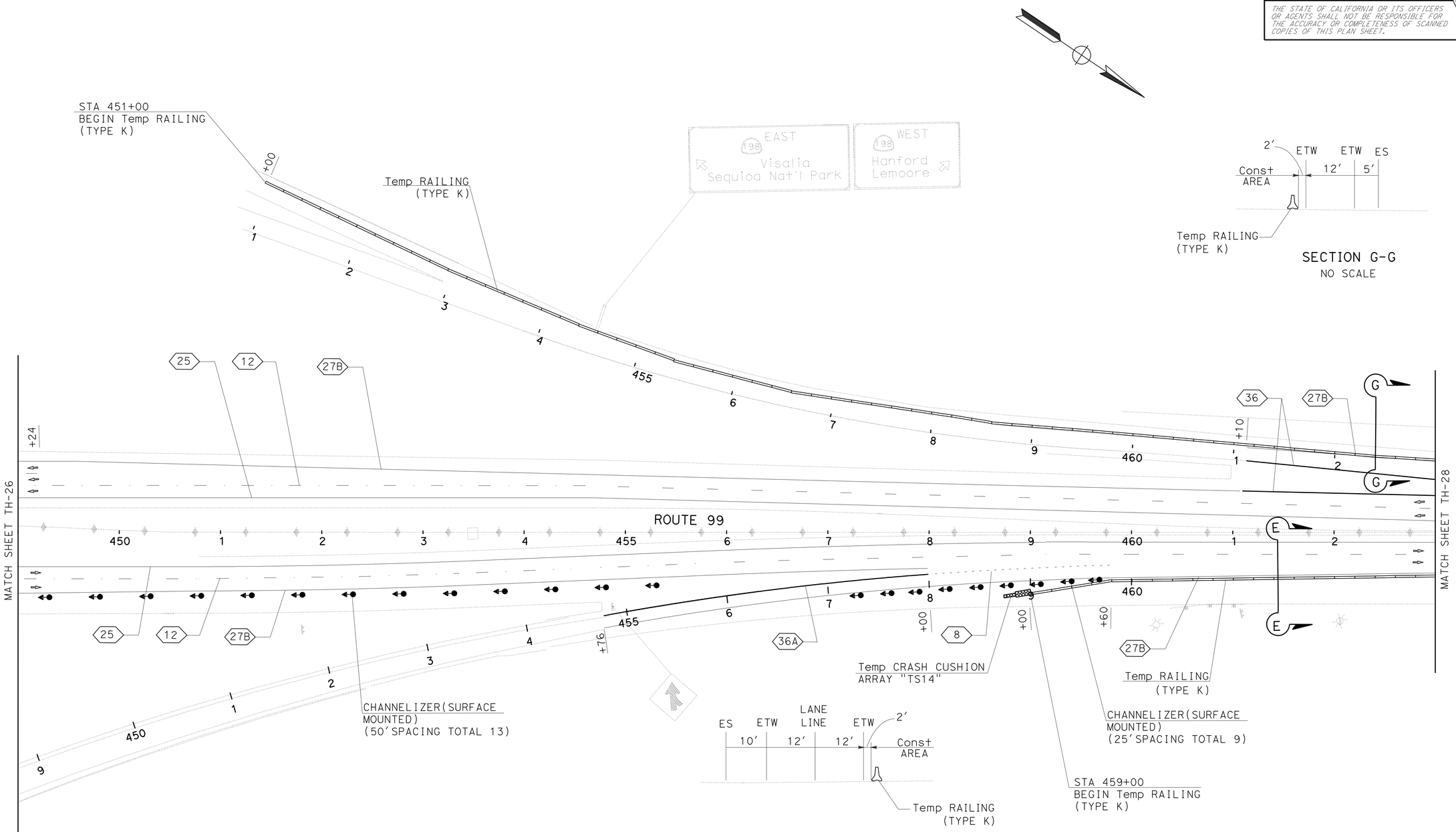

TRAFFIC HANDLING PLAN
(STAGE 3)

SCALE: 1" = 50'

TH-27

APPROVED FOR TRAFFIC HANDLING WORK ONLY

STATE OF CALIFORNIA - DEPARTMENT OF TRANSPORTATION
Caltrans
TRAFFIC DESIGN

FUNCTIONAL SUPERVISOR: MOHAMMED QATAMI
CALCULATED-DESIGNED BY: SANDY LE
CHECKED BY: HASSAN TAHA
REVISED BY
DATE REVISED

LAST REVISION 12-14-11
DATE PLOTTED => 19-APR-2012
TIME PLOTTED => 10:56

Dist	COUNTY	ROUTE	POST MILES TOTAL PROJECT	SHEET No.	TOTAL SHEETS
06	Tul	99	R37.3/41.3	87	346

Sandy L Le 12-14-11
REGISTERED CIVIL ENGINEER DATE

4-16-12
PLANS APPROVAL DATE

REGISTERED PROFESSIONAL ENGINEER
SANDY L. LE
No. 67065
Exp. 9/30/12
CIVIL
STATE OF CALIFORNIA

THE STATE OF CALIFORNIA OR ITS OFFICERS OR AGENTS SHALL NOT BE RESPONSIBLE FOR THE ACCURACY OR COMPLETENESS OF SCANNED COPIES OF THIS PLAN SHEET.

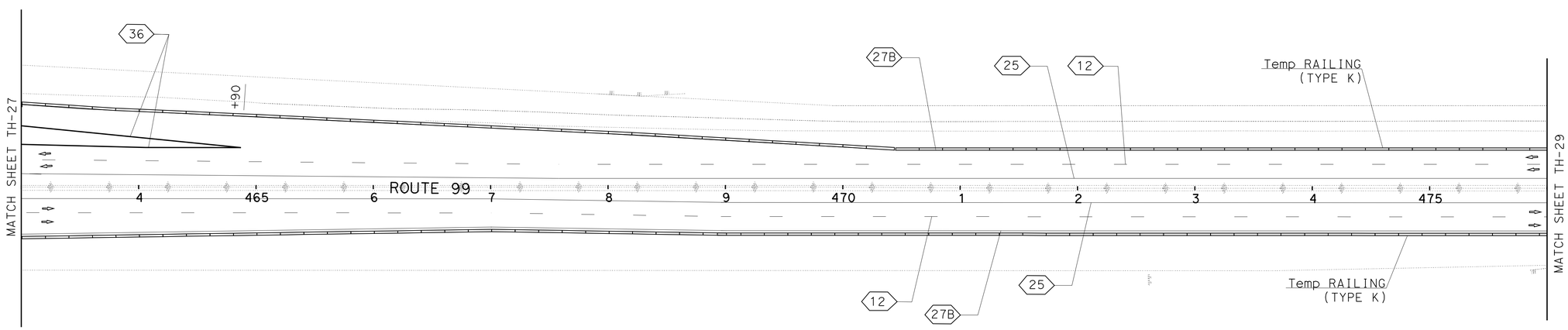

TRAFFIC HANDLING PLAN
(STAGE 3)

SCALE:1" = 50'

TH-28

APPROVED FOR TRAFFIC HANDLING WORK ONLY

STATE OF CALIFORNIA - DEPARTMENT OF TRANSPORTATION
Caltrans
TRAFFIC DESIGN

FUNCTIONAL SUPERVISOR: MOHAMMED QATAMI
CALCULATED-DESIGNED BY: SANDY LE
CHECKED BY: HASSAN TAHA
REVISED BY
DATE REVISED

LAST REVISION 12-14-11
DATE PLOTTED => 19-APR-2012
TIME PLOTTED => 10:56

Dist	COUNTY	ROUTE	POST MILES TOTAL PROJECT	SHEET No.	TOTAL SHEETS
06	Tul	99	R37.3/41.3	88	346

Sandy L Le 12-14-11
REGISTERED CIVIL ENGINEER DATE

4-16-12
PLANS APPROVAL DATE

REGISTERED PROFESSIONAL ENGINEER
SANDY L. LE
No. 67065
Exp. 9/30/12
CIVIL
STATE OF CALIFORNIA

THE STATE OF CALIFORNIA OR ITS OFFICERS OR AGENTS SHALL NOT BE RESPONSIBLE FOR THE ACCURACY OR COMPLETENESS OF SCANNED COPIES OF THIS PLAN SHEET.

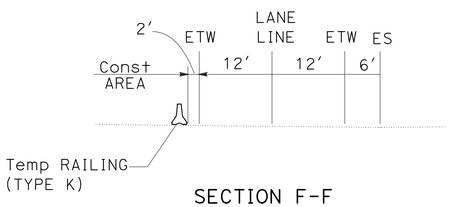

SECTION F-F
NO SCALE

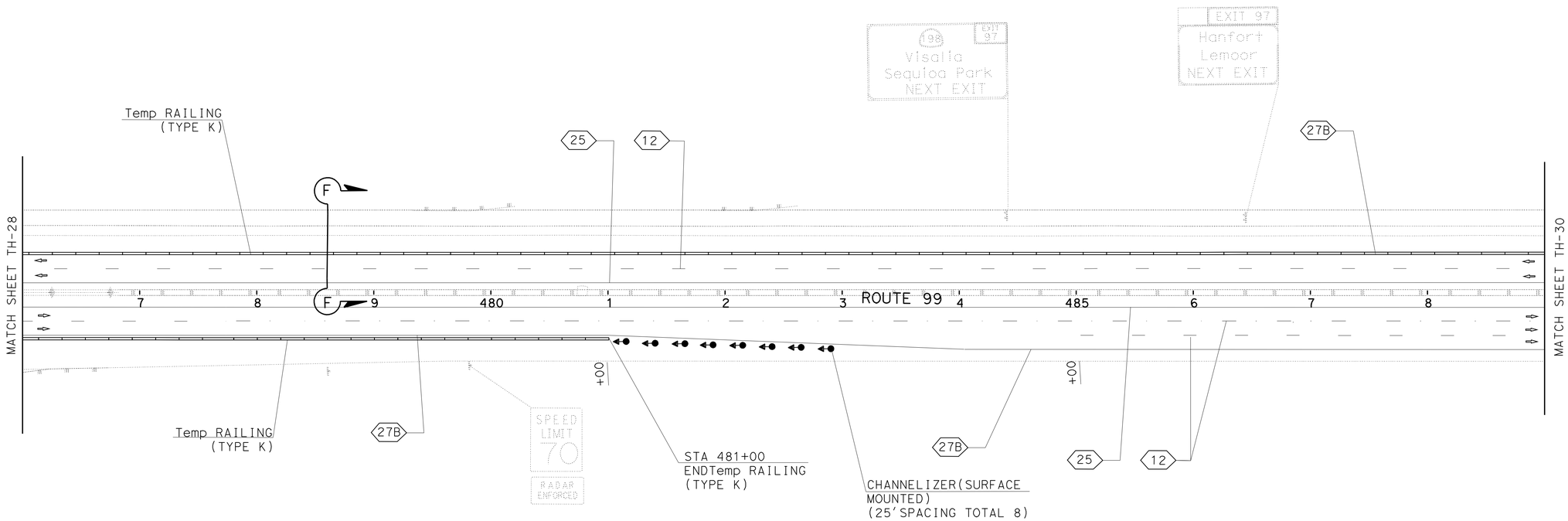

TRAFFIC HANDLING PLAN
(STAGE 3)

SCALE:1" = 50'

TH-29

APPROVED FOR TRAFFIC HANDLING WORK ONLY

STATE OF CALIFORNIA - DEPARTMENT OF TRANSPORTATION
Caltrans
TRAFFIC DESIGN

FUNCTIONAL SUPERVISOR: MOHAMMED QATAMI
CALCULATED-DESIGNED BY: HASSAN TAHA
CHECKED BY
REVISED BY: SANDY LE
DATE REVISED

LAST REVISION 12-14-11
DATE PLOTTED => 19-APR-2012
TIME PLOTTED => 10:56

Dist	COUNTY	ROUTE	POST MILES TOTAL PROJECT	SHEET No.	TOTAL SHEETS
06	Tul	99	R37.3/41.3	89	346

Sandy L Le 12-14-11
REGISTERED CIVIL ENGINEER DATE

4-16-12
PLANS APPROVAL DATE

REGISTERED PROFESSIONAL ENGINEER
SANDY L. LE
No. 67065
Exp. 9/30/12
CIVIL
STATE OF CALIFORNIA

THE STATE OF CALIFORNIA OR ITS OFFICERS OR AGENTS SHALL NOT BE RESPONSIBLE FOR THE ACCURACY OR COMPLETENESS OF SCANNED COPIES OF THIS PLAN SHEET.

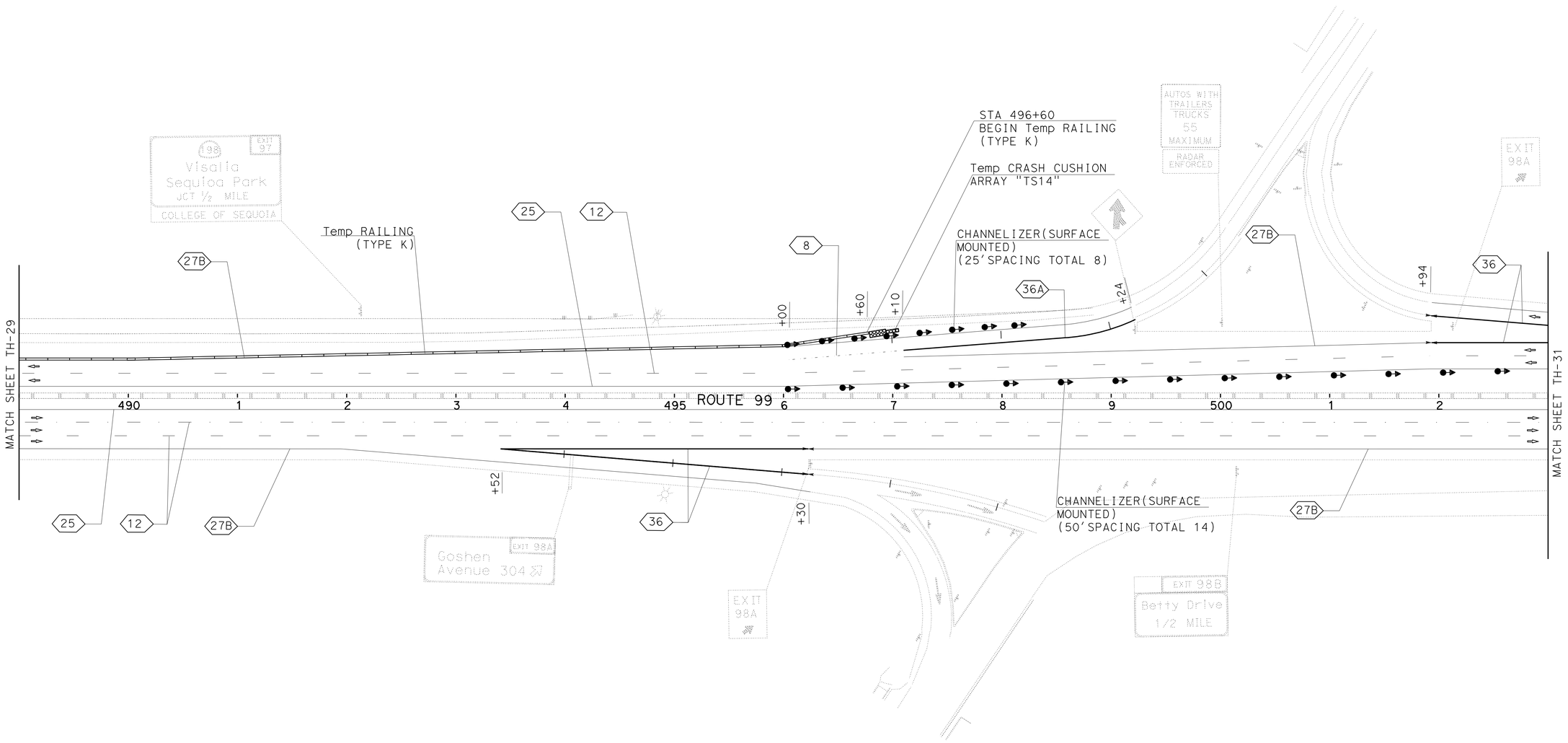

TRAFFIC HANDLING PLAN
(STAGE 3)

SCALE:1" = 50'

TH-30

APPROVED FOR TRAFFIC HANDLING WORK ONLY

STATE OF CALIFORNIA - DEPARTMENT OF TRANSPORTATION
Caltrans®
TRAFFIC DESIGN

FUNCTIONAL SUPERVISOR: MOHAMMED QATAMI
CALCULATED-DESIGNED BY: SANDY LE
CHECKED BY: HASSAN TAHA
REVISED BY
DATE REVISED

LAST REVISION 12-14-11
DATE PLOTTED => 19-APR-2012
TIME PLOTTED => 10:56

Dist	COUNTY	ROUTE	POST MILES TOTAL PROJECT	SHEET No.	TOTAL SHEETS
06	Tul	99	R37.3/41.3	90	346

Sandy L Le 12-14-11
REGISTERED CIVIL ENGINEER DATE

4-16-12
PLANS APPROVAL DATE

REGISTERED PROFESSIONAL ENGINEER
SANDY L. LE
No. 67065
Exp. 9/30/12
CIVIL
STATE OF CALIFORNIA

THE STATE OF CALIFORNIA OR ITS OFFICERS OR AGENTS SHALL NOT BE RESPONSIBLE FOR THE ACCURACY OR COMPLETENESS OF SCANNED COPIES OF THIS PLAN SHEET.

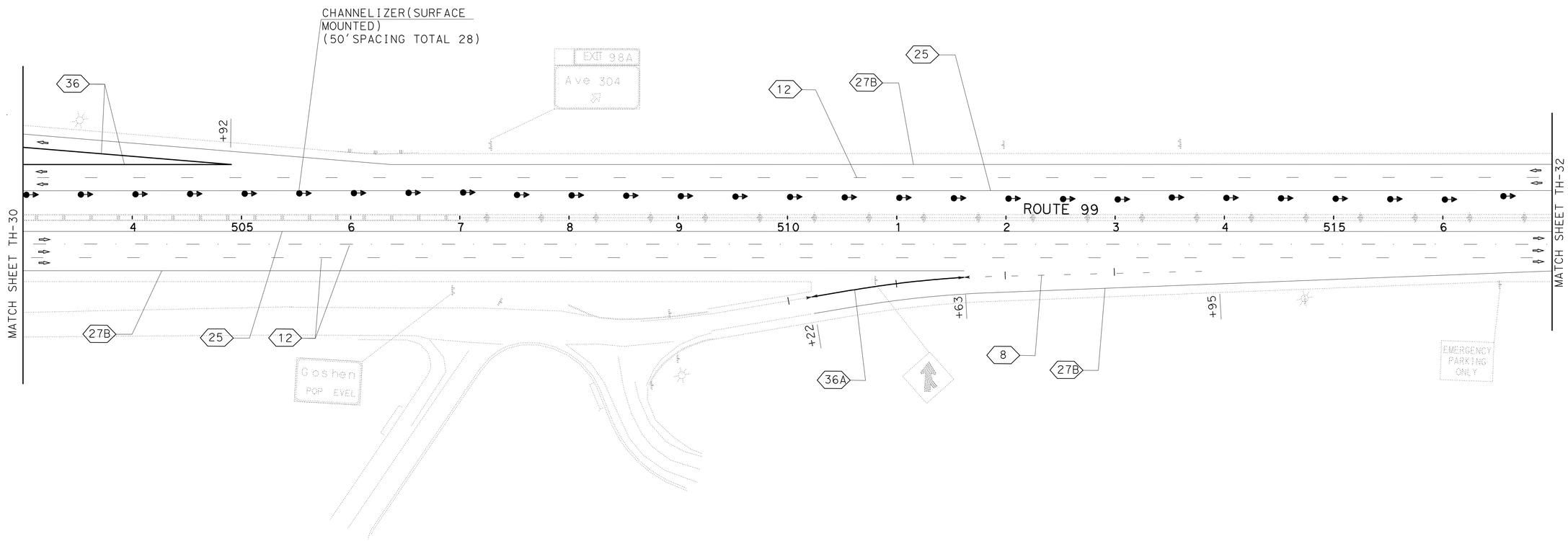

TRAFFIC HANDLING PLAN
(STAGE 3)

SCALE:1" = 50'

TH-31

APPROVED FOR TRAFFIC HANDLING WORK ONLY

STATE OF CALIFORNIA - DEPARTMENT OF TRANSPORTATION
Caltrans
TRAFFIC DESIGN

FUNCTIONAL SUPERVISOR: MOHAMMED QATAMI
CALCULATED-DESIGNED BY: SANDY LE
CHECKED BY: HASSAN TAHA
REVISED BY
DATE REVISED

LAST REVISION 12-14-11
DATE PLOTTED => 19-APR-2012
TIME PLOTTED => 10:56

Dist	COUNTY	ROUTE	POST MILES TOTAL PROJECT	SHEET No.	TOTAL SHEETS
06	Tul	99	R37.3/41.3	91	346

Sandy L Le 12-14-11
REGISTERED CIVIL ENGINEER DATE

4-16-12
PLANS APPROVAL DATE

REGISTERED PROFESSIONAL ENGINEER
SANDY L. LE
No. 67065
Exp. 9/30/12
CIVIL
STATE OF CALIFORNIA

THE STATE OF CALIFORNIA OR ITS OFFICERS OR AGENTS SHALL NOT BE RESPONSIBLE FOR THE ACCURACY OR COMPLETENESS OF SCANNED COPIES OF THIS PLAN SHEET.

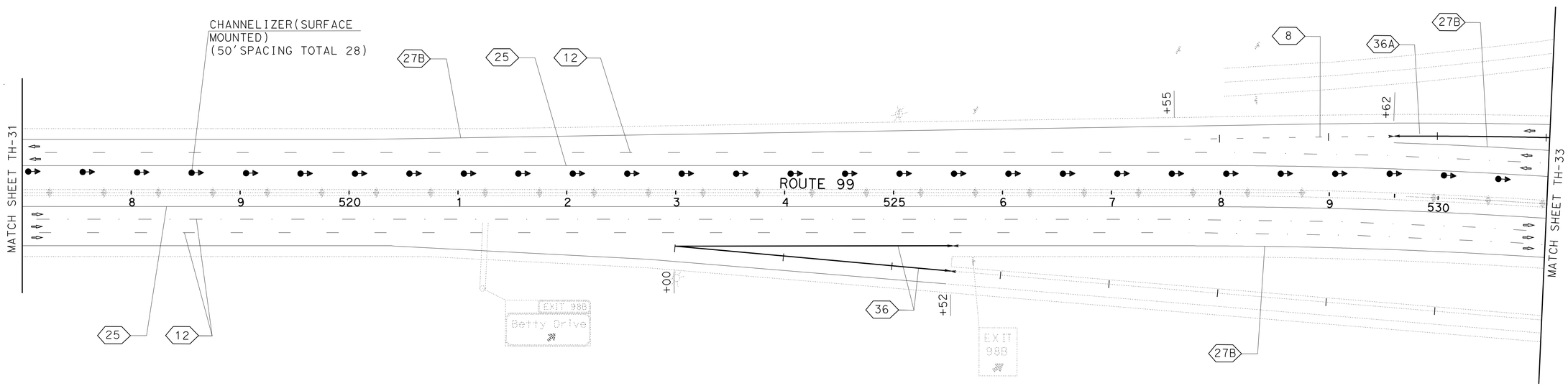

TRAFFIC HANDLING PLAN
(STAGE 3)

SCALE:1" = 50'

TH-32

APPROVED FOR TRAFFIC HANDLING WORK ONLY

STATE OF CALIFORNIA - DEPARTMENT OF TRANSPORTATION
Caltrans
TRAFFIC DESIGN

FUNCTIONAL SUPERVISOR: MOHAMMED QATAMI
CALCULATED-DESIGNED BY: SANDY LE
CHECKED BY: HASSAN TAHA
REVISED BY
DATE REVISED

LAST REVISION 12-14-11
DATE PLOTTED => 19-APR-2012
TIME PLOTTED => 10:56

Dist	COUNTY	ROUTE	POST MILES TOTAL PROJECT	SHEET No.	TOTAL SHEETS
06	Tul	99	R37.3/41.3	92	346

Sandy L Le 12-14-11
REGISTERED CIVIL ENGINEER DATE

4-16-12
PLANS APPROVAL DATE

REGISTERED PROFESSIONAL ENGINEER
SANDY L. LE
No. 67065
Exp. 9/30/12
CIVIL
STATE OF CALIFORNIA

THE STATE OF CALIFORNIA OR ITS OFFICERS OR AGENTS SHALL NOT BE RESPONSIBLE FOR THE ACCURACY OR COMPLETENESS OF SCANNED COPIES OF THIS PLAN SHEET.

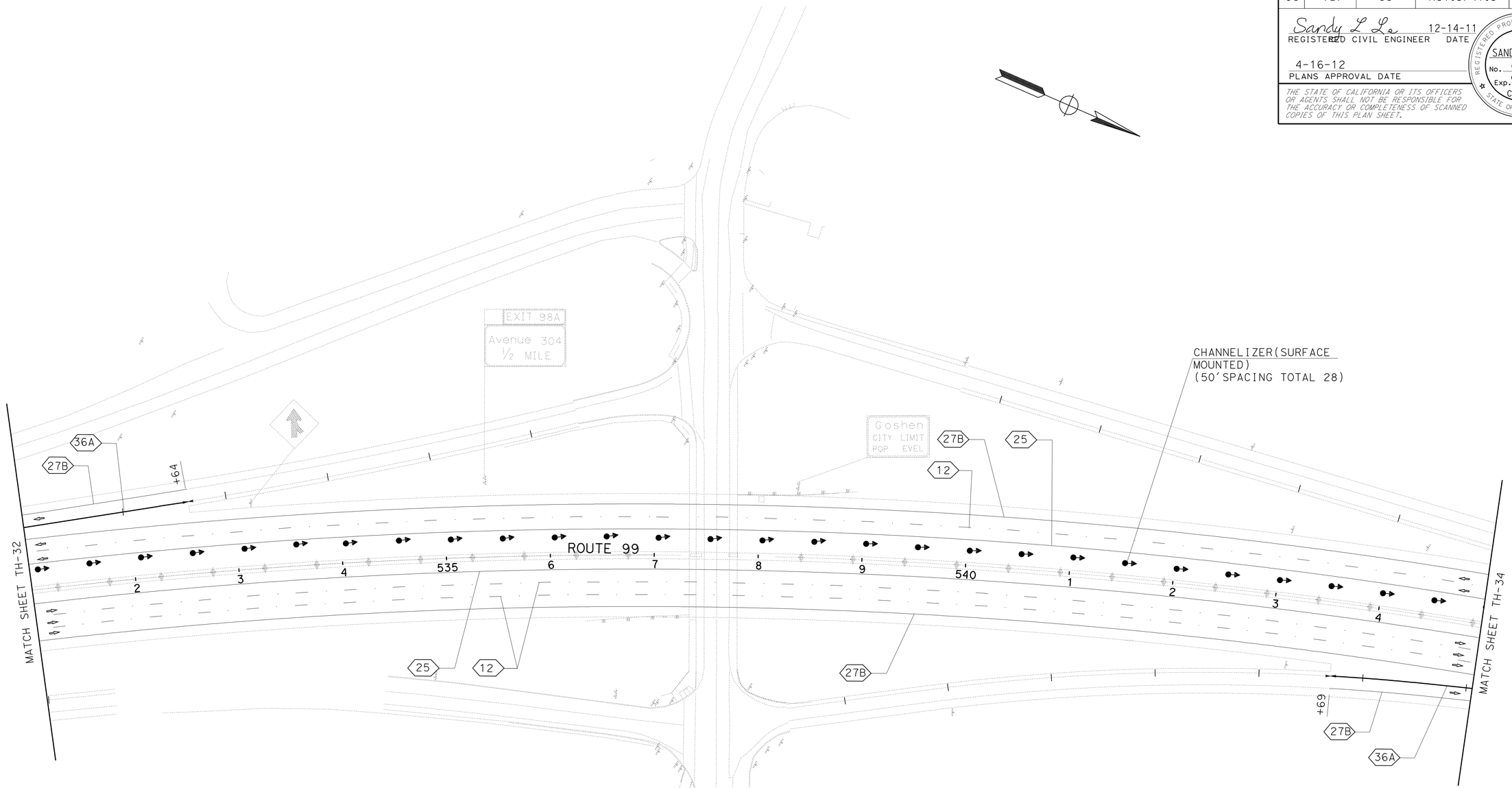

APPROVED FOR TRAFFIC HANDLING WORK ONLY

TRAFFIC HANDLING PLAN
(STAGE 3)

SCALE: 1" = 50'

TH-33

STATE OF CALIFORNIA - DEPARTMENT OF TRANSPORTATION
Caltrans
TRAFFIC DESIGN

FUNCTIONAL SUPERVISOR: MOHAMMED QATAMI

CALCULATED-DESIGNED BY: SANDY LE
CHECKED BY: HASSAN TAHA

REVISED BY
DATE REVISED

LAST REVISION 12-14-11
DATE PLOTTED => 19-APR-2012
TIME PLOTTED => 10:56

Dist	COUNTY	ROUTE	POST MILES TOTAL PROJECT	SHEET No.	TOTAL SHEETS
06	Tul	99	R37.3/41.3	93	346

Sandy L Le 12-14-11
REGISTERED CIVIL ENGINEER DATE

4-16-12
PLANS APPROVAL DATE

REGISTERED PROFESSIONAL ENGINEER
SANDY L. LE
No. 67065
Exp. 9/30/12
CIVIL
STATE OF CALIFORNIA

THE STATE OF CALIFORNIA OR ITS OFFICERS OR AGENTS SHALL NOT BE RESPONSIBLE FOR THE ACCURACY OR COMPLETENESS OF SCANNED COPIES OF THIS PLAN SHEET.

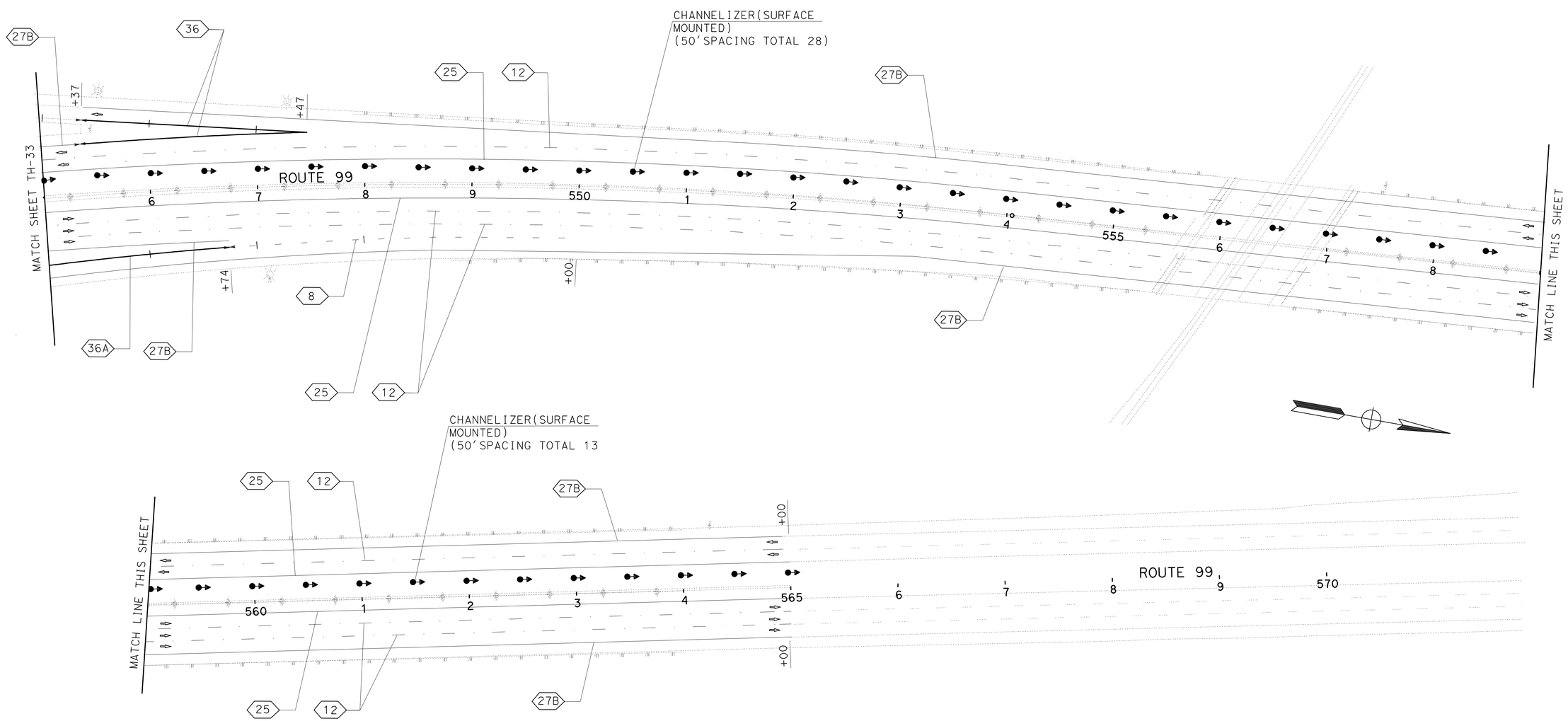

TRAFFIC HANDLING PLAN
(STAGE 3)

SCALE:1" = 50'

TH-34

APPROVED FOR TRAFFIC HANDLING WORK ONLY

STATE OF CALIFORNIA - DEPARTMENT OF TRANSPORTATION
Caltrans
TRAFFIC DESIGN

FUNCTIONAL SUPERVISOR: MOHAMMED QATAMI

CALCULATED-DESIGNED BY: SANDY LE
CHECKED BY: HASSAN TAHA

REVISED BY
DATE REVISED

LAST REVISION 12-14-11
DATE PLOTTED => 19-APR-2012
TIME PLOTTED => 10:56

Dist	COUNTY	ROUTE	POST MILES TOTAL PROJECT	SHEET No.	TOTAL SHEETS
06	Tul	99	R37.3/41.3	94	346

Sandy L Le 12-14-11
REGISTERED CIVIL ENGINEER DATE

4-16-12
PLANS APPROVAL DATE

REGISTERED PROFESSIONAL ENGINEER
SANDY L. LE
No. 67065
Exp. 9/30/12
CIVIL
STATE OF CALIFORNIA

THE STATE OF CALIFORNIA OR ITS OFFICERS OR AGENTS SHALL NOT BE RESPONSIBLE FOR THE ACCURACY OR COMPLETENESS OF SCANNED COPIES OF THIS PLAN SHEET.

TEMPORARY PAVEMENT DELINEATION

STAGE	SHEET	LOCATION	DIRECTION	DETAIL	INSTALL/REMOVE	PAVEMENT MARKER RETROREFLECTIVE TYPE G CLEAR (ONE-WAY)	PAVEMENT MARKER RETROREFLECTIVE TYPE H YELLOW (ONE-WAY)	REMOVE PAVEMENT MARKER	PAINT TRAFFIC STRIPE (2-COAT)	TEMPORARY PAVEMENT MARKING PAINT (2 COAT) DESCRIPTION	TEMPORARY PAVEMENT MARKING PAINT (2 COAT) SQFT
						EA	EA	EA	LF		
STAGE 2	TH-5/TH-19	348+00 to 570+00	NB	12	I	464			22,200		
	TH-5/TH-19	348+00 to 570+00	SB	12	I	464			22,200		
	TH-19	563+56 to 570+00	NB	12	I	14			644		
	TH-5/TH-19	348+00 to 570+00	NB	25	I		464		22,200		
	TH-5/TH-19	348+00 to 570+00	SB	25	I		464		22,200		
	TH-5/TH-19	348+00 to 570+00	NB	27B	I				22,200		
	TH-5/TH-19	348+00 to 570+00	SB	27B	I				22,200		
	TH-7/TH-8	391+00 to 393+00	NB	36	I	20			400		
	TH-9	415+90 to 418+32	NB	36	I	24			484		
	TH-10	427+70 to 430+06	NB	36A	I	11			236		
	TH-10	427+70 to 430+06	NB	27B	I				236		
	TH-10	430+06 to 432+40	NB	8	I				234		
	TH-10	423+00 to 425+60	SB	8	I				260		
	TH-10	425+60 to 428+00	SB	36A	I	11			240		
	TH-10	425+60 to 428+00	SB	27B	I				240		
	TH-11	442+00 to 444+78	SB	8	I				278		
	TH-11	444+78 to 446+68	SB	36A	I	9			190		
	TH-11	444+78 to 446+68	SB	27B	I				190		
	TH-12	454+88 to 457+40	NB	36A	I	12			252		
	TH-12	454+88 to 457+40	NB	27B	I				252		
	TH-12	457+40 to 459+00	NB	8	I				160		
	TH-12	458+71 to 461+49	SB	36	I	26			556		
	TH-15	493+22 to 496+20	NB	36	I	28			596		
	TH-15	496+12 to 497+71	SB	8	I				159		
	TH-15	497+71 to 499+00	SB	36A	I	6			129		
	TH-15	497+71 to 499+00	SB	27B	I				129		
	TH-15/TH-16	502+12 to 504+88	SB	36	I	26			552		
	TH-16	510+92 to 512+44	NB	36A	I	7			152		
	TH-16	510+92 to 512+44	NB	27B	I				152		
	TH-16	512+44 to 514+00	NB	8	I				156		
	TH-17	523+00 to 526+12	NB	36	I	28			624		
	TH-17/TH-18	529+24 to 533+00	SB	36A	I	17			376		
	TH-17/TH-18	529+24 to 533+00	SB	27B	I				376		
	TH-18/TH-19	543+24 to 546+50	NB	36A	I	15			326		
	TH-18/TH-19	543+24 to 546+50	NB	27B	I				326		
	TH-19	546+50 to 549+00	NB	8	I				250		
	TH-19	545+50 to 547+80	SB	36	I	22			460		
STAGE 3	TH-20/TH-34	348+00 to 565+00	NB	12	I	453			21,700	3-TYPE VI ARROW	126
	TH-20/TH-34	348+00 to 565+00	SB	12	I	453			21,700		
	TH-20/TH-34	348+00 to 565+00	NB	25	I		453	453	21,700		
	TH-20/TH-34	348+00 to 565+00	SB	25	I		453	453	21,700		
	TH-20/TH-34	348+00 to 565+00	NB	27B	I				21,700		
	TH-20/TH-34	348+00 to 565+00	SB	27B	I				21,700		
	TH-21/TH-27	366+00 to 449+24	SB	12	I	174			8,324		
	TH-29/TH-34	485+00 to 565+00	NB	12	I	168			8,000		
	TH-22/TH-23	389+36 to 393+00	NB	36	I	34			728		
	TH-24	411+55 to 417+57	NB	36	I	54			1,204		
	TH-24/TH-25	414+00 to 425+74	SB	8	I				1,174		
	TH-25	425+74 to 428+83	SB	36A	I	14			309		
	TH-25	425+74 to 428+83	SB	27B	I				309		
SHEET SUB-TOTAL						2554	1834	906	293187		126

TRAFFIC HANDLING QUANTITIES
THQ-1

STATE OF CALIFORNIA - DEPARTMENT OF TRANSPORTATION
Caltrans
TRAFFIC DESIGN

FUNCTIONAL SUPERVISOR: MOHAMMED QATAMI
CALCULATED-DESIGNED BY / CHECKED BY: HASSAN TAHA
REVISED BY: SANDY LE
DATE REVISED

LAST REVISION 12-14-11
DATE PLOTTED => 19-APR-2012
TIME PLOTTED => 12:39

Dist	COUNTY	ROUTE	POST MILES TOTAL PROJECT	SHEET No.	TOTAL SHEETS
06	Tul	99	R37.3/41.3	95	346

Sandy L Le 12-14-11
REGISTERED CIVIL ENGINEER DATE

4-16-12
PLANS APPROVAL DATE

REGISTERED PROFESSIONAL ENGINEER SANDY L. LE No. 67065 Exp. 9/30/12 CIVIL STATE OF CALIFORNIA

THE STATE OF CALIFORNIA OR ITS OFFICERS OR AGENTS SHALL NOT BE RESPONSIBLE FOR THE ACCURACY OR COMPLETENESS OF SCANNED COPIES OF THIS PLAN SHEET.

TEMPORARY PAVEMENT DELINEATION

STAGE	SHEET	LOCATION	DIRECTION	DETAIL	INSTALL/REMOVE	PAVEMENT MARKER RETROREFLECTIVE TYPE G CLEAR (ONE-WAY)	PAVEMENT MARKER RETROREFLECTIVE TYPE H YELLOW (ONE-WAY)	REMOVE PAVEMENT MARKER	PAINT TRAFFIC STRIPE (2-COAT)	TEMPORARY PAVEMENT MARKING PAINT (2 COAT) DESCRIPTION	TEMPORARY PAVEMENT MARKING PAINT (2 COAT) SQFT
						EA	EA	EA	LF		
STAGE 3	TH-25/TH-26	426+62 to 435+50	NB	36A	I	38			888		
	TH-25/TH-26	426+62 to 435+50	NB	27B	I				888		
	TH-26	435+50 to 441+25	NB	8	I				575		
	TH-25/TH-26	430+00 to 445+15	SB	8	I				1515		
	TH-26	445+15 to 447+20	SB	36A	I	10			205		
	TH-26	445+15 to 447+20	SB	27B	I				205		
	TH-27	454+76 to 458+00	NB	36A	I	15			324		
	TH-27	454+76 to 458+00	NB	27B	I				324		
	TH-27	458+00 to 459+60	NB	8	I				160		
	TH-27/TH-28	461+10 to 464+90	SB	36	I	34			760		
	TH-30	493+52 to 496+30	NB	36	I	26			556		
	TH-30	496+00 to 497+10	SB	8	I				110		
	TH-30	497+10 to 499+24	SB	36A	I	10			214		
	TH-30	497+10 to 499+24	SB	27B	I				214		
	TH-30/TH-31	501+94 to 504+92	SB	36	I	28			596		
	TH-31	510+22 to 511+63	NB	36A	I	7			141		
	TH-31	510+22 to 511+63	NB	27B	I				141		
	TH-31	511+63 to 513+95	NB	8	I				232		
	TH-32	523+00 to 525+52	NB	36	I	24			504		
	TH-32	527+55 to 529+62	SB	8	I				207		
	TH-32/TH-33	529+62 to 532+64	SB	36A	I	14			302		
	TH-32/TH-33	529+62 to 532+64	SB	27B	I				302		
	TH-33/TH-34	543+69 to 546+74	NB	36A	I	14			305		
	TH-33/TH-34	543+69 to 546+74	NB	27B	I				305		
	TH-34	546+74 to 550+00	NB	8	I				326		
	TH-34	545+37 to 547+47	SB	36	I	20			420		
SHEET SUB-TOTAL						240			10719		
THQ-1						2554	1834	906	293187		126
SUB-TOTAL						2,794	1834				
TOTAL						4,628*		906	303,906		126

* QUANTITIES ARE INCLUDED IN THE PAVEMENT DELINEATION QUANTITIES TABLE, SHEET PDQ-2

TEMPORARY RAILING (TYPE K)

STAGE	SHEET No.	DIRECTION	LOCATION Sta	LOCATION TO Sta	TEMPORARY RAILING (TYPE K)	TEMPORARY TRAFFIC SCREEN
					LF	LF
1 & 2	TH-1 TO TH-4	NB	348+20	564+00	21,580	21,580
	TH-1 TO TH-4	SB	349+60	566+00	21,640	21,640
	TH-2	EB	415+00	417+20	220	220
	TH-2	WB	414+70	416+70	200	200
	TH-3	EB	456+60	458+60	200	200
	TH-3	WB	456+24	458+24	200	200
3	TH-22 TO TH-23	NB	390+90	399+00	810	810
	TH-27 TO TH-29	NB	459+00	481+00	2,200	2,200
	TH-27 TO TH-30	SB	451+00	496+60	4,560	4,560
TOTAL					51,610	51,610

CHANNELIZER (SURFACE MOUNTED)

STAGE	SHEET No.	EA
1 & 2	TH-1	12
	TH-2	14
	TH-3	14
	TH-4	12
3	TH-20	29
	TH-21	30
	TH-22	46
	TH-23	16
	TH-24	19
	TH-25	16
	TH-26	10
	TH-27	22
	TH-29	8
	TH-30	22
	TH-31	28
	TH-32	28
	TH-33	28
	TH-34	41
TOTAL		395

TEMPORARY CRASH CUSHION

STAGE	SHEET No.	TEMPORARY CRASH CUSHION TYPE "TS14" EA
1 & 2	TH-1	14
	TH-2	28
	TH-3	28
	TH-4	14
3	TH-22	14
	TH-27	14
	TH-30	14
TOTAL		126

STATIONARY MOUNTED CONSTRUCTION AREA SIGNS

SHEET	SIGN No.	SIGN CODE	SIGN MESSAGE	PANEL SIZE INCHES	No. OF POST AND SIZE EA-INCHES	No. OF SIGNS EA
TH-1	1-1	W21-5aL	LEFT SHOULDER CLOSED AHEAD	48 x 48	1 - 6 x 6	1
	1-2	C30A (CA)	SHOULDER CLOSED	48 x 48	1 - 6 x 6	1
TH-2	2-1	W21-5	SHOULDER WORK	48 x 48	1 - 6 x 6	2
TH-3	3-1	W21-5	SHOULDER WORK	48 x 48	1 - 6 x 6	2
TH-4	4-1	W21-5aL	LEFT SHOULDER CLOSED AHEAD	48 x 48	1 - 6 x 6	1
	4-2	C30A (CA)	SHOULDER CLOSED	48 x 48	1 - 6 x 6	1

NOTE:

FOR ADDITIONAL CONSTRUCTION AREA SIGNS REFER TO SHEET CS-1.

TRAFFIC HANDLING QUANTITIES
THQ-2

REVISED BY | DATE REVISED
SANDY LE | HASSAN TAHA
CALCULATED-DESIGNED BY | CHECKED BY
FUNCTIONAL SUPERVISOR: MOHAMMED QATAMI
STATE OF CALIFORNIA - DEPARTMENT OF TRANSPORTATION
Caltrans TRAFFIC DESIGN

LAST REVISION 12-14-11 | DATE PLOTTED => 19-APR-2012 | TIME PLOTTED => 12:39

Dist	COUNTY	ROUTE	POST MILES TOTAL PROJECT	SHEET No.	TOTAL SHEETS
06	Tul	99	R37.3/41.3	96	346

Sandy L Le 12-14-11
REGISTERED CIVIL ENGINEER DATE

4-16-12
PLANS APPROVAL DATE

REGISTERED PROFESSIONAL ENGINEER SANDY L. LE No. 67065 Exp. 9/30/12 CIVIL STATE OF CALIFORNIA

THE STATE OF CALIFORNIA OR ITS OFFICERS OR AGENTS SHALL NOT BE RESPONSIBLE FOR THE ACCURACY OR COMPLETENESS OF SCANNED COPIES OF THIS PLAN SHEET.

LEGEND:

- DIRECTION OF DETOUR TRAVeL
- ROADSIDE SIGN
- SHUT DOWN LOCATION

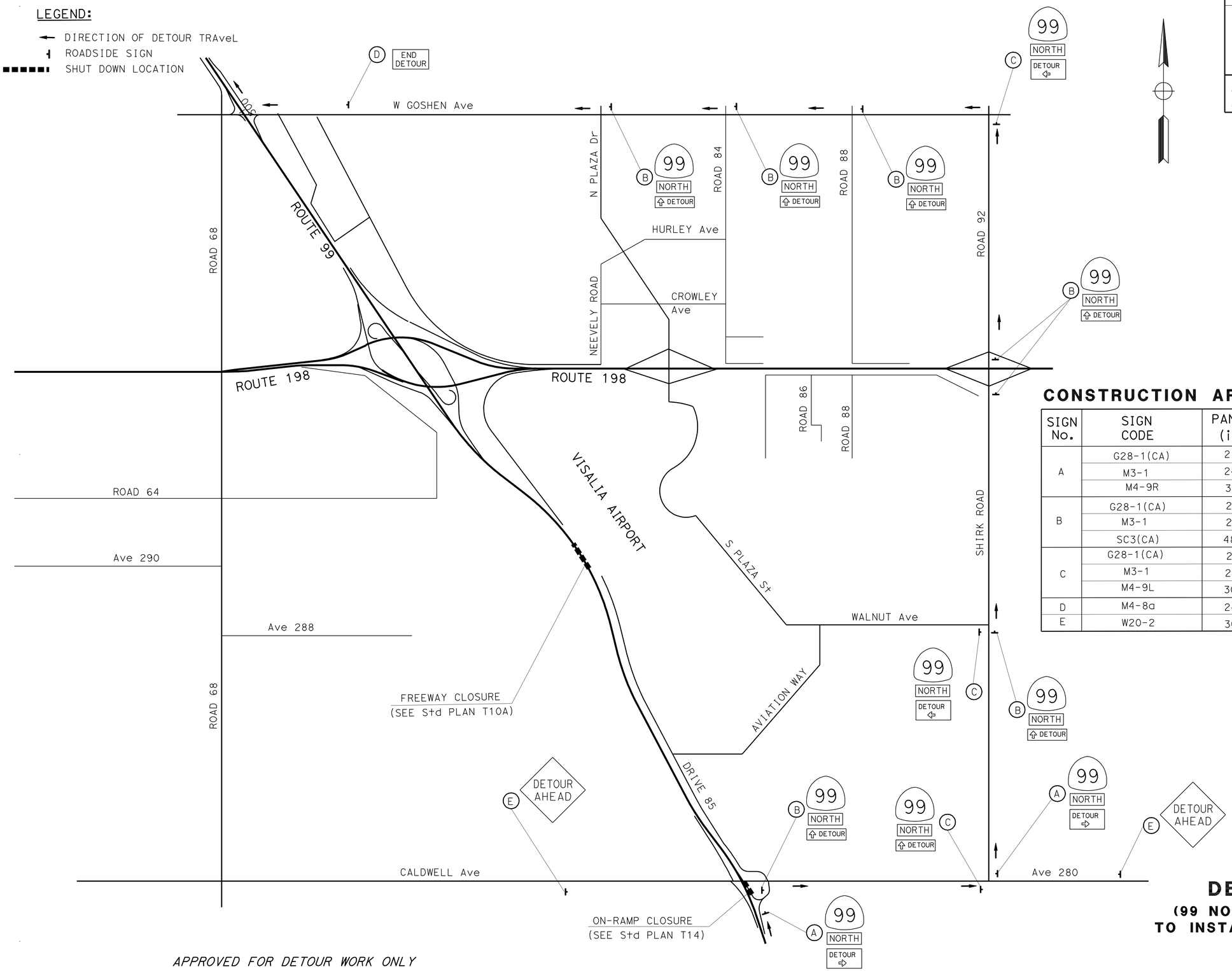

CONSTRUCTION AREA SIGNS (PORTABLE)

SIGN No.	SIGN CODE	PANEL SIZE (in x in)	SIGN MESSAGE	No. OF SIGNS
A	G28-1(CA)	21 x 18	AS SHOWN ON PLAN	2
	M3-1	24 x 12		
	M4-9R	30 x 24		
B	G28-1(CA)	21 x 18	AS SHOWN ON PLAN	7
	M3-1	24 x 12		
	SC3(CA)	48 x 18		
C	G28-1(CA)	21 x 18	AS SHOWN ON PLAN	3
	M3-1	24 x 12		
	M4-9L	30 x 24		
D	M4-8a	24 x 18	AS SHOWN ON PLAN	1
E	W20-2	36 x 36	AS SHOWN ON PLAN	2

APPROVED FOR DETOUR WORK ONLY

DETOUR PLAN

(99 NORTHBOUND CLOSURE TO INSTALL OVERHEAD SIGNS)

(STAGE 3)

NO SCALE

DE-1

STATE OF CALIFORNIA - DEPARTMENT OF TRANSPORTATION
Caltrans® TRAFFIC DESIGN

FUNCTIONAL SUPERVISOR: MOHAMMED QATAMI
CALCULATED-DESIGNED BY: SANDY LE
CHECKED BY: HASSAN TAHA
REVISED BY
DATE REVISED

LAST REVISION DATE PLOTTED => 19-APR-2012
TIME PLOTTED => 12:39

Dist	COUNTY	ROUTE	POST MILES TOTAL PROJECT	SHEET No.	TOTAL SHEETS
06	Tul	99	R37.3/41.3	97	346

Sandy L Le 12-14-11
REGISTERED CIVIL ENGINEER DATE

4-16-12
PLANS APPROVAL DATE

REGISTERED PROFESSIONAL ENGINEER
SANDY L. LE
No. 67065
Exp. 9/30/12
CIVIL
STATE OF CALIFORNIA

THE STATE OF CALIFORNIA OR ITS OFFICERS OR AGENTS SHALL NOT BE RESPONSIBLE FOR THE ACCURACY OR COMPLETENESS OF SCANNED COPIES OF THIS PLAN SHEET.

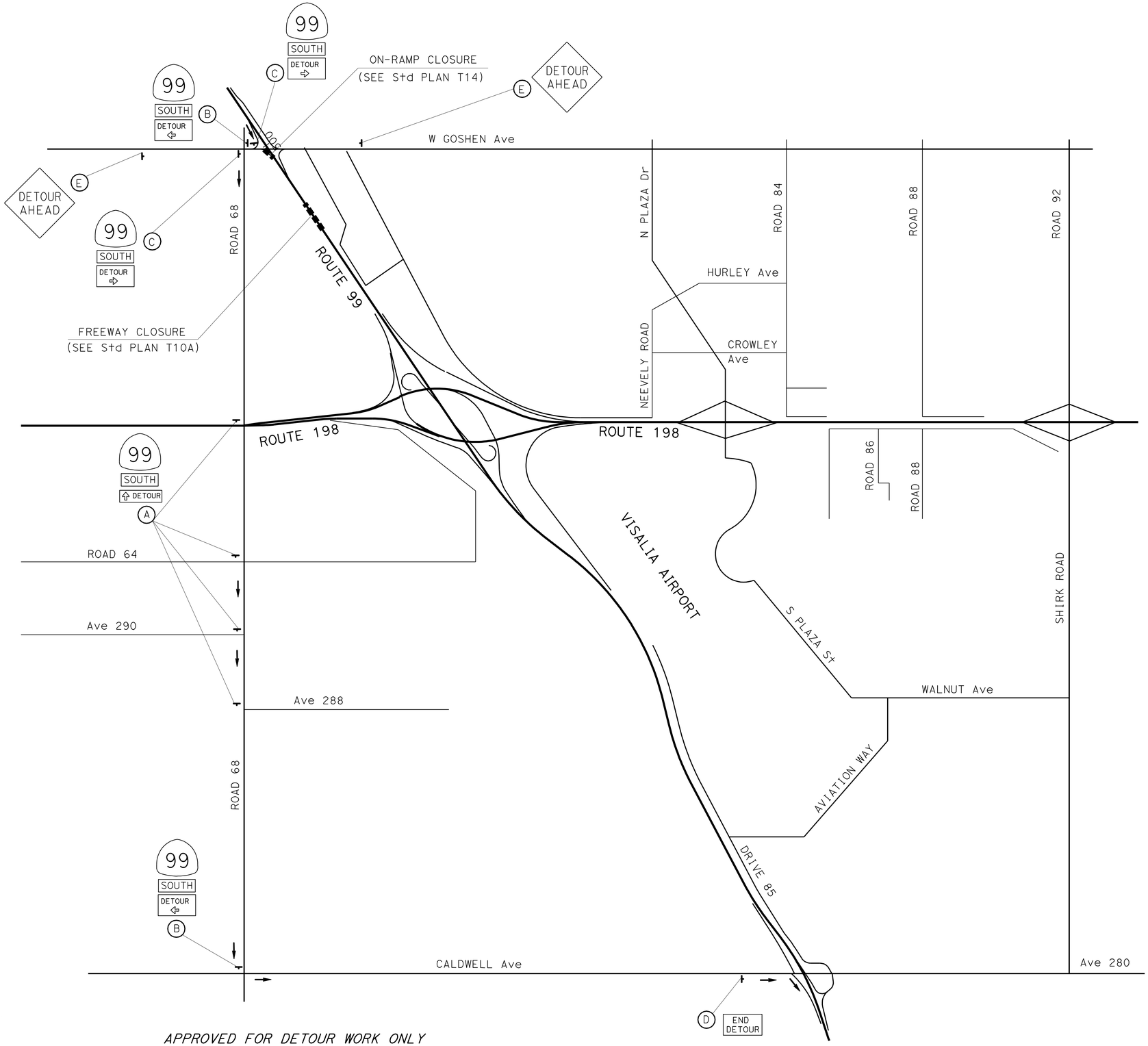

APPROVED FOR DETOUR WORK ONLY

CONSTRUCTION AREA SIGNS (PORTABLE)

SIGN No.	SIGN CODE	PANEL SIZE (in x in)	SIGN MESSAGE	No. OF SIGNS
A	G28-1(CA)	21 x 18	AS SHOWN ON PLAN	4
	M3-3	24 x 12		
	SC3(CA)	48 x 18		
B	G28-1(CA)	21 x 18	AS SHOWN ON PLAN	2
	M3-3	24 x 12		
	M4-9L	30 x 24		
C	G28-1(CA)	21 x 18	AS SHOWN ON PLAN	2
	M3-3	24 x 12		
	M4-9R	30 x 24		
D	M4-8a	24 x 18	AS SHOWN ON PLAN	1
E	W20-2	36 x 36	AS SHOWN ON PLAN	2

DETOUR PLAN
(99 SOUTHBOUND CLOSURE TO INSTALL OVERHEAD SIGNS) (STAGE 3)

NO SCALE

DE-2

STATE OF CALIFORNIA - DEPARTMENT OF TRANSPORTATION
Caltrans® TRAFFIC DESIGN

FUNCTIONAL SUPERVISOR: MOHAMMED QATAMI
CALCULATED-DESIGNED BY: SANDY LE
CHECKED BY: HASSAN TAHA
REVISED BY
DATE REVISED

LAST REVISION 12-14-11
DATE PLOTTED => 19-APR-2012
TIME PLOTTED => 12:39

Dist	COUNTY	ROUTE	POST MILES TOTAL PROJECT	SHEET No.	TOTAL SHEETS
06	Tul	99	R37.3/41.3	98	346

Sandy L Le 12-14-11
REGISTERED CIVIL ENGINEER DATE

4-16-12
PLANS APPROVAL DATE

REGISTERED PROFESSIONAL ENGINEER
SANDY L. LE
No. 67065
Exp. 9/30/12
CIVIL
STATE OF CALIFORNIA

THE STATE OF CALIFORNIA OR ITS OFFICERS OR AGENTS SHALL NOT BE RESPONSIBLE FOR THE ACCURACY OR COMPLETENESS OF SCANNED COPIES OF THIS PLAN SHEET.

STATIONARY MOUNTED CONSTRUCTION AREA SIGNS

SIGN	SIGN CODE	PANEL SIZE	SIGN MESSAGE	No. OF POSTS	POST SIZE	No. OF SIGNS
A	W20-1	60" x 60"	ROAD WORK AHEAD	2	4" x 6"	4
C	W20-1	36" x 36"	ROAD WORK AHEAD	1	4" x 6"	7
D	C14(CA)	48" x 24"	END ROAD WORK	1	4" x 6"	6
E	C40(CA)	144" x 60"	TRAFFIC FINES DOUBLED IN CONSTRUCTION ZONES	2	6" x 8"	2

NOTES:

1. ALL TEMPORARY WARNING SIGNS SHALL HAVE BLACK LEGEND ON ORANGE BACKGROUND.
2. EXACT SIGN LOCATIONS TO BE DETERMINED BY THE ENGINEER.
3. FOR ADDITIONAL CONSTRUCTION AREA SIGNS, REFER TO TRAFFIC HANDLING PLANS.

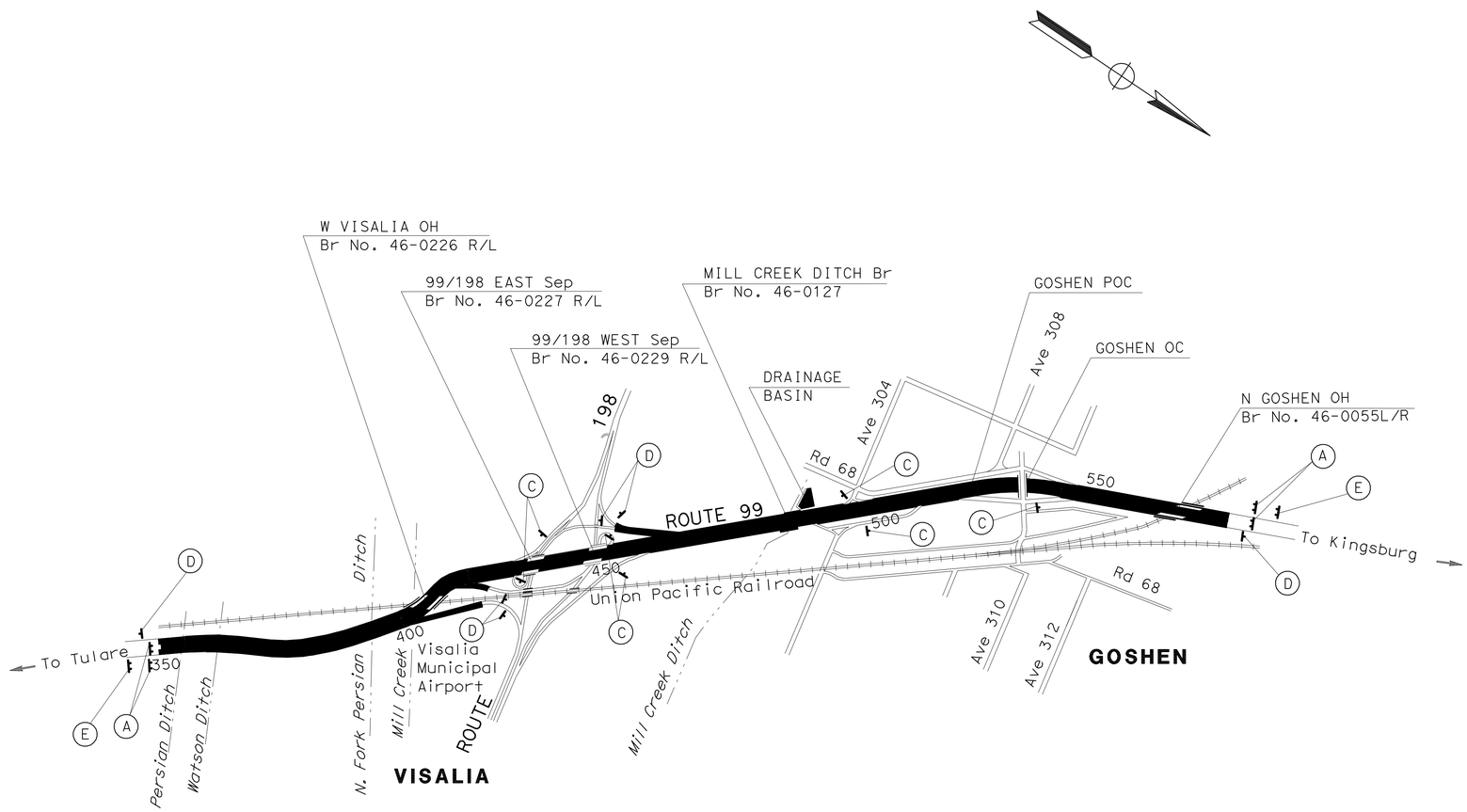

APPROVED FOR CONSTRUCTION AREA SIGN WORK ONLY

CONSTRUCTION AREA SIGNS

NO SCALE

CS-1

STATE OF CALIFORNIA - DEPARTMENT OF TRANSPORTATION
Caltrans
TRAFFIC DESIGN

FUNCTIONAL SUPERVISOR: MOHAMMED QATAMI
CALCULATED-DESIGNED BY: SANDY LE
CHECKED BY: HASSAN TAHA
REVISED BY
DATE REVISED

LAST REVISION 12-14-11
DATE PLOTTED => 19-APR-2012
TIME PLOTTED => 12:46

Dist	COUNTY	ROUTE	POST MILES TOTAL PROJECT	SHEET No.	TOTAL SHEETS
06	Tul	99	R37.3/41.3	99	346

Sandy L Le 12-14-11
REGISTERED CIVIL ENGINEER DATE

4-16-12
PLANS APPROVAL DATE

REGISTERED PROFESSIONAL ENGINEER SANDY L. LE No. 67065 Exp. 9/30/12 CIVIL STATE OF CALIFORNIA

THE STATE OF CALIFORNIA OR ITS OFFICERS OR AGENTS SHALL NOT BE RESPONSIBLE FOR THE ACCURACY OR COMPLETENESS OF SCANNED COPIES OF THIS PLAN SHEET.

LEGEND:

- XX — TRAFFIC STRIPE PAVEMENT DELINEATION DETAIL NUMBER
- STOP/AHEAD — PAVEMENT MARKING (SIGNAL, STOP, AHEAD,..)
- PAVEMENT MARKING (TYPE V ARROW)
- PAVEMENT MARKING (TYPE III ARROW)
- PAVEMENT MARKING (TYPE I 24′ ARROW)
- LIMITS OF DESIGNATED TRAFFIC STRIPING DETAIL
- TYPE VI ARROW
- DELINEATOR
- RESET ROADSIDE SIGN
- REMOVE ROADSIDE SIGN
- RELOCATE ROADSIDE SIGN FROM TO
- RELOCATE ROADSIDE PANEL FROM TO
- REMOVE OVERHEAD SIGN
- SIGN MOUNTED ON POLE
- X-X — ROADSIDE SIGN NUMBER
- XX — OVERHEAD SIGN STRUCTURE NUMBER
- OVERHEAD SIGN ONE-POST
- OVERHEAD SIGN TWO-POST

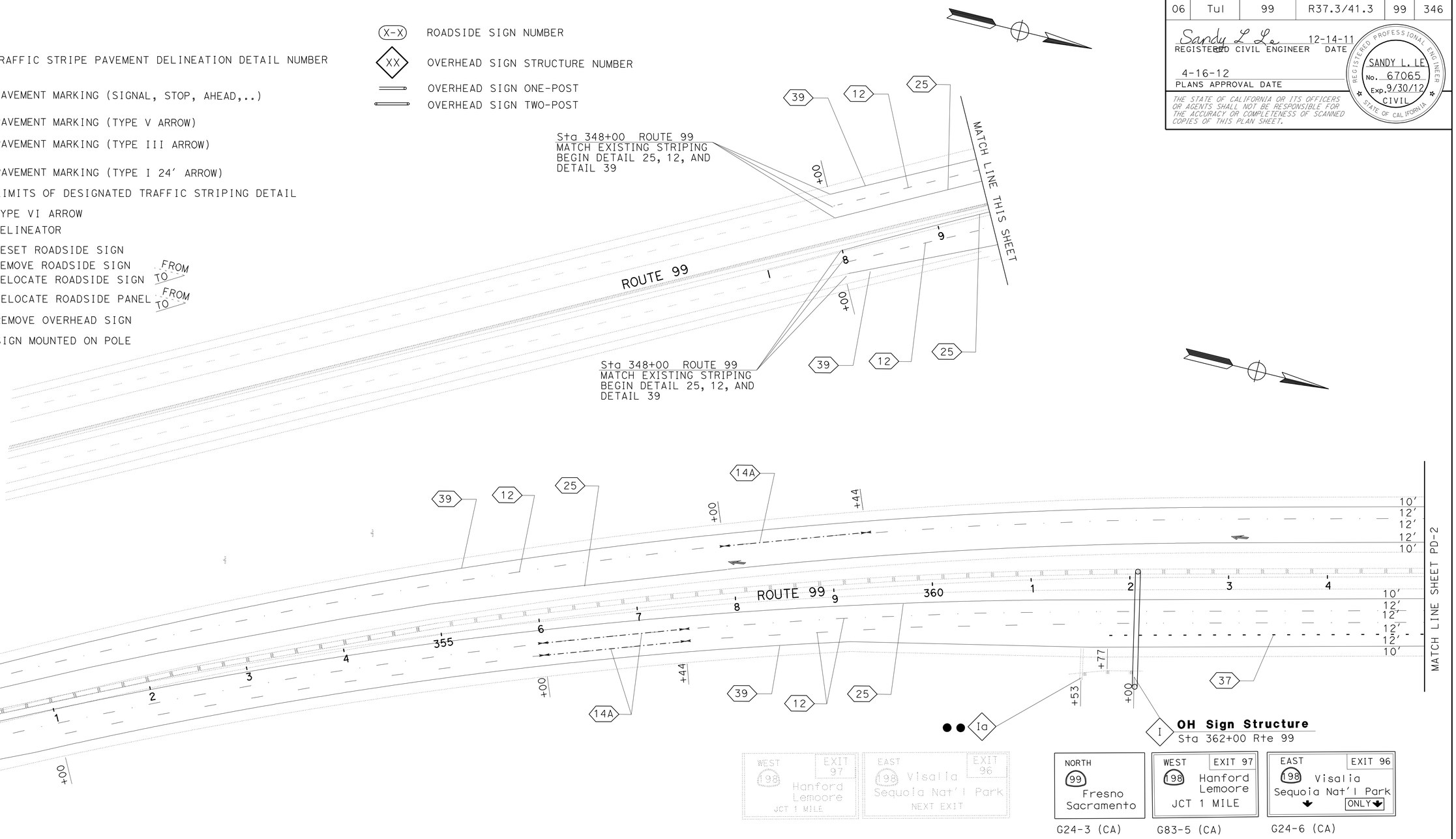

APPROVED FOR PAVEMENT DELINEATION AND SIGN WORK ONLY

PAVEMENT DELINEATION AND SIGN PLAN

SCALE: 1" = 50′

PD-1

STATE OF CALIFORNIA - DEPARTMENT OF TRANSPORTATION
Caltrans
TRAFFIC DESIGN
FUNCTIONAL SUPERVISOR: MOHAMMED QATAMI
CALCULATED-DESIGNED BY: HASSAN TAHA
CHECKED BY: SANDY LE
REVISED BY / DATE REVISED

LAST REVISION 12-14-11 | DATE PLOTTED => 19-APR-2012 | TIME PLOTTED => 12:39

BORDER LAST REVISED 7/2/2010 | USERNAME => s114926 | DGN FILE => 0600020408na001.dgn | RELATIVE BORDER SCALE IS IN INCHES 0 1 2 3 | UNIT 1513 | PROJECT NUMBER & PHASE 06000204081

Dist	COUNTY	ROUTE	POST MILES TOTAL PROJECT	SHEET No.	TOTAL SHEETS
06	Tul	99	R37.3/41.3	100	346

Sandy L Le 12-14-11
REGISTERED CIVIL ENGINEER DATE

4-16-12
PLANS APPROVAL DATE

REGISTERED PROFESSIONAL ENGINEER
SANDY L. LE
No. 67065
Exp. 9/30/12
CIVIL
STATE OF CALIFORNIA

THE STATE OF CALIFORNIA OR ITS OFFICERS OR AGENTS SHALL NOT BE RESPONSIBLE FOR THE ACCURACY OR COMPLETENESS OF SCANNED COPIES OF THIS PLAN SHEET.

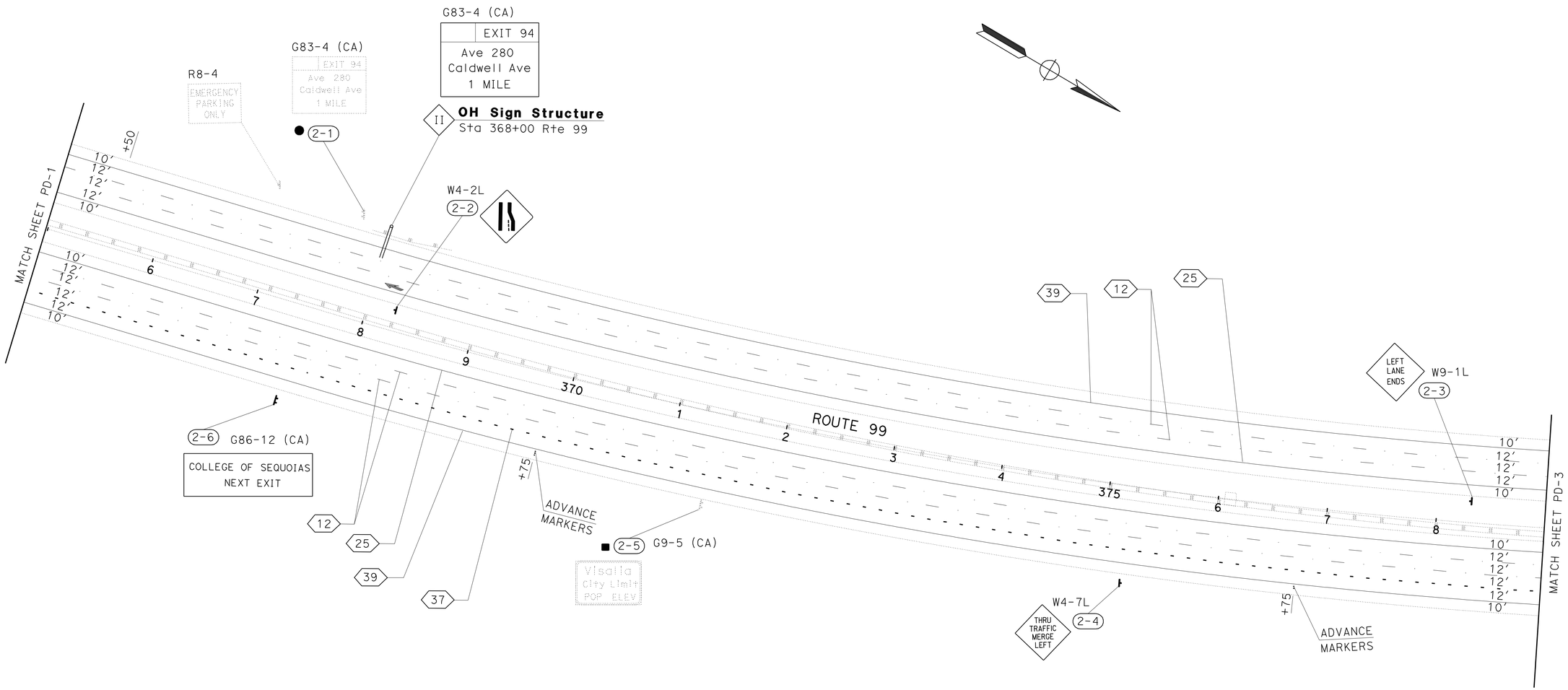

APPROVED FOR PAVEMENT DELINEATION AND SIGN WORK ONLY

PAVEMENT DELINEATION AND SIGN PLAN

SCALE: 1" = 50′

PD-2

STATE OF CALIFORNIA - DEPARTMENT OF TRANSPORTATION
Caltrans
TRAFFIC DESIGN

FUNCTIONAL SUPERVISOR: MOHAMMED QATAMI
CALCULATED-DESIGNED BY: SANDY LE
CHECKED BY: HASSAN TAHA
REVISED BY
DATE REVISED

LAST REVISION 12-14-11
DATE PLOTTED => 19-APR-2012
TIME PLOTTED => 12:39