INDEX OF PLANS

| SHEET No. | DESCRIPTION |
|---|---|
| 1 | TITLE AND LOCATION MAP |
| 2-3 | TYPICAL CROSS SECTIONS |
| 4-23 | LAYOUTS |
| 24-46 | PROFILE AND SUPPERELEVATION DIAGRAM |
| 47-56 | CONSTRUCTION DETAILS |
| 57-65 | DRAINAGE PROFILES, DETAILS AND QUANTITIES |
| 66-77 | UTILITY PLANS |
| 78 | CONSTRUCTION AREA SIGNS |
| 79-86 | PAVEMENT DELINEATION AND SIGN PLAN |
| 87 | PAVEMENT DELINEATION AND SIGN QUANTITIES |
| 88-91 | SUMMARY OF QUANTITIES |
| 92 | ELECTRICAL PLANS |
| 93-120 | REVISED AND NEW STANDARD PLANS |

THE STANDARD PLANS LIST APPLICABLE TO THIS CONTRACT IS INCLUDED IN THE NOTICE TO BIDDERS AND SPECIAL PROVISIONS BOOK.

STATE OF CALIFORNIA

# DEPARTMENT OF TRANSPORTATION

ACSTP-P190(014)E

## PROJECT PLANS FOR CONSTRUCTION ON

# STATE HIGHWAY

## IN TULARE COUNTY NEAR PORTERVILLE FROM 0.1 MILE EAST OF ROAD 284 TO PLEASANT OAK DRIVE

TO BE SUPPLEMENTED BY STANDARD PLANS DATED MAY 2006

| Dist | COUNTY | ROUTE | POST MILES TOTAL PROJECT | SHEET No. | TOTAL SHEETS |
|---|---|---|---|---|---|
| 06 | Tul | 190 | 21.2/26.4 | 1 | 120 |

LOCATION MAP

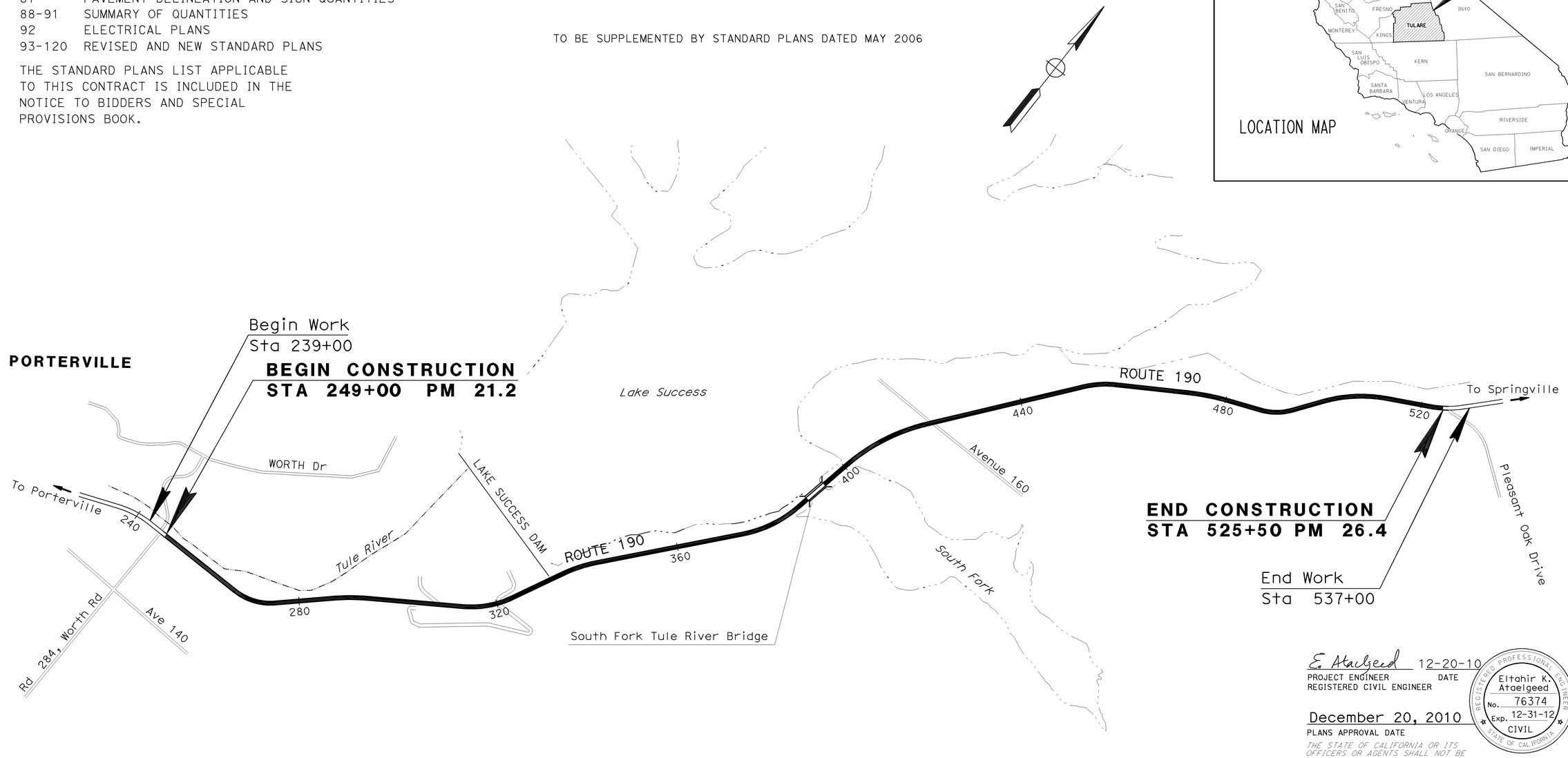


NO SCALE

E Ataelgeed 12-20-10
PROJECT ENGINEER DATE
REGISTERED CIVIL ENGINEER

Eltahir K. Ataelgeed
No. 76374
Exp. 12-31-12
CIVIL
REGISTERED PROFESSIONAL ENGINEER
STATE OF CALIFORNIA

December 20, 2010
PLANS APPROVAL DATE

THE STATE OF CALIFORNIA OR ITS OFFICERS OR AGENTS SHALL NOT BE RESPONSIBLE FOR THE ACCURACY OR COMPLETENESS OF SCANNED COPIES OF THIS PLAN SHEET.

THE CONTRACTOR SHALL POSSESS THE CLASS (OR CLASSES) OF LICENSE AS SPECIFIED IN THE "NOTICE TO BIDDERS."

| | |
|---|---|
| CONTRACT No. | 06-337404 |
| PROJECT ID | 0600020150 |

PROJECT MANAGER: STEVEN MILTON
DESIGN ENGINEER: ABDUL BAKER

LAST REVISION 09-13-10
DATE PLOTTED => 22-DEC-2010
TIME PLOTTED => 11:25

BORDER LAST REVISED 7/2/2010 | CALTRANS WEB SITE IS: HTTP//WWW.DOT.CA.GOV/ | RELATIVE BORDER SCALE IS IN INCHES 0 1 2 3 | USERNAME => s115755 DGN FILE => 633740ab001.dgn | UNIT 1476 | PROJECT NUMBER & PHASE 06000201501

| Dist | COUNTY | ROUTE | POST MILES TOTAL PROJECT | SHEET No. | TOTAL SHEETS |
|---|---|---|---|---|---|
| 06 | Tul | 190 | 21.2/26.4 | 2 | 120 |

E. Ataelgeed 12-20-10
REGISTERED CIVIL ENGINEER DATE

Eltahir K. Ataelgeed
No. 76374
Exp. 12-31-12
CIVIL
REGISTERED PROFESSIONAL ENGINEER
STATE OF CALIFORNIA

12-20-10
PLANS APPROVAL DATE

THE STATE OF CALIFORNIA OR ITS OFFICERS OR AGENTS SHALL NOT BE RESPONSIBLE FOR THE ACCURACY OR COMPLETENESS OF SCANNED COPIES OF THIS PLAN SHEET.

NOTES :

1. DIMENSIONS OF THE PAVEMENT STRUCTURES (STRUCTURAL SECTIONS) ARE SUBJECT TO TOLERANCES SPECIFIED IN THE STANDARD SPECIFICATIONS.
2. SUPERELEVATION AS SHOWN OR AS DIRECTED BY THE ENGINEER.
3. EXACT LOCATIONS AND TYPES OF HMA DIKES, AND MBGR ARE SHOWN ON THE LAYOUT AND SUMMARY OF QUANTITIES SHEETS.

## DESIGN DESIGNATION

| | |
|---|---|
| ADT (2010) | 8,500 |
| T | 6% |
| V | 55 MPH |

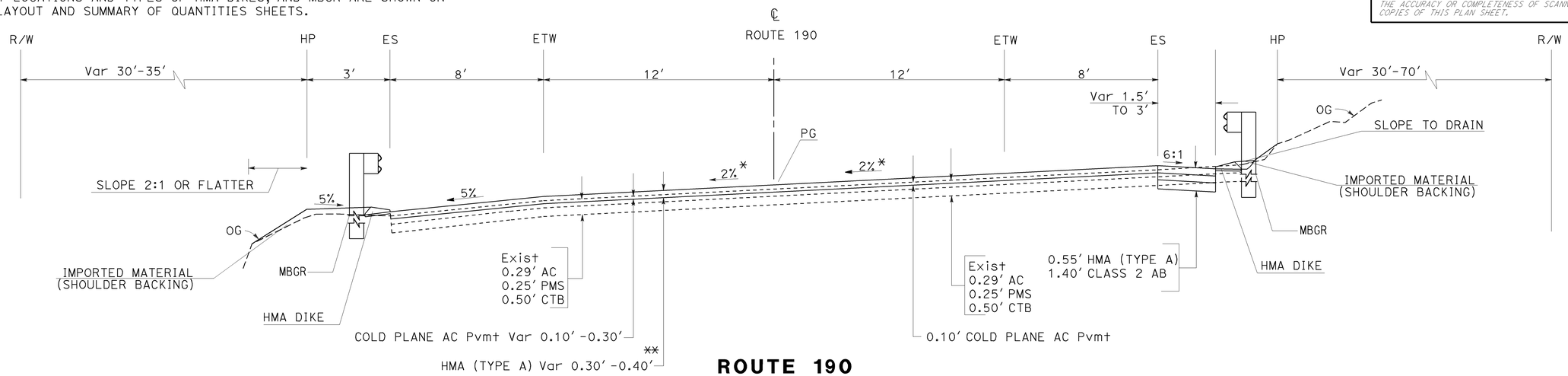


## ROUTE 190

STA 312+53.59 TO STA 317+33.82
STA 372+71.38 TO STA 383+62.50
STA 400+79.02 TO STA 415+99.74
STA 476+09.87 TO STA 479+34.16
STA 492+00.00 TO STA 499+81.00

* OR STANDARD SUPERELEVATION

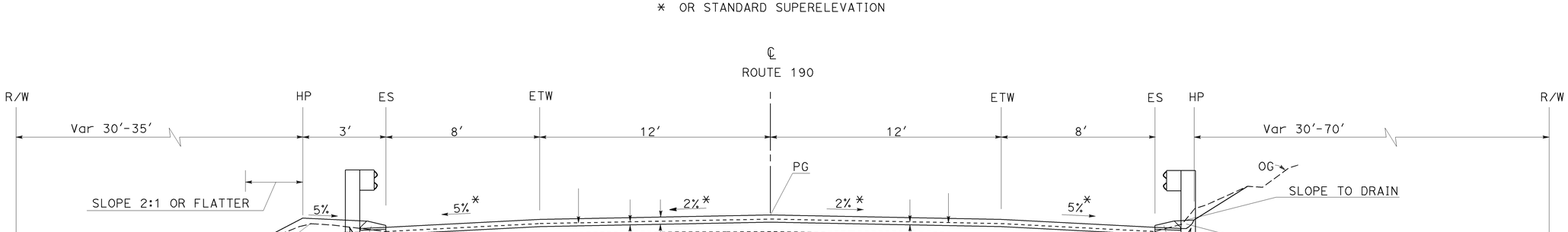


** HMA THICKNESS

| LOCATION | HMA |
|---|---|
| STA 321+81.06 TO STA 327+57.91 | 1.15' |
| STA 385+49.52 TO STA 387+94.95 | 0.68' |
| STA 393+50.00 TO STA 396+56.76 | 0.53' |
| STA 418+20.96 TO STA 430+85.01 | 0.84' |
| STA 442+97.09 TO STA 445+77.63 | 0.66' |

## ROUTE 190

STA 249+00.00 TO STA 312+53.59
STA 317+33.82 TO STA 372+71.38
STA 383+62.50 TO STA 400+79.02
STA 415+99.74 TO STA 476+09.87
STA 479+34.16 TO STA 492+00.00
STA 499+81.00 TO STA 525+50.00

*OR STANDARD SUPERELEVATION

# TYPICAL CROSS SECTIONS X-1

NO SCALE

REVISED BY | DATE REVISED
ELTAHIR ATAELGEED | ABDUL BAKER
CALCULATED-DESIGNED BY | CHECKED BY
FUNCTIONAL SUPERVISOR: ABDUL BAKER
STATE OF CALIFORNIA - DEPARTMENT OF TRANSPORTATION
DESIGN
Caltrans

LAST REVISION | DATE PLOTTED => 22-DEC-2010
TIME PLOTTED => 11:25

BORDER LAST REVISED 7/1/2010 | USERNAME => s115755 | DGN FILE => 633740ca001.dgn | RELATIVE BORDER SCALE IS IN INCHES 0 1 2 3 | UNIT 1476 | PROJECT NUMBER & PHASE 06000201501

| Dist | COUNTY | ROUTE | POST MILES TOTAL PROJECT | SHEET No. | TOTAL SHEETS |
|---|---|---|---|---|---|
| 06 | Tul | 190 | 21.2/26.4 | 3 | 120 |

E. Ataelgeed 12-20-10
REGISTERED CIVIL ENGINEER DATE

12-20-10
PLANS APPROVAL DATE

Eltahir K. Ataelgeed No. 76374 Exp. 12-31-12 CIVIL — REGISTERED PROFESSIONAL ENGINEER — STATE OF CALIFORNIA

THE STATE OF CALIFORNIA OR ITS OFFICERS OR AGENTS SHALL NOT BE RESPONSIBLE FOR THE ACCURACY OR COMPLETENESS OF SCANNED COPIES OF THIS PLAN SHEET.

NOTES :

1. DIMENSIONS OF THE PAVEMENT STRUCTURES (STRUCTURAL SECTIONS) ARE SUBJECT TO TOLERANCES SPECIFIED IN THE STANDARD SPECIFICATIONS.
2. SUPERELEVATION AS SHOWN OR AS DIRECTED BY THE ENGINEER.
3. EXACT LOCATIONS AND TYPES OF HMA DIKE ARE SHOWN ON THE LAYOUTS AND SUMMARY OF QUANTITIES SHEETS.

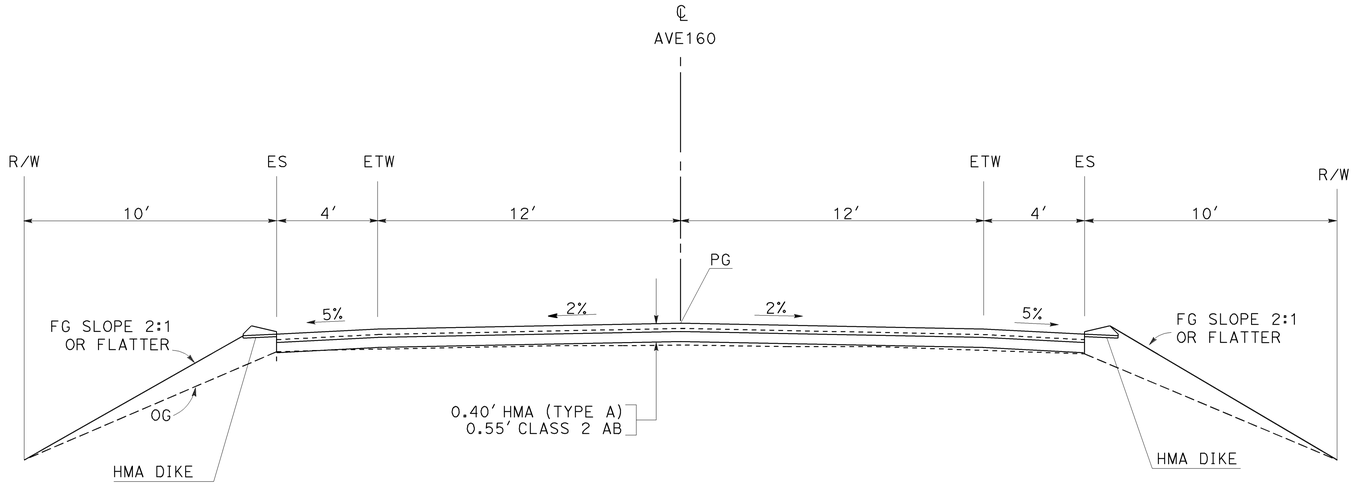


**Ave 160**

STA 04+50.00 TO STA 08+21.55

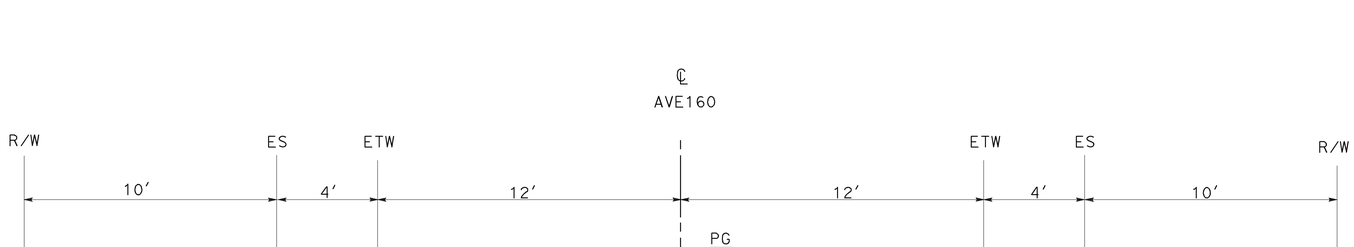


**Ave 160**

STA 08+68.54 TO STA 11+00.00

# TYPICAL CROSS SECTIONS X-2

NO SCALE

CALCULATED-DESIGNED BY: ELTAHIR ATAELGEED
CHECKED BY: ABDUL BAKER
FUNCTIONAL SUPERVISOR: ABDUL BAKER
REVISED BY / DATE REVISED:

STATE OF CALIFORNIA - DEPARTMENT OF TRANSPORTATION
DESIGN

LAST REVISION DATE PLOTTED => 22-DEC-2010
TIME PLOTTED => 11:25
09-08-10

| Dist | COUNTY | ROUTE | POST MILES TOTAL PROJECT | SHEET No. | TOTAL SHEETS |
|---|---|---|---|---|---|
| 06 | Tul | 190 | 21.2/26.4 | 4 | 120 |

E. Ataelgeed 12-20-10
REGISTERED CIVIL ENGINEER DATE

12-20-10
PLANS APPROVAL DATE

Eltahir K. Ataelgeed
No. 76374
Exp 12-31-12
CIVIL
REGISTERED PROFESSIONAL ENGINEER
STATE OF CALIFORNIA

THE STATE OF CALIFORNIA OR ITS OFFICERS OR AGENTS SHALL NOT BE RESPONSIBLE FOR THE ACCURACY OR COMPLETENESS OF SCANNED COPIES OF THIS PLAN SHEET.

## NOTES:

1. FOR ACCURATE RIGHT OF WAY , CONTACT RIGHT OF WAY ENGINEERING AT THE DISTRICT OFFICE.
2. FOR MAILBOX RESET SEE SHEETS C-3, C-4 AND Q-1

### LEGEND

- DRAINAGE SYSTEM No.
- DRAINAGE UNIT No.
- PAVE DRIVEWAY
- FLOW LINE
- TFESA TEMPORARY FENCE (TYPE ESA)

### ABBREVIATIONS

ESA ENVIRONMENTALLY SENSITIVE AREA

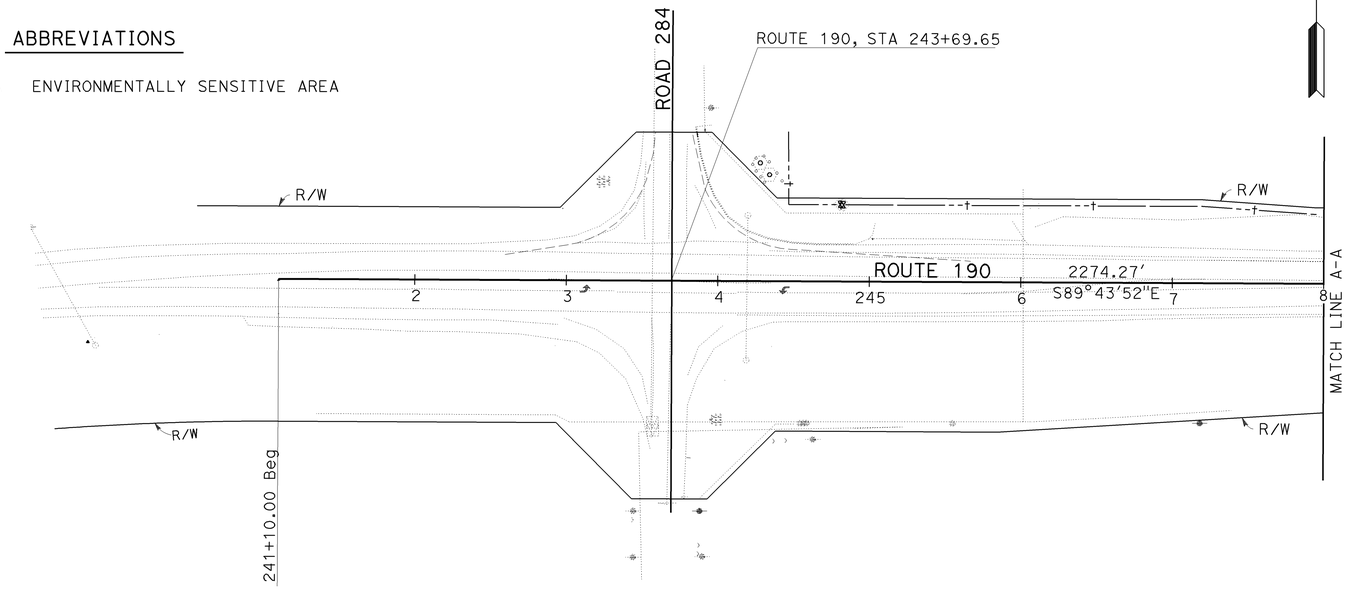


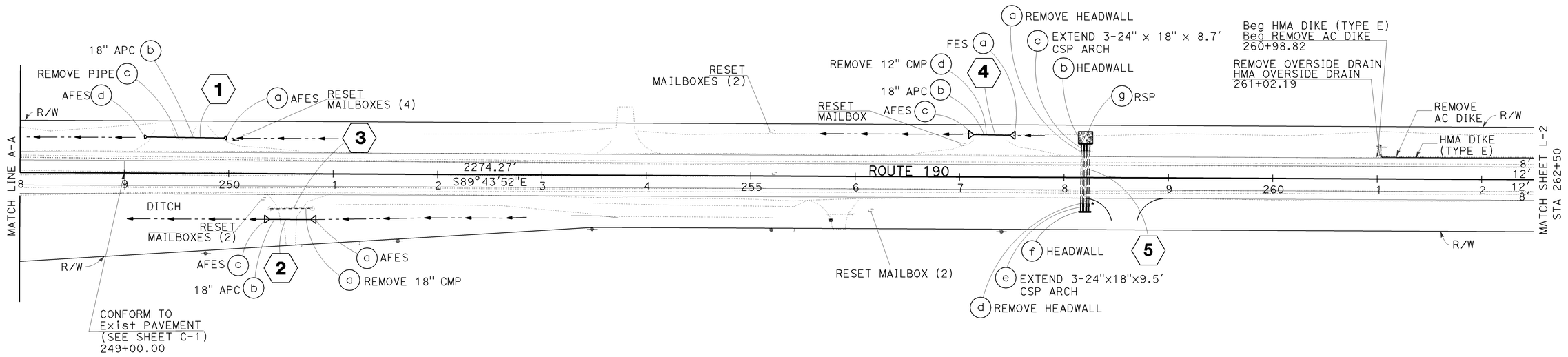


SCALE: 1" = 50'

# LAYOUT
# L-1

STATE OF CALIFORNIA - DEPARTMENT OF TRANSPORTATION
DESIGN
FUNCTIONAL SUPERVISOR: ABDUL BAKER
CALCULATED-DESIGNED BY: ELTAHIR ATAELGEED
CHECKED BY: ABDUL BAKER
REVISED BY / DATE REVISED

LAST REVISION DATE PLOTTED => 22-DEC-2010
TIME PLOTTED => 11:25
08-30-10

BORDER LAST REVISED 7/2/2010
USERNAME => s115755
DGN FILE => 633740ea001.dgn
RELATIVE BORDER SCALE IS IN INCHES 0 1 2 3
UNIT 1476
PROJECT NUMBER & PHASE 06000201501

| Dist | COUNTY | ROUTE | POST MILES TOTAL PROJECT | SHEET No. | TOTAL SHEETS |
|---|---|---|---|---|---|
| 06 | Tul | 190 | 21.2/26.4 | 5 | 120 |

E. Ataelgeed 12-20-10
REGISTERED CIVIL ENGINEER DATE

12-20-10
PLANS APPROVAL DATE

REGISTERED PROFESSIONAL ENGINEER
Eltahir K. Ataelgeed
No. 76374
Exp 12-31-12
CIVIL
STATE OF CALIFORNIA

THE STATE OF CALIFORNIA OR ITS OFFICERS OR AGENTS SHALL NOT BE RESPONSIBLE FOR THE ACCURACY OR COMPLETENESS OF SCANNED COPIES OF THIS PLAN SHEET.

NOTES:

1. FOR ACCURATE RIGHT OF WAY , CONTACT RIGHT OF WAY ENGINEERING AT THE DISTRICT OFFICE.
2. FOR MAILBOX RESET SEE SHEETS C-3, C-4 AND Q-1

CURVE DATA

| No. | R | △ | T | L |
|---|---|---|---|---|
| (1) | 1199.96′ | 43°22′59.9" | 477.32′ | 908.59′ |

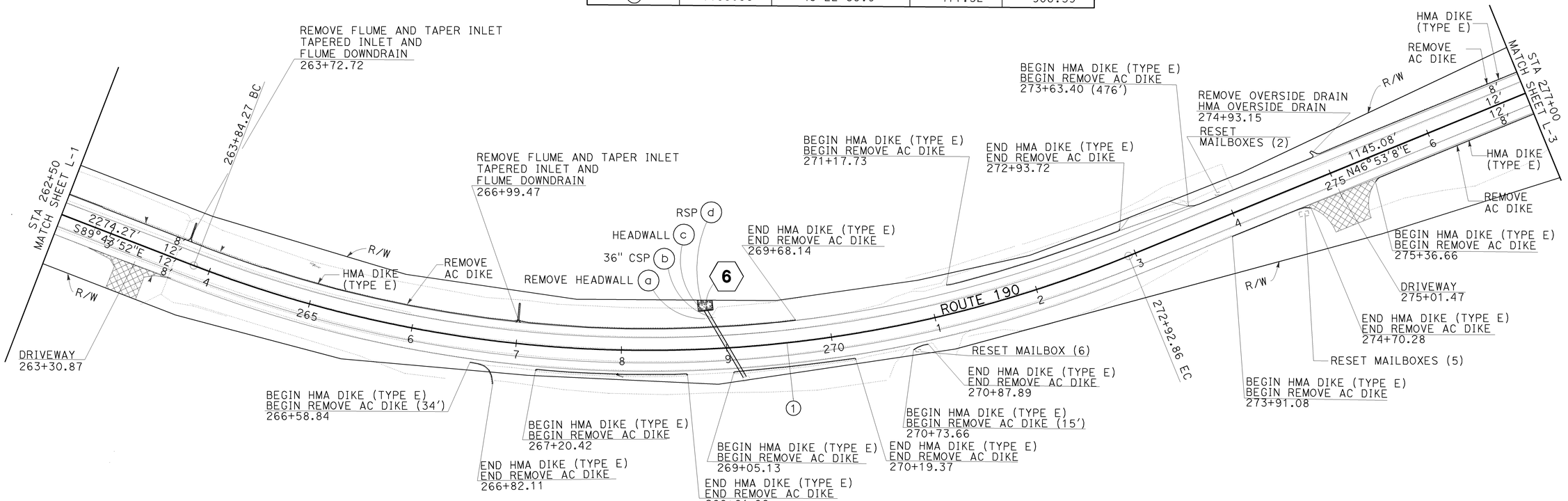


SCALE: 1" = 50′

# LAYOUT L-2

STATE OF CALIFORNIA - DEPARTMENT OF TRANSPORTATION
DESIGN

CALCULATED-DESIGNED BY: ELTAHIR ATAELGEED
CHECKED BY: ABDUL BAKER
FUNCTIONAL SUPERVISOR: ABDUL BAKER

| REVISED BY | DATE REVISED |
|---|---|
| | |

LAST REVISION | DATE PLOTTED => 22-DEC-2010
08-30-10 | TIME PLOTTED => 11:26

BORDER LAST REVISED 7/2/2010

USERNAME => s115755
DGN FILE => 633740ea002.dgn

RELATIVE BORDER SCALE IS IN INCHES 0 1 2 3

UNIT 1476

PROJECT NUMBER & PHASE 06000201501

| Dist | COUNTY | ROUTE | POST MILES TOTAL PROJECT | SHEET No. | TOTAL SHEETS |
|---|---|---|---|---|---|
| 06 | Tul | 190 | 21.2/26.4 | 6 | 120 |

E. Ataelgeed 12-20-10
REGISTERED CIVIL ENGINEER DATE

12-20-10
PLANS APPROVAL DATE

Eltahir K. Ataelgeed No. 76374 Exp 12-31-12 CIVIL — REGISTERED PROFESSIONAL ENGINEER — STATE OF CALIFORNIA

THE STATE OF CALIFORNIA OR ITS OFFICERS OR AGENTS SHALL NOT BE RESPONSIBLE FOR THE ACCURACY OR COMPLETENESS OF SCANNED COPIES OF THIS PLAN SHEET.

NOTES:

1. FOR ACCURATE RIGHT OF WAY , CONTACT RIGHT OF WAY ENGINEERING AT THE DISTRICT OFFICE.
2. FOR MAILBOX RESET SEE SHEETS C-3, C-4 AND Q-1

CURVE DATA

| No. | R | △ | T | L |
|---|---|---|---|---|
| ② | 4999.82′ | 9°46′00" | 427.17′ | 852.27′ |

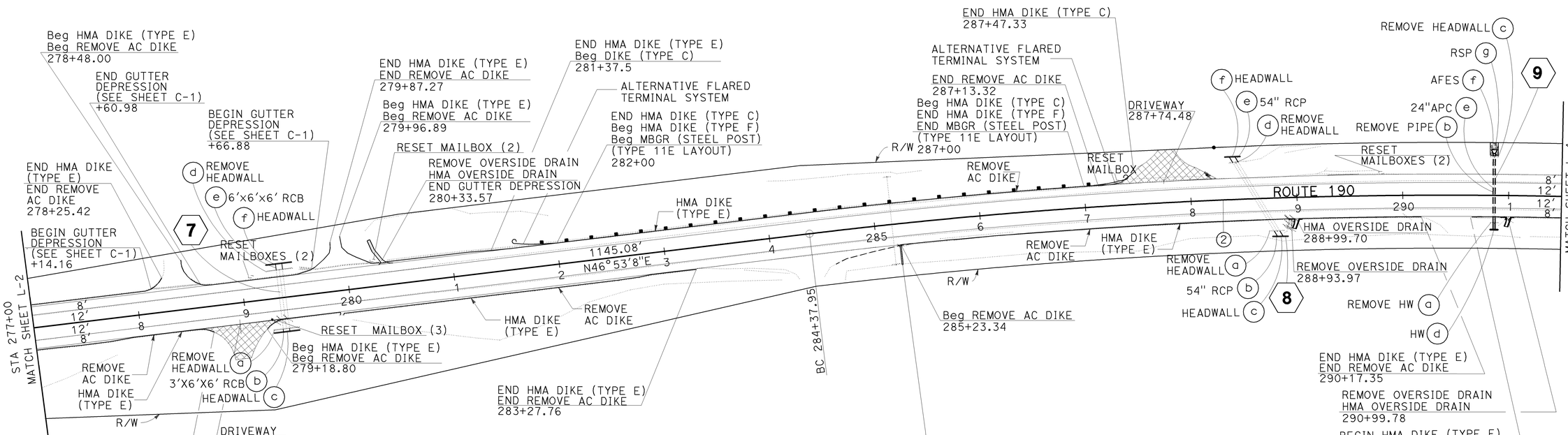


SCALE: 1" = 50′

# LAYOUT L-3

STATE OF CALIFORNIA - DEPARTMENT OF TRANSPORTATION
DESIGN
Caltrans

FUNCTIONAL SUPERVISOR: ABDUL BAKER
CALCULATED-DESIGNED BY: ELTAHIR ATAELGEED
CHECKED BY: ABDUL BAKER
REVISED BY
DATE REVISED

LAST REVISION | DATE PLOTTED => 22-DEC-2010
08-30-10 | TIME PLOTTED => 11:26

BORDER LAST REVISED 7/2/2010
USERNAME => s115755
DGN FILE => 633740eq003.dgn
RELATIVE BORDER SCALE IS IN INCHES 0 1 2 3
UNIT 1476
PROJECT NUMBER & PHASE 06000201501

| Dist | COUNTY | ROUTE | POST MILES TOTAL PROJECT | SHEET No. | TOTAL SHEETS |
|---|---|---|---|---|---|
| 06 | Tul | 190 | 21.2/26.4 | 7 | 120 |

E. Ataelgeed 12-20-10
REGISTERED CIVIL ENGINEER DATE

12-20-10
PLANS APPROVAL DATE

REGISTERED PROFESSIONAL ENGINEER
Eltahir K. Ataelgeed
No. 76374
Exp 12-31-12
CIVIL
STATE OF CALIFORNIA

THE STATE OF CALIFORNIA OR ITS OFFICERS OR AGENTS SHALL NOT BE RESPONSIBLE FOR THE ACCURACY OR COMPLETENESS OF SCANNED COPIES OF THIS PLAN SHEET.

NOTES:

1. FOR ACCURATE RIGHT OF WAY , CONTACT RIGHT OF WAY ENGINEERING AT THE DISTRICT OFFICE.

2. FOR MAILBOX RESET SEE SHEETS C-3, C-4 AND Q-1

CURVE DATA

| No. | R | △ | T | L |
|---|---|---|---|---|
| ② | 4999.84′ | 9 45′59.9" | 427.17′ | 852.27′ |

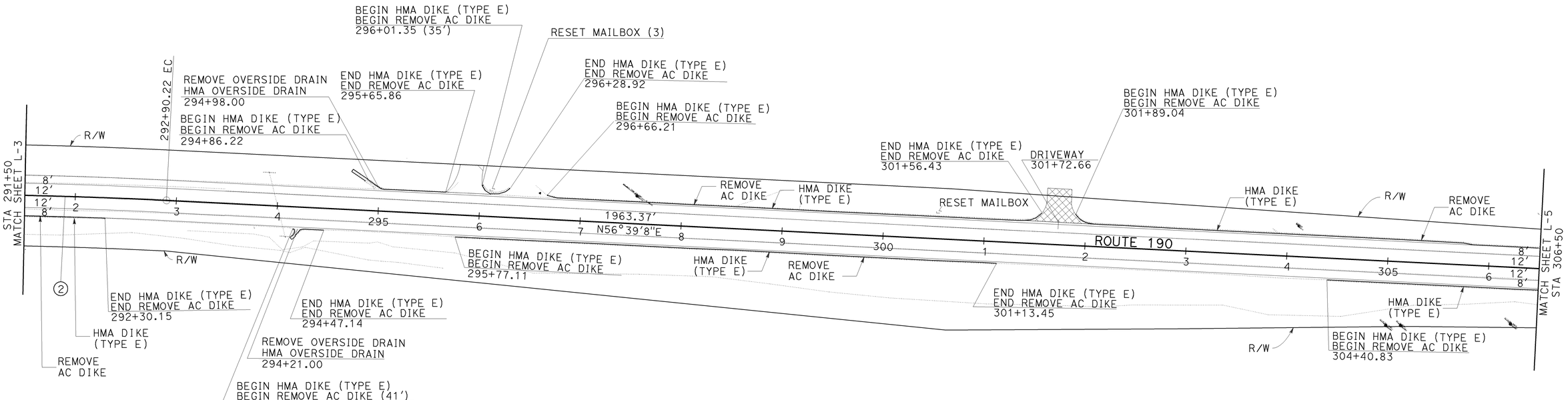


SCALE: 1" = 50′

**LAYOUT**
**L-4**

STATE OF CALIFORNIA - DEPARTMENT OF TRANSPORTATION
DESIGN
FUNCTIONAL SUPERVISOR: ABDUL BAKER
CALCULATED-DESIGNED BY: ELTAHIR ATAELGEED
CHECKED BY: ABDUL BAKER
REVISED BY
DATE REVISED

LAST REVISION DATE PLOTTED => 22-DEC-2010
08-30-10 TIME PLOTTED => 11:26

BORDER LAST REVISED 7/2/2010
USERNAME => s115755
DGN FILE => 633740ea004.dgn
RELATIVE BORDER SCALE IS IN INCHES 0 1 2 3
UNIT 1476
PROJECT NUMBER & PHASE 06000201501

| Dist | COUNTY | ROUTE | POST MILES TOTAL PROJECT | SHEET No. | TOTAL SHEETS |
|---|---|---|---|---|---|
| 06 | Tul | 190 | 21.2/26.4 | 8 | 120 |

E. Ataelgeed 12-20-10
REGISTERED CIVIL ENGINEER DATE

12-20-10
PLANS APPROVAL DATE

REGISTERED PROFESSIONAL ENGINEER
Eltahir K. Ataelgeed
No. 76374
Exp 12-31-12
CIVIL
STATE OF CALIFORNIA

THE STATE OF CALIFORNIA OR ITS OFFICERS OR AGENTS SHALL NOT BE RESPONSIBLE FOR THE ACCURACY OR COMPLETENESS OF SCANNED COPIES OF THIS PLAN SHEET.

NOTES:

1. FOR ACCURATE RIGHT OF WAY , CONTACT RIGHT OF WAY ENGINEERING AT THE DISTRICT OFFICE.
2. FOR MAILBOX RESET SEE SHEETS C-3, C-4 AND Q-1

CURVE DATA

| No. | R | △ | T | L |
|---|---|---|---|---|
| ③ | 1999.93′ | 30°24′00" | 543.37′ | 1061.12′ |

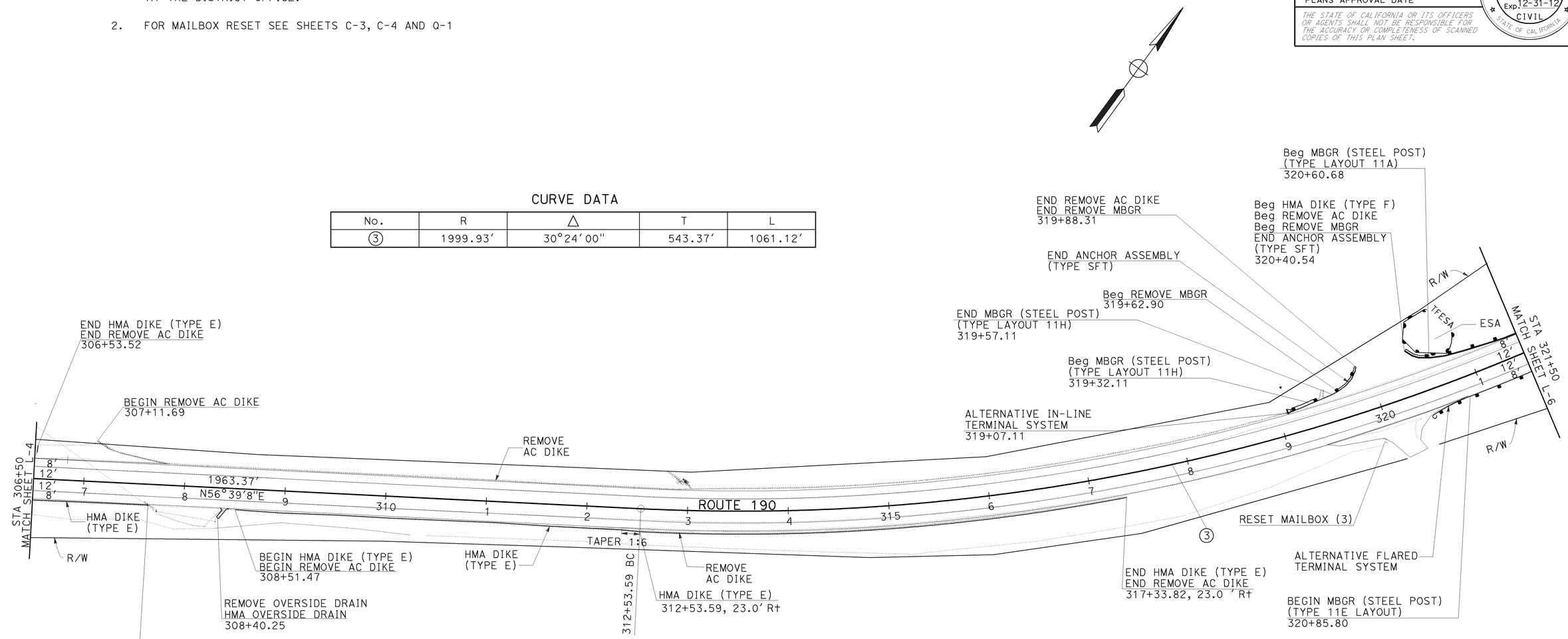


SCALE: 1" = 50′

# LAYOUT
# L-5

LAST REVISION DATE PLOTTED => 22-DEC-2010
08-30-10 TIME PLOTTED => 11:26

CALCULATED-DESIGNED BY
CHECKED BY
ELTAHIR ATAELGEED
ABDUL BAKER
REVISED BY
DATE REVISED
FUNCTIONAL SUPERVISOR
ABDUL BAKER
STATE OF CALIFORNIA - DEPARTMENT OF TRANSPORTATION
DESIGN
Caltrans

BORDER LAST REVISED 7/2/2010
USERNAME => s115755
DGN FILE => 633740ea005.dgn
RELATIVE BORDER SCALE IS IN INCHES 0 1 2 3
UNIT 1476
PROJECT NUMBER & PHASE 06000201501

| Dist | COUNTY | ROUTE | POST MILES TOTAL PROJECT | SHEET No. | TOTAL SHEETS |
|---|---|---|---|---|---|
| 06 | Tul | 190 | 21.2/26.4 | 9 | 120 |

E. Ataelgeed 12-20-10
REGISTERED CIVIL ENGINEER DATE

12-20-10
PLANS APPROVAL DATE

Eltahir K. Ataelgeed No. 76374 Exp 12-31-12 CIVIL — REGISTERED PROFESSIONAL ENGINEER — STATE OF CALIFORNIA

THE STATE OF CALIFORNIA OR ITS OFFICERS OR AGENTS SHALL NOT BE RESPONSIBLE FOR THE ACCURACY OR COMPLETENESS OF SCANNED COPIES OF THIS PLAN SHEET.

NOTES:

1. FOR ACCURATE RIGHT OF WAY , CONTACT RIGHT OF WAY ENGINEERING AT THE DISTRICT OFFICE.
2. FOR MAILBOX RESET SEE SHEETS C-3, C-4 AND Q-1

CURVE DATA

| No. | R | △ | T | L |
|---|---|---|---|---|
| ③ | 1999.93′ | 30°24′00" | 543.37′ | 1061.12′ |
| ④ | 2999.89′ | 14°22′00" | 378.09′ | 752.21′ |

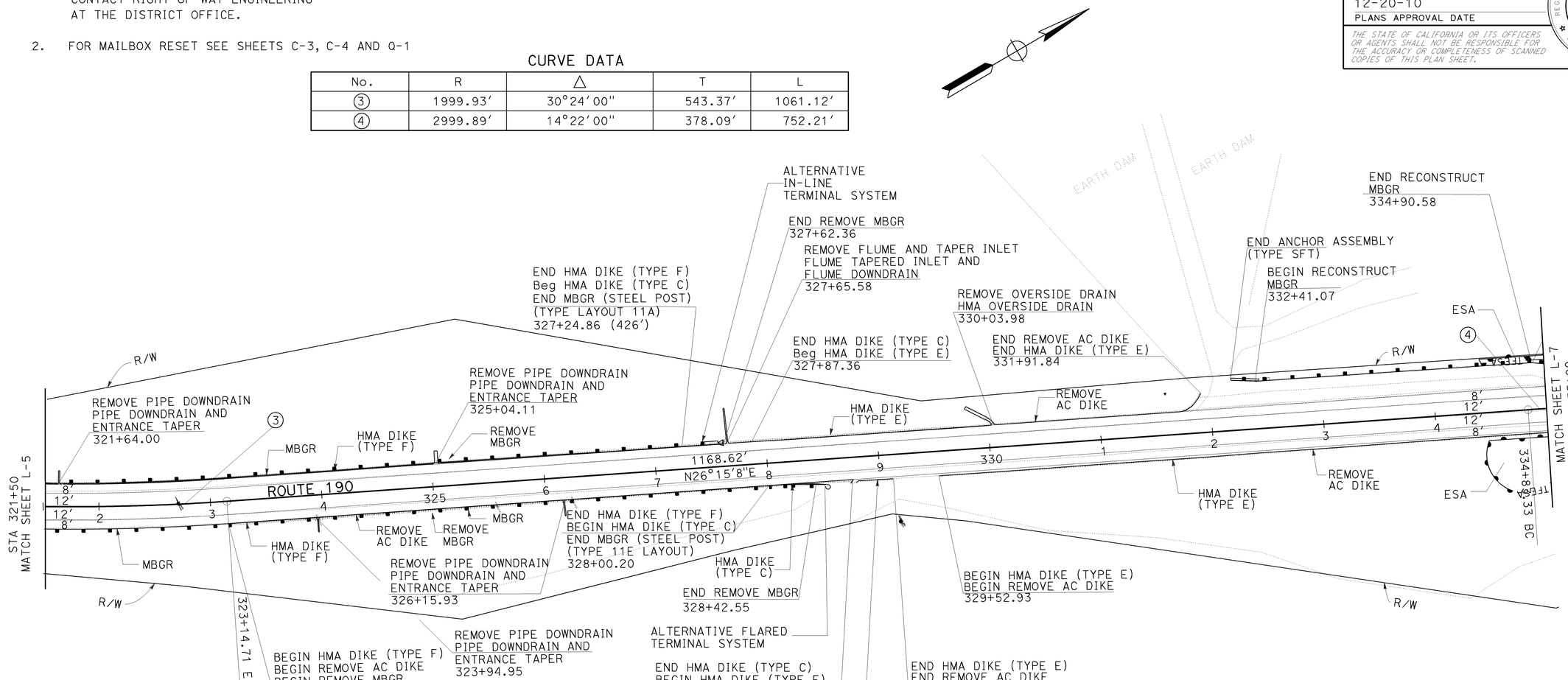


SCALE: 1" = 50′

# LAYOUT L-6

STATE OF CALIFORNIA - DEPARTMENT OF TRANSPORTATION
Caltrans® DESIGN
FUNCTIONAL SUPERVISOR ABDUL BAKER
CALCULATED-DESIGNED BY ELTAHIR ATAELGEED
CHECKED BY ABDUL BAKER
REVISED BY
DATE REVISED

LAST REVISION DATE PLOTTED => 22-DEC-2010
08-30-10 TIME PLOTTED => 11:26

BORDER LAST REVISED 7/2/2010
USERNAME => s115755
DGN FILE => 633740ea006.dgn
RELATIVE BORDER SCALE IS IN INCHES 0 1 2 3
UNIT 1476
PROJECT NUMBER & PHASE 06000201501

| Dist | COUNTY | ROUTE | POST MILES TOTAL PROJECT | SHEET No. | TOTAL SHEETS |
|---|---|---|---|---|---|
| 06 | Tul | 190 | 21.2/26.4 | 10 | 120 |

E. Ataelgeed 12-20-10
REGISTERED CIVIL ENGINEER DATE

12-20-10
PLANS APPROVAL DATE

REGISTERED PROFESSIONAL ENGINEER
Eltahir K. Ataelgeed
No. 76374
Exp 12-31-12
CIVIL
STATE OF CALIFORNIA

THE STATE OF CALIFORNIA OR ITS OFFICERS OR AGENTS SHALL NOT BE RESPONSIBLE FOR THE ACCURACY OR COMPLETENESS OF SCANNED COPIES OF THIS PLAN SHEET.

NOTES:

1. FOR ACCURATE RIGHT OF WAY , CONTACT RIGHT OF WAY ENGINEERING AT THE DISTRICT OFFICE.

2. FOR MAILBOX RESET SEE SHEETS C-3, C-4 AND Q-1

CURVE DATA

| No. | R | △ | T | L |
|---|---|---|---|---|
| ④ | 2999.89′ | 14°22′00" | 378.09′ | 752.21′ |

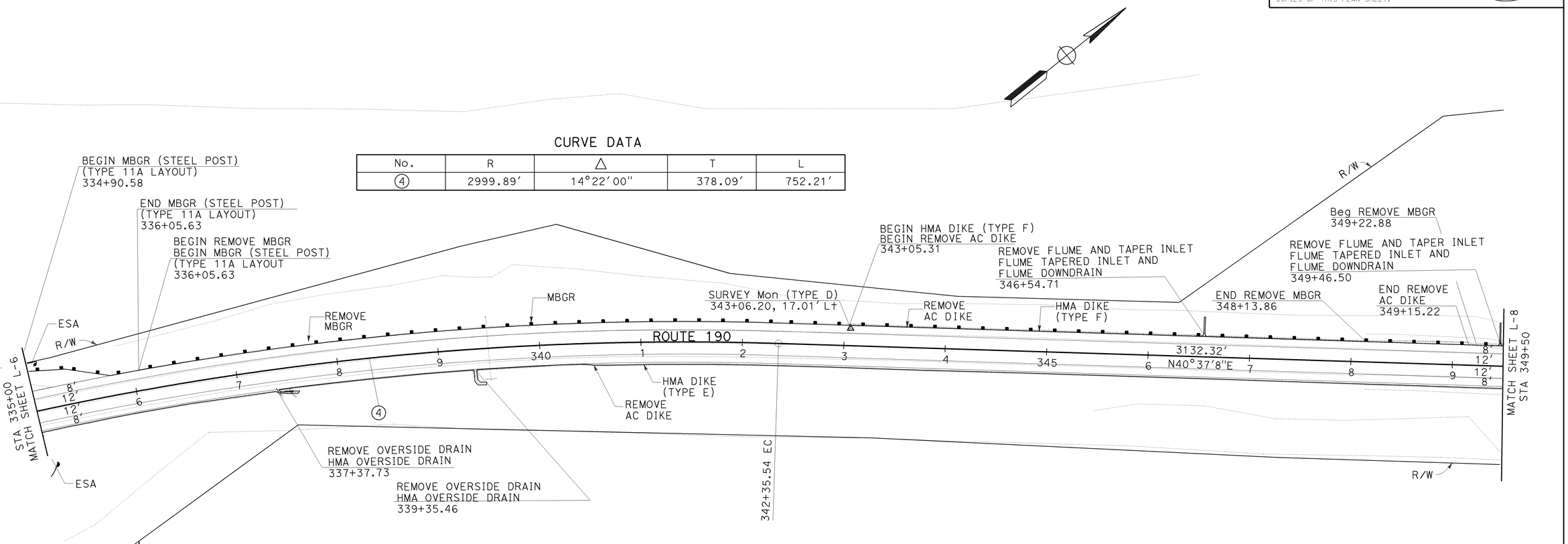


# LAYOUT
# L-7

SCALE: 1" = 50′

STATE OF CALIFORNIA - DEPARTMENT OF TRANSPORTATION
DESIGN
Caltrans

| REVISED BY | DATE REVISED |
|---|---|
| | |

CALCULATED-DESIGNED BY: ELTAHIR ATAELGEED
CHECKED BY: ABDUL BAKER
FUNCTIONAL SUPERVISOR: ABDUL BAKER

LAST REVISION DATE PLOTTED => 22-DEC-2010
08-30-10 TIME PLOTTED => 11:26

BORDER LAST REVISED 7/2/2010
USERNAME => s115755
DGN FILE => 633740ea007.dgn
RELATIVE BORDER SCALE IS IN INCHES 0 1 2 3
UNIT 1476
PROJECT NUMBER & PHASE 06000201501

| Dist | COUNTY | ROUTE | POST MILES TOTAL PROJECT | SHEET No. | TOTAL SHEETS |
|---|---|---|---|---|---|
| 06 | Tul | 190 | 21.2/26.4 | 11 | 120 |

E. Ataelgeed 12-20-10
REGISTERED CIVIL ENGINEER DATE

12-20-10
PLANS APPROVAL DATE

Eltahir K. Ataelgeed No. 76374 Exp 12-31-12 CIVIL
REGISTERED PROFESSIONAL ENGINEER — STATE OF CALIFORNIA

THE STATE OF CALIFORNIA OR ITS OFFICERS OR AGENTS SHALL NOT BE RESPONSIBLE FOR THE ACCURACY OR COMPLETENESS OF SCANNED COPIES OF THIS PLAN SHEET.

NOTES:

1. FOR ACCURATE RIGHT OF WAY , CONTACT RIGHT OF WAY ENGINEERING AT THE DISTRICT OFFICE.
2. FOR MAILBOX RESET SEE SHEETS C-3, C-4 AND Q-1

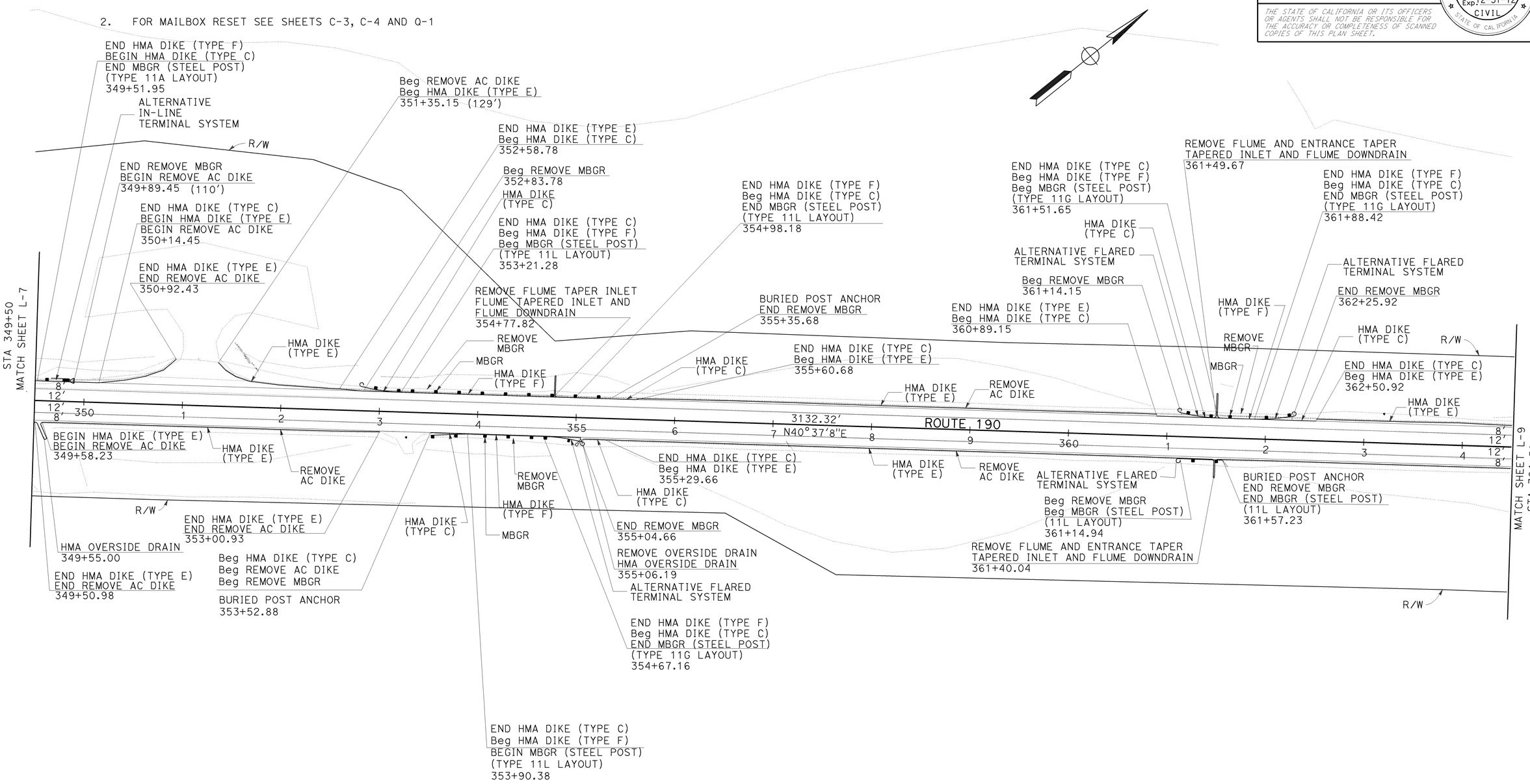


SCALE: 1" = 50'

# LAYOUT L-8

CALCULATED- DESIGNED BY
CHECKED BY
REVISED BY
DATE REVISED
ELTAHIR ATAELGEED
ABDUL BAKER
FUNCTIONAL SUPERVISOR
ABDUL BAKER
STATE OF CALIFORNIA - DEPARTMENT OF TRANSPORTATION
DESIGN
Caltrans

LAST REVISION | DATE PLOTTED => 22-DEC-2010
08-30-10 | TIME PLOTTED => 11:26

BORDER LAST REVISED 7/2/2010
USERNAME => s115755
DGN FILE => 633740ea008.dgn
RELATIVE BORDER SCALE IS IN INCHES 0 1 2 3
UNIT 1476
PROJECT NUMBER & PHASE 06000201501

| Dist | COUNTY | ROUTE | POST MILES TOTAL PROJECT | SHEET No. | TOTAL SHEETS |
|---|---|---|---|---|---|
| 06 | Tul | 190 | 21.2/26.4 | 12 | 120 |

E. Ataelgeed 12-20-10
REGISTERED CIVIL ENGINEER DATE

12-20-10
PLANS APPROVAL DATE

Eltahir K. Ataelgeed No. 76374 Exp 12-31-12 CIVIL
REGISTERED PROFESSIONAL ENGINEER — STATE OF CALIFORNIA

THE STATE OF CALIFORNIA OR ITS OFFICERS OR AGENTS SHALL NOT BE RESPONSIBLE FOR THE ACCURACY OR COMPLETENESS OF SCANNED COPIES OF THIS PLAN SHEET.

NOTES:

1. FOR ACCURATE RIGHT OF WAY , CONTACT RIGHT OF WAY ENGINEERING AT THE DISTRICT OFFICE.
2. FOR MAILBOX RESET SEE SHEETS C-3, C-4 AND Q-1

CURVE DATA

| No. | R | △ | T | L |
|---|---|---|---|---|
| ⑤ | 2499.90′ | 29 47′59.9" | 665.17′ | 1300.22′ |

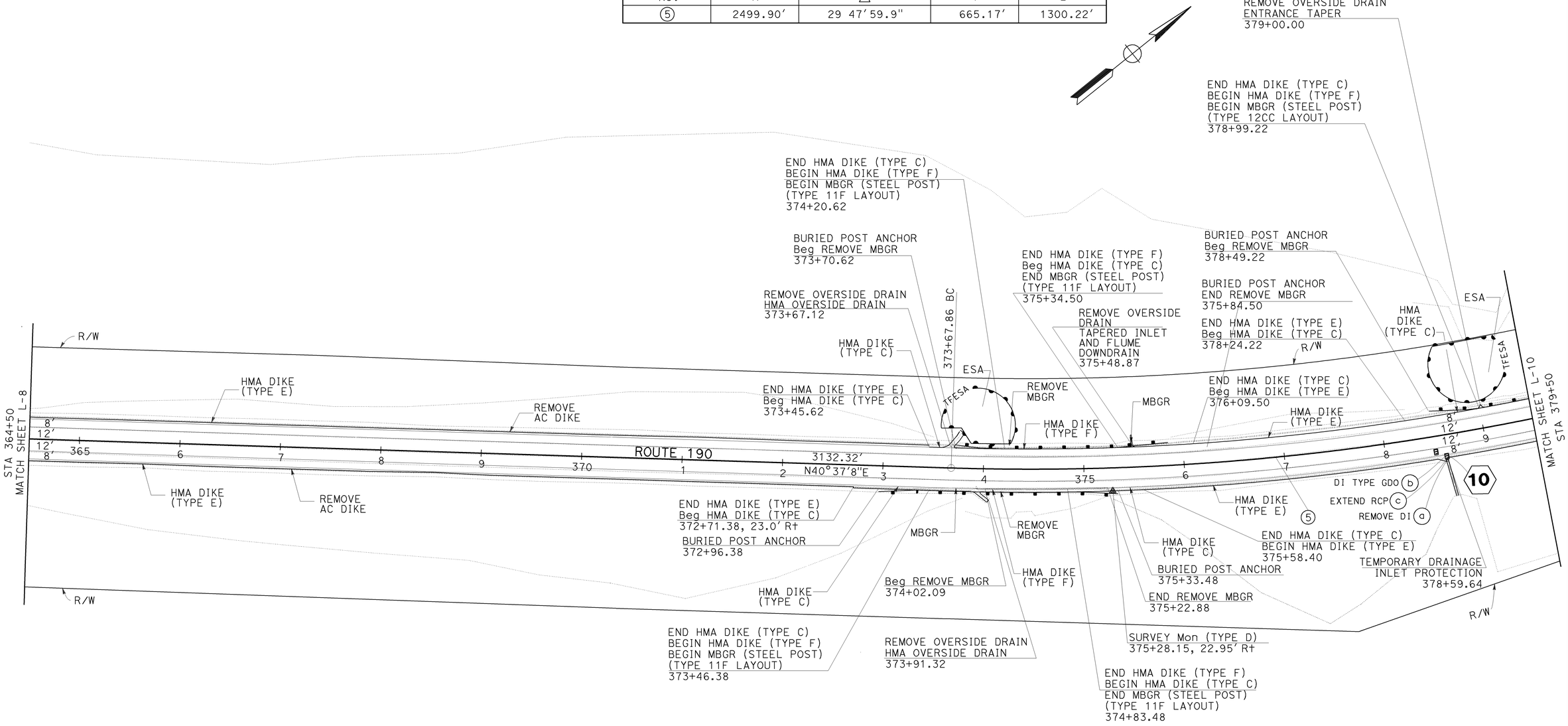


SCALE: 1" = 50′

# LAYOUT L-9

CALCULATED-DESIGNED BY
CHECKED BY
REVISED BY
DATE REVISED
ELTAHIR ATAELGEED
ABDUL BAKER
FUNCTIONAL SUPERVISOR
ABDUL BAKER
STATE OF CALIFORNIA - DEPARTMENT OF TRANSPORTATION
DESIGN
Caltrans

LAST REVISION | DATE PLOTTED => 22-DEC-2010
08-30-10 | TIME PLOTTED => 11:26

| Dist | COUNTY | ROUTE | POST MILES TOTAL PROJECT | SHEET No. | TOTAL SHEETS |
|---|---|---|---|---|---|
| 06 | Tul | 190 | 21.2/26.4 | 13 | 120 |

E. Ataelgeed 12-20-10
REGISTERED CIVIL ENGINEER DATE

12-20-10
PLANS APPROVAL DATE

REGISTERED PROFESSIONAL ENGINEER
Eltahir K. Ataelgeed
No. 76374
Exp 12-31-12
CIVIL
STATE OF CALIFORNIA

THE STATE OF CALIFORNIA OR ITS OFFICERS OR AGENTS SHALL NOT BE RESPONSIBLE FOR THE ACCURACY OR COMPLETENESS OF SCANNED COPIES OF THIS PLAN SHEET.

NOTES:

1. FOR ACCURATE RIGHT OF WAY , CONTACT RIGHT OF WAY ENGINEERING AT THE DISTRICT OFFICE.
2. FOR MAILBOX RESET SEE SHEETS C-3, C-4 AND Q-1

CURVE DATA

| No. | R | △ | T | L |
|---|---|---|---|---|
| ⑤ | 2499.90′ | 29°47′59.9" | 665.17′ | 1300.22′ |

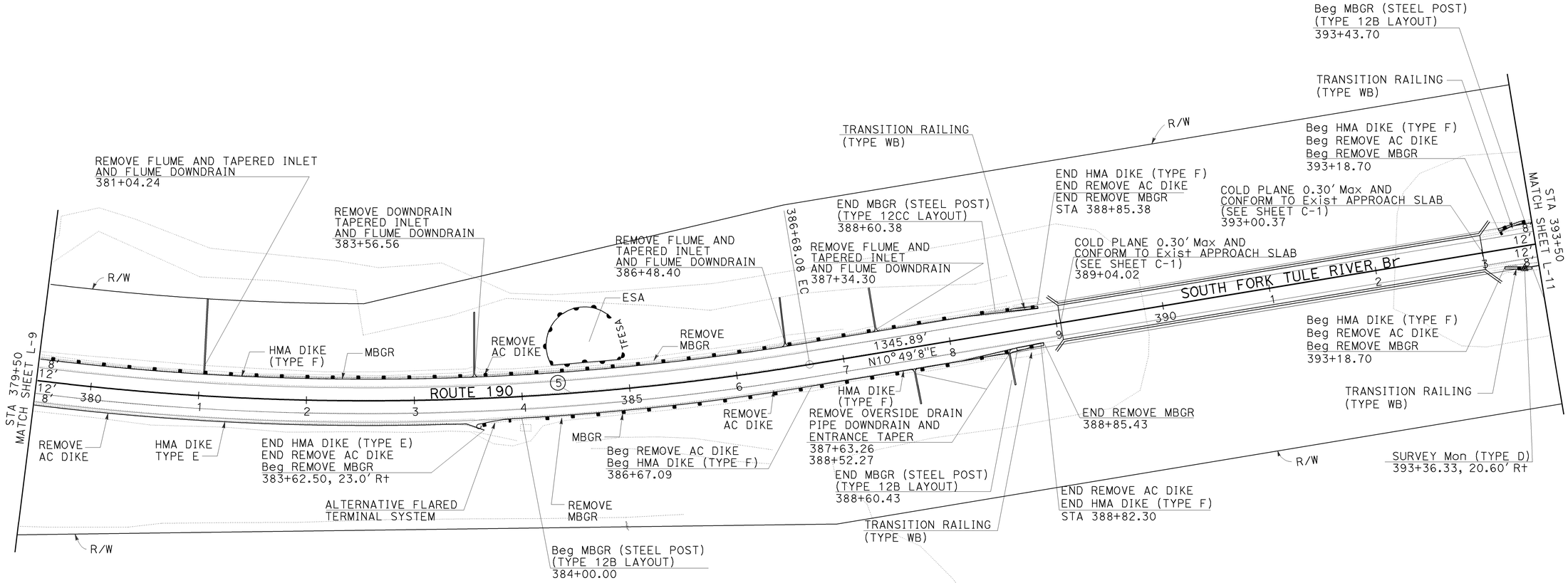


SCALE: 1" = 50′

# LAYOUT L-10

REVISED BY | DATE REVISED
CALCULATED-DESIGNED BY | CHECKED BY
ELTAHIR ATAELGEED | ABDUL BAKER
FUNCTIONAL SUPERVISOR | ABDUL BAKER
STATE OF CALIFORNIA - DEPARTMENT OF TRANSPORTATION
DESIGN
Caltrans

LAST REVISION | DATE PLOTTED => 22-DEC-2010
08-30-10 | TIME PLOTTED => 11:26

BORDER LAST REVISED 7/2/2010
USERNAME => s115755
DGN FILE => 633740ea010.dgn
RELATIVE BORDER SCALE IS IN INCHES 0 1 2 3
UNIT 1476
PROJECT NUMBER & PHASE 06000201501

| Dist | COUNTY | ROUTE | POST MILES TOTAL PROJECT | SHEET No. | TOTAL SHEETS |
|---|---|---|---|---|---|
| 06 | Tul | 190 | 21.2/26.4 | 14 | 120 |

E. Ataelgeed 12-20-10
REGISTERED CIVIL ENGINEER DATE

12-20-10
PLANS APPROVAL DATE

Eltahir K. Ataelgeed No. 76374 Exp 12-31-12 CIVIL
REGISTERED PROFESSIONAL ENGINEER — STATE OF CALIFORNIA

THE STATE OF CALIFORNIA OR ITS OFFICERS OR AGENTS SHALL NOT BE RESPONSIBLE FOR THE ACCURACY OR COMPLETENESS OF SCANNED COPIES OF THIS PLAN SHEET.

NOTES:

1. FOR ACCURATE RIGHT OF WAY , CONTACT RIGHT OF WAY ENGINEERING AT THE DISTRICT OFFICE.
2. FOR MAILBOX RESET SEE SHEETS C-3, C-4 AND Q-1

## CURVE DATA

| No. | R | △ | T | L |
|---|---|---|---|---|
| ⑥ | 3999.83′ | 27°29′00" | 978.14′ | 1918.62′ |

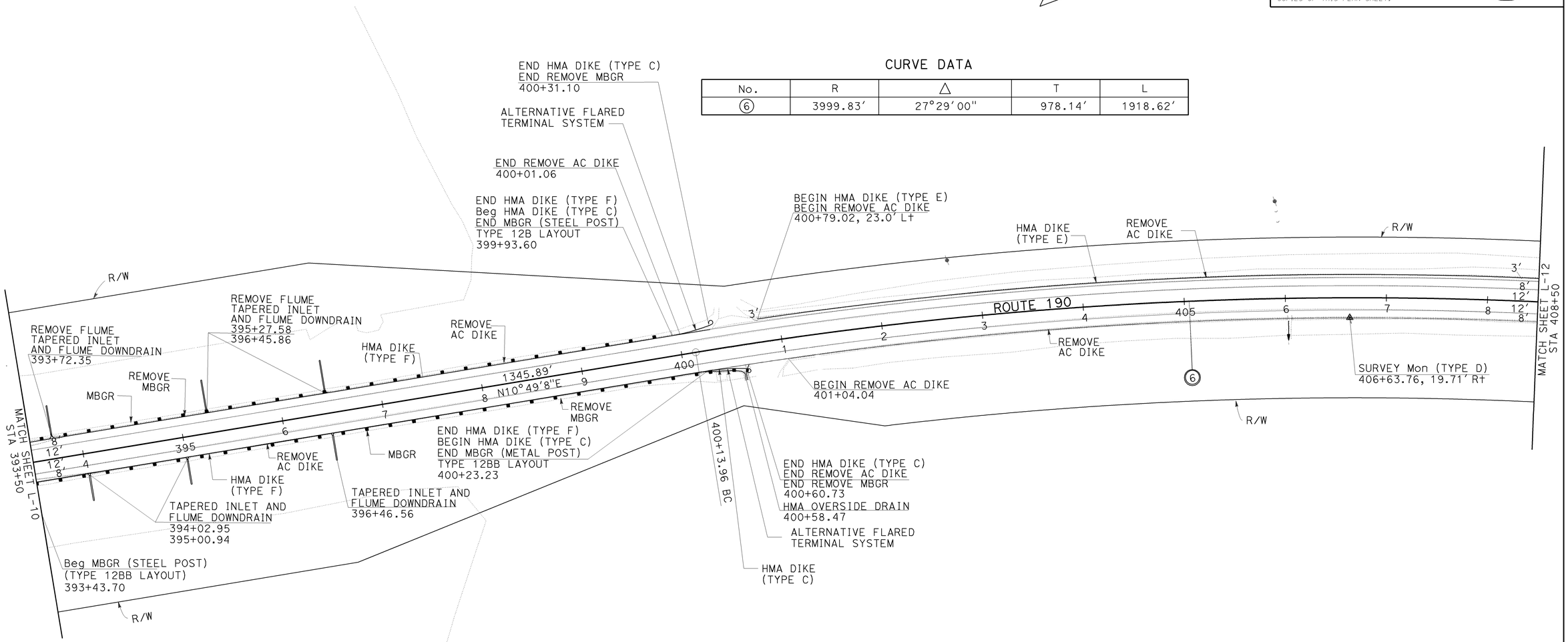


SCALE: 1" = 50′

# LAYOUT
# L-11

CALCULATED-DESIGNED BY
CHECKED BY
REVISED BY
DATE REVISED
ELTAHIR ATAELGEED
ABDUL BAKER
FUNCTIONAL SUPERVISOR
ABDUL BAKER
STATE OF CALIFORNIA - DEPARTMENT OF TRANSPORTATION
DESIGN
Caltrans®

LAST REVISION
DATE PLOTTED => 22-DEC-2010
TIME PLOTTED => 11:26
08-30-10

BORDER LAST REVISED 7/2/2010
USERNAME => s115755
DGN FILE => 633740ea011.dgn
RELATIVE BORDER SCALE IS IN INCHES 0 1 2 3
UNIT 1476
PROJECT NUMBER & PHASE 06000201501

| Dist | COUNTY | ROUTE | POST MILES TOTAL PROJECT | SHEET No. | TOTAL SHEETS |
|---|---|---|---|---|---|
| 06 | Tul | 190 | 21.2/26.4 | 15 | 120 |

E. Ataelgeed 12-20-10
REGISTERED CIVIL ENGINEER DATE

12-20-10
PLANS APPROVAL DATE

REGISTERED PROFESSIONAL ENGINEER Eltahir K. Ataelgeed No. 76374 Exp. 12-31-12 CIVIL STATE OF CALIFORNIA

*THE STATE OF CALIFORNIA OR ITS OFFICERS OR AGENTS SHALL NOT BE RESPONSIBLE FOR THE ACCURACY OR COMPLETENESS OF SCANNED COPIES OF THIS PLAN SHEET.*

## NOTES:

1. FOR ACCURATE RIGHT OF WAY , CONTACT RIGHT OF WAY ENGINEERING AT THE DISTRICT OFFICE.
2. FOR MAILBOX RESET SEE SHEETS C-3, C-4 AND Q-1

### CURVE DATA

| No. | R | △ | T | L |
|---|---|---|---|---|
| 6 | 3999.83′ | 27°29′00" | 978.14′ | 1918.62′ |

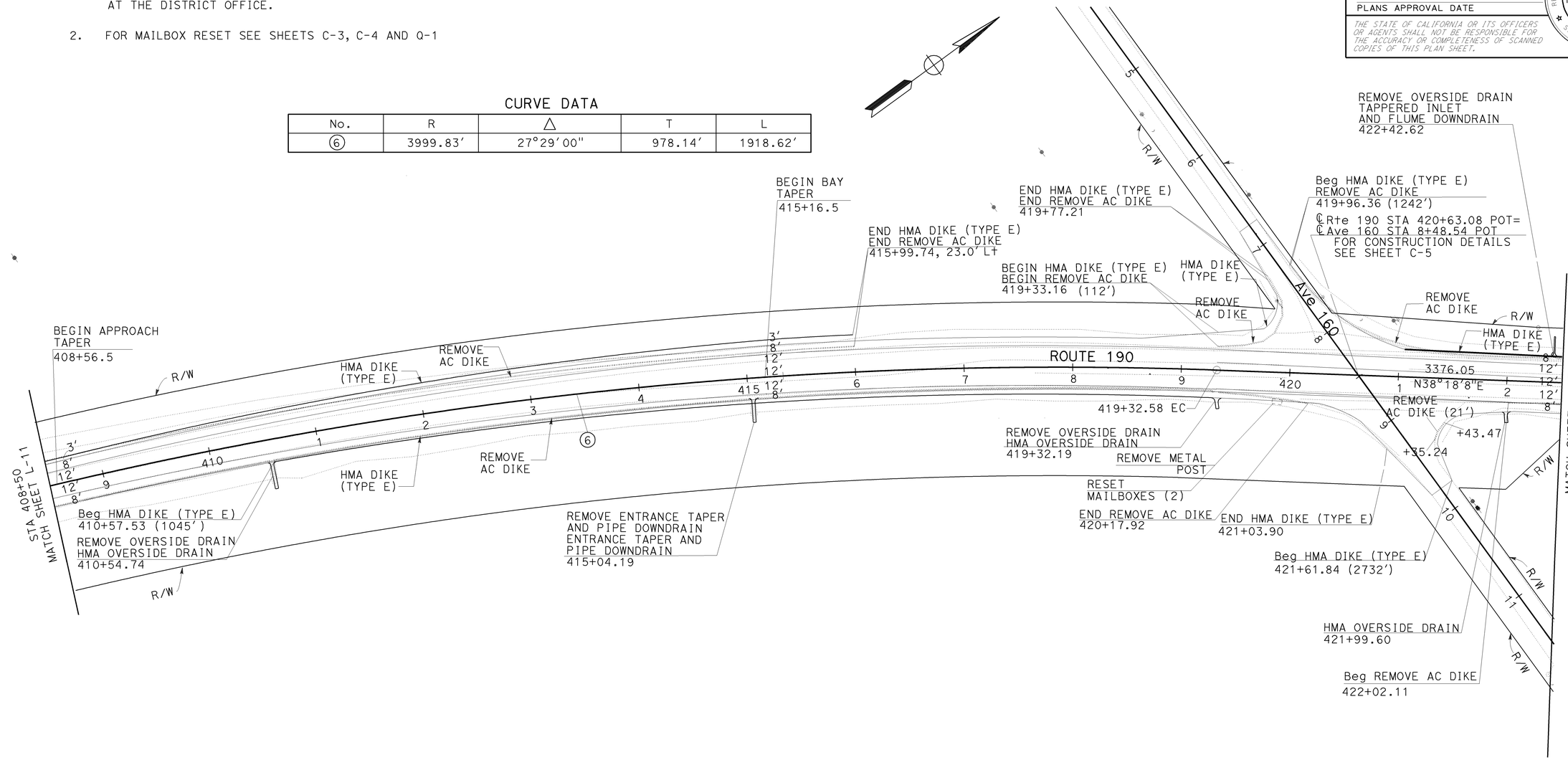


SCALE: 1" = 50′

# LAYOUT L-12

STATE OF CALIFORNIA - DEPARTMENT OF TRANSPORTATION
Caltrans DESIGN
FUNCTIONAL SUPERVISOR ABDUL BAKER
CALCULATED-DESIGNED BY ELTAHIR ATAELGEED
CHECKED BY ABDUL BAKER
REVISED BY
DATE REVISED

LAST REVISION 08-30-10
DATE PLOTTED => 22-DEC-2010
TIME PLOTTED => 11:26

| Dist | COUNTY | ROUTE | POST MILES TOTAL PROJECT | SHEET No. | TOTAL SHEETS |
|---|---|---|---|---|---|
| 06 | Tul | 190 | 21.2/26.4 | 16 | 120 |

E. Ataelgeed 12-20-10
REGISTERED CIVIL ENGINEER DATE

12-20-10
PLANS APPROVAL DATE

REGISTERED PROFESSIONAL ENGINEER
Eltahir K. Ataelgeed
No. 76374
Exp 12-31-12
CIVIL
STATE OF CALIFORNIA

THE STATE OF CALIFORNIA OR ITS OFFICERS OR AGENTS SHALL NOT BE RESPONSIBLE FOR THE ACCURACY OR COMPLETENESS OF SCANNED COPIES OF THIS PLAN SHEET.

NOTES:

1. FOR ACCURATE RIGHT OF WAY , CONTACT RIGHT OF WAY ENGINEERING AT THE DISTRICT OFFICE.

2. FOR MAILBOX RESET SEE SHEETS C-3, C-4 AND Q-1

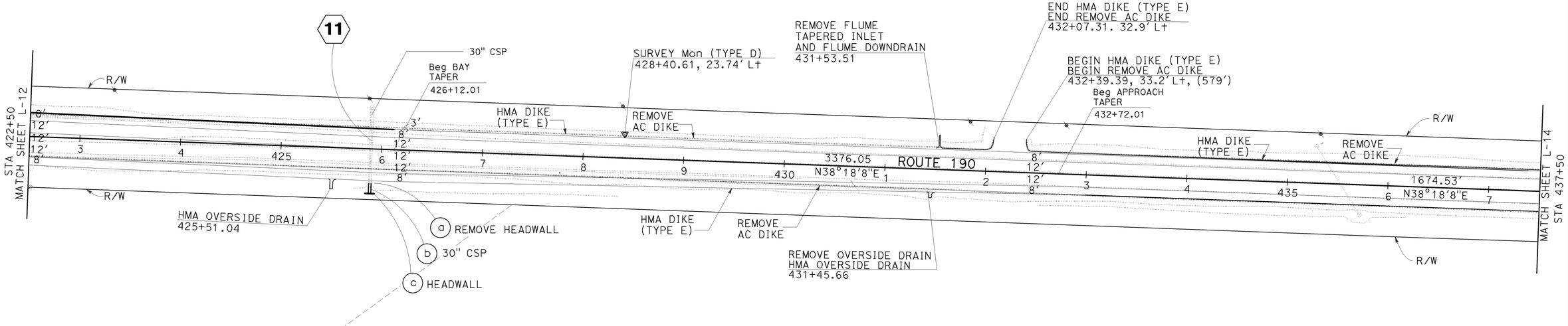


SCALE: 1" = 50'

**LAYOUT**
**L-13**

STATE OF CALIFORNIA - DEPARTMENT OF TRANSPORTATION
DESIGN
FUNCTIONAL SUPERVISOR: ABDUL BAKER
CALCULATED-DESIGNED BY: ABDUL BAKER
CHECKED BY: ELTAHIR ATAELGEED
REVISED BY
DATE REVISED

LAST REVISION | DATE PLOTTED => 22-DEC-2010 | 08-30-10 | TIME PLOTTED => 11:26

BORDER LAST REVISED 7/2/2010
USERNAME => s115755
DGN FILE => 633740ea013.dgn
RELATIVE BORDER SCALE IS IN INCHES 0 1 2 3
UNIT 1476
PROJECT NUMBER & PHASE 06000201501

| Dist | COUNTY | ROUTE | POST MILES TOTAL PROJECT | SHEET No. | TOTAL SHEETS |
|---|---|---|---|---|---|
| 06 | Tul | 190 | 21.2/26.4 | 17 | 120 |

E. Ataelgeed 12-20-10
REGISTERED CIVIL ENGINEER DATE

12-20-10
PLANS APPROVAL DATE

REGISTERED PROFESSIONAL ENGINEER
Eltahir K. Ataelgeed
No. 76374
Exp 12-31-12
CIVIL
STATE OF CALIFORNIA

THE STATE OF CALIFORNIA OR ITS OFFICERS OR AGENTS SHALL NOT BE RESPONSIBLE FOR THE ACCURACY OR COMPLETENESS OF SCANNED COPIES OF THIS PLAN SHEET.

NOTES:

1. FOR ACCURATE RIGHT OF WAY , CONTACT RIGHT OF WAY ENGINEERING AT THE DISTRICT OFFICE.

2. FOR MAILBOX RESET SEE SHEETS C-3, C-4 AND Q-1

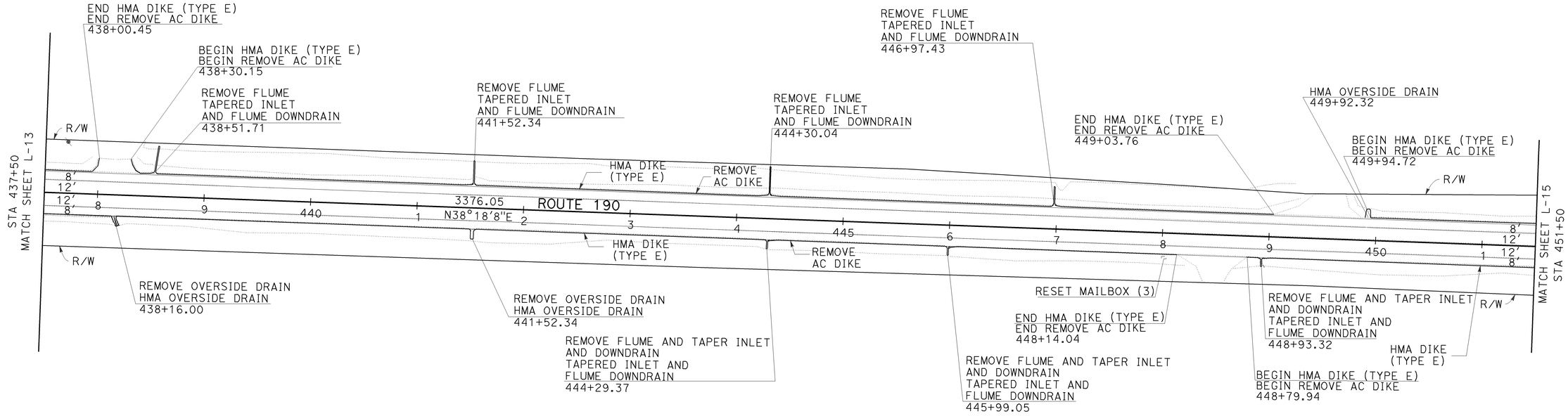


SCALE: 1" = 50'

# LAYOUT
# L-14

CALCULATED-DESIGNED BY
CHECKED BY
REVISED BY
DATE REVISED
ELTAHIR ATAELGEED
ABDUL BAKER
FUNCTIONAL SUPERVISOR
ABDUL BAKER
STATE OF CALIFORNIA - DEPARTMENT OF TRANSPORTATION
Caltrans®
DESIGN

LAST REVISION | DATE PLOTTED => 22-DEC-2010 | 08-30-10 | TIME PLOTTED => 11:26

BORDER LAST REVISED 7/2/2010
USERNAME => s115755
DGN FILE => 633740ea014.dgn
RELATIVE BORDER SCALE IS IN INCHES 0 1 2 3
UNIT 1476
PROJECT NUMBER & PHASE 06000201501

| Dist | COUNTY | ROUTE | POST MILES TOTAL PROJECT | SHEET No. | TOTAL SHEETS |
|---|---|---|---|---|---|
| 06 | Tul | 190 | 21.2/26.4 | 18 | 120 |

E. Ataelgeed 12-20-10
REGISTERED CIVIL ENGINEER DATE

12-20-10
PLANS APPROVAL DATE

REGISTERED PROFESSIONAL ENGINEER
Eltahir K. Ataelgeed
No. 76374
Exp 12-31-12
CIVIL
STATE OF CALIFORNIA

THE STATE OF CALIFORNIA OR ITS OFFICERS OR AGENTS SHALL NOT BE RESPONSIBLE FOR THE ACCURACY OR COMPLETENESS OF SCANNED COPIES OF THIS PLAN SHEET.

## NOTES:

1. FOR ACCURATE RIGHT OF WAY , CONTACT RIGHT OF WAY ENGINEERING AT THE DISTRICT OFFICE.
2. FOR MAILBOX RESET SEE SHEETS C-3, C-4 AND Q-1

### CURVE DATA

| No. | R | △ | T | L |
|---|---|---|---|---|
| ⑦ | 2000′ | 19 40′00" | 346.66′ | 686.50′ |

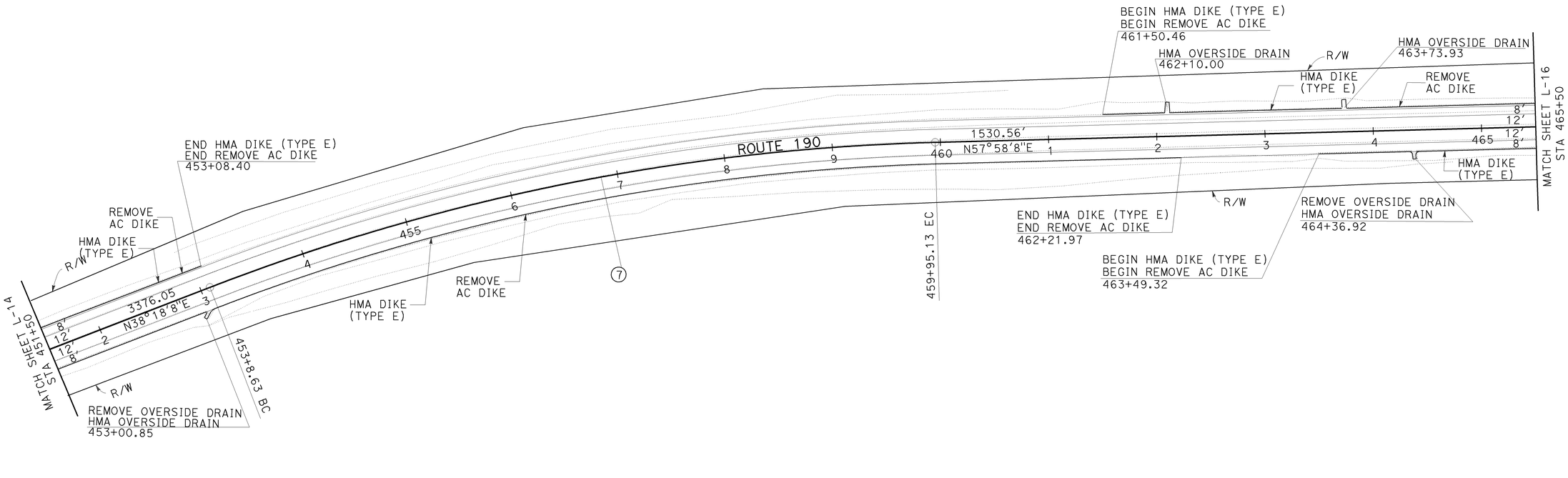


SCALE: 1" = 50′

# LAYOUT
# L-15

| REVISED BY | DATE REVISED |
|---|---|
| | |

CALCULATED-DESIGNED BY: ELTAHIR ATAELGEED
CHECKED BY: ABDUL BAKER
FUNCTIONAL SUPERVISOR: ABDUL BAKER

STATE OF CALIFORNIA - DEPARTMENT OF TRANSPORTATION
Caltrans® DESIGN

LAST REVISION | DATE PLOTTED => 22-DEC-2010
08-30-10 | TIME PLOTTED => 11:26

BORDER LAST REVISED 7/2/2010
USERNAME => s115755
DGN FILE => 633740ea015.dgn
RELATIVE BORDER SCALE IS IN INCHES 0 1 2 3
UNIT 1476
PROJECT NUMBER & PHASE 06000201501

| Dist | COUNTY | ROUTE | POST MILES TOTAL PROJECT | SHEET No. | TOTAL SHEETS |
|---|---|---|---|---|---|
| 06 | Tul | 190 | 21.2/26.4 | 19 | 120 |

E. Ataelgeed 12-20-10
REGISTERED CIVIL ENGINEER DATE

12-20-10
PLANS APPROVAL DATE

REGISTERED PROFESSIONAL ENGINEER
Eltahir K. Ataelgeed
No. 76374
Exp 12-31-12
CIVIL
STATE OF CALIFORNIA

THE STATE OF CALIFORNIA OR ITS OFFICERS OR AGENTS SHALL NOT BE RESPONSIBLE FOR THE ACCURACY OR COMPLETENESS OF SCANNED COPIES OF THIS PLAN SHEET.

NOTES:

1. FOR ACCURATE RIGHT OF WAY , CONTACT RIGHT OF WAY ENGINEERING AT THE DISTRICT OFFICE.

2. FOR MAILBOX RESET SEE SHEETS C-3, C-4 AND Q-1

CURVE DATA

| No. | R | △ | T | L |
|---|---|---|---|---|
| ⑧ | 5000′ | 9°55′00" | 433.78′ | 865.39′ |

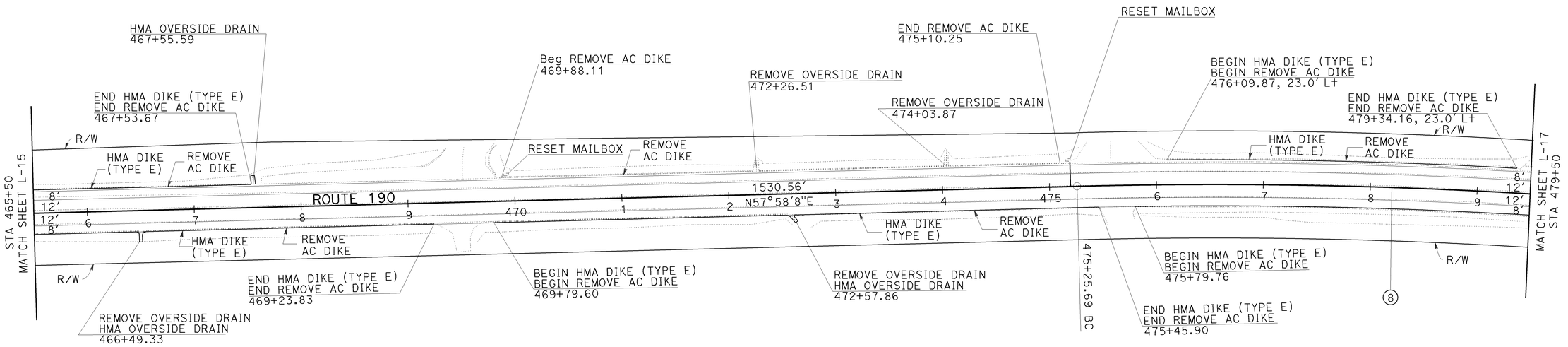


**LAYOUT**
**L-16**

SCALE: 1" = 50′

STATE OF CALIFORNIA - DEPARTMENT OF TRANSPORTATION
DESIGN
Caltrans

FUNCTIONAL SUPERVISOR: ABDUL BAKER
CALCULATED-DESIGNED BY: ELTAHIR ATAELGEED
CHECKED BY: ABDUL BAKER
REVISED BY
DATE REVISED

LAST REVISION DATE PLOTTED => 22-DEC-2010
08-30-10 TIME PLOTTED => 11:26

BORDER LAST REVISED 7/2/2010
USERNAME => s115755
DGN FILE => 633740ea016.dgn
RELATIVE BORDER SCALE IS IN INCHES 0 1 2 3
UNIT 1476
PROJECT NUMBER & PHASE 06000201501

| Dist | COUNTY | ROUTE | POST MILES TOTAL PROJECT | SHEET No. | TOTAL SHEETS |
|---|---|---|---|---|---|
| 06 | Tul | 190 | 21.2/26.4 | 20 | 120 |

E. Ataelgeed 12-20-10
REGISTERED CIVIL ENGINEER DATE

12-20-10
PLANS APPROVAL DATE

REGISTERED PROFESSIONAL ENGINEER
Eltahir K. Ataelgeed
No. 76374
Exp 12-31-12
CIVIL
STATE OF CALIFORNIA

THE STATE OF CALIFORNIA OR ITS OFFICERS OR AGENTS SHALL NOT BE RESPONSIBLE FOR THE ACCURACY OR COMPLETENESS OF SCANNED COPIES OF THIS PLAN SHEET.

NOTES:

1. FOR ACCURATE RIGHT OF WAY , CONTACT RIGHT OF WAY ENGINEERING AT THE DISTRICT OFFICE.
2. FOR MAILBOX RESET SEE SHEETS C-3, C-4 AND Q-1

CURVE DATA

| No. | R | △ | T | L |
|---|---|---|---|---|
| ⑧ | 5000′ | 9°55′00" | 433.78′ | 865.39′ |
| ⑨ | 1200′ | 32°03′00" | 344.66′ | 671.25′ |

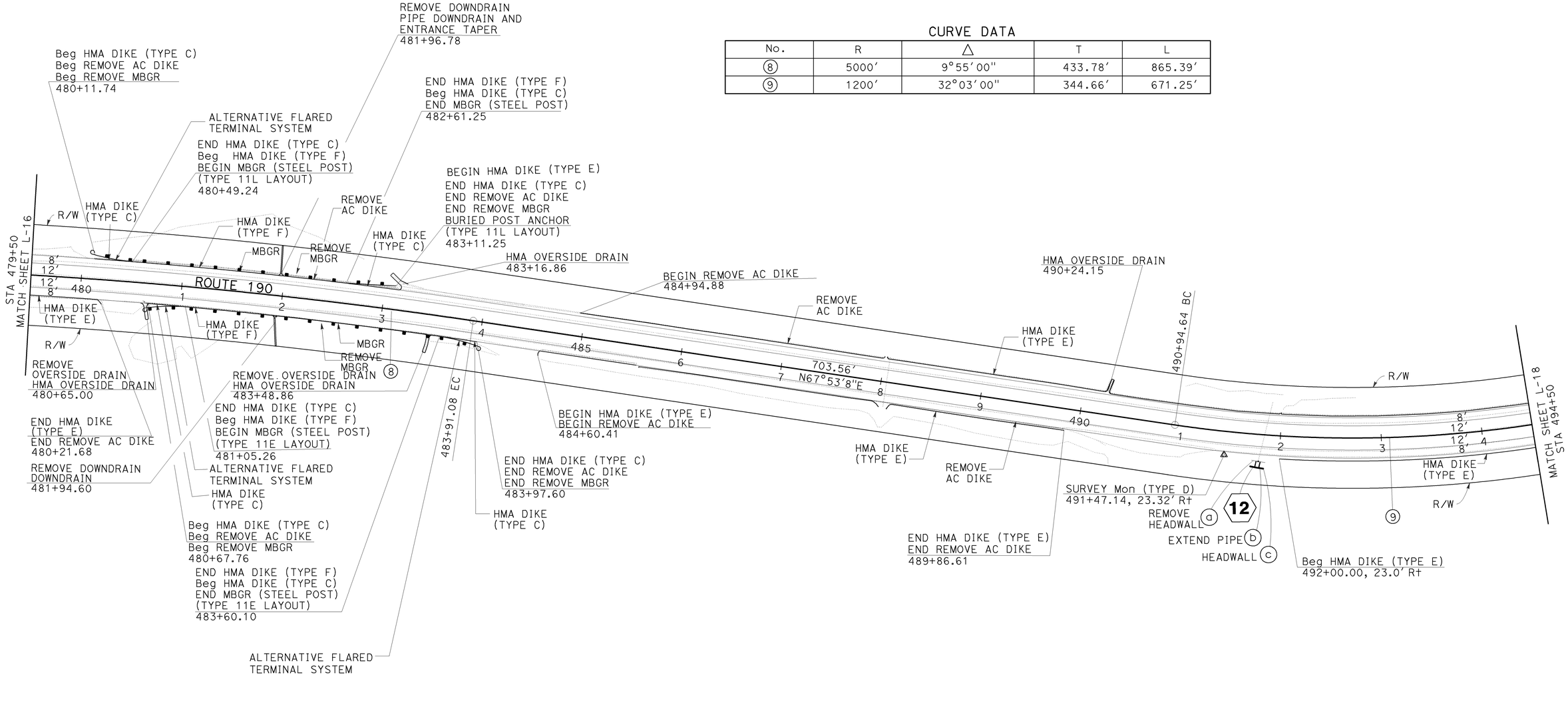


SCALE: 1" = 50′

# LAYOUT
# L-17

LAST REVISION | DATE PLOTTED => 22-DEC-2010
08-30-10 | TIME PLOTTED => 11:26

CALCULATED-DESIGNED BY ELTAHIR ATAELGEED
CHECKED BY ABDUL BAKER
REVISED BY
DATE REVISED
FUNCTIONAL SUPERVISOR ABDUL BAKER

STATE OF CALIFORNIA - DEPARTMENT OF TRANSPORTATION
DESIGN
Caltrans

BORDER LAST REVISED 7/2/2010

USERNAME => s115755
DGN FILE => 633740ea017.dgn

RELATIVE BORDER SCALE IS IN INCHES 0 1 2 3

UNIT 1476

PROJECT NUMBER & PHASE 06000201501

| Dist | COUNTY | ROUTE | POST MILES TOTAL PROJECT | SHEET No. | TOTAL SHEETS |
|---|---|---|---|---|---|
| 06 | Tul | 190 | 21.2/26.4 | 21 | 120 |

E. Ataelgeed 12-20-10
REGISTERED CIVIL ENGINEER DATE

12-20-10
PLANS APPROVAL DATE

REGISTERED PROFESSIONAL ENGINEER
Eltahir K. Ataelgeed
No. 76374
Exp 12-31-12
CIVIL
STATE OF CALIFORNIA

THE STATE OF CALIFORNIA OR ITS OFFICERS OR AGENTS SHALL NOT BE RESPONSIBLE FOR THE ACCURACY OR COMPLETENESS OF SCANNED COPIES OF THIS PLAN SHEET.

NOTES:

1. FOR ACCURATE RIGHT OF WAY , CONTACT RIGHT OF WAY ENGINEERING AT THE DISTRICT OFFICE.
2. FOR MAILBOX RESET SEE SHEETS C-3, C-4 AND Q-1

CURVE DATA

| No. | R | △ | T | L |
|---|---|---|---|---|
| (10) | 3000′ | 26°22′59.9" | 703.18′ | 1381.43′ |

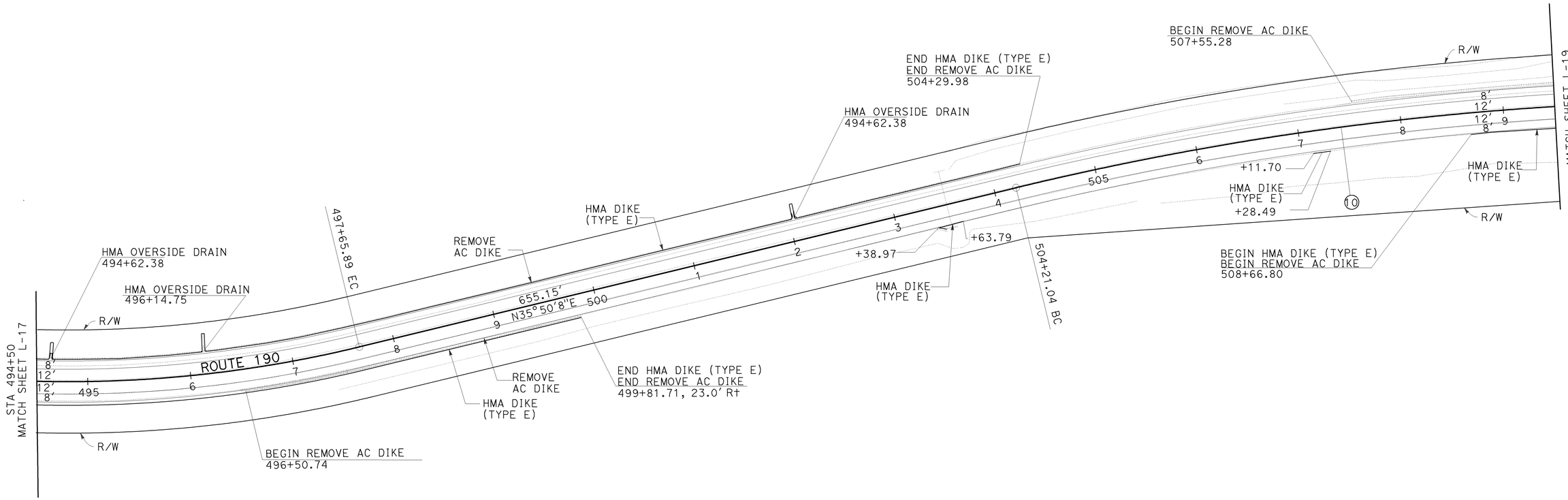


SCALE: 1" = 50′

# LAYOUT
# L-18

STATE OF CALIFORNIA - DEPARTMENT OF TRANSPORTATION
DESIGN
Caltrans
FUNCTIONAL SUPERVISOR: ABDUL BAKER
CALCULATED-DESIGNED BY: ELTAHIR ATAELGEED
CHECKED BY: ABDUL BAKER
REVISED BY
DATE REVISED
LAST REVISION: 08-30-10
DATE PLOTTED => 22-DEC-2010
TIME PLOTTED => 11:36

BORDER LAST REVISED 7/2/2010
USERNAME => s115755
DGN FILE => 633740ea018.dgn
RELATIVE BORDER SCALE IS IN INCHES 0 1 2 3
UNIT 1476
PROJECT NUMBER & PHASE 06000201501

| Dist | COUNTY | ROUTE | POST MILES TOTAL PROJECT | SHEET No. | TOTAL SHEETS |
|---|---|---|---|---|---|
| 06 | Tul | 190 | 21.2/26.4 | 22 | 120 |

E. Ataelgeed 12-20-10
REGISTERED CIVIL ENGINEER DATE

12-20-10
PLANS APPROVAL DATE

REGISTERED PROFESSIONAL ENGINEER — Eltahir K. Ataelgeed — No. 76374 — Exp 12-31-12 — CIVIL — STATE OF CALIFORNIA

THE STATE OF CALIFORNIA OR ITS OFFICERS OR AGENTS SHALL NOT BE RESPONSIBLE FOR THE ACCURACY OR COMPLETENESS OF SCANNED COPIES OF THIS PLAN SHEET.

## NOTES:

1. FOR ACCURATE RIGHT OF WAY , CONTACT RIGHT OF WAY ENGINEERING AT THE DISTRICT OFFICE.
2. FOR MAILBOX RESET SEE SHEETS C-3, C-4 AND Q-1

### CURVE DATA

| No. | R | △ | T | L |
|---|---|---|---|---|
| (10) | 3000′ | 26°22′59.9" | 703.18′ | 1381.43′ |

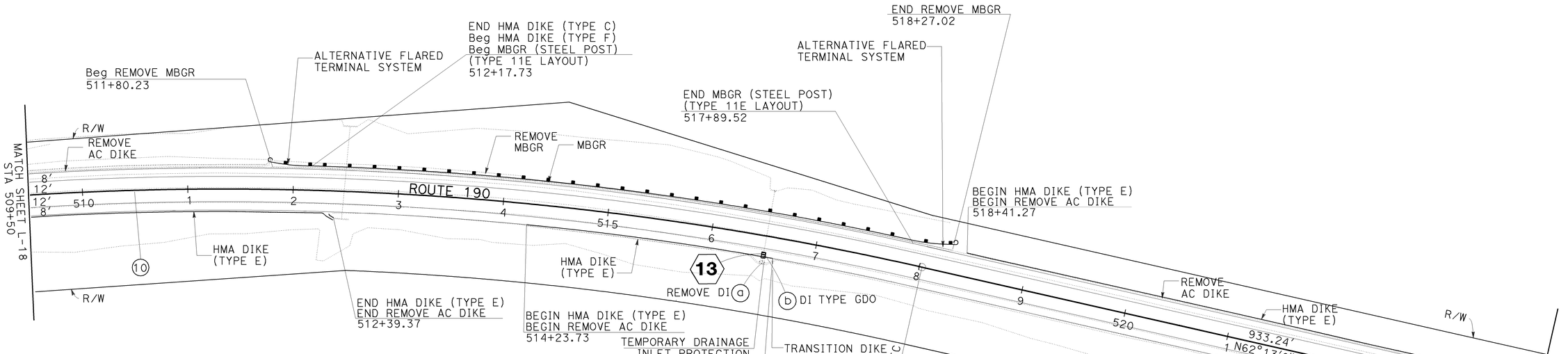


SCALE: 1" = 50′

# LAYOUT L-19

| REVISED BY | DATE REVISED |
|---|---|
| | |

CALCULATED-DESIGNED BY: ELTAHIR ATAELGEED
CHECKED BY: ABDUL BAKER
FUNCTIONAL SUPERVISOR: ABDUL BAKER
STATE OF CALIFORNIA - DEPARTMENT OF TRANSPORTATION
DESIGN

LAST REVISION — DATE PLOTTED => 22-DEC-2010 — TIME PLOTTED => 11:26
08-30-10

BORDER LAST REVISED 7/2/2010
USERNAME => s115755
DGN FILE => 633740ea019.dgn
RELATIVE BORDER SCALE IS IN INCHES 0 1 2 3
UNIT 1476
PROJECT NUMBER & PHASE 06000201501

| Dist | COUNTY | ROUTE | POST MILES TOTAL PROJECT | SHEET No. | TOTAL SHEETS |
|---|---|---|---|---|---|
| 06 | Tul | 190 | 21.2/26.4 | 23 | 120 |

E. Ataelgeed 12-20-10
REGISTERED CIVIL ENGINEER DATE

12-20-10
PLANS APPROVAL DATE

REGISTERED PROFESSIONAL ENGINEER
Eltahir K. Ataelgeed
No. 76374
Exp 12-31-10
CIVIL
STATE OF CALIFORNIA

THE STATE OF CALIFORNIA OR ITS OFFICERS OR AGENTS SHALL NOT BE RESPONSIBLE FOR THE ACCURACY OR COMPLETENESS OF SCANNED COPIES OF THIS PLAN SHEET.

## NOTES:

1. FOR ACCURATE RIGHT OF WAY , CONTACT RIGHT OF WAY ENGINEERING AT THE DISTRICT OFFICE.
2. FOR MAILBOX RESET SEE SHEETS C-3, C-4 AND Q-1

### CURVE DATA

| No. | R | △ | T | L |
|---|---|---|---|---|
| (11) | 2000′ | 19°02′59.7" | 335.58′ | 664.97′ |

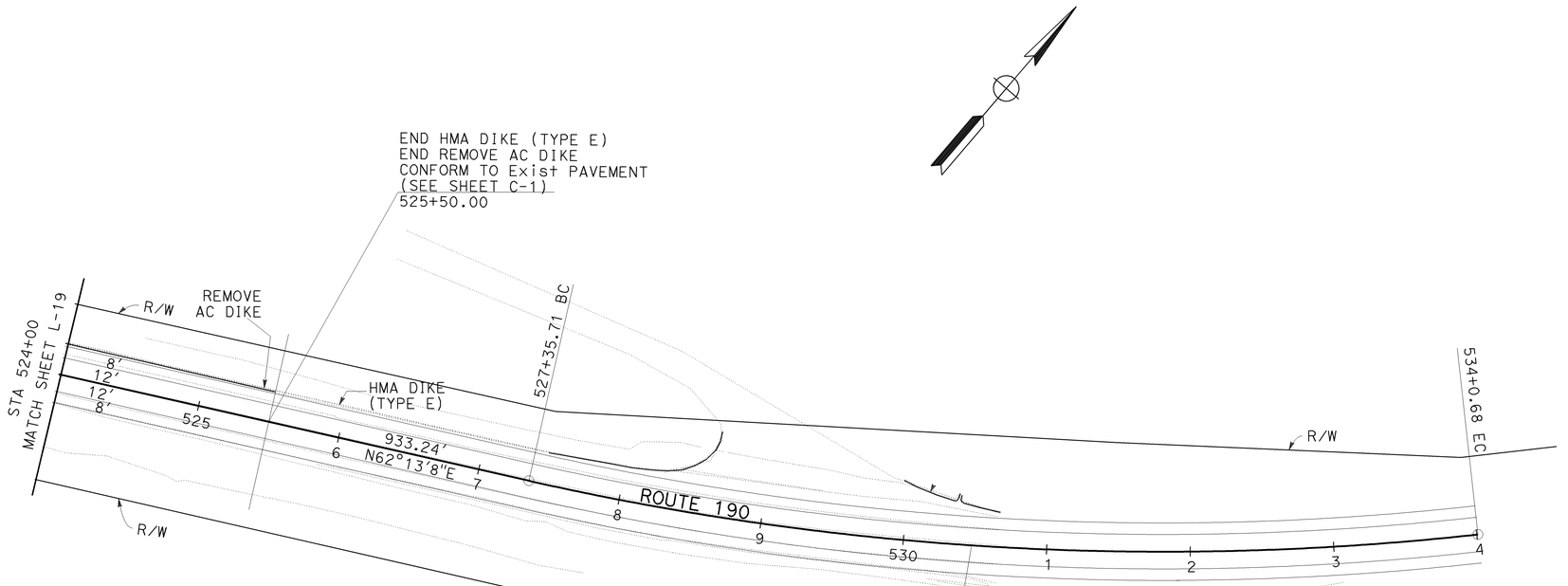


SCALE: 1" = 50′

**LAYOUT**
**L-20**

ELTAHIR ATAELGEED — CALCULATED-DESIGNED BY
ABDUL BAKER — CHECKED BY
REVISED BY — DATE REVISED
ABDUL BAKER — FUNCTIONAL SUPERVISOR
STATE OF CALIFORNIA - DEPARTMENT OF TRANSPORTATION
DESIGN

LAST REVISION DATE PLOTTED => 22-DEC-2010
08-30-10 TIME PLOTTED => 11:26

BORDER LAST REVISED 7/2/2010
USERNAME => s115755
DGN FILE => 633740ea020.dgn
RELATIVE BORDER SCALE IS IN INCHES 0 1 2 3
UNIT 1476
PROJECT NUMBER & PHASE 06000201501

| Dist | COUNTY | ROUTE | POST MILES TOTAL PROJECT | SHEET No. | TOTAL SHEETS |
|---|---|---|---|---|---|
| 06 | Tul | 190 | 21.2/26.4 | 24 | 120 |

E. Ataelgeed 12-20-10
REGISTERED CIVIL ENGINEER DATE

12-20-10
PLANS APPROVAL DATE

REGISTERED PROFESSIONAL ENGINEER — Eltahir K. Ataelgeed — No. 76374 — Exp. 12-31-12 — CIVIL — STATE OF CALIFORNIA

THE STATE OF CALIFORNIA OR ITS OFFICERS OR AGENTS SHALL NOT BE RESPONSIBLE FOR THE ACCURACY OR COMPLETENESS OF SCANNED COPIES OF THIS PLAN SHEET.

REVISED BY
DATE REVISED
REZA SADJADI
ELTAHIR ATAELGEED
CALCULATED-DESIGNED BY
CHECKED BY
FUNCTIONAL SUPERVISOR
ABDUL BAKER

STATE OF CALIFORNIA - DEPARTMENT OF TRANSPORTATION
DESIGN

## ROUTE 190 SUPERELEVATION
SCALE: Horiz 1"=50'

-2.00% -2.00%
-5.00% -5.00%

## ROUTE 190 PROFILE
SCALE: Horiz 1"=50'
Vert 1"= 5'

ROAD 284 STA 243+69.65
OG
STA 249+00.00
Elev 543.76
PG
+2.00 %
BVC STA 253+00.00
BVC Elev 551.75
1000 VC
STA 256+00.00
Elev 557.29

10% 5% 0% -5% -10%

565 560 555 550 545 540 535 530

| STATION | 243 | 244 | 245 | 246 | 247 | 248 | 249 | 250 | 251 | 252 | 253 | 254 | 255 | 256 | TOTAL |
|---|---|---|---|---|---|---|---|---|---|---|---|---|---|---|---|
| CY Exc | | | | | | | | | | | | | | | |
| CY Emb | | | | | | | | | | | | | | | |

# PROFILE AND SUPERELEVATION DIAGRAM
# PS-1

LAST REVISION DATE PLOTTED => 22-DEC-2010
TIME PLOTTED => 11:26
12-14-10

BORDER LAST REVISED 7/2/2010
USERNAME => s115755
DGN FILE => 633740fb001.dgn
RELATIVE BORDER SCALE IS IN INCHES 0 1 2 3
UNIT 1476
PROJECT NUMBER & PHASE 06000201501

| Dist | COUNTY | ROUTE | POST MILES TOTAL PROJECT | SHEET No. | TOTAL SHEETS |
|---|---|---|---|---|---|
| 06 | Tul | 190 | 21.2/26.4 | 25 | 120 |

E. Ataelgeed 12-20-10
REGISTERED CIVIL ENGINEER DATE

12-20-10
PLANS APPROVAL DATE

REGISTERED PROFESSIONAL ENGINEER
Eltahir K. Ataelgeed
No. 76374
Exp. 12-31-12
CIVIL
STATE OF CALIFORNIA

THE STATE OF CALIFORNIA OR ITS OFFICERS OR AGENTS SHALL NOT BE RESPONSIBLE FOR THE ACCURACY OR COMPLETENESS OF SCANNED COPIES OF THIS PLAN SHEET.

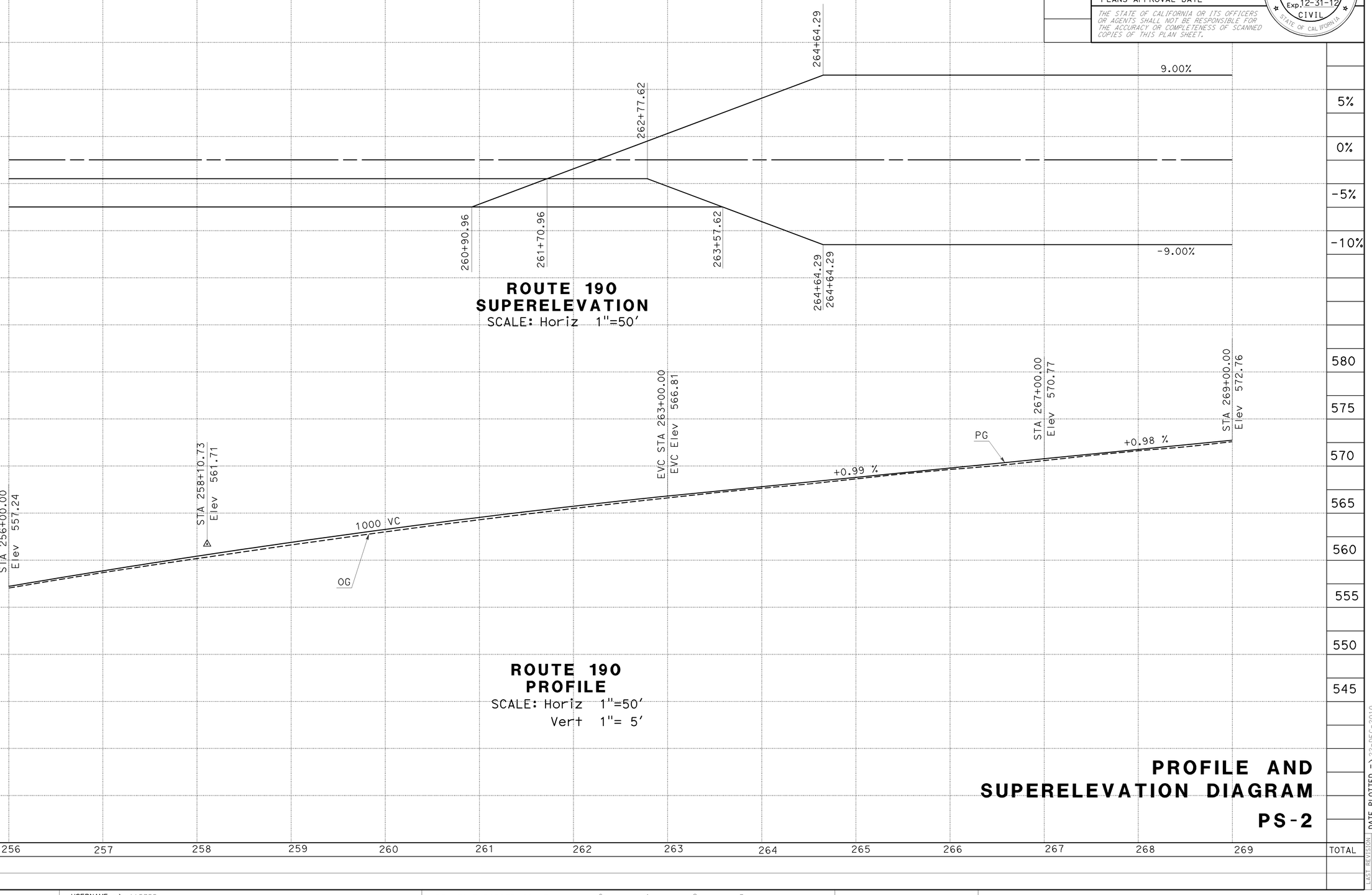


**ROUTE 190**
**SUPERELEVATION**
SCALE: Horiz 1"=50'

**ROUTE 190**
**PROFILE**
SCALE: Horiz 1"=50'
Vert 1"= 5'

**PROFILE AND SUPERELEVATION DIAGRAM**

**PS-2**

REVISED BY
DATE REVISED
REZA SADJADI
ELTAHIR ATAELGEED
CALCULATED-DESIGNED BY
CHECKED BY
FUNCTIONAL SUPERVISOR
ABDUL BAKER
STATE OF CALIFORNIA - DEPARTMENT OF TRANSPORTATION
DESIGN
Caltrans

LAST REVISION DATE PLOTTED => 22-DEC-2010
TIME PLOTTED => 11:26
12-14-10

BORDER LAST REVISED 7/2/2010
USERNAME => s115755
DGN FILE => 633740fb002.dgn
RELATIVE BORDER SCALE IS IN INCHES 0 1 2 3
UNIT 1476
PROJECT NUMBER & PHASE 06000201501

| Dist | COUNTY | ROUTE | POST MILES TOTAL PROJECT | SHEET No. | TOTAL SHEETS |
|---|---|---|---|---|---|
| 06 | Tul | 190 | 21.2/26.4 | 26 | 120 |

E. Ataelgeed 12-20-10
REGISTERED CIVIL ENGINEER DATE

12-20-10
PLANS APPROVAL DATE

REGISTERED PROFESSIONAL ENGINEER
Eltahir K. Ataelgeed
No. 76374
Exp. 12-31-12
CIVIL
STATE OF CALIFORNIA

THE STATE OF CALIFORNIA OR ITS OFFICERS OR AGENTS SHALL NOT BE RESPONSIBLE FOR THE ACCURACY OR COMPLETENESS OF SCANNED COPIES OF THIS PLAN SHEET.

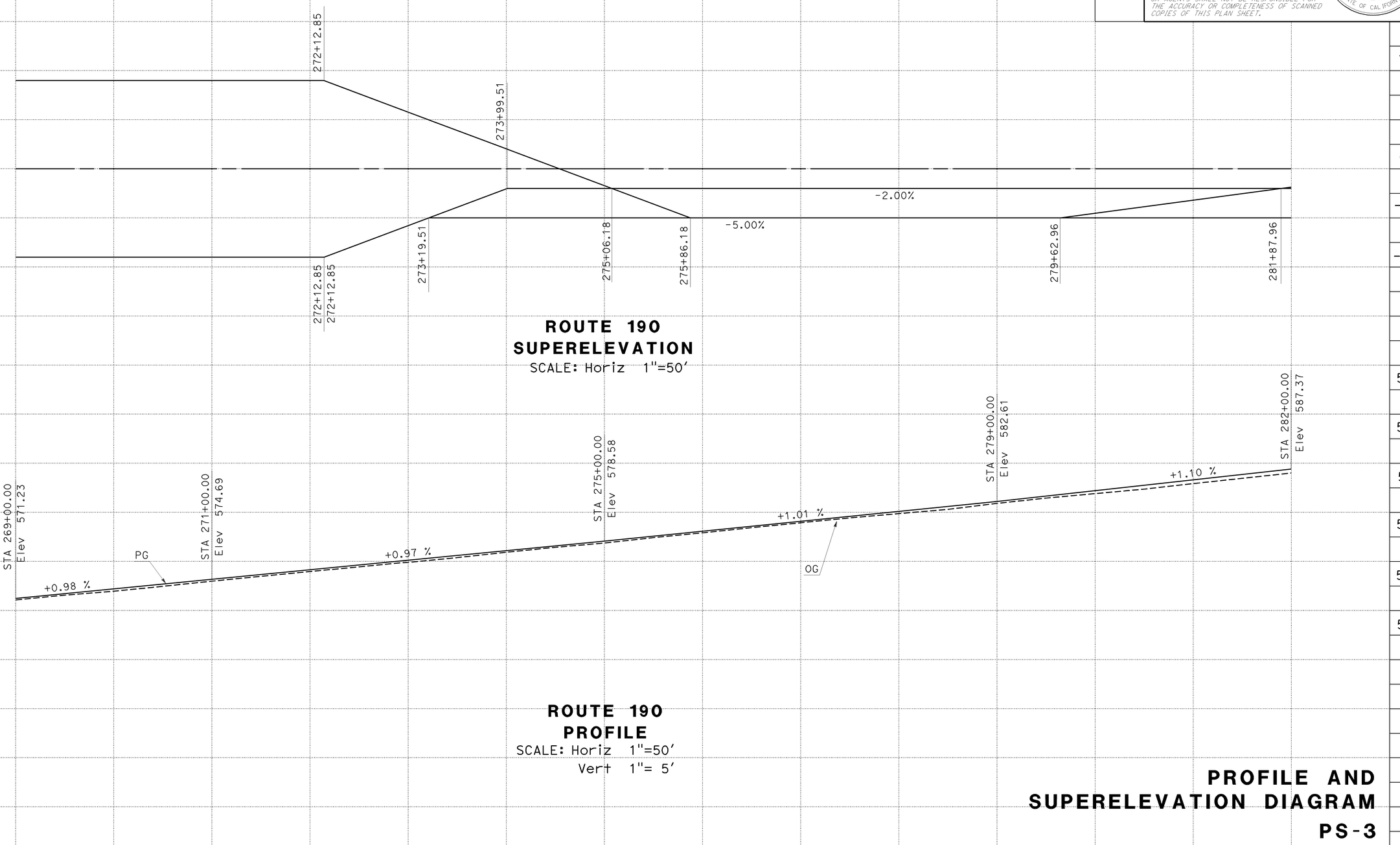


**ROUTE 190**
**SUPERELEVATION**
SCALE: Horiz 1"=50'




**ROUTE 190**
**PROFILE**
SCALE: Horiz 1"=50'
Vert 1"= 5'

| STATION | 269 | 270 | 271 | 272 | 273 | 274 | 275 | 276 | 277 | 278 | 279 | 280 | 281 | 282 | TOTAL |
|---|---|---|---|---|---|---|---|---|---|---|---|---|---|---|---|
| CY Exc | | | | | | | | | | | | | | | |
| CY Emb | | | | | | | | | | | | | | | |

# PROFILE AND SUPERELEVATION DIAGRAM
# PS-3

STATE OF CALIFORNIA - DEPARTMENT OF TRANSPORTATION
DESIGN
FUNCTIONAL SUPERVISOR: ABDUL BAKER
CALCULATED-DESIGNED BY: ELTAHIR ATAELGEED
CHECKED BY: REZA SADJADI
REVISED BY
DATE REVISED
LAST REVISION DATE PLOTTED => 22-DEC-2010
TIME PLOTTED => 11:26
12-14-10

BORDER LAST REVISED 7/2/2010
USERNAME => s115755
DGN FILE => 633740fb003.dgn
RELATIVE BORDER SCALE IS IN INCHES 0 1 2 3
UNIT 1476
PROJECT NUMBER & PHASE 06000201501

| Dist | COUNTY | ROUTE | POST MILES TOTAL PROJECT | SHEET No. | TOTAL SHEETS |
|---|---|---|---|---|---|
| 06 | Tul | 190 | 21.2/26.4 | 27 | 120 |

E. Ataelgeed 12-20-10
REGISTERED CIVIL ENGINEER DATE

12-20-10
PLANS APPROVAL DATE

REGISTERED PROFESSIONAL ENGINEER
Eltahir K. Ataelgeed
No. 76374
Exp. 12-31-12
CIVIL
STATE OF CALIFORNIA

THE STATE OF CALIFORNIA OR ITS OFFICERS OR AGENTS SHALL NOT BE RESPONSIBLE FOR THE ACCURACY OR COMPLETENESS OF SCANNED COPIES OF THIS PLAN SHEET.

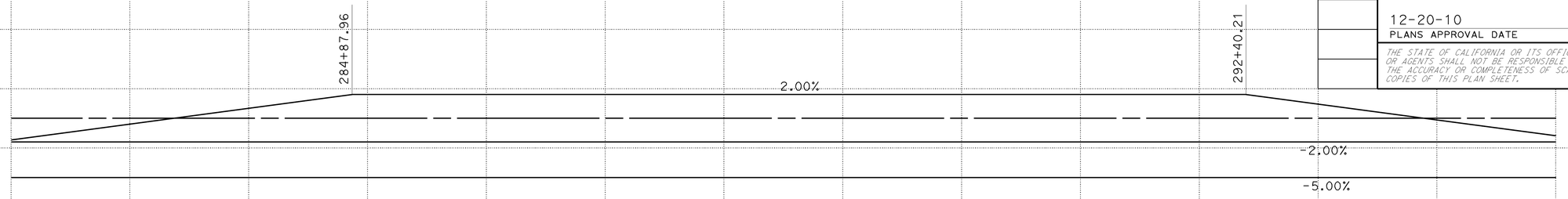


**ROUTE 190**
**SUPERELEVATION**
SCALE: Horiz 1"=50'

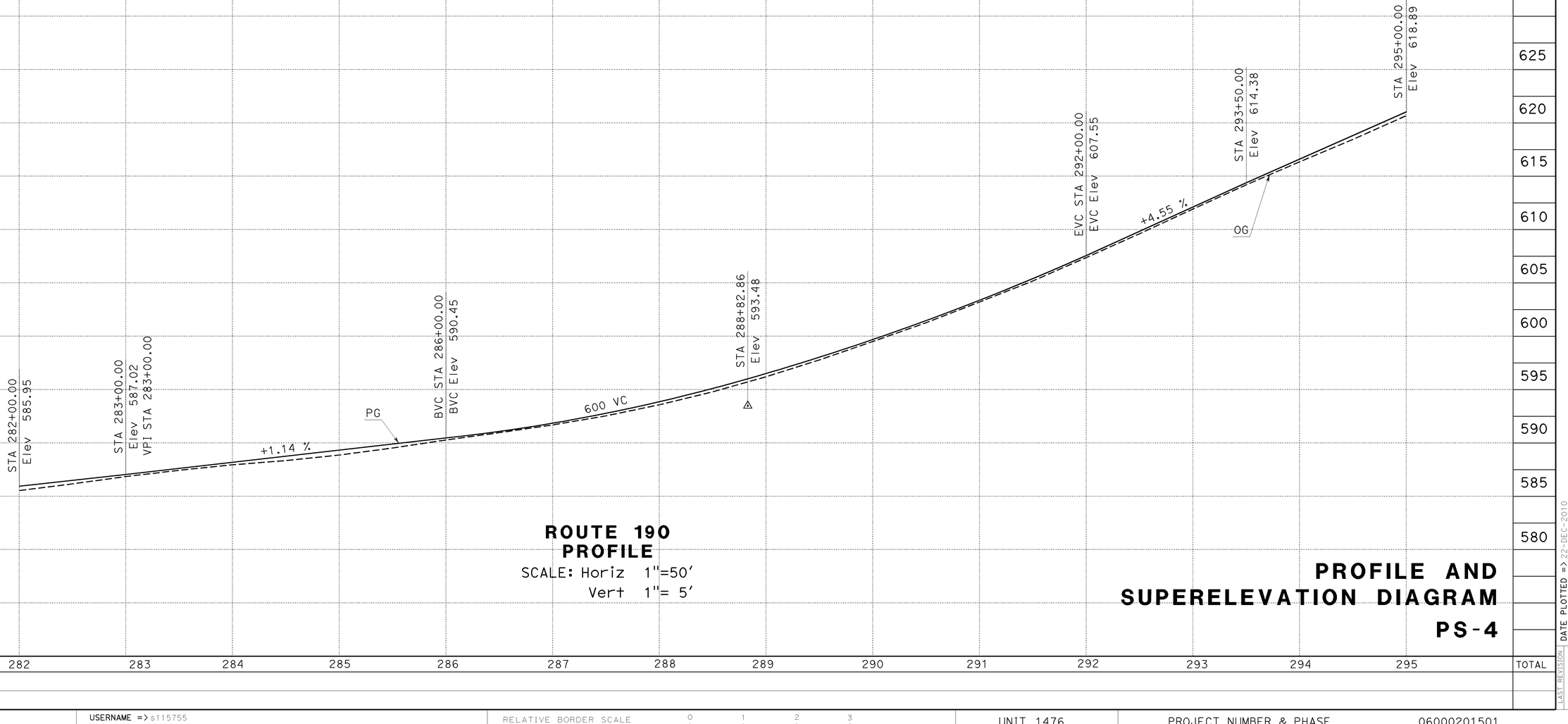


**ROUTE 190**
**PROFILE**
SCALE: Horiz 1"=50'
Vert 1"= 5'

# PROFILE AND SUPERELEVATION DIAGRAM

**PS-4**

STATE OF CALIFORNIA - DEPARTMENT OF TRANSPORTATION
DESIGN
FUNCTIONAL SUPERVISOR: ABDUL BAKER
CALCULATED-DESIGNED BY: REZA SADJADI
CHECKED BY: ELTAHIR ATAELGEED
REVISED BY
DATE REVISED
LAST REVISION DATE PLOTTED => 22-DEC-2010
TIME PLOTTED => 11:26
12-14-10

BORDER LAST REVISED 7/2/2010
USERNAME => s115755
DGN FILE => 633740fb004.dgn
RELATIVE BORDER SCALE IS IN INCHES 0 1 2 3
UNIT 1476
PROJECT NUMBER & PHASE 06000201501

| Dist | COUNTY | ROUTE | POST MILES TOTAL PROJECT | SHEET No. | TOTAL SHEETS |
|---|---|---|---|---|---|
| 06 | Tul | 190 | 21.2/26.4 | 28 | 120 |

E. Ataelgeed 12-20-10
REGISTERED CIVIL ENGINEER DATE

12-20-10
PLANS APPROVAL DATE

REGISTERED PROFESSIONAL ENGINEER
Eltahir K. Ataelgeed
No. 76374
Exp. 12-31-12
CIVIL
STATE OF CALIFORNIA

THE STATE OF CALIFORNIA OR ITS OFFICERS OR AGENTS SHALL NOT BE RESPONSIBLE FOR THE ACCURACY OR COMPLETENESS OF SCANNED COPIES OF THIS PLAN SHEET.

5%
0%
-5%
-10%

295+40.21
297+65.21
-2.00%

**ROUTE 190**
**SUPERELEVATION**
SCALE: Horiz 1"=50'

680
675
670
665
660
655
650
645
640
635
630
625
620
615

STA 304+69.46
Elev 664.67
STA 308+00.00
Elev 666.58
1600 VC
OG
PG
BVC STA 297+00.00
BVC Elev 629.85
VPI STA 297+00.00
STA 295+00.00
Elev 621.07
+4.42 %

**ROUTE 190**
**PROFILE**
SCALE: Horiz 1"=50'
Vert 1"= 5'

**PROFILE AND SUPERELEVATION DIAGRAM**

**PS-5**

| STATION | 295 | 296 | 297 | 298 | 299 | 300 | 301 | 302 | 303 | 304 | 305 | 306 | 307 | 308 | TOTAL |
|---|---|---|---|---|---|---|---|---|---|---|---|---|---|---|---|
| CY Exc | | | | | | | | | | | | | | | |
| CY Emb | | | | | | | | | | | | | | | |

REVISED BY
DATE REVISED
REZA SADJADI
ELTAHIR ATAELGEED
CALCULATED-DESIGNED BY
CHECKED BY
FUNCTIONAL SUPERVISOR
ABDUL BAKER
STATE OF CALIFORNIA - DEPARTMENT OF TRANSPORTATION
DESIGN
Caltrans

LAST REVISION DATE PLOTTED => 22-DEC-2010
TIME PLOTTED => 11:26
12-14-10

BORDER LAST REVISED 7/2/2010
USERNAME => s115755
DGN FILE => 633740fb005.dgn
RELATIVE BORDER SCALE IS IN INCHES 0 1 2 3
UNIT 1476
PROJECT NUMBER & PHASE 06000201501

| Dist | COUNTY | ROUTE | POST MILES TOTAL PROJECT | SHEET No. | TOTAL SHEETS |
|---|---|---|---|---|---|
| 06 | Tul | 190 | 21.2/26.4 | 29 | 120 |

E. Ataelgeed 12-20-10
REGISTERED CIVIL ENGINEER DATE

12-20-10
PLANS APPROVAL DATE

REGISTERED PROFESSIONAL ENGINEER
Eltahir K. Ataelgeed
No. 76374
Exp. 12-31-12
CIVIL
STATE OF CALIFORNIA

THE STATE OF CALIFORNIA OR ITS OFFICERS OR AGENTS SHALL NOT BE RESPONSIBLE FOR THE ACCURACY OR COMPLETENESS OF SCANNED COPIES OF THIS PLAN SHEET.

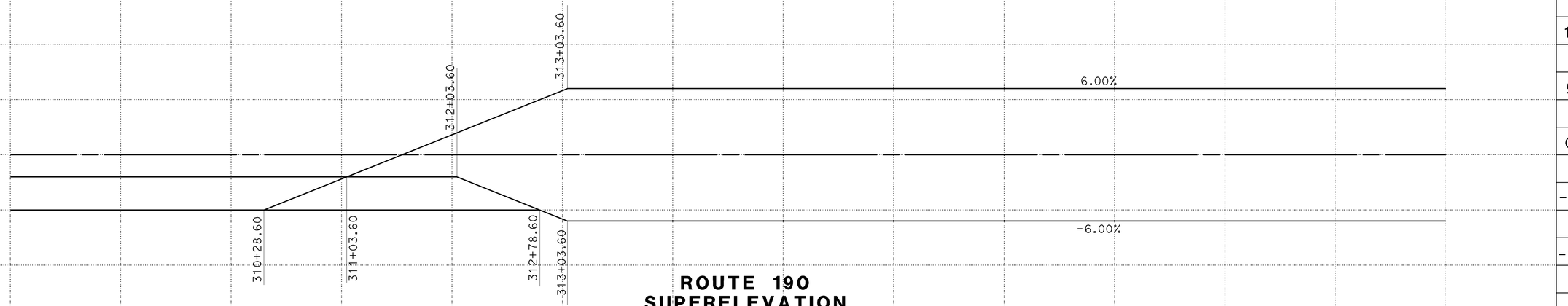


**ROUTE 190**
**SUPERELEVATION**
SCALE: Horiz 1"=50'

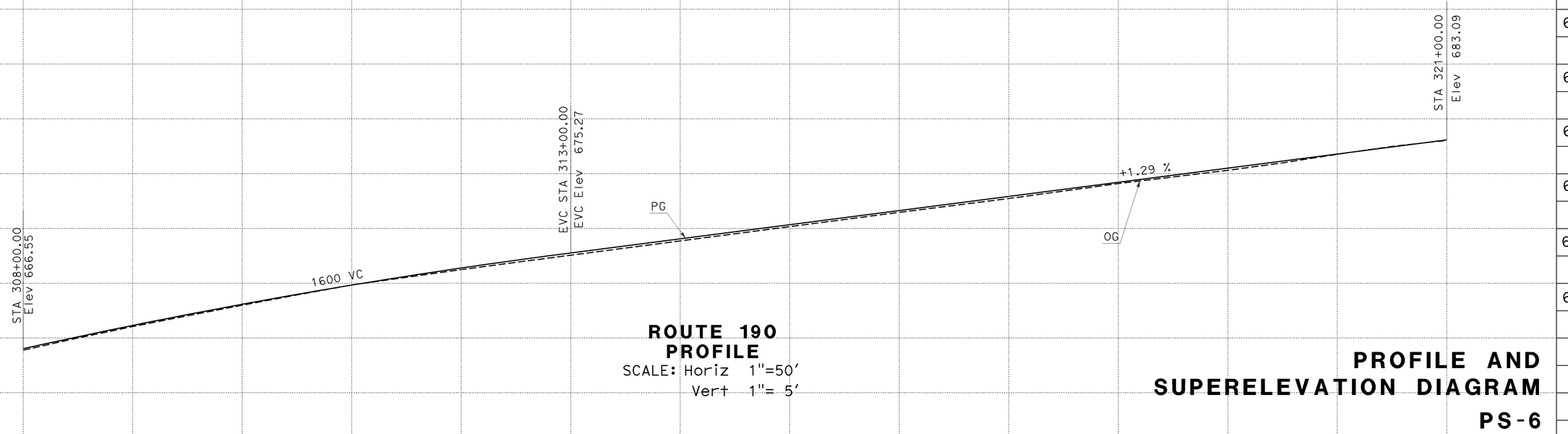


**ROUTE 190**
**PROFILE**
SCALE: Horiz 1"=50'
Vert 1"= 5'

# PROFILE AND SUPERELEVATION DIAGRAM

**PS-6**

| STATION | 308 | 309 | 310 | 311 | 312 | 313 | 314 | 315 | 316 | 317 | 318 | 319 | 320 | 321 | TOTAL |
|---|---|---|---|---|---|---|---|---|---|---|---|---|---|---|---|
| CY Exc | | | | | | | | | | | | | | | |
| CY Emb | | | | | | | | | | | | | | | |

REVISED BY | DATE REVISED

REZA SADJADI | ELTAHIR ATAELGEED

CALCULATED-DESIGNED BY | CHECKED BY

FUNCTIONAL SUPERVISOR: ABDUL BAKER

STATE OF CALIFORNIA - DEPARTMENT OF TRANSPORTATION
DESIGN

LAST REVISION DATE PLOTTED => 22-DEC-2010
TIME PLOTTED => 11:26

| Dist | COUNTY | ROUTE | POST MILES TOTAL PROJECT | SHEET No. | TOTAL SHEETS |
|---|---|---|---|---|---|
| 06 | Tul | 190 | 21.2/26.4 | 30 | 120 |

E. Ataelgeed 12-20-10
REGISTERED CIVIL ENGINEER DATE

12-20-10
PLANS APPROVAL DATE

REGISTERED PROFESSIONAL ENGINEER
Eltahir K. Ataelgeed
No. 76374
Exp. 12-31-12
CIVIL
STATE OF CALIFORNIA

THE STATE OF CALIFORNIA OR ITS OFFICERS OR AGENTS SHALL NOT BE RESPONSIBLE FOR THE ACCURACY OR COMPLETENESS OF SCANNED COPIES OF THIS PLAN SHEET.

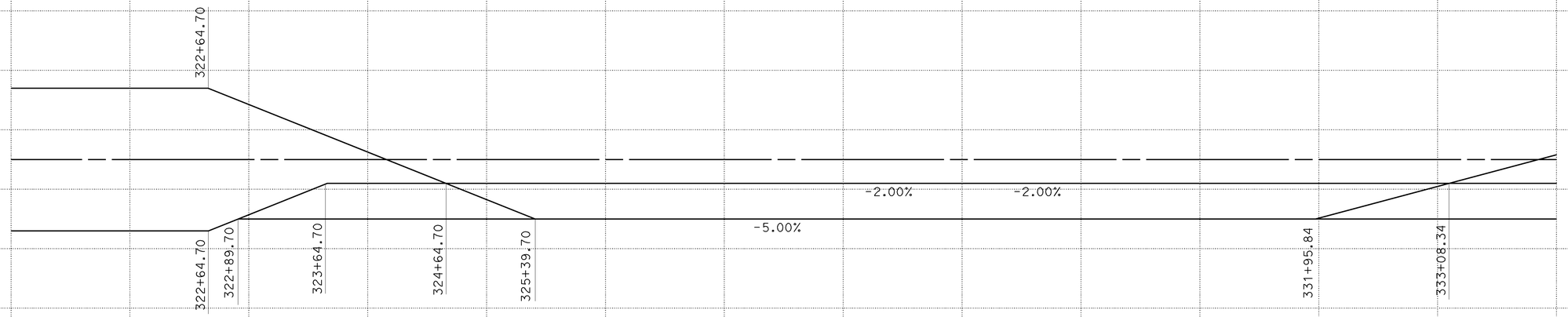


## ROUTE 190 SUPERELEVATION

SCALE: Horiz 1"=50'

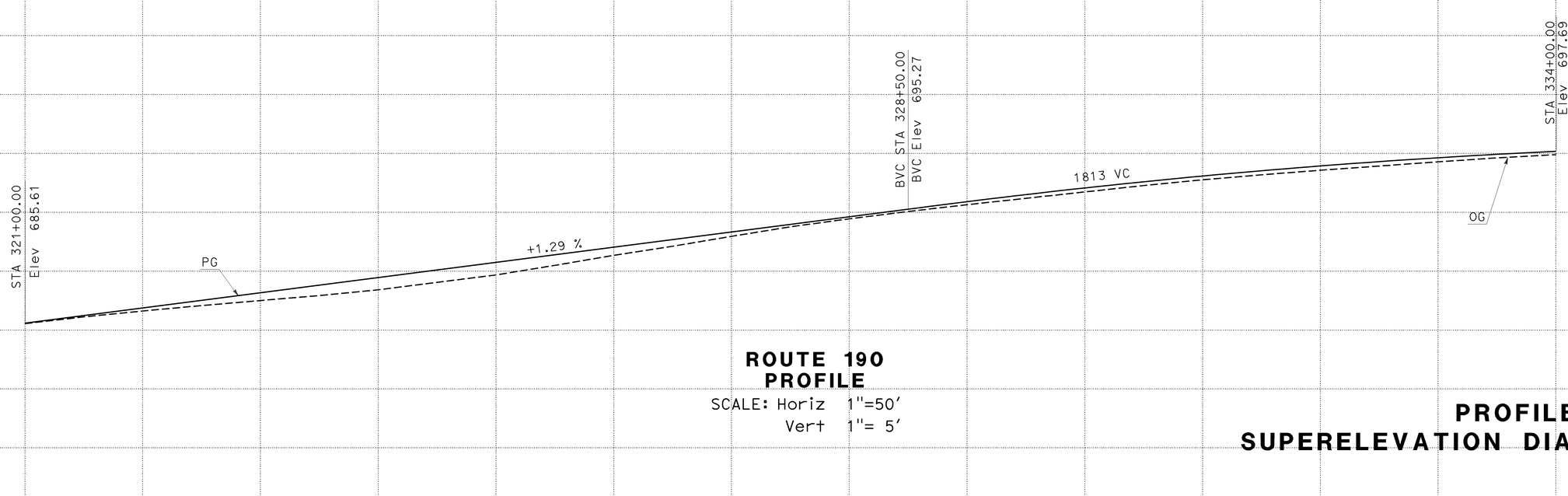


## ROUTE 190 PROFILE

SCALE: Horiz 1"=50'
Vert 1"= 5'

# PROFILE AND SUPERELEVATION DIAGRAM

# PS-7

| STATION | 321 | 322 | 323 | 324 | 325 | 326 | 327 | 328 | 329 | 330 | 331 | 332 | 333 | 334 | TOTAL |
|---|---|---|---|---|---|---|---|---|---|---|---|---|---|---|---|
| CY Exc | | | | | | | | | | | | | | | |
| CY Emb | | | | | | | | | | | | | | | |

REVISED BY | DATE REVISED

REZA SADJADI | ELTAHIR ATAELGEED

CALCULATED-DESIGNED BY | CHECKED BY

FUNCTIONAL SUPERVISOR: ABDUL BAKER

STATE OF CALIFORNIA - DEPARTMENT OF TRANSPORTATION
DESIGN

LAST REVISION DATE PLOTTED => 22-DEC-2010
TIME PLOTTED => 11:26
12-14-10

BORDER LAST REVISED 7/2/2010

USERNAME => s115755
DGN FILE => 633740fb007.dgn

RELATIVE BORDER SCALE IS IN INCHES 0 1 2 3

UNIT 1476

PROJECT NUMBER & PHASE 06000201501

| Dist | COUNTY | ROUTE | POST MILES TOTAL PROJECT | SHEET No. | TOTAL SHEETS |
|---|---|---|---|---|---|
| 06 | Tul | 190 | 21.2/26.4 | 31 | 120 |

E. Ataelgeed 12-20-10
REGISTERED CIVIL ENGINEER DATE

12-20-10
PLANS APPROVAL DATE

Eltahir K. Ataelgeed No. 76374 Exp. 12-31-12 CIVIL
REGISTERED PROFESSIONAL ENGINEER STATE OF CALIFORNIA

THE STATE OF CALIFORNIA OR ITS OFFICERS OR AGENTS SHALL NOT BE RESPONSIBLE FOR THE ACCURACY OR COMPLETENESS OF SCANNED COPIES OF THIS PLAN SHEET.

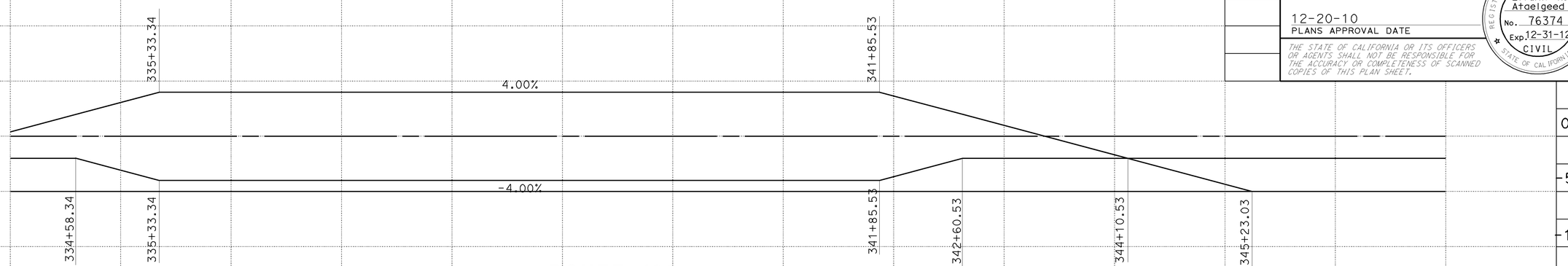


**ROUTE 190**
**SUPERELEVATION**
SCALE: Horiz 1"=50'

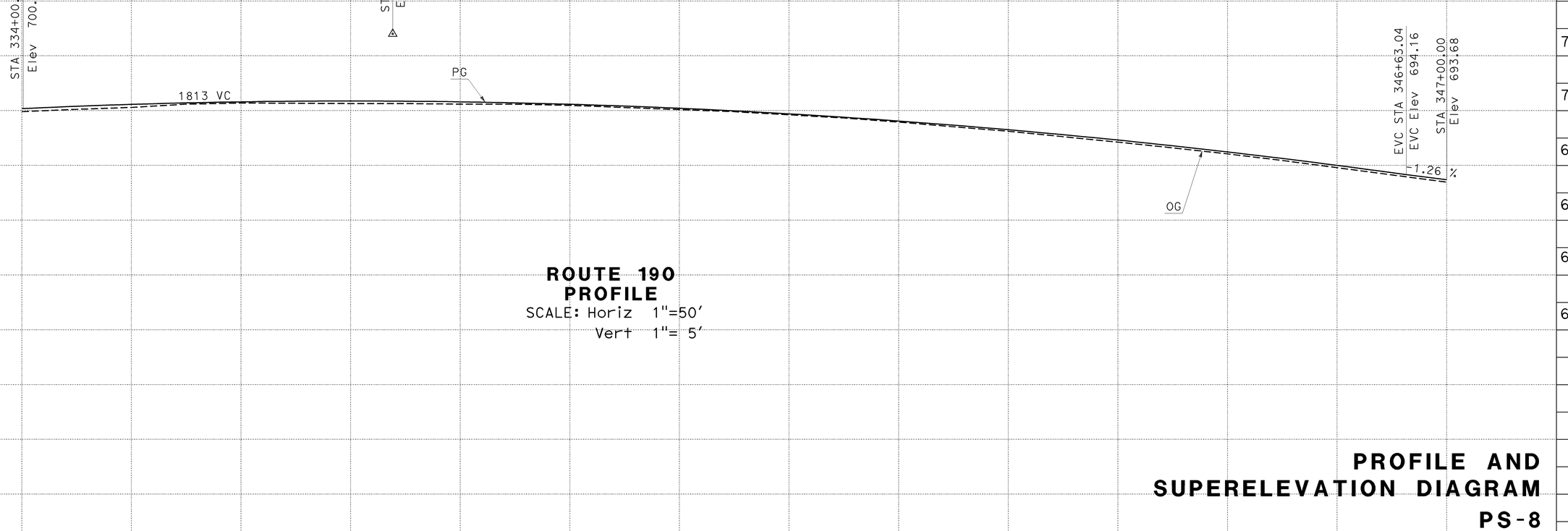


**ROUTE 190**
**PROFILE**
SCALE: Horiz 1"=50'
Vert 1"= 5'

# PROFILE AND SUPERELEVATION DIAGRAM
# PS-8

CALCULATED-DESIGNED BY
CHECKED BY
REVISED BY
DATE REVISED
REZA SADJADI
ELTAHIR ATAELGEED
FUNCTIONAL SUPERVISOR
ABDUL BAKER
STATE OF CALIFORNIA - DEPARTMENT OF TRANSPORTATION
DESIGN
Caltrans

LAST REVISION DATE PLOTTED => 22-DEC-2010
TIME PLOTTED => 11:26

BORDER LAST REVISED 7/2/2010
USERNAME => s115755
DGN FILE => 633740fb008.dgn
RELATIVE BORDER SCALE IS IN INCHES 0 1 2 3
UNIT 1476
PROJECT NUMBER & PHASE 06000201501

| Dist | COUNTY | ROUTE | POST MILES TOTAL PROJECT | SHEET No. | TOTAL SHEETS |
|---|---|---|---|---|---|
| 06 | Tul | 190 | 21.2/26.4 | 32 | 120 |

E. Ataelgeed 12-20-10
REGISTERED CIVIL ENGINEER DATE

12-20-10
PLANS APPROVAL DATE

REGISTERED PROFESSIONAL ENGINEER
Eltahir K. Ataelgeed
No. 76374
Exp. 12-31-12
CIVIL
STATE OF CALIFORNIA

THE STATE OF CALIFORNIA OR ITS OFFICERS OR AGENTS SHALL NOT BE RESPONSIBLE FOR THE ACCURACY OR COMPLETENESS OF SCANNED COPIES OF THIS PLAN SHEET.

10%
5%
0%
-5%
-10%

-2.00%
-2.00%
-5.00%

**ROUTE 190**
**SUPERELEVATION**
SCALE: Horiz 1"=50'

700
695
690
685
680
675

STA 347+00.00
Elev 693.67
PG
-1.24 %
BVC STA 354+00.00
BVC Elev 684.99
STA 354+63.50
Elev 684.33
200 VC
EVC STA 356+00.00
EVC Elev 685.02
+0.73 %
OG
STA 360+00.00
Elev 687.96

**ROUTE 190**
**PROFILE**
SCALE: Horiz 1"=50'
Vert 1"= 5'

**PROFILE AND SUPERELEVATION DIAGRAM**
**PS-9**

| STATION | 347 | 348 | 349 | 350 | 351 | 352 | 353 | 354 | 355 | 356 | 357 | 358 | 359 | 360 | TOTAL |
|---|---|---|---|---|---|---|---|---|---|---|---|---|---|---|---|
| CY Exc | | | | | | | | | | | | | | | |
| CY Emb | | | | | | | | | | | | | | | |

REVISED BY | DATE REVISED
REZA SADJADI | ELTAHIR ATAELGEED
CALCULATED-DESIGNED BY | CHECKED BY
FUNCTIONAL SUPERVISOR: ABDUL BAKER
STATE OF CALIFORNIA - DEPARTMENT OF TRANSPORTATION
DESIGN
Caltrans

LAST REVISION DATE PLOTTED => 22-DEC-2010
TIME PLOTTED => 11:26

BORDER LAST REVISED 7/2/2010
USERNAME => s115755
DGN FILE => 633740fb009.dgn
RELATIVE BORDER SCALE IS IN INCHES 0 1 2 3
UNIT 1476
PROJECT NUMBER & PHASE 06000201501

| Dist | COUNTY | ROUTE | POST MILES TOTAL PROJECT | SHEET No. | TOTAL SHEETS |
|---|---|---|---|---|---|
| 06 | Tul | 190 | 21.2/26.4 | 33 | 120 |

E. Ataelgeed 12-20-10
REGISTERED CIVIL ENGINEER DATE

12-20-10
PLANS APPROVAL DATE

Eltahir K. Ataelgeed
No. 76374
Exp. 12-31-12
CIVIL
REGISTERED PROFESSIONAL ENGINEER
STATE OF CALIFORNIA

THE STATE OF CALIFORNIA OR ITS OFFICERS OR AGENTS SHALL NOT BE RESPONSIBLE FOR THE ACCURACY OR COMPLETENESS OF SCANNED COPIES OF THIS PLAN SHEET.

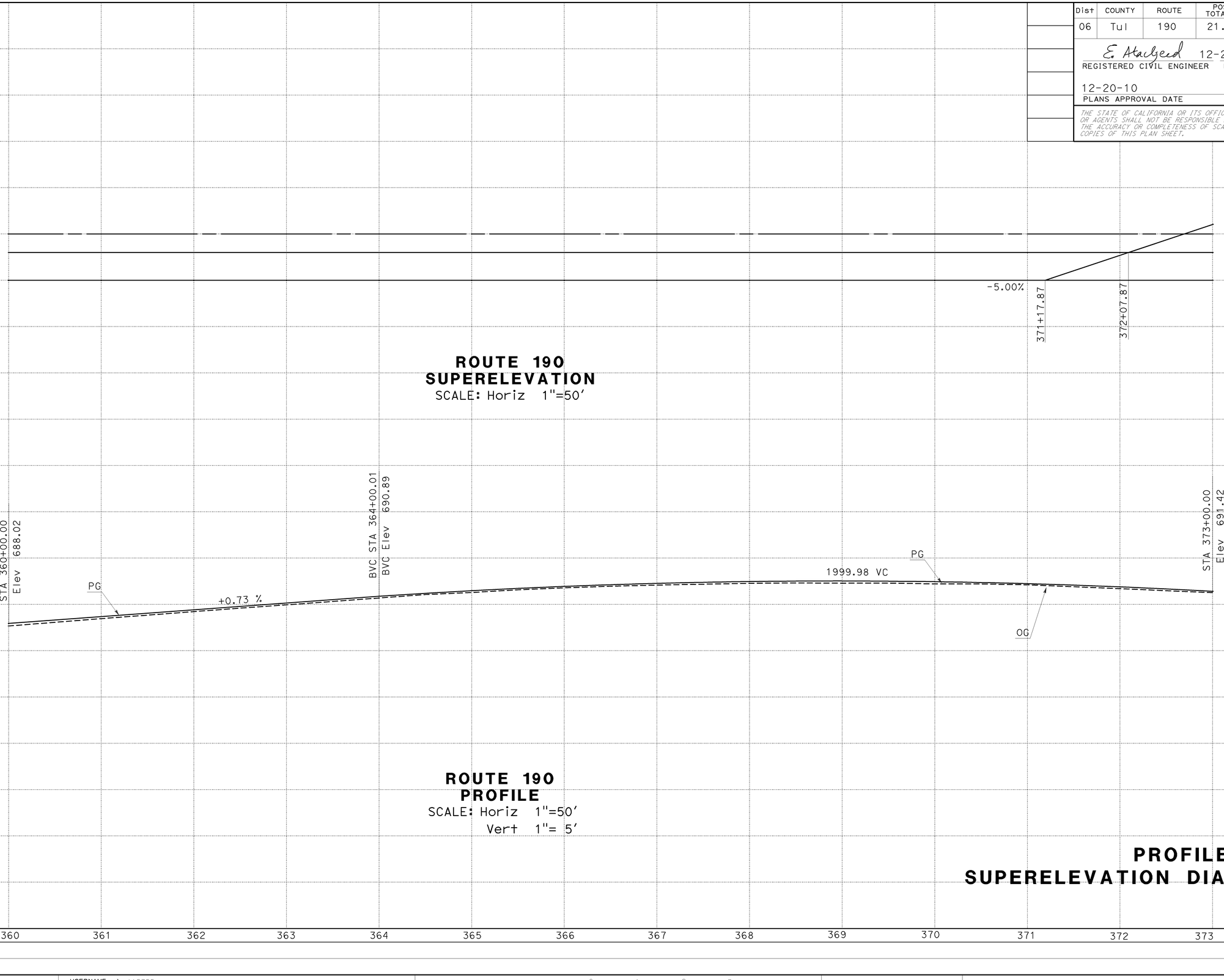


**ROUTE 190**
**SUPERELEVATION**
SCALE: Horiz 1"=50'

**ROUTE 190**
**PROFILE**
SCALE: Horiz 1"=50'
Vert 1"= 5'

**PROFILE AND SUPERELEVATION DIAGRAM**

**PS-10**

REVISED BY
DATE REVISED
REZA SADJADI
ELTAHIR ATAELGEED
CALCULATED-DESIGNED BY
CHECKED BY
FUNCTIONAL SUPERVISOR
ABDUL BAKER

STATE OF CALIFORNIA - DEPARTMENT OF TRANSPORTATION
DESIGN

LAST REVISION
DATE PLOTTED => 22-DEC-2010
TIME PLOTTED => 11:26
12-14-10

| Dist | COUNTY | ROUTE | POST MILES TOTAL PROJECT | SHEET No. | TOTAL SHEETS |
|---|---|---|---|---|---|
| 06 | Tul | 190 | 21.2/26.4 | 34 | 120 |

E. Ataelgeed 12-20-10
REGISTERED CIVIL ENGINEER DATE

12-20-10
PLANS APPROVAL DATE

Eltahir K. Ataelgeed No. 76374 Exp. 12-31-12 CIVIL — REGISTERED PROFESSIONAL ENGINEER — STATE OF CALIFORNIA

THE STATE OF CALIFORNIA OR ITS OFFICERS OR AGENTS SHALL NOT BE RESPONSIBLE FOR THE ACCURACY OR COMPLETENESS OF SCANNED COPIES OF THIS PLAN SHEET.

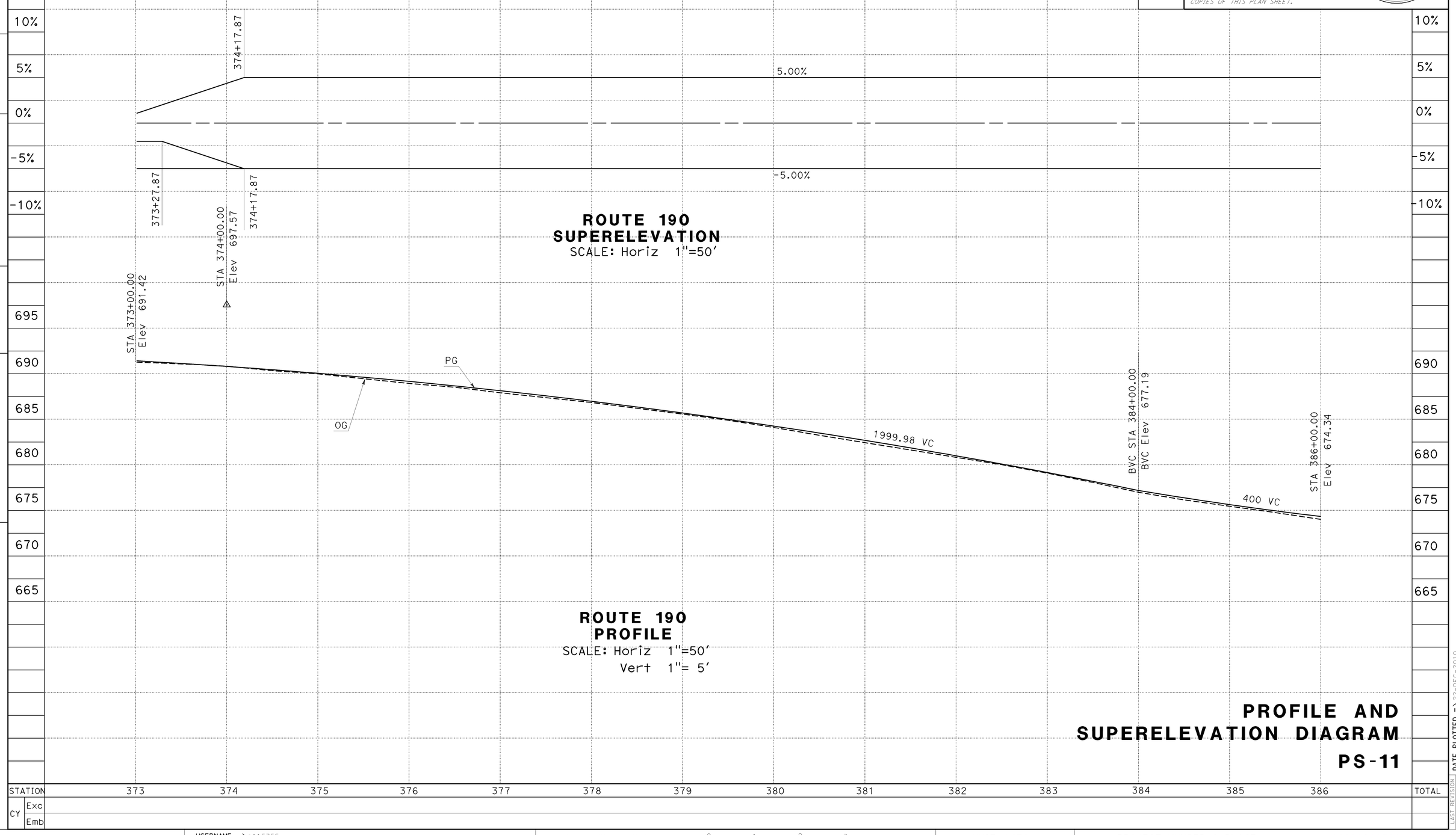


REVISED BY | DATE REVISED

CALCULATED-DESIGNED BY: REZA SADJADI
CHECKED BY: ELTAHIR ATAELGEED

FUNCTIONAL SUPERVISOR: ABDUL BAKER

STATE OF CALIFORNIA - DEPARTMENT OF TRANSPORTATION
DESIGN

Caltrans

LAST REVISION | DATE PLOTTED => 22-DEC-2010
12-14-10 | TIME PLOTTED => 11:26

BORDER LAST REVISED 7/2/2010

USERNAME => s115755
DGN FILE => 633740fb011.dgn

RELATIVE BORDER SCALE IS IN INCHES 0 1 2 3

UNIT 1476

PROJECT NUMBER & PHASE 06000201501

| Dist | COUNTY | ROUTE | POST MILES TOTAL PROJECT | SHEET No. | TOTAL SHEETS |
|---|---|---|---|---|---|
| 06 | Tul | 190 | 21.2/26.4 | 35 | 120 |

E. Ataelgeed 12-20-10
REGISTERED CIVIL ENGINEER DATE

12-20-10
PLANS APPROVAL DATE

REGISTERED PROFESSIONAL ENGINEER
Eltahir K. Ataelgeed
No. 76374
Exp. 12-31-12
CIVIL
STATE OF CALIFORNIA

THE STATE OF CALIFORNIA OR ITS OFFICERS OR AGENTS SHALL NOT BE RESPONSIBLE FOR THE ACCURACY OR COMPLETENESS OF SCANNED COPIES OF THIS PLAN SHEET.

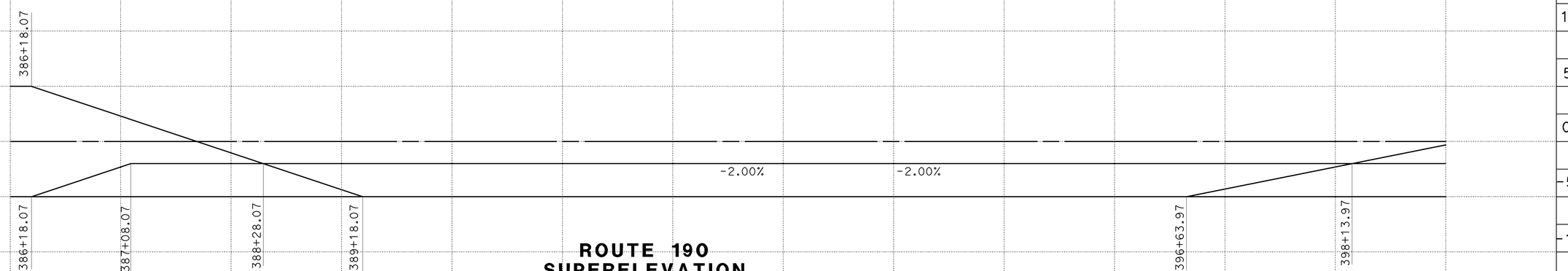


**ROUTE 190**
**SUPERELEVATION**
SCALE: Horiz 1"=50'

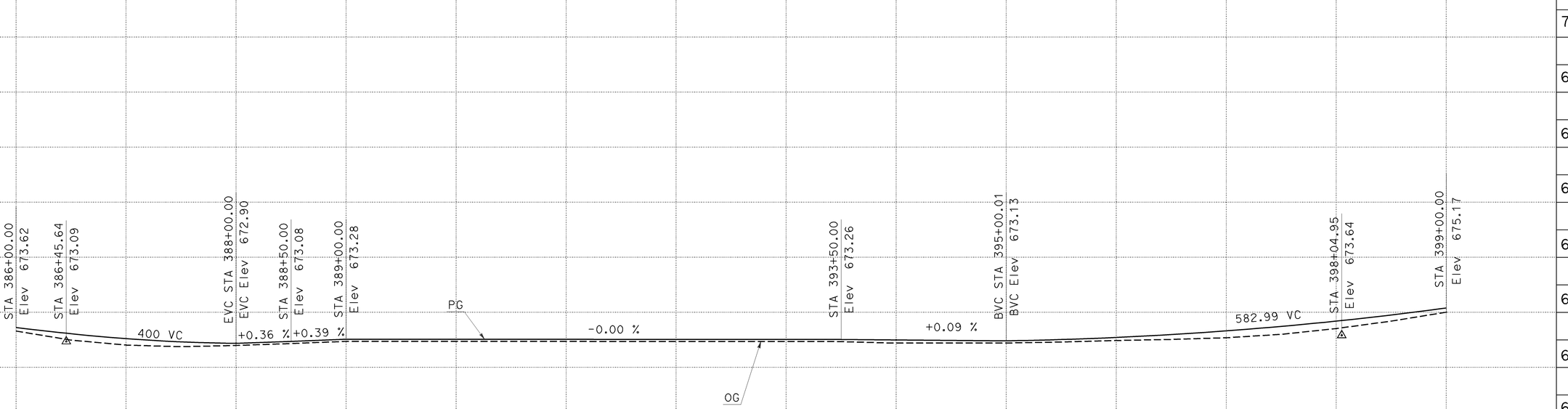


**ROUTE 190**
**PROFILE**
SCALE: Horiz 1"=50'
Vert 1"= 5'

# PROFILE AND SUPERELEVATION DIAGRAM

**PS-12**

| STATION | 386 | 387 | 388 | 389 | 390 | 391 | 392 | 393 | 394 | 395 | 396 | 397 | 398 | 399 | TOTAL |
|---|---|---|---|---|---|---|---|---|---|---|---|---|---|---|---|
| CY Exc | | | | | | | | | | | | | | | |
| CY Emb | | | | | | | | | | | | | | | |

STATE OF CALIFORNIA - DEPARTMENT OF TRANSPORTATION
DESIGN
FUNCTIONAL SUPERVISOR: ABDUL BAKER
CALCULATED-DESIGNED BY: ELTAHIR ATAELGEED
CHECKED BY: REZA SADJADI
REVISED BY
DATE REVISED

LAST REVISION DATE PLOTTED => 22-DEC-2010
TIME PLOTTED => 11:26
12-14-10

BORDER LAST REVISED 7/2/2010
USERNAME => s115755
DGN FILE => 633740fb012.dgn
RELATIVE BORDER SCALE IS IN INCHES 0 1 2 3
UNIT 1476
PROJECT NUMBER & PHASE 06000201501

| Dist | COUNTY | ROUTE | POST MILES TOTAL PROJECT | SHEET No. | TOTAL SHEETS |
|---|---|---|---|---|---|
| 06 | Tul | 190 | 21.2/26.4 | 36 | 120 |

E. Ataelgeed 12-20-10
REGISTERED CIVIL ENGINEER DATE

12-20-10
PLANS APPROVAL DATE

REGISTERED PROFESSIONAL ENGINEER
Eltahir K. Ataelgeed
No. 76374
Exp. 12-31-12
CIVIL
STATE OF CALIFORNIA

THE STATE OF CALIFORNIA OR ITS OFFICERS OR AGENTS SHALL NOT BE RESPONSIBLE FOR THE ACCURACY OR COMPLETENESS OF SCANNED COPIES OF THIS PLAN SHEET.

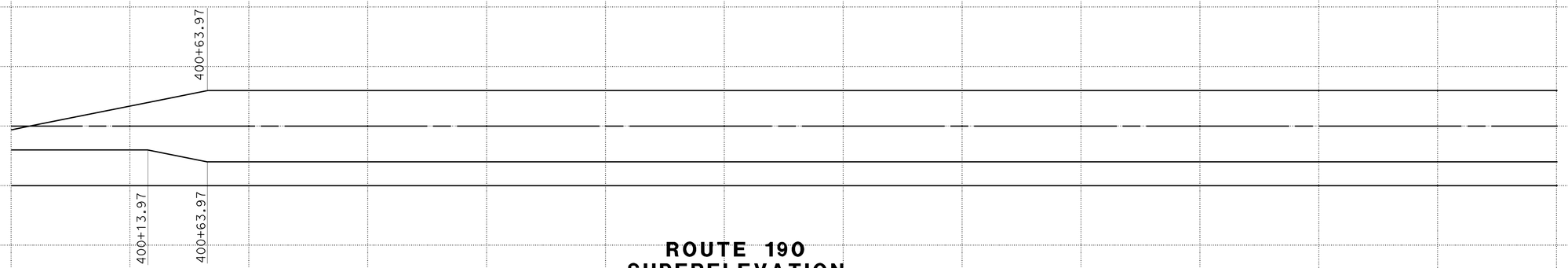


**ROUTE 190**
**SUPERELEVATION**
SCALE: Horiz 1"=50'




**ROUTE 190**
**PROFILE**
SCALE: Horiz 1"=50'
Vert 1"= 5'

**PROFILE AND SUPERELEVATION DIAGRAM**

**PS-13**

| STATION | 399 | 400 | 401 | 402 | 403 | 404 | 405 | 406 | 407 | 408 | 409 | 410 | 411 | 412 | TOTAL |
|---|---|---|---|---|---|---|---|---|---|---|---|---|---|---|---|
| CY Exc | | | | | | | | | | | | | | | |
| CY Emb | | | | | | | | | | | | | | | |

STATE OF CALIFORNIA - DEPARTMENT OF TRANSPORTATION
DESIGN
FUNCTIONAL SUPERVISOR: ABDUL BAKER
CALCULATED-DESIGNED BY: REZA SADJADI
CHECKED BY: ELTAHIR ATAELGEED
REVISED BY
DATE REVISED

LAST REVISION DATE PLOTTED => 22-DEC-2010
TIME PLOTTED => 11:26
12-14-10

BORDER LAST REVISED 7/2/2010
USERNAME => s115755
DGN FILE => 633740fb013.dgn
RELATIVE BORDER SCALE IS IN INCHES 0 1 2 3
UNIT 1476
PROJECT NUMBER & PHASE 06000201501

| Dist | COUNTY | ROUTE | POST MILES TOTAL PROJECT | SHEET No. | TOTAL SHEETS |
|---|---|---|---|---|---|
| 06 | Tul | 190 | 21.2/26.4 | 37 | 120 |

E. Ataelgeed 12-20-10
REGISTERED CIVIL ENGINEER DATE

12-20-10
PLANS APPROVAL DATE

REGISTERED PROFESSIONAL ENGINEER
Eltahir K. Ataelgeed
No. 76374
Exp. 12-31-12
CIVIL
STATE OF CALIFORNIA

THE STATE OF CALIFORNIA OR ITS OFFICERS OR AGENTS SHALL NOT BE RESPONSIBLE FOR THE ACCURACY OR COMPLETENESS OF SCANNED COPIES OF THIS PLAN SHEET.

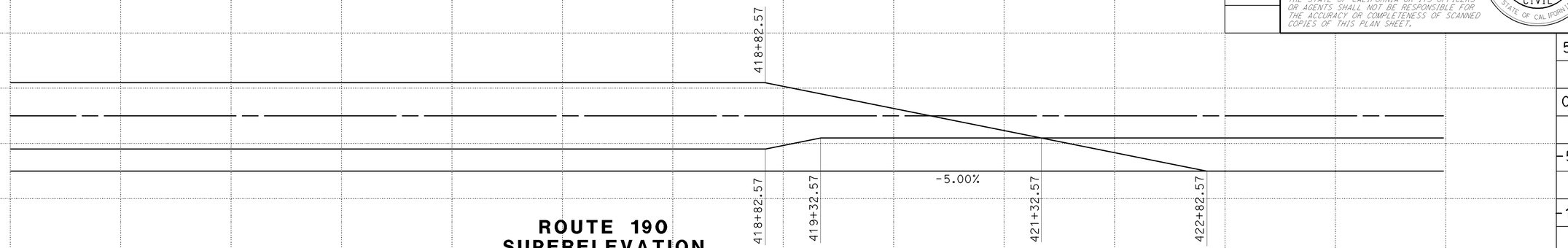


**ROUTE 190**
**SUPERELEVATION**
SCALE: Horiz 1"=50'

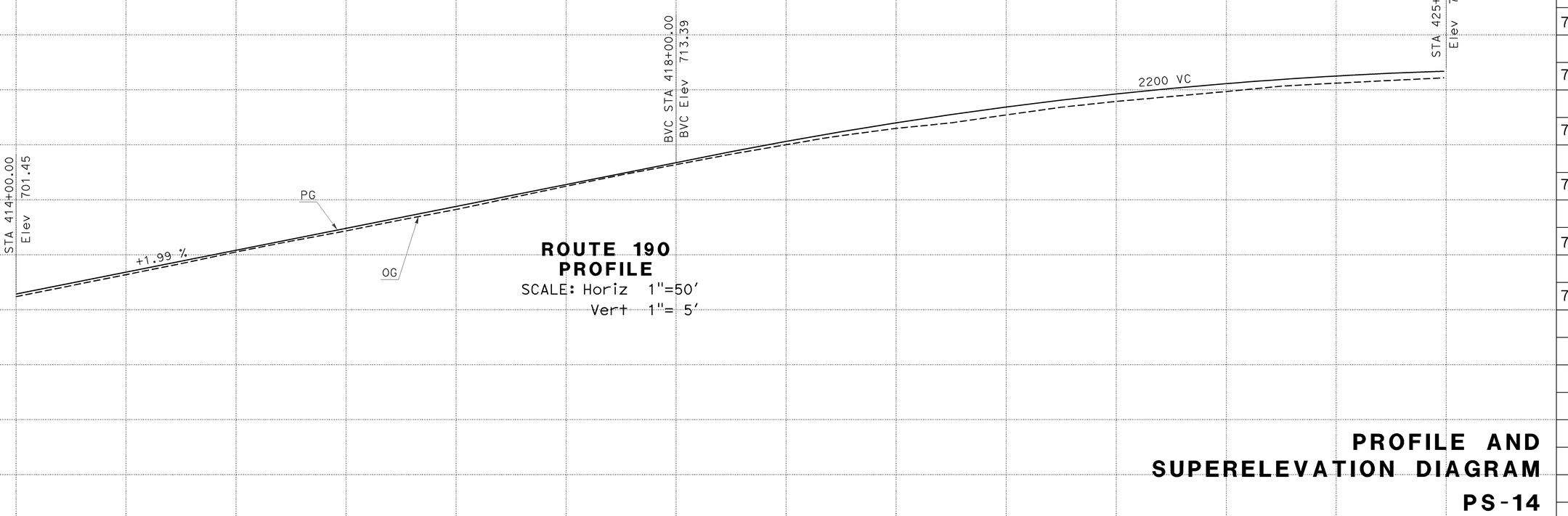


**ROUTE 190**
**PROFILE**
SCALE: Horiz 1"=50'
Vert 1"= 5'

# PROFILE AND SUPERELEVATION DIAGRAM

**PS-14**

STATE OF CALIFORNIA - DEPARTMENT OF TRANSPORTATION
DESIGN
FUNCTIONAL SUPERVISOR: ABDUL BAKER
CALCULATED-DESIGNED BY: REZA SADJADI
CHECKED BY: ELTAHIR ATAELGEED
REVISED BY
DATE REVISED

LAST REVISION DATE PLOTTED => 22-DEC-2010
TIME PLOTTED => 11:26

BORDER LAST REVISED 7/2/2010
USERNAME => s115755
DGN FILE => 633740fb014.dgn
RELATIVE BORDER SCALE IS IN INCHES 0 1 2 3
UNIT 1476
PROJECT NUMBER & PHASE 06000201501

| Dist | COUNTY | ROUTE | POST MILES TOTAL PROJECT | SHEET No. | TOTAL SHEETS |
|---|---|---|---|---|---|
| 06 | Tul | 190 | 21.2/26.4 | 38 | 120 |

E. Ataelgeed 12-20-10
REGISTERED CIVIL ENGINEER DATE

12-20-10
PLANS APPROVAL DATE

REGISTERED PROFESSIONAL ENGINEER
Eltahir K. Ataelgeed
No. 76374
Exp. 12-31-12
CIVIL
STATE OF CALIFORNIA

THE STATE OF CALIFORNIA OR ITS OFFICERS OR AGENTS SHALL NOT BE RESPONSIBLE FOR THE ACCURACY OR COMPLETENESS OF SCANNED COPIES OF THIS PLAN SHEET.

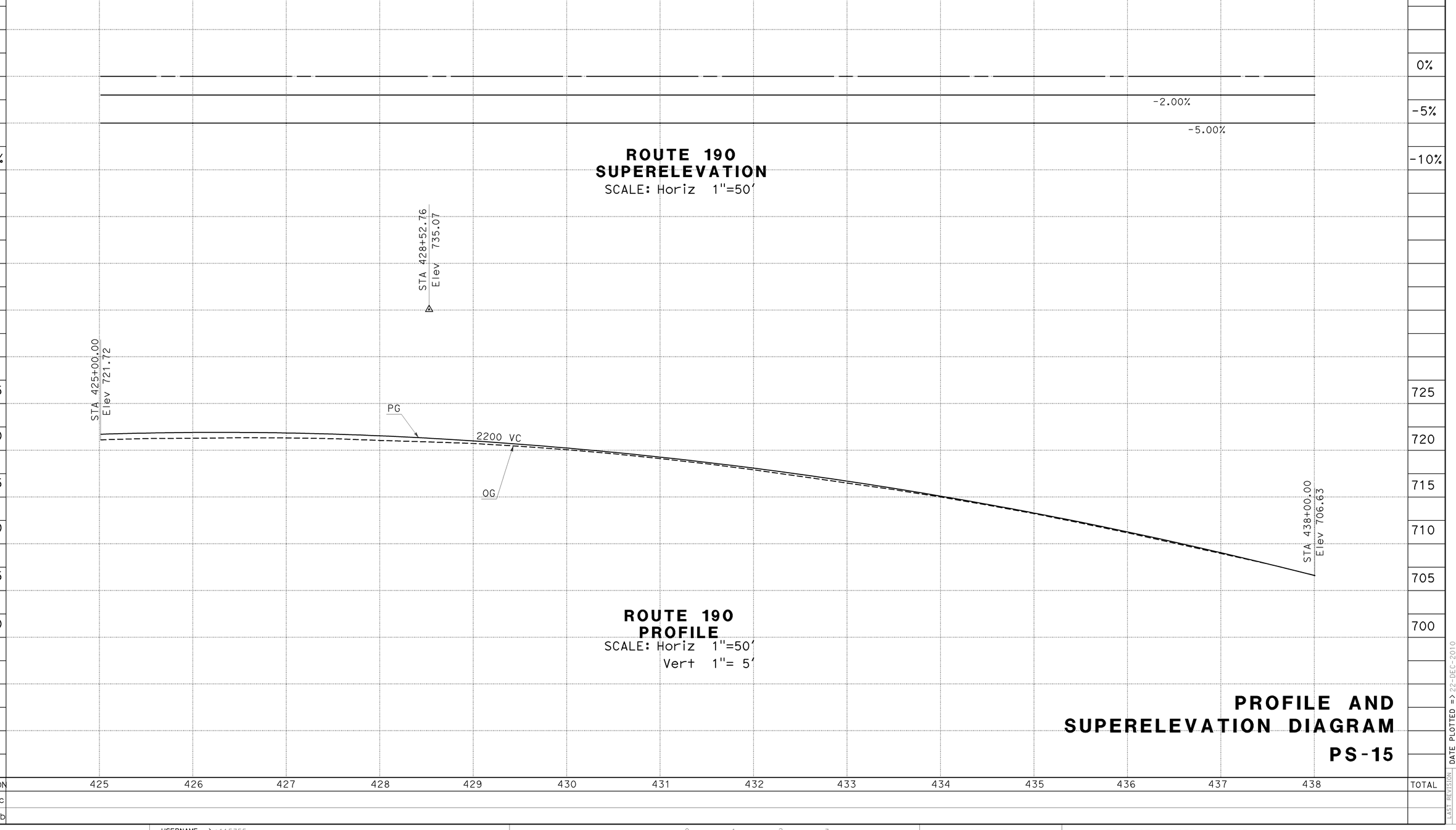


**ROUTE 190**
**SUPERELEVATION**
SCALE: Horiz 1"=50'

**ROUTE 190**
**PROFILE**
SCALE: Horiz 1"=50'
Vert 1"= 5'

# PROFILE AND SUPERELEVATION DIAGRAM

**PS-15**

REVISED BY
DATE REVISED
REZA SADJADI
ELTAHIR ATAELGEED
CALCULATED-DESIGNED BY
CHECKED BY
FUNCTIONAL SUPERVISOR
ABDUL BAKER
STATE OF CALIFORNIA - DEPARTMENT OF TRANSPORTATION
DESIGN
Caltrans

LAST REVISION DATE PLOTTED => 22-DEC-2010
TIME PLOTTED => 11:26
12-14-10

BORDER LAST REVISED 7/2/2010
USERNAME => s115755
DGN FILE => 633740fb015.dgn
RELATIVE BORDER SCALE IS IN INCHES 0 1 2 3
UNIT 1476
PROJECT NUMBER & PHASE 06000201501

| Dist | COUNTY | ROUTE | POST MILES TOTAL PROJECT | SHEET No. | TOTAL SHEETS |
|---|---|---|---|---|---|
| 06 | Tul | 190 | 21.2/26.4 | 39 | 120 |

E. Ataelgeed 12-20-10
REGISTERED CIVIL ENGINEER DATE

12-20-10
PLANS APPROVAL DATE

Eltahir K. Ataelgeed
No. 76374
Exp. 12-31-12
CIVIL
REGISTERED PROFESSIONAL ENGINEER
STATE OF CALIFORNIA

THE STATE OF CALIFORNIA OR ITS OFFICERS OR AGENTS SHALL NOT BE RESPONSIBLE FOR THE ACCURACY OR COMPLETENESS OF SCANNED COPIES OF THIS PLAN SHEET.

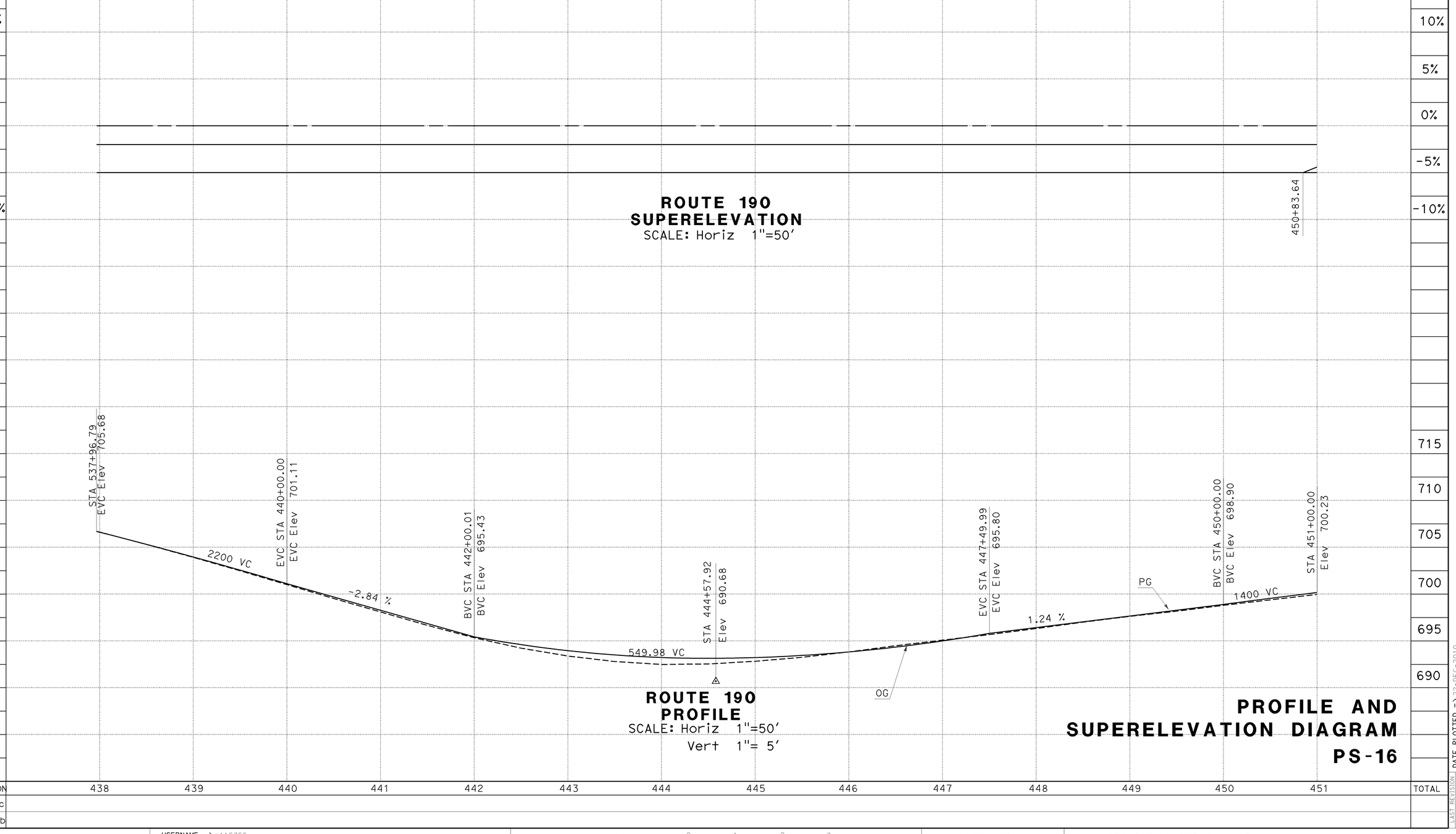


**ROUTE 190**
**SUPERELEVATION**
SCALE: Horiz 1"=50'

**ROUTE 190**
**PROFILE**
SCALE: Horiz 1"=50'
Vert 1"= 5'

# PROFILE AND SUPERELEVATION DIAGRAM

**PS-16**

REVISED BY
DATE REVISED
REZA SADJADI
ELTAHIR ATAELGEED
CALCULATED-DESIGNED BY
CHECKED BY
FUNCTIONAL SUPERVISOR
ABDUL BAKER
STATE OF CALIFORNIA - DEPARTMENT OF TRANSPORTATION
DESIGN
Caltrans

LAST REVISION DATE PLOTTED => 22-DEC-2010
TIME PLOTTED => 11:26
12-14-10

BORDER LAST REVISED 7/2/2010
USERNAME => s115755
DGN FILE => 633740fb016.dgn
RELATIVE BORDER SCALE IS IN INCHES 0 1 2 3
UNIT 1476
PROJECT NUMBER & PHASE 06000201501

| Dist | COUNTY | ROUTE | POST MILES TOTAL PROJECT | SHEET No. | TOTAL SHEETS |
|---|---|---|---|---|---|
| 06 | Tul | 190 | 21.2/26.4 | 40 | 120 |

E. Ataelgeed 12-20-10
REGISTERED CIVIL ENGINEER DATE

12-20-10
PLANS APPROVAL DATE

REGISTERED PROFESSIONAL ENGINEER
Eltahir K. Ataelgeed
No. 76374
Exp. 12-31-12
CIVIL
STATE OF CALIFORNIA

THE STATE OF CALIFORNIA OR ITS OFFICERS OR AGENTS SHALL NOT BE RESPONSIBLE FOR THE ACCURACY OR COMPLETENESS OF SCANNED COPIES OF THIS PLAN SHEET.

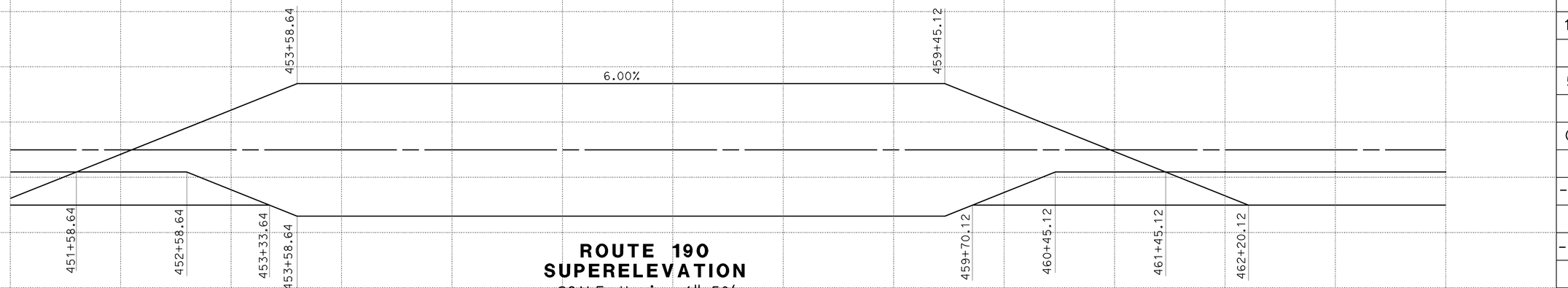


**ROUTE 190**
**SUPERELEVATION**
SCALE: Horiz 1"=50'

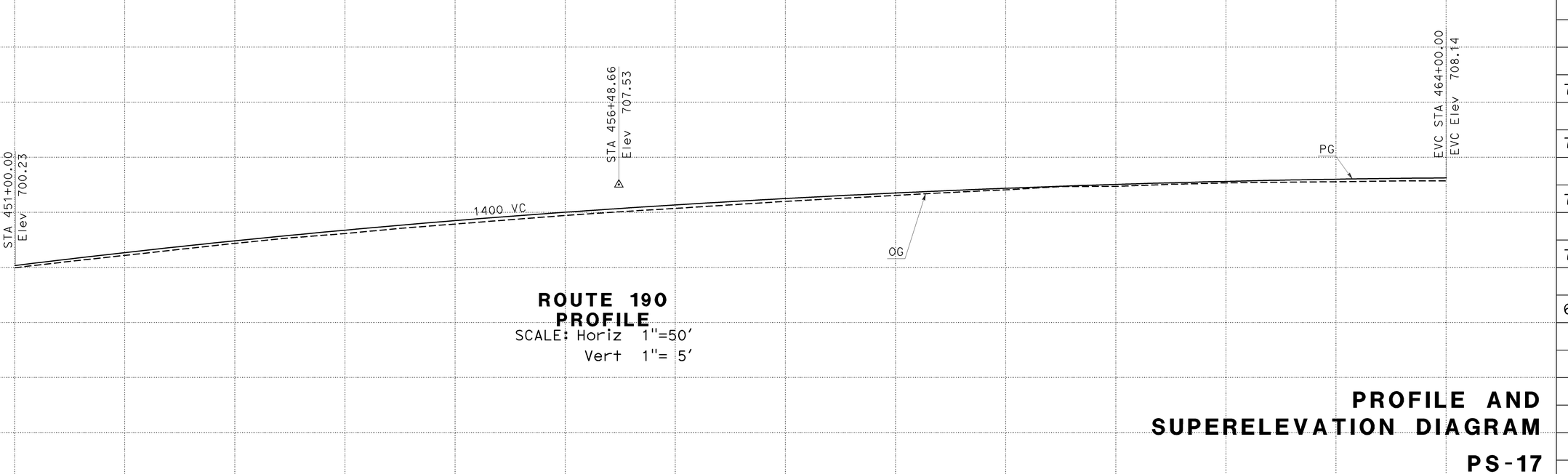


**ROUTE 190**
**PROFILE**
SCALE: Horiz 1"=50'
Vert 1"= 5'

# PROFILE AND SUPERELEVATION DIAGRAM

**PS-17**

| STATION | 451 | 452 | 453 | 454 | 455 | 456 | 457 | 458 | 459 | 460 | 461 | 462 | 463 | 464 | TOTAL |
|---|---|---|---|---|---|---|---|---|---|---|---|---|---|---|---|
| CY Exc | | | | | | | | | | | | | | | |
| CY Emb | | | | | | | | | | | | | | | |

REVISED BY | DATE REVISED
REZA SADJADI | ELTAHIR ATAELGEED
CALCULATED-DESIGNED BY | CHECKED BY
FUNCTIONAL SUPERVISOR: ABDUL BAKER
STATE OF CALIFORNIA - DEPARTMENT OF TRANSPORTATION
DESIGN
Caltrans

LAST REVISION DATE PLOTTED => 22-DEC-2010
TIME PLOTTED => 11:26
12-14-10

BORDER LAST REVISED 7/2/2010
USERNAME => s115755
DGN FILE => 633740fb017.dgn
RELATIVE BORDER SCALE IS IN INCHES 0 1 2 3
UNIT 1476
PROJECT NUMBER & PHASE 06000201501

| Dist | COUNTY | ROUTE | POST MILES TOTAL PROJECT | SHEET No. | TOTAL SHEETS |
|---|---|---|---|---|---|
| 06 | Tul | 190 | 21.2/26.4 | 41 | 120 |

E. Ataelgeed 12-20-10
REGISTERED CIVIL ENGINEER DATE

12-20-10
PLANS APPROVAL DATE

Eltahir K. Ataelgeed No. 76374 Exp. 12-31-12 CIVIL — REGISTERED PROFESSIONAL ENGINEER — STATE OF CALIFORNIA

THE STATE OF CALIFORNIA OR ITS OFFICERS OR AGENTS SHALL NOT BE RESPONSIBLE FOR THE ACCURACY OR COMPLETENESS OF SCANNED COPIES OF THIS PLAN SHEET.

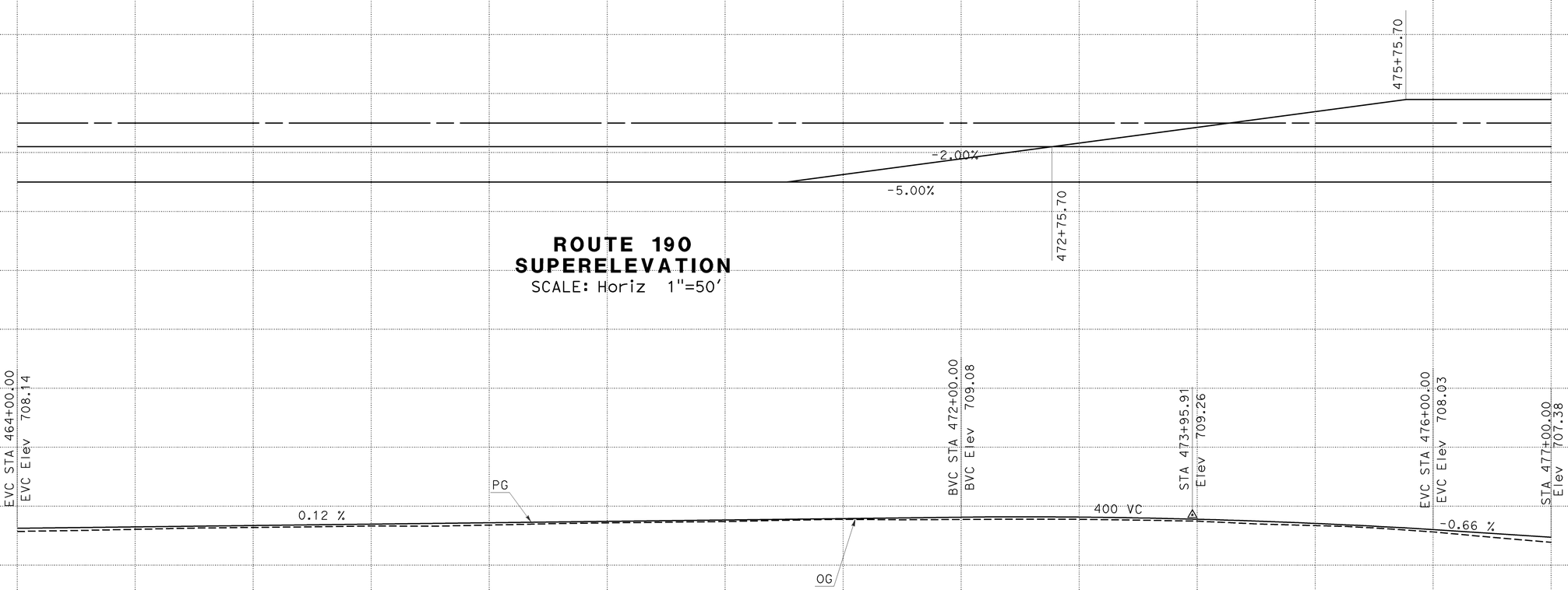


**ROUTE 190**
**SUPERELEVATION**
SCALE: Horiz 1"=50'

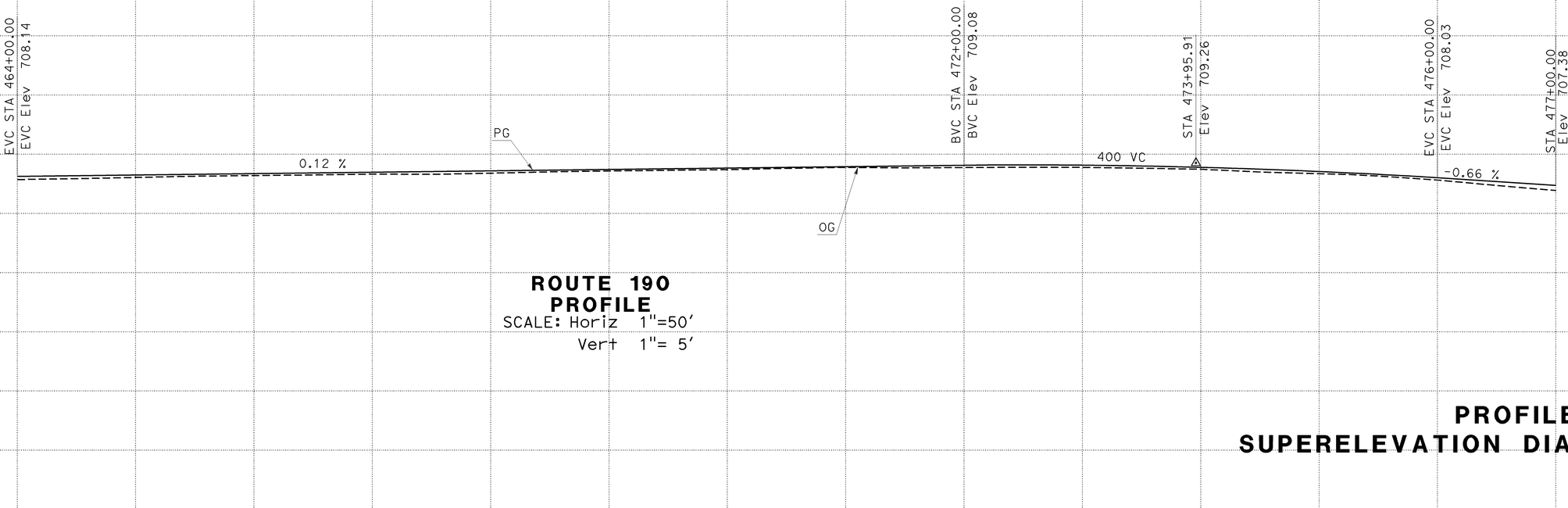


**ROUTE 190**
**PROFILE**
SCALE: Horiz 1"=50'
Vert 1"= 5'

| STATION | 464 | 465 | 466 | 467 | 468 | 469 | 470 | 471 | 472 | 473 | 474 | 475 | 476 | 477 | TOTAL |
|---|---|---|---|---|---|---|---|---|---|---|---|---|---|---|---|
| CY Exc | | | | | | | | | | | | | | | |
| CY Emb | | | | | | | | | | | | | | | |

# PROFILE AND SUPERELEVATION DIAGRAM
# PS-18

STATE OF CALIFORNIA - DEPARTMENT OF TRANSPORTATION
DESIGN
FUNCTIONAL SUPERVISOR: ABDUL BAKER
CALCULATED-DESIGNED BY: REZA SADJADI
CHECKED BY: ELTAHIR ATAELGEED
REVISED BY
DATE REVISED

LAST REVISION DATE PLOTTED => 22-DEC-2010
TIME PLOTTED => 11:26

BORDER LAST REVISED 7/2/2010
USERNAME => s115755
DGN FILE => 633740fb018.dgn
RELATIVE BORDER SCALE IS IN INCHES 0 1 2 3
UNIT 1476
PROJECT NUMBER & PHASE 06000201501

| Dist | COUNTY | ROUTE | POST MILES TOTAL PROJECT | SHEET No. | TOTAL SHEETS |
|---|---|---|---|---|---|
| 06 | Tul | 190 | 21.2/26.4 | 42 | 120 |

E. Ataelgeed 12-20-10
REGISTERED CIVIL ENGINEER DATE

12-20-10
PLANS APPROVAL DATE

Eltahir K. Ataelgeed
No. 76374
Exp. 12-31-12
CIVIL
REGISTERED PROFESSIONAL ENGINEER
STATE OF CALIFORNIA

THE STATE OF CALIFORNIA OR ITS OFFICERS OR AGENTS SHALL NOT BE RESPONSIBLE FOR THE ACCURACY OR COMPLETENESS OF SCANNED COPIES OF THIS PLAN SHEET.

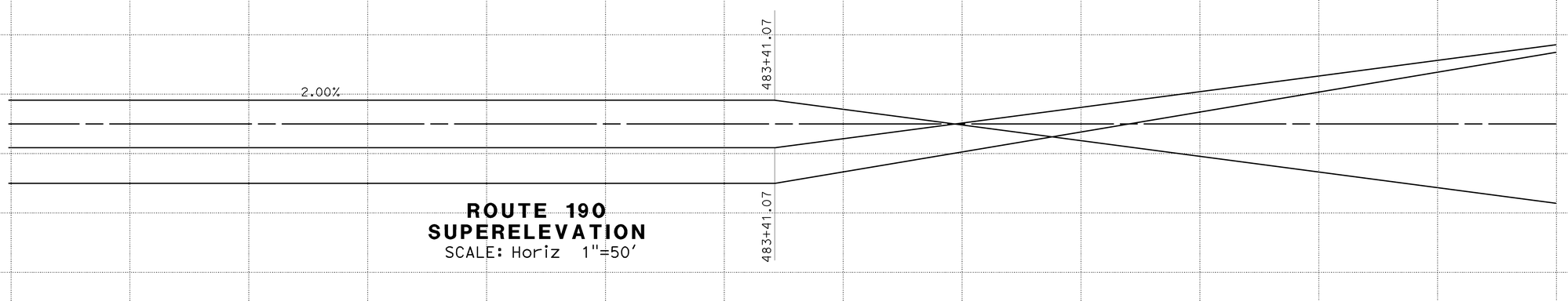


**ROUTE 190**
**SUPERELEVATION**
SCALE: Horiz 1"=50'

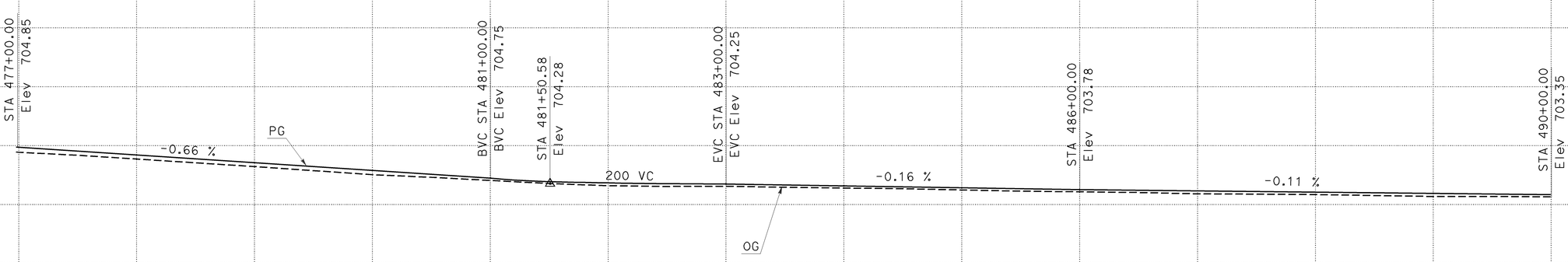


**ROUTE 190**
**PROFILE**
SCALE: Horiz 1"=50'
Vert 1"= 5'

| STATION | 477 | 478 | 479 | 480 | 481 | 482 | 483 | 484 | 485 | 486 | 487 | 488 | 489 | 490 | TOTAL |
|---|---|---|---|---|---|---|---|---|---|---|---|---|---|---|---|
| CY Exc | | | | | | | | | | | | | | | |
| CY Emb | | | | | | | | | | | | | | | |

# PROFILE AND SUPERELEVATION DIAGRAM
# PS-19

REVISED BY | DATE REVISED
REZA SADJADI | ELTAHIR ATAELGEED
CALCULATED-DESIGNED BY | CHECKED BY
FUNCTIONAL SUPERVISOR: ABDUL BAKER
STATE OF CALIFORNIA - DEPARTMENT OF TRANSPORTATION
DESIGN
Caltrans

LAST REVISION DATE PLOTTED => 22-DEC-2010
TIME PLOTTED => 11:26
12-14-10

BORDER LAST REVISED 7/2/2010
USERNAME => s115755
DGN FILE => 633740fb019.dgn
RELATIVE BORDER SCALE IS IN INCHES 0 1 2 3
UNIT 1476
PROJECT NUMBER & PHASE 06000201501

| Dist | COUNTY | ROUTE | POST MILES TOTAL PROJECT | SHEET No. | TOTAL SHEETS |
|---|---|---|---|---|---|
| 06 | Tul | 190 | 21.2/26.4 | 43 | 120 |

E. Ataelgeed 12-20-10
REGISTERED CIVIL ENGINEER DATE

12-20-10
PLANS APPROVAL DATE

REGISTERED PROFESSIONAL ENGINEER
Eltahir K. Ataelgeed
No. 76374
Exp. 12-31-12
CIVIL
STATE OF CALIFORNIA

THE STATE OF CALIFORNIA OR ITS OFFICERS OR AGENTS SHALL NOT BE RESPONSIBLE FOR THE ACCURACY OR COMPLETENESS OF SCANNED COPIES OF THIS PLAN SHEET.

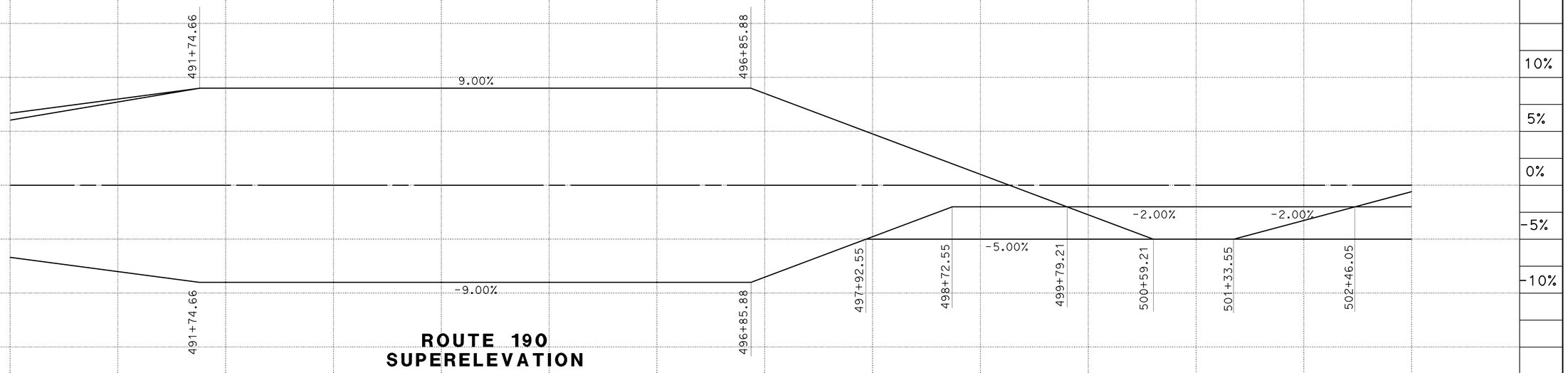


**ROUTE 190**
**SUPERELEVATION**
SCALE: Horiz 1"=50'

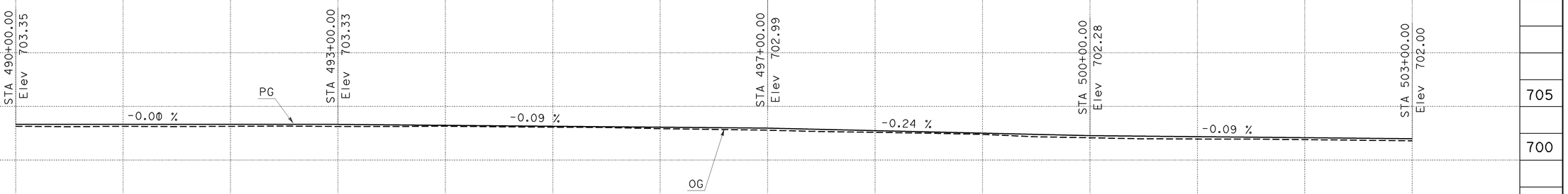


**ROUTE 190**
**PROFILE**
SCALE: Horiz 1"=50'
Vert 1"= 5'

| STATION | 490 | 491 | 492 | 493 | 494 | 495 | 496 | 497 | 498 | 499 | 500 | 501 | 502 | 503 | TOTAL |
|---|---|---|---|---|---|---|---|---|---|---|---|---|---|---|---|
| CY Exc | | | | | | | | | | | | | | | |
| CY Emb | | | | | | | | | | | | | | | |

# PROFILE AND SUPERELEVATION DIAGRAM
# PS-20

CALCULATED-DESIGNED BY
CHECKED BY
REVISED BY
DATE REVISED
REZA SADJADI
ELTAHIR ATAELGEED
FUNCTIONAL SUPERVISOR
ABDUL BAKER
STATE OF CALIFORNIA - DEPARTMENT OF TRANSPORTATION
DESIGN
Caltrans

LAST REVISION DATE PLOTTED => 22-DEC-2010
TIME PLOTTED => 11:26
12-14-10

BORDER LAST REVISED 7/2/2010
USERNAME => s115755
DGN FILE => 633740fb020.dgn
RELATIVE BORDER SCALE IS IN INCHES 0 1 2 3
UNIT 1476
PROJECT NUMBER & PHASE 06000201501

| Dist | COUNTY | ROUTE | POST MILES TOTAL PROJECT | SHEET No. | TOTAL SHEETS |
|---|---|---|---|---|---|
| 06 | Tul | 190 | 21.2/26.4 | 44 | 120 |

E. Ataelgeed 12-20-10
REGISTERED CIVIL ENGINEER DATE

12-20-10
PLANS APPROVAL DATE

Eltahir K. Ataelgeed
No. 76374
Exp. 12-31-12
CIVIL
REGISTERED PROFESSIONAL ENGINEER
STATE OF CALIFORNIA

THE STATE OF CALIFORNIA OR ITS OFFICERS OR AGENTS SHALL NOT BE RESPONSIBLE FOR THE ACCURACY OR COMPLETENESS OF SCANNED COPIES OF THIS PLAN SHEET.

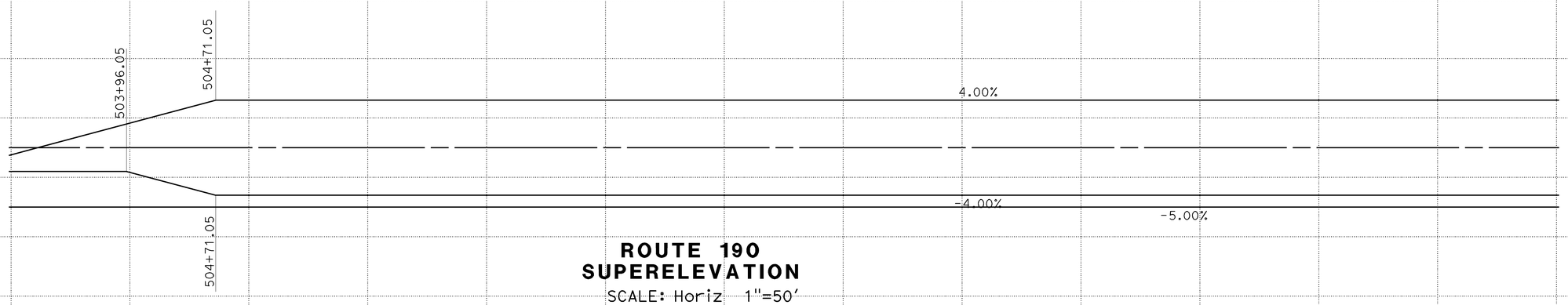


**ROUTE 190**
**SUPERELEVATION**
SCALE: Horiz 1"=50'

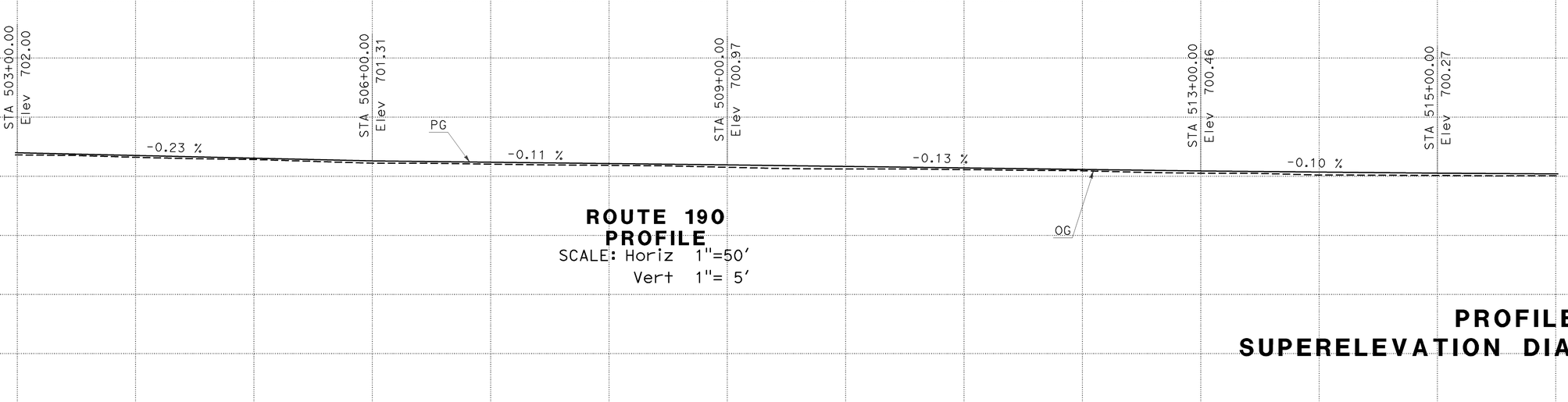


**ROUTE 190**
**PROFILE**
SCALE: Horiz 1"=50'
Vert 1"= 5'

# PROFILE AND SUPERELEVATION DIAGRAM

**PS-21**

| STATION | 503 | 504 | 505 | 506 | 507 | 508 | 509 | 510 | 511 | 512 | 513 | 514 | 515 | 516 | TOTAL |
|---|---|---|---|---|---|---|---|---|---|---|---|---|---|---|---|
| CY Exc | | | | | | | | | | | | | | | |
| CY Emb | | | | | | | | | | | | | | | |

REVISED BY | DATE REVISED

REZA SADJADI | ELTAHIR ATAELGEED
CALCULATED-DESIGNED BY | CHECKED BY

FUNCTIONAL SUPERVISOR: ABDUL BAKER

STATE OF CALIFORNIA - DEPARTMENT OF TRANSPORTATION
DESIGN

LAST REVISION DATE PLOTTED => 22-DEC-2010
TIME PLOTTED => 11:26
12-14-10

BORDER LAST REVISED 7/2/2010 | USERNAME => s115755 | DGN FILE => 633740fb021.dgn | RELATIVE BORDER SCALE IS IN INCHES 0 1 2 3 | UNIT 1476 | PROJECT NUMBER & PHASE 06000201501

| Dist | COUNTY | ROUTE | POST MILES TOTAL PROJECT | SHEET No. | TOTAL SHEETS |
|---|---|---|---|---|---|
| 06 | Tul | 190 | 21.2/26.4 | 45 | 120 |

E. Ataelgeed 12-20-10
REGISTERED CIVIL ENGINEER DATE

12-20-10
PLANS APPROVAL DATE

Eltahir K. Ataelgeed No. 76374 Exp. 12-31-12 CIVIL
REGISTERED PROFESSIONAL ENGINEER — STATE OF CALIFORNIA

THE STATE OF CALIFORNIA OR ITS OFFICERS OR AGENTS SHALL NOT BE RESPONSIBLE FOR THE ACCURACY OR COMPLETENESS OF SCANNED COPIES OF THIS PLAN SHEET.

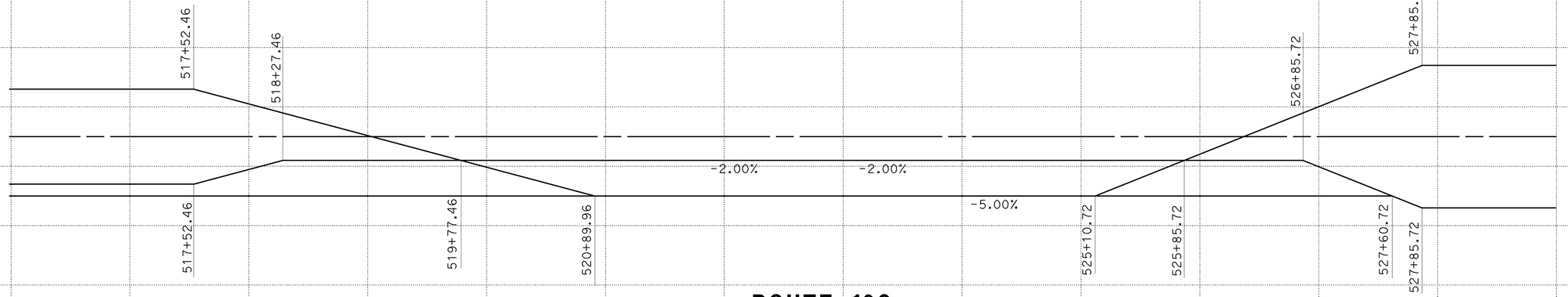


## ROUTE 190 SUPERELEVATION

SCALE: Horiz 1"=50'

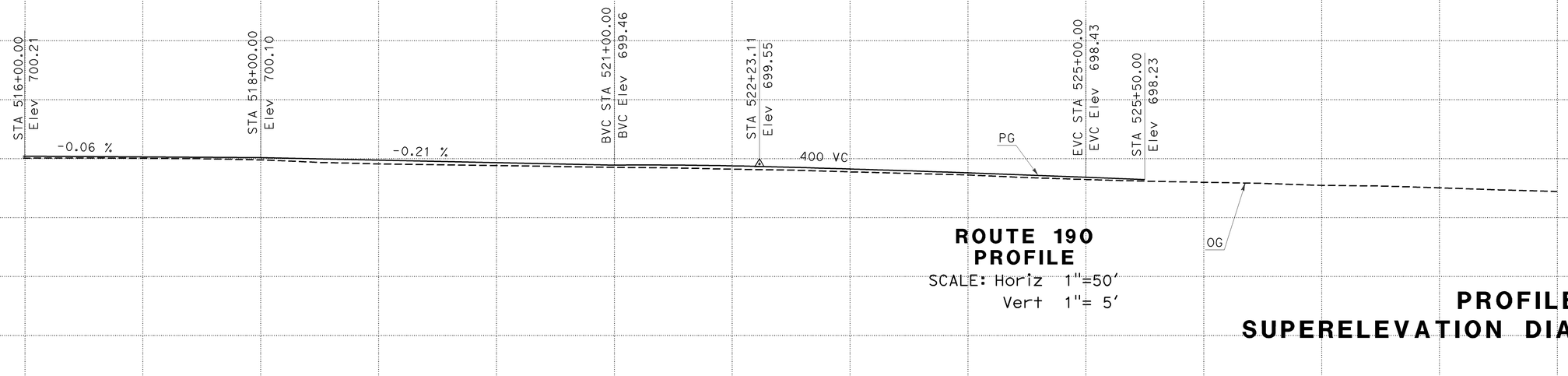


## ROUTE 190 PROFILE

SCALE: Horiz 1"=50'
Vert 1"= 5'

# PROFILE AND SUPERELEVATION DIAGRAM

# PS-22

| STATION | 516 | 517 | 518 | 519 | 520 | 521 | 522 | 523 | 524 | 525 | 526 | 527 | TOTAL |
|---|---|---|---|---|---|---|---|---|---|---|---|---|---|
| CY Exc | | | | | | | | | | | | | |
| CY Emb | | | | | | | | | | | | | |

REVISED BY | DATE REVISED

REZA SADJADI | ELTAHIR ATAELGEED

CALCULATED-DESIGNED BY | CHECKED BY

FUNCTIONAL SUPERVISOR: ABDUL BAKER

STATE OF CALIFORNIA - DEPARTMENT OF TRANSPORTATION
DESIGN

Caltrans

LAST REVISION DATE PLOTTED => 22-DEC-2010
TIME PLOTTED => 11:26

BORDER LAST REVISED 7/2/2010

USERNAME => s115755
DGN FILE => 633740fb022.dgn

RELATIVE BORDER SCALE IS IN INCHES 0 1 2 3

UNIT 1476

PROJECT NUMBER & PHASE 06000201501

| Dist | COUNTY | ROUTE | POST MILES TOTAL PROJECT | SHEET No. | TOTAL SHEETS |
|---|---|---|---|---|---|
| 06 | Tul | 190 | 21.2/26.4 | 46 | 120 |

E. Ataelgeed 12-20-10
REGISTERED CIVIL ENGINEER DATE

12-20-10
PLANS APPROVAL DATE

Eltahir K. Ataelgeed No. 76374 Exp 12-31-10 CIVIL
REGISTERED PROFESSIONAL ENGINEER — STATE OF CALIFORNIA

THE STATE OF CALIFORNIA OR ITS OFFICERS OR AGENTS SHALL NOT BE RESPONSIBLE FOR THE ACCURACY OR COMPLETENESS OF SCANNED COPIES OF THIS PLAN SHEET.

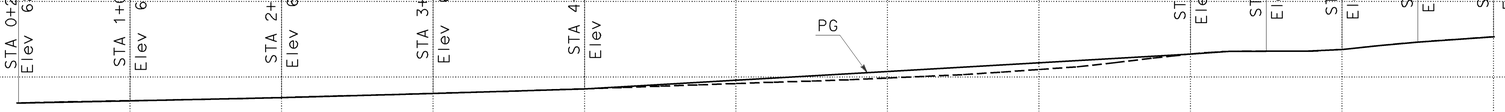


AVE 160
SUPERELEVATION

ROUTE 190
PROFILE

SCALE: Horiz 1"=50'
Vert 1"=50'

# PROFILE AND SUPERELEVATION DIAGRAM

## PS-23

| STATION | 0 | 1 | 2 | 3 | 4 | 5 | 6 | 7 | 8 | 9 | 10 | TOTAL |
|---|---|---|---|---|---|---|---|---|---|---|---|---|
| CY Exc | | | | | | | | | | | | |
| CY Emb | | | | | | | | | | | | |

STATE OF CALIFORNIA - DEPARTMENT OF TRANSPORTATION
Caltrans® DESIGN

CALCULATED-DESIGNED BY: REZA SADJADI
CHECKED BY: ELTAHIR ATAELGEED
FUNCTIONAL SUPERVISOR: ABDUL BAKER
REVISED BY
DATE REVISED

LAST REVISION DATE PLOTTED => 22-DEC-2010
TIME PLOTTED => 11:26
12-14-10

BORDER LAST REVISED 7/2/2010
USERNAME => s115755
DGN FILE => 633740fb023.dgn
RELATIVE BORDER SCALE IS IN INCHES 0 1 2 3
UNIT 1476
PROJECT NUMBER & PHASE 06000201501

| Dist | COUNTY | ROUTE | POST MILES TOTAL PROJECT | SHEET No. | TOTAL SHEETS |
|---|---|---|---|---|---|
| 06 | Tul | 190 | 21.2/26.4 | 47 | 120 |

E. Ataelgeed 12-20-10
REGISTERED CIVIL ENGINEER DATE

Eltahir K. Ataelgeed No. 76374 Exp 12-31-12 CIVIL — REGISTERED PROFESSIONAL ENGINEER — STATE OF CALIFORNIA

12-20-10
PLANS APPROVAL DATE

THE STATE OF CALIFORNIA OR ITS OFFICERS OR AGENTS SHALL NOT BE RESPONSIBLE FOR THE ACCURACY OR COMPLETENESS OF SCANNED COPIES OF THIS PLAN SHEET.

LEGEND

- COLD PLANE AC Pvmt
- PAVE DRIVEWAY
- AB
- HMA (TYPE A)

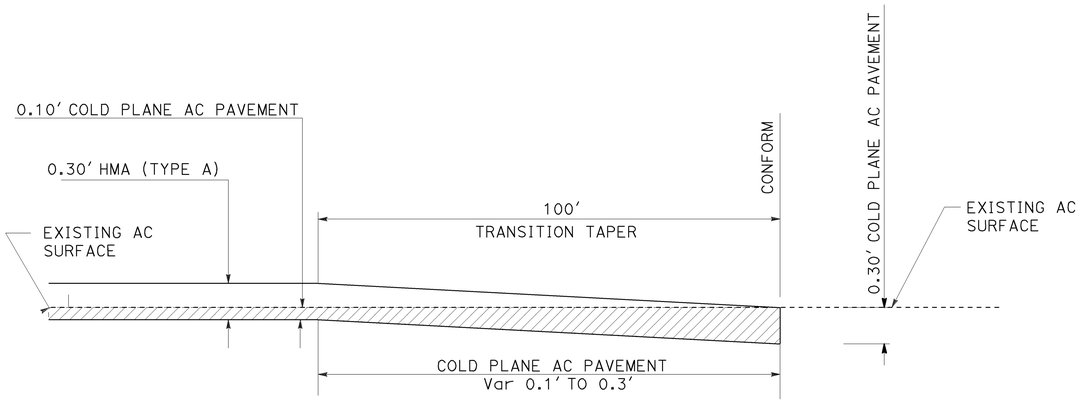


## TYPICAL TRANSITION TO CONFORM AC PAVEMENT

STA 249+00.00
STA 389+04.02
STA 393+00.37
STA 523+52.18

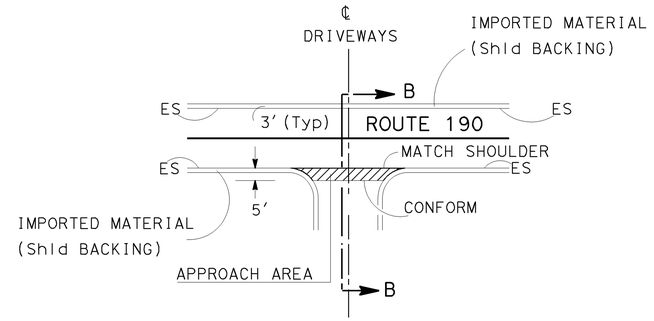


## TYPICAL PAVED DRIVEWAY APPROACH

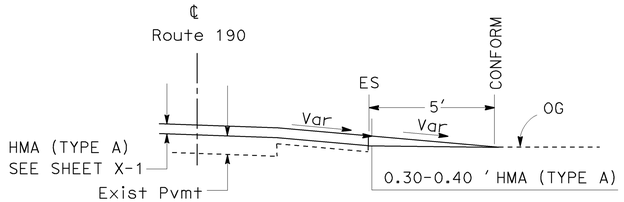


SECTION B-B

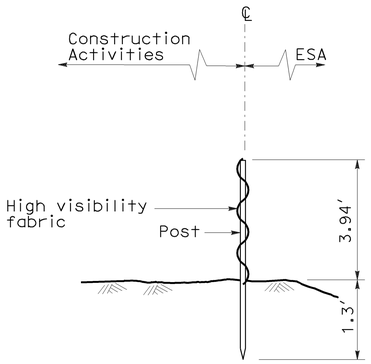


## TEMPORARY FENCE (TYPE ESA)

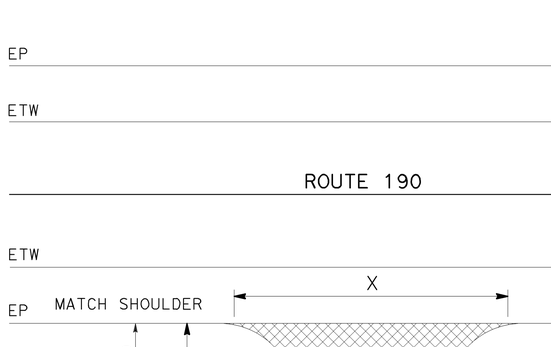


## TYPICAL DRIVEWAY APPROACH

| STATION | X | Y | Z |
|---|---|---|---|
| STA 263+30.87 | 79.16' | 30.00' | 30.00' |
| STA 275+01.47 | 77.15' | 33.57' | 30.00' |
| STA 278+94.10 | 73.44' | 32.72' | 15.00' |
| STA 278+74.48 | 90.42' | 29.72' | 15.00' |
| STA 301+72.66 | 63.34' | 33.00' | 30.00' |

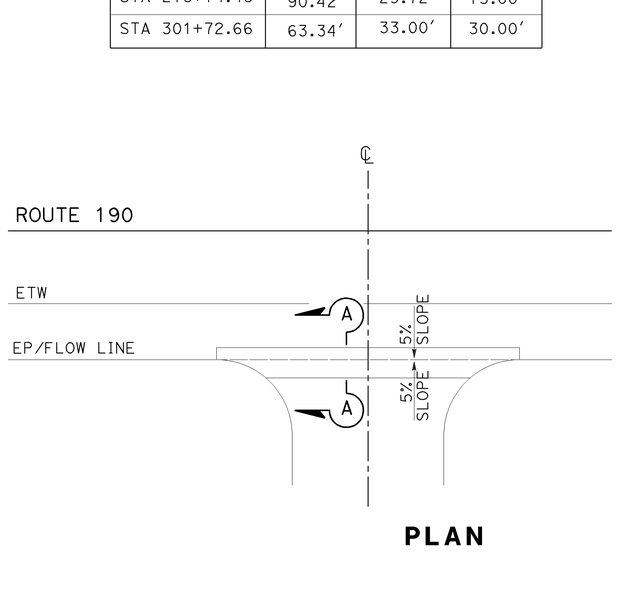


PLAN

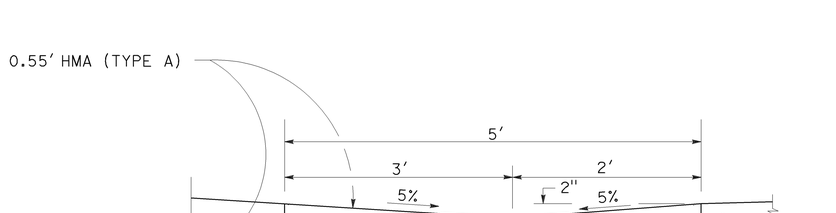


## SECTION A-A

STA 278+14.16 TO 278+60.98
STA 279+66.88 TO 280+33.57

## GUTTER DEPRESSION

# CONSTRUCTION DETAILS

NO SCALE

C-1

REVISED BY | DATE REVISED
ELTAHIR ATAELGEED | ABDUL BAKER
CALCULATED-DESIGNED BY | CHECKED BY
FUNCTIONAL SUPERVISOR: ABDUL BAKER
STATE OF CALIFORNIA - DEPARTMENT OF TRANSPORTATION
DESIGN
Caltrans

LAST REVISION | DATE PLOTTED => 22-DEC-2010
08-30-10 | TIME PLOTTED => 11:26

| Dist | COUNTY | ROUTE | POST MILES TOTAL PROJECT | SHEET No. | TOTAL SHEETS |
|---|---|---|---|---|---|
| 06 | Tul | 190 | 21.2/26.4 | 48 | 120 |

E. Ataelgeed 12-20-10
REGISTERED CIVIL ENGINEER DATE

12-20-10
PLANS APPROVAL DATE

Eltahir K. Ataelgeed No. 76374 Exp 12-31-12 CIVIL — REGISTERED PROFESSIONAL ENGINEER — STATE OF CALIFORNIA

THE STATE OF CALIFORNIA OR ITS OFFICERS OR AGENTS SHALL NOT BE RESPONSIBLE FOR THE ACCURACY OR COMPLETENESS OF SCANNED COPIES OF THIS PLAN SHEET.

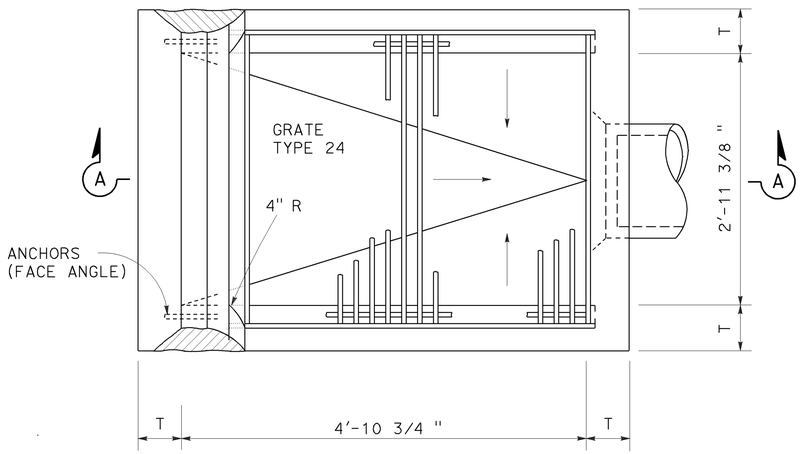


## PLAN
## TYPE GDO MODIFIED

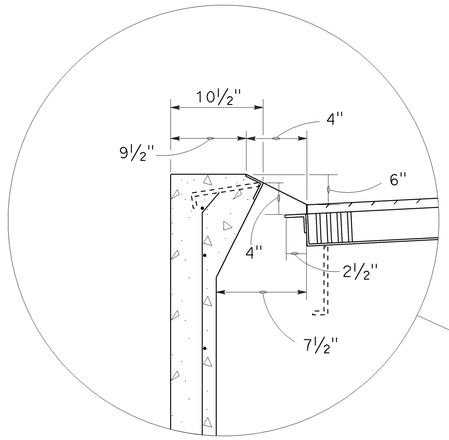


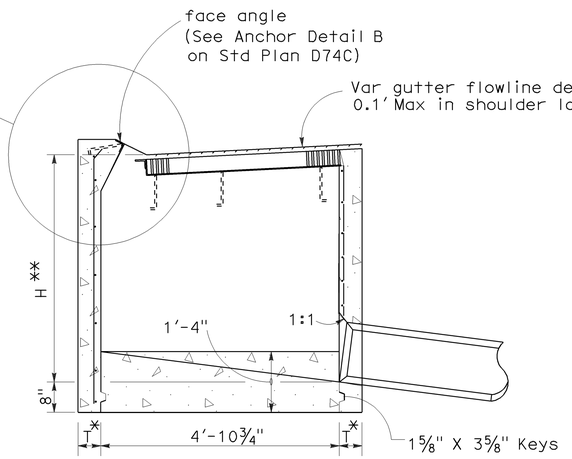


* SEE STD PLAN, RSP D74B
** SEE PLAN SHEET DQ-1

## SECTION A-A

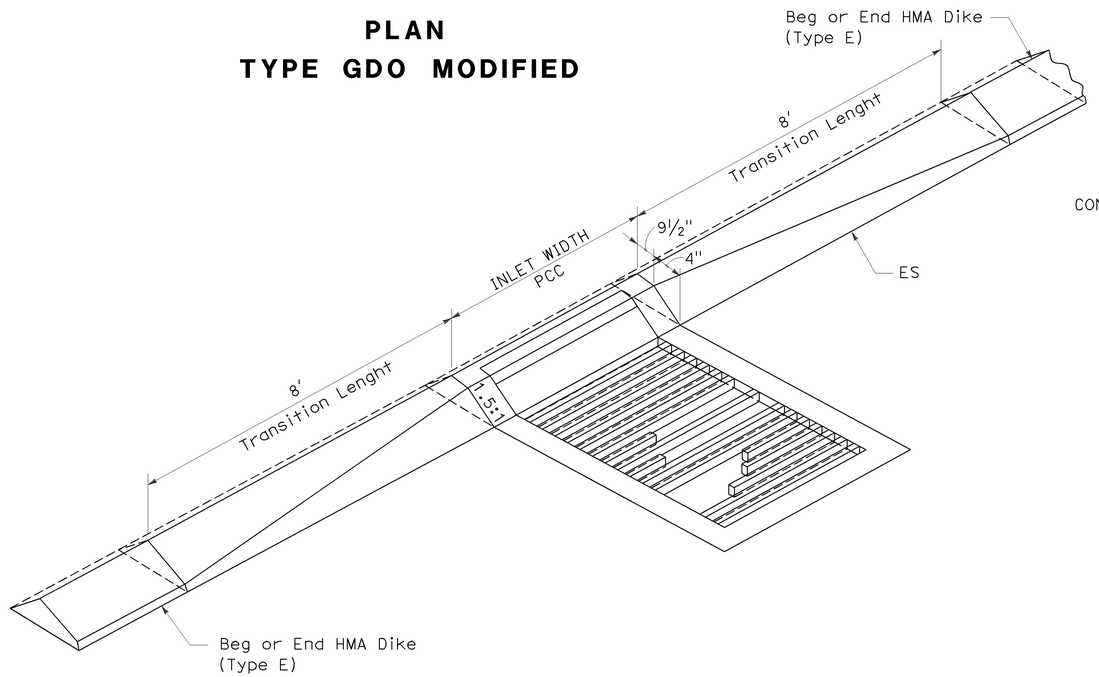


## HMA DIKE TRANSITION DETAILS

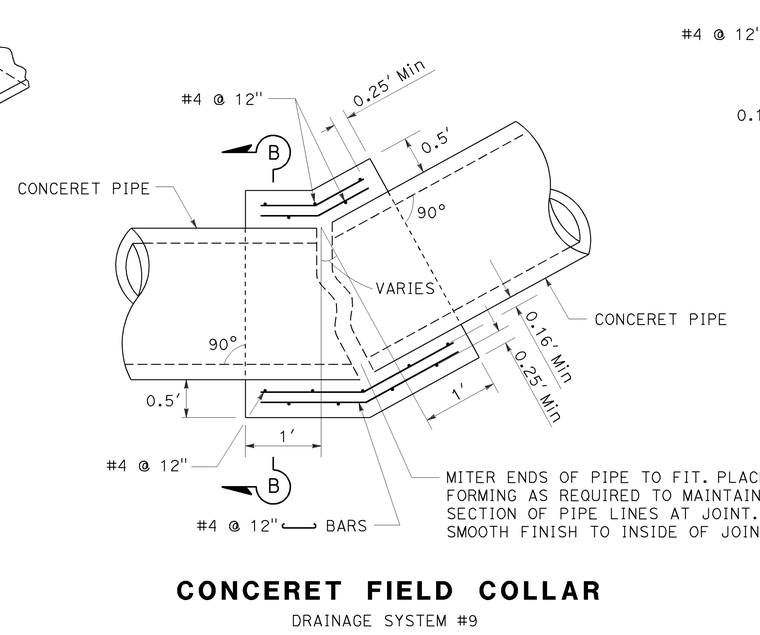


## CONCERET FIELD COLLAR
DRAINAGE SYSTEM #9

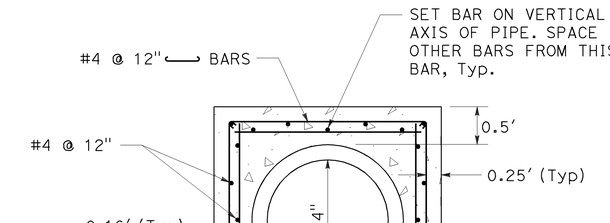


## SECTION B-B

# CONSTRUCTION DETAILS

NO SCALE

**C-2**

STATE OF CALIFORNIA - DEPARTMENT OF TRANSPORTATION
DESIGN
FUNCTIONAL SUPERVISOR: ABDUL BAKER
CALCULATED-DESIGNED BY: ELTAHIR ATAELGEED
CHECKED BY:
REVISED BY / DATE REVISED:

LAST REVISION DATE PLOTTED => 22-DEC-2010
08-30-10 TIME PLOTTED => 11:26

| Dist | COUNTY | ROUTE | POST MILES TOTAL PROJECT | SHEET No. | TOTAL SHEETS |
|---|---|---|---|---|---|
| 06 | Tul | 190 | 21.2/26.4 | 49 | 120 |

E. Ataelgeed 12-20-10
REGISTERED CIVIL ENGINEER DATE

12-20-10
PLANS APPROVAL DATE

REGISTERED PROFESSIONAL ENGINEER
Eltahir K. Ataelgeed
No. 76374
Exp 12-31-12
CIVIL
STATE OF CALIFORNIA

THE STATE OF CALIFORNIA OR ITS OFFICERS OR AGENTS SHALL NOT BE RESPONSIBLE FOR THE ACCURACY OR COMPLETENESS OF SCANNED COPIES OF THIS PLAN SHEET.

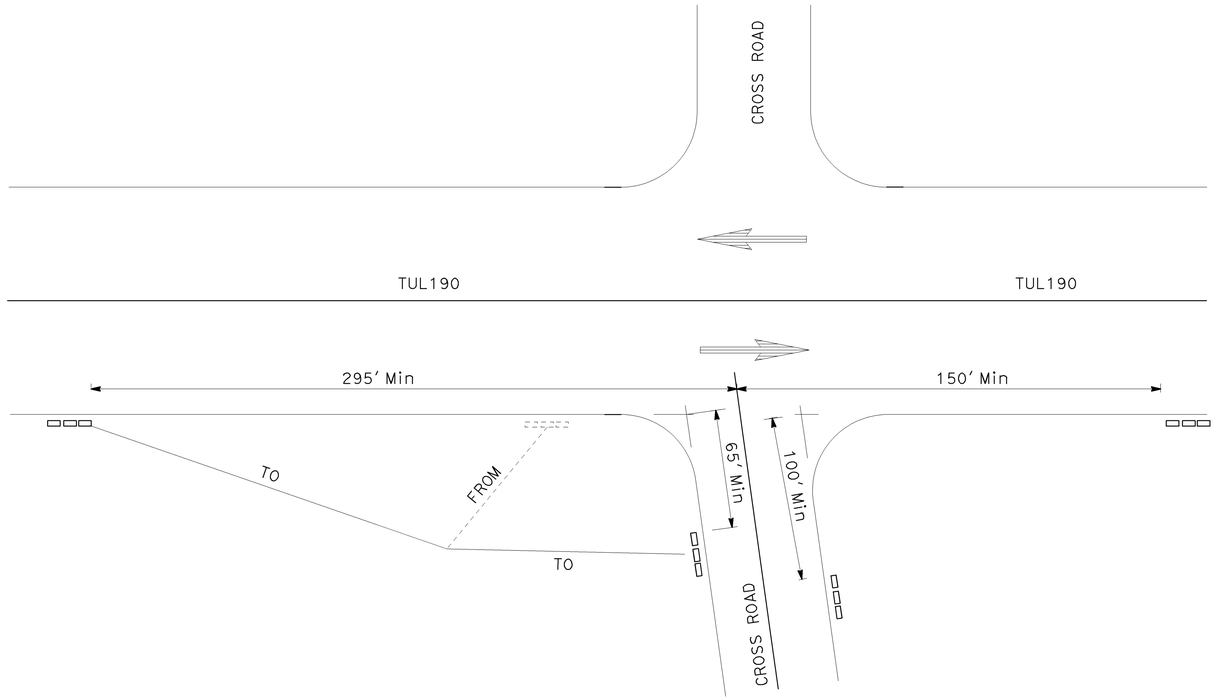


## RESET MAILBOX DETAIL

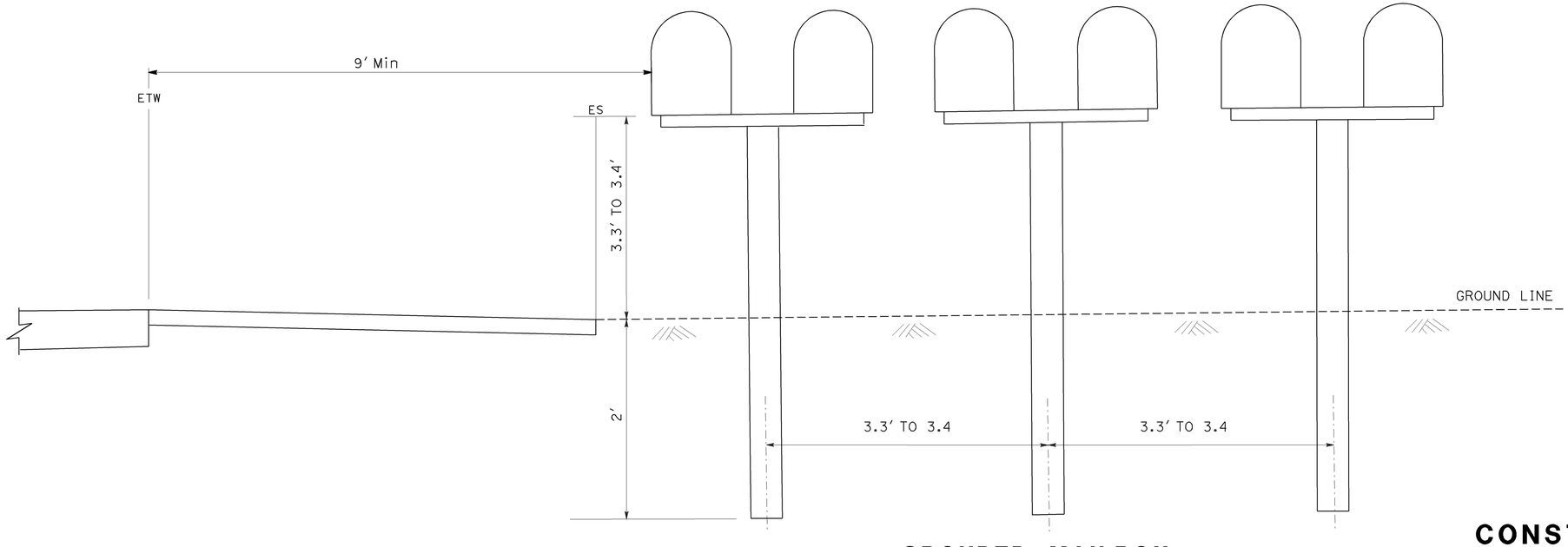


## GROUPED MAILBOX

# CONSTRUCTION DETAILS

NO SCALE

C-3

CALCULATED-DESIGNED BY: ELTAHIR ATAELGEED
CHECKED BY: ABDUL BAKER
REVISED BY
DATE REVISED
FUNCTIONAL SUPERVISOR: ABDUL BAKER
STATE OF CALIFORNIA - DEPARTMENT OF TRANSPORTATION
DESIGN
Caltrans

LAST REVISION DATE PLOTTED => 22-DEC-2010
TIME PLOTTED => 11:26
08-20-10

BORDER LAST REVISED 7/2/2010
USERNAME => s115755
DGN FILE => 633740ga003.dgn
RELATIVE BORDER SCALE IS IN INCHES 0 1 2 3
UNIT 1476
PROJECT NUMBER & PHASE 06000201501

| Dist | COUNTY | ROUTE | POST MILES TOTAL PROJECT | SHEET No. | TOTAL SHEETS |
|---|---|---|---|---|---|
| 06 | Tul | 190 | 21.2/26.4 | 50 | 120 |

E. Ataelgeed 12-20-10
REGISTERED CIVIL ENGINEER DATE

12-20-10
PLANS APPROVAL DATE

REGISTERED PROFESSIONAL ENGINEER
Eltahir K. Ataelgeed
No. 76374
Exp 12-31-12
CIVIL
STATE OF CALIFORNIA

THE STATE OF CALIFORNIA OR ITS OFFICERS OR AGENTS SHALL NOT BE RESPONSIBLE FOR THE ACCURACY OR COMPLETENESS OF SCANNED COPIES OF THIS PLAN SHEET.

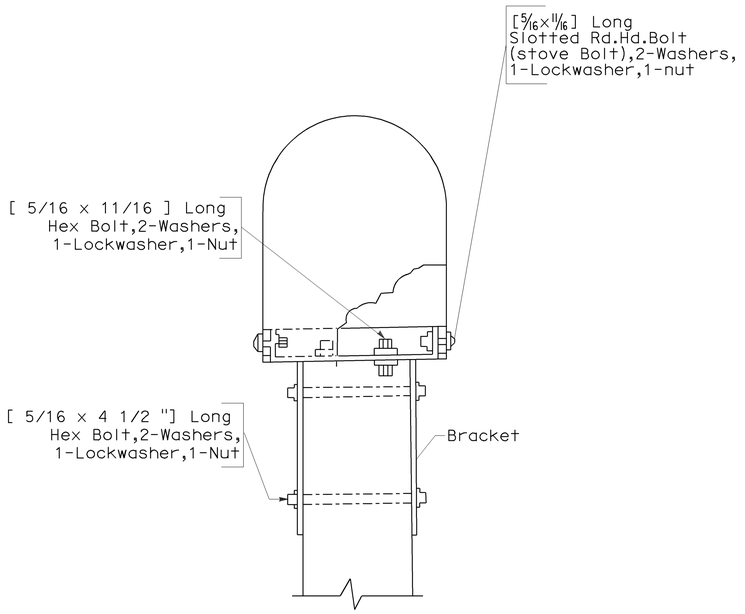


**SINGLE MAILBOX**

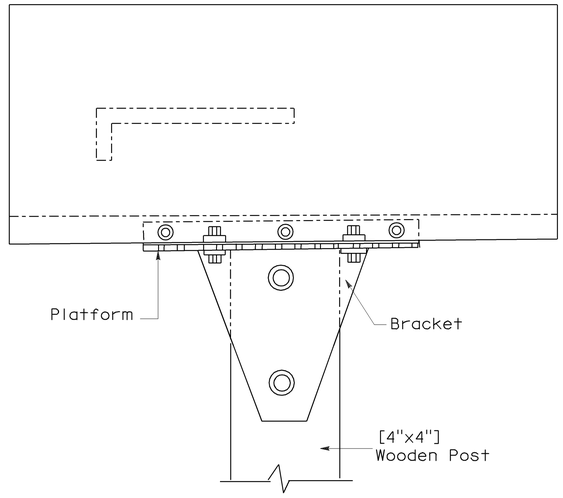


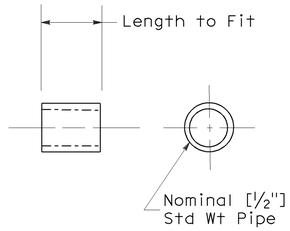


**SPACER**

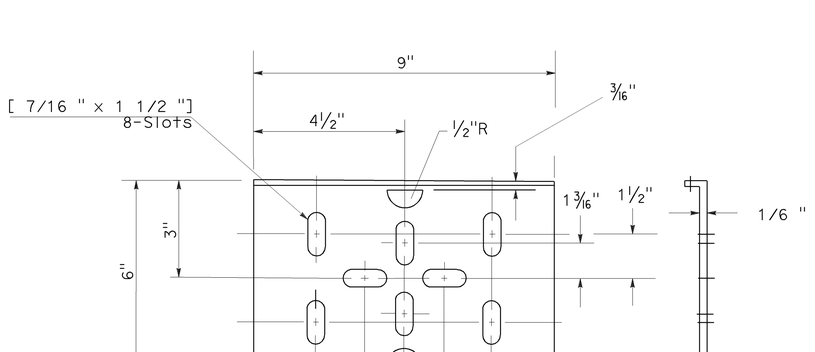


**PLATFORM**

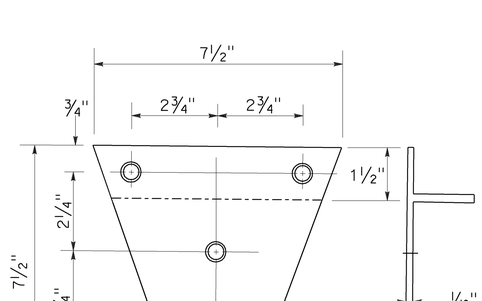


**BRACKET**

# RESET MAILBOX DETAIL

# CONSTRUCTION DETAILS

NO SCALE

**C-4**

STATE OF CALIFORNIA - DEPARTMENT OF TRANSPORTATION
DESIGN
FUNCTIONAL SUPERVISOR: ABDUL BAKER
CALCULATED-DESIGNED BY: ELTAHIR ATAELGEED
CHECKED BY: ABDUL BAKER
REVISED BY
DATE REVISED

LAST REVISION DATE PLOTTED => 22-DEC-2010
TIME PLOTTED => 11:27

BORDER LAST REVISED 7/2/2010
USERNAME => s115755
DGN FILE => 633740ga004.dgn
RELATIVE BORDER SCALE IS IN INCHES 0 1 2 3
UNIT 1476
PROJECT NUMBER & PHASE 06000201501

| Dist | COUNTY | ROUTE | POST MILES TOTAL PROJECT | SHEET No. | TOTAL SHEETS |
|---|---|---|---|---|---|
| 06 | Tul | 190 | 21.2/26.4 | 51 | 120 |

E. Ataelgeed 12-20-10
REGISTERED CIVIL ENGINEER DATE

12-20-10
PLANS APPROVAL DATE

Eltahir K. Ataelgeed
No. 76374
Exp 12-31-12
CIVIL
REGISTERED PROFESSIONAL ENGINEER
STATE OF CALIFORNIA

THE STATE OF CALIFORNIA OR ITS OFFICERS OR AGENTS SHALL NOT BE RESPONSIBLE FOR THE ACCURACY OR COMPLETENESS OF SCANNED COPIES OF THIS PLAN SHEET.

## CURVE DATA

| No. O | R | Δ | T | L |
|---|---|---|---|---|
| ① | 30.00′ | 66°46′17″ | 19.77′ | 34.96′ |
| ② | 200.00′ | 30°22′54″ | 54.30′ | 106.05′ |
| ③ | 30.00′ | 78°20′59″ | 24.45′ | 41.02′ |
| ④ | 120.00′ | 20°12′28″ | 21.38′ | 42.32′ |

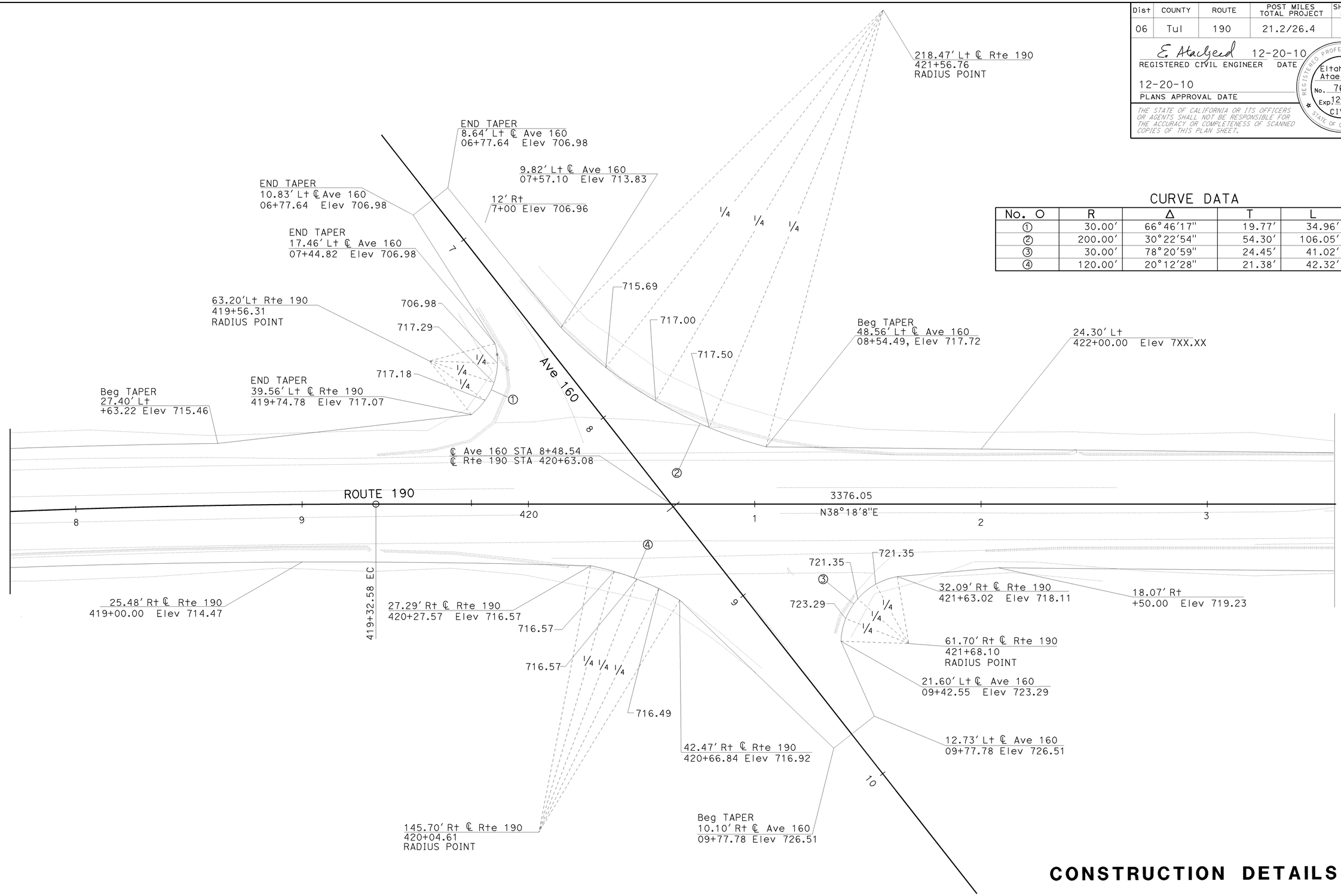


# CONSTRUCTION DETAILS

## C-5

SCALE: 1" = 20′

STATE OF CALIFORNIA - DEPARTMENT OF TRANSPORTATION
DESIGN
FUNCTIONAL SUPERVISOR: ABDUL BAKER
CALCULATED-DESIGNED BY: ELTAHIR ATAELGEED
CHECKED BY: ABDUL BAKER
REVISED BY
DATE REVISED

LAST REVISION DATE PLOTTED => 22-DEC-2010
TIME PLOTTED => 11:27
08-30-10

BORDER LAST REVISED 7/2/2010
USERNAME => s115755
DGN FILE => 633740ga005.dgn
RELATIVE BORDER SCALE IS IN INCHES 0 1 2 3
UNIT 1476
PROJECT NUMBER & PHASE 06000201501

| Dist | COUNTY | ROUTE | POST MILES TOTAL PROJECT | SHEET No. | TOTAL SHEETS |
|---|---|---|---|---|---|
| 06 | Tul | 190 | 21.2/26.4 | 52 | 120 |

E. Ataelgeed 12-20-10
REGISTERED CIVIL ENGINEER DATE

12-20-10
PLANS APPROVAL DATE

REGISTERED PROFESSIONAL ENGINEER
Eltahir K. Ataelgeed
No. 76374
Exp 12-31-12
CIVIL
STATE OF CALIFORNIA

THE STATE OF CALIFORNIA OR ITS OFFICERS OR AGENTS SHALL NOT BE RESPONSIBLE FOR THE ACCURACY OR COMPLETENESS OF SCANNED COPIES OF THIS PLAN SHEET.

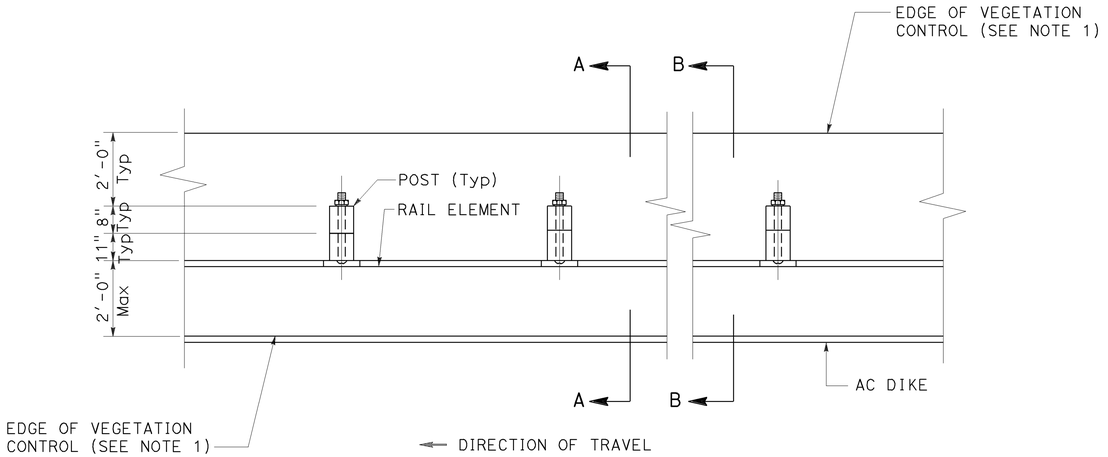


PLAN

## NOTES:

1. THE WIDTH OF THE VEGETATION BARRIER SHOWN IS TYPICAL 24 INCHES MAXIMUM, FROM RAILING IN FRONT AND FROM POST IN THE BACK. GRUBBED SMOOTH SURFACE FREE OF VEGETATION IS REQUIRED PRIOR TO INSTALLATION.
2. IF THERE IS AN EXISTING DIKE UNDER THE RAILING OR LESS THAN 24'' FROM THE FRONT OF THE RAILING, THE SEAMLESS COMPOSITE SHALL BE INSTALLED UP TO THE TOP 2 INCHES OF THE INSIDE WALL OF THE DIKE TO PROVIDE SOLID ANCHORAGE, AND PREVENT A GAP AT THE JUNCTION OF THE VEGETATION BARRIER AND DIKE.
3. WHERE PAVED SHOULDER EXISTS WITHIN 24'' IN FRONT OF THE RAILING, INSTALL VEGETATION CONTROL BARRIER UP TO THE EDGE OF PAVED SHOULDER. SEAMLESS ASPHALT COMPOSITE IS NOT INTENDED FOR VEHICLE TRAFFIC.
4. DIRECTION OF ADJACENT TRAFFIC INDICATED BY ←

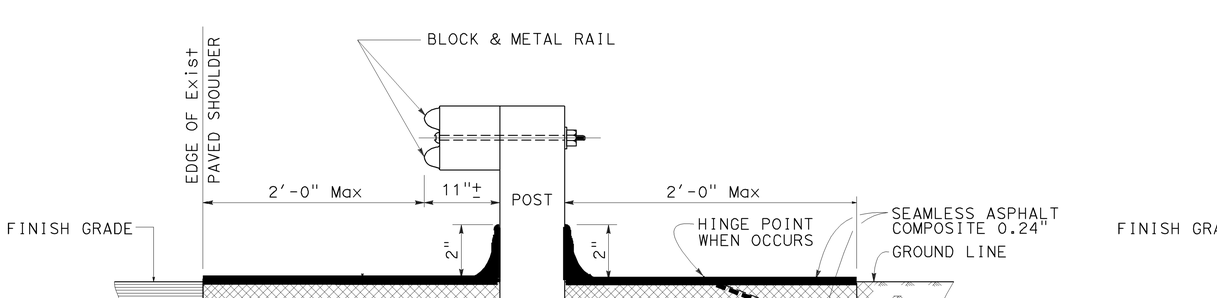


SECTION A-A

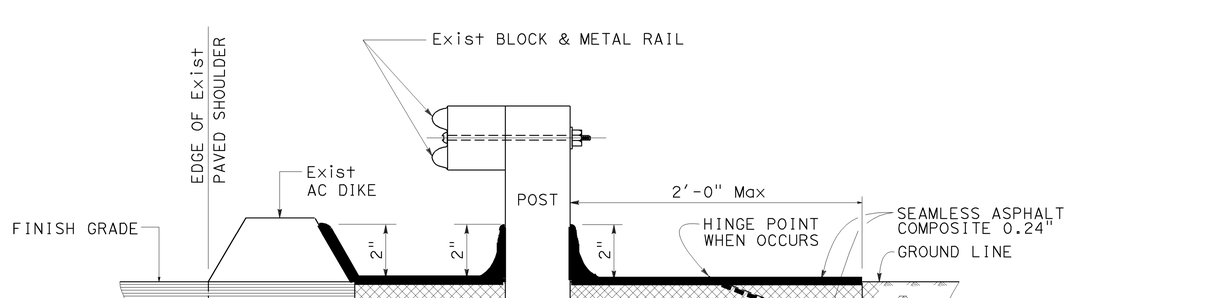


SECTION B-B

# CONSTRUCTION DETAILS

NO SCALE

C-6

REVISED BY | DATE REVISED
ELTAHIR ATAELGEED | ABDUL BAKER
CALCULATED-DESIGNED BY | CHECKED BY
FUNCTIONAL SUPERVISOR: ABDUL BAKER
STATE OF CALIFORNIA - DEPARTMENT OF TRANSPORTATION
DESIGN
Caltrans

LAST REVISION | DATE PLOTTED => 22-DEC-2010
08-30-10 | TIME PLOTTED => 11:27

| Dist | COUNTY | ROUTE | POST MILES TOTAL PROJECT | SHEET No. | TOTAL SHEETS |
|---|---|---|---|---|---|
| 06 | Tul | 190 | 21.2/26.4 | 53 | 120 |

E. Ataelgeed 12-20-10
REGISTERED CIVIL ENGINEER DATE

12-20-10
PLANS APPROVAL DATE

REGISTERED PROFESSIONAL ENGINEER
Eltahir K. Ataelgeed
No. 76374
Exp 12-31-12
CIVIL
STATE OF CALIFORNIA

THE STATE OF CALIFORNIA OR ITS OFFICERS OR AGENTS SHALL NOT BE RESPONSIBLE FOR THE ACCURACY OR COMPLETENESS OF SCANNED COPIES OF THIS PLAN SHEET.

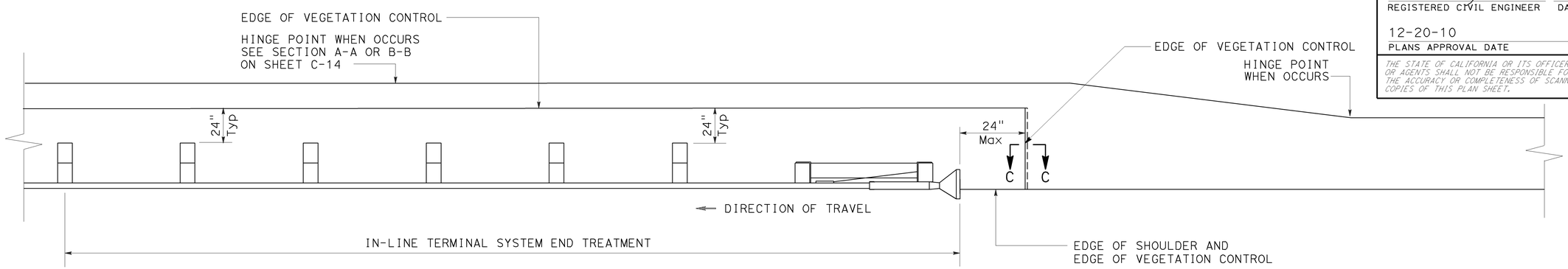


PLAN

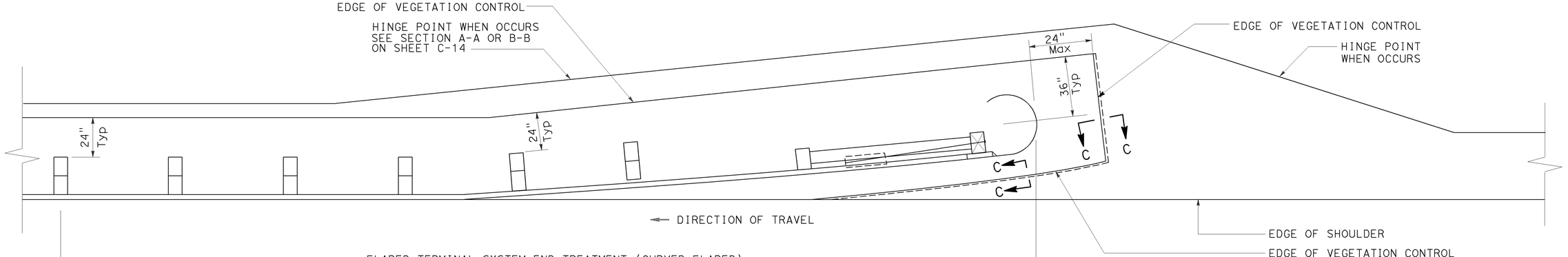


PLAN

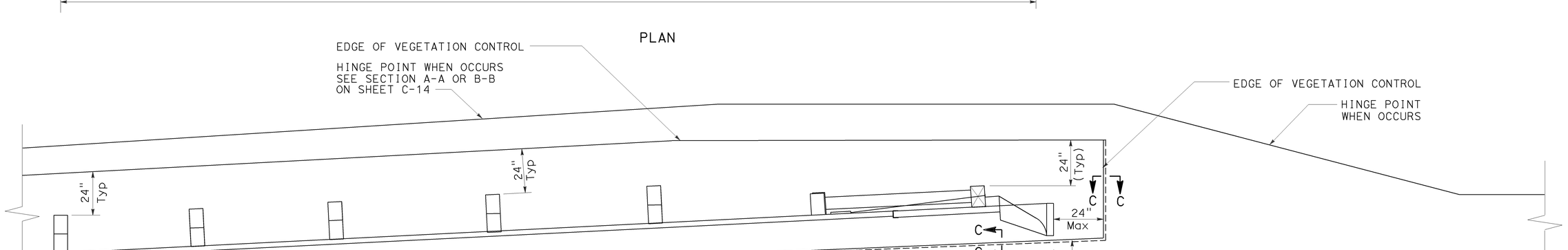


PLAN

# CONSTRUCTION DETAILS

NO SCALE

C-7

ELTAHIR ATAELGEED — DESIGNED BY
ABDUL BAKER — CALCULATED-DESIGNED BY
CHECKED BY
REVISED BY
DATE REVISED
ABDUL BAKER — FUNCTIONAL SUPERVISOR

STATE OF CALIFORNIA - DEPARTMENT OF TRANSPORTATION
DESIGN
Caltrans

LAST REVISION | DATE PLOTTED => 22-DEC-2010
08-30-10 | TIME PLOTTED => 11:27

BORDER LAST REVISED 7/2/2010
USERNAME => s115755
DGN FILE => 633740ga007.dgn
RELATIVE BORDER SCALE IS IN INCHES 0 1 2 3
UNIT 1476
PROJECT NUMBER & PHASE 06000201501

| Dist | COUNTY | ROUTE | POST MILES TOTAL PROJECT | SHEET No. | TOTAL SHEETS |
|---|---|---|---|---|---|
| 06 | Tul | 190 | 21.2/26.4 | 54 | 120 |

E. Ataelgeed 12-20-10
REGISTERED CIVIL ENGINEER DATE

12-20-10
PLANS APPROVAL DATE

REGISTERED PROFESSIONAL ENGINEER
Eltahir K. Ataelgeed
No. 76374
Exp 12-31-12
CIVIL
STATE OF CALIFORNIA

THE STATE OF CALIFORNIA OR ITS OFFICERS OR AGENTS SHALL NOT BE RESPONSIBLE FOR THE ACCURACY OR COMPLETENESS OF SCANNED COPIES OF THIS PLAN SHEET.

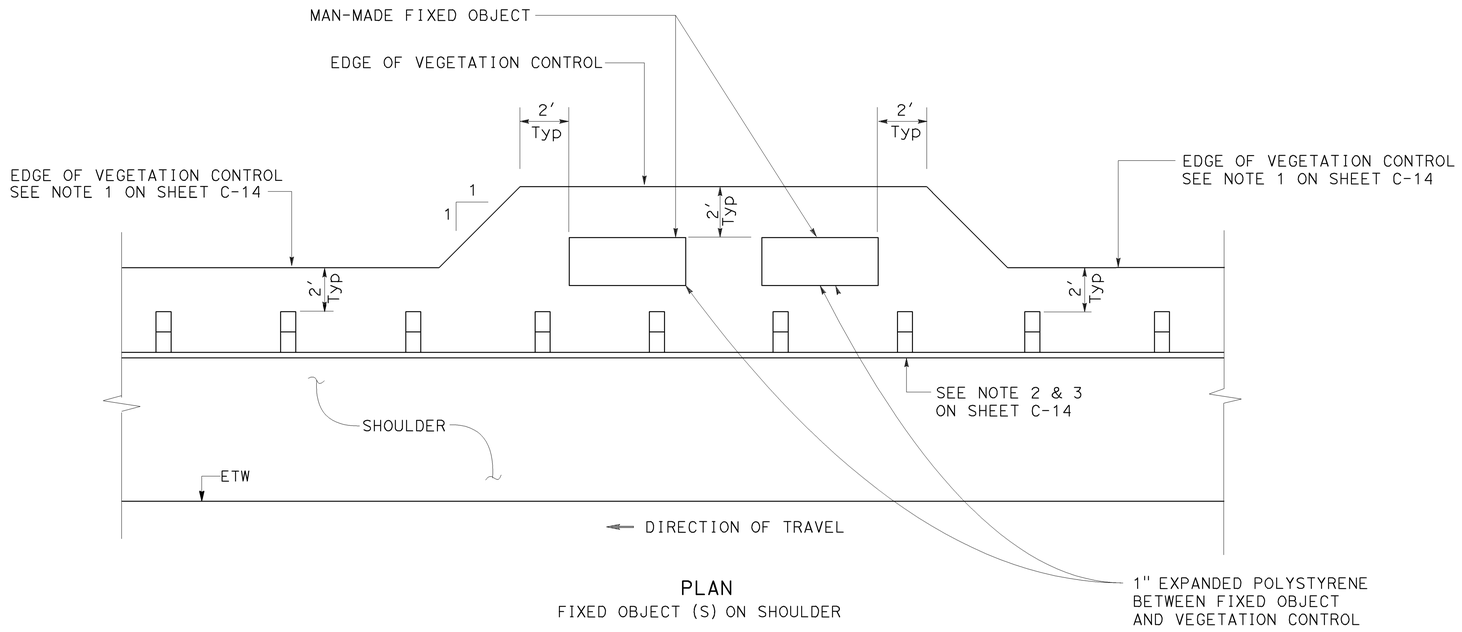


PLAN
FIXED OBJECT (S) ON SHOULDER

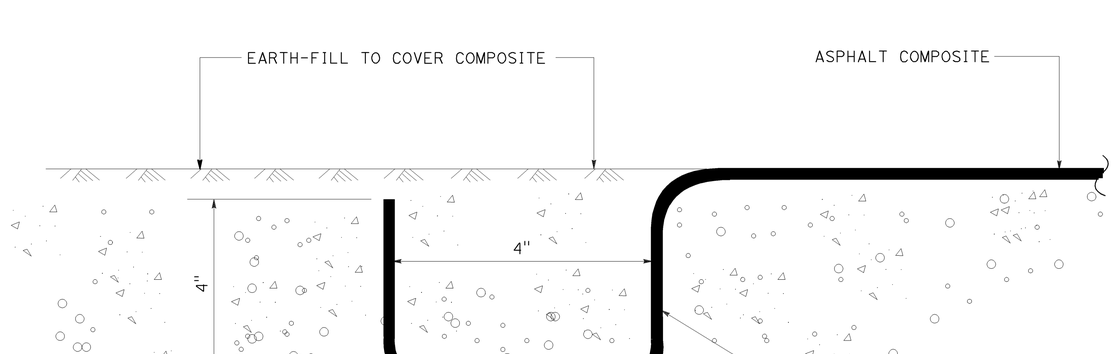


SECTION C-C
EDGE - KEY DETAIL

# CONSTRUCTION DETAILS

NO SCALE

C-8

CALCULATED-DESIGNED BY
CHECKED BY
REVISED BY
DATE REVISED
ELTAHIR ATAELGEED
ABDUL BAKER
FUNCTIONAL SUPERVISOR
ABDUL BAKER
STATE OF CALIFORNIA - DEPARTMENT OF TRANSPORTATION
DESIGN
Caltrans

LAST REVISION 08-30-10
DATE PLOTTED => 22-DEC-2010
TIME PLOTTED => 11:27

| Dist | COUNTY | ROUTE | POST MILES TOTAL PROJECT | SHEET No. | TOTAL SHEETS |
|---|---|---|---|---|---|
| 06 | Tul | 190 | 21.2/26.4 | 55 | 120 |

E. Ataelgeed 12-20-10
REGISTERED CIVIL ENGINEER DATE

12-20-10
PLANS APPROVAL DATE

Eltahir K. Ataelgeed No. 76374 Exp 12-31-12 CIVIL — REGISTERED PROFESSIONAL ENGINEER — STATE OF CALIFORNIA

THE STATE OF CALIFORNIA OR ITS OFFICERS OR AGENTS SHALL NOT BE RESPONSIBLE FOR THE ACCURACY OR COMPLETENESS OF SCANNED COPIES OF THIS PLAN SHEET.

NOTES:

NOTES:

1. SEE MANUFACTURER PLANS FOR ADDITIONAL DETAILS AND DIMENSIONS NOT SHOWN.
2. SYSTEM TO BE INSTALLED PER MANUFACTURER SPECIFICATIONS.
3. ONLY TIGHTEN THE CABLE ASSEMBLIES USING THE NUTS AT THE CABLE BRACKET (SEE DETAIL D). DO NOT TIGHTEN THE CABLES AT THE FRONT OF THE GROUND ANCHOR.
4. WHEN DRIVING STEEL POST, ENSURE THAT A DRIVING CAP WITH TIMBER OR PLASTIC INSERT IS USED TO PREVENT DAMAGE TO THE GALVANIZING TO THE TOP OF THE STEEL POST.

2. FOR MAILBOX RESET SEE SHEETS C-3, C-4 AND Q-1

TIGHTEN CABLE ASSEMBLIES UNTIL THEY ARE NOT VISIBLY SAGGING BETWEEN STEEL POSTS (THERE IS NO TORQUE REQUIREMENT FOR THE CABLES)

FOR ACCURATE FROM OF WAY CONTACT OF ENGINEERING AT THE DISTRICT OFFICE

ATTACH SLIDER BRACKET PART OF ITEM 1 TO END OF GUARDRAIL PANEL AS SHOWN, ENSURE THAT HEX NUTS ARE AWAY FROM TRAFFIC SIDE

SLIDE GUARDRAIL PANEL PART OF ITEM 1 OVER END OF GUARDRAIL 1 SECURE IN PLACE USING HARDWARE PROVIDED, ENSURE THAT HEX NUTS ARE ON TRAFFIC SIDE

REMOVED ANGLED BRACKET WHEN SLIDING GUARDRAIL 1 WITH SLIDER PANEL OVER GUARDRAIL 2, REATTACH ANGLE BRACKET

DETAIL B1

SLIDER PANEL ON TRAFFIC SIDE
SLIDER BRACKET ON INSIDE OF GUARDRAIL PANEL

USE GUARDRAIL HARDWARE PROVIDED PART OF ITEM 3 TO SECURE PLASTIC BLOCK TO STEEL POST GUARDRAIL IS NOT BOLTED TO THE PLASTIC BLOCK OR STEEL POST

STEEL POST AND PLASTIC BLOCK PART OF ITEM 4

DETAIL B2

CABLE BRACKET PART OF ITEM 1

DETAIL D

PASS 2 CABLE ASSEMBLIES BETWEEN GUARDRAIL PANELS AND PLASTIC BLOCKS

ENSURE THAT HEX NUTS ARE ON INSIDE OF GUARDRAIL PANEL

0° TO 6°

0' TO 4'- 0"

## FLARED TERMINAL SYSTEM DETAIL

USE A PRY BAR TURN FRICTION PLATE PART OF ITEM 1 COUNTER CLOCKWISE UNTIL IS COMPLETELY AGAINST LOCKING MECHANISM, SECURE IN PLACE USING 4 BOLTS PART OF ITEM 2 ON SIDE OF IMPACT HEAD WELDMENT

SEE DETAIL A1 & A2

SEE DETAIL C

SEE DETAIL B1 & B2

PASS CABLE ASSEMBLY UNDER THE STEEL STRAP ON THE GROUND STRUT AND FORWARD THROUGH THE HOLES AT FRONT END OF GROUND STRUT. THEN PASS CABLE ASSEMBLY THROUGH LOWER HOLE IN IMPACT HEAD WELDMENT AND THROUGH FRICTION PLATE AND OUT THE BACK SIDE OF THE IMPACT HEAD. (REPEAT FOR SECOND CABLE ASSEMBLY TO PASS THROUGH UPPER HOLE IN IMPACT HEAD WELDMENT)

NO PLASTIC BLOCK AT STEEL POST 1

8 1/2"

SEE DETAIL D

OFFSET STEEL POST 3 1 1/2" AWAY FROM TRAFFIC TO MAKE IT EASIER TO PUSH GUARDRAIL WITH SLIDER PANEL OVER GUARDRAIL 2

OFFSET STEEL POST 2 AWAY FROM TRAFFIC PER DIMENSION SHOWN

43'-4"

WHEN MOUNTING IMPACT HEAD WELDMENT TO GUARDRAIL ENSURE THAT HEX NUTS PART OF ITEM 3 ARE ON TRAFFIC SIDE

USE PLASTIC BLOCKS TO HOLD HEAD WELDMENT UP WHILE BOLTING IT TO THE GUARDRAIL PANEL AND STEEL POST 1

DETAIL A1

## IN-LINE TERMINAL SYSTEM DETAIL

25'

6'-3"

5'-3 13/16"

2'-3 9/16"

OG

3 1/8" Max

3'-6 9/16"

5'-3 1/4"

5'-8 1/8"

STEEL POST 6

STEEL POST 5

STEEL POST 4

STEEL POST 3

STEEL POST 2

STEEL POST 1

SOIL ANCHOR

SECTION B-B

8 SHEAR BOLTS PART OF ITEM 2

STEEL POST & PLASTIC BLOCK PART OF ITEM 4

DETAIL C

SQUARE WASHER ON THIS SIDE ROUND WASHER OTHER SIDE PART OF ITEM 2

4 RIVET NYLON TREE PART OF ITEM 2

DETAIL A2

## TERMINAL SYSTEM (TYPE X-TENSION) DETAIL

LEGEND:

| ITEM | DESCRIPTION |
|---|---|
| 1 | TERMINAL SYSTEM (TYPE X-TENSION) COMPONENT KIT |
| 2 | TERMINAL SYSTEM (TYPE X-TENSION) HARDWARE KIT |
| 3 | TERMINAL SYSTEM (TYPE X-TENSION) SYSTEM HARDWARE KIT |
| 4 | TERMINAL SYSTEM (TYPE X-TENSION) GUARDRAIL COMPONENT KIT 3 |
| 5 | TERMINAL SYSTEM (TYPE X-TENSION) I-BEAM POST |

# CONSTRUCTION DETAILS C-9

NO SCALE

REVISED BY | DATE REVISED

CALCULATED-DESIGNED BY: ELTAHIR ATAELGEED
CHECKED BY: ABDUL BAKER
FUNCTIONAL SUPERVISOR: ABDUL BAKER

STATE OF CALIFORNIA - DEPARTMENT OF TRANSPORTATION
DESIGN

LAST REVISION | DATE PLOTTED => 22-DEC-2010 | TIME PLOTTED => 11:27 | 08-30-10

BORDER LAST REVISED 7/2/2010 | USERNAME => s115755 | DGN FILE => 633740ga009.dgn | RELATIVE BORDER SCALE IS IN INCHES 0 1 2 3 | UNIT 1476 | PROJECT NUMBER & PHASE 06000201501

| Dist | COUNTY | ROUTE | POST MILES TOTAL PROJECT | SHEET No. | TOTAL SHEETS |
|---|---|---|---|---|---|
| 06 | Tul | 190 | 21.2/26.4 | 56 | 120 |

E. Ataelgeed 12-20-10
REGISTERED CIVIL ENGINEER DATE

12-20-10
PLANS APPROVAL DATE

REGISTERED PROFESSIONAL ENGINEER
Eltahir K. Ataelgeed
No. 76374
Exp 12-31-12
CIVIL
STATE OF CALIFORNIA

THE STATE OF CALIFORNIA OR ITS OFFICERS OR AGENTS SHALL NOT BE RESPONSIBLE FOR THE ACCURACY OR COMPLETENESS OF SCANNED COPIES OF THIS PLAN SHEET.

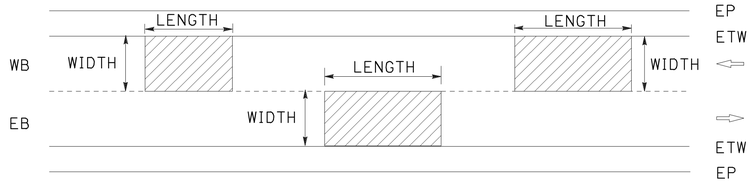


NOTE: FOR LOCATIONS, DEPTHS, LENGTHS, AND WIDTHS, SEE QUANTITY SHEETS.

# REPLACE AC SURFACING

ROUTE 190 PM 21.2 TO PM 26.4

## AC SURFACING LIMITS

| DIRECTION | BEGIN POST MILE | END POST MILE | WIDTH LF |
|---|---|---|---|
| EASTBOUND | 21.28 | 21.40 | 12.00 |
| | 21.43 | 21.45 | 12.00 |
| | 21.61 | 21.71 | 12.00 |
| | 21.73 | 21.75 | 12.00 |
| | 21.96 | 22.35 | 12.00 |
| | 22.37 | 23.78 | 12.00 |
| | 23.86 | 24.04 | 12.00 |
| | 24.12 | 24.24 | 12.00 |
| | 24.35 | 24.37 | 12.00 |
| | 24.40 | 24.43 | 12.00 |
| | 24.10 | 24.58 | 12.00 |
| | 24.69 | 24.87 | 12.00 |
| | 25.28 | 25.36 | 12.00 |
| | 25.80 | 26.10 | 12.00 |
| | 26.14 | 26.17 | 12.00 |
| | 26.40 | 26.42 | 12.00 |

| DIRECTION | BEGIN POST MILE | END POST MILE | WIDTH LF |
|---|---|---|---|
| WESTBOUND | 21.02 | 21.01 | 12.00 |
| | 21.09 | 21.07 | 12.00 |
| | 21.29 | 21.27 | 12.00 |
| | 21.43 | 21.31 | 12.00 |
| | 21.52 | 21.48 | 12.00 |
| | 21.75 | 21.57 | 12.00 |
| | 21.99 | 21.96 | 12.00 |
| | 22.17 | 22.01 | 12.00 |
| | 22.35 | 22.21 | 12.00 |
| | 23.78 | 22.44 | 12.00 |
| | 23.95 | 23.90 | 12.00 |
| | 24.04 | 24.00 | 12.00 |
| | 24.49 | 24.33 | 12.00 |
| | 24.57 | 24.55 | 12.00 |
| | 25.99 | 25.95 | 12.00 |
| | 26.39 | 26.37 | 12.00 |

# CONSTRUCTION DETAILS

NO SCALE

C-10

CALCULATED-DESIGNED BY ELTAHIR ATAELGEED
CHECKED BY ABDUL BAKER
REVISED BY
DATE REVISED
FUNCTIONAL SUPERVISOR ABDUL BAKER
STATE OF CALIFORNIA - DEPARTMENT OF TRANSPORTATION
Caltrans® DESIGN

LAST REVISION DATE PLOTTED => 22-DEC-2010
08-30-10 TIME PLOTTED => 11:27

BORDER LAST REVISED 7/2/2010
USERNAME => s115755
DGN FILE => 633740ga010.dgn
RELATIVE BORDER SCALE IS IN INCHES 0 1 2 3
UNIT 1476
PROJECT NUMBER & PHASE 06000201501

NOTES:

1. ALL STATIONS, OFFSETS AND CORRESPONDING SHOWN LEADER LINES ARE TO THE FLOW LINE AT CURB UNLESS OTHERWISE SHOWN.

2. ALL DRAINAGE STRUCTURES ARE RADIAL TO THE REFERENCED ALIGNMENT UNLESS OTHERWISE SHOWN.

| Dist | COUNTY | ROUTE | POST MILES TOTAL PROJECT | SHEET No. | TOTAL SHEETS |
|---|---|---|---|---|---|
| 06 | Tul | 190 | 21.2/26.4 | 57 | 120 |

E. Ataelgeed 12-20-10
REGISTERED CIVIL ENGINEER DATE

12-20-10
PLANS APPROVAL DATE

Eltahir K. Ataelgeed No. 76374 Exp. 12-31-12 CIVIL — REGISTERED PROFESSIONAL ENGINEER — STATE OF CALIFORNIA

THE STATE OF CALIFORNIA OR ITS OFFICERS OR AGENTS SHALL NOT BE RESPONSIBLE FOR THE ACCURACY OR COMPLETENESS OF SCANNED COPIES OF THIS PLAN SHEET.

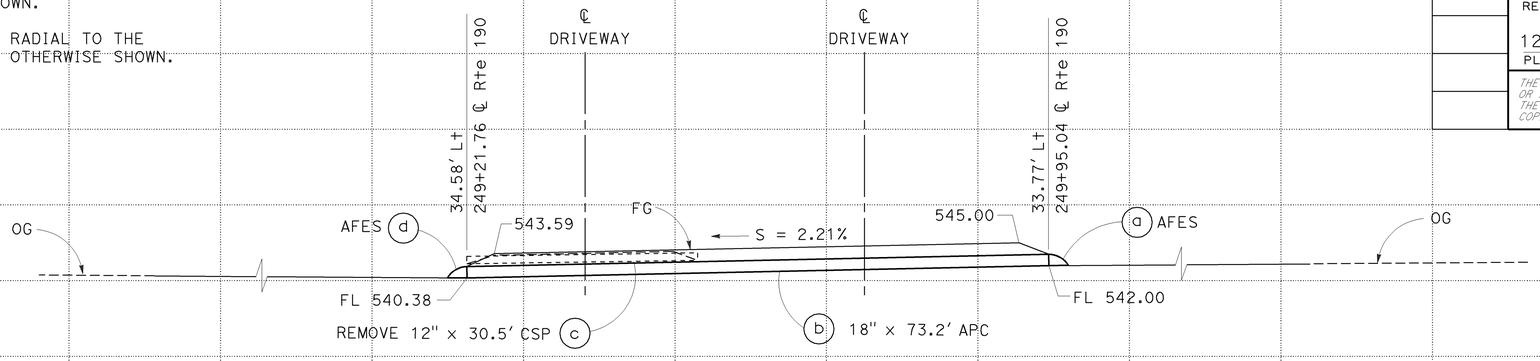


## DRAINAGE SYSTEM No. 1

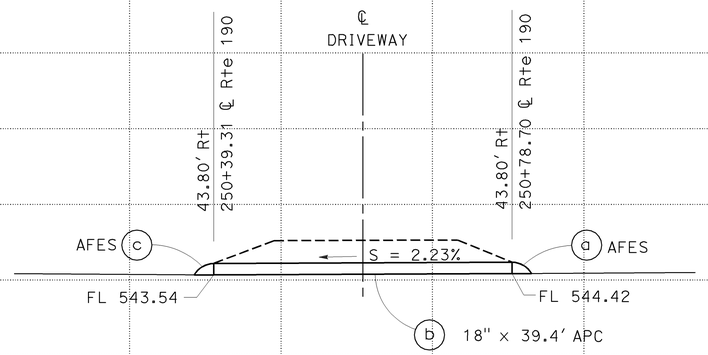


## DRAINAGE SYSTEM No. 2

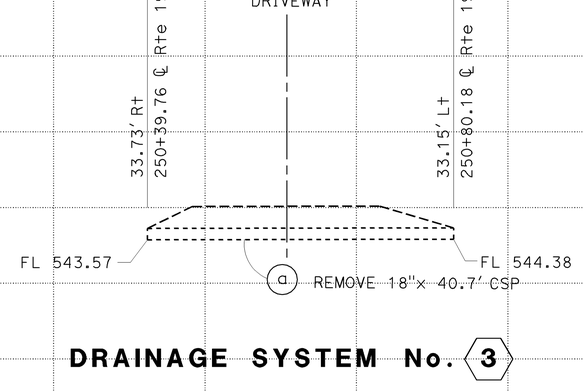


## DRAINAGE SYSTEM No. 3

# DRAINAGE PROFILE
# DP-1

SCALE: Horiz 1"=10'
Vert 1"=10'

STATE OF CALIFORNIA - DEPARTMENT OF TRANSPORTATION
Caltrans® DESIGN

CALCULATED-DESIGNED BY: MARCO NABAVI
CHECKED BY: ABDUL BAKER
FUNCTIONAL SUPERVISOR: ABDUL BAKER
REVISED BY
DATE REVISED

LAST REVISION
DATE PLOTTED => 22-DEC-2010
TIME PLOTTED => 11:27
08-30-10

BORDER LAST REVISED 7/2/2010
USERNAME => s115755
DGN FILE => 633740ib001.dgn
RELATIVE BORDER SCALE IS IN INCHES 0 1 2 3
UNIT 1476
PROJECT NUMBER & PHASE 06000201501

| Dist | COUNTY | ROUTE | POST MILES TOTAL PROJECT | SHEET No. | TOTAL SHEETS |
|---|---|---|---|---|---|
| 06 | Tul | 190 | 21.2/26.4 | 58 | 120 |

E. Ataelgeed 12-20-10
REGISTERED CIVIL ENGINEER DATE

12-20-10
PLANS APPROVAL DATE

Eltahir K. Ataelgeed No. 76374 Exp 12-31-12 CIVIL — REGISTERED PROFESSIONAL ENGINEER — STATE OF CALIFORNIA

THE STATE OF CALIFORNIA OR ITS OFFICERS OR AGENTS SHALL NOT BE RESPONSIBLE FOR THE ACCURACY OR COMPLETENESS OF SCANNED COPIES OF THIS PLAN SHEET.

NOTES:

1. ALL STATIONS, OFFSETS AND CORRESPONDING SHOWN LEADER LINES ARE TO THE FLOW LINE AT CURB UNLESS OTHERWISE SHOWN.
2. ALL DRAINAGE STRUCTURES ARE RADIAL TO THE REFERENCED ALIGNMENT UNLESS OTHERWISE SHOWN.
3. SEE Std PLAN D89 FOR SPACING BETWEEN THE HEADWALL OPENING, S/2 OR MATCH Exist.

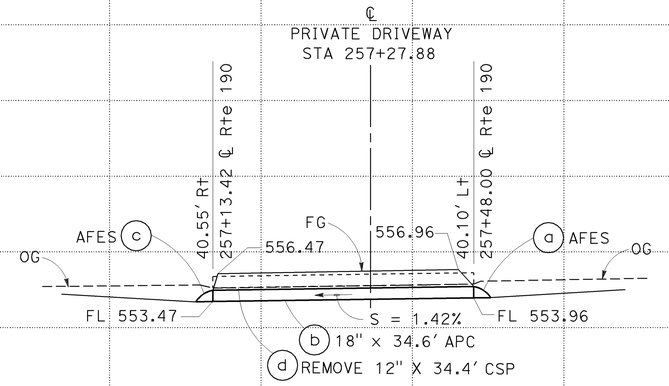


## DRAINAGE SYSTEM No. 4

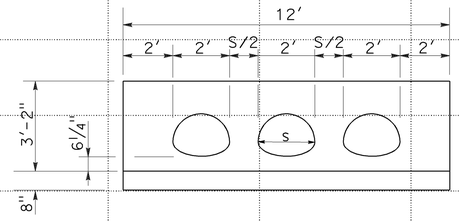


SECTION A-A
NO SCALE

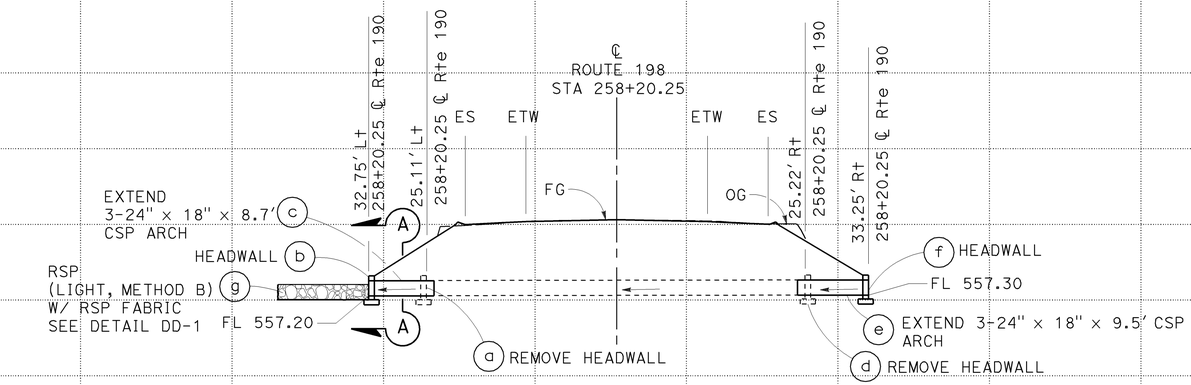


## DRAINAGE SYSTEM No. 5

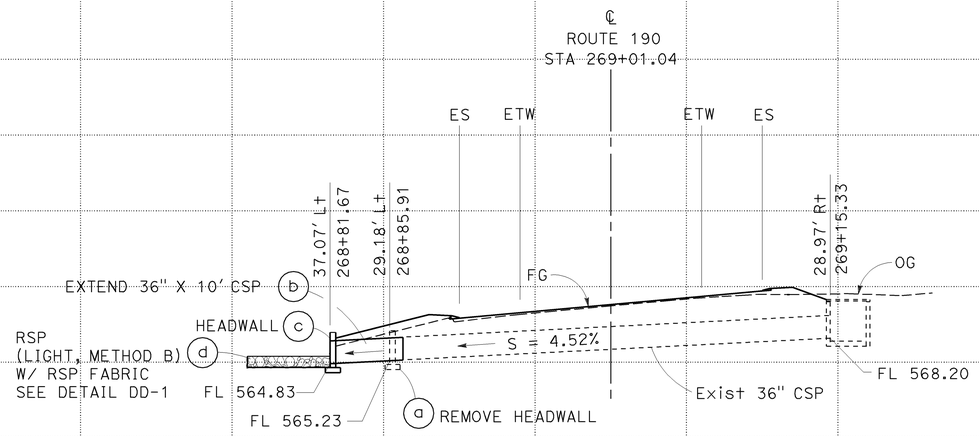


## DRAINAGE SYSTEM No. 6

# DRAINAGE PROFILE
# DP-2

SCALE: Horiz 1"=10'
Vert 1"=10'

CALCULATED-DESIGNED BY: MARCO NABAVI
CHECKED BY: ABDUL BAKER
FUNCTIONAL SUPERVISOR: ABDUL BAKER
REVISED BY
DATE REVISED
STATE OF CALIFORNIA - DEPARTMENT OF TRANSPORTATION
DESIGN
Caltrans

LAST REVISION DATE PLOTTED => 22-DEC-2010
TIME PLOTTED => 11:27
08-30-10

NOTES:

1. ALL STATIONS, OFFSETS AND CORRESPONDING SHOWN LEADER LINES ARE TO THE FLOW LINE AT CURB UNLESS OTHERWISE SHOWN.

2. ALL DRAINAGE STRUCTURES ARE RADIAL TO THE REFERENCED ALIGNMENT UNLESS OTHERWISE SHOWN.

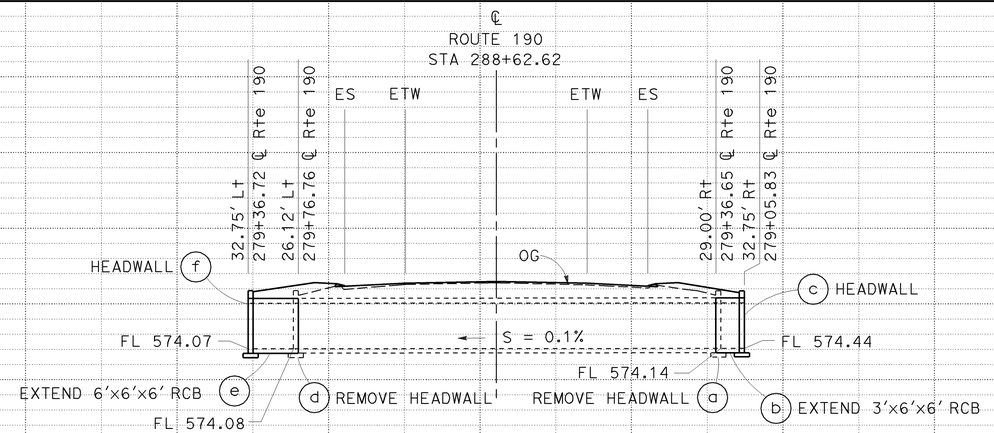


## DRAINAGE SYSTEM No. 7

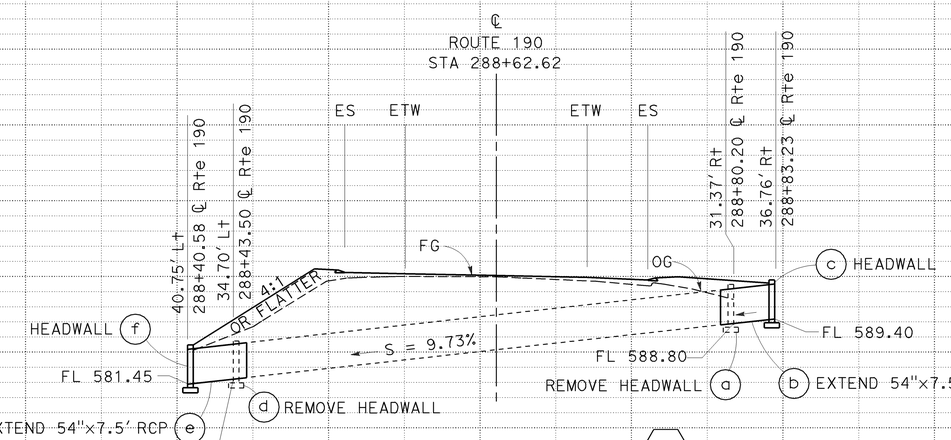


## DRAINAGE SYSTEM No. 8

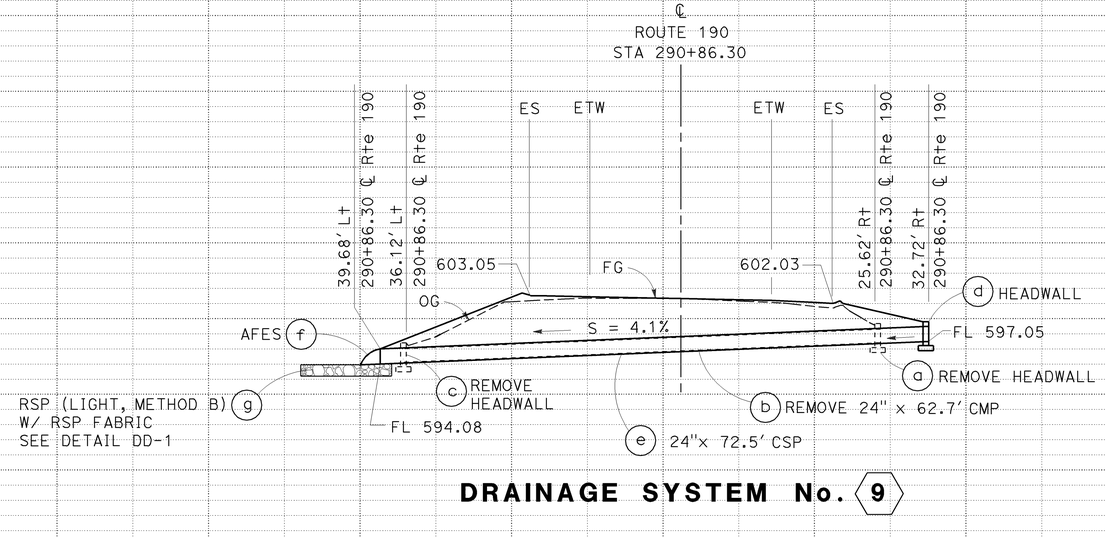


## DRAINAGE SYSTEM No. 9

# DRAINAGE PROFILE
# DP-3

SCALE: Horiz 1"=10'
Vert 1"=10'

| Dist | COUNTY | ROUTE | POST MILES TOTAL PROJECT | SHEET No. | TOTAL SHEETS |
|---|---|---|---|---|---|
| 06 | Tul | 190 | 21.2/26.4 | 59 | 120 |

E. Ataelgeed 12-20-10
REGISTERED CIVIL ENGINEER DATE

Eltahir K. Ataelgeed No. 76374 Exp. 12-31-12 CIVIL
REGISTERED PROFESSIONAL ENGINEER STATE OF CALIFORNIA

12-20-10
PLANS APPROVAL DATE

THE STATE OF CALIFORNIA OR ITS OFFICERS OR AGENTS SHALL NOT BE RESPONSIBLE FOR THE ACCURACY OR COMPLETENESS OF SCANNED COPIES OF THIS PLAN SHEET.

REVISED BY | DATE REVISED
MARCO NABAVI | ABDUL BAKER
CALCULATED-DESIGNED BY | CHECKED BY
FUNCTIONAL SUPERVISOR: ABDUL BAKER

STATE OF CALIFORNIA - DEPARTMENT OF TRANSPORTATION
Caltrans® DESIGN

LAST REVISION | DATE PLOTTED => 22-DEC-2010
08-30-10 | TIME PLOTTED => 11:27

BORDER LAST REVISED 7/2/2010 | USERNAME => s115755 | DGN FILE => 633740ib003.dgn | RELATIVE BORDER SCALE IS IN INCHES 0 1 2 3 | UNIT 1476 | PROJECT NUMBER & PHASE 06000201501

NOTES:

1. ALL STATIONS, OFFSETS AND CORRESPONDING SHOWN LEADER LINES ARE TO THE FLOW LINE AT CURB UNLESS OTHERWISE SHOWN.

2. ALL DRAINAGE STRUCTURES ARE RADIAL TO THE REFERENCED ALIGNMENT UNLESS OTHERWISE SHOWN.

| Dist | COUNTY | ROUTE | POST MILES TOTAL PROJECT | SHEET No. | TOTAL SHEETS |
|---|---|---|---|---|---|
| 06 | Tul | 190 | 21.2/26.4 | 60 | 120 |

E. Ataelgeed 12-20-10
REGISTERED CIVIL ENGINEER DATE

12-20-10
PLANS APPROVAL DATE

Eltahir K. Ataelgeed No. 76374 Exp. 12-31-12 CIVIL — REGISTERED PROFESSIONAL ENGINEER — STATE OF CALIFORNIA

THE STATE OF CALIFORNIA OR ITS OFFICERS OR AGENTS SHALL NOT BE RESPONSIBLE FOR THE ACCURACY OR COMPLETENESS OF SCANNED COPIES OF THIS PLAN SHEET.

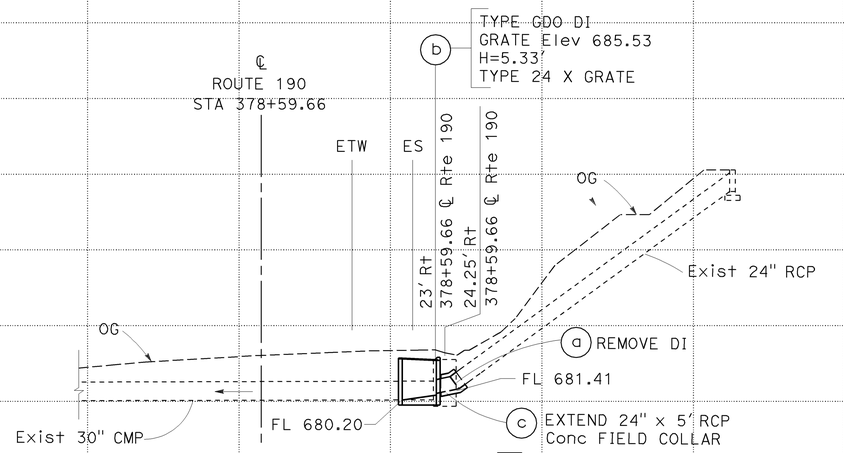


## DRAINAGE SYSTEM No. 10

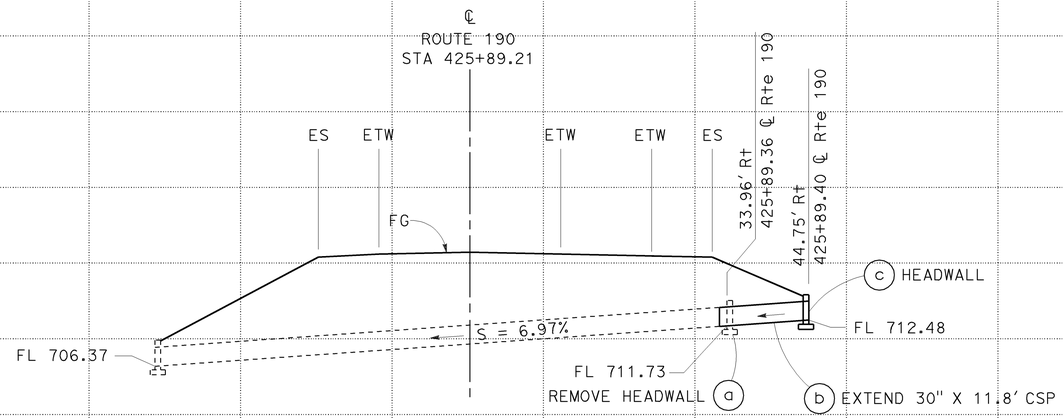


## DRAINAGE SYSTEM No. 11

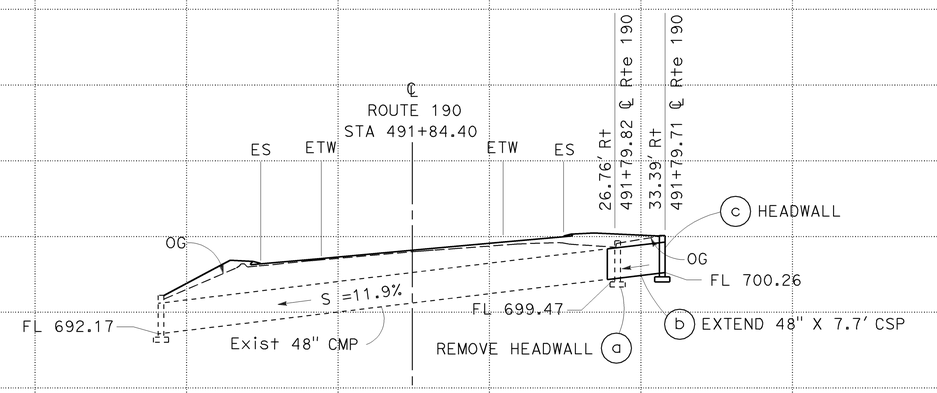


## DRAINAGE SYSTEM No. 12

SCALE: Horiz 1"=10'
Vert 1"=10'

# DRAINAGE PROFILE
# DP-4

STATE OF CALIFORNIA - DEPARTMENT OF TRANSPORTATION
Caltrans® DESIGN
FUNCTIONAL SUPERVISOR: ABDUL BAKER
CALCULATED-DESIGNED BY: MARCO NABAVI
CHECKED BY: ALTAHIR ATAELGEED
REVISED BY
DATE REVISED

LAST REVISION | DATE PLOTTED => 22-DEC-2010 | 08-30-10 | TIME PLOTTED => 11:27

BORDER LAST REVISED 7/2/2010 | USERNAME => s115755 | DGN FILE => 633740ib004.dgn | RELATIVE BORDER SCALE IS IN INCHES 0 1 2 3 | UNIT 1476 | PROJECT NUMBER & PHASE 06000201501

NOTES:

1. ALL STATIONS, OFFSETS AND CORRESPONDING SHOWN LEADER LINES ARE TO THE FLOW LINE AT CURB UNLESS OTHERWISE SHOWN.

2. ALL DRAINAGE STRUCTURES ARE RADIAL TO THE REFERENCED ALIGNMENT UNLESS OTHERWISE SHOWN.

| Dist | COUNTY | ROUTE | POST MILES TOTAL PROJECT | SHEET No. | TOTAL SHEETS |
|---|---|---|---|---|---|
| 06 | Tul | 190 | 21.2/26.4 | 61 | 120 |

E. Ataelgeed 12-20-10
REGISTERED CIVIL ENGINEER DATE

12-20-10
PLANS APPROVAL DATE

Eltahir K. Ataelgeed No. 76374 Exp. 12-31-12 CIVIL
REGISTERED PROFESSIONAL ENGINEER — STATE OF CALIFORNIA

THE STATE OF CALIFORNIA OR ITS OFFICERS OR AGENTS SHALL NOT BE RESPONSIBLE FOR THE ACCURACY OR COMPLETENESS OF SCANNED COPIES OF THIS PLAN SHEET.

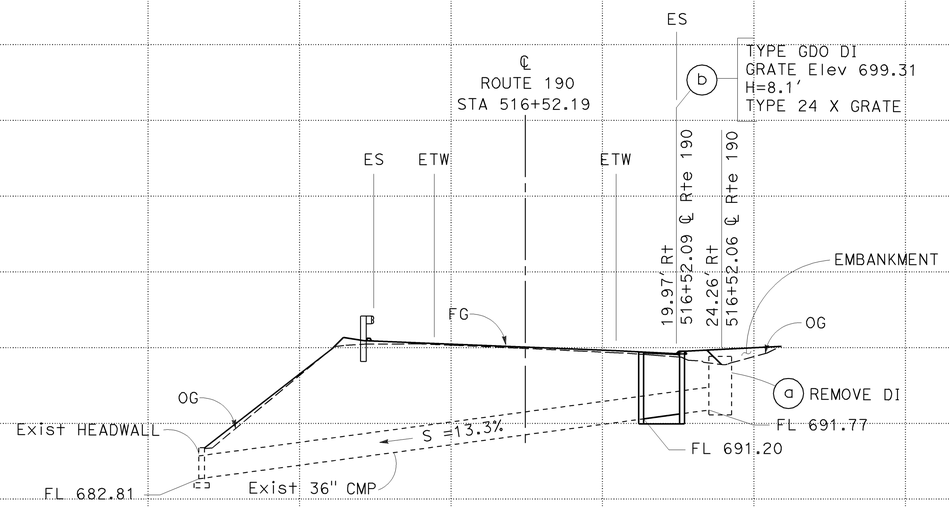


## DRAINAGE SYSTEM No. 13

SCALE: Horiz 1"=10'
Vert 1"=10'

## DRAINAGE PROFILE DP-5

REVISED BY | DATE REVISED
MARCO NABAVI | ALTAHIR ATAELGEED
CALCULATED-DESIGNED BY | CHECKED BY
FUNCTIONAL SUPERVISOR: ABDUL BAKER
STATE OF CALIFORNIA - DEPARTMENT OF TRANSPORTATION
Caltrans® DESIGN

LAST REVISION | DATE PLOTTED => 22-DEC-2010 | TIME PLOTTED => 11:27
08-30-10

BORDER LAST REVISED 7/2/2010 | USERNAME => s115755 | DGN FILE => 633740ib005.dgn | RELATIVE BORDER SCALE IS IN INCHES 0 1 2 3 | UNIT 1476 | PROJECT NUMBER & PHASE 06000201501

| Dist | COUNTY | ROUTE | POST MILES TOTAL PROJECT | SHEET No. | TOTAL SHEETS |
|---|---|---|---|---|---|
| 06 | Tul | 190 | 21.2/26.4 | 62 | 120 |

E. Ataelgeed 12-20-10
REGISTERED CIVIL ENGINEER DATE

12-20-10
PLANS APPROVAL DATE

Eltahir K. Ataelgeed No. 76374 Exp. 12-31-12 CIVIL — REGISTERED PROFESSIONAL ENGINEER — STATE OF CALIFORNIA

THE STATE OF CALIFORNIA OR ITS OFFICERS OR AGENTS SHALL NOT BE RESPONSIBLE FOR THE ACCURACY OR COMPLETENESS OF SCANNED COPIES OF THIS PLAN SHEET.

## NOTES:

1. THE ROCK MATERIAL AND PLACEMENT METHOD SHALL CONFORM TO THE GRADING "LIGHT FOR METHOD B".

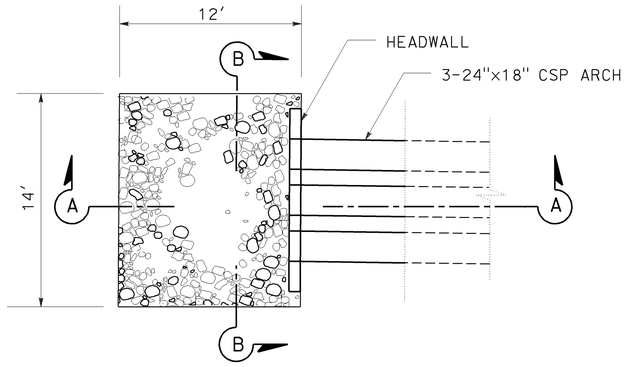


PLAN
RSP AT CROSS CULVERT OUTLET
DRAINAGE SYSTEM # 5

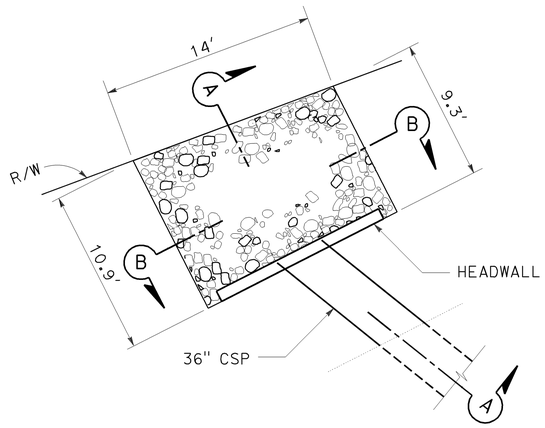


PLAN
RSP AT CROSS CULVERT OUTLET
DRAINAGE SYSTEM # 6

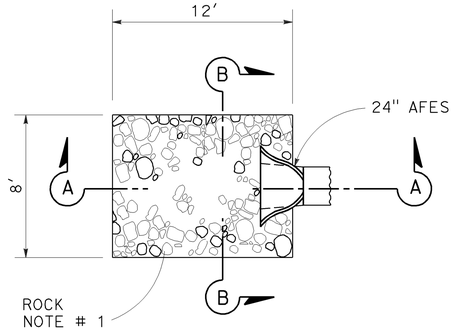


PLAN
RSP AT CROSS CULVERT OUTLET
DRAINAGE SYSTEM # 8

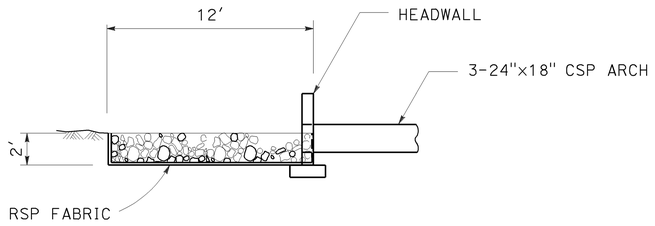


SECTION A-A

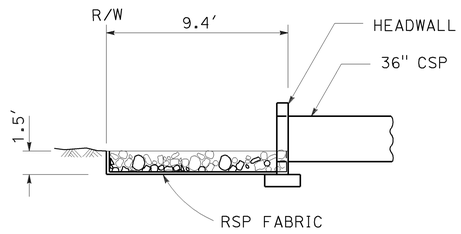


SECTION A-A

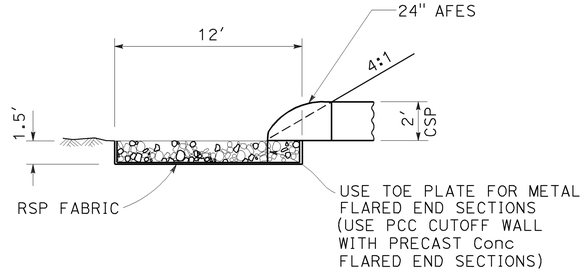


SECTION A-A

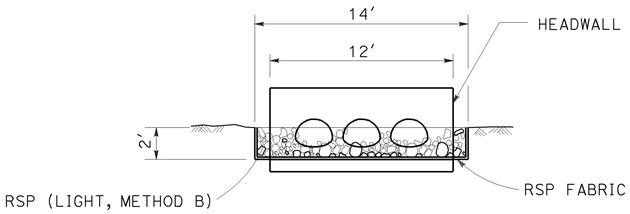


SECTION B-B

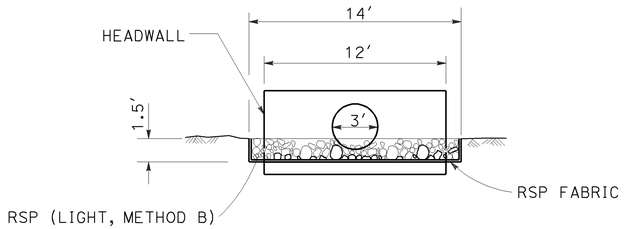


SECTION B-B

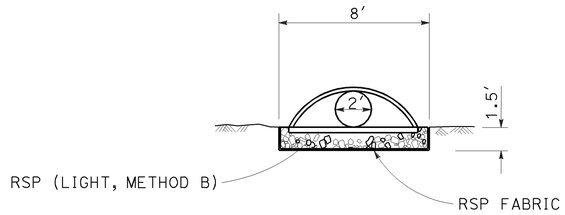


SECTION B-B

# DRAINAGE DETAILS
# DD-1

NO SCALE

STATE OF CALIFORNIA - DEPARTMENT OF TRANSPORTATION
DESIGN
Caltrans
CALCULATED-DESIGNED BY: MARCO NABAVI
CHECKED BY: ELTAHIR ATAELGEED
FUNCTIONAL SUPERVISOR: ABDUL BAKER
REVISED BY
DATE REVISED

LAST REVISION
DATE PLOTTED => 22-DEC-2010
TIME PLOTTED => 11:27
10-20-10

BORDER LAST REVISED 7/2/2010
USERNAME => s115755
DGN FILE => 633740ic001.dgn
RELATIVE BORDER SCALE IS IN INCHES 0 1 2 3
UNIT 1476
PROJECT NUMBER & PHASE 06000201501

# DRAINAGE QUANTITIES

| DRAINAIGE PLAN SHEET No. | DRAINAGE SYSTEM No. ⬡ | DRAINAGE UNIT ○ | DRAINAGE INLET: MINOR CONCRETE (MINOR STRUCTURE) CY | DRAINAGE INLET: HEIGHT OF INLET (N) LF | DRAINAGE INLET: Misc IRON AND STEEL LB | CULVERT AND EXTEND CULVERT: LENGTH: 24"x18" CSP ARCH (0.109" THICK) LF | 24" RCP LF | 30" CSP (0.109" THICK) LF | 36" CSP (0.109" THICK) LF | 48" CSP (0.109" THICK) LF | 54" RCP LF | AFES: 18" AFES EA | 24" AFES EA | REMOVE HEADWALL EA | REMOVE INLET EA | PLACE HMA (Misc AREA) (***) SQYD | RSP (LIGHT, METHOD B) CY | RSP FABRIC SQYD | REMOVE CULVERT LF | 18" APC LF | 24" APC LF | MAXIMUN COVER (N) FT | STRUCTURAL CONCRETE (BOX CULVERT) CY | BAR REINFORCING STEEL (BOX CULVERT) LB | DESCRIPTION | STATION |
|---|---|---|---|---|---|---|---|---|---|---|---|---|---|---|---|---|---|---|---|---|---|---|---|---|---|---|---|
| L-1 | 1 | a | | | | | | | | | | 1 | | | | | | | | | | | | | | 18" AFES | 249+95.04 33.77′ Lt |
| | | b | | | | | | | | | | | | | | | | | | | 73.2 | | 3 | | | 18" APC | 249+58.39 ℄ 34.23′ Lt |
| | | c | | | | | | | | | | | | | | | | | | 30.5 | | | | | | REMOVE 12" CSP | 249+37.00 34.41′ Lt |
| | | d | | | | | | | | | | 1 | | | | | | | | | | | | | | 18" AFES | 249+21.76 34.58′ Lt |
| | 2 | a | | | | | | | | | | 1 | | | | | | | | | | | | | | 18" AFES | 250+78.70 43.80′ Rt |
| | | b | | | | | | | | | | | | | | | | | | | 39.4 | | 3 | | | 18" APC | 250+59.00 43.80′ Rt |
| | | c | | | | | | | | | | 1 | | | | | | | | | | | | | | 18" AFES | 250+39.31 43.80′ Rt |
| | 3 | a | | | | | | | | | | | | | | | | | | 40.7 | | | | | | REMOVE 18" CSP | 250+59.97 33.44′ Rt |
| | 4 | a | | | | | | | | | | 1 | | | | | | | | | | | | | | 18" AFES | 257+48.00 40.10′ Lt |
| | | b | | | | | | | | | | | | | | | | | | | 34.6 | | 3 | | | 18" APC | 257+30.69 40.30′ Lt |
| | | c | | | | | | | | | | 1 | | | | | | | | | | | | | | 18" AFES | 257+13.42 40.55′ Lt |
| | | d | | | | | | | | | | | | | | | | | | 34.4 | | | | | | REMOVE 12" CMP | 257+30.69 40.30′ Lt |
| | 5 | a | | | | | | | | | | | | 1 | | | | | | | | | | | | REMOVE HEADWALL | 258+20.25 25.11′ Lt |
| | | b | 1.5 | | | | | | | | | | | | | | | | | | | | | | | STRAIGHT HEADWALL | 258+20.25 32.75′ Lt |
| | | c | | | | 26.1 | | | | | | | | | | | | | | | | | | | | EXTEND CSP | 258+20.25 |
| | | d | | | | | | | | | | | | 1 | | | | | | | | | | | | REMOVE HEADWALL | 258+20.25 25.22′ Rt |
| | | e | | | | 28.5 | | | | | | | | | | | | | | | | | | | | EXTEND CSP | 258+20.25 |
| | | f | 1.5 | | | | | | | | | | | | | | | | | | | | | | | STRAIGHT HEADWALL | 258+20.25 33.25′ Rt |
| | | g | | | | | | | | | | | | | | | | 12.4 | 30.2 | | | | | | | RSP (LIGHT METHOD B), W/FABRIC | 258+20.25 33.75′ Lt |
| L-2 | 6 | a | | | | | | | | | | | | 1 | | | | | | | | | | | | REMOVE HEADWALL | 268+85.91 29.18′ Lt |
| | | b | | | | | | | 10.0 | | | | | | | | | | | | | | | | | EXTEND CSP | 268+85.60 |
| | | c | 1.9 | | | | | | | | | | | | | | | | | | | | | | | STRAIGHT HEADWALL | 268+81.67 37.07′ Lt |
| | | d | | | | | | | | | | | | | | | | 8.6 | 28.2 | | | | | | | RSP (LIGHT METHOD B), W/FABRIC | 268+81.67 37.07′ Lt |
| L-3 | 7 | a | | | | | | | | | | | | 1 | | | | | | | | | | | | REMOVE HEADWALL | 279+36.65 29.00′ Rt |
| | | b | | | | | | | | | | | | | | | | | | | | | | 1.8 | 372 | EXTEND RCB - 3′ Rt | 279+36.65 |
| | | c | | | | | | | | | | | | | | | | | | | | | | 4.8 | 277 | STRAIGHT HEADWALL | 279+05.83 32.75′ Rt |
| | | d | | | | | | | | | | | | 1 | | | | | | | | | | | | REMOVE HEADWALL | 279+76.76 26.12′ Lt |
| | | e | | | | | | | | | | | | | | | | | | | | | | 3.5 | 744 | EXTEND RCB - 6′ Lt | 279+76.76 |
| | | f | | | | | | | | | | | | | | | | | | | | | | 4.8 | 277 | STRAIGHT HEADWALL | 279+36.72 32.75′ Lt |
| SUBTOTAL 1 | | | 4.9 | | | 54.6 | | | 10.0 | | | 6 | | 5 | | | | 21 | 58.4 | 105.6 | 147.2 | | | 14.9 | 1670 | | |

(N) NOT A SEPARATE PAY ITEM, FOR INFORMATION ONLY.

(*) SEE STANDARD SPECIFICATION FOR AVAILABLE AND ALLOWABLE PLASTIC PIPE SIZES.

(**) SEE STANDARD SPECIFICATION,SECTION 64 FOR SMOOTH INTERIOR PLASTIC PIPE TYPE S OR TYPE D HDPE; RIBBED HDPE; OR RIBBED PVC PIPE AT CONTRACTOR OPTION.

(***) QUANTITIES ARE INCLUDED IN, SEE PLACE HMA (MISC AREA) TABLE.

## ALLOWABLE PIPE MATERIAL AND PROTECTION (ALTERNATIVE PIPE CULVERT)

| DESIGNATION | CSP & SSRP: SIZE (Inches) | THICKNESS (Inches) | Bit Ctd | Bit Ctd Paved Inv | POLYMERIC SHEET Ctd | PLASTIC: ** SMOOTH Int | RCP |
|---|---|---|---|---|---|---|---|
| 18" APC | 18" | 0.109 | NO | NO | YES | 18" | SEE Std PLAN A62 D |
| 24" APC | 24" | 0.109 | YES | YES | YES | 24" | |

NOTE: MATCH ALTERNATIVE FLARED END SECTION MATERIALS TO ALTERNATIVE PIPE MATERIALS.

| Dist | COUNTY | ROUTE | POST MILES TOTAL PROJECT | SHEET No. | TOTAL SHEETS |
|---|---|---|---|---|---|
| 06 | Tul | 190 | 21.2/26.4 | 63 | 120 |

E. Ataelgeed 12-20-10
REGISTERED CIVIL ENGINEER DATE

12-20-10
PLANS APPROVAL DATE

REGISTERED PROFESSIONAL ENGINEER — Eltahir K. Ataelgeed — No. 76374 — Exp. 12-31-12 — CIVIL — STATE OF CALIFORNIA

THE STATE OF CALIFORNIA OR ITS OFFICERS OR AGENTS SHALL NOT BE RESPONSIBLE FOR THE ACCURACY OR COMPLETENESS OF SCANNED COPIES OF THIS PLAN SHEET.

REVISED BY | DATE REVISED

CALCULATED-DESIGNED BY: MARCO NABAVI
CHECKED BY: ELTAHIR ATAELGEED

FUNCTIONAL SUPERVISOR: ABDUL BAKER

STATE OF CALIFORNIA - DEPARTMENT OF TRANSPORTATION
DESIGN

Caltrans

LAST REVISION | DATE PLOTTED => 22-DEC-2010
12-20-10 | TIME PLOTTED => 11:27

DRAINAGE QUANTITIES
DQ-1

BORDER LAST REVISED 7/2/2010 | USERNAME => s115755 | DGN FILE => 633740id001.dgn | RELATIVE BORDER SCALE IS IN INCHES 0 1 2 3 | UNIT 1476 | PROJECT NUMBER & PHASE 06000201501

| Dist | COUNTY | ROUTE | POST MILES TOTAL PROJECT | SHEET No. | TOTAL SHEETS |
|---|---|---|---|---|---|
| 06 | Tul | 190 | 21.2/26.4 | 64 | 120 |

E. Ataelgeed 12-20-10
REGISTERED CIVIL ENGINEER DATE

Eltahir K. Ataelgeed No. 76374 Exp. 12-31-12 CIVIL — REGISTERED PROFESSIONAL ENGINEER — STATE OF CALIFORNIA

12-20-10
PLANS APPROVAL DATE

THE STATE OF CALIFORNIA OR ITS OFFICERS OR AGENTS SHALL NOT BE RESPONSIBLE FOR THE ACCURACY OR COMPLETENESS OF SCANNED COPIES OF THIS PLAN SHEET.

# DRAINAGE QUANTITIES

| DRAINAGE PLAN SHEET No. | DRAINAGE SYSTEM No. ⬡ | DRAINAGE UNIT ○ | DRAINAGE INLET: MINOR CONCRETE (MINOR STRUCTURE) CY | DRAINAGE INLET: HEIGHT OF INLET (N) LF | DRAINAGE INLET: Misc IRON AND STEEL LB | CULVERT AND EXTEND CULVERT: LENGTH: 24"x18" CSP ARCH (0.109" THICK) LF | 24" RCP LF | 30" CSP (0.109" THICK) LF | 36" CSP (0.109" THICK) LF | 48" CSP (0.109" THICK) LF | 54" RCP LF | AFES: 18" AFES EA | 24" AFES EA | REMOVE HEADWALL EA | REMOVE INLET EA | PLACE HMA (Misc AREA) (***) SQYD | RSP (LIGHT, METHOD B) CY | RSP FABRIC SQYD | REMOVE CULVERT LF | 18" APC LF | 24" APC LF | MAXIMUN COVER (N) FT | STRUCTURAL CONCRETE, BOX CULVERT CY | BAR REINFORCING STEEL (BOX CULVERT) LB | DESCRIPTION | STATION | DRAINAGE PLAN SHEET No. | DRAINAGE SYSTEM No. ⬡ | DRAINAGE UNIT ○ |
|---|---|---|---|---|---|---|---|---|---|---|---|---|---|---|---|---|---|---|---|---|---|---|---|---|---|---|---|---|---|
| L-3 | 8 | a | | | | | | | | | | | | 1 | | | | | | | | | | | | REMOVE HEADWALL | 288+80.20 31.37′ R† | L-3 | 8 | a |
| | | b | | | | | | | | | 7.5 | | | | | | | | | | | | | | | EXTEND RCP | 288+79.61 | | | b |
| | | c | 2.7 | | | | | | | | | | | | | | | | | | | | | | | STRAIGHT HEADWALL | 288+83.23 36.76′ R† | | | c |
| | | d | | | | | | | | | | | | 1 | | | | | | | | | | | | REMOVE HEADWALL | 288+43.50 34.70′ L† | | | d |
| | | e | | | | | | | | | 7.5 | | | | | | | | | | | | | | | EXTEND RCP | 288+43.69 | | | e |
| | | f | 2.7 | | | | | | | | | | | | | | | | | | | | | | | STRAIGHT HEADWALL | 288+43.58 40.75′ L† | | | f |
| L-3 | 9 | a | | | | | | | | | | | | 1 | | | | | | | | | | | | REMOVE HEADWALL | 290+86.30 25.62′ R† | L-3 | 9 | a |
| | | b | | | | | | | | | | | | | | | | | | 62.7 | | | | | | REMOVE 24" CMP | 290+86.30 ℄ ROUTE 190 | | | b |
| | | c | | | | | | | | | | | | 1 | | | | | | | | | | | | REMOVE HEADWALL | 290+86.30 36.12′ L† | | | c |
| | | d | 1.2 | | | | | | | | | | | | | | | | | | | | | | | STRAIGHT HEADWALL | 290+86.30 32.72′ R† | | | d |
| | | e | | | | | | | | | | | | | | | | | | | | 72.5 | 8.2 | | | 24" APC | 290+86.30 ℄ ROUTE 190 | | | e |
| | | f | | | | | | | | | | | 1 | | | | | | | | | | | | | 24" AFES | 290+86.30 39.68′ L† | | | f |
| | | g | | | | | | | | | | | | | | | 5.3 | 19.5 | | | | | | | | RSP (LIGHT METHOD B), W/FABRIC | 290+86.30 39.68′ L† | | | g |
| L-9 | 10 | a | | | | | | | | | | | | | 1 | | | | | | | | | | | REMOVE INLET | 378+59.66 24.25′ R† | L-9 | 10 | a |
| | | b | 2.8 | 5.3 | 634 | | | | | | | | | | | 5.0 | | | | | | | | | | MODIFIED GDO DI w/ 24-12 GRATE | 378+59.66 23.00′ R† | | | b |
| | | c | | | | | 5.0 | | | | | | | | | | | | | | | | | | | EXTEND RCP | 378+59.66 24.25′ R† | | | c |
| L-13 | 11 | a | | | | | | | | | | | | 1 | | | | | | | | | | | | REMOVE HEADWALL | 425+89.36 33.96′ R† | L-13 | 11 | a |
| | | b | | | | | | 10.6 | | | | | | | | | | | | | | | | | | EXTEND CSP | 425+89.21 | | | b |
| | | c | 1.5 | | | | | | | | | | | | | | | | | | | | | | | STRAIGHT HEADWALL | 425+89.40 44.75′ R† | | | c |
| L-17 | 12 | a | | | | | | | | | | | | 1 | | | | | | | | | | | | REMOVE HEADWALL | 491+79.82 26.76′ R† | L-17 | 12 | a |
| | | b | | | | | | | | 7.7 | | | | | | | | | | | | | | | | EXTEND CSP | 491+79.23 | | | b |
| | | c | 2.7 | | | | | | | | | | | | | | | | | | | | | | | STRAIGHT HEADWALL | 491+79.71 33.39′ R† | | | c |
| L-19 | 13 | a | | | | | | | | | | | | | 1 | | | | | | | | | | | REMOVE INLET | 516+52.06 24.26′ R† | L-19 | 13 | a |
| | | b | 5.9 | 8.1 | 634 | | | | | | | | | | | 5.0 | | | | | | | | | | MODIFIED GDO DI w/ 24-12 GRATE | 516+52.09 19.97′ R† | | | b |
| SUBTOTAL 2 | | | 19.5 | | 1268 | | 5.0 | 10.6 | | 7.7 | 15.0 | | 1 | 6 | 2 | 10 | 5.3 | 19.5 | 62.7 | | 72.5 | | | | | | | | |

| | | | | | | | | | | | | | | | | | | | | | | |
|---|---|---|---|---|---|---|---|---|---|---|---|---|---|---|---|---|---|---|---|---|---|---|
| SUBTOTAL DQ-1 | 4.9 | | | 54.6 | | | 10.0 | | | 6 | | 5 | | | 21 | 58.4 | 105.6 | 147.2 | | | 14.9 | 1670 |
| SUBTOTAL DQ-2 | 19.5 | | 1268 | | 5.0 | 10.6 | | 7.7 | 15.0 | | 1 | 6 | | 10 | 5.3 | 19.5 | 62.7 | | 72.5 | | | |
| GRAND TOTAL | 24.4 | | 1268 | 54.6 | 5.0 | 10.6 | 10.0 | 7.7 | 15.0 | 6 | 1 | 11 | 2 | 10 | 26.3 | 77.9 | 168.3 | 147.2 | 72.5 | | 14.9 | 1670 |

(N) NOT A SEPARATE PAY ITEM, FOR INFORMATION ONLY.

(*) SEE STANDARD SPECIFICATION FOR AVAILABLE AND ALLOWABLE PLASTIC PIPE SIZES.

(**) SEE STANDARD SPECIFICATION,SECTION 64 FOR SMOOTH INTERIOR PLASTIC PIPE TYPE S OR TYPE D HDPE; RIBBED HDPE; OR RIBBED PVC PIPE AT CONTRACTOR OPTION.

(***) QUANTITIES ARE INCLUDED IN, SEE PLACE HMA (MISC AREA) TABLE.

## DRAINAGE QUANTITIES
## DQ-2

LAST REVISION DATE PLOTTED => 22-DEC-2010
TIME PLOTTED => 11:27

STATE OF CALIFORNIA - DEPARTMENT OF TRANSPORTATION — DESIGN
Caltrans®
FUNCTIONAL SUPERVISOR: ABDUL BAKER
CALCULATED-DESIGNED BY: ELTAHIR ATAELGEED
CHECKED BY: MARCO NABAVI
REVISED BY
DATE REVISED

BORDER LAST REVISED 7/2/2010
USERNAME => s115755
DGN FILE => 633740id002.dgn
RELATIVE BORDER SCALE IS IN INCHES 0 1 2 3
UNIT 1476
PROJECT NUMBER & PHASE 06000201501

# HMA OVERSIDE DRAIN, FLUME, AND PIPE DOWNDRAINS

| | STATION | REMOVE OVERSIDE DRAIN | * HMA OVERSIDE DRAIN | REMOVE ENTRANCE TAPER | REMOVE FLUME DOWNDRIAN (N) | REMOVE TAPER INLET (N) | REMOVE PIPE DOWNDRAIN (N) | 10" TAPERED INLET ** | 10" FLUME DOWNDRAIN ** | 12" ENTRANCE TAPER | 12" CSP DOWNDRAIN (0.064 THICK) | ANCHOR ASSEMBLY |
|---|---|---|---|---|---|---|---|---|---|---|---|---|
| | | EA | SQYD | EA | LF | EA | LF | EA | LF | EA | LF | EA |
| EASTBOUND | 285+22.74 | | | 1 | 17.3 | 1 | | 1 | 17.3 | | | 2 |
| | 288+93.97 | 1 | | | | | | | | | | |
| | 288+99.70 | | 4.5 | | | | | | | | | |
| | 290+99.78 | 1 | 3.6 | | | | | | | | | |
| | 294+21.00 | 1 | 3.4 | | | | | | | | | |
| | 308+40.25 | | 2.4 | | | | | | | | | |
| | 323+94.95 | | | 1 | | | 11.2 | | | 1 | 11.2 | |
| | 326+15.93 | | | 1 | | | 12.4 | | | 1 | 12.4 | |
| | 337+37.73 | 1 | 6.5 | | | | | | | | | |
| | 339+35.46 | 1 | 6.5 | | | | | | | | | |
| | 349+55.19 | | 5.2 | | | | | | | | | |
| | 355+06.19 | | 2.6 | | | | | | | | | |
| | 361+40.04 | | | 1 | 3.8 | | | 1 | 17.0 | | | 2 |
| | 373+91.32 | 1 | 5.3 | | | | | | | | | |
| | 387+63.26 | | | 1 | | | 12.2 | | | 1 | 30.0 | |
| | 388+52.27 | | | 1 | | | 11.2 | | | 1 | 30.0 | |
| | 394+02.95 | | | | 11.4 | 1 | | 1 | 25.0 | | | 3 |
| | 395+00.94 | | | | 14.2 | 1 | | 1 | 25.0 | | | 3 |
| | 396+46.56 | | | | 5.4 | 1 | | 1 | 25.0 | | | 3 |
| | 400+58.47 | | 5.0 | | | | | | | | | |
| | 410+54.74 | 1 | 6.5 | | | | | | | | | |
| | 415+04.19 | | 2.5 | 1 | | | 18.4 | | | 1 | 18.4 | |
| | 419+32.19 | 1 | 1.2 | | | | | | | | | |
| | 421+99.60 | | 2.5 | | | | | | | | | |
| | 425+51.04 | | 2.5 | | | | | | | | | |
| | 431+45.66 | 1 | 2.7 | | | | | | | | | |
| | 438+16.00 | 1 | 2.7 | | | | | | | | | |
| | 441+52.34 | 1 | 2.5 | | | | | | | | | |
| | 444+29.37 | | | | 7.2 | 1 | | 1 | 10.0 | | | 1 |
| | 445+99.05 | | | | 6.0 | 1 | | 1 | 10.0 | | | 1 |
| | 448+93.32 | | | | 6.5 | 1 | | 1 | 10.0 | | | 1 |
| | 453+00.85 | 1 | 2.5 | | | | | | | | | |
| | 464+36.92 | 1 | 1.9 | | | | | | | | | |
| | 466+49.33 | 1 | 2.8 | | | | | | | | | |
| | 472+57.86 | 1 | 2.4 | | | | | | | | | |
| | 480+65.00 | 1 | 4.0 | | | | | | | | | |
| | 481+94.60 | | | 1 | | | 10.9 | | | 1 | 27.0 | |
| | 483+48.86 | 1 | 5.4 | | | | | | | | | |
| WESTBOUND | 261+02.19 | 1 | 2.8 | | | | | | | | | |
| | 263+72.72 | | | | 11.3 | 1 | | 1 | 15.0 | | | 2 |
| | 266+99.47 | | | | 15.5 | 1 | | 1 | 16.0 | | | 2 |
| | 274+93.15 | 1 | 2.0 | | | | | | | | | |
| | 280+33.57 | 1 | 7.1 | | | | | | | | | |
| | 294+98.00 | 1 | 9.1 | | | | | | | | | |
| | 321+64.00 | | | 1 | | | 10.9 | | | 1 | 11.0 | |
| | 325+04.11 | | | 1 | | | 10.2 | | | 1 | 10.2 | |
| | 327+65.58 | | | | 30.4 | 1 | | 1 | 30.0 | | | 3 |
| | 330+03.98 | 1 | 8.8 | | | | | | | | | |
| | 346+54.71 | | | | 17.1 | 1 | | 1 | 16.0 | | | 2 |
| | 349+46.50 | | | | 2.6 | 1 | | 1 | 20.0 | | | 2 |
| | 354+77.82 | | | | 5.2 | 1 | | 1 | 20.0 | | | 2 |
| | 361+49.64 | | | | 4.1 | 1 | | 1 | 22.0 | | | 2 |
| | 373+67.12 | 1 | 5.6 | | | | | | | | | |
| | 375+48.87 | | | | 7.9 | 1 | | 1 | 10.0 | | | 1 |
| | 379+00.00 | 1 | | | | | 10.0 | | | 1 | | |
| | SUB TOTAL 1 | 24 | 122.5 | 10 | | | | 16 | 288.3 | 9 | 150.2 | 32 |

* QUANTITIES INCLUDED IN PLACE HMA (MISC AREA). TABLE

** FOR TAPERED INLET AND FLUME DOWNDRAIN SEE STANDARD PLANS, STD D87D.

(N) NOT A SEPARATE PAY ITEM, FOR INFORMATION ONLY.

# HMA OVERSIDE DRAIN, FLUME, AND PIPE DOWNDRAINS Cont

| | STATION | REMOVE OVERSIDE DRAIN | * HMA OVERSIDE DRAIN | REMOVE ENTRANCE TAPER | REMOVE FLUME DOWNDRIAN (N) | REMOVE TAPER INLET (N) | REMOVE PIPE DOWNDRAIN (N) | 10" TAPERED INLET ** | 10" FLUME DOWNDRAIN ** | 12" ENTRANCE TAPER | 12" CSP DOWNDRAIN (0.064 THICK) | ANCHOR ASSEMBLY |
|---|---|---|---|---|---|---|---|---|---|---|---|---|
| | | EA | SQYD | EA | LF | EA | LF | EA | LF | EA | LF | EA |
| WESTBOUND | 381+04.24 | | | | 9.8 | 1 | | 1 | 69 | | | 7 |
| | 383+56.56 | | | | 9.7 | 1 | | 1 | 57 | | | 6 |
| | 386+48.40 | | | | 2.3 | 1 | | 1 | 43 | | | 5 |
| | 387+34.30 | | | | 7.9 | 1 | | 1 | 38 | | | 4 |
| | 393+72.35 | | | | 7.2 | 1 | | 1 | 30 | | | 3 |
| | 395+27.58 | | | | 7.5 | 1 | | 1 | 30 | | | 3 |
| | 396+45.86 | | | | 5.7 | 1 | | 1 | 30 | | | 3 |
| | 422+42.62 | | | | 15.9 | 1 | | 1 | 15 | | | 2 |
| | 431+53.51 | | | | 9.4 | 1 | | 1 | 10 | | | 1 |
| | 438+51.71 | | | | 6.4 | 1 | | 1 | 23 | | | 3 |
| | 441+52.34 | | | | 5.5 | 1 | | 1 | 20 | | | 2 |
| | 444+30.04 | | | | 9.8 | 1 | | 1 | 24 | | | 3 |
| | 446+97.43 | | | | 5.5 | 1 | | 1 | 15 | | | 2 |
| | 449+92.32 | 1 | 2.3 | | | | | | | | | |
| | 462+10.00 | 1 | 2.3 | | | | | | | | | |
| | 463+73.93 | 1 | 2.5 | | | | | | | | | |
| | 467+55.59 | 1 | 2.0 | | | | | | | | | |
| | 472+26.51 | 1 | | | | | | | | | | |
| | 474+03.87 | 1 | | | | | | | | | | |
| | 481+96.78 | | | 1 | | | 3.7 | | | 1 | 27 | |
| | 483+16.86 | 1 | 6.0 | | | | | | | | | |
| | 490+24.15 | 1 | 4.0 | | | | | | | | | |
| | 494+62.38 | 1 | 4.4 | | | | | | | | | |
| | 496+14.75 | 1 | 5.1 | | | | | | | | | |
| | 502+04.47 | 1 | 4.0 | | | | | | | | | |
| | SUB TOTAL 1 | 24 | 122.5 | 10 | | | | 16 | 288.3 | 9 | 150.2 | 32 |
| | SUB TOTAL 2 | 11 | 32.6 | 1 | | | | 13 | 404.0 | 1 | 27.0 | 44 |
| | TOTAL | 35 | 155.1 | 11 | | | | 29 | 692.3 | 10 | 177.2 | 76 |

| Dist | COUNTY | ROUTE | POST MILES TOTAL PROJECT | SHEET No. | TOTAL SHEETS |
|---|---|---|---|---|---|
| 06 | Tul | 190 | 21.2/26.4 | 65 | 120 |

E. Ataelgeed 12-20-10
REGISTERED CIVIL ENGINEER DATE

12-20-10
PLANS APPROVAL DATE

REGISTERED PROFESSIONAL ENGINEER
Eltahir K. Ataelgeed
No. 76374
Exp. 12-31-12
CIVIL
STATE OF CALIFORNIA

THE STATE OF CALIFORNIA OR ITS OFFICERS OR AGENTS SHALL NOT BE RESPONSIBLE FOR THE ACCURACY OR COMPLETENESS OF SCANNED COPIES OF THIS PLAN SHEET.

CALCULATED-DESIGNED BY: MARCO NABAVI
CHECKED BY: ELTAHIR ATAELGEED
FUNCTIONAL SUPERVISOR: ABDUL BAKER
REVISED BY
DATE REVISED

STATE OF CALIFORNIA - DEPARTMENT OF TRANSPORTATION
DESIGN

## DRAINAGE QUANTITIES
## DQ-3

LAST REVISION | DATE PLOTTED => 22-DEC-2010
08-30-10 | TIME PLOTTED => 11:27

BORDER LAST REVISED 7/2/2010
USERNAME => s115755
DGN FILE => 633740id003.dgn
RELATIVE BORDER SCALE IS IN INCHES 0 1 2 3
UNIT 1476
PROJECT NUMBER & PHASE 06000201501

| Dist | COUNTY | ROUTE | POST MILES TOTAL PROJECT | SHEET No. | TOTAL SHEETS |
|---|---|---|---|---|---|
| 06 | Tul | 190 | 21.2/26.4 | 66 | 120 |

E. Ataelgeed 12-20-10
REGISTERED CIVIL ENGINEER DATE

12-20-10
PLANS APPROVAL DATE

REGISTERED PROFESSIONAL ENGINEER
Eltahir K. Ataelgeed
No. 76374
Exp 12-31-12
CIVIL
STATE OF CALIFORNIA

THE STATE OF CALIFORNIA OR ITS OFFICERS OR AGENTS SHALL NOT BE RESPONSIBLE FOR THE ACCURACY OR COMPLETENESS OF SCANNED COPIES OF THIS PLAN SHEET.

## NOTES:

1. FOR ACCURATE RIGHT OF WAY , CONTACT RIGHT OF WAY ENGINEERING AT THE DISTRICT OFFICE.

## LEGEND

⊗ POTHOLE LOCATION

⊗ POTHOLE NUMBER

TO / FROM RELOCATE

UTILITY OWNERS:

———g———-———g—— NATURAL GAS LINE: SOUTHERN CALIFORNIA GAS COMPANY

———t———-———t—— OVERHEAD TELEPHOME LINE: AT&T

———e———-———(oh)—— OVERHEAD ELECTRIC LINE: SOUTHERN CALIFORNIA EDISON

———T———-———T—— UNDERGROUND TELEPHOME LINE: AT&T

## POTHOLING INFORMATION

| ⊗ | UTILITY | STATION | OFFSET | | Elev |
|---|---|---|---|---|---|
| 1 | GAS | 258+14.05 | RIGHT | 45.01 | 556.96 |

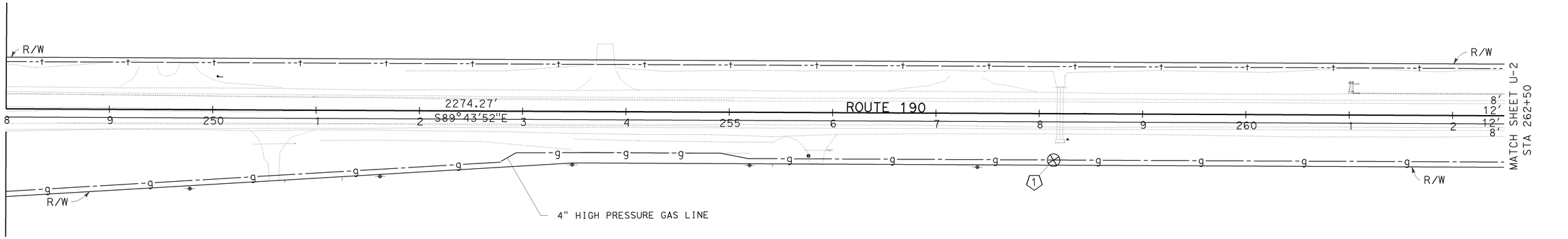


THIS PLAN ACCURATE FOR UTILITY WORK ONLY

# UTILITY PLAN

SCALE: 1" = 50'

U-1

STATE OF CALIFORNIA - DEPARTMENT OF TRANSPORTATION
DESIGN
FUNCTIONAL SUPERVISOR: ABDUL BAKER
CALCULATED-DESIGNED BY: ELTAHIR ATAELGEED
CHECKED BY: ABDUL BAKER
REVISED BY
DATE REVISED

LAST REVISION | DATE PLOTTED => 22-DEC-2010
08-30-10 | TIME PLOTTED => 11:27

BORDER LAST REVISED 7/2/2010
USERNAME => s115755
DGN FILE => 633740ka001.dgn
RELATIVE BORDER SCALE IS IN INCHES 0 1 2 3
UNIT 1476
PROJECT NUMBER & PHASE 06000201501

| Dist | COUNTY | ROUTE | POST MILES TOTAL PROJECT | SHEET No. | TOTAL SHEETS |
|---|---|---|---|---|---|
| 06 | Tul | 190 | 21.2/26.4 | 67 | 120 |

E. Ataelgeed 12-20-10
REGISTERED CIVIL ENGINEER DATE

12-20-10
PLANS APPROVAL DATE

Eltahir K. Ataelgeed
No. 76374
Exp 12-31-12
CIVIL
REGISTERED PROFESSIONAL ENGINEER
STATE OF CALIFORNIA

THE STATE OF CALIFORNIA OR ITS OFFICERS OR AGENTS SHALL NOT BE RESPONSIBLE FOR THE ACCURACY OR COMPLETENESS OF SCANNED COPIES OF THIS PLAN SHEET.

NOTES:

1. FOR ACCURATE RIGHT OF WAY , CONTACT RIGHT OF WAY ENGINEERING AT THE DISTRICT OFFICE.

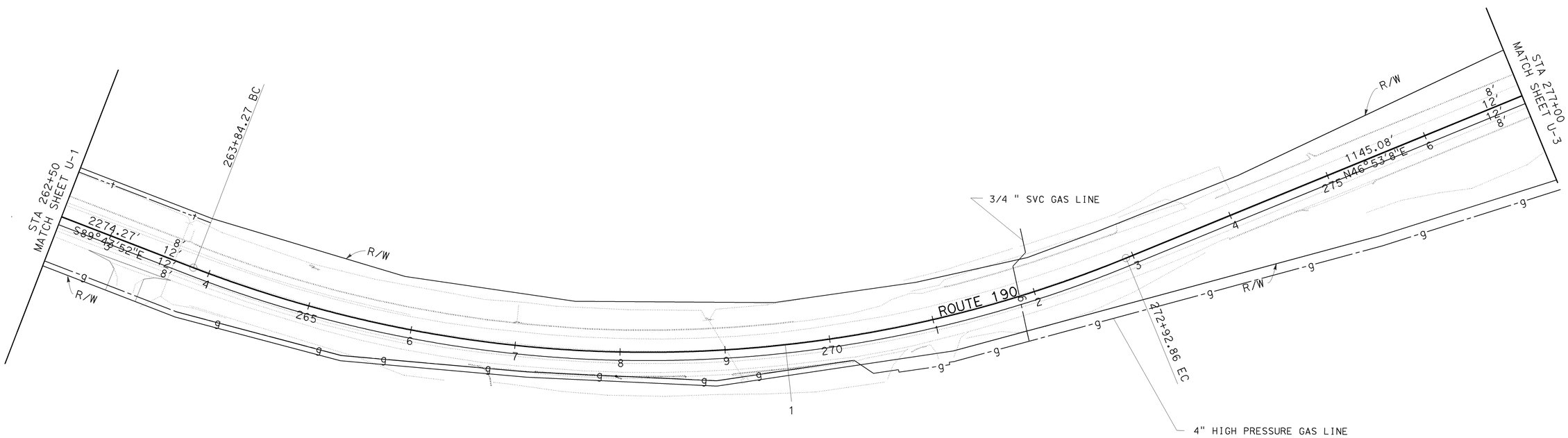


THIS PLAN ACCURATE FOR UTILITY WORK ONLY

# UTILITY PLAN
## U-2

SCALE: 1" = 50'

STATE OF CALIFORNIA - DEPARTMENT OF TRANSPORTATION
DESIGN
Caltrans
FUNCTIONAL SUPERVISOR: ABDUL BAKER
CALCULATED-DESIGNED BY: ELTAHIR ATAELGEED
CHECKED BY: ABDUL BAKER
REVISED BY
DATE REVISED

LAST REVISION
DATE PLOTTED => 22-DEC-2010
TIME PLOTTED => 11:27
08-30-10

BORDER LAST REVISED 7/2/2010
USERNAME => s115755
DGN FILE => 633740ka002.dgn
RELATIVE BORDER SCALE IS IN INCHES 0 1 2 3
UNIT 1476
PROJECT NUMBER & PHASE 06000201501

| Dist | COUNTY | ROUTE | POST MILES TOTAL PROJECT | SHEET No. | TOTAL SHEETS |
|---|---|---|---|---|---|
| 06 | Tul | 190 | 21.2/26.4 | 68 | 120 |

E. Ataelgeed 12-20-10
REGISTERED CIVIL ENGINEER DATE

12-20-10
PLANS APPROVAL DATE

REGISTERED PROFESSIONAL ENGINEER
Eltahir K. Ataelgeed
No. 76374
Exp 12-31-12
CIVIL
STATE OF CALIFORNIA

THE STATE OF CALIFORNIA OR ITS OFFICERS OR AGENTS SHALL NOT BE RESPONSIBLE FOR THE ACCURACY OR COMPLETENESS OF SCANNED COPIES OF THIS PLAN SHEET.

NOTES:

1. FOR ACCURATE RIGHT OF WAY , CONTACT RIGHT OF WAY ENGINEERING AT THE DISTRICT OFFICE.

POTHOLING INFORMATION

| ⓧ | UTILITY | STATION | OFFSET | | Elev |
|---|---|---|---|---|---|
| ② | GAS | 290+97.16 | RIGHT | 22.00 | 597.75 |

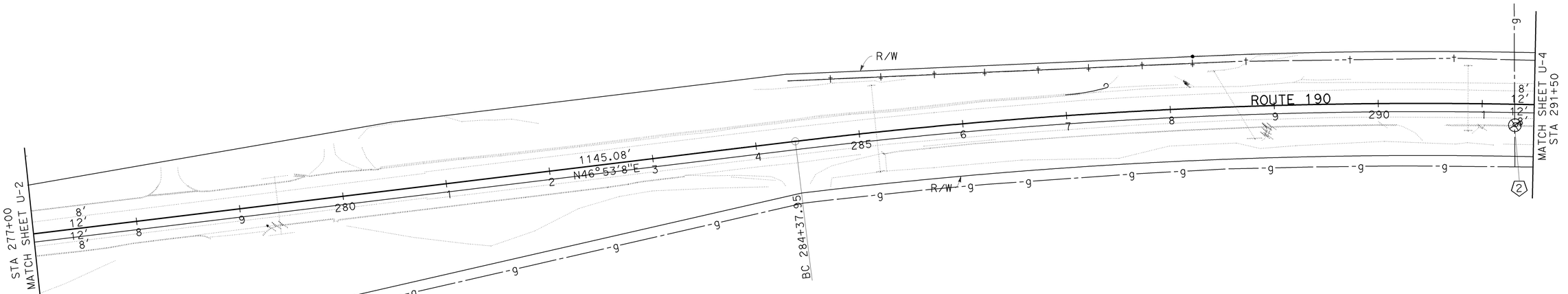


THIS PLAN ACCURATE FOR UTILITY WORK ONLY

# UTILITY PLAN

## U-3

SCALE: 1" = 50'

ELTAHIR ATAELGEED — CALCULATED-DESIGNED BY
ABDUL BAKER — CHECKED BY
ABDUL BAKER — FUNCTIONAL SUPERVISOR
REVISED BY — DATE REVISED

STATE OF CALIFORNIA - DEPARTMENT OF TRANSPORTATION
DESIGN

LAST REVISION DATE PLOTTED => 22-DEC-2010
TIME PLOTTED => 11:27
08-30-10

BORDER LAST REVISED 7/2/2010
USERNAME => s115755
DGN FILE => 633740ka003.dgn
RELATIVE BORDER SCALE IS IN INCHES 0 1 2 3
UNIT 1476
PROJECT NUMBER & PHASE 06000201501

| Dist | COUNTY | ROUTE | POST MILES TOTAL PROJECT | SHEET No. | TOTAL SHEETS |
|---|---|---|---|---|---|
| 06 | Tul | 190 | 21.2/26.4 | 69 | 120 |

E. Ataelgeed 12-20-10
REGISTERED CIVIL ENGINEER DATE

12-20-10
PLANS APPROVAL DATE

REGISTERED PROFESSIONAL ENGINEER
Eltahir K. Ataelgeed
No. 76374
Exp 12-31-12
CIVIL
STATE OF CALIFORNIA

THE STATE OF CALIFORNIA OR ITS OFFICERS OR AGENTS SHALL NOT BE RESPONSIBLE FOR THE ACCURACY OR COMPLETENESS OF SCANNED COPIES OF THIS PLAN SHEET.

NOTES:

1. FOR ACCURATE RIGHT OF WAY , CONTACT RIGHT OF WAY ENGINEERING AT THE DISTRICT OFFICE.

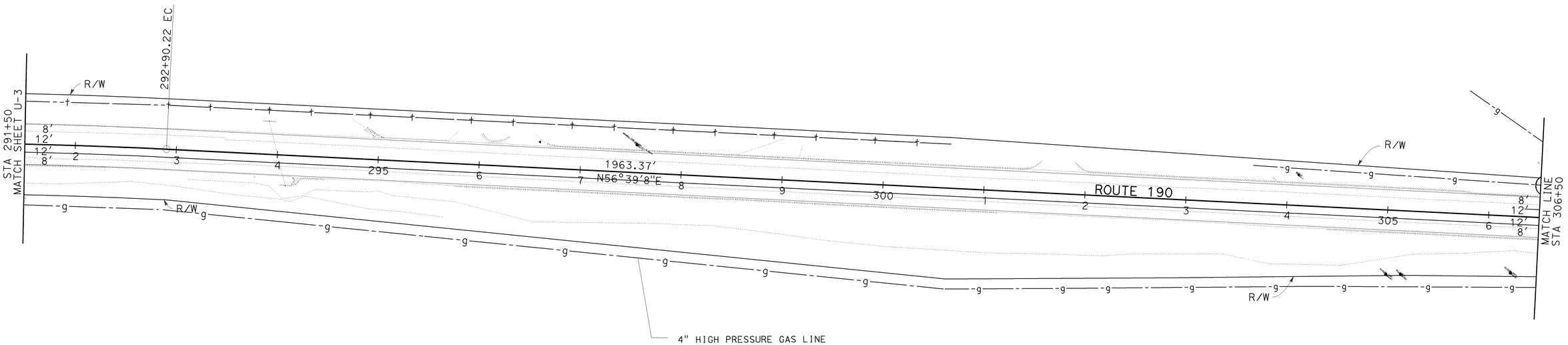


THIS PLAN ACCURATE FOR UTILITY WORK ONLY

# UTILITY PLAN
# U-4

SCALE: 1" = 50'

ELTAHIR ATAELGEED — CALCULATED-DESIGNED BY
ABDUL BAKER — CHECKED BY
REVISED BY — DATE REVISED
ABDUL BAKER — FUNCTIONAL SUPERVISOR
STATE OF CALIFORNIA - DEPARTMENT OF TRANSPORTATION
Caltrans®
DESIGN

LAST REVISION DATE PLOTTED => 22-DEC-2010
TIME PLOTTED => 11:27
08-30-10

BORDER LAST REVISED 7/2/2010
USERNAME => s115755
DGN FILE => 633740ka004.dgn
RELATIVE BORDER SCALE IS IN INCHES 0 1 2 3
UNIT 1476
PROJECT NUMBER & PHASE 06000201501

| Dist | COUNTY | ROUTE | POST MILES TOTAL PROJECT | SHEET No. | TOTAL SHEETS |
|---|---|---|---|---|---|
| 06 | Tul | 190 | 21.2/26.4 | 70 | 120 |

E. Ataelgeed 12-20-10
REGISTERED CIVIL ENGINEER DATE

12-20-10
PLANS APPROVAL DATE

REGISTERED PROFESSIONAL ENGINEER
Eltahir K. Ataelgeed
No. 76374
Exp 12-31-12
CIVIL
STATE OF CALIFORNIA

THE STATE OF CALIFORNIA OR ITS OFFICERS OR AGENTS SHALL NOT BE RESPONSIBLE FOR THE ACCURACY OR COMPLETENESS OF SCANNED COPIES OF THIS PLAN SHEET.

NOTES:

1. FOR ACCURATE RIGHT OF WAY , CONTACT RIGHT OF WAY ENGINEERING AT THE DISTRICT OFFICE.

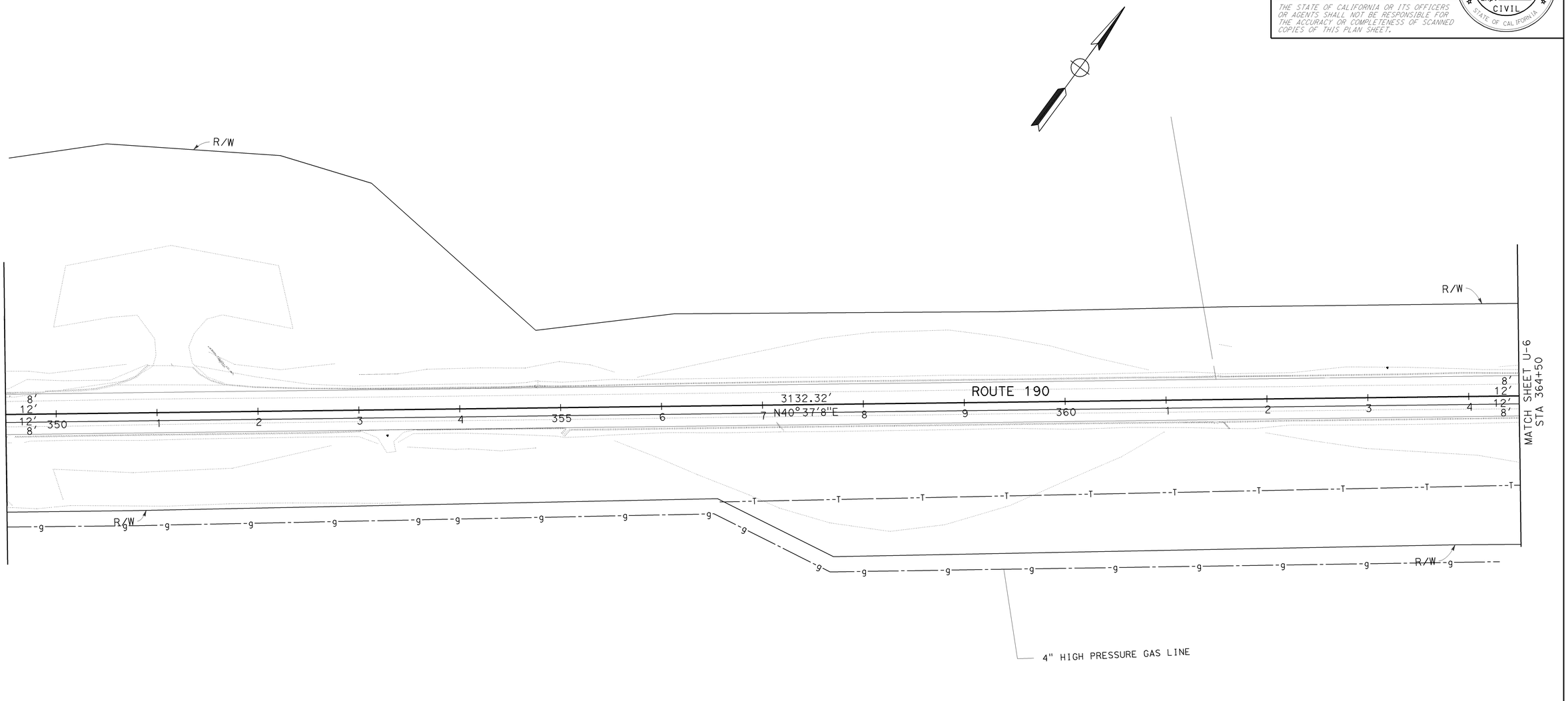


THIS PLAN ACCURATE FOR UTILITY WORK ONLY

# UTILITY PLAN

SCALE: 1" = 50'

U-5

REVISED BY | DATE REVISED
ELTAHIR ATAELGEED | ABDUL BAKER
CALCULATED-DESIGNED BY | CHECKED BY
FUNCTIONAL SUPERVISOR: ABDUL BAKER
STATE OF CALIFORNIA - DEPARTMENT OF TRANSPORTATION
DESIGN

LAST REVISION 08-30-10
DATE PLOTTED => 22-DEC-2010
TIME PLOTTED => 11:27

BORDER LAST REVISED 7/2/2010
USERNAME => s115755
DGN FILE => 633740ka005.dgn
RELATIVE BORDER SCALE IS IN INCHES 0 1 2 3
UNIT 1476
PROJECT NUMBER & PHASE 06000201501

| Dist | COUNTY | ROUTE | POST MILES TOTAL PROJECT | SHEET No. | TOTAL SHEETS |
|---|---|---|---|---|---|
| 06 | Tul | 190 | 21.2/26.4 | 71 | 120 |

E. Ataelgeed 12-20-10
REGISTERED CIVIL ENGINEER DATE

12-20-10
PLANS APPROVAL DATE

REGISTERED PROFESSIONAL ENGINEER
Eltahir K. Ataelgeed
No. 76374
Exp 12-31-12
CIVIL
STATE OF CALIFORNIA

THE STATE OF CALIFORNIA OR ITS OFFICERS OR AGENTS SHALL NOT BE RESPONSIBLE FOR THE ACCURACY OR COMPLETENESS OF SCANNED COPIES OF THIS PLAN SHEET.

NOTES:

1. FOR ACCURATE RIGHT OF WAY , CONTACT RIGHT OF WAY ENGINEERING AT THE DISTRICT OFFICE.

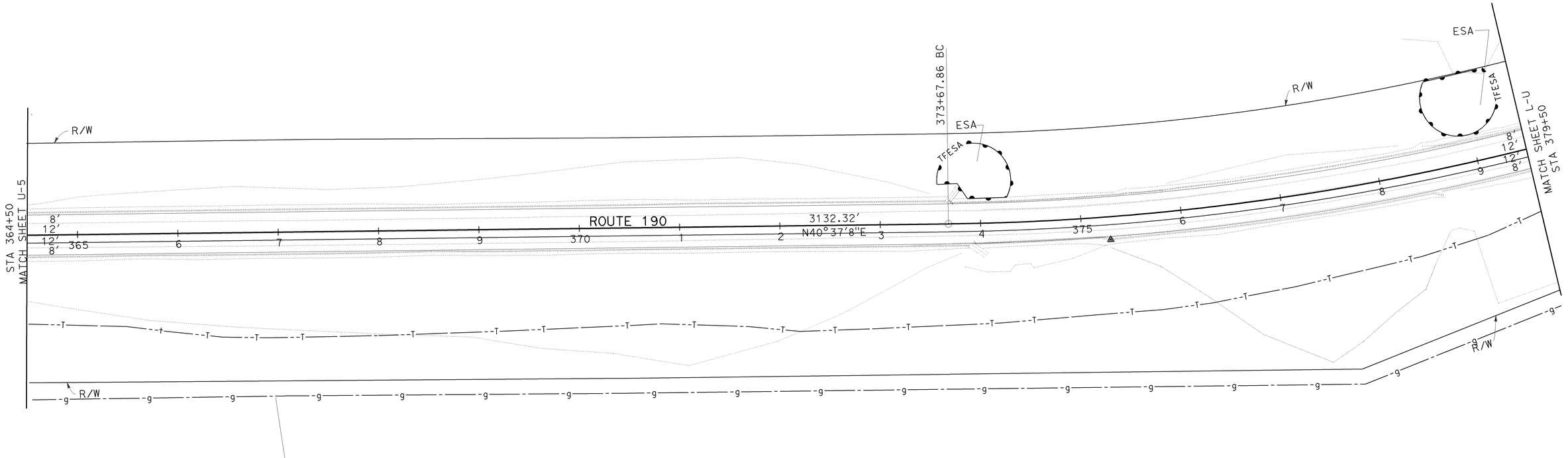


THIS PLAN ACCURATE FOR UTILITY WORK ONLY

# UTILITY PLAN

SCALE: 1" = 50'

U-6

CALCULATED-DESIGNED BY
CHECKED BY
ELTAHIR ATAELGEED
ABDUL BAKER
REVISED BY
DATE REVISED
FUNCTIONAL SUPERVISOR
ABDUL BAKER
STATE OF CALIFORNIA - DEPARTMENT OF TRANSPORTATION
DESIGN
Caltrans

LAST REVISION | DATE PLOTTED => 22-DEC-2010
08-30-10 | TIME PLOTTED => 11:27

BORDER LAST REVISED 7/2/2010 | USERNAME => s115755 | DGN FILE => 633740ka006.dgn | RELATIVE BORDER SCALE IS IN INCHES 0 1 2 3 | UNIT 1476 | PROJECT NUMBER & PHASE 06000201501

| Dist | COUNTY | ROUTE | POST MILES TOTAL PROJECT | SHEET No. | TOTAL SHEETS |
|---|---|---|---|---|---|
| 06 | Tul | 190 | 21.2/26.4 | 72 | 120 |

E. Ataelgeed 12-20-10
REGISTERED CIVIL ENGINEER DATE

12-20-10
PLANS APPROVAL DATE

REGISTERED PROFESSIONAL ENGINEER
Eltahir K. Ataelgeed
No. 76374
Exp 12-31-12
CIVIL
STATE OF CALIFORNIA

THE STATE OF CALIFORNIA OR ITS OFFICERS OR AGENTS SHALL NOT BE RESPONSIBLE FOR THE ACCURACY OR COMPLETENESS OF SCANNED COPIES OF THIS PLAN SHEET.

NOTES:

1. FOR ACCURATE RIGHT OF WAY , CONTACT RIGHT OF WAY ENGINEERING AT THE DISTRICT OFFICE.

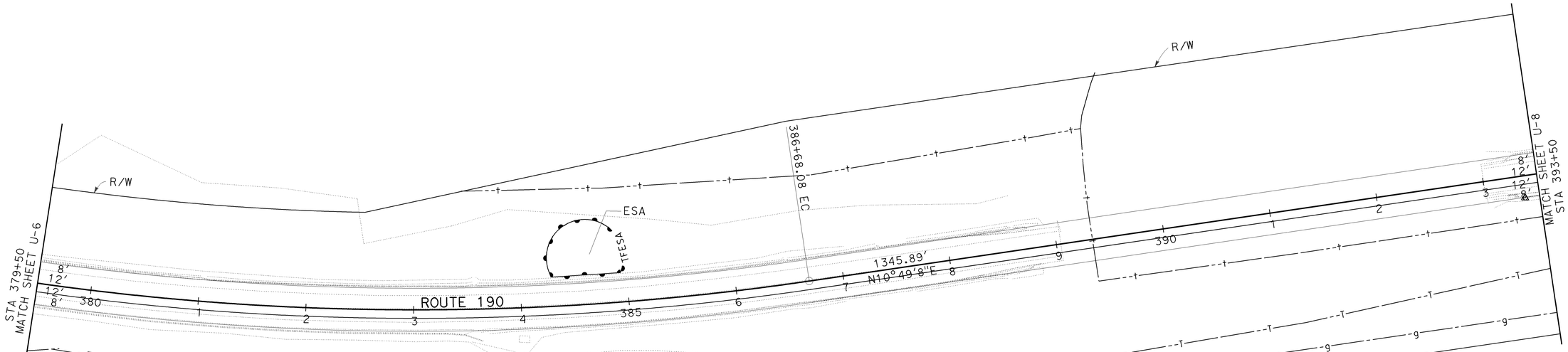


THIS PLAN ACCURATE FOR UTILITY WORK ONLY

# UTILITY PLAN

SCALE: 1" = 50'

U-7

STATE OF CALIFORNIA - DEPARTMENT OF TRANSPORTATION
DESIGN
FUNCTIONAL SUPERVISOR: ABDUL BAKER
CALCULATED-DESIGNED BY: ELTAHIR ATAELGEED
CHECKED BY: ABDUL BAKER
REVISED BY
DATE REVISED

LAST REVISION DATE PLOTTED => 22-DEC-2010
TIME PLOTTED => 11:27
08-30-10

BORDER LAST REVISED 7/2/2010
USERNAME => s115755
DGN FILE => 633740ka007.dgn
RELATIVE BORDER SCALE IS IN INCHES 0 1 2 3
UNIT 1476
PROJECT NUMBER & PHASE 06000201501

| Dist | COUNTY | ROUTE | POST MILES TOTAL PROJECT | SHEET No. | TOTAL SHEETS |
|---|---|---|---|---|---|
| 06 | Tul | 190 | 21.2/26.4 | 73 | 120 |

E. Ataelgeed 12-20-10
REGISTERED CIVIL ENGINEER DATE

12-20-10
PLANS APPROVAL DATE

Eltahir K. Ataelgeed No. 76374 Exp 12-31-12 CIVIL
REGISTERED PROFESSIONAL ENGINEER — STATE OF CALIFORNIA

THE STATE OF CALIFORNIA OR ITS OFFICERS OR AGENTS SHALL NOT BE RESPONSIBLE FOR THE ACCURACY OR COMPLETENESS OF SCANNED COPIES OF THIS PLAN SHEET.

NOTES:

1. FOR ACCURATE RIGHT OF WAY , CONTACT RIGHT OF WAY ENGINEERING AT THE DISTRICT OFFICE.

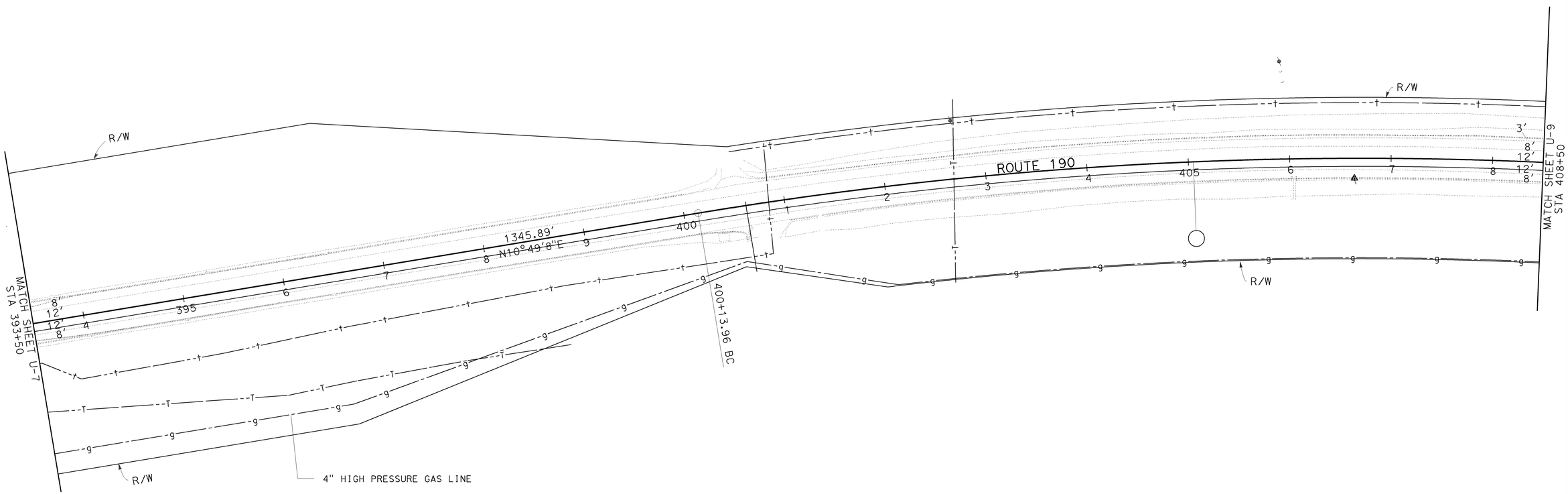


THIS PLAN ACCURATE FOR UTILITY WORK ONLY

# UTILITY PLAN
## U-8

SCALE: 1" = 50'

CALCULATED-DESIGNED BY
CHECKED BY
REVISED BY
DATE REVISED
ELTAHIR ATAELGEED
ABDUL BAKER
FUNCTIONAL SUPERVISOR
ABDUL BAKER
STATE OF CALIFORNIA - DEPARTMENT OF TRANSPORTATION
DESIGN
Caltrans

LAST REVISION 08-30-10
DATE PLOTTED => 22-DEC-2010
TIME PLOTTED => 11:27

BORDER LAST REVISED 7/2/2010
USERNAME => s115755
DGN FILE => 633740ka008.dgn
RELATIVE BORDER SCALE IS IN INCHES 0 1 2 3
UNIT 1476
PROJECT NUMBER & PHASE 06000201501

| Dist | COUNTY | ROUTE | POST MILES TOTAL PROJECT | SHEET No. | TOTAL SHEETS |
|---|---|---|---|---|---|
| 06 | Tul | 190 | 21.2/26.4 | 74 | 120 |

E. Ataelgeed 12-20-10
REGISTERED CIVIL ENGINEER DATE

Eltahir K. Ataelgeed No. 76374 Exp 12-31-12 CIVIL — REGISTERED PROFESSIONAL ENGINEER — STATE OF CALIFORNIA

12-20-10
PLANS APPROVAL DATE

THE STATE OF CALIFORNIA OR ITS OFFICERS OR AGENTS SHALL NOT BE RESPONSIBLE FOR THE ACCURACY OR COMPLETENESS OF SCANNED COPIES OF THIS PLAN SHEET.

NOTES:

1. FOR ACCURATE RIGHT OF WAY , CONTACT RIGHT OF WAY ENGINEERING AT THE DISTRICT OFFICE.

POTHOLING INFORMATION

| ⓧ | UTILITY | STATION | OFFSET | | Elev |
|---|---|---|---|---|---|
| ③ | GAS | 421+49.68 | RIGHT | 95.17 | 721.83 |

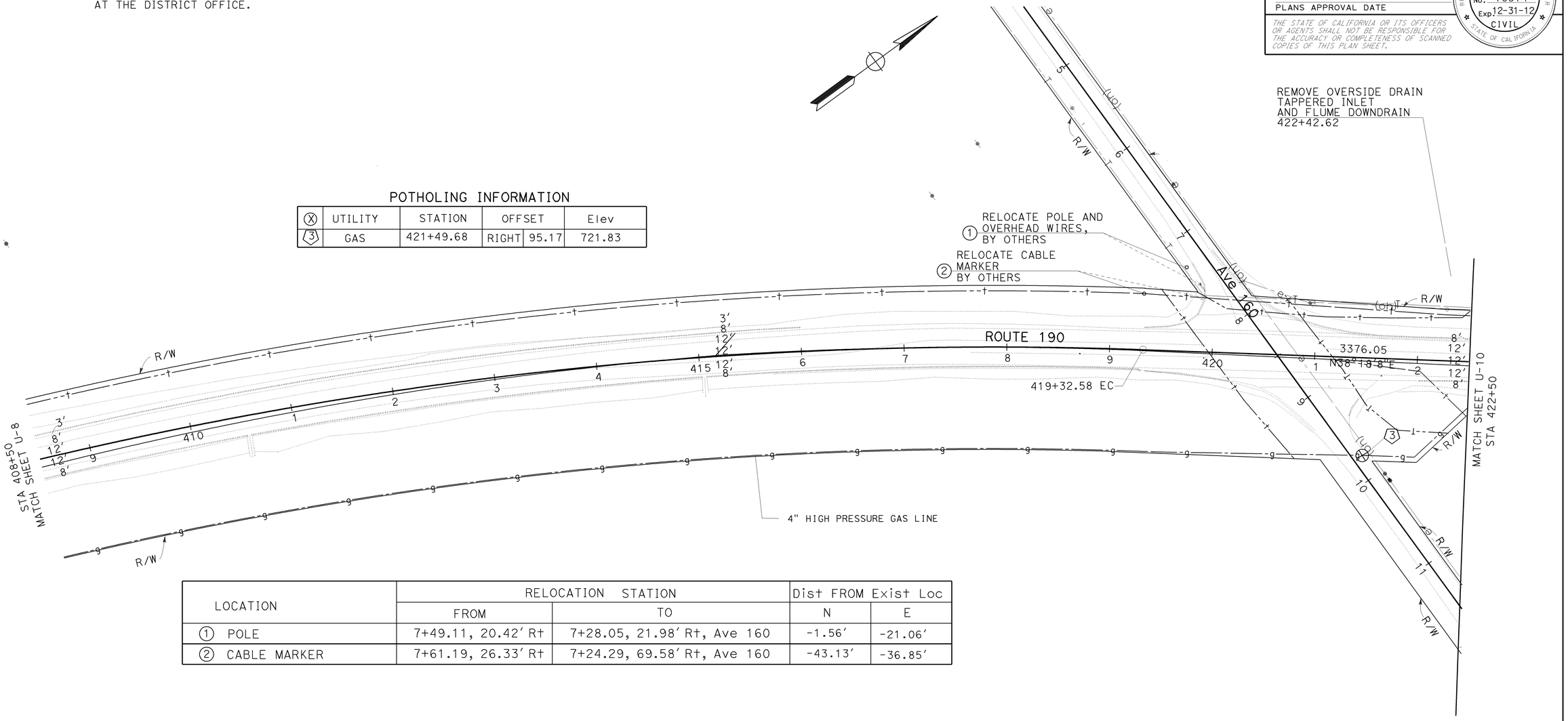


| LOCATION | RELOCATION STATION | | Dist FROM Exist Loc | |
|---|---|---|---|---|
| | FROM | TO | N | E |
| ① POLE | 7+49.11, 20.42′ Rt | 7+28.05, 21.98′ Rt, Ave 160 | -1.56′ | -21.06′ |
| ② CABLE MARKER | 7+61.19, 26.33′ Rt | 7+24.29, 69.58′ Rt, Ave 160 | -43.13′ | -36.85′ |

THIS PLAN ACCURATE FOR UTILITY WORK ONLY

# UTILITY PLAN

SCALE: 1" = 50′

U-9

STATE OF CALIFORNIA - DEPARTMENT OF TRANSPORTATION
DESIGN
FUNCTIONAL SUPERVISOR: ABDUL BAKER
CALCULATED-DESIGNED BY: ELTAHIR ATAELGEED
CHECKED BY: ABDUL BAKER
REVISED BY
DATE REVISED

LAST REVISION DATE PLOTTED => 22-DEC-2010
TIME PLOTTED => 11:27
08-30-10

BORDER LAST REVISED 7/2/2010
USERNAME => s115755
DGN FILE => 633740ka009.dgn
RELATIVE BORDER SCALE IS IN INCHES 0 1 2 3
UNIT 1476
PROJECT NUMBER & PHASE 06000201501

| Dist | COUNTY | ROUTE | POST MILES TOTAL PROJECT | SHEET No. | TOTAL SHEETS |
|---|---|---|---|---|---|
| 06 | Tul | 190 | 21.2/26.4 | 75 | 120 |

E. Ataelgeed 12-20-10
REGISTERED CIVIL ENGINEER DATE

12-20-10
PLANS APPROVAL DATE

REGISTERED PROFESSIONAL ENGINEER
Eltahir K. Ataelgeed
No. 76374
Exp 12-31-12
CIVIL
STATE OF CALIFORNIA

THE STATE OF CALIFORNIA OR ITS OFFICERS OR AGENTS SHALL NOT BE RESPONSIBLE FOR THE ACCURACY OR COMPLETENESS OF SCANNED COPIES OF THIS PLAN SHEET.

NOTES:

1. FOR ACCURATE RIGHT OF WAY , CONTACT RIGHT OF WAY ENGINEERING AT THE DISTRICT OFFICE.

POTHOLING INFORMATION

| ⓧ | UTILITY | STATION | OFFSET | | Elev |
|---|---|---|---|---|---|
| ④ | GAS | 425+94.33 | RIGHT | 45.00 | 710.07 |

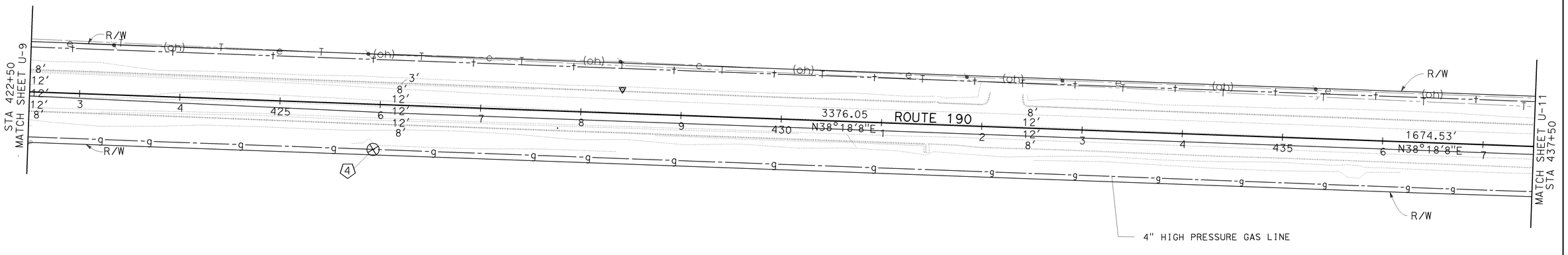


THIS PLAN ACCURATE FOR UTILITY WORK ONLY

# UTILITY PLAN
## U-10

SCALE: 1" = 50′

STATE OF CALIFORNIA - DEPARTMENT OF TRANSPORTATION
Caltrans® DESIGN
FUNCTIONAL SUPERVISOR: ABDUL BAKER
CALCULATED-DESIGNED BY: ELTAHIR ATAELGEED
CHECKED BY: ABDUL BAKER
REVISED BY
DATE REVISED

LAST REVISION
DATE PLOTTED => 22-DEC-2010
TIME PLOTTED => 11:27
08-30-10

BORDER LAST REVISED 7/2/2010
USERNAME => s115755
DGN FILE => 633740ka010.dgn
RELATIVE BORDER SCALE IS IN INCHES 0 1 2 3
UNIT 1476
PROJECT NUMBER & PHASE 06000201501

| Dist | COUNTY | ROUTE | POST MILES TOTAL PROJECT | SHEET No. | TOTAL SHEETS |
|---|---|---|---|---|---|
| 06 | Tul | 190 | 21.2/26.4 | 76 | 120 |

E. Ataelgeed 12-20-10
REGISTERED CIVIL ENGINEER DATE

12-20-10
PLANS APPROVAL DATE

Eltahir K. Ataelgeed
No. 76374
Exp 12-31-12
CIVIL
REGISTERED PROFESSIONAL ENGINEER
STATE OF CALIFORNIA

THE STATE OF CALIFORNIA OR ITS OFFICERS OR AGENTS SHALL NOT BE RESPONSIBLE FOR THE ACCURACY OR COMPLETENESS OF SCANNED COPIES OF THIS PLAN SHEET.

NOTES:

1. FOR ACCURATE RIGHT OF WAY , CONTACT RIGHT OF WAY ENGINEERING AT THE DISTRICT OFFICE.

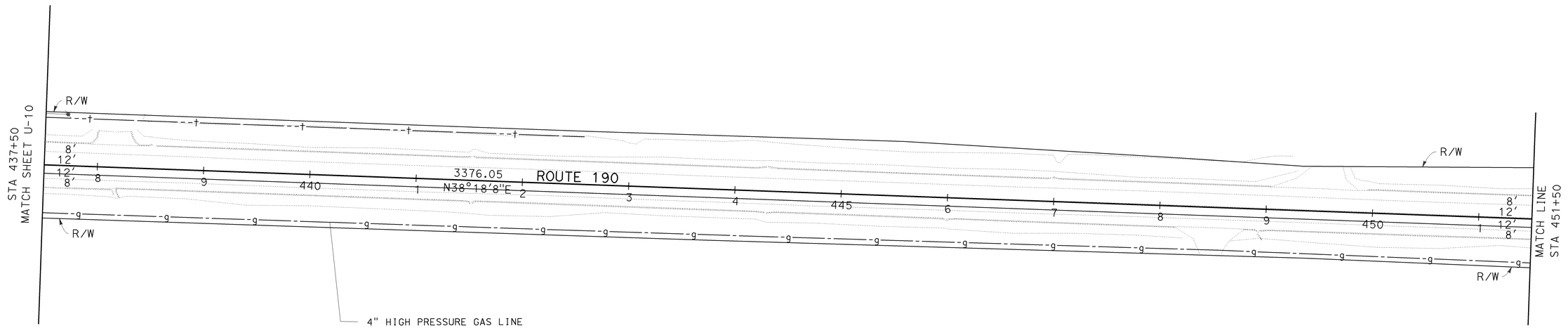


THIS PLAN ACCURATE FOR UTILITY WORK ONLY

# UTILITY PLAN
## U-11

SCALE: 1" = 50'

CALCULATED-DESIGNED BY
CHECKED BY
REVISED BY
DATE REVISED
ELTAHIR ATAELGEED
ABDUL BAKER
FUNCTIONAL SUPERVISOR
ABDUL BAKER
STATE OF CALIFORNIA - DEPARTMENT OF TRANSPORTATION
DESIGN
Caltrans

LAST REVISION
DATE PLOTTED => 22-DEC-2010
TIME PLOTTED => 11:27
08-30-10

BORDER LAST REVISED 7/2/2010
USERNAME => s115755
DGN FILE => 633740ka011.dgn
RELATIVE BORDER SCALE IS IN INCHES 0 1 2 3
UNIT 1476
PROJECT NUMBER & PHASE 06000201501

| Dist | COUNTY | ROUTE | POST MILES TOTAL PROJECT | SHEET No. | TOTAL SHEETS |
|---|---|---|---|---|---|
| 06 | Tul | 190 | 21.2/26.4 | 77 | 120 |

E. Ataelgeed 12-20-10
REGISTERED CIVIL ENGINEER DATE

12-20-10
PLANS APPROVAL DATE

REGISTERED PROFESSIONAL ENGINEER
Eltahir K. Ataelgeed
No. 76374
Exp 12-31-12
CIVIL
STATE OF CALIFORNIA

THE STATE OF CALIFORNIA OR ITS OFFICERS OR AGENTS SHALL NOT BE RESPONSIBLE FOR THE ACCURACY OR COMPLETENESS OF SCANNED COPIES OF THIS PLAN SHEET.

NOTES:

1. FOR ACCURATE RIGHT OF WAY , CONTACT RIGHT OF WAY ENGINEERING AT THE DISTRICT OFFICE.

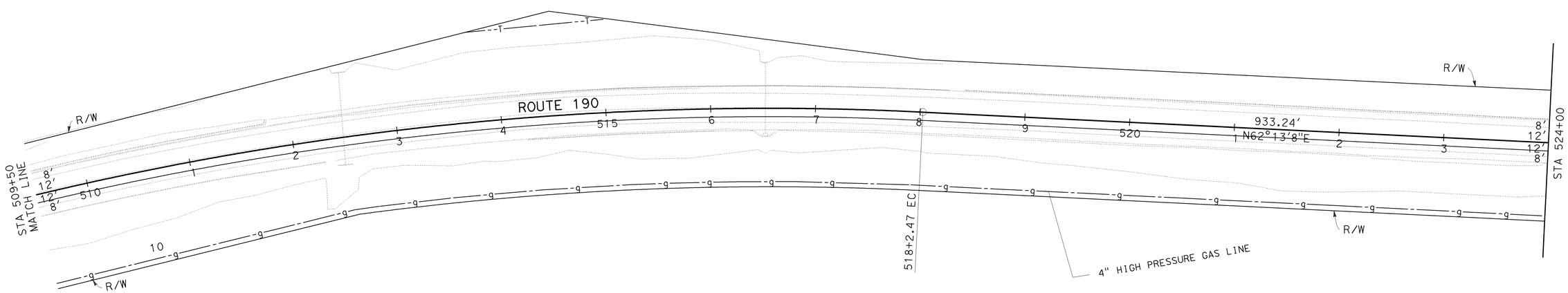


THIS PLAN ACCURATE FOR UTILITY WORK ONLY

# UTILITY PLAN

SCALE: 1" = 50'

U-12

STATE OF CALIFORNIA - DEPARTMENT OF TRANSPORTATION
DESIGN
FUNCTIONAL SUPERVISOR: ABDUL BAKER
CALCULATED-DESIGNED BY: ELTAHIR ATAELGEED
CHECKED BY: ABDUL BAKER
REVISED BY
DATE REVISED

LAST REVISION DATE PLOTTED => 22-DEC-2010
08-30-10 TIME PLOTTED => 11:27

BORDER LAST REVISED 7/2/2010
USERNAME => s115755
DGN FILE => 633740ka012.dgn
RELATIVE BORDER SCALE IS IN INCHES 0 1 2 3
UNIT 1476
PROJECT NUMBER & PHASE 06000201501

| Dist | COUNTY | ROUTE | POST MILES TOTAL PROJECT | SHEET No. | TOTAL SHEETS |
|---|---|---|---|---|---|
| 06 | Tul | 190 | 21.2/26.4 | 78 | 120 |

Hassan Taha 03-15-10
REGISTERED CIVIL ENGINEER DATE

12-20-10
PLANS APPROVAL DATE

REGISTERED PROFESSIONAL ENGINEER
HASSAN M. TAHA
No. 60130
Exp 06/30/12
CIVIL
STATE OF CALIFORNIA

THE STATE OF CALIFORNIA OR ITS OFFICERS OR AGENTS SHALL NOT BE RESPONSIBLE FOR THE ACCURACY OR COMPLETENESS OF SCANNED COPIES OF THIS PLAN SHEET.

# STATIONARY MOUNTED CONSTRUCTION AREA SIGNS

| SIGN No. | SIGN CODE | PANEL SIZE | SIGN MESSAGE | No. OF POSTS | POST SIZE | No. OF SIGNS |
|---|---|---|---|---|---|---|
| (A) | W20-1 | 48" x 48" | ROAD WORK AHEAD | 1 | 6" x 6" | 4 |
| (B) | C14(CA) | 48" x 24" | END ROAD WORK | 1 | 4" x 6" | 4 |

NOTE: LOCATIONS OF CONSTRUCTION AREA SIGNS SHOWN ARE APPROXIMATE. EXACT LOCATIONS TO BE DETERMINED BY THE ENGINEER.

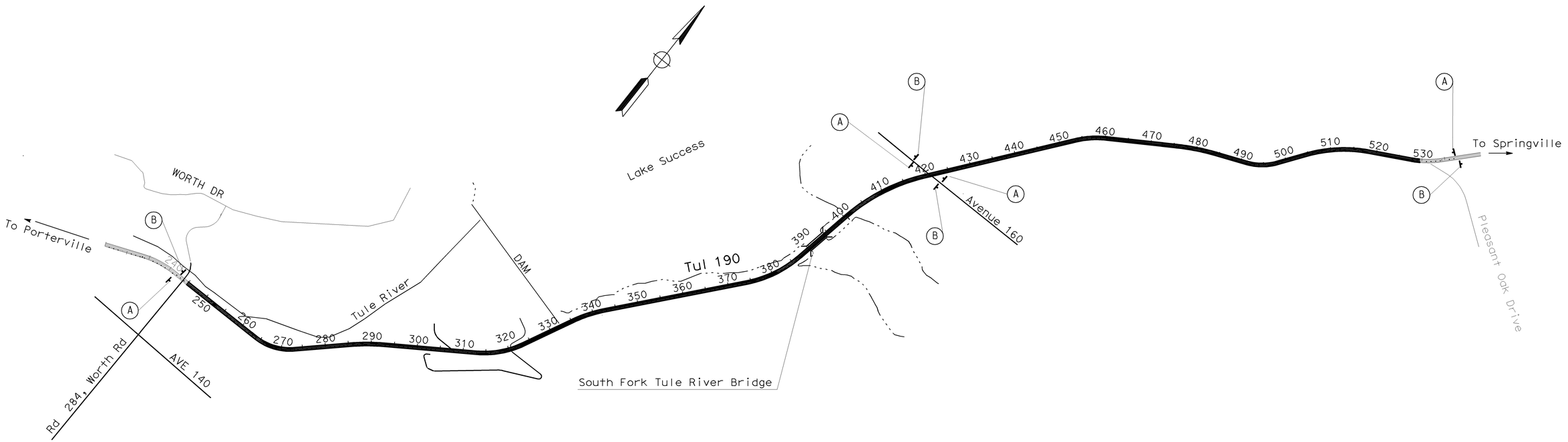


## CONSTRUCTION AREA SIGNS

NO SCALE

CS-1

THIS PLAN ACCURATE FOR CONSTRUCTION AREA SIGNS ONLY

CALCULATED- DESIGNED BY: KAMRUL KHAN
CHECKED BY: HASSAN TAHA
FUNCTIONAL SUPERVISOR: MOHAMMED QATAMI
STATE OF CALIFORNIA - DEPARTMENT OF TRANSPORTATION
Caltrans® TRAFFIC DESIGN
REVISED BY | DATE REVISED

LAST REVISION | DATE PLOTTED => 22-DEC-2010 | TIME PLOTTED => 11:27
07-23-10

| Dist | COUNTY | ROUTE | POST MILES TOTAL PROJECT | SHEET No. | TOTAL SHEETS |
|---|---|---|---|---|---|
| 06 | Tul | 190 | 21.2/26.4 | 79 | 120 |

Hassan Taha 03-15-10
REGISTERED CIVIL ENGINEER DATE

12-20-10
PLANS APPROVAL DATE

REGISTERED PROFESSIONAL ENGINEER
HASSAN M. TAHA
No. 60130
Exp 06/30/12
CIVIL
STATE OF CALIFORNIA

THE STATE OF CALIFORNIA OR ITS OFFICERS OR AGENTS SHALL NOT BE RESPONSIBLE FOR THE ACCURACY OR COMPLETENESS OF SCANNED COPIES OF THIS PLAN SHEET.

## LEGEND

- TRAFFIC DIRECTION
- XX — TRAFFIC STRIPE
- No. — ROADSIDE SIGN NUMBER
- RESET ROADSIDE SIGN
- ROADSIDE SIGN ONE-POST
- ROADSIDE SIGN TWO-POST
- DELINEATOR (CLASS I) - TYPE E,F
- CHANGE IN DETAIL
- OBJECT MARKER (TYPE P, L)

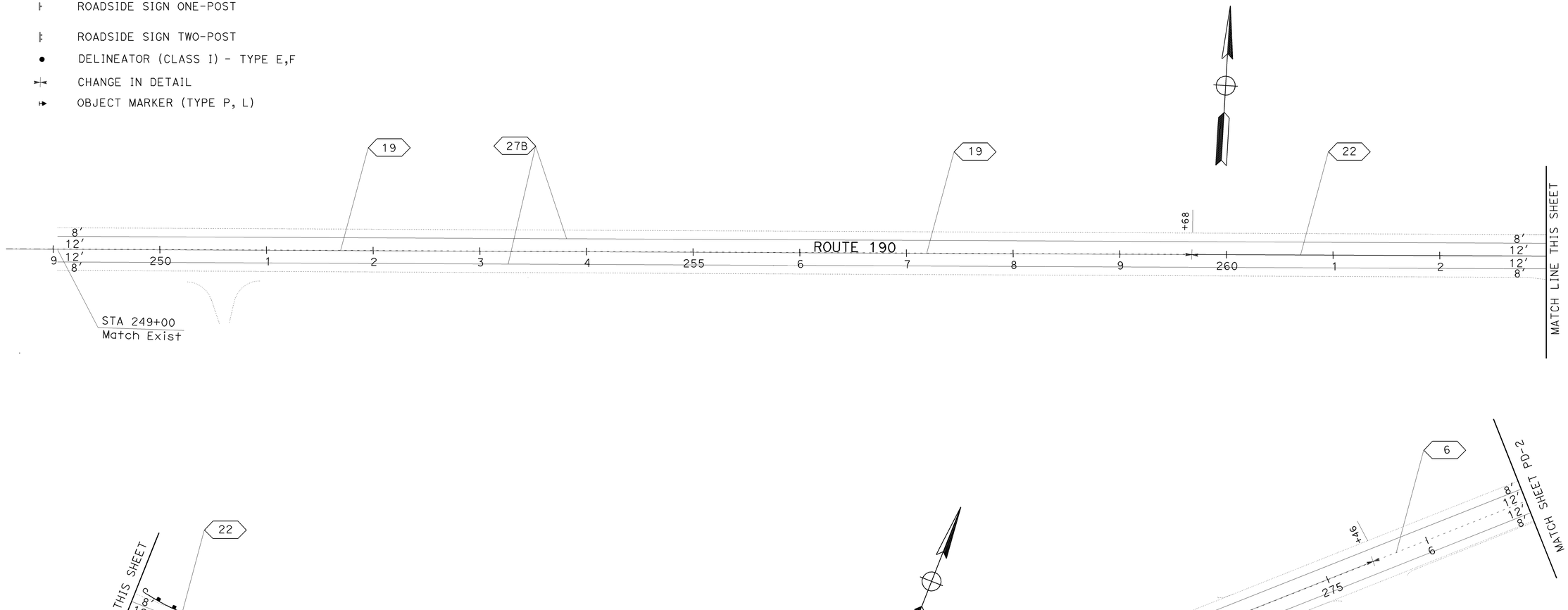


# PAVEMENT DELINEATION AND SIGN PLAN

SCALE: 1"= 50′

**PD-1**

THIS PLAN ACCURATE FOR PAVEMENT DELINEATION AND SIGN WORK ONLY

STATE OF CALIFORNIA - DEPARTMENT OF TRANSPORTATION
Caltrans
TRAFFIC DESIGN
FUNCTIONAL SUPERVISOR: MOHAMMED QATAMI
CALCULATED-DESIGNED BY: KAMRUL KHAN
CHECKED BY: HASSAN TAHA
REVISED BY
DATE REVISED

LAST REVISION
DATE PLOTTED => 22-DEC-2010
TIME PLOTTED => 11:27
07-23-10

BORDER LAST REVISED 7/1/2010
USERNAME => s115755
DGN FILE => 633740na001.dgn
RELATIVE BORDER SCALE IS IN INCHES 0 1 2 3
UNIT 1513
PROJECT NUMBER & PHASE 06000201501

| Dist | COUNTY | ROUTE | POST MILES TOTAL PROJECT | SHEET No. | TOTAL SHEETS |
|---|---|---|---|---|---|
| 06 | Tul | 190 | 21.2/26.4 | 80 | 120 |

Hassan Taha 03-15-10
REGISTERED CIVIL ENGINEER DATE

12-20-10
PLANS APPROVAL DATE

REGISTERED PROFESSIONAL ENGINEER
HASSAN M. TAHA
No. 60130
Exp 06/30/12
CIVIL
STATE OF CALIFORNIA

THE STATE OF CALIFORNIA OR ITS OFFICERS OR AGENTS SHALL NOT BE RESPONSIBLE FOR THE ACCURACY OR COMPLETENESS OF SCANNED COPIES OF THIS PLAN SHEET.

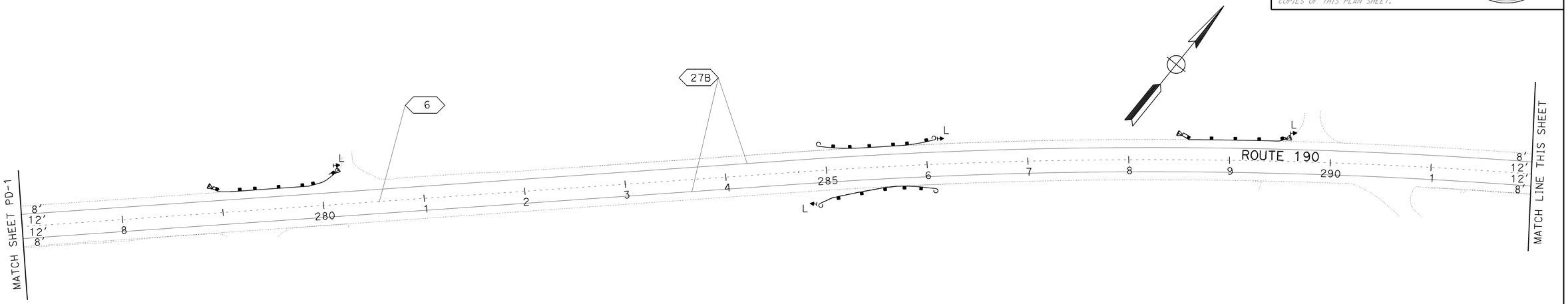


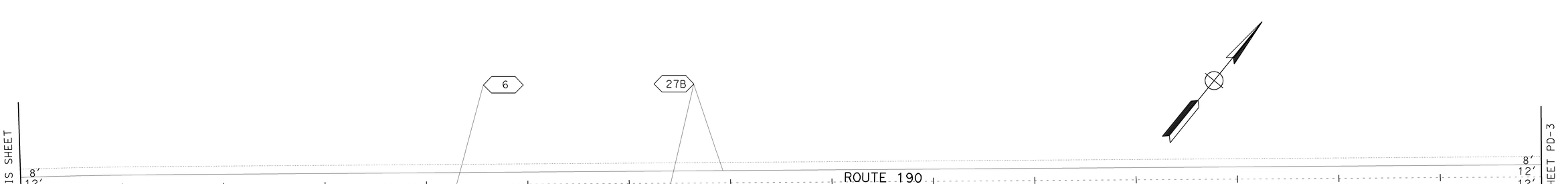


# PAVEMENT DELINEATION AND SIGN PLAN

SCALE: 1"= 50′ **PD-2**

THIS PLAN ACCURATE FOR PAVEMENT DELINEATION AND SIGN WORK ONLY

STATE OF CALIFORNIA - DEPARTMENT OF TRANSPORTATION
Caltrans®
TRAFFIC DESIGN
FUNCTIONAL SUPERVISOR: MOHAMMED QATAMI
CALCULATED-DESIGNED BY: KAMRUL KHAN
CHECKED BY: HASSAN TAHA
REVISED BY
DATE REVISED

LAST REVISION
DATE PLOTTED => 22-DEC-2010
TIME PLOTTED => 11:27
07-23-10

BORDER LAST REVISED 7/1/2010
USERNAME => s115755
DGN FILE => 633740na002.dgn
RELATIVE BORDER SCALE IS IN INCHES 0 1 2 3
UNIT 1513
PROJECT NUMBER & PHASE 06000201501

| Dist | COUNTY | ROUTE | POST MILES TOTAL PROJECT | SHEET No. | TOTAL SHEETS |
|---|---|---|---|---|---|
| 06 | Tul | 190 | 21.2/26.4 | 81 | 120 |

Hassan Taha 03-15-10
REGISTERED CIVIL ENGINEER DATE

12-20-10
PLANS APPROVAL DATE

REGISTERED PROFESSIONAL ENGINEER
HASSAN M. TAHA
No. 60130
Exp 06/30/12
CIVIL
STATE OF CALIFORNIA

THE STATE OF CALIFORNIA OR ITS OFFICERS OR AGENTS SHALL NOT BE RESPONSIBLE FOR THE ACCURACY OR COMPLETENESS OF SCANNED COPIES OF THIS PLAN SHEET.

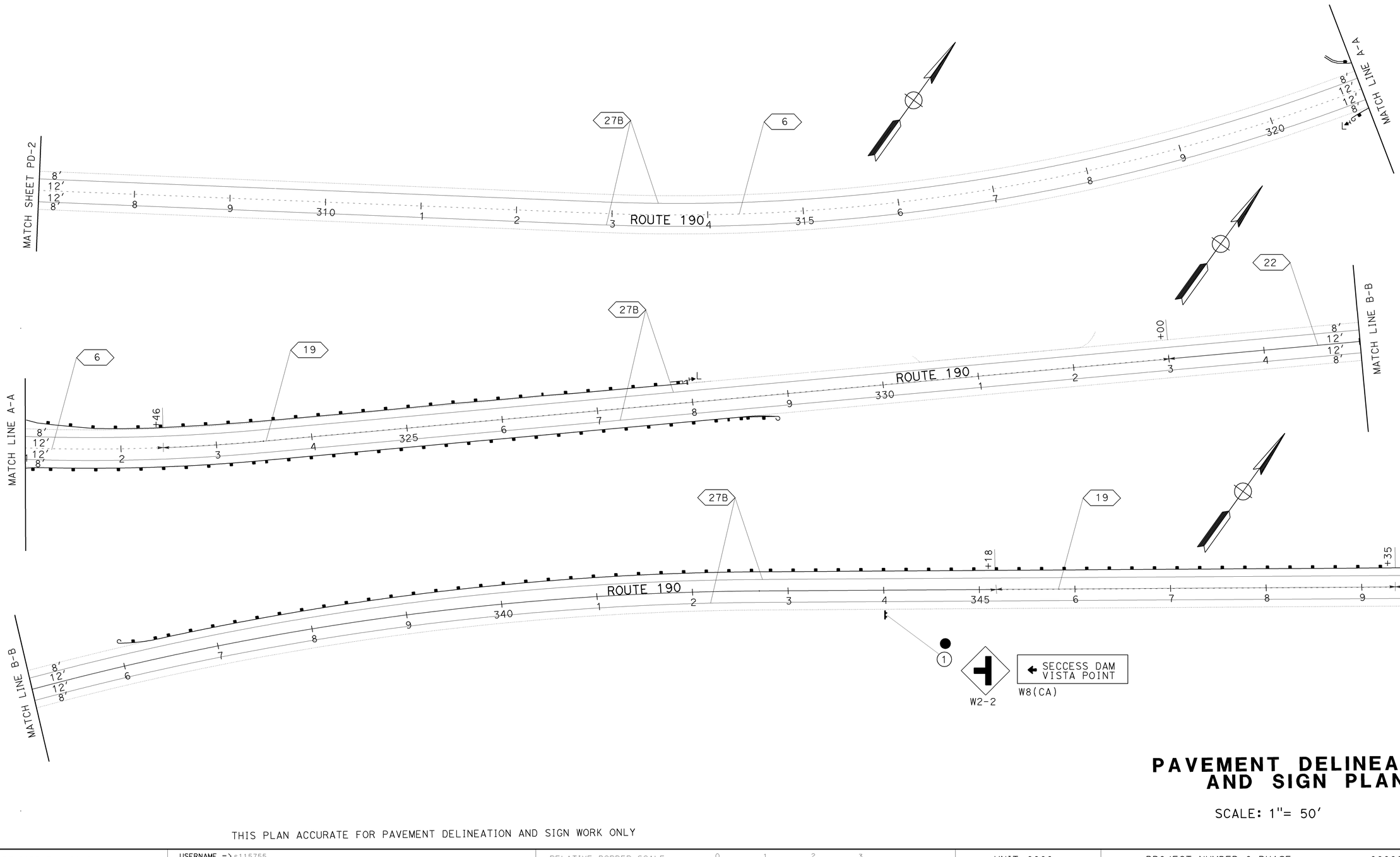


# PAVEMENT DELINEATION AND SIGN PLAN

SCALE: 1"= 50'

**PD-3**

THIS PLAN ACCURATE FOR PAVEMENT DELINEATION AND SIGN WORK ONLY

STATE OF CALIFORNIA - DEPARTMENT OF TRANSPORTATION
TRAFFIC DESIGN
FUNCTIONAL SUPERVISOR: MOHAMMED QATAMI
CALCULATED-DESIGNED BY: KAMRUL KHAN
CHECKED BY: HASSAN TAHA
REVISED BY
DATE REVISED

LAST REVISION DATE PLOTTED => 22-DEC-2010
TIME PLOTTED => 11:27

BORDER LAST REVISED 7/1/2010
USERNAME => s115755
DGN FILE => 633740na003.dgn
RELATIVE BORDER SCALE IS IN INCHES 0 1 2 3
UNIT 0000
PROJECT NUMBER & PHASE 00000000001

| Dist | COUNTY | ROUTE | POST MILES TOTAL PROJECT | SHEET No. | TOTAL SHEETS |
|---|---|---|---|---|---|
| 06 | Tul | 190 | 21.2/26.4 | 82 | 120 |

Hassan Taha 03-15-10
REGISTERED CIVIL ENGINEER DATE

12-20-10
PLANS APPROVAL DATE

REGISTERED PROFESSIONAL ENGINEER
HASSAN M. TAHA
No. 60130
Exp 06/30/12
CIVIL
STATE OF CALIFORNIA

THE STATE OF CALIFORNIA OR ITS OFFICERS OR AGENTS SHALL NOT BE RESPONSIBLE FOR THE ACCURACY OR COMPLETENESS OF SCANNED COPIES OF THIS PLAN SHEET.

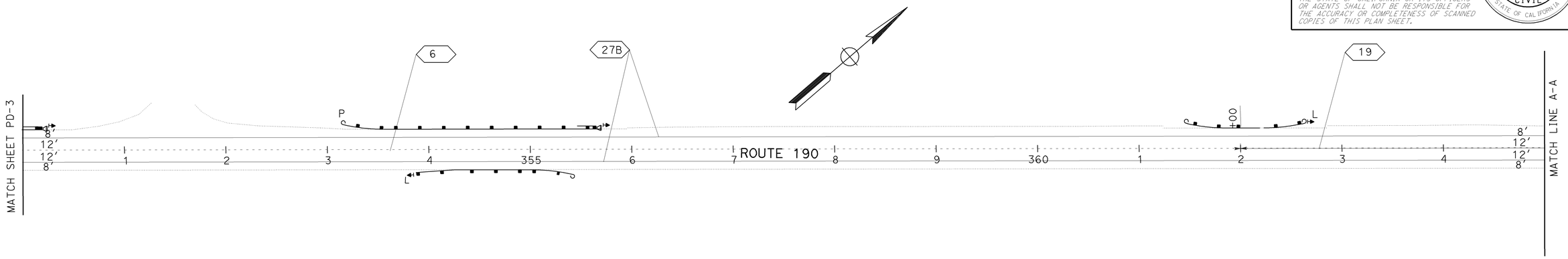


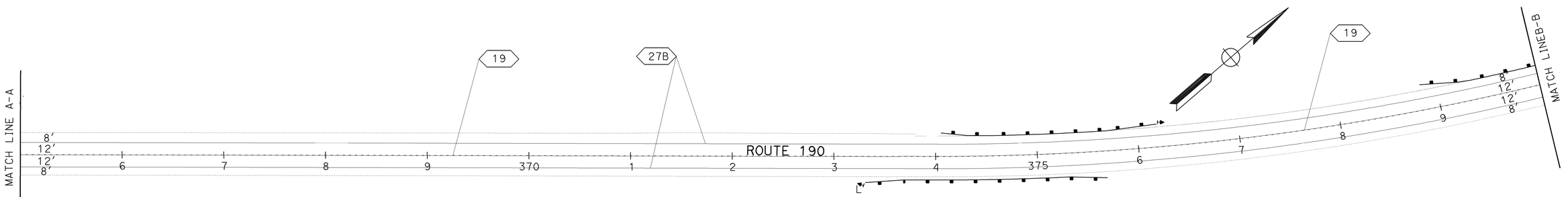


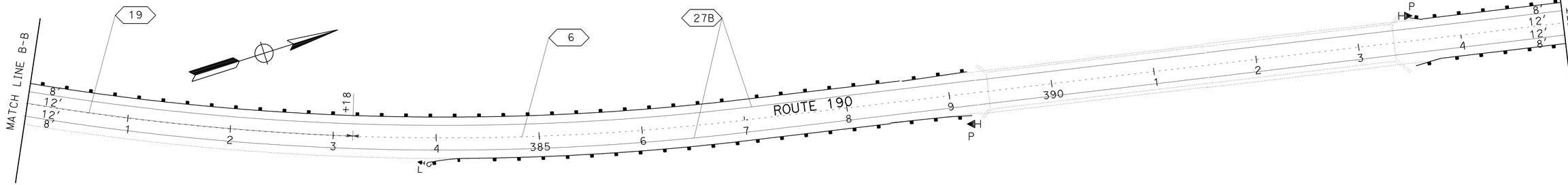


# PAVEMENT DELINEATION AND SIGN PLAN

SCALE: 1"= 50′

**PD-4**

THIS PLAN ACCURATE FOR PAVEMENT DELINEATION AND SIGN WORK ONLY

STATE OF CALIFORNIA - DEPARTMENT OF TRANSPORTATION
Caltrans®
TRAFFIC DESIGN
FUNCTIONAL SUPERVISOR: MOHAMMED QATAMI
CALCULATED-DESIGNED BY: KAMRUL KHAN
CHECKED BY: HASSAN TAHA
REVISED BY
DATE REVISED

LAST REVISION | DATE PLOTTED => 22-DEC-2010 | TIME PLOTTED => 11:27 | 07-23-10

BORDER LAST REVISED 7/1/2010
USERNAME => s115755
DGN FILE => 633740na004.dgn
RELATIVE BORDER SCALE IS IN INCHES 0 1 2 3
UNIT 1513
PROJECT NUMBER & PHASE 06000201501

| Dist | COUNTY | ROUTE | POST MILES TOTAL PROJECT | SHEET No. | TOTAL SHEETS |
|---|---|---|---|---|---|
| 06 | Tul | 190 | 21.2/26.4 | 83 | 120 |

Hassan Taha 03-15-10
REGISTERED CIVIL ENGINEER DATE

12-20-10
PLANS APPROVAL DATE

REGISTERED PROFESSIONAL ENGINEER
HASSAN M. TAHA
No. 60130
Exp 06/30/12
CIVIL
STATE OF CALIFORNIA

THE STATE OF CALIFORNIA OR ITS OFFICERS OR AGENTS SHALL NOT BE RESPONSIBLE FOR THE ACCURACY OR COMPLETENESS OF SCANNED COPIES OF THIS PLAN SHEET.

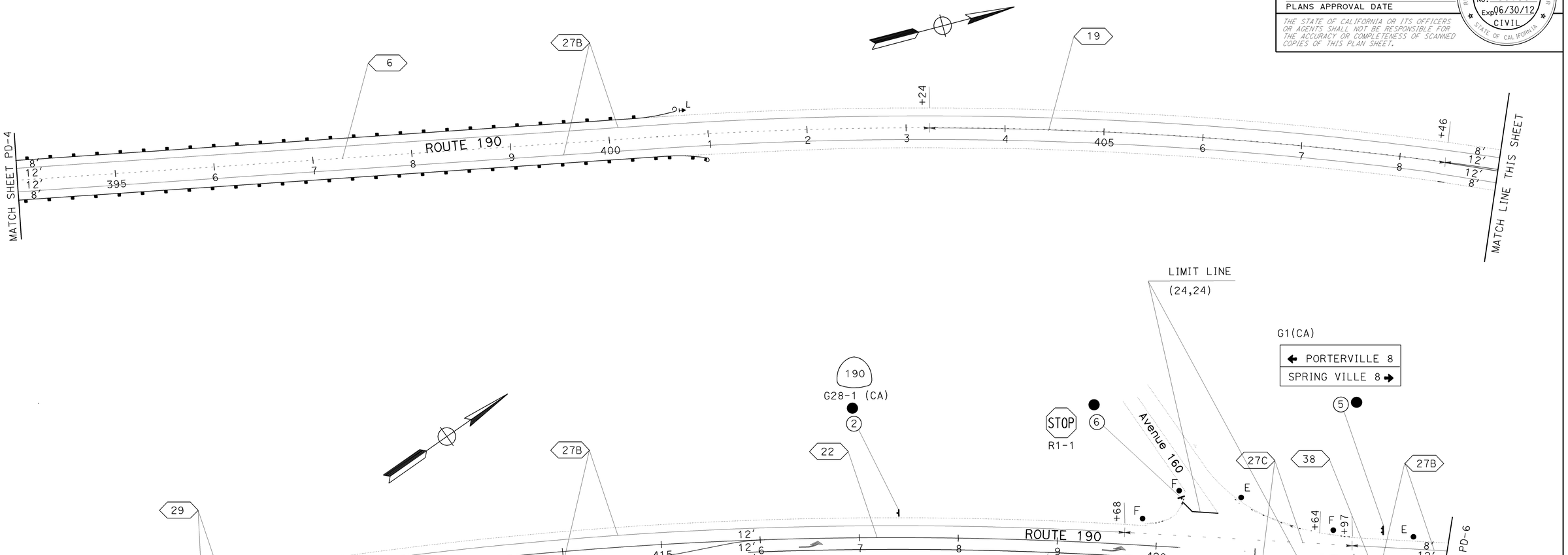


# PAVEMENT DELINEATION AND SIGN PLAN

SCALE: 1"= 50'

**PD-5**

THIS PLAN ACCURATE FOR PAVEMENT DELINEATION AND SIGN WORK ONLY

STATE OF CALIFORNIA - DEPARTMENT OF TRANSPORTATION
Caltrans®
TRAFFIC DESIGN
FUNCTIONAL SUPERVISOR: MOHAMMED QATAMI
CALCULATED-DESIGNED BY: KAMRUL KHAN
CHECKED BY: HASSAN TAHA
DATE REVISED
REVISED BY

LAST REVISION DATE PLOTTED => 22-DEC-2010
TIME PLOTTED => 11:27
07-23-10

| Dist | COUNTY | ROUTE | POST MILES TOTAL PROJECT | SHEET No. | TOTAL SHEETS |
|---|---|---|---|---|---|
| 06 | Tul | 190 | 21.2/26.4 | 84 | 120 |

Hassan Taha 03-15-10
REGISTERED CIVIL ENGINEER DATE

12-20-10
PLANS APPROVAL DATE

REGISTERED PROFESSIONAL ENGINEER
HASSAN M. TAHA
No. 60130
Exp 06/30/12
CIVIL
STATE OF CALIFORNIA

THE STATE OF CALIFORNIA OR ITS OFFICERS OR AGENTS SHALL NOT BE RESPONSIBLE FOR THE ACCURACY OR COMPLETENESS OF SCANNED COPIES OF THIS PLAN SHEET.

SECCESS VALLEY
← TULE RIVER INDIAN RESERVATION 10

RW-080 (CA) RM-010 (CA)

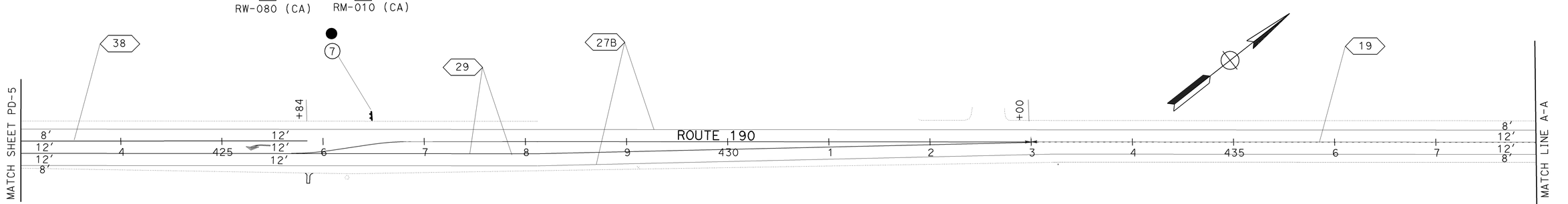


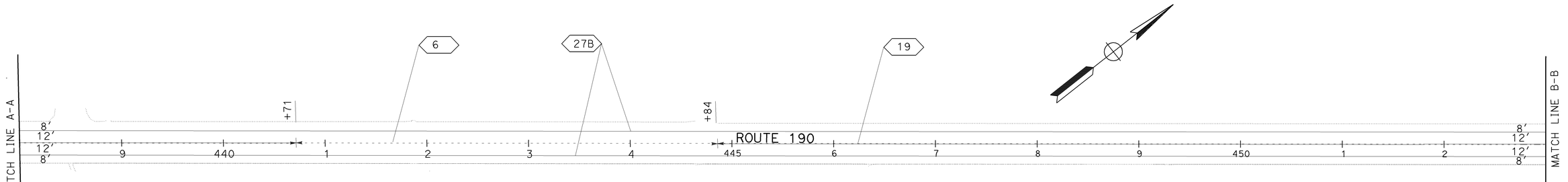


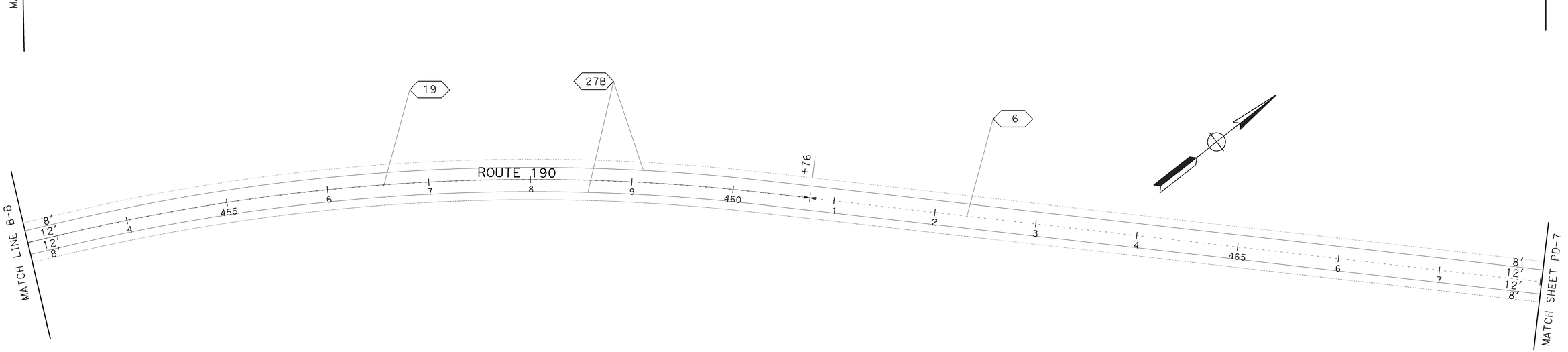


# PAVEMENT DELINEATION AND SIGN PLAN

SCALE: 1"= 50′

**PD-6**

THIS PLAN ACCURATE FOR PAVEMENT DELINEATION AND SIGN WORK ONLY

STATE OF CALIFORNIA - DEPARTMENT OF TRANSPORTATION
TRAFFIC DESIGN
FUNCTIONAL SUPERVISOR: MOHAMMED QATAMI
CALCULATED-DESIGNED BY: KAMRUL KHAN
CHECKED BY: HASSAN TAHA
REVISED BY
DATE REVISED

LAST REVISION DATE PLOTTED => 22-DEC-2010
TIME PLOTTED => 11:27
07-23-10

BORDER LAST REVISED 7/1/2010
USERNAME => s115755
DGN FILE => 633740na006.dgn
RELATIVE BORDER SCALE IS IN INCHES 0 1 2 3
UNIT 1513
PROJECT NUMBER & PHASE 06000201501

| Dist | COUNTY | ROUTE | POST MILES TOTAL PROJECT | SHEET No. | TOTAL SHEETS |
|---|---|---|---|---|---|
| 06 | Tul | 190 | 21.2/26.4 | 85 | 120 |

Hassan Taha 03-15-10
REGISTERED CIVIL ENGINEER DATE

12-20-10
PLANS APPROVAL DATE

REGISTERED PROFESSIONAL ENGINEER
HASSAN M. TAHA
No. 60130
Exp 06/30/12
CIVIL
STATE OF CALIFORNIA

THE STATE OF CALIFORNIA OR ITS OFFICERS OR AGENTS SHALL NOT BE RESPONSIBLE FOR THE ACCURACY OR COMPLETENESS OF SCANNED COPIES OF THIS PLAN SHEET.

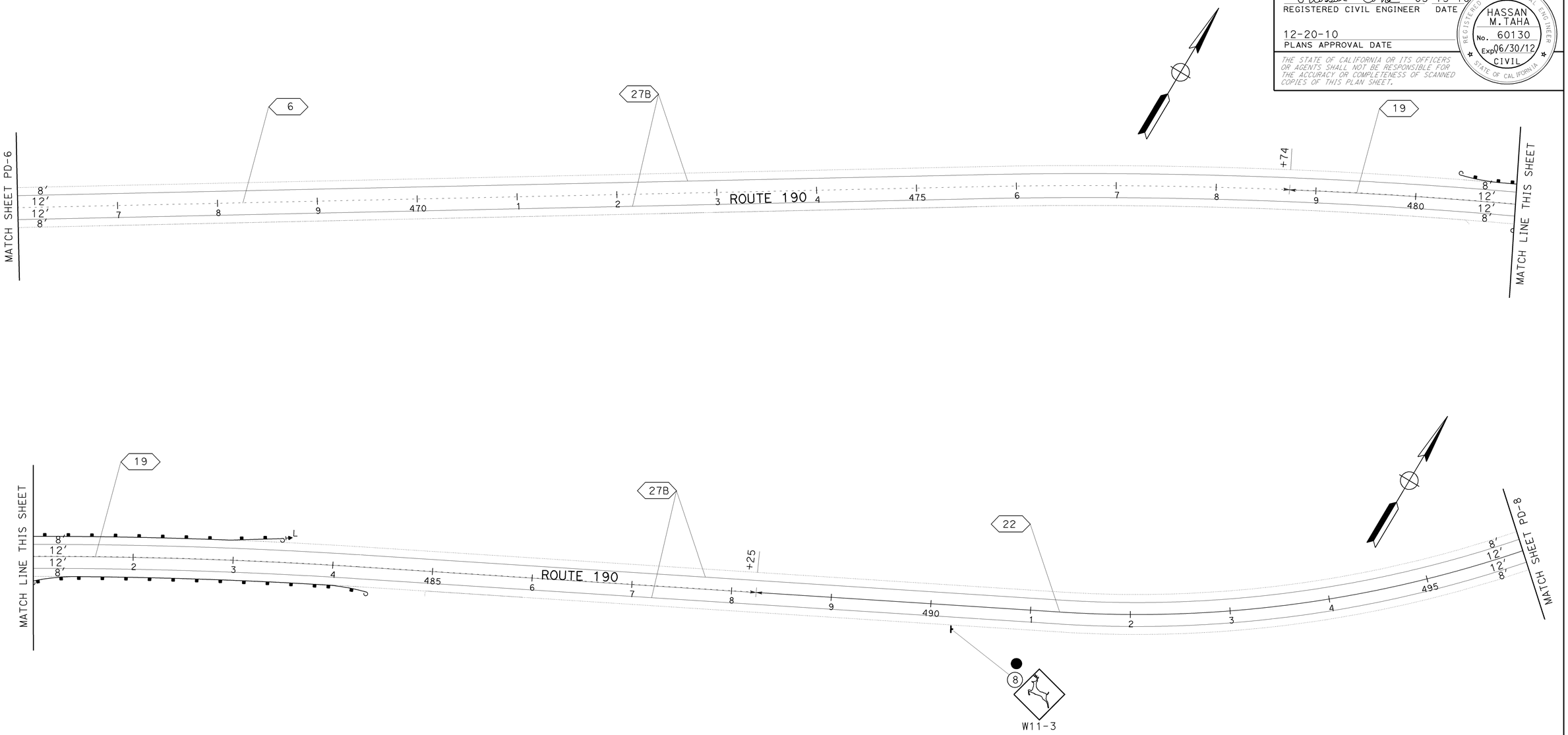


# PAVEMENT DELINEATION AND SIGN PLAN

SCALE: 1"= 50'

**PD-7**

THIS PLAN ACCURATE FOR PAVEMENT DELINEATION AND SIGN WORK ONLY

REVISED BY | DATE REVISED

CALCULATED-DESIGNED BY: KAMRUL KHAN
CHECKED BY: HASSAN TAHA

FUNCTIONAL SUPERVISOR: MOHAMMED QATAMI

STATE OF CALIFORNIA - DEPARTMENT OF TRANSPORTATION
TRAFFIC DESIGN

LAST REVISION | DATE PLOTTED => 22-DEC-2010
07-23-10 | TIME PLOTTED => 11:27

| Dist | COUNTY | ROUTE | POST MILES TOTAL PROJECT | SHEET No. | TOTAL SHEETS |
|---|---|---|---|---|---|
| 06 | Tul | 190 | 21.2/26.4 | 86 | 120 |

Hassan Taha 03-15-10
REGISTERED CIVIL ENGINEER DATE

12-20-10
PLANS APPROVAL DATE

REGISTERED PROFESSIONAL ENGINEER
HASSAN M. TAHA
No. 60130
Exp 06/30/12
CIVIL
STATE OF CALIFORNIA

THE STATE OF CALIFORNIA OR ITS OFFICERS OR AGENTS SHALL NOT BE RESPONSIBLE FOR THE ACCURACY OR COMPLETENESS OF SCANNED COPIES OF THIS PLAN SHEET.

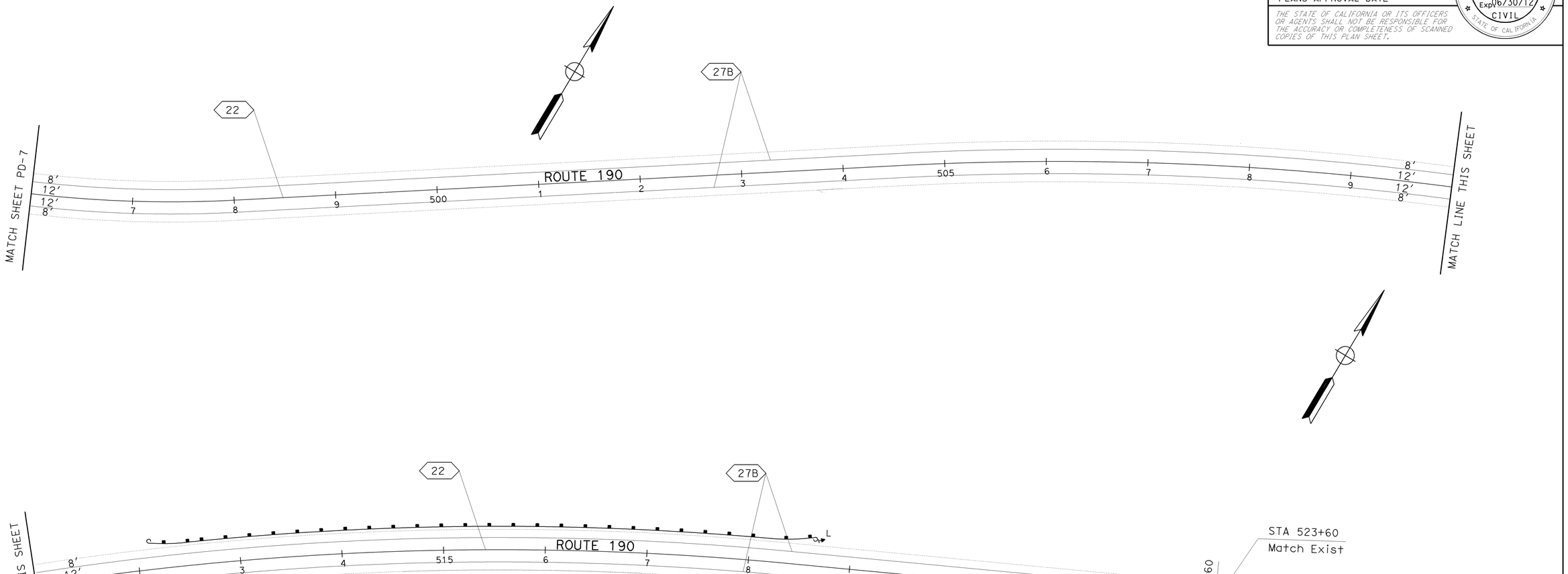


# PAVEMENT DELINEATION AND SIGN PLAN

SCALE: 1"= 50′

**PD-8**

THIS PLAN ACCURATE FOR PAVEMENT DELINEATION AND SIGN WORK ONLY

STATE OF CALIFORNIA - DEPARTMENT OF TRANSPORTATION
Caltrans
TRAFFIC DESIGN
FUNCTIONAL SUPERVISOR: MOHAMMED QATAMI
CALCULATED-DESIGNED BY
CHECKED BY: HASSAN TAHA
DETAILED BY: KAMRUL KHAN
REVISED BY
DATE REVISED

LAST REVISION 07-23-10
DATE PLOTTED => 22-DEC-2010
TIME PLOTTED => 11:27

BORDER LAST REVISED 7/1/2010
USERNAME => s115755
DGN FILE => 633740na008.dgn
RELATIVE BORDER SCALE IS IN INCHES 0 1 2 3
UNIT 1513
PROJECT NUMBER & PHASE 06000201501

| Dist | COUNTY | ROUTE | POST MILES TOTAL PROJECT | SHEET No. | TOTAL SHEETS |
|---|---|---|---|---|---|
| 06 | Tul | 190 | 21.1/26.4 | 87 | 120 |

Hassan Taha 03-15-10
REGISTERED CIVIL ENGINEER DATE

12-20-10
PLANS APPROVAL DATE

REGISTERED PROFESSIONAL ENGINEER
HASSAN M. TAHA
No. 60130
Exp 06/30/12
CIVIL
STATE OF CALIFORNIA

THE STATE OF CALIFORNIA OR ITS OFFICERS OR AGENTS SHALL NOT BE RESPONSIBLE FOR THE ACCURACY OR COMPLETENESS OF SCANNED COPIES OF THIS PLAN SHEET.

# PAVEMENT DELINEATION QUANTITIES

| SHEET No. | LOCATION | DIRECTION | DETAIL No. | PAVEMENT MARKER (RETROREFLECTIVE) | | | THERMOPLASTIC TRAFFIC STRIPE | | | | THERMOPLASTIC PAVEMENT MARKING | |
|---|---|---|---|---|---|---|---|---|---|---|---|---|
| | | | | TYPE D | TYPE G | TYPE H | 8" SOLID | 4" SOLID | 4" (BROKEN 36-12) | 4" (BROKEN 12-3) | | |
| | | | | EA | EA | EA | LF | LF | LF | LF | DESCRIPTION | SQFT |
| PD-1 to PD-12 | 249+04 to 420+31 | EB | 27B | | | | | 17,127 | | | | |
| | 419+68 to 249+04 | WB | 27B | | | | | 17,064 | | | | |
| PD-1 | 249+04 to 259+68 | EB | 19 | 26 | | 45 | | 1,064 | 1,064 | | | |
| | 259+68 to 264+36 | EB | 22 | 42 | | | | 936 | | | | |
| | 264+36 to 275+46 | EB | 19 | 26 | | 47 | | 1,110 | 1,110 | | | |
| PD-1 to PD-3 | 275+46 to 322+46 | EB | 6 | 99 | | | | | 4,700 | | | |
| PD-3 | 322+46 to 333+00 | EB | 19 | 24 | | 45 | | 1,054 | 1,054 | | | |
| | 333+00 to 345+18 | EB | 22 | 104 | | | | 2,436 | | | | |
| | 345+18 to 349+35 | EB | 19 | 12 | | 18 | | 417 | 417 | | | |
| PD-3 to PD-4 | 349+35 to 362+00 | EB | 6 | 27 | | | | | 1,265 | | | |
| PD-4 | 362+00 to 383+18 | EB | 19 | 48 | | 89 | | 2,118 | 2,118 | | | |
| PD-4to PD-5 | 383+18 to 403+24 | EB | 6 | 43 | | | | | 2,006 | | | |
| PD-5 | 403+24 to 408+46 | EB | 19 | 14 | | 23 | | 522 | 522 | | | |
| | 408+46 to 415+87 | EB | 29 | 64 | | | | 2,964 | | | | |
| | 415+87 to 420+31 | EB | 38 | | 19 | | 444 | | | | 2-TYPE IV ARROW | 30 |
| | 415+87 to 420+31 | EB | 22 | 40 | | | | 888 | | | | |
| | 421+97 to 419+68 | WB | 27C | | | | | | | 229 | 2-LIMIT LINE | 48 |
| PD-5 to PD-8 | 421+97 to 523+60 | EB | 27B | | | | | 10,163 | | | | |
| | 523+60 to 422+15 | WB | 27B | | | | | 10,145 | | | | |
| PD-5 | 420+31 to 422+15 | EB | 27C | | | | | | | 184 | | |
| PD-5 to PD-6 | 421+64 to 425+84 | EB | 22 | 38 | | | | 840 | | | | |
| | 421+64 to 425+84 | EB | 38 | | 19 | | 420 | | | | 2-TYPE IV ARROW | 30 |
| PD-6 | 425+84 to 433+00 | EB | 29 | 62 | | | | 2,864 | | | | |
| | 433+00 to 440+71 | EB | 19 | 20 | | 33 | | 771 | 771 | | | |
| | 440+71 to 444+84 | EB | 6 | 10 | | | | | 413 | | | |
| | 444+84 to 460+76 | EB | 19 | 36 | | 67 | | 1,592 | 1,592 | | | |
| PD-6 to PD-7 | 460+76 to 478+74 | EB | 6 | 38 | | | | | 1,798 | | | |
| PD-7 | 478+74 to 488+25 | EB | 19 | 22 | | 41 | | 951 | 951 | | | |
| PD-7 to PD-8 | 488+25 to 528+00 | EB | 22 | 334 | | | | 7,950 | | | | |
| SUB-TOTAL | | | | 1129 | 38 | 409 | 864 | 82,976 | 19,781 | 413 | | 108 |
| TOTAL | | | | 1,576 | | | 864 | 82,976 | 19,781 | 413 | | 108 |

# DELINEATOR AND OBJECT MARKER

| SHEET No. | DELINEATOR (CLASS 1) | | OBJECT MARKER (OM2-2V) | (OM-3R) |
|---|---|---|---|---|
| | (TYPE F) | (TYPE E) | (TYPE L) | (TYPE P) |
| | EA | EA | EA | |
| PD-1 | 6 | 4 | 2 | |
| PD-2 | | | 3 | |
| PD-3 | | | 2 | |
| PD-4 | | | 6 | 2 |
| PD-5 | 6 | 4 | 1 | |
| PD-7 | | | 1 | |
| PD-8 | | | 1 | |
| SUBTOTAL | 6 | 4 | 16 | 2 |
| TOTAL | 10 | | 18 | |

# ROADSIDE SIGN QUANTITIES

| SHEET No. | SIGN No. (No.) | SIGN CODE | SIGN MESSAGE OR DESCRIPTION | RESET ROADSIDE SIGN |
|---|---|---|---|---|
| | | | | EA |
| PD-3 | 1 | W2-2 | T INTERSECTION | 1 |
| | | W8 (CA) | SUCCESS DAM VISTA POINT | |
| PD-5 | 2 | G28-1 (CA) | ROUTE 190 SHIELD | 1 |
| | 3 | G28-1 (CA) | ROUTE 190 SHIELD | 1 |
| | 4 | R1-1 | STOP | 1 |
| | 5 | G1(CA) | PORTERVILLE 8, SPRINGVILLE 8 | 1 |
| | 6 | R1-1 | STOP | 1 |
| PD-6 | 7 | W1-1 | RW-080 (CA),RM-010 (CA),SECCESS Valley, TULE RIVER | 1 |
| PD-7 | 8 | W11-3 | | 1 |
| TOTAL | | | | 8 |

# PAVEMENT DELINEATION AND SIGN QUANTITIES

PDQ-1

REVISED BY | DATE REVISED
CALCULATED-DESIGNED BY: KAMRUL KHAN
CHECKED BY: HASSAN TAHA
FUNCTIONAL SUPERVISOR: MOHAMMED OATAMI
STATE OF CALIFORNIA - DEPARTMENT OF TRANSPORTATION
TRAFFIC DESIGN

LAST REVISION | DATE PLOTTED => 22-DEC-2010
07-23-10 | TIME PLOTTED => 11:27

BORDER LAST REVISED 7/2/2010 | USERNAME => s115755 | DGN FILE => 633740nc001.dgn | RELATIVE BORDER SCALE IS IN INCHES 0 1 2 3 | UNIT 1513 | PROJECT NUMBER & PHASE 06000201501

| Dist | COUNTY | ROUTE | POST MILES TOTAL PROJECT | SHEET No. | TOTAL SHEETS |
|---|---|---|---|---|---|
| 06 | Tul | 190 | 21.2/26.4 | 88 | 120 |

E. Ataelgeed 12-20-10
REGISTERED CIVIL ENGINEER DATE

PLANS APPROVAL DATE

Eltahir K. Ataelgeed No. 76374 Exp. 12-31-12 CIVIL — REGISTERED PROFESSIONAL ENGINEER — STATE OF CALIFORNIA

THE STATE OF CALIFORNIA OR ITS OFFICERS OR AGENTS SHALL NOT BE RESPONSIBLE FOR THE ACCURACY OR COMPLETENESS OF SCANNED COPIES OF THIS PLAN SHEET.

# ROADWAY QUANTITIES

| SHEET No. | LOCATION No. | EROSION CONTROL (HYDROSEED) | COLD PLANE AC PAVEMENT | HOT MIX ASPHALT (TYPE A) | | | | TACK COAT | IMPORTED MATERIAL (SHOULDER BACKING) | CLASS 2 AB | ROADWAY EXCAVATION | VEGETATION CONTROL ( ASPHALT COMPOSITE) |
|---|---|---|---|---|---|---|---|---|---|---|---|---|
| | | | | OVERLAY | DIKES | GUTTER | OVERSIDE DRAINS | | | | | |
| | | ACRE | SQYD | TON | TON | TON | TON | TON | TON | CY | CY | SQYD |
| L-1 TO L-10 | STA 249+04.00 TO STA 388+92.17 | 3.27 | 62,222 | 12,818 | | 257 | | 34.63 | 1235 | 245 | 650 | |
| L-10 TO L-19 | STA 392+84.07 TO STA 523+60.00 | 3.05 | 58,008 | 11,982 | | 321 | | 32.37 | 1155 | 645 | 109 | |
| L-1 TO L-19 | STA 260+98.82 TO STA 523+60.00 | | | | 864 | | 6 | | | | | |
| L-2 TO L-20 | | | | | | | | | | | | |
| TOTAL | | 6.32 | 120,230 | 26,248 | | | | 67 | 2390 | 890 | 1740 | 1650 |

## SURVEY MONUMENTS (TYPE D)

| PLAN SHEET No. | STATION | L† | R† | QUANTITY |
|---|---|---|---|---|
| | | | | EA |
| L-7 | STA 343+06.20 | 17.01′ | | 1 |
| L-9 | STA 375+28.15 | | 22.95′ | 1 |
| L-10 | STA 393+36.33 | | 20.60′ | 1 |
| L-11 | STA 406+63.76 | | 19.71′ | 1 |
| L-13 | STA 428+40.61 | 23.74′ | | 1 |
| L-17 | STA 491+47.14 | | 23.32′ | 1 |
| TOTAL | | | | 6 |

## TEMPORARY FENCE (TYPE ESA)

| PLAN SHEET No. | STATION | L† | R† | (LF) |
|---|---|---|---|---|
| L-5 | 320+42.38 TO 320+91.62 | X | | 150 |
| L-6, L-7 | 334+40.66 TO 335+09.66 | X | | 140 |
| L-6, L-7 | 334+42.35 TO 335+09.79 | | X | 199 |
| L-9 | 373+56.90 TO 374+31.14 | X | | 215 |
| L-9 | 378+54.61 TO 379+33.03 | X | | 232 |
| L-10 | 384+23.70 TO 385+00.00 | X | | 209 |
| | | | TOTAL | 1145 |

## RESET MAILBOX

| PLAN SHEET No. | STATION | L† | R† | EA |
|---|---|---|---|---|
| L-1 | STA 250+16.60 | X | | 3 |
| L-1 | STA 254+22.60 | X | | 2 |
| L-1 | STA 257+06.82 | X | | 1 |
| L-2 | STA 274+10.97 | X | | 2 |
| L-3 | STA 278+72.43 | X | | 2 |
| L-3 | STA 280+24.66 | X | | 2 |
| L-3 | STA 289+80.27 | X | | 3 |
| L-4 | STA 296+29.43 | X | | 3 |
| L-4 | STA 302+08.93 | X | | 1 |
| L-16 | STA 475+19.63 | X | | 1 |
| WB SUBTOTAL | | | | 20 |
| L-1 | STA 250+17.00 | | X | 6 |
| L-1 | STA 255+17.67 | | X | 1 |
| L-1 | STA 256+11.50 | | X | 1 |
| L-1 | STA 257+18.00 | | X | 1 |
| L-2 | STA 270+88.00 | | X | 5 |
| L-2 | STA 274+63.15 | | X | 5 |
| L-3 | STA 279+30.94 | | X | 2 |
| L-5 | STA 319+92.74 | | X | 2 |
| L-12 | STA 419+89.16 | | X | 3 |
| L-14 | STA 448+19.78 | | X | 3 |
| EB SUBTOTAL | | | | 29 |
| TOTAL | | | | 49 |

## PLACE HMA (Misc AREAS)

| PLAN SHEET No. | DRIVEWAYS | | | | OVERSIDE DRAIN | DRAIN INLET |
|---|---|---|---|---|---|---|
| | STATION | L† | R† | SQYD | SQYD | SQYD |
| L-2 | STA 263+30.87 | | 20.0′ | 116.9 | | |
| L-2 | STA 273+27.05 | 23.8′ | | 58.7 | | |
| L-2 | STA 275+01.47 | | 20.0′ | 174.3 | | |
| L-3 | STA 278+94.10 | | 20.0′ | 122.9 | | |
| L-3 | STA 287+74.48 | 20.0′ | | 162.2 | | |
| L-4 | STA 295+86.10 | 20.0′ | | 89.3 | | |
| L-4 | STA 301+72.66 | 20.0′ | | 113.8 | | |
| L-5 | STA 306+82.60 | 20.6′ | | 280.3 | | |
| L-5 | STA 320+14.91 | | 20.0′ | 208.9 | | |
| L-3 TO L-18 | STA 288+99.70 TO 502+04.47 | | | | 155.1 | 10.0 |
| L-2 TO L-5 | STA 263+30.87 TO 308+05.25 | | | | | |
| SUB-TOTAL | | | | 1327.3 | 155.1 | 10.0 |
| TOTAL | | | | 1492.4 | | |

## TEMPORARY DRAINAGE INLET PROTECTION

| PLAN SHEET No. | STATION | L† | R† | QUANTITY |
|---|---|---|---|---|
| | | | | EA |
| L-9 | 378+59.64 | | X | 1 |
| L-19 | 516+52.11 | | X | 1 |
| TOTAL | | | | 2 |

## TEMPORARY FIBER ROLL

| PLAN SHEET No. | STATION | L† | R† | (LF) |
|---|---|---|---|---|
| L-1 | 258+20.25 | X | | 8 |
| L-2 | 269+01.04 | X | | 8 |
| L-3 | 288+62.62 | | X | 8 |
| | TOTAL | | | 24 |

# SUMMARY OF QUANTITIES
# Q-1

STATE OF CALIFORNIA - DEPARTMENT OF TRANSPORTATION
DESIGN
FUNCTIONAL SUPERVISOR: ABDUL BAKER
CALCULATED-DESIGNED BY: MARCO NABAVI
CHECKED BY: ABDUL BAKER
REVISED BY
DATE REVISED

LAST REVISION 12-20-10
DATE PLOTTED => 22-DEC-2010
TIME PLOTTED => 11:28

BORDER LAST REVISED 7/2/2010
USERNAME => s115755
DGN FILE => 633740pa001.dgn
RELATIVE BORDER SCALE IS IN INCHES 0 1 2 3
UNIT 1476
PROJECT NUMBER & PHASE 06000201501

# HOT MIX ASPHALT DIKE

| PLAN SHEET No. | LOCATION | | | PLACE HMA DIKE | | | REMOVE ASPHALT CONCRETE DIKE | * HMA (TYPE A) |
|---|---|---|---|---|---|---|---|---|
| | STATION | L† | R† | TYPE C | TYPE E | TYPE F | | |
| | | | | LF | LF | LF | LF | TON |
| L-1, L-2 | STA 260+98.82 TO STA 269+68.14 | X | | | 869 | | 869 | 4.87 |
| L-2 | STA 271+17.73 TO STA 272+93.72 | X | | | 174 | | 174 | 4.58 |
| L-2, L-3 | STA 273+63.40 TO STA 278+25.42 | X | | | 476 | | 476 | 12.53 |
| L-3 | STA 278+48.00 TO STA 279+87.27 | X | | | 139 | | 139 | 1.80 |
| L-3 | STA 279+96.89 TO STA 281+37.50 | X | | | 141 | | 455 | 11.98 |
| L-3 | STA 281+37.50 TO STA 282+00.00 | X | | 63 | | | 63 | 0.49 |
| L-3 | STA 282+00.00 TO STA 287+00.00 | X | | | | 500 | 38 | 0.51 |
| L-3 | STA 285+97.66 TO STA 287+13.32 | X | | | | | 115 | |
| L-3 | STA 287+00.00 TO STA 287+47.33 | X | | 47 | | | 63 | 0.49 |
| L-4 | STA 294+86.22 TO STA 295+65.86 | X | | | 80 | | 80 | 2.11 |
| L-4 | STA 296+01.35 TO STA 296+28.92 | X | | | 35 | | 35 | 0.92 |
| L-4 | STA 296+66.21 TO STA 301+56.43 | X | | | 494 | | 494 | 13.01 |
| L-4, L-5 | STA 301+89.04 TO STA 306+53.52 | X | | | 468 | | 468 | 12.32 |
| L-5 | STA 307+11.69 TO STA 319+88.31 | X | | | | | 1280 | —— |
| L-5, L-6 | STA 320+40.54 TO STA 327+24.86 | X | | | | 685 | 685 | 9.16 |
| L-6 | STA 327+24.86 TO STA 327+87.36 | X | | 63 | | | 63 | 0.49 |
| L-6 | STA 327+87.36 TO STA 331+91.84 | X | | | 426 | | 426 | 11.21 |
| L-7, L-8 | STA 343+05.31 TO STA 349+51.95 | X | | | | 647 | | 8.65 |
| L-7 | STA 343+05.31 TO STA 349+15.22 | X | | | | | 610 | —— |
| L-8 | STA 349+51.95 TO STA 350+14.45 | X | | 63 | | | | 0.49 |
| L-8 | STA 349+89.45 TO STA 350+92.43 | X | | | | | 110 | —— |
| L-8 | STA 350+14.45 TO STA 350+92.43 | X | | | 78 | | | 2.05 |
| L-8 | STA 351+35.15 TO STA 352+58.78 | X | | | 129 | | 129 | 3.40 |
| L-8 | STA 352+58.78 TO STA 353+21.28 | X | | 63 | | | 63 | 0.49 |
| L-8 | STA 353+21.28 TO STA 354+98.18 | X | | | | 177 | 177 | 1.17 |
| L-8 | STA 354+98.18 TO STA 355+60.68 | X | | 63 | | | 63 | 0.49 |
| L-8 | STA 355+60.68 TO STA 360+89.15 | X | | | 528 | | 528 | 13.90 |
| L-8 | STA 360+89.15 TO STA 361+51.65 | X | | 63 | | | 63 | 0.49 |
| L-8 | STA 361+51.65 TO STA 361+88.42 | X | | | | 37 | 37 | 0.50 |
| L-8 | STA 361+88.42 TO STA 362+50.92 | X | | 63 | | | 63 | 0.49 |
| L-8, L-9 | STA 362+50.92 TO STA 373+45.62 | X | | | 1095 | | 1095 | 28.83 |
| L-9 | STA 373+45.62 TO STA 374+20.62 | X | | 75 | | | 75 | 0.58 |
| L-9 | STA 374+20.62 TO STA 375+34.50 | X | | | | 114 | 114 | 1.52 |
| L-9 | STA 375+34.50 TO STA 376+09.50 | X | | 75 | | | 75 | 0.58 |
| L-9 | STA 376+09.50 TO STA 378+24.22 | X | | | 215 | | 215 | 5.66 |
| L-9 | STA 378+24.22 TO STA 378+99.22 | X | | 75 | | | 75 | 0.58 |
| L-9, L-10 | STA 378+99.22 TO STA 388+85.38 | X | | | | 986 | 986 | 13.18 |
| L-10, L-11 | STA 393+18.70 TO STA 399+93.60 | X | | | | 675 | 675 | 9.02 |
| L-11 | STA 399+93.60 TO STA 400+31.10 | X | | 38 | | | 38 | 0.30 |
| L-11, L-12 | STA 400+79.02 TO STA 415+99.70 | X | | | 1530 | | 1530 | 40.28 |
| L-12 | STA 419+33.16 TO STA 419+77.21 | X | | | 112 | | 112 | 2.95 |
| L-12, L-13 | STA 419+96.36 TO STA 432+07.31 | X | | | 1242 | | 1242 | 32.70 |
| L-13, L-14 | STA 432+39.39 TO STA 438+00.45 | X | | | 579 | | 579 | 15.24 |
| L-14 | STA 438+30.15 TO STA 449+03.76 | X | | | 1078 | | 1078 | 28.38 |
| L-14, L-15 | STA 449+94.72 TO STA 453+08.40 | X | | | 314 | | 314 | 8.27 |
| L-15, L-16 | STA 461+50.46 TO STA 467+53.67 | X | | | 603 | | 603 | 15.87 |
| L-16 | STA 469+88.11 TO STA 475+10.25 | X | | | | | 502 | —— |
| L-16 | STA 476+09.87 TO STA 479+34.16 | X | | | 328 | | 328 | 8.64 |
| L-17 | STA 480+11.74 TO STA 480+49.24 | X | | 38 | | | 38 | 0.29 |
| L-17 | STA 480+49.24 TO STA 482+61.25 | X | | | | 212 | 212 | 2.83 |
| L-17 | STA 482+61.25 TO STA 483+11.25 | X | | 50 | | | 50 | 0.39 |
| L-17, L-18 | STA 483+11.25 TO STA 504+29.98 | X | | | 2146 | | 1963 | 51.68 |
| L-18, L-19 | STA 507+55.28 TO STA 511+80.23 | X | | | | | 425 | |
| L-19 | STA 511+80.23 TO STA 512+17.73 | X | | | | | 38 | |
| L-19 | STA 512+17.73 TO STA 517+89.52 | X | | | | | 576 | |
| L-19 | STA 517+89.52 TO STA 518+27.02 | X | | | | | 38 | |
| L-19, L-20 | STA 518+41.27 TO STA 525+50.00 | X | | | 709 | | 709 | |
| SUBTOTAL 1 | | | | 839 | 13,988 | 4033 | 21,451 | 386 |

| Dist | COUNTY | ROUTE | POST MILES TOTAL PROJECT | SHEET No. | TOTAL SHEETS |
|---|---|---|---|---|---|
| 06 | Tul | 190 | 21.2/26.4 | 89 | 120 |

E. Ataelgeed 12-20-10
REGISTERED CIVIL ENGINEER DATE

12-20-10
PLANS APPROVAL DATE

REGISTERED PROFESSIONAL ENGINEER — Eltahir K. Ataelgeed — No. 76374 — Exp. 12-31-12 — CIVIL — STATE OF CALIFORNIA

THE STATE OF CALIFORNIA OR ITS OFFICERS OR AGENTS SHALL NOT BE RESPONSIBLE FOR THE ACCURACY OR COMPLETENESS OF SCANNED COPIES OF THIS PLAN SHEET.

# HOT MIX ASPHALT DIKE

| PLAN SHEET No. | LOCATION | | | PLACE HMA DIKE | | | REMOVE ASPHALT CONCRETE DIKE | * HMA (TYPE A) |
|---|---|---|---|---|---|---|---|---|
| | STATION | L† | R† | TYPE C | TYPE E | TYPE F | | |
| | | | | LF | LF | LF | LF | TON |
| L-2 | STA 266+58.84 TO STA 266+82.11 | | X | | 34 | | 34 | 0.90 |
| L-2 | STA 267+20.42 TO STA 268+61.86 | | X | | 142 | | 142 | 3.74 |
| L-2 | STA 269+05.13 TO STA 270+19.37 | | X | | 114 | | 114 | 3.00 |
| L-2 | STA 270+73.66 TO STA 270+87.89 | | X | | 15 | | 15 | 0.40 |
| L-2 | STA 273+91.08 TO STA 274+70.28 | | X | | 80 | | 80 | 2.11 |
| L-2, L-3 | STA 275+36.66 TO STA 278+68.60 | | X | | 333 | | 333 | 8.77 |
| L-3 | STA 279+18.80 TO STA 283+27.76 | | X | | 414 | | 414 | 10.90 |
| L-3 | STA 285+23.34 TO STA 285+35.09 | | X | | 12 | | 12 | 0.16 |
| L-3 | STA 285+35.09 TO STA 285+97.66 | | X | | 63 | | 63 | 0.49 |
| L-3 | STA 285+97.66 TO STA 290+17.35 | | X | | 432 | | 432 | 11.37 |
| L-3, L-4 | STA 290+63.98 TO STA 292+30.15 | | X | | 167 | | 167 | 4.40 |
| L-4 | STA 294+16.10 TO STA 294+47.14 | | X | | 41 | | 41 | 1.08 |
| L-4 | STA 295+77.11 TO STA 301+13.45 | | X | | 536 | | 536 | 14.11 |
| L-4, L-5 | STA 304+40.83 TO STA 307+64.71 | | X | | 324 | | 324 | 8.53 |
| L-5 | STA 308+51.47 TO STA 317+33.82 | | X | | 888 | | 888 | 23.38 |
| L-6 | STA 323+15.24 TO STA 328+12.70 | | X | | | 498 | 498 | 6.65 |
| L-6 | STA 328+12.70 TO STA 328+75.20 | | X | 63 | | | 63 | 0.48 |
| L-6 | STA 328+75.20 TO STA 329+11.82 | | X | | 38 | | 38 | 1.00 |
| L-6 - L-8 | STA 329+52.93 TO STA 353+00.93 | | X | | 2378 | | 2378 | 62.60 |
| L-8 | STA 353+52.88 TO STA 353+90.38 | | X | 38 | | | 38 | 0.29 |
| L-8 | STA 353+90.38 TO STA 354+67.16 | | X | | | 77 | 77 | 1.03 |
| L-8 | STA 354+67.16 TO STA 355+29.66 | | X | 75 | | | 75 | 0.58 |
| L-8, L-9 | STA 355+29.66 TO STA 372+71.38 | | X | | 1742 | | 1742 | 45.85 |
| L-9 | STA 372+71.38 TO STA 373+46.38 | | X | 75 | | | 75 | 0.58 |
| L-9 | STA 373+46.38 TO STA 374+83.48 | | X | | | 137 | 137 | 1.83 |
| L-9 | STA 374+83.48 TO STA 375+58.40 | | X | 75 | | | 75 | 0.58 |
| L-9, L-10 | STA 375+58.40 TO STA 383+62.50 | | X | | 815 | | 815 | 21.46 |
| L-10 | STA 386+67.09 TO STA 388+82.30 | | X | | | 218 | 218 | 2.91 |
| L-10, L-11 | STA 393+18.70 TO STA 400+23.23 | | X | | | 705 | 705 | 9.42 |
| L-11 | STA 400+23.23 TO STA 400+60.73 | | X | 38 | | | 38 | 0.29 |
| L-11, L-12 | STA 401+04.04 TO STA 420+17.92 | | X | | | | 1914 | —— |
| L-12 | STA 410+57.53 TO STA 421+03.90 | | X | | 1045 | | | 25.51 |
| L-12 | STA 421+35.24 TO STA 421+43.47 | | X | | | | 21 | —— |
| L-12, L-14 | STA 421+61.84 TO STA 448+14.04 | | X | | 2732 | | | 71.92 |
| L-12, L-14 | STA 422+02.11 TO STA 448+14.04 | | X | | | | 2612 | —— |
| L-14, L-15 | STA 448+79.94 TO STA 462+21.97 | | X | | 1342 | | 1342 | 35.33 |
| L-15, L-16 | STA 463+49.32 TO STA 469+23.83 | | X | | 575 | | 575 | 15.14 |
| L-16 | STA 469+79.60 TO STA 475+45.90 | | X | | 567 | | 567 | 14.93 |
| L-16, L-17 | STA 475+79.76 TO STA 480+21.68 | | X | | 442 | | 442 | 11.64 |
| L-17 | STA 480+67.76 TO STA 481+05.26 | | X | 38 | | | 38 | 0.29 |
| L-17 | STA 481+05.26 TO STA 483+60.10 | | X | | | 255 | 255 | 3.41 |
| L-17 | STA 483+60.10 TO STA 483+97.60 | | X | 38 | | | 38 | 0.29 |
| L-17 | STA 484+60.41 TO STA 489+86.61 | | X | | 526 | | 526 | 13.85 |
| L-18 | STA 492+00.00 TO STA 499+81.71 | | X | | 782 | | 331 | 20.59 |
| L-18, L-19 | STA 508+66.80 TO STA 512+39.37 | | X | | 378 | | 378 | 9.95 |
| L-19 | STA 514+23.73 TO STA 516+61.42 | | X | | 237 | | 237 | 6.24 |
| SUBTOTAL 2 | | | | 503 | 17,119 | 1902 | 19,843 | 478 |
| TOTAL (1+2) | | | | 1342 | 31,107 | 5935 | 41,294 | 864 |

* HMA QUANTITIES INCLUDED IN ROADWAY QUANTITIES TABLE ON SHEET Q-1

# SUMMARY OF QUANTITIES
# Q-2

REVISED BY | DATE REVISED
ELTAHIR ATAELGEED | ABDUL BAKER
CALCULATED-DESIGNED BY | CHECKED BY
FUNCTIONAL SUPERVISOR: ABDUL BAKER
STATE OF CALIFORNIA - DEPARTMENT OF TRANSPORTATION
DESIGN

LAST REVISION 12-20-10
DATE PLOTTED => 22-DEC-2010
TIME PLOTTED => 11:28

BORDER LAST REVISED 7/2/2010
USERNAME => s115755
DGN FILE => 633740pa002.dgn
RELATIVE BORDER SCALE IS IN INCHES 0 1 2 3
UNIT 1476
PROJECT NUMBER & PHASE 06000201501

| Dist | COUNTY | ROUTE | POST MILES TOTAL PROJECT | SHEET No. | TOTAL SHEETS |
|---|---|---|---|---|---|
| 06 | Tul | 190 | 21.2/26.4 | 90 | 120 |

E. Ataelgeed 12-20-10
REGISTERED CIVIL ENGINEER DATE

12-20-10
PLANS APPROVAL DATE

Eltahir K. Ataelgeed No. 76374 Exp. 12-31-12 CIVIL — REGISTERED PROFESSIONAL ENGINEER — STATE OF CALIFORNIA

THE STATE OF CALIFORNIA OR ITS OFFICERS OR AGENTS SHALL NOT BE RESPONSIBLE FOR THE ACCURACY OR COMPLETENESS OF SCANNED COPIES OF THIS PLAN SHEET.

# METAL BEAM GUARD RAILING

| PLAN SHEET No. | LOCATION | | | LAYOUT TYPE (N) | MBGR (STEEL POST) | REMOVE MBGR | ALTERNATIVE FLARED TERMINAL SYSTEM | TRANSITION RAILING (TYPE WB) | (N) END CAP (TYPE TC) | (N) BURIED POST ANCHOR | END ANCHOR ASSEMBLY (TYPE SFT) | ALTERNATIVE IN-LINE TERMINAL SYSTEM |
|---|---|---|---|---|---|---|---|---|---|---|---|---|
| | STATION | L† | R† | | LF | LF | EA | EA | EA | EA | EA | EA |
| L-5, L-6 | STA 320+85.80 TO STA 328+00.20 | | X | 11E | 714 | | 2 | | | | | |
| L-6 | STA 323+15.24 TO STA 328+42.55 | | X | | | 547 | | | | | | |
| L-8 | STA 353+90.38 TO STA 354+67.16 | | X | 11G | 77 | | 1 | | | 1 | | |
| L-8 | STA 353+90.38 TO STA 355+04.66 | | X | | | 152 | | | | | | |
| L-8 | STA 361+14.94 TO STA 361+57.23 | | X | 11L | 42 | 42 | | | | | | |
| L-9 | STA 373+46.38 TO STA 374+83.48 | | X | 11F | 137 | | | | | 2 | | |
| L-9 | STA 374+02.09 TO STA 375+22.08 | | X | | | 120 | | | | | | |
| L-10 | STA 383+62.50 TO STA 388+85.43 | | X | | | 523 | | | | | | |
| L-10 | STA 384+00.00 TO STA 388+60.43 | | X | 12B | 460 | | 1 | 1 | 1 | | | |
| L-11 | STA 393+43.70 TO STA 400+23.23 | | X | 12BB | 680 | | 1 | 1 | 1 | | | |
| L-11 | STA 393+18.70 TO STA 400+60.73 | | X | | | 742 | | | | | | |
| L-17 | STA 480+67.76 TO STA 483+97.60 | | X | | | 330 | | | | | | |
| L-17 | STA 481+05.26 TO STA 483+60.10 | | X | 11E | 255 | | 2 | | | | | |
| | SUBTOTAL 1 | | | | 2365 | 2456 | 7 | 2 | 2 | 3 | | |
| L-3 | STA 282+00.00 TO STA 287+00.00 | X | | 11E | 500 | | 2 | | | | | |
| L-5 | STA 319+32.11 TO STA 319+57.11 | X | | 11H | 25 | | | | | | 1 | 1 |
| L-5 | STA 319+62.90 TO STA 319+88.31 | X | | | | 31 | | | | | | |
| L-5, L-6 | STA 320+40.54 TO STA 327+62.36 | X | | | | 722 | | | | | | |
| L-5, L-6 | STA 320+60.68 TO STA 327+24.86 | X | | 11A | 664 | | | | | | 1 | 1 |
| L-6 | STA 332+41.07 TO STA 334+90.58 | X | | 11A | 250 | 250 | | | | | 1 | |
| L-7 | STA 334+90.58 TO STA 336+05.63 | X | | 11A | 122 | | | | | | | |
| L-7 | STA 336+05.63 TO STA 349+51.95 | X | | 11A | 1346 | | 1 | | | | | 1 |
| L-7 | STA 336+05.63 TO STA 348+13.86 | X | | | | 1208 | | | | | | |
| L-7 | STA 349+22.88 TO STA 349+89.45 | X | | | | 67 | | | | | | |
| L-8 | STA 352+83.78 TO STA 355+35.68 | X | | | | 252 | | | | | | |
| L-8 | STA 353+21.28 TO STA 354+98.18 | X | | 11L | 177 | | 1 | | | 1 | | |
| L-8 | STA 361+14.15 TO STA 362+25.92 | X | | | | 111 | | | | | | |
| L-8 | STA 361+51.65 TO STA 361+88.42 | X | | 11G | 37 | | | | | 1 | | 1 |
| L-9 | STA 373+70.62 TO STA 375+84.50 | X | | | | 214 | | | | | | |
| L-9 | STA 374+20.62 TO STA 375+34.50 | X | | 11F | 114 | | | | | 2 | | |
| L-9 | STA 378+49.22 TO STA 388+85.38 | X | | | | 1036 | | | | | | |
| L-9 | STA 378+99.22 TO STA 388+60.38 | X | | 12CC | 961 | | | 1 | 1 | 1 | | |
| L-11 | STA 393+18.70 TO STA 400+31.10 | X | | | | 713 | | | | | | |
| L-11 | STA 393+43.70 TO STA 399+93.60 | X | | 12B | 650 | | 1 | 1 | 1 | | | |
| L-17 | STA 480+11.74 TO STA 483+11.25 | X | | | | 300 | | | | | | |
| L-17 | STA 480+49.24 TO STA 482+61.25 | X | | 11L | 212 | | 1 | | | 1 | | |
| L-19 | STA 511+80.23 TO STA 518+27.02 | X | | | | 647 | | | | | | |
| L-19 | STA 512+17.73 TO STA 517+89.52 | X | | 11E | 576 | | 2 | | | | | |
| | SUBTOTAL 2 | | | | 5634 | 5551 | 8 | 2 | 2 | 6 | | 4 |
| | TOTAL (1+2) | | | | 7999 | 8007 | 15 | 4 | 4 | | 3 | 4 |

(N) NOT A SEPARATE PAY ITEM, FOR INFORMATION ONLY.

## SUMMARY OF QUANTITIES
## Q-3

STATE OF CALIFORNIA - DEPARTMENT OF TRANSPORTATION
DESIGN
FUNCTIONAL SUPERVISOR: ABDUL BAKER
CALCULATED-DESIGNED BY: ELTAHIR ATAELGEED
CHECKED BY: ABDUL BAKER
REVISED BY / DATE REVISED

LAST REVISION | DATE PLOTTED => 22-DEC-2010
12-20-10 | TIME PLOTTED => 11:28

BORDER LAST REVISED 7/2/2010
USERNAME => s115755
DGN FILE => 633740pa003.dgn
RELATIVE BORDER SCALE IS IN INCHES 0 1 2 3
UNIT 1476
PROJECT NUMBER & PHASE 06000201501

| Dist | COUNTY | ROUTE | POST MILES TOTAL PROJECT | SHEET No. | TOTAL SHEETS |
|---|---|---|---|---|---|
| 06 | Tul | 190 | 21.2/26.4 | 91 | 120 |

E. Ataelgeed 12-20-10
REGISTERED CIVIL ENGINEER DATE

12-20-10
PLANS APPROVAL DATE

Eltahir K. Ataelgeed
No. 76374
Exp. 12-31-12
CIVIL
REGISTERED PROFESSIONAL ENGINEER
STATE OF CALIFORNIA

THE STATE OF CALIFORNIA OR ITS OFFICERS OR AGENTS SHALL NOT BE RESPONSIBLE FOR THE ACCURACY OR COMPLETENESS OF SCANNED COPIES OF THIS PLAN SHEET.

## REPLACE AC SURFACING

| DIRECTION | BEGIN POST MILE | END POST MILE | DEPTH (N) | LENGTH (N) | WIDTH (N) | REPLACE AC SURFACING |
|---|---|---|---|---|---|---|
| | | | LF | LF | LF | CY |
| EASTBOUND | 21.28 | 21.40 | 0.23 | 633.60 | 12.00 | 64.77 |
| | 21.43 | 21.45 | 0.23 | 105.60 | 12.00 | 10.79 |
| | 21.61 | 21.71 | 0.23 | 528.00 | 12.00 | 53.97 |
| | 21.73 | 21.75 | 0.23 | 105.60 | 12.00 | 10.79 |
| | 21.96 | 22.35 | 0.23 | 2059.20 | 12.00 | 210.50 |
| | 22.37 | 23.78 | 0.23 | 7444.80 | 12.00 | 761.02 |
| | 23.86 | 24.04 | 0.23 | 950.40 | 12.00 | 97.15 |
| | 24.12 | 24.24 | 0.23 | 633.60 | 12.00 | 64.77 |
| | 24.35 | 24.37 | 0.23 | 105.60 | 12.00 | 10.79 |
| | 24.40 | 24.43 | 0.23 | 158.40 | 12.00 | 16.19 |
| | 24.10 | 24.58 | 0.23 | 2534.40 | 12.00 | 259.07 |
| | 24.69 | 24.87 | 0.23 | 950.40 | 12.00 | 97.15 |
| | 25.28 | 25.36 | 0.23 | 422.40 | 12.00 | 43.18 |
| | 25.80 | 26.10 | 0.23 | 1584.00 | 12.00 | 161.92 |
| | 26.14 | 26.17 | 0.23 | 158.40 | 12.00 | 16.19 |
| | 26.40 | 26.42 | 0.23 | 105.60 | 12.00 | 10.79 |
| | EB LANE TOTAL | | | | | 1,889.04 |

(N) NOT A SEPARATE PAY ITEM, FOR INFORMATION ONLY.

## REPLACE AC SURFACING

| DIRECTION | BEGINNING POST MILE | END POST MILE | DEPTH (N) | LENGTH (N) | WIDTH (N) | REPLACE AC SURFACING |
|---|---|---|---|---|---|---|
| | | | LF | LF | LF | CY |
| WESTBOUND | 21.02 | 21.01 | 0.23 | 52.80 | 12.00 | 5.40 |
| | 21.09 | 21.07 | 0.23 | 105.60 | 12.00 | 10.79 |
| | 21.29 | 21.27 | 0.23 | 105.60 | 12.00 | 10.79 |
| | 21.43 | 21.31 | 0.23 | 633.60 | 12.00 | 64.77 |
| | 21.52 | 21.48 | 0.23 | 211.20 | 12.00 | 21.59 |
| | 21.75 | 21.57 | 0.23 | 950.40 | 12.00 | 97.15 |
| | 21.99 | 21.96 | 0.23 | 158.40 | 12.00 | 16.19 |
| | 22.17 | 22.01 | 0.23 | 844.80 | 12.00 | 86.36 |
| | 22.35 | 22.21 | 0.23 | 739.20 | 12.00 | 75.56 |
| | 23.78 | 22.44 | 0.23 | 7075.20 | 12.00 | 723.24 |
| | 23.95 | 23.90 | 0.23 | 264.00 | 12.00 | 26.99 |
| | 24.04 | 24.00 | 0.23 | 211.20 | 12.00 | 21.59 |
| | 24.49 | 24.33 | 0.23 | 844.80 | 12.00 | 86.36 |
| | 24.57 | 24.55 | 0.23 | 105.60 | 12.00 | 10.79 |
| | 25.99 | 25.95 | 0.23 | 211.20 | 12.00 | 21.59 |
| | 26.39 | 26.37 | 0.23 | 105.60 | 12.00 | 10.79 |
| | WB LANE TOTAL | | | | | 1,289.95 |
| TOTAL (EB + WB) | | | | | | 3,178.99 |

(N) NOT A SEPARATE PAY ITEM, FOR INFORMATION ONLY.

## SUMMARY OF QUANTITIES
## Q-4

| REVISED BY | DATE REVISED |
|---|---|
| | |
| | |
| | |
| | |
| | |

CALCULATED-DESIGNED BY: ELTAHIR ATAELGEED
CHECKED BY: ABDUL BAKER
FUNCTIONAL SUPERVISOR: ABDUL BAKER
STATE OF CALIFORNIA - DEPARTMENT OF TRANSPORTATION
DESIGN

LAST REVISION DATE PLOTTED => 22-DEC-2010
TIME PLOTTED => 11:28
12-20-10

BORDER LAST REVISED 7/2/2010
USERNAME => s115755
DGN FILE => 633740pa004.dgn
RELATIVE BORDER SCALE IS IN INCHES 0 1 2 3
UNIT 1476
PROJECT NUMBER & PHASE 06000201501

| Dist | COUNTY | ROUTE | POST MILES TOTAL PROJECT | SHEET No. | TOTAL SHEETS |
|---|---|---|---|---|---|
| 06 | Tul | 190 | 21.2/26.4 | 92 | 120 |

Daniel Thanh Vo 12-20-10
REGISTERED ELECTRICAL ENGINEER DATE

12-20-10
PLANS APPROVAL DATE

REGISTERED PROFESSIONAL ENGINEER
DANIEL THANH VO
No. 17408
Exp. 9/30/12
ELECTRICAL
STATE OF CALIFORNIA

THE STATE OF CALIFORNIA OR ITS OFFICERS OR AGENTS SHALL NOT BE RESPONSIBLE FOR THE ACCURACY OR COMPLETENESS OF SCANNED COPIES OF THIS PLAN SHEET.

## LEGEND:

[1] IDENTIFY LOOP DETECTORS AND PIEZO AXLE SENSORS AS SHOWN ON DETAIL A.
INSTALL PIEZO AXLE SENSORS AS SHOWN IN DETAIL B.

## NOTES:

1. FOR ACCURATE RIGHT OF WAY AND ACCESS DATA, CONTACT RIGHT OF WAY ENGINEERING AT THE DISTRICT OFFICE.

## ABBREVIATIONS:

VCS - VEHICLE CLASSIFICATION STATION
STC - SCREENED TRANSMISSION CABLE

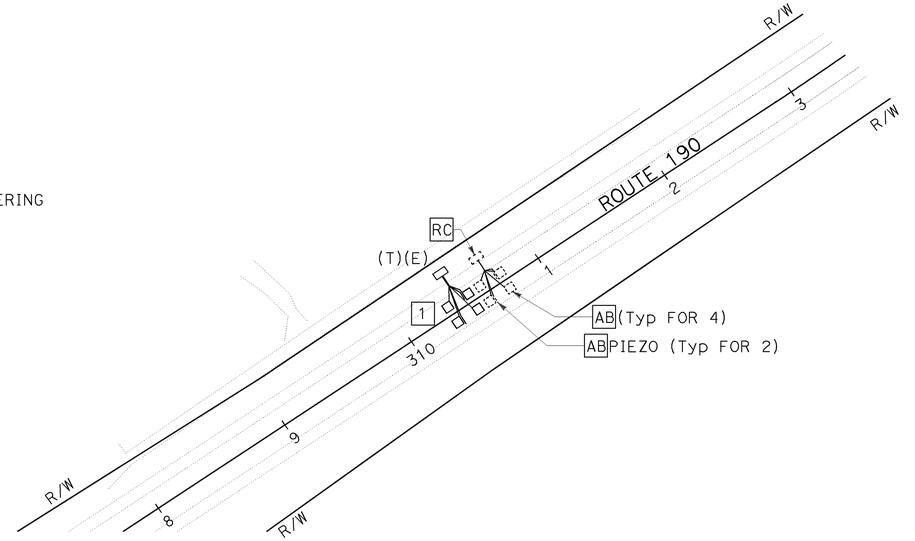


**PM 22.5**

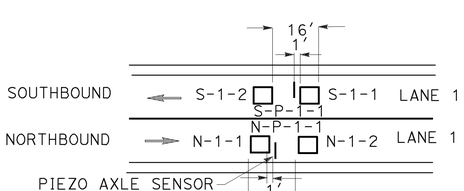


DLC IDENTIFICATION

D-L-N
- DIRECTION OF TRAFFIC
  - N - NORTHBOUND
  - S - SOUTHBOUND
  - E - EASTBOUND
  - W - WESTBOUND
- 1 - ENTERING
- 2 - LEAVING
- LANE NUMBER

PIEZO AXLE SENSOR IDENTIFICATION

D-P-L-1
- DIRECTION OF TRAFFIC
  - N - NORTHBOUND
  - S - SOUTHBOUND
  - E - EASTBOUND
  - W - WESTBOUND
- 1 - FOR ALL PIEZO AXLE SENSORS
- LANE NUMBER
- P - PIEZO AXLE SENSOR

**DLC AND PIEZO AXLE SENSOR IDENTIFICATION**
**DETAIL A**

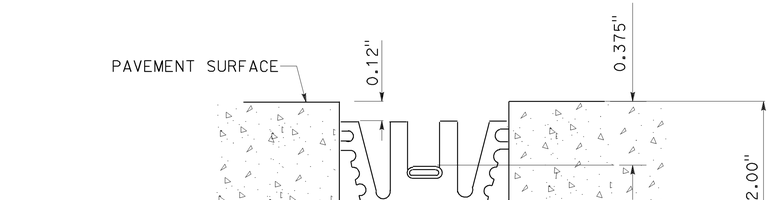


SECTION A-A

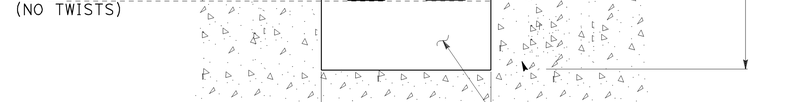


**PIEZO AXLE SENSOR INSTALLATION**
**DETAIL B**

# MODIFY VEHICLE CLASSIFICATION STATION

# E-1

THIS PLAN IS ACCURATE FOR ELECTRICAL WORK ONLY.

SCALE: 1"=50'

STATE OF CALIFORNIA - DEPARTMENT OF TRANSPORTATION
ELECTRICAL DESIGN

| FUNCTIONAL SUPERVISOR | CALCULATED-DESIGNED BY | CHECKED BY | REVISED BY | DATE REVISED |
|---|---|---|---|---|
| ALI BAKHDOUD | NORMA M. GALLEGOS | DANIEL T. VO | | |

LAST REVISION DATE PLOTTED => 22-DEC-2010
10-12-10 TIME PLOTTED => 11:28

BORDER LAST REVISED 7/2/2010

USERNAME => s115755
DGN FILE => 633740ua001.dgn

RELATIVE BORDER SCALE IS IN INCHES 0 1 2 3

UNIT 1515

PROJECT NUMBER & PHASE 06000201501

| DIST | COUNTY | ROUTE | POST MILES TOTAL PROJECT | SHEET NO. | TOTAL SHEETS |
|---|---|---|---|---|---|
| 06 | Tul | 190 | 21.2/26.4 | 93 | 120 |

Mark S. Turner
PROFESSIONAL LAND SURVEYOR

June 30, 2006
PLANS APPROVAL DATE

LICENSED LAND SURVEYOR
Mark S. Turner
No. 6228
Exp. 3-31-08
STATE OF CALIFORNIA

*The State of California or its officers or agents shall not be responsible for the accuracy or completeness of electronic copies of this plan sheet.*

*To accompany plans dated* 12-20-10

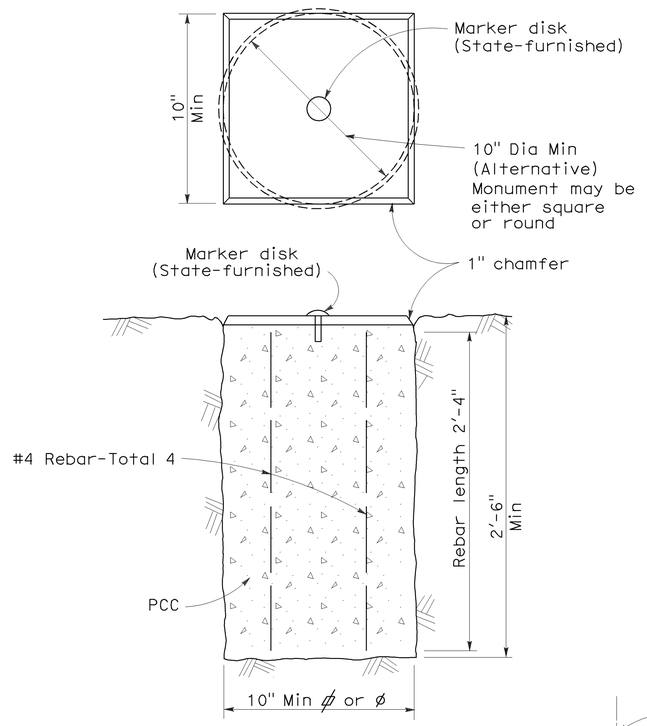


TYPE A

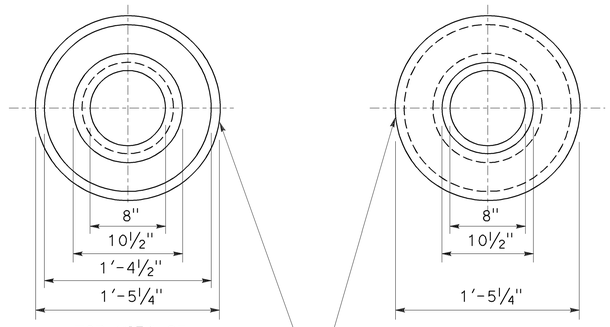


TOP VIEW OF
MONUMENT OF WELL RING




BOTTOM VIEW OF
MONUMENT OF WELL RING

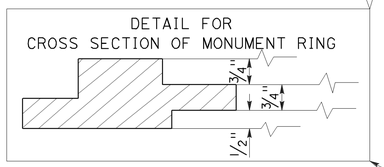


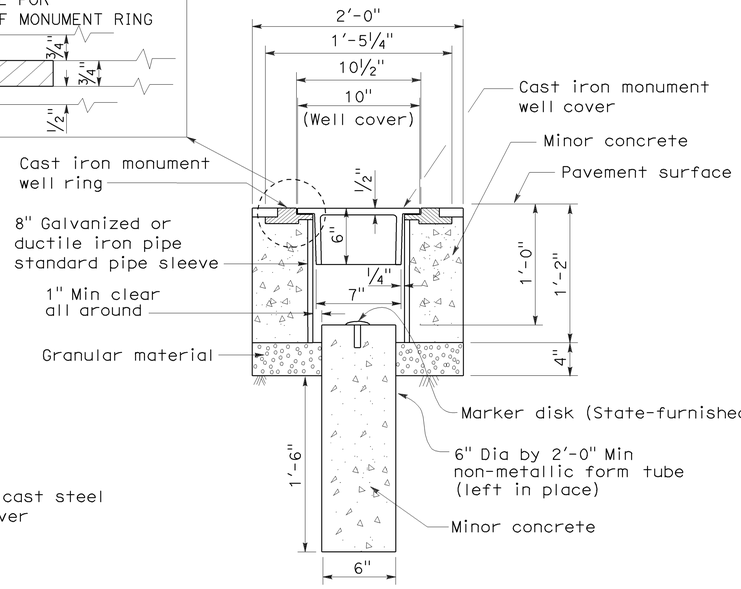


TYPE B

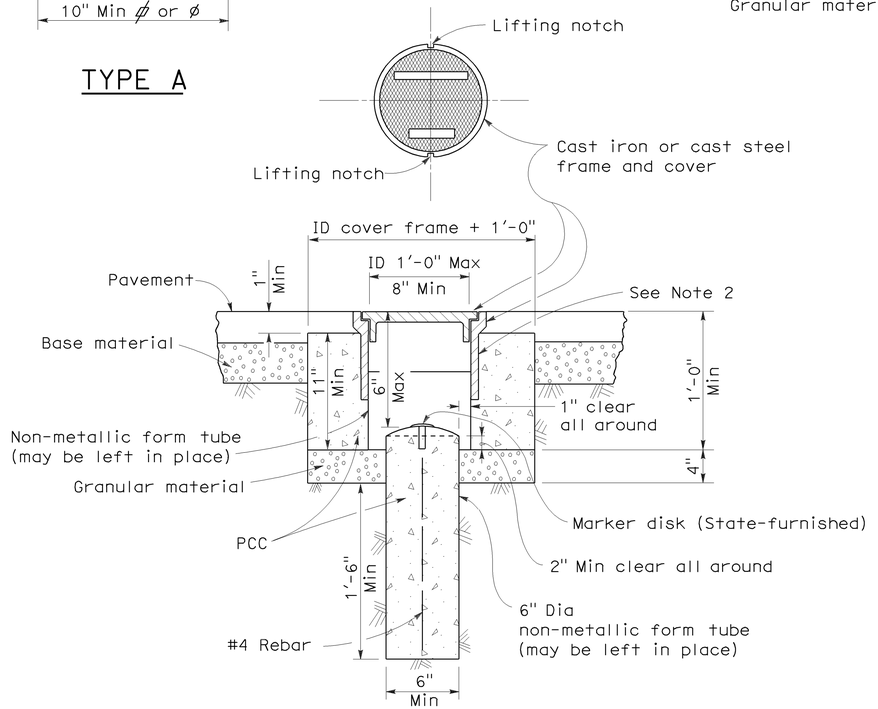


TYPE D
Alternative No. 1

## NOTES:

1. The configuration of the cast iron or cast steel frame and cover may vary from that shown.
2. Frame shall be embedded in the concrete a minimum of 3".
3. Type D monument shall be either Alternative No. 1 or Alternative No. 2 at the contractor's option.
4. All portland cement concrete shall be Class 2 or minor concrete with 1" maximum aggregate.

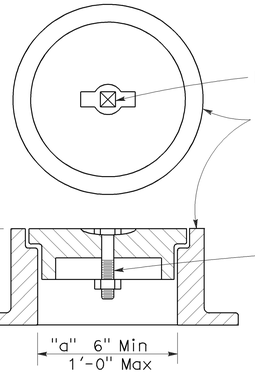


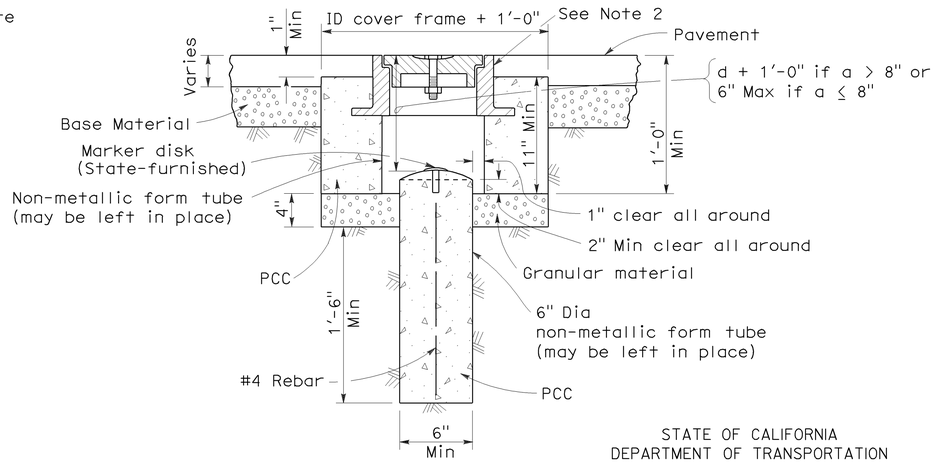


STATE OF CALIFORNIA
DEPARTMENT OF TRANSPORTATION

TYPE D
Alternative No. 2

# SURVEY MONUMENTS

NO SCALE

RSP A74 DATED JUNE 30, 2006 SUPERSEDES STANDARD PLAN DATED MAY 1, 2006 - PAGE 28 OF THE STANDARD PLANS BOOK DATED MAY 2006.

**REVISED STANDARD PLAN RSP A74**

**2006 REVISED STANDARD PLAN RSP A74**

5-24-06

| DIST | COUNTY | ROUTE | POST MILES TOTAL PROJECT | SHEET NO. | TOTAL SHEETS |
|---|---|---|---|---|---|
| 06 | Tul | 190 | 21.2/26.4 | 94 | 120 |

Randell D. Hiatt
REGISTERED CIVIL ENGINEER

June 6, 2008
PLANS APPROVAL DATE

REGISTERED PROFESSIONAL ENGINEER
Randell D. Hiatt
No. C50200
Exp. 6-30-09
CIVIL
STATE OF CALIFORNIA

*The State of California or its officers or agents shall not be responsible for the accuracy or completeness of electronic copies of this plan sheet.*

*To accompany plans dated* 12-20-10

## NOTES:

1. When necessary to place dike in front of face of guard railing, only Type C dike may be used. For dike details, see Standard Plan A87B.
2. For standard railing post embedment, see Standard Plans A77C3.
3. Guard railing delineation to be used where shown on the Project Plans.
4. When dike or curb is placed under guard railing, the maximum height of the dike or curb shall be 4". Mountable dike should not be used. For dike and curb details, see Revised Standard Plans RSP A87A and Standard Plan A87B.
5. For details of typical distance between the face of rail and hinge point, see Standard Plan A77C3.

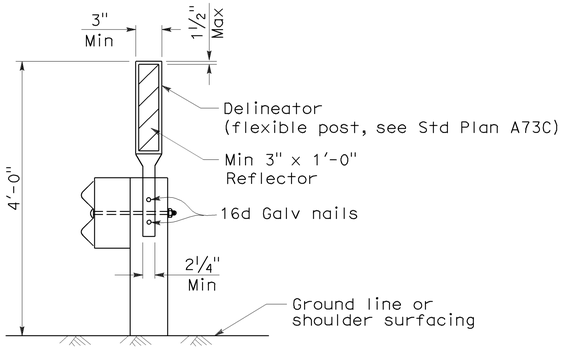


GUARD RAILING DELINEATION
See Note 3

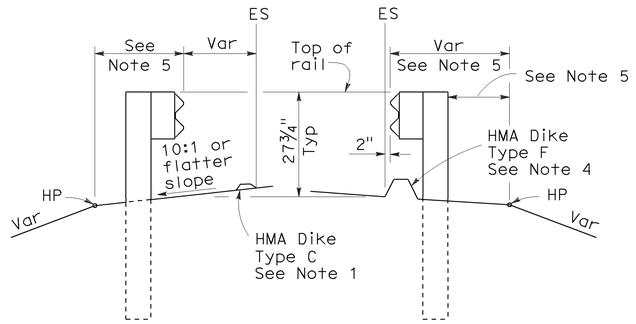


DIKE POSITIONING
See Note 1

STATE OF CALIFORNIA
DEPARTMENT OF TRANSPORTATION

# METAL BEAM GUARD RAILING TYPICAL RAILING DELINEATION AND DIKE POSITIONING DETAILS

NO SCALE

RSP A77C4 DATED JUNE 6, 2008 SUPERSEDES STANDARD PLAN A77C4
DATED MAY 1, 2006 - PAGE 47 OF THE STANDARD PLANS BOOK DATED MAY 2006.

**REVISED STANDARD PLAN RSP A77C4**

**2006 REVISED STANDARD PLAN RSP A77C4**

12-10-07

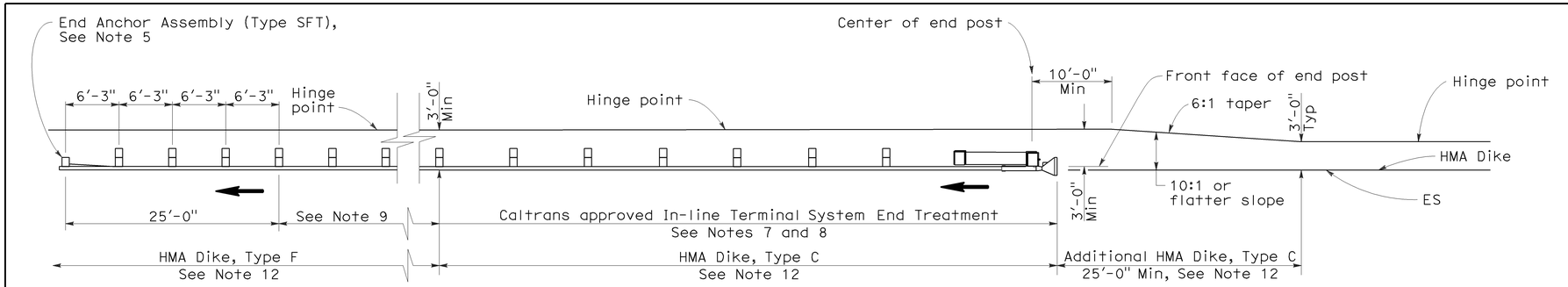


## TYPE 11A LAYOUT

(EMBANKMENT GUARD INSTALLATION WITH IN-LINE END TREATMENT AT TRAFFIC APPROACH END OF RAILING)
See Note 6

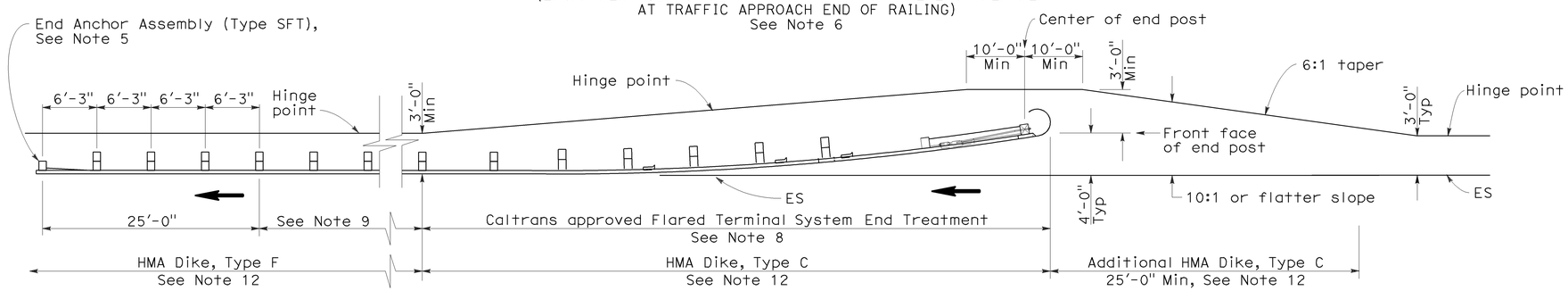


## TYPE 11B LAYOUT

(EMBANKMENT GUARD RAILING INSTALLATION WITH FLARED END TREATMENT AT TRAFFIC APPROACH END OF RAILING)
See Note 6

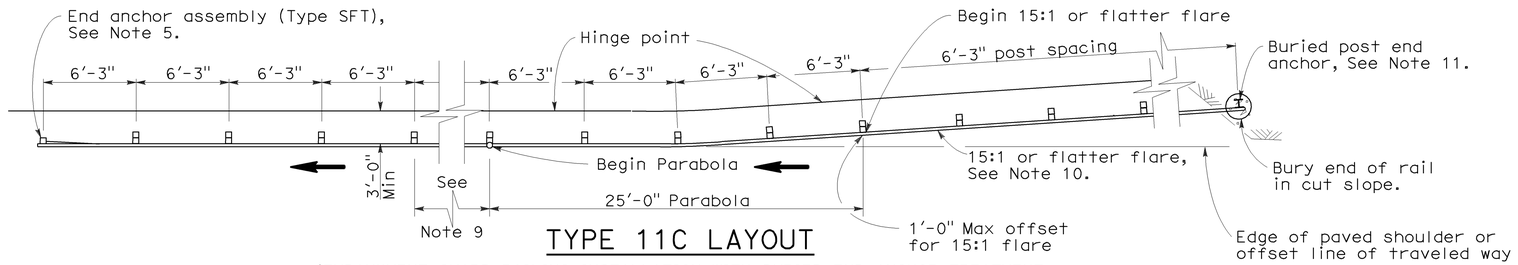


## TYPE 11C LAYOUT

(EMBANKMENT GUARD RAILING INSTALLATION WITH BURIED END ANCHOR TREATMENT AT TRAFFIC APPROACH END OF RAILING)
See Notes 6 and 12

## NOTES:

1. Line post, blocks and hardware to be used are shown on Standard Plans A77A1, A77A2, A77B1, A77C1, and A77C2.
2. Guard rail post spacing to be 6'-3" center to center, except as otherwise noted.
3. Except as noted, line posts are 6" x 8" x 6'-0" wood with 6" x 8" x 1'-2" wood blocks. W6 x 9 steel posts, 6'-0" in length, with 6" x 8" x 1'-2" notched wood blocks or recycled plastic blocks may be used for 6" x 8" x 6'-0" wood post with 6" x 8" x 1'-2" wood blocks where applicable and when specified.
4. Direction of adjacent traffic indicated by ➞.
5. For End Anchor Assembly (Type SFT) details, see Standard Plan A77H1.
6. Layout Types 11A, 11B or 11C are typically used where guard railing is recommended to shield embankment slopes and a crashworthy end treatment is required for only one direction of traffic.
7. In-line Terminal System End Treatments are used where site conditions will not accommodate a flared end treatment.
8. The type of terminal system end treatment to be used will be shown on the Project Plans.
9. Dependent on site conditions (embankment height and side slope), construction of additional guard railing (length equal to multiples of 12'-6" with 6'-3" post spacing) may be advisable.
10. The 15:1 or flatter flare used with buried end anchors is based on the edge of the paved shoulder or offset line of edge of the traveled way. The length of guard railing within the 15:1 or flatter flare is based on site conditions and should be a length equal to multiples of 12'-6".
11. For details of the buried post end anchor used with Type 11C Layout, see Standard Plan A77I2.
12. Where placement of dike is required with guard railing installations, see Revised Standard Plan RSP A77C4 for dike positioning details.

| DIST | COUNTY | ROUTE | POST MILES TOTAL PROJECT | SHEET NO. | TOTAL SHEETS |
|---|---|---|---|---|---|
| 06 | Tul | 190 | 21.2/26.4 | 95 | 120 |

Randell D. Hiatt
REGISTERED CIVIL ENGINEER

June 6, 2008
PLANS APPROVAL DATE

REGISTERED PROFESSIONAL ENGINEER — Randell D. Hiatt — No. C50200 — Exp. 6-30-09 — CIVIL — STATE OF CALIFORNIA

*The State of California or its officers or agents shall not be responsible for the accuracy or completeness of electronic copies of this plan sheet.*

*To accompany plans dated* 12-20-10

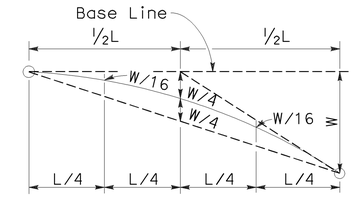


## TYPICAL PARABOLIC LAYOUT

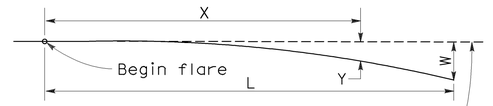


Base Line (Edge of paved shoulder or offset line of edge of traveled way)

$$Y = \frac{WX^2}{L^2}$$

Y = Offset from base line
W = Maximum offset
X = Distance along base line
L = Length of flare

## PARABOLIC FLARE OFFSETS

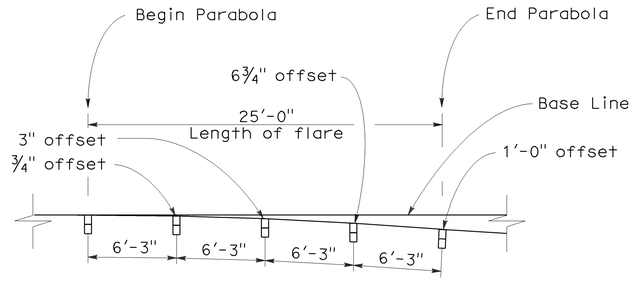


## TYPICAL FLARE OFFSETS FOR 1 FOOT MAX END OFFSET

STATE OF CALIFORNIA
DEPARTMENT OF TRANSPORTATION

# METAL BEAM GUARD RAILING TYPICAL LAYOUTS FOR EMBANKMENTS

NO SCALE

RSP A77E1 DATED JUNE 6, 2008 SUPERSEDES STANDARD PLAN A77E1
DATED MAY 1, 2006 - PAGE 48 OF THE STANDARD PLANS BOOK DATED MAY 2006.

**REVISED STANDARD PLAN RSP A77E1**

**2006 REVISED STANDARD PLAN RSP A77E1**

12-10-07

| DIST | COUNTY | ROUTE | POST MILES TOTAL PROJECT | SHEET NO. | TOTAL SHEETS |
|---|---|---|---|---|---|
| 06 | Tul | 190 | 21.2/26.4 | 96 | 120 |

Randell D. Hiatt
REGISTERED CIVIL ENGINEER

June 6, 2008
PLANS APPROVAL DATE

REGISTERED PROFESSIONAL ENGINEER
Randell D. Hiatt
No. C50200
Exp. 6-30-09
CIVIL
STATE OF CALIFORNIA

*The State of California or its officers or agents shall not be responsible for the accuracy or completeness of electronic copies of this plan sheet.*

*To accompany plans dated* 12-20-10

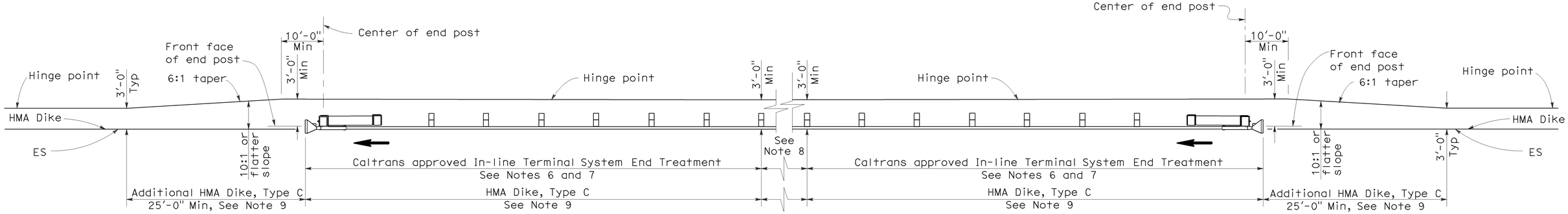


## TYPE 11D LAYOUT

(EMBANKMENT GUARD RAILING INSTALLATION WITH IN-LINE END TREATMENT AT EACH END OF RAILING)
See Note 5

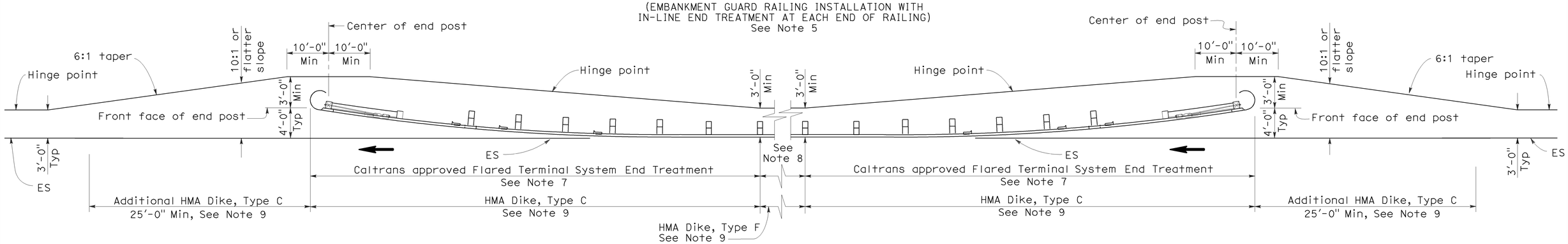


## TYPE 11E LAYOUT

(EMBANKMENT GUARD RAILING INSTALLATION WITH FLARED END TREATMENT AT EACH END OF RAILING)
See Note 5

## NOTES:

1. Line post, blocks and hardware to be used are shown on Standard Plans A77A1, A77A2, A77B1, A77C1 and A77C2.
2. Guard rail post spacing to be 6'-3" center to center, except as otherwise noted.
3. Except as noted, line posts are 6" x 8" x 6'-0" wood with 6" x 8" x 1'-2" wood blocks. W6 x 9 steel posts, 6'-0" in length, with 6" x 8" x 1'-2" notched wood blocks or plastic blocks may be used for 6" x 8" x 6'-0" wood post with 6" x 8" x 1'-2" wood blocks where applicable and when specified.
4. Direction of adjacent traffic indicated by ➡.
5. Layout Types 11D through 11L, shown on the A77E Series of Revised Standard Plans, are typically used where guard railing is recommended to shield embankment slopes and a crashworthy end treatment is required for both directions of traffic.
6. In-line Terminal System End Treatments are used where site conditions will not accommodate a flared end treatment.
7. The type of terminal system end treatment to be used will be shown on the Project Plans.
8. Dependent on site conditions (embankment height and side slope), construction of additional guard railing (length equal to multiples of 12'-6" with 6'-3" post spacing) may be advisable.
9. Where placement of dike is required with guard railing installations, see Revised Standard Plan RSP A77C4 for dike positioning details.

STATE OF CALIFORNIA
DEPARTMENT OF TRANSPORTATION

# METAL BEAM GUARD RAILING TYPICAL LAYOUTS FOR EMBANKMENTS

NO SCALE

RSP A77E2 DATED JUNE 6, 2008 SUPERSEDES STANDARD PLAN A77E2
DATED MAY 1, 2006 - PAGE 49 OF THE STANDARD PLANS BOOK DATED MAY 2006.

**REVISED STANDARD PLAN RSP A77E2**

**2006 REVISED STANDARD PLAN RSP A77E2**

12-10-07

| DIST | COUNTY | ROUTE | POST MILES TOTAL PROJECT | SHEET NO. | TOTAL SHEETS |
|---|---|---|---|---|---|
| 06 | Tul | 190 | 21.2/26.4 | 97 | 120 |

Randell D. Hiatt
REGISTERED CIVIL ENGINEER

June 6, 2008
PLANS APPROVAL DATE

REGISTERED PROFESSIONAL ENGINEER
Randell D. Hiatt
No. C50200
Exp. 6-30-09
CIVIL
STATE OF CALIFORNIA

*The State of California or its officers or agents shall not be responsible for the accuracy or completeness of electronic copies of this plan sheet.*

*To accompany plans dated* 12-20-10

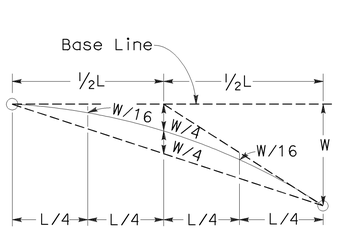


## TYPICAL PARABOLIC LAYOUT

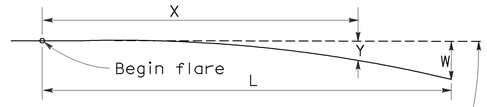


$$Y = \frac{WX^2}{L^2}$$

Y = Offset from base line
W = Maximum offset
X = Distance along base line
L = Length of flare

## PARABOLIC FLARE OFFSETS

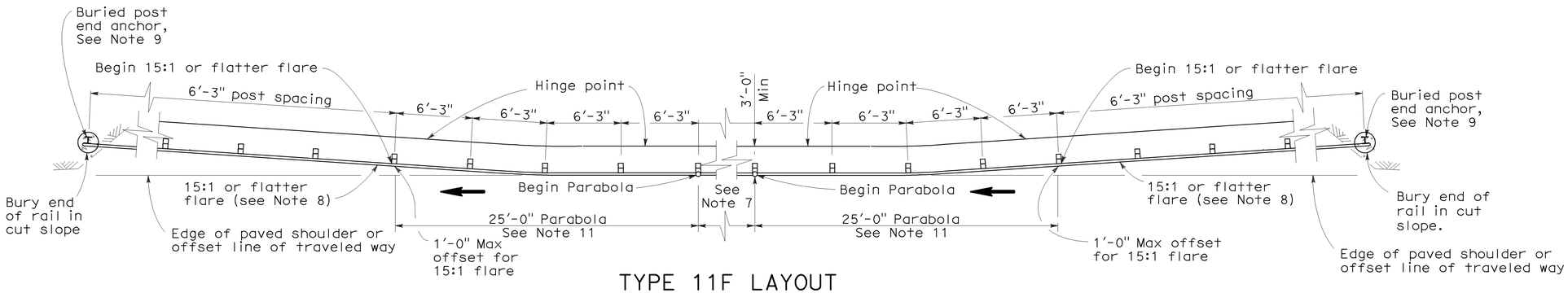


## TYPE 11F LAYOUT

(EMBANKMENT GUARD RAILING INSTALLATION WITH A BURIED END ANCHOR TREATMENT AT EACH END OF RAILING)
See Notes 5 and 10

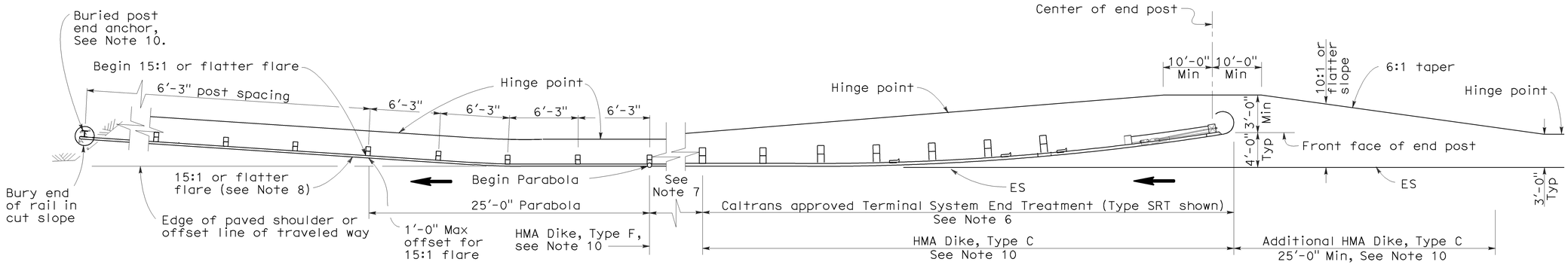


## TYPE 11G LAYOUT

(EMBANKMENT GUARD RAILING INSTALLATION WITH FLARED END TREATMENT AND A BURIED END ANCHOR TREATMENT AT THE ENDS OF RAILING)
See Notes 5 and 10

## NOTES:

1. Line post, blocks and hardware to be used are shown on Standard Plans A77A1, A77A2, A77B1, A77C1 and A77C2.
2. Guard rail post spacing to be 6'-3" center to center, except as otherwise noted.
3. Except as noted, line posts are 6" x 8" x 6'-0" wood with 6" x 8" x 1'-2" wood blocks. W6 x 9 steel posts, 6'-0" in length, with 6" x 8" x 1'-2" notched wood blocks or plastic blocks may be used for 6" x 8" x 6'-0" wood post with 6" x 8" x 1'-2" wood blocks where applicable and when specified.
4. Direction of adjacent traffic indicated by ➔.
5. Layout Types 11D through 11L, shown on the A77E Series of Revised Standard Plans, are typically used where guard railing is recommended to shield embankment slopes and a crashworthy end treatment is required for both directions of traffic.
6. The type of terminal system end treatment to be used will be shown on the Project Plans.
7. Dependent on site conditions (embankment height and side slope), construction of additional guard railing (length equal to multiples of 12'-6" with 6'-3" post spacing) may be advisable.
8. The 15:1 or flatter flare used with buried end anchors is based on the edge of the paved shoulder or offset line of edge of the traveled way. The length of guard railing within the 15:1 or flatter flare is based on site conditions and should be a length equal to multiples of 12'-6".
9. For details of the buried post end anchor used with Type 11F and 11G Layouts, see Standard Plan A77I2.
10. Where placement of dike is required with guard railing installations, see Revised Standard Plan RSP A77C4 for dike positioning details.
11. For typical flare offsets for 25'-0" length parabola with maximum offset of 1'-0", see Revised Standard Plan RSP A77E1.

STATE OF CALIFORNIA
DEPARTMENT OF TRANSPORTATION

# METAL BEAM GUARD RAILING TYPICAL LAYOUTS FOR EMBANKMENTS

NO SCALE

RSP A77E3 DATED JUNE 6, 2008 SUPERSEDES STANDARD PLAN A77E3 DATED MAY 1, 2006 - PAGE 50 OF THE STANDARD PLANS BOOK DATED MAY 2006.

**REVISED STANDARD PLAN RSP A77E3**

**2006 REVISED STANDARD PLAN RSP A77E3**

12-10-07

| DIST | COUNTY | ROUTE | POST MILES TOTAL PROJECT | SHEET NO. | TOTAL SHEETS |
|---|---|---|---|---|---|
| 06 | Tul | 190 | 21.2/26.4 | 98 | 120 |

Randell D. Hiatt
REGISTERED CIVIL ENGINEER

June 6, 2008
PLANS APPROVAL DATE

REGISTERED PROFESSIONAL ENGINEER
Randell D. Hiatt
No. C50200
Exp. 6-30-09
CIVIL
STATE OF CALIFORNIA

*The State of California or its officers or agents shall not be responsible for the accuracy or completeness of electronic copies of this plan sheet.*

*To accompany plans dated* 12-20-10

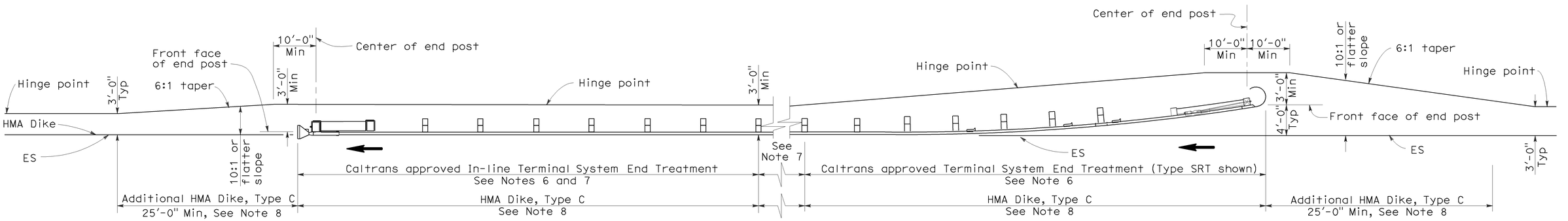


# TYPE 11H LAYOUT

(EMBANKMENT GUARD RAILING INSTALLATION WITH FLARED END TREATMENT
AND AN IN-LINE TREATMENT AT THE ENDS OF RAILING)
See Notes 5 and 8

## NOTES:

1. Line post, blocks and hardware to be used are shown on Standard Plans A77A1, A77A2, A77B1, A77C1 and A77C2.
2. Guard rail post spacing to be 6'-3" center to center, except as otherwise noted.
3. Except as noted, line posts are 6" x 8" x 6'-0" wood with 6" x 8" x 1'-2" wood blocks. W6 x 9 steel posts, 6'-0" in length, with 6" x 8" x 1'-2" notched wood blocks or plastic blocks may be used for 6" x 8" x 6'-0" wood post with 6" x 8" x 1'-2" wood blocks where applicable and when specified.
4. Direction of adjacent traffic indicated by ➞.
5. Layout Types 11D through 11L, shown on the A77E Series of Revised Standard Plans, are typically used where guard railing is recommended to shield embankment slopes and a crashworthy end treatment is required for both directions of traffic.
6. The type of terminal system end treatment to be used will be shown on the Project Plans.
7. Dependent on site conditions (embankment height and side slope), construction of additional guard railing (length equal to multiples of 12'-6" with 6'-3" post spacing) may be advisable.
8. Where placement of dike is required with guard railing installations, see Revised Standard Plan RSP A77C4 for dike positioning details.

STATE OF CALIFORNIA
DEPARTMENT OF TRANSPORTATION

# METAL BEAM GUARD RAILING TYPICAL LAYOUTS FOR EMBANKMENTS

NO SCALE

RSP A77E4 DATED JUNE 6, 2008 SUPERSEDES STANDARD PLAN A77E4
DATED MAY 1, 2006 - PAGE 51 OF THE STANDARD PLANS BOOK DATED MAY 2006.

**REVISED STANDARD PLAN RSP A77E4**

**2006 REVISED STANDARD PLAN RSP A77E4**

12-10-07

| DIST | COUNTY | ROUTE | POST MILES TOTAL PROJECT | SHEET NO. | TOTAL SHEETS |
|---|---|---|---|---|---|
| 06 | Tul | 190 | 21.2/26.4 | 99 | 120 |

Randell D. Hiatt
REGISTERED CIVIL ENGINEER

June 6, 2008
PLANS APPROVAL DATE

REGISTERED PROFESSIONAL ENGINEER — Randell D. Hiatt — No. C50200 — Exp. 6-30-09 CIVIL — STATE OF CALIFORNIA

*The State of California or its officers or agents shall not be responsible for the accuracy or completeness of electronic copies of this plan sheet.*

*To accompany plans dated* 12-20-10

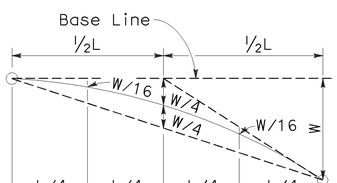


## TYPICAL PARABOLIC LAYOUT

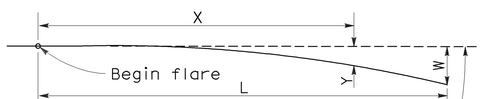


$$Y = \frac{WX^2}{L^2}$$

Y = Offset from base line
W = Maximum offset
X = Distance along base line
L = Length of flare

## PARABOLIC FLARE OFFSETS

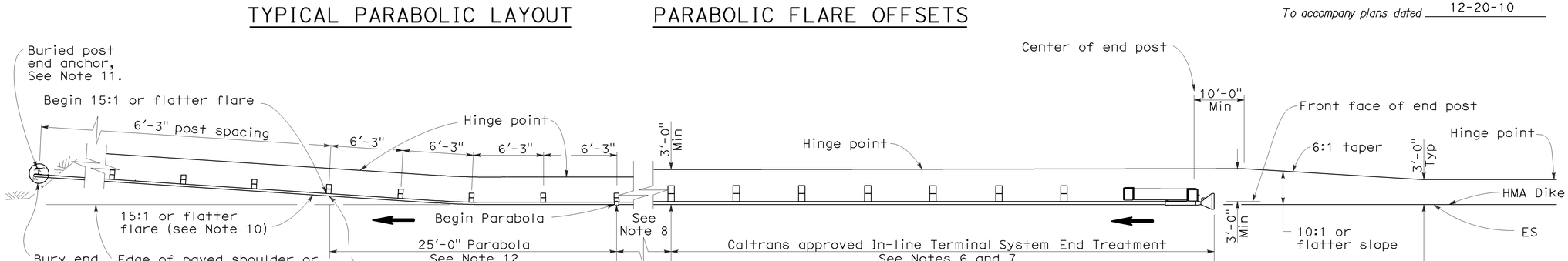


## TYPE 11I LAYOUT

(EMBANKMENT GUARD RAILING INSTALLATION WITH IN-LINE END TREATMENT AND A BURIED END ANCHOR TREATMENT AT THE ENDS OF RAILING)
See Note 5

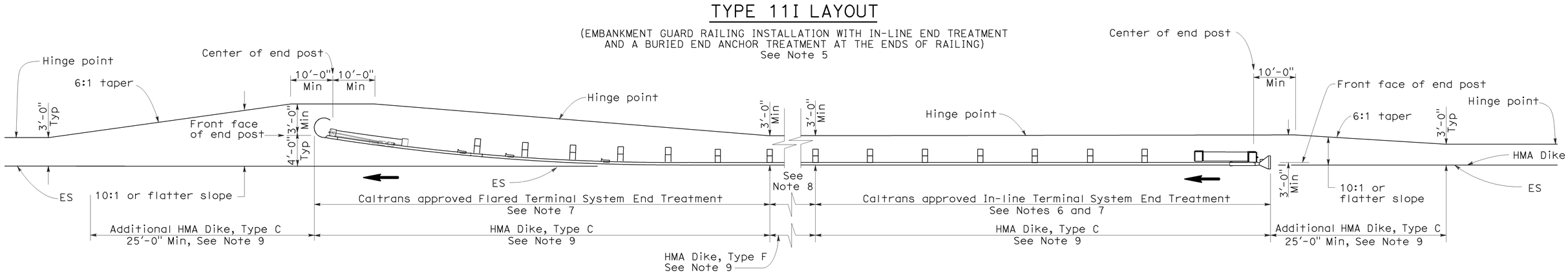


## TYPE 11J LAYOUT

(EMBANKMENT GUARD RAILING INSTALLATION WITH IN-LINE END TREATMENT AND FLARED END TREATMENT AT THE ENDS OF RAILING)
See Note 5

## NOTES:

1. Line post, blocks and hardware to be used are shown on Standard Plans A77A1, A77A2, A77B1, A77C1 and A77C2.
2. Guard rail post spacing to be 6'-3" center to center, except as otherwise noted.
3. Except as noted, line posts are 6" x 8" x 6'-0" wood with 6" x 8" x 1'-2" wood blocks. W6 x 9 steel posts, 6'-0" in length, with 6" x 8" x 1'-2" notched wood blocks or plastic blocks may be used for 6" x 8" x 6'-0" wood post with 6" x 8" x 1'-2" wood blocks where applicable and when specified.
4. Direction of adjacent traffic indicated by ➞.
5. Layout Types 11D through 11L, shown on the A77E Series of Revised Standard Plans, are typically used where guard railing is recommended to shield embamkment slopes and a crashworthy end treatment is required for both directions of traffic.
6. In-line Terminal System End Treatments are used where site conditions will not accommodate a flared end treatment.
7. The type of terminal system end treatment to be used will be shown on the Project Plans.
8. Dependent on site conditions (embankment height and side slope), construction of additional guard railing (length equal to multiples of 12'-6" with 6'-3" post spacing) may be advisable.
9. Where placement of dike is required with guard railing installations, see Revised Standard Plan RSP A77C4 for dike positioning details.
10. The 15:1 or flatter flare used with buried end anchors is based on the edge of the paved shoulder or offset line of edge of the traveled way. The length of guard railing within the 15:1 or flatter flare is based on site conditions and should be a length equal to multiples of 12'-6".
11. For details of the buried post end anchor used with Type 11I Layout, see Standard Plan A77I2.
12. For typical flare offsets for 25'-0" length parabola with maximum offset of 1'-0", see Revised Standard Plan RSP A77E1.

STATE OF CALIFORNIA
DEPARTMENT OF TRANSPORTATION

# METAL BEAM GUARD RAILING TYPICAL LAYOUTS FOR EMBANKMENTS

NO SCALE

RSP A77E5 DATED JUNE 6, 2008 SUPERSEDES STANDARD PLAN A77E5
DATED MAY 1, 2006 - PAGE 52 OF THE STANDARD PLANS BOOK DATED MAY 2006.

**REVISED STANDARD PLAN RSP A77E5**

**2006 REVISED STANDARD PLAN RSP A77E5**

12-10-07

| DIST | COUNTY | ROUTE | POST MILES TOTAL PROJECT | SHEET NO. | TOTAL SHEETS |
|---|---|---|---|---|---|
| 06 | Tul | 190 | 21.2/26.4 | 100 | 120 |

Randell D. Hiatt
REGISTERED CIVIL ENGINEER

June 6, 2008
PLANS APPROVAL DATE

Randell D. Hiatt
No. C50200
Exp. 6-30-09
CIVIL
REGISTERED PROFESSIONAL ENGINEER
STATE OF CALIFORNIA

*The State of California or its officers or agents shall not be responsible for the accuracy or completeness of electronic copies of this plan sheet.*

*To accompany plans dated* 12-20-10

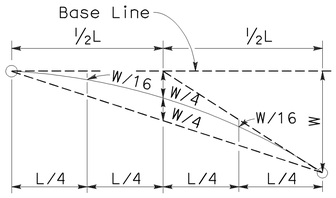


## TYPICAL PARABOLIC LAYOUT

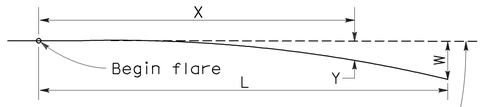


Base Line (Edge of paved shoulder or offset line of edge of traveled way)

$$Y = \frac{WX^2}{L^2}$$

Y = Offset from base line
W = Maximum offset
X = Distance along base line
L = Length of flare

## PARABOLIC FLARE OFFSETS

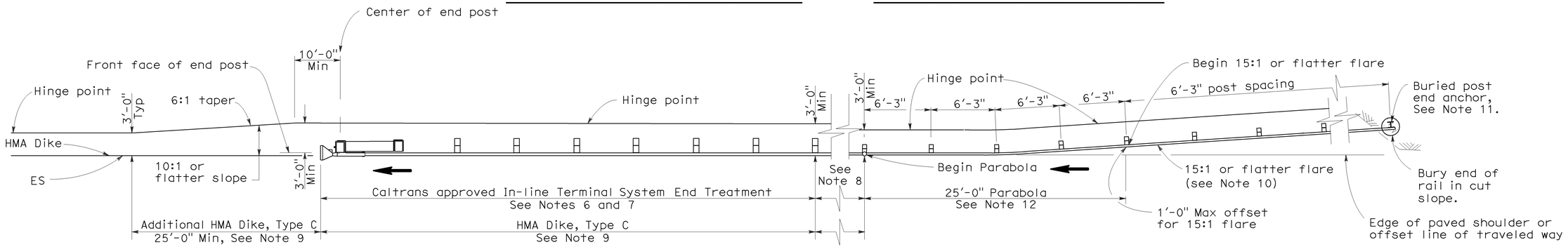


## TYPE 11K LAYOUT

(EMBANKMENT GUARD RAILING INSTALLATION WITH A BURIED END ANCHOR TREATMENT AND AN IN-LINE END TREATMENT AT THE ENDS OF RAILING)
See Note 5

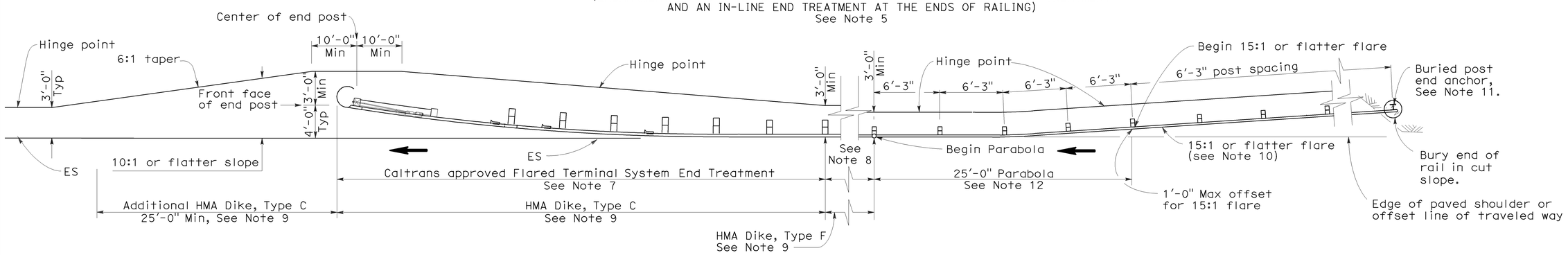


## TYPE 11L LAYOUT

(EMBANKMENT GUARD RAILING INSTALLATION WITH A BURIED END ANCHOR TREATMENT AND A FLARED END TREATMENT AT THE ENDS OF RAILING)
See Note 5

## NOTES:

1. Line post, blocks and hardware to be used are shown on Standard Plans A77A1, A77A2, A77B1, A77C1 and A77C2.
2. Guard rail post spacing to be 6'-3" center to center, except as otherwise noted.
3. Except as noted, line posts are 6" x 8" x 6'-0" wood with 6" x 8" x 1'-2" wood blocks. W6 x 9 steel posts, 6'-0" in length, with 6" x 8" x 1'-2" notched wood blocks or plastic blocks may be used for 6" x 8" x 6'-0" wood post with 6" x 8" x 1'-2" wood blocks where applicable and when specified.
4. Direction of adjacent traffic indicated by ➔.
5. Layout Types 11D through 11L, shown on the A77E Series of Revised Standard Plans, are typically used where guard railing is recommended to shield embamkment slopes and a crashworthy end treatment is required for both directions of traffic.
6. In-line Terminal System End Treatments are used where site conditions will not accommodate a flared end treatment.
7. The type of terminal system end treatment to be used will be shown on the Project Plans.
8. Dependent on site conditions (embankment height and side slope), construction of additional guard railing (length equal to multiples of 12'-6" with 6'-3" post spacing) may be advisable.
9. Where placement of dike is required with guard railing installations, see Revised Standard Plan RSP A77C4 for dike positioning details.
10. The 15:1 or flatter flare used with buried end anchors is based on the edge of the paved shoulder or offset line of edge of the traveled way. The length of guard railing within the 15:1 or flatter flare is based on site conditions and should be a length equal to multiples of 12'-6".
11. For details of the buried post end anchor used with Type 11K and 11L Layouts, see Standard Plan A77I2.
12. For typical flare offsets for 25'-0" length parabola with maximum offset of 1'-0", see Revised Standard Plan RSP A77E1.

STATE OF CALIFORNIA
DEPARTMENT OF TRANSPORTATION

# METAL BEAM GUARD RAILING TYPICAL LAYOUTS FOR EMBANKMENTS

NO SCALE

RSP A77E6 DATED JUNE 6, 2008 SUPERSEDES STANDARD PLAN A77E6
DATED MAY 1, 2006 - PAGE 53 OF THE STANDARD PLANS BOOK DATED MAY 2006.

**REVISED STANDARD PLAN RSP A77E6**

**2006 REVISED STANDARD PLAN RSP A77E6**

12-10-07

| DIST | COUNTY | ROUTE | POST MILES TOTAL PROJECT | SHEET NO. | TOTAL SHEETS |
|---|---|---|---|---|---|
| 06 | Tul | 190 | 21.2/26.4 | 101 | 120 |

Randell D. Hiatt
REGISTERED CIVIL ENGINEER

June 6, 2008
PLANS APPROVAL DATE

REGISTERED PROFESSIONAL ENGINEER — Randell D. Hiatt — No. C50200 — Exp. 6-30-09 — CIVIL — STATE OF CALIFORNIA

*The State of California or its officers or agents shall not be responsible for the accuracy or completeness of electronic copies of this plan sheet.*

*To accompany plans dated* 12-20-10

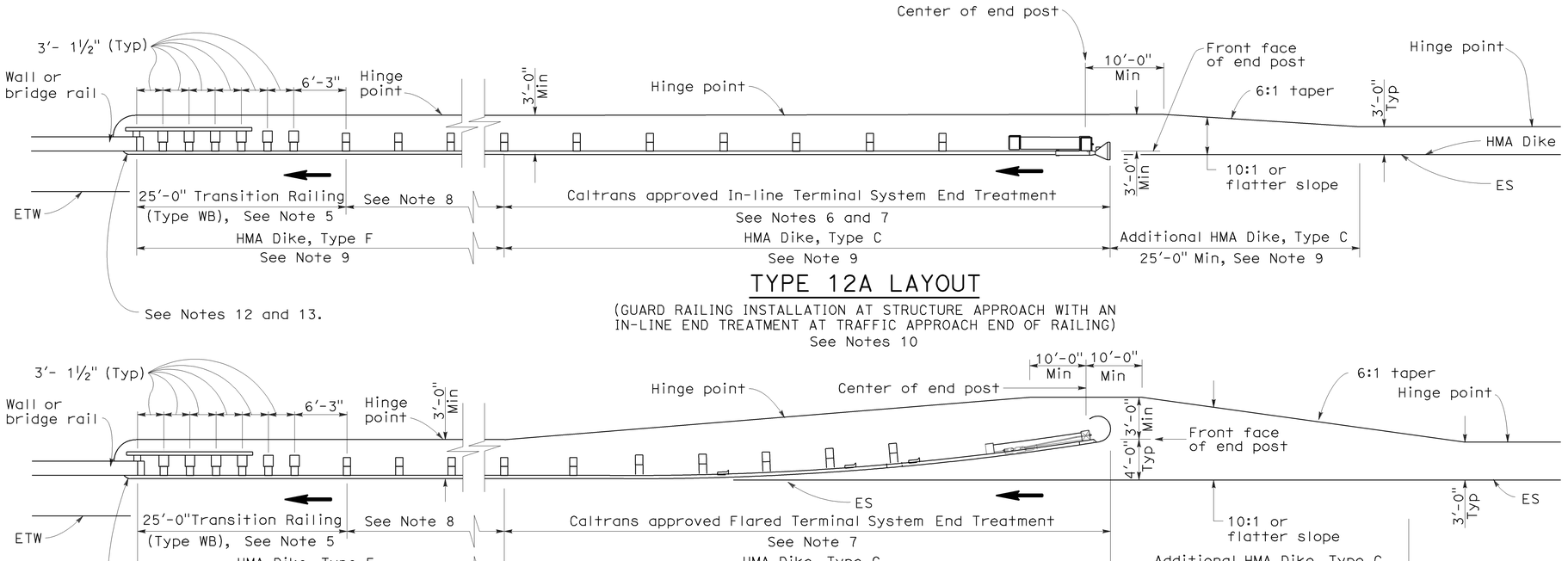


## TYPE 12A LAYOUT

(GUARD RAILING INSTALLATION AT STRUCTURE APPROACH WITH AN IN-LINE END TREATMENT AT TRAFFIC APPROACH END OF RAILING)
See Notes 10




## TYPE 12B LAYOUT

(GUARD RAILING INSTALLATION AT STRUCTURE APPROACH WITH A FLARED END TREATMENT AT TRAFFIC APPROACH END OF RAILING)
See Notes 10

## NOTES:

1. Line post, blocks and hardware to be used are shown on Standard Plans A77A1, A77A2, A77B1, A77C1 and A77C2.
2. Guard rail post spacing to be 6'-3" center to center, except as otherwise noted.
3. Except as noted, line posts are 6" x 8" x 6'-0" wood with 6" x 8" x 1'-2" wood blocks. W6 x 9 steel posts, 6'-0" in length, with 6" x 8" x 1'-2" notched wood blocks or plastic blocks may be used for 6" x 8" x 6'-0" wood posts with 6" x 8" x 1'-2" wood blocks where applicable and when specified.
4. Direction of adjacent traffic indicated by ➔.
5. For Transition Railing (Type WB) details for Types 12A and 12B Layouts, see Standard Plan A77J4.
6. In-line Terminal System End Treatments are used where site conditions will not accommodate a flared end treatment.
7. The type of terminal system end treatment to be used will be shown on the Project Plans.
8. Dependent on site conditions (embankment height, side slopes, or other fixed objects), it may be advisable to construct additional guard railing (a length equal to multiples of 12'-6" with 6'-3" post spacing) between the transition railing and end treatment.
9. Where placement of dike is required with guard railing installations, see Revised Standard Plan RSP A77C4 for dike positioning details.
10. Type 12A or Type 12B Layouts are typically used:
    a. To the right of approaching traffic, at the end of a structure, on two-lane conventional highway where the roadbed width across the structure is less than 40 feet.
    b. To the left of approaching traffic, at the end of a structure, on two-lane conventional highway where the roadbed width across the structure is less than 40 feet.
    c. To the right of approaching traffic at the end of each structure on multilane freeways or expressways with separate adjacent or parallel bridges.
    d. To the right of approaching traffic at the end of the structure on multilane freeways or expressways with decked median on the bridge.
11. See Revised Standard Plan RSP A77F3 for typical layout used left of approaching traffic at the ends of each structure on multilane freeways or expressways with separate adjacent or parallel bridges.
12. For additional details of typical connections to bridge rail, see Connection Detail AA on Revised Standard Plans RSP A77J1 and RSP A77J2 and Connection Detail FF on Standard Plans A77K1 and A77K2.
13. For additional details of a typical connection to walls or abutments, see Standard Plan A77J3.

STATE OF CALIFORNIA
DEPARTMENT OF TRANSPORTATION

# METAL BEAM GUARD RAILING TYPICAL LAYOUTS FOR STRUCTURE APPROACH

NO SCALE

RSP A77F1 DATED JUNE 6, 2008 SUPERSEDES STANDARD PLAN A77F1
DATED MAY 1, 2006 - PAGE 54 OF THE STANDARD PLANS BOOK DATED MAY 2006.

**REVISED STANDARD PLAN RSP A77F1**

**2006 REVISED STANDARD PLAN RSP A77F1**

12-10-07

| DIST | COUNTY | ROUTE | POST MILES TOTAL PROJECT | SHEET NO. | TOTAL SHEETS |
|---|---|---|---|---|---|
| 06 | Tul | 190 | 21.2/26.4 | 102 | 120 |

Randell D. Hiatt
REGISTERED CIVIL ENGINEER

June 6, 2008
PLANS APPROVAL DATE

REGISTERED PROFESSIONAL ENGINEER
Randell D. Hiatt
No. C50200
Exp. 6-30-09
CIVIL
STATE OF CALIFORNIA

The State of California or its officers or agents shall not be responsible for the accuracy or completeness of electronic copies of this plan sheet.

*To accompany plans dated* 12-20-10

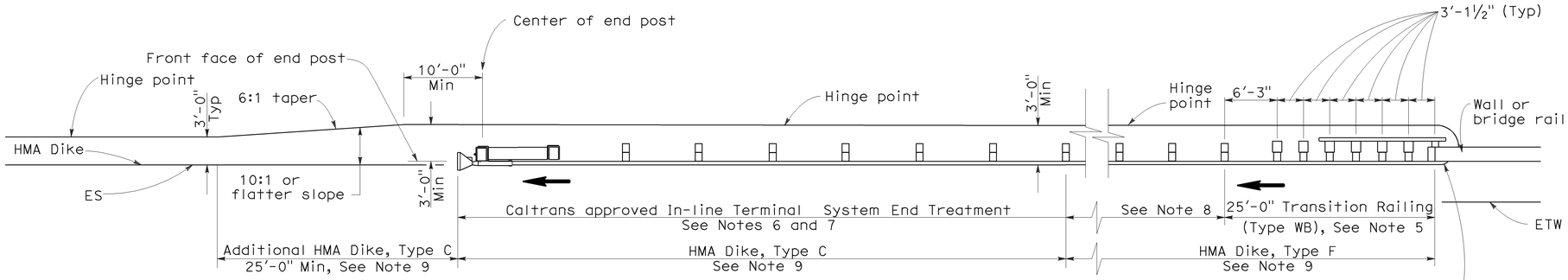


## TYPE 12AA LAYOUT

(GUARD RAILING INSTALLATION AT STRUCTURE DEPARTURE WITH AN IN-LINE END TREATMENT AT TRAILING END OF RAILING)
See Notes 9 and 10

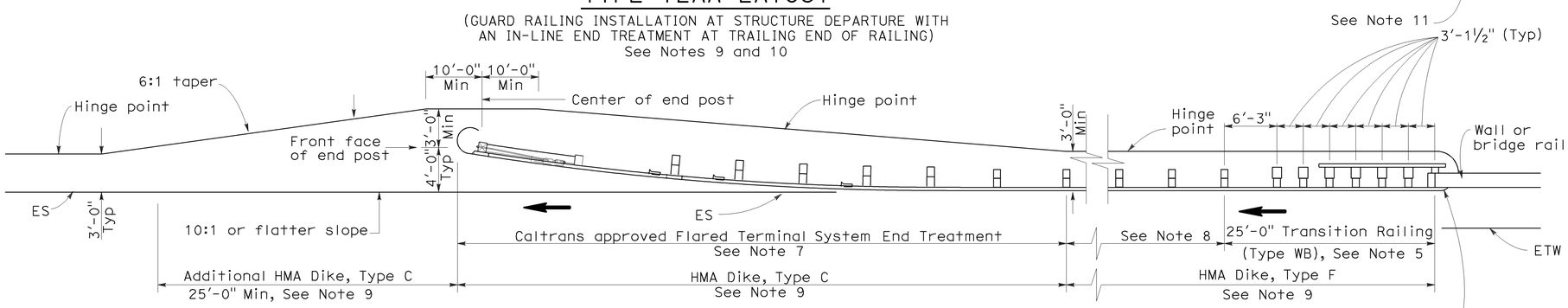


## TYPE 12BB LAYOUT

(GUARD RAILING INSTALLATION AT STRUCTURE DEPARTURE WITH A FLARED END TREATMENT AT TRAILING END OF RAILING)
See Notes 9 and 10

## NOTES:

1. Line post, blocks and hardware to be used are shown on Standard Plans A77A1, A77A2, A77B1, A77C1 and A77C2.
2. Guard rail post spacing to be 6'-3" center to center, except as otherwise noted.
3. Except as noted, line posts are 6" x 8" x 6'-0" wood with 6" x 8" x 1'-2" wood blocks. W6 x 9 steel posts, 6'-0" in length, with 6" x 8" x 1-2" notched wood blocks or notched recycled plastic blocks may be used for 6" x 8" x 6'-0" wood posts with 6" x 8" x 1'-2" wood blocks where applicable and when specified.
4. Direction of adjacent traffic indicated by ➡.
5. For Transition Railing (Type WB) details for Types 12AA and 12BB Layouts, see Standard Plan A77J4.
6. In-line Terminal System Treatments are used where site conditions will not accommodate a flared end treatment.
7. The type of terminal system to be used will be shown on the Project Plans.
8. Dependent on site conditions (embankment height, side slopes, other fixed objects), it may be advisable to construct additional guard railing (a length equal to multiples of 12'-6" with 6'-3" post spacing) between the transition railing and end treatments.
9. Where placement of dike is required with guard railing installations, see Revised Standard Plan RSP A77C4 for dike positioning details.
10. Type 12AA or Type 12BB Layouts are typically used to the right of traffic departing a structure on two-way conventional highways where the roadbed width across the structure is less than 40 feet.
11. For additional details of typical connections to bridge rail, see Connection Detail CC on Revised Standard Plan RSP A77J2 and Connection Detail HH on Standard Plans A77k2.

STATE OF CALIFORNIA
DEPARTMENT OF TRANSPORTATION

# METAL BEAM GUARD RAILING TYPICAL LAYOUTS FOR STRUCTURE DEPARTURE

NO SCALE

RSP A77F4 DATED JUNE 6, 2008 SUPERSEDES STANDARD PLAN A77F4
DATED MAY 1, 2006 - PAGE 57 OF THE STANDARD PLANS BOOK DATED MAY 2006.

**REVISED STANDARD PLAN RSP A77F4**

**2006 REVISED STANDARD PLAN RSP A77F4**

12-10-07

| DIST | COUNTY | ROUTE | POST MILES TOTAL PROJECT | SHEET NO. | TOTAL SHEETS |
|---|---|---|---|---|---|
| 06 | Tul | 190 | 21.2/26.4 | 103 | 120 |

Randell D. Hiatt
REGISTERED CIVIL ENGINEER

June 5, 2009
PLANS APPROVAL DATE

Randell D. Hiatt
No. C50200
Exp. 6-30-09
CIVIL
REGISTERED PROFESSIONAL ENGINEER
STATE OF CALIFORNIA

*The State of California or its officers or agents shall not be responsible for the accuracy or completeness of electronic copies of this plan sheet.*

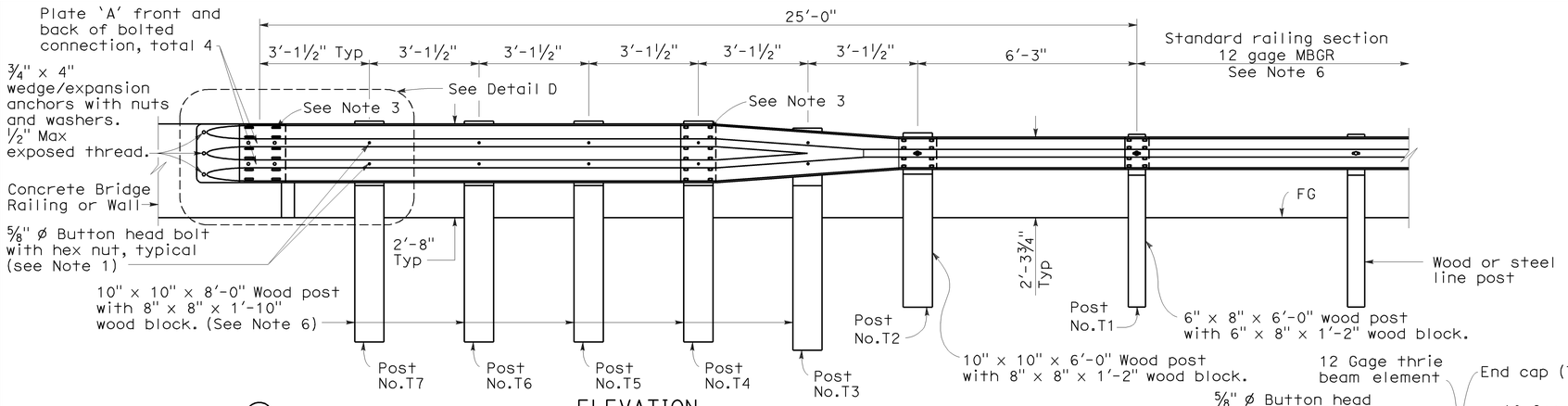


ELEVATION

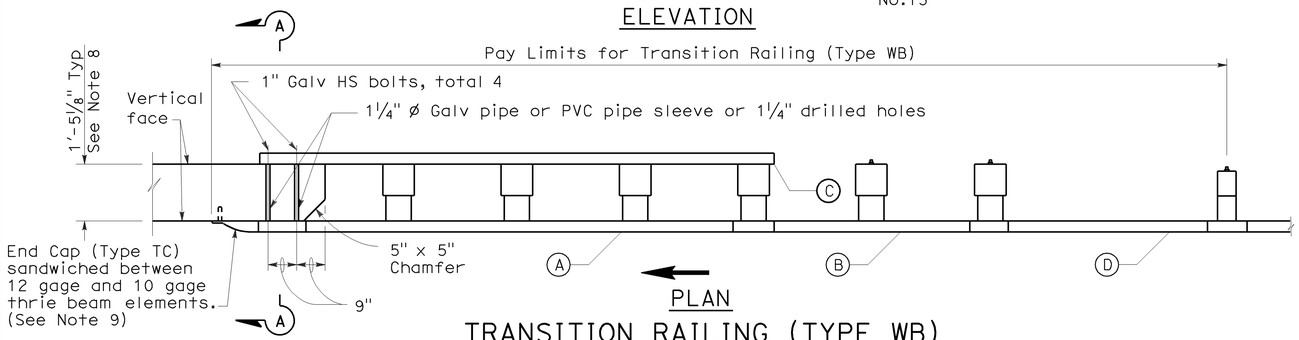


PLAN

## TRANSITION RAILING (TYPE WB)

(No Blockout Attachment)

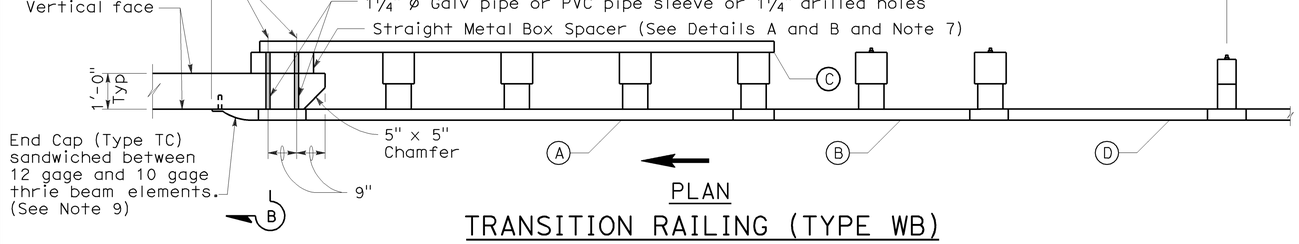


PLAN

## TRANSITION RAILING (TYPE WB)

(Blockout Attachment)

## LEGEND

- (A) Nested thrie beam elements (one 12 gage element nested over one 10 gage element).
- (B) One 10 gage "W" beam to thrie beam element.
- (C) One 12 gage thrie beam element.
- (D) One 10 gage "W" beam rail element (7'-3½" length)

10 gage = 0.135" thick

12 gage = 0.108" thick

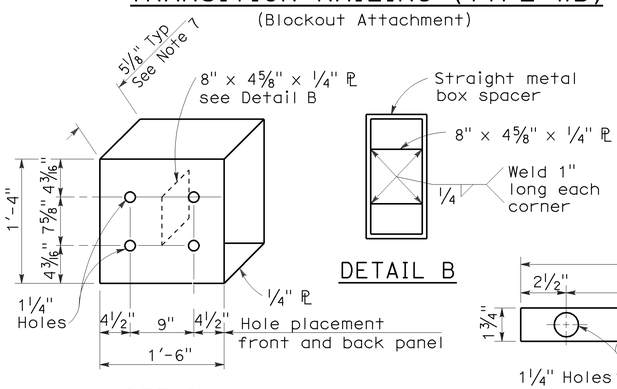


## STRAIGHT METAL BOX SPACER

## PLATE 'A'

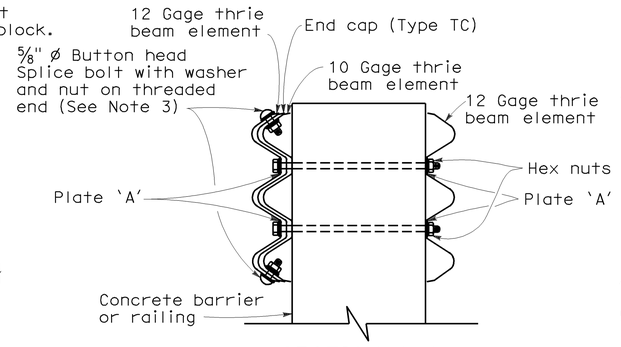


SECTION A-A

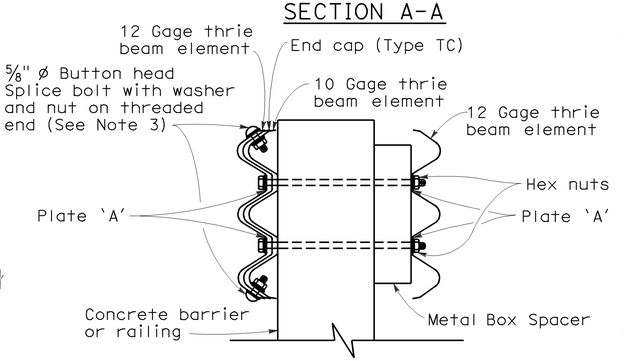


SECTION B-B

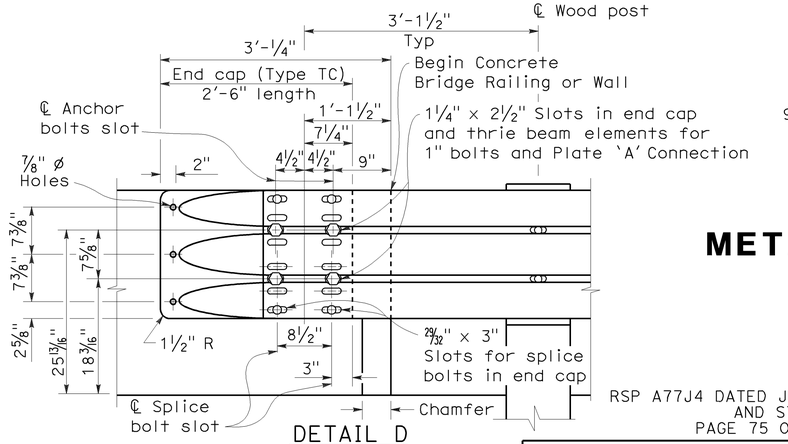


## NOTES:

*To accompany plans dated* 12-20-10

1. Use 5/8 " ø Button head bolts and hex nuts for connections to posts. No washer on rail face for bolted connections to post.
2. The nested rail elements, end cap, and 'W' beam to thrie beam element may be spliced together prior to bolting the elements to the wood post and concrete barrier or railing.
3. Exterior splice bolt holes for rail element splices at Post No.T4 and the connection to the concrete barrier or railing shall be the standard 29/32 " x 1 1/8 " slot size. Interior splice bolt holes at these locations may be increased up to 1 1/4 " ø. Only the top 2 and the bottom 2 splice bolts with washers and nuts are required for rail splices at Post No.T4 and the connection to the concrete barrier or railing.
4. Direction of adjacent traffic indicated by →.
5. The top elevation of Post Nos.T2 through T7 shall not project more than 1" above the top elevation of the rail element.
6. Typically, the railing connected to Transition Railing (Type WB) will be either standard railing section of metal beam guard railing or an approved Caltrans end treatment attached to Post No.T1.
7. The depth of the metal box spacer varies from the 5 1/8 " to 1 1/2 " and is dependent on the width of the concrete railing or wall. The combined dimension for the depth of the metal box spacer plus the width of railing or wall is typically 17 1/8 ". Where the space between the backside of the concrete railing or wall and the rear thrie beam element is less than 1 1/2 ", metal plates similar to Plate 'A' are to be used as spacers.
8. Where the width of the concrete railing or wall is greater than 17 1/8 ", wood blocks are to be used to fill the space created between the backside of Posts No.4 through No.7 and the rear thrie beam element. These wood blocks shall be 8" in width and 1'-2" in length. The dimension between the front thrie beam element and the rear thrie beam element is to match the width of the concrete railing or wall.
9. End cap may be installed over 12 gage and 10 gage thrie beam elements where transition railing is installed on the departure end of bridge railing.

STATE OF CALIFORNIA
DEPARTMENT OF TRANSPORTATION

# METAL BEAM GUARD RAILING TRANSITION RAILING (TYPE WB)

NO SCALE

RSP A77J4 DATED JUNE 5, 2009 SUPERSEDES RSP A77J4 DATED JUNE 6, 2008 AND STANDARD PLAN A77J4 DATED MAY 1, 2006 - PAGE 75 OF THE STANDARD PLANS BOOK DATED MAY 2006.

**REVISED STANDARD PLAN RSP A77J4**

**2006 REVISED STANDARD PLAN RSP A77J4**

5-14-09

| DIST | COUNTY | ROUTE | POST MILES TOTAL PROJECT | SHEET NO. | TOTAL SHEETS |
|---|---|---|---|---|---|
| 06 | Tul | 190 | 21.2/26.4 | 104 | 120 |

Raymond Don Tsztoo
REGISTERED CIVIL ENGINEER

June 6, 2008
PLANS APPROVAL DATE

REGISTERED PROFESSIONAL ENGINEER — Raymond Don Tsztoo — No. C37332 — Exp. 6-30-08 — CIVIL — STATE OF CALIFORNIA

*The State of California or its officers or agents shall not be responsible for the accuracy or completeness of electronic copies of this plan sheet.*

# ANNULAR AND HELICAL PROFILE

| COUPLING TYPE | PIPE CORRUGATION | PIPE SIZE | W OR A | PIPE WALL THICKNESS | | BAND THICKNESS | | BAR AND STRAP (CSP ONLY) | | | | ANGLE DIMENSIONS | | ANGLE BOLTS (No.- Dia) | | ANGLE RIVETS ANGLE TO BAND | | ANGLE SPOT WELDS ANGLE TO BAND |
|---|---|---|---|---|---|---|---|---|---|---|---|---|---|---|---|---|---|---|
| | | | | CSP | CAP | CSP | CAP | STRAP THICKNESS | BOLTS Dia | BAR Dia | BAR YIELD STRENGTH | CSP | CAP | CSP | CAP | CSP | CAP | CSP |
| TWO PIECE INTEGRAL FLANGE | 1½′ × ¼" | 6"-10" | 7" | 0.052"-0.079" | 0.048"-0.060" | 0.052" | 0.060" | | | | | | | 2-⅜" | 2-⅜" | | | |
| | | 12"-18" | 7" | 0.052"-0.079" | | 0.064" | | | | | | | | 2-½" | | | | |
| | 2⅔" × ½" | 12"-24" | 7" | 0.052"-0.079" | 0.060"-0.105" | 0.064" | 0.060" | | | | | | | 2-½" | 2-½" | | | |
| UNIVERSAL | 2⅔" × ½" | THROUGH 36" | 12" | 0.052"-0.138" | 0.060"-0.135" | 0.052" | 0.060" | | | | | 2" × 2" × 3/16" | 2" × 2" × 3/16" | 3-½" | 3-½" | 3-⅜" | 3-⅜" | 3-½" |
| | | 42"-60" | 12" | 0.052"-0.168" | 0.075"-0.164" | 0.052" | 0.060" | | | | | 2" × 2" × 3/16" | 2" × 2" × 3/16" | 3-½" | 3-½" | 3-⅜" | 3-⅜" | 5-½" |
| | | THROUGH 72" | 12" | 0.052"-0.168" | 0.164" | 0.052" | 0.105" | 0.079" | ½" | ⅞" | 32 ksi | 2" × 2" × 3/16" | 2" × 2" × 3/16" | 3-½" | 3-½" | 3-⅜" | 3-⅜" | 5-½" |
| | | 78"-84" | 16¼" | 0.168" | | 0.079" | | DOUBLE 0.079" | ½" | ⅞" | 32 ksi | | | | | | | |
| ANNULAR | 2⅔" × ½" | THROUGH 36" | 7" | 0.064"-0.138" | 0.060"-0.135" | 0.052" | 0.060" | 0.079" | ½" | ⅞" | 32 ksi | 2" × 2" × 3/16" | 2" × 2" × 3/16" | 2-½" | 2-½" | 3-⅜" | 3-⅜" | 3-½" |
| | | 42"-72" | 12" | 0.064"-0.168" | 0.075"-0.164" | 0.052" | 0.105" | 0.079" | ½" | ⅞" | 32 ksi | 2" × 2" × 3/16" | 2" × 2" × 3/16" | 3-½" | 3-½" | 3-⅜" | 3-⅜" | 5-½" |
| | | 78"-84" | 12" | 0.168" | | 0.079" | | 0.109" | ½" | ⅞" | 45 ksi | 2" × 2" × 3/16" | | 3-½" | | 3-⅜" | | 5-½" |
| | 3" × 1" | 48"-90" | 14" | 0.064"-0.109" | | 0.052" | | 0.079" | ½" | ⅞" | 32 ksi | 2" × 2" × 3/16" | | 3-½" | | 3-⅜" | | 5-½" |
| | | 96"-120" | 14" | 0.079"-0.109" | | 0.052" | | 0.109" | ½" | ⅞" | 45 ksi | 2" × 2" × 3/16" | | 3-½" | | 4-⅜" | | |
| | | 42"-108" | 14" | | 0.060"-0.135" | | 0.060" | | | | | | 2" × 2" × 3/16" | | 3-½" | | 3-⅜" | |
| HELICAL | 2⅔" × ½" | THROUGH 36" | 12" | 0.052"-0.138" | 0.060"-0.135" | 0.052" | 0.060" | 0.079" | ½" | ⅞" | 32 ksi | 2" × 2" × 3/16" | 2" × 2" × 3/16" | 3-½" | 3-½" | 3-⅜" | 3-⅜" | 3-½" |
| | | 42"-72" | 12" | 0.052"-0.168" | 0.075"-0.164" | 0.052" | 0.060" | 0.079" | ½" | ⅞" | 32 ksi | 2" × 2" × 3/16" | 2" × 2" × 3/16" | 3-½" | 3-½" | 3-⅜" | 3-⅜" | 5-½" |
| | | 78"-84" | 12" | 0.168" | | 0.079" | | 0.109" | ½" | ⅞" | 45 ksi | 2" × 2" × 3/16" | | 3-½" | | 3-⅜" | | 5-½" |
| | 3" × 1" | 48"-90" | 14" | 0.064"-0.109" | | 0.052" | | 0.079" | ½" | ⅞" | 32 ksi | 2" × 2" × 3/16" | | 3-½" | | 3-⅜" | | 5-½" |
| | | 96"-120" | 14" | 0.079"-0.109" | | 0.052" | | 0.109" | ½" | ⅞" | 45 ksi | 2" × 2" × 3/16" | | 3-½" | | 4-⅜" | | |
| | | 42"-108" | 14" | | 0.060"-0.135" | | 0.060" | | | | | | 2" × 2" × 3/16" | | 3-½" | | 3-⅜" | |
| HUGGER | 2⅔" × ½" REROLLED END | 12"-54" | 4" | 0.052"-0.109" | | 0.052" | | | | | | 2½" × 1½" × 3/16" | 2½" × 1½" × 3/16" | 1-½" | | | | 3-½" |
| | | 60"-66" | 4" | 0.109" | | 0.064" | | | | | | 2½" × 1½" × 3/16" | 2½" × 1½" × 3/16" | 1-½" | | | | 3-½" |
| | | 36"-48" | 4" | 0.138" | | 0.064" | | | | | | 2½" × 1½" × 3/16" | 2½" × 1½" × 3/16" | 1-½" | | | | 3-½" |
| | | THROUGH 72" | 10½" | 0.052"-0.168" | | 0.052" | | 0.079" | ½" | ⅞" | 32 ksi | | | | | | | |
| | | 78"-84" | 10½" | 0.168" | | 0.079" | | 0.109" | ½" | ⅞" | 45 ksi | | | | | | | |
| | 3" × 1" REROLLED END | 48"-90" | 10½" | 0.064"-0.109" | | 0.052" | | 0.079" | ½" | ⅞" | 32 ksi | | | | | | | |
| | | 96"-120" | 10½" | 0.079"-0.109" | | 0.052" | | 0.109" | ½" | ⅞" | 45 ksi | | | | | | | |
| | 5" × 1" REROLLED END | 48"-66" | 7½" | 0.064"-0.109" | | 0.064" | | 0.079" | ½" | ⅞" | 32 ksi | 2½" × 1½" × 3/16" | 2½" × 1½" × 3/16" | 1-½" | | | | 3-½" |
| | | 72"-90" | 7½" | 0.064"-0.079" | | 0.064" | | 0.079" | ½" | ⅞" | 32 ksi | 2½" × 1½" × 3/16" | 2½" × 1½" × 3/16" | 1-½" | | | | 3-½" |
| | | 48"-90" | 7½" | 0.064"-0.138" | | 0.064" | | 0.079" | ½" | ⅞" | 32 ksi | | | | | | | |
| | | 48"-120" | 12" SEE | 0.064"-0.109" | | 0.064" | | 0.079" | ½" | ⅞" | 32 ksi | | | | | | | |
| | | 48"-84" | 12" NOTE | 0.138" | | 0.064" | | 0.079" | ½" | ⅞" | 32 ksi | | | | | | | |
| | | 90"-120" | 12" 11 | 0.138" | | 0.064" | | DOUBLE 0.079" | ½" | ⅞" | 32 ksi | | | | | | | |

# SPIRAL RIB PROFILE

| COUPLING TYPE | PIPE CORRUGATION | PIPE SIZE | W | PIPE WALL THICKNESS | | BAND THICKNESS | | BAR AND STRAP (SSRP ONLY) | | | | ANGLE DIMENSIONS | | ANGLE BOLTS (No.- Dia) | | ANGLE RIVETS ANGLE TO BAND | | ANGLE SPOT WELDS ANGLE TO BAND |
|---|---|---|---|---|---|---|---|---|---|---|---|---|---|---|---|---|---|---|
| | | | | SSRP | ASRP | SSRP | ASRP | STRAP THICKNESS | BOLTS Dia | BAR Dia | BAR YIELD STRENGTH | SSRP | ASRP | SSRP | ASRP | SSRP | ASRP | SSRP |
| ANNULAR | 2⅔" × ½" * REROLLED END | 24"-36" | 12" | 0.064"-0.109" | 0.060"-0.105" | 0.052" | 0.060" | 0.079" | ½" | ⅞" | 32 ksi | 2" × 2" × 3/16" | 2" × 2" × 3/16" | 3-½" | 3-½" | 3-⅜" | 3-⅜" | 5-½" |
| | | 42"-60" | 12" | 0.064"-0.109" | 0.075"-0.105" | 0.052" | 0.105" | 0.079" | ½" | ⅞" | 32 ksi | 2" × 2" × 3/16" | 2" × 2" × 3/16" | 3-½" | 3-½" | 3-⅜" | 3-⅜" | 5-½" |
| | | 66"-72" | 12" | 0.064"-0.109" | | 0.052" | | 0.079" | ½" | ⅞" | 32 ksi | 2" × 2" × 3/16" | 2" × 2" × 3/16" | 3-½" | 3-½" | 3-⅜" | 3-⅜" | 5-½" |
| | | 78"-114" | 12" | 0.079"-0.109" | | 0.079" | | 0.109" | ½" | ⅞" | 45 ksi | 2" × 2" × 3/16" | 2" × 2" × 3/16" | 3-½" | 3-½" | 3-⅜" | 3-⅜" | 5-½" |
| HUGGER | 2⅔" × ½" * REROLLED END | 24"-72" | 10½" | 0.064"-0.109" | | 0.052" | | 0.079" | ½" | ⅞" | 32 ksi | | | | | | | |
| | | 78"-84" | 10½" | 0.109" | | 0.079" | | 0.109" | ½" | ⅞" | 45 ksi | | | | | | | |

* See Note 14.

## NOTES:

*To accompany plans dated* 12-20-10

1. All ferrous metal coupling band connection hardware shall be galvanized or electro-plated in accordance with the Standard Specifications.
2. For helically corrugated coupling bands, the connection angles may be oriented parallel to the pipe axis, provided connecting holes are slotted lengthwise sufficiently to allow adjustment for the helix angle.
3. Tension strap may be connected to band with either spot welds or fillet welds that develop minimum required strength of strap.
4. Use 1¼" gage line dimension on attached angle leg for rivets and spot welds.
5. Band thickness shall not be less than:
   a. 3 standard thicknesses lighter than the thickness of the pipe for Corrugated Steel Pipe.
   b. 2 standard thicknesses lighter than the thickness of the pipe and in no case lighter than 0.060" for Corrugated Aluminum Pipe.
6. Dimensions, thicknesses and strengths shown are minimum.
7. For pipe arches use same width band as for round pipe of equal periphery.
8. Fillet welds of equivalent strenght may be substituted for spot welds or rivets.
9. Spot welds shall develop minimum required strength of strap.
10. Pipe with rerolled ends having at least two 2⅔" × ½" annular corrugations at each end with or without an upturned flange may be connected with any of the annular coupling bands shown for pipe of the same diameter and wall thickness and having 2⅔" × ½" corrugations.
11. In the case of H-12 huggerbands, two piece bands are required for diameters through 96" and three piece bands are required for diameters 102" through 120".
12. Two piece bands are required for pipes greater than 42" diameter.
13. The 2¼" × 2" × 0.109" thick galvanized die-formed angle connector may be used in lieu of the 2" × 2" × 3/16" angle connector for standard joints only on pipes through 72" diameter.
14. All profiles of Spiral Rib Pipe (¾" × ¾" ribs at 7½" pitch and ¾" × 1" ribs at 11½" pitch in both steel and aluminum and ¾" × 1" ribs at 8½" pitch in steel only) shall be manufactured with rerolled ends. Corrugation profile of the rerolled ends shall be 2⅔" × ½" annual corrugations with a minimum of two full corrugations at each end.

STATE OF CALIFORNIA
DEPARTMENT OF TRANSPORTATION

# CORRUGATED METAL PIPE COUPLING DETAILS No. 5 STANDARD JOINT

NO SCALE

RSP D97E DATED JUNE 6, 2008 SUPERSEDES STANDARD PLAN D97E
DATED MAY 1, 2006 - PAGE 187 OF THE STANDARD PLANS BOOK DATED MAY 2006.

**REVISED STANDARD PLAN RSP D97E**

**2006 REVISED STANDARD PLAN RSP D97E**

4-2-08

| DIST | COUNTY | ROUTE | POST MILES TOTAL PROJECT | SHEET NO. | TOTAL SHEETS |
|---|---|---|---|---|---|
| 06 | Tul | 190 | 21.2/26.4 | 105 | 120 |

Randell D. Hiatt
REGISTERED CIVIL ENGINEER

June 6, 2008
PLANS APPROVAL DATE

Randell D. Hiatt
No. C50200
Exp. 6-30-09
CIVIL
REGISTERED PROFESSIONAL ENGINEER
STATE OF CALIFORNIA

*The State of California or its officers or agents shall not be responsible for the accuracy or completeness of electronic copies of this plan sheet.*

*To accompany plans dated* 12-20-10

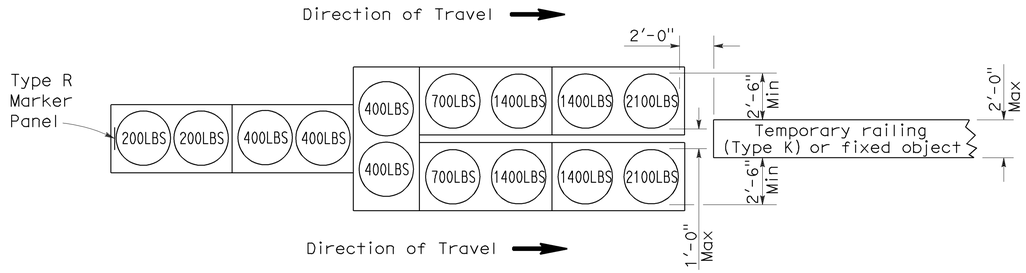


## ARRAY 'TU14'

Approach speed 45 mph or more

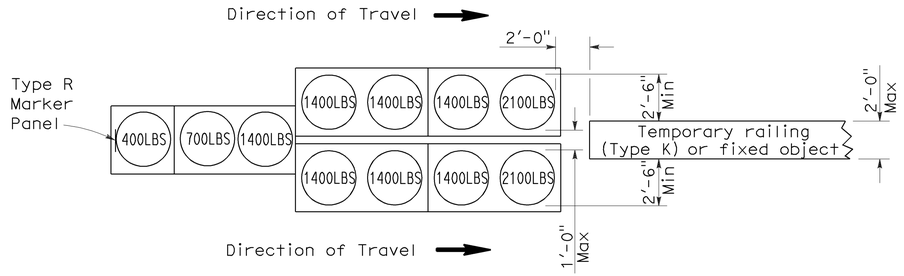


## ARRAY 'TU11'

Approach speed less than 45 mph

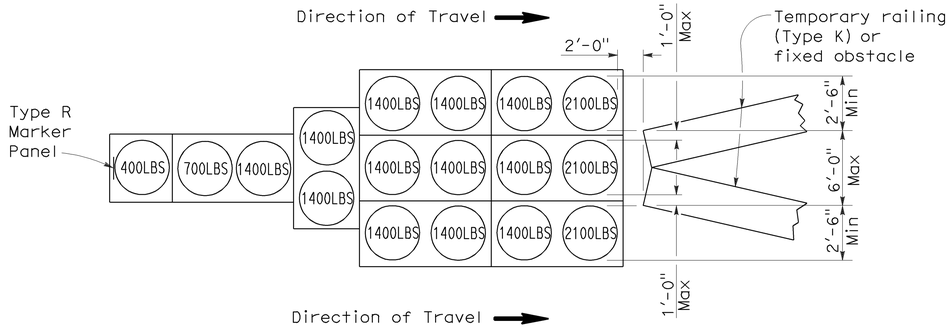


## ARRAY 'TU17'

Approach speed less than 45 mph

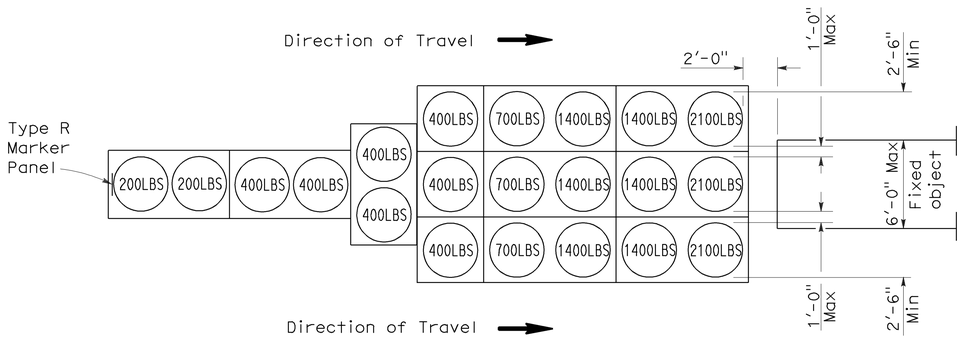


## ARRAY 'TU21'

Approach speed 45 mph or more

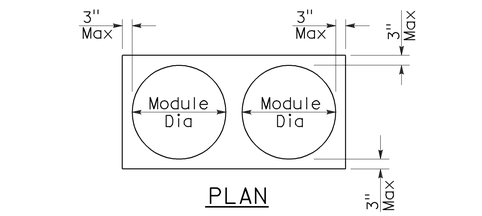


PLAN

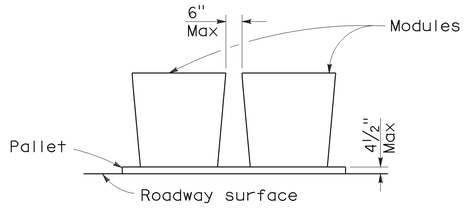


ELEVATION

## CRASH CUSHION PALLET DETAIL

See Note 7

NOTES:

1. (XXX) Indicates sand filled module location and weight of sand in pounds for each module. Module spacing is based on the greater diameter of the module.
2. All sand weights are nominal.
3. Temporary crash cushion arrays shall not encroach on the traveled way.
4. Place the top of Type R marker panel 1" below the module lid.
5. Refer to Standard Plan A73B for marker details.
6. Approach speeds indicated conform to NCHRP 350 Report criteria.
7. Use of pallets is optional.

STATE OF CALIFORNIA
DEPARTMENT OF TRANSPORTATION

# TEMPORARY CRASH CUSHION, SAND FILLED (UNIDIRECTIONAL)

NO SCALE

RSP T1A DATED JUNE 6, 2008 SUPERSEDES STANDARD PLAN T1A
DATED MAY 1, 2006 - PAGE 211 OF THE STANDARD PLANS BOOK DATED MAY 2006.

**REVISED STANDARD PLAN RSP T1A**

**2006 REVISED STANDARD PLAN RSP T1A**

5-15-08

| DIST | COUNTY | ROUTE | POST MILES TOTAL PROJECT | SHEET NO. | TOTAL SHEETS |
|---|---|---|---|---|---|
| 06 | Tul | 190 | 21.2/26.4 | 106 | 120 |

Randell D. Hiatt
REGISTERED CIVIL ENGINEER

June 6, 2008
PLANS APPROVAL DATE

REGISTERED PROFESSIONAL ENGINEER
Randell D. Hiatt
No. C50200
Exp. 6-30-09
CIVIL
STATE OF CALIFORNIA

*The State of California or its officers or agents shall not be responsible for the accuracy or completeness of electronic copies of this plan sheet.*

*To accompany plans dated* 12-20-10

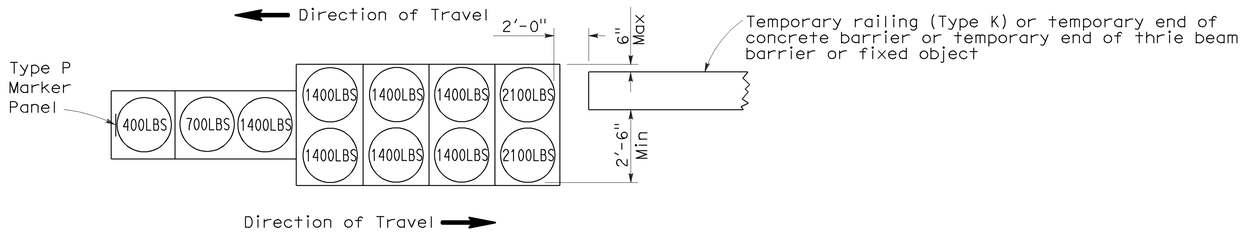


## ARRAY 'TB11'

Approach speed less than 45 mph

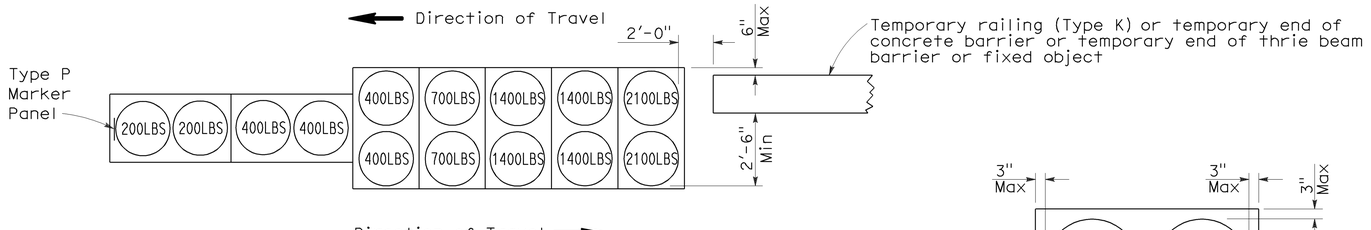


## ARRAY 'TB14'

Approach speed 45 mph or more

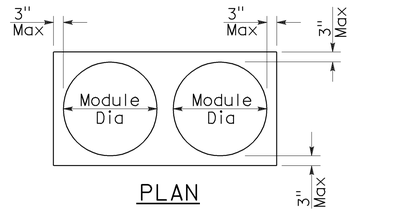


PLAN

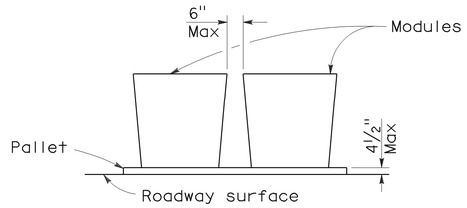


ELEVATION

## CRASH CUSHION PALLET DETAIL

See Note 7

NOTES:

1. (XXX) Indicates sand filled module location and weight of sand in pounds for each module. Module spacing is based on the greater diameter of the module.
2. All sand weights are nominal.
3. Temporary crash cushion arrays shall not encroach on the traveled way.
4. Place the Type P marker panel so that the bottom of the panel rests upon the pallet.
5. Refer to Standard Plan A73B for marker details.
6. Approach speeds indicated conform to NCHRP 350 Report criteria.
7. Use of pallets is optional.

STATE OF CALIFORNIA
DEPARTMENT OF TRANSPORTATION

# TEMPORARY CRASH CUSHION, SAND FILLED (BIDIRECTIONAL)

NO SCALE

RSP T1B DATED JUNE 6, 2008 SUPERSEDES STANDARD PLAN T1B
DATED MAY 1, 2006 - PAGE 212 OF THE STANDARD PLANS BOOK DATED MAY 2006.

**REVISED STANDARD PLAN RSP T1B**

**2006 REVISED STANDARD PLAN RSP T1B**

5-15-08

| DIST | COUNTY | ROUTE | POST MILES TOTAL PROJECT | SHEET NO. | TOTAL SHEETS |
|---|---|---|---|---|---|
| 06 | Tul | 190 | 21.2/26.4 | 107 | 120 |

Randell D. Hiatt
REGISTERED CIVIL ENGINEER

June 6, 2008
PLANS APPROVAL DATE

REGISTERED PROFESSIONAL ENGINEER
Randell D. Hiatt
No. C50200
Exp. 6-30-09
CIVIL
STATE OF CALIFORNIA

*The State of California or its officers or agents shall not be responsible for the accuracy or completeness of electronic copies of this plan sheet.*

*To accompany plans dated* 12-20-10

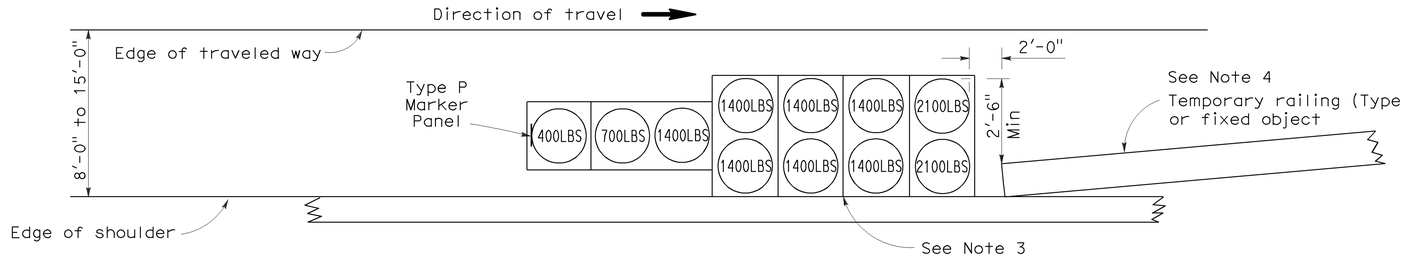


## ARRAY 'TS11'

Approach speed less than 45 mph
See Note 9

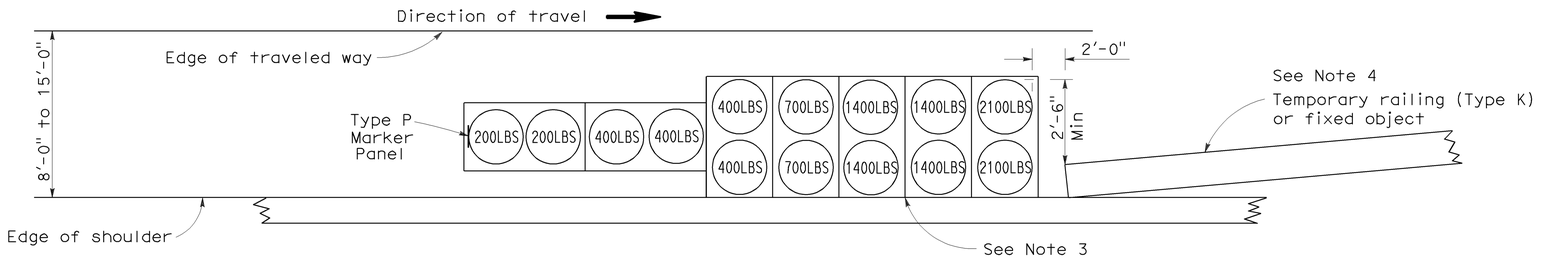


## ARRAY 'TS14'

Approach speed 45 mph or more
See Note 9

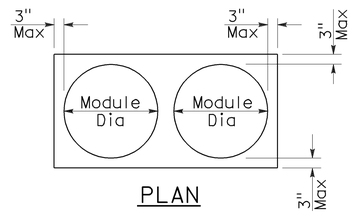


PLAN

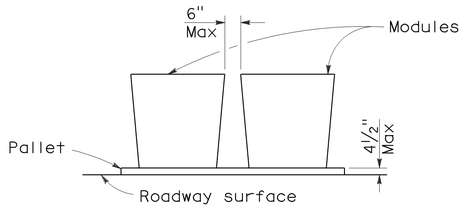


ELEVATION

## CRASH CUSHION PALLET DETAIL

See Note 11

## NOTES:

1. (XXX) Indicates sand filled module location and weight of sand in pounds for each module. Module spacing is based on the greater diameter of the module.
2. All sand weights are nominal.
3. The temporary crash cushion arrays shown on this plan shall be used only in locations where there will be traffic on one side of the temporary crash cushion array.
4. If the fixed object or approach end of the temporary railing is less than 15'-0" from the edge of traveled way, a temporary crash cushion is required in a construction or work zone.
5. Temporary crash cushion arrays shall not encroach on the traveled way.
6. Arrays for median shoulders shall conform to details shown on this plan for outside shoulders.
7. Place the Type P marker panel so that the bottom of the panel rests upon the pallet and faces traffic.
8. Refer to Standard Plan A73B for marker details.
9. For shoulder widths less than 8'-0", appropriate approved crash cushion protection, other than sand filled modules, shall be provided at fixed objects and at approach ends of temporary railing. The specific type of crash cushion shall be as shown on the project plans or as specified in the Special Provisions, or if not shown on the project plans or specified in the Special Provisions, shall be as approved by the Engineer.
10. Approach speeds indicated conform to NCHRP 350 Report criteria.
11. Use of pallets is optional.

STATE OF CALIFORNIA
DEPARTMENT OF TRANSPORTATION

# TEMPORARY CRASH CUSHION, SAND FILLED (SHOULDER INSTALLATIONS)

NO SCALE

RSP T2 DATED JUNE 6, 2008 SUPERSEDES STANDARD PLAN T2
DATED MAY 1, 2006 - PAGE 213 OF THE STANDARD PLANS BOOK DATED MAY 2006.

**REVISED STANDARD PLAN RSP T2**

**2006 REVISED STANDARD PLAN RSP T2**

5-15-08

| DIST | COUNTY | ROUTE | POST MILES TOTAL PROJECT | SHEET NO. | TOTAL SHEETS |
|---|---|---|---|---|---|
| 06 | Tul | 190 | 21.2/26.4 | 108 | 120 |

Greg W. Edwards
REGISTERED CIVIL ENGINEER

November 17, 2006
PLANS APPROVAL DATE

REGISTERED PROFESSIONAL ENGINEER — Greg W. Edwards — No. C36386 — Exp. 6-30-08 CIVIL — STATE OF CALIFORNIA

The State of California or its officers or agents shall not be responsible for the accuracy or completeness of electronic copies of this plan sheet.

*To accompany plans dated* 12-20-10

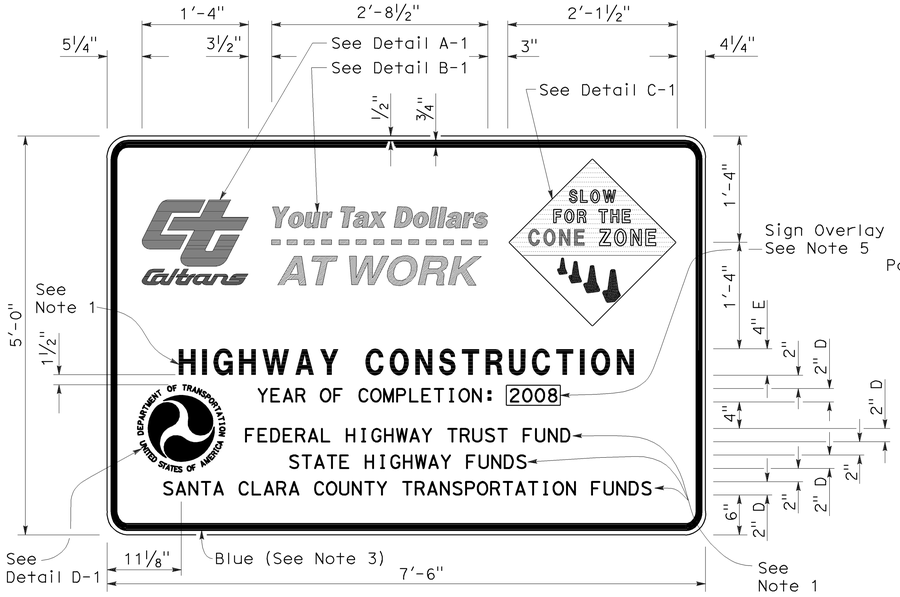


TYPE 1

DETAIL A-1

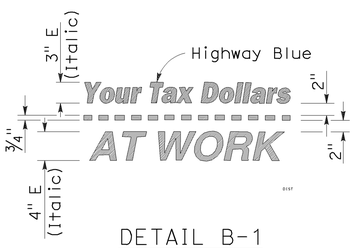


DETAIL B-1
(See Note 3)

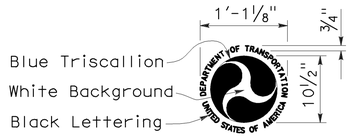


DETAIL D-1
(See Note 6)

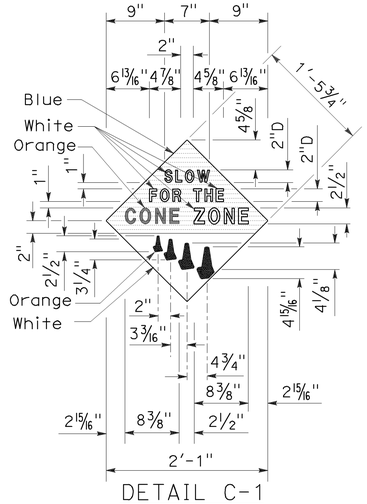


DETAIL C-1
(See Note 4)

## NOTES:

1. The sign messages shown for type of project and fund types are examples only. See the Special Provisions for the applicable type of project and fund type messages to be used.
2. Except as otherwise shown, the legend of sign shall be black on a white background (non-reflective).
3. The border of the signs and details "B-1" and "B-2" shall be blue (non-reflective).
4. The diamond in details "C-1" and "C-2" shall be blue for the background of message, " SLOW FOR THE CONE ZONE", and white background for the orange cones. The color and type of font for the "SLOW FOR THE CONE ZONE" message shall be: "SLOW" white D; "FOR THE" white D; "CONE" orange Arial font; "ZONE" white Arial font.
5. Year of completion of project construction shown on the overlay is an example only. See the Special Provisions.
6. Use when the Project involves Federal Highway Trust Fund.

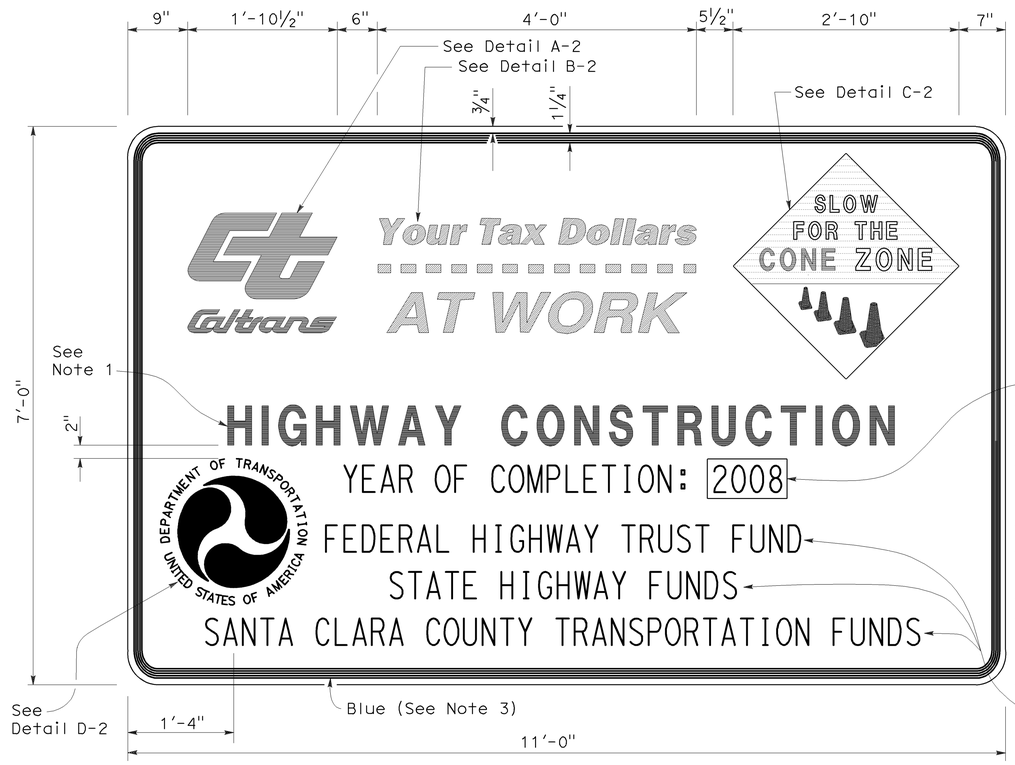


TYPE 2

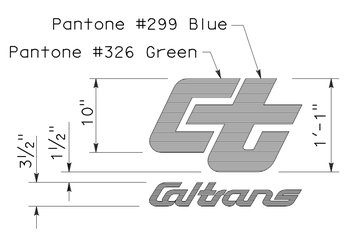


DETAIL A-2

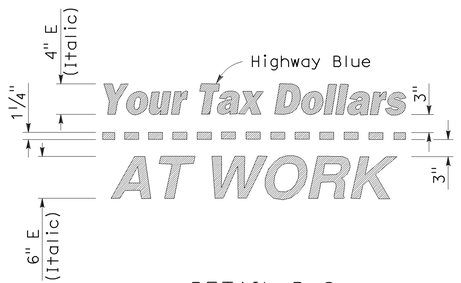


DETAIL B-2
(See Note 3)

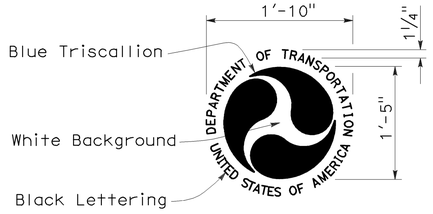


DETAIL D-2
(See Note 6)

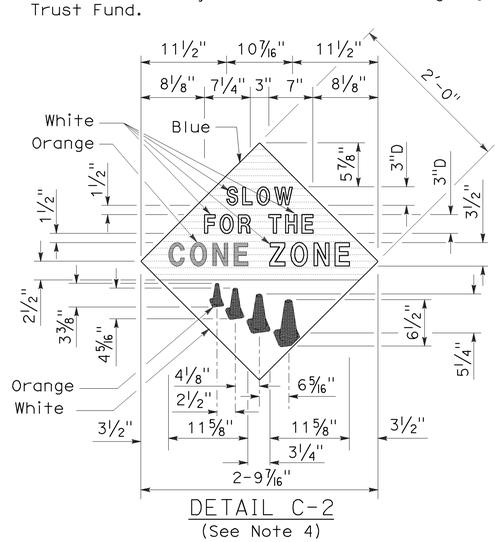


DETAIL C-2
(See Note 4)

STATE OF CALIFORNIA
DEPARTMENT OF TRANSPORTATION

# CONSTRUCTION PROJECT FUNDING IDENTIFICATION SIGNS

NO SCALE

RSP T7 DATED NOVEMBER 17, 2006 SUPERSEDES STANDARD PLAN T7
DATED MAY 1, 2006 - PAGE 217 OF THE STANDARD PLANS BOOK DATED MAY 2006.

**REVISED STANDARD PLAN RSP T7**

**2006 REVISED STANDARD PLAN RSP T7**

9-7-06

| DIST | COUNTY | ROUTE | POST MILES TOTAL PROJECT | SHEET NO. | TOTAL SHEETS |
|---|---|---|---|---|---|
| 06 | Tul | 190 | 21.2/26.4 | 109 | 120 |

Robert B Schott
LICENSED LANDSCAPE ARCHITECT

April 3, 2009
PLANS APPROVAL DATE

LICENSED LANDSCAPE ARCHITECT — Robert B. Schott 3695 — 11-30-10 Renewal Date — 2-25-09 Date — STATE OF CALIFORNIA

*The State of California or its officers or agents shall not be responsible for the accuracy or completeness of electronic copies of this plan sheet.*

*To accompany plans dated* 12-20-10

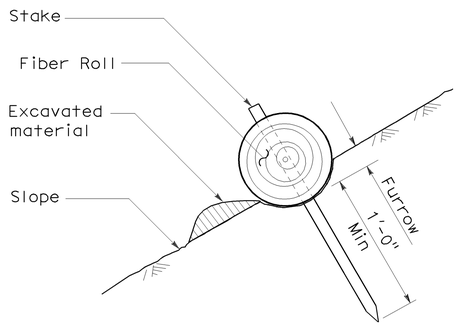


SECTION

## TEMPORARY FIBER ROLL (TYPE 1)

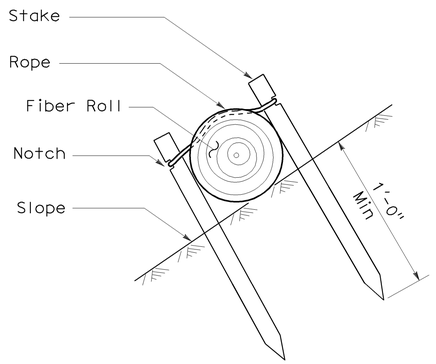


SECTION

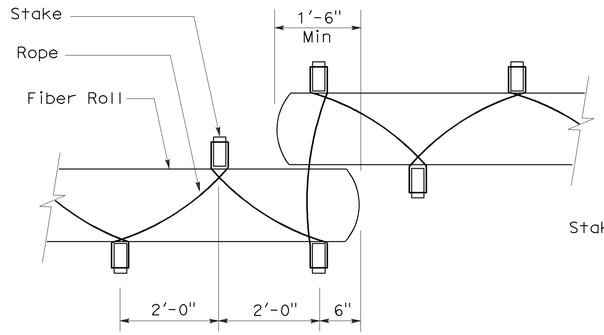


PLAN

## TEMPORARY FIBER ROLL (TYPE 2)

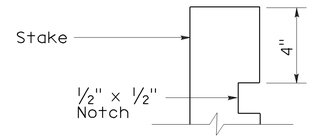


ELEVATION

## STAKE NOTCH DETAIL

NOTES:

1. Temporary fiber roll spacing varies depending upon slope inclination.
2. Installations shown in the perspectives are for slope inclination of 10:1 and steeper.

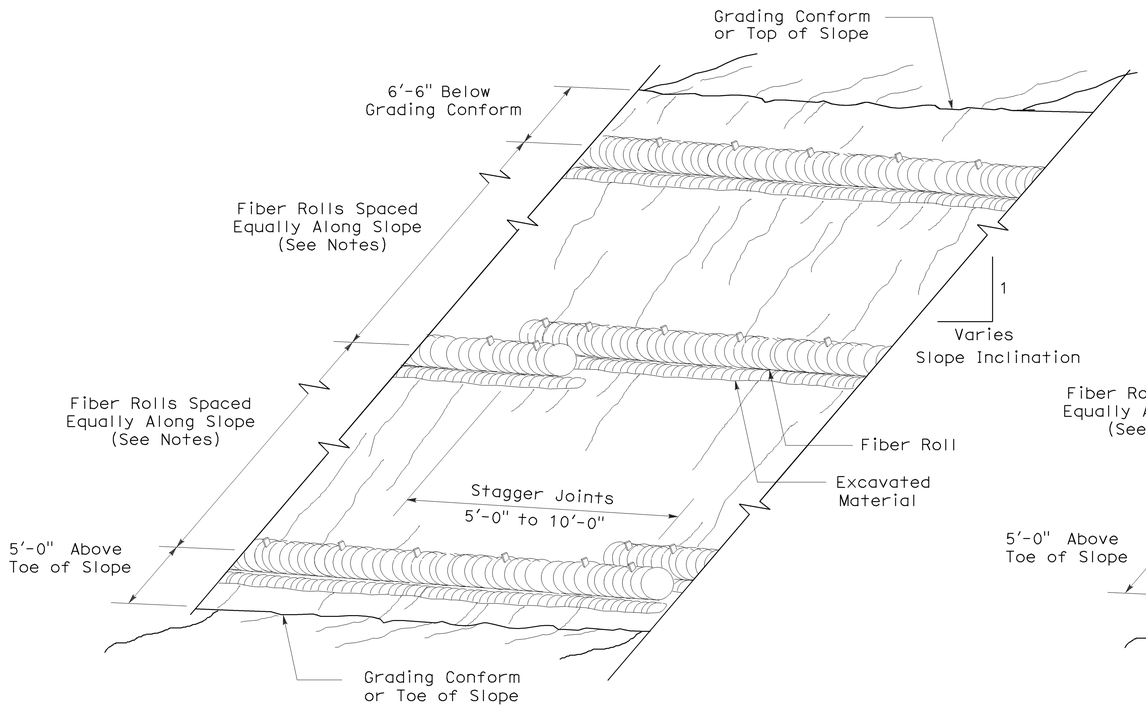


PERSPECTIVE

## TEMPORARY FIBER ROLL (TYPE 1)

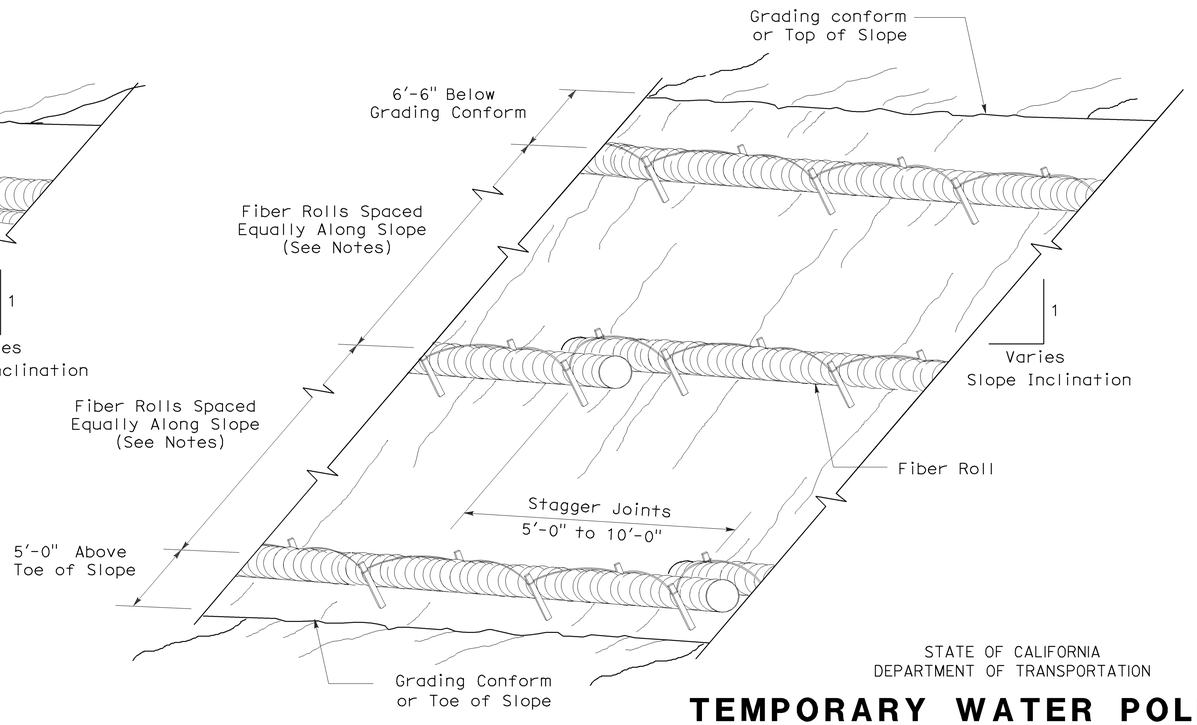


PERSPECTIVE

## TEMPORARY FIBER ROLL (TYPE 2)

STATE OF CALIFORNIA
DEPARTMENT OF TRANSPORTATION

# TEMPORARY WATER POLLUTION CONTROL DETAILS (TEMPORARY FIBER ROLL)

NO SCALE

RSP T56 DATED APRIL 3, 2009 SUPERSEDES STANDARD PLAN T56
DATED MAY 1, 2006 - PAGE 232 OF THE STANDARD PLANS BOOK DATED MAY 2006.

**REVISED STANDARD PLAN RSP T56**

| DIST | COUNTY | ROUTE | POST MILES TOTAL PROJECT | SHEET NO. | TOTAL SHEETS |
|---|---|---|---|---|---|
| 06 | Tul | 190 | 21.2/26.4 | 110 | 120 |

Robert B Schott
LICENSED LANDSCAPE ARCHITECT

April 3, 2009
PLANS APPROVAL DATE

LICENSED LANDSCAPE ARCHITECT — Robert B. Schott 3035 — Signature — 11-30-10 Renewal Date — 2-25-09 Date — STATE OF CALIFORNIA

*The State of California or its officers or agents shall not be responsible for the accuracy or completeness of electronic copies of this plan sheet.*

*To accompany plans dated* 12-20-10

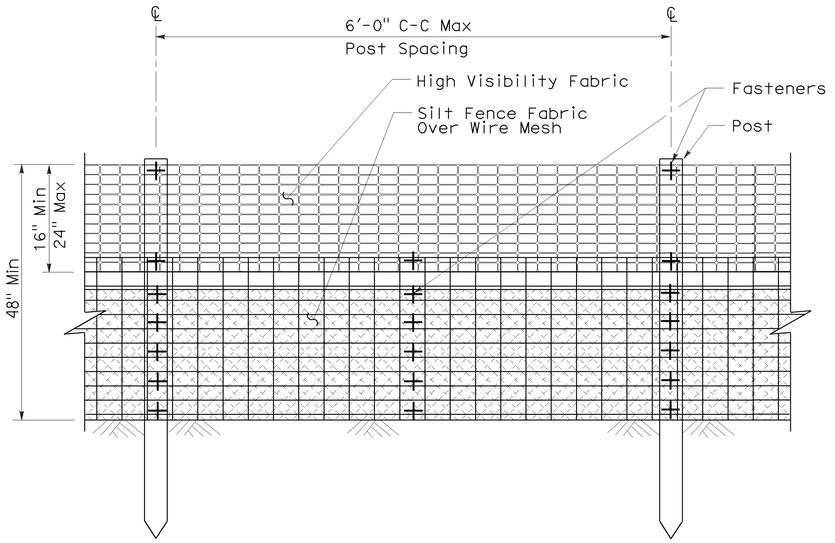


ELEVATION

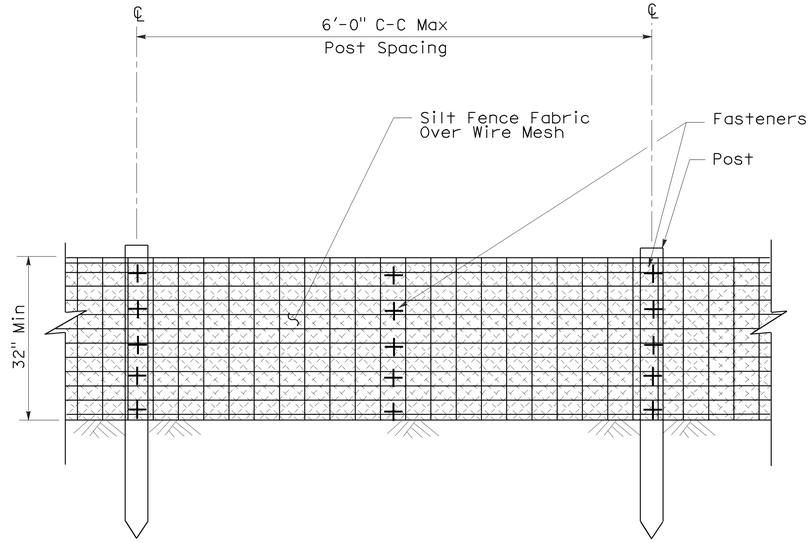


ELEVATION

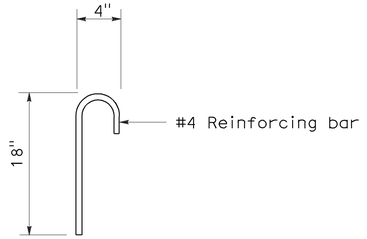


ANCHOR

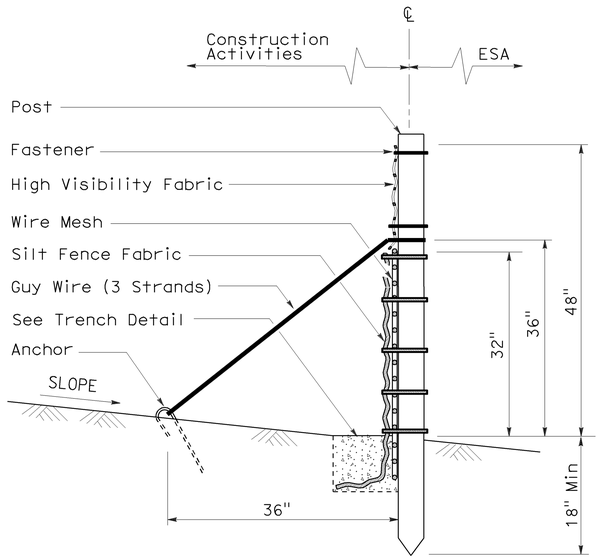


SECTION

TEMPORARY REINFORCED SILT FENCE (TYPE 1)

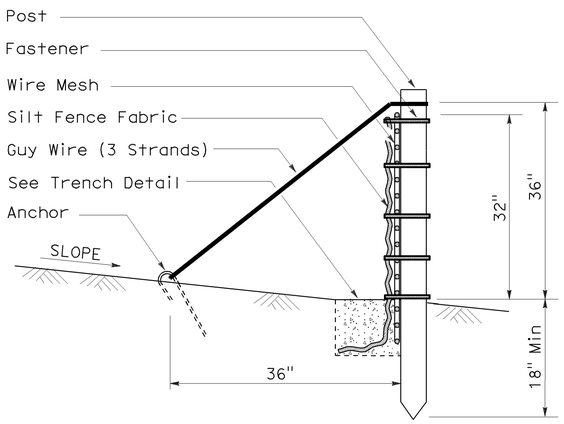


SECTION

TEMPORARY REINFORCED SILT FENCE (TYPE 2)

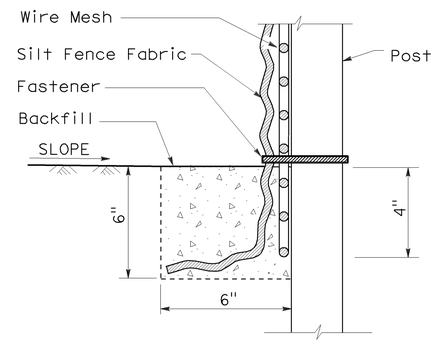


SECTION

TRENCH DETAIL

STATE OF CALIFORNIA
DEPARTMENT OF TRANSPORTATION

# TEMPORARY WATER POLLUTION CONTROL DETAILS (TEMPORARY REINFORCED SILT FENCE)

NO SCALE

NSP T60 DATED APRIL 3, 2009 SUPPLEMENTS
THE STANDARD PLANS BOOK DATED MAY 2006.

**NEW STANDARD PLAN NSP T60**

**2006 NEW STANDARD PLAN NSP T60**

1-7-09

| DIST | COUNTY | ROUTE | POST MILES TOTAL PROJECT | SHEET NO. | TOTAL SHEETS |
|---|---|---|---|---|---|
| 06 | Tul | 190 | 21.2/26.4 | 111 | 120 |

Robert B Schott
LICENSED LANDSCAPE ARCHITECT

August 15, 2008
PLANS Approval DATE

LICENSED LANDSCAPE ARCHITECT
Robert B. Schott 3695
Robert B Schott
Signature
11-04-08
Renewal Date
08-11-08
Date
STATE OF CALIFORNIA

*The State of California or its officers or agents shall not be responsible for the accuracy or completeness of electronic copies of this plan sheet.*

*To accompany plans dated* 12-20-10

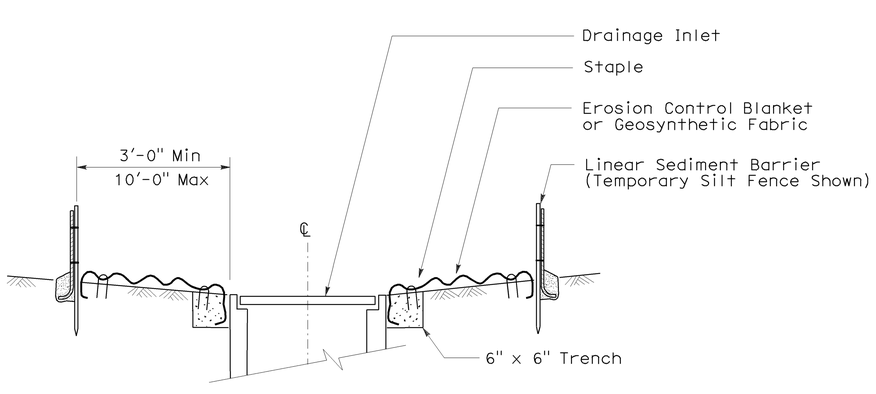


SECTION A-A

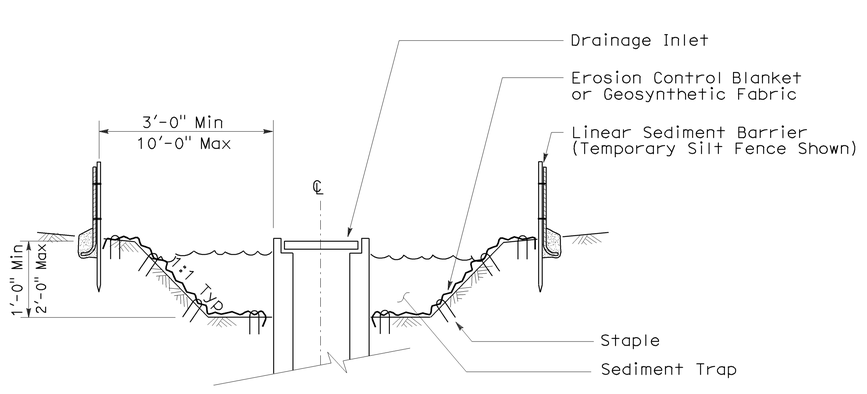


SECTION B-B

## NOTES:

1. See Standard Plan T51 for Temporary Silt Fence.
2. Dimensions may vary to fit field conditions.

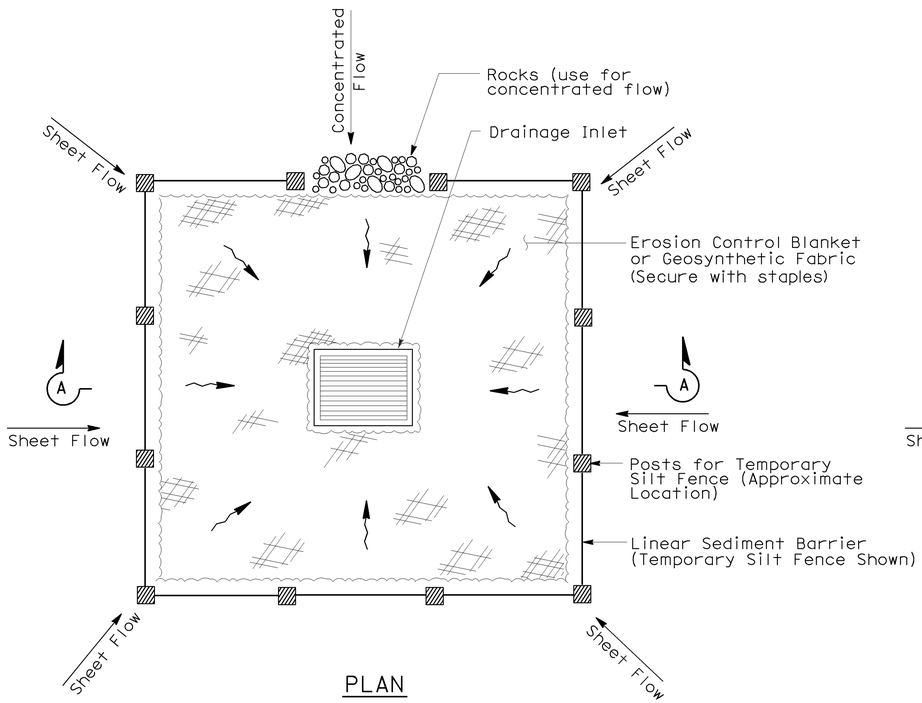


PLAN

TEMPORARY DRAINAGE INLET PROTECTION (TYPE 1)

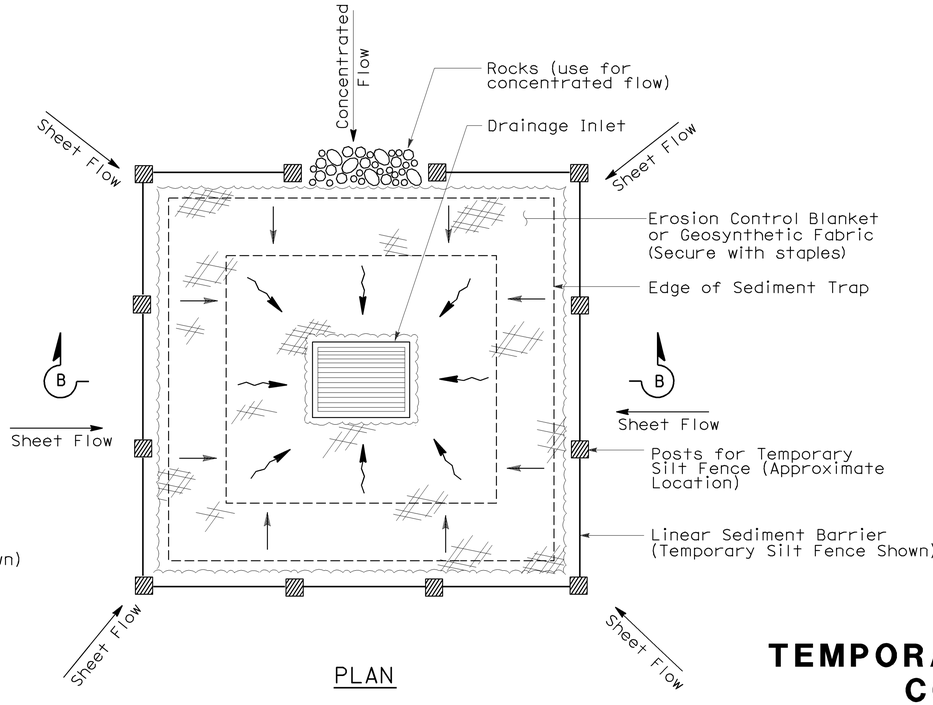


PLAN

TEMPORARY DRAINAGE INLET PROTECTION (TYPE 2) (EXCAVATED SEDIMENT TRAP)

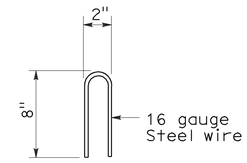


STAPLE DETAIL

STATE OF CALIFORNIA
DEPARTMENT OF TRANSPORTATION

# TEMPORARY WATER POLLUTION CONTROL DETAILS (TEMPORARY DRAINAGE INLET PROTECTION)

NO SCALE

Nsp t61 dated august 15, 2008 supplements the standard plans book dated may 2006.

**NEW STANDARD PLAN NSP T61**

**2006 NEW STANDARD PLAN NSP T61**

7-11-08

| DIST | COUNTY | ROUTE | POST MILES TOTAL PROJECT | SHEET NO. | TOTAL SHEETS |
|---|---|---|---|---|---|
| 06 | Tul | 190 | 21.2/26.4 | 112 | 120 |

Robert B Schott
LICENSED LANDSCAPE ARCHITECT

August 15, 2008
PLANS APPROVAL DATE

LICENSED LANDSCAPE ARCHITECT Robert B. Schott 3695 Signature 11-04-08 Renewal Date 08-11-08 Date STATE OF CALIFORNIA

*The State of California or its officers or agents shall not be responsible for the accuracy or completeness of electronic copies of this plan sheet.*

*To accompany plans dated* 12-20-10

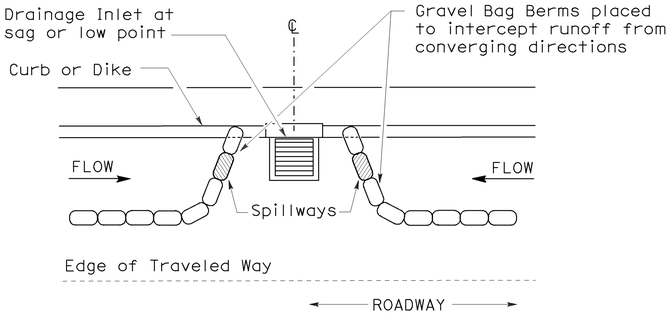


PLAN

## CONFIGURATION FOR SAG POINT INLET (GRAVEL BAG BERM)

## GRAVEL BAG BERM (TYPE 3A) SPACING TABLE

| SLOPE OF ROADWAY (PERCENT) | 1 to 3.9 | 4 to 5.9 | 6 to 7.9 | 8 to 10 | 10+ |
|---|---|---|---|---|---|
| INTERVAL BETWEEN BERM | 100′ | 75′ | 50′ | 25′ | 12′ |

For slope of less than 1%, install barriers only if erosion/sediment is prevalent

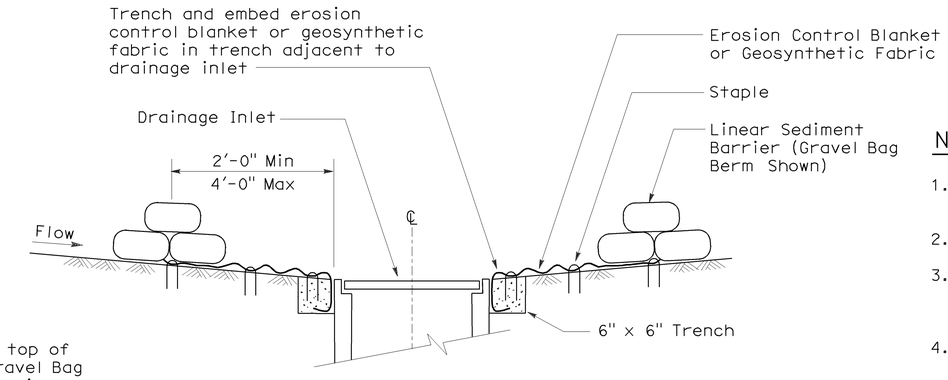


SECTION A-A

## NOTES:

1. Place safety cones adjacent to drainage inlet protection.
2. Dimensions may vary to fit field conditions.
3. Install a minimum of 3 gravel bag berms upstream of each drainage inlet to be protected.
4. Position erosion control blanket or geosynthetic fabric at edge of concrete apron and secure in trench.
5. Erosion control blanket or geosynthetic fabric is not required if the area adjacent to the drainage inlet is vegetated or paved.

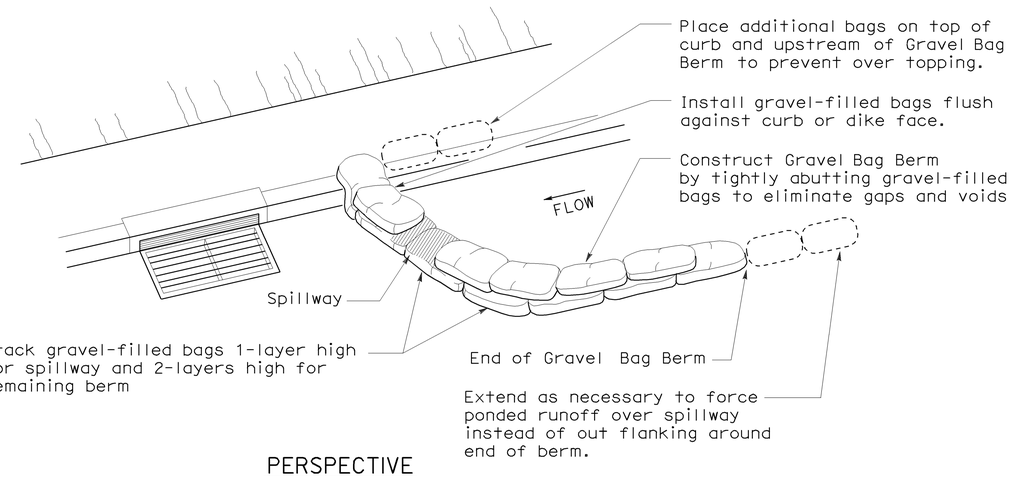


PERSPECTIVE

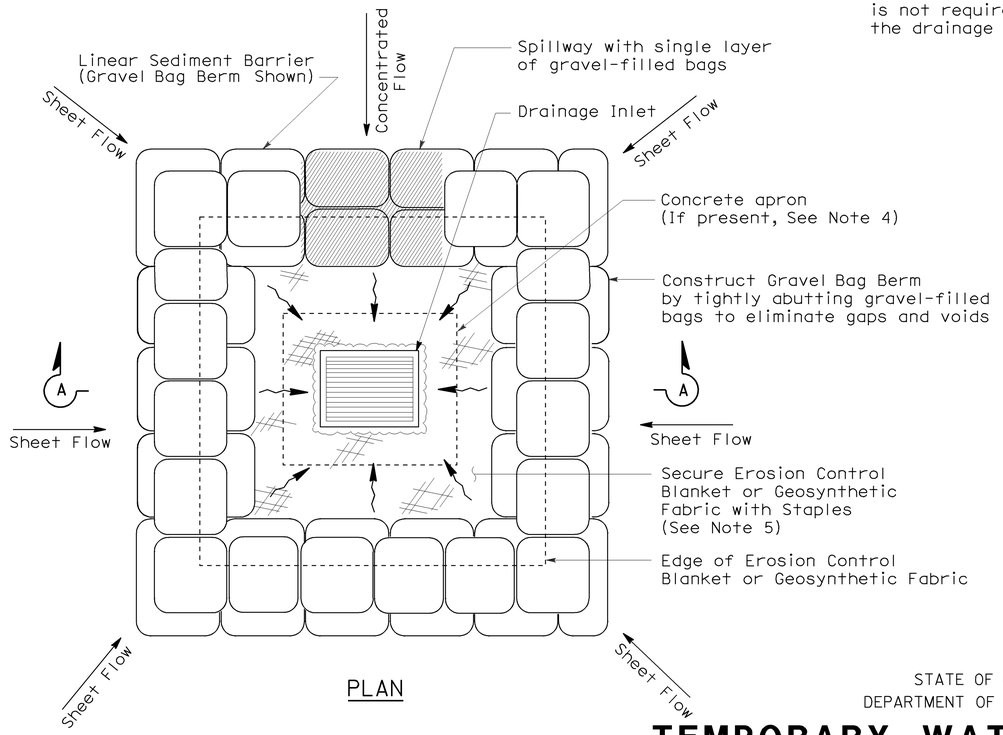


PLAN

## TEMPORARY DRAINAGE INLET PROTECTION (TYPE 3B)

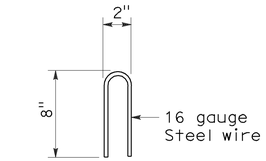


## STAPLE DETAIL

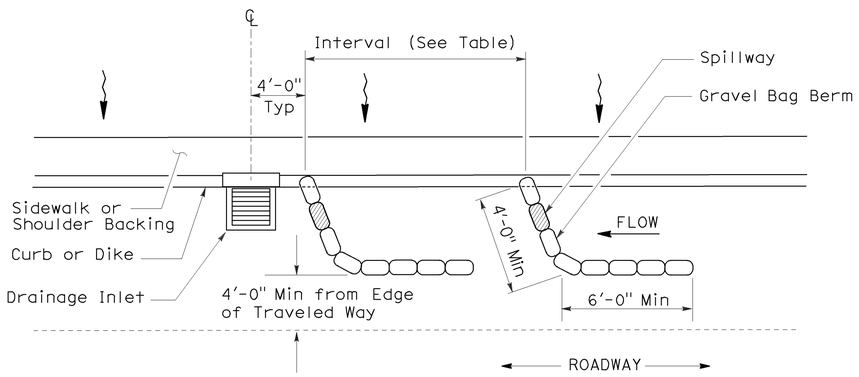


PLAN

## TEMPORARY DRAINAGE INLET PROTECTION (TYPE 3A) (GRAVEL BAG BERM)

STATE OF CALIFORNIA
DEPARTMENT OF TRANSPORTATION

# TEMPORARY WATER POLLUTION CONTROL DETAILS (TEMPORARY DRAINAGE INLET PROTECTION)

NO SCALE

NSP T62 DATED AUGUST 15, 2008 SUPPLEMENTS
THE STANDARD PLANS BOOK DATED MAY 2006.

**NEW STANDARD PLAN NSP T62**

**2006 NEW STANDARD PLAN NSP T62**

7-11-08

## FLEXIBLE SEDIMENT BARRIER SPACING TABLE

| SLOPE OF ROADWAY (PERCENT) | 0 to 0.9 | 1 to 1.9 | 2 to 2.9 | 3 to 4 | 5+ |
|---|---|---|---|---|---|
| INTERVAL BETWEEN BARRIERS | 50′ | 35′ | 30′ | 25′ | 20′ |
| ANGLE FROM FACE OF CURB | 70° | 70° | 70° | 45° | 45° |
| SUGGESTED BARRIER LENGTH | 6′ | 6′ | 6′ | 6′ | 6′ |

| DIST | COUNTY | ROUTE | POST MILES TOTAL PROJECT | SHEET NO. | TOTAL SHEETS |
|---|---|---|---|---|---|
| 06 | Tul | 190 | 21.2/26.4 | 113 | 120 |

Robert B Schott
LICENSED LANDSCAPE ARCHITECT

August 15, 2008
PLANS APPROVAL DATE

LICENSED LANDSCAPE ARCHITECT Robert B. Schott 3825 Signature 11-04-08 Renewal Date 08-11-08 Date STATE OF CALIFORNIA

*The State of California or its officers or agents shall not be responsible for the accuracy or completeness of electronic copies of this plan sheet.*

*To accompany plans dated* 12-20-10

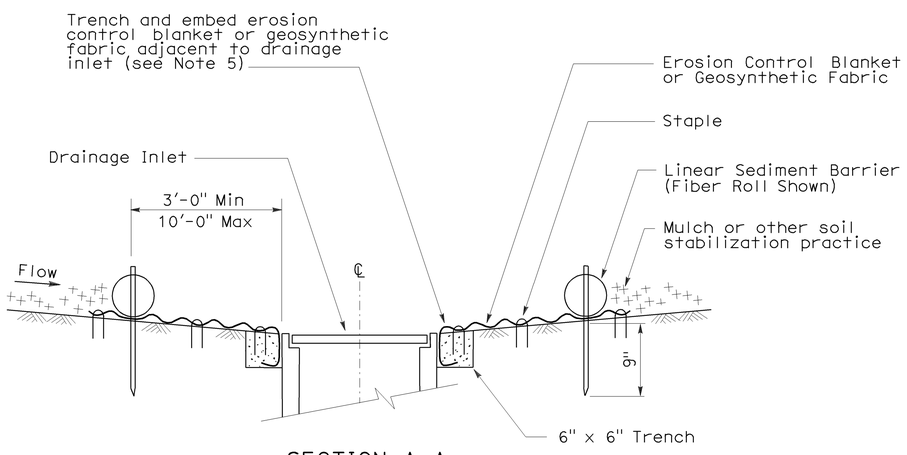


SECTION A-A

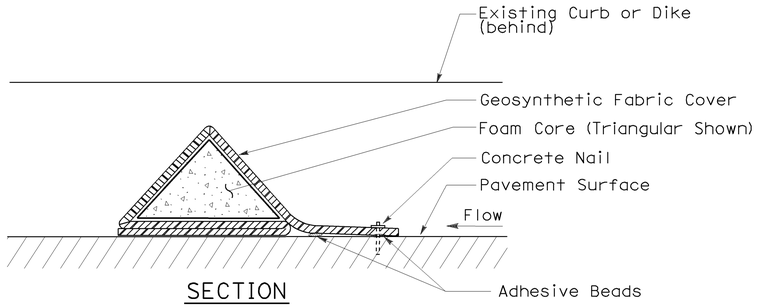


SECTION

## FLEXIBLE SEDIMENT BARRIER DETAIL (FOAM BARRIER SHOWN)

## NOTES:

1. See Standard Plan T51 for Temporary Silt Fence.
2. Dimensions may vary to fit field conditions.
3. Install a minimum of 3 flexible sediment barriers upstream of each drainage inlet to be protected.
4. Position erosion control blanket or geosynthetic fabric at edge of concrete apron and secure in trench.
5. Erosion control blanket or geosynthetic fabric is not required if the area adjacent to the drainage inlet is vegetated.

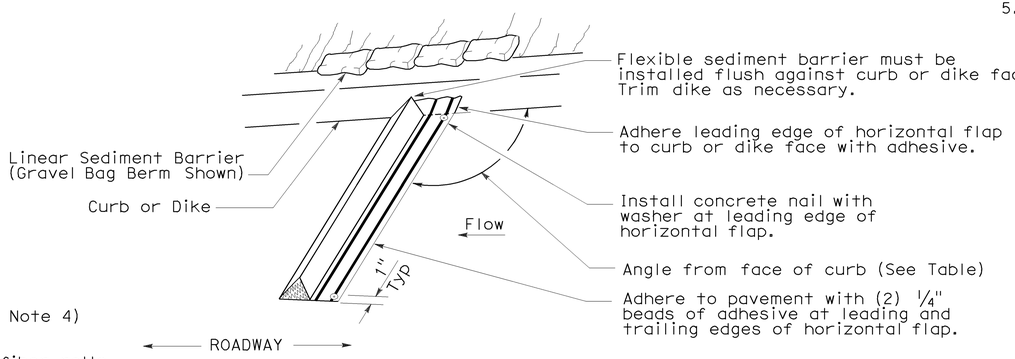


PERSPECTIVE

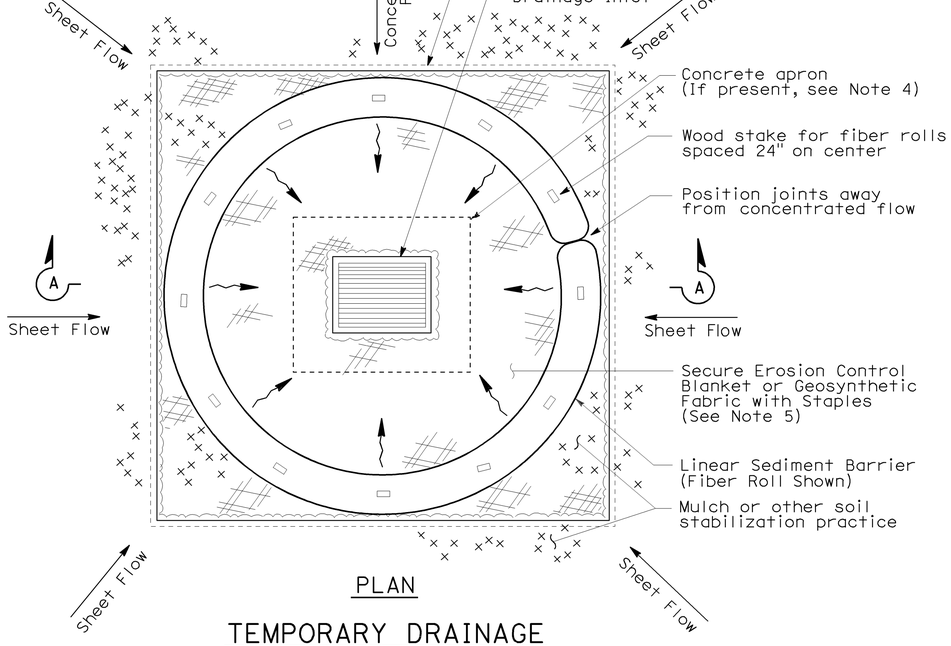


PLAN

TEMPORARY DRAINAGE INLET PROTECTION (TYPE 4A)

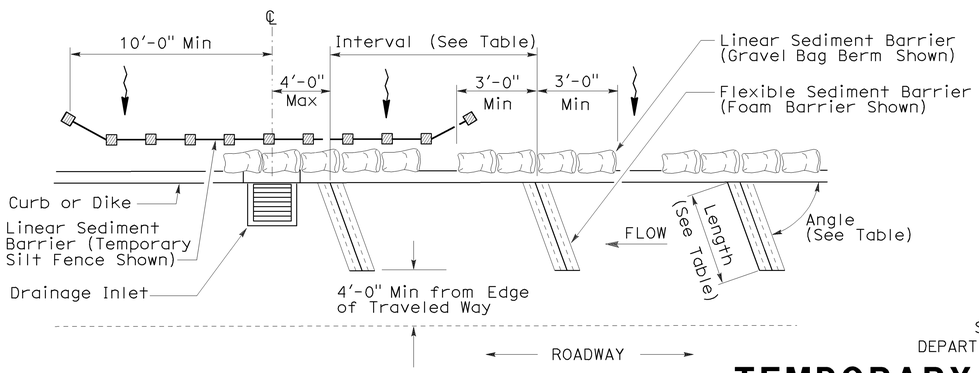


PLAN

TEMPORARY DRAINAGE INLET PROTECTION (TYPE 4B) FLEXIBLE SEDIMENT BARRIER

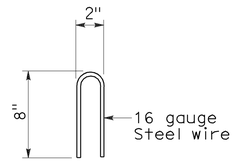


STAPLE DETAIL

STATE OF CALIFORNIA
DEPARTMENT OF TRANSPORTATION

# TEMPORARY WATER POLLUTION CONTROL DETAILS (TEMPORARY DRAINAGE INLET PROTECTION)

NO SCALE

NSP T63 DATED AUGUST 15, 2008 SUPPLEMENTS THE STANDARD PLANS BOOK DATED MAY 2006.

**NEW STANDARD PLAN NSP T63**

**2006 NEW STANDARD PLAN NSP T63**

7-11-08

| DIST | COUNTY | ROUTE | POST MILES TOTAL PROJECT | SHEET NO. | TOTAL SHEETS |
|---|---|---|---|---|---|
| 06 | Tul | 190 | 21.2/26.4 | 114 | 120 |

Robert B Schott
LICENSED LANDSCAPE ARCHITECT

August 15, 2008
PLANS APPROVAL DATE

LICENSED LANDSCAPE ARCHITECT — Robert B. Schott 3835 — Signature — 11-04-08 Renewal Date — 08-11-08 Date — STATE OF CALIFORNIA

*The State of California or its officers or agents shall not be responsible for the accuracy or completeness of electronic copies of this plan sheet.*

*To accompany plans dated* 12-20-10

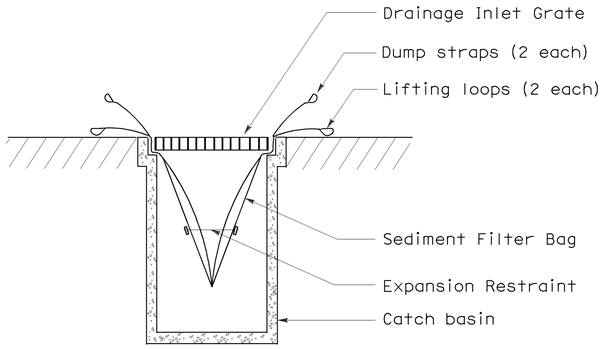


SECTION B-B

## SEDIMENT FILTER BAG DETAIL

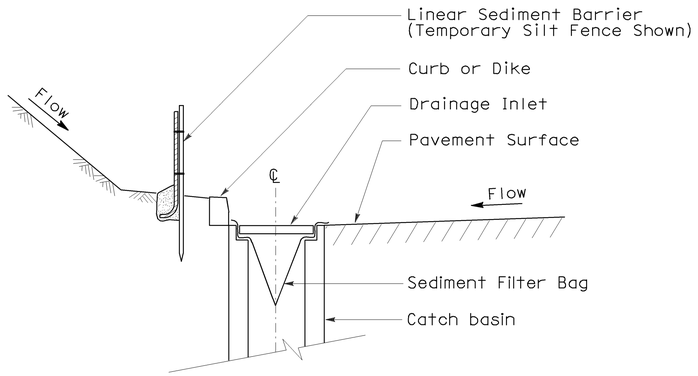


SECTION A-A

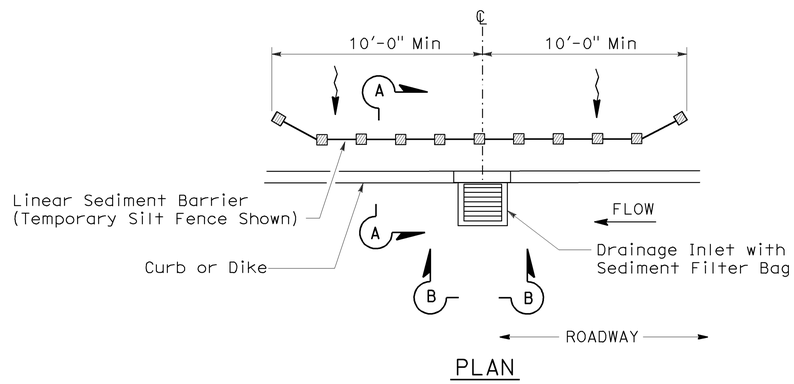


PLAN

## TEMPORARY DRAINAGE INLET PROTECTION (TYPE 5) (SEDIMENT FILTER BAG)

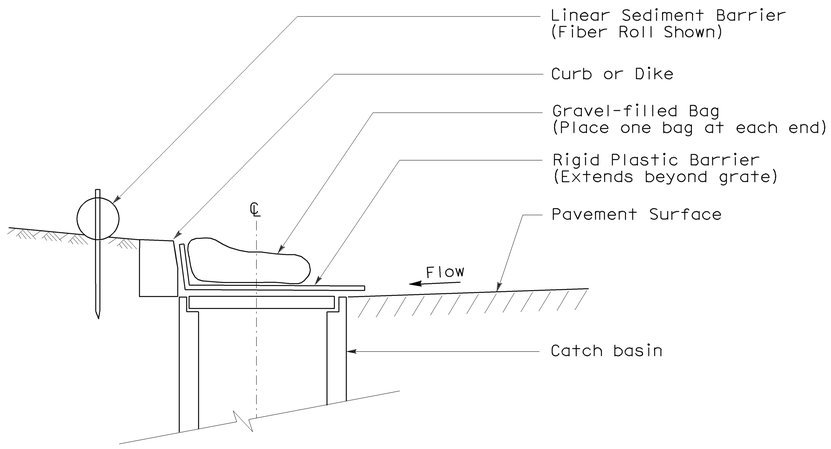


SECTION

## TEMPORARY DRAINAGE INLET PROTECTION (TYPE 6A) (CATCH BASIN WITH GRATE)

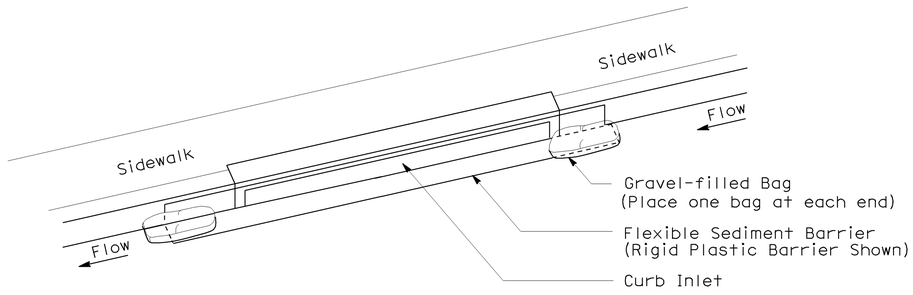


PERSPECTIVE

## TEMPORARY DRAINAGE INLET PROTECTION (TYPE 6B) (CURB INLET WITHOUT GRATE)

## NOTES:

1. See Standard Plan T51 for Temporary Silt Fence.
2. Dimensions may vary to fit field conditions.

STATE OF CALIFORNIA
DEPARTMENT OF TRANSPORTATION

# TEMPORARY WATER POLLUTION CONTROL DETAILS (TEMPORARY DRAINAGE INLET PROTECTION)

NO SCALE

NSP T64 DATED AUGUST 15, 2008 SUPPLEMENTS THE STANDARD PLANS BOOK DATED MAY 2006.

**NEW STANDARD PLAN NSP T64**

**2006 NEW STANDARD PLAN NSP T64**

7-11-08

| DIST | COUNTY | ROUTE | POST MILES TOTAL PROJECT | SHEET NO. | TOTAL SHEETS |
|---|---|---|---|---|---|
| 06 | Tul | 190 | 21.2/26.4 | 115 | 120 |

Robert B Schott
LICENSED LANDSCAPE ARCHITECT

April 3, 2009
PLANS APPROVAL DATE

LICENSED LANDSCAPE ARCHITECT — Robert B. Schott 3835 — Signature — 11-30-10 Renewal Date — 2-25-09 Date — STATE OF CALIFORNIA

*The State of California or its officers or agents shall not be responsible for the accuracy or completeness of electronic copies of this plan sheet.*

*To accompany plans dated* 12-20-10

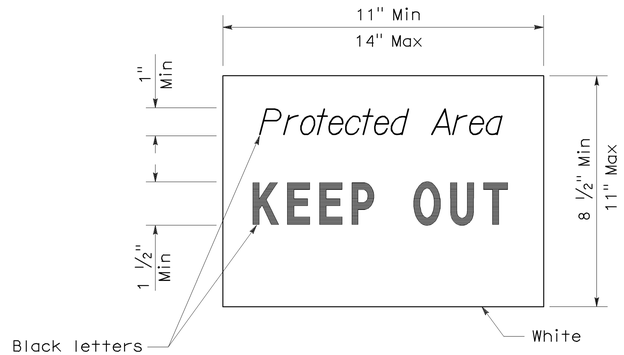


SIGN DETAIL

NOTE:

1. Temporary silt fence and temporary straw bale barrier shown for reference purposes only.

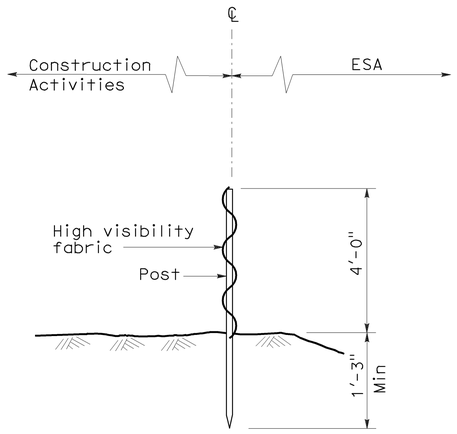


SECTION
TEMPORARY FENCE (TYPE ESA)

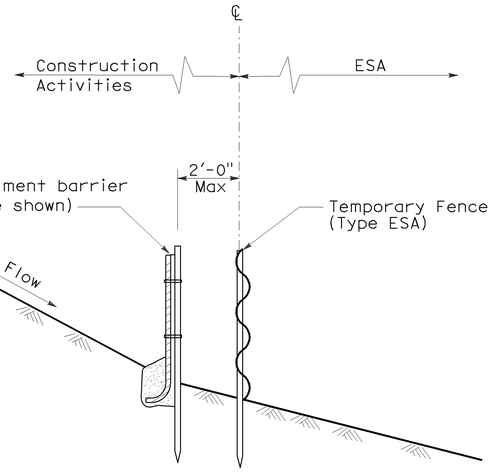


SECTION
PLACEMENT DETAIL
FOR TEMPORARY LINEAR SEDIMENT BARRIER
USED WITH TEMPORARY
FENCE (TYPE ESA)
(See Note 1 )

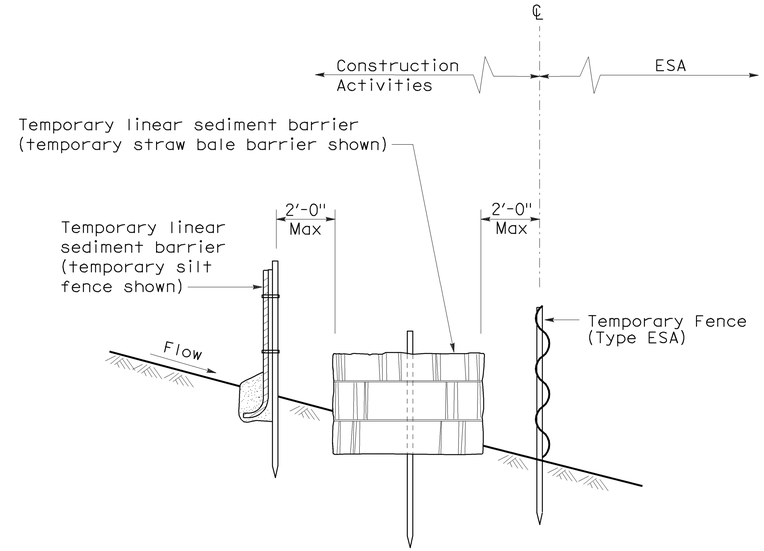


SECTION
PLACEMENT DETAIL
FOR TEMPORARY SILT FENCE
AND TEMPORARY STRAW BALE BARRIER
USED WITH TEMPORARY FENCE (TYPE ESA)
(See Note 1 )

STATE OF CALIFORNIA
DEPARTMENT OF TRANSPORTATION

# TEMPORARY WATER POLLUTION CONTROL DETAILS [TEMPORARY FENCE (TYPE ESA)]

NO SCALE

NSP T65 DATED APRIL 3, 2009 SUPPLEMENTS
THE STANDARD PLANS BOOK DATED MAY 2006.

**NEW STANDARD PLAN NSP T65**

**2006 NEW STANDARD PLAN NSP T65**

1-7-09

## ELECTROLIERS

| STANDARD TYPES |
|---|
| 15, 15D |
| 15 STRUCTURE |
| 21, 21D STRUCTURE |
| 30 |
| 31 |
| 32 |
| 35 |
| 36-20A |

High mast light pole

Double Arm lighting standard

Existing electrolier

Electrolier foundation (Future installation)

### NOTES:

1. Luminaires shall be 310 W HPS when installed on Type 21, 21D, 30, 31, 32, 35 and 36-20A Standards, unless otherwise specified. Luminaires shall be 200 W HPS when installed on other type standards or poles, unless otherwise specified.
2. Luminaires shall be the cutoff type, ANSI Type III medium cutoff lighting distribution, unless otherwise specified.
3. Variations noted adjacent to symbol on project plans.

Electrolier (see project notes or project plans)

Luminaire on wood pole

## STANDARD NOTES:

- AB Abandon. If applied to conduit, remove conductors.
- BC Install pull box in existing conduit run.
- BP Pedestrian barricade, type as indicated on plan.
- CB Install conduit into existing pull box.
- CC Connect new and existing conduit. Remove existing conductors and install conductors as indicated.
- CF Conduit to remain for future use. Remove conductors. Install pull wire or rope.
- DH Detector handhole.
- FA Foundation to be abandoned.
- IS Install sign on signal mast arm.
- NS No slip base on standard.
- PEC Photoelectric control.
- PEU Photoelectric unit.
- RC Equipment or material to be removed and become the property of the Contractor.
- RE Remove electrolier, fuses and ballast. Tape ends of conductors.
- RL Relocate equipment.
- RR Remove and reuse equipment.
- RS Remove and salvage equipment.
- SC Splice new to existing conductors.
- SD Service disconnect.
- SF Standard to remain for future use. Remove luminaire, pole conductors, fuses and ballast.
- TSP Telephone service point.

## ABBREVIATIONS AND EQUIPMENT DESIGNATIONS

| PROPOSED | EXISTING | |
|---|---|---|
| BBS | bbs | Battery backup system |
| BC | bc | Bolt circle |
| C | C | Conduit |
| CCTV | cctv | Closed circuit television |
| CKT | ckt | Circuit |
| CMS | cms | Changeable message sign |
| DLC | dlc | Loop detector lead-in cable |
| EMS | ems | Extinguishable message sign |
| EVC | evc | Emergency vehicle cable |
| EVD | evd | Emergency vehicle detector |
| FB | fb | Flashing beacon |
| FBCA | fbca | Flashing beacon control assembly |
| FBS | fbs | Flashing beacon with slip base |
| FO | fo | Fiber optic |
| G | G | Ground (Equipment Grounding Conductor) |
| GFCI | GFCI | Ground fault circuit interrupt |
| HAR | har | Highway advisory radio |
| HEX | hex | Hexagonal |
| HPS | hps | High pressure sodium |
| IISNS | iisns | Internally illuminated street name sign |
| ISL | isl | Induction sign lighting |
| LED | led | Light emitting diode |
| LMA | lma | Luminaire mast arm |
| LPS | lps | Low pressure sodium |
| LTG | ltg | Lighting |
| LUM | lum | Luminaire |
| MAT | mat | Mast arm mounting vehicle signal faces, top attachment |
| MAS | mas | Mast arm mounting vehicle signal faces, side attachment |
| MAS-4A | mas-4A | Mast arm mounting vehicle signal faces, |
| MAS-4B | mas-4B | side attachment - 4 signal section |
| MAS-4C | mas-4C | |
| MAS-5A | mas-5A | Mast arm mounting vehicle signal faces, |
| MAS-5B | mas-5B | side attachment - 5 signal section |
| MC | mc | Mercury contactor |
| M/M | m/m | Multiple to multiple transformer |
| MT | mt | Conduit with pull wire or rope only |
| MTG | mtg | Mounting |
| | mv | Mercury vapor lighting fixture |
| N | N | Neutral (Grounded Conductor) |
| NC | NC | Normally closed |
| NO | NO | Normally open |
| PB | pb | Pull box |
| PEC | pec | Photoelectric control (Type I, II, III, IV or V as shown) |
| PED | ped | Pedestrian |
| PEU | peu | Photoelectric unit |
| PPB | ppb | Pedestrian push button |
| RL | | Relocated equipment |
| RM | rm | Ramp metering |
| SB | sb | Slip base |
| SIC | sic | Signal interconnect cable |
| SIG | sig | Signal |
| SMA | sma | Signal mast arm |
| SNS | sns | Street name sign |
| SP | sp | Service point |
| TDC | tdc | Telephone demarcation cabinet |
| TMS | tms | Traffic monitoring station |
| TOS | tos | Traffic Operations System |
| VEH | veh | Vehicle |
| XFMR | xfmr | Transformer |
| COMM | comm | Communication |
| RWIS | rwis | Roadway weather information system |

| DIST | COUNTY | ROUTE | POST MILES TOTAL PROJECT | SHEET NO. | TOTAL SHEETS |
|---|---|---|---|---|---|
| 06 | Tul | 190 | 21.2/26.4 | 116 | 120 |

Jeffrey G. McRae
REGISTERED ELECTRICAL ENGINEER

October 5, 2007
PLANS APPROVAL DATE

REGISTERED PROFESSIONAL ENGINEER — Jeffery G. McRae — No. E14512 — Exp. 6-30-08 — ELECTRICAL — STATE OF CALIFORNIA

The State of California or its officers or agents shall not be responsible for the accuracy or completeness of electronic copies of this plan sheet.

*To accompany plans dated* 12-20-10

## SOFFIT AND WALL MOUNTED LUMINAIRES

- Pendant, 70 W HPS unless otherwise specified.
- Flush, 70 W HPS unless otherwise specified.
- Wall surface, 70 W HPS unless otherwise specified.
- Existing soffit or wall luminaire to remain unmodified.
- (M) Existing soffit or wall luminaire to be modified as specified.

NOTE:
Arrow indicates "street side" of luminaire.

STATE OF CALIFORNIA
DEPARTMENT OF TRANSPORTATION

# ELECTRICAL SYSTEMS (SYMBOLS AND ABBREVIATIONS)

NO SCALE

RSP ES-1A DATED OCTOBER 5, 2007 SUPERSEDES STANDARD PLAN ES-1A
DATED MAY 1, 2006 - PAGE 400 OF THE STANDARD PLANS BOOK DATED MAY 2006.

**REVISED STANDARD PLAN RSP ES-1A**

**2006 REVISED STANDARD PLAN RSP ES-1A**

7-10-07

| DIST | COUNTY | ROUTE | POST MILES TOTAL PROJECT | SHEET NO. | TOTAL SHEETS |
|---|---|---|---|---|---|
| 06 | Tul | 190 | 21.2/26.4 | 117 | 120 |

REGISTERED ELECTRICAL ENGINEER

Jeffery G. McRae
No. E14512
Exp. 6-30-08
ELECTRICAL
REGISTERED PROFESSIONAL ENGINEER
STATE OF CALIFORNIA

October 5, 2007
PLANS APPROVAL DATE

*The State of California or its officers or agents shall not be responsible for the accuracy or completeness of electronic copies of this plan sheet.*

*To accompany plans dated* 12-20-10

# CONDUIT

| PROPOSED | EXISTING | |
|---|---|---|
| | | Lighting Conduit, unless otherwise indicated or noted |
| | | Traffic signal conduit |
| C | c | Communication conduit |
| T | t | Telephone conduit |
| F | f | Fire alarm conduit |
| FO | fo | Fiber optic conduit |
| | | Conduit termination (RSP ES-9A C) |
| R | r | Conduit riser in/on structure or service pole |

# SERVICE EQUIPMENT

| PROPOSED | EXISTING | |
|---|---|---|
| OH | oh | Overhead lines |
| U | U | Wood pole "U" indicates utility owned |
| | | Pole guy with anchor |
| | | Utility transformer - ground mounted |
| III | | Service equipment enclosure type |
| | | Service equipment enclosure door indicates front of enclosure |
| T | t | Telephone demarcation cabinet |

# POLE-MOUNTED SERVICE DESIGNATION

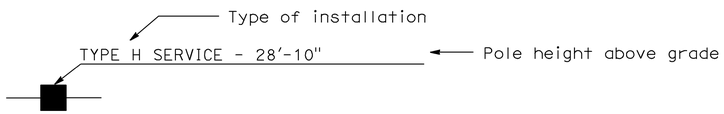


# ILLUMINATED OVERHEAD SIGN

| PROPOSED | EXISTING | |
|---|---|---|
| | | Overhead sign - Single post |
| | | Overhead sign - Two post |
| | | Overhead sign - Mounted on structure |
| | | Overhead sign with electrolier |

# SIGNAL EQUIPMENT

| PROPOSED | EXISTING | |
|---|---|---|
| | | Pedestrian signal face |
| | | Pedestrian push button post |
| | | Pedestrian barricade |
| | | Vehicle signal face (with backplate, 3-Section: red, yellow and green) |
| | | Vehicle signal face with angle visors |
| PV | PV | Modifications of basic symbols:<br>"L" Indicates all non-arrow sections louvered<br>"LG" Indicates louvered green section only<br>"PV" Indicates 12" programmed visibility sections<br>"8" indicates all 8" sections (only when specified) |
| | | Type 15TS and Vehicle signal face |
| | | Vehicle signal face with red, yellow and green left arrow sections |
| | | Vehicle signal face with red and yellow sections and up green arrow |
| | | Vehicle signal face (5 Section) with red, yellow and green sections and yellow and green right arrows |
| | | Type 1 Standard and attached vehicle signal faces |
| | | Standard with signal mast arm only and attached vehicle signal faces and internally illuminated street name sign |
| | | Type 33 Standard, Left-turn vehicle signal face and sign |
| | | Standard with luminaire and signal mast arms and attached vehicle signal faces |
| | | Cantilever flashing beacon Type 9 Frame, with a sign unless otherwise specified or indicated |
| | | Type 15-FBS Standard with two vehicle signal face sections with lens, backplate and visor with a sign |
| R | Y | Flashing beacon. One vehicle signal face section with lens, backplate and visor. "R" indicates red indication, "Y" indicates yellow indication |
| | | Controller assembly. Door indicates front of cabinet |

# SIGNAL EQUIPMENT Cont

| PROPOSED | EXISTING | |
|---|---|---|
| | | Guard post |
| | | Type 1 Standard with "Meter On" sign |
| | | Emergency Vehicle detector |

## NOTES:

1. All signal sections shall be 12" unless shown otherwise.
2. Signal heads shall be provided with backplates unless shown otherwise.
3. Signal indication shall be LED.

STATE OF CALIFORNIA
DEPARTMENT OF TRANSPORTATION

# ELECTRICAL SYSTEMS (SYMBOLS AND ABBREVIATIONS)

NO SCALE

RSP ES-1B DATED OCTOBER 5, 2007 SUPERCEDES STANDARD PLAN ES-1B
DATED MAY 1, 2006 - PAGE 401 OF THE STANDARD PLANS BOOK DATED MAY 2006.

**REVISED STANDARD PLAN RSP ES-1B**

**2006 REVISED STANDARD PLAN RSP ES-1B**

7-10-07

| DIST | COUNTY | ROUTE | POST MILES TOTAL PROJECT | SHEET NO. | TOTAL SHEETS |
|---|---|---|---|---|---|
| 06 | Tul | 190 | 21.2/26.4 | 118 | 120 |

Jeffery G. McRae
REGISTERED ELECTRICAL ENGINEER

October 5, 2007
PLANS APPROVAL DATE

REGISTERED PROFESSIONAL ENGINEER
Jeffery G. McRae
No. E14512
Exp. 6-30-08
ELECTRICAL
STATE OF CALIFORNIA

The State of California or its officers or agents shall not be responsible for the accuracy or completeness of electronic copies of this plan sheet.

*To accompany plans dated* 12-20-10

# EQUIPMENT IDENTIFICATION

## ILLUMINATED SIGN IDENTIFICATION NUMBER:

Sign No. 12345
10 ISL SCI 1.0

- Sign number - Place on post or structure
- Transformer rating (kVA)
- Lighting control type
- Number and type of fixtures

Do NOT place on standard or structure

## ELECTROLIER OR EQUIPMENT IDENTIFICATION NUMBER:

12345 - 15'-0"

- Mast arm length, if shown. Do not place on standard or structure.
- Equipment number - Place on standard or structure. Existing equipment numbers are shown in parenthesis

## CONDUIT AND CONDUCTOR IDENTIFICATION:

1½"C, 2#10, 15#14, 2 DLC

- Number and size of conductors and cables
- Size of conduit in inches

| | |
|---|---|
| Ø1, Ø2, Ø2P, etc. | Traffic phase identification for signal faces, detectors and phase diagrams |
| 1 2 3 | Project note numbers |
| A B C | Equipment description, installation or item numbers |
| 1 2 3 | Conduit run numbers |

## SIGNAL AND LIGHTING STANDARD (TYPICAL DESIGNATION):

19A - 3 - 100

- Wind velocity = 100 mph
- Case 3 arm loading
- Standard type
- Standard Plan sheet number
- Detail number or letter

# WIRING DIAGRAM LEGEND

| | |
|---|---|
| P | Pole |
| CB | Circuit breaker |
| A | Ampere |
| V | Volt |
| M | Metered |
| UM | Unmetered |
| NB | Neutral bus |
| GB | Ground bus |
| G | Equipment grounding conductor |
| N | Grounded conductor (Neutral) |

- External conductor
- Conductor or bus
- Tie point
- Contactor coil
- Contactor, Contact NO
- Terminal blocks
- Contactor, Contact NC
- Enclosure bond
- Grounding electrode
- Circuit breaker
- Receptacle

# PULL BOXES

PROPOSED EXISTING

Pull box-No. 5 unless otherwise indicated or noted.

3 9A(21)

Pull box-Additional designations or descriptions

3 = No. 3½ pull box
5 = No. 5 pull box
6 = No. 6 pull box
7 = No. 7 (Ceiling pull box)
8 = No. 8 (Pendant soffit pull box)
9 = No. 9 pull box
9A = No. 9A pull box

(C) = Communications pull box
(E) = Pull box with extension
(S) = Sprinkler control pull box
(21) = Anchor bolts and conduit for future installation of Type 21 Standard
(T) = Traffic pull box

# MISCELLANEOUS EQUIPMENT

| PROPOSED | EXISTING | |
|---|---|---|
| CMS | cms | Changeable message sign |
| | | Closed circuit television camera |
| | | Highway advisory radio pole and antenna |
| EMS | ems | Extinguishable message sign |
| M V | m v | Detection device<br>M = Microwave sensor<br>V = Video image sensor |

# VEHICLE DETECTORS

5 J 9 U

- Vehicle detector designation
- U = Upper
  L = Lower
- Slot number in input file
- Input file (I or J)
- Phase

| PROPOSED | EXISTING | |
|---|---|---|
| | | Type A detector loop. Outline of sawcut shown. |
| | | Type B detector loop. Outline of sawcut shown. |
| | | Type C detector loop. Outline of sawcut shown. |
| | | Type D detector loop. Outline of sawcut shown. |
| | | Type E detector loop. Outline of sawcut shown. |
| | | Type Q detector loop. Outline of sawcut shown. |
| | | Magnetic detector |
| DH | dh | Detector handhole |
| | | Microwave or video detection zone |

STATE OF CALIFORNIA
DEPARTMENT OF TRANSPORTATION

# ELECTRICAL SYSTEMS (SYMBOLS AND ABBREVIATIONS)

NO SCALE

RSP ES-1C DATED OCTOBER 5, 2007 SUPERCEDES STANDARD PLAN ES-1C
DATED MAY 1, 2006 - PAGE 402 OF THE STANDARD PLANS BOOK DATED MAY 2006.

**REVISED STANDARD PLAN RSP ES-1C**

**2006 REVISED STANDARD PLAN RSP ES-1C**

7-10-07

| DIST | COUNTY | ROUTE | POST MILES TOTAL PROJECT | SHEET NO. | TOTAL SHEETS |
|---|---|---|---|---|---|
| 06 | Tul | 190 | 21.2/26.4 | 119 | 120 |

Jeffery G. McRae
REGISTERED ELECTRICAL ENGINEER

REGISTERED PROFESSIONAL ENGINEER
Jeffery G. McRae
No. E14512
Exp. 6-30-08
ELECTRICAL
STATE OF CALIFORNIA

October 5, 2007
PLANS APPROVAL DATE

*The State of California or its officers or agents shall not be responsible for the accuracy or completeness of electronic copies of this plan sheet.*

*To accompany plans dated* 12-20-10

# LOOP INSTALLATION PROCEDURE

1. Loops shall be centered in lanes.
2. Saw slots in pavement for loop conductors as shown in details.
3. Distance between side of loop and a lead-in saw cut from adjacent detectors shall be 2'-0" minimum. Distance between lead-in saw cuts shall be 6" minimum.
4. Bottom of saw slot shall be smooth with no sharp edges.
5. Slots shall be washed until clean, blown out and thoroughly dried before installing loop conductors.
6. Adjacent loops on the same sensor unit channel shall be wound in opposite directions.
7. Identify and tag loop circuit pairs in the pull box with loop number, start (S) and finish (F) of conductor. Identify and tag lead-in-cable with sensor number and phase.
8. Install loop conductor in slot using a 3/16" to 1/4" thick wood paddle. Hold loop conductors with wood paddles (at the bottom of the sawed slot) during sealant placement.
9. No more than 2 twisted pairs shall be installed in one sawed slot.
10. Allow additional 5'-0" of slack length of conductor for the lead-in run to pull box.
11. The additional length of each conductor for each loop shall be twisted together into a pair (6 turns per 3'-4" minimum) before being placed in the slot and conduit leading to pull box.
12. Test each loop circuit for continuity, circuit resistance and insulation resistance at the pull box before filling slots.
13. Fill slots as shown in details.
14. Splice loop conductors to lead-in-cable. Splices shall be soldered.
15. End of lead-in-cable and Type 2 loop conductor shall be waterproofed prior to installing in conduit to prevent moisture from entering the cable.
16. Lead-in-cable shall not be spliced between the pull box and the controller cabinet terminals.
17. Test each loop circuit for continuity, circuit resistance and insulation resistance at the controller cabinet location.
18. Where loop conductors are not to be spliced to a lead-in-cable, the ends of the conductors shall be taped and waterproofed with electrical insulating coating.

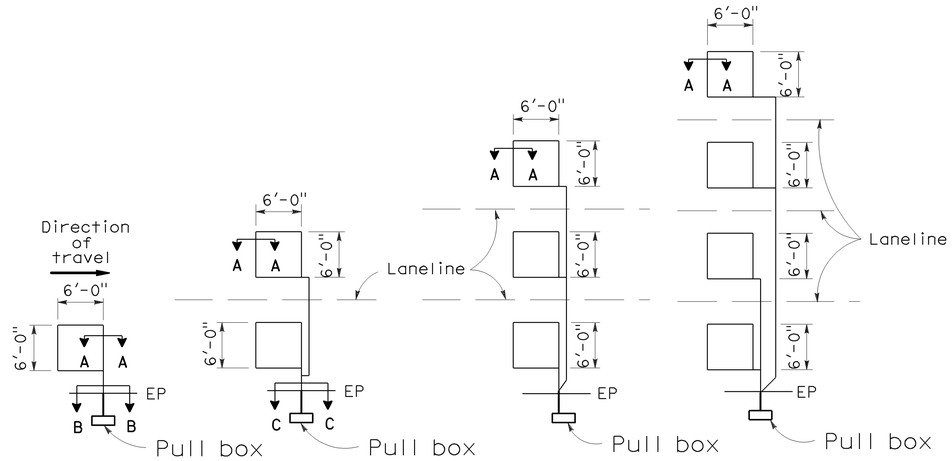


TYPE 1A INSTALLATION | TYPE 2A INSTALLATION | TYPE 3A INSTALLATION | TYPE 4A INSTALLATION

## SAWCUT DETAILS

(Type A loop detector configurations illustrated)

1. 1A thru 4A = 1 Type A loop configuration in each lane.
2. 1B thru 4B = 1 Type B loop configuration in each lane.
3. 1C = 1 Type C loop configuration entering lanes as required.
4. 1D thru 4D = 1 Type D loop configuration in each lane.
5. 1E thru 4E = 1 Type E loop configuration in each lane.
6. 1Q thru 4Q = 1 Type Q loop configuration in each lane. (Use Type A, B, C, D, E or Q loop detector configurations only when specified or shown on plans)

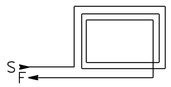


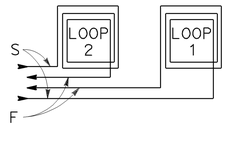


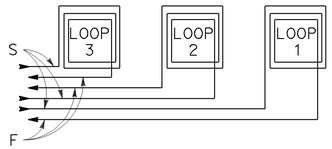


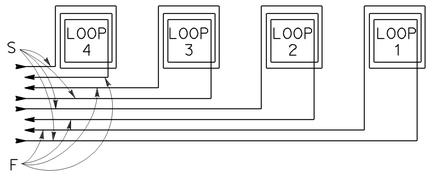


## WINDING DETAILS

See Notes 6 and 7

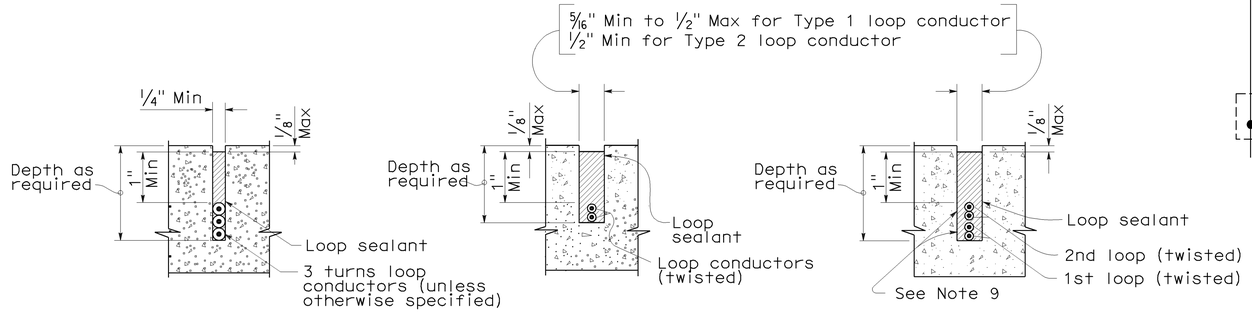


SECTION A-A | SECTION B-B | SECTION C-C

## SLOT DETAILS - TYPE 1 AND TYPE 2 LOOP CONDUCTOR

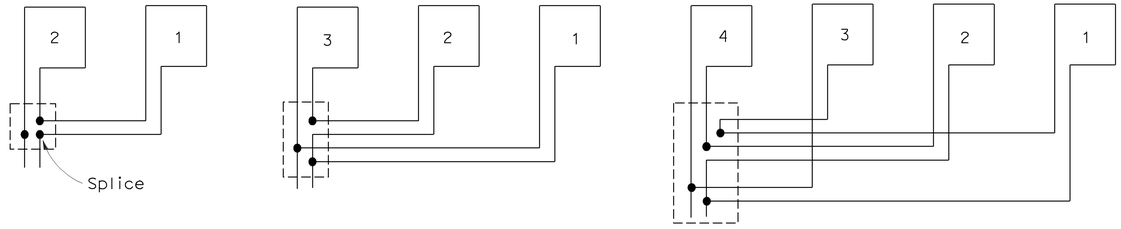


## TYPICAL LOOP CONNECTIONS

(Dashed lines represent the pull box)

STATE OF CALIFORNIA
DEPARTMENT OF TRANSPORTATION

# ELECTRICAL SYSTEMS (DETECTORS)

NO SCALE

RSP ES-5A DATED OCTOBER 5, 2007 SUPERCEDES STANDARD PLAN ES-5A
DATED MAY 1, 2006 - PAGE 423 OF THE STANDARD PLANS BOOK DATED MAY 2006.

**REVISED STANDARD PLAN RSP ES-5A**

**2006 REVISED STANDARD PLAN RSP ES-5A**

8-17-07

| DIST | COUNTY | ROUTE | POST MILES TOTAL PROJECT | SHEET NO. | TOTAL SHEETS |
|---|---|---|---|---|---|
| 06 | Tul | 190 | 21.2/26.4 | 120 | 120 |

Jeffery G. McRae
REGISTERED ELECTRICAL ENGINEER

REGISTERED PROFESSIONAL ENGINEER
Jeffery G. McRae
No. E14512
Exp. 6-30-08
ELECTRICAL
STATE OF CALIFORNIA

October 5, 2007
PLANS APPROVAL DATE

*The State of California or its officers or agents shall not be responsible for the accuracy or completeness of electronic copies of this plan sheet.*

*To accompany plans dated* 12-20-10

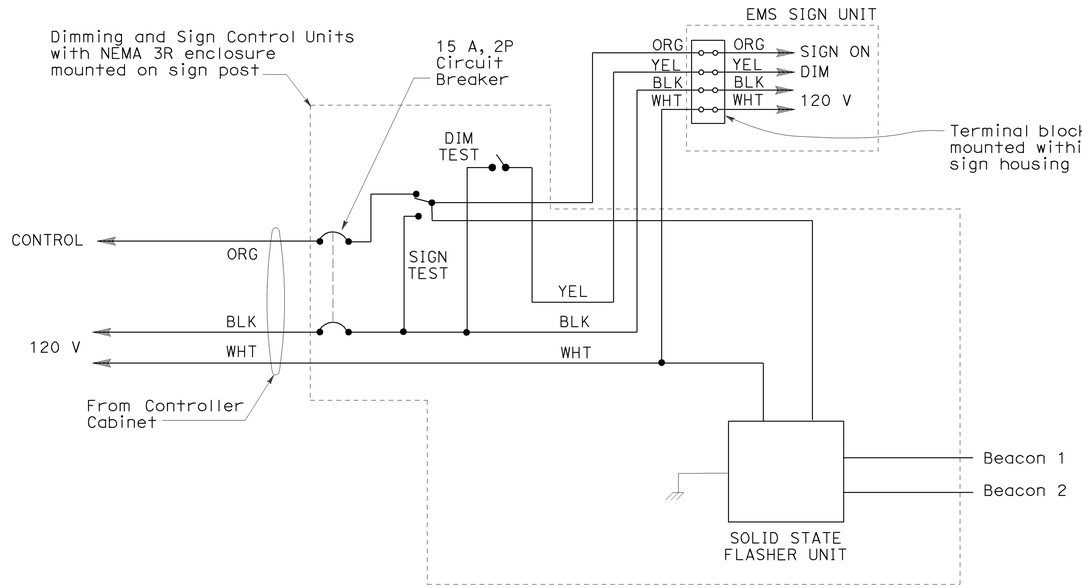


STATE OF CALIFORNIA
DEPARTMENT OF TRANSPORTATION

# ELECTRICAL SYSTEMS (LED EXTINGUISHABLE MESSAGE SIGN WIRING DIAGRAM)

NO SCALE

RSP ES-14B DATED OCTOBER 5, 2007 SUPERCEDES STANDARD PLAN ES-14B DATED MAY 1, 2006 - PAGE 467 OF THE STANDARD PLANS BOOK DATED MAY 2006.

## REVISED STANDARD PLAN RSP ES-14B

**2006 REVISED STANDARD PLAN RSP ES-14B**

7-10-07