DIST	COUNTY	ROUTE	POST MILES TOTAL PROJECT	SHEET No	TOTAL SHEETS
06	Tul,Fre	99	41.3/R53.9, R0.0/R1.2	601	687

REGISTERED CIVIL ENGINEER 1/13/10 DATE

1-25-10
PLANS APPROVAL DATE

REGISTERED PROFESSIONAL ENGINEER Todd W. Dudley No. C39514 Exp. 12/31/2011 CIVIL STATE OF CALIFORNIA

The State of California or its officers or agents shall not be responsible for the accuracy or completeness of electronic copies of this plan sheet.

LIM & NASCIMENTO ENGINEERING
20 EMPIRE DRIVE
LAKE FOREST, CALIFORNIA 92630

INDEX TO PLANS

SHEET NO.	TITLE
1.	GENERAL PLAN
2.	INDEX TO PLANS
3.	FOUNDATION PLAN
4.	CONCRETE REMOVAL
5.	ABUTMENT DETAILS NO. 1
6.	ABUTMENT DETAILS NO. 2
7.	TYPICAL SECTION
8.	LONGITUDINAL REINFORCEMENT
9.	BARRIER ARCHITECTURAL SURFACE DETAIL
10.	STRUCTURE APPROACH TYPE R(30D)
11.	LOG OF TEST BORINGS

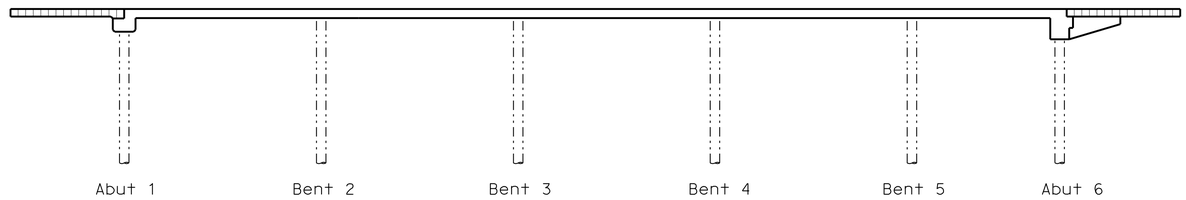

Structural Concrete Bridge (4000 psi at 28 days)

Structural Concrete, Approach Slab (3600 psi @ 28 days)

CONCRETE STRENGTH AND TYPE LIMITS

TEMPORARY SUPPORT ALLOWABLE STRESS DESIGN

DEAD LOAD: 200 pst

LIVE LOAD: 20 pst + Actual Construction Equipment Weight

LATERAL LOAD: 4 pst

GENERAL NOTES LOAD FACTOR DESIGN

DESIGN: (1996 AASHTO Bridge Design Specifcations with Revisions by Caltrans).

SEISMIC DESIGN:
Caltrans Seismic Design Criteria (SDC), Version 1.4 June 2006

DEAD LOAD:
Includes 35 psf for future wearing surface.

LIVE LOADING:
HS20-44 and alternative and permit design load.

SEISMIC LOADING:
SDC ARS Curve for Soil Profile D (M=7.0± 0.25)
(Peak Rock Acceleration = 0.2 g)

REINFORCED CONCRETE:
fy = 60 ksi
f'c = 4.0 ksi
n = 8

STANDARD PLANS DATED MAY 2006 WITH ERRATA 1-10

A10A	ACRONYMS AND ABBREVIATIONS (SHEET 1 OF 2)
A10B	ACRONYMS AND ABBREVIATIONS (SHEET 2 OF 2)
A10C	SYMBOLS (SHEET 1 OF 2)
A10D	SYMBOLS (SHEET 2 OF 2)
A62C	LIMITS OF PAYMENT FOR EXCAVATION AND BACKFILL-BRIDGE
T3	TEMPORARY RAILING (TYPE K)
B0-1	BRIDGE DETAILS
B0-3	BRIDGE DETAILS
B0-13	BRIDGE DETAILS
RSP B6-21	JOINT SEALS (MAXIMUM MOVEMENT RATING=2")
B11-56	CONCRETE BARRIER TYPE 736

STANDARD PLAN SHEET NO.

DETAIL NO.

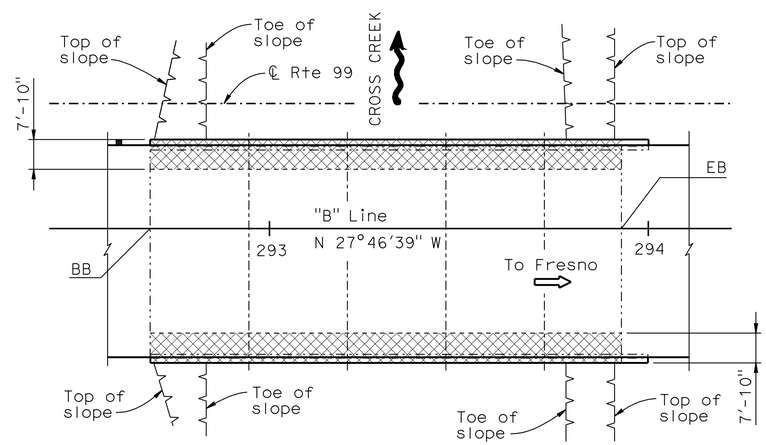

TEMPORARY SUPPORT PLAN

1"=20'

Limits of Temporary Support

QUANTITIES

TEMPORARY SUPPORT	LUMP	SUM
REMOVE CONTRAST TREATMENT (SLURRY OR CHIP SEAL)	5,780	SQFT
SALVAGE METAL BRIDGE RAILING	264	LF
CLEAN BRIDGE DECK	5,780	SQFT
BRIDGE REMOVAL (PORTION), LOCATION E	LUMP	SUM
STRUCTURE EXCAVATION (BRIDGE)	8	CY
STRUCTURE BACKFILL (BRIDGE)	5	CY
AGGREGATE BASE (APPROACH SLAB)	13	CY
STRUCTURAL CONCRETE, BRIDGE	48	CY
STRUCTURAL CONCRETE, APPROACH SLAB (TYPE R)	125	CY
PAVING NOTCH EXTENSION	38	CF
ARCHITECTURAL TEXTURE (DRY STACKED STONE)	683	SQFT
DRILL AND BOND DOWEL (CHEMICAL ADHESIVE)	888	EA
JOINT SEAL (MR1/2")	118	LF
BAR REINFORCING STEEL (BRIDGE)	17,865	LB
TREAT BRIDGE DECK	5,780	SQFT
FURNISH BRIDGE DECK TREATMENT MATERIAL	64	GAL
PREPARE AND STAIN CONCRETE	683	SQFT
CONCRETE BARRIER (TYPE 736 MODIFIED)	263	LF

Note:
The Contractor shall verify all controlling field dimensions before ordering or fabricating any material.

Fritz Hoffman
DESIGN OVERSIGHT Fritz Hoffman
Sept 8, 2009
SIGN OFF DATE

DESIGN DETAIL SHEET (ENGLISH) (REV. 2/25/05)

	BY	CHECKED
DESIGN	T. Dudley	M. Stiller
DETAILS	Y. Ng / C. Lee	T. Dudley
QUANTITIES	C. Lee	M. Stiller

ORIGINAL SCALE IN INCHES FOR REDUCED PLANS 0 1 2 3

PREPARED FOR THE STATE OF CALIFORNIA DEPARTMENT OF TRANSPORTATION

Stephen J. Mislinski
PROJECT ENGINEER

CU 06249
EA 324501

BRIDGE NO. 46-0032R
POST MILE 44.8

CROSS CREEK BRIDGE (WIDEN)
INDEX TO PLANS

DISREGARD PRINTS BEARING EARLIER REVISION DATES

REVISION DATES (PRELIMINARY STAGE ONLY): 11/18/08 11/18/08 01/16/09 04/27/09 05/13/09 05/27/09 09/01/09 1-13-10

SHEET 2 OF 11

FILE => 46-0032r-bitp.dgn

USERNAME => trrlcht DATE PLOTTED => 04-AUG-2010 TIME PLOTTED => 14:55

DIST	COUNTY	ROUTE	POST MILES TOTAL PROJECT	SHEET No	TOTAL SHEETS
06	Tul,Fre	99	41.3/R53.9, R0.0/R1.2	602	687

REGISTERED CIVIL ENGINEER — DATE 1/13/10

1-25-10
PLANS APPROVAL DATE

REGISTERED PROFESSIONAL ENGINEER — Todd W. Dudley — No. C39514 — Exp. 12/31/2011 — CIVIL — STATE OF CALIFORNIA

The State of California or its officers or agents shall not be responsible for the accuracy or completeness of electronic copies of this plan sheet.

LIM & NASCIMENTO ENGINEERING
20 EMPIRE DRIVE
LAKE FOREST, CALIFORNIA 92630

SURVEY CONTROL

PRHV260 (Not Shown on Plan)
Fnd 1" IP w/Red Plug
112.65 FT Lt. "A" Line Rte 99
Sta. 282+58.57
N 2,029,279.29
E 6,427,895.55
Elev. = 271.53

PRHV262
Fnd 1" IP w/Red Plug
59.60 FT Lt. "A" Line Rte 99
Sta. 291+89.33
N 2,030,127.63
E 6,427,508.18
Elev. = 274.86

HYDROLOGIC / HYDRAULIC DATA SUMMARY

DRAINAGE AREA: N/A SQUARE MILES

	DESIGN FLOOD
FREQUENCY (YEARS)	Max Capicity
DISCHARGE (CUBIC FEET PER SECOND)	3880.00
WATER SURFACE ELEV. (FEET)	272.00

FLOOD PLAIN DATA ARE BASED UPON INFORMATION AVAILABLE WHEN THE PLANS WERE PREPARED AND ARE SHOWN TO MEET FEDERAL REQUIREMENTS. THE ACCURACY OF SAID INFORMATION IS NOT WARRANTED BY THE STATE AND INTERESTED OR AFFECTED PARTIES SHOULD MAKE THEIR OWN INVESTIGATIONS.

Bridge Location # 46-0032R
⑤ - 53.77 Rt. "A" Line, Sta.292+37.58, Elev.=275.84 ±
⑥ - 46.05 Rt. "A" Line, Sta.293+62.14, Elev.=276.08 ±
⑦ - 99.11 Rt. "A" Line, Sta.292+37.65, Elev.=275.03 ±
⑧ - 99.81 Rt. "A" Line, Sta.293+62.07, Elev.=275.14 ±

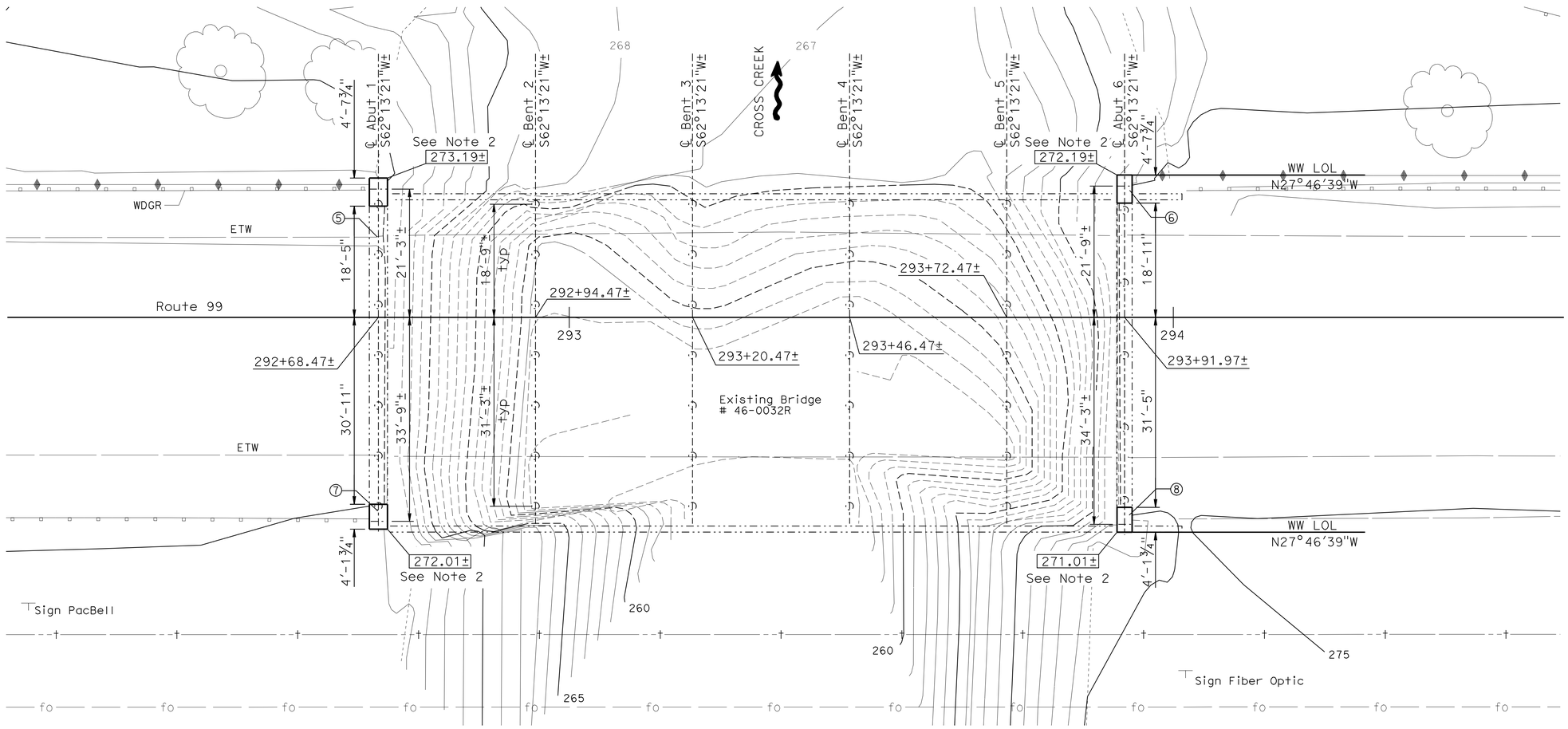

LENGEND:

Existing piles

271.01± Bottom of footing elevation

PLAN
1"=10'

NOTES:
1. Utilities shown are approximate, see "Road Plans".
2. Match existing footing elevations.

Fritz Hoffman
DESIGN OVERSIGHT Fritz Hoffman
Sept 8, 2009
SIGN OFF DATE

SCALE: As noted	VERT.DATUM NAVD 88	HORZ.DATUM NAD 83	
PHOTOGRAMMETRY AS OF: X		ALIGNMENT TIES Dist. Traverse Sheet	
SURVEYED	BY District	DRAFTED	BY T.Gillett 09/2008
FIELD CHECKED	BY J.Martinez 09/2008	CHECKED	BY T.Zolnikova 09/2008

DESIGN	BY T. Dudley	CHECKED M. Stiller
DETAILS	BY Y. Ng	CHECKED T. Dudley
QUANTITIES	BY C. Lee	CHECKED M. Stiller

PREPARED FOR THE STATE OF CALIFORNIA DEPARTMENT OF TRANSPORTATION

Stephen J. Mislinski
PROJECT ENGINEER

BRIDGE NO. 46-0032R
POST MILE 44.8

CROSS CREEK BRIDGE (WIDEN)
FOUNDATION PLAN

FOUNDATION PLAN SHEET (ENGLISH) (REV. 2-25-05)

ORIGINAL SCALE IN INCHES FOR REDUCED PLANS 0 1 2 3

CU 06249
EA 324501

DISREGARD PRINTS BEARING EARLIER REVISION DATES

REVISION DATES (PRELIMINARY STAGE ONLY): 11/06/08 01/06/09 04/22/09 05/13/09 05/27/09 09/01/09 1-13-10

SHEET 3 OF 11

FILE => 46-0032r-dfdp.dgn

USERNAME => trrcht DATE PLOTTED => 04-AUG-2010 TIME PLOTTED => 14:55

DIST	COUNTY	ROUTE	POST MILES TOTAL PROJECT	SHEET No	TOTAL SHEETS
06	Tul,Fre	99	41.3/R53.9, R0.0/R1.2	603	687

REGISTERED CIVIL ENGINEER 1/13/10 DATE

1-25-10
PLANS APPROVAL DATE

The State of California or its officers or agents shall not be responsible for the accuracy or completeness of electronic copies of this plan sheet.

REGISTERED PROFESSIONAL ENGINEER Todd W. Dudley No. C39514 Exp. 12/31/2011 CIVIL STATE OF CALIFORNIA

LIM & NASCIMENTO ENGINEERING
20 EMPIRE DRIVE
LAKE FOREST, CALIFORNIA 92630

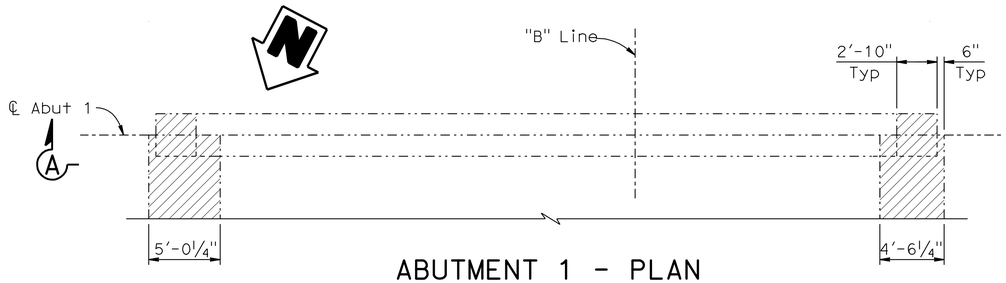

ABUTMENT 1 - PLAN
3/16"=1'-0"

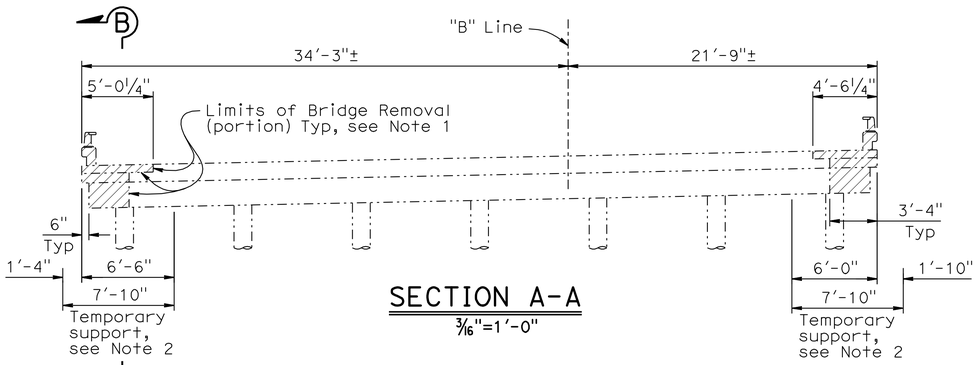

SECTION A-A
3/16"=1'-0"

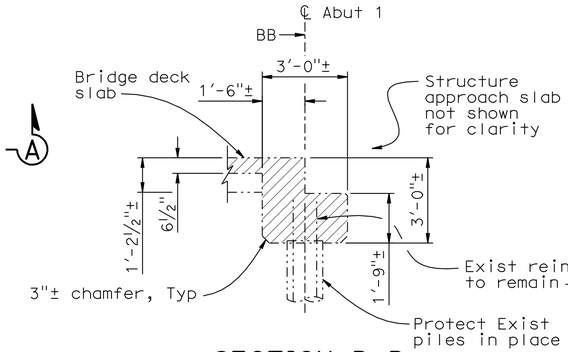

SECTION B-B
3/8"=1'-0"

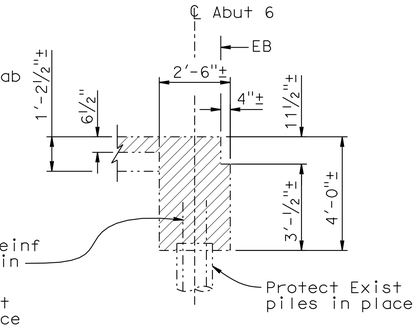

SECTION D-D
3/8"=1'-0"

LEGEND:

Limits of Bridg Removal (Portion)

Existing Structure

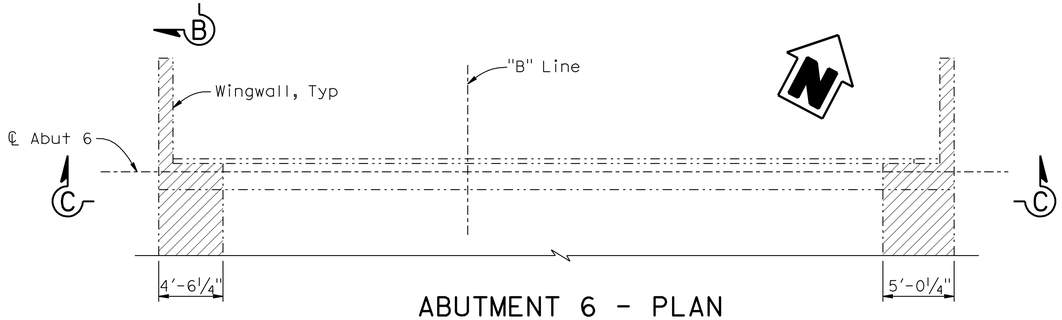

ABUTMENT 6 - PLAN
3/16"=1'-0"

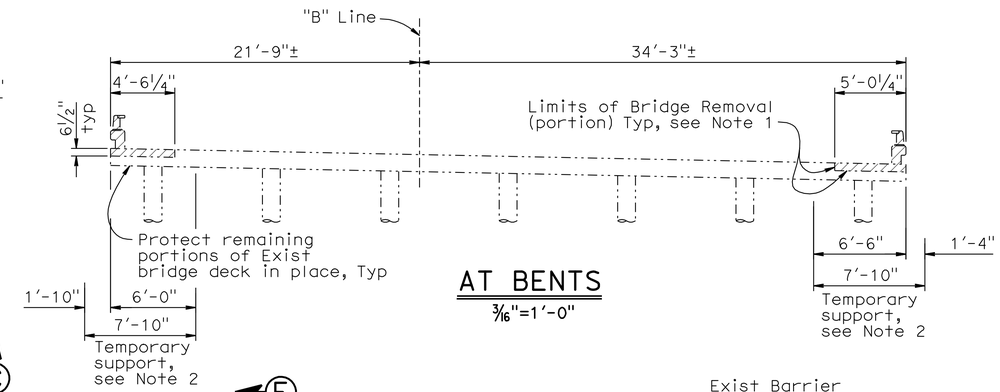

AT BENTS
3/16"=1'-0"

NOTES:

1. Limits of bridge removal shall be intentionally roughened.
2. Temporary support needed for deck slab and abutment 1 removal and widening construction operations.

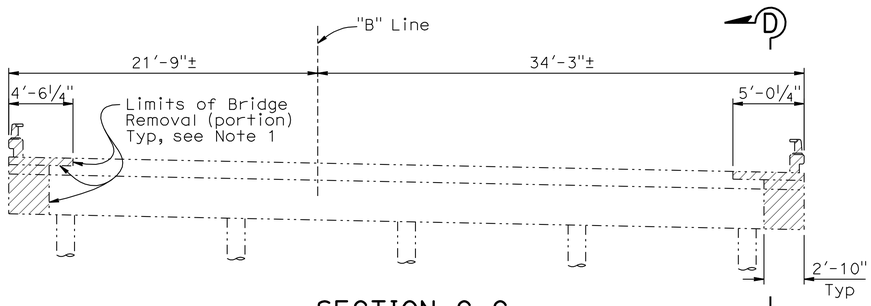

SECTION C-C
3/16"=1'-0"

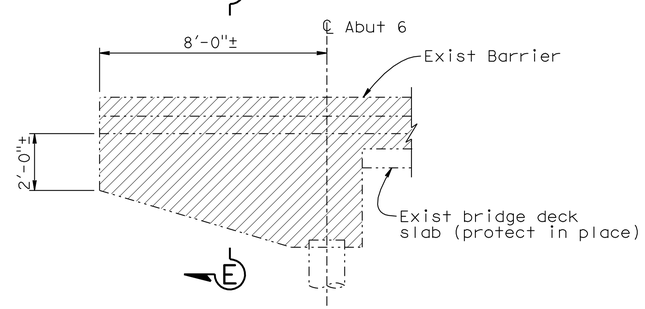

WINGWALL ELEVATION
3/8"=1'-0"

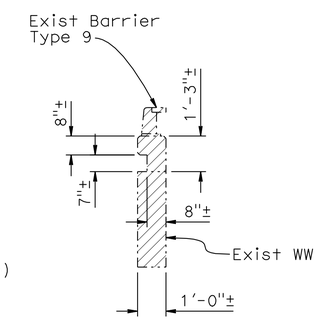

SECTION E-E
3/8"=1'-0"

Note:
The Contractor shall verify all controlling field dimensions before ordering or fabricating any material.

Fritz Hoffman — DESIGN OVERSIGHT — Fritz Hoffman — Sept 8, 2009 — SIGN OFF DATE	DESIGN	BY T. Dudley	CHECKED M. Stiller	PREPARED FOR THE STATE OF CALIFORNIA DEPARTMENT OF TRANSPORTATION	Stephen J. Mislinski — PROJECT ENGINEER
	DETAILS	BY C. Lee / Y. Ng	CHECKED T. Dudley		
	QUANTITIES	BY C. Lee	CHECKED M. Stiller		

BRIDGE NO. 46-0032R
POST MILE 44.8

CROSS CREEK BRIDGE (WIDEN)
CONCRETE REMOVAL

DESIGN DETAIL SHEET (ENGLISH) (REV. 2/25/05)

ORIGINAL SCALE IN INCHES FOR REDUCED PLANS 0 1 2 3

CU 06249
EA 324501

DISREGARD PRINTS BEARING EARLIER REVISION DATES

REVISION DATES (PRELIMINARY STAGE ONLY): 11/18/08 01/16/09 04/22/09 05/13/09 05/27/09 09/01/09 1-13-10

SHEET 4 OF 11

FILE => 46-0032r-erem_xdet01.dgn

USERNAME => trrichf DATE PLOTTED => 04-AUG-2010 TIME PLOTTED => 14:55

DIST	COUNTY	ROUTE	POST MILES TOTAL PROJECT	SHEET No	TOTAL SHEETS
06	Tul,Fre	99	41.3/R53.9, R0.0/R1.2	604	687

REGISTERED CIVIL ENGINEER 1/13/10 DATE

1-25-10
PLANS APPROVAL DATE

The State of California or its officers or agents shall not be responsible for the accuracy or completeness of electronic copies of this plan sheet.

REGISTERED PROFESSIONAL ENGINEER Todd W. Dudley No. C39514 Exp. 12/31/2011 CIVIL STATE OF CALIFORNIA

LIM & NASCIMENTO ENGINEERING
20 EMPIRE DRIVE
LAKE FOREST, CALIFORNIA 92630

LEGEND:

Existing Structure

New Structure

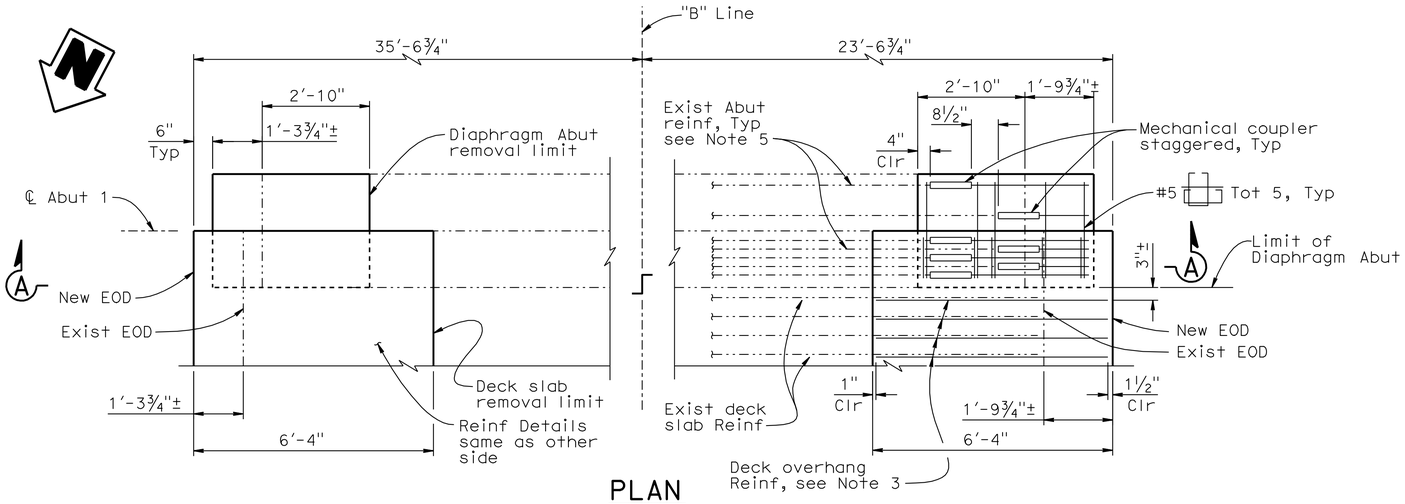

PLAN
½"=1'-0"

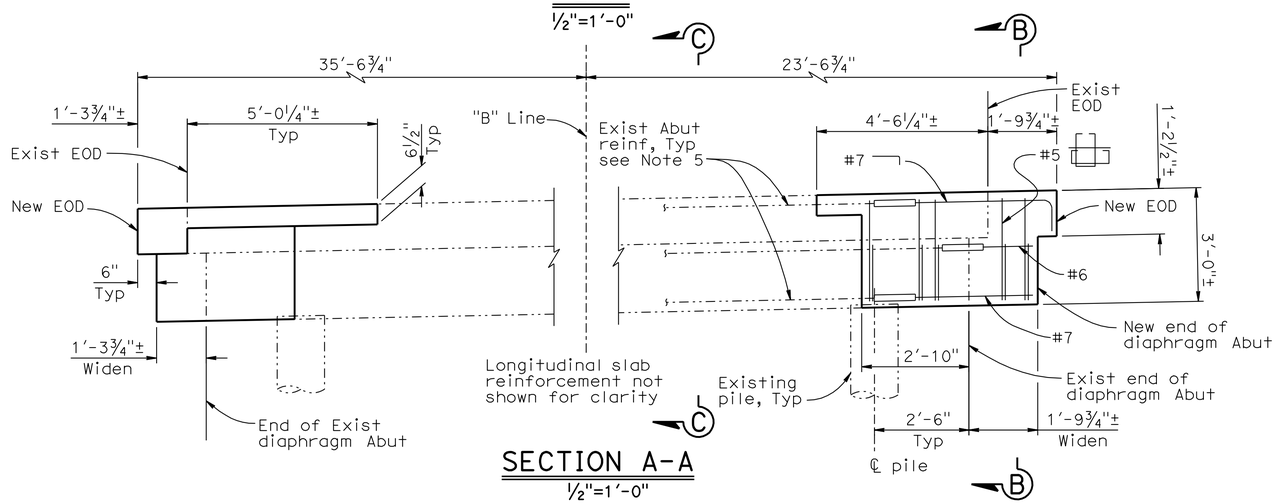

SECTION A-A
½"=1'-0"

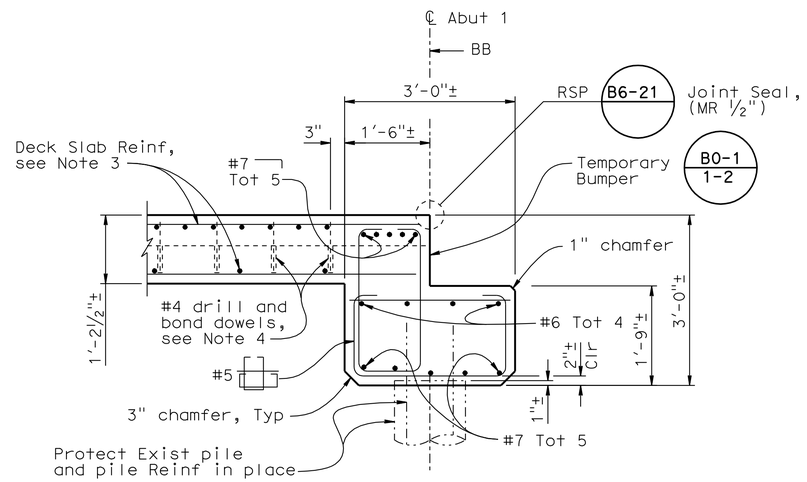

SECTION B-B
¾"=1'-0"

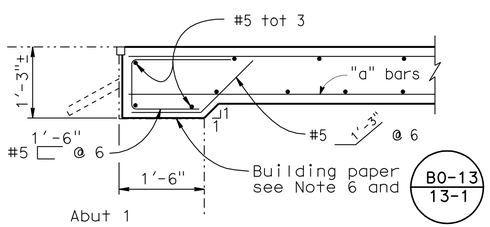

SECTION C-C
¾"=1'-0"

NOTES:

1. Cross sectional dimensions for widening diaphragm abutments shall match existing abutment dimensions.
2. Stagger adjacent splice connectors.
3. For Slab Reinf Details, see "TYPICAL SECTION" sheet.
4. For Drill and Bond Dowel Details, see "TYPICAL SECTIONS" sheet.
5. Existing reinforcement to be protected in place and extended into new construction as shown.
6. Two depressed keys in existing paving notch at abutment 1 shall be filled with polystyrene (1½"x6"x2'-6"±) before constructing approach slab.

Note:
The Contractor shall verify all controlling field dimensions before ordering or fabricating any material.

NOTE: For details not shown, see "Structure Approach Type R(30D) sheet".

DESIGN OVERSIGHT Fritz Hoffman
Sept 8, 2009
SIGN OFF DATE

	BY	CHECKED
DESIGN	T. DUdley	M. Stiller
DETAILS	C. Lee / Y. Ng	T. Dudley
QUANTITIES	C. Lee	M. Stiller

PREPARED FOR THE STATE OF CALIFORNIA DEPARTMENT OF TRANSPORTATION

Stephen J. Mislinski
PROJECT ENGINEER

BRIDGE NO. 46-0032R
POST MILE 44.8

CROSS CREEK BRIDGE (WIDEN)
ABUTMENT DETAILS NO. 1

DESIGN DETAIL SHEET (ENGLISH) (REV. 2/25/05)

ORIGINAL SCALE IN INCHES FOR REDUCED PLANS 0 1 2 3

CU 06249
EA 324501

DISREGARD PRINTS BEARING EARLIER REVISION DATES

REVISION DATES (PRELIMINARY STAGE ONLY): 11/16/08 01/16/09 04/27/09 05/13/09 05/27/09 09/01/09 1-13-10

SHEET 5 OF 11

FILE => 46-0032r-fabt_lo01.dgn

USERNAME => trrichf DATE PLOTTED => 04-AUG-2010 TIME PLOTTED => 14:55

DIST	COUNTY	ROUTE	POST MILES TOTAL PROJECT	SHEET No	TOTAL SHEETS
06	Tul,Fre	99	41.3/R53.9, R0.0/R1.2	605	687

REGISTERED CIVIL ENGINEER — DATE 1/13/10

1-25-10
PLANS APPROVAL DATE

The State of California or its officers or agents shall not be responsible for the accuracy or completeness of electronic copies of this plan sheet.

REGISTERED PROFESSIONAL ENGINEER — Todd W. Dudley — No. C39514 — Exp. 12/31/2011 — CIVIL — STATE OF CALIFORNIA

LIM & NASCIMENTO ENGINEERING
20 EMPIRE DRIVE
LAKE FOREST, CALIFORNIA 92630

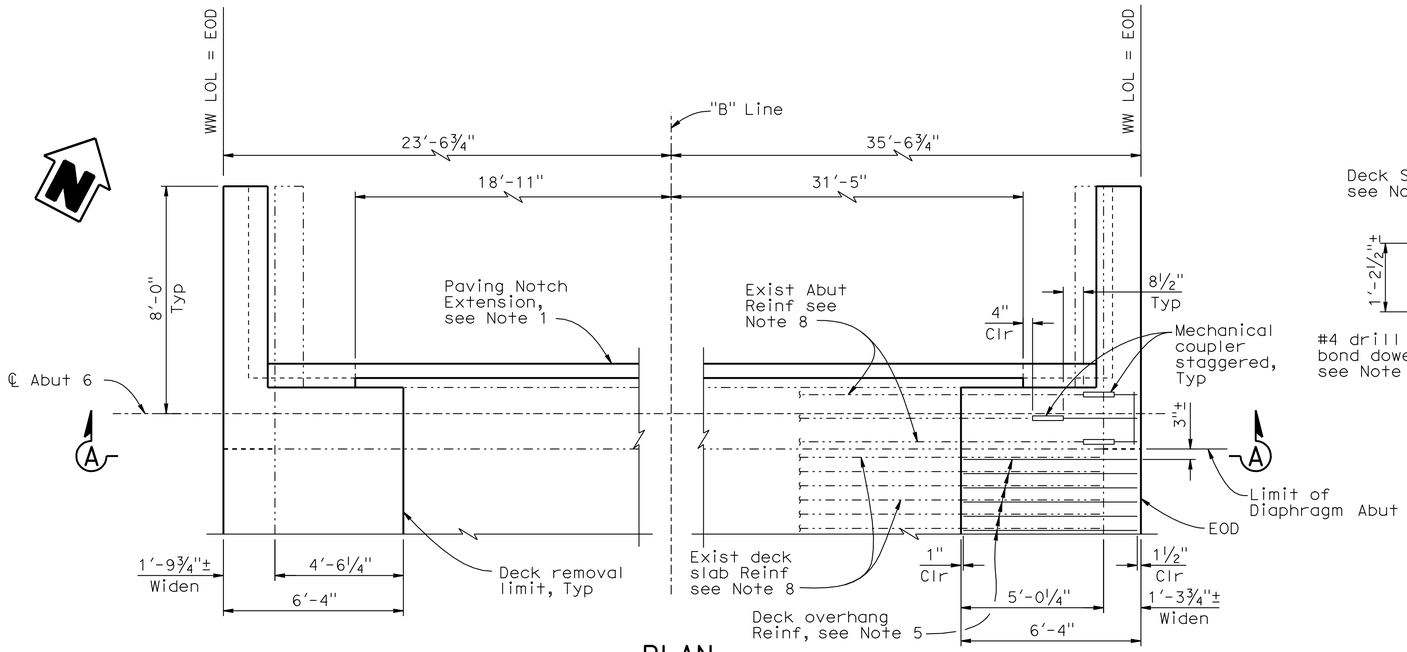

PLAN
⅜"=1'-0"

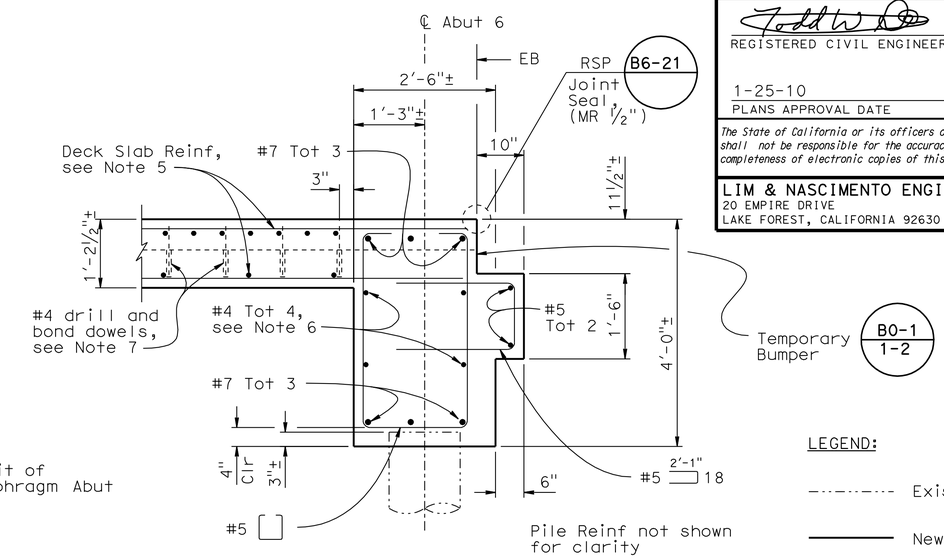

SECTION B-B
¾"=1'-0"
See Note 3

LEGEND:

-·-·-·-·- Existing Structure

——— New Structure

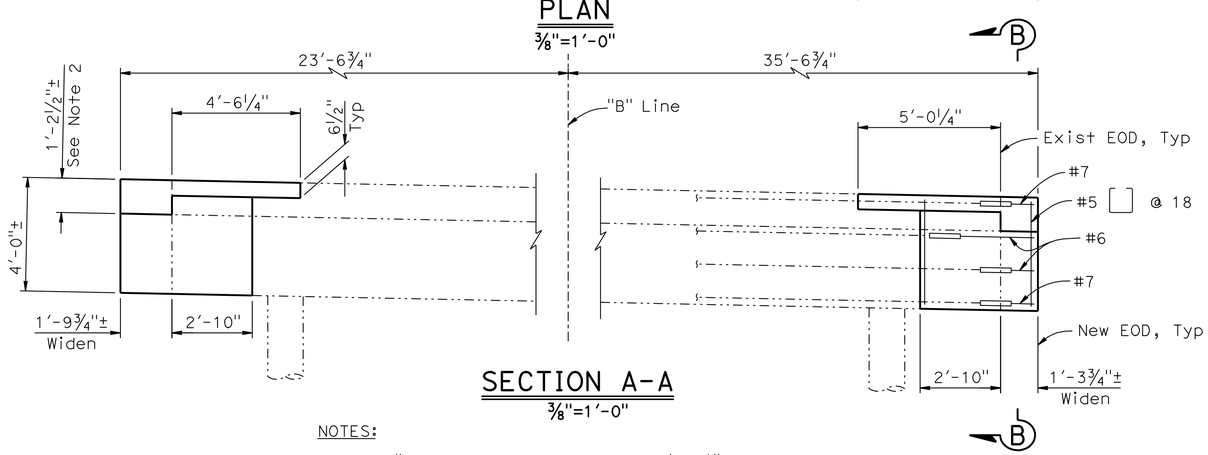

SECTION A-A
⅜"=1'-0"

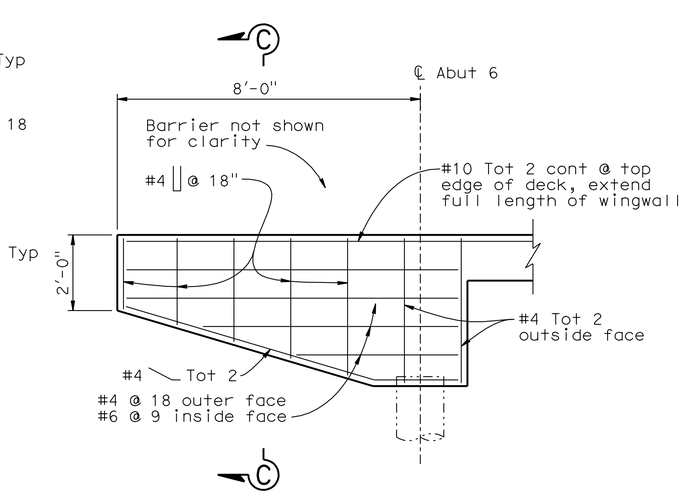

WINGWALL ELEVATION
½"=1'-0"

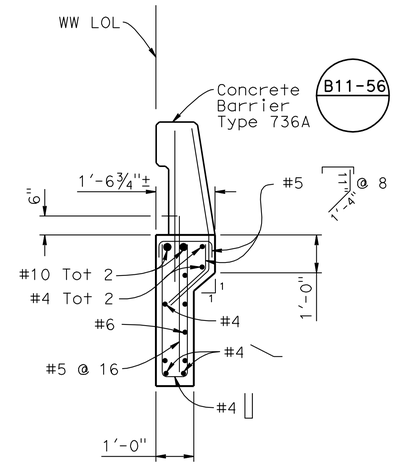

SECTION C-C
½"=1'-0"

NOTES:

1. See "STRUCTURE APPROACH TYPE R(30D)" for Paving Notch Extension Details.
2. Match existing deck slab thickness.
3. Cross Sectional dimensions for widening diaphragm abutments shall match existing abutment dimensions.
4. Stagger adjacent splice connectors.
5. For Slab Reinf Details, see "TYPICAL SECTION" sheet.
6. Existing No. 4 bars in diaphragm abutment to be extended for widening using contact lap splices.
7. For #4 Drill and Bond Dowel Details, see "TYPICAL SECTION" sheet.
8. Existing reinforcement to be protected in place and extented into new construction as shown.

Note:
The Contractor shall verify all controlling field dimensions before ordering or fabricating any material.

DESIGN OVERSIGHT — Fritz Hoffman
Sept 8, 2009
SIGN OFF DATE

	BY	CHECKED
DESIGN	T. Dudley	M. Stiller
DETAILS	C. Lee / Y. Ng	T. Dudley
QUANTITIES	C. Lee	M. Stiller

PREPARED FOR THE STATE OF CALIFORNIA DEPARTMENT OF TRANSPORTATION

Stephen J. Mislinski
PROJECT ENGINEER

BRIDGE NO. 46-0032R
POST MILE 44.8

CROSS CREEK BRIDGE (WIDEN)
ABUTMENT DETAILS NO. 2

DESIGN DETAIL SHEET (ENGLISH) (REV. 2/25/05)

ORIGINAL SCALE IN INCHES FOR REDUCED PLANS 0 1 2 3

CU 06249
EA 324501

DISREGARD PRINTS BEARING EARLIER REVISION DATES

REVISION DATES (PRELIMINARY STAGE ONLY): 11/14/08 01/16/09 04/22/09 05/13/09 05/27/09 09/01/09 1-13-10

SHEET 6 OF 11

FILE => 46-0032r-fabt_lo02.dgn

USERNAME => trrichf DATE PLOTTED => 04-AUG-2010 TIME PLOTTED => 14:55

DIST	COUNTY	ROUTE	POST MILES TOTAL PROJECT	SHEET No	TOTAL SHEETS
06	Tul,Fre	99	41.3/R53.9, R0.0/R1.2	606	687

REGISTERED CIVIL ENGINEER — DATE 1/13/10

1-25-10
PLANS APPROVAL DATE

The State of California or its officers or agents shall not be responsible for the accuracy or completeness of electronic copies of this plan sheet.

REGISTERED PROFESSIONAL ENGINEER — Todd W. Dudley — No. C39514 — Exp. 12/31/2011 — CIVIL — STATE OF CALIFORNIA

LIM & NASCIMENTO ENGINEERING
20 EMPIRE DRIVE
LAKE FOREST, CALIFORNIA 92630

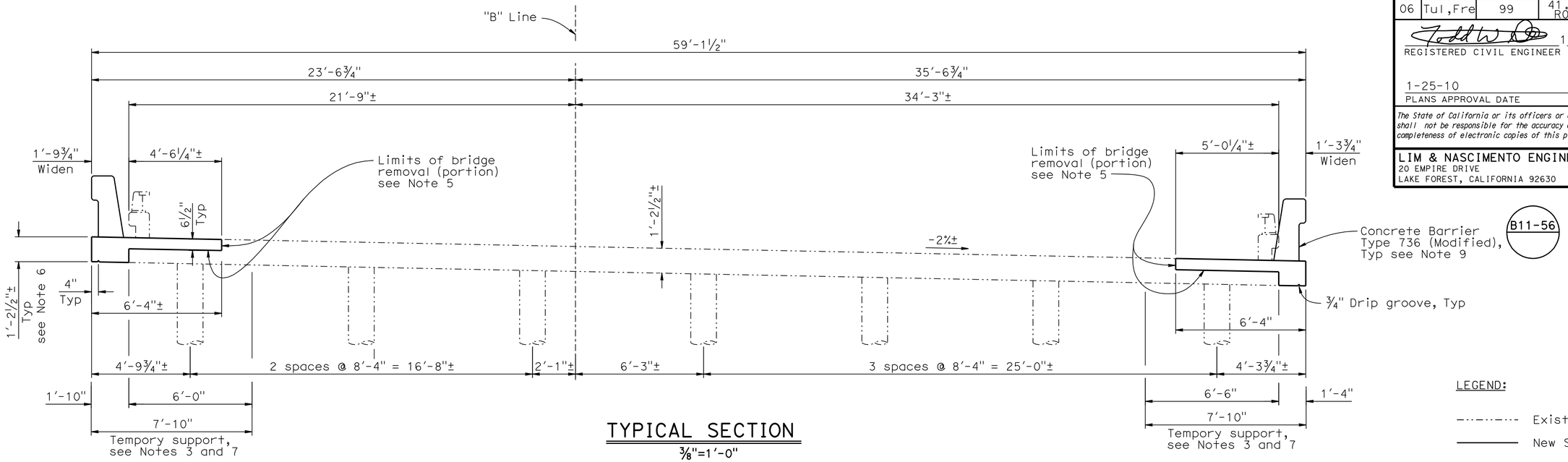

TYPICAL SECTION

⅜"=1'-0"

LEGEND:

-·-·-·-·- Existing Structure

——— New Structure

NOTES:

1. New transverse deck reinforcement to be contact lap spliced with existing transverse deck reinforcement wherever possible.
2. See "LONGITUDINAL REINFORCEMENT" sheet for deck Main Slab Reinf.
3. Construction loads on edges of bridge deck shall be limited to foot traffic and light equipment. Construction loads tributary to a single exterior column shall not exceed 27 kips.
4. Place all transverse bars parallel to bents.
5. Bridge removal (portion) to leave surfaces intentionally roughened.
6. Match existing deck slab thickness.
7. Temporary support needed for deck slab removal and widening construction operations.
8. Existing reinforcement to be protected in place and extented into new construction as shown.
9. See "BARRIER ARCHITECTURAL SURFACE DETAIL" sheet for added architectural treatment.

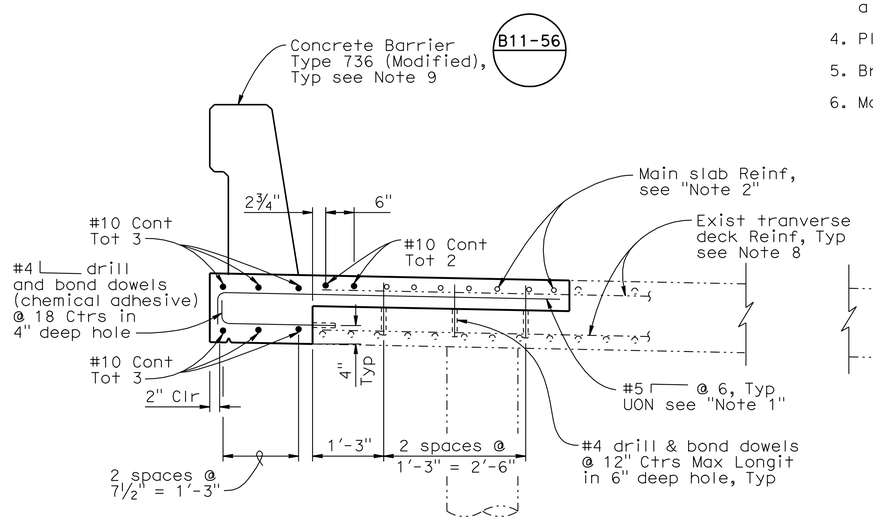

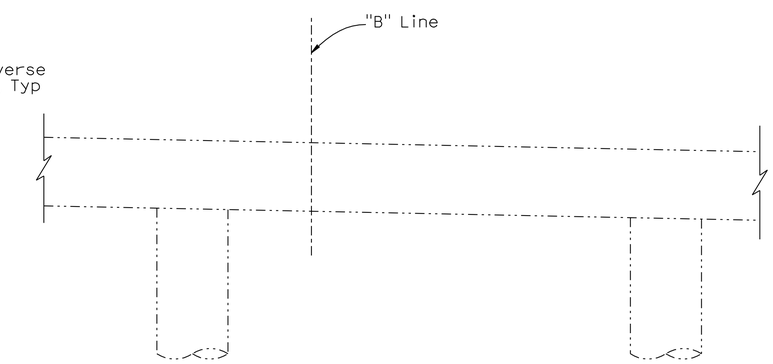

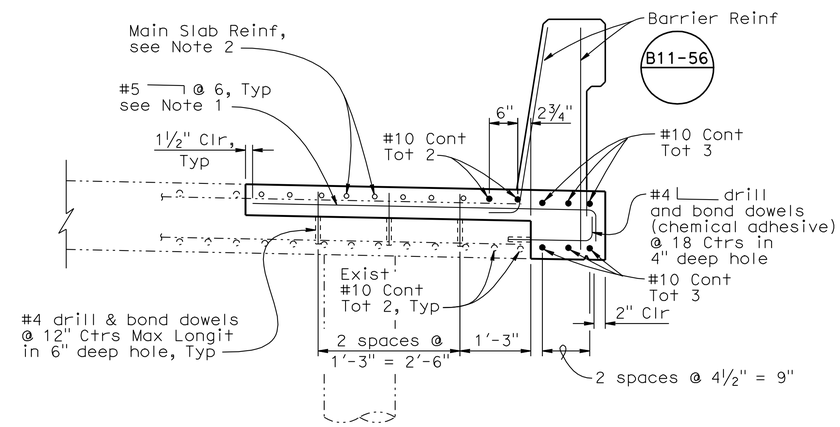

PART TYPICAL SECTION

¾"=1'-0"

Note:
The Contractor shall verify all controlling field dimensions before ordering or fabricating any material.

DESIGN OVERSIGHT — Fritz Hoffman
Sept 8, 2009
SIGN OFF DATE

	BY	CHECKED
DESIGN	T. Dudley	M. Stiller
DETAILS	Y. Ng / C. Lee	T. Dudley
QUANTITIES	C. Lee	M. Stiller

PREPARED FOR THE STATE OF CALIFORNIA DEPARTMENT OF TRANSPORTATION

Stephen J. Mislinski
PROJECT ENGINEER

BRIDGE NO. 46-0032R
POST MILE 44.8

CROSS CREEK BRIDGE (WIDEN)

TYPICAL SECTION

DESIGN DETAIL SHEET (ENGLISH) (REV. 2/25/05)

ORIGINAL SCALE IN INCHES FOR REDUCED PLANS 0 1 2 3

CU 06249
EA 324501

DISREGARD PRINTS BEARING EARLIER REVISION DATES

REVISION DATES (PRELIMINARY STAGE ONLY): 11/18/08 01/16/09 04/22/09 05/13/09 05/27/09 09/01/09 1-13-10

SHEET 7 OF 11

FILE => 46-0032r-kts01.dgn

USERNAME => frrright DATE PLOTTED => 04-AUG-2010 TIME PLOTTED => 14:55

DIST	COUNTY	ROUTE	POST MILES TOTAL PROJECT	SHEET No	TOTAL SHEETS
06	Tul,Fre	99	41.3/R53.9, R0.0/R1.2	607	687

REGISTERED CIVIL ENGINEER 1/13/10 DATE

1-25-10
PLANS APPROVAL DATE

The State of California or its officers or agents shall not be responsible for the accuracy or completeness of electronic copies of this plan sheet.

REGISTERED PROFESSIONAL ENGINEER Todd W. Dudley No. C39514 Exp. 12/31/2011 CIVIL STATE OF CALIFORNIA

LIM & NASCIMENTO ENGINEERING
20 EMPIRE DRIVE
LAKE FOREST, CALIFORNIA 92630

NOTES:

1. Splices in top main bars to be located near ℄ of span.
2. Splices in bottom main bars to be located near bent.
3. Splices in adjacent bars to be staggered.
4. Place all transverse bars parallel to bent.
5. Lap splice with existing #7 transverse reinforcement.
6. Existing transverse reinforcement to be protected in place and extented into new construction as shown.
7. See "BARRIER ARCHITECTURAL SURFACE DETAIL" sheet for added architectural treatment.

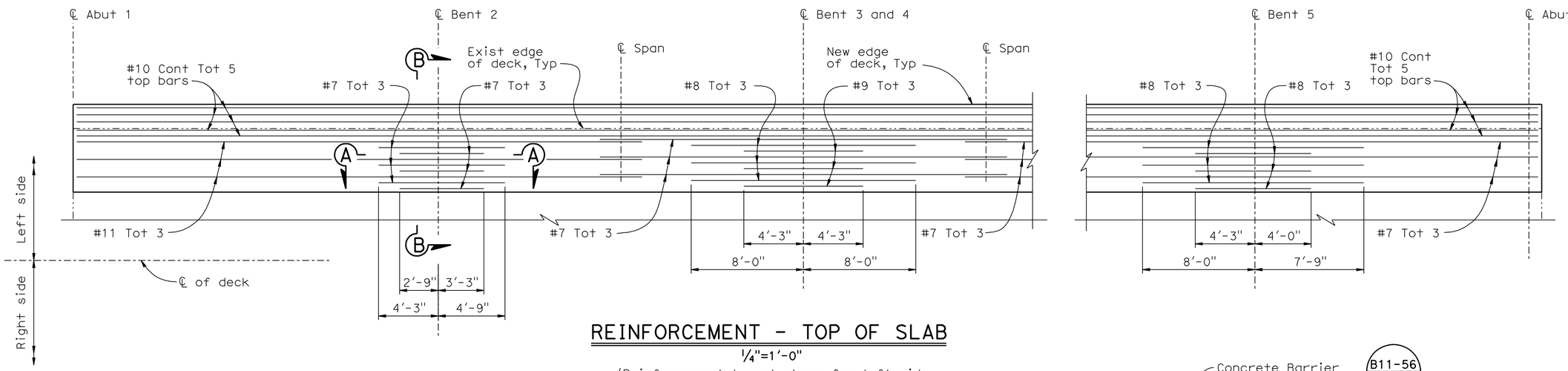

REINFORCEMENT - TOP OF SLAB

1/4"=1'-0"

(Reinforcement layout shown for left side widening, right side widening similar)

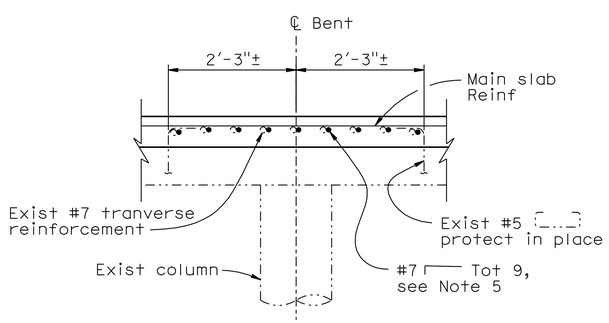

Section A-A

3/4"=1'-0"

(Typical, Bents 2 through 5)

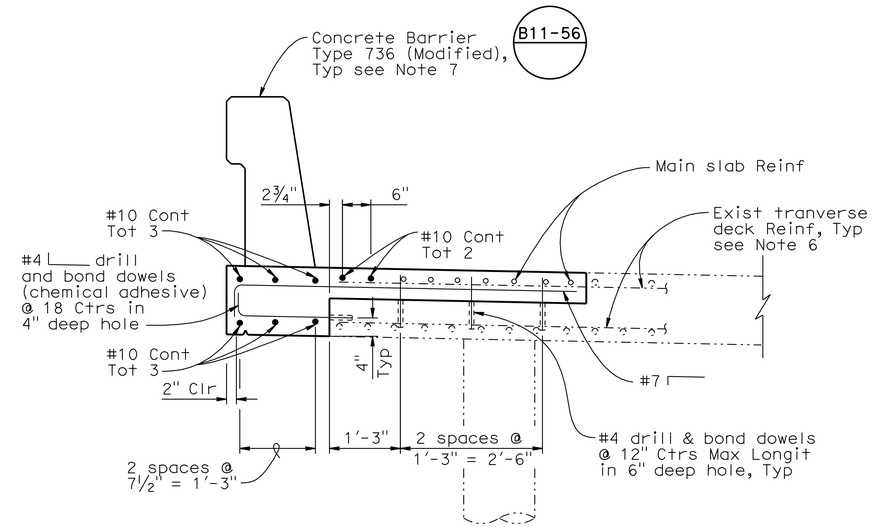

Section B-B

3/4"=1'-0"

(Typical, Bents 2 through 5)

Note:
The Contractor shall verify all controlling field dimensions before ordering or fabricating any material.

DESIGN OVERSIGHT Fritz Hoffman	DESIGN	BY T. Dudley	CHECKED M. Stiller
Sept 8, 2009	DETAILS	BY Y. Ng / C. Lee	CHECKED T. Dudley
SIGN OFF DATE	QUANTITIES	BY C. Lee	CHECKED M. Stiller

PREPARED FOR THE STATE OF CALIFORNIA DEPARTMENT OF TRANSPORTATION

Stephen J. Mislinski
PROJECT ENGINEER

BRIDGE NO. 46-0032R
POST MILE 44.8

CROSS CREEK BRIDGE (WIDEN)
LONGITUDINAL REINFORCEMENT

DESIGN DETAIL SHEET (ENGLISH) (REV. 2/25/05)

ORIGINAL SCALE IN INCHES FOR REDUCED PLANS 0 1 2 3

CU 06249
EA 324501

DISREGARD PRINTS BEARING EARLIER REVISION DATES

REVISION DATES (PRELIMINARY STAGE ONLY): 01/16/09 04/27/09 05/13/09 05/27/09 09/01/09 1-13-10

SHEET 8 OF 11

FILE => 46-0032r-lslr01.dgn

USERNAME => trrichf DATE PLOTTED => 04-AUG-2010 TIME PLOTTED => 14:55

DIST	COUNTY	ROUTE	POST MILES TOTAL PROJECT	SHEET No	TOTAL SHEETS
06	Tul,Fre	99	41.3/R53.9, R0.0/R1.2	608	687

REGISTERED CIVIL ENGINEER 1/13/10 DATE

1-25-10
PLANS APPROVAL DATE

The State of California or its officers or agents shall not be responsible for the accuracy or completeness of electronic copies of this plan sheet.

REGISTERED PROFESSIONAL ENGINEER Todd W. Dudley No. C39514 Exp. 12/31/2011 CIVIL STATE OF CALIFORNIA

LIM & NASCIMENTO ENGINEERING
20 EMPIRE DRIVE
LAKE FOREST, CALIFORNIA 92630

NOTES:

1. For details not shown, see Standard Plan B11-56.
2. Height of repeating pattern measured along the slope of the barrier face.
3. Dry stacked stone finish shall be applied to the surface of concrete barrier railing between the BB and the EB of the bridge.

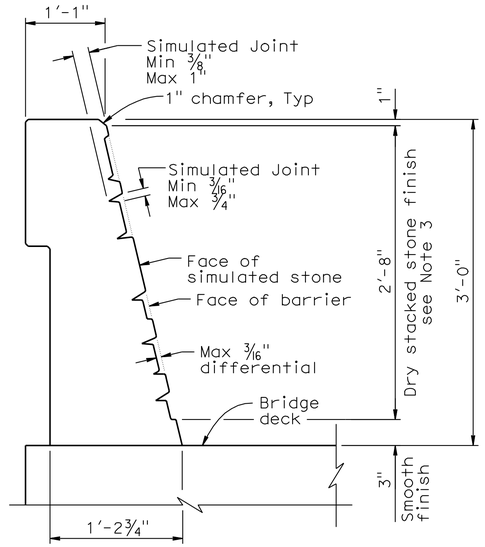

TYPE 736 (MODIFIED)
See Note 1

CONCRETE BARRIER SECTION

No scale

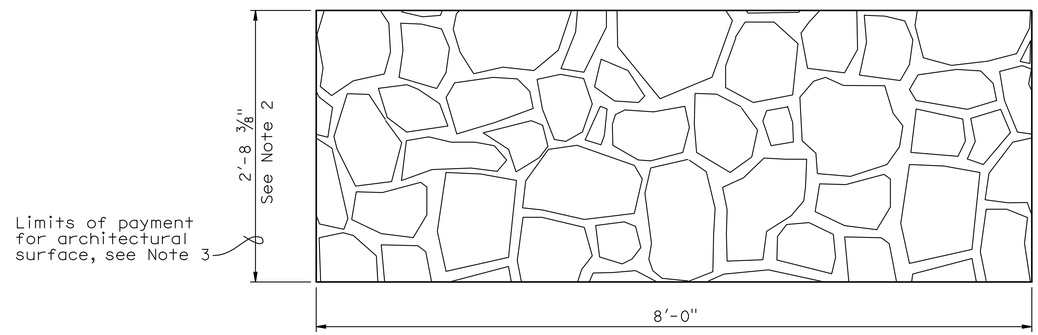

DEVELOPED ELEVATION

REPEATING PATTERN

No scale

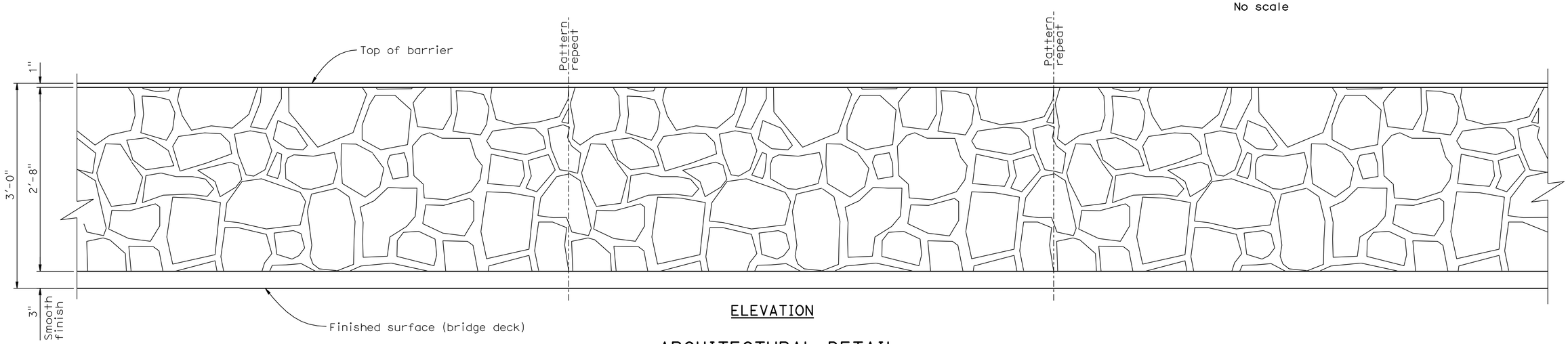

ELEVATION

ARCHITECTURAL DETAIL
CONCRETE BARRIER TYPE 736 (MODIFIED)

No scale
See Note 3

Note:
The Contractor shall verify all controlling field dimensions before ordering or fabricating any material.

DESIGN OVERSIGHT Fritz Hoffman
Sept 8, 2009
SIGN OFF DATE

	BY	CHECKED
DESIGN	T. Dudley	M. Stiller
DETAILS	Y. Ng / C. Lee	T. Dudley
QUANTITIES	C. Lee	M. Stiller

PREPARED FOR THE STATE OF CALIFORNIA DEPARTMENT OF TRANSPORTATION

Stephen J. Mislinski
PROJECT ENGINEER

BRIDGE NO. 46-0032R
POST MILE 44.8

CROSS CREEK BRIDGE (WIDEN)
BARRIER ARCHITECTURAL SURFACE DETAIL

DESIGN DETAIL SHEET (ENGLISH) (REV. 2/25/05)

ORIGINAL SCALE IN INCHES FOR REDUCED PLANS 0 1 2 3

CU 06249
EA 324501

DISREGARD PRINTS BEARING EARLIER REVISION DATES

REVISION DATES (PRELIMINARY STAGE ONLY): 05/27/09 05/27/09 09/01/09 1-13-10

SHEET 9 OF 11

FILE => 46-0032r-mconcsur.dgn

USERNAME => trrichf DATE PLOTTED => 04-AUG-2010 TIME PLOTTED => 14:56

DIST	COUNTY	ROUTE	POST MILES TOTAL PROJECT	SHEET No	TOTAL SHEETS
06	Tul,Fre	99	41.3/R53.9, R0.0/R1.2	609	687

REGISTERED CIVIL ENGINEER 1/13/10 DATE

1-25-10
PLANS APPROVAL DATE

REGISTERED PROFESSIONAL ENGINEER Todd W. Dudley No. C39514 Exp. 12/31/2011 CIVIL STATE OF CALIFORNIA

The State of California or its officers or agents shall not be responsible for the accuracy or completeness of electronic copies of this plan sheet.

LIM & NASCIMENTO ENGINEERING
20 EMPIRE DRIVE
LAKE FOREST, CALIFORNIA 92630

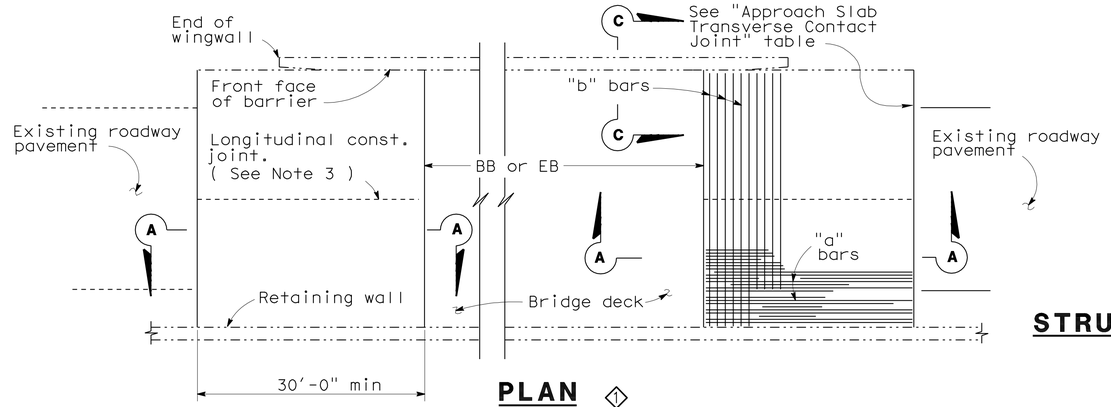

PLAN ◇1
1"=10'

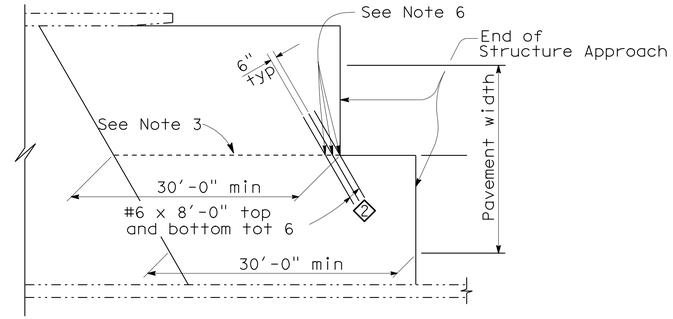

STRUCTURE APPROACH - END STAGGER DETAIL
No Scale

APPROACH SLAB TRANSVERSE CONTACT JOINT		
APPROACH SKEW	WITH AC ROADWAY PAVEMENT	WITH PCC ROADWAY PAVEMENT
< 10°	Parallel to face of paving notch	Parallel to face of paving notch
10° - 45°	Parallel to face of P N use (Detail A)	Stagger lines 24' to 36' apart
> 45°	Parallel to face of P N use (Detail A)	Stagger at each lane line

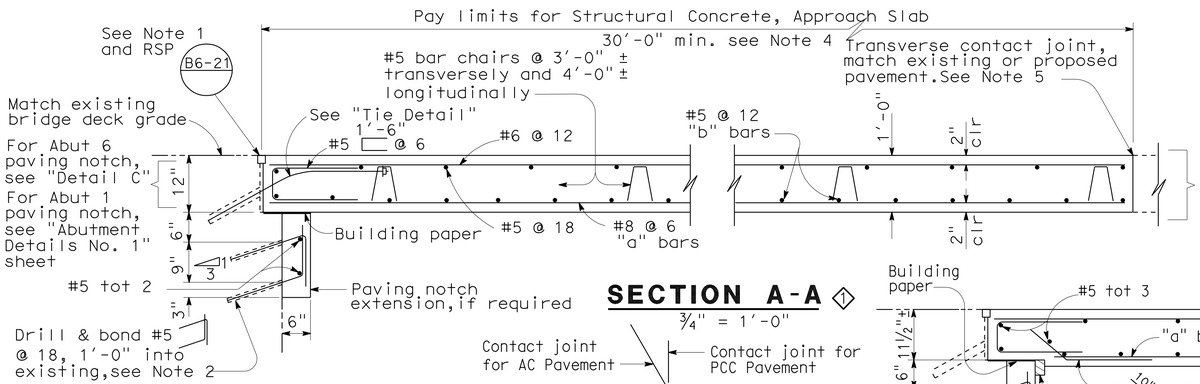

SECTION A-A ◇1
¾" = 1'-0"

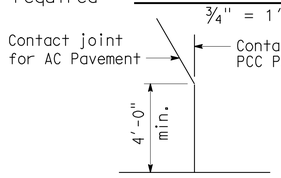

DETAIL A
No Scale

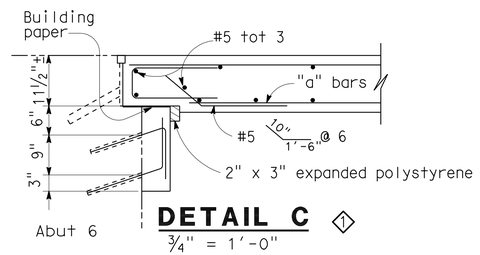

DETAIL C ◇1
¾" = 1'-0"

NOTE: For details not shown,see "Section A-A".

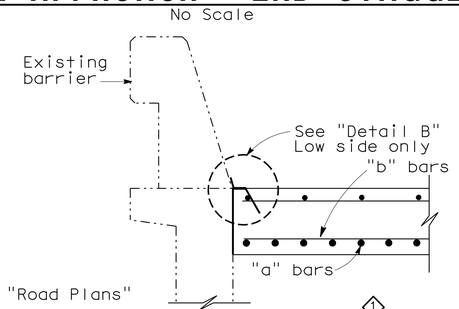

SECTION C-C ◇1
¾" = 1'-0"

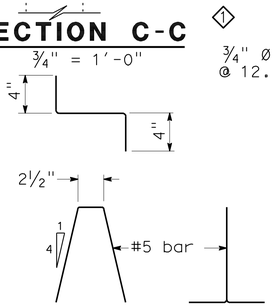

BAR CHAIR DETAIL
1½" = 1'-0"

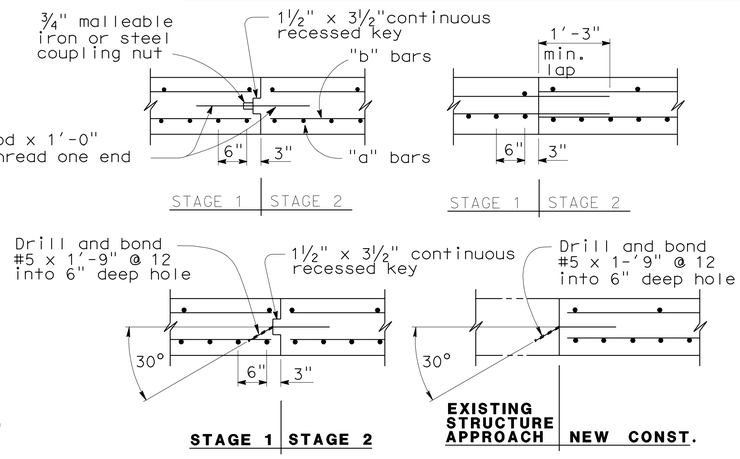

LONGITUDINAL CONSTRUCTION JOINT ALTERNATIVES
¾" = 1'-0"

NOTES:

1. For details not shown or noted,see Structure Plans. Adjust bar reinforcement to clear a sawcut for sealed joint,when required.
2. Space to avoid existing prestress anchorages and main reinforcement.
3. Longitudinal construction joints,when permitted by the Engineer,shall be located on lane lines.
4. Transverse contact joint shall be a minimum of 5'-0" from an existing or constructed weakened plane joint.
5. For transverse contact joint with new PCC paving. refer to Standard Plan P10.
6. Couplers are required for stage construction.
7. End angle or plate at beginning of barrier transition, end of wingwall or end of structure approach as applicable.

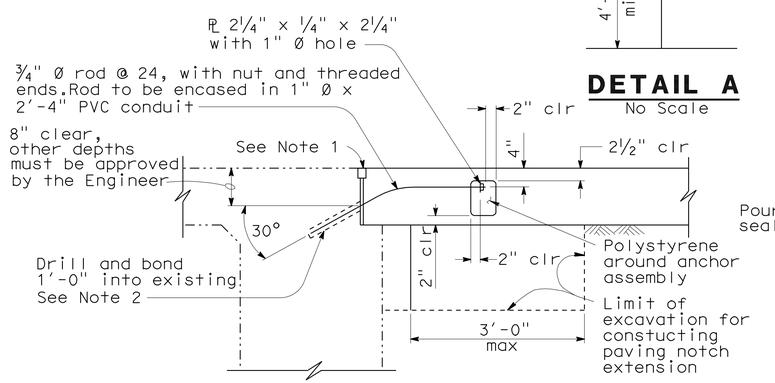

TIE DETAIL
¾" = 1'-0"

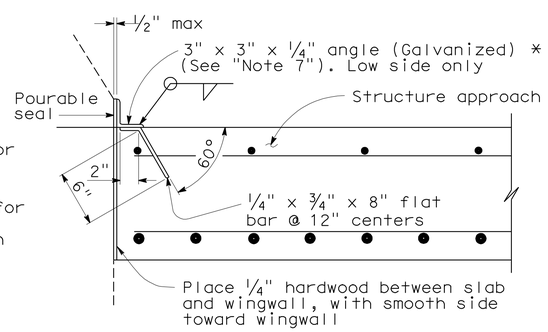

*(TO BE USED WITH TYPE 25 OR TYPE 27 CONCRETE BARRIER)

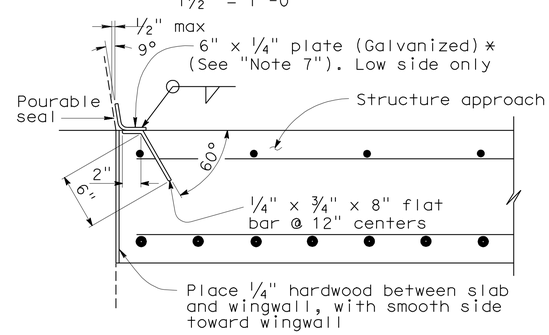

*(TO BE USED WITH TYPE 732 OR TYPE 736 CONCRETE BARRIER)

DETAIL B
1½" = 1'-0"

NOTE:
THE CONTRACTOR SHALL VERIFY ALL CONTROLLING FIELD DIMENSIONS BEFORE ORDERING OR FABRICATING ANY MATERIAL.

STANDARD DRAWING				
RELEASE DATE 3/14/05	DESIGN	BY M.TRAFFALIS	CHECKED E.THORKILDSEN	RELEASED BY
	DETAILS	BY R.YEE	CHECKED E.THORKILDSEN	
FILE NO. xs3-140e	SUBMITTED	BY M.HA	DRAWING DATE 8/92	OFFICE CHIEF

DS OSD 2147A (ENGLISH) (REV. X/XX/XX)

◇1 Plan, Section A-A, C-C and Detail C modified

STATE OF CALIFORNIA
DEPARTMENT OF TRANSPORTATION

DIVISION OF ENGINEERING SERVICES

CU 06249
EA 324501

ORIGINAL SCALE IN INCHES FOR REDUCED PLANS 0 1 2 3

BRIDGE NO. 46-0032R
MILE POST 44.8

CROSS CREEK BRIDGE (WIDEN)
STRUCTURE APPROACH TYPE R(30D)

DISREGARD PRINTS BEARING EARLIER REVISION DATES

REVISION DATES (PRELIMINARY STAGE ONLY) 11/16/0801/16/09 04/22/09 05/13/09 05/27/09 09/01/09 1-13-10

SHEET 10 OF 11

46-0032r-sapp_xs3-140e.dgn

USERNAME = rtrichf DATE PLOTTED -> 04-AUG-2010 TIME PLOTTED -> 14:56

DIST.	COUNTY	ROUTE	POST MILES—TOTAL PROJECT	SHEET NO.	TOTAL SHEETS
06	TUL	99	41.2/48.3	48	56

R C Blake
DESIGN SECTION SUPERVISOR — REGISTERED CIVIL ENGINEER NO. 8082

DATE APPROVED August 31, 1970

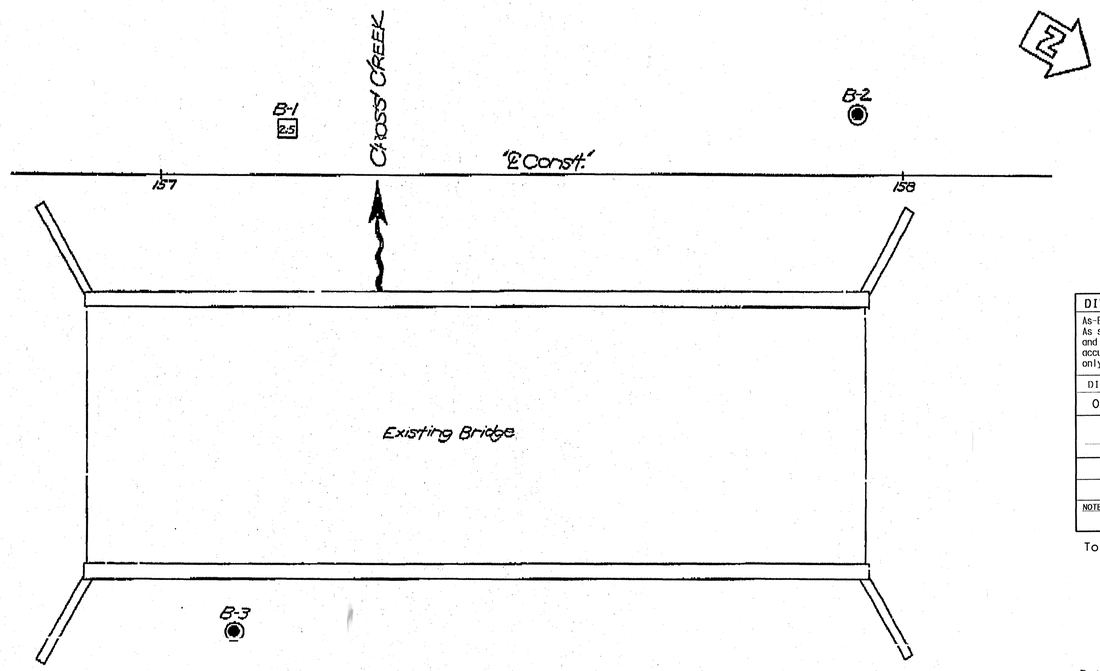

Plan
Scale: 1"=10'

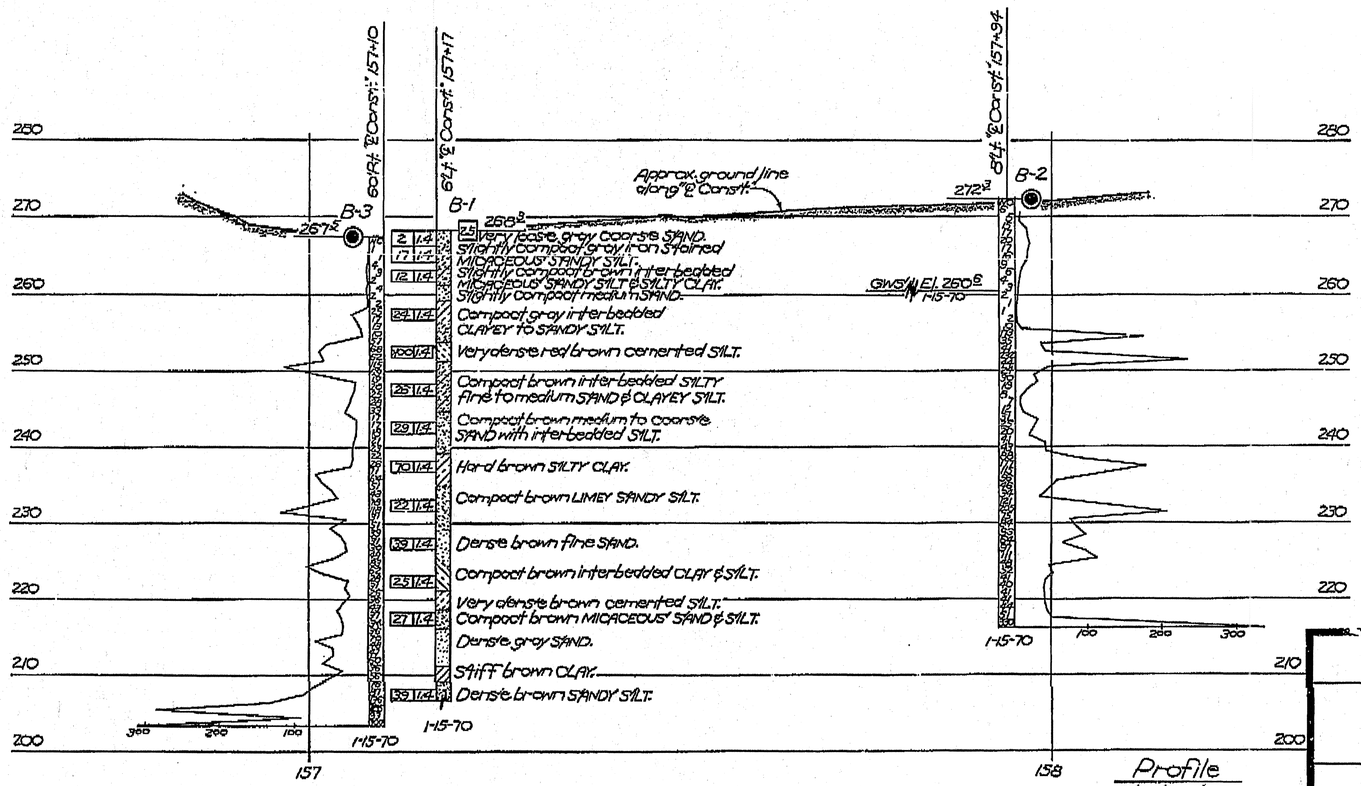

Profile
Scale: 1"=10'

DIVISION OF ENGINEERING SERVICES - GEOTECHNICAL SERVICES

As-Built Log of Test Borings sheet is considered an informational document only. As such, the State of California registration seal with signature, license number and registration certificate expiration date confirm that this is a true and accurate copy of the original document. This drawing is available and presented only for the convenience of any bidder, contractor or other interested party.

DIST.	COUNTY	ROUTE	POST MILE-TOTAL PROJECT	Sheet No.	Total Sheets
06	Tul,Fre	99	41.3/R53.9,R0.0/R1.2	610	687

Chris Koepke 2/26/09
REGISTERED PROFESSIONAL GEOLOGIST

REGISTERED PROFESSIONAL GEOLOGIST — Christopher W. Koepke — No. 2207 — Exp. 10-31-10 — CERTIFIED ENGINEERING GEOLOGIST — STATE OF CALIFORNIA

CROSS CREEK BRIDGE (WIDEN)

LOG OF TEST BORINGS

NOTE: A COPY OF THIS LOG OF TEST BORINGS IS AVAILABLE AT OFFICE OF STRUCTURE MAINTENANCE AND INVESTIGATIONS, SACRAMENTO, CALIFORNIA

CU: 06
EA: 324501

BRIDGE No. 46-0032 R/L

Sheet 11 of 11

To accompany plans dated 1-25-10

AS BUILT PLANS
Contract No. 06-100304
Date Completed 12-22-71
Document No. 60000866

RA Qualls Jr
06-100304 11/30/71
RRR 2/24/72

LEGEND OF BORING OPERATIONS

PENETROMETER — 2½" CONE PENETROMETER — SHIPPER BORING (DRY) — ROTARY BORING (WET) — AUGER BORING (DRY) — JET BORING — CORE BORING — TEST PIT

LEGEND OF EARTH MATERIALS

GRAVEL — SAND — SILT — CLAY — SANDY CLAY OR CLAYEY SAND — SANDY SILT OR SILTY SAND — CLAY OR SILT — PEAT AND ORGANIC MATTER — FILL MATERIAL — IGNEOUS ROCK — SEDIMENTARY ROCK — METAMORPHIC ROCK

CLASSIFICATION OF MATERIAL BASED ON STANDARD GRADE SIZE LIMITS

DIAGRAM SHOWING THE BASIS FOR ESTIMATES OF GRADE SIZE DISTRIBUTION USED IN DETERMINATION OF CLASS NAMES.
FOR THE PURPOSE OF ESTIMATING IN THE FIELD, AMOUNTS THE TERM "GRAVELLY" MAY BE ADDED TO THE CLASS NAME, VIZ. "GRAVELLY SAND". THE TERMS "SOME GRAVEL", "TRACE OF GRAVEL" WHICH ARE USED TO DESCRIBE SAND, SILT AND GRAVEL, REFER TO STANDARD GRADE SIZE LIMITS.

NOTE: Classification of earth material as shown on this sheet is based upon field inspection and is not to be construed to imply mechanical analysis.

STATE OF CALIFORNIA
TRANSPORTATION AGENCY
DEPARTMENT OF PUBLIC WORKS
DIVISION OF HIGHWAYS

CROSS CREEK BRIDGE

LOG OF TEST BORINGS

BRIDGE NO.	POST MILE	DRAWING NO.	SHEET	OF
46-32 R	44.8		5	5

REVISION DATES (PRELIMINARY STAGE ONLY)

WO 100301
CU 06201
PR 4632-2

Disregard prints showing earlier revision dates

FILENAME => 46-0032r-z-ltb01.tif

DIST	COUNTY	ROUTE	POST MILES TOTAL PROJECT	SHEET No	TOTAL SHEETS
06	Tul,Fre	99	41.3/R53.9, R0.0/R1.2	611	687

REGISTERED CIVIL ENGINEER — 09/01/09 DATE

1-25-10
PLANS APPROVAL DATE

REGISTERED PROFESSIONAL ENGINEER — DUAN WANG — No. C61439 — Exp. 06/30/11 — CIVIL — STATE OF CALIFORNIA

The State of California or its officers or agents shall not be responsible for the accuracy or completeness of electronic copies of this plan sheet.

MGE ENGINEERING, INC.
7415 GREENHAVEN DRIVE, SUITE 100
SACRAMENTO, CALIFORNIA 95831

LIM & NASCIMENTO ENGINEERING
20 EMPIRE DRIVE
LAKE FOREST, CALIFORNIA 92630

QUANTITIES

BRIDGE REMOVAL (PORTION), LOCATION F	LUMP	SUM
HOT MIX ASPHALT (TYPE B)	51	TON
STRUCTURAL CONCRETE, BOX CULVERT	202	CY
ARCHITECTURAL TEXTURE (DRY STACKED STONE)	533	SQFT
DRILL AND BOND DOWEL	3	LF
BAR REINFORCING STEEL (BOX CULVERT)	32,100	LB
PREPARE AND STAIN CONCRETE	533	SQFT
CONCRETE BARRIER (TYPE 736 MODIFIED)	259	LF

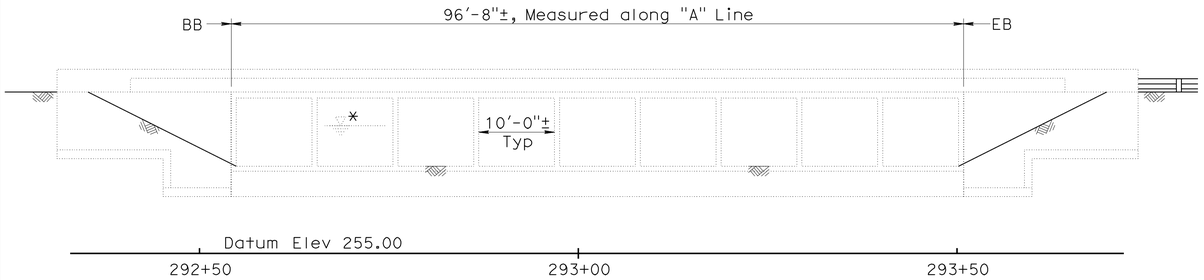

* For 'Hydrologic Summary', see "Foundation Plan" sheet.

ELEVATION
SCALE: 1" = 10'

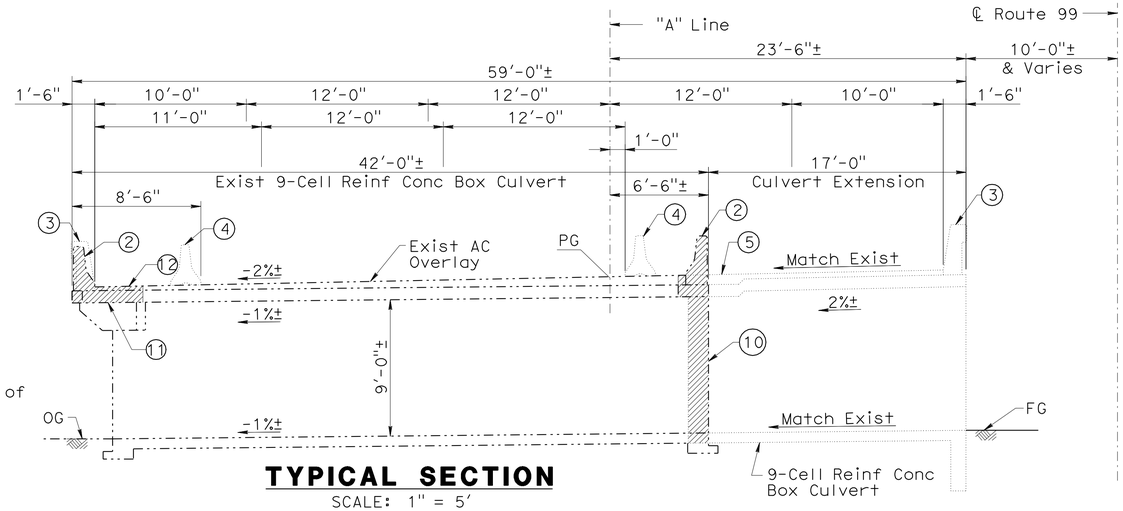

TYPICAL SECTION
SCALE: 1" = 5'

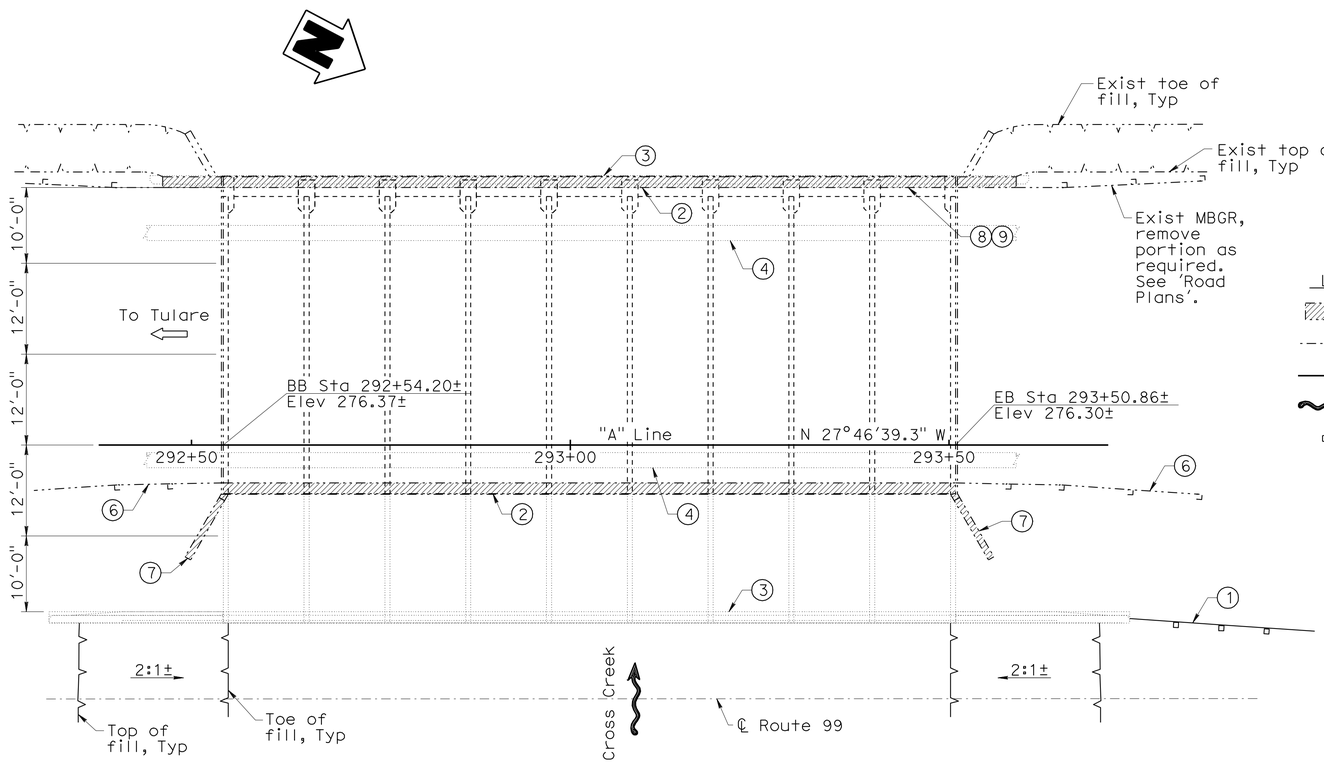

PLAN
SCALE: 1" = 10'

Note:
The Contractor shall verify all controlling field dimensions before ordering or fabricating any material.

LEGEND

- Indicates Limits of Bridge Removal (Portion)
- Indicates Exist Structure
- Indicates New Structure
- Indicates Direction of Flow
- Indicates Direction of Travel
- (1) MBGR, See 'Road Plans'
- (2) Remove Exist Concrete Barrier Type 27R/27/27B
- (3) Concrete Barrier Type 736 (Mod)
- (4) Temporary "K" Railing, See 'Road Plans'
- (5) Hot Mix Asphalt (Type B), Thickness Varies
- (6) Exist MBGR to be Removed, See 'Road Plans'
- (7) Remove Exist Wingwall
- (8) Paint "Cross Creek Bridge"
- (9) Paint "Br. No. 46-0032L"
- (10) Remove Exist Concrete (Exist Reinf to Remain)
- (11) Remove Portion of Exist Reinf Conc Slab
- (12) Remove Portion of Exist AC Overlay

INDEX TO PLANS

Sheet No.	Title
1	General Plan
2	Foundation Plan
3	Extension Details No. 1
4	Extension Details No. 2
5	Extension Details No. 3
6	Barrier Architectural Surface Detail
7	As-Built Log of Test Borings

STANDARD PLANS
Dated May 2006

A10A	Acronyms and Abbreviations (Sheet 1 of 2)
A10B	Acronyms and Abbreviations (Sheet 2 of 2)
A10C	Symbols (Sheet 1 of 2)
A10D	Symbols (Sheet 2 of 2)
A62A	Excavation and Backfill - Miscellaneous Details
A62B	Limits of Payment for Excavation and Backfill - Bridge Surcharge and Wall
A62E	Excavation and Backfill - Cast-In-Place Reinforced Concrete Box and Arch Culverts
B0-1	Bridge Details
B3-8	Retaining Wall Details No. 1
B11-56	Concrete Barrier Type 736
D84	Box Culvert Wingwalls Types A, B and C

Fritz Hoffman
DESIGN OVERSIGHT — Fritz Hoffman
Sept 8, 2009
SIGN OFF DATE

	BY	CHECKED			
DESIGN	D. Wang	D. Vang	LOAD FACTOR DESIGN	LIVE LOADING: HS20-44	
DETAILS	X. Sun	D. Vang	LAYOUT: D. Wang	CHECKED D. Vang	
QUANTITIES	D. Wang	K. Wang	SPECIFICATIONS: R. Sennett	PLANS AND SPECS COMPARED G. Xu	

PREPARED FOR THE STATE OF CALIFORNIA DEPARTMENT OF TRANSPORTATION

Guoping Xu
PROJECT ENGINEER

BRIDGE NO. 46-0032L
POST MILES 44.80

CROSS CREEK BRIDGE (WIDEN)
GENERAL PLAN

DESIGN GENERAL PLAN SHEET (ENGLISH) (REV.2/25/05)

ORIGINAL SCALE IN INCHES FOR REDUCED PLANS 0 1 2 3

CU 06249
EA 324501

DISREGARD PRINTS BEARING EARLIER REVISION DATES
REVISION DATES (PRELIMINARY STAGE ONLY): 10/16/08 01/12/09 4/22/09 05/28/09 09/01/09

SHEET 1 OF 7

FILE => 46-00321-a-gp01.dgn

USERNAME => jtrright DATE PLOTTED => 04-AUG-2010 TIME PLOTTED => 14:56

DIST	COUNTY	ROUTE	POST MILES TOTAL PROJECT	SHEET No	TOTAL SHEETS
06	Tul,Fre	99	41.3/R53.9, R0.0/R1.2	612	687

REGISTERED CIVIL ENGINEER 09/01/09 DATE

1-25-10
PLANS APPROVAL DATE

REGISTERED PROFESSIONAL ENGINEER DUAN WANG No. C61439 Exp. 06/30/11 CIVIL STATE OF CALIFORNIA

The State of California or its officers or agents shall not be responsible for the accuracy or completeness of electronic copies of this plan sheet.

MGE ENGINEERING, INC.
7415 GREENHAVEN DRIVE, SUITE 100
SACRAMENTO, CALIFORNIA 95831

LIM & NASCIMENTO ENGINEERING
20 EMPIRE DRIVE
LAKE FOREST, CALIFORNIA 92630

LEGEND

- Indicates Limits of Bridge Removal (Portion)
- Indicates Exist Structure
- Indicates New Structure
- Indicates Direction of Flow
- xxx.xx Indicates Bottom of Footing Elevation
- xxx.xx * Indicates Bottom of Invert Slab Elevation

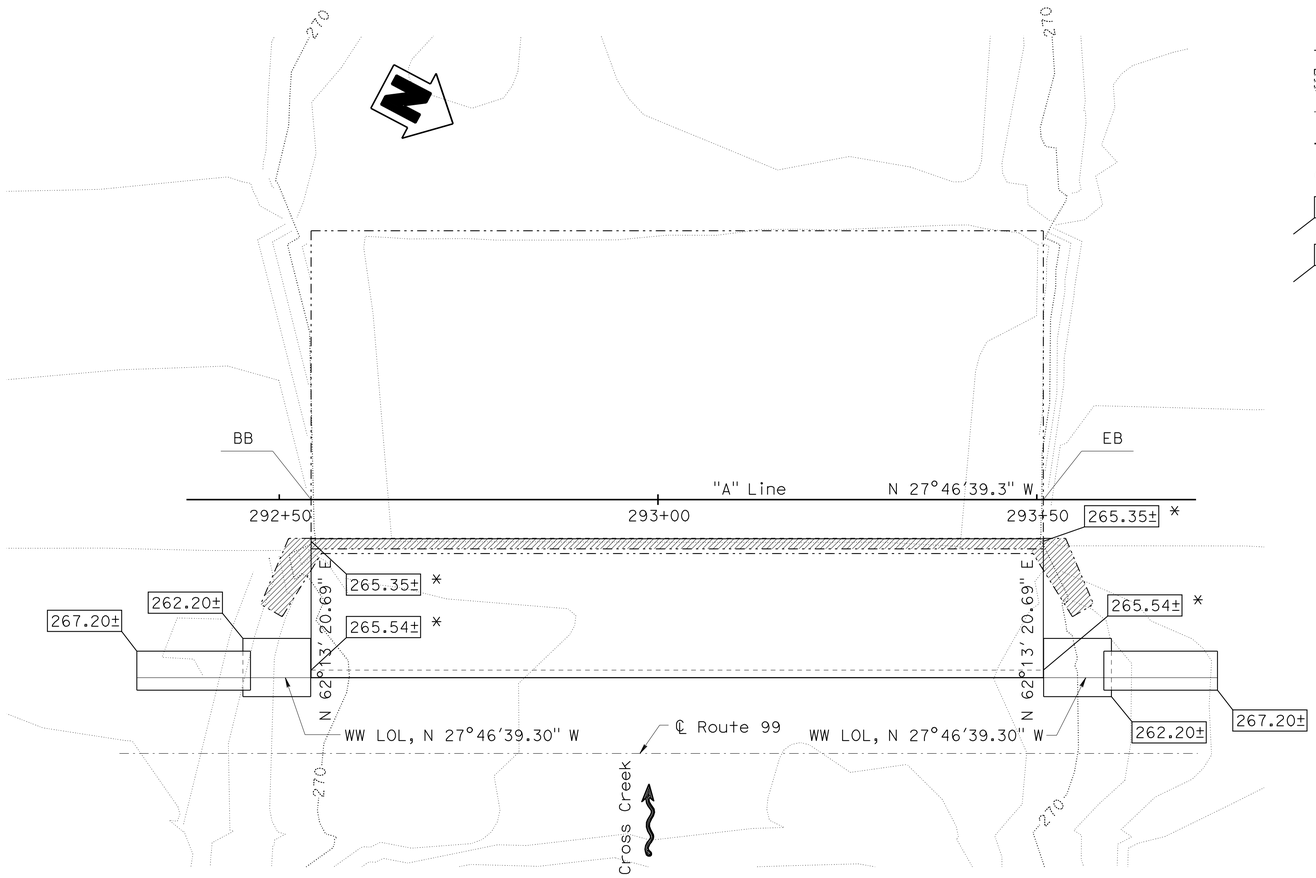

FOUNDATION PLAN

SCALE: 1" = 10'

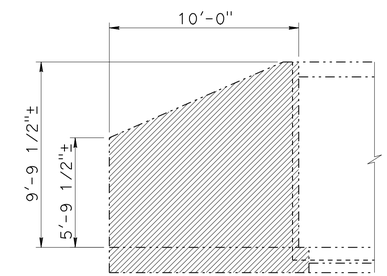

ELEVATION

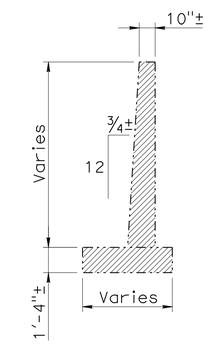

SECTION

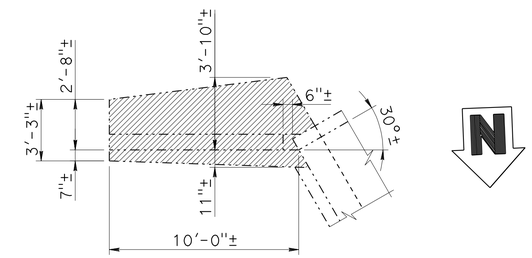

PLAN

Note: South wingwall shown, north wingwall similar.

EXIST WINGWALL DEMOLITION DETAIL

SCALE: 1/4" = 1'-0"

GENERAL NOTES
LOAD FACTOR DESIGN

Design: Bridge Design Specifications, April 2000 (1996 AASHTO with Interims and Revisions by Caltrans) except that bridge barriers are designed per AASHTO LRFD Bridge Design Specifications, 3rd Edition with Interims through 2006 and the Caltrans Amendments, V3.06.01

Dead Load: Includes 35 psf for future wearing surface

Live Loading: HS20-44 with 30% Impact except that bridge barriers are design based on LRFD live loading

Earth Pressure: (1) Vertical: 140 pcf; Horizontal: 140 pcf
(2) Vertical: 140 pcf; Horizontal: 42 pcf

Reinforced Concrete: fy = 60 ksi
f'c = 3.6 ksi
n = 8

SPREAD FOOTING DATA TABLE

Support Location	Allowable Bearing Capacity q_{all}	Nominal Bearing Resistance q_n
All	3.0 ksf	6.0 ksf

HYDROLOGIC SUMMARY

	Max Discharge Design Flood Max Capacity
Frequency (Years)	
Discharge (Cubic feet per second)	3,880
Water Surface (Elevation at bridge)	272.0

Flood plain data are based upon information available when the plans were prepared and are shown to meet federal requirements. The accuracy of said information is not warranted by the State and interested or affected parties should make their own investigation.

Note:
The Contractor shall verify all controlling field dimensions before ordering or fabricating any material.

Fritz Hoffman
DESIGN OVERSIGHT Fritz Hoffman
Sept 8, 2009
SIGN OFF DATE

SCALE:	VERT.DATUM NAVD 88	HORZ.DATUM NAD 83
PHOTOGRAMMETRY AS OF:	ALIGNMENT TIES Dist. Traverse Sheet	
SURVEYED BY District	DRAFTED BY J. Martinez	
FIELD CHECKED BY T. Gillett	CHECKED BY T. Zolnikova	

DESIGN	BY D. Wang	CHECKED D. Vang	
DETAILS	BY X. Sun	CHECKED D. Vang	
QUANTITIES	BY D. Wang	CHECKED K. Wang	

PREPARED FOR THE STATE OF CALIFORNIA DEPARTMENT OF TRANSPORTATION

Guoping Xu
PROJECT ENGINEER

BRIDGE NO. 46-0032L
POST MILE 44.80

CROSS CREEK BRIDGE (WIDEN)
FOUNDATION PLAN

FOUNDATION PLAN SHEET (ENGLISH) (REV. 2-25-05)

ORIGINAL SCALE IN INCHES FOR REDUCED PLANS 0 1 2 3

CU 06249
EA 324501

DISREGARD PRINTS BEARING EARLIER REVISION DATES

REVISION DATES (PRELIMINARY STAGE ONLY) 10/16/08 01/12/09 04/22/09 09/01/09

SHEET 2 OF 7

FILE => 46-0032l-e-fdp101.dgn

USERNAME => rrright DATE PLOTTED => 04-AUG-2010 TIME PLOTTED => 14:56

DIST	COUNTY	ROUTE	POST MILES TOTAL PROJECT	SHEET No	TOTAL SHEETS
06	Tul,Fre	99	41.3/R53.9, R0.0/R1.2	613	687

REGISTERED CIVIL ENGINEER — DATE 09/01/09

1-25-10
PLANS APPROVAL DATE

REGISTERED PROFESSIONAL ENGINEER — DUAN WANG — No. C61439 — Exp. 06/30/11 — CIVIL — STATE OF CALIFORNIA

The State of California or its officers or agents shall not be responsible for the accuracy or completeness of electronic copies of this plan sheet.

MGE ENGINEERING, INC.
7415 GREENHAVEN DRIVE, SUITE 100
SACRAMENTO, CALIFORNIA 95831

LIM & NASCIMENTO ENGINEERING
20 EMPIRE DRIVE
LAKE FOREST, CALIFORNIA 92630

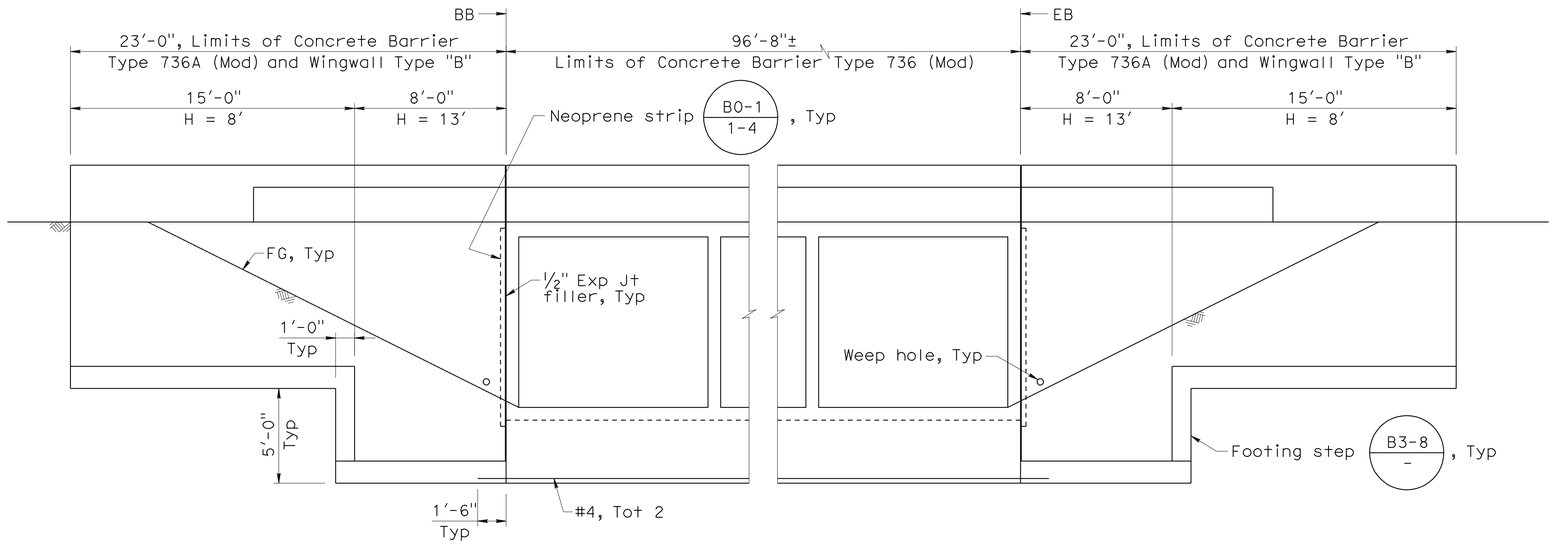

PARTIAL ELEVATION

SCALE: 1/4" = 1'-0"

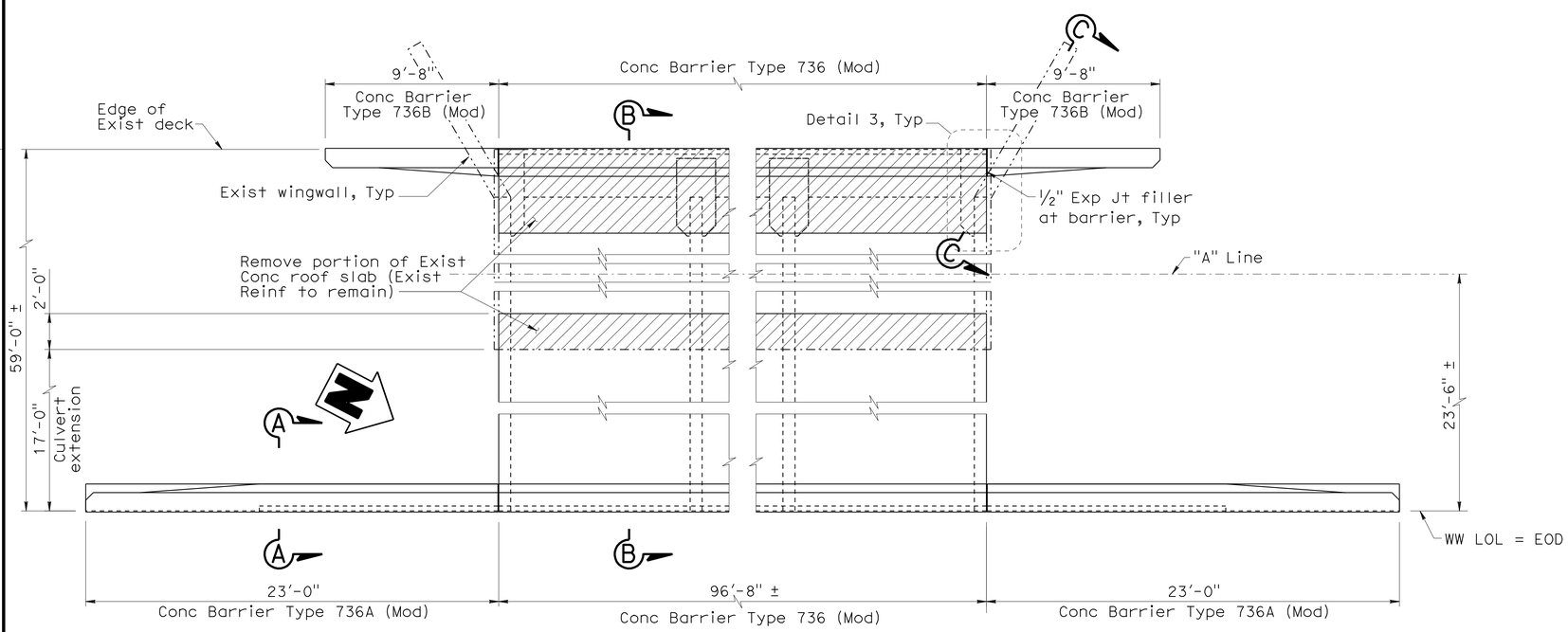

Note:
Removal of Exist wingwalls not shown. See "Foundation Plan" sheet for removal limits and details.
Removal of Exist barrier not shown, see Section B-B on "Extension Detail No. 3" sheet for details.

PARTIAL PLAN

SCALE: 1/4" = 1'-0"

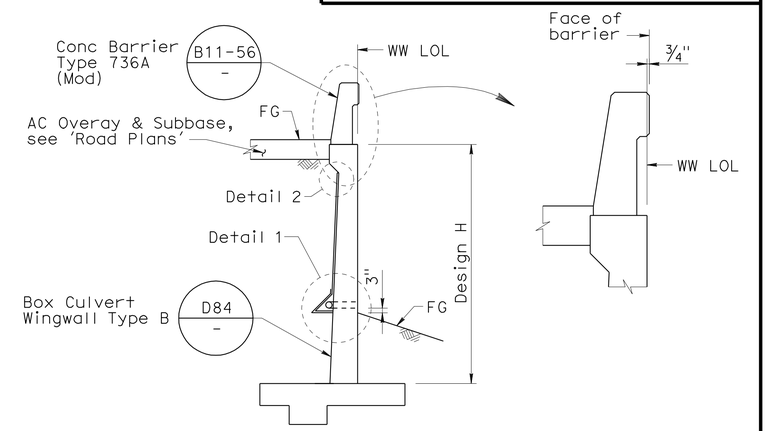

SECTION A-A

SCALE: 1/4" = 1'-0"

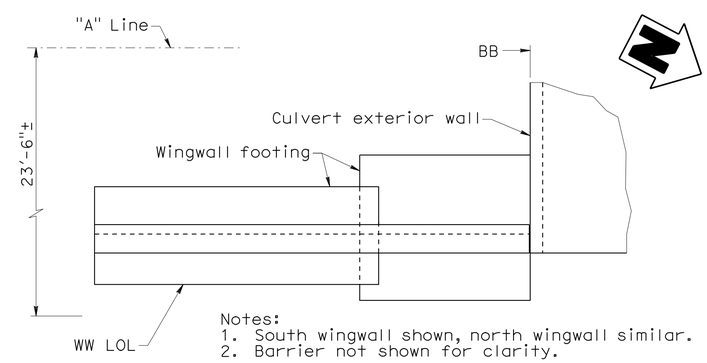

Notes:
1. South wingwall shown, north wingwall similar.
2. Barrier not shown for clarity.

WINGWALL LAYOUT

SCALE: 1/4" = 1'-0"

Notes:

1. For Section B-B, Detail 1 and Detail 2, see "Extension Details No. 3" sheet.
2. See Standard Plan sheet D82 for details and notes not shown.
3. For Section C-C and Detail 3, see "Extension Details No. 2" sheet.

Note:
The Contractor shall verify all controlling field dimensions before ordering or fabricating any material.

LEGEND

Indicates Limits of Bridge Removal (Portion)

DESIGN OVERSIGHT — Fritz Hoffman
Sept 8, 2009
SIGN OFF DATE

	BY	CHECKED
DESIGN	D. Wang	D. Vang
DETAILS	X. Sun	D. Vang
QUANTITIES	D. Wang	K. Wang

PREPARED FOR THE STATE OF CALIFORNIA DEPARTMENT OF TRANSPORTATION

Guoping Xu
PROJECT ENGINEER

BRIDGE NO. 46-0032L
POST MILE 44.80

CROSS CREEK BRIDGE (WIDEN)
EXTENSION DETAILS NO. 1

DESIGN DETAIL SHEET (ENGLISH) (REV. 2/25/05)

ORIGINAL SCALE IN INCHES FOR REDUCED PLANS 0 1 2 3

CU 06249
EA 324501

DISREGARD PRINTS BEARING EARLIER REVISION DATES

REVISION DATES (PRELIMINARY STAGE ONLY) 10/10/08 01/27/09 04/22/09 05/27/09 09/01/09

SHEET 3 OF 7

FILE => 46-0032l-f-a01dt01.dgn

USERNAME => trrichf DATE PLOTTED => 04-AUG-2010 TIME PLOTTED => 14:57

DIST	COUNTY	ROUTE	POST MILES TOTAL PROJECT	SHEET No	TOTAL SHEETS
06	Tul,Fre	99	41.3/R53.9, R0.0/R1.2	614	687

REGISTERED CIVIL ENGINEER 09/01/09 DATE

1-25-10
PLANS APPROVAL DATE

REGISTERED PROFESSIONAL ENGINEER DUAN WANG No. C61439 Exp. 06/30/11 CIVIL STATE OF CALIFORNIA

The State of California or its officers or agents shall not be responsible for the accuracy or completeness of electronic copies of this plan sheet.

MGE ENGINEERING, INC.
7415 GREENHAVEN DRIVE, SUITE 100
SACRAMENTO, CALIFORNIA 95831

LIM & NASCIMENTO ENGINEERING
20 EMPIRE DRIVE
LAKE FOREST, CALIFORNIA 92630

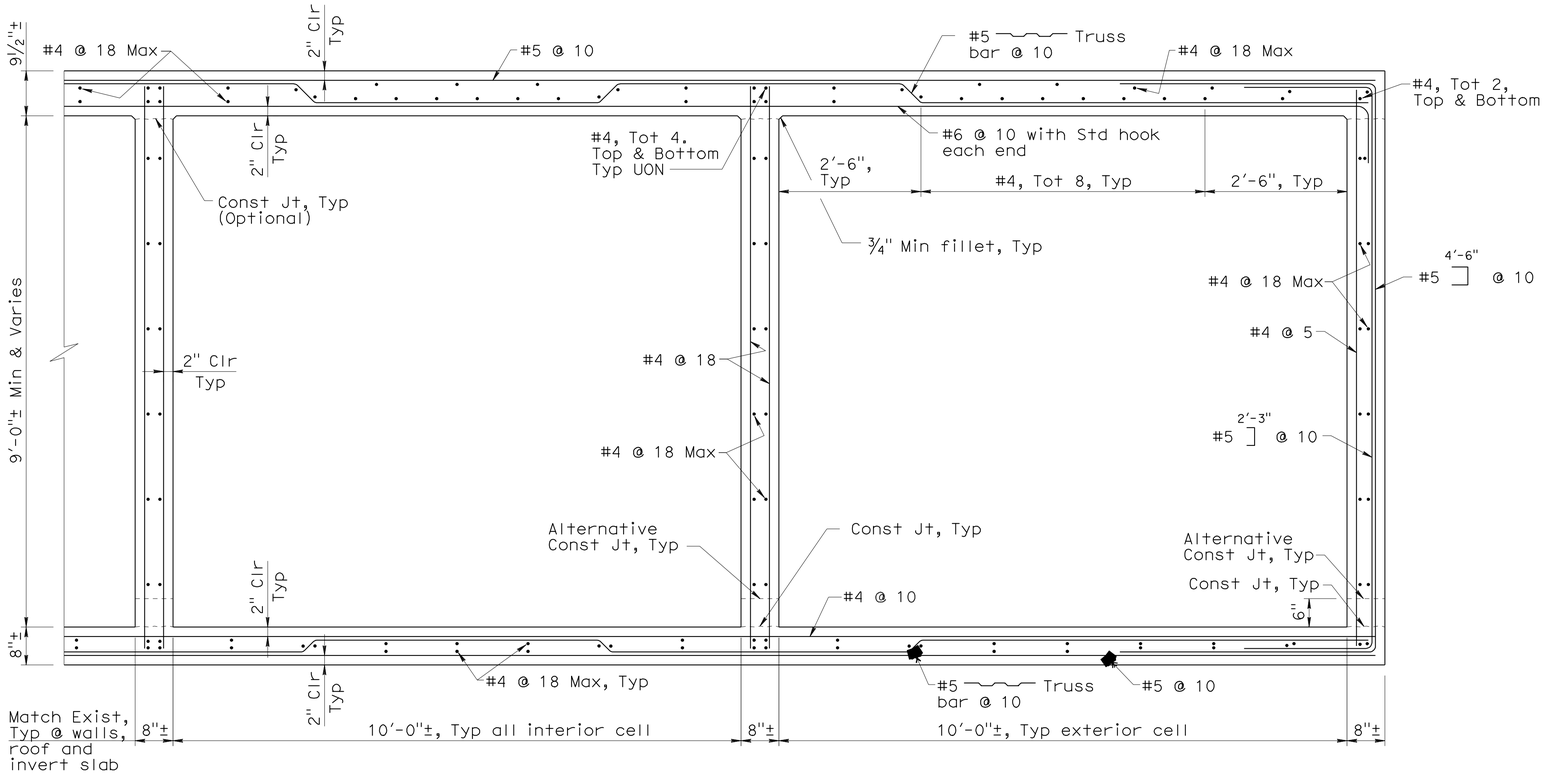

PARTIAL CULVERT PARTIAL TYPICAL SECTION

SCALE: ¾" = 1'-0"

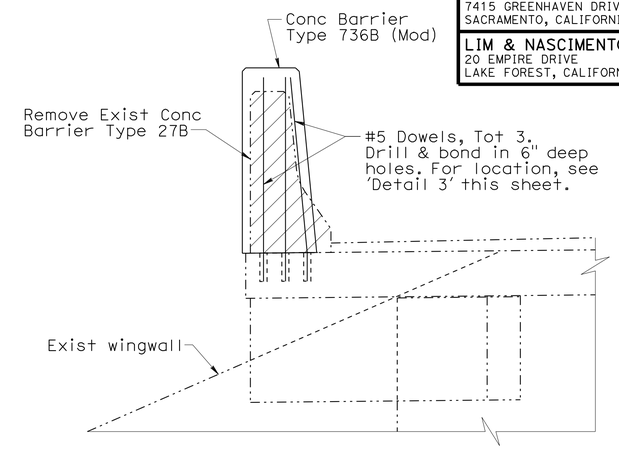

SECTION C-C

Scale: ¾" = 1'-0"

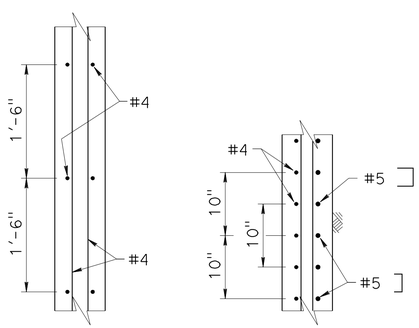

INTERIOR EXTERIOR

WALL SECTION

SCALE: 1" = 1'-0"

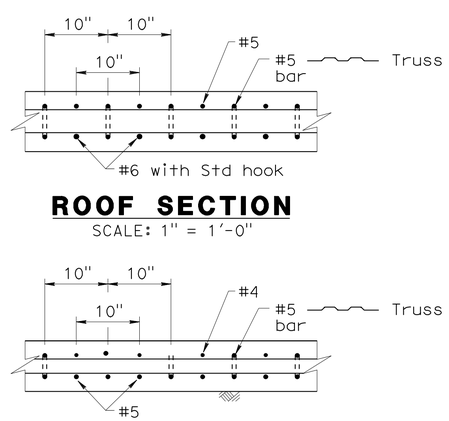

ROOF SECTION

SCALE: 1" = 1'-0"

INVERT SECTION

SCALE: 1" = 1'-0"

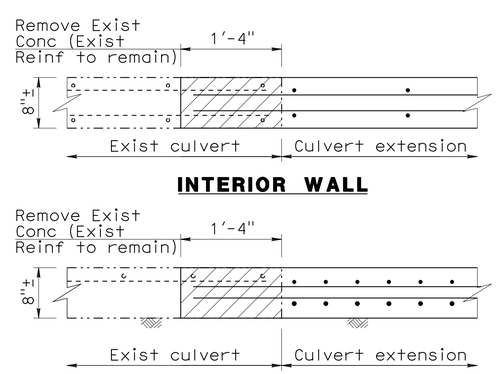

INTERIOR WALL

EXTERIOR WALL

WALL CONNECTION DETAIL

SCALE: 1" = 1'-0"

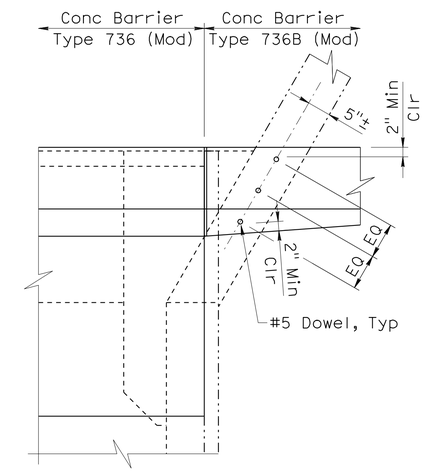

DETAIL 3

Scale: ¾" = 1'-0"

Note:
The Contractor shall verify all controlling field dimensions before ordering or fabricating any material.

LEGEND

Indicates Limits of Bridge Removal (Portion)

Note:
1. See Standard Plan sheet D82 for details and notes not shown.

DESIGN OVERSIGHT Fritz Hoffman
Sept 8, 2009
SIGN OFF DATE

	BY	CHECKED
DESIGN	D. Wang	D. Vang
DETAILS	X. Sun	D. Vang
QUANTITIES	D. Wang	K. Wang

PREPARED FOR THE STATE OF CALIFORNIA DEPARTMENT OF TRANSPORTATION

Guoping Xu
PROJECT ENGINEER

BRIDGE NO. 46-0032L
POST MILE 44.80

CROSS CREEK BRIDGE (WIDEN)
EXTENSION DETAILS NO. 2

DESIGN DETAIL SHEET (ENGLISH) (REV. 2/25/05)

ORIGINAL SCALE IN INCHES FOR REDUCED PLANS 0 1 2 3

CU 06249
EA 324501

DISREGARD PRINTS BEARING EARLIER REVISION DATES

REVISION DATES (PRELIMINARY STAGE ONLY) 10/17/08 01/12/09 04/22/08 05/27/09 09/01/09

SHEET 4 OF 7

FILE => 46-0032I-f-a01dt02.dgn

USERNAME => trrichf DATE PLOTTED => 04-AUG-2010 TIME PLOTTED => 14:57

DIST	COUNTY	ROUTE	POST MILES TOTAL PROJECT	SHEET No	TOTAL SHEETS
06	Tul,Fre	99	41.3/R53.9, R0.0/R1.2	615	687

REGISTERED CIVIL ENGINEER 09/01/09 DATE

1-25-10
PLANS APPROVAL DATE

The State of California or its officers or agents shall not be responsible for the accuracy or completeness of electronic copies of this plan sheet.

REGISTERED PROFESSIONAL ENGINEER DUAN WANG No. C61439 Exp. 06/30/11 CIVIL STATE OF CALIFORNIA

MGE ENGINEERING, INC.
7415 GREENHAVEN DRIVE, SUITE 100
SACRAMENTO, CALIFORNIA 95831

LIM & NASCIMENTO ENGINEERING
20 EMPIRE DRIVE
LAKE FOREST, CALIFORNIA 92630

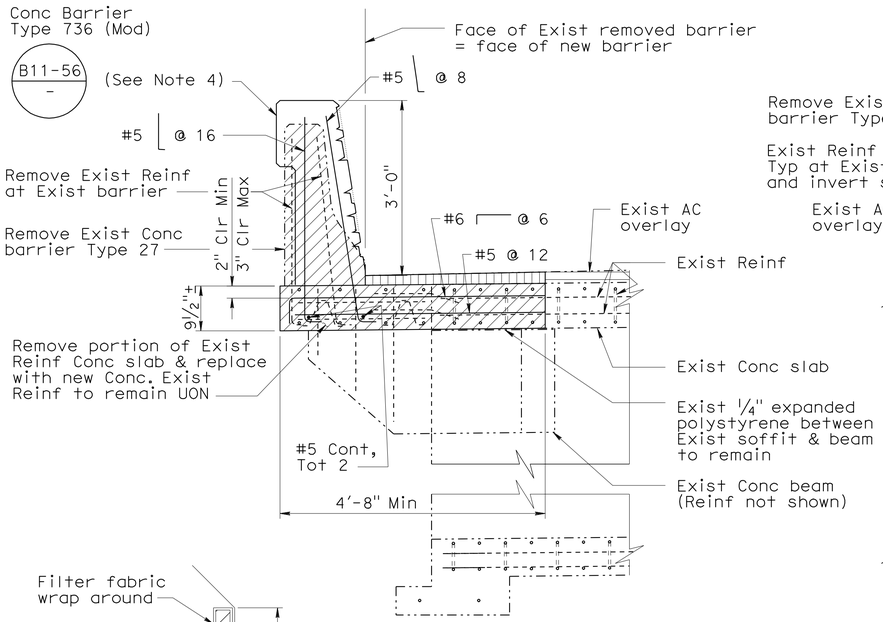

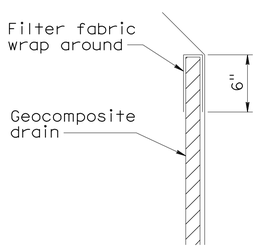

DETAIL 2
No Scale

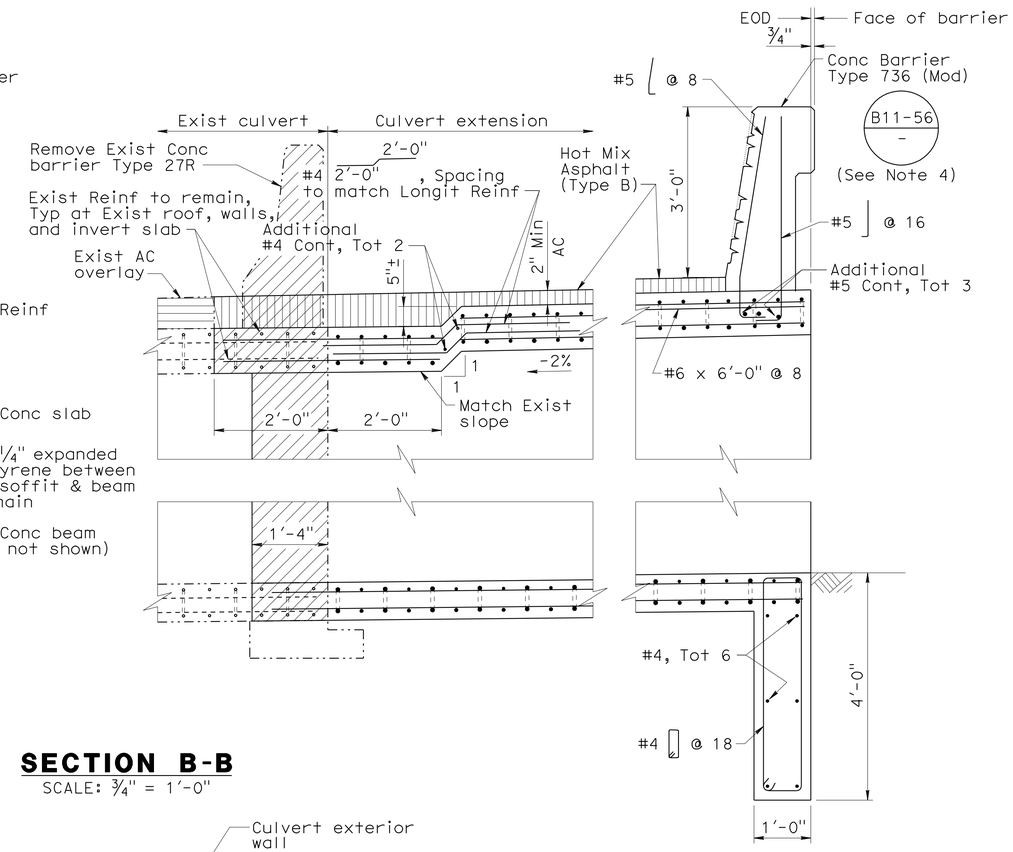

SECTION B-B
SCALE: 3/4" = 1'-0"

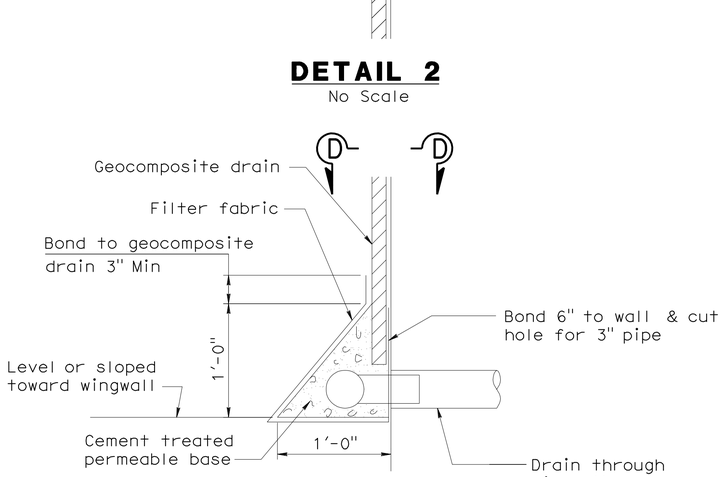

DETAIL 1
No Scale

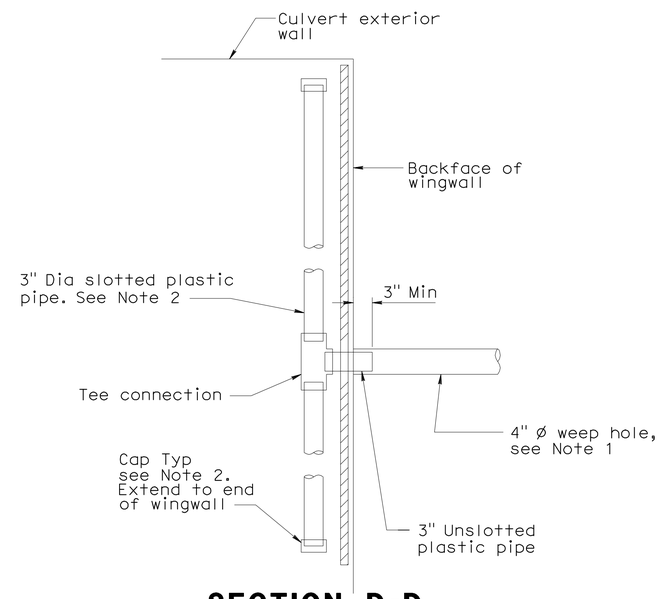

SECTION D-D
No Scale

LEGEND

- Indicates Limits of Bridge Removal (Portion)
- Indicates Hot Mix Asphalt (Type B)
- Indicates Exist AC overlay

Notes:

1. 4" drains at 20' Max center to center. Weep holes shall be located 3" above finished grade.
2. Geocomposite drain, cement treated permeable base, and 3" Dia slotted plastic pipe continuous behind wingwalls. Cap ends of pipe. Provide "Tee" connection at each 4" Dia drain.
3. See Standard Plan sheet D82 for details and notes not shown.
4. For architectural surface detail at barrier, see "Barrier Architectural Surface Detail" sheet.

Note:
The Contractor shall verify all controlling field dimensions before ordering or fabricating any material.

DESIGN OVERSIGHT Fritz Hoffman
Sept 8, 2009
SIGN OFF DATE

	BY	CHECKED
DESIGN	D. Wang	D. Vang
DETAILS	X. Sun	D. Vang
QUANTITIES	D. Wang	K. Wang

PREPARED FOR THE STATE OF CALIFORNIA DEPARTMENT OF TRANSPORTATION

Guoping Xu
PROJECT ENGINEER

BRIDGE NO. 46-0032L
POST MILE 44.80

CROSS CREEK BRIDGE (WIDEN)
EXTENSION DETAILS NO. 3

DESIGN DETAIL SHEET (ENGLISH) (REV. 2/25/05)

ORIGINAL SCALE IN INCHES FOR REDUCED PLANS 0 1 2 3

CU 06249
EA 324501

DISREGARD PRINTS BEARING EARLIER REVISION DATES

REVISION DATES (PRELIMINARY STAGE ONLY) 04/28/09 05/13/09 05/22/09 09/01/09

SHEET 5 OF 7

FILE => 46-0032I-f-a01dt03.dgn

USERNAME => trrichf DATE PLOTTED => 04-AUG-2010 TIME PLOTTED => 14:57

DIST	COUNTY	ROUTE	POST MILES TOTAL PROJECT	SHEET No	TOTAL SHEETS
06	Tul,Fre	99	41.3/R53.9, R0.0/R1.2	616	687

REGISTERED CIVIL ENGINEER 09/01/09 DATE

1-25-10
PLANS APPROVAL DATE

The State of California or its officers or agents shall not be responsible for the accuracy or completeness of electronic copies of this plan sheet.

REGISTERED PROFESSIONAL ENGINEER DUAN WANG No. C61439 Exp. 06/30/11 CIVIL STATE OF CALIFORNIA

MGE ENGINEERING, INC.
7415 GREENHAVEN DRIVE, SUITE 100
SACRAMENTO, CALIFORNIA 95831

LIM & NASCIMENTO ENGINEERING
20 EMPIRE DRIVE
LAKE FOREST, CALIFORNIA 92630

NOTES:

1. For details not shown, see Standard Plan B11-56.
2. Height of repeating pattern measured along the slope of the barrier face.
3. Limits of placement and payment for architectural surface (dry stacked stone) texture shall be as shown in "Elevation" and shall extend from BB to EB.

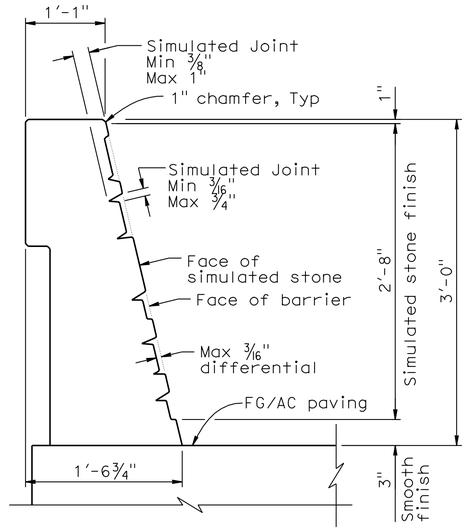

TYPE 736 (MODIFIED)
See Note 1

CONCRETE BARRIER SECTION

No scale

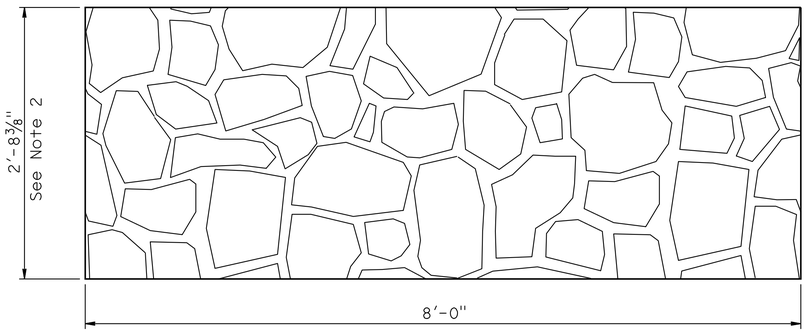

DEVELOPED ELEVATION

REPEATING PATTERN

No scale

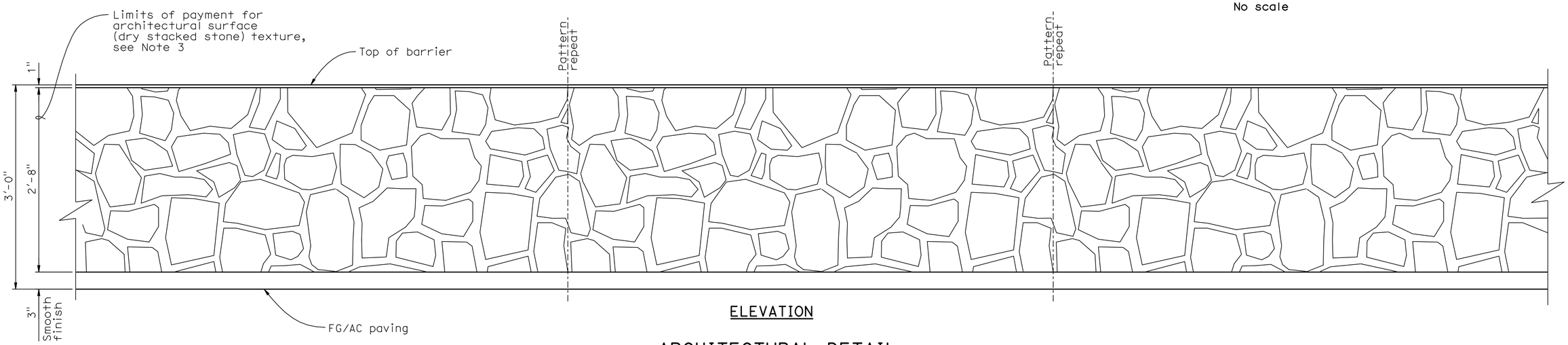

ELEVATION

ARCHITECTURAL DETAIL
CONCRETE BARRIER TYPE 736 (MODIFIED)

No scale

Note:
The Contractor shall verify all controlling field dimensions before ordering or fabricating any material.

Fritz Hoffman
DESIGN OVERSIGHT Fritz Hoffman
Sept 8, 2009
SIGN OFF DATE

	BY	CHECKED
DESIGN	D. Vang	G. Xu
DETAILS	X. Sun	G. Xu
QUANTITIES	D. Vang	K. Wang

PREPARED FOR THE STATE OF CALIFORNIA DEPARTMENT OF TRANSPORTATION

Guoping Xu
PROJECT ENGINEER

BRIDGE NO. 46-0032L
POST MILE 44.80

CROSS CREEK BRIDGE (WIDEN)
BARRIER ARCHITECTURAL SURFACE DETAIL

DESIGN DETAIL SHEET (ENGLISH) (REV. 2/25/05)

ORIGINAL SCALE IN INCHES FOR REDUCED PLANS 0 1 2 3

CU 06249
EA 324501

DISREGARD PRINTS BEARING EARLIER REVISION DATES → 05/28/09 09/01/09

REVISION DATES (PRELIMINARY STAGE ONLY)

SHEET 6 OF 7

FILE => 46-00321-t-brdt.dgn

USERNAME => trrichf DATE PLOTTED => 04-AUG-2010 TIME PLOTTED => 14:57

DIST.	COUNTY	ROUTE	POST MILES—TOTAL PROJECT	SHEET NO.	TOTAL SHEETS
06	Tul	99	41.2/48.3	48	56

R C Blake
DESIGN SECTION SUPERVISOR — REGISTERED CIVIL ENGINEER NO. 8082
DATE APPROVED August 31, 1970

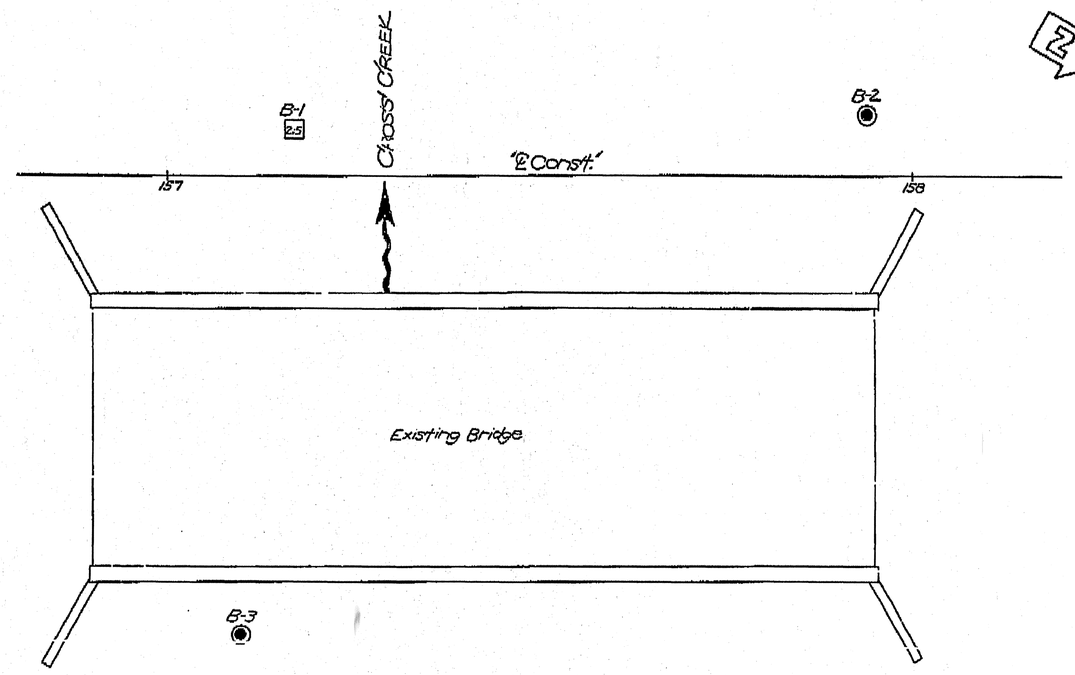

BM 15.79
Chiseled "□" on E. end of
NW wingwall of Br. #46-32L
Elev. 274.50

Plan
Scale: 1"=10'

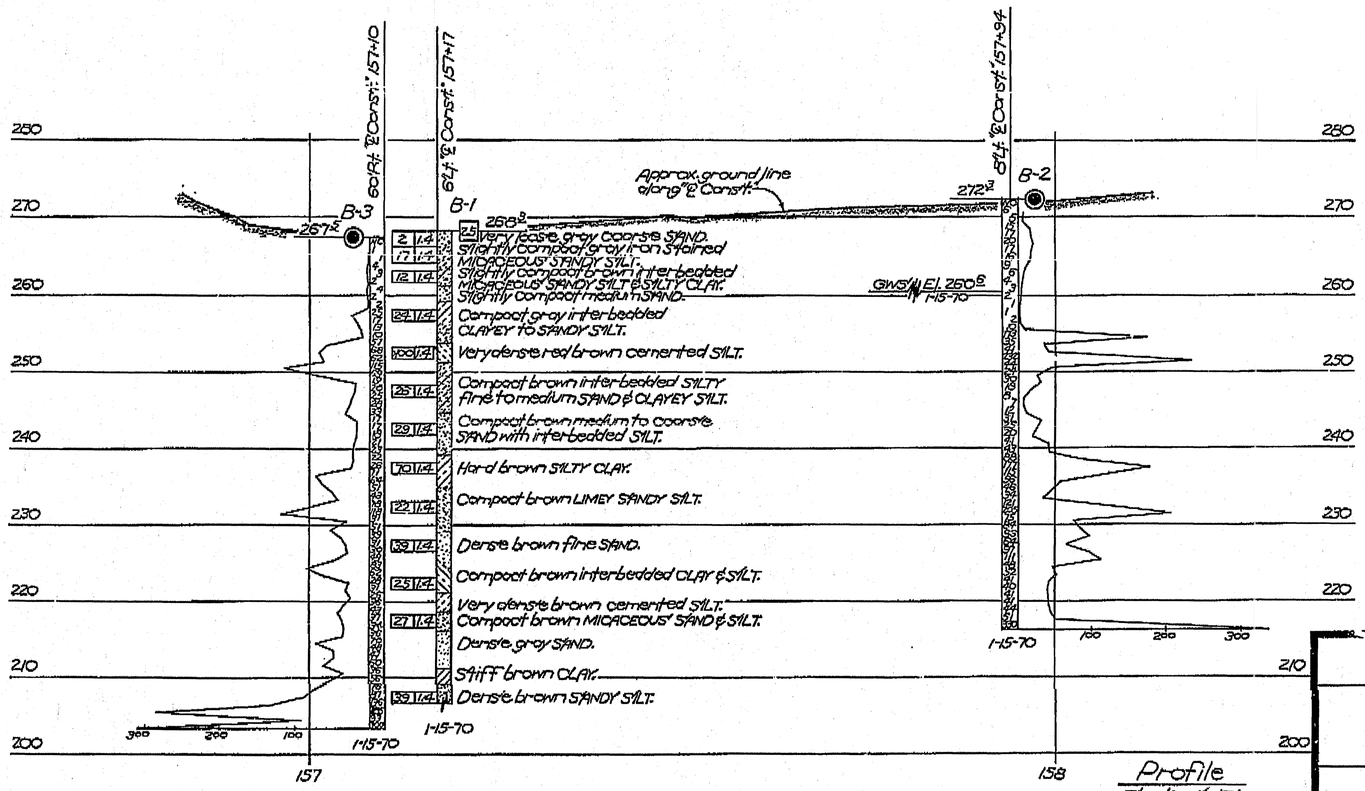

Profile
Scale: 1"=10'

DIVISION OF ENGINEERING SERVICES - GEOTECHNICAL SERVICES

As-Built Log of Test Borings sheet is considered an informational document only. As such, the State of California registration seal with signature, license number and registration certificate expiration date confirm that this is a true and accurate copy of the original document. This drawing is available and presented only for the convenience of any bidder, contractor or other interested party.

DIST.	COUNTY	ROUTE	POST MILE-TOTAL PROJECT	Sheet No.	Total Sheets
06	Tul,Fre	99	41.3/R53.9,R0.0/R1.2	617	687

Chris Koepke 2/26/09
REGISTERED PROFESSIONAL GEOLOGIST

REGISTERED PROFESSIONAL GEOLOGIST — Christopher W. Koepke — No. 2207 — Exp. 10-31-10 — CERTIFIED ENGINEERING GEOLOGIST — STATE OF CALIFORNIA

CROSS CREEK BRIDGE (WIDEN)

LOG OF TEST BORINGS

NOTE: A COPY OF THIS LOG OF TEST BORINGS IS AVAILABLE AT OFFICE OF STRUCTURE MAINTENANCE AND INVESTIGATIONS, SACRAMENTO, CALIFORNIA

CU: 06
EA: 324501

BRIDGE No. 46-0032 R/L

Sheet 7 of 7

To accompany plans dated 1-25-10

AS BUILT PLANS
Contract No. 06-100304
Date Completed 12-22-71
Document No. 60000866

R.A. Qualls Jr
06-100304 11/30/71
RRR 2/24/72

STATE OF CALIFORNIA
TRANSPORTATION AGENCY
DEPARTMENT OF PUBLIC WORKS
DIVISION OF HIGHWAYS

CROSS CREEK BRIDGE

LOG OF TEST BORINGS

BRIDGE No.	POST MILE	DRAWING No.	SHEET	OF
46-32R	44.8		5	5

REVISION DATES (PRELIMINARY STAGE ONLY) 3/10

LEGEND OF OPERATIONS

Penetrometer; 2½" Cone Penetrometer; Sniper Boring (Dry); Rotary Boring (Wet); Auger Boring (Dry); Jet Boring; Core Boring; Test Pit

Penetration Boring; Rotary Boring; Soil Tube

LEGEND OF EARTH MATERIALS

Gravel; Sand; Silt; Clay; Sandy Clay or Clayey Sand; Sandy Silt or Silty Sand; Peat and/or Organic Matter; Fill Material; Igneous Rock; Sedimentary Rock; Metamorphic Rock

CLASSIFICATION OF MATERIAL BASED ON STANDARD GRADE SIZE LIMITS

Diagram showing the sand and gravel estimates of grade size distribution used in determination of class names. If gravel is present in appreciable amounts (over about 10%), the word "gravelly" is added to the class name, viz. "gravelly sand." The terms "coarse," "medium," and "fine" refer to the sand fraction, and "coarse," "medium," and "fine" refer to the gravel fraction. Silt and gravel, refer to standard grade size limits.

NOTE: Classification of earth material as shown on this sheet is based upon field inspection and is not to be construed to imply mechanical analysis.

WO 100301
CU 06201
PR 4632-2

Disregard prints bearing earlier revision dates

FILENAME => 46-0032I-z-1tb01.tif

DIST	COUNTY	ROUTE	POST MILES TOTAL PROJECT	SHEET No	TOTAL SHEETS
06	Tul,Fre	99	41.3/R53.9, R0.0/R1.2	618	687

REGISTERED CIVIL ENGINEER — DATE 09/01/09

1-25-10
PLANS APPROVAL DATE

The State of California or its officers or agents shall not be responsible for the accuracy or completeness of electronic copies of this plan sheet.

REGISTERED PROFESSIONAL ENGINEER — DANNY C. VANG No. C60613 Exp. 12/31/10 CIVIL — STATE OF CALIFORNIA

MGE ENGINEERING, INC.
7415 GREENHAVEN DRIVE, SUITE 100
SACRAMENTO, CALIFORNIA 95831

LIM & NASCIMENTO ENGINEERING
20 EMPIRE DRIVE
LAKE FOREST, CALIFORNIA 92630

QUANTITIES

BRIDGE REMOVAL (PORTION), LOCATION G	LUMP	SUM
HOT MIX ASPHALT (TYPE B)	3	TON
STRUCTURAL CONCRETE, BOX CULVERT	18	CY
ARCHITECTURAL TEXTURE (DRY STACKED STONE)	253	SQFT
DRILL AND BOND DOWEL	171	LF
DRILL AND BOND DOWEL (CHEMICAL ADHESIVE)	53	EA
BAR REINFORCING STEEL (BOX CULVERT)	2,785	LB
PREPARE AND STAIN CONCRETE	253	SQFT
CONCRETE BARRIER (TYPE 736 MODIFIED)	172	LF

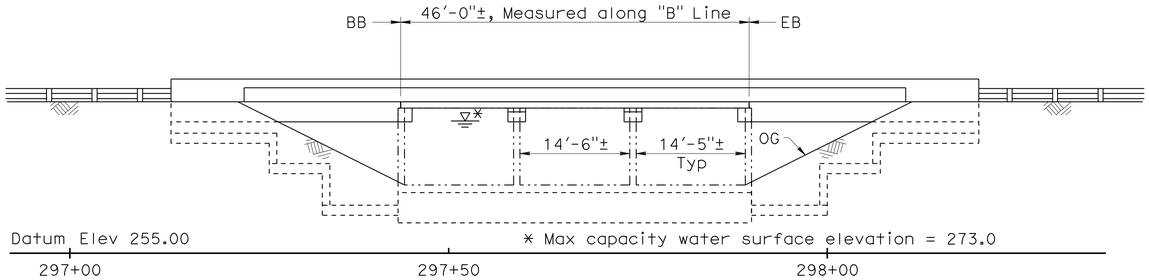

MIRRORED ELEVATION

SCALE: 1" = 10'

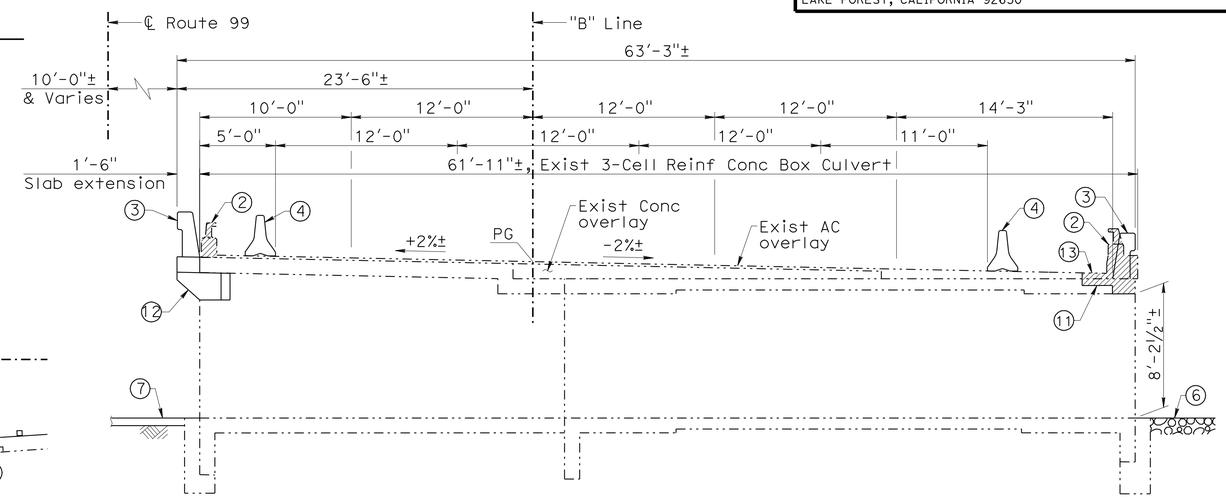

TYPICAL SECTION

SCALE: 1" = 5'

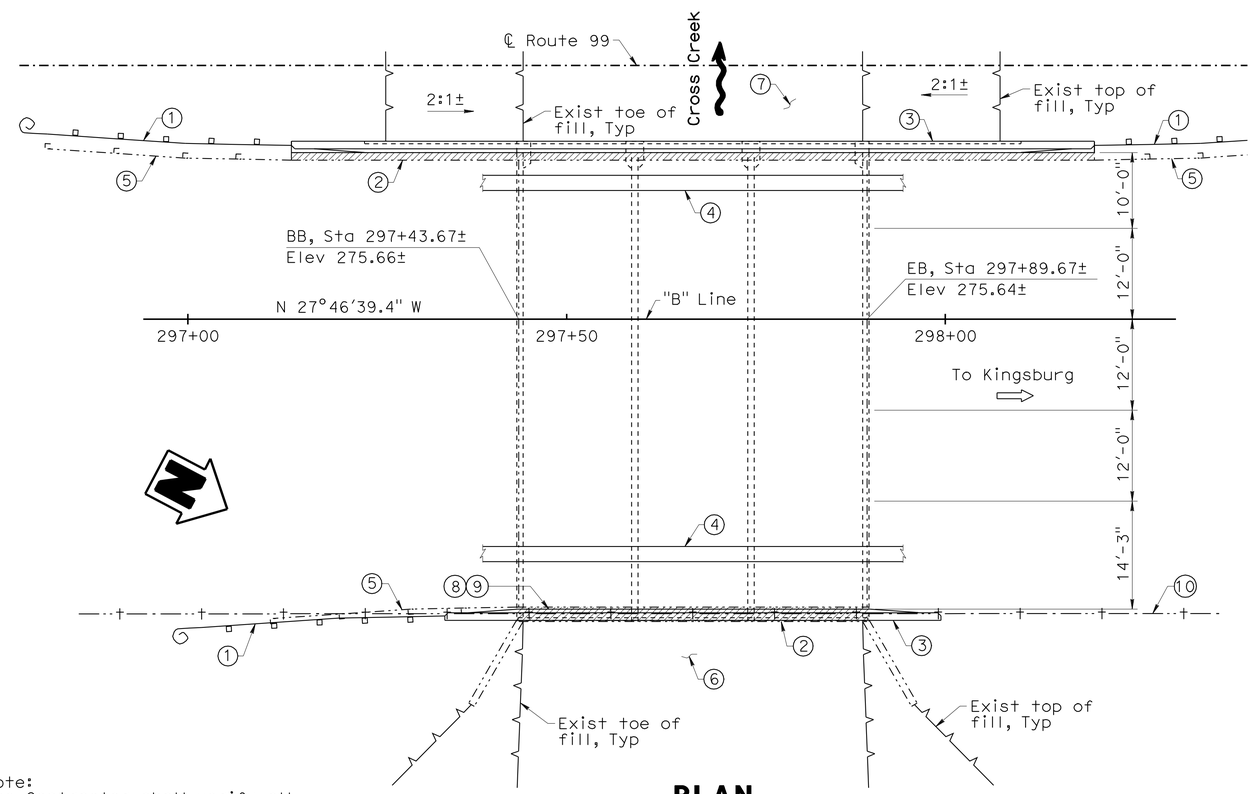

PLAN

SCALE: 1" = 10'

Note:
The Contractor shall verify all controlling field dimensions before ordering or fabricating any material.

LEGEND

- Indicates Limits of Bridge Removal (Portion)
- Indicates Exist Structure
- Indicates New Structure
- Indicates Direction of Flow
- Indicates Direction of Travel
- (1) MBGR, See 'Road Plans'
- (2) Remove Exist Concrete Barrier with Type 9 Metal Railing. Salvage Metal Portion of Exist Barrier Rail.
- (3) Concrete Barrier Type 736 (Mod)
- (4) Temporary "K" Railing, See 'Road Plans'
- (5) Exist MBGR to be Removed, See 'Road Plans'
- (6) Rock Slope Protection, See 'Road Plans'
- (7) Pave with Concrete, See 'Road Plans'
- (8) Paint "Cross Creek Bridge"
- (9) Paint "Br. No. 46-0033R"
- (10) Exist Underground Telephone Conduit to Remain
- (11) Remove Portion of Exist Reinf Conc Slab
- (12) Reinforced Concrete Corbel
- (13) Remove Portion of Exist AC Overlay

STANDARD PLANS
Dated May 2006

A10A	Acronyms and Abbreviations (Sheet 1 of 2)
A10B	Acronyms and Abbreviations (Sheet 2 of 2)
A10C	Symbols (Sheet 1 of 2)
A10D	Symbols (Sheet 2 of 2)
B11-56	Concrete Barrier Type 736

INDEX TO PLANS

Sheet No.	Title
1	General Plan
2	Extension Details No. 1
3	Extension Details No. 2
4	Extension Details No. 3
5	Barrier Architectural Surface Detail
6	As-Built Log of Test Borings

Notes:

1. For 'General Notes', see "Extension Details No. 2" sheet.
2. Vertical datum is per NAVD 88.

Fritz Hoffman — DESIGN OVERSIGHT Fritz Hoffman; Sept 8, 2009 — SIGN OFF DATE	DESIGN	BY D. Vang	CHECKED G. Xu	LOAD FACTOR DESIGN	LIVE LOADING: HS20-44
	DETAILS	BY X. Sun	CHECKED G. Xu	LAYOUT BY D. Vang	CHECKED G. Xu
	QUANTITIES	BY D. Vang	CHECKED K. Wang	SPECIFICATIONS BY R. Price	PLANS AND SPECS COMPARED R. Sennett

PREPARED FOR THE STATE OF CALIFORNIA DEPARTMENT OF TRANSPORTATION

Guoping Xu — PROJECT ENGINEER

BRIDGE NO. 46-0033R
POST MILES 44.89

CROSS CREEK BRIDGE (WIDEN)
GENERAL PLAN

DESIGN GENERAL PLAN SHEET (ENGLISH) (REV.2/25/05)

ORIGINAL SCALE IN INCHES FOR REDUCED PLANS 0 1 2 3

CU 06249
EA 324501

DISREGARD PRINTS BEARING EARLIER REVISION DATES

REVISION DATES (PRELIMINARY STAGE ONLY): 10/10/08 01/27/09 04/22/09 05/13/09 05/27/09 09/01/09

SHEET 1 OF 6

FILE => 46-0033r-a-gp01.dgn

USERNAME => trrright DATE PLOTTED => 04-AUG-2010 TIME PLOTTED => 14:57

DIST	COUNTY	ROUTE	POST MILES TOTAL PROJECT	SHEET No	TOTAL SHEETS
06	Tul,Fre	99	41.3/R53.9, R0.0/R1.2	619	687

REGISTERED CIVIL ENGINEER 09/01/09 DATE

1-25-10
PLANS APPROVAL DATE

The State of California or its officers or agents shall not be responsible for the accuracy or completeness of electronic copies of this plan sheet.

REGISTERED PROFESSIONAL ENGINEER DANNY C. VANG No. C60613 Exp. 12/31/10 CIVIL STATE OF CALIFORNIA

MGE ENGINEERING, INC.
7415 GREENHAVEN DRIVE, SUITE 100
SACRAMENTO, CALIFORNIA 95831

LIM & NASCIMENTO ENGINEERING
20 EMPIRE DRIVE
LAKE FOREST, CALIFORNIA 92630

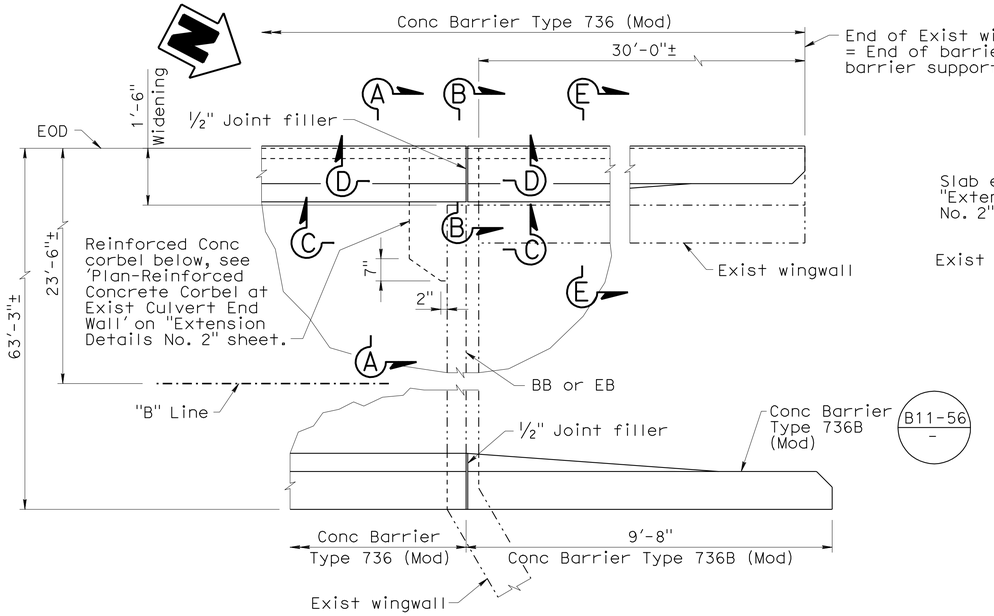

Note:
North Abut shown, South Abut similar.

PARTIAL PLAN
Scale: ½" = 1'-0"

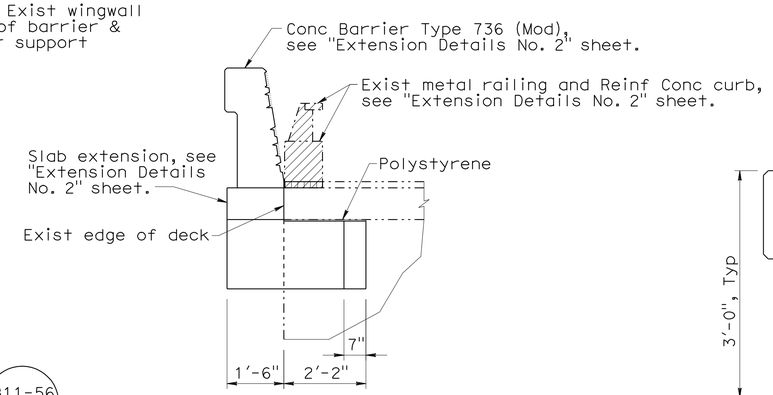

SECTION A-A
Scale: ½" = 1'-0"

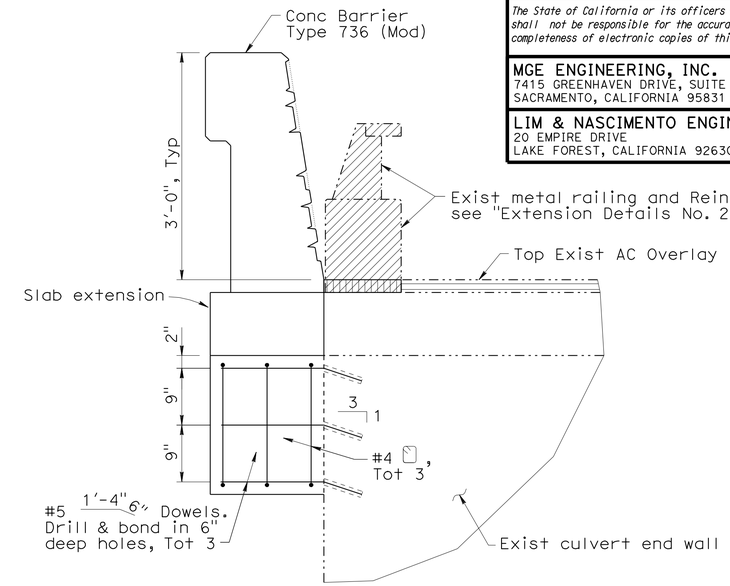

SECTION B-B
Scale: 1" = 1'-0"

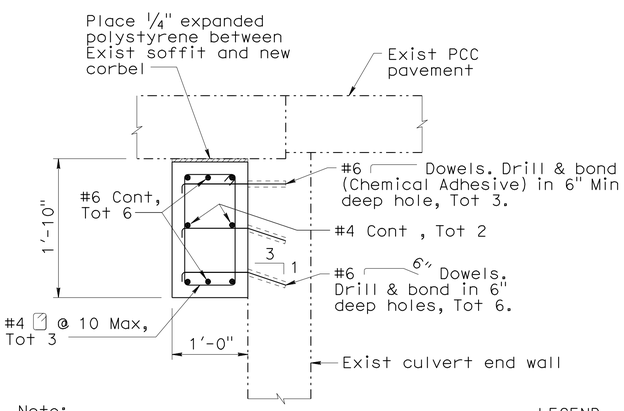

Note:
For spacing of dowels, see 'Dowel Layout' on "Extension Details No. 2" sheet.

SECTION C-C
Scale: 1" = 1'-0"

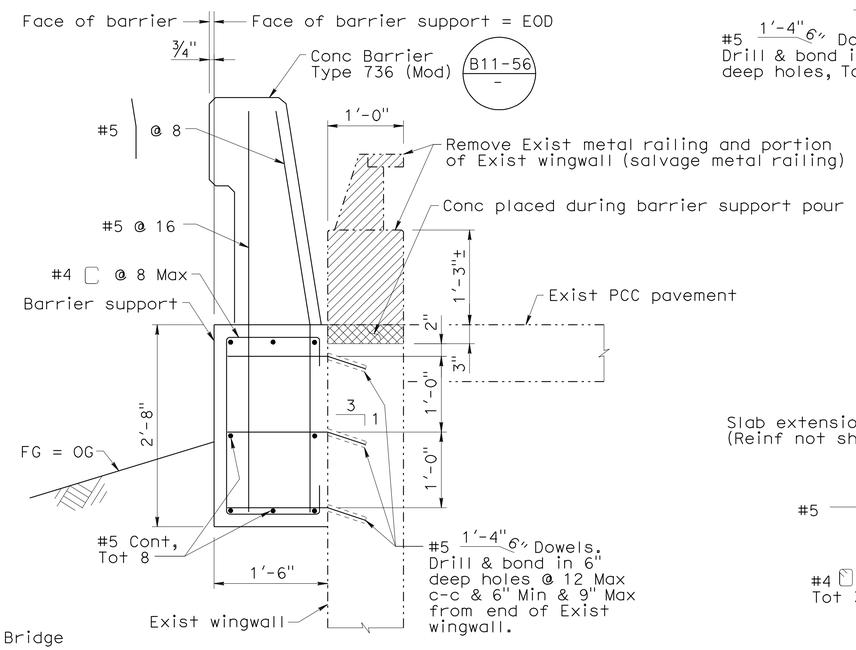

SECTION E-E
Scale: 1" = 1'-0"

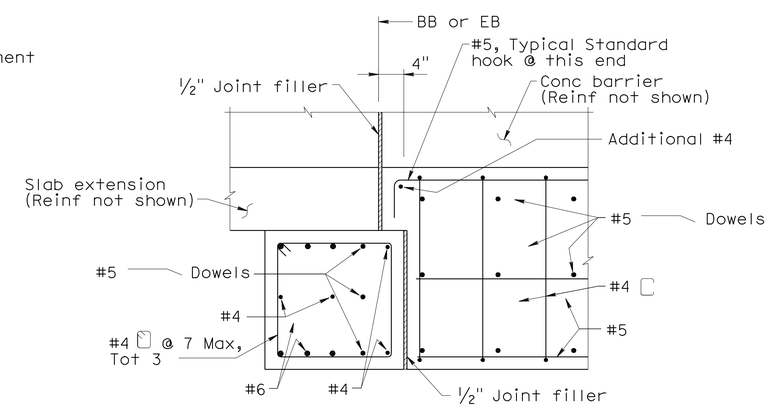

SECTION D-D
Scale: 1" = 1'-0"

LEGEND

- Indicates Limits of Bridge Removal (Portion)
- Indicates Exist AC Overlay
- Indicates Conc placed during barrier support pour
- Indicates Hot Mix Asphalt (Type B)

Note:
The Contractor shall verify all controlling field dimensions before ordering or fabricating any material.

Fritz Hoffman
DESIGN OVERSIGHT Fritz Hoffman
Sept 8, 2009
SIGN OFF DATE

	BY	CHECKED
DESIGN	D. Vang	G. Xu
DETAILS	X. Sun	G. Xu
QUANTITIES	D. Vang	K. Wang

PREPARED FOR THE STATE OF CALIFORNIA DEPARTMENT OF TRANSPORTATION

Guoping Xu
PROJECT ENGINEER

BRIDGE NO. 46-0033R
POST MILE 44.89

CROSS CREEK BRIDGE (WIDEN)
EXTENSION DETAILS NO. 1

DESIGN DETAIL SHEET (ENGLISH) (REV. 2/25/05)

ORIGINAL SCALE IN INCHES FOR REDUCED PLANS 0 1 2 3

CU 06249
EA 324501

DISREGARD PRINTS BEARING EARLIER REVISION DATES

REVISION DATES (PRELIMINARY STAGE ONLY) 10/16/08 01/12/09 04/22/09 05/15/09 05/28/09 09/01/09

SHEET 2 OF 6

FILE => 46-0033r-f-a01dt01.dgn

USERNAME => rrright DATE PLOTTED => 04-AUG-2010 TIME PLOTTED => 14:58

DIST	COUNTY	ROUTE	POST MILES TOTAL PROJECT	SHEET No	TOTAL SHEETS
06	Tul,Fre	99	41.3/R53.9, R0.0/R1.2	620	687

REGISTERED CIVIL ENGINEER 09/01/09 DATE

1-25-10
PLANS APPROVAL DATE

The State of California or its officers or agents shall not be responsible for the accuracy or completeness of electronic copies of this plan sheet.

REGISTERED PROFESSIONAL ENGINEER DANNY C. VANG No. C60613 Exp. 12/31/10 CIVIL STATE OF CALIFORNIA

MGE ENGINEERING, INC.
7415 GREENHAVEN DRIVE, SUITE 100
SACRAMENTO, CALIFORNIA 95831

LIM & NASCIMENTO ENGINEERING
20 EMPIRE DRIVE
LAKE FOREST, CALIFORNIA 92630

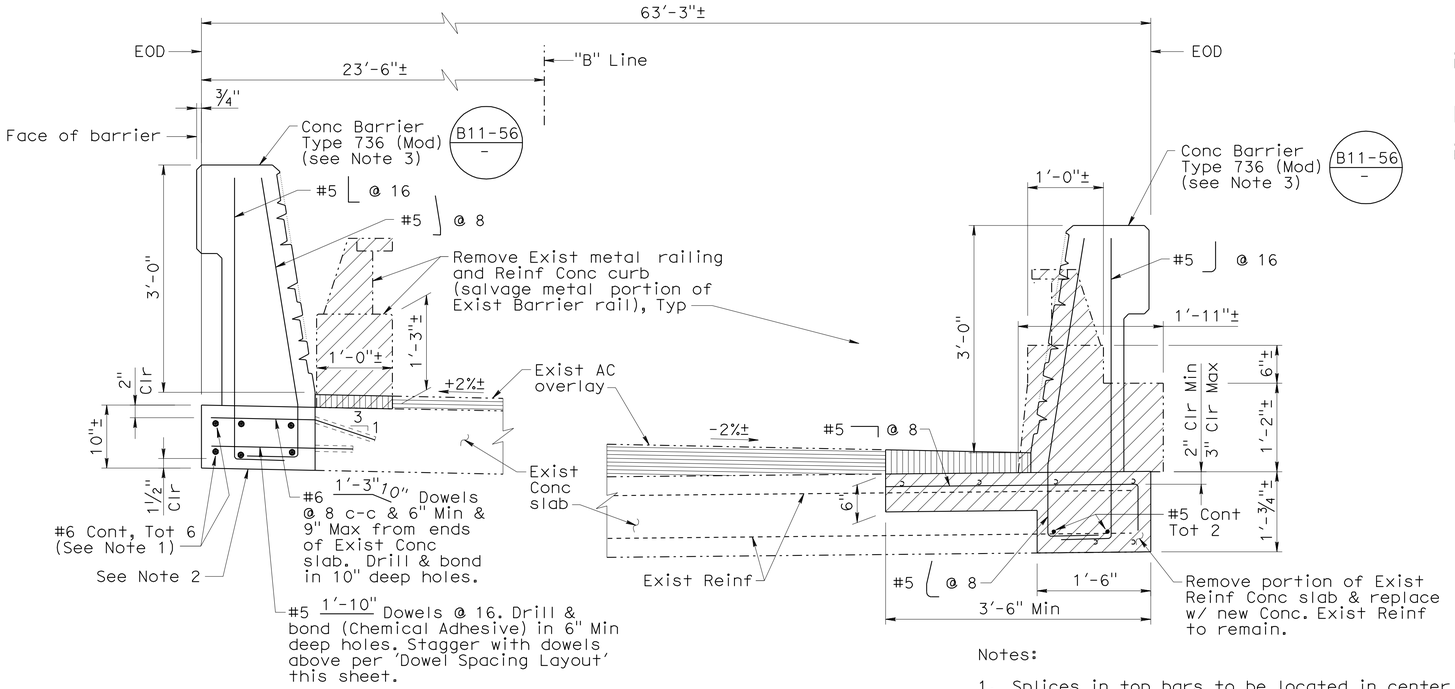

PARTIAL TYPICAL SECTION

Scale: 1" = 1'-0"

LEGEND

- Indicates Limits of Bridge Removal (Portion)
- Indicates Hot Mix Asphalt (Type B)
- Indicates Exist AC Overlay

Notes:

1. Splices in top bars to be located in center of span. Splices in bottom main bars to be located near bent.
2. Match existing grade & cross slope.
3. For architectural surface detail at barrier, see "Barrier Architectural Surface Detail" sheet.

GENERAL NOTES

Design: Bridge barriers are designed based on AASHTO LRFD Bridge Design Specifications, 3rd Edition with Interims through 2006 and the Caltrans Amendments, V3.06.01.

Reinforced Concrete: fy = 60 ksi
f'c = 3.6 ksi
n = 8

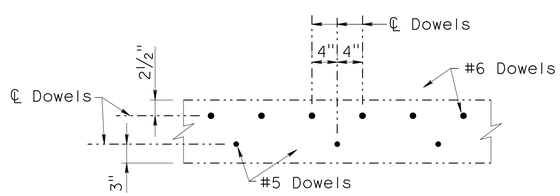

DOWEL SPACING LAYOUT

Scale: 1" = 1'-0"

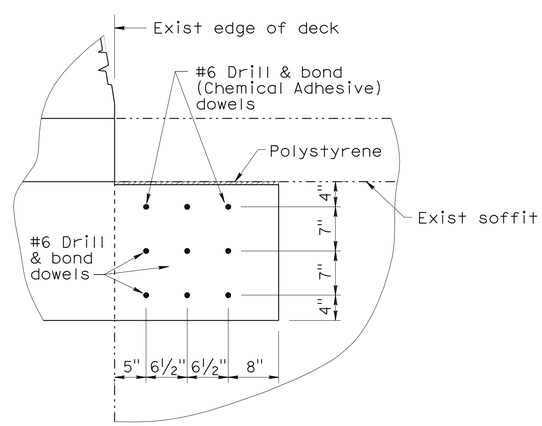

DOWEL LAYOUT

Scale: 1" = 1'-0"

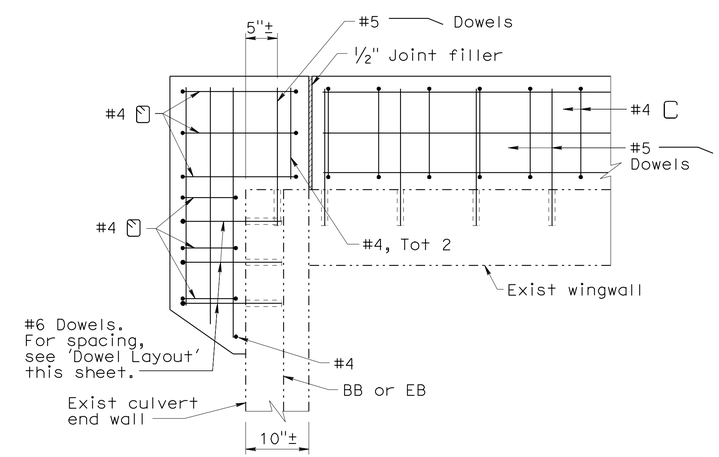

PLAN - REINFORCED CONCRETE CORBEL AT EXIST CULVERT END WALL

Scale: 1" = 1'-0"

Note:
The Contractor shall verify all controlling field dimensions before ordering or fabricating any material.

DESIGN OVERSIGHT Fritz Hoffman
Sept 8, 2009
SIGN OFF DATE

	BY	CHECKED
DESIGN	D. Vang	G. Xu
DETAILS	X. Sun	G. Xu
QUANTITIES	D. Vang	K. Wang

PREPARED FOR THE STATE OF CALIFORNIA DEPARTMENT OF TRANSPORTATION

Guoping Xu
PROJECT ENGINEER

BRIDGE NO. 46-0033R
POST MILE 44.89

CROSS CREEK BRIDGE (WIDEN)
EXTENSION DETAILS NO. 2

DESIGN DETAIL SHEET (ENGLISH) (REV. 2/25/05)

ORIGINAL SCALE IN INCHES FOR REDUCED PLANS 0 1 2 3

CU 06249
EA 324501

DISREGARD PRINTS BEARING EARLIER REVISION DATES

REVISION DATES (PRELIMINARY STAGE ONLY) 10/10/08 01/07/09 04/27/09 05/13/09 05/27/09 09/01/09

SHEET 3 OF 6

FILE => 46-0033r-f-a01dt02.dgn

USERNAME => trrichf DATE PLOTTED => 04-AUG-2010 TIME PLOTTED => 14:58

DIST	COUNTY	ROUTE	POST MILES TOTAL PROJECT	SHEET No	TOTAL SHEETS
06	Tul,Fre	99	41.3/R53.9, R0.0/R1.2	621	687

REGISTERED CIVIL ENGINEER 09/01/09 DATE

1-25-10
PLANS APPROVAL DATE

The State of California or its officers or agents shall not be responsible for the accuracy or completeness of electronic copies of this plan sheet.

REGISTERED PROFESSIONAL ENGINEER DANNY C. VANG No. C60613 Exp. 12/31/10 CIVIL STATE OF CALIFORNIA

MGE ENGINEERING, INC.
7415 GREENHAVEN DRIVE, SUITE 100
SACRAMENTO, CALIFORNIA 95831

LIM & NASCIMENTO ENGINEERING
20 EMPIRE DRIVE
LAKE FOREST, CALIFORNIA 92630

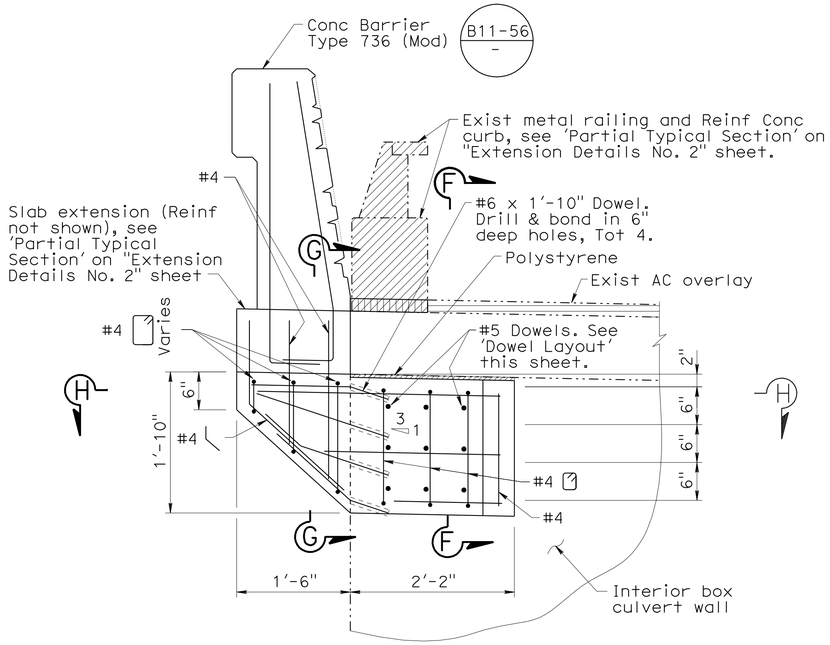

PARTIAL ELEVATION AT INTERIOR WALL

Scale: 1" = 1'-0"

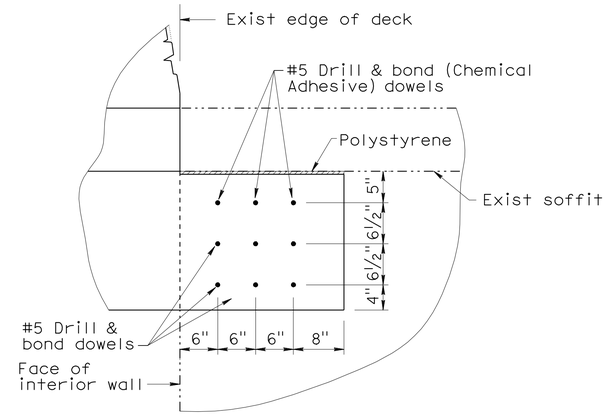

DOWEL LAYOUT

Scale: 1" = 1'-0"

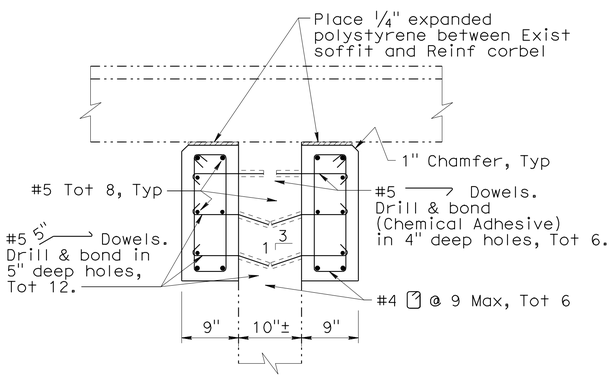

SECTION F-F

Scale: 1" = 1'-0"

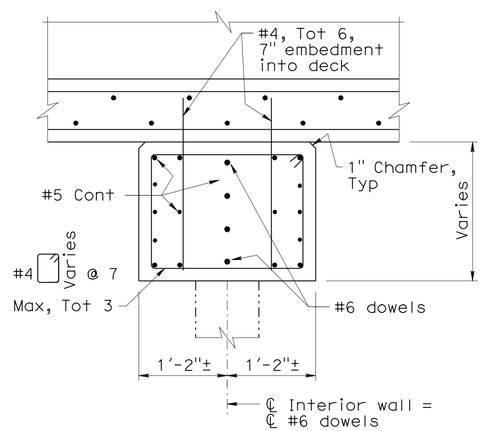

SECTION G-G

Scale: 1" = 1'-0"

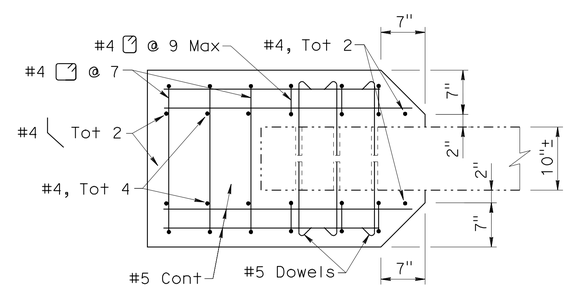

SECTION H-H

Scale: 1" = 1'-0"

Note:
The Contractor shall verify all controlling field dimensions before ordering or fabricating any material.

Note:
See "Extension Details No. 2" sheet for Conc Barrier details not shown.

DESIGN OVERSIGHT Fritz Hoffman
Sept 8, 2009
SIGN OFF DATE

	BY	CHECKED
DESIGN	D. Vang	G. Xu
DETAILS	X. Sun	G. Xu
QUANTITIES	D. Vang	K. Wang

PREPARED FOR THE STATE OF CALIFORNIA DEPARTMENT OF TRANSPORTATION

Guoping Xu
PROJECT ENGINEER

BRIDGE NO. 46-0033R
POST MILE 44.89

CROSS CREEK BRIDGE (WIDEN)
EXTENSION DETAILS NO. 3

DESIGN DETAIL SHEET (ENGLISH) (REV. 2/25/05)

ORIGINAL SCALE IN INCHES FOR REDUCED PLANS 0 1 2 3

CU 06249
EA 324501

DISREGARD PRINTS BEARING EARLIER REVISION DATES

REVISION DATES (PRELIMINARY STAGE ONLY) 10/16/08 01/12/09 04/22/09 05/15/09 05/28/09 09/01/09

SHEET 4 OF 6

FILE => 46-0033r-f-a01dt03.dgn

USERNAME => trrcht DATE PLOTTED => 04-AUG-2010 TIME PLOTTED => 14:58

DIST	COUNTY	ROUTE	POST MILES TOTAL PROJECT	SHEET No	TOTAL SHEETS
06	Tul,Fre	99	41.3/R53.9, R0.0/R1.2	622	687

REGISTERED CIVIL ENGINEER — DATE 09/01/09

1-25-10
PLANS APPROVAL DATE

The State of California or its officers or agents shall not be responsible for the accuracy or completeness of electronic copies of this plan sheet.

REGISTERED PROFESSIONAL ENGINEER — DANNY C. VANG — No. C60613 — Exp. 12/31/10 — CIVIL — STATE OF CALIFORNIA

MGE ENGINEERING, INC.
7311 GREENHAVEN DRIVE, SUITE 100
SACRAMENTO, CALIFORNIA 95831

LIM & NASCIMENTO ENGINEERING
20 EMPIRE DRIVE
LAKE FOREST, CALIFORNIA 92630

NOTES:

1. For details not shown, see Standard Plan B11-56.
2. Height of repeating pattern measured along the slope of the barrier face.
3. Limits of placement and payment for architectural surface (dry stacked stone) texture shall be as shown in "Elevation" and shall extend from BB to EB.

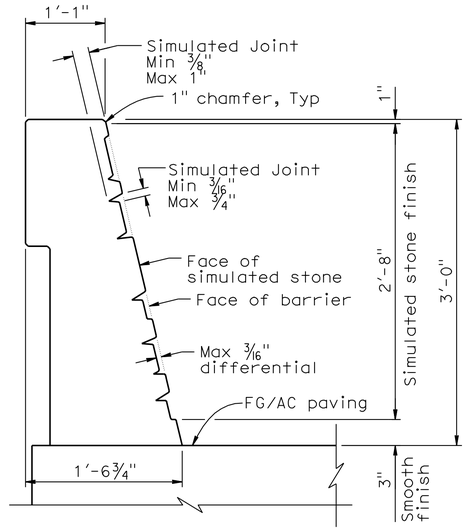

TYPE 736 (MODIFIED)
See Note 1

CONCRETE BARRIER SECTION

No scale

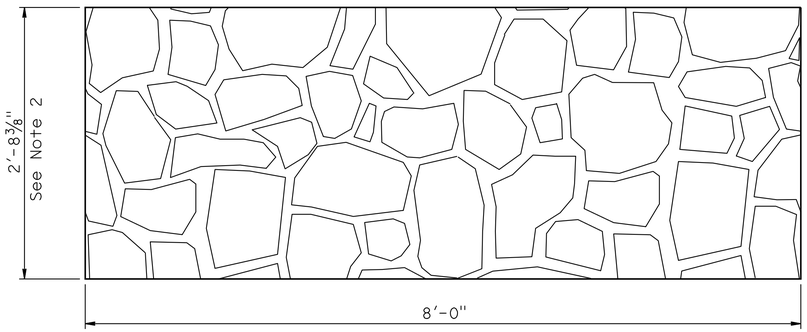

DEVELOPED ELEVATION

REPEATING PATTERN

No scale

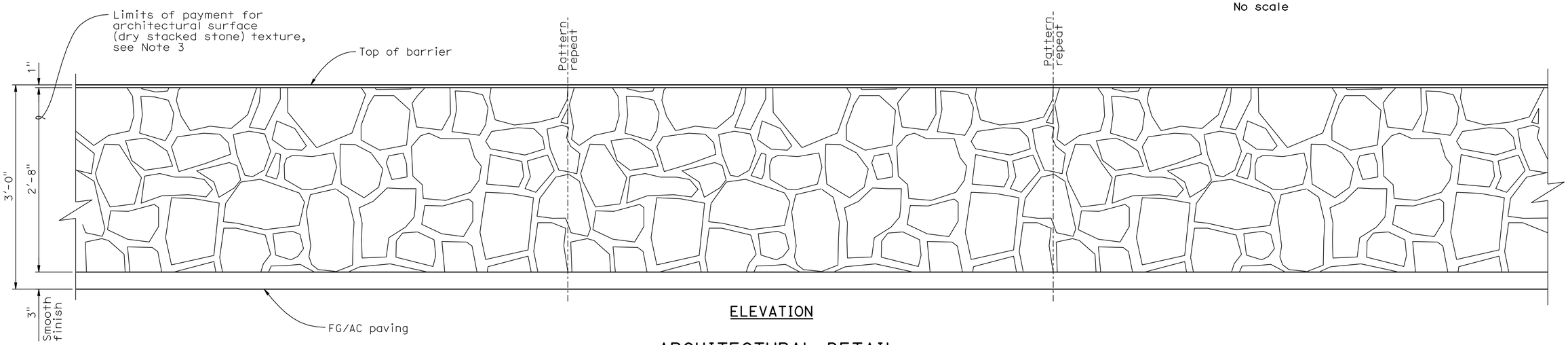

ELEVATION

ARCHITECTURAL DETAIL
CONCRETE BARRIER TYPE 736 (MODIFIED)

No scale

Note:
The Contractor shall verify all controlling field dimensions before ordering or fabricating any material.

Fritz Hoffman
DESIGN OVERSIGHT — Fritz Hoffman
Sept 8, 2009
SIGN OFF DATE

	BY	CHECKED
DESIGN	D. Vang	G. Xu
DETAILS	X. Sun	G. Xu
QUANTITIES	D. Vang	K. Wang

PREPARED FOR THE STATE OF CALIFORNIA DEPARTMENT OF TRANSPORTATION

Guoping Xu
PROJECT ENGINEER

BRIDGE NO. 46-0033R
POST MILE 44.89

CROSS CREEK BRIDGE (WIDEN)
BARRIER ARCHITECTURAL SURFACE DETAIL

DESIGN DETAIL SHEET (ENGLISH) (REV. 2/25/05)

ORIGINAL SCALE IN INCHES FOR REDUCED PLANS 0 1 2 3

CU 06249
EA 324501

DISREGARD PRINTS BEARING EARLIER REVISION DATES → REVISION DATES (PRELIMINARY STAGE ONLY) 05/13/09 05/27/09 09/01/09

SHEET 5 OF 6

FILE => 46-0033r-t-brdt.dgn

USERNAME => trrichf DATE PLOTTED => 04-AUG-2010 TIME PLOTTED => 14:58

DIST.	COUNTY	ROUTE	POST MILES—TOTAL PROJECT	SHEET No.	TOTAL SHEETS
06	Tul	99	41.2/48.3	52	56

R C Blake
DESIGN SECTION SUPERVISOR — REGISTERED CIVIL ENGINEER NO. 0082
DATE APPROVED August 31, 1970

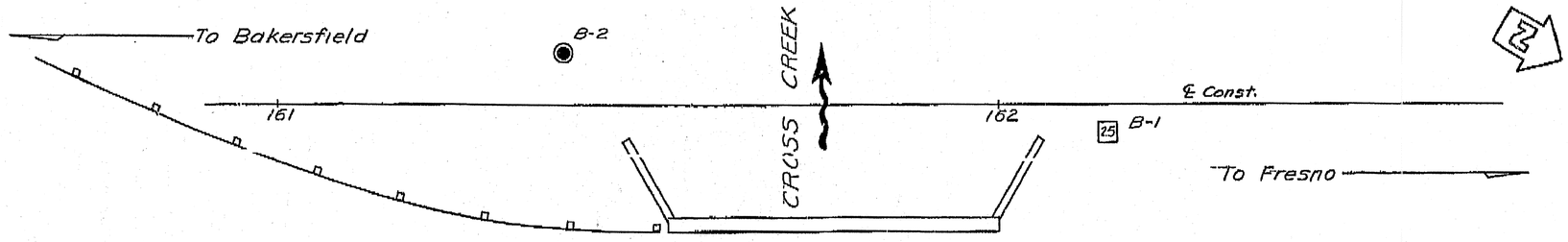

Exist Rte 99
Northbound

B.M. #15.79
Chiseled "□" on East End
of Northwest Wingwall
Br. # 46.32 L
Elev. 274.50

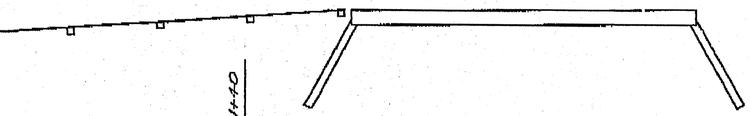

PLAN
Scale: 1" = 10'

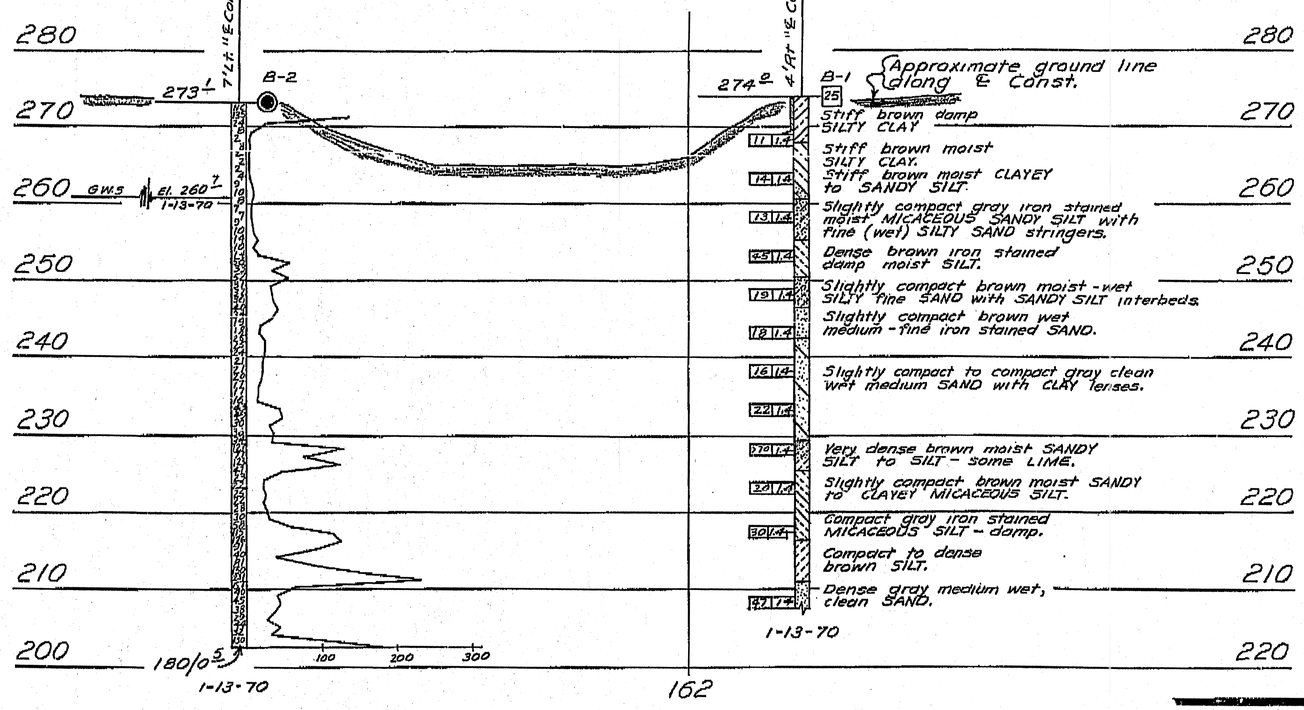

PROFILE
Scale: 1" = 10'

DIVISION OF ENGINEERING SERVICES - GEOTECHNICAL SERVICES

As-Built Log of Test Borings sheet is considered an informational document only. As such, the State of California registration seal with signature, license number and registration certificate expiration date confirm that this is a true and accurate copy of the original document. This drawing is available and presented only for the convenience of any bidder, contractor or other interested party.

DIST.	COUNTY	ROUTE	POST MILE-TOTAL PROJECT	Sheet No.	Total Sheets
06	Tul,Fre	99	41.3/R53.9,R0.0/R1.2	623	687

Christopher W. Koepke 2/26/09
REGISTERED PROFESSIONAL GEOLOGIST

CROSS CREEK BRIDGE (WIDEN)

LOG OF TEST BORINGS

NOTE: A COPY OF THIS LOG OF TEST BORINGS IS AVAILABLE AT OFFICE OF STRUCTURE MAINTENANCE AND INVESTIGATIONS, SACRAMENTO, CALIFORNIA

CU: 06
EA: 324501

BRIDGE No. 46-0033 R/L

Sheet 6 of 6

To accompany plans dated 1-25-10

REGISTERED PROFESSIONAL GEOLOGIST — Christopher W. Koepke — No. 2207 — Exp. 10-31-10 — CERTIFIED ENGINEERING GEOLOGIST — STATE OF CALIFORNIA

AS BUILT
No CORRECTIONS BY R.A. Quallis Jr
CONTRACT NO. 06-100304 11/30/71
RRR 2/29/72

LEGEND OF BORING OPERATIONS

Penetrometer; 2½" Cone Penetrometer; Sampler Boring (Dry); Rotary Boring (Wet); Auger Boring (Dry); Jet Boring; Core Boring; Test Pit

LEGEND OF EARTH MATERIALS

Gravel; Silty Clay or Clayey Silt; Sand; Peat and/or Organic Matter; Silt; Fill Material; Clay; Igneous Rock; Sandy Clay or Clayey Sand; Sedimentary Rock; Sandy Silt or Silty Sand; Metamorphic Rock

CLASSIFICATION OF MATERIAL BASED ON STANDARD GRADE SIZE LIMITS

NOTE: Classification of earth material as shown on this sheet is based upon field inspection and is not to be construed to imply mechanical analysis.

AS BUILT PLANS
Contract No. 06-100304
Date Completed 12-22-71
Document No. 60000866

STATE OF CALIFORNIA
TRANSPORTATION AGENCY
DEPARTMENT OF PUBLIC WORKS
DIVISION OF HIGHWAYS

CROSS CREEK BRIDGE WIDENING

LOG OF TEST BORINGS

BRIDGE NO.	POST MILE	DRAWING NO.	SHEET	OF
46-33R	44.89		4	4

REVISION DATES (PRELIMINARY STAGE ONLY) 3/23/10

FILENAME => 46-0033r-z-itb06.tif

WO 100301
CU 06201

Disregard prints bearing earlier revision dates

DIST	COUNTY	ROUTE	POST MILES TOTAL PROJECT	SHEET No	TOTAL SHEETS
06	Tul,Fre	99	41.3/R53.9, R0.0/R1.2	624	687

REGISTERED CIVIL ENGINEER — DATE 09/01/09

1-25-10
PLANS APPROVAL DATE

The State of California or its officers or agents shall not be responsible for the accuracy or completeness of electronic copies of this plan sheet.

REGISTERED PROFESSIONAL ENGINEER — DANNY C. VANG No. C60613 Exp. 12/31/10 CIVIL — STATE OF CALIFORNIA

MGE ENGINEERING, INC.
7415 GREENHAVEN DRIVE, SUITE 100
SACRAMENTO, CALIFORNIA 95831

LIM & NASCIMENTO ENGINEERING
20 EMPIRE DRIVE
LAKE FOREST, CALIFORNIA 92630

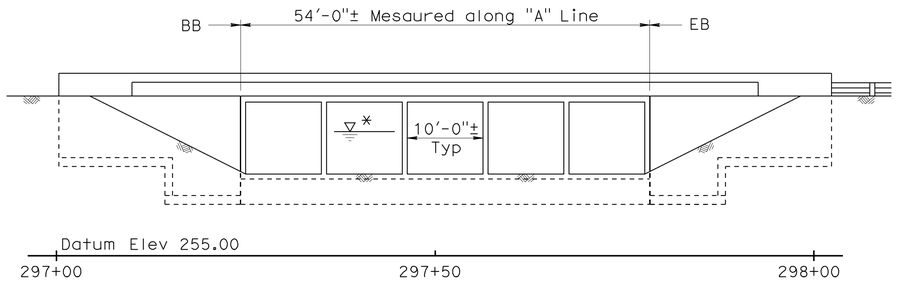

* For 'Hydrologic Summary', see "Foundation Plan" sheet.

ELEVATION
SCALE: 1" = 10'

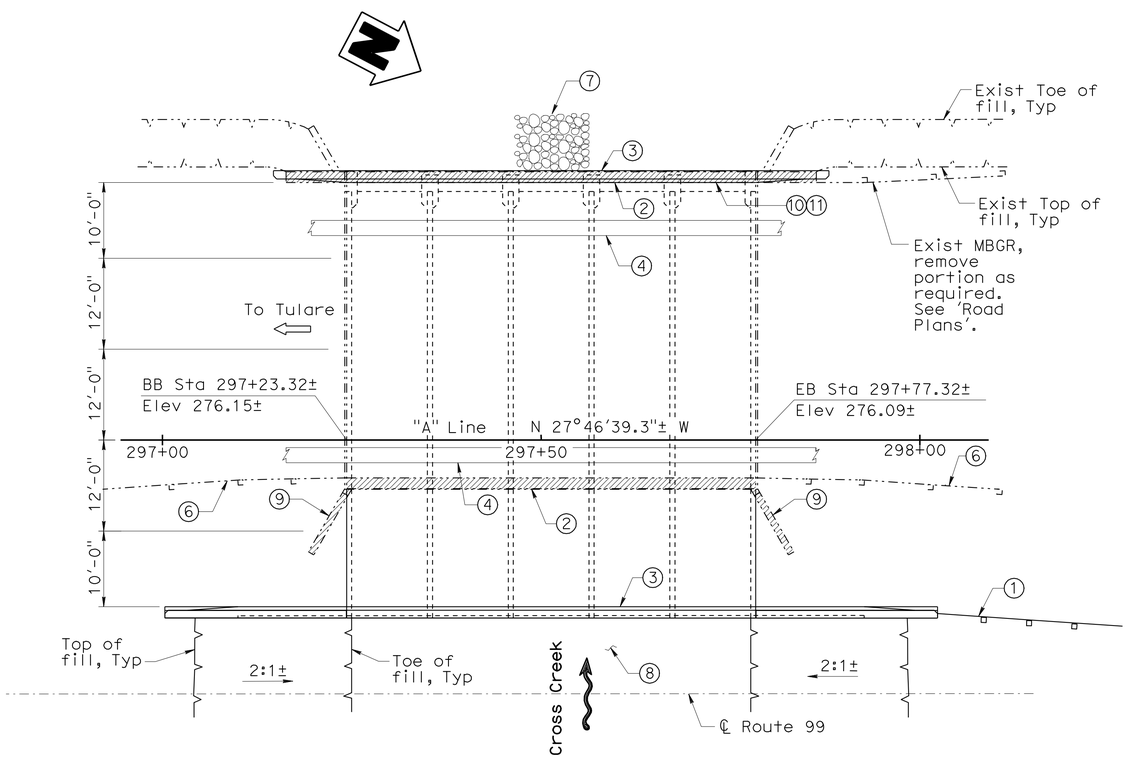

PLAN
SCALE: 1" = 10'

Note:
The Contractor shall verify all controlling field dimensions before ordering or fabricating any material.

QUANTITIES

BRIDGE REMOVAL (PORTION), LOCATION H	LUMP	SUM
HOT MIX ASPHALT (TYPE B)	29	TON
STRUCTURAL CONCRETE, BOX CULVERT	135	CY
ARCHITECTURAL TEXTURE (DRY STACKED STONE)	297	SQFT
DRILL AND BOND DOWEL	3	LF
BAR REINFORCING STEEL (BOX CULVERT)	20,570	LB
PREPARE AND STAIN CONCRETE	297	SQFT
CONCRETE BARRIER (TYPE 736 MODIFIED)	175	LF

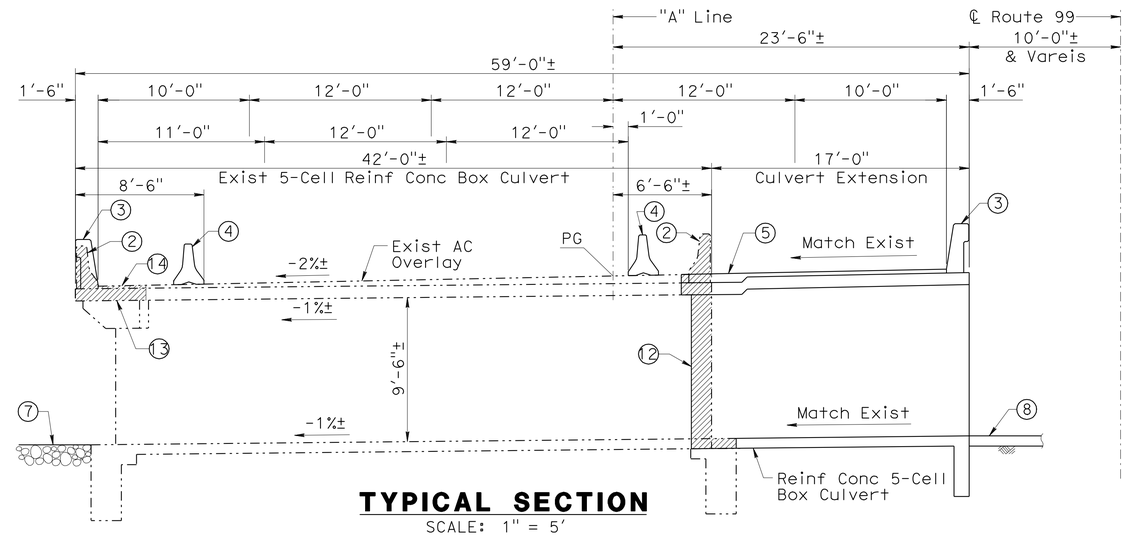

TYPICAL SECTION
SCALE: 1" = 5'

LEGEND

- Indicates Limits of Bridge Removal (Portion)
- Indicates Exist Structure
- Indicates New Structure
- Indicates Direction of Flow
- Indicates Direction of Travel
- (1) MBGR, See 'Road Plans'
- (2) Remove Exist Concrete Barrier Type 27R/27/27B
- (3) Concrete Barrier Type 736 (Mod)
- (4) Temporary "K" Railing, See 'Road Plans'
- (5) Hot Mix Asphalt (Type B), Thickness Varies
- (6) Exist MBGR to be Removed, See 'Road Plans'
- (7) Rock Slope Protection, See 'Road Plans'
- (8) Pave with Concrete, See 'Road Plans'
- (9) Remove Exist Wingwall
- (10) Paint "Cross Creek Bridge"
- (11) Paint "Br. No. 46-0033L"
- (12) Remove Exist Concrete
- (13) Remove Portion of Exist Reinf Conc Slab
- (14) Remove Portion of Exist AC Overlay

INDEX TO PLANS

Sheet No.	Title
1	General Plan
2	Foundation Plan
3	Extension Details No. 1
4	Extension Details No. 2
5	Extension Details No. 3
6	Barrier Architectural Surface Detail
7	As-Built Log of Test Borings

STANDARD PLANS
Dated May 2006

A10A	Acronyms and Abbreviations (Sheet 1 of 2)
A10B	Acronyms and Abbreviations (Sheet 2 of 2)
A10C	Symbols (Sheet 1 of 2)
A10D	Symbols (Sheet 2 of 2)
A62A	Excavation and Backfill - Miscellaneous Details
A62B	Limits of Payment for Excavation and Backfill - Bridge Surcharge and Wall
A62E	Excavation and Backfill - Cast-In-Place Reinforced Concrete Box and Arch Culverts
B0-1	Bridge Details
B3-8	Retaining Wall Details No. 1
B11-56	Concrete Barrier Type 736
D84	Box Culvert Wingwalls Types A, B and C

Fritz Hoffman
DESIGN OVERSIGHT — Fritz Hoffman
Sept 8, 2009
SIGN OFF DATE

	BY	CHECKED		
DESIGN	D. Vang	D. Wang	LOAD FACTOR DESIGN	LIVE LOADING: HS20-44
DETAILS	X. Sun	D. Wang	LAYOUT: D. Vang	CHECKED: D. Wang
QUANTITIES	D. Vang	K. Wang	SPECIFICATIONS: R. Price	PLANS AND SPECS COMPARED: R. Sennett

PREPARED FOR THE STATE OF CALIFORNIA DEPARTMENT OF TRANSPORTATION

Guoping Xu
PROJECT ENGINEER

BRIDGE NO. 46-0033L
POST MILES 44.89

CROSS CREEK BRIDGE (WIDEN)
GENERAL PLAN

DESIGN GENERAL PLAN SHEET (ENGLISH) (REV.2/25/05)

ORIGINAL SCALE IN INCHES FOR REDUCED PLANS 0 1 2 3

CU 06249
EA 324501

DISREGARD PRINTS BEARING EARLIER REVISION DATES

REVISION DATES (PRELIMINARY STAGE ONLY): 10/15/08 01/12/09 04/22/09 05/27/09 09/01/09

SHEET 1 OF 7

FILE => 46-0033l-a-gp01.dgn

USERNAME => trrichf DATE PLOTTED => 04-AUG-2010 TIME PLOTTED => 14:58

DIST	COUNTY	ROUTE	POST MILES TOTAL PROJECT	SHEET No	TOTAL SHEETS
06	Tul,Fre	99	41.3/R53.9, R0.0/R1.2	625	687

Danny C Vang 09/01/09
REGISTERED CIVIL ENGINEER DATE

1-25-10
PLANS APPROVAL DATE

REGISTERED PROFESSIONAL ENGINEER DANNY C. VANG No. C60613 Exp. 12/31/10 CIVIL STATE OF CALIFORNIA

The State of California or its officers or agents shall not be responsible for the accuracy or completeness of electronic copies of this plan sheet.

MGE ENGINEERING, INC.
7415 GREENHAVEN DRIVE, SUITE 100
SACRAMENTO, CALIFORNIA 95831

LIM & NASCIMENTO ENGINEERING
20 EMPIRE DRIVE
LAKE FOREST, CALIFORNIA 92630

LEGEND

- Indicates Limits of Bridge Removal (Portion)
- Indicates Exist Structure
- Indicates New Structure
- Indicates Direction of Flow
- xxx.xx Indicates Bottom of Footing Elevation
- xxx.xx * Indicates Bottom of Invert Slab Elevation

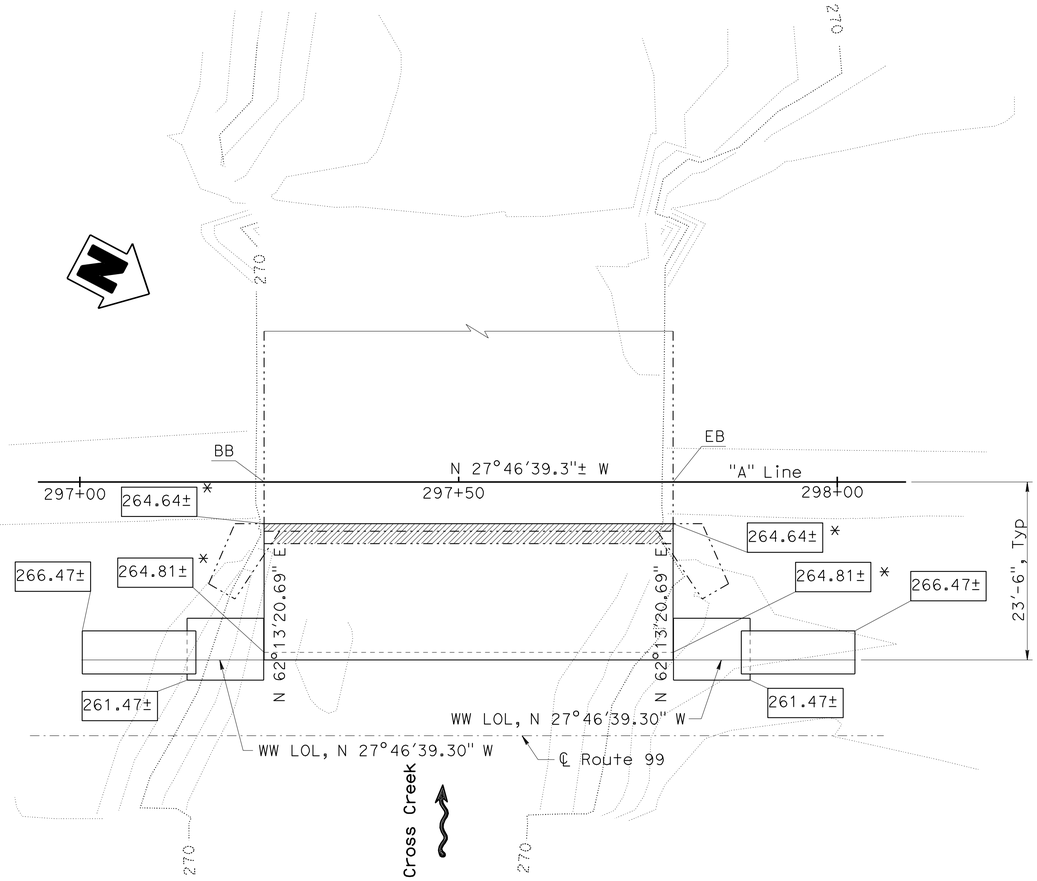

FOUNDATION PLAN

SCALE: 1" = 10'

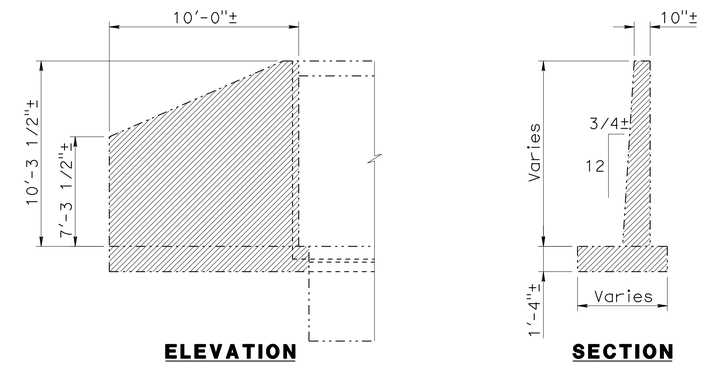

ELEVATION **SECTION**

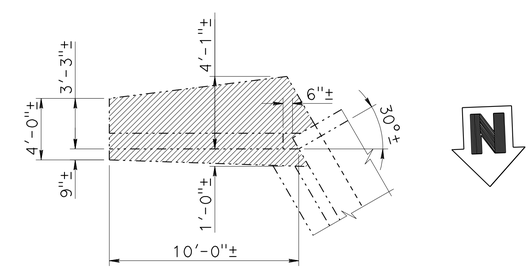

PLAN

Note: South wingwall shown, north wingwall similar.

EXIST WINGWALL DEMOLITION DETAIL

SCALE: NTS

SPREAD FOOTING DATA TABLE

Support Location	Allowable Bearing Capacity q_{all}	Nominal Bearing Resistance q_n
All	3.0 ksf	6.0 ksf

GENERAL NOTES
LOAD FACTOR DESIGN

Design: Bridge Design Specifications, April 2000 (1996 AASHTO with Interims and Revisions by Caltrans) except that bridge barriers are designed per AASHTO LRFD Bridge Design Specifications, 3rd Edition with Interims through 2006 and the Caltrans Amendments, V3.06.01

Dead Load: Includes 35 psf for future wearing surface

Live Loading: HS20-44 with 30% Impact except that bridge barriers are design based on LRFD live loading

Earth Pressure: (1) Vertical: 140 pcf; Horizontal: 140 pcf
(2) Vertical: 140 pcf; Horizontal: 42 pcf

Reinforced Concrete: fy = 60 ksi
f'c = 3.6 ksi
n = 8

Note:
The Contractor shall verify all controlling field dimensions before ordering or fabricating any material.

HYDROLOGIC SUMMARY

	Max Discharge Design Flood Max Capacity
Frequency (Years)	
Discharge (Cubic feet per second)	1,440
Water Surface (Elevation at bridge)	273.0

Flood plain data are based upon information available when the plans were prepared and are shown to meet federal requirements. The accuracy of said information is not warranted by the State and interested or affected parties should make their own investigation.

Fritz Hoffman
DESIGN OVERSIGHT Fritz Hoffman
Sept 8, 2009
SIGN OFF DATE

SCALE:	VERT.DATUM NAVD 88	HORZ.DATUM NAD 83			
PHOTOGRAMMETRY AS OF:		ALIGNMENT TIES Dist. Traverse Sheet			
SURVEYED	BY District	DRAFTED	BY J. Martinez		
FIELD CHECKED	BY T. Gillett	CHECKED	BY T. Zolnikova		

DESIGN	BY D. Vang	CHECKED	D. Wang
DETAILS	BY X. Sun	CHECKED	D. Wang
QUANTITIES	BY D. Vang	CHECKED	K. Wang

PREPARED FOR THE STATE OF CALIFORNIA DEPARTMENT OF TRANSPORTATION

Guoping Xu
PROJECT ENGINEER

BRIDGE NO. 46-0033L
POST MILE 44.89

CROSS CREEK BRIDGE (WIDEN)
FOUNDATION PLAN

FOUNDATION PLAN SHEET (ENGLISH) (REV. 2-25-05)

ORIGINAL SCALE IN INCHES FOR REDUCED PLANS 0 1 2 3

CU 06249
EA 324501

DISREGARD PRINTS BEARING EARLIER REVISION DATES

REVISION DATES (PRELIMINARY STAGE ONLY) 10/14/08 01/21/09 04/22/09 09/01/09

SHEET 2 OF 7

FILE => 46-0033l-e-fdp101.dgn

USERNAME => trrichf DATE PLOTTED => 04-AUG-2010 TIME PLOTTED => 14:59

DIST	COUNTY	ROUTE	POST MILES TOTAL PROJECT	SHEET No	TOTAL SHEETS
06	Tul,Fre	99	41.3/R53.9, R0.0/R1.2	626	687

REGISTERED CIVIL ENGINEER — DATE 09/01/09

1-25-10
PLANS APPROVAL DATE

The State of California or its officers or agents shall not be responsible for the accuracy or completeness of electronic copies of this plan sheet.

REGISTERED PROFESSIONAL ENGINEER — DANNY C. VANG No. C60613 Exp. 12/31/10 CIVIL — STATE OF CALIFORNIA

MGE ENGINEERING, INC.
7415 GREENHAVEN DRIVE, SUITE 100
SACRAMENTO, CALIFORNIA 95831

LIM & NASCIMENTO ENGINEERING
20 EMPIRE DRIVE
LAKE FOREST, CALIFORNIA 92630

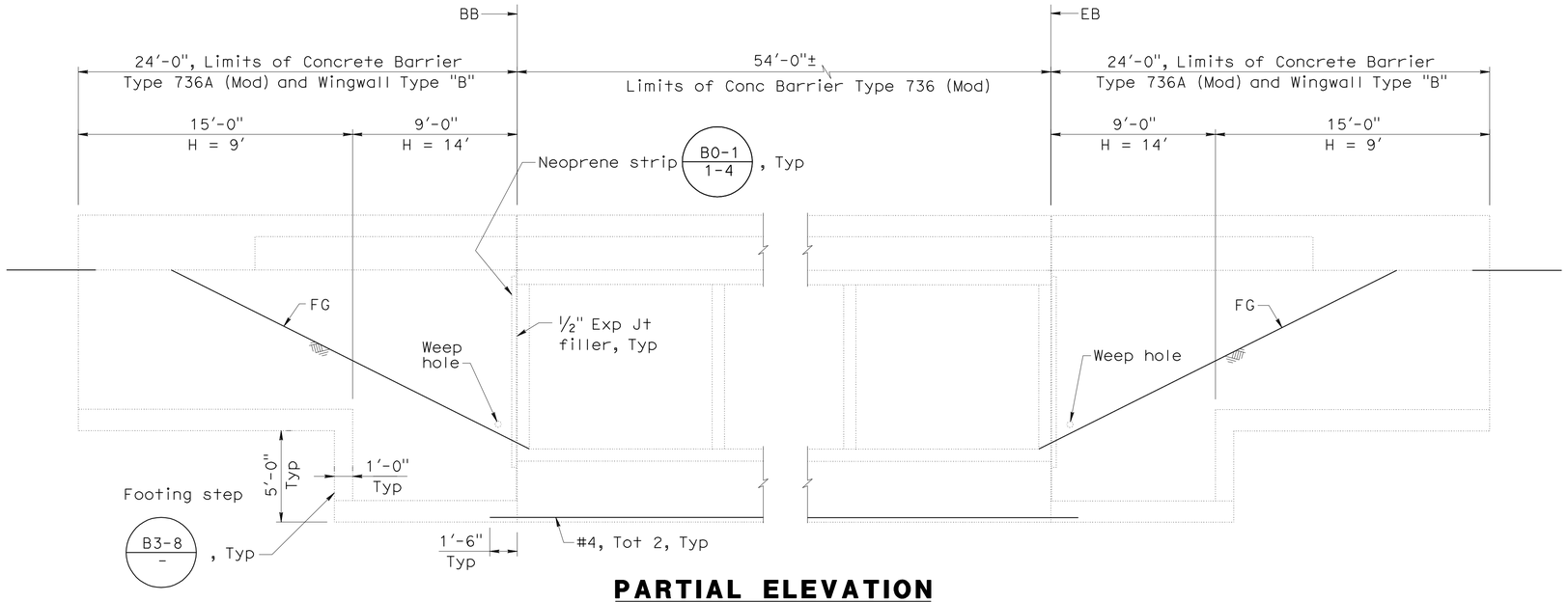

PARTIAL ELEVATION

SCALE: ¼" = 1'-0"

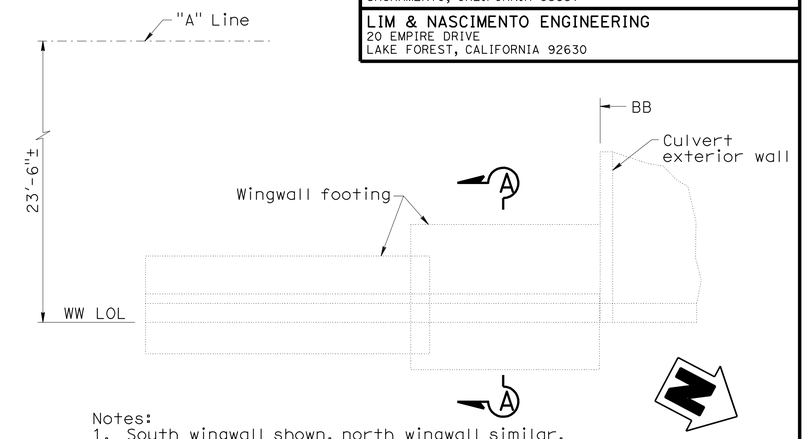

Notes:
1. South wingwall shown, north wingwall similar.
2. Barrier not shown for clarity.

WINGWALL PLAN

SCALE: ¼" = 1'-0"

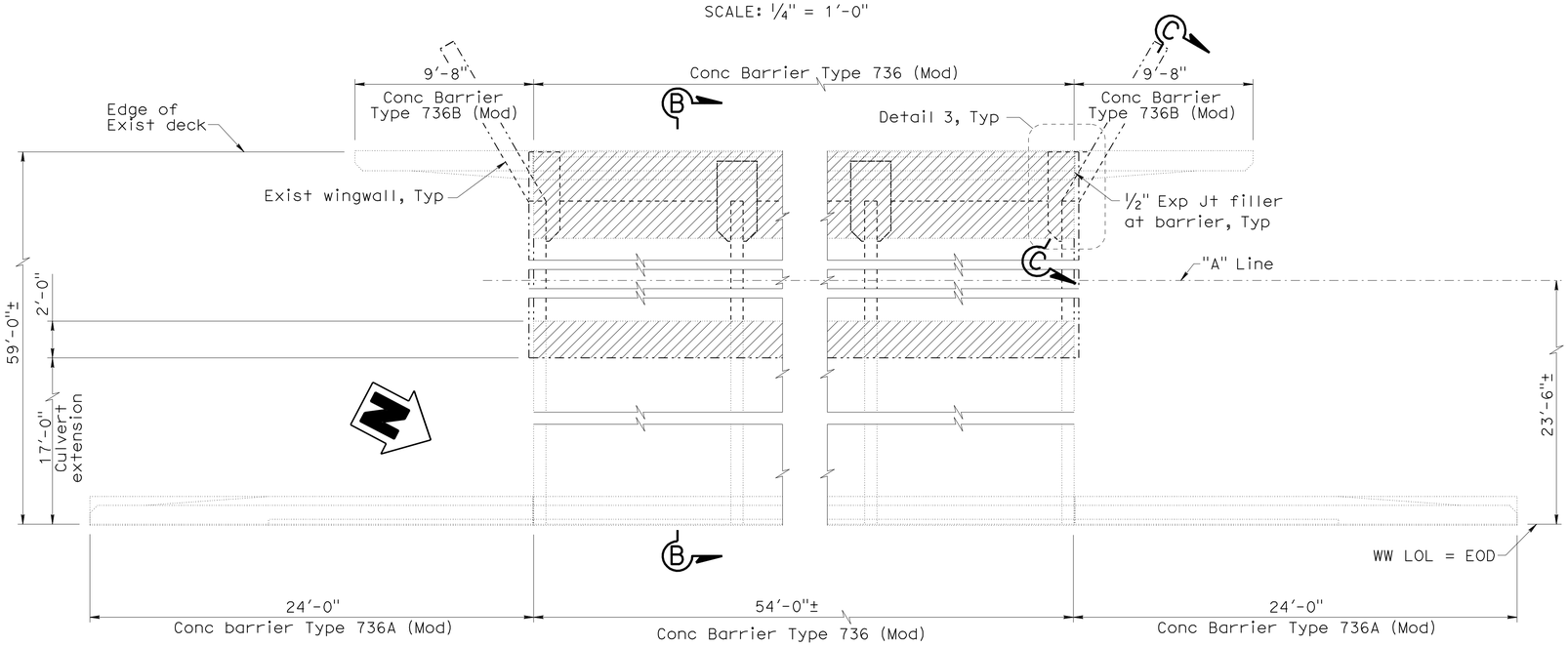

Note:
Removal of Exist wingwalls not shown, see "Foundation Plan" sheet for removal limits and details.
Removal of Exist barriers not shown, see Section B-B on "Extension Details No. 3" sheet for details.

Note:
The Contractor shall verify all controlling field dimensions before ordering or fabricating any material.

PARTIAL PLAN

SCALE: ¼" = 1'-0"

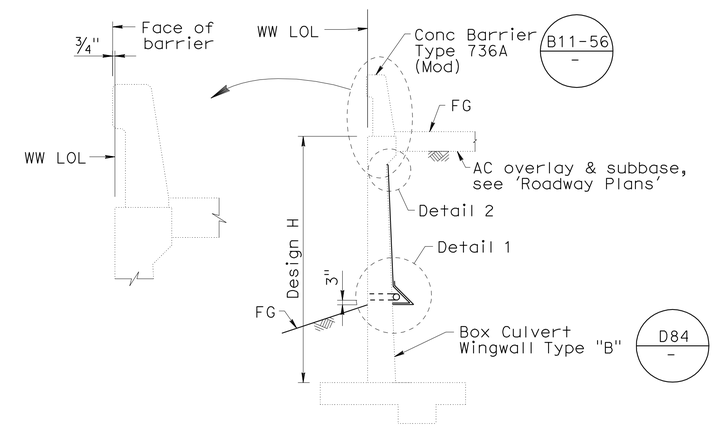

SECTION A-A

SCALE: ¼" = 1'-0"

Notes:

1. For Section B-B, Detail 1 & Detail 2, see "Extension Details No. 3" sheet.
2. See Standard Plan sheet D82 for details and notes not shown.
3. For Section C-C and Detail 3, see "Extension Details No. 2" sheet.

Indicates Limits of Bridge Removal (Portion)

DESIGN OVERSIGHT Fritz Hoffman — Sept 8, 2009 SIGN OFF DATE	DESIGN	BY D. Vang	CHECKED D. Wang	PREPARED FOR THE STATE OF CALIFORNIA DEPARTMENT OF TRANSPORTATION	Guoping Xu PROJECT ENGINEER
	DETAILS	BY X. Sun	CHECKED D. Wang		
	QUANTITIES	BY D. Vang	CHECKED K. Wang		

BRIDGE NO. 46-0033L — POST MILE 44.89

CROSS CREEK BRIDGE (WIDEN)
EXTENSION DETAILS NO. 1

DESIGN DETAIL SHEET (ENGLISH) (REV. 2/25/05)

ORIGINAL SCALE IN INCHES FOR REDUCED PLANS 0 1 2 3

CU 06249
EA 324501

DISREGARD PRINTS BEARING EARLIER REVISION DATES — REVISION DATES (PRELIMINARY STAGE ONLY): 10/14/08 01/12/09 04/22/09 05/13/09 05/22/09 09/01/09

SHEET 3 OF 7

FILE => 46-0033l-f-a01dt01.dgn

USERNAME => trrichf DATE PLOTTED => 04-AUG-2010 TIME PLOTTED => 14:59

DIST	COUNTY	ROUTE	POST MILES TOTAL PROJECT	SHEET No	TOTAL SHEETS
06	Tul,Fre	99	41.3/R53.9, R0.0/R1.2	627	687

REGISTERED CIVIL ENGINEER — DATE 09/01/09

1-25-10
PLANS APPROVAL DATE

The State of California or its officers or agents shall not be responsible for the accuracy or completeness of electronic copies of this plan sheet.

REGISTERED PROFESSIONAL ENGINEER — DANNY C. VANG — No. C60613 — Exp. 12/31/10 — CIVIL — STATE OF CALIFORNIA

MGE ENGINEERING, INC.
7415 GREENHAVEN DRIVE, SUITE 100
SACRAMENTO, CALIFORNIA 95831

LIM & NASCIMENTO ENGINEERING
20 EMPIRE DRIVE
LAKE FOREST, CALIFORNIA 92630

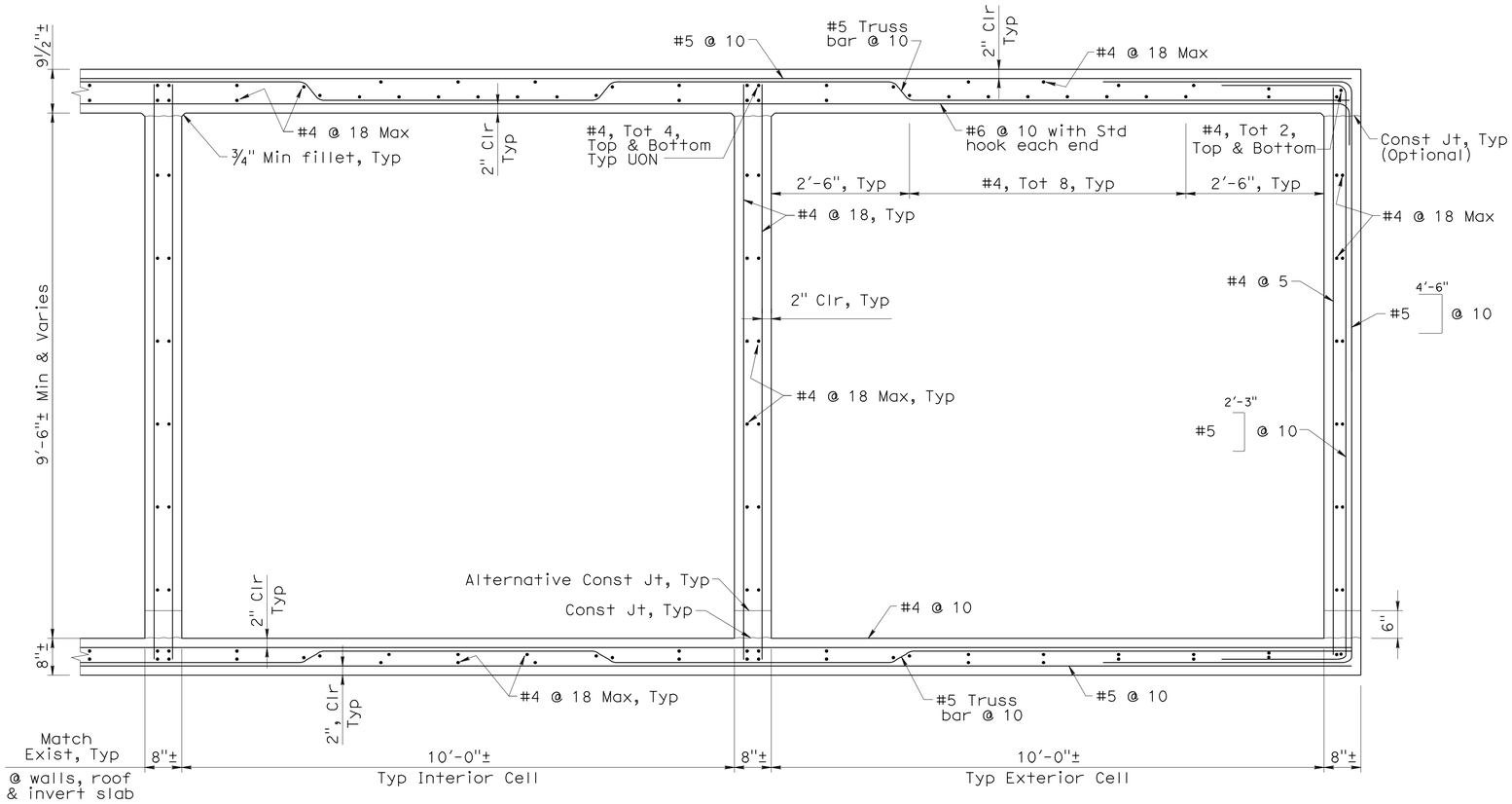

CULVERT PARTIAL TYPICAL SECTION

Scale: ¾" = 1'-0"

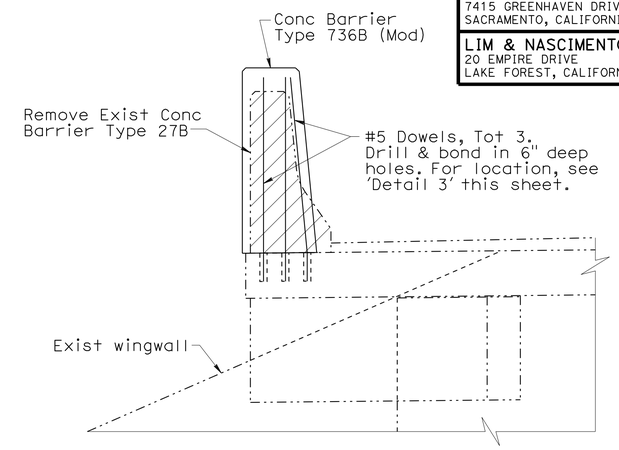

SECTION C-C

Scale: ¾" = 1'-0"

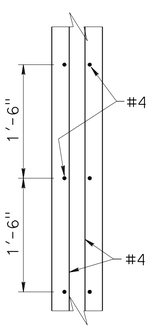

INTERIOR

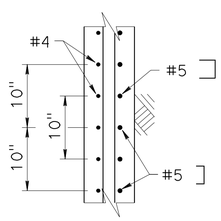

EXTERIOR

WALL SECTION

SCALE: 1" = 1'-0"

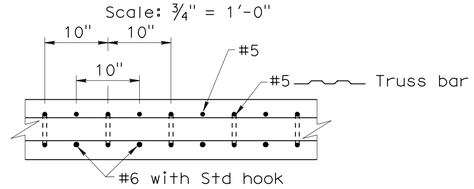

ROOF SECTION

SCALE: 1" = 1'-0"

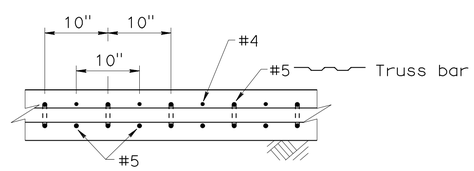

INVERT SECTION

SCALE: 1" = 1'-0"

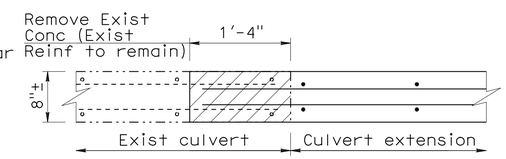

INTERIOR WALL

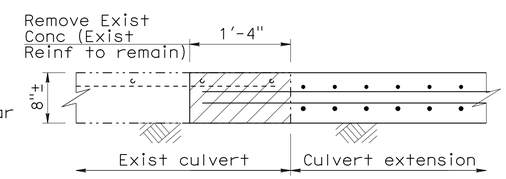

EXTERIOR WALL

WALL CONNECTION DETAIL

SCALE: 1" = 1'-0"

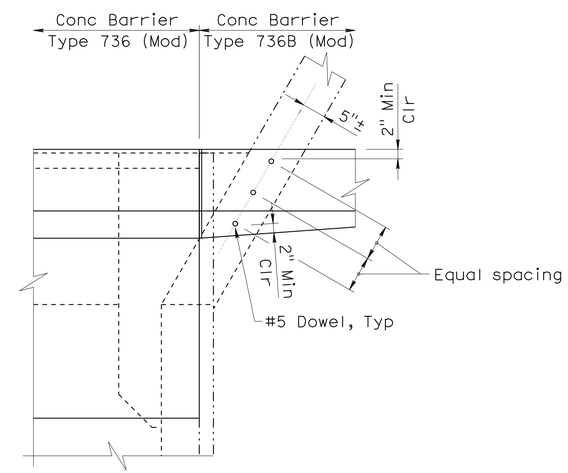

DETAIL 3

Scale: ¾" = 1'-0"

Note:
The Contractor shall verify all controlling field dimensions before ordering or fabricating any material.

LEGEND

Indicates Limits of Bridge Removal (Portion)

Note:
1. See Standard Plan sheet D82 for details and notes not shown.

DESIGN OVERSIGHT — Fritz Hoffman — Sept 8, 2009 — SIGN OFF DATE

	BY	CHECKED
DESIGN	D. Vang	D. Wang
DETAILS	X. Sun	D. Wang
QUANTITIES	D. Vang	K. Wang

PREPARED FOR THE STATE OF CALIFORNIA DEPARTMENT OF TRANSPORTATION

Guoping Xu — PROJECT ENGINEER

BRIDGE NO. 46-0033L — POST MILE 44.89

CROSS CREEK BRIDGE (WIDEN)
EXTENSION DETAILS NO. 2

DESIGN DETAIL SHEET (ENGLISH) (REV. 2/25/05)

ORIGINAL SCALE IN INCHES FOR REDUCED PLANS 0 1 2 3

CU 06249
EA 324501

DISREGARD PRINTS BEARING EARLIER REVISION DATES

REVISION DATES (PRELIMINARY STAGE ONLY): 10/16/08 01/12/09 04/22/09 05/27/09 09/01/09

SHEET 4 OF 7

FILE => 46-0033l-f-a01dt02.dgn

USERNAME => frrichf DATE PLOTTED => 04-AUG-2010 TIME PLOTTED => 14:53

DIST	COUNTY	ROUTE	POST MILES TOTAL PROJECT	SHEET No	TOTAL SHEETS
06	Tul,Fre	99	41.3/R53.9, R0.0/R1.2	628	687

REGISTERED CIVIL ENGINEER — DATE 09/01/09

1-25-10
PLANS APPROVAL DATE

The State of California or its officers or agents shall not be responsible for the accuracy or completeness of electronic copies of this plan sheet.

REGISTERED PROFESSIONAL ENGINEER — DANNY C. VANG — No. C60613 — Exp. 12/31/10 — CIVIL — STATE OF CALIFORNIA

MGE ENGINEERING, INC.
7415 GREENHAVEN DRIVE, SUITE 100
SACRAMENTO, CALIFORNIA 95831

LIM & NASCIMENTO ENGINEERING
20 EMPIRE DRIVE
LAKE FOREST, CALIFORNIA 92630

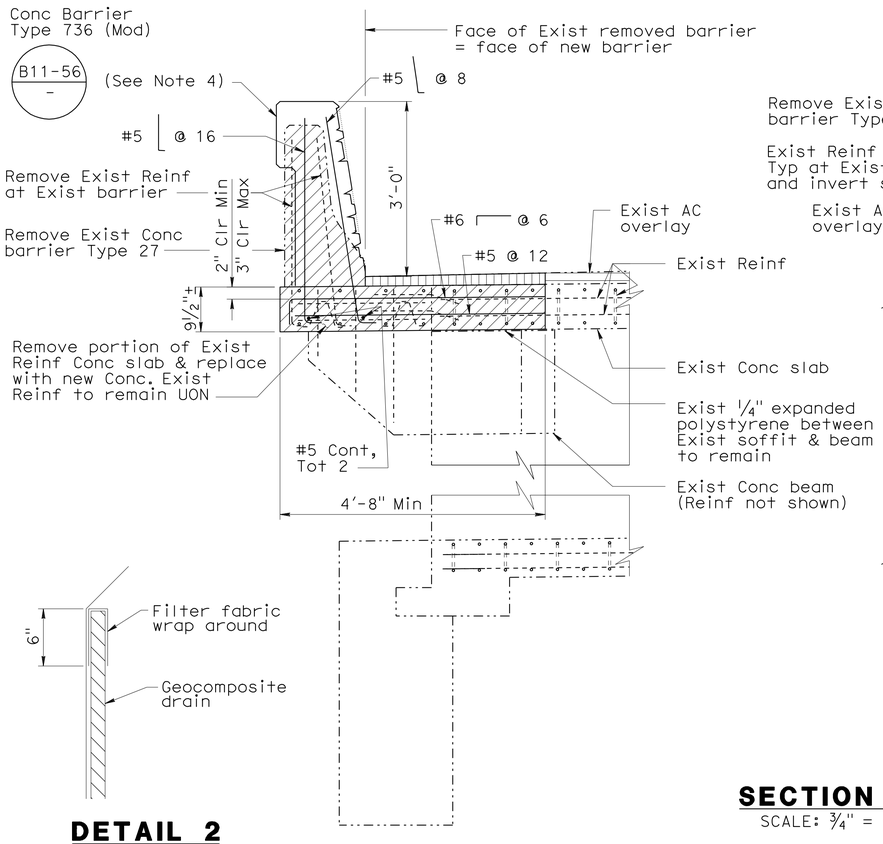

DETAIL 2
No Scale

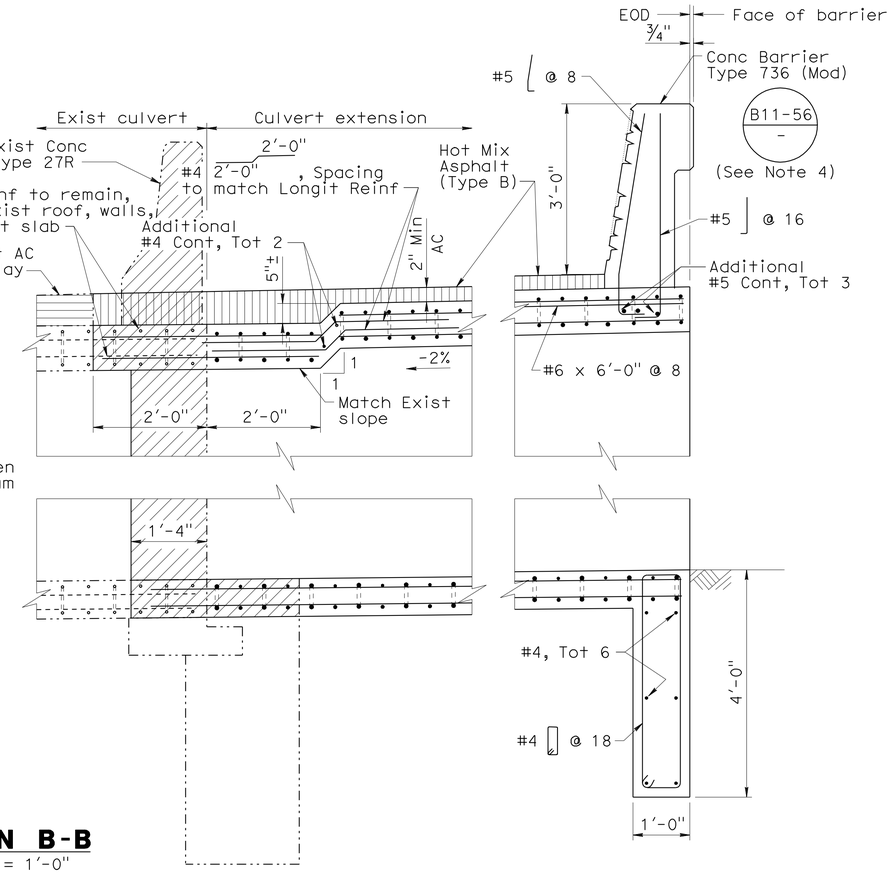

SECTION B-B
SCALE: ¾" = 1'-0"

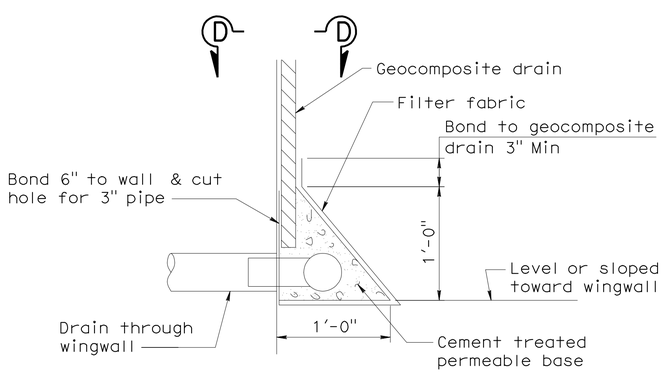

DETAIL 1
No Scale

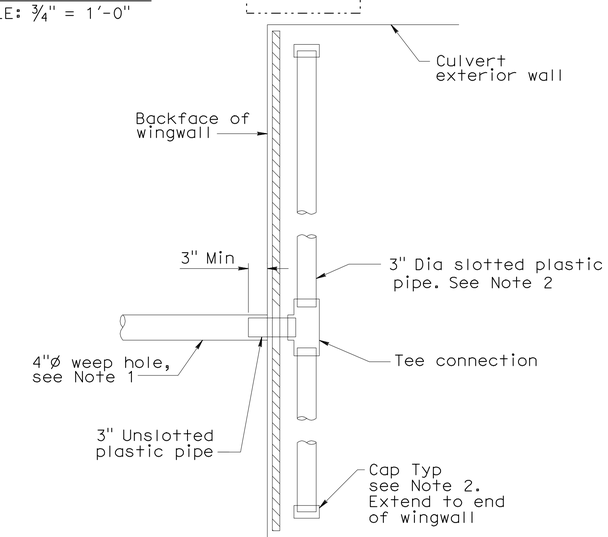

SECTION D-D
No Scale

LEGEND

- Indicates Limits of Bridge Removal (Portion)
- Indicates Hot Mix Asphalt (Type B)
- Indicates Exist AC overlay

Notes:

1. 4" drains at 20' Max center to center. Weep holes shall be located 3" above finished grade.
2. Geocomposite drain, cement treated permeable base, and 3" Dia slotted plastic pipe continuous behind wingwalls. Cap ends of pipe. Provide "Tee" connection at each 4" Dia drain.
3. See Standard Plan sheet D82 for details and notes not shown.
4. For architectural surface detail at barrier, see "Barrier Architectural Surface Detail" sheet.

Note:
The Contractor shall verify all controlling field dimensions before ordering or fabricating any material.

DESIGN OVERSIGHT — Fritz Hoffman
Sept 8, 2009
SIGN OFF DATE

	BY	CHECKED
DESIGN	D. Vang	D. Wang
DETAILS	X. Sun	D. Wang
QUANTITIES	D. Vang	K. Wang

PREPARED FOR THE STATE OF CALIFORNIA DEPARTMENT OF TRANSPORTATION

Guoping Xu
PROJECT ENGINEER

BRIDGE NO. 46-0033L
POST MILE 44.89

CROSS CREEK BRIDGE (WIDEN)
EXTENSION DETAILS NO. 3

DESIGN DETAIL SHEET (ENGLISH) (REV. 2/25/05)

ORIGINAL SCALE IN INCHES FOR REDUCED PLANS 0 1 2 3

CU 06249
EA 324501

DISREGARD PRINTS BEARING EARLIER REVISION DATES — REVISION DATES (PRELIMINARY STAGE ONLY) 04/28/09 05/13/09 05/22/09 09/01/09

SHEET 5 OF 7

FILE => 46-0033l-f-a01dt03.dgn

USERNAME => trrright DATE PLOTTED => 04-AUG-2010 TIME PLOTTED => 14:59

DIST	COUNTY	ROUTE	POST MILES TOTAL PROJECT	SHEET No	TOTAL SHEETS
06	Tul,Fre	99	41.3/R53.9, R0.0/R1.2	629	687

REGISTERED CIVIL ENGINEER — DATE 09/01/09

1-25-10
PLANS APPROVAL DATE

The State of California or its officers or agents shall not be responsible for the accuracy or completeness of electronic copies of this plan sheet.

REGISTERED PROFESSIONAL ENGINEER — DANNY C. VANG — No. C60613 — Exp. 12/31/10 — CIVIL — STATE OF CALIFORNIA

MGE ENGINEERING, INC.
7415 GREENHAVEN DRIVE, SUITE 100
SACRAMENTO, CALIFORNIA 95831

LIM & NASCIMENTO ENGINEERING
20 EMPIRE DRIVE
LAKE FOREST, CALIFORNIA 92630

NOTES:

1. For details not shown, see Standard Plan B11-56.
2. Height of repeating pattern measured along the slope of the barrier face.
3. Limits of placement and payment for architectural surface (dry stacked stone) texture shall be as shown in "Elevation" and shall extend from BB to EB.

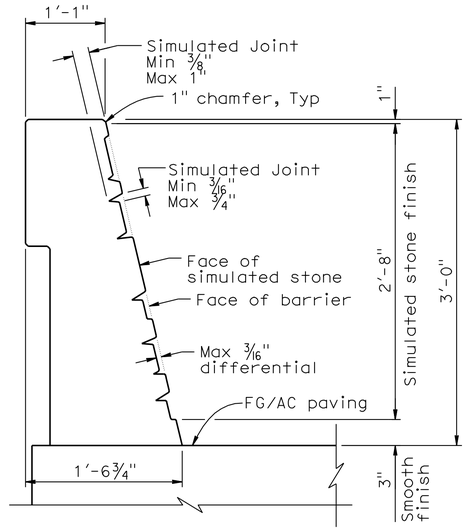

TYPE 736 (MODIFIED)
See Note 1

CONCRETE BARRIER SECTION

No scale

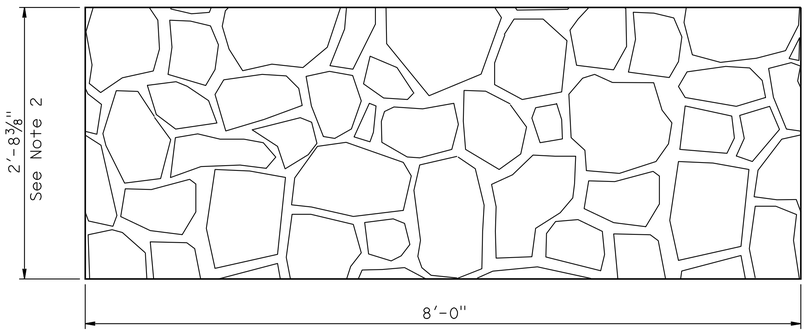

DEVELOPED ELEVATION

REPEATING PATTERN

No scale

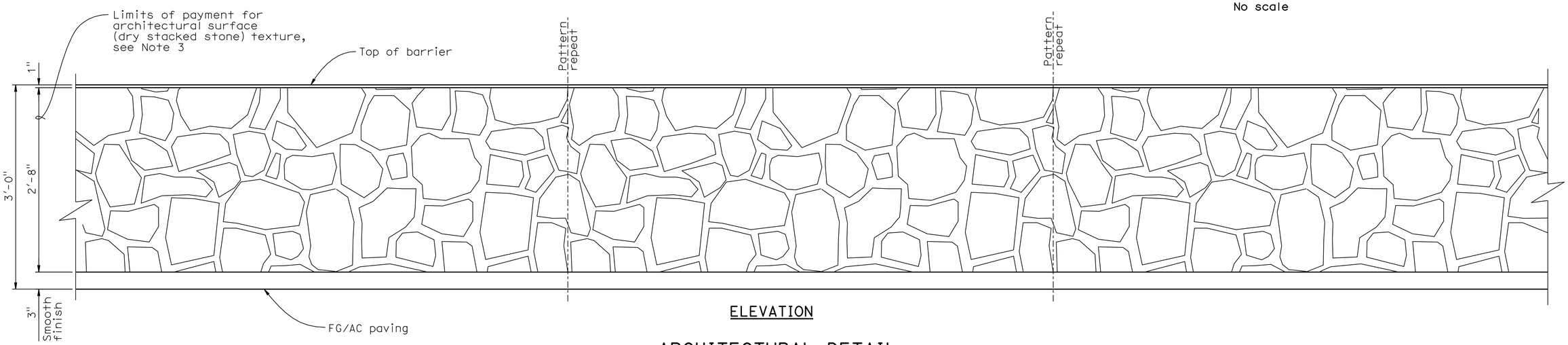

ELEVATION

ARCHITECTURAL DETAIL
CONCRETE BARRIER TYPE 736 (MODIFIED)

No scale

Note:
The Contractor shall verify all controlling field dimensions before ordering or fabricating any material.

DESIGN OVERSIGHT — Fritz Hoffman
Sept 8, 2009
SIGN OFF DATE

	BY	CHECKED
DESIGN	D. Vang	G. Xu
DETAILS	X. Sun	G. Xu
QUANTITIES	D. Vang	K. Wang

PREPARED FOR THE STATE OF CALIFORNIA DEPARTMENT OF TRANSPORTATION

Guoping Xu
PROJECT ENGINEER

BRIDGE NO. 46-0033L
POST MILE 44.89

CROSS CREEK BRIDGE (WIDEN)
BARRIER ARCHITECTURAL SURFACE DETAIL

DESIGN DETAIL SHEET (ENGLISH) (REV. 2/25/05)

ORIGINAL SCALE IN INCHES FOR REDUCED PLANS 0 1 2 3

CU 06249
EA 324501

DISREGARD PRINTS BEARING EARLIER REVISION DATES → 05/28/09 09/01/09

REVISION DATES (PRELIMINARY STAGE ONLY)

SHEET 6 OF 7

FILE => 46-0033I-t-brdt.dgn

USERNAME => trrichf DATE PLOTTED => 04-AUG-2010 TIME PLOTTED => 14:59

DIST.	COUNTY	ROUTE	POST MILES—TOTAL PROJECT	SHEET NO.	TOTAL SHEETS
06	Tul	99	41.2/48.3	52	56

R C Blake
DESIGN SECTION SUPERVISOR — REGISTERED CIVIL ENGINEER NO. 0002
DATE APPROVED August 31, 1970

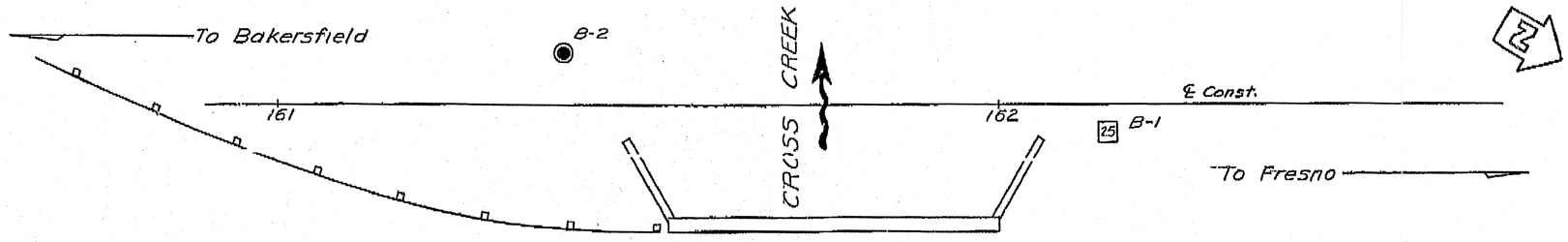

Exist Rte 99
Northbound

DIVISION OF ENGINEERING SERVICES - GEOTECHNICAL SERVICES					
As-Built Log of Test Borings sheet is considered an informational document only. As such, the State of California registration seal with signature, license number and registration certificate expiration date confirm that this is a true and accurate copy of the original document. This drawing is available and presented only for the convenience of any bidder, contractor or other interested party.					
DIST.	COUNTY	ROUTE	POST MILE-TOTAL PROJECT	Sheet No.	Total Sheets
06	Tul,Fre	99	41.3/R53.9,R0.0/R1.2	630	687
Chris Koepke 2/26/09 REGISTERED PROFESSIONAL GEOLOGIST					
CROSS CREEK BRIDGE (WIDEN)					
LOG OF TEST BORINGS					
NOTE: A COPY OF THIS LOG OF TEST BORINGS IS AVAILABLE AT OFFICE OF STRUCTURE MAINTENANCE AND INVESTIGATIONS, SACRAMENTO, CALIFORNIA		CU: 06 EA: 324501		BRIDGE No. 46-0033 R/L	
To accompany plans dated 1-25-10				Sheet 7	of 7

REGISTERED PROFESSIONAL GEOLOGIST — Christopher W. Koepke — No. 2207 — Exp. 10-31-10 — CERTIFIED ENGINEERING GEOLOGIST — STATE OF CALIFORNIA

B.M. #15.79
Chiseled "□" on East End of Northwest Wingwall
Br. #46.32 L
Elev. 274.50

PLAN
Scale: 1"=10'

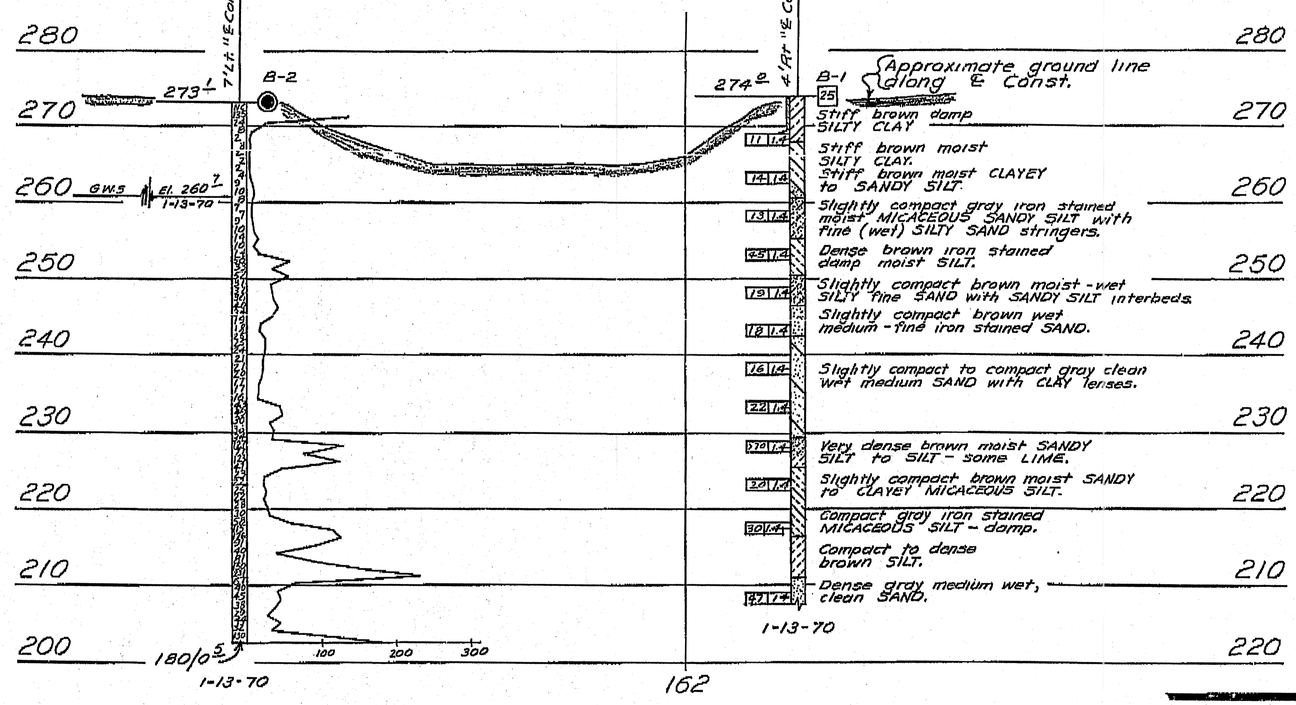

PROFILE
Scale: 1"=10'

AS BUILT
No CORRECTIONS BY R A Quallis Jr
CONTRACT NO. 06-100304 11/30/71
RAQ 2/29/72

AS BUILT PLANS
Contract No. 06-100304
Date Completed 12-22-71
Document No. 60000866

STATE OF CALIFORNIA
TRANSPORTATION AGENCY
DEPARTMENT OF PUBLIC WORKS
DIVISION OF HIGHWAYS

CROSS CREEK BRIDGE WIDENING

LOG OF TEST BORINGS

BRIDGE NO.	POST MILE	DRAWING NO.	SHEET	OF
46-33R	44.89		4	4

REVISION DATES (PRELIMINARY STAGE ONLY)

WO 100301
CU 06201

Disregard prints bearing earlier revision dates

FILENAME => 46-0033I-z-1tb01.tif

LEGEND OF BORING OPERATIONS

Penetrometer; 2½" Cone Penetrometer; Sampler Boring (Dry); Rotary Boring (Wet); Auger Boring (Dry); Jet Boring; Core Boring; Test Pit

LEGEND OF EARTH MATERIALS

Gravel; Sand; Silt; Clay; Sandy Clay or Clayey Sand; Sandy Silt or Silty Sand; Silty Clay or Clayey Silt; Peat and/or Organic Matter; Fill Material; Igneous Rock; Sedimentary Rock; Metamorphic Rock

CLASSIFICATION OF MATERIAL BASED ON STANDARD GRADE SIZE LIMITS

NOTE: Classification of earth material as shown on this sheet is based upon field inspection and is not to be construed to imply mechanical analysis.

ENGINEERING GEOLOGY SECTION

DIST	COUNTY	ROUTE	POST MILES TOTAL PROJECT	SHEET No	TOTAL SHEETS
06	Tul,Fre	99	41.3/R53.9, R0.0/R1.2	631	687

REGISTERED CIVIL ENGINEER 09/01/09 DATE

1-25-10
PLANS APPROVAL DATE

REGISTERED PROFESSIONAL ENGINEER DANNY C. VANG No. C60613 Exp. 12/31/10 CIVIL STATE OF CALIFORNIA

The State of California or its officers or agents shall not be responsible for the accuracy or completeness of electronic copies of this plan sheet.

MGE ENGINEERING, INC.
7415 GREENHAVEN DRIVE, SUITE 100
SACRAMENTO, CALIFORNIA 95831

LIM & NASCIMENTO ENGINEERING
20 EMPIRE DRIVE
LAKE FOREST, CALIFORNIA 92630

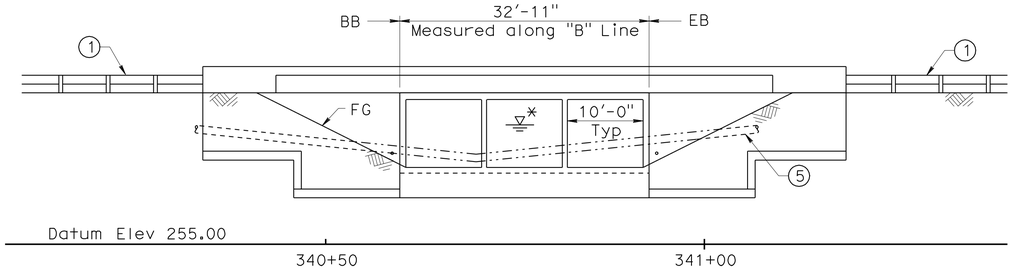

* For 'Hydrologic Summary', see "Foundation Plan" sheet.

ELEVATION

SCALE: 1" = 10'

(Existing bridge not shown for clarity)

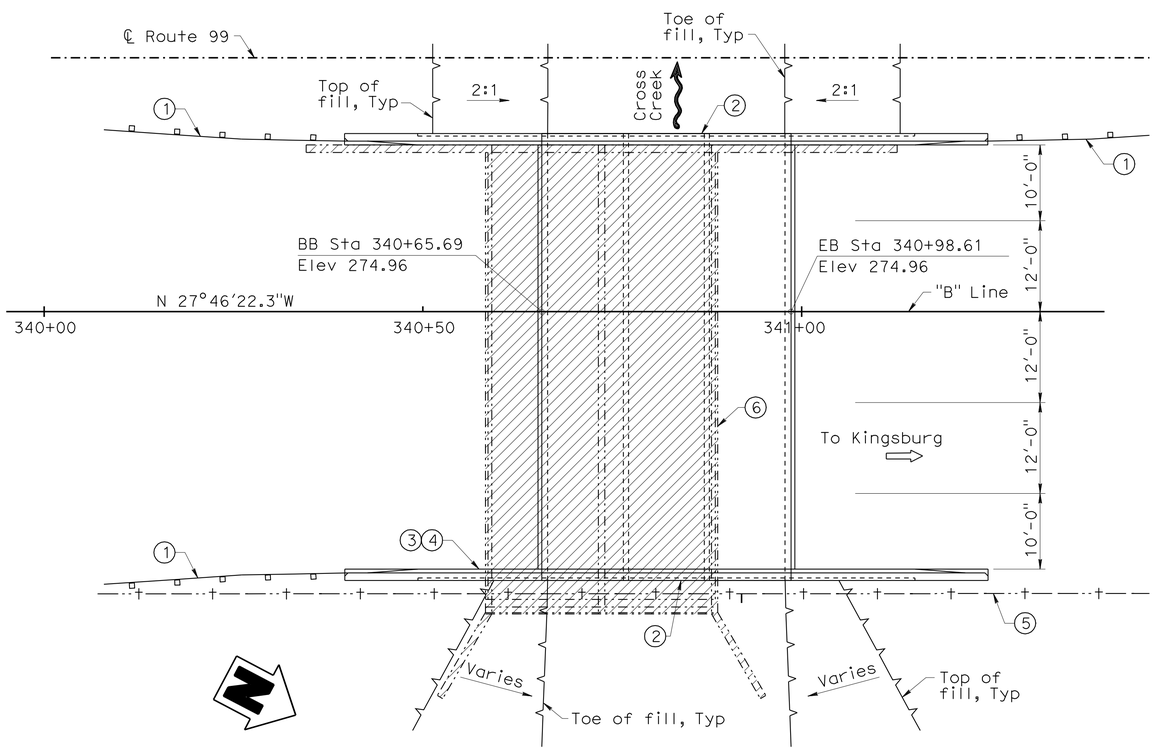

PLAN

SCALE: 1" = 10'

Note:
The Contractor shall verify all controlling field dimensions before ordering or fabricating any material.

STANDARD PLANS
Dated May 2006

A10A	Acronyms and Abbreviations (Sheet 1 of 2)
A10B	Acronyms and Abbreviations (Sheet 2 of 2)
A10C	Symbols (Sheet 1 of 2)
A10D	Symbols (Sheet 2 of 2)
A62A	Excavation and Backfill - Miscellaneous Details
A62B	Limits of Payment for Excavation and Backfill - Bridge Surcharge and Wall
A62E	Excavation and Backfill - Cast-In-Place Reinforced Concrete Box and Arch Culverts
B0-1	Bridge Details
B3-8	Retaining Wall Details No. 1
B11-56	Concrete Barrier Type 736
D81	Cast-In-Place Reinforced Concrete Double Box Culvert
D82	Cast-In-Place Reinforced Concrete Box Culvert Miscellaneous Details
D84	Box Culvert Wingwalls Types A, B and C

LEGEND

- Indicates Limits of Bridge Removal
- Indicates Exist Structure
- Indicates New Structure
- Indicates Direction of Flow
- Indicates Direction of Travel
- (1) MBGR, See 'Road Plans'
- (2) Concrete Barrier Type 736 (Mod)
- (3) Paint "Cross Creek Bridge"
- (4) Paint "Br. No. 46-0034R"
- (5) Exist Underground Telephone Conduit to be Relocated, See 'Road Plans'
- (6) Remove Exist Bridge 46-0034R

INDEX TO PLANS

Sheet No.	Title
1	General Plan
2	Foundation Plan
3	Structure Details No. 1
4	Sturcture Details No. 2
5	Sturcture Details No. 3
6	Barrier Architectural Surface Detail
7	As-Built Log of Test Borings

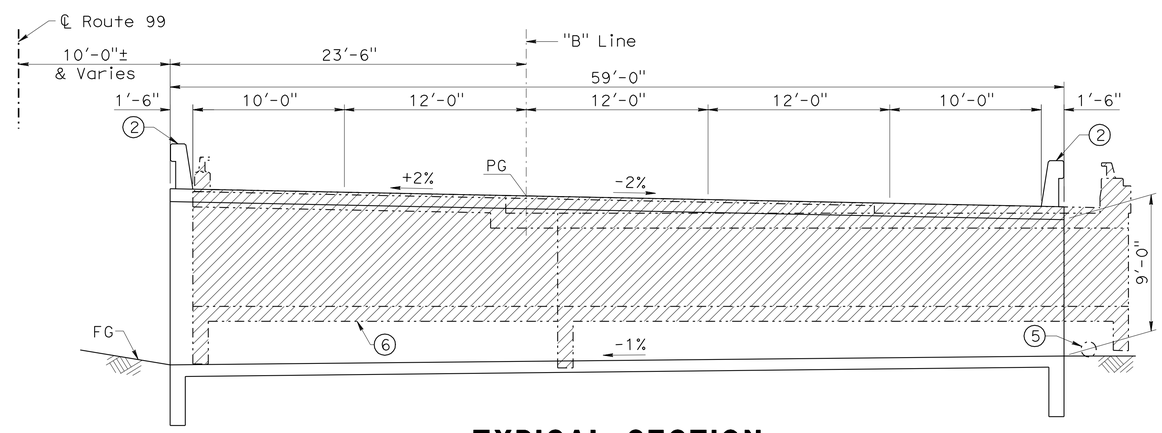

TYPICAL SECTION

SCALE: 1" = 5'

Notes:

1. For 'General Notes', see "Foundation Plan" sheet.
2. For 'Quantities', see "Foundation Plan" sheet.

DESIGN OVERSIGHT Fritz Hoffman
Sept 8, 2009
SIGN OFF DATE

	BY	CHECKED	
DESIGN	D. Vang	G. Xu	LOAD AND RESISTANCE FACTOR DESIGN — LIVE LOADING: HL93 WITH "LOW-BOY" PERMIT DESIGN VEHICLE
DETAILS	X. Sun	G. Xu	LAYOUT — D. Vang — CHECKED G. Xu
QUANTITIES	D. Vang	K. Wang	SPECIFICATIONS — R. Price — PLANS AND SPECS COMPARED R. Sennett

PREPARED FOR THE STATE OF CALIFORNIA DEPARTMENT OF TRANSPORTATION

Guoping Xu
PROJECT ENGINEER

BRIDGE NO. 46-0034R
POST MILES 45.70

CROSS CREEK BRIDGE (REPLACE)
GENERAL PLAN

DESIGN GENERAL PLAN SHEET (ENGLISH) (REV.2/25/05)

ORIGINAL SCALE IN INCHES FOR REDUCED PLANS 0 1 2 3

CU 06
EA 324501

DISREGARD PRINTS BEARING EARLIER REVISION DATES

REVISION DATES (PRELIMINARY STAGE ONLY): 10/10/08 01/12/09 04/22/09 05/15/09 05/22/09 09/01/09

SHEET 1 OF 7

FILE => 46-0034r-a-gp01.dgn

USERNAME => trrichf DATE PLOTTED => 04-AUG-2010 TIME PLOTTED => 15:00

DIST	COUNTY	ROUTE	POST MILES TOTAL PROJECT	SHEET No	TOTAL SHEETS
06	Tul,Fre	99	41.3/R53.9, R0.0/R1.2	632	687

REGISTERED CIVIL ENGINEER — DATE 09/01/09

1-25-10
PLANS APPROVAL DATE

The State of California or its officers or agents shall not be responsible for the accuracy or completeness of electronic copies of this plan sheet.

REGISTERED PROFESSIONAL ENGINEER — DANNY C. VANG — No. C60613 — Exp. 12/31/10 — CIVIL — STATE OF CALIFORNIA

MGE ENGINEERING, INC.
7415 GREENHAVEN DRIVE, SUITE 100
SACRAMENTO, CALIFORNIA 95831

LIM & NASCIMENTO ENGINEERING
20 EMPIRE DRIVE
LAKE FOREST, CALIFORNIA 92630

QUANTITIES

BRIDGE REMOVAL (PORTION), LOCATION I	LUMP	SUM
STRUCTURAL CONCRETE, BOX CULVERT	285	CY
ARCHITECTURAL TEXTURE (DRY STACKED STONE)	181	SQFT
BAR REINFORCING STEEL (BOX CULVERT)	55,850	LB
PREPARE AND STAIN CONCRETE	181	SQFT
CONCRETE BARRIER (TYPE 736 MODIFIED)	170	LF

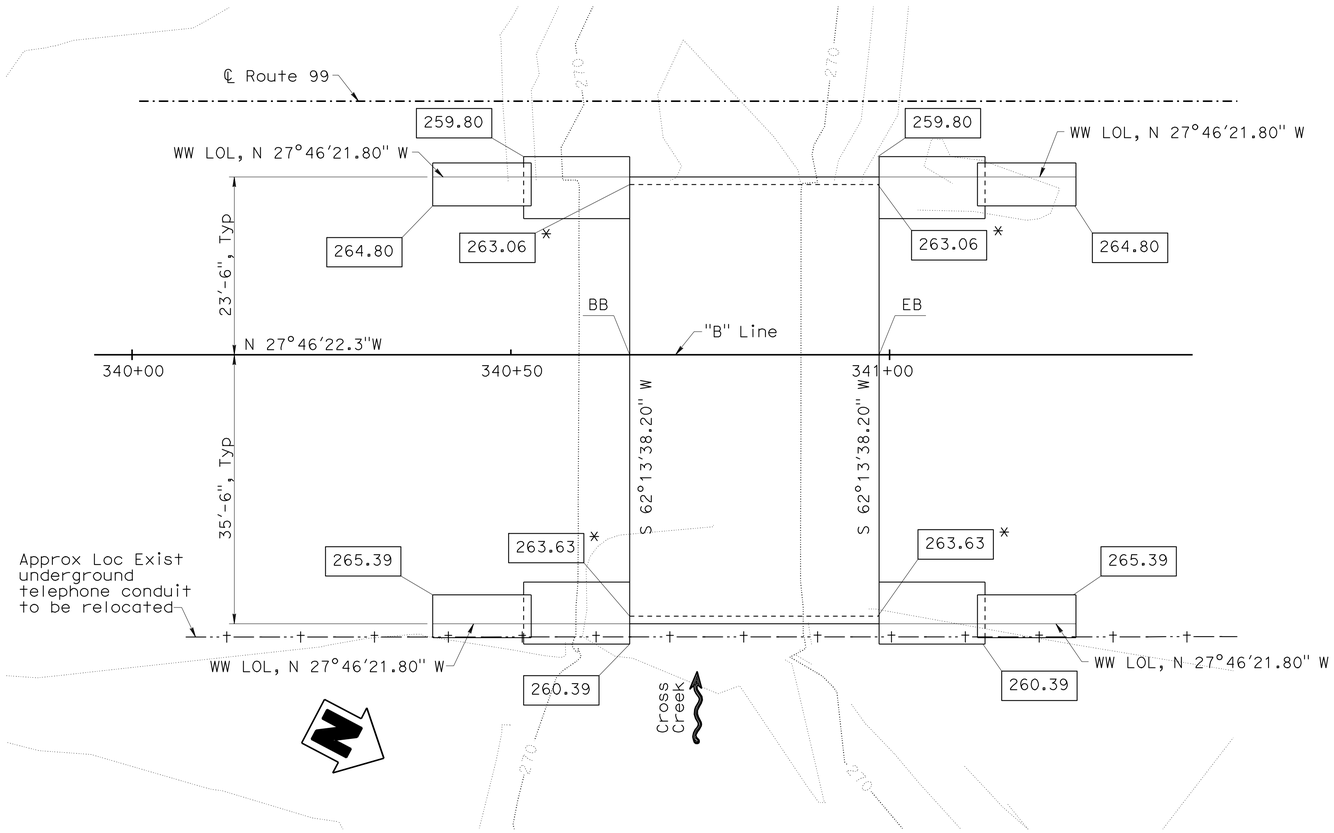

FOUNDATION PLAN

(Existing bridge not shown for clarity)

SCALE: 1" = 10'-0"

GENERAL NOTES
LOAD AND RESISTANCE FACTOR DESIGN

Design: AASHTO LRFD Bridge Design Specifications, 3rd Edition with Interims through 2006 and the Caltrans Amendments V3.06.01; except that the culvert walls, invert slab and bridge details including barriers and wingwalls taken from Standard Plans May 2006 are designed using Bridge Design Specifications ('96 AASHTO with Revisions by Caltrans).

Dead Load: Includes 35 psf for future wearing surface.

Live Loading: HL93 and permit design load.

Earth Pressure: (1) Vertical: 140 pcf; Horizontal: 140 pcf
(2) Vertical: 140 pcf; Horizontal: 42 pcf

Reinforced Concrete: fy = 60 ksi
f'c = 3.6 ksi
n = 8

SPREAD FOOTING DATA TABLE

Support Location	Allowable Bearing Capacity q_{all}	Nominal Bearing Resistance q_n
All	3.0 ksf	6.0 ksf

HYDROLOGIC SUMMARY

	Max Discharge Design Flood Max Capacity
Frequency (Years)	
Discharge (Cubic feet per second)	680
Water Surface (Elevation at bridge)	271.0

Flood plain data are based upon information available when the plans were prepared and are shown to meet federal requirements. The accuracy of said information is not warranted by the State and interested or affected parties should make their own investigation.

LEGEND

Indicates New Structure

Indicates Direction of Flow

xxx.xx — Indicates Bottom of Footing Elevation

xxx.xx * — Indicates Bottom of Invert Slab Elevation

Note:
The Contractor shall verify all controlling field dimensions before ordering or fabricating any material.

Fritz Hoffman — DESIGN OVERSIGHT Fritz Hoffman — Sept 8, 2009 — SIGN OFF DATE	SCALE:	VERT.DATUM NAVD 88	HORZ.DATUM NAD 83		
	PHOTOGRAMMETRY AS OF:		ALIGNMENT TIES Dist. Traverse Sheet		
	SURVEYED	BY District	DRAFTED	BY J. Martinez	
	FIELD CHECKED	BY T. Gillett	CHECKED	BY T. Zolnikova	

DESIGN	BY D. Vang	CHECKED	G. Xu
DETAILS	BY X. Sun	CHECKED	G. Xu
QUANTITIES	BY D. Vang	CHECKED	K. Wang

PREPARED FOR THE STATE OF CALIFORNIA DEPARTMENT OF TRANSPORTATION

Guoping Xu — PROJECT ENGINEER

BRIDGE NO. 46-0034R
POST MILE 45.70

CROSS CREEK BRIDGE (REPLACE)
FOUNDATION PLAN

FOUNDATION PLAN SHEET (ENGLISH) (REV. 2-25-05)

ORIGINAL SCALE IN INCHES FOR REDUCED PLANS 0 1 2 3

CU 06
EA 324501

DISREGARD PRINTS BEARING EARLIER REVISION DATES

REVISION DATES (PRELIMINARY STAGE ONLY) 10/16/08 01/12/09 4/22/09 05/15/09 09/01/09

SHEET 2 OF 7

FILE => 46-0034r-e-fdp101.dgn

USERNAME => trrright DATE PLOTTED => 04-AUG-2010 TIME PLOTTED => 15:00

DIST	COUNTY	ROUTE	POST MILES TOTAL PROJECT	SHEET No	TOTAL SHEETS
06	Tul,Fre	99	41.3/R53.9, R0.0/R1.2	633	687

REGISTERED CIVIL ENGINEER 09/01/09 DATE

1-25-10
PLANS APPROVAL DATE

REGISTERED PROFESSIONAL ENGINEER DANNY C. VANG No. C60613 Exp. 12/31/10 CIVIL STATE OF CALIFORNIA

The State of California or its officers or agents shall not be responsible for the accuracy or completeness of electronic copies of this plan sheet.

MGE ENGINEERING, INC.
7415 GREENHAVEN DRIVE, SUITE 100
SACRAMENTO, CALIFORNIA 95831

LIM & NASCIMENTO ENGINEERING
20 EMPIRE DRIVE
LAKE FOREST, CALIFORNIA 92630

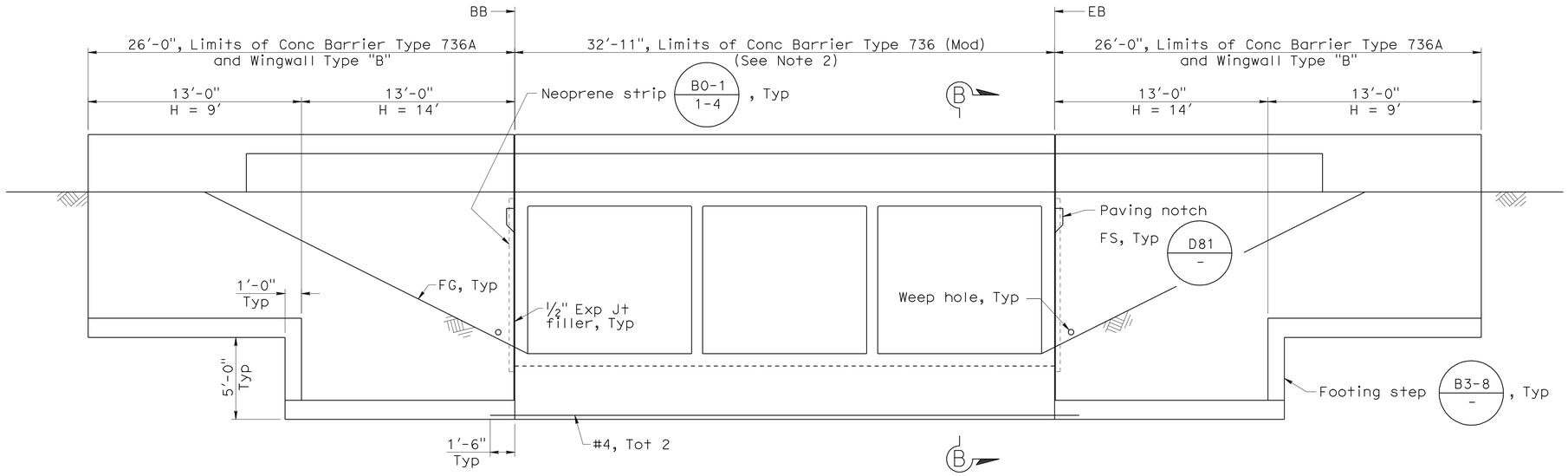

CULVERT AND WINGWALL ELEVATION

SCALE: 1/4" = 1'-0"

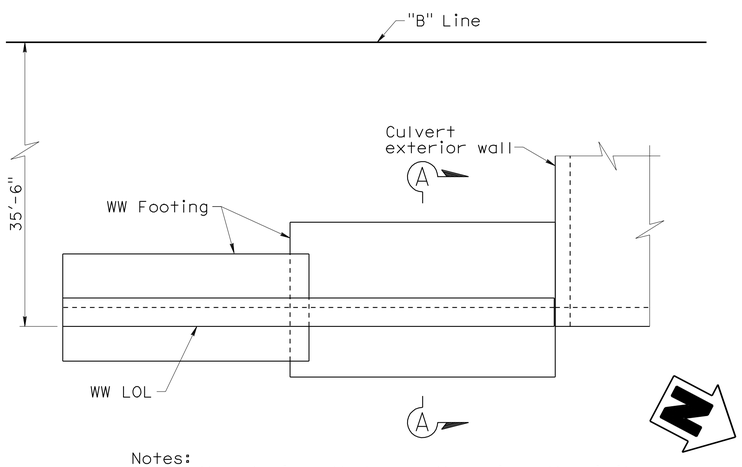

Notes:
1. Southeast wingwall shown, other wingwalls similar.
2. Barrier not shown for clarity.

WINGWALL PLAN

SCALE: 1/4" = 1'-0"

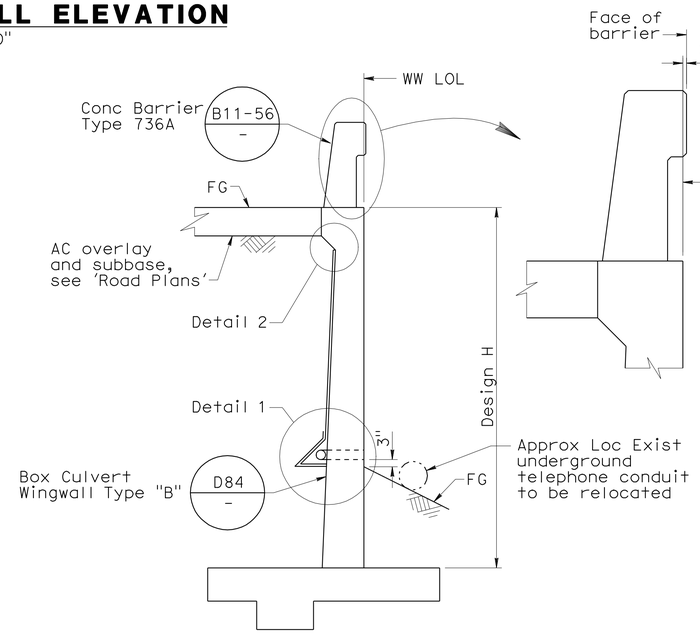

SECTION A-A

SCALE: 3/8" = 1'-0"

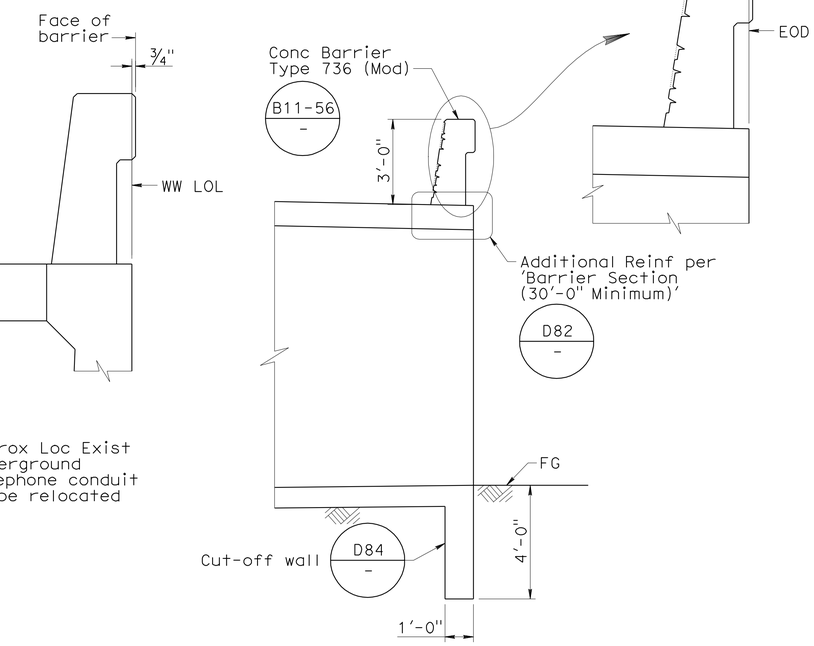

Note:
East side shown, West side similar.

SECTION B-B

SCALE: 3/8" = 1'-0"

Notes:

1. For Detail 1 and Detail 2, see "Structure Details No. 3" sheet.
2. For architectural surface detail at barrier, see "Barrier Architectural Surface Detail" sheet.

Note:
The Contractor shall verify all controlling field dimensions before ordering or fabricating any material.

DESIGN	BY D. Vang	CHECKED G. Xu	
DETAILS	BY X. Sun	CHECKED G. Xu	
QUANTITIES	BY D. Vang	CHECKED K. Wang	

DESIGN OVERSIGHT Fritz Hoffman
Sept 8, 2009
SIGN OFF DATE

PREPARED FOR THE STATE OF CALIFORNIA DEPARTMENT OF TRANSPORTATION

Guoping Xu
PROJECT ENGINEER

BRIDGE NO. 46-0034R
POST MILE 45.70

CROSS CREEK BRIDGE (REPLACE)
STRUCTURE DETAILS NO. 1

DESIGN DETAIL SHEET (ENGLISH) (REV. 2/25/05)

ORIGINAL SCALE IN INCHES FOR REDUCED PLANS 0 1 2 3

CU 06
EA 324501

DISREGARD PRINTS BEARING EARLIER REVISION DATES

REVISION DATES (PRELIMINARY STAGE ONLY) 10/16/08 01/12/09 04/22/09 05/15/09 05/28/09 09/01/09

SHEET 3 OF 7

FILE => 46-0034r-f-a01dt01.dgn

USERNAME => frrright DATE PLOTTED => 04-AUG-2010 TIME PLOTTED => 15:00

DIST	COUNTY	ROUTE	POST MILES TOTAL PROJECT	SHEET No	TOTAL SHEETS
06	Tul,Fre	99	41.3/R53.9, R0.0/R1.2	634	687

REGISTERED CIVIL ENGINEER — DATE 09/01/09

1-25-10
PLANS APPROVAL DATE

REGISTERED PROFESSIONAL ENGINEER — DANNY C. VANG — No. C60613 — Exp. 12/31/10 — CIVIL — STATE OF CALIFORNIA

The State of California or its officers or agents shall not be responsible for the accuracy or completeness of electronic copies of this plan sheet.

MGE ENGINEERING, INC.
7415 GREENHAVEN DRIVE, SUITE 100
SACRAMENTO, CALIFORNIA 95831

LIM & NASCIMENTO ENGINEERING
20 EMPIRE DRIVE
LAKE FOREST, CALIFORNIA 92630

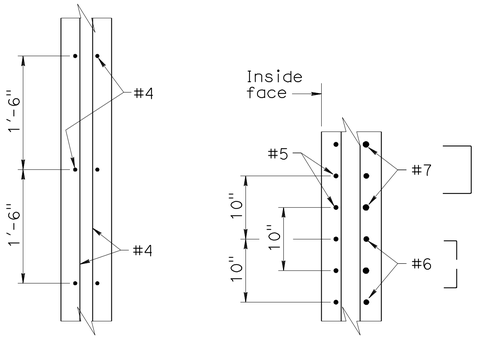

INTERIOR **EXTERIOR**

WALL SECTION
SCALE: 1" = 1'-0"

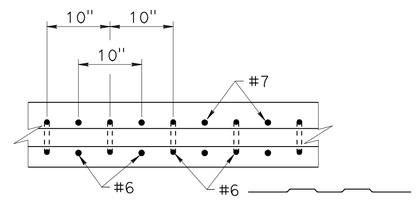

ROOF SECTION
SCALE: 1" = 1'-0"

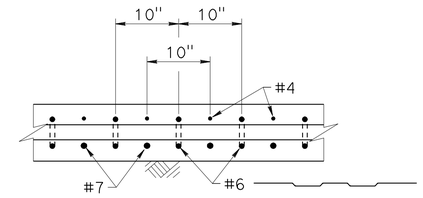

INVERT SECTION
SCALE: 1" = 1'-0"

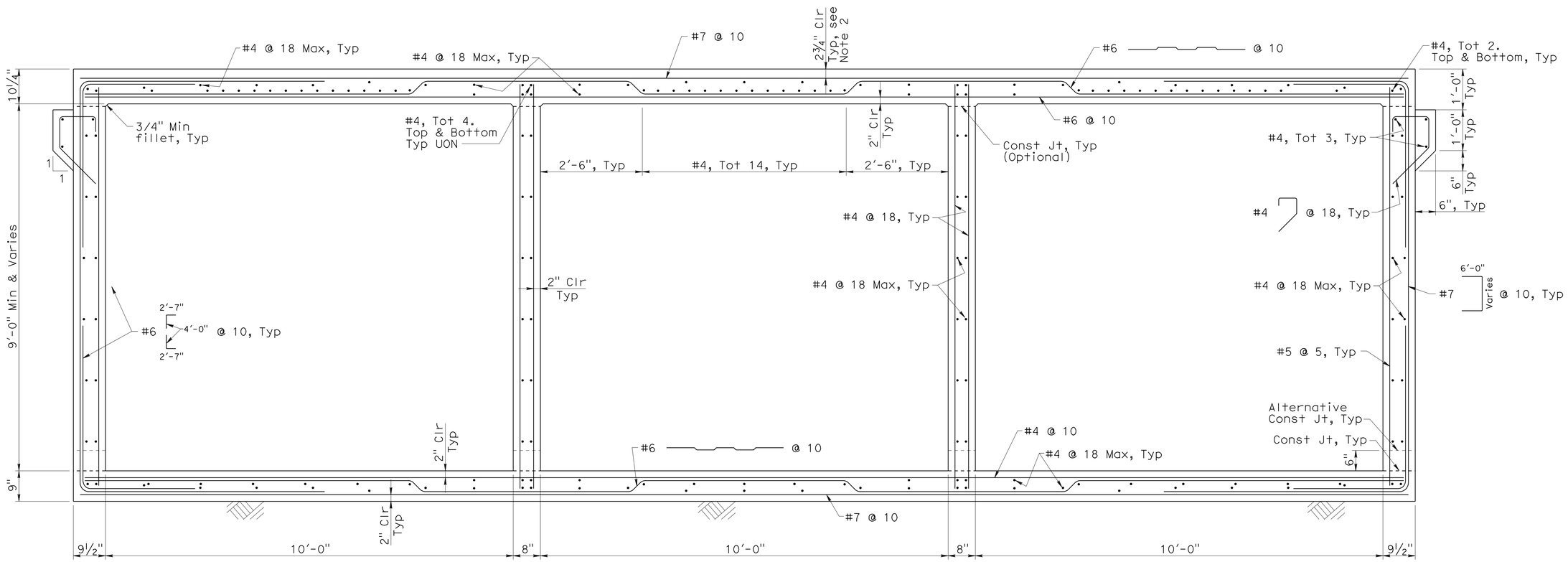

CULVERT TYPICAL SECTION
SCALE: 3/4" = 1'-0"

Note:
The Contractor shall verify all controlling field dimensions before ordering or fabricating any material.

Notes:
1. See Standard Plan sheet D82 for details and notes not shown.
2. Extra 3/4" cover provided at top of culvert for potential grinding.

DESIGN OVERSIGHT Fritz Hoffman	DESIGN	BY D. Vang	CHECKED G. Xu
Sept 8, 2009	DETAILS	BY X. Sun	CHECKED G. Xu
SIGN OFF DATE	QUANTITIES	BY D. Vang	CHECKED K. Wang

PREPARED FOR THE STATE OF CALIFORNIA DEPARTMENT OF TRANSPORTATION

Guoping Xu
PROJECT ENGINEER

BRIDGE NO. 46-0034R
POST MILE 45.70

CROSS CREEK BRIDGE (REPLACE)
STRUCTURE DETAILS NO. 2

DESIGN DETAIL SHEET (ENGLISH) (REV. 2/25/05)

ORIGINAL SCALE IN INCHES FOR REDUCED PLANS 0 1 2 3

CU 06
EA 324501

DISREGARD PRINTS BEARING EARLIER REVISION DATES

REVISION DATES (PRELIMINARY STAGE ONLY) 10/16/08 01/12/09 04/22/09 09/01/09

SHEET 4 OF 7

FILE => 46-0034r-f-a01dt02.dgn

USERNAME => rrright DATE PLOTTED => 04-AUG-2010 TIME PLOTTED => 15:00

DIST	COUNTY	ROUTE	POST MILES TOTAL PROJECT	SHEET No	TOTAL SHEETS
06	Tul,Fre	99	41.3/R53.9, R0.0/R1.2	635	687

Danny C. Vang 09/01/09
REGISTERED CIVIL ENGINEER DATE

1-25-10
PLANS APPROVAL DATE

REGISTERED PROFESSIONAL ENGINEER
DANNY C. VANG
No. C60613
Exp. 12/31/10
CIVIL
STATE OF CALIFORNIA

The State of California or its officers or agents shall not be responsible for the accuracy or completeness of electronic copies of this plan sheet.

MGE ENGINEERING, INC.
7415 GREENHAVEN DRIVE, SUITE 100
SACRAMENTO, CALIFORNIA 95831

LIM & NASCIMENTO ENGINEERING
20 EMPIRE DRIVE
LAKE FOREST, CALIFORNIA 92630

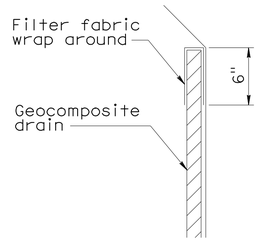

DETAIL 2
No Scale

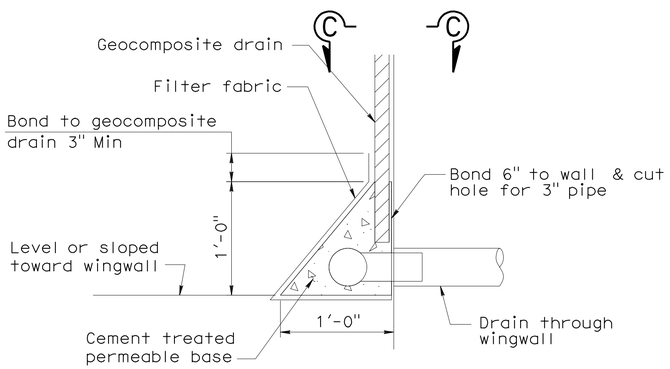

DETAIL 1
No Scale

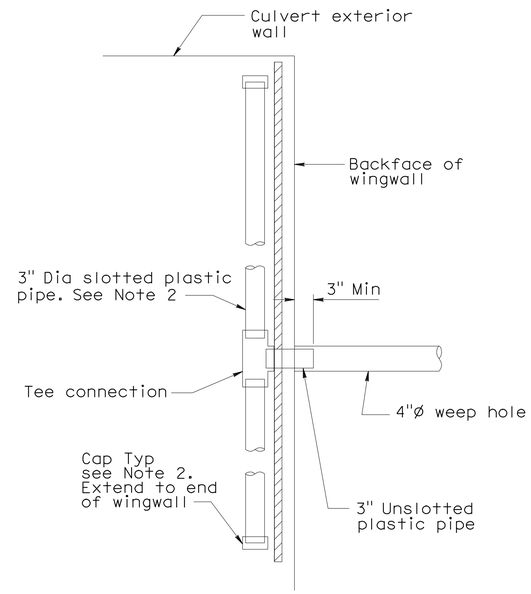

SECTION C-C
No Scale

Notes:

1. 4" drains at 20' Max center to center. Weep holes shall be located 3" above finished grade.
2. Geocomposite drain, cement treated permeable base, and 3" Dia slotted plastic pipe continuous behind wingwalls. Cap ends of pipe. Provide "Tee" connection at each 4" Dia drain.

Note:
The Contractor shall verify all controlling field dimensions before ordering or fabricating any material.

Fritz Hoffman
DESIGN OVERSIGHT Fritz Hoffman
Sept 8, 2009
SIGN OFF DATE

	BY	CHECKED
DESIGN	D. Vang	G. Xu
DETAILS	X. Sun	G. Xu
QUANTITIES	D. Vang	K. Wang

PREPARED FOR THE STATE OF CALIFORNIA DEPARTMENT OF TRANSPORTATION

Guoping Xu
PROJECT ENGINEER

BRIDGE NO. 46-0034R
POST MILE 45.70

CROSS CREEK BRIDGE (REPLACE)
STRUCTURE DETAILS NO. 3

DESIGN DETAIL SHEET (ENGLISH) (REV. 2/25/05)

ORIGINAL SCALE IN INCHES FOR REDUCED PLANS 0 1 2 3

CU 06
EA 324501

DISREGARD PRINTS BEARING EARLIER REVISION DATES

REVISION DATES (PRELIMINARY STAGE ONLY) 04/28/09 05/13/09 09/01/09

SHEET 5 OF 7

FILE => 46-0034r-f-a01dt03.dgn

USERNAME => trrichf DATE PLOTTED => 04-AUG-2010 TIME PLOTTED => 15:00

DIST	COUNTY	ROUTE	POST MILES TOTAL PROJECT	SHEET No	TOTAL SHEETS
06	Tul,Fre	99	41.3/R53.9, R0.0/R1.2	636	687

REGISTERED CIVIL ENGINEER — DATE 09/01/09

1-25-10
PLANS APPROVAL DATE

The State of California or its officers or agents shall not be responsible for the accuracy or completeness of electronic copies of this plan sheet.

REGISTERED PROFESSIONAL ENGINEER — DANNY C. VANG — No. C60613 — Exp. 12/31/10 — CIVIL — STATE OF CALIFORNIA

MGE ENGINEERING, INC.
7311 GREENHAVEN DRIVE, SUITE 100
SACRAMENTO, CALIFORNIA 95831

LIM & NASCIMENTO ENGINEERING
20 EMPIRE DRIVE
LAKE FOREST, CALIFORNIA 92630

NOTES:

1. For details not shown, see Standard Plan B11-56.
2. Height of repeating pattern measured along the slope of the barrier face.
3. Limits of placement and payment for architectural surface (dry stacked stone) texture shall be as shown in "Elevation" and shall extend from BB to EB.

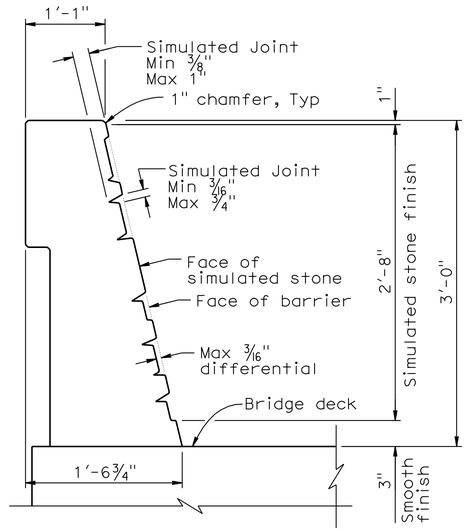

TYPE 736 (MODIFIED)
See Note 1

CONCRETE BARRIER SECTION

No scale

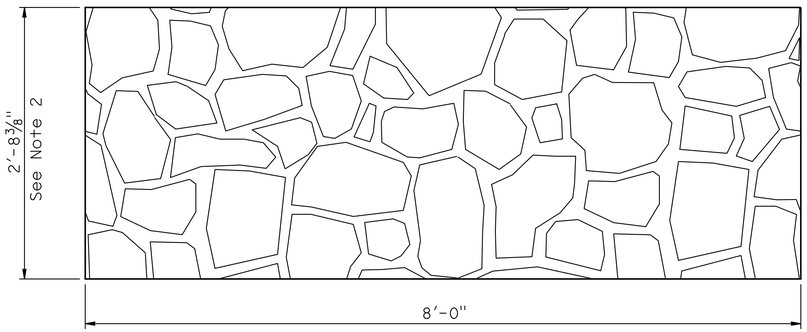

DEVELOPED ELEVATION

REPEATING PATTERN

No scale

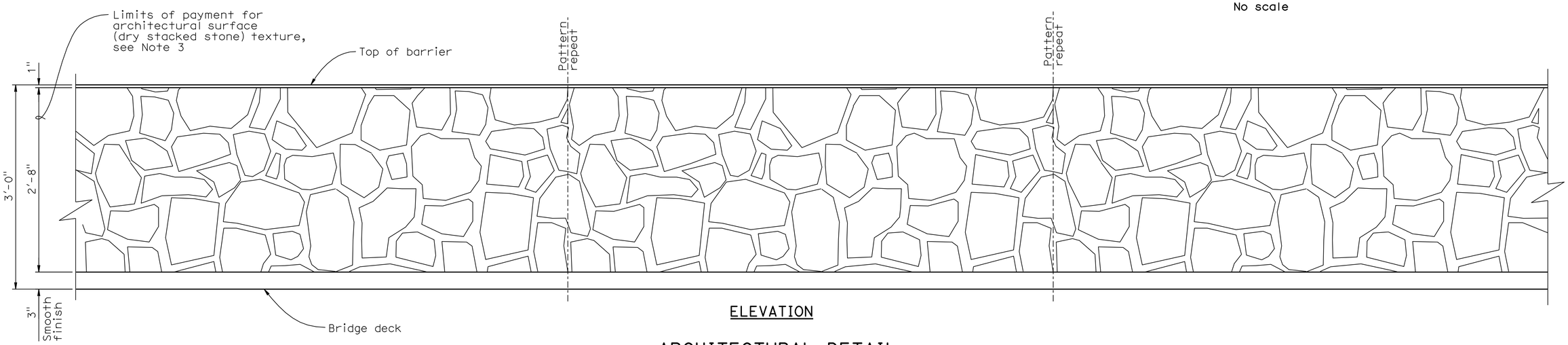

ELEVATION

ARCHITECTURAL DETAIL
CONCRETE BARRIER TYPE 736 (MODIFIED)

No scale

Note:
The Contractor shall verify all controlling field dimensions before ordering or fabricating any material.

Fritz Hoffman
DESIGN OVERSIGHT — Fritz Hoffman
Sept 8, 2009
SIGN OFF DATE

	BY	CHECKED
DESIGN	D. Vang	G. Xu
DETAILS	X. Sun	G. Xu
QUANTITIES	D. Vang	K. Wang

PREPARED FOR THE STATE OF CALIFORNIA DEPARTMENT OF TRANSPORTATION

Guoping Xu
PROJECT ENGINEER

BRIDGE NO. 46-0034R
POST MILE 45.70

CROSS CREEK BRIDGE (WIDEN)
BARRIER ARCHITECTURAL SURFACE DETAIL

DESIGN DETAIL SHEET (ENGLISH) (REV. 2/25/05)

ORIGINAL SCALE IN INCHES FOR REDUCED PLANS 0 1 2 3

CU 06249
EA 324501

DISREGARD PRINTS BEARING EARLIER REVISION DATES — REVISION DATES (PRELIMINARY STAGE ONLY) 05/14/09 05/27/09 09/01/09

SHEET 6 OF 7

FILE => 46-0034r-t-brdt.dgn

USERNAME => trrichf DATE PLOTTED => 04-AUG-2010 TIME PLOTTED => 15:00

DIST.	COUNTY	ROUTE	POST MILES—TOTAL PROJECT	SHEET NO.	TOTAL SHEETS
06	Tul	99	41.2/42.3	56	56

R C Blacklock
BRIDGE SECTION SUPERVISOR — REGISTERED CIVIL ENGINEER NO. 0002
DATE APPROVED August 31, 1970

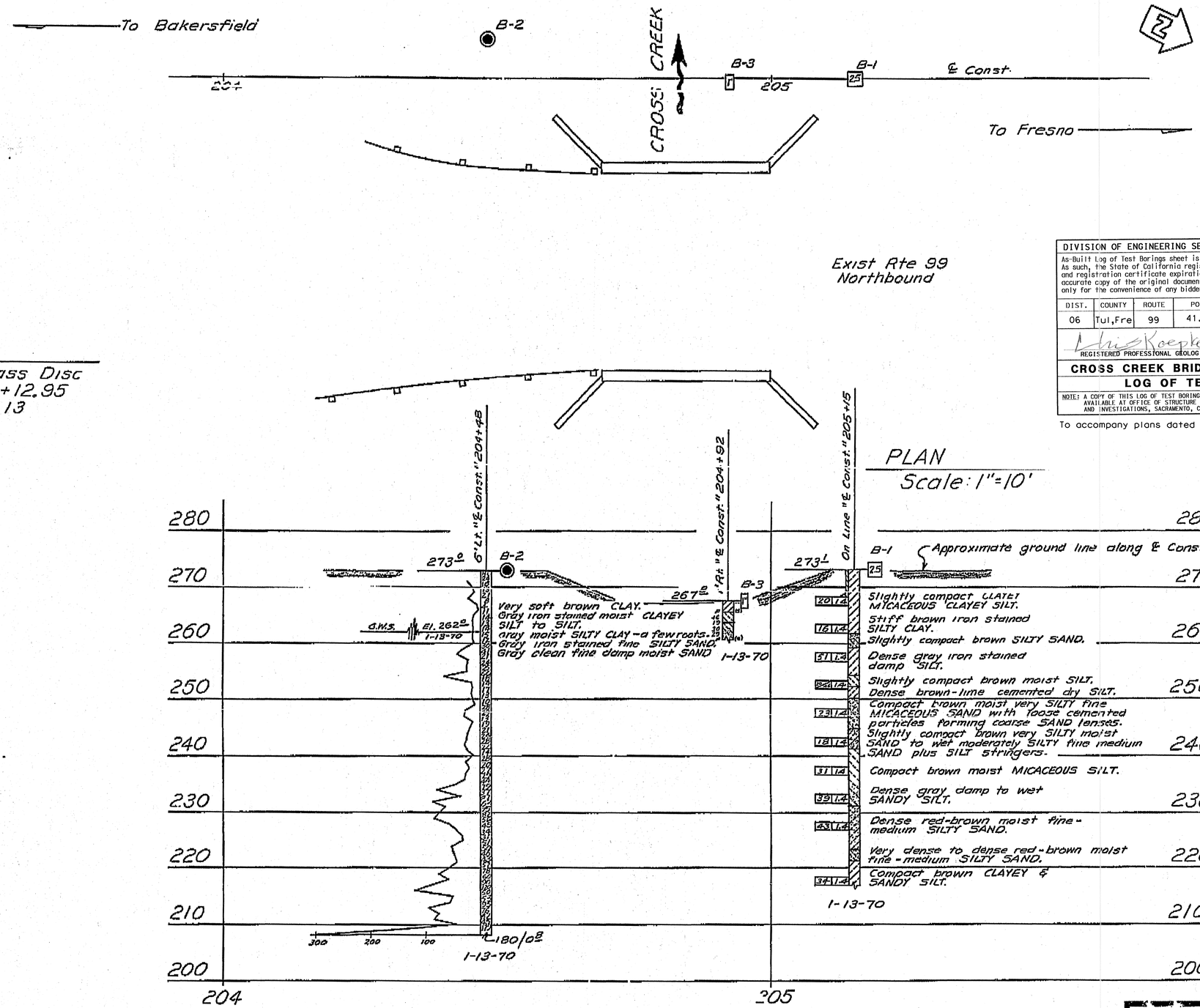

DIVISION OF ENGINEERING SERVICES - GEOTECHNICAL SERVICES

As-Built Log of Test Borings sheet is considered an informational document only. As such, the State of California registration seal with signature, license number and registration certificate expiration date confirm that this is a true and accurate copy of the original document. This drawing is available and presented only for the convenience of any bidder, contractor or other interested party.

DIST.	COUNTY	ROUTE	POST MILE-TOTAL PROJECT	Sheet No.	Total Sheets
06	Tul,Fre	99	41.3/R53.9,R0.0/R1.2	637	687

Christopher W. Koepke 2/26/09
REGISTERED PROFESSIONAL GEOLOGIST

REGISTERED PROFESSIONAL GEOLOGIST — Christopher W. Koepke — No. 2207 — Exp. 10-31-10 — CERTIFIED ENGINEERING GEOLOGIST — STATE OF CALIFORNIA

CROSS CREEK BRIDGE (REPLACE/ WIDEN)

LOG OF TEST BORINGS

NOTE: A COPY OF THIS LOG OF TEST BORINGS IS AVAILABLE AT OFFICE OF STRUCTURE MAINTENANCE AND INVESTIGATIONS, SACRAMENTO, CALIFORNIA

CU: 06
EA: 324501

BRIDGE No. 46-0034 R/L

Sheet 7 of 7

To accompany plans dated 1-25-10

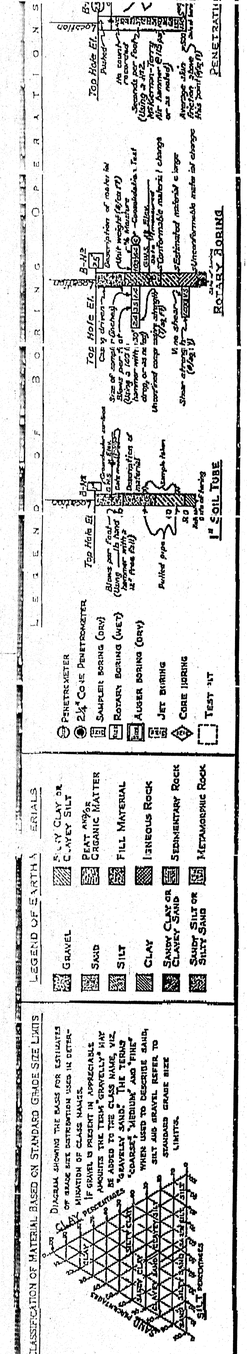

NOTE: Classification of earth material as shown on this sheet is based upon field inspection and is not to be construed to imply mechanical analysis.

AS BUILT PLANS
Contract No. 06-100304
Date Completed 12-22-71
Document No. 60000866

AS BUILT
No. CORRECTIONS BY RA Quails Jr
CONTRACT NO. 06-100304 11/30/71
RRR 2/24/12

STATE OF CALIFORNIA
TRANSPORTATION AGENCY
DEPARTMENT OF PUBLIC WORKS
DIVISION OF HIGHWAYS

CROSS CREEK BRIDGE WIDENING

LOG OF TEST BORINGS

BRIDGE NO.	POST MILE	DRAWING NO.	SHEET	OF
46-34 R	45.70		4	4

REVISION DATES (PRELIMINARY STAGE ONLY)

FILENAME => 46-0034r-z-ltb01.tif

WO 100301
CU 06201

Disregard prints bearing earlier revision dates

DIST	COUNTY	ROUTE	POST MILES TOTAL PROJECT	SHEET No	TOTAL SHEETS
06	Tul,Fre	99	41.3/R53.9, R0.0/R1.2	638	687

REGISTERED CIVIL ENGINEER — DATE 09/01/09

1-25-10
PLANS APPROVAL DATE

The State of California or its officers or agents shall not be responsible for the accuracy or completeness of electronic copies of this plan sheet.

REGISTERED PROFESSIONAL ENGINEER — DANNY C. VANG — No. C60613 — Exp. 12/31/10 — CIVIL — STATE OF CALIFORNIA

MGE ENGINEERING, INC.
7415 GREENHAVEN DRIVE, SUITE 100
SACRAMENTO, CALIFORNIA 95831

LIM & NASCIMENTO ENGINEERING
20 EMPIRE DRIVE
LAKE FOREST, CALIFORNIA 92630

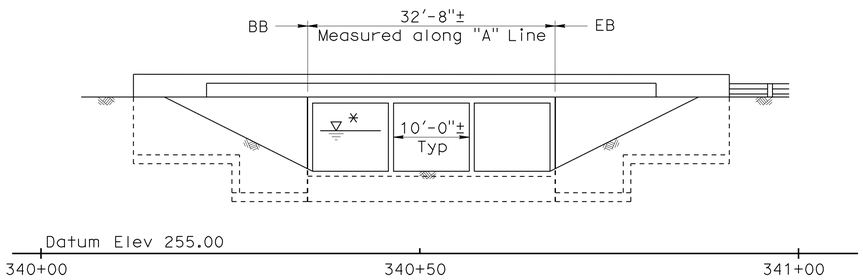

* For 'Hydrologic Summary', see "Foundation Plan" sheet.

ELEVATION
SCALE: 1" = 10'

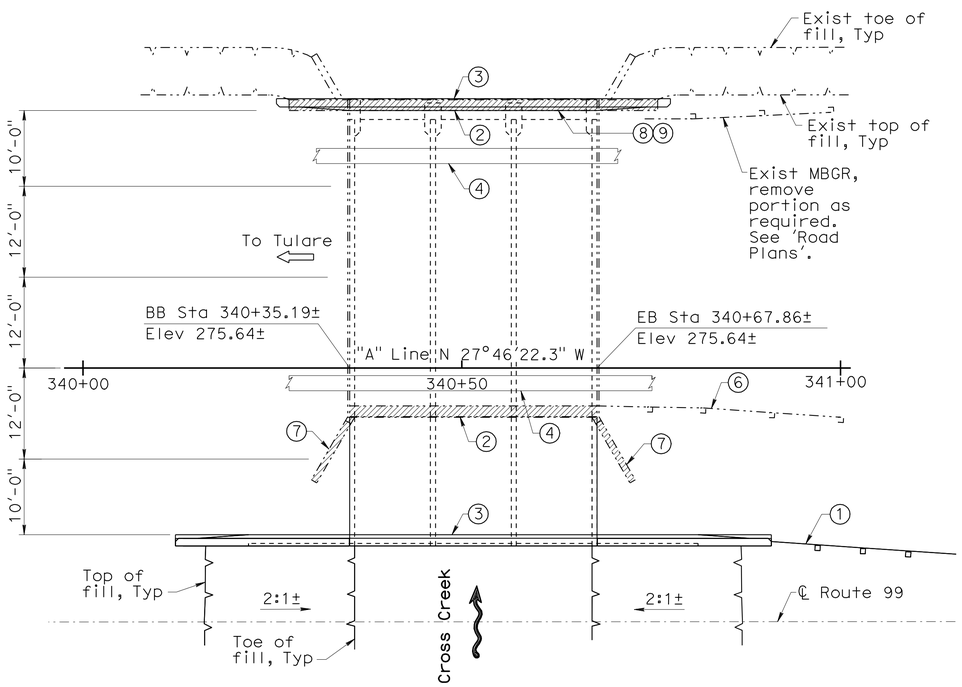

PLAN
SCALE: 1" = 10'

Note:
The Contractor shall verify all controlling field dimensions before ordering or fabricating any material.

QUANTITIES

BRIDGE REMOVAL (PORTION), LOCATION J	LUMP	SUM
HOT MIX ASPHALT (TYPE B)	17	TON
STRUCTURAL CONCRETE, BOX CULVERT	96	CY
ARCHITECTURAL TEXTURE (DRY STACKED STONE)	180	SQFT
DRILL AND BOND DOWEL	3	LF
BAR REINFORCING STEEL (BOX CULVERT)	14,100	LB
PREPARE AND STAIN CONCRETE	180	SQFT
CONCRETE BARRIER (TYPE 736 MODIFIED)	131	LF

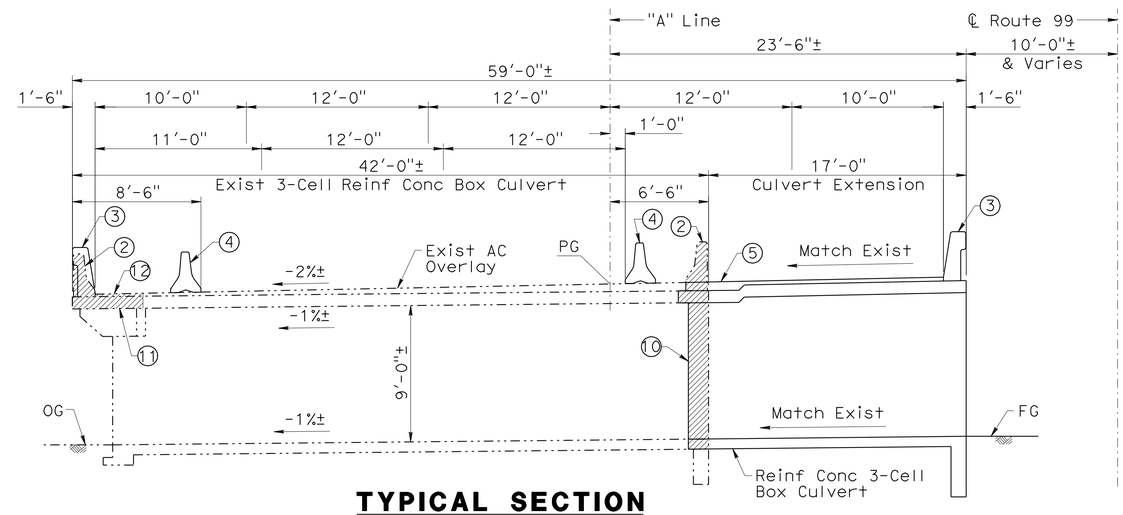

TYPICAL SECTION
SCALE: 1" = 5'

LEGEND

- Indicates Limits of Bridge Removal (Portion)
- Indicates Exist Structure
- Indicates New Structure
- Indicates Direction of Flow
- Indicates Direction of Travel
- (1) MBGR, See 'Road Plans'
- (2) Remove Exist Concrete Barrier Type 27R/27/27B
- (3) Concrete Barrier Type 736 (Mod)
- (4) Temporary "K" Railing, See 'Road Plans'
- (5) Hot Mix Asphalt (Type B), Thickness Varies
- (6) Exist MBGR to be Removed, See 'Road Plans'
- (7) Remove Exist Wingwall
- (8) Paint "Cross Creek Bridge"
- (9) Paint "Br. No. 46-0034L"
- (10) Remove Exist Concrete (Exist Reinf to Remain)
- (11) Remove Portion of Exist Reinf Conc Slab
- (12) Remove Portion of Exist AC Overlay

INDEX TO PLANS

Sheet No.	Title
1	General Plan
2	Foundation Plan
3	Extension Details No. 1
4	Extension Details No. 2
5	Extension Details No. 3
6	Barrier Architectural Surface Detail
7	As-Built Log of Test Borings

STANDARD PLANS
Dated May 2006

A10A	Acronyms and Abbreviations (Sheet 1 of 2)
A10B	Acronyms and Abbreviations (Sheet 2 of 2)
A10C	Symbols (Sheet 1 of 2)
A10D	Symbols (Sheet 2 of 2)
A62A	Excavation and Backfill - Miscellaneous Details
A62B	Limits of Payment for Excavation and Backfill - Bridge Surcharge and Wall
A62E	Excavation and Backfill - Cast-In-Place Reinforced Concrete Box and Arch Culverts
B0-1	Bridge Details
B3-8	Retaining Wall Details No. 1
B11-56	Concrete Barrier Type 736
D84	Box Culvert Wingwalls Types A, B and C

Fritz Hoffman
DESIGN OVERSIGHT — Fritz Hoffman
Sept 8, 2009
SIGN OFF DATE

	BY	CHECKED			
DESIGN	D. Vang	D. Wang	LOAD FACTOR DESIGN	LIVE LOADING: HS20-44	
DETAILS	X. Sun	D. Wang	LAYOUT	D. Vang	D. Wang
QUANTITIES	D. Vang	K. Wang	SPECIFICATIONS	R. Price	PLANS AND SPECS COMPARED R. Sennett

PREPARED FOR THE STATE OF CALIFORNIA DEPARTMENT OF TRANSPORTATION

Guoping Xu
PROJECT ENGINEER

BRIDGE NO. 46-0034L
POST MILES 45.70

CROSS CREEK BRIDGE (WIDEN)
GENERAL PLAN

DESIGN GENERAL PLAN SHEET (ENGLISH) (REV.2/25/05)

ORIGINAL SCALE IN INCHES FOR REDUCED PLANS 0 1 2 3

CU 06249
EA 324501

DISREGARD PRINTS BEARING EARLIER REVISION DATES

REVISION DATES (PRELIMINARY STAGE ONLY): 10/16/08 01/12/09 04/22/09 05/27/09 09/01/09

SHEET 1 OF 7

FILE => 46-0034l-a-gp01.dgn

USERNAME => frrright DATE PLOTTED => 04-AUG-2010 TIME PLOTTED => 15:01

DIST	COUNTY	ROUTE	POST MILES TOTAL PROJECT	SHEET No	TOTAL SHEETS
06	Tul,Fre	99	41.3/R53.9, R0.0/R1.2	639	687

REGISTERED CIVIL ENGINEER — DATE 09/01/09

1-25-10
PLANS APPROVAL DATE

The State of California or its officers or agents shall not be responsible for the accuracy or completeness of electronic copies of this plan sheet.

REGISTERED PROFESSIONAL ENGINEER — DANNY C. VANG — No. C60613 — Exp. 12/31/10 — CIVIL — STATE OF CALIFORNIA

MGE ENGINEERING, INC.
7415 GREENHAVEN DRIVE, SUITE 100
SACRAMENTO, CALIFORNIA 95831

LIM & NASCIMENTO ENGINEERING
20 EMPIRE DRIVE
LAKE FOREST, CALIFORNIA 92630

LEGEND

- Indicates Limits of Bridge Removal (Portion)
- Indicates Exist Structure
- Indicates New Structure
- Indicates Direction of Flow
- xxx.xx — Indicates Bottom of Footing Elevation
- xxx.xx * — Indicates Bottom of Invert Slab Elevation

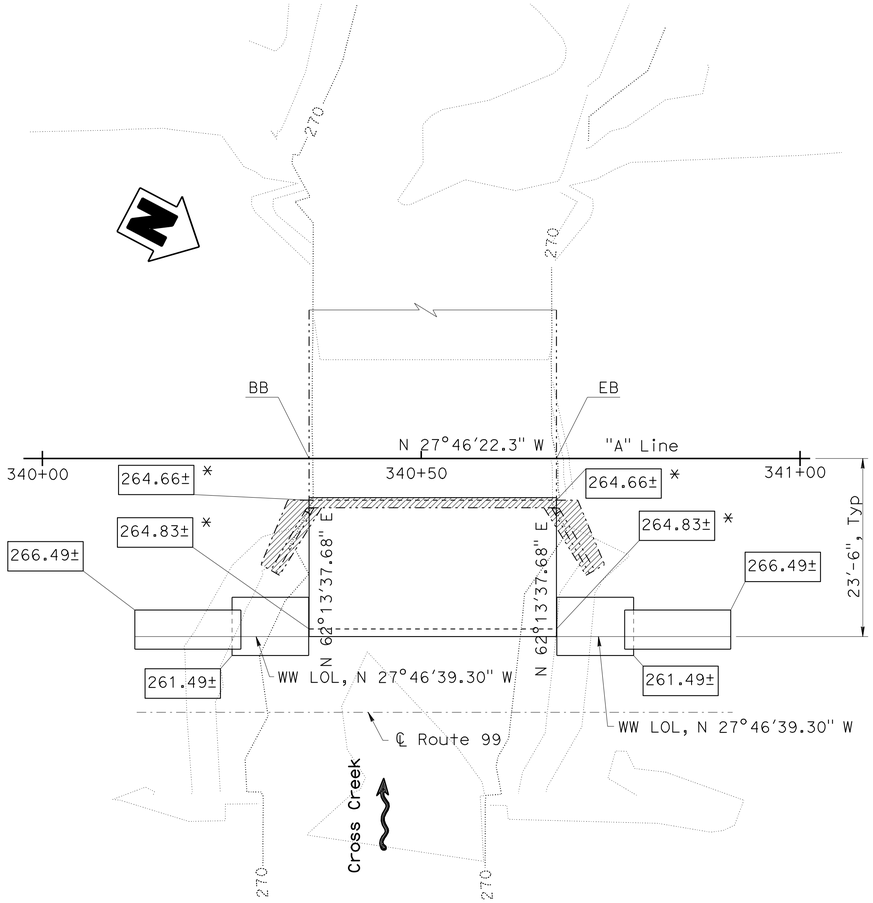

FOUNDATION PLAN

SCALE: 1" = 10'

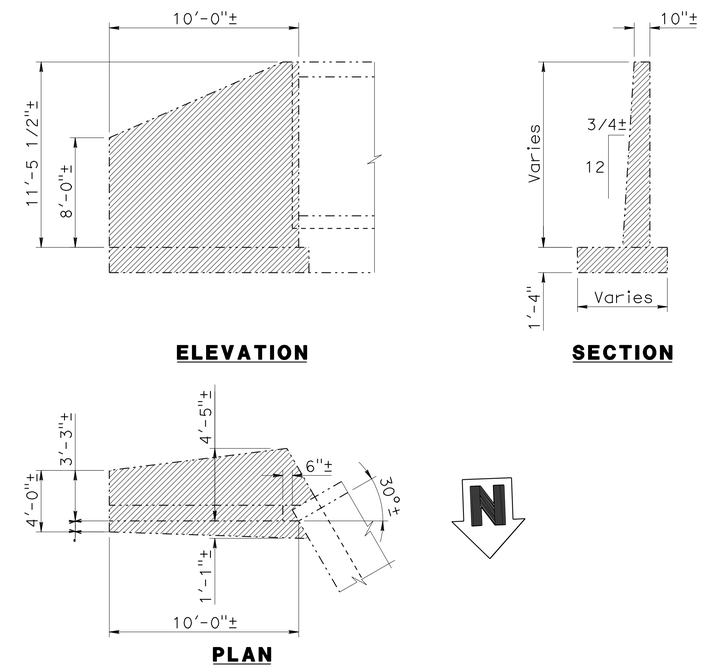

ELEVATION **SECTION** **PLAN**

Note: South wingwall shown, north wingwall similar.

EXIST WINGWALL DEMOLITION DETAIL

SCALE: NTS

SPREAD FOOTING DATA TABLE

Support Location	Allowable Bearing Capacity q_{all}	Nominal Bearing Resistance q_n
All	3.0 ksf	6.0 ksf

GENERAL NOTES
LOAD FACTOR DESIGN

Design: Bridge Design Specifications, April 2000 (1996 AASHTO with Interims and Revisions by Caltrans) except that bridge barriers are designed per AASHTO LRFD Bridge Design Specifications, 3rd Edition with Interims through 2006 and the Caltrans Amendments, V3.06.01

Dead Load: Includes 35 psf for future wearing surface

Live Loading: HS20-44 with 30% Impact except that bridge barriers are design based on LRFD live loading

Earth Pressure: (1) Vertical: 140 pcf; Horizontal: 140 pcf
(2) Vertical: 140 pcf; Horizontal: 42 pcf

Reinforced Concrete: fy = 60 ksi
f'c = 3.6 ksi
n = 8

Note:
The Contractor shall verify all controlling field dimensions before ordering or fabricating any material.

HYDROLOGIC SUMMARY

	Max Discharge Design Flood Max Capacity
Frequency (Years)	
Discharge (Cubic feet per second)	680
Water Surface (Elevation at bridge)	271.0

Flood plain data are based upon information available when the plans were prepared and are shown to meet federal requirements. The accuracy of said information is not warranted by the State and interested or affected parties should make their own investigation.

DESIGN OVERSIGHT Fritz Hoffman	SCALE:	VERT.DATUM NAVD 88	HORZ.DATUM NAD 83
Sept 8, 2009	PHOTOGRAMMETRY AS OF:	ALIGNMENT TIES Dist. Traverse Sheet	
SIGN OFF DATE	SURVEYED BY District	DRAFTED BY J. Martinez	
	FIELD CHECKED BY T. Gillett	CHECKED BY T. Zolnikova	

DESIGN	BY D. Vang	CHECKED D. Wang	
DETAILS	BY X. Sun	CHECKED D. Wang	
QUANTITIES	BY D. Vang	CHECKED K. Wang	

PREPARED FOR THE STATE OF CALIFORNIA DEPARTMENT OF TRANSPORTATION

Guoping Xu
PROJECT ENGINEER

BRIDGE NO. 46-0034L
POST MILE 45.70

CROSS CREEK BRIDGE (WIDEN)
FOUNDATION PLAN

FOUNDATION PLAN SHEET (ENGLISH) (REV. 2-25-05)

ORIGINAL SCALE IN INCHES FOR REDUCED PLANS 0 1 2 3

CU 06249
EA 324501

DISREGARD PRINTS BEARING EARLIER REVISION DATES

REVISION DATES (PRELIMINARY STAGE ONLY) 10/16/08 01/12/09 04/22/09 09/01/09

SHEET 2 OF 7

FILE => 46-0034l-e-fdp101.dgn

USERNAME => frrichf DATE PLOTTED => 04-AUG-2010 TIME PLOTTED => 15:01

DIST	COUNTY	ROUTE	POST MILES TOTAL PROJECT	SHEET No	TOTAL SHEETS
06	Tul,Fre	99	41.3/R53.9, R0.0/R1.2	640	687

REGISTERED CIVIL ENGINEER — DATE 09/01/09

1-25-10
PLANS APPROVAL DATE

The State of California or its officers or agents shall not be responsible for the accuracy or completeness of electronic copies of this plan sheet.

REGISTERED PROFESSIONAL ENGINEER — DANNY C. VANG No. C60613 Exp. 12/31/10 CIVIL — STATE OF CALIFORNIA

MGE ENGINEERING, INC.
7415 GREENHAVEN DRIVE, SUITE 100
SACRAMENTO, CALIFORNIA 95831

LIM & NASCIMENTO ENGINEERING
20 EMPIRE DRIVE
LAKE FOREST, CALIFORNIA 92630

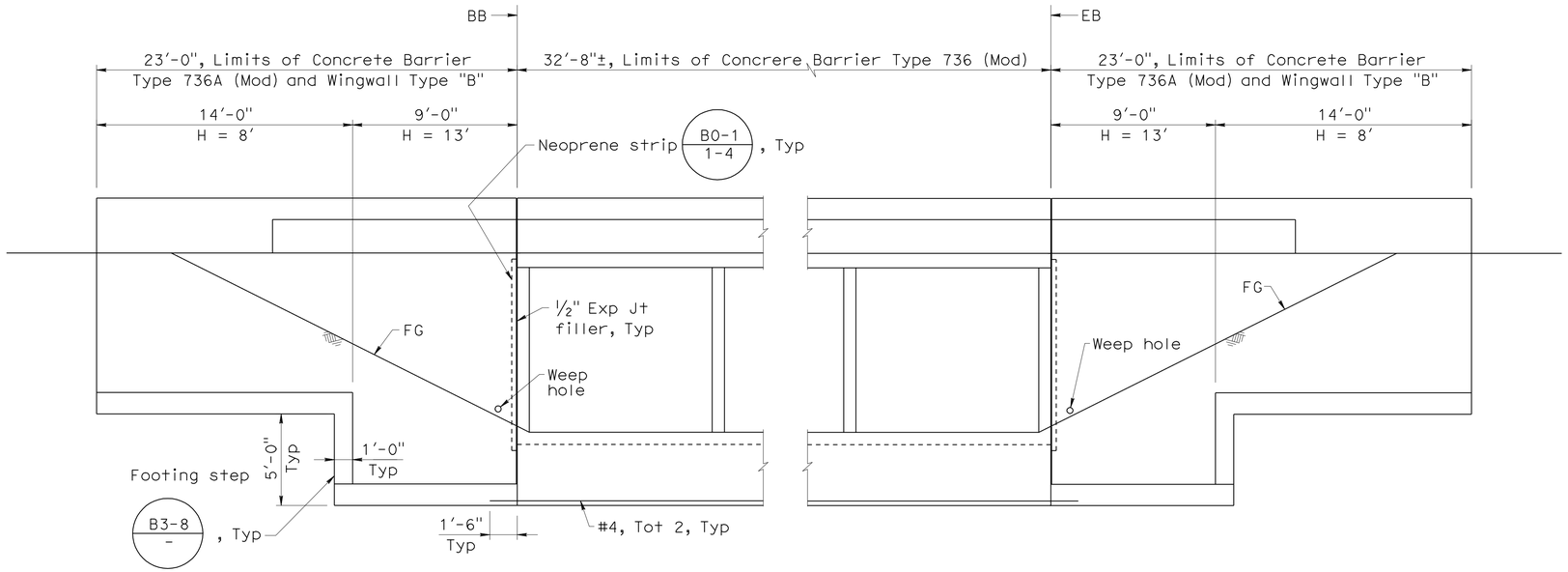

PARTIAL ELEVATION

SCALE: ¼" = 1'-0"

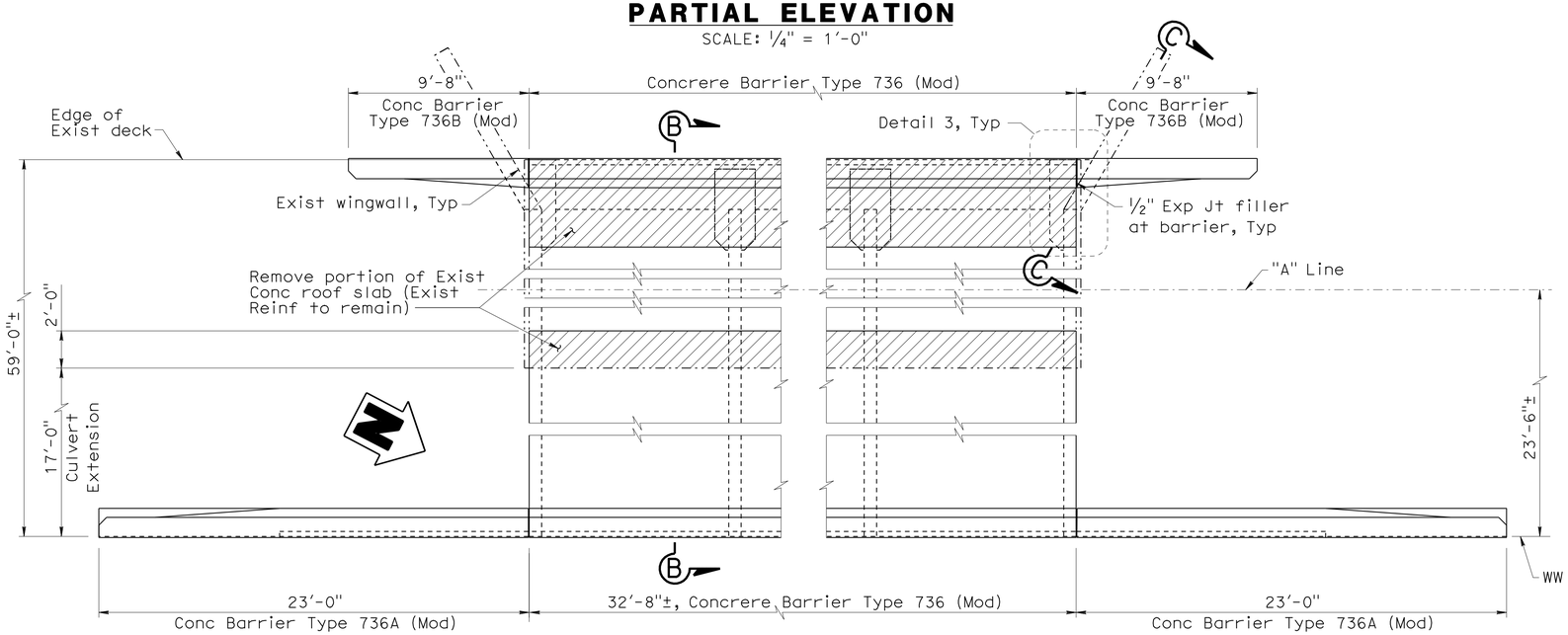

Note:
Removal of Exist wingwalls not shown, see "Foundation Plan" sheet for removal limits and details.
Removal of Exist barriers not shown, see Section B-B on "Extension Details No. 3" sheet for details.

PARTIAL PLAN

SCALE: ¼" = 1'-0"

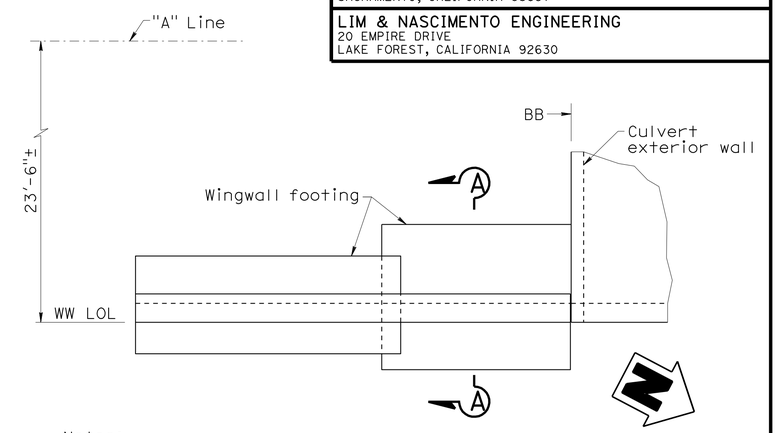

Notes:
1. South wingwall shown, north wingwall similar.
2. Barrier not shown for clarity.

WINGWALL PLAN

SCALE: ¼" = 1'-0"

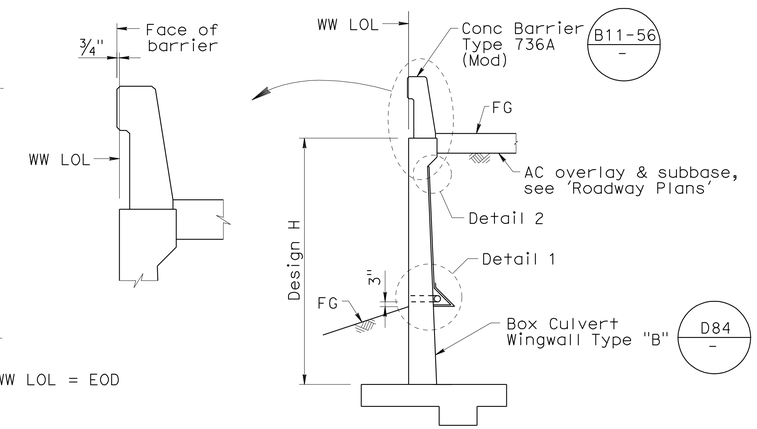

SECTION A-A

SCALE: ¼" = 1'-0"

Notes:
1. For Section B-B, Detail 1 & Detail 2, see "Extension Details No. 3" sheet.
2. See Standard Plan sheet D82 for details and notes not shown.
3. For Section C-C and Detail 3, see "Extension Details No. 2" sheet.

LEGEND

Indicates Limits of Bridge Removal (Portion)

Notes:
The Contractor shall verify all controlling field dimensions before ordering or fabricating any material.

DESIGN OVERSIGHT Fritz Hoffman
Sept 8, 2009
SIGN OFF DATE

	BY	CHECKED
DESIGN	D. Vang	D. Wang
DETAILS	X. Sun/A.Bhatt	D. Wang
QUANTITIES	D. Vang	K. Wang

PREPARED FOR THE STATE OF CALIFORNIA DEPARTMENT OF TRANSPORTATION

Guoping Xu
PROJECT ENGINEER

BRIDGE NO. 46-0034L
POST MILE 45.70

CROSS CREEK BRIDGE (WIDEN)
EXTENSION DETAILS NO. 1

DESIGN DETAIL SHEET (ENGLISH) (REV. 2/25/05)

ORIGINAL SCALE IN INCHES FOR REDUCED PLANS 0 1 2 3

CU 06249
EA 324501

DISREGARD PRINTS BEARING EARLIER REVISION DATES

REVISION DATES (PRELIMINARY STAGE ONLY) 10/14/08 01/12/09 04/22/09 05/15/09 05/22/09 09/01/09

SHEET 3 OF 7

FILE => 46-0034l-f-a01dt01.dgn

USERNAME => trrichf DATE PLOTTED => 04-AUG-2010 TIME PLOTTED => 15:01

DIST	COUNTY	ROUTE	POST MILES TOTAL PROJECT	SHEET No	TOTAL SHEETS
06	Tul,Fre	99	41.3/R53.9, R0.0/R1.2	641	687

REGISTERED CIVIL ENGINEER — DATE 09/01/09

1-25-10
PLANS APPROVAL DATE

The State of California or its officers or agents shall not be responsible for the accuracy or completeness of electronic copies of this plan sheet.

REGISTERED PROFESSIONAL ENGINEER — DANNY C. VANG — No. C60613 — Exp. 12/31/10 — CIVIL — STATE OF CALIFORNIA

MGE ENGINEERING, INC.
7415 GREENHAVEN DRIVE, SUITE 100
SACRAMENTO, CALIFORNIA 95831

LIM & NASCIMENTO ENGINEERING
20 EMPIRE DRIVE
LAKE FOREST, CALIFORNIA 92630

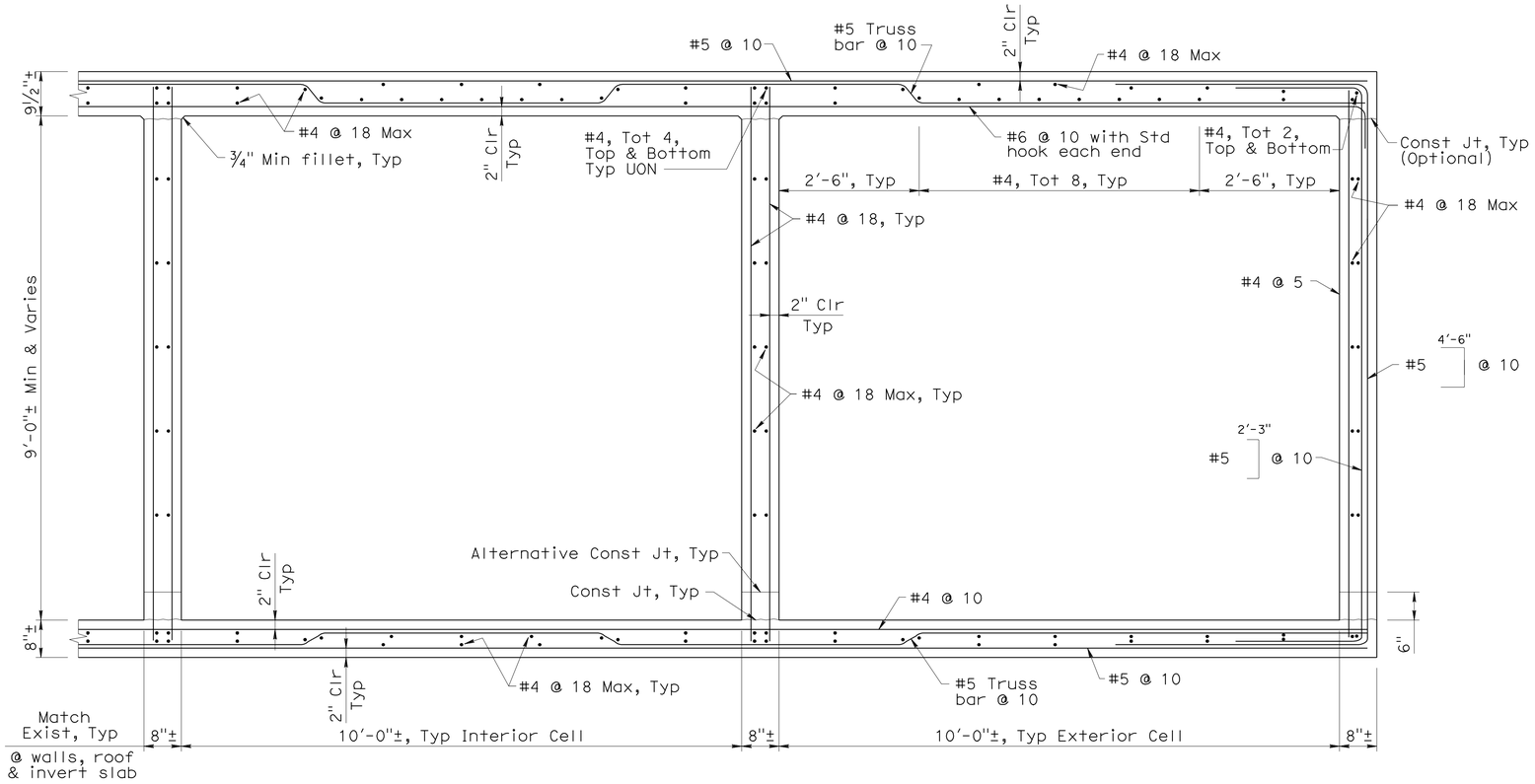

CULVERT PARTIAL TYPICAL SECTION

Scale: ¾" = 1'-0"

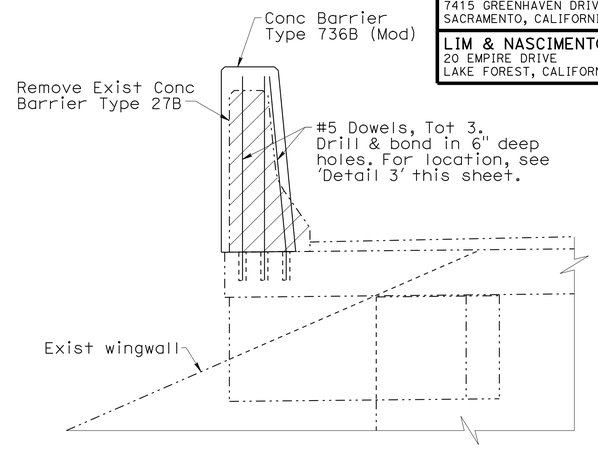

SECTION C-C

Scale: ¾" = 1'-0"

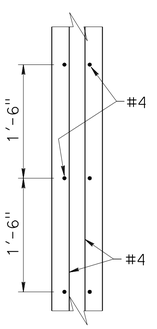

INTERIOR

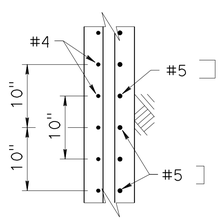

EXTERIOR

WALL SECTION

SCALE: 1" = 1'-0"

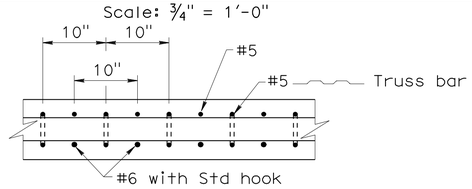

ROOF SECTION

SCALE: 1" = 1'-0"

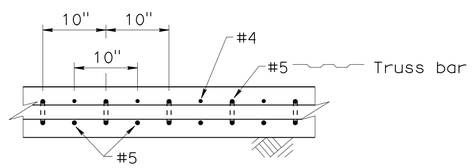

INVERT SECTION

SCALE: 1" = 1'-0"

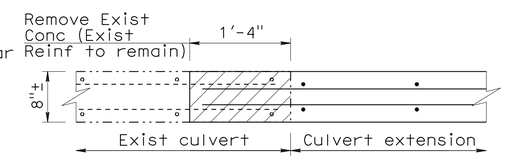

INTERIOR WALL

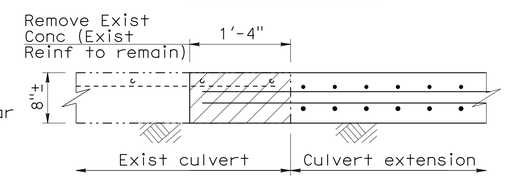

EXTERIOR WALL

WALL CONNECTION DETAIL

SCALE: 1" = 1'-0"

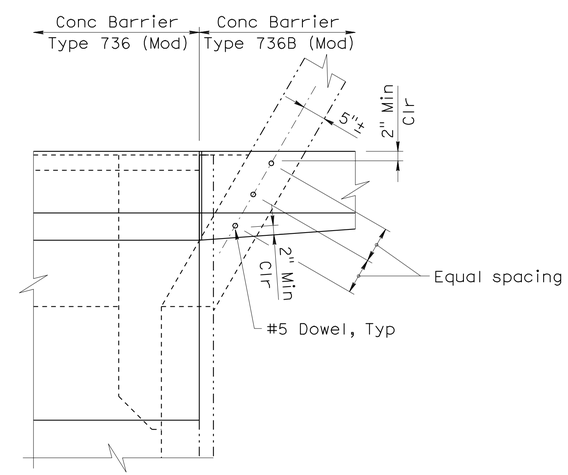

DETAIL 3

Scale: ¾" = 1'-0"

Notes:
The Contractor shall verify all controlling field dimensions before ordering or fabricating any material.

LEGEND

Indicates Limits of Bridge Removal (Portion)

Note:
1. See Standard Plan sheet D82 for details and notes not shown.

DESIGN OVERSIGHT Fritz Hoffman — Fritz Hoffman
Sept 8, 2009
SIGN OFF DATE

	BY	CHECKED
DESIGN	D. Vang	D. Wang
DETAILS	X. Sun/A.Bhatt	D. Wang
QUANTITIES	D. Vang	K. Wang

PREPARED FOR THE STATE OF CALIFORNIA DEPARTMENT OF TRANSPORTATION

Guoping Xu
PROJECT ENGINEER

BRIDGE NO. 46-0034L
POST MILE 45.70

CROSS CREEK BRIDGE (WIDEN)
EXTENSION DETAILS NO. 2

DESIGN DETAIL SHEET (ENGLISH) (REV. 2/25/05)

ORIGINAL SCALE IN INCHES FOR REDUCED PLANS 0 1 2 3

CU 06249
EA 324501

DISREGARD PRINTS BEARING EARLIER REVISION DATES

REVISION DATES (PRELIMINARY STAGE ONLY) 10/16/08 01/12/09 04/22/09 05/27/09 09/01/09

SHEET 4 OF 7

FILE => 46-0034l-f-a01dt02.dgn

USERNAME => frrichf DATE PLOTTED => 04-AUG-2010 TIME PLOTTED => 15:01

DIST	COUNTY	ROUTE	POST MILES TOTAL PROJECT	SHEET No	TOTAL SHEETS
06	Tul,Fre	99	41.3/R53.9, R0.0/R1.2	642	687

REGISTERED CIVIL ENGINEER — DATE 09/01/09

1-25-10
PLANS APPROVAL DATE

REGISTERED PROFESSIONAL ENGINEER — DANNY C. VANG — No. C60613 — Exp. 12/31/10 — CIVIL — STATE OF CALIFORNIA

The State of California or its officers or agents shall not be responsible for the accuracy or completeness of electronic copies of this plan sheet.

MGE ENGINEERING, INC.
7415 GREENHAVEN DRIVE, SUITE 100
SACRAMENTO, CALIFORNIA 95831

LIM & NASCIMENTO ENGINEERING
20 EMPIRE DRIVE
LAKE FOREST, CALIFORNIA 92630

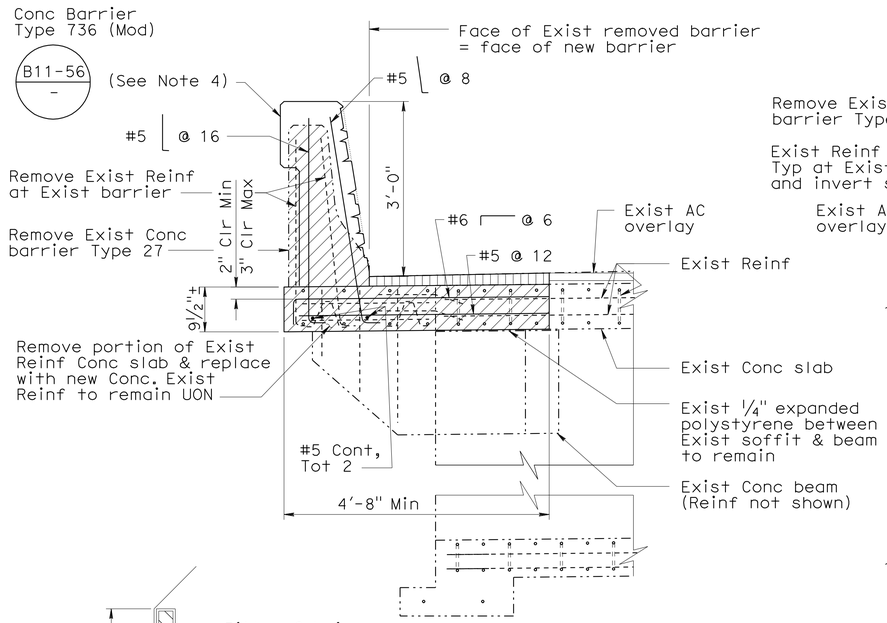

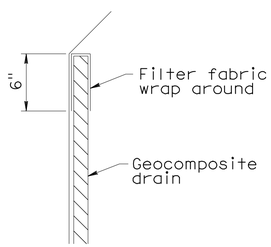

DETAIL 2
No Scale

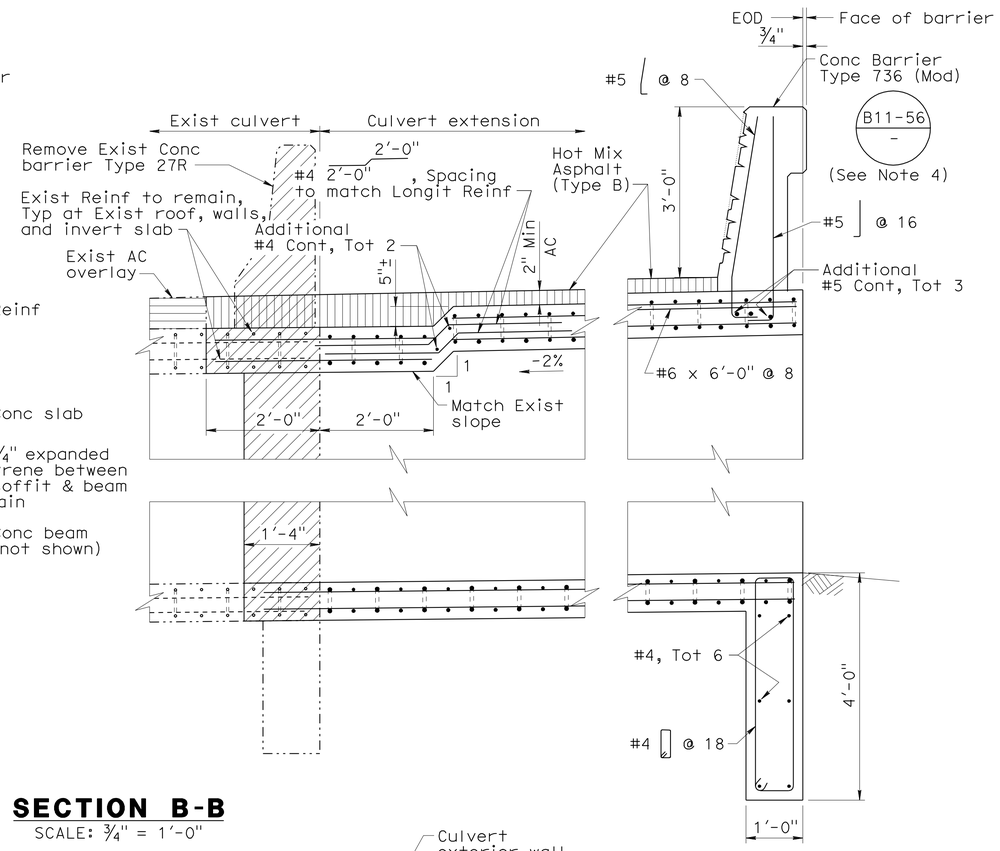

SECTION B-B
SCALE: 3/4" = 1'-0"

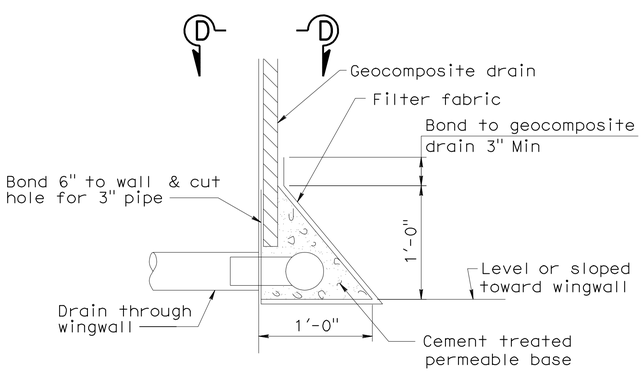

DETAIL 1
No Scale

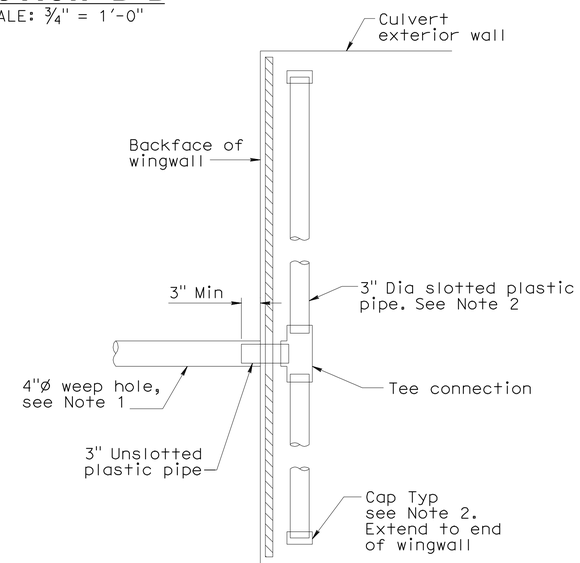

SECTION D-D
No Scale

LEGEND

- Indicates Limits of Bridge Removal (Portion)
- Indicates Hot Mix Asphalt (Type B)
- Indicates Exist AC overlay

Notes:

1. 4" drains at 20' Max center to center. Weep holes shall be located 3" above finished grade.
2. Geocomposite drain, cement treated permeable base, and 3" Dia slotted plastic pipe continuous behind wingwalls. Cap ends of pipe. Provide "Tee" connection at each 4" Dia drain.
3. See Standard Plan sheet D82 for details and notes not shown.
4. For architectural surface detail at barrier, see "Barrier Architectural Surface Detail" sheet.

Notes:
The Contractor shall verify all controlling field dimensions before ordering or fabricating any material.

DESIGN OVERSIGHT — Fritz Hoffman
Sept 8, 2009
SIGN OFF DATE

	BY	CHECKED
DESIGN	D. Vang	D. Wang
DETAILS	X. Sun/A.Bhatt	D. Wang
QUANTITIES	D. Vang	K. Wang

PREPARED FOR THE STATE OF CALIFORNIA DEPARTMENT OF TRANSPORTATION

Guoping Xu
PROJECT ENGINEER

BRIDGE NO. 46-0034L
POST MILE 45.70

CROSS CREEK BRIDGE (WIDEN)
EXTENSION DETAILS NO. 3

DESIGN DETAIL SHEET (ENGLISH) (REV. 2/25/05)

ORIGINAL SCALE IN INCHES FOR REDUCED PLANS 0 1 2 3

CU 06249
EA 324501

DISREGARD PRINTS BEARING EARLIER REVISION DATES
REVISION DATES (PRELIMINARY STAGE ONLY) 04/28/09 05/13/09 05/28/09 09/01/09

SHEET 5 OF 7

FILE => 46-0034l-f-a01dt03.dgn

USERNAME => trrright DATE PLOTTED => 04-AUG-2010 TIME PLOTTED => 15:01

DIST	COUNTY	ROUTE	POST MILES TOTAL PROJECT	SHEET No	TOTAL SHEETS
06	Tul,Fre	99	41.3/R53.9, R0.0/R1.2	643	687

REGISTERED CIVIL ENGINEER — DATE 09/01/09

1-25-10
PLANS APPROVAL DATE

The State of California or its officers or agents shall not be responsible for the accuracy or completeness of electronic copies of this plan sheet.

REGISTERED PROFESSIONAL ENGINEER — DANNY C. VANG — No. C60613 — Exp. 12/31/10 — CIVIL — STATE OF CALIFORNIA

MGE ENGINEERING, INC.
7415 GREENHAVEN DRIVE, SUITE 100
SACRAMENTO, CALIFORNIA 95831

LIM & NASCIMENTO ENGINEERING
20 EMPIRE DRIVE
LAKE FOREST, CALIFORNIA 92630

NOTES:

1. For details not shown, see Standard Plan B11-56.
2. Height of repeating pattern measured along the slope of the barrier face.
3. Limits of placement and payment for architectural surface (dry stacked stone) texture shall be as shown in "Elevation" and shall extend from BB to EB.

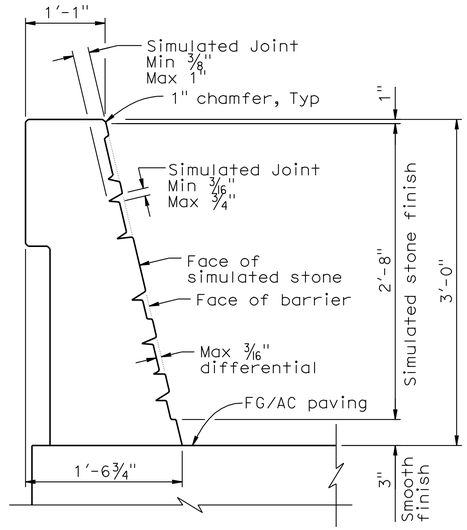

TYPE 736 (MODIFIED)
See Note 1

CONCRETE BARRIER SECTION

No scale

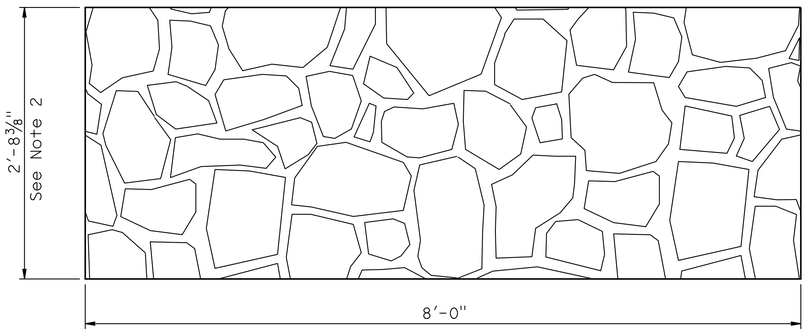

DEVELOPED ELEVATION

REPEATING PATTERN

No scale

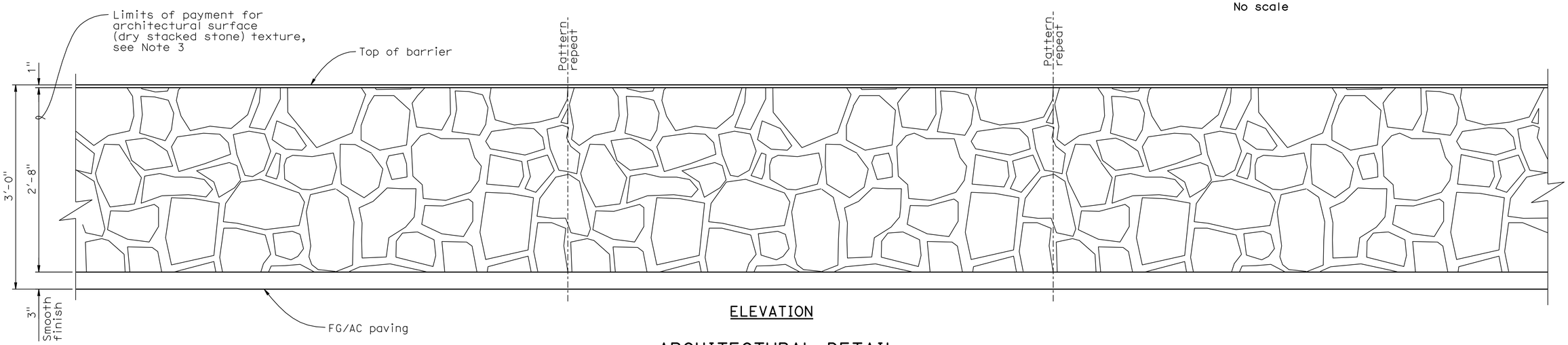

ELEVATION

ARCHITECTURAL DETAIL
CONCRETE BARRIER TYPE 736 (MODIFIED)

No scale

Notes:
The Contractor shall verify all controlling field dimensions before ordering or fabricating any material.

DESIGN OVERSIGHT — Fritz Hoffman
Sept 8, 2009
SIGN OFF DATE

	BY	CHECKED
DESIGN	D. Vang	G. Xu
DETAILS	X. Sun/A.Bhatt	G. Xu
QUANTITIES	D. Vang	K. Wang

PREPARED FOR THE STATE OF CALIFORNIA DEPARTMENT OF TRANSPORTATION

Guoping Xu
PROJECT ENGINEER

BRIDGE NO. 46-0034L
POST MILE 45.70

CROSS CREEK BRIDGE (WIDEN)
BARRIER ARCHITECTURAL SURFACE DETAIL

DESIGN DETAIL SHEET (ENGLISH) (REV. 2/25/05)

ORIGINAL SCALE IN INCHES FOR REDUCED PLANS 0 1 2 3

CU 06249
EA 324501

DISREGARD PRINTS BEARING EARLIER REVISION DATES → 05/28/09 09/01/09

REVISION DATES (PRELIMINARY STAGE ONLY)

SHEET 6 OF 7

FILE => 46-00341-t-brdt.dgn

USERNAME => trrichf DATE PLOTTED => 04-AUG-2010 TIME PLOTTED => 15:02

DIST.	COUNTY	ROUTE	POST MILES—TOTAL PROJECT	SHEET NO.	TOTAL SHEETS
06	Tul	99	41.3/48.3	56	56

R C Blake
DESIGN SECTION SUPERVISOR — REGISTERED CIVIL ENGINEER NO. 60032
DATE APPROVED August 31, 1970

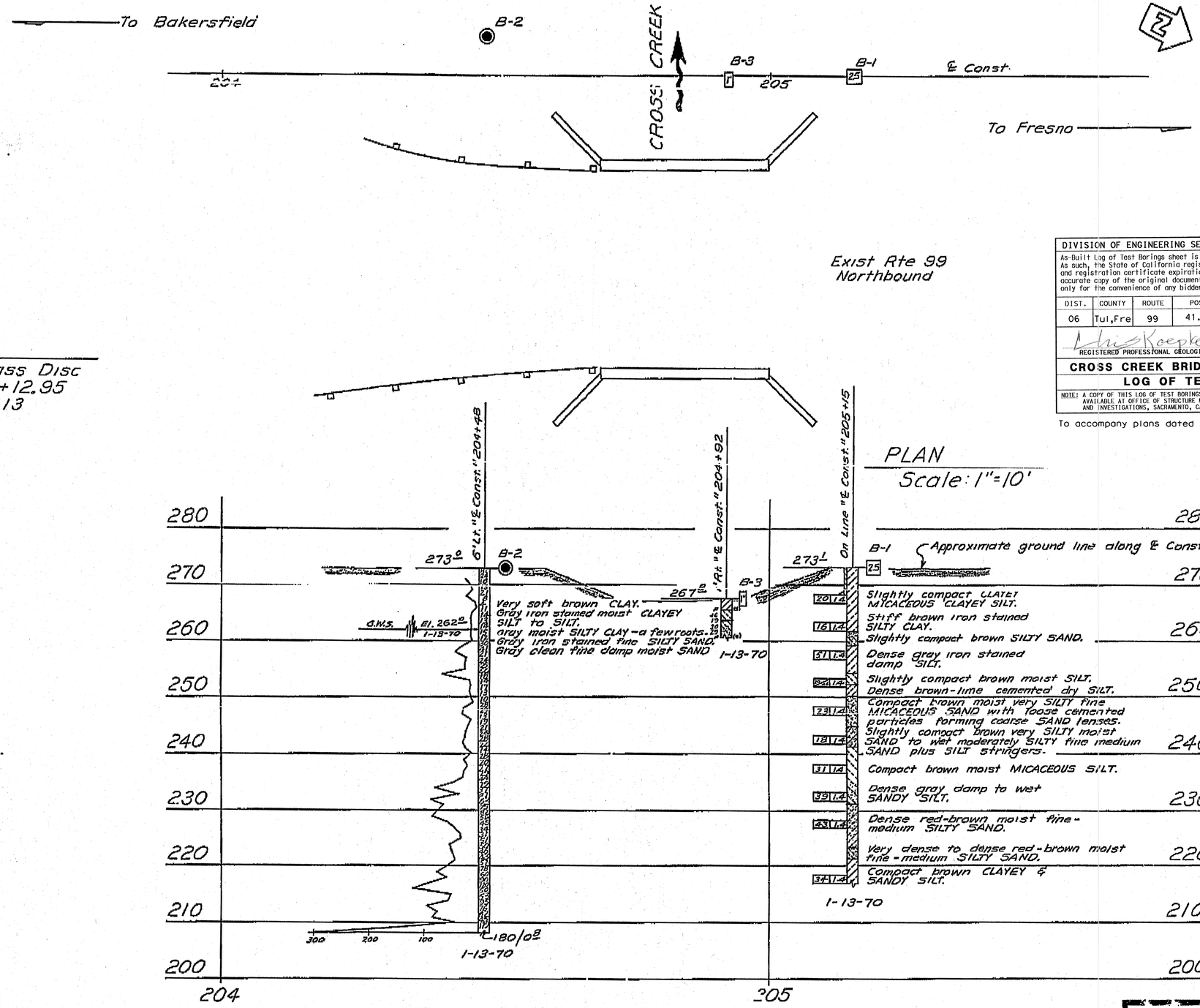

PLAN
Scale: 1"=10'

PROFILE
Scale: 1"=10'

DIVISION OF ENGINEERING SERVICES - GEOTECHNICAL SERVICES					
As-Built Log of Test Borings sheet is considered an informational document only. As such, the State of California registration seal with signature, license number and registration certificate expiration date confirm that this is a true and accurate copy of the original document. This drawing is available and presented only for the convenience of any bidder, contractor or other interested party.					
DIST.	COUNTY	ROUTE	POST MILE-TOTAL PROJECT	Sheet No.	Total Sheets
06	Tul,Fre	99	41.3/R53.9,R0.0/R1.2	644	687
Chris Koepke 2/26/09 REGISTERED PROFESSIONAL GEOLOGIST					
CROSS CREEK BRIDGE (REPLACE/ WIDEN)					
LOG OF TEST BORINGS					
NOTE: A COPY OF THIS LOG OF TEST BORINGS IS AVAILABLE AT OFFICE OF STRUCTURE MAINTENANCE AND INVESTIGATIONS, SACRAMENTO, CALIFORNIA		CU: 06 EA: 324501		BRIDGE No. 46-0034 R/L	
To accompany plans dated 1-25-10				Sheet 7	of 7

REGISTERED PROFESSIONAL GEOLOGIST — Christopher W. Koepke — No. 2207 — Exp. 10-31-10 — CERTIFIED ENGINEERING GEOLOGIST — STATE OF CALIFORNIA

AS BUILT
No. CORRECTIONS BY RA Qualls Jr
DATE NO. 06-100304 11/30/71
RRR 2/29/72

AS BUILT PLANS
Contract No. 06-100304
Date Completed 12-22-71
Document No. 60000866

STATE OF CALIFORNIA
TRANSPORTATION AGENCY
DEPARTMENT OF PUBLIC WORKS
DIVISION OF HIGHWAYS

CROSS CREEK BRIDGE WIDENING

LOG OF TEST BORINGS

BRIDGE NO.	POST MILE	DRAWING NO.	SHEET	OF
46-34 R	45.70		4	4

REVISION DATES (PRELIMINARY STAGE ONLY)

FILENAME => 46-0034I-z-ltb01.tif

WO 100301
CU 06201

Disregard prints bearing earlier revision dates

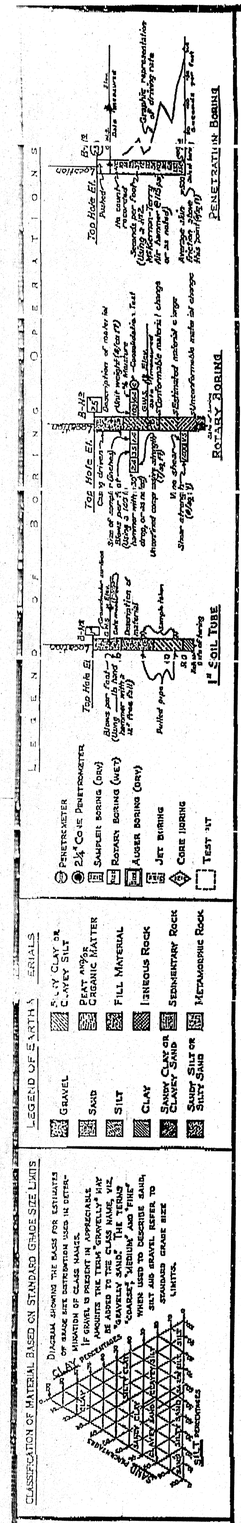

NOTE: Classification of earth material as shown on this sheet is based upon field inspection and is not to be construed to imply mechanical analysis.

DIST	COUNTY	ROUTE	POST MILES TOTAL PROJECT	SHEET No	TOTAL SHEETS
06	Tul,Fre	99	41.3/R53.9, R0.0/R1.2	645	687

REGISTERED CIVIL ENGINEER — DATE 09/01/09

1-25-10
PLANS APPROVAL DATE

The State of California or its officers or agents shall not be responsible for the accuracy or completeness of electronic copies of this plan sheet.

REGISTERED PROFESSIONAL ENGINEER — DANNY C. VANG — No. C60613 — Exp. 12/31/10 — CIVIL — STATE OF CALIFORNIA

MGE ENGINEERING, INC.
7415 GREENHAVEN DRIVE, SUITE 100
SACRAMENTO, CALIFORNIA 95831

LIM & NASCIMENTO ENGINEERING
20 EMPIRE DRIVE
LAKE FOREST, CALIFORNIA 92630

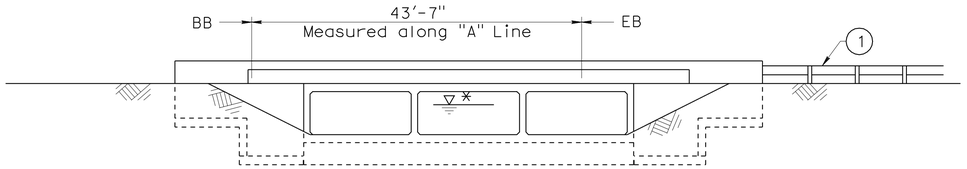

* For 'Hydrologic Summary', see "Foundation Plan" sheet.

Datum Elev 270.00

525+00 525+50

MIRRORED ELEVATION

SCALE: 1" = 10'

(Exist bridge not shown for clarity)

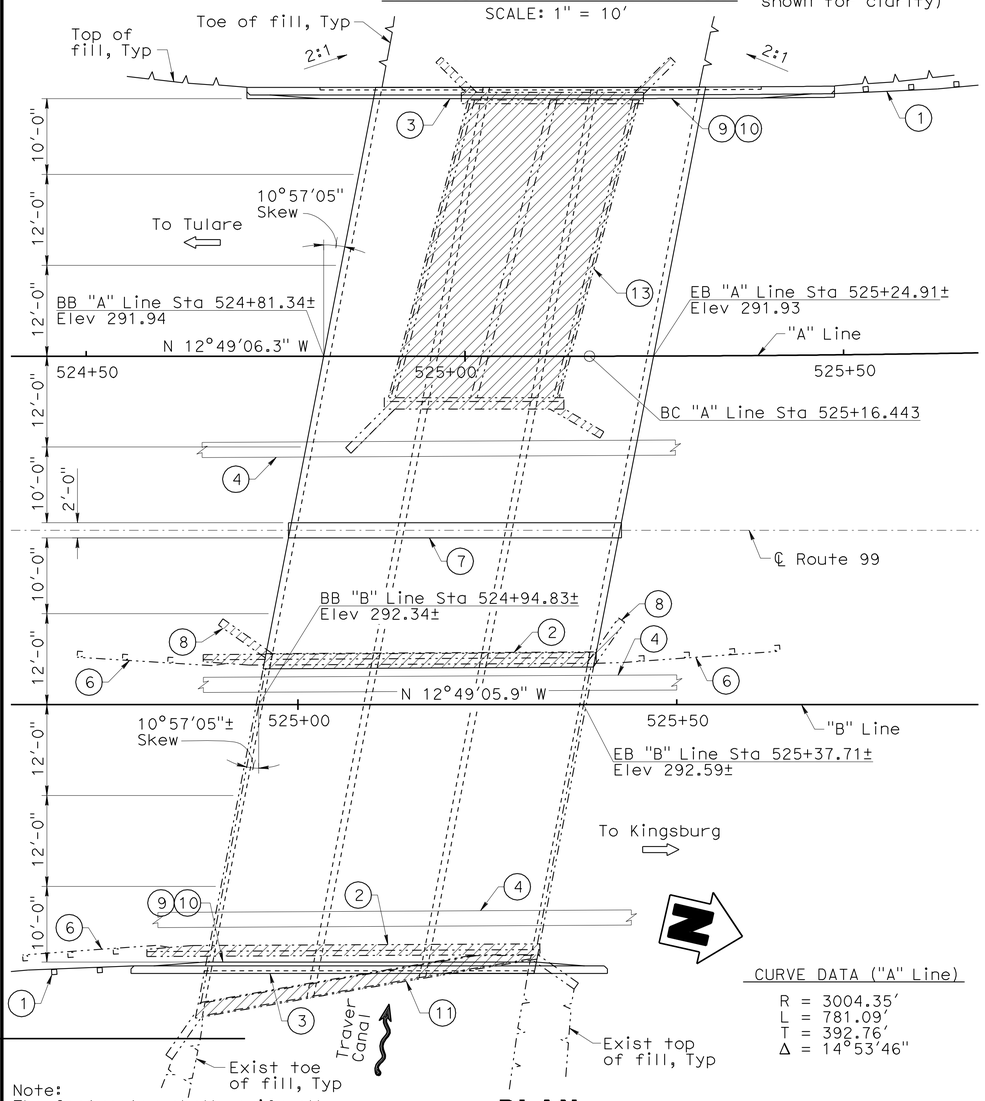

CURVE DATA ("A" Line)

R = 3004.35'
L = 781.09'
T = 392.76'
Δ = 14°53'46"

Note:
The Contractor shall verify all controlling field dimensions before ordering or fabricating any material.

PLAN

SCALE: 1" = 10'

LEGEND

- Indicates Limits of Bridge Removal
- Indicates Exist Structure
- Indicates New Structure
- Indicates Direction of Flow
- Indicates Direction of Travel
- (1) MBGR, See 'Road Plans'
- (2) Remove Exist Concrete Barrier Type 27R
- (3) Concrete Barrier Type 736 (Mod)
- (4) Temporary "K" Railing, See 'Road Plans'
- (5) Hot Mix Asphalt (Type B), Thickness Varies
- (6) Exist MBGR to be Removed, See 'Road Plans'
- (7) Concrete Barrier Type 60A (Mod), to be Constructed During Stage III Construction
- (8) Remove Exist Wingwall & Footing
- (9) Paint "Traver Canal Bridge"
- (10) Paint "Br. No. 46-0035R/L"
- (11) Remove Exist Concrete Curb
- (12) Remove Portion of Exist Concrete (Exist Reinf to Remain)
- (13) Remove Exist Bridge 46-0035L
- (14) Remove Portion of Exist Reinf Concrete Slab
- (15) Reinforced Concrete Corbel
- (16) Remove Portion of Exist AC Overlay
- (17) Slope Varies, See 'Road Plans'

INDEX TO PLANS

Sheet No.	Title
1	General Plan
2	Foundation Plan
3	Bridge Details No. 1
4	Bridge Details No. 2
5	Bridge Details No. 3
6	Bridge Details No. 4
7	Bridge Details No. 5
8	Bridge Details No. 6
9	Bridge Details No. 7
10	Barrier Architectural Surface Detail
11	As-Built Log of Test Borings

STANDARD PLANS
Dated May 2006

A10A	Acronyms and Abbreviations (Sheet 1 of 2)
A10B	Acronyms and Abbreviations (Sheet 2 of 2)
A10C	Symbols (Sheet 1 of 2)
A10D	Symbols (Sheet 2 of 2)
A62A	Excavation and Backfill - Miscellaneous Details
A62B	Limits of Payment for Excavation and Backfill - Bridge Surcharge and Wall
A62E	Excavation and Backfill - Cast-In-Place Reinforced Concrete Box and Arch Culverts
A76A	Concrete Barrier Type 60
B0-1	Bridge Details
B3-8	Retaining Wall Details No. 1
B11-56	Concrete Barrier Type 736
D82	Cast-In-Place Reinforced Concrete Box Culvert Miscellaneous Details
D84	Box Culvert Wingwalls Types A, B and C

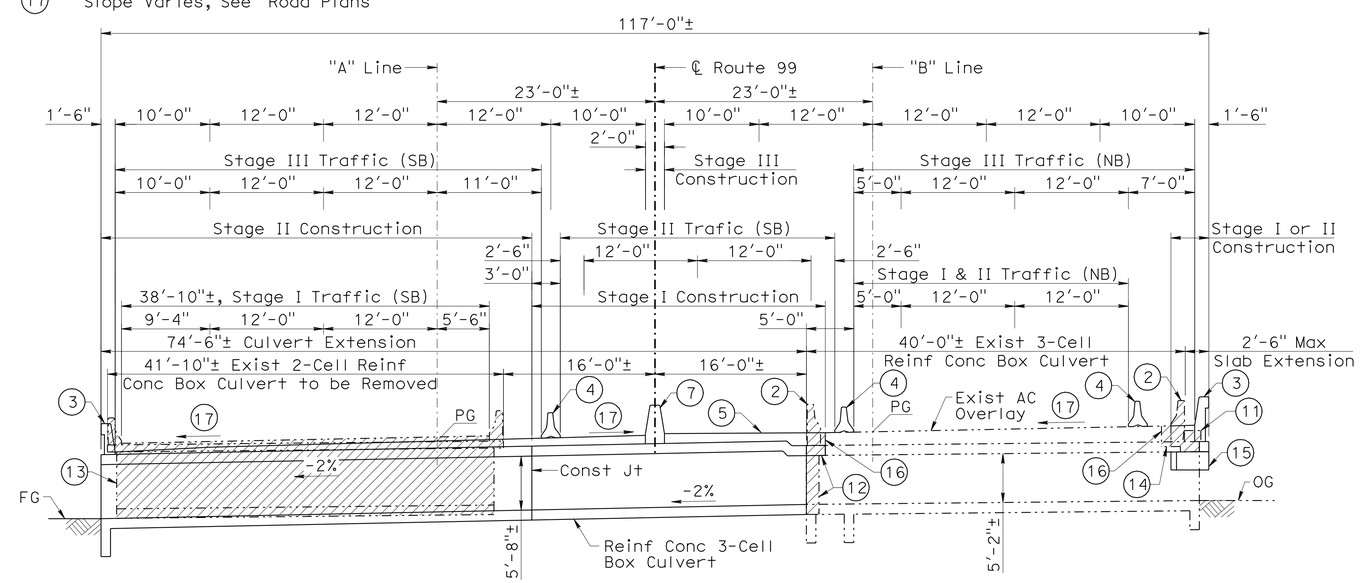

TYPICAL SECTION

SCALE: 1/8" = 1'-0"

Notes:

1. For 'General Notes', see "Foundation Plan" sheet.
2. For 'Quantities', see "Foundation Plan" sheet.

DESIGN OVERSIGHT Fritz Hoffman — Sept 8, 2009 SIGN OFF DATE	DESIGN	BY D. Vang	CHECKED G. Xu	LOAD FACTOR DESIGN	LIVE LOADING: HS20-44
	DETAILS	BY X. Sun	CHECKED G. Xu	LAYOUT BY D. Vang	CHECKED G. Xu
	QUANTITIES	BY D. Vang	CHECKED K. Wang	SPECIFICATIONS BY R. Price	PLANS AND SPECS COMPARED R. Sennett

PREPARED FOR THE STATE OF CALIFORNIA DEPARTMENT OF TRANSPORTATION

Guoping Xu
PROJECT ENGINEER

CU 06249
EA 324501

BRIDGE NO. 46-0035R/L
POST MILES 49.20

TRAVER CANAL BRIDGE (WIDEN)

GENERAL PLAN

DESIGN GENERAL PLAN SHEET (ENGLISH) (REV.2/25/05)

ORIGINAL SCALE IN INCHES FOR REDUCED PLANS 0 1 2 3

DISREGARD PRINTS BEARING EARLIER REVISION DATES

REVISION DATES (PRELIMINARY STAGE ONLY): 10/15/08 01/12/09 04/22/09 05/13/09 05/22/09 09/01/09

SHEET 1 OF 11

FILE => 46-0035rl-a-gp01.dgn

USERNAME => trrright DATE PLOTTED => 04-AUG-2010 TIME PLOTTED => 15:02

DIST	COUNTY	ROUTE	POST MILES TOTAL PROJECT	SHEET No	TOTAL SHEETS
06	Tul,Fre	99	41.3/R53.9, R0.0/R1.2	646	687

REGISTERED CIVIL ENGINEER — DATE 09/01/09

1-25-10
PLANS APPROVAL DATE

The State of California or its officers or agents shall not be responsible for the accuracy or completeness of electronic copies of this plan sheet.

REGISTERED PROFESSIONAL ENGINEER — DANNY C. VANG — No. C60613 — Exp. 12/31/10 — CIVIL — STATE OF CALIFORNIA

MGE ENGINEERING, INC.
7415 GREENHAVEN DRIVE, SUITE 100
SACRAMENTO, CALIFORNIA 95831

LIM & NASCIMENTO ENGINEERING
20 EMPIRE DRIVE
LAKE FOREST, CALIFORNIA 92630

QUANTITIES

BRIDGE REMOVAL (PORTION), LOCATION K	LUMP	SUM
BRIDGE REMOVAL, LOCATION K	LUMP	SUM
HOT MIX ASPHALT (TYPE B)	185	TON
STRUCTURAL CONCRETE, BOX CULVERT	355	CY
ARCHITECTURAL TEXTURE (DRY STACKED STONE)	479	SQFT
DRILL AND BOND DOWEL	37	LF
DRILL AND BOND DOWEL (CHEMICAL ADHESIVE)	3	EA
BAR REINFORCING STEEL (BOX CULVERT)	54,620	LB
PREPARE AND STAIN CONCRETE	479	SQFT
CONCRETE BARRIER (TYPE 60A MODIFIED)	44	LF
CONCRETE BARRIER (TYPE 736 MODIFIED)	141	LF

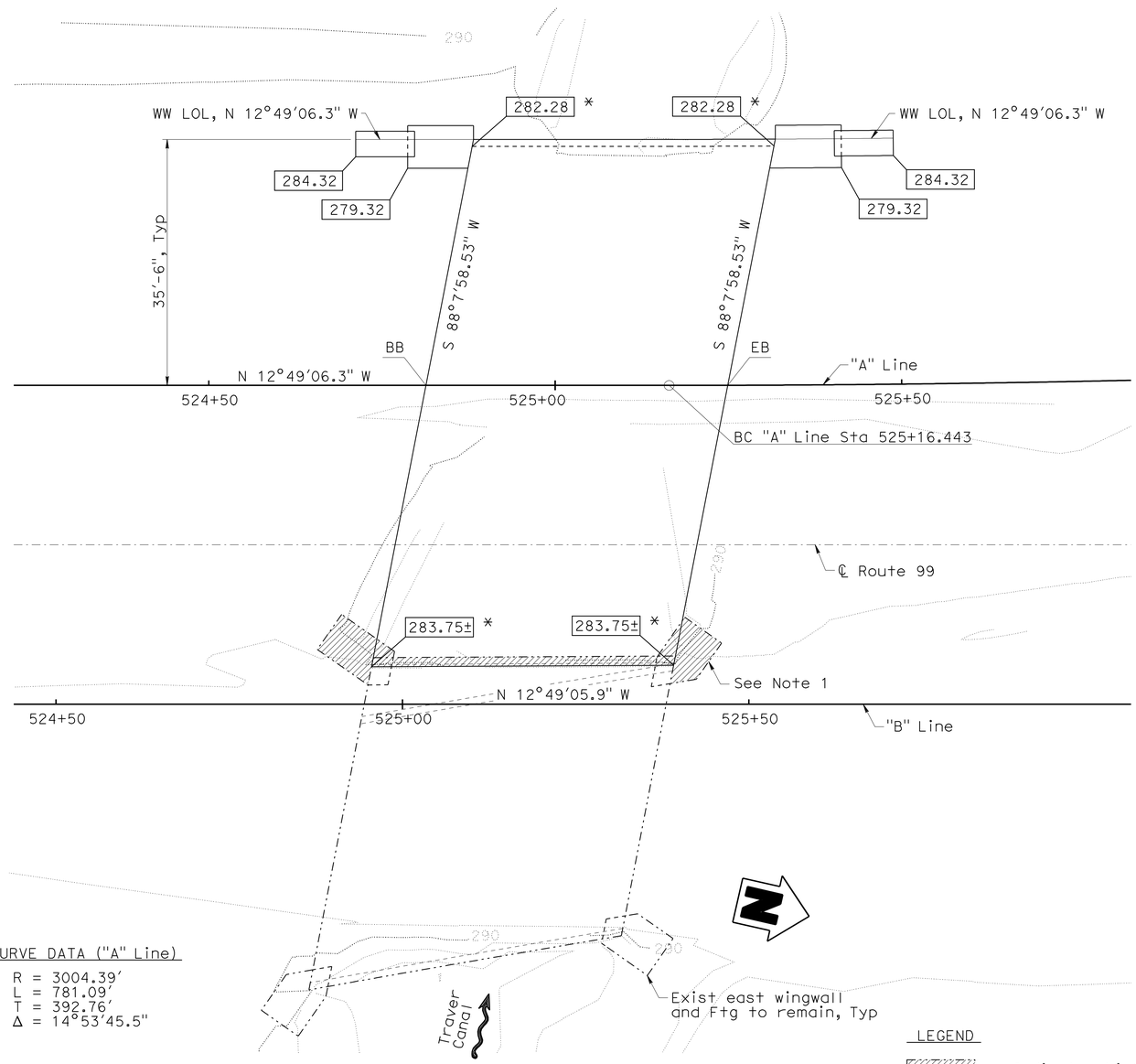

CURVE DATA ("A" Line)

R = 3004.39'
L = 781.09'
T = 392.76'
Δ = 14°53'45.5"

FOUNDATION PLAN

SCALE: 1" = 10'

LEGEND

- Indicates Limits of Bridge Removal
- Indicates Exist Structure
- Indicates New Structure
- Indicates Direction of Flow
- xxx.xx — Indicates Bottom of Footing Elevation
- xxx.xx * — Indicates Bottom of Invert Slab Elevation

GENERAL NOTES
LOAD FACTOR DESIGN

Design: Bridge Design Specifications, April 2000 (1996 AASHTO with Interims and Revisions by Caltrans) except that bridge barriers are designed per AASHTO LRFD Bridge Design Specifications, 3rd Edition with Interims through 2006 and the Caltrans Amendments, V3.06.01

Dead Load: Includes 35 psf for future wearing surface

Live Loading: HS20-44 with 30% Impact except that bridge barriers are designed based on LRFD live loading

Earth Pressure: (1) Vertical: 140 pcf; Horizontal: 140 pcf
(2) Vertical: 140 pcf; Horizontal: 42 pcf

Reinforced Concrete: fy = 60 ksi
f'c = 3.6 ksi
n = 8

SPREAD FOOTING DATA TABLE

Support Location	Allowable Bearing Capacity q_{all}	Nominal Bearing Resistance q_n
All	2.0 ksf	4.0 ksf

HYDROLOGIC SUMMARY

	Max Discharge Design Flood Max Capacity
Frequency (Years)	
Discharge (Cubic feet per second)	311.0
Water Surface (Elevation at bridge)	288.0

Flood plain data are based upon information available when the plans were prepared and are shown to meet federal requirements. The accuracy of said information is not warranted by the State and interested or affected parties should make their own investigation.

Note:
The Contractor shall verify all controlling field dimensions before ordering or fabricating any material.

Note:
1. For Exist wingwall and footing removal details, see "Bridge Details No. 4" sheet.

DESIGN OVERSIGHT Fritz Hoffman	SCALE:	VERT.DATUM NAVD 88	HORZ.DATUM NAD 83
Sept 8, 2009	PHOTOGRAMMETRY AS OF:	ALIGNMENT TIES Dist. Traverse Sheet	
SIGN OFF DATE	SURVEYED BY District	DRAFTED BY J. Martinez	
	FIELD CHECKED BY T. Gillett	CHECKED BY T. Zolnikova	

DESIGN	BY D. Vang	CHECKED G. Xu	
DETAILS	BY X. Sun	CHECKED G. Xu	
QUANTITIES	BY D. Vang	CHECKED K. Wang	

PREPARED FOR THE STATE OF CALIFORNIA DEPARTMENT OF TRANSPORTATION

Guoping Xu
PROJECT ENGINEER

BRIDGE NO. 46-0035R/L
POST MILE 49.20

TRAVER CANAL BRIDGE (WIDEN)
FOUNDATION PLAN

FOUNDATION PLAN SHEET (ENGLISH) (REV. 2-25-05)

ORIGINAL SCALE IN INCHES FOR REDUCED PLANS 0 1 2 3

CU 06249
EA 324501

DISREGARD PRINTS BEARING EARLIER REVISION DATES — REVISION DATES (PRELIMINARY STAGE ONLY) 10/10/08 01/12/09 04/22/09 09/10/09

SHEET 2 OF 11

FILE => 46-0035rl-e-fdpl01.dgn

USERNAME => trrrcht DATE PLOTTED => 04-AUG-2010 TIME PLOTTED => 15:02

DIST	COUNTY	ROUTE	POST MILES TOTAL PROJECT	SHEET No	TOTAL SHEETS
06	Tul,Fre	99	41.3/R53.9, R0.0/R1.2	647	687

REGISTERED CIVIL ENGINEER — DATE 09/01/09

1-25-10
PLANS APPROVAL DATE

The State of California or its officers or agents shall not be responsible for the accuracy or completeness of electronic copies of this plan sheet.

REGISTERED PROFESSIONAL ENGINEER — DANNY C. VANG — No. C60613 — Exp. 12/31/10 — CIVIL — STATE OF CALIFORNIA

MGE ENGINEERING, INC.
7415 GREENHAVEN DRIVE, SUITE 100
SACRAMENTO, CALIFORNIA 95831

LIM & NASCIMENTO ENGINEERING
20 EMPIRE DRIVE
LAKE FOREST, CALIFORNIA 92630

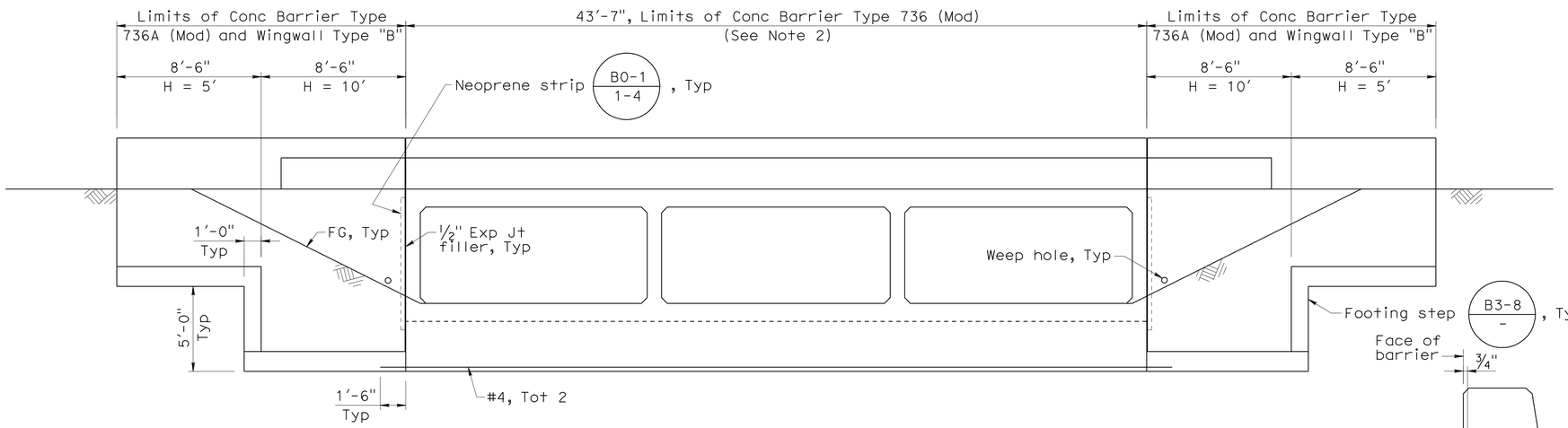

MIRRORED WINGWALL ELEVATION (WEST ELEVATION)

SCALE: 1/4" = 1'-0"

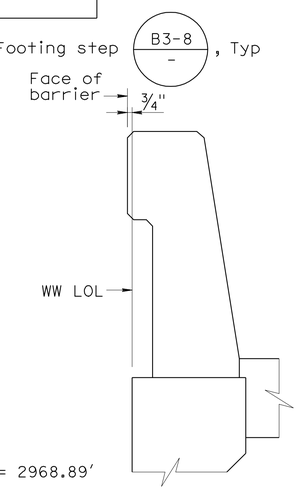

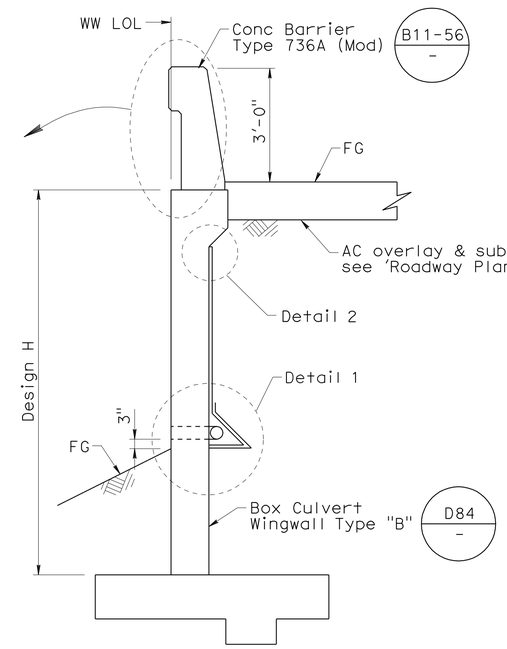

SECTION A-A

SCALE: 1/2" = 1'-0"

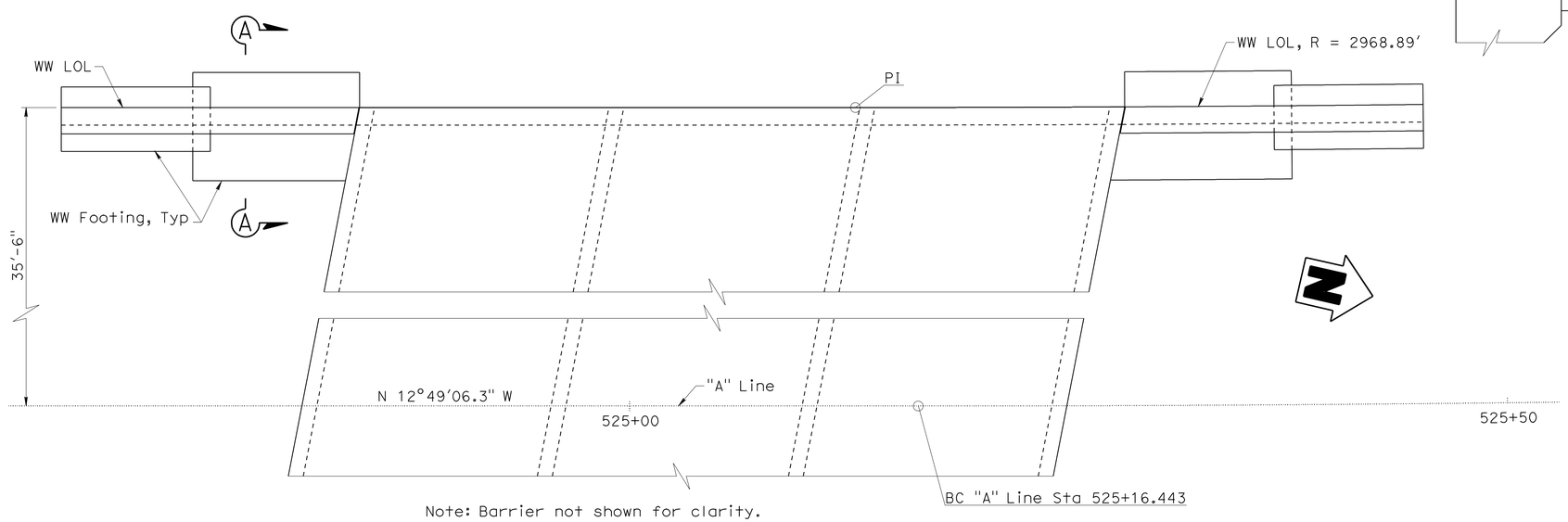

Note: Barrier not shown for clarity.

WINGWALL LAYOUT

SCALE: 1/4" = 1'-0"

Note:
The Contractor shall verify all controlling field dimensions before ordering or fabricating any material.

Notes:

1. For Detail 1 and Detail 2, see "Bridge Details No. 7" sheet.
2. For architectural surface detail at barrier, see "Barrier Architectural Surface Detail" sheet.

DESIGN OVERSIGHT — Fritz Hoffman — Sept 8, 2009
SIGN OFF DATE

	BY	CHECKED
DESIGN	D. Vang	G. Xu
DETAILS	X. Sun	G. Xu
QUANTITIES	D. Vang	K. Wang

PREPARED FOR THE STATE OF CALIFORNIA DEPARTMENT OF TRANSPORTATION

Guoping Xu — PROJECT ENGINEER

BRIDGE NO. 46-0035R/L — POST MILE 49.20

TRAVER CANAL BRIDGE (WIDEN)

BRIDGE DETAILS NO. 1

DESIGN DETAIL SHEET (ENGLISH) (REV. 2/25/05)

ORIGINAL SCALE IN INCHES FOR REDUCED PLANS 0 1 2 3

CU 06249
EA 324501

DISREGARD PRINTS BEARING EARLIER REVISION DATES

REVISION DATES (PRELIMINARY STAGE ONLY): 10/16/08 01/12/09 04/22/09 05/15/09 05/21/09 09/01/09

SHEET 3 OF 11

FILE => 46-0035rl-f-a01dt01.dgn

USERNAME => trright DATE PLOTTED => 04-AUG-2010 TIME PLOTTED => 15:02

DIST	COUNTY	ROUTE	POST MILES TOTAL PROJECT	SHEET No	TOTAL SHEETS
06	Tul,Fre	99	41.3/R53.9, R0.0/R1.2	648	687

REGISTERED CIVIL ENGINEER — DATE 09/01/09

1-25-10
PLANS APPROVAL DATE

The State of California or its officers or agents shall not be responsible for the accuracy or completeness of electronic copies of this plan sheet.

REGISTERED PROFESSIONAL ENGINEER — DANNY C. VANG — No. C60613 — Exp. 12/31/10 — CIVIL — STATE OF CALIFORNIA

MGE ENGINEERING, INC.
7415 GREENHAVEN DRIVE, SUITE 100
SACRAMENTO, CALIFORNIA 95831

LIM & NASCIMENTO ENGINEERING
20 EMPIRE DRIVE
LAKE FOREST, CALIFORNIA 92630

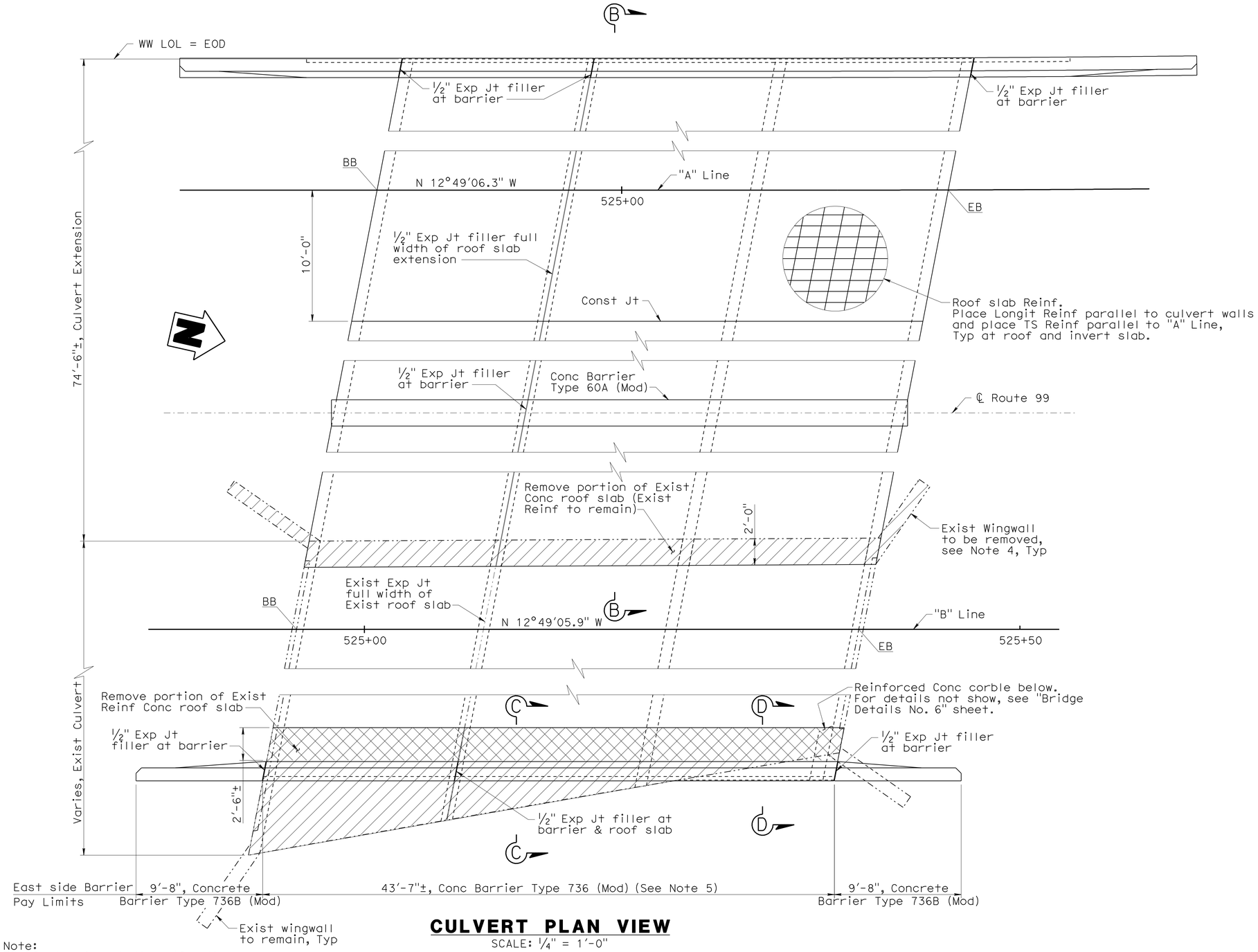

CULVERT PLAN VIEW

SCALE: ¼" = 1'-0"

Note:
The Contractor shall verify all controlling field dimensions before ordering or fabricating any material.

LEGEND

Indicates Limits of Bridge Removal (Portion)

Indicates Limits of Hot Mix Asphalt (Type B)

Notes:

1. For Section B-B, see "Bridge Details No. 3" sheet.
2. For Section C-C & D-D, see "Bridge Details No. 4" sheet.
3. For West side barrier pay limits, see "Bridge Details No. 1" sheet.
4. For Exist wingwall and footing removal details, see "Bridge Detials No. 4" sheet.
5. For architectural surface detail at barrier, see "Barrier Architectural Surface Detail" sheet.

DESIGN OVERSIGHT — Fritz Hoffman
Sept 8, 2009
SIGN OFF DATE

	BY	CHECKED
DESIGN	D. Vang	G. Xu
DETAILS	X. Sun	G. Xu
QUANTITIES	D. Vang	K. Wang

PREPARED FOR THE STATE OF CALIFORNIA DEPARTMENT OF TRANSPORTATION

Guoping Xu
PROJECT ENGINEER

BRIDGE NO. 46-0035R/L
POST MILE 49.20

TRAVER CANAL BRIDGE (WIDEN)
BRIDGE DETAILS NO. 2

DESIGN DETAIL SHEET (ENGLISH) (REV. 2/25/05)

ORIGINAL SCALE IN INCHES FOR REDUCED PLANS 0 1 2 3

CU 06249
EA 324501

DISREGARD PRINTS BEARING EARLIER REVISION DATES — REVISION DATES (PRELIMINARY STAGE ONLY) 10/16/08 01/12/09 04/22/09 05/15/09 05/22/09 09/01/09

SHEET 4 OF 11

FILE => 46-0035rl-f-a01dt02.dgn

USERNAME => trrright DATE PLOTTED => 04-AUG-2010 TIME PLOTTED => 15:02

DIST	COUNTY	ROUTE	POST MILES TOTAL PROJECT	SHEET No	TOTAL SHEETS
06	Tul,Fre	99	41.3/R53.9, R0.0/R1.2	649	687

REGISTERED CIVIL ENGINEER — DATE 09/01/09

1-25-10
PLANS APPROVAL DATE

The State of California or its officers or agents shall not be responsible for the accuracy or completeness of electronic copies of this plan sheet.

REGISTERED PROFESSIONAL ENGINEER — DANNY C. VANG — No. C60613 — Exp. 12/31/10 — CIVIL — STATE OF CALIFORNIA

MGE ENGINEERING, INC.
7415 GREENHAVEN DRIVE, SUITE 100
SACRAMENTO, CALIFORNIA 95831

LIM & NASCIMENTO ENGINEERING
20 EMPIRE DRIVE
LAKE FOREST, CALIFORNIA 92630

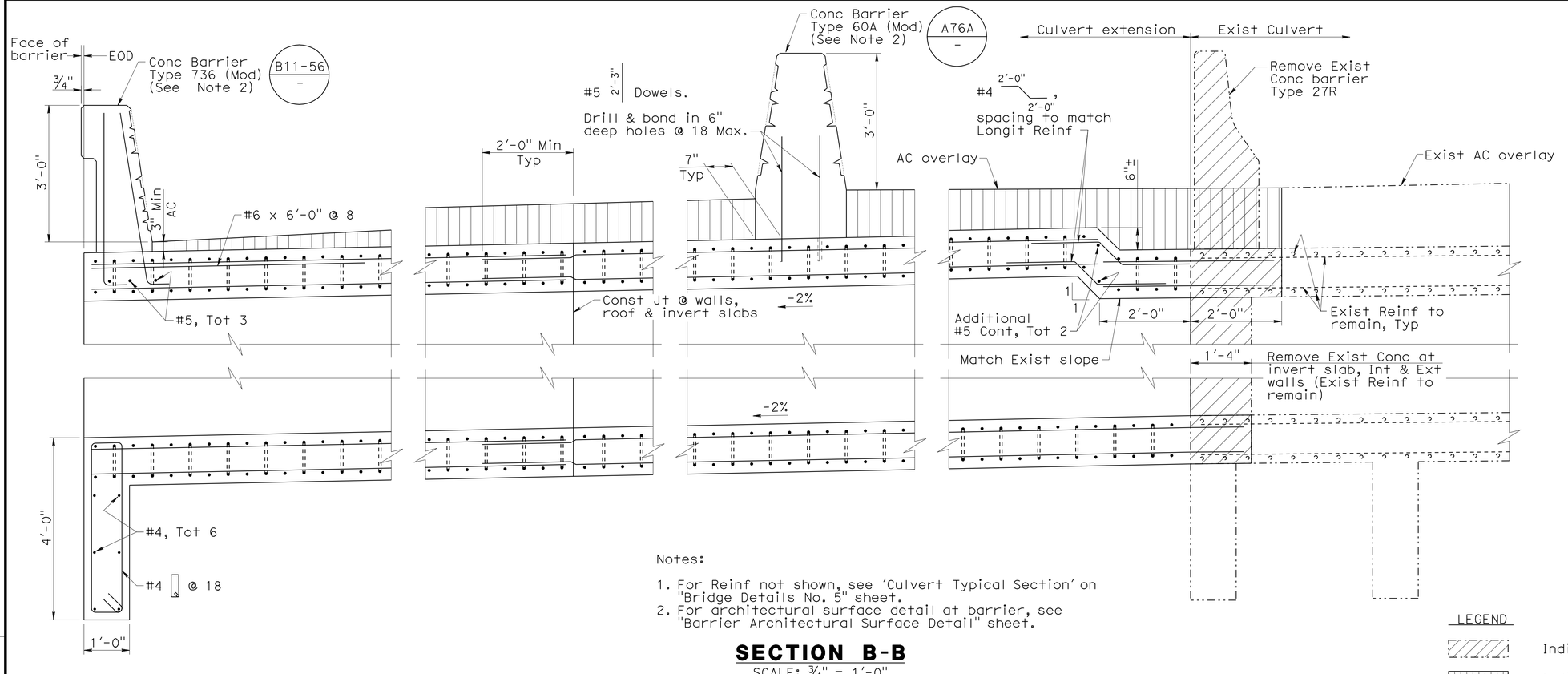

Notes:

1. For Reinf not shown, see 'Culvert Typical Section' on "Bridge Details No. 5" sheet.
2. For architectural surface detail at barrier, see "Barrier Architectural Surface Detail" sheet.

SECTION B-B

SCALE: 3/4" = 1'-0"

LEGEND

- Indicates Limits of Bridge Removal (Portion)
- Indicates Hot Mix Asphalt (Type B)

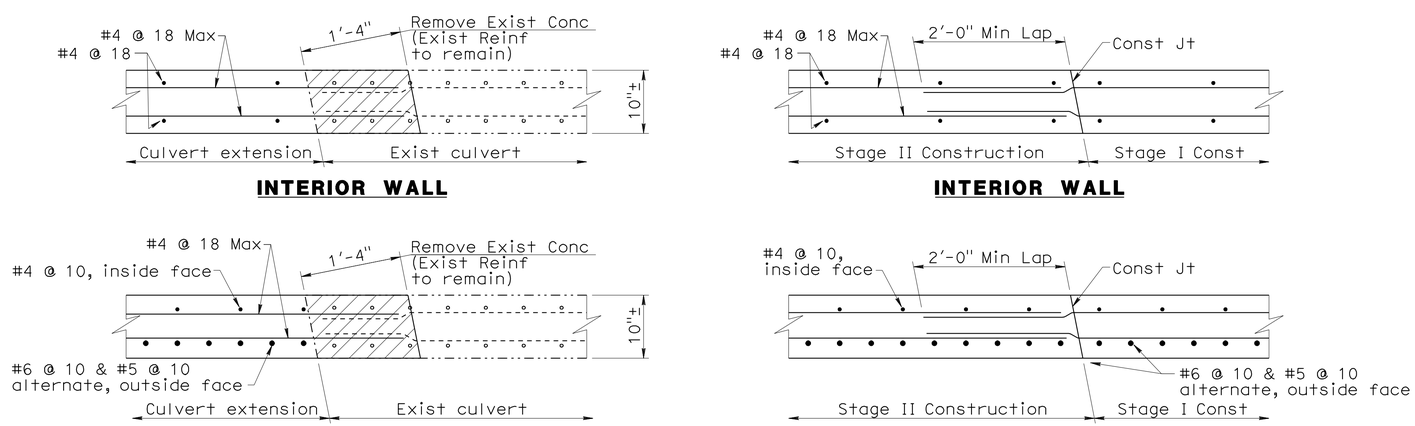

WALL CONNECTION DETAIL

SCALE: 1" = 1'-0"

WALL CONST JT DETAIL

SCALE: 1" = 1'-0"

Note:
The Contractor shall verify all controlling field dimensions before ordering or fabricating any material.

DESIGN OVERSIGHT — Fritz Hoffman
Sept 8, 2009
SIGN OFF DATE

	BY	CHECKED
DESIGN	D. Vang	G. Xu
DETAILS	X. Sun	G. Xu
QUANTITIES	D. Vang	K. Wang

PREPARED FOR THE STATE OF CALIFORNIA DEPARTMENT OF TRANSPORTATION

Guoping Xu
PROJECT ENGINEER

BRIDGE NO. 46-0035R/L
POST MILE 49.20

TRAVER CANAL BRIDGE (WIDEN)

BRIDGE DETAILS NO. 3

DESIGN DETAIL SHEET (ENGLISH) (REV. 2/25/05)

ORIGINAL SCALE IN INCHES FOR REDUCED PLANS 0 1 2 3

CU 06249
EA 324501

DISREGARD PRINTS BEARING EARLIER REVISION DATES

REVISION DATES (PRELIMINARY STAGE ONLY): 10/16/08 01/12/09 04/22/09 05/15/09 05/22/09 09/01/09

SHEET 5 OF 11

FILE => 46-0035rl-f-a01dt03.dgn

USERNAME => trrichf DATE PLOTTED => 04-AUG-2010 TIME PLOTTED => 15:03

DIST	COUNTY	ROUTE	POST MILES TOTAL PROJECT	SHEET No	TOTAL SHEETS
06	Tul,Fre	99	41.3/R53.9, R0.0/R1.2	650	687

REGISTERED CIVIL ENGINEER 09/01/09 DATE

1-25-10
PLANS APPROVAL DATE

REGISTERED PROFESSIONAL ENGINEER DANNY C. VANG No. C60613 Exp. 12/31/10 CIVIL STATE OF CALIFORNIA

The State of California or its officers or agents shall not be responsible for the accuracy or completeness of electronic copies of this plan sheet.

MGE ENGINEERING, INC.
7415 GREENHAVEN DRIVE, SUITE 100
SACRAMENTO, CALIFORNIA 95831

LIM & NASCIMENTO ENGINEERING
20 EMPIRE DRIVE
LAKE FOREST, CALIFORNIA 92630

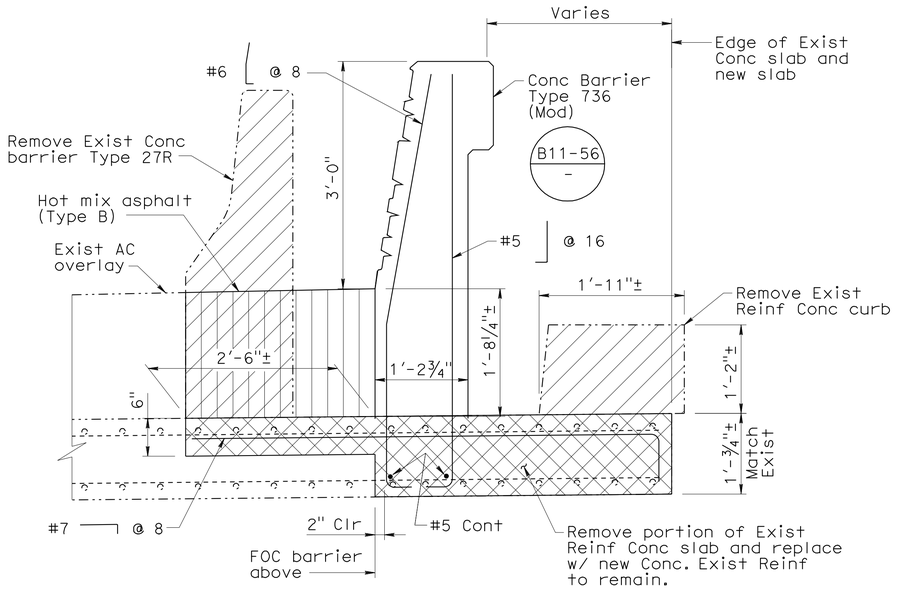

SECTION C-C
SCALE: 1" = 1'-0"

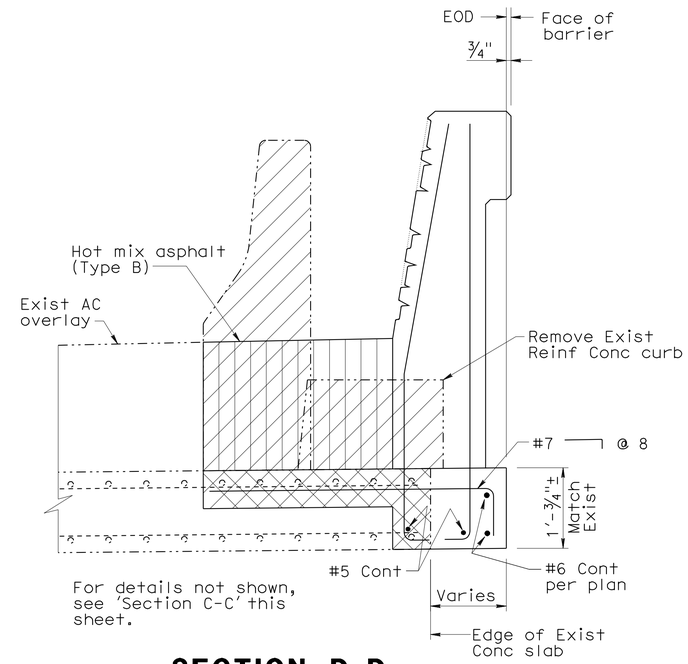

SECTION D-D
SCALE: 1" = 1'-0"

LEGEND

- Indicates Limits of Bridge Removal (Portion)
- Indicates New Concrete
- Indicates Hot Mix Asphalt (Type B)

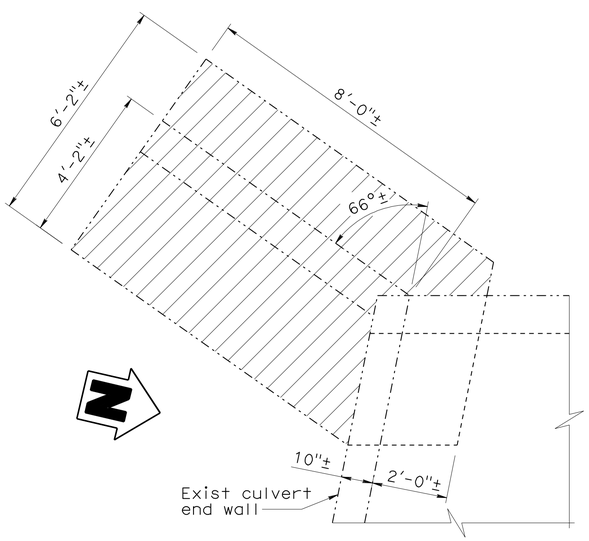

SOUTHWEST WINGWALL PLAN

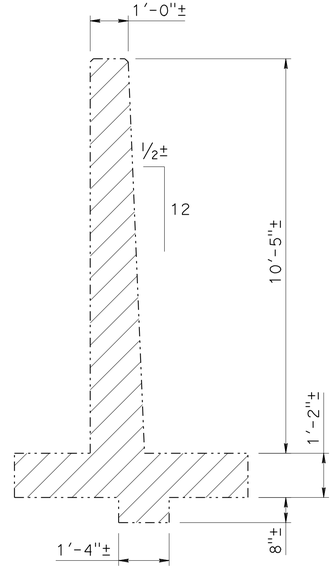

SOUTHWEST WINGWALL SECTION

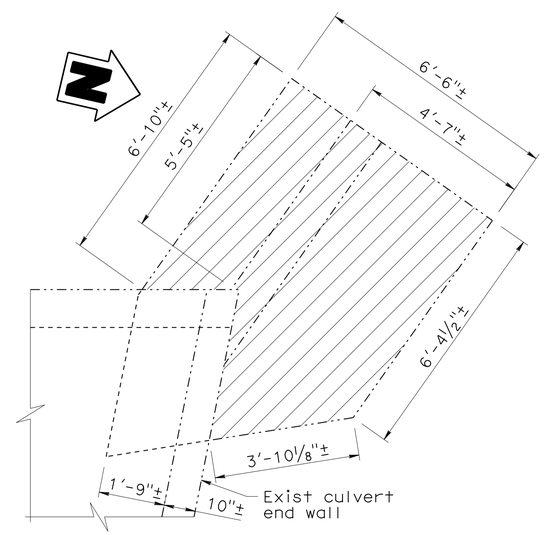

NORTHWEST WINGWALL PLAN

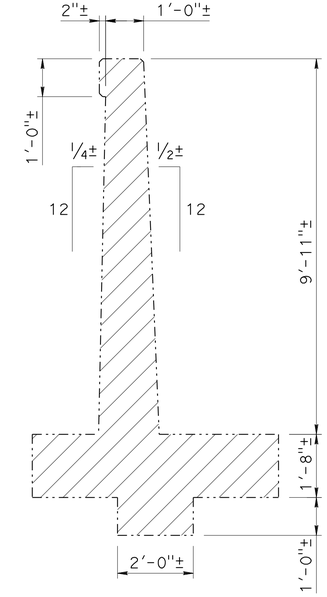

NORTHWEST WINGWALL SECTION

EXIST WINGWALL DEMOLITION DETAIL
SCALE: 1/2" = 1'-0"

Note:
The Contractor shall verify all controlling field dimensions before ordering or fabricating any material.

Fritz Hoffman
DESIGN OVERSIGHT Fritz Hoffman
Sept 8, 2009
SIGN OFF DATE

	BY	CHECKED
DESIGN	D. Vang	G. Xu
DETAILS	X. Sun	G. Xu
QUANTITIES	D. Vang	K. Wang

PREPARED FOR THE STATE OF CALIFORNIA DEPARTMENT OF TRANSPORTATION

Guoping Xu
PROJECT ENGINEER

BRIDGE NO. 46-0035R/L
POST MILE 49.20

TRAVER CANAL BRIDGE (WIDEN)
BRIDGE DETAILS NO. 4

DESIGN DETAIL SHEET (ENGLISH) (REV. 2/25/05)

ORIGINAL SCALE IN INCHES FOR REDUCED PLANS 0 1 2 3

CU 06249
EA 324501

DISREGARD PRINTS BEARING EARLIER REVISION DATES

REVISION DATES (PRELIMINARY STAGE ONLY): 10/16/08 01/12/09 04/22/09 05/15/09 05/22/09 09/01/09

SHEET 6 OF 11

FILE => 46-0035rl-f-a01dt04.dgn

USERNAME => jrright DATE PLOTTED => 04-AUG-2010 TIME PLOTTED => 15:03

DIST	COUNTY	ROUTE	POST MILES TOTAL PROJECT	SHEET No	TOTAL SHEETS
06	Tul,Fre	99	41.3/R53.9, R0.0/R1.2	651	687

REGISTERED CIVIL ENGINEER — DATE 09/01/09

1-25-10
PLANS APPROVAL DATE

The State of California or its officers or agents shall not be responsible for the accuracy or completeness of electronic copies of this plan sheet.

REGISTERED PROFESSIONAL ENGINEER — DANNY C. VANG No. C60613 Exp. 12/31/10 CIVIL — STATE OF CALIFORNIA

MGE ENGINEERING, INC.
7415 GREENHAVEN DRIVE, SUITE 100
SACRAMENTO, CALIFORNIA 95831

LIM & NASCIMENTO ENGINEERING
20 EMPIRE DRIVE
LAKE FOREST, CALIFORNIA 92630

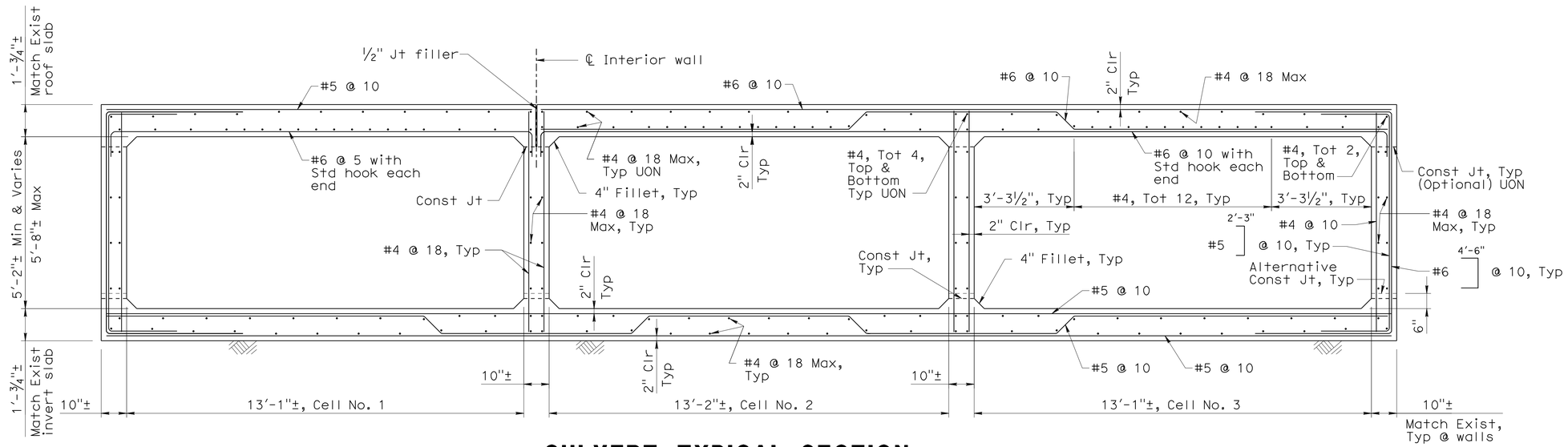

CULVERT TYPICAL SECTION

SCALE: 1/2" = 1'-0"

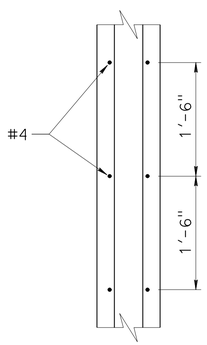

INTERIOR WALL SECTION

SCALE: 1" = 1'-0"

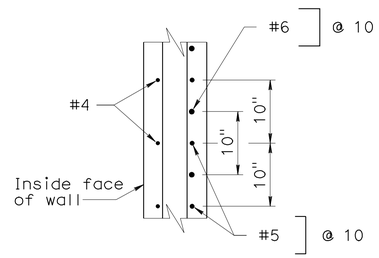

EXTERIOR WALL SECTION

SCALE: 1" = 1'-0"

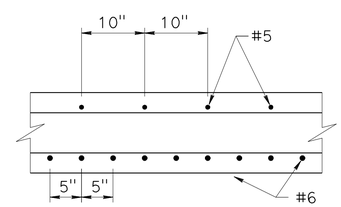

CELL NO. 1

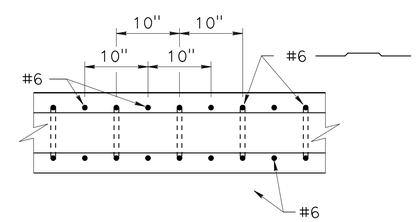

CELL NO.'s 2 & 3

ROOF SECTION

SCALE: 1" = 1'-0"

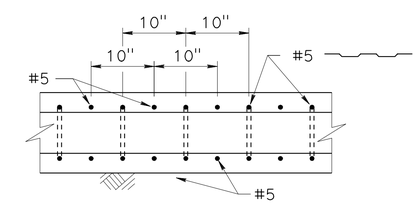

INVERT SECTION

SCALE: 1" = 1'-0"

Note:
The Contractor shall verify all controlling field dimensions before ordering or fabricating any material.

Fritz Hoffman
DESIGN OVERSIGHT — Fritz Hoffman
Sept 8, 2009
SIGN OFF DATE

	BY	CHECKED
DESIGN	D. Vang	G. Xu
DETAILS	X. Sun	G. Xu
QUANTITIES	D. Vang	K. Wang

PREPARED FOR THE STATE OF CALIFORNIA DEPARTMENT OF TRANSPORTATION

Guoping Xu
PROJECT ENGINEER

BRIDGE NO. 46-0035R/L
POST MILE 49.20

TRAVER CANAL BRIDGE (WIDEN)
BRIDGE DETAILS NO. 5

DESIGN DETAIL SHEET (ENGLISH) (REV. 2/25/05)

ORIGINAL SCALE IN INCHES FOR REDUCED PLANS 0 1 2 3

CU 06249
EA 324501

DISREGARD PRINTS BEARING EARLIER REVISION DATES

REVISION DATES (PRELIMINARY STAGE ONLY): 10/10/08 01/12/09 04/22/09 05/15/09 05/27/09 09/01/09

SHEET 7 OF 11

USERNAME => trrichf DATE PLOTTED => 04-AUG-2010 TIME PLOTTED => 15:03

FILE => 46-0035rl-f-a01dt05.dgn

DIST	COUNTY	ROUTE	POST MILES TOTAL PROJECT	SHEET No	TOTAL SHEETS
06	Tul,Fre	99	41.3/R53.9, R0.0/R1.2	652	687

REGISTERED CIVIL ENGINEER — DATE 09/01/09

1-25-10
PLANS APPROVAL DATE

The State of California or its officers or agents shall not be responsible for the accuracy or completeness of electronic copies of this plan sheet.

REGISTERED PROFESSIONAL ENGINEER — DANNY C. VANG — No. C60613 — Exp. 12/31/10 — CIVIL — STATE OF CALIFORNIA

MGE ENGINEERING, INC.
7415 GREENHAVEN DRIVE, SUITE 100
SACRAMENTO, CALIFORNIA 95831

LIM & NASCIMENTO ENGINEERING
20 EMPIRE DRIVE
LAKE FOREST, CALIFORNIA 92630

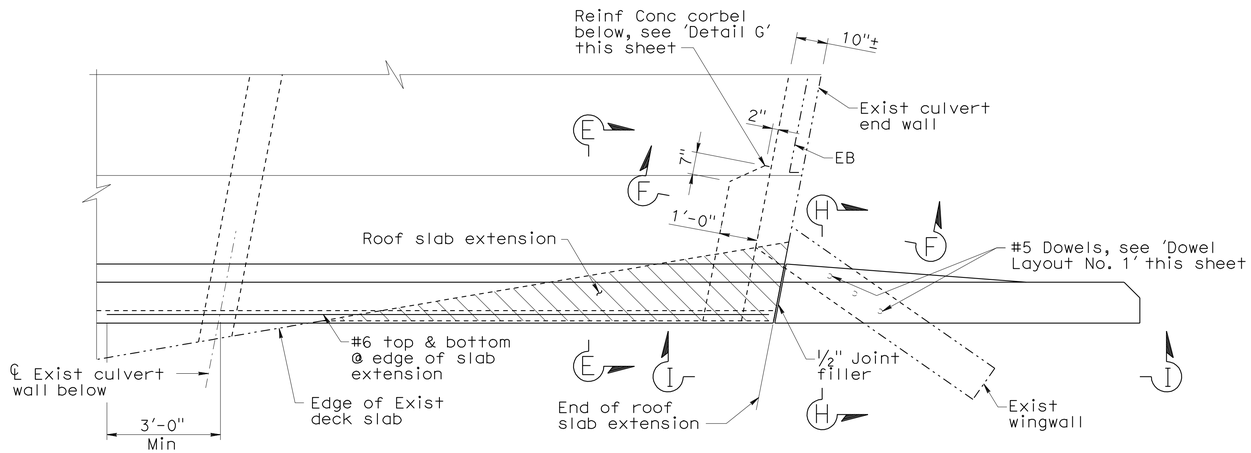

PARTIAL PLAN AT NORTHEAST CORNER

Scale: ½" = 1'-0"

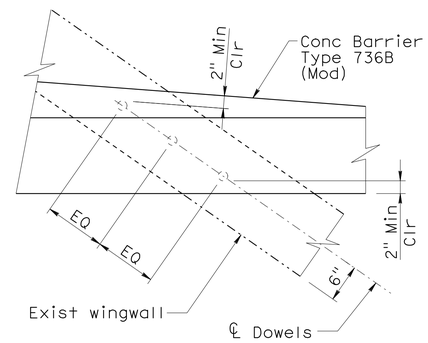

DOWEL LAYOUT NO. 1

SCALE: 1" = 1'-0"

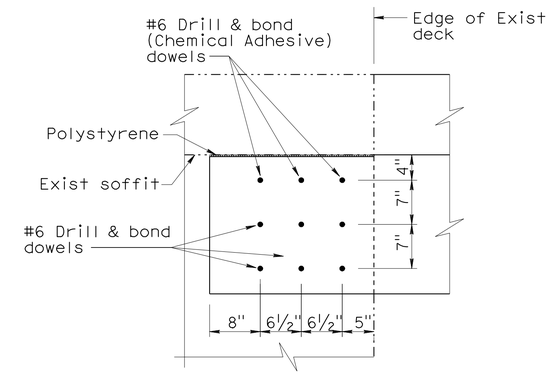

DOWEL LAYOUT NO. 2

Scale: 1" = 1'-0"

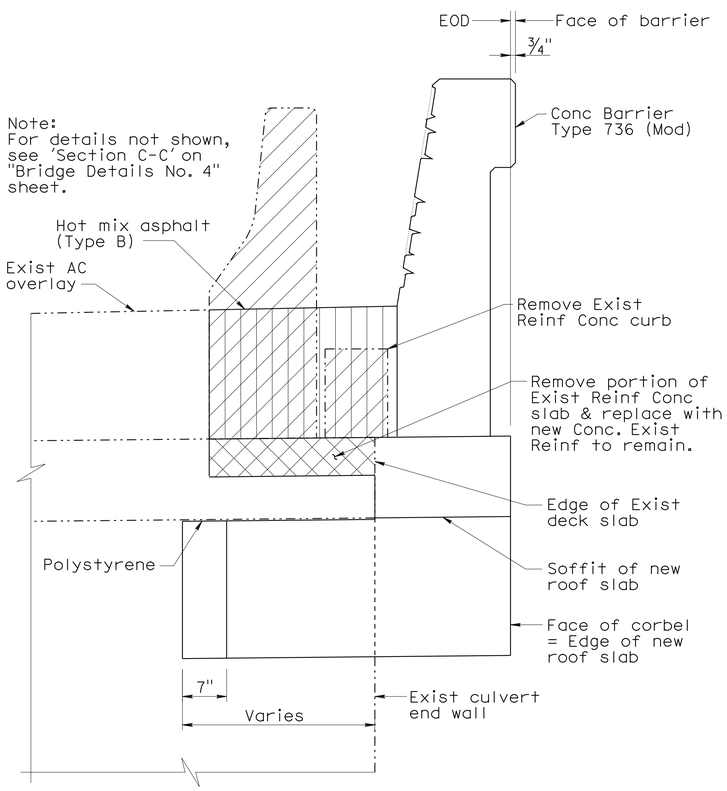

Note:
For details not shown, see 'Section C-C' on "Bridge Details No. 4" sheet.

SECTION E-E

SCALE: 1" = 1'-0"

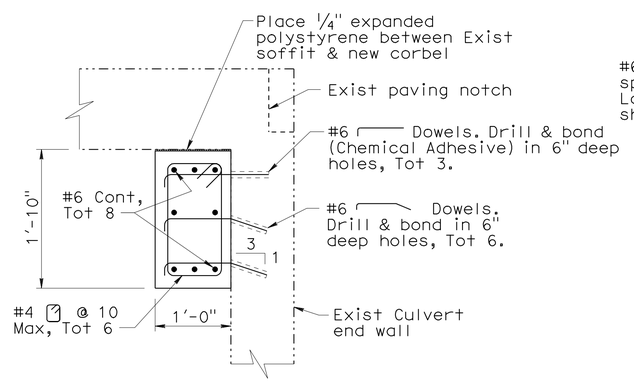

Note:
For spacing of dowels, see 'Dowel Layout No. 2' this sheet.

SECTION F-F

SCALE: 1" = 1'-0"

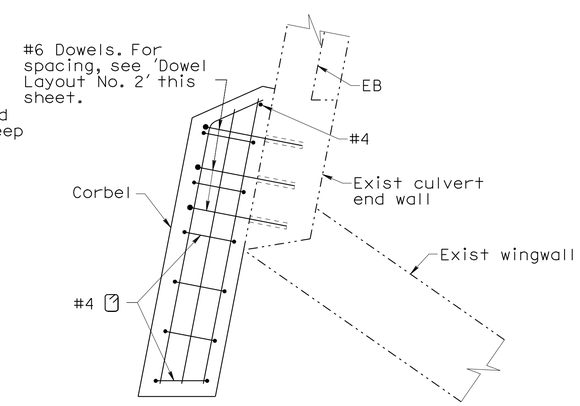

DETAIL G

SCALE: 1" = 1'-0"

Note:
The Contractor shall verify all controlling field dimensions before ordering or fabricating any material.

Note:
1. For Section H-H and View I-I, see "Bridge Details No. 7" sheet.

Fritz Hoffman
DESIGN OVERSIGHT — Fritz Hoffman
Sept 8, 2009
SIGN OFF DATE

	BY	CHECKED
DESIGN	D. Vang	G. Xu
DETAILS	X. Sun	G. Xu
QUANTITIES	D. Vang	K. Wang

PREPARED FOR THE STATE OF CALIFORNIA DEPARTMENT OF TRANSPORTATION

Guoping Xu
PROJECT ENGINEER

BRIDGE NO. 46-0035R/L
POST MILE 49.20

TRAVER CANAL BRIDGE (WIDEN)

BRIDGE DETAILS NO. 6

DESIGN DETAIL SHEET (ENGLISH) (REV. 2/25/05)

ORIGINAL SCALE IN INCHES FOR REDUCED PLANS 0 1 2 3

CU 06249
EA 324501

DISREGARD PRINTS BEARING EARLIER REVISION DATES

REVISION DATES (PRELIMINARY STAGE ONLY): 10/16/08 01/12/09 04/22/09 05/15/09 05/22/09 09/01/09

SHEET 8 OF 11

FILE => 46-0035rl-f-a01dt06.dgn

USERNAME => rrright DATE PLOTTED => 04-AUG-2010 TIME PLOTTED => 15:03

DIST	COUNTY	ROUTE	POST MILES TOTAL PROJECT	SHEET No	TOTAL SHEETS
06	Tul,Fre	99	41.3/R53.9, R0.0/R1.2	653	687

REGISTERED CIVIL ENGINEER — DATE 09/01/09

1-25-10
PLANS APPROVAL DATE

REGISTERED PROFESSIONAL ENGINEER — DANNY C. VANG — No. C60613 — Exp. 12/31/10 — CIVIL — STATE OF CALIFORNIA

The State of California or its officers or agents shall not be responsible for the accuracy or completeness of electronic copies of this plan sheet.

MGE ENGINEERING, INC.
7415 GREENHAVEN DRIVE, SUITE 100
SACRAMENTO, CALIFORNIA 95831

LIM & NASCIMENTO ENGINEERING
20 EMPIRE DRIVE
LAKE FOREST, CALIFORNIA 92630

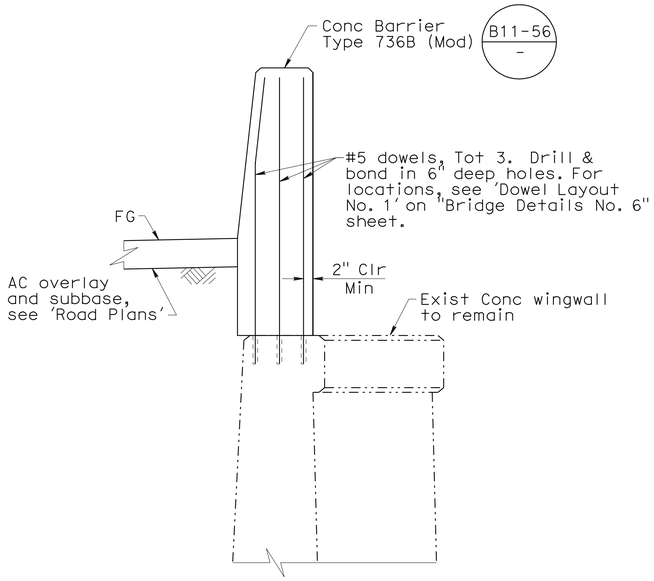

SECTION H-H
SCALE: 3/4" = 1'-0"

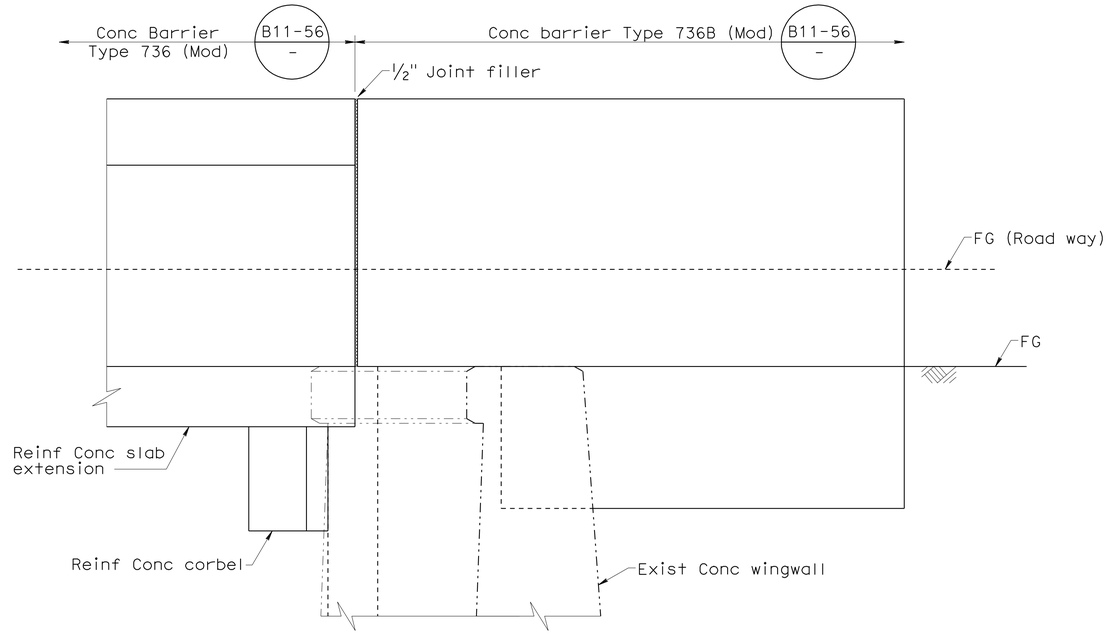

VIEW I-I
SCALE: 3/4" = 1'-0"

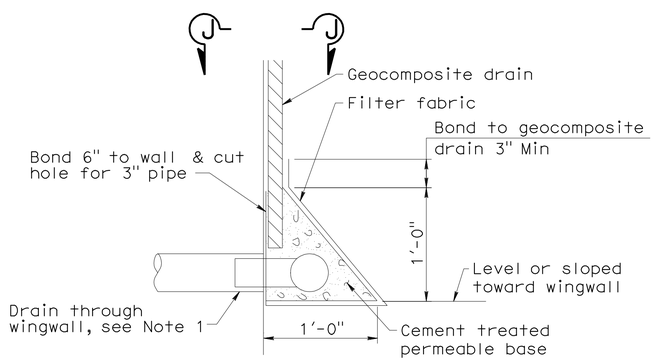

DETAIL 1
No Scale

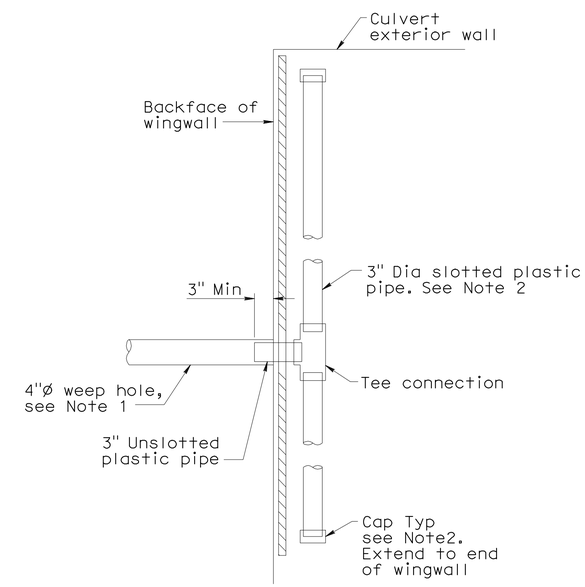

SECTION J-J
No Scale

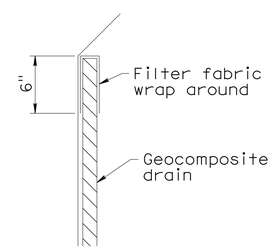

DETAIL 2
No Scale

Notes:

1. 4" drains at 20' Max center to center. Weep holes shall be located 3" above finished grade.
2. Geocomposite drain, cement treated permeable base, and 3" Dia slotted plastic pipe continuous behind wingwalls. Cap ends of pipe. Provide "Tee" connection at each 4" Dia drain.

Note:
The Contractor shall verify all controlling field dimensions before ordering or fabricating any material.

DESIGN OVERSIGHT Fritz Hoffman
Sept 8, 2009
SIGN OFF DATE

	BY	CHECKED
DESIGN	D. Vang	G. Xu
DETAILS	X. Sun	G. Xu
QUANTITIES	D. Vang	K. Wang

PREPARED FOR THE STATE OF CALIFORNIA DEPARTMENT OF TRANSPORTATION

Guoping Xu
PROJECT ENGINEER

BRIDGE NO. 46-0035R/L
POST MILE 49.20

TRAVER CANAL BRIDGE (WIDEN)
BRIDGE DETAILS NO. 7

DESIGN DETAIL SHEET (ENGLISH) (REV. 2/25/05)

ORIGINAL SCALE IN INCHES FOR REDUCED PLANS 0 1 2 3

CU 06249
EA 324501

DISREGARD PRINTS BEARING EARLIER REVISION DATES

REVISION DATES (PRELIMINARY STAGE ONLY) 10/07/08 01/22/09 04/22/09 05/15/09 05/27/09 09/01/09

SHEET 9 OF 11

FILE => 46-0035rl-f-a01dt07.dgn

USERNAME => trrichf DATE PLOTTED => 04-AUG-2010 TIME PLOTTED => 15:03

DIST	COUNTY	ROUTE	POST MILES TOTAL PROJECT	SHEET No	TOTAL SHEETS
06	Tul,Fre	99	41.3/R53.9, R0.0/R1.2	654	687

REGISTERED CIVIL ENGINEER — DATE 09/01/09

1-25-10
PLANS APPROVAL DATE

The State of California or its officers or agents shall not be responsible for the accuracy or completeness of electronic copies of this plan sheet.

REGISTERED PROFESSIONAL ENGINEER — DANNY C. VANG No. C60613 12/31/10 CIVIL — STATE OF CALIFORNIA

MGE ENGINEERING, INC.
7311 GREENHAVEN DRIVE, SUITE 100
SACRAMENTO, CALIFORNIA 95831

LIM & NASCIMENTO ENGINEERING
20 EMPIRE DRIVE
LAKE FOREST, CALIFORNIA 92630

NOTES:

1. For details not shown see Standard Plan RSP A76A.
2. For details not shown, see Standard Plan B11-56.
3. Height of repeating pattern measured along the slope of the barrier face.
4. Limits of placement and payment for architectural surface (dry stacked stone) texture shall be as shown in "Elevation" and shall extend from BB to EB.

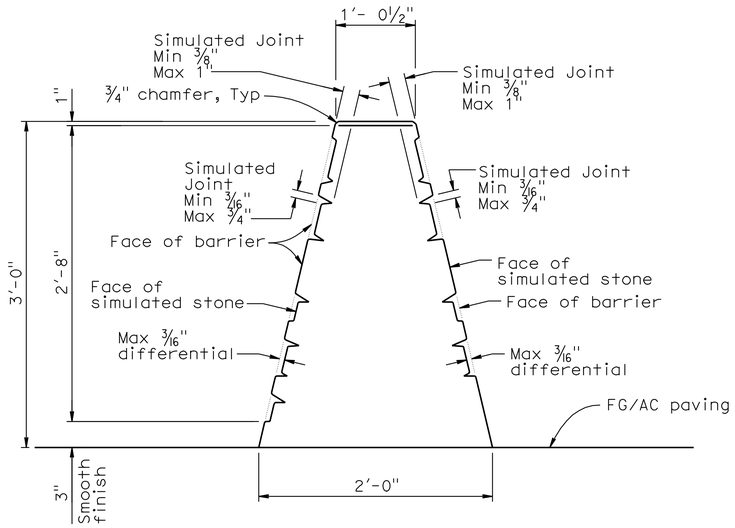

TYPE 60A (MODIFIED)
See Note 1

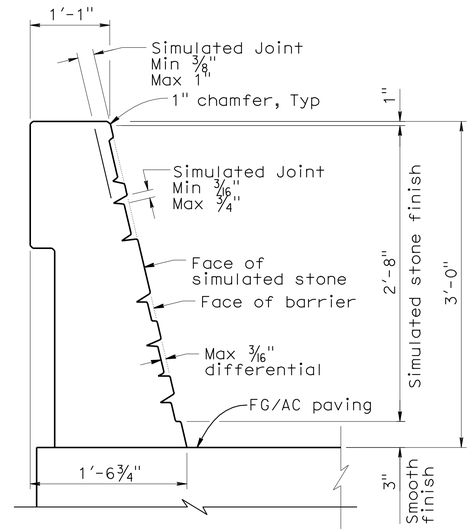

TYPE 736 (MODIFIED)
See Note 2

CONCRETE BARRIER SECTIONS

No scale

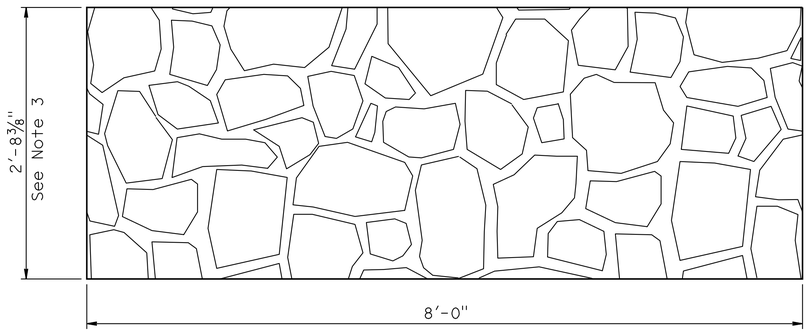

DEVELOPED ELEVATION

REPEATING PATTERN

No scale

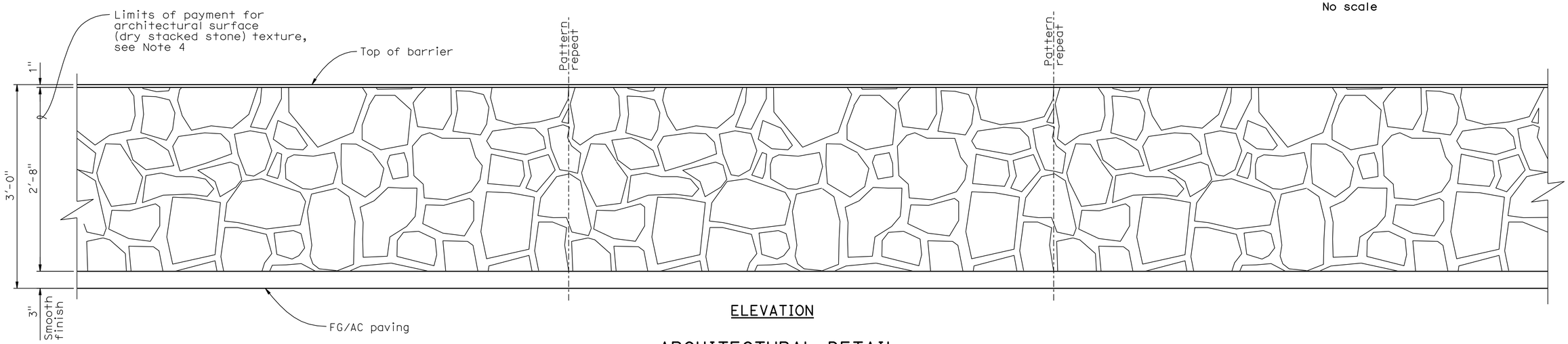

ELEVATION

ARCHITECTURAL DETAIL
CONCRETE BARRIERS TYPE 60A (MODIFIED) AND TYPE 736 (MODIFIED)

No scale

Note:
The Contractor shall verify all controlling field dimensions before ordering or fabricating any material.

DESIGN OVERSIGHT — Fritz Hoffman
Sept 8, 2009
SIGN OFF DATE

	BY	CHECKED
DESIGN	D. Vang	G. Xu
DETAILS	X. Sun	G. Xu
QUANTITIES	D. Vang	K. Wang

PREPARED FOR THE STATE OF CALIFORNIA DEPARTMENT OF TRANSPORTATION

Guoping Xu
PROJECT ENGINEER

BRIDGE NO. 46-0035R/L
POST MILE 49.20

TRAVER CANAL BRIDGE (WIDEN)
BARRIER ARCHITECTURAL SURFACE DETAIL

DESIGN DETAIL SHEET (ENGLISH) (REV. 2/25/05)

ORIGINAL SCALE IN INCHES FOR REDUCED PLANS 0 1 2 3

CU 06
EA 324501

DISREGARD PRINTS BEARING EARLIER REVISION DATES → REVISION DATES (PRELIMINARY STAGE ONLY) 05/14/09 05/27/09 09/01/09

SHEET 10 OF 11

FILE => 46-0035rl-t-brdt.dgn

USERNAME => trrichf DATE PLOTTED => 04-AUG-2010 TIME PLOTTED => 15:04

FED ROAD DIV NO	STATE	PROJ. NO.	FISCAL YEAR	SHEET NO.	TOTAL SHEETS
7	CAL.			00	124

DIST.	COUNTY	ROUTE	PREFIX	SHEET NO.	TOTAL SHEETS
VI	Tul.	4	E	4	4

DATE AUTHORIZED March 19, 1956

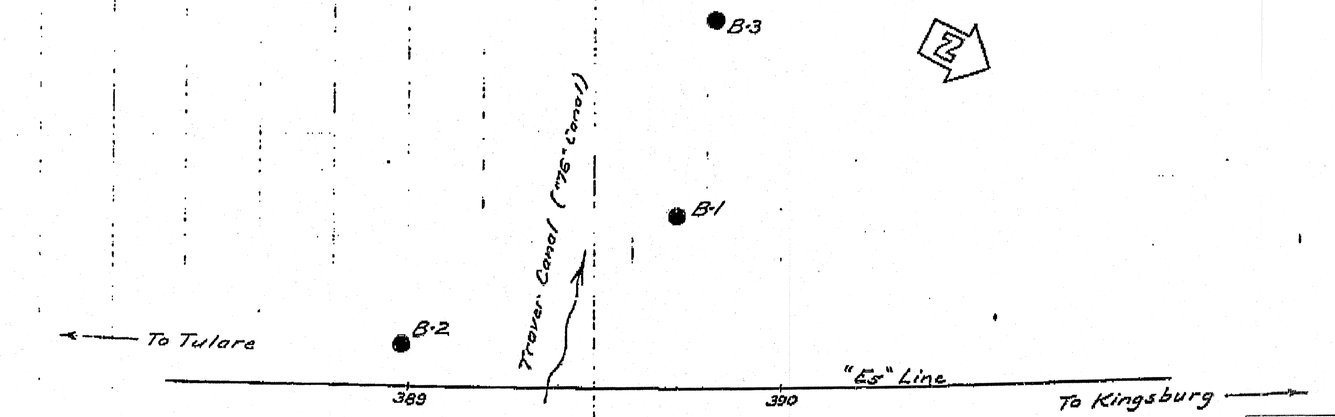

PLAN
Scale: 1" = 20'

DIVISION OF ENGINEERING SERVICES - GEOTECHNICAL SERVICES					
As-Built Log of Test Borings sheet is considered an informational document only. As such, the State of California registration seal with signature, license number and registration certificate expiration date confirm that this is a true and accurate copy of the original document. This drawing is available and presented only for the convenience of any bidder, contractor or other interested party.					
DIST.	COUNTY	ROUTE	POST MILE-TOTAL PROJECT	Sheet No.	Total Sheets
06	Tul,Fre	99	41.3/R53.9,R0.0/R1.2	655	687
Chris Koepke 2/26/09 REGISTERED PROFESSIONAL GEOLOGIST					
TRAVER CANAL BRIDGE (REPLACE)					
LOG OF TEST BORINGS					
NOTE: A COPY OF THIS LOG OF TEST BORINGS IS AVAILABLE AT OFFICE OF STRUCTURE MAINTENANCE AND INVESTIGATIONS, SACRAMENTO, CALIFORNIA	CU: 06 EA: 324501		BRIDGE No. 46-0035 R/L		
To accompany plans dated 1-25-10			Sheet 11	of 11	

REGISTERED PROFESSIONAL GEOLOGIST
Christopher W. Koepke
No. 2207
Exp. 10-31-10
CERTIFIED ENGINEERING GEOLOGIST
STATE OF CALIFORNIA

BM #387.9 Square chiseled in NE corner of E Headwall. Elev. 288.93

AS-BUILT
NO CHANGES
MARCH 5, 1957
J. D. Hosking

AS BUILT PLANS
Contract No. 57-6VC2
Date Completed
Document No. 60001013

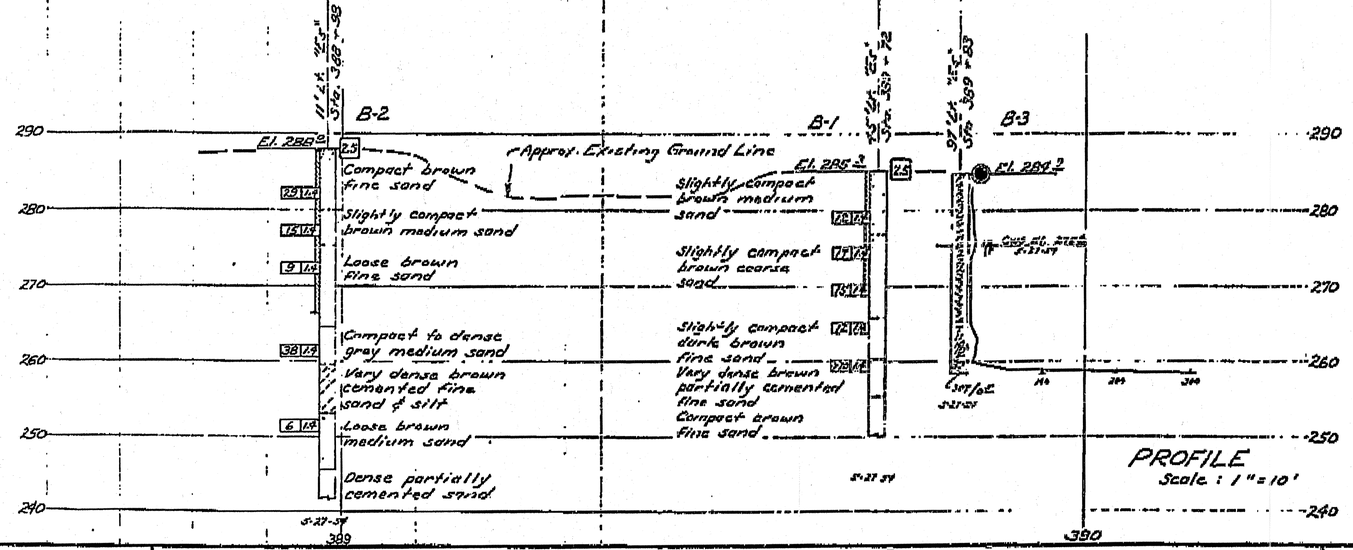

PROFILE
Scale: 1" = 10'

Classification of Material Based on Standard Grade Size Limits

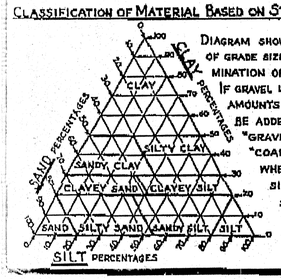

Diagram showing the basis for estimates of grade size distribution used in determination of class names.

If gravel is present in appreciable amounts the term "gravelly" may be added to the class name, viz. "gravelly sand." The terms "coarse", "medium" and "fine" when used to describe sand, silt and gravel, refer to standard grade size limits.

Legend of Earth Materials

- Gravel
- Sand
- Silt
- Clay
- Sandy Clay or Clayey Sand
- Sandy Silt or Silty Sand
- Silty Clay or Clayey Silt
- Peat and/or Organic Matter
- Fill Material
- Igneous Rock
- Sedimentary Rock
- Metamorphic Rock

Legend of Boring Operations

- Plan of any boring
- Penetrometer
- 2 1/4" Cone Penetrometer
- Sampler boring (Dry)
- Rotary boring (Wet)
- Auger boring (Dry)
- Jet boring
- Core boring
- Test pit

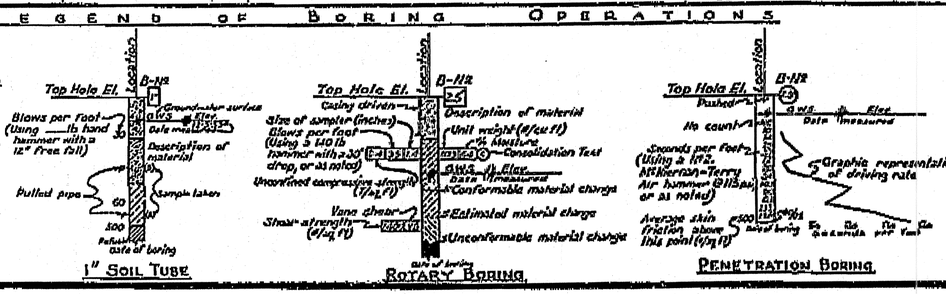

Notes

The contractor's attention is directed to Section 2, Article (c) of the Standard Specifications and to the Special Provisions accompanying this set of plans.

Classification of earth material as shown on this sheet is based upon field inspection and is not to be construed to imply mechanical analysis.

STATE OF CALIFORNIA
DEPARTMENT OF PUBLIC WORKS
DIVISION OF HIGHWAYS

Bridge Across Traver Canal

Log of Test Borings

SCALE As Noted	BRIDGE 46-35	FILE E-46	DRAWING C-3962-4

PRE. DRAWING NO. P-3962 9

FILENAME => 46-0035r1-z-1tb01.tif

DIST	COUNTY	ROUTE	POST MILES TOTAL PROJECT	SHEET No	TOTAL SHEETS
06	Tul,Fre	99	41.3/R53.9, R0.0/R1.2	656	687

Robert C Fish 1/13/10
REGISTERED CIVIL ENGINEER DATE

1-25-10
PLANS APPROVAL DATE

The State of California or its officers or agents shall not be responsible for the accuracy or completeness of electronic copies of this plan sheet.

REGISTERED PROFESSIONAL ENGINEER Robert C. Fish No. C39540 Exp. 12/31/2011 CIVIL STATE OF CALIFORNIA

LIM & NASCIMENTO ENGINEERING
20 EMPIRE DRIVE
LAKE FOREST, CALIFORNIA 92630

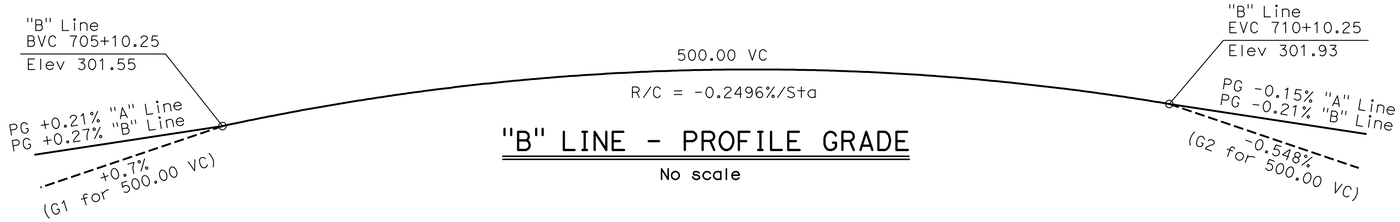

"B" LINE - PROFILE GRADE

No scale

LEGEND:

- Limits of Bridge Removal
- Existing Structure
- New Structure

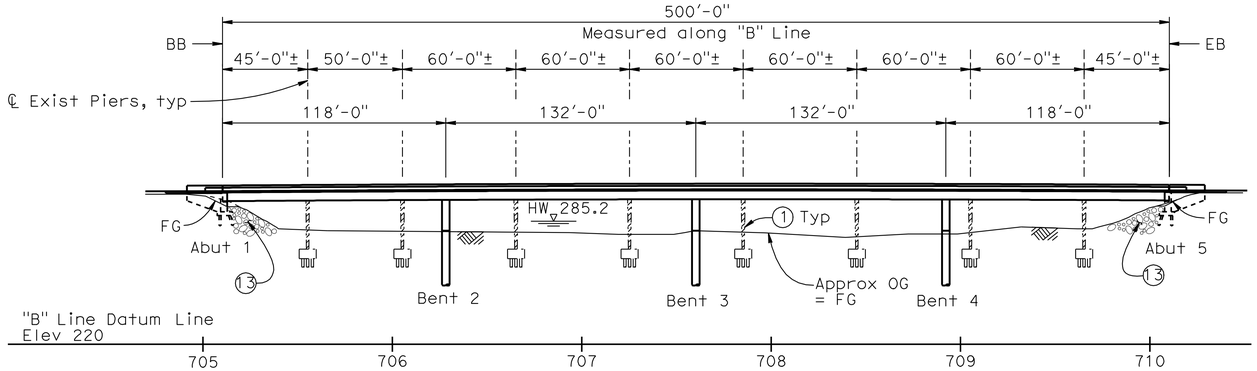

ELEVATION

1"=40'

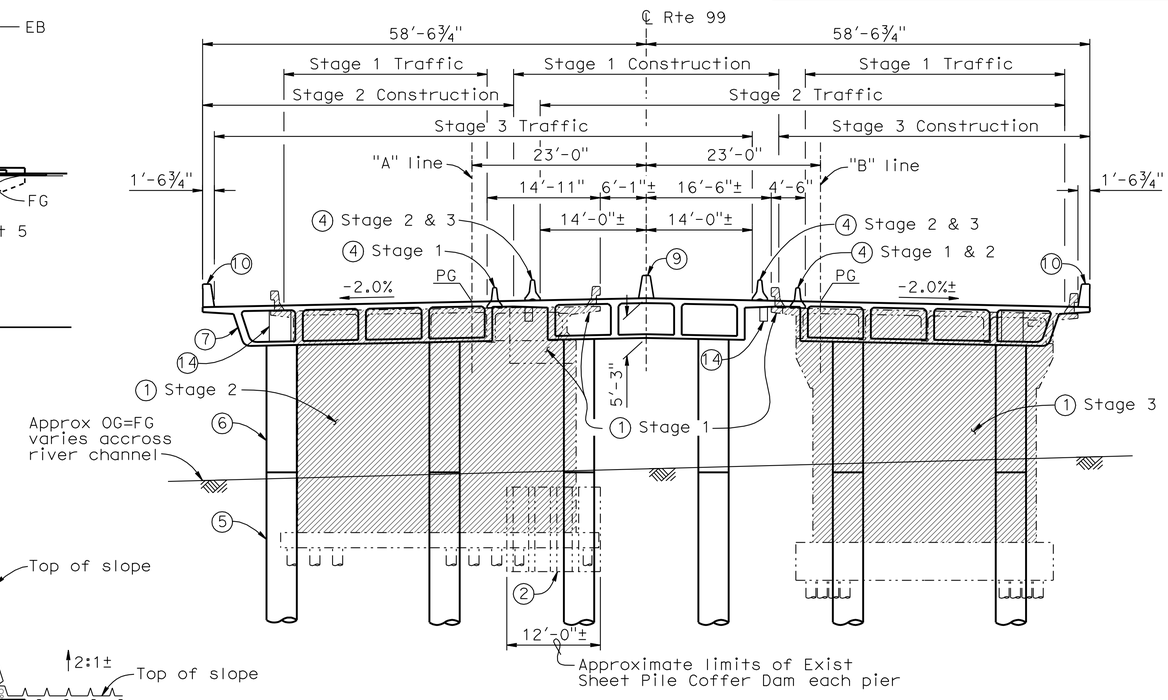

TYPICAL SECTION

1"=10'

NOTES:

1. Remove Existing Bridges 46-0036R/L
2. Remove Existing Cofferdam to top of Pile Cap at all Piers
3. Remove Existing Structure Approach
4. Temporary Railing Type K, see "DEMOLITION AND STAGING" sheet and "Road Plans"
5. 48"Ø CISS Pile
6. 48"Ø CIP Column Extension
7. Cast-in-Place PS Concrete Box Girder
8. Structure Approach Type N(30S)
9. Concrete Barrier Type 60A (Mod)
10. Concrete Barrier Type 736 (Mod)
11. Paint "Bridge No 46-0036R/L"
12. Paint "Kings River Bridge"
13. Grouted Rip-Rap by District
14. Bat Habitat

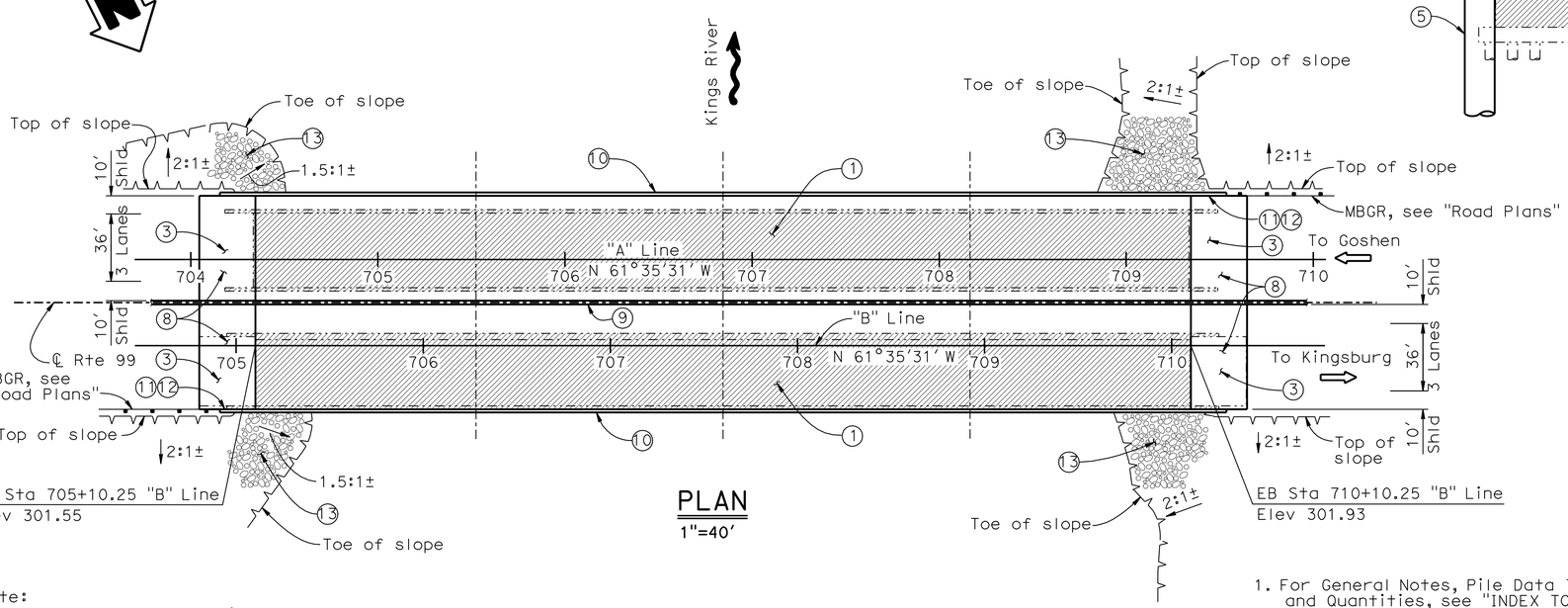

PLAN

1"=40'

Note:
The Contractor shall verify all controlling field dimensions before ordering or fabricating any material.

1. For General Notes, Pile Data Table, Index to Plans and Quantities, see "INDEX TO PLANS" sheet.

Fritz Hoffman — DESIGN OVERSIGHT Fritz Hoffman — Sept 8, 2009 — SIGN OFF DATE	DESIGN	BY R. Fish	CHECKED M. Stiller / R. Price	LOAD AND RESISTANCE FACTOR DESIGN	LIVE LOADING: HL-93 W/ "LOW BOY" AND PERMIT DESIGN VEHICLE
	DETAILS	BY C. Lee / Y. Ng	CHECKED M. Stiller / R. Price	LAYOUT: BY C. Lee	CHECKED X
	QUANTITIES	BY R. Fish	CHECKED M. Stiller	SPECIFICATIONS: BY R. Price	PLANS AND SPECS COMPARED B. Fish

PREPARED FOR THE STATE OF CALIFORNIA DEPARTMENT OF TRANSPORTATION

Stephen J. Mislinski
PROJECT ENGINEER

BRIDGE NO. 46-0267
POST MILES 52.6

KINGS RIVER BRIDGE (REPLACE)
GENERAL PLAN

DESIGN GENERAL PLAN SHEET (ENGLISH) (REV.2/25/05)

ORIGINAL SCALE IN INCHES FOR REDUCED PLANS 0 1 2 3

CU 06249
EA 324501

DISREGARD PRINTS BEARING EARLIER REVISION DATES

REVISION DATES (PRELIMINARY STAGE ONLY): 7/28/08 11/14/08 01/16/09 04/27/09 05/13/09 05/27/09 09/04/09 1-11-10

SHEET 1 OF 30

FILE => 46-0267-agp.dgn

USERNAME => rtrright DATE PLOTTED => 04-AUG-2010 TIME PLOTTED => 15:04

DIST	COUNTY	ROUTE	POST MILES TOTAL PROJECT	SHEET No	TOTAL SHEETS
06	Tul,Fre	99	41.3/R53.9, R0.0/R1.2	657	687

Robert C Fish 1/13/10
REGISTERED CIVIL ENGINEER DATE

1-25-10
PLANS APPROVAL DATE

REGISTERED PROFESSIONAL ENGINEER Robert C. Fish No. C39540 Exp. 12/31/2011 CIVIL STATE OF CALIFORNIA

The State of California or its officers or agents shall not be responsible for the accuracy or completeness of electronic copies of this plan sheet.

LIM & NASCIMENTO ENGINEERING
20 EMPIRE DRIVE
LAKE FOREST, CALIFORNIA 92630

INDEX TO PLANS

SHEET NO.	TITLE
1.	GENERAL PLAN
2.	INDEX TO PLANS
3.	DECK CONTOURS
4.	FOUNDATION PLAN
5.	DEMOLITION AND STAGING DETAILS
6.	ABUTMENT LAYOUT
7.	ABUTMENT PILE LAYOUT
8.	ABUTMENT DETAILS NO.1
9.	ABUTMENT DETAILS NO. 2
10.	BENT DETAILS NO. 1
11.	CISS PILE DETAILS NO. 1
12.	CISS PILE DETAILS NO. 2
13.	TYPICAL SECTION
14.	GIRDER LAYOUT
15.	LONGITUDINAL REINFORCEMENT
16.	ARCHITECTURAL SURFACE DETAILS NO. 1
17.	ARCHITECTURAL SURFACE DETAILS NO. 2
18.	ARCHITECTURAL SURFACE DETAILS NO. 3
19.	STRUCTURE APPROACH DRAINAGE DETAILS
20.	STRUCTURE APPROACH TYPE N(30S)
21.	JOINT SEAL ASSEMBLY (MAXIMUM MOVEMENT RATING = 4")
22.	BAT HABITAT (INTERNAL) NO. 1
23.	BAT HABITAT (INTERNAL) NO. 2
24.	BAT HABITAT (EXTERNAL)
25.	LOG OF TEST BORINGS 1 OF 6
26.	LOG OF TEST BORINGS 2 OF 6
27.	LOG OF TEST BORINGS 3 OF 6
28.	LOG OF TEST BORINGS 4 OF 6
29.	LOG OF TEST BORINGS 5 OF 6
30.	LOG OF TEST BORINGS 6 OF 6

STANDARD PLANS DATED MAY 2006 WITH ERRATA 1-10

A10A	ACRONYMS AND ABBREVIATIONS (SHEET 1 OF 2)
A10B	ACRONYMS AND ABBREVIATIONS (SHEET 2 OF 2)
A10C	SYMBOLS (SHEET 1 OF 2)
A10D	SYMBOLS (SHEET 2 OF 2)
A62C	LIMITS OF PAYMENT FOR EXCAVATION AND BACKFILL-BRIDGE
RSP A76A	CONCRETE BARRIER TYPE 60
T-3	TEMPORARY RAILING (TYPE K)
B0-1	BRIDGE DETAILS
B0-3	BRIDGE DETAILS
B0-5	BRIDGE DETAILS
B0-13	BRIDGE DETAILS
B2-5	PILE DETAILS CLASS 90 AND CLASS 140
B7-1	BOX GIRDER DETAILS
B7-7	DECK DRAINAGE TYPE D-3
B7-8	DECK DRAINAGE DETAILS
B7-10	UTILITY OPENING-BOX GIRDER
B7-11	UTILITY DETAILS
B8-5	CAST-IN-PLACE PRESTRESSED GIRDER DETAILS
B11-56	CONCRETE BARRIER TYPE 736
B14-5	WATER SUPPLY LINE (DETAILS)

STANDARD PLAN SHEET NO.

DETAIL NO.

Note:
The Contractor shall verify all controlling field dimensions before ordering or fabricating any material.

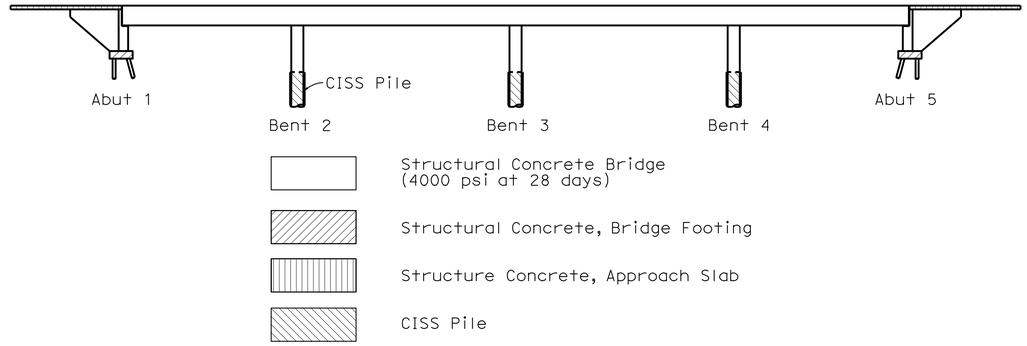

CONCRETE STRENGTH AND TYPE LIMITS

PILE DATA TABLE

Location	Columns	Pile Type	Nominal Resistance (kips) Compression	Nominal Resistance (kips) Tension	Design Tip Elevation (FT)	Specified Tip Elevation (FT)	Nominal Driving Resistance (kips)
Abut 1	-	Class 140 ALT. X	250	N/A	230 (a) 260 (b)	230	250
Bent 2	1, 2, 5 & 6	48" CISS	3285	0	148 (a) 222 (b)	148	3285
	3 & 4		2685	0	170 (a) 222 (b) 169 (c)	169	2685
Bent 3	1, 2, 5 & 6	48" CISS	3285	0	148 (a) 222 (b)	148	3285
	3 & 4		2685	0	170 (a) 222 (b) 169 (c)	169	2685
Bent 4	1, 2, 5 & 6	48" CISS	3285	0	148 (a) 222 (b)	148	3285
	3 & 4		2685	0	170 (a) 222 (b) 169 (c)	169	2685
Abut 5	-	Class 140 ALT. X	250	N/A	245 (a) 260 (b)	245	250
LOAD TEST PILES							
Near Bent 4	Test Pile	48" Steel Pile	N/A	N/A	148	148	N/A
	Non-production Reaction Piles	48" Steel Pile	N/A	N/A	173	173	N/A

NOTE: Design tip elevations are controlled by: (a) compression, (b) lateral load, (c) geotechnical capacity.

GENERAL NOTES
LOAD AND RESISTANCE FACTOR DESIGN

DESIGN: AASHTO LRFD Bridge Design Specifcations, 3rd Edition with Interims through 2006 and the Caltrans Amendments v3.06.01 except for geotechnical design of earth retaining systems, bridge details taken from Standard Plans May 2006 and earlier versions, Standard Bridge Details (XS sheets, ect) are designed using Bridge Design Specifications (1996 AASHTO with Revisions by Caltrans).

SEISMIC DESIGN:
Caltrans Seismic Design Criteria (SDC), Version 1.4 June 2006

DEAD LOAD:
Includes 35 psf for future wearing surface.

LIVE LOADING:
HL93 with "Low Boy" and permit design load.

SEISMIC LOADING:
SDC ARS Curve for Soil Profile D (M=7.0± 0.25)
(Peak Rock Acceleration = 0.2 g)

REINFORCED CONCRETE:
fy = 60 ksi
f'c = 3.6 ksi
n = 8

See prestressing notes on "Girder Layout" sheet.

STRUCTURAL STEEL:
Steel Pipe Piles - ASTM A252 Grade 3

QUANTITIES

BRIDGE REMOVAL, LOCATION L	LUMP	SUM
STRUCTURE EXCAVATION (BRIDGE)	697	CY
STRUCTURE BACKFILL (BRIDGE)	530	CY
FURNISH STEEL PIPE PILING (PP 48 X 0.75)	379	LF
DRIVE STEEL PIPE PILING (PP 48 X 0.75)	3	EA
FURNISH PILING (CLASS 140) (ALTERNATIVE X)	3,881	LF
DRIVE PILE (CLASS 140) (ALTERNATIVE X)	74	EA
FURNISH 48" CAST-IN-STEEL SHELL CONCRETE PILING	2,267	LF
DRIVE 48" CAST-IN-STEEL SHELL CONCRETE PILE	18	EA
PRESTRESSING CAST-IN-PLACE CONCRETE	LUMP	SUM
STRUCTURAL CONCRETE, BRIDGE FOOTING	141	CY
STRUCTURAL CONCRETE, BRIDGE	4,120	CY
STRUCTURAL CONCRETE, APPROACH SLAB (TYPE N)	272	CY
ARCHITECTURAL TEXTURE (DRY STACKED STONE)	5,490	SQFT
ARCHITECTURAL TEXTURE (EMBEDDED PEA GRAVEL FACE FORMED RELIEF OVER SMOOTH CONCRETE TEXTURED)	544	SQFT
ARCHITECTURAL TEXTURE (SMOOTH FACE FORMED RELIEF OVER EMBEDDED PEA GRAVEL TEXTURE)	2,504	SQFT
DRILL AND BOND DOWEL	283	LF
JOINT SEAL ASSEMBLY (MR 3")	230	LF
BAR REINFORCING STEEL (BRIDGE)	1,032,900	LB
BAT HABITAT (INTERNAL)	8	EA
BAT HABITAT (EXTERNAL)	4	EA
PREPARE AND STAIN CONCRETE	5,490	SQFT
24" WELDED STEEL PIPE CASING (BRIDGE)	158	LF
10" WELDED STEEL PIPE CASING (BRIDGE)	158	LF
MISCELLANEOUS METAL (BRIDGE)	1,740	LB
BRIDGE DECK DRAINAGE SYSTEM	7,883	LB
CONCRETE BARRIER (TYPE 60A MODIFIED)	560	LF
CONCRETE BARRIER (TYPE 736 MODIFIED)	1,075	LF

Fritz Hoffman
DESIGN OVERSIGHT Fritz Hoffman
Sept 8, 2009
SIGN OFF DATE

	BY	CHECKED
DESIGN	R. Fish	M. Stiller / R. Price
DETAILS	C. Lee / Y. Ng	M. Stiller / R. Price
QUANTITIES	R. Fish	M. Stiller

PREPARED FOR THE STATE OF CALIFORNIA DEPARTMENT OF TRANSPORTATION

Stephen J. Mislinski
PROJECT ENGINEER

BRIDGE NO. 46-0267
POST MILE 52.6

KINGS RIVER BRIDGE (REPLACE)
INDEX TO PLANS

DESIGN DETAIL SHEET (ENGLISH) (REV. 2/25/05)

ORIGINAL SCALE IN INCHES FOR REDUCED PLANS 0 1 2 3

CU 06249
EA 324501

DISREGARD PRINTS BEARING EARLIER REVISION DATES

REVISION DATES (PRELIMINARY STAGE ONLY): ~~11/16/08~~ ~~01/16/09~~ ~~04/22/09~~ ~~05/13/09~~ ~~05/27/09~~ ~~09/09/09~~ 1-11-10

SHEET 2 OF 30

FILE => 46-0267-bitp.dgn

USERNAME => trrichf DATE PLOTTED => 04-AUG-2010 TIME PLOTTED => 15:04

DIST	COUNTY	ROUTE	POST MILES TOTAL PROJECT	SHEET No	TOTAL SHEETS
06	Tul,Fre	99	41.3/R53.9, R0.0/R1.2	658	687

Robert C Fish 1/13/10
REGISTERED CIVIL ENGINEER DATE

1-25-10
PLANS APPROVAL DATE

REGISTERED PROFESSIONAL ENGINEER
Robert C. Fish
No. C39540
Exp. 12/31/2011
CIVIL
STATE OF CALIFORNIA

The State of California or its officers or agents shall not be responsible for the accuracy or completeness of electronic copies of this plan sheet.

LIM & NASCIMENTO ENGINEERING
20 EMPIRE DRIVE
LAKE FOREST, CALIFORNIA 92630

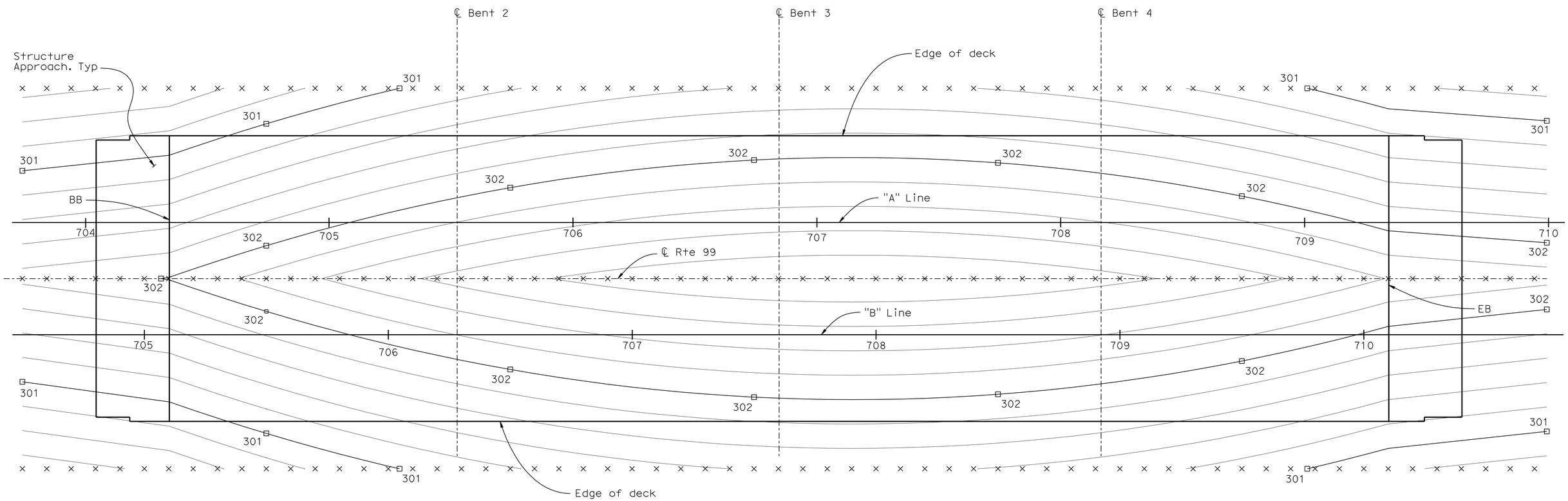

PLAN
1"=20'

NOTES:
1. □ Indicates even foot contours
2. × Indicates 10' intervals measured along Rte 99
3. Contour interval is 0.20'
4. Contours do not include camber

Note:
The Contractor shall verify all controlling field dimensions before ordering or fabricating any material.

Fritz Hoffman
DESIGN OVERSIGHT Fritz Hoffman
Sept 8, 2009
SIGN OFF DATE

	BY	CHECKED
DESIGN	R. Fish	M. Stiller / R. Price
DETAILS	C. Lee / Y. Ng	M. Stiller / R. Price
QUANTITIES	R. Fish	M. Stiller

PREPARED FOR THE STATE OF CALIFORNIA DEPARTMENT OF TRANSPORTATION

Stephen J. Mislinski
PROJECT ENGINEER

BRIDGE NO. 46-0267
POST MILE 52.6

KINGS RIVER BRIDGE (REPLACE)
DECK CONTOURS

DESIGN DETAIL SHEET (ENGLISH) (REV. 2/25/05)

ORIGINAL SCALE IN INCHES FOR REDUCED PLANS 0 1 2 3

CU 06249
EA 324501

DISREGARD PRINTS BEARING EARLIER REVISION DATES

REVISION DATES (PRELIMINARY STAGE ONLY): 11/10/08 01/16/09 04/22/09 05/13/09 05/27/09 09/01/09 1-11-10

SHEET 3 OF 30

FILE => 46-0267-cdkc.dgn

USERNAME => trrichf DATE PLOTTED => 04-AUG-2010 TIME PLOTTED => 15:04

DIST	COUNTY	ROUTE	POST MILES TOTAL PROJECT	SHEET No	TOTAL SHEETS
06	Tul,Fre	99	41.3/R53.9, R0.0/R1.2	659	687

Robert C Fish 1/13/10
REGISTERED CIVIL ENGINEER DATE

1-25-10
PLANS APPROVAL DATE

REGISTERED PROFESSIONAL ENGINEER Robert C. Fish No. C39540 Exp. 12/31/2011 CIVIL STATE OF CALIFORNIA

The State of California or its officers or agents shall not be responsible for the accuracy or completeness of electronic copies of this plan sheet.

LIM & NASCIMENTO ENGINEERING
20 EMPIRE DRIVE
LAKE FOREST, CALIFORNIA 92630

LENGEND:

Indicates existing piles

Indicates new piles

Bridge Location #46-0036L (PN Points)

① -22.74 Lt. "A" Line, Rte 99 Southbound, Sta 704+34.33, EL.=301.19±
② -22.78 Lt. "A" Line, Rte 99 Southbound, Sta 709+32.41, EL.=301.34±
③ -17.13 Rt. "A" Line, Rte 99 Southbound, Sta 709+32.37, EL.=301.83±
④ -17.13 Rt. "A" Line, Rte 99 Southbound, Sta 704+34.53, EL.=301.73±

Bridge Location #46-0036R (PN Points)

⑤ -43.35 Rt. "A" Line, Rte 99 Southbound, Sta 704+34.52, EL.=301.15±
⑥ -43.47 Rt. "A" Line, Rte 99 Southbound, Sta 709+34.34, EL.=301.63±
⑦ -80.40 Rt. "A" Line, Rte 99 Southbound, Sta 709+34.23, EL.=300.97±
⑧ -80.16 Rt. "A" Line, Rte 99 Southbound, Sta 704+34.57, EL.=300.43±

Notes:

1. Telephone Line & Gas Line per Dist. Utility Map
2. All Soffit EL. have been called out on construction class, level 14, 52.
3. Back row of piles @ Abut 1, stage 3 construction only, shall be battered to avoid existing buried structure.
4. For Pile Load Test Details, see "CISS PILE DETAILS NO. 2" sheet. Non production Anchor Piles and Test Pile to be removed after load test is completed.

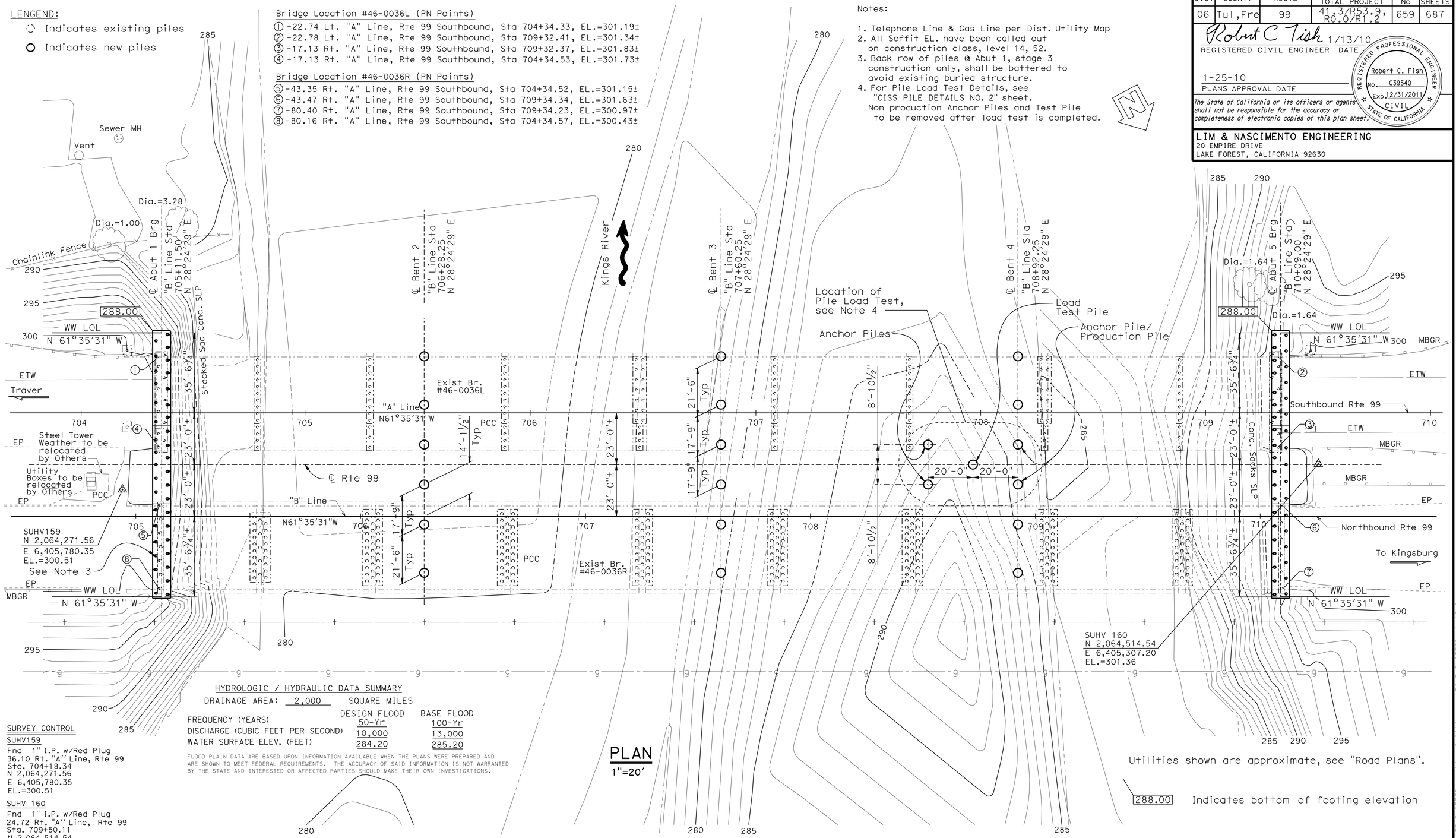

HYDROLOGIC / HYDRAULIC DATA SUMMARY

DRAINAGE AREA: 2,000 SQUARE MILES

	DESIGN FLOOD	BASE FLOOD
FREQUENCY (YEARS)	50-Yr	100-Yr
DISCHARGE (CUBIC FEET PER SECOND)	10,000	13,000
WATER SURFACE ELEV. (FEET)	284.20	285.20

FLOOD PLAIN DATA ARE BASED UPON INFORMATION AVAILABLE WHEN THE PLANS WERE PREPARED AND ARE SHOWN TO MEET FEDERAL REQUIREMENTS. THE ACCURACY OF SAID INFORMATION IS NOT WARRANTED BY THE STATE AND INTERESTED OR AFFECTED PARTIES SHOULD MAKE THEIR OWN INVESTIGATIONS.

PLAN
1"=20'

Utilities shown are approximate, see "Road Plans".

288.00 Indicates bottom of footing elevation

SURVEY CONTROL

SUHV159
Fnd 1" I.P. w/Red Plug
36.10 Rt. "A" Line, Rte 99
Sta. 704+18.34
N 2,064,271.56
E 6,405,780.35
EL.=300.51

SUHV 160
Fnd 1" I.P. w/Red Plug
24.72 Rt. "A" Line, Rte 99
Sta. 709+50.11
N 2,064,514.54
E 6,405,307.20
EL.=301.36

Fritz Hoffman
DESIGN OVERSIGHT Fritz Hoffman
Sept 8, 2009
SIGN OFF DATE

SCALE: As noted	VERT.DATUM NAVD 88	HORZ.DATUM NAD 83	
PHOTOGRAMMETRY AS OF: X		ALIGNMENT TIES Dist. Traverse Sheet	
SURVEYED	BY District	DRAFTED	BY Tom Gillet 09/2008
FIELD CHECKED	BY Sharon Zheng 09/2008	CHECKED	BY T. Zolnikova 09/2008

DESIGN	BY R. Fish	CHECKED M. Stiller / R. Price
DETAILS	BY C. Lee	CHECKED M. Stiller / R. Price
QUANTITIES	BY R. Fish	CHECKED M. Stiller

PREPARED FOR THE STATE OF CALIFORNIA DEPARTMENT OF TRANSPORTATION

Stephen J. Mislinski
PROJECT ENGINEER

BRIDGE NO. 46-0267
POST MILE 52.6

KINGS RIVER BRIDGE (REPLACE)
FOUNDATION PLAN

FOUNDATION PLAN SHEET (ENGLISH) (REV. 2-25-05)

ORIGINAL SCALE IN INCHES FOR REDUCED PLANS 0 1 2 3

CU 06249
EA 324501

DISREGARD PRINTS BEARING EARLIER REVISION DATES

REVISION DATES (PRELIMINARY STAGE ONLY) 07/28/08 11/20/08 01/16/09 04/27/09 05/13/09 05/27/09 09/08/09 01/12/10

SHEET 4 OF 30

FILE => 46-0267-dfdp.dgn

USERNAME => trrright DATE PLOTTED => 04-AUG-2010 TIME PLOTTED => 15:04

DIST	COUNTY	ROUTE	POST MILES TOTAL PROJECT	SHEET No	TOTAL SHEETS
06	Tul,Fre	99	41.3/R53.9, R0.0/R1.2	660	687

Robert C Fish 1/13/10
REGISTERED CIVIL ENGINEER DATE

1-25-10
PLANS APPROVAL DATE

REGISTERED PROFESSIONAL ENGINEER Robert C. Fish No. C39540 Exp. 12/31/2011 CIVIL STATE OF CALIFORNIA

The State of California or its officers or agents shall not be responsible for the accuracy or completeness of electronic copies of this plan sheet.

LIM & NASCIMENTO ENGINEERING
20 EMPIRE DRIVE
LAKE FOREST, CALIFORNIA 92630

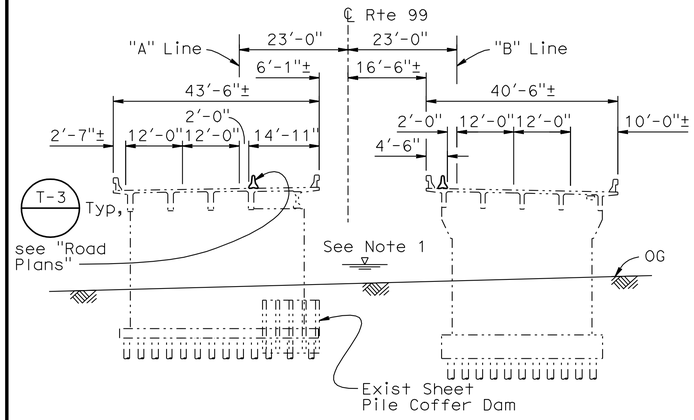

STAGE 1A - RESTRIPE LANES AND SET K-RAILING

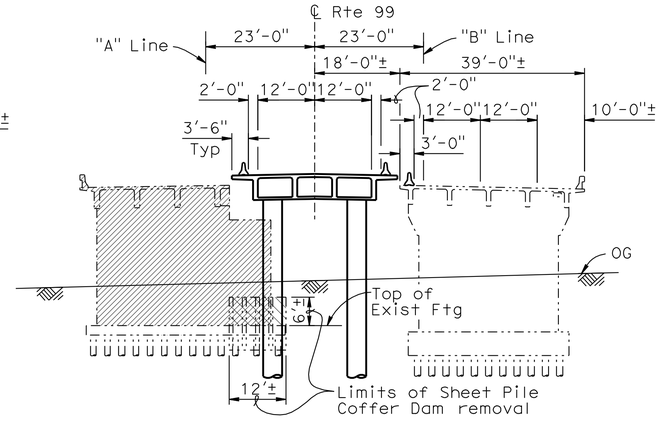

STAGE 2A - DEMOLITION

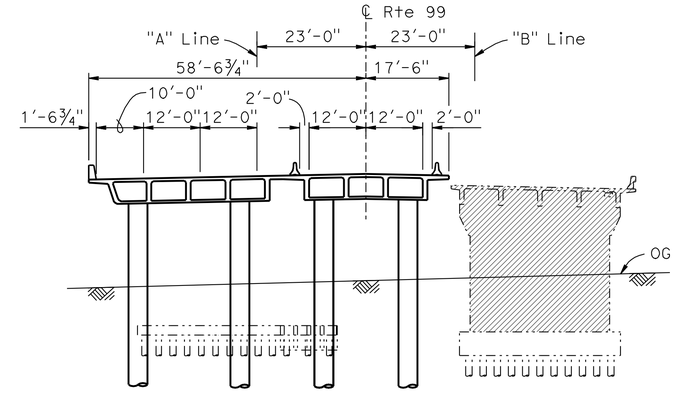

STAGE 3B - DEMOLITION

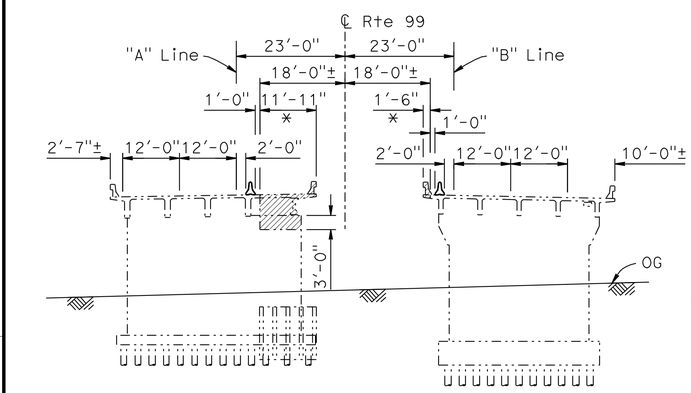

* - Limit of partial demolition

STAGE 1B - DEMOLITION

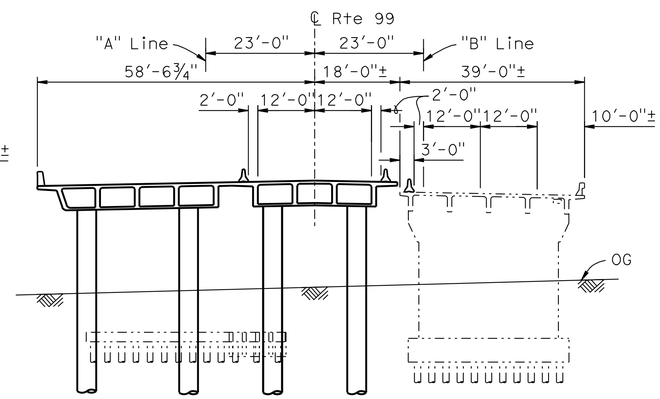

STAGE 2B - CONSTRUCTION

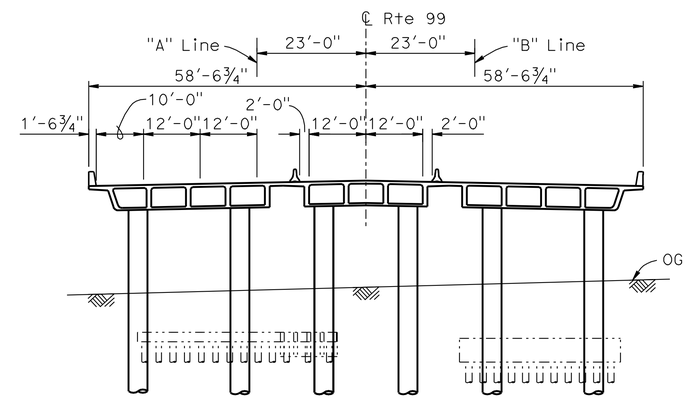

STAGE 3C - CONSTRUCTION

LEGEND:

- Limits of Bridge Removal
- Sheet Pile Coffer Dam Removal, included in limits of Bridge Removal
- Existing Structure
- New Structure

NOTES:

1. River depth varies accross width of river. River elevation varies with season.
2. For Abutment Demolition and Construction Staging, see "ABUTMENT LAYOUT" and "ABUTMENT PILE LAYOUT" sheets.

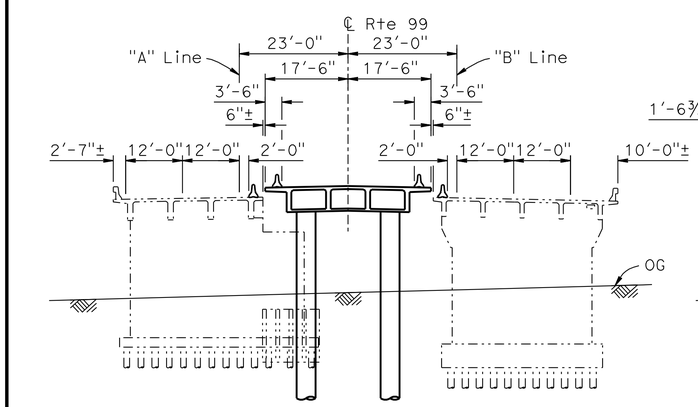

STAGE 1C - CONSTRUCTION

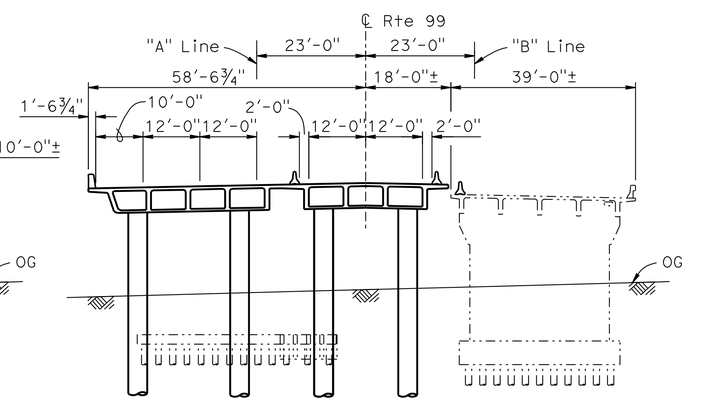

STAGE 3A - RESTRIPE LANES AND SET K-RAILINGS

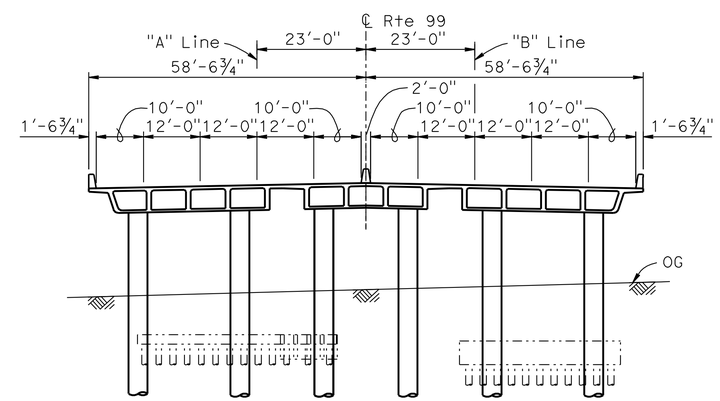

STAGE 4 - FINAL STRIPING AND MEDIAN BARRIER

Note:
The Contractor shall verify all controlling field dimensions before ordering or fabricating any material.

DEMOLITION AND CONSTRUCTION STAGGING

1/16"=1'-0"

Fritz Hoffman
DESIGN OVERSIGHT Fritz Hoffman
Sept 8, 2009
SIGN OFF DATE

	BY	CHECKED
DESIGN	R. Fish	M. Stiller / R. Price
DETAILS	C. Lee / Y. Ng	M. Stiller / R. Price
QUANTITIES	R. Fish	M. Stiller

PREPARED FOR THE STATE OF CALIFORNIA DEPARTMENT OF TRANSPORTATION

Stephen J. Mislinski
PROJECT ENGINEER

BRIDGE NO. 46-0267
POST MILE 52.6

KINGS RIVER BRIDGE (REPLACE)
DEMOLITION AND STAGING DETAILS

DESIGN DETAIL SHEET (ENGLISH) (REV. 2/25/05)

ORIGINAL SCALE IN INCHES FOR REDUCED PLANS 0 1 2 3

CU 06249
EA 324501

DISREGARD PRINTS BEARING EARLIER REVISION DATES

REVISION DATES (PRELIMINARY STAGE ONLY): 11/16/08 01/16/09 04/27/09 05/13/09 05/27/09 09/01/09 1-12-10

SHEET 5 OF 30

FILE => 46-0267-edem_xdet01.dgn

USERNAME => trrichf DATE PLOTTED => 04-AUG-2010 TIME PLOTTED => 15:05

DIST	COUNTY	ROUTE	POST MILES TOTAL PROJECT	SHEET No	TOTAL SHEETS
06	Tul,Fre	99	41.3/R53.9, R0.0/R1.2	661	687

REGISTERED CIVIL ENGINEER 1/13/10 DATE

1-25-10
PLANS APPROVAL DATE

The State of California or its officers or agents shall not be responsible for the accuracy or completeness of electronic copies of this plan sheet.

REGISTERED PROFESSIONAL ENGINEER Stephen J. Mislinski C61834 06-30-2011 CIVIL STATE OF CALIFORNIA

LIM & NASCIMENTO ENGINEERING
20 EMPIRE DRIVE
LAKE FOREST, CALIFORNIA 92630

NOTES:

1. For pile layout, see "ABUTMENT PILE LAYOUT" sheet.
2. For Sections A-A and B-B and Shear Key Detail, see "ABUTMENT DETAILS NO. 1" sheet.
3. For Bearing Pad Detail and View C-C, see "ABUTMENT DETAILS NO. 2" sheet.
4. For Structure Approach Details, see "STRUCTURE APPROACH TYPE N(30S)" sheet.
5. Horizontal Shear Key Const Jt surfaces to be finished smooth.
6. Architectural surface (embedded pea gravel face formed relief over smooth concrete texture) over ends of face of abutments, exterior shear keys & wing walls, see "ARCHITECTURAL SURFACE DETAILS NO. 1" sheet for details and limits.
7. Limits of shoring for Stage 1 Construction.

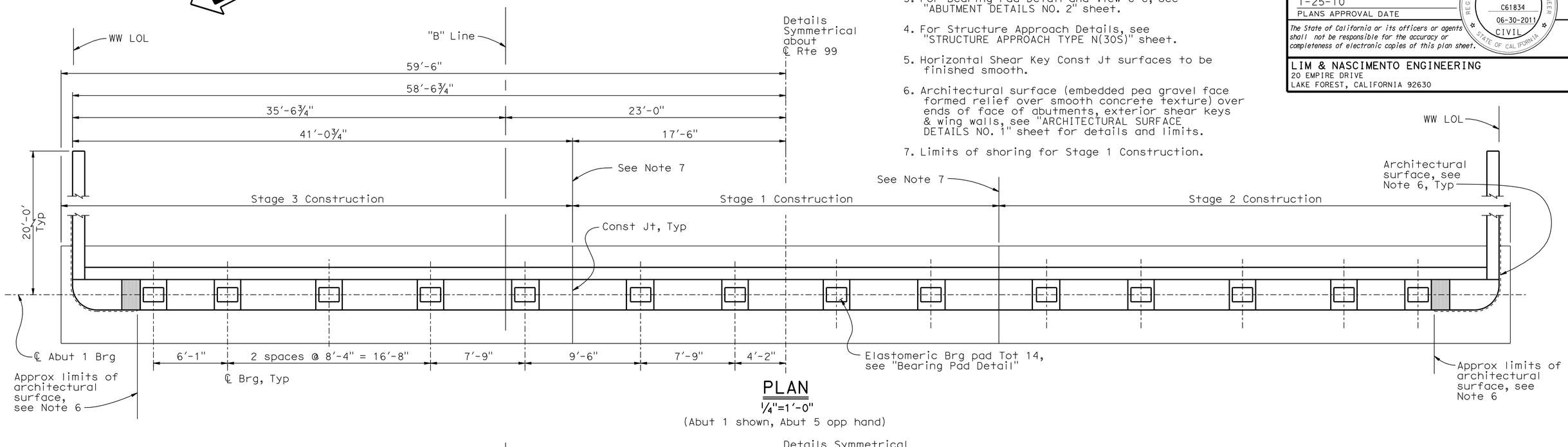

PLAN

¼"=1'-0"

(Abut 1 shown, Abut 5 opp hand)

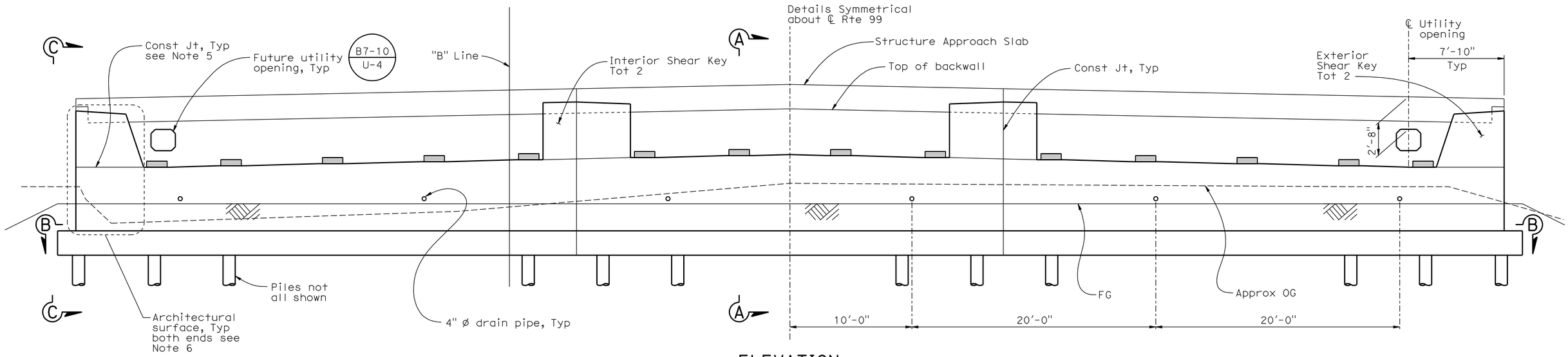

ELEVATION

¼"=1'-0"

(Abut 1 shown, Abut 5 Opp hand)

Note:
The Contractor shall verify all controlling field dimensions before ordering or fabricating any material.

Fritz Hoffman
DESIGN OVERSIGHT Fritz Hoffman
Sept 8, 2009
SIGN OFF DATE

DESIGN	BY S. Mislinski	CHECKED M. Stiller / R. Price	
DETAILS	BY C. Lee / Y. Ng	CHECKED M. Stiller / R. Price	
QUANTITIES	BY R. Fish	CHECKED M. Stiller	

PREPARED FOR THE STATE OF CALIFORNIA DEPARTMENT OF TRANSPORTATION

Stephen J. Mislinski
PROJECT ENGINEER

BRIDGE NO. 46-0267
POST MILE 52.6

KINGS RIVER BRIDGE (REPLACE)
ABUTMENT LAYOUT

DESIGN DETAIL SHEET (ENGLISH) (REV. 2/25/05)

ORIGINAL SCALE IN INCHES FOR REDUCED PLANS 0 1 2 3

CU 06249
EA 324501

DISREGARD PRINTS BEARING EARLIER REVISION DATES

REVISION DATES (PRELIMINARY STAGE ONLY) 11/10/08 01/16/09 04/22/09 05/13/09 05/27/09 09/01/09 1-12-10

SHEET 6 OF 30

FILE => 46-0267-fabt_lo01.dgn

USERNAME => trrichf DATE PLOTTED => 04-AUG-2010 TIME PLOTTED => 15:05

DIST	COUNTY	ROUTE	POST MILES TOTAL PROJECT	SHEET No	TOTAL SHEETS
06	Tul,Fre	99	41.3/R53.9, R0.0/R1.2	662	687

REGISTERED CIVIL ENGINEER 1/13/10 DATE

1-25-10
PLANS APPROVAL DATE

REGISTERED PROFESSIONAL ENGINEER Stephen J. Mislinski No. C61834 06-30-2011 CIVIL STATE OF CALIFORNIA

The State of California or its officers or agents shall not be responsible for the accuracy or completeness of electronic copies of this plan sheet.

LIM & NASCIMENTO ENGINEERING
20 EMPIRE DRIVE
LAKE FOREST, CALIFORNIA 92630

NOTE:

1. For "Pile Data Table", see "INDEX TO PLANS" sheet.
2. Back row of piles @ Abut 1, Stage 3 Construction only, shall be battered to avoid existing structure below existing Abut footing.

LEGEND:

- Existing Pile
- Existing Battered Pile
- New Vertical Pile
- New 3:1 Battered Pile
- Limits of Bridge Removal - Partal Removal for Stage I

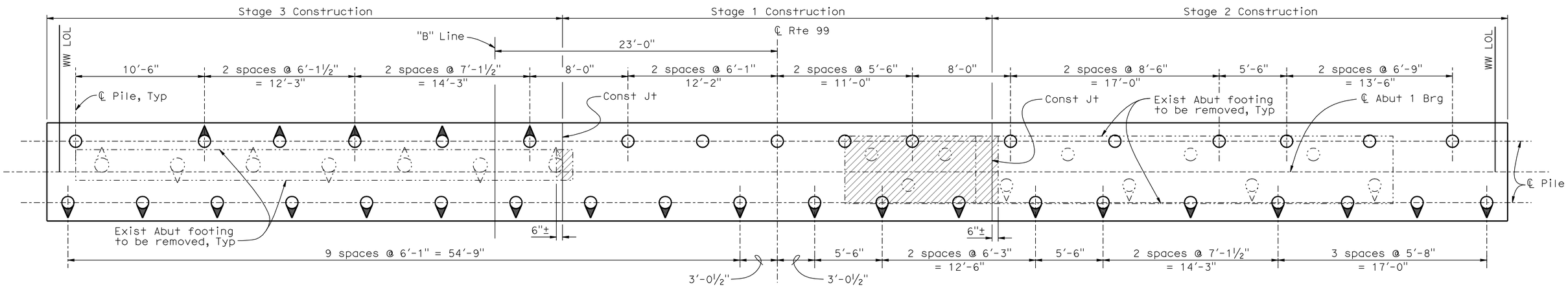

PILE LAYOUT - ABUT 1

¼"=1'-0"

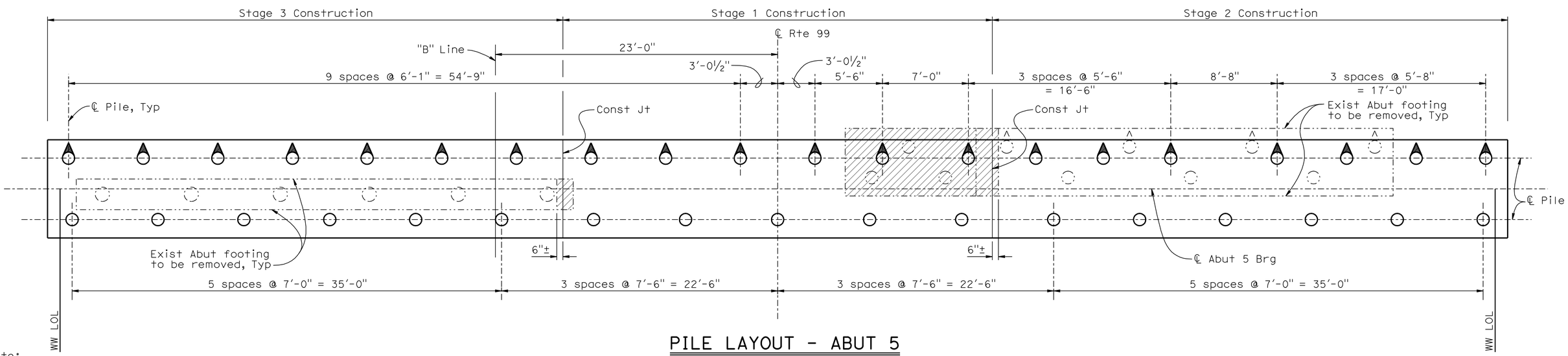

PILE LAYOUT - ABUT 5

¼"=1'-0"

Note:
The Contractor shall verify all controlling field dimensions before ordering or fabricating any material.

Fritz Hoffman
DESIGN OVERSIGHT Fritz Hoffman
Sept 8, 2009
SIGN OFF DATE

DESIGN DETAIL SHEET (ENGLISH) (REV. 2/25/05)

	BY	CHECKED
DESIGN	S. Mislinski	M. Stiller / R. Price
DETAILS	C. Lee / Y. Ng	M. Stiller / R. Price
QUANTITIES	R. Fish	M. Stiller

ORIGINAL SCALE IN INCHES FOR REDUCED PLANS 0 1 2 3

PREPARED FOR THE STATE OF CALIFORNIA DEPARTMENT OF TRANSPORTATION

Stephen J. Mislinski
PROJECT ENGINEER

BRIDGE NO. 46-0267
POST MILE 52.6

KINGS RIVER BRIDGE (REPLACE)
ABUTMENT PILE LAYOUT

CU 06249
EA 324501

DISREGARD PRINTS BEARING EARLIER REVISION DATES

REVISION DATES (PRELIMINARY STAGE ONLY): 11/16/08 01/16/09 04/22/09 05/13/09 05/27/09 09/01/09 1-12-10

SHEET 7 OF 30

FILE => 46-0267-fabt_pio01.dgn

USERNAME => trrichf DATE PLOTTED => 04-AUG-2010 TIME PLOTTED => 15:05

DIST	COUNTY	ROUTE	POST MILES TOTAL PROJECT	SHEET No	TOTAL SHEETS
06	Tul,Fre	99	41.3/R53.9, R0.0/R1.2	663	687

REGISTERED CIVIL ENGINEER 1/13/10 DATE

1-25-10
PLANS APPROVAL DATE

The State of California or its officers or agents shall not be responsible for the accuracy or completeness of electronic copies of this plan sheet.

REGISTERED PROFESSIONAL ENGINEER Stephen J. Mislinski No. C61834 06-30-2011 CIVIL STATE OF CALIFORNIA

LIM & NASCIMENTO ENGINEERING
20 EMPIRE DRIVE
LAKE FOREST, CALIFORNIA 92630

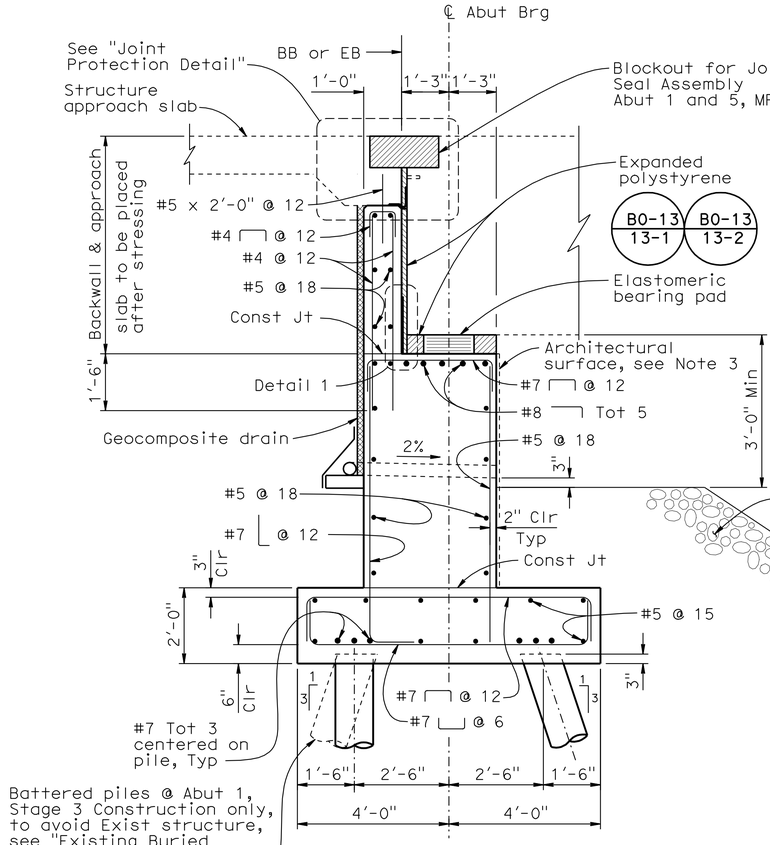

SECTION A-A

½":1'-0"

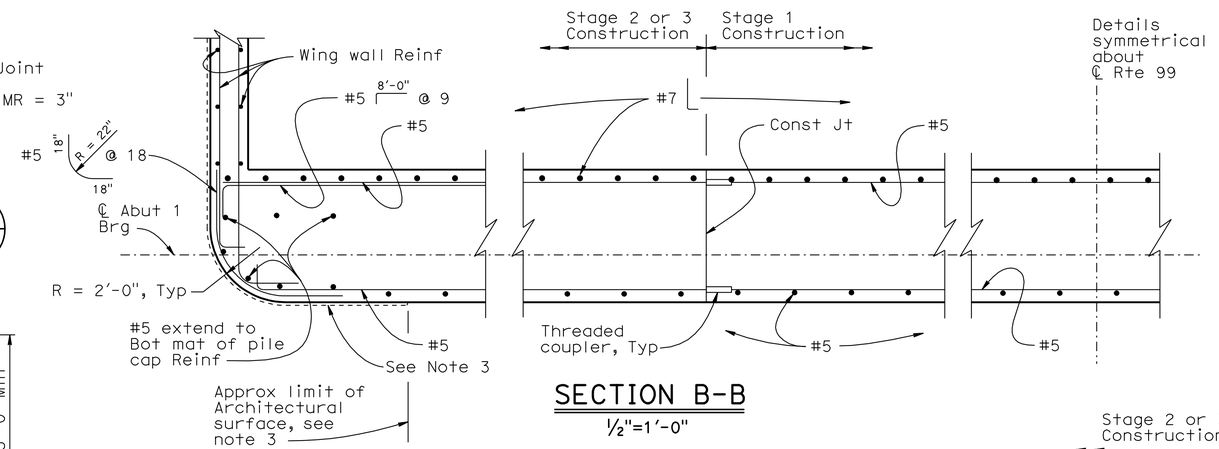

SECTION B-B

½"=1'-0"

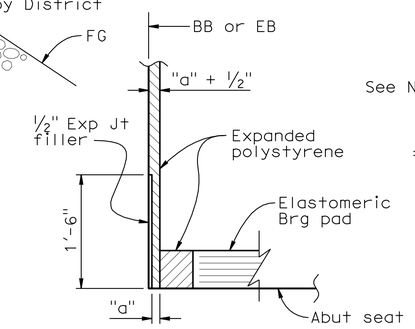

DETAIL 1

1"=1'-0"

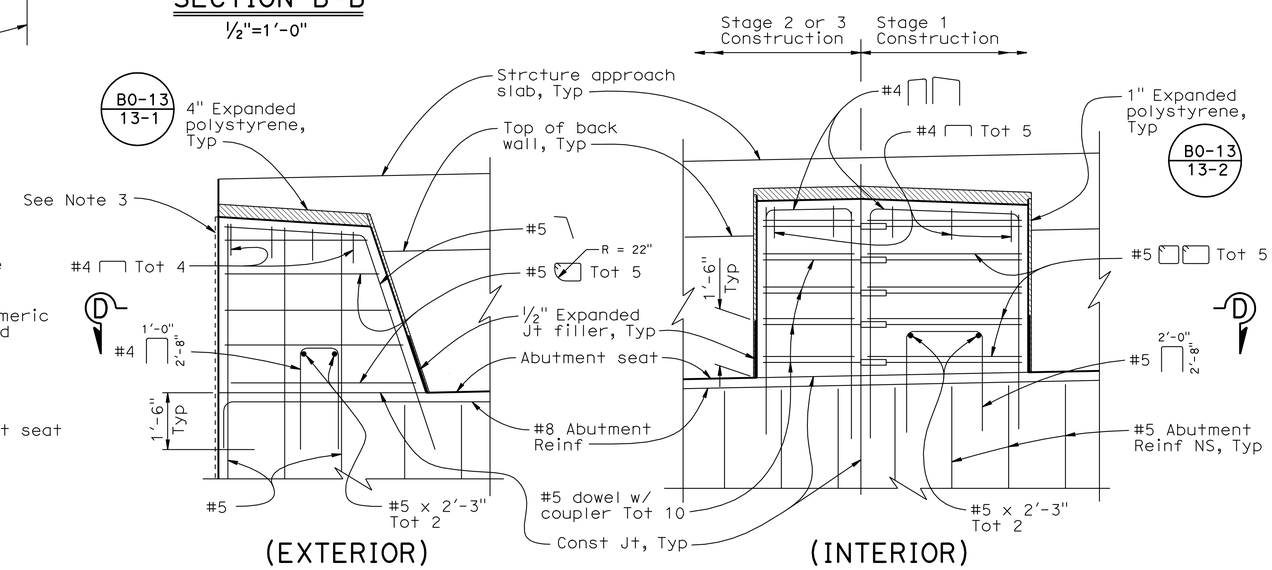

SHEAR KEY DETAIL

½"=1'-0"

NOTES:

1. For Geocomposite drain, see "STRUCTURE APPROACH DRAINAGE DETAILS" sheet
2. For Joint Seal Assembly, see "JOINT SEAL ASSEMBLY (MAXIMUM MOVEMENT RATING = 4")" sheet.
3. Architectural surface (embedded pea gravel face formed relief over smooth concrete texture) over face of abutment, exterior shear keys & wing walls, see "Architectural Surface Details No. 1" sheet for details and limits.

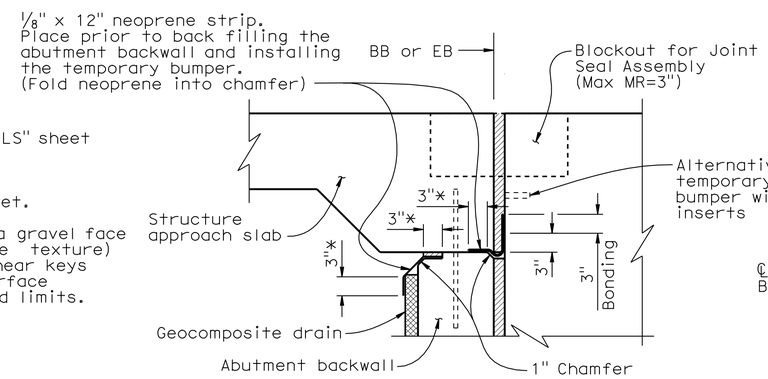

JOINT PROTECTION DETAIL

1"=1'-0"

* - Bonding on smooth finish

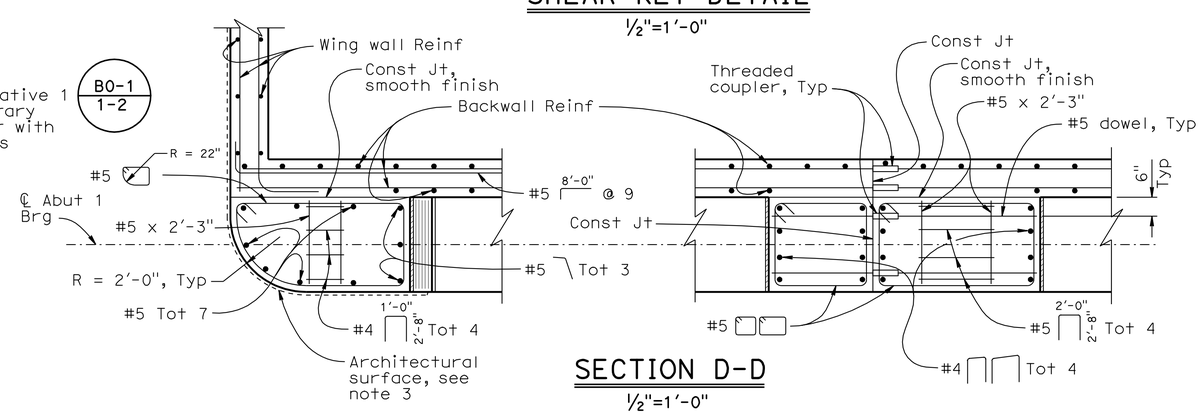

SECTION D-D

½"=1'-0"

Note:
The Contractor shall verify all controlling field dimensions before ordering or fabricating any material.

DESIGN OVERSIGHT Fritz Hoffman	DESIGN	BY S. Mislinski	CHECKED M. Stiller / R. Price
Sept 8, 2009	DETAILS	BY C. Lee / Y. Ng	CHECKED M. Stiller / R. Price
SIGN OFF DATE	QUANTITIES	BY R. Fish	CHECKED M. Stiller

PREPARED FOR THE STATE OF CALIFORNIA DEPARTMENT OF TRANSPORTATION

Stephen J. Mislinski
PROJECT ENGINEER

BRIDGE NO. 46-0267
POST MILE 52.6

KINGS RIVER BRIDGE (REPLACE)
ABUTMENT DETAILS NO. 1

DESIGN DETAIL SHEET (ENGLISH) (REV. 2/25/05)

ORIGINAL SCALE IN INCHES FOR REDUCED PLANS 0 1 2 3

CU 06249
EA 324501

DISREGARD PRINTS BEARING EARLIER REVISION DATES

REVISION DATES (PRELIMINARY STAGE ONLY) 11/16/08 01/16/09 04/27/09 05/13/09 05/27/09 09/01/09 1-12-10

SHEET 8 OF 30

FILE => 46-0267-fabt_xdet01.dgn

USERNAME => trrricht DATE PLOTTED => 04-AUG-2010 TIME PLOTTED => 15:05

DIST	COUNTY	ROUTE	POST MILES TOTAL PROJECT	SHEET No	TOTAL SHEETS
06	Tul,Fre	99	41.3/R53.9, R0.0/R1.2	664	687

REGISTERED CIVIL ENGINEER 1/13/10 DATE

1-25-10
PLANS APPROVAL DATE

REGISTERED PROFESSIONAL ENGINEER Stephen J. Mislinski No. C61834 06-30-2011 CIVIL STATE OF CALIFORNIA

The State of California or its officers or agents shall not be responsible for the accuracy or completeness of electronic copies of this plan sheet.

LIM & NASCIMENTO ENGINEERING
20 EMPIRE DRIVE
LAKE FOREST, CALIFORNIA 92630

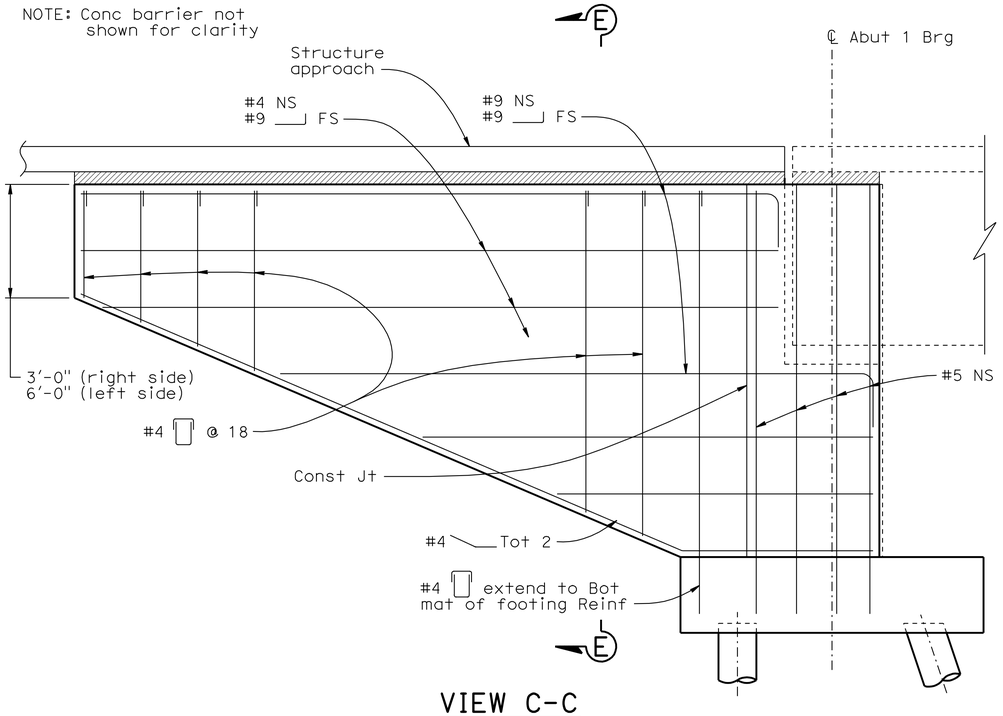

VIEW C-C

½"=1'-0"

NOTE: Abutment 1 WW shown, Abutment 5 WW similar

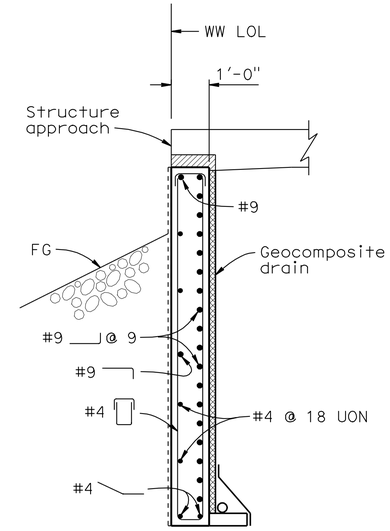

SECTION E-E

½"=1'-0"

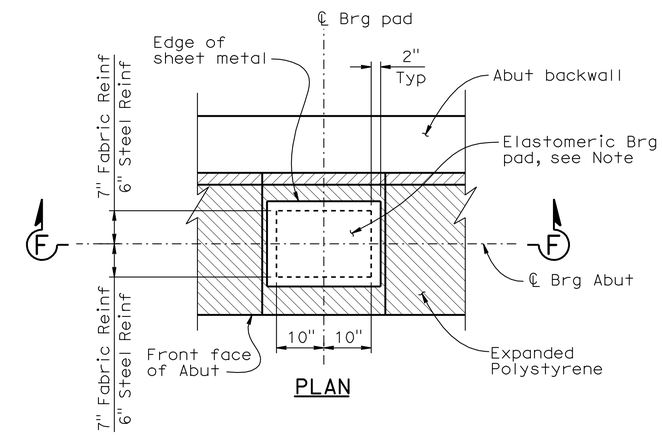

PLAN

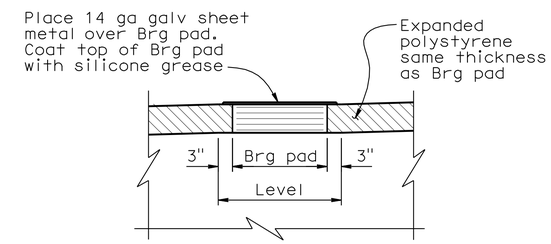

SECTION F-F

BEARING PAD DETAIL

¾"=1'-0"

NOTE: 14"x20"x5½" fabric reinforced or 12"x20"x5½" steel reinforced elastomeric Brg pad where thickness is for elastomer only.

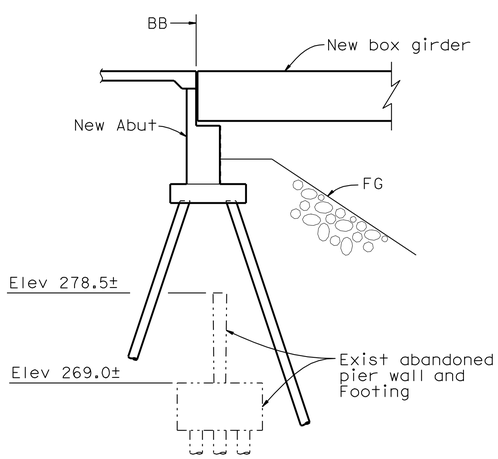

EXISTING BURIED STRUCTURE

⅛"=1'-0"

(At Abut 1 - Stage 3 only)

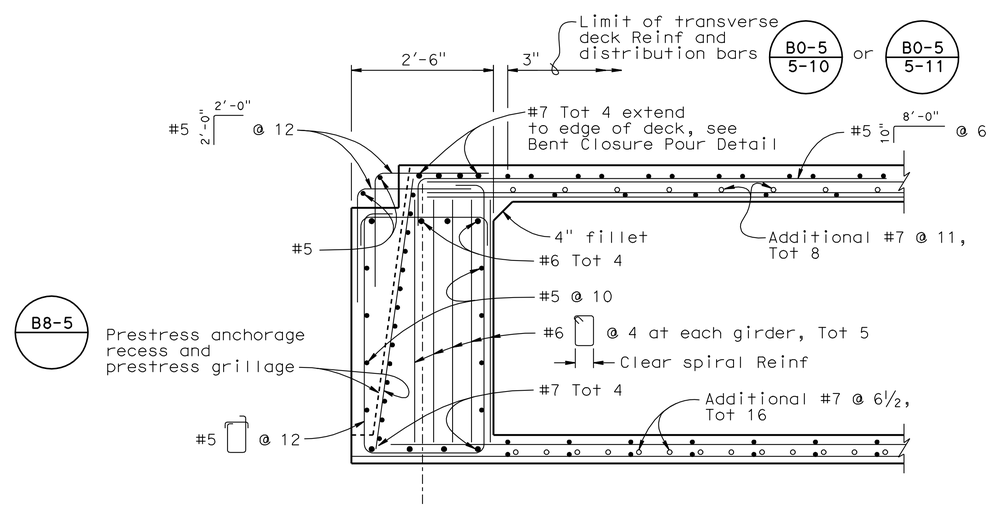

TYPICAL END DIAPHRAGM

¾"=1'-0"

NOTES:

1. For Geocomposite drain, see "STRUCTURE APPROACH DRAINAGE DETAILS" sheet
2. For Structure Approach Details, see "STRUCTURE APPROACH TYPE N(30S)" sheet.
3. Architectural surface (embedded pea gravel face formed relief over smooth concrete texture) over face of abutment, exterior shear keys & wing walls, see "Architectural Surface Details No. 1" sheet for details and limits.

Note:
The Contractor shall verify all controlling field dimensions before ordering or fabricating any material.

Fritz Hoffman
DESIGN OVERSIGHT Fritz Hoffman
Sept 8, 2009
SIGN OFF DATE

	BY	CHECKED
DESIGN	S. Mislinski	M. Stiller / R. Price
DETAILS	C. Lee / Y. Ng	M. Stiller / R. Price
QUANTITIES	R. Fish	M. Stiller

PREPARED FOR THE STATE OF CALIFORNIA DEPARTMENT OF TRANSPORTATION

Stephen J. Mislinski
PROJECT ENGINEER

BRIDGE NO. 46-0267
POST MILE 52.6

KINGS RIVER BRIDGE (REPLACE)
ABUTMENT DETAILS NO. 2

DESIGN DETAIL SHEET (ENGLISH) (REV. 2/25/05)

ORIGINAL SCALE IN INCHES FOR REDUCED PLANS 0 1 2 3

CU 06249
EA 324501

DISREGARD PRINTS BEARING EARLIER REVISION DATES

REVISION DATES (PRELIMINARY STAGE ONLY) 11/16/08 01/16/09 04/22/09 05/13/09 05/27/09 09/01/09 1-12-10

SHEET 9 OF 30

FILE => 46-0267-fabt_xdet02.dgn

USERNAME => trright DATE PLOTTED => 04-AUG-2010 TIME PLOTTED => 15:05

DIST	COUNTY	ROUTE	POST MILES TOTAL PROJECT	SHEET No	TOTAL SHEETS
06	Tul,Fre	99	41.3/R53.9, R0.0/R1.2	665	687

Robert C Fish 1/13/10
REGISTERED CIVIL ENGINEER DATE

1-25-10
PLANS APPROVAL DATE

The State of California or its officers or agents shall not be responsible for the accuracy or completeness of electronic copies of this plan sheet.

REGISTERED PROFESSIONAL ENGINEER Robert C. Fish No. C39540 Exp. 12/31/2011 CIVIL STATE OF CALIFORNIA

LIM & NASCIMENTO ENGINEERING
20 EMPIRE DRIVE
LAKE FOREST, CALIFORNIA 92630

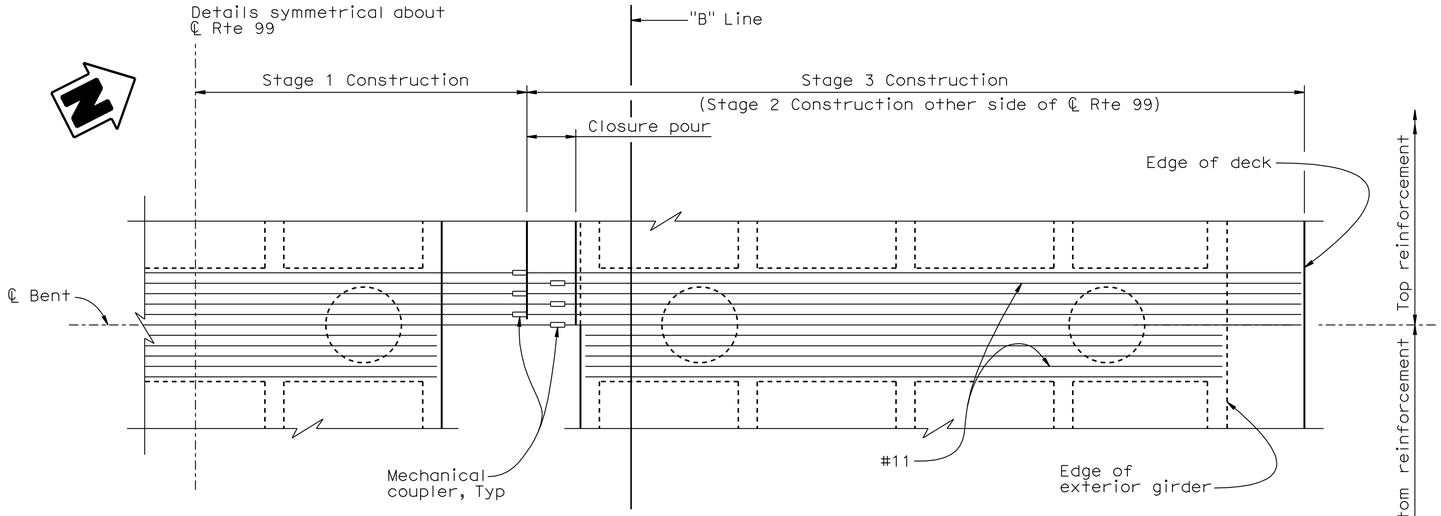

PLAN
1/4"=1'-0"

* No lap splices allowed.
** Indicates clearance to main cap reinforcement.

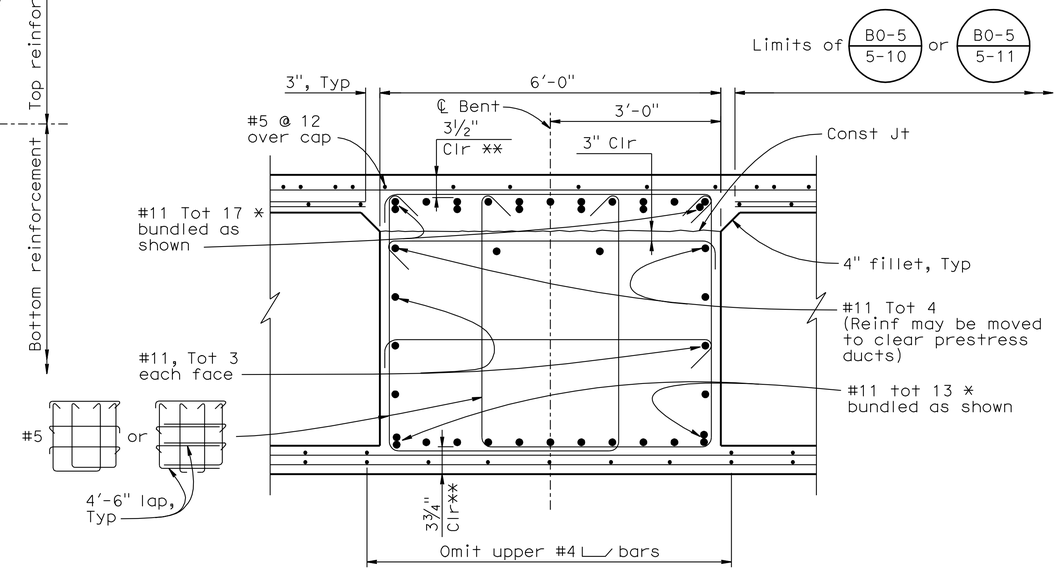

SECTION A-A
3/4"=1'-0"

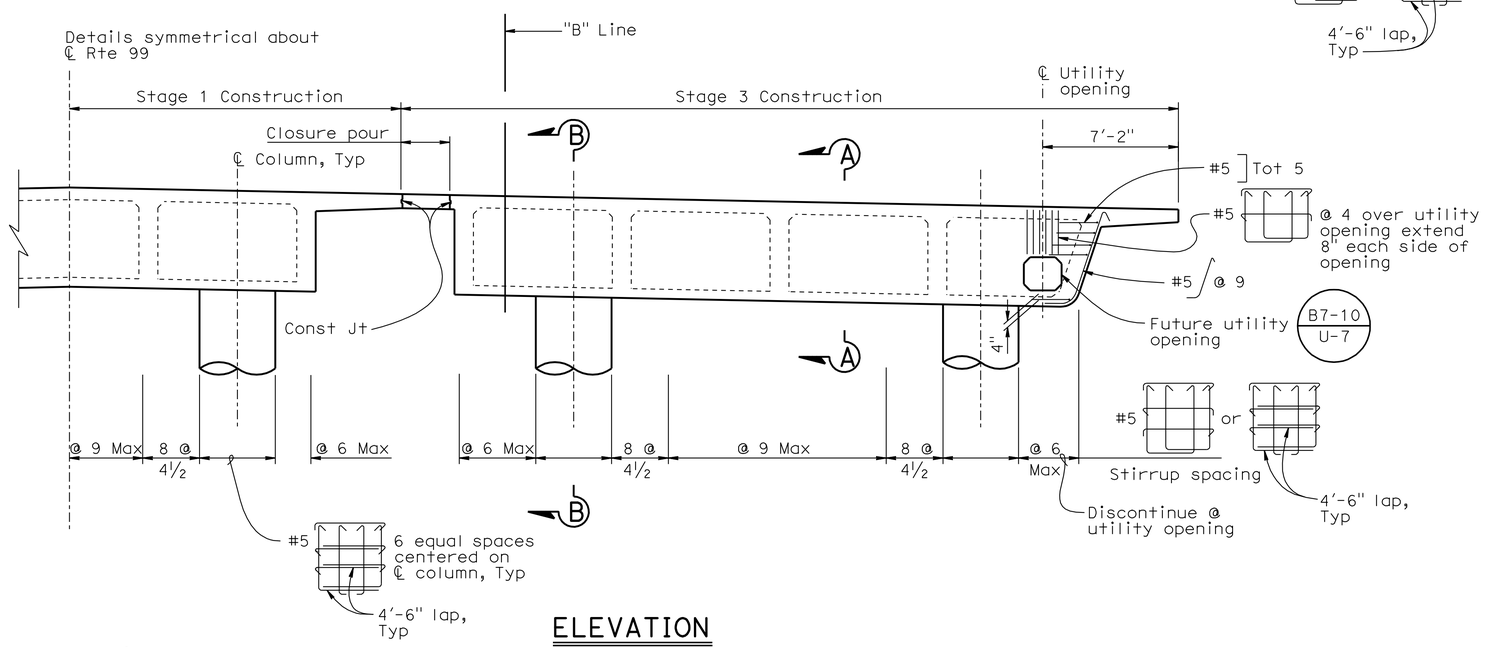

ELEVATION
1/4"=1'-0"

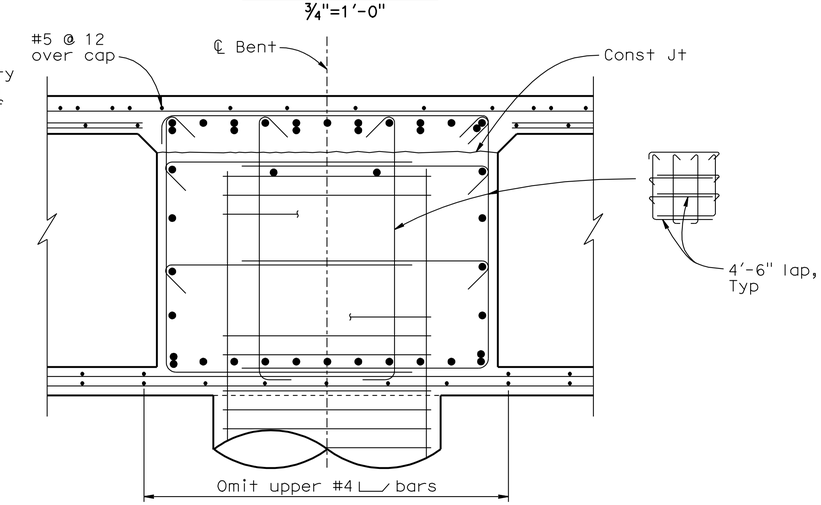

SECTION B-B
3/4"=1'-0"

Note:
The Contractor shall verify all controlling field dimensions before ordering or fabricating any material.

Fritz Hoffman
DESIGN OVERSIGHT Fritz Hoffman
Sept 8, 2009
SIGN OFF DATE

	BY	CHECKED
DESIGN	R. Fish	M. Stiller / R. Price
DETAILS	C. Lee / Y. Ng	M. Stiller / R. Price
QUANTITIES	R. Fish	M. Stiller

PREPARED FOR THE STATE OF CALIFORNIA DEPARTMENT OF TRANSPORTATION

Stephen J. Mislinski
PROJECT ENGINEER

BRIDGE NO. 46-0267
POST MILE 52.6

KINGS RIVER BRIDGE (REPLACE)
BENT DETAILS NO. 1

DESIGN DETAIL SHEET (ENGLISH) (REV. 2/25/05)

ORIGINAL SCALE IN INCHES FOR REDUCED PLANS 0 1 2 3

CU 06249
EA 324501

DISREGARD PRINTS BEARING EARLIER REVISION DATES

REVISION DATES (PRELIMINARY STAGE ONLY) 11/16/08 01/16/09 04/22/09 05/13/09 05/27/09 09/01/09 1-12-10

SHEET 10 OF 30

FILE => 46-0267-hbnt_xdet01.dgn

USERNAME => trrichf DATE PLOTTED => 04-AUG-2010 TIME PLOTTED => 15:05

DIST	COUNTY	ROUTE	POST MILES TOTAL PROJECT	SHEET No	TOTAL SHEETS
06	Tul,Fre	99	41.3/R53.9, R0.0/R1.2	666	687

Robert C Fish 1/13/10
REGISTERED CIVIL ENGINEER DATE

1-25-10
PLANS APPROVAL DATE

REGISTERED PROFESSIONAL ENGINEER Robert C. Fish No. C39540 Exp. 12/31/2011 CIVIL STATE OF CALIFORNIA

The State of California or its officers or agents shall not be responsible for the accuracy or completeness of electronic copies of this plan sheet.

LIM & NASCIMENTO ENGINEERING
20 EMPIRE DRIVE
LAKE FOREST, CALIFORNIA 92630

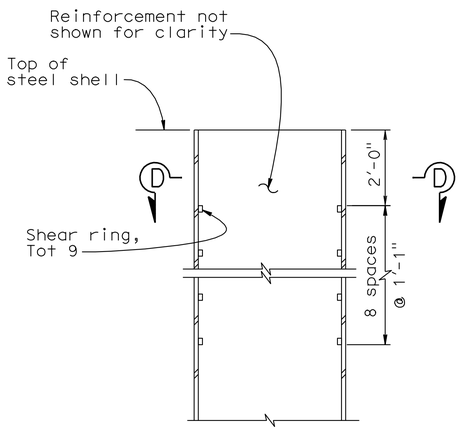

ELEVATION
1/2" = 1'-0"

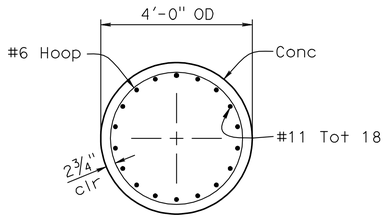

SECTION A-A
1/2" = 1'-0"

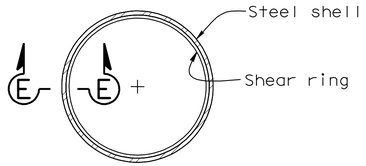

SECTION D-D
1/2" = 1'-0"

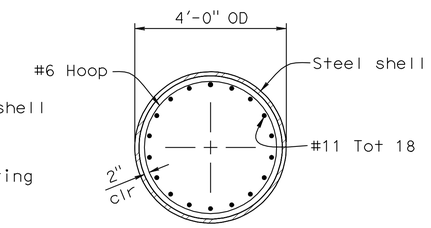

SECTION B-B
1/2" = 1'-0"

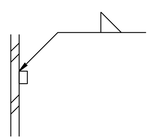

SECTION E-E
1/4" = 1'-0"

SHEAR RING

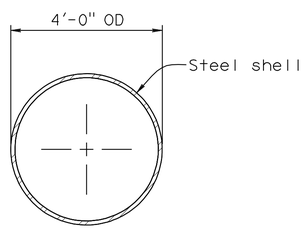

SECTION C-C
1/2" = 1'-0"

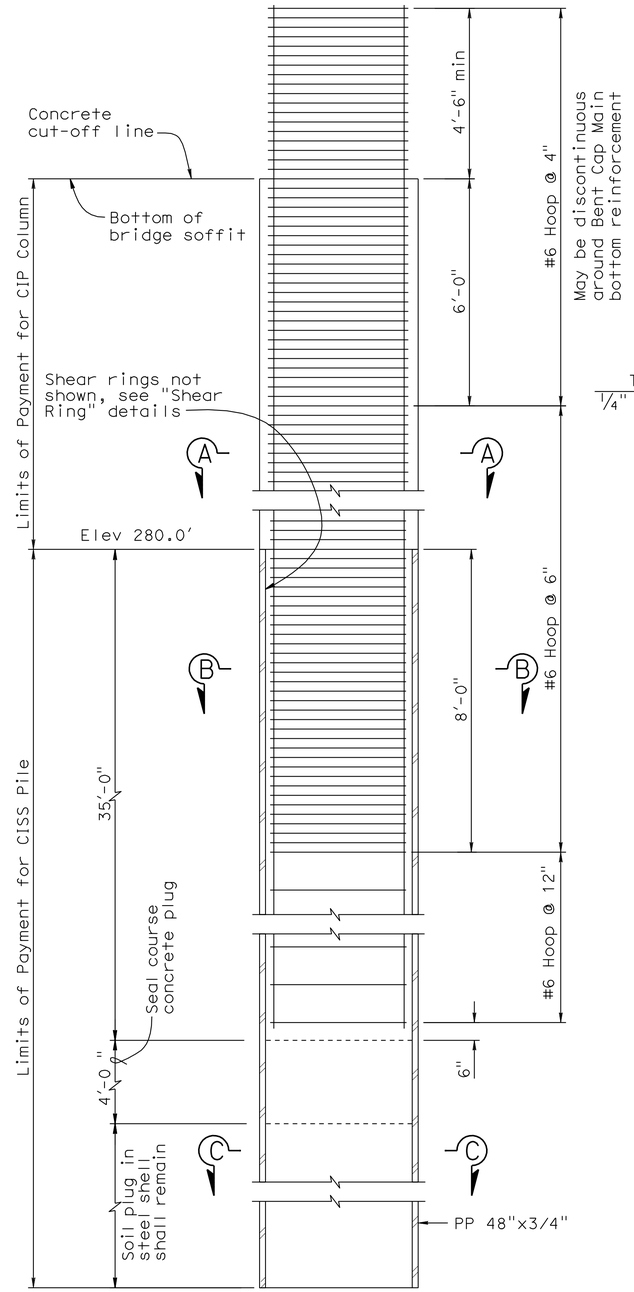

48" DIA CISS PILE AND COLUMN EXTENSION
1/2" = 1'-0"

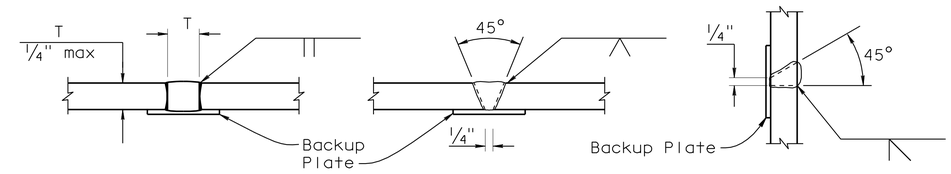

SQUARE GROOVE SINGLE VEE-GROVE SINGLE BEVEL-GROOVE

PILE WELDING DETAIL - BUTT JOINTS
No Scale

Welding Notes:

1. Single Vee-Groove and Square Groove permitted for all positions.
2. Single Bevel-Groove permitted for horizontal joints only.

Notes:

1. For Pile Data, see "Index to Plans" sheet.
2. Pile tip elevations for steel pipe piles (PP) shown on the "Index to Plans" sheet are the minimum required. Final tip elevations shall be determined by pile driving criteria as required by the project specifications.
3. Steel pipe pile (PP) shall be driven open ended. Pile tips shall be reinforced as required and approved by the Engineer.
4. Structural steel for Pipe Piles (PP) shall conform to the Specifications.
5. Minimum concrete strength for concrete plug: f'c = 4 ksi.
6. The Contractor shall remove soil plug to the bottom elevation of the concrete plug, if required. If the top of the soil plug is below the lower elevation of the concrete plug as shown on the plans, the Contractor may fill the additional void in the steel pipe pile (PP) with concrete.
7. All hoops shall be "ultimate" butt spliced continuous.
8. No splice is allowed in column main reinforcement.

Note:
The Contractor shall verify all controlling field dimensions before ordering or fabricating any material.

Fritz Hoffman
DESIGN OVERSIGHT Fritz Hoffman
Sept 8, 2009
SIGN OFF DATE

	BY	CHECKED
DESIGN	R. Fish	M. Stiller / R. Price
DETAILS	C. Lee / Y. Ng	M. Stiller / R. Price
QUANTITIES	R. Fish	M. Stiller

PREPARED FOR THE STATE OF CALIFORNIA DEPARTMENT OF TRANSPORTATION

Stephen J. Mislinski
PROJECT ENGINEER

BRIDGE NO. 46-0267
POST MILE 52.6

KINGS RIVER BRIDGE (REPLACE)
CISS PILE DETAILS NO. 1

DESIGN DETAIL SHEET (ENGLISH) (REV. 2/25/05)

ORIGINAL SCALE IN INCHES FOR REDUCED PLANS 0 1 2 3

CU 06249
EA 324501

DISREGARD PRINTS BEARING EARLIER REVISION DATES

REVISION DATES (PRELIMINARY STAGE ONLY) 11/10/08 01/16/09 04/22/09 05/13/09 05/27/09 09/01/09 1-12-10

SHEET 11 OF 30

FILE => 46-0267-hpil_xdet01.dgn

USERNAME => trrichf DATE PLOTTED => 04-AUG-2010 TIME PLOTTED => 15:06

DIST	COUNTY	ROUTE	POST MILES TOTAL PROJECT	SHEET No	TOTAL SHEETS
06	Tul,Fre	99	41.3/R53.9, R0.0/R1.2	667	687

Robert C Fish 1/13/10
REGISTERED CIVIL ENGINEER DATE

1-25-10
PLANS APPROVAL DATE

REGISTERED PROFESSIONAL ENGINEER Robert C. Fish No. C39540 Exp. 12/31/2011 CIVIL STATE OF CALIFORNIA

The State of California or its officers or agents shall not be responsible for the accuracy or completeness of electronic copies of this plan sheet.

LIM & NASCIMENTO ENGINEERING
20 EMPIRE DRIVE
LAKE FOREST, CALIFORNIA 92630

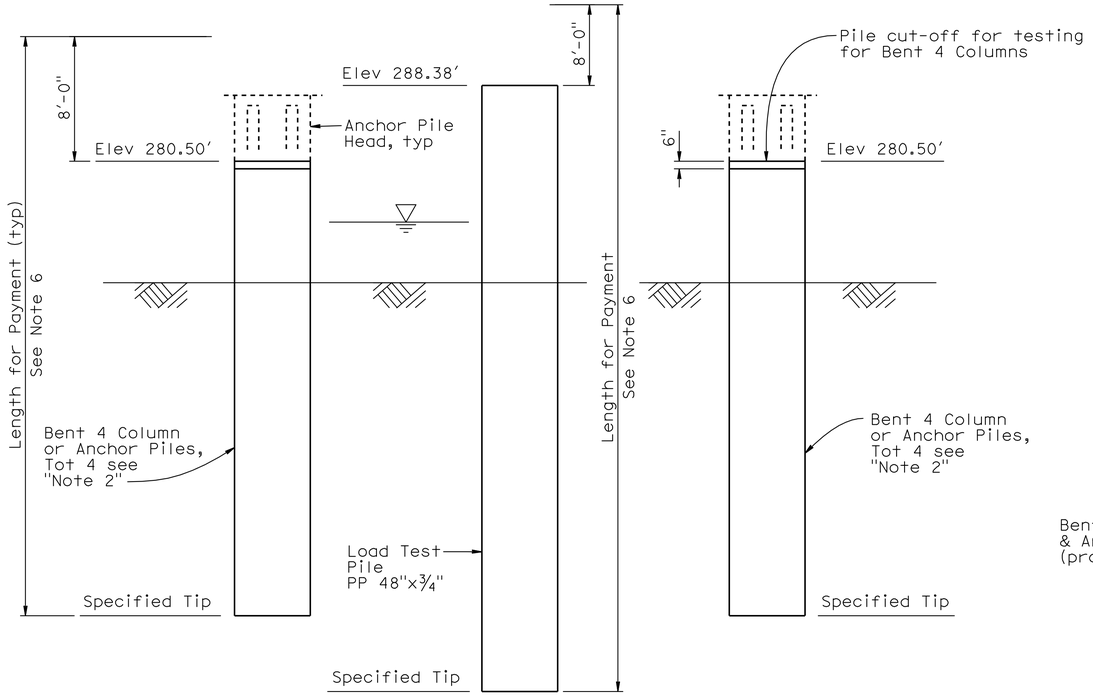

BENT 4 PILE LOAD TEST DETAIL

No Scale

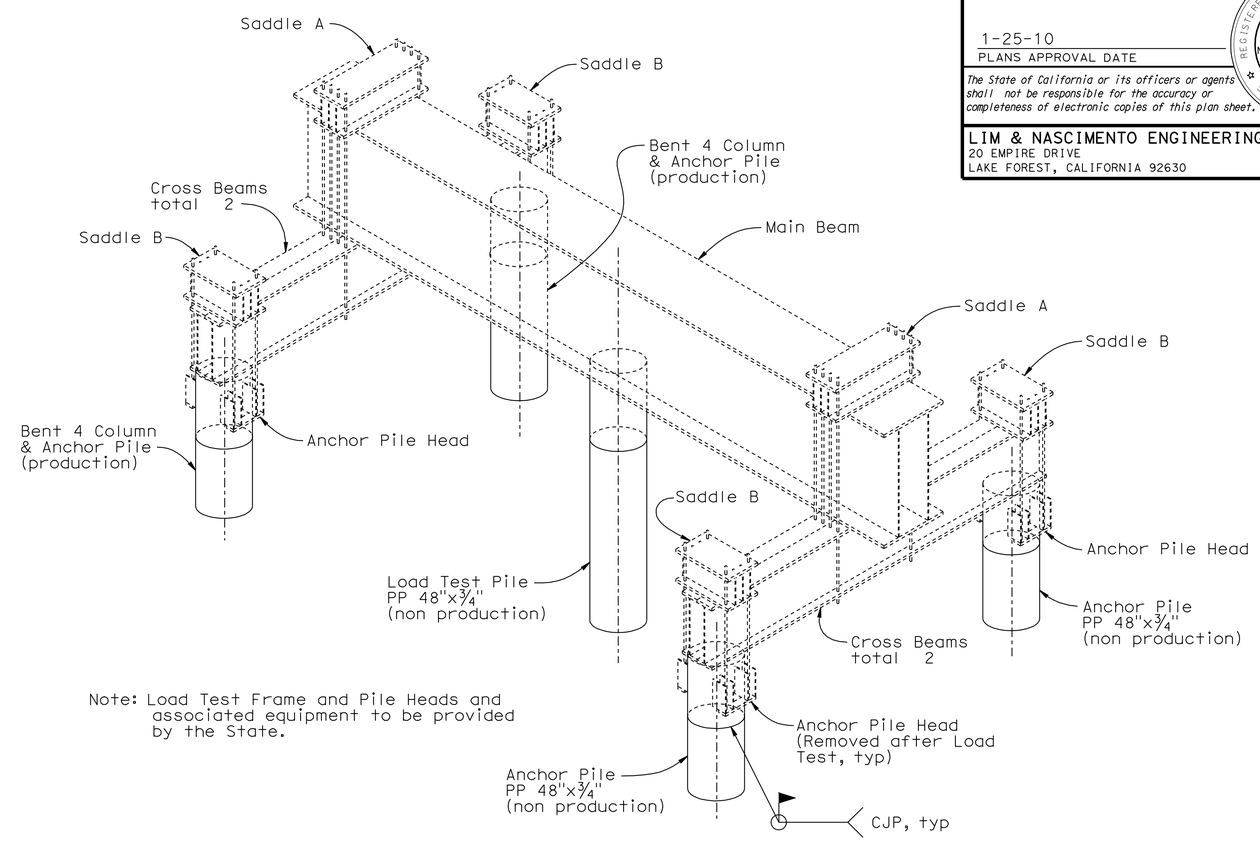

Note: Load Test Frame and Pile Heads and associated equipment to be provided by the State.

ISOMETRIC VIEW

No Scale

PILE LOAD TEST

1. All pile steel shells (production and non-production anchor piles and non-production load test pile) shall consist of the steel shell shown in "Section C-C" on "CISS PILE DETAILS NO. 1" sheet.
2. The load test pile shall have the soil inside the pipe removed and seal course concrete plug placed to the elevations indicated in the "48" DIA CISS PILE & COLUMN EXTENSION" detail on the "CISS PILE DETAIL NO. 1" sheet.
3. Anchor piles are not required to have the soil inside the pipe removed or seal course placed, except as required for production piles after completion of load test.
4. Testing shall be completed and approved by the engineer prior to placement of reinforcing steel and concrete in any production pile. Reinforcing steel shear rings and concrete shall not be placed in any non-production pile.
5. LOADING:
   3285 kips Test Pile Jacking Load (Compression)
   1645 kips Anchor Pile Jacking Load (Tension or Compression).
6. An additional 8'-0" shall be added to the length of Test and Anchor Piles as shown for dynamic monitoring.

NOTES:

1. For location of Pile Load Test and Anchor Pile Layout, see "FOUNDATION PLAN" sheet.
2. Anchor Piles may be production or non-production. See "FOUNDATION PLAN" sheet.
3. For specified tip elevations for piles, see Pile Data Table on "INDEX TO PLANS" sheet.

Note:
The Contractor shall verify all controlling field dimensions before ordering or fabricating any material.

Fritz Hoffman
DESIGN OVERSIGHT Fritz Hoffman
Sept 8, 2009
SIGN OFF DATE

	BY	CHECKED
DESIGN	R. Fish	M. Stiller / R. Price
DETAILS	C. Lee / Y. Ng	M. Stiller / R. Price
QUANTITIES	R. Fish	M. Stiller

PREPARED FOR THE STATE OF CALIFORNIA DEPARTMENT OF TRANSPORTATION

Stephen J. Mislinski
PROJECT ENGINEER

BRIDGE NO. 46-0267
POST MILE 52.6

KINGS RIVER BRIDGE (REPLACE)
CISS PILE DETAILS NO. 2

DESIGN DETAIL SHEET (ENGLISH) (REV. 2/25/05)

ORIGINAL SCALE IN INCHES FOR REDUCED PLANS 0 1 2 3

CU 06249
EA 324501

DISREGARD PRINTS BEARING EARLIER REVISION DATES

REVISION DATES (PRELIMINARY STAGE ONLY): 04/28/09 05/13/09 05/27/09 09/01/09 1-12-10

SHEET 12 OF 30

FILE => 46-0267-hpil_xdet02.dgn

USERNAME => trrichf DATE PLOTTED => 04-AUG-2010 TIME PLOTTED => 15:06

DIST	COUNTY	ROUTE	POST MILES TOTAL PROJECT	SHEET No	TOTAL SHEETS
06	Tul,Fre	99	41.3/R53.9, R0.0/R1.2	668	687

Robert C Fish 1/13/10
REGISTERED CIVIL ENGINEER DATE

1-25-10
PLANS APPROVAL DATE

The State of California or its officers or agents shall not be responsible for the accuracy or completeness of electronic copies of this plan sheet.

REGISTERED PROFESSIONAL ENGINEER Robert C. Fish No. C39540 Exp. 12/31/2011 CIVIL STATE OF CALIFORNIA

LIM & NASCIMENTO ENGINEERING
20 EMPIRE DRIVE
LAKE FOREST, CALIFORNIA 92630

NOTES:

1. For closure pour requirements, see "Falsework Release" Notes on "LONGITUDINAL REINFORCEMENT" sheet.
2. See "LONGITUDINAL REINFORCEMENT" sheet for location and extent of additional longitudinal reinforcement.
3. Architectural surface (smooth face formed relief over embedded pea gravel texture), for details see "ARCHITECTURAL SURFACE DETAILS NO. 2" sheet.
4. Architectural surface (dry stacked stone) texture for details see "ARCHITECTURAL SURFACE DETAILS NO. 3 " sheet.
5. No lap splice allowed in all #5 longitudinal bars within:
   (i) one fifth the span length on either side of ℄ Bents (top bars only).
   (ii) one fourth the span length on either side of ℄ Bents (bottom bars only).

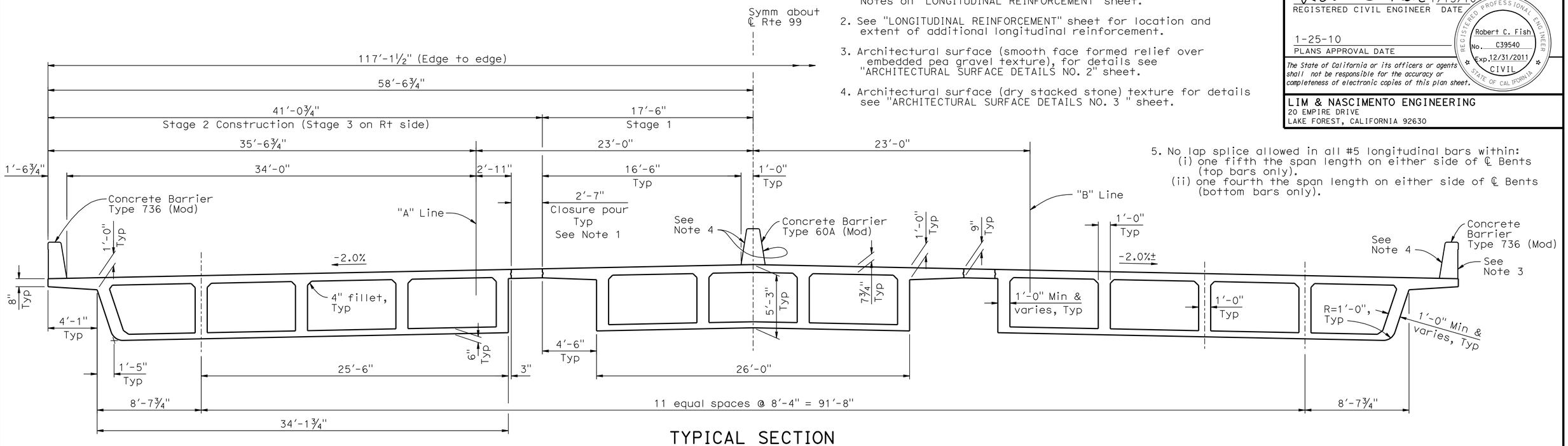

TYPICAL SECTION

¼"=1'-0"

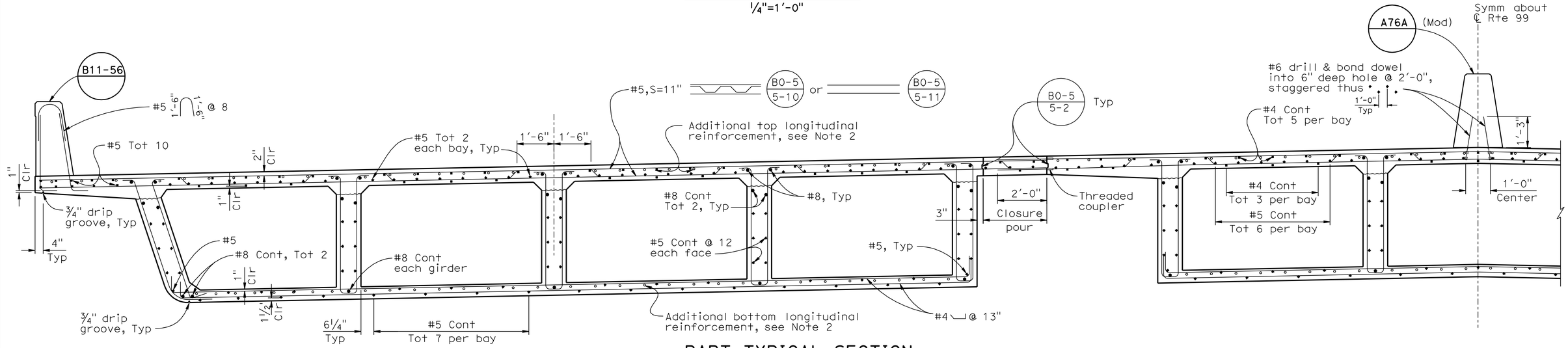

PART TYPICAL SECTION

½"=1'-0"

(symmetrical on both sides)

Note:
The Contractor shall verify all controlling field dimensions before ordering or fabricating any material.

Fritz Hoffman
DESIGN OVERSIGHT Fritz Hoffman
Sept 8, 2009
SIGN OFF DATE

	BY	CHECKED
DESIGN	R. Fish	M. Stiller / R. Price
DETAILS	C. Lee / Y. Ng	M. Stiller / R. Price
QUANTITIES	R. Fish	M. Stiller

PREPARED FOR THE STATE OF CALIFORNIA DEPARTMENT OF TRANSPORTATION

Stephen J. Mislinski
PROJECT ENGINEER

BRIDGE NO. 46-0267
POST MILE 52.6

KINGS RIVER BRIDGE (REPLACE)

TYPICAL SECTION

DESIGN DETAIL SHEET (ENGLISH) (REV. 2/25/05)

ORIGINAL SCALE IN INCHES FOR REDUCED PLANS 0 1 2 3

CU 06249
EA 324501

DISREGARD PRINTS BEARING EARLIER REVISION DATES

REVISION DATES (PRELIMINARY STAGE ONLY): 11/18/08 01/16/09 04/22/09 05/13/09 05/27/09 09/01/09 1-12-10

SHEET 13 OF 30

FILE => 46-0267-ktsd01.dgn

USERNAME => trrichf DATE PLOTTED => 04-AUG-2010 TIME PLOTTED => 15:06

NOTES:

1. For other details not shown, see see Standard Plan B8-5.
2. "L" denotes distance measured along "B" line from ℄ bearing at abutments to ℄ bent or ℄ bent to ℄ bent.

PRESTRESSING NOTES

270 ksi low relaxation strand:

	Stage		
	1	2	3
Pjack, kips	5,950	7,050	7,050
Anchor Set, inch	3/8	3/8	3/8
Total No. of Girders	4	5	5

Friction Wobble Coeff $k = 0.0002/ft$

Friction Curvature Coeff $\mu = 0.15$

Distribution of prestress force (Pjack) between girders shall not exceed the ratio of 3:2. Maximum final force variation between girders shall not exceed 470 kips.

Concrete: f'c = 4.0 ksi psi @ 28 days

f'ci = 3.0 ksi psi @ time of stressing

Contractor shall submit elongation calculations based on initial stress at

X = 0.912 times jacking stress.

Stressing shall be performed from both ends.

LEGEND:

- 18" Indicates girder stem width
- Theoretical point of no movement
- Denotes soffit vent
- Indicate Bat Box Type A, Tot 8
- Indiacte Bat Box Type B, Tot 4
- Soffit access opening
- Deck access opening

DIST	COUNTY	ROUTE	POST MILES TOTAL PROJECT	SHEET No	TOTAL SHEETS
06	Tul,Fre	99	41.3/R53.9, R0.0/R1.2	669	687

Robert C Fish 1/13/10
REGISTERED CIVIL ENGINEER DATE

1-25-10
PLANS APPROVAL DATE

The State of California or its officers or agents shall not be responsible for the accuracy or completeness of electronic copies of this plan sheet.

REGISTERED PROFESSIONAL ENGINEER Robert C. Fish No. C39540 Exp. 12/31/2011 CIVIL STATE OF CALIFORNIA

LIM & NASCIMENTO ENGINEERING
20 EMPIRE DRIVE
LAKE FOREST, CALIFORNIA 92630

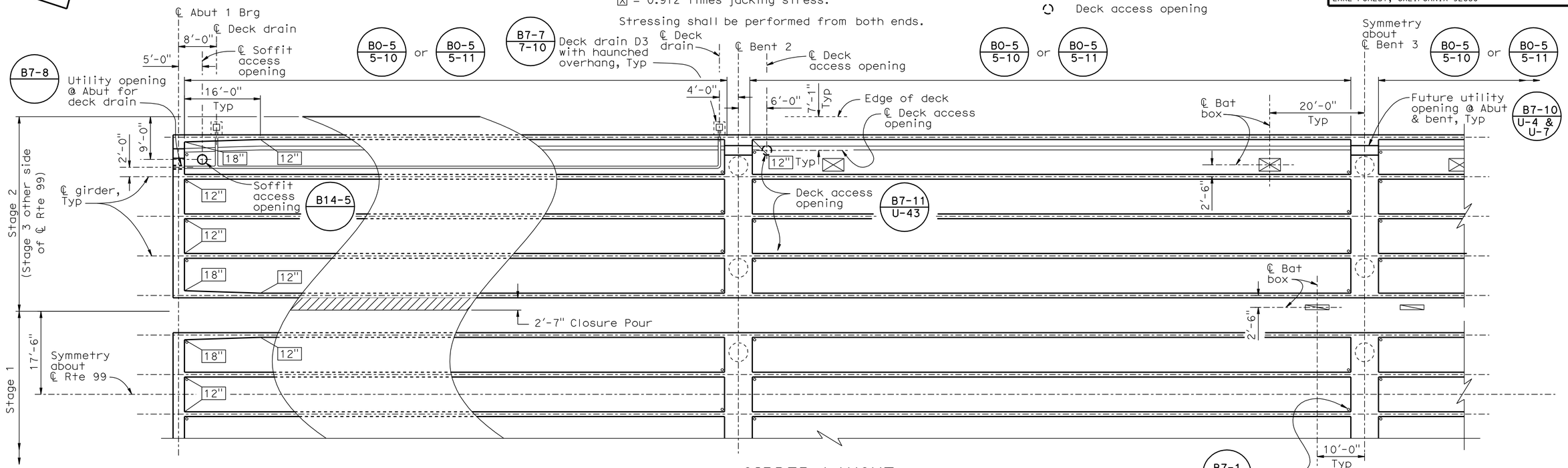

GIRDER LAYOUT

3/32"=1'-0"

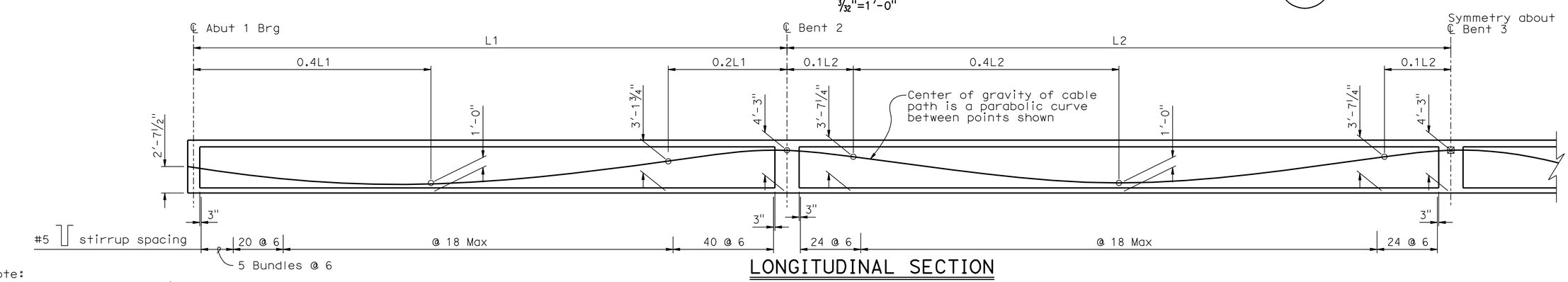

LONGITUDINAL SECTION

3/32"=1'-0" Horizontal
3/16"=1'-0" Vertical

Note:
The Contractor shall verify all controlling field dimensions before ordering or fabricating any material.

Fritz Hoffman
DESIGN OVERSIGHT Fritz Hoffman
Sept 8, 2009
SIGN OFF DATE

	BY	CHECKED
DESIGN	R. Fish	M. Stiller / R. Price
DETAILS	C. Lee / Y. Ng	M. Stiller / R. Price
QUANTITIES	R. Fish	M. Stiller

PREPARED FOR THE STATE OF CALIFORNIA DEPARTMENT OF TRANSPORTATION

Stephen J. Mislinski
PROJECT ENGINEER

BRIDGE NO. 46-0267
POST MILE 52.6

KINGS RIVER BRIDGE (REPLACE)
GIRDER LAYOUT

DESIGN DETAIL SHEET (ENGLISH) (REV. 2/25/05)

ORIGINAL SCALE IN INCHES FOR REDUCED PLANS 0 1 2 3

CU 06249
EA 324501

DISREGARD PRINTS BEARING EARLIER REVISION DATES

REVISION DATES (PRELIMINARY STAGE ONLY): 11/06/08 01/26/09 04/22/09 05/13/09 05/27/09 09/01/09 1-12-10

SHEET 14 OF 30

FILE => 46-0267-lgir_lo01.dgn

USERNAME => trrichf DATE PLOTTED => 04-AUG-2010 TIME PLOTTED => 15:06

DIST	COUNTY	ROUTE	POST MILES TOTAL PROJECT	SHEET No	TOTAL SHEETS
06	Tul,Fre	99	41.3/R53.9, R0.0/R1.2	670	687

Robert C Fish 1/13/10
REGISTERED CIVIL ENGINEER DATE

1-25-10
PLANS APPROVAL DATE

The State of California or its officers or agents shall not be responsible for the accuracy or completeness of electronic copies of this plan sheet.

REGISTERED PROFESSIONAL ENGINEER Robert C. Fish No. C39540 Exp. 12/31/2011 CIVIL STATE OF CALIFORNIA

LIM & NASCIMENTO ENGINEERING
20 EMPIRE DRIVE
LAKE FOREST, CALIFORNIA 92630

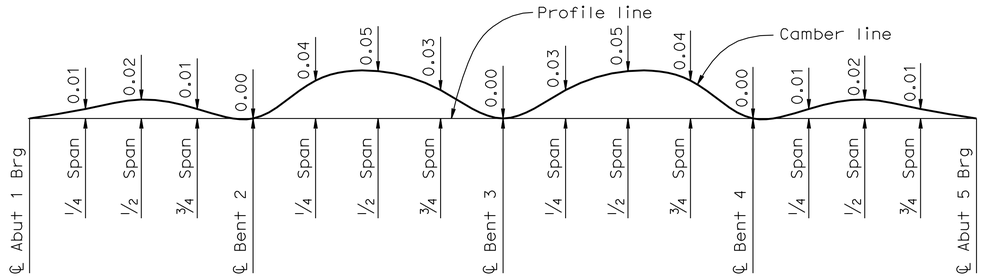

CAMBER DIAGRAM

No scale
(Does not include allowance for falsework settlement)

FALSEWORK RELEASE

Alternative 1:

Falsework shall be released as soon as permitted by the specifications. Closure pour shall not be placed sooner than 60 days after the falsework had been released.

Alternative 2:

Falsework shall not be released less than 28 days after the last concrete has been placed. Closure pour shall not be placed sooner than 14 days after the falsework has been released.

When Falsework Release Alternative 2 is used, camber values are 0.75 times those shown.

Note:

* Indicates additional longitudinal reinforcement. Typical reinforcement not shown.

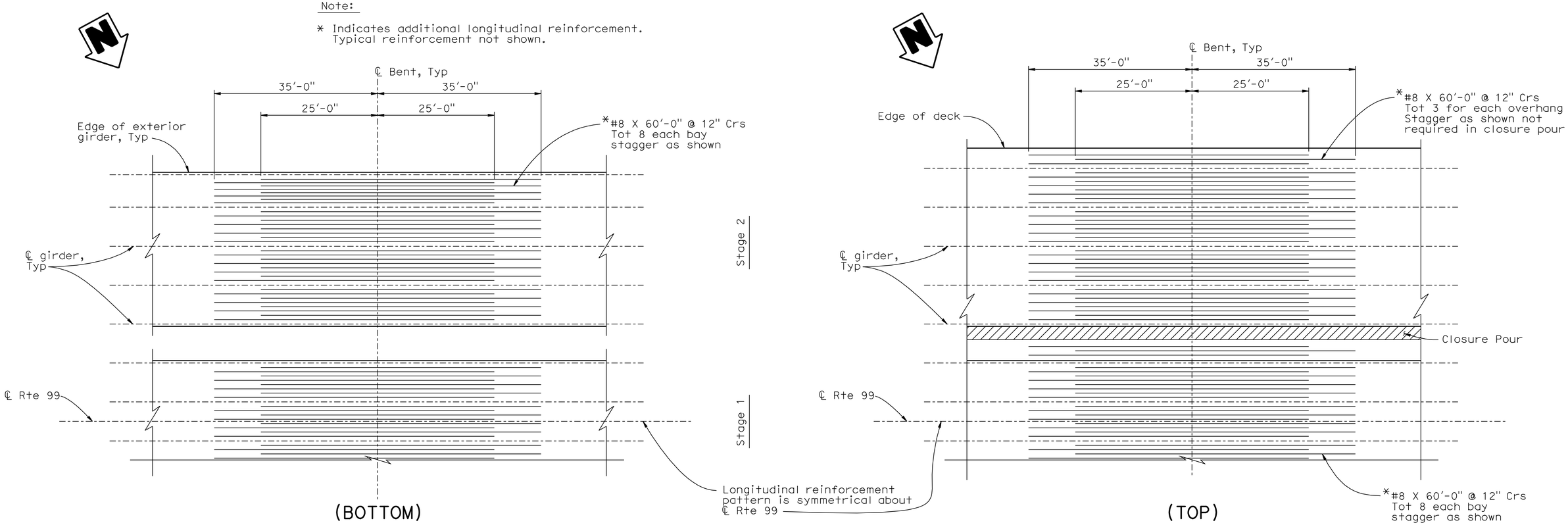

ADDITIONAL LONGITUDINAL REINFORCEMENT

3/32"=1'-0"

Note:
The Contractor shall verify all controlling field dimensions before ordering or fabricating any material.

Fritz Hoffman
DESIGN OVERSIGHT Fritz Hoffman
Sept 8, 2009
SIGN OFF DATE

	BY	CHECKED
DESIGN	R. Fish	M. Stiller / R. Price
DETAILS	C. Lee / Y. Ng	M. Stiller / R. Price
QUANTITIES	R. Fish	M. Stiller

PREPARED FOR THE STATE OF CALIFORNIA DEPARTMENT OF TRANSPORTATION

Stephen J. Mislinski
PROJECT ENGINEER

BRIDGE NO. 46-0267
POST MILE 52.6

KINGS RIVER BRIDGE (REPLACE)
LONGINTUDINAL REINFORCEMENT

DESIGN DETAIL SHEET (ENGLISH) (REV. 2/25/05)

ORIGINAL SCALE IN INCHES FOR REDUCED PLANS 0 1 2 3

CU 06249
EA 324501

DISREGARD PRINTS BEARING EARLIER REVISION DATES
REVISION DATES (PRELIMINARY STAGE ONLY) 11/18/08 01/16/09 04/22/09 05/13/09 05/27/09 09/01/09 1-12-10

SHEET 15 OF 30

FILE => 46-0267-lgir_rf01.dgn

USERNAME => trrichf DATE PLOTTED => 04-AUG-2010 TIME PLOTTED => 15:06

DIST	COUNTY	ROUTE	POST MILES TOTAL PROJECT	SHEET No	TOTAL SHEETS
06	Tul,Fre	99	41.3/R53.9, R0.0/R1.2	671	687

Robert C Fish 1/13/10
REGISTERED CIVIL ENGINEER DATE

1-25-10
PLANS APPROVAL DATE

REGISTERED PROFESSIONAL ENGINEER Robert C. Fish No. C39540 12/31/2011 CIVIL STATE OF CALIFORNIA

The State of California or its officers or agents shall not be responsible for the accuracy or completeness of electronic copies of this plan sheet.

LIM & NASCIMENTO ENGINEERING
20 EMPIRE DRIVE
LAKE FOREST, CALIFORNIA 92630

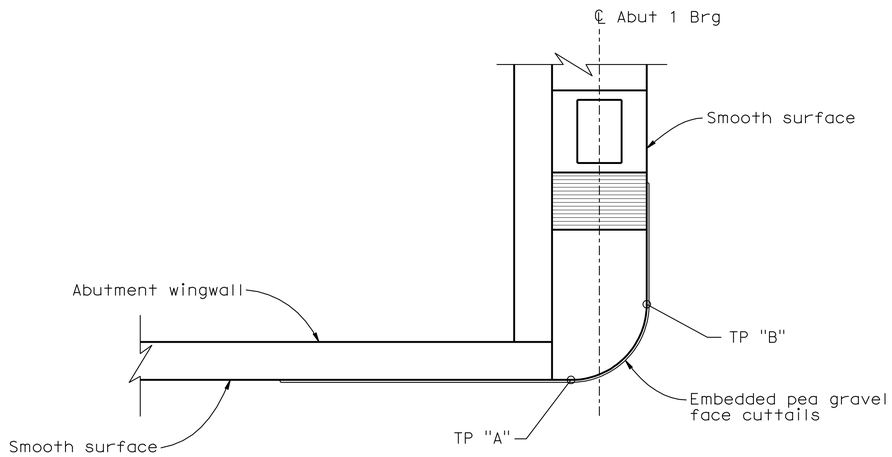

PLAN
½"=1'-0"

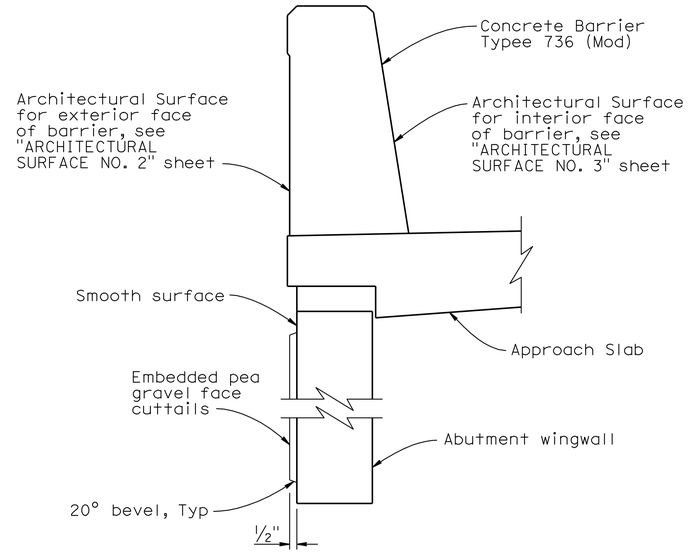

SECTION A-A
No scale

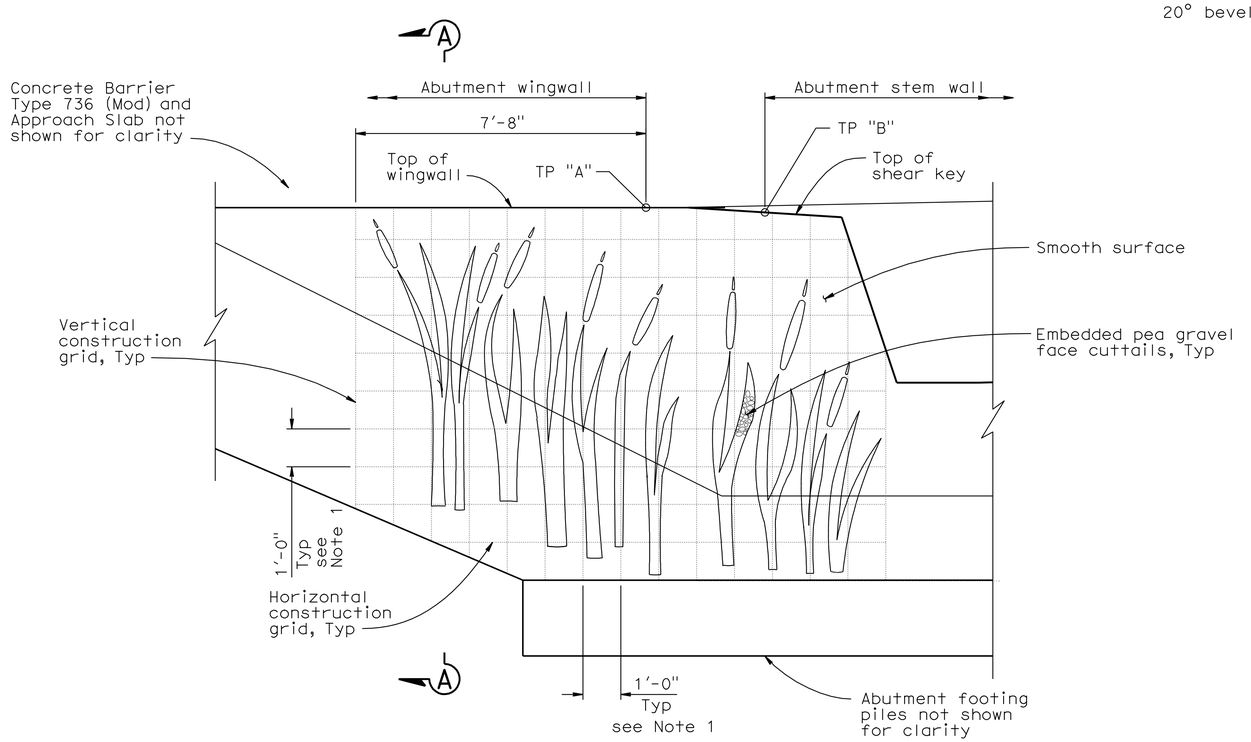

DEVELOPED ELEVATION
½"=1'-0"

ARCHITECTURAL SURFACE NOTES:

1. Grid represents limits of payment for Architectural Surface (embedded pea gravel face formed relief over smooth concrete texture).

Note:
The Contractor shall verify all controlling field dimensions before ordering or fabricating any material.

Fritz Hoffman
DESIGN OVERSIGHT Fritz Hoffman
Sept 8, 2009
SIGN OFF DATE

	BY	CHECKED
DESIGN	R. Fish	M. Stiller / R. Price
DETAILS	C. Lee	M. Stiller / R. Price
QUANTITIES	R. Fish	M. Stiller

PREPARED FOR THE STATE OF CALIFORNIA DEPARTMENT OF TRANSPORTATION

Stephen J. Mislinski
PROJECT ENGINEER

BRIDGE NO. 46-0267
POST MILE 52.6

KINGS RIVER BRIDGE (REPLACE)
ARCHITECTURAL SURFACE DETAILS NO. 1

DESIGN DETAIL SHEET (ENGLISH) (REV. 2/25/05)

ORIGINAL SCALE IN INCHES FOR REDUCED PLANS 0 1 2 3

CU 06249
EA 324501

DISREGARD PRINTS BEARING EARLIER REVISION DATES

REVISION DATES (PRELIMINARY STAGE ONLY) 04/27/09 05/27/09 05/27/09 09/01/09 1-12-10

SHEET 16 OF 30

FILE => 46-0267-qconcsur_xdet01.dgn

USERNAME => trrichf DATE PLOTTED => 04-AUG-2010 TIME PLOTTED => 15:06

DIST	COUNTY	ROUTE	POST MILES TOTAL PROJECT	SHEET No	TOTAL SHEETS
06	Tul,Fre	99	41.3/R53.9, R0.0/R1.2	672	687

Robert C Fish 1/13/10
REGISTERED CIVIL ENGINEER DATE

1-25-10
PLANS APPROVAL DATE

REGISTERED PROFESSIONAL ENGINEER Robert C. Fish No. C39540 12/31/2011 CIVIL STATE OF CALIFORNIA

The State of California or its officers or agents shall not be responsible for the accuracy or completeness of electronic copies of this plan sheet.

LIM & NASCIMENTO ENGINEERING
20 EMPIRE DRIVE
LAKE FOREST, CALIFORNIA 92630

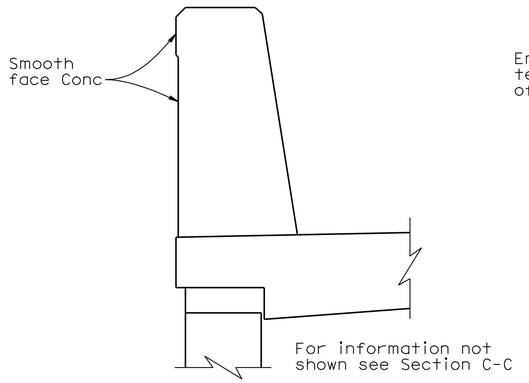

SECTION A-A
No scale

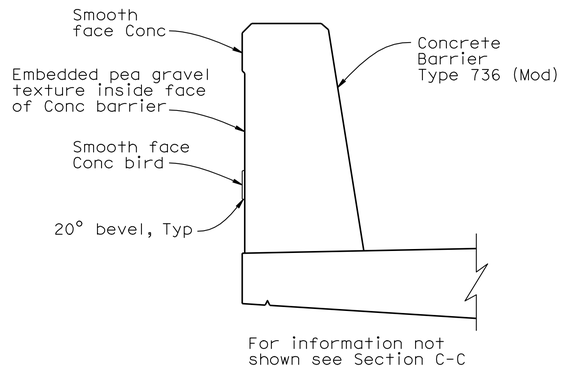

SECTION B-B
No scale

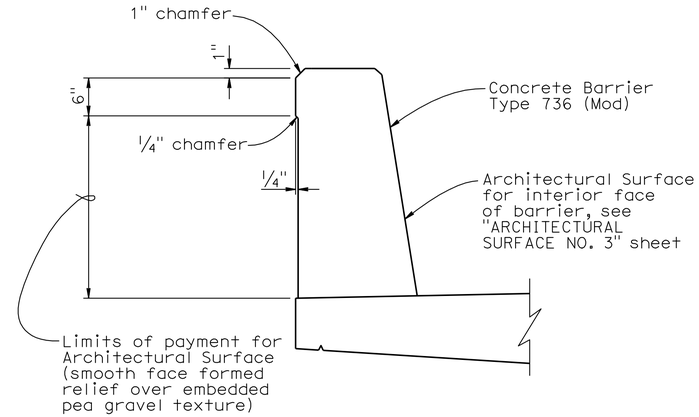

SECTION C-C
No scale

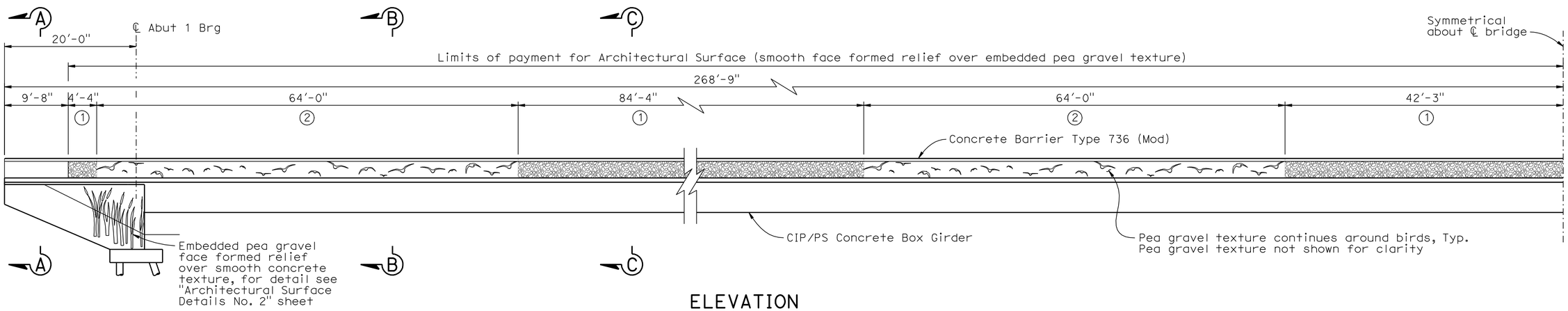

ELEVATION
1/8"=1'-0"

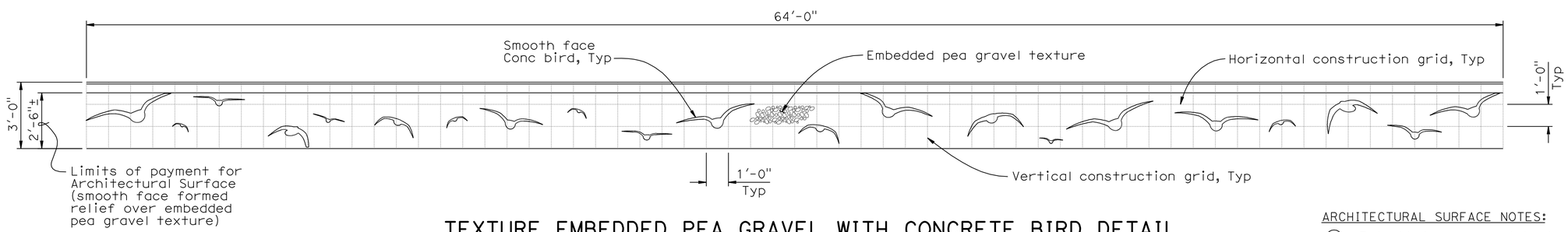

TEXTURE EMBEDDED PEA GRAVEL WITH CONCRETE BIRD DETAIL
1/8"=1'-0"

ARCHITECTURAL SURFACE NOTES:

1. Embedded pea gravel texture
2. Smooth concrete bird over embedded pea gravel texture

Note:
The Contractor shall verify all controlling field dimensions before ordering or fabricating any material.

Fritz Hoffman
DESIGN OVERSIGHT Fritz Hoffman
Sept 8, 2009
SIGN OFF DATE

	BY	CHECKED
DESIGN	R. Fish	M. Stiller / R. Price
DETAILS	C. Lee	M. Stiller / R. Price
QUANTITIES	R. Fish	M. Stiller

PREPARED FOR THE STATE OF CALIFORNIA DEPARTMENT OF TRANSPORTATION

Stephen J. Mislinski
PROJECT ENGINEER

BRIDGE NO. 46-0267
POST MILE 52.6

KINGS RIVER BRIDGE (REPLACE)
ARCHITECTURAL SURFACE DETAILS NO. 2

DESIGN DETAIL SHEET (ENGLISH) (REV. 2/25/05)

ORIGINAL SCALE IN INCHES FOR REDUCED PLANS 0 1 2 3

CU 06249
EA 324501

DISREGARD PRINTS BEARING EARLIER REVISION DATES

REVISION DATES (PRELIMINARY STAGE ONLY) 04/28/09 05/13/09 05/27/09 09/01/09 1-12-10

SHEET 17 OF 30

FILE => 46-0267-qconcsur_xdet02.dgn

USERNAME => jtrright DATE PLOTTED => 04-AUG-2010 TIME PLOTTED => 15:06

DIST	COUNTY	ROUTE	POST MILES TOTAL PROJECT	SHEET No	TOTAL SHEETS
06	Tul,Fre	99	41.3/R53.9, R0.0/R1.2	673	687

Robert C Fish 1/13/10
REGISTERED CIVIL ENGINEER DATE

1-25-10
PLANS APPROVAL DATE

REGISTERED PROFESSIONAL ENGINEER Robert C. Fish No. C39540 12/31/2011 CIVIL STATE OF CALIFORNIA

The State of California or its officers or agents shall not be responsible for the accuracy or completeness of electronic copies of this plan sheet.

LIM & NASCIMENTO ENGINEERING
20 EMPIRE DRIVE
LAKE FOREST, CALIFORNIA 92630

NOTES:

1. For details not shown see Standard Plan RSP A76A.
2. For details not shown, see Standard Plan B11-56.
3. Height of repeating pattern measured along the slope of the barrier face.
4. Limits of placement and payment for architectural surface (dry stacked stone) texture shall be as shown in "Elevation" and shall extend from BB to EB.

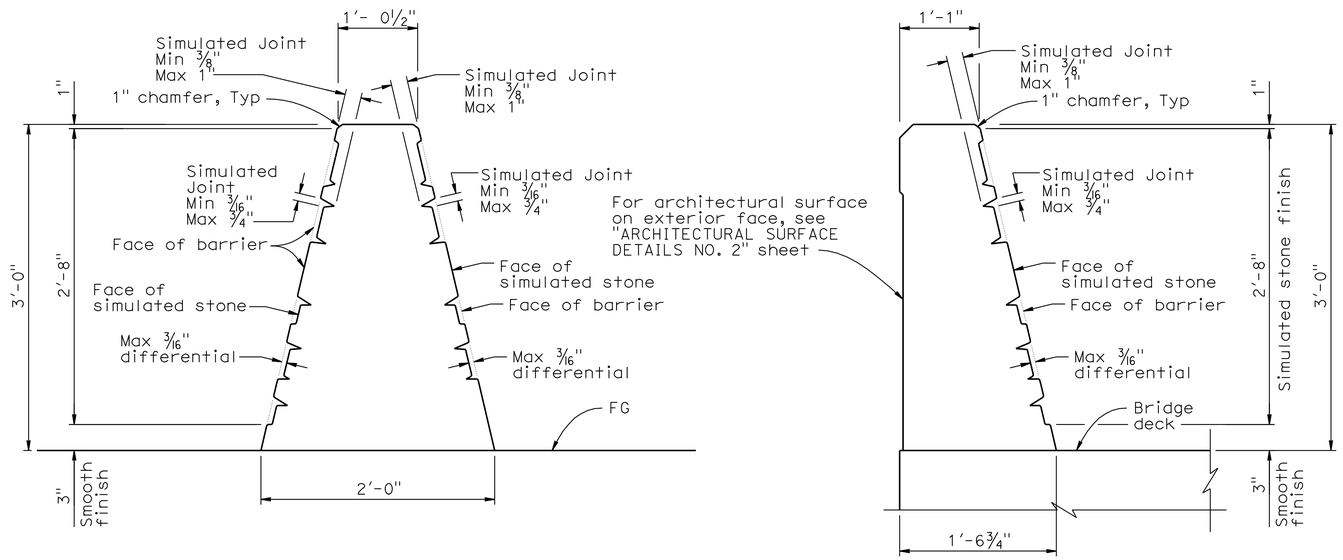

TYPE 60A (MODIFIED)
See Note 1

TYPE 736 (MODIFIED)
See Note 2

CONCRETE BARRIER SECTIONS
No scale

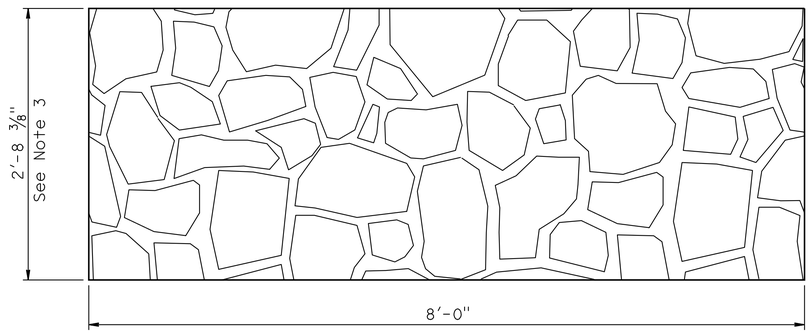

DEVELOPED ELEVATION

REPEATING PATTERN
No scale

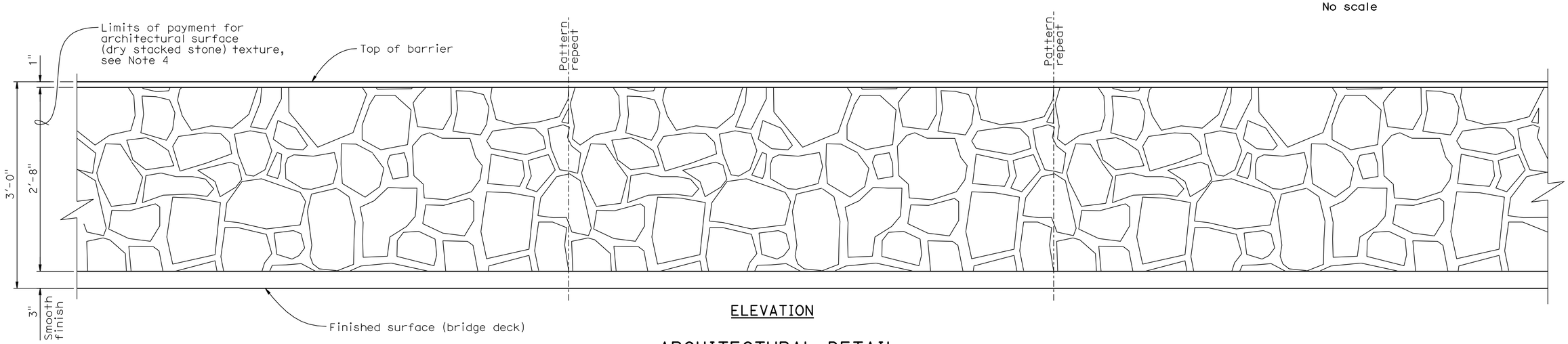

ELEVATION

ARCHITECTURAL DETAIL
CONCRETE BARRIERS TYPE 60A (MODIFIED) AND TYPE 736A (MODIFIED)
No scale

Note:
The Contractor shall verify all controlling field dimensions before ordering or fabricating any material.

Fritz Hoffman
DESIGN OVERSIGHT Fritz Hoffman
Sept 8, 2009
SIGN OFF DATE

	BY	CHECKED
DESIGN	R. Fish	M. Stiller / R. Price
DETAILS	C. Lee	M. Stiller / R. Price
QUANTITIES	R. Fish	M. Stiller

PREPARED FOR THE STATE OF CALIFORNIA DEPARTMENT OF TRANSPORTATION

Stephen J. Mislinski
PROJECT ENGINEER

BRIDGE NO. 46-0267
POST MILE 52.6

KINGS RIVER BRIDGE (REPLACE)
ARCHITECTURAL SURFACE DETAILS NO. 3

DESIGN DETAIL SHEET (ENGLISH) (REV. 2/25/05)

ORIGINAL SCALE IN INCHES FOR REDUCED PLANS 0 1 2 3

CU 06249
EA 324501

DISREGARD PRINTS BEARING EARLIER REVISION DATES

REVISION DATES (PRELIMINARY STAGE ONLY) 05/15/09 05/27/09 09/01/09 1-12-10

SHEET 18 OF 30

FILE => 46-0267-qconcsur_xdet03.dgn

USERNAME => trrichf DATE PLOTTED => 04-AUG-2010 TIME PLOTTED => 15:07

DIST	COUNTY	ROUTE	POST MILES TOTAL PROJECT	SHEET No	TOTAL SHEETS
06	Tul,Fre	99	41.3/R53.9, R0.0/R1.2	674	687

Robert C Fish 1/13/10
REGISTERED CIVIL ENGINEER DATE

1-25-10
PLANS APPROVAL DATE

REGISTERED PROFESSIONAL ENGINEER
Robert C. Fish
No. C39540
Exp. 12/31/2011
CIVIL
STATE OF CALIFORNIA

The State of California or its officers or agents shall not be responsible for the accuracy or completeness of electronic copies of this plan sheet.

LIM & NASCIMENTO ENGINEERING
20 EMPIRE DRIVE
LAKE FOREST, CALIFORNIA 92630

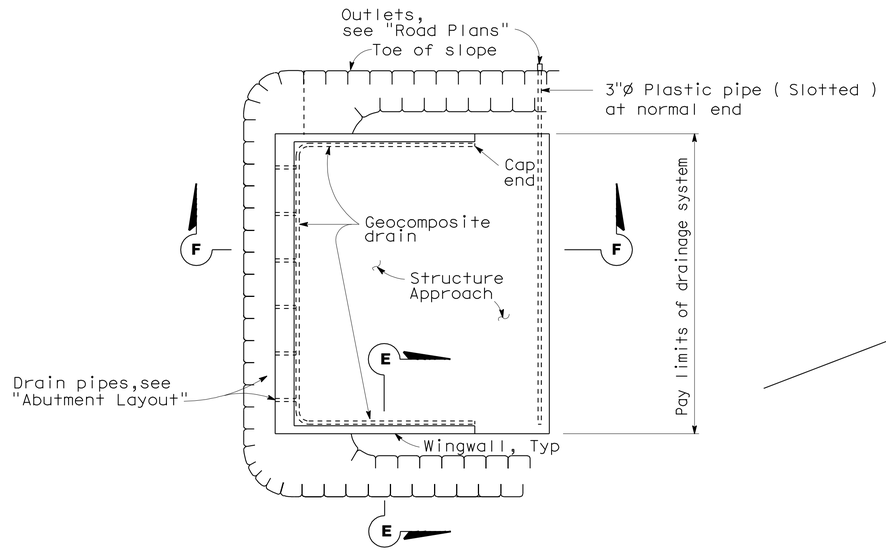

TYPICAL PLAN 1

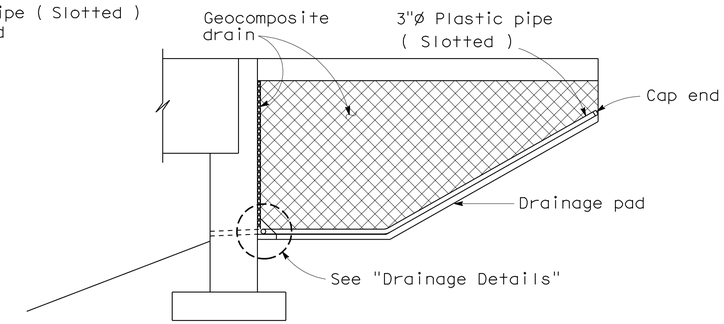

CANTILEVER WINGWALL 1
SECTION F-F

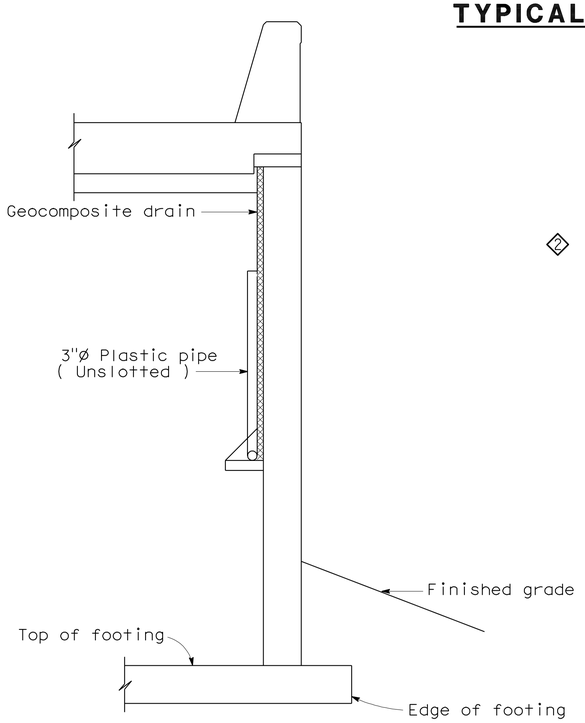

SECTION E-E 1

NOTE: Bends and junctions in 3" plastic pipe are 2'-5" radius min.

2

3

4

5

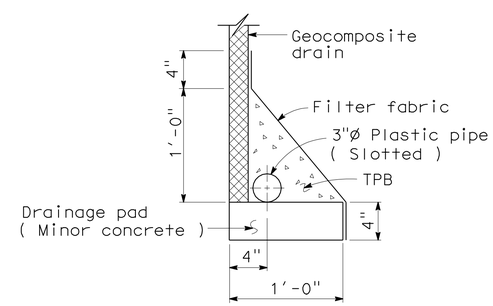

WITHOUT FOOTING
DRAINAGE DETAILS

STANDARD DRAWING				
RELEASE DATE 4/23/98	DESIGN	BY M.TRAFFALIS	CHECKED E.THORKILDSEN	RELEASED BY
FILE NO. xs3-110e	DETAILS	BY R.YEE	CHECKED E.THORKILDSEN	OFFICE CHIEF
	SUBMITTED	BY M.HA	DRAWING DATE 4/98	

1 Plan, Section E - E and F-F modified
2 3 4 and 5 details deleted

STATE OF CALIFORNIA
DEPARTMENT OF TRANSPORTATION

DIVISION OF ENGINEERING SERVICES

BRIDGE NO. 46-0267
MILE POST 52.6

KINGS RIVER BRIDGE (REPLACE)
STRUCTURE APPROACH DRAINAGE DETAILS

DS OSD 2147A (ENGLISH) (REV. X/XX/XX)

ORIGINAL SCALE IN INCHES FOR REDUCED PLANS 0 1 2 3

CU 06249
EA 324501

DISREGARD PRINTS BEARING EARLIER REVISION DATES

REVISION DATES (PRELIMINARY STAGE ONLY): 11/14/08 01/16/09 04/22/09 05/13/09 05/27/09 09/01/09 1-12-10

SHEET 19 OF 30

46-0267-sapd_xs3-110e.dgn

USERNAME = trrichf DATE PLOTTED => 04-AUG-2010 TIME PLOTTED => 15:07

DIST	COUNTY	ROUTE	POST MILES TOTAL PROJECT	SHEET No	TOTAL SHEETS
06	Tul,Fre	99	41.3/R53.9, R0.0/R1.2	675	687

Robert C Fish 1/13/10
REGISTERED CIVIL ENGINEER DATE

1-25-10
PLANS APPROVAL DATE

REGISTERED PROFESSIONAL ENGINEER Robert C. Fish No. C39540 Exp. 12/31/2011 CIVIL STATE OF CALIFORNIA

The State of California or its officers or agents shall not be responsible for the accuracy or completeness of electronic copies of this plan sheet.

LIM & NASCIMENTO ENGINEERING
20 EMPIRE DRIVE
LAKE FOREST, CALIFORNIA 92630

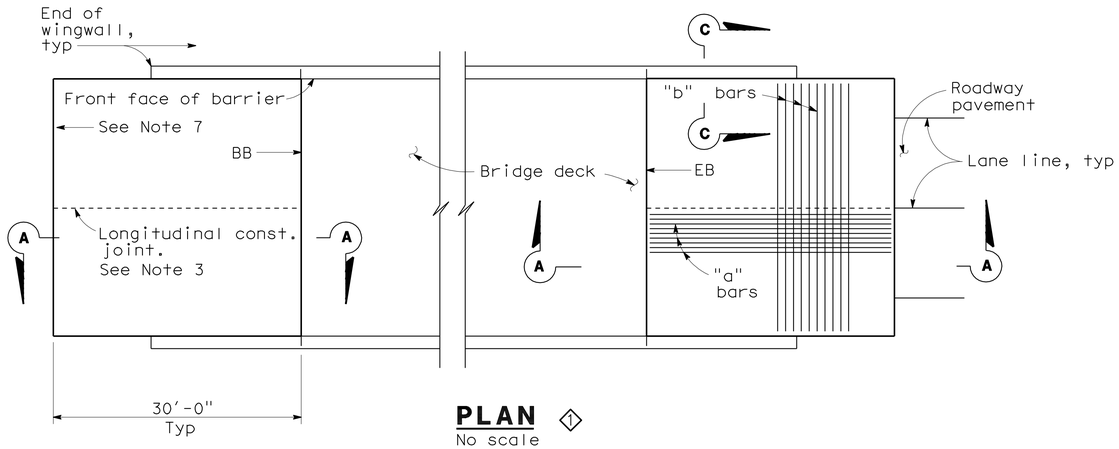

PLAN 1
No scale

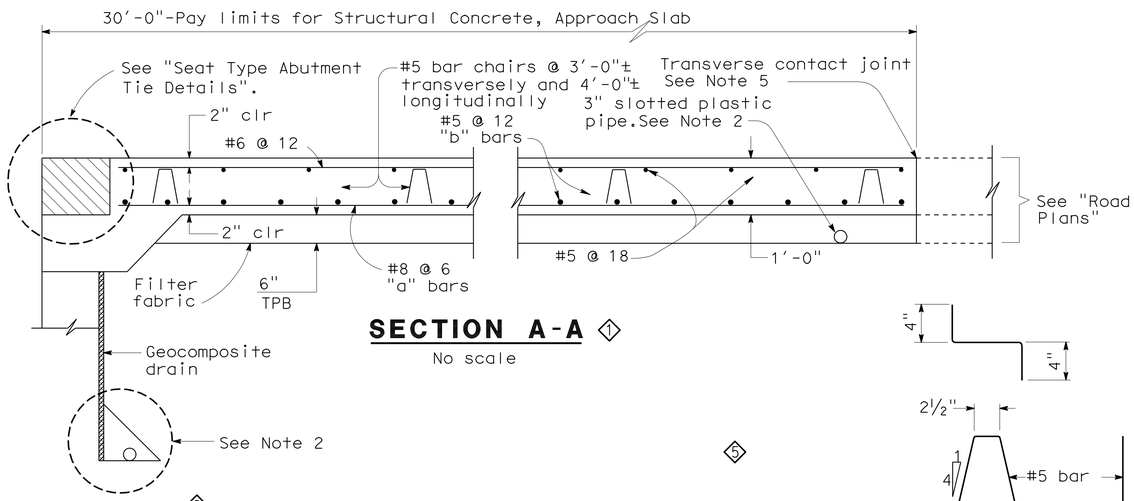

SECTION A-A 1
No scale

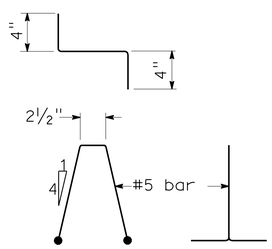

BAR CHAIR DETAIL
1½"=1'-0"

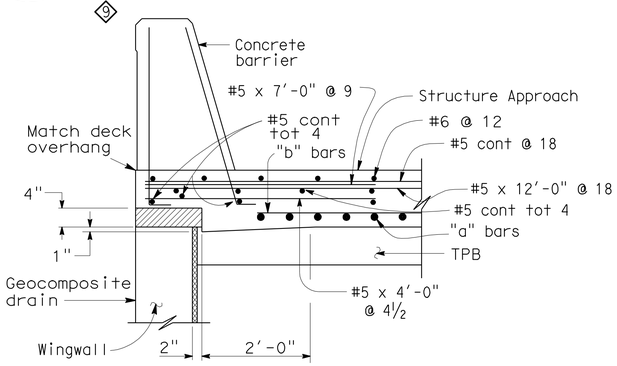

TYPE E-1

SECTION C-C
¾"=1'-0"
(Type E-1 to be used,unless otherwise shown on plans)

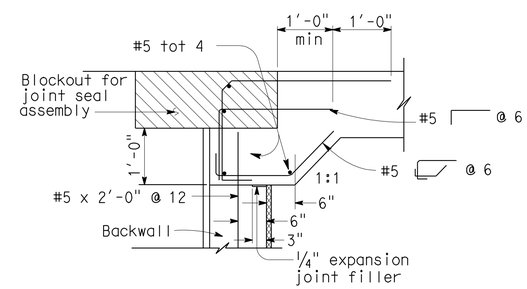

MR > 2"

SEAT TYPE ABUTMENT TIE DETAILS (SEE NOTE 1)
¾"=1'-0"

NOTES:

1. For details not shown,see Structure Plans. For MR ≤ 2",adjust bar reinforcement to clear a sawcut for sealed joint,when required.
2. For drainage details,see "Structure Approach Drainage Details" sheet.
3. Longitudinal construction joints,when permitted by the Engineer, shall be located on lane lines.
4. End angle or plate at beginning of barrier transition, end of wingwall or end of structure approach as applicable.
5. For transverse contact joint with new PCC paving, refer to Standard Plan P10.
6. At the contractor's option, approach slab transverse reinforcement may be placed parallel to paving notch. Spacing of transverse reinforcement is measured along ℄ roadway.
7. Approach Slab Transverse Contract Joint shall be parallel to face of blockout for joint seal assembly.

Remove all polystyrene.

STANDARD DRAWING				
RELEASE DATE 3/14/05	DESIGN	BY M.TRAFFALIS	CHECKED E.THORKILDSEN	RELEASED BY
	DETAILS	BY R.YEE	CHECKED E.THORKILDSEN	
FILE NO. xs3-120e	SUBMITTED	BY M.HA	DRAWING DATE 4/98	OFFICE CHIEF

DS OSD 2147A (ENGLISH) (REV. X/XX/XX)

1 Plan and Section A - A modified. Note 7 added
2 3 4 5 6 7 and 8 details deleted
9 Modified Detail for Type 736 barrier

STATE OF CALIFORNIA
DEPARTMENT OF TRANSPORTATION

DIVISION OF ENGINEERING SERVICES

CU 06249
EA 324501

BRIDGE NO. 46-0267
MILE POST 52.6

KINGS RIVER BRIDGE (REPLACE)
STRUCTURE APPROACH TYPE N(30S)

ORIGINAL SCALE IN INCHES FOR REDUCED PLANS 0 1 2 3

DISREGARD PRINTS BEARING EARLIER REVISION DATES

REVISION DATES (PRELIMINARY STAGE ONLY): 11/06/08 01/06/09 04/27/09 05/13/09 05/27/09 09/09/09 1-12-10

SHEET 20 OF 30

46-0267-sapp_xs3-120e.dgn

USERNAME => trrichf DATE PLOTTED => 04-AUG-2010 TIME PLOTTED => 15:07

DIST	COUNTY	ROUTE	POST MILES TOTAL PROJECT	SHEET No	TOTAL SHEETS
06	Tul,Fre	99	41.3/R53.9, R0.0/R1.2	676	687

Robert C Fish 1/13/10
REGISTERED CIVIL ENGINEER DATE

1-25-10
PLANS APPROVAL DATE

REGISTERED PROFESSIONAL ENGINEER Robert C. Fish No. C39540 Exp. 12/31/2011 CIVIL STATE OF CALIFORNIA

The State of California or its officers or agents shall not be responsible for the accuracy or completeness of electronic copies of this plan sheet.

LIM & NASCIMENTO ENGINEERING
20 EMPIRE DRIVE
LAKE FOREST, CALIFORNIA 92630

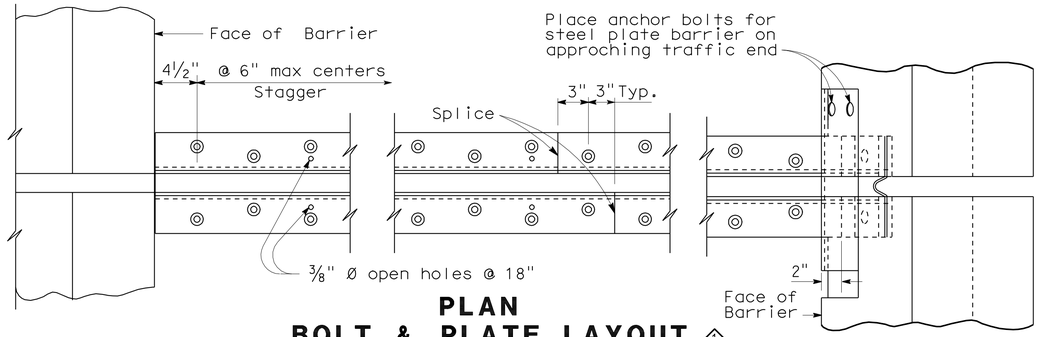

PLAN
BOLT & PLATE LAYOUT ◇1

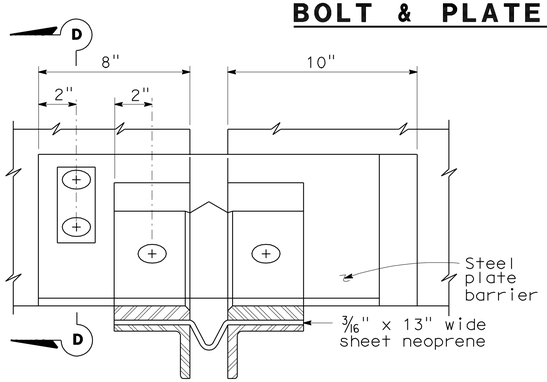

VIEW B-B ◇1

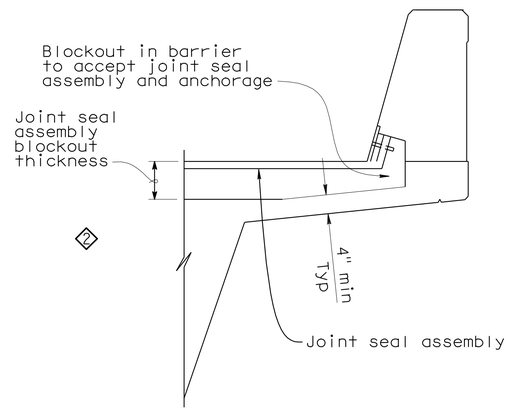

◇2

LOW SIDE
SEAL INSTALLATION ◇5

¾" = 1'-0"

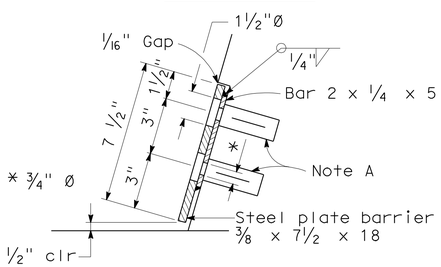

SECTION D-D ◇1

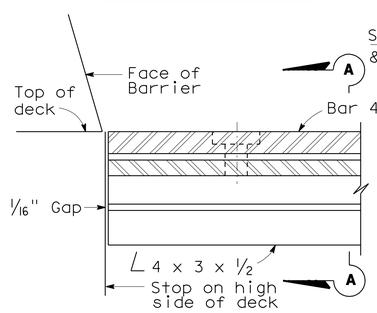

HIGH SIDE
BARRIER DETAIL ◇1

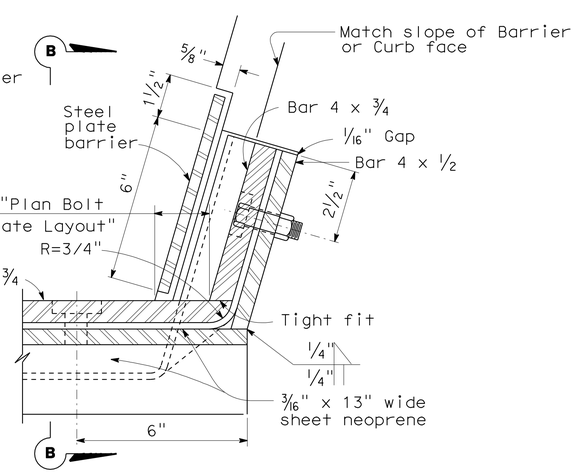

LOW SIDE
BARRIER DETAIL ◇1

(See Note B)

◇3

◇4

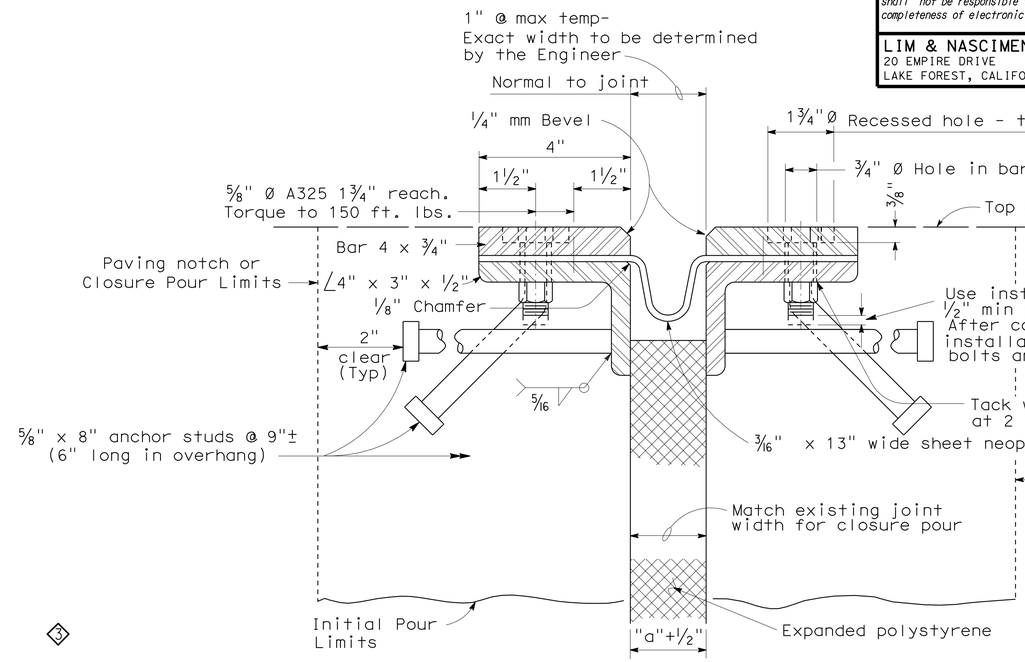

SECTION A-A

Note :
Stagger anchor studs @ 4½"± on centers thus:

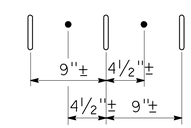

Joint Information			"a" Dimensions		
Location	Movement Rating (MR)	Skew	Winter	Spring & Fall	Summer
Abut 1 & 5	3"	0	2"	1½"	1¼"

NOTES:

Full penetration butt welds may be substituted for fillet welds on all anchor studs.

Alternate types of anchor studs may be permitted subject to the approval by the Engineer.

Joint seal assembly to be used in conjunction with closure pour. (See other sheets for limits). Closure pour shall not be placed until final deck surface is within the tolerances specified.

Use joint at crown of roadway, at any change in traverse slope in deck and at changes in horizontal direction. Place other joints at or near lanes. All metal parts to be painted or galvanized after fabrication.

Sheet neoprene shall be fabricated in one continuous piece or joints shall be vulcanized. Neoprene shall be fabricated to bend around corners. 1" holes in neoprene sheets shall be drilled or punched so that the neoprene is not distorted at the time of installation.

NOTE A

Insert assembly or expansion anchorage for ⅝" x 1¾" A325 bolt.

NOTE B

Use the sidewalk Detail at all sidewalk joints. Use the Barrier Detail at both sides if the roadway is crowned or if the difference in elevation between the ends of the seal is 0.5' or less.

NO SCALE

STANDARD DRAWING

FILE NO. xs8-010e

APPROVED BY T. DELIS
RESPONSIBLE TECHNICAL SPECIALIST
APPROVAL DATE 5-8-08

RELEASED BY ROBERTO LACALLE
RESPONSIBLE OFFICE CHIEF
RELEASE DATE 5-8-08

◇1 Plan, View B-B, Section D-D and Barrier details modified
◇2 ◇3 and ◇4 details deleted
◇5 Added detail

STATE OF CALIFORNIA
DEPARTMENT OF TRANSPORTATION

DIVISION OF ENGINEERING SERVICES

BRIDGE NO. 46-0267
POST MILE 52.6

KINGS RIVER BRIDGE (REPLACE)

JOINT SEAL ASSEMBLY
(MAXIMUM MOVEMENT RATING = 4")

DS OSD 2147A (ENGLISH STANDARD DRAWING "XS" BORDER REV. 01/11/08)

ORIGINAL SCALE IN INCHES FOR REDUCED PLANS 0 1 2 3

CU 06249
EA 324501

DISREGARD PRINTS BEARING EARLIER REVISION DATES

REVISION DATES (PRELIMINARY STAGE ONLY) 11/16/08 01/16/09 04/22/09 05/13/09 05/27/09 09/01/09 1-12-10

SHEET 21 OF 30

USERNAME => trrichf DATE PLOTTED => 04-AUG-2010 TIME PLOTTED => 15:07

46-0267-tjsa_xs8-010e.dgn

DIST	COUNTY	ROUTE	POST MILES TOTAL PROJECT	SHEET No	TOTAL SHEETS
06	Tul,Fre	99	41.3/R53.9, R0.0/R1.2	677	687

Robert C Fish 1/13/10
REGISTERED CIVIL ENGINEER DATE

1-25-10
PLANS APPROVAL DATE

REGISTERED PROFESSIONAL ENGINEER Robert C. Fish No. C39540 Exp. 12/31/2011 CIVIL STATE OF CALIFORNIA

The State of California or its officers or agents shall not be responsible for the accuracy or completeness of electronic copies of this plan sheet.

LIM & NASCIMENTO ENGINEERING
20 EMPIRE DRIVE
LAKE FOREST, CALIFORNIA 92630

NOTES:

1. 2"X4" size corresponds to (2x4) nominal wood studs.
2. Use 8d nails at 12" O.C. for nailing all wood studs to plywood.

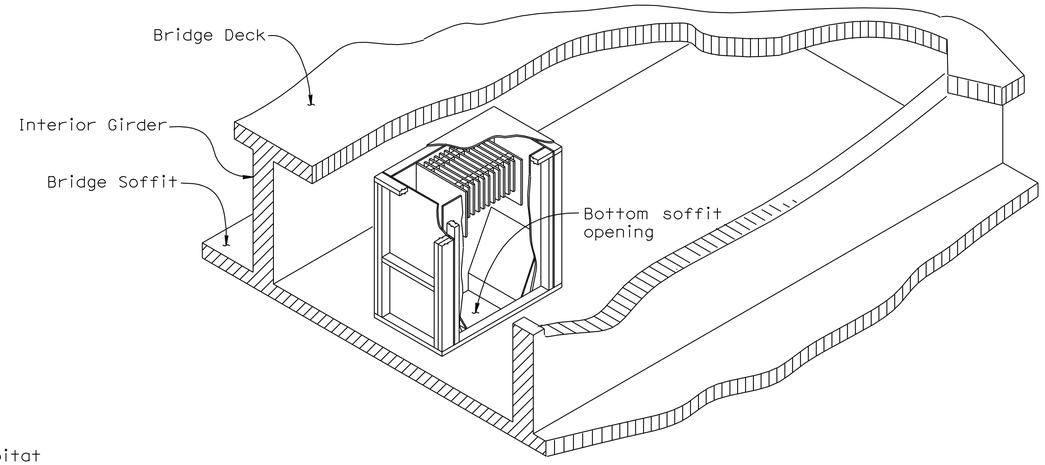

VIEW OF BAT HABITAT INSIDE BOX GIRDER BRIDGE
No Scale

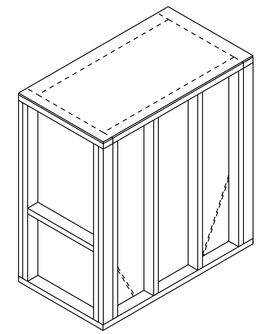

BAT HABITAT
No Scale

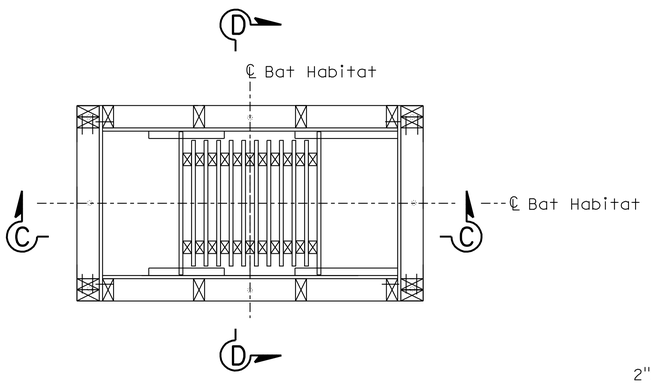

PLAN A-A
1"=1'-0"

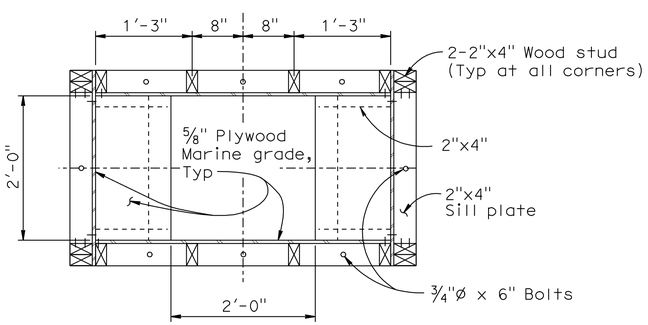

PLAN B-B
1"=1'-0"

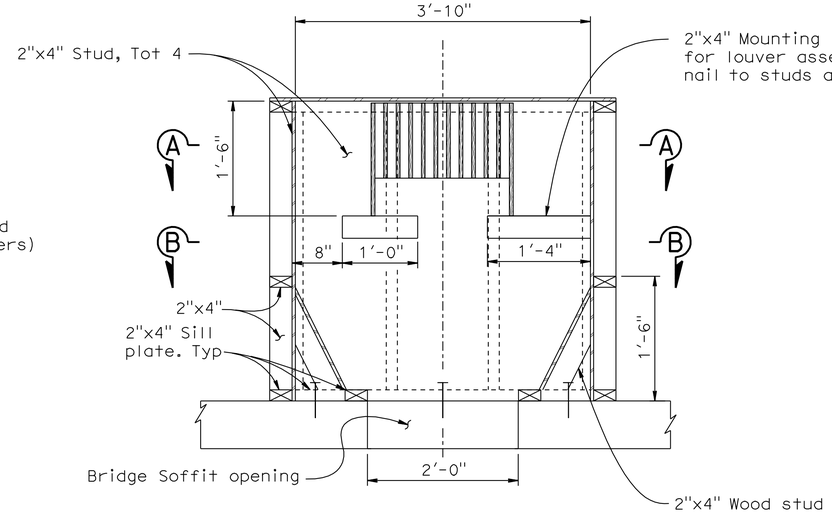

SECTION C-C
1"=1'-0"

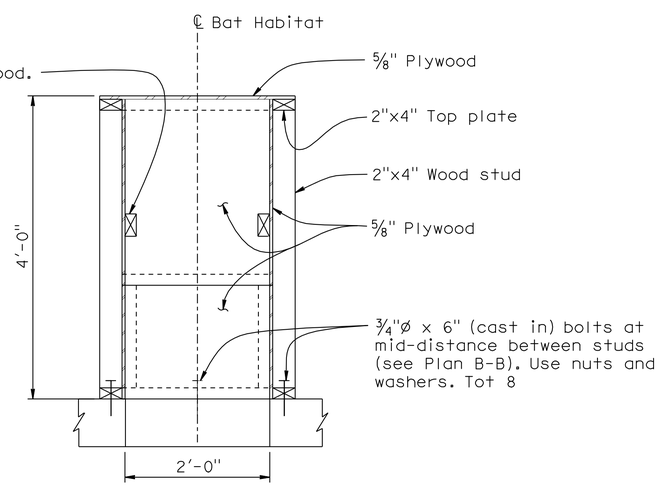

ELEVATION D-D
1"=1'-0"

Note:
The Contractor shall verify all controlling field dimensions before ordering or fabricating any material.

Fritz Hoffman
DESIGN OVERSIGHT Fritz Hoffman
Sept 8, 2009
SIGN OFF DATE

	BY	CHECKED
DESIGN	R. Fish	M. Stiller / R. Price
DETAILS	F. DeMarco	M. Stiller / R. Price
QUANTITIES	R. Fish	M. Stiller

PREPARED FOR THE STATE OF CALIFORNIA DEPARTMENT OF TRANSPORTATION

Stephen J. Mislinski
PROJECT ENGINEER

BRIDGE NO. 46-0267
POST MILE 52.6

KINGS RIVER BRIDGE (REPLACE)
BAT HABITAT (INTERNAL) NO. 1

DESIGN DETAIL SHEET (ENGLISH) (REV. 2/25/05)

ORIGINAL SCALE IN INCHES FOR REDUCED PLANS 0 1 2 3

CU 06249
EA 324501

DISREGARD PRINTS BEARING EARLIER REVISION DATES

REVISION DATES (PRELIMINARY STAGE ONLY) 01/16/09 04/22/09 05/12/09 05/27/09 09/01/09 1-12-10

SHEET 22 OF 30

FILE => 46-0267-ubh_xdet01.dgn

USERNAME => frrichf DATE PLOTTED => 04-AUG-2010 TIME PLOTTED => 15:07

DIST	COUNTY	ROUTE	POST MILES TOTAL PROJECT	SHEET No	TOTAL SHEETS
06	Tul,Fre	99	41.3/R53.9, R0.0/R1.2	678	687

Robert C Fish 1/13/10
REGISTERED CIVIL ENGINEER DATE

1-25-10
PLANS APPROVAL DATE

REGISTERED PROFESSIONAL ENGINEER Robert C. Fish No. C39540 Exp. 12/31/2011 CIVIL STATE OF CALIFORNIA

The State of California or its officers or agents shall not be responsible for the accuracy or completeness of electronic copies of this plan sheet.

LIM & NASCIMENTO ENGINEERING
20 EMPIRE DRIVE
LAKE FOREST, CALIFORNIA 92630

NOTE
Assembly is NOT to be permanently attached to box. Allow for future replacement of assembly.
Locate assembly in center of box directly above soffit opening.

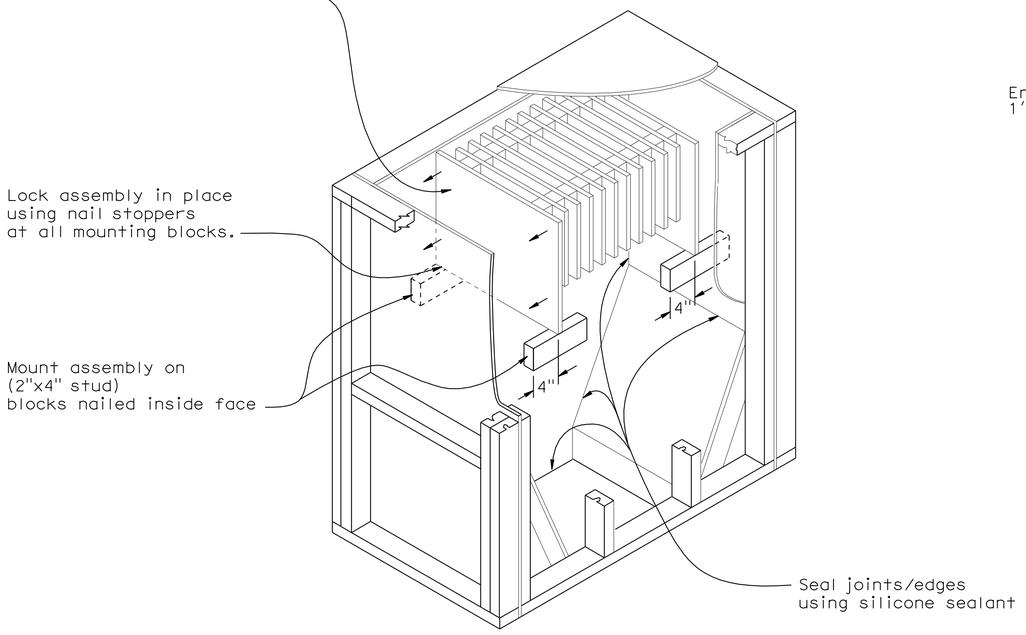

BAT HABITAT
1"=1'-0"

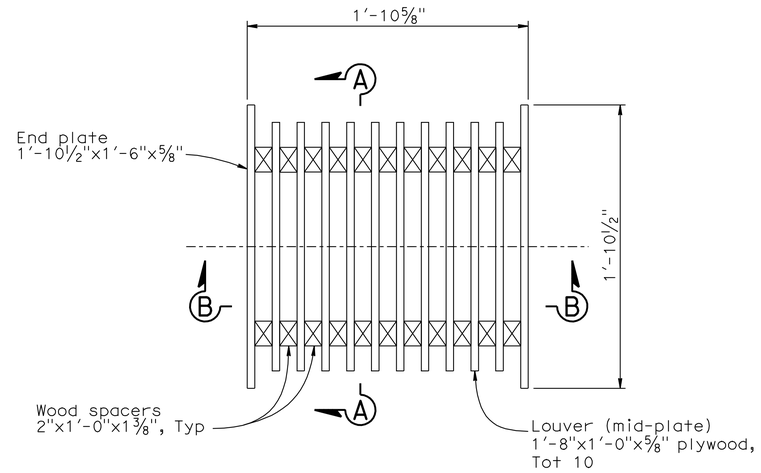

PLAN VIEW
2"=1'-0"

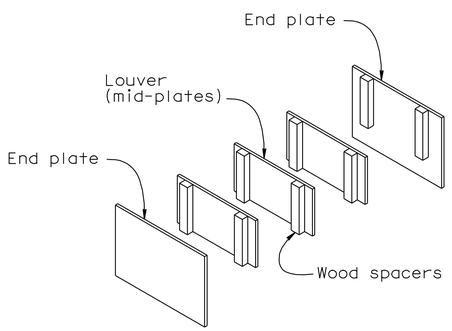

LOUVER ASSEMBLY
½"=1'-0"

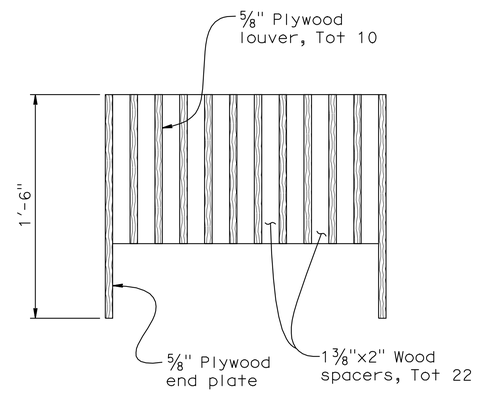

SECTION A-A
2"=1'-0"

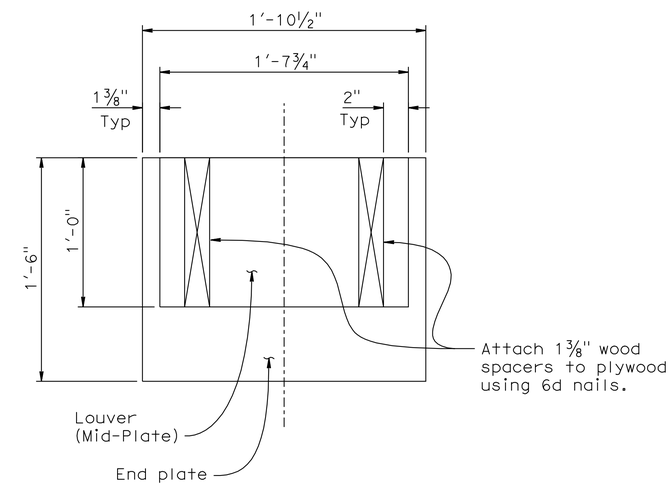

SECTION B-B
2"=1'-0"

NOTE:
All wood and plywood shall be Marine/exterior Grade.
All metal bolts and nails shall be galvanized.

Note:
The Contractor shall verify all controlling field dimensions before ordering or fabricating any material.

Fritz Hoffman
DESIGN OVERSIGHT Fritz Hoffman
Sept 8, 2009
SIGN OFF DATE

	BY	CHECKED
DESIGN	R. Fish	M. Stiller / R. Price
DETAILS	F. DeMarco	M. Stiller / R. Price
QUANTITIES	R. Fish	M. Stiller

PREPARED FOR THE STATE OF CALIFORNIA DEPARTMENT OF TRANSPORTATION

Stephen J. Mislinski
PROJECT ENGINEER

BRIDGE NO. 46-0267
POST MILE 52.6

KINGS RIVER BRIDGE (REPLACE)
BAT HABITAT (INTERNAL) NO. 2

DESIGN DETAIL SHEET (ENGLISH) (REV. 2/25/05)

ORIGINAL SCALE IN INCHES FOR REDUCED PLANS 0 1 2 3

CU 06249
EA 324501

DISREGARD PRINTS BEARING EARLIER REVISION DATES

REVISION DATES (PRELIMINARY STAGE ONLY) 01/12/09 04/22/09 05/13/09 05/27/09 09/01/09 1-12-10

SHEET 23 OF 30

FILE => 46-0267-ubh_xdet02.dgn

USERNAME => trright DATE PLOTTED => 04-AUG-2010 TIME PLOTTED => 15:08

DIST	COUNTY	ROUTE	POST MILES TOTAL PROJECT	SHEET No	TOTAL SHEETS
06	Tul,Fre	99	41.3/R53.9, R0.0/R1.2	679	687

Robert C Fish 1/13/10
REGISTERED CIVIL ENGINEER DATE

1-25-10
PLANS APPROVAL DATE

The State of California or its officers or agents shall not be responsible for the accuracy or completeness of electronic copies of this plan sheet.

REGISTERED PROFESSIONAL ENGINEER
Robert C. Fish
No. C39540
Exp. 12/31/2011
CIVIL
STATE OF CALIFORNIA

LIM & NASCIMENTO ENGINEERING
20 EMPIRE DRIVE
LAKE FOREST, CALIFORNIA 92630

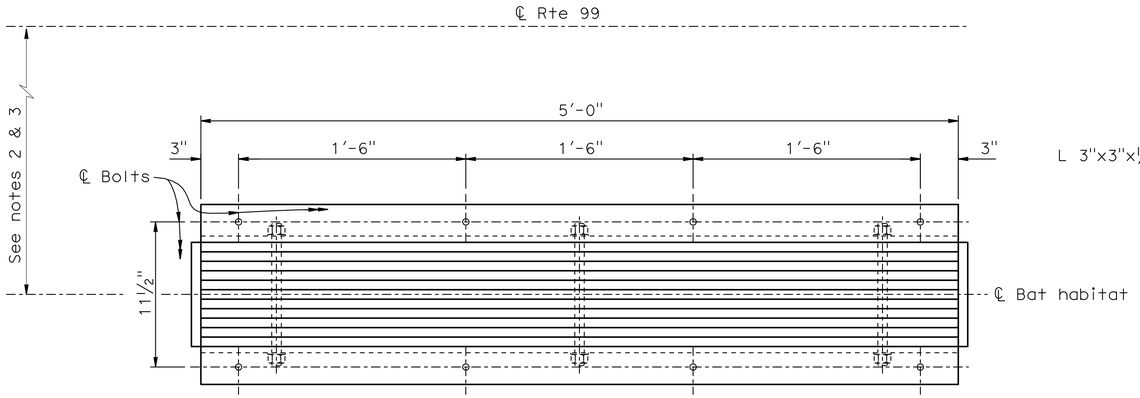

PLAN VIEW

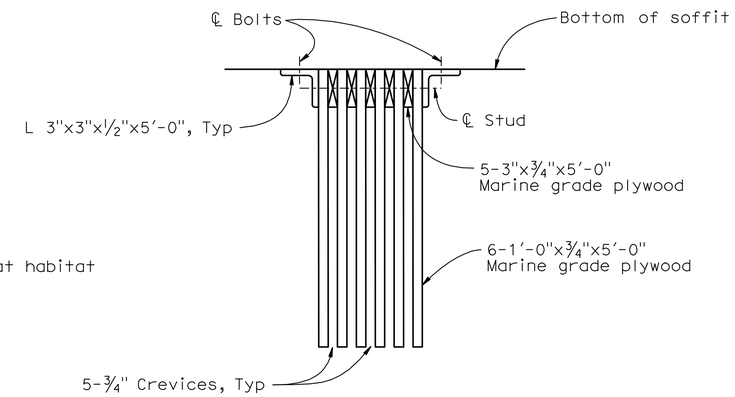

SECTION A-A

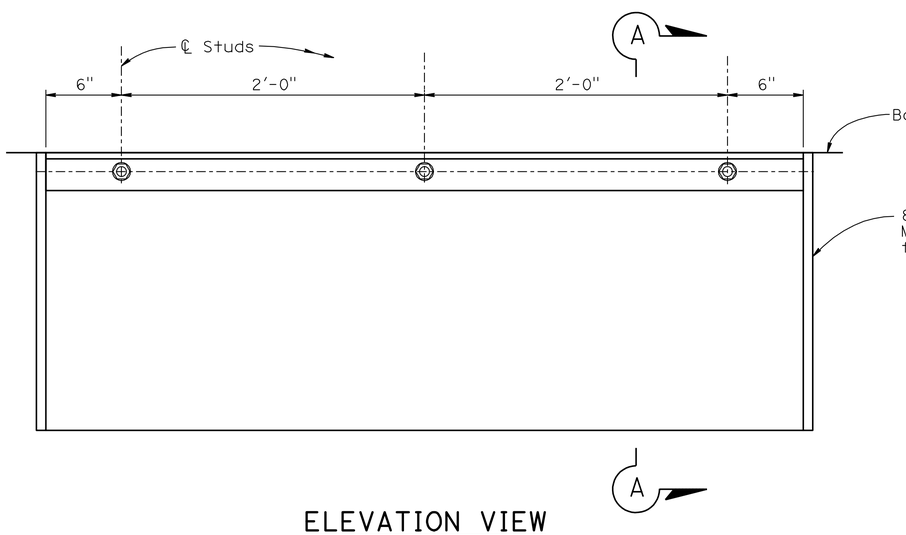

ELEVATION VIEW

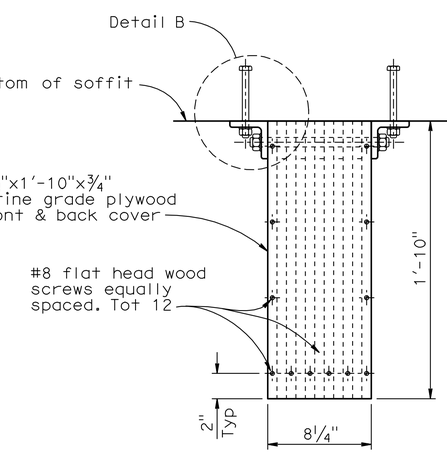

END VIEW
No Scale

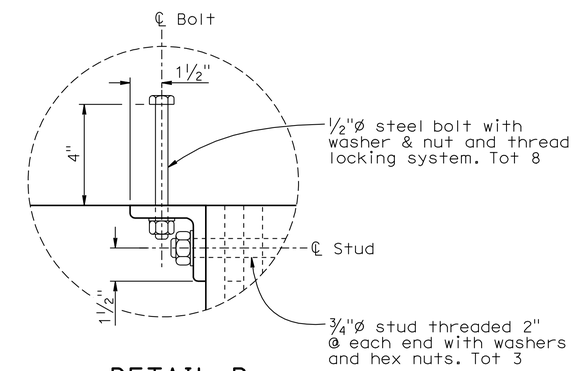

DETAIL B
No Scale

BAT HABITAT DETAILS
2"=1'-0"

NOTES:

1. All bolts and wood screws shall be galvanized.
2. Adjust bat habitat location as necessary to avoid slab deck main reinforcement.
3. ℄ bat habitat parallel to ℄ Rte 99.

Note:
The Contractor shall verify all controlling field dimensions before ordering or fabricating any material.

Fritz Hoffman
DESIGN OVERSIGHT Fritz Hoffman
Sept 8, 2009
SIGN OFF DATE

	BY	CHECKED
DESIGN	R. Fish	M. Stiller / R. Price
DETAILS	F. DeMarco	M. Stiller / R. Price
QUANTITIES	R. Fish	M. Stiller

PREPARED FOR THE STATE OF CALIFORNIA DEPARTMENT OF TRANSPORTATION

Stephen J. Mislinski
PROJECT ENGINEER

BRIDGE NO. 46-0267
POST MILE 52.6

KINGS RIVER BRIDGE (REPLACE)
BAT HABITAT (EXTERNAL)

DESIGN DETAIL SHEET (ENGLISH) (REV. 2/25/05)

ORIGINAL SCALE IN INCHES FOR REDUCED PLANS 0 1 2 3

CU 06249
EA 324501

DISREGARD PRINTS BEARING EARLIER REVISION DATES

REVISION DATES (PRELIMINARY STAGE ONLY): ~~01/06/09~~ ~~04/22/09~~ ~~05/13/09~~ ~~05/27/09~~ ~~09/01/09~~ 1-12-10

SHEET 24 OF 30

FILE => 46-0267-ubh_xdet03.dgn

USERNAME => rrright DATE PLOTTED => 04-AUG-2010 TIME PLOTTED => 15:08

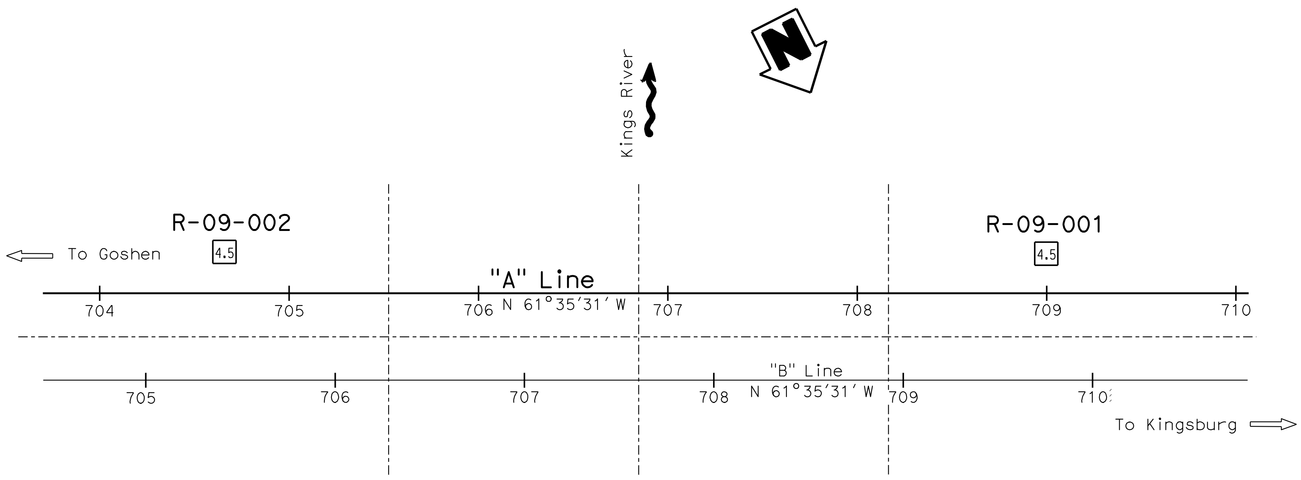

BENCH MARK

Found red disk at 25' Rt
Sta 709+50 "A" Line marked 160
and red disk at 36' Rt
Sta 704+18 "A" Line
just North of weather vane.

PLAN

1" = 40'

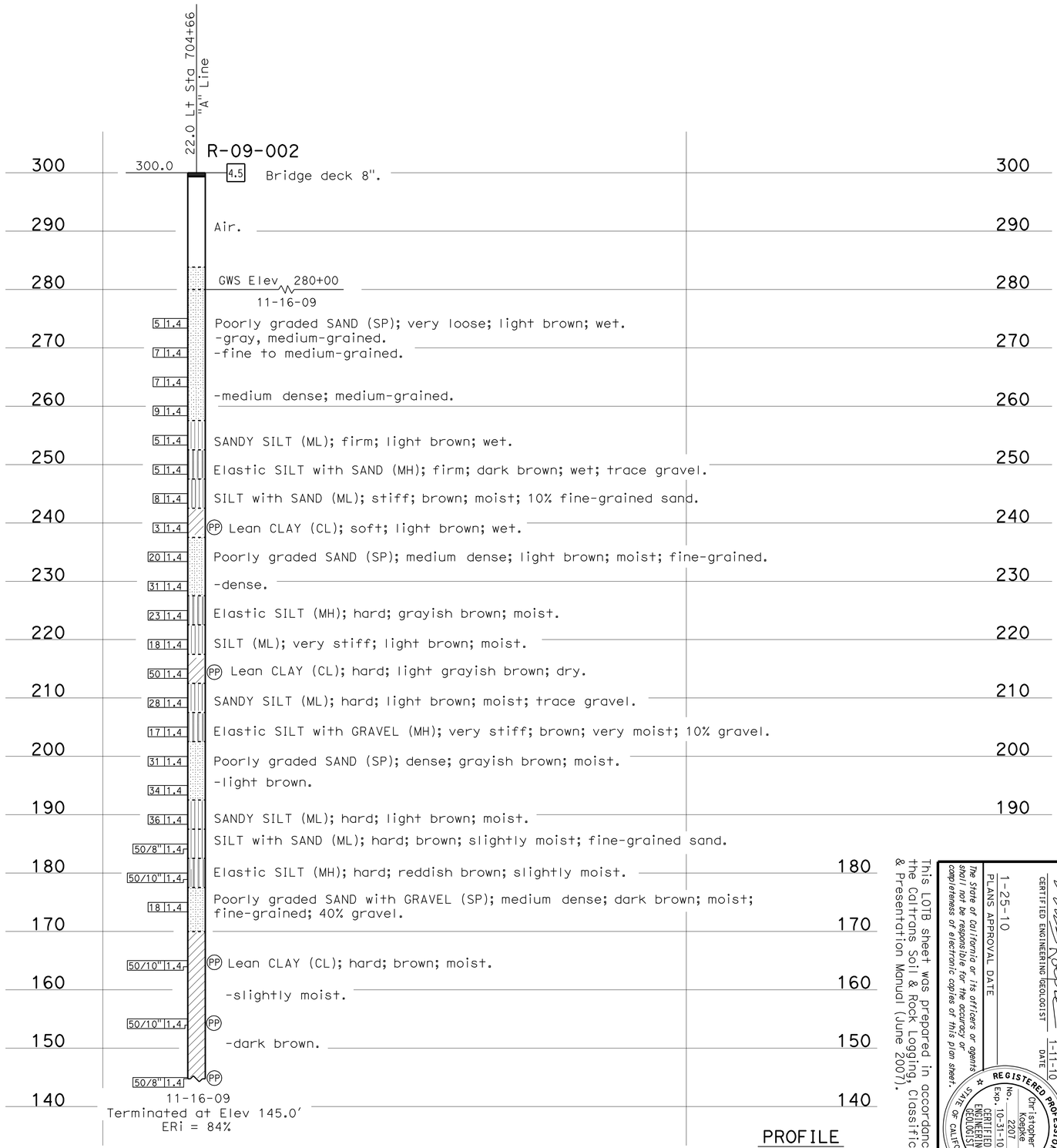

PROFILE

HOR. 1" = 10'
VER. 1" = 10'

This LOTB sheet was prepared in accordance with the Caltrans Soil & Rock Logging, Classification, & Presentation Manual (June 2007).

Kris Koepke
CERTIFIED ENGINEERING GEOLOGIST
1-11-10
DATE

1-25-10
PLANS APPROVAL DATE

REGISTERED PROFESSIONAL GEOLOGIST
Christopher W. Koepke
No. 2207
Exp. 10-31-10
CERTIFIED ENGINEERING GEOLOGIST
STATE OF CALIFORNIA

The State of California or its officers or agents shall not be responsible for the accuracy or completeness of electronic copies of this plan sheet.

DIST	COUNTY	ROUTE	POST MILES TOTAL PROJECT	SHEET NO	TOTAL SHEETS
06	Tul,Fre	99	41.3/R53.9, R0.0/R1.2	680	687

ENGINEERING SERVICES

FUNCTIONAL SUPERVISOR
NAME: Q. Huang

DRAWN BY: F. Nguyen 01/10
CHECKED BY: B. Badeker

GEOTECHNICAL SERVICES

FIELD INVESTIGATION BY:
C. Koepke

STATE OF CALIFORNIA
DEPARTMENT OF TRANSPORTATION

DIVISION OF ENGINEERING SERVICES
STRUCTURE DESIGN
DESIGN BRANCH 6

BRIDGE NO. 46-0267
POST MILES 52.6

KINGS RIVER BRIDGE (REPLACE)
LOG OF TEST BORINGS 1 OF 6

SHEET 25 OF 30

ORIGINAL SCALE IN INCHES FOR REDUCED PLANS
0 1 2 3

DISREGARD PRINTS BEARING EARLIER REVISION DATES

REVISION DATES

CU 06
EA 324501

FILE => 46-0267-Z1TB01.dgn

ODS CIVIL LOG OF TEST BORINGS SHEET

USERNAME => trrichf DATE PLOTTED => 04-AUG-2010 TIME PLOTTED => 15:08

DIST	COUNTY	ROUTE	POST MILES TOTAL PROJECT	SHEET No	TOTAL SHEETS
06	Tul,Fre	99	41.3/R53.9, R0.0/R1.2	681	687

CERTIFIED ENGINEERING GEOLOGIST — 1-11-10 DATE

REGISTERED PROFESSIONAL GEOLOGIST — Christopher W. Koepke — No. 2207 — Exp. 10-31-10 — CERTIFIED ENGINEERING GEOLOGIST — STATE OF CALIFORNIA

1-25-10
PLANS APPROVAL DATE

The State of California or its officers or agents shall not be responsible for the accuracy or completeness of electronic copies of this plan sheet.

This LOTB sheet was prepared in accordance with the Caltrans Soil & Rock Logging, Classification, & Presentation Manual (June 2007).

FOR PLAN VIEW, SEE
"LOG OF TEST BORINGS 1 OF 4"

21.1 Lt Sta 709+00
"A" Line

R-09-001

300.2

Elev	Depth	Description
	4.5	Bridge deck 8".
		Air.
		GWS Elev 280+00 11-16-09
	3 1.4	Poorly graded SAND (SP); very loose; light brown; wet.
		ORGANIC SOIL with SAND (OL/OH); very soft; very dark brown to black; wet; 15% clay.
	14 1.4	PP Lean CLAY with SAND (CL); very stiff; brown to dark grayish brown; wet; trace organics.
	16 1.4	Poorly graded SAND (SP); medium dense; grayish brown; moist; fine grained.
	22 1.4	PP Lean CLAY with SAND (CL); hard; dark brown; wet; 30% sand.
	18 1.4	Poorly graded SAND (SP); medium dense; grayish brown; wet; fine grained.
	14 1.4	-dark brown; fine to medium grained.
	18 1.4	-light brown; fine grained.
	16 1.4	PP Lean CLAY with SAND (CL); very stiff; light brown; moist; 25% sand.
	13 1.4	Poorly graded SAND (SP); medium dense; light brown; wet; fine grained; 10% clay.
	27 1.4	PP Lean CLAY (CL); hard; light brown; wet.
	3 1.4	PP -stiff; moist; 5% gravel.
	27 1.4	SANDY SILT (ML); dense; light brown; moist; 10% gravel.
	27 1.4	Poorly graded SAND (SP); dense; light brown; moist; fine grained.
	27 1.4	-grayish brown; very moist.
	27 1.4	-wet; medium grained.
	50/6" 1.4	SILT with SAND (ML); hard; light yellowish brown; dry.
	REF 1.4	
	REF 1.4	
	12 1.4	Elastic SILT with GRAVEL (MH); very stiff; light brown; moist; 10% gravel.
	19 1.4	SILT with SAND (ML); very stiff; light brown; moist.
	24 1.4	PP Lean CLAY (CL); hard; light grayish brown; moist.
		-light brown.
	25 1.4	PP

11-16-09
Terminated at Elev 143.7'
ERi = 84%

300 290 280 270 260 250 240 230 220 210 200 190 180 170 160 150 140

709+00 710+00

PROFILE
HOR. 1" = 10'
VER. 1" = 10'

ENGINEERING SERVICES	GEOTECHNICAL SERVICES	STATE OF CALIFORNIA DEPARTMENT OF TRANSPORTATION	DIVISION OF ENGINEERING SERVICES STRUCTURE DESIGN DESIGN BRANCH 6	BRIDGE NO. 46-0267 POST MILES 52.6	KINGS RIVER BRIDGE (REPLACE)
FUNCTIONAL SUPERVISOR	DRAWN BY: F. Nguyen 01/10	FIELD INVESTIGATION BY:			LOG OF TEST BORINGS 2 OF 6
NAME: Q. Huang	CHECKED BY: B. Badeker	C. Koepke			

OGS CIVIL LOG OF TEST BORINGS SHEET

ORIGINAL SCALE IN INCHES FOR REDUCED PLANS 0 1 2 3

CU 06
EA 324501

DISREGARD PRINTS BEARING EARLIER REVISION DATES → 01-11-10

REVISION DATES

SHEET 26 OF 30

FILE => 46-0267-zltb02.dgn

USERNAME => trrright DATE PLOTTED => 04-AUG-2010 TIME PLOTTED => 15:08

DIST	COUNTY	ROUTE	POST MILES TOTAL PROJECT	SHEET No	TOTAL SHEETS
06	Tul,Fre	99	41.3/R53.9, R0.0/R1.2	682	687

Chris Koepke 1-11-10
CERTIFIED ENGINEERING GEOLOGIST DATE

REGISTERED PROFESSIONAL GEOLOGIST
Christopher W. Koepke
No. 2207
Exp. 10-31-10
CERTIFIED ENGINEERING GEOLOGIST
STATE OF CALIFORNIA

1-25-10
PLANS APPROVAL DATE

The State of California or its officers or agents shall not be responsible for the accuracy or completeness of electronic copies of this plan sheet.

REFERENCE: CALTRANS SOIL & ROCK LOGGING, CLASSIFICATION, AND PRESENTATION MANUAL (JUNE 2007)

CEMENTATION

Description	Criteria
Weak	Crumbles or breaks with handling or little finger pressure.
Moderate	Crumbles or breaks with considerable finger pressure.
Strong	Will not crumble or break with finger pressure.

CONSISTENCY OF COHESIVE SOILS

Description	Unconfined Compressive Strength (tsf)	Pocket Penetrometer Measurement (tsf)	Torvane Measurement (tsf)	Field Approximation
Very Soft	< 0.25	< 0.25	< 0.12	Easily penetrated several inches by fist
Soft	0.25 to 0.50	0.25 to 0.50	0.12 to 0.25	Easily penetrated several inches by thumb
Medium Stiff	0.50 to 1.0	0.50 to 1.0	0.25 to 0.50	Penetrated several inches by thumb with moderate effort
Stiff	1 to 2	1 to 2	0.50 to 1.0	Readily indented by thumb but penetrated only with great effort
Very Stiff	2 to 4	2 to 4	1.0 to 2.0	Readily indented by thumbnail
Hard	> 4.0	> 4.0	> 2.0	Indented by thumbnail with difficulty

BOREHOLE IDENTIFICATION

Symbol	Hole Type	Description
Size	A	Auger Boring
Size	R P	Rotary drilled boring Rotary percussion boring (air)
Size	R	Rotary drilled diamond core
Size	HD HA	Hand driven (1-inch soil tube) Hand Auger
●	D	Dynamic Cone Penetration Boring
▲	CPT	Cone Penetration Test (ASTM D 5778-95)
⬚	O	Other

Note: Size in inches.

PLASTICITY OF FINE-GRAINED SOILS

Description	Criteria
Nonplastic	A 1/8-inch thread cannot be rolled at any water content.
Low	The thread can barely be rolled and the lump cannot be formed when drier than the plastic limit.
Medium	The thread is easy to roll and not much time is required to reach the plastic limit. The thread cannot be rerolled after reaching the plastic limit. The lump crumbles when drier than the plastic limit.
High	It takes considerable time rolling and kneading to reach the plastic limit. The thread can be rerolled several times after reaching the plastic limit. The lump can be formed without crumbling when drier than the plastic limit.

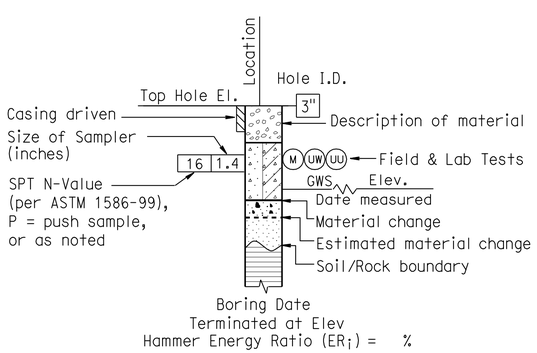

ROTARY BORING

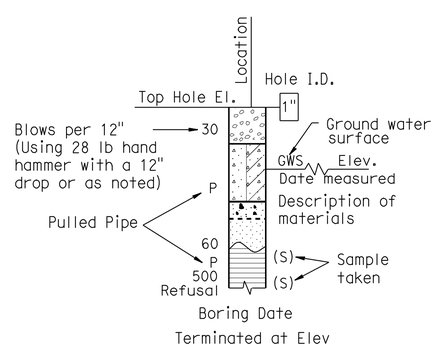

HAND BORING

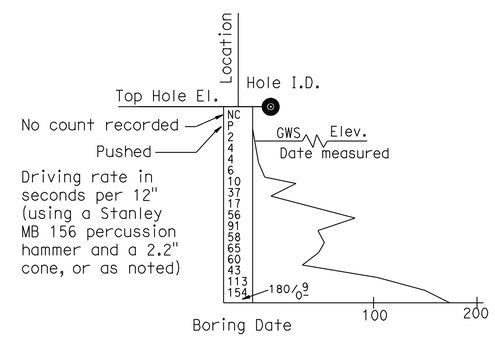

DYNAMIC CONE PENETRATION BORING

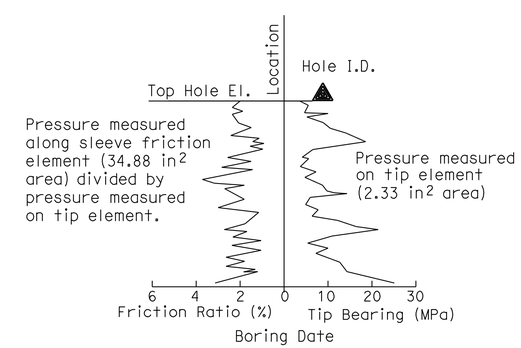

CONE PENETRATION TEST (CPT) SOUNDING

ENGINEERING SERVICES	GEOTECHNICAL SERVICES	STATE OF CALIFORNIA DEPARTMENT OF TRANSPORTATION	DIVISION OF ENGINEERING SERVICES STRUCTURE DESIGN DESIGN BRANCH 6	BRIDGE NO. 46-0267 POST MILE 52.6	KINGS RIVER BRIDGE (REPLACE) LOG OF TEST BORINGS 3 OF 6
	PREPARED BY: F. Nguyen 01/10				

GS LOTB SOIL LEGEND

ORIGINAL SCALE IN INCHES FOR REDUCED PLANS 0 1 2 3

CU 06
EA 324501

DISREGARD PRINTS BEARING EARLIER REVISION DATES 01-11-10

REVISION DATES

SHEET 27 OF 30

FILE => 46-0267-zltb03.dgn

USERNAME => trrichf DATE PLOTTED => 04-AUG-2010 TIME PLOTTED => 15:08

REFERENCE: CALTRANS SOIL & ROCK LOGGING, CLASSIFICATION, AND PRESENTATION MANUAL (JUNE 2007)

DIST	COUNTY	ROUTE	POST MILES TOTAL PROJECT	SHEET No	TOTAL SHEETS
06	Tul,Fre	99	41.3/R53.9, R0.0/R1.2	683	687

CERTIFIED ENGINEERING GEOLOGIST — 1-11-10 DATE

1-25-10
PLANS APPROVAL DATE

REGISTERED PROFESSIONAL GEOLOGIST — Christopher W. Koepke — No. 2207 — Exp. 10-31-10 — CERTIFIED ENGINEERING GEOLOGIST — STATE OF CALIFORNIA

The State of California or its officers or agents shall not be responsible for the accuracy or completeness of electronic copies of this plan sheet.

GROUP SYMBOLS AND NAMES

Graphic/Symbol	Group Names	Graphic/Symbol	Group Names
GW	Well-graded GRAVEL Well-graded GRAVEL with SAND	CL	Lean CLAY Lean CLAY with SAND Lean CLAY with GRAVEL SANDY lean CLAY SANDY lean CLAY with GRAVEL GRAVELLY lean CLAY GRAVELLY lean CLAY with SAND
GP	Poorly graded GRAVEL Poorly graded GRAVEL with SAND		
GW-GM	Well-graded GRAVEL with SILT Well-graded GRAVEL with SILT and SAND	CL-ML	SILTY CLAY SILTY CLAY with SAND SILTY CLAY with GRAVEL SANDY SILTY CLAY SANDY SILTY CLAY with GRAVEL GRAVELLY SILTY CLAY GRAVELLY SILTY CLAY with SAND
GW-GC	Well-graded GRAVEL with CLAY (or SILTY CLAY) Well-graded GRAVEL with CLAY and SAND (or SILTY CLAY and SAND)		
GP-GM	Poorly graded GRAVEL with SILT Poorly graded GRAVEL with SILT and SAND	ML	SILT SILT with SAND SILT with GRAVEL SANDY SILT SANDY SILT with GRAVEL GRAVELLY SILT GRAVELLY SILT with SAND
GP-GC	Poorly graded GRAVEL with CLAY (or SILTY CLAY) Poorly graded GRAVEL with CLAY and SAND (or SILTY CLAY and SAND)		
GM	SILTY GRAVEL SILTY GRAVEL with SAND	OL	ORGANIC lean CLAY ORGANIC lean CLAY with SAND ORGANIC lean CLAY with GRAVEL SANDY ORGANIC lean CLAY SANDY ORGANIC lean CLAY with GRAVEL GRAVELLY ORGANIC lean CLAY GRAVELLY ORGANIC lean CLAY with SAND
GC	CLAYEY GRAVEL CLAYEY GRAVEL with SAND		
GC-GM	SILTY, CLAYEY GRAVEL SILTY, CLAYEY GRAVEL with SAND	OL	ORGANIC SILT ORGANIC SILT with SAND ORGANIC SILT with GRAVEL SANDY ORGANIC SILT SANDY ORGANIC SILT with GRAVEL GRAVELLY ORGANIC SILT GRAVELLY ORGANIC SILT with SAND
SW	Well-graded SAND Well-graded SAND with GRAVEL		
SP	Poorly graded SAND Poorly graded SAND with GRAVEL	CH	Fat CLAY Fat CLAY with SAND Fat CLAY with GRAVEL SANDY fat CLAY SANDY fat CLAY with GRAVEL GRAVELLY fat CLAY GRAVELLY fat CLAY with SAND
SW-SM	Well-graded SAND with SILT Well-graded SAND with SILT and GRAVEL		
SW-SC	Well-graded SAND with CLAY (or SILTY CLAY) Well-graded SAND with CLAY and GRAVEL (or SILTY CLAY and GRAVEL)	MH	Elastic SILT Elastic SILT with SAND Elastic SILT with GRAVEL SANDY elastic SILT SANDY elastic SILT with GRAVEL GRAVELLY elastic SILT GRAVELLY elastic SILT with SAND
SP-SM	Poorly graded SAND with SILT Poorly graded SAND with SILT and GRAVEL		
SP-SC	Poorly graded SAND with CLAY (or SILTY CLAY) Poorly graded SAND with CLAY and GRAVEL (or SILTY CLAY and GRAVEL)	OH	ORGANIC fat CLAY ORGANIC fat CLAY with SAND ORGANIC fat CLAY with GRAVEL SANDY ORGANIC fat CLAY SANDY ORGANIC fat CLAY with GRAVEL GRAVELLY ORGANIC fat CLAY GRAVELLY ORGANIC fat CLAY with SAND
SM	SILTY SAND SILTY SAND with GRAVEL		
SC	CLAYEY SAND CLAYEY SAND with GRAVEL	OH	ORGANIC elastic SILT ORGANIC elastic SILT with SAND ORGANIC elastic SILT with GRAVEL SANDY ORGANIC elastic SILT SANDY ORGANIC elastic SILT with GRAVEL GRAVELLY ORGANIC elastic SILT GRAVELLY ORGANIC elastic SILT with SAND
SC-SM	SILTY, CLAYEY SAND SILTY, CLAYEY SAND with GRAVEL		
PT	PEAT	OL/OH	ORGANIC SOIL ORGANIC SOIL with SAND ORGANIC SOIL with GRAVEL SANDY ORGANIC SOIL SANDY ORGANIC SOIL with GRAVEL GRAVELLY ORGANIC SOIL GRAVELLY ORGANIC SOIL with SAND
	COBBLES COBBLES and BOULDERS BOULDERS		

FIELD AND LABORATORY TESTING

- (C) Consolidation (ASTM D 2435)
- (CL) Collapse Potential (ASTM D 5333)
- (CP) Compaction Curve (CTM 216)
- (CR) Corrosivity Testing (CTM 643, CTM 422, CTM 417)
- (CU) Consolidated Undrained Triaxial (ASTM D 4767)
- (DS) Direct Shear (ASTM D 3080)
- (EI) Expansion Index (ASTM D 4829)
- (M) Moisture Content (ASTM D 2216)
- (OC) Organic Content-% (ASTM D 2974)
- (P) Permeability (CTM 220)
- (PA) Particle Size Analysis (ASTM D 422)
- (PI) Plasticity Index (AASHTO T 90) Liquid Limit (AASHTO T 89)
- (PL) Point Load Index (ASTM D 5731)
- (PM) Pressure Meter
- (PP) Pocket Penetrometer
- (R) R-Value (CTM 301)
- (SE) Sand Equivalent (CTM 217)
- (SG) Specific Gravity (AASHTO T 100)
- (SL) Shrinkage Limit (ASTM D 427)
- (SW) Swell Potential (ASTM D 4546)
- (TV) Pocket Torvane
- (UC) Unconfined Compression-Soil (ASTM D 2166) Unconfined Compression-Rock (ASTM D 2938)
- (UU) Unconsolidated Undrained Triaxial (ASTM D 2850)
- (UW) Unit Weight (ASTM D 4767)
- (VS) Vane Shear (AASHTO T 223)

APPARENT DENSITY OF COHESIONLESS SOILS

Description	SPT N_{60} (Blows / 12 inches)
Very loose	0 - 4
Loose	5 - 10
Medium Dense	11 - 30
Dense	31 - 50
Very Dense	> 50

MOISTURE

Description	Criteria
Dry	Absence of moisture, dusty, dry to the touch
Moist	Damp but no visible water
Wet	Visible free water, usually soil is below water table

PERCENT OR PROPORTION OF SOILS

Description	Criteria
Trace	Particles are present but estimated to be less than 5%
Few	5 to 10%
Little	15 to 25%
Some	30 to 45%
Mostly	50 to 100%

PARTICLE SIZE

Description		Size
Boulder		> 12"
Cobble		3" to 12"
Gravel	Coarse	3/4" to 3"
	Fine	No. 4 to 3/4"
Sand	Coarse	No. 10 to No. 4
	Medium	No. 40 to No. 10
	Fine	No. 200 to No. 40

ENGINEERING SERVICES

GEOTECHNICAL SERVICES
PREPARED BY: F. Nguyen 01/10

STATE OF CALIFORNIA DEPARTMENT OF TRANSPORTATION

DIVISION OF ENGINEERING SERVICES STRUCTURE DESIGN
DESIGN BRANCH 6

BRIDGE NO. 46-0267
POST MILE 52.6

KINGS RIVER BRIDGE (REPLACE)
LOG OF TEST BORINGS 4 OF 6

GS LOTB SOIL LEGEND

ORIGINAL SCALE IN INCHES FOR REDUCED PLANS 0 1 2 3

CU 06
EA 324501

DISREGARD PRINTS BEARING EARLIER REVISION DATES 01-11-10

REVISION DATES

SHEET 28 OF 30

FILE => 46-0267-zltb04.dgn

USERNAME => trrichf DATE PLOTTED => 04-AUG-2010 TIME PLOTTED => 15:08

DIST.	COUNTY	ROUTE	POST MILES — TOTAL PROJECT	SHEET NO.	TOTAL SHEETS
06	Tul	99	52.1/52.9	42	55

Robert W. Reynolds #165
ENGINEERING GEOLOGIST — CERTIFIED ENGINEERING GEOLOGIST NUMBER

DATE APPROVED November 28, 1983

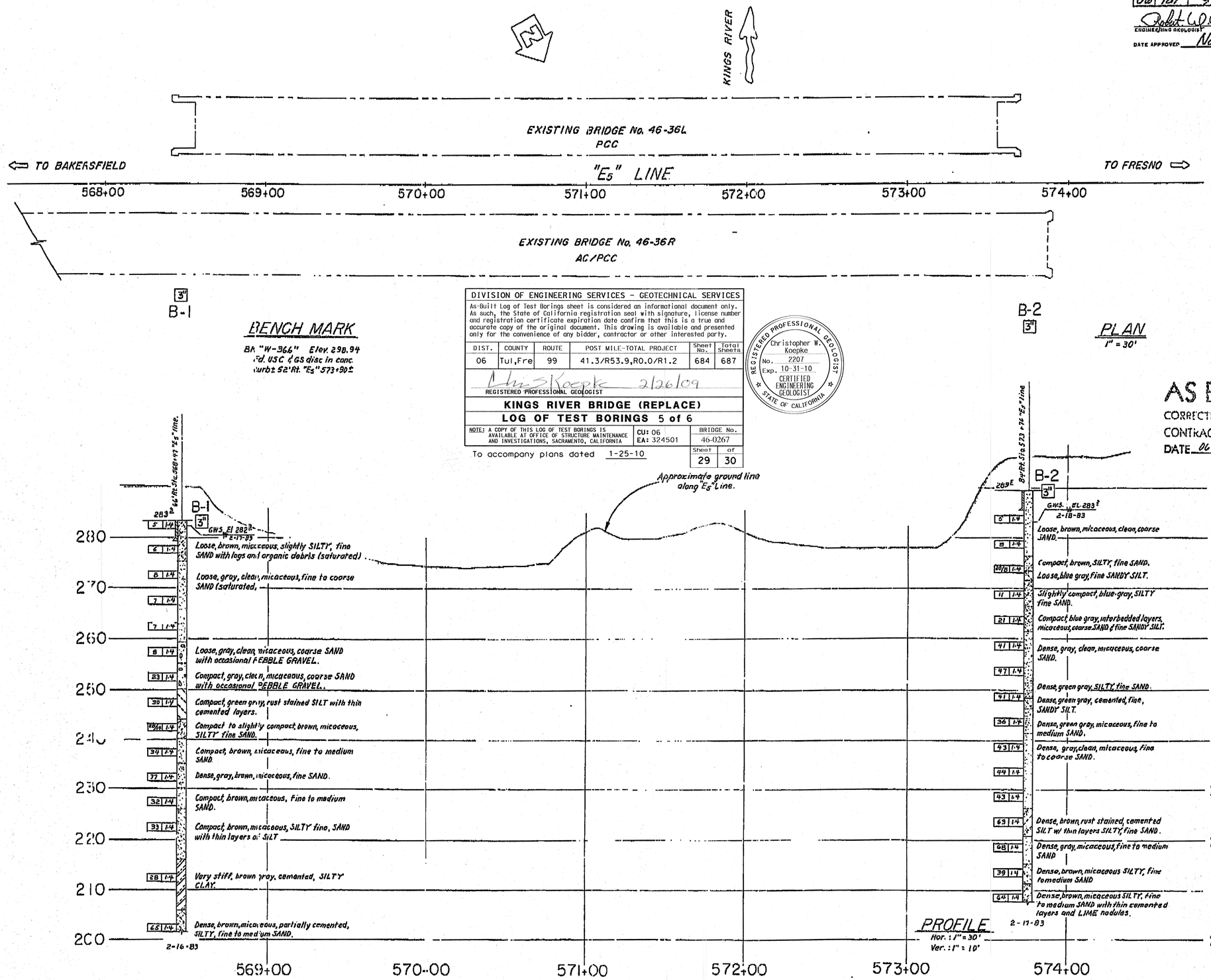

DIVISION OF ENGINEERING SERVICES - GEOTECHNICAL SERVICES					
As-Built Log of Test Borings sheet is considered an informational document only. As such, the State of California registration seal with signature, license number and registration certificate expiration date confirm that this is a true and accurate copy of the original document. This drawing is available and presented only for the convenience of any bidder, contractor or other interested party.					
DIST.	COUNTY	ROUTE	POST MILE-TOTAL PROJECT	Sheet No.	Total Sheets
06	Tul,Fre	99	41.3/R53.9,R0.0/R1.2	684	687
C. S. Koepke 2/26/09 REGISTERED PROFESSIONAL GEOLOGIST					
KINGS RIVER BRIDGE (REPLACE)					
LOG OF TEST BORINGS 5 of 6					
NOTE: A COPY OF THIS LOG OF TEST BORINGS IS AVAILABLE AT OFFICE OF STRUCTURE MAINTENANCE AND INVESTIGATIONS, SACRAMENTO, CALIFORNIA	CU: 06 EA: 324501		BRIDGE No. 46-0267		
To accompany plans dated 1-25-10				Sheet 29	of 30

REGISTERED PROFESSIONAL GEOLOGIST — Christopher W. Koepke — No. 2207 — Exp. 10-31-10 — CERTIFIED ENGINEERING GEOLOGIST — STATE OF CALIFORNIA

AS BUILT
CORRECTIONS BY R.K. ARIE
CONTRACT NO. 06-179504
DATE 06-25-85 02-20-86

ENGINEERING GEOLOGY AND TECHNICAL SERVICES BRANCH – TRANSPORTATION LABORATORY					
DRAWN BY I. Howell 3/83	R.C. Wilhelms 560 PROJECT GEOLOGIST C.E.G. NO.	Approval Recommended By: E. Wolcomson 271 ENGINEERING GEOLOGIST C.E.G. NO.	CHARGE UNIT	EXPEND. AUTHOR.	SPEC. DESIGN.
CHECKED BY R.C. Wilhelms					

State of CALIFORNIA DEPARTMENT OF TRANSPORTATION

STRUCTURES - DESIGN
E. N. Tolentino C 27503
PROJECT ENGINEER — REGISTERED CIVIL ENGINEER NO.

BRIDGE NO. 46-36R
POST MILE 52.5

KINGS RIVER BRIDGE (MODIFY)
LOG OF TEST BORINGS

FILENAME => 46-0267-z-1tb05.tif

ORIGINAL SCALE IN INCHES FOR REDUCED PLANS 0 1 2 3

CU 06102
WO 179501

Disregard prints bearing earlier revision dates

REVISION DATES (PRELIMINARY STAGE ONLY) 6/1/83

SHEET 15 OF 15

FED. ROAD DIV. No.	STATE	PROJ. No.	FISCAL YEAR	SHEET No.	TOTAL SHEETS
7	CAL.			124	124

of 14

DIST.	COUNTY	ROUTE	SECTION	SHEET No.	TOTAL SHEETS
27	Tul	4	E	13	13

March 19, 1956

AS BUILT PLANS
Contract No. 57-6vc2
Date Completed
Document No. 60001013

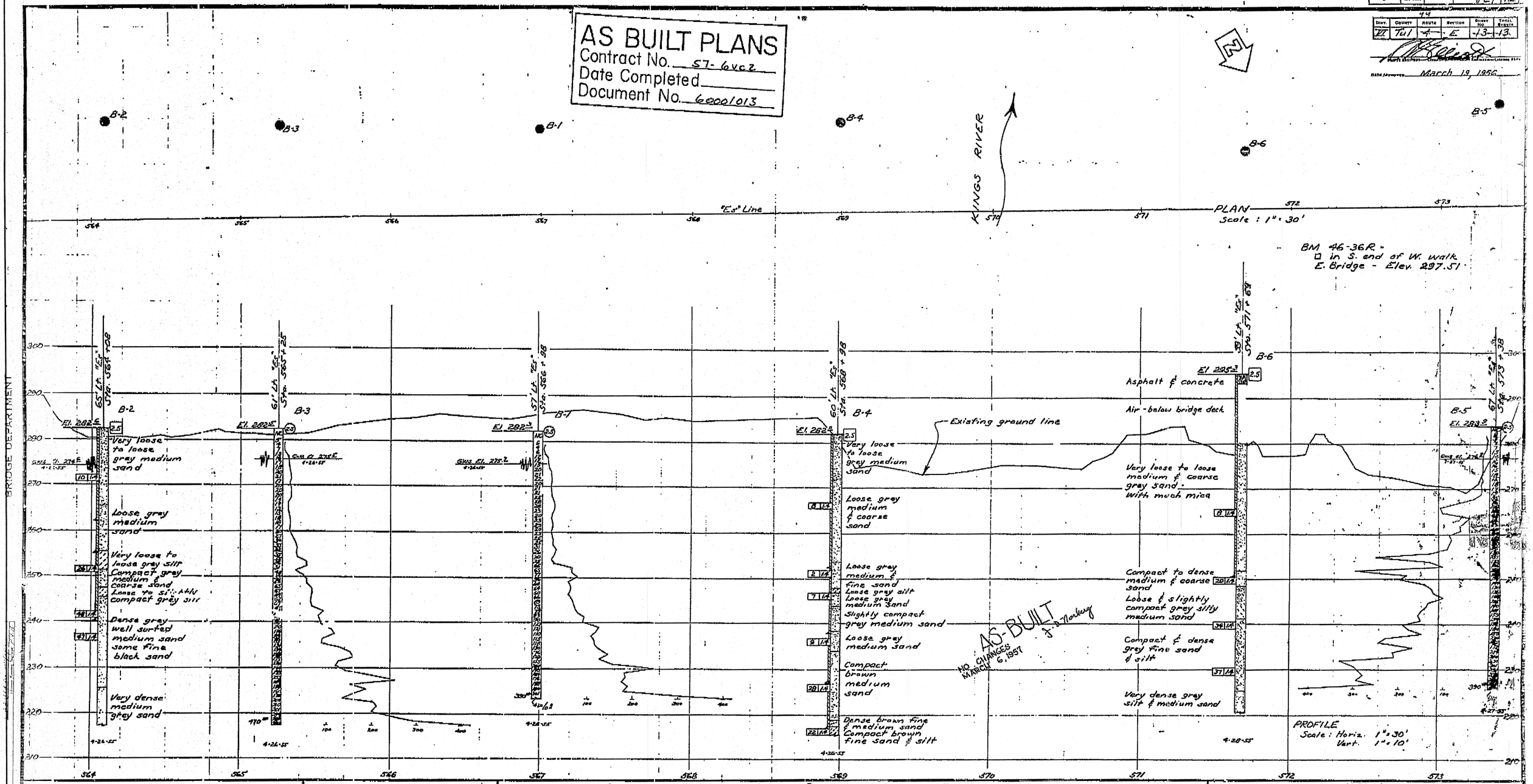

CLASSIFICATION OF MATERIAL BASED ON STANDARD GRADE SIZE LIMITS

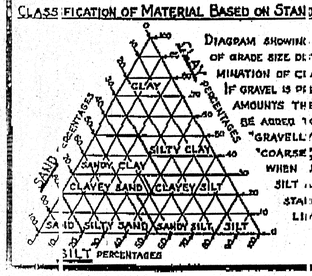

DIAGRAM SHOWING THE BASIS FOR ESTIMATES OF GRADE SIZE DISTRIBUTION USED IN DETERMINATION OF CLASS NAMES. IF GRAVEL IS PRESENT IN APPRECIABLE AMOUNTS THE TERM "GRAVELLY" MAY BE ADDED TO THE CLASS NAME, VIZ. "GRAVELLY SAND". THE TERMS "COARSE", "MEDIUM" AND "FINE" WHEN USED TO DESCRIBE SAND, SILT AND GRAVEL REFER TO STANDARD GRADE SIZE LIMITS.

LEGEND OF EARTH MATERIALS

- GRAVEL
- SAND
- SILT
- CLAY
- SANDY CLAY OR CLAYEY SAND
- SANDY SILT OR SILTY SAND
- SILTY CLAY OR CLAYEY SILT
- PEAT AND/OR ORGANIC MATTER
- FILL MATERIAL
- IGNEOUS ROCK
- SEDIMENTARY ROCK
- METAMORPHIC ROCK

LEGEND OF BORINGS

- PLAN OF ANY BORING
- PENETROMETER
- 2½" CONE PENETROMETER
- SAMPLER BORING (DRY)
- ROTARY BORING (WET)
- AUGER BORING (DRY)
- JET BORING
- CORE BORING
- TEST PIT

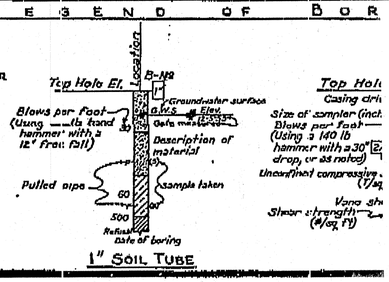

DIVISION OF ENGINEERING SERVICES - GEOTECHNICAL SERVICES

As-Built Log of Test Borings sheet is considered an informational document only. As such, the State of California registration seal with signature, license number and registration certificate expiration date confirm that this is a true and accurate copy of the original document. This drawing is available and presented only for the convenience of any bidder, contractor or other interested party.

DIST.	COUNTY	ROUTE	POST MILE-TOTAL PROJECT	Sheet No.	Total Sheets
06	Tul,Fre	99	41.3/R53.9,R0.0/R1.2	685	687

Chris Koepke 2/26/09
REGISTERED PROFESSIONAL GEOLOGIST

REGISTERED PROFESSIONAL GEOLOGIST
Christopher W. Koepke
No. 2207
Exp. 10-31-10
CERTIFIED ENGINEERING GEOLOGIST
STATE OF CALIFORNIA

KINGS RIVER BRIDGE (REPLACE)

LOG OF TEST BORINGS 6 of 6

NOTE: A COPY OF THIS LOG OF TEST BORINGS IS AVAILABLE AT OFFICE OF STRUCTURE MAINTENANCE AND INVESTIGATIONS, SACRAMENTO, CALIFORNIA

CU: 06
EA: 324501

BRIDGE No.	
46-0267	
Sheet	of
30	30

To accompany plans dated 1-25-10

NOTES

The contractor's attention is directed to Section 2, Article (c) of the Standard Specifications and to the Special Provisions accompanying this set of plans.

"Classification of earth material as shown on this sheet is based upon field inspection and is not to be construed to imply mechanical analysis."

STATE OF CALIFORNIA
DEPARTMENT OF PUBLIC WORKS
DIVISION OF HIGHWAYS

KINGS RIVER BRIDGE

LOG OF TEST BORINGS

SCALE: As Noted | BRIDGE 46-36 L | FILE E-1/0 | DRAWING 696-32

PHEL DRAWING NO. P- 696 96

BRIDGE DEPARTMENT

FILENAME => 46-0267-z-itb06.tif

DIST	COUNTY	ROUTE	POST MILES TOTAL PROJECT	SHEET No	TOTAL SHEETS
06	Tul,Fre	99	41.3/R53.9, R0.0/R1.2	686	687

Robert A. Price 9/1/09
REGISTERED CIVIL ENGINEER DATE

1-25-10
PLANS APPROVAL DATE

The State of California or its officers or agents shall not be responsible for the accuracy or completeness of electronic copies of this plan sheet.

REGISTERED PROFESSIONAL ENGINEER Robert A. Price No. C56855 Exp. 06/30/2011 CIVIL STATE OF CALIFORNIA

LIM & NASCIMENTO ENGINEERING
20 EMPIRE DRIVE
LAKE FOREST, CALIFORNIA 92630

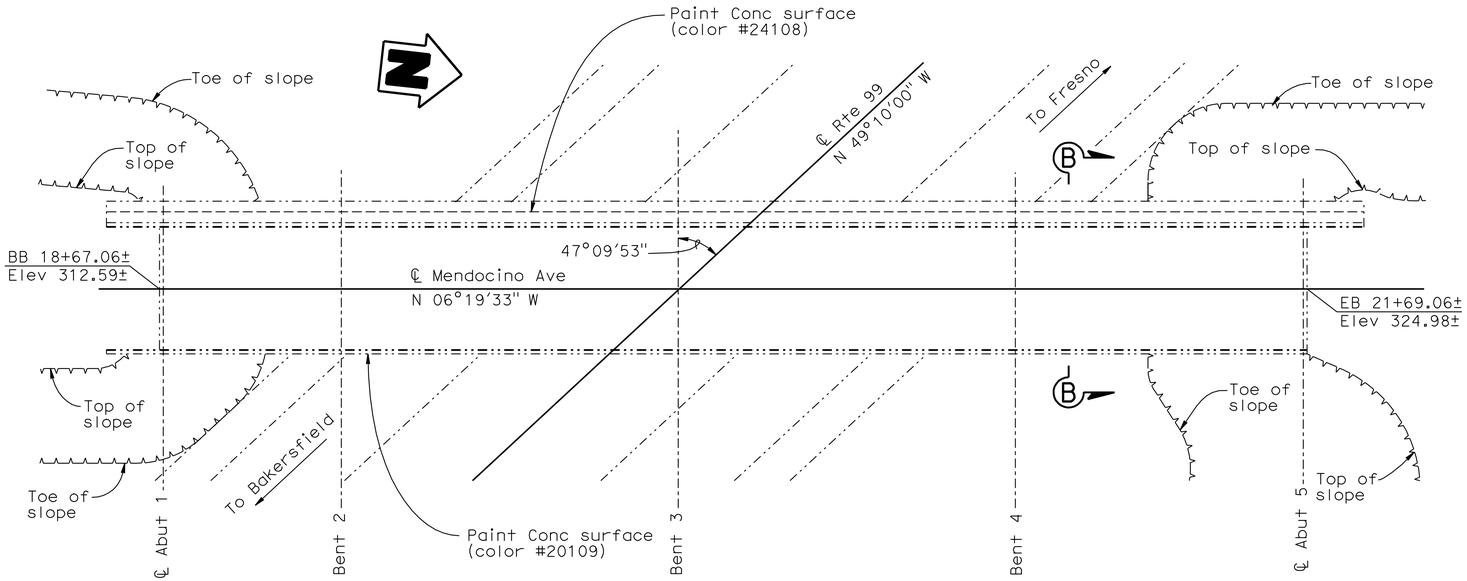

MENDOCINO AVE. OVERCROSSING
BR. NO. 46-0199 RTE 99 P.M. 53.8

1"=20'

QUANTITIES

PREPARE AND PAINT CONCRETE 705 SQFT

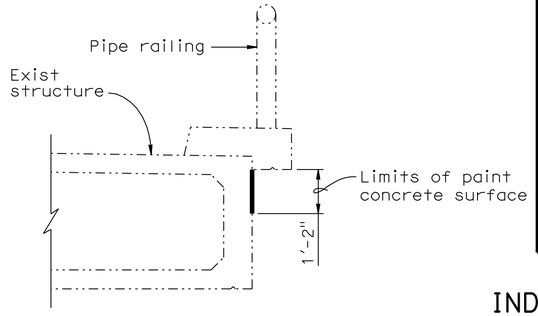

SECTION A-A

½"=1'-0"

INDEX TO PLANS

SHEET NO.	TITLE
1.	PAINT CONCRETE SURFACE GENERAL PLAN NO. 1
2.	PAINT CONCRETE SURFACE GENERAL PLAN NO. 2

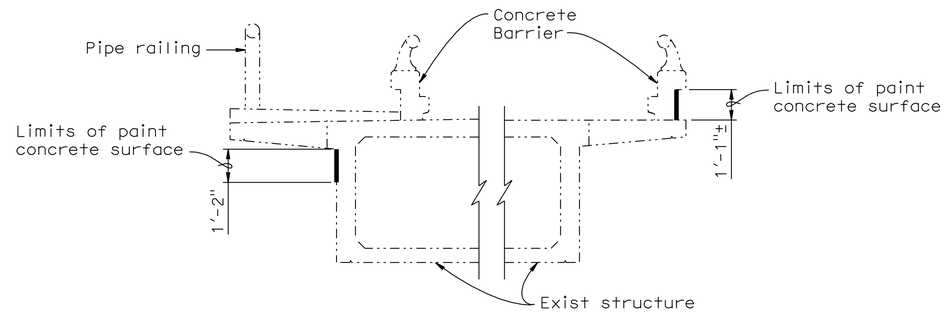

SECTION B-B

⅜"=1'-0"

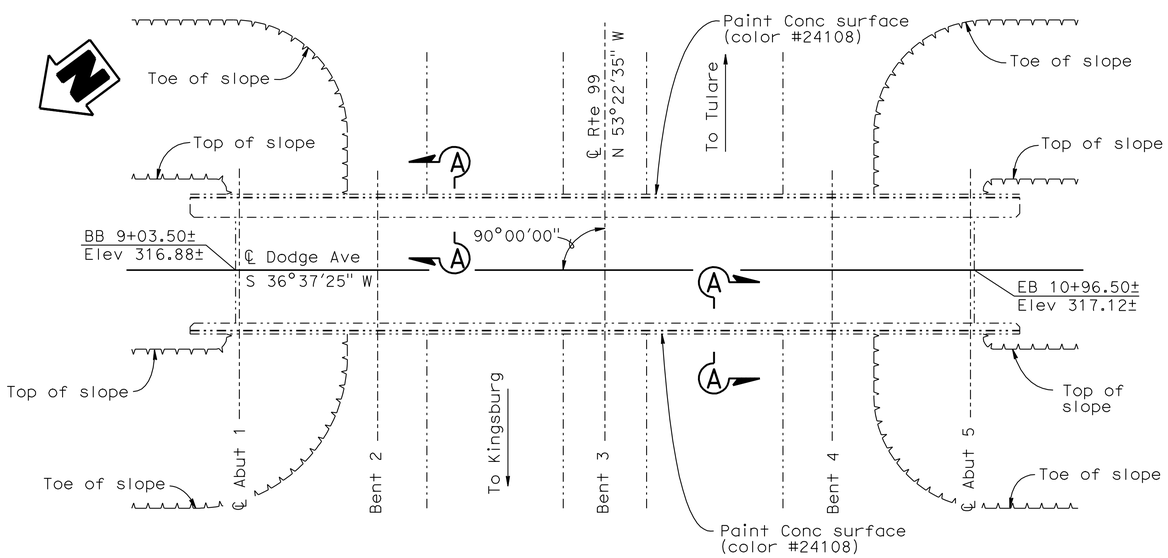

DODGE AVE. OVERCROSSING
BR. NO. 46-0177 RTE 99 P.M. 51.8

1"=20'

QUANTITIES

PREPARE AND PAINT CONCRETE 470 SQFT

Note:
The Contractor shall verify all controlling field dimensions before ordering or fabricating any material.

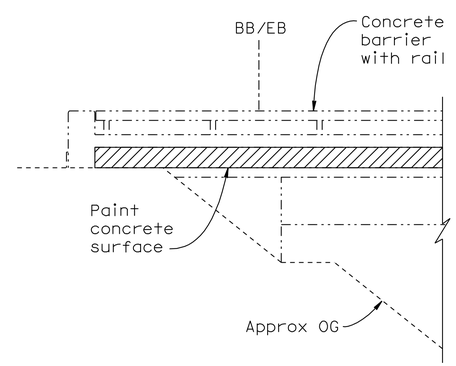

ELEVATION DETAIL 1
PAINTED BARRIER

No Scale

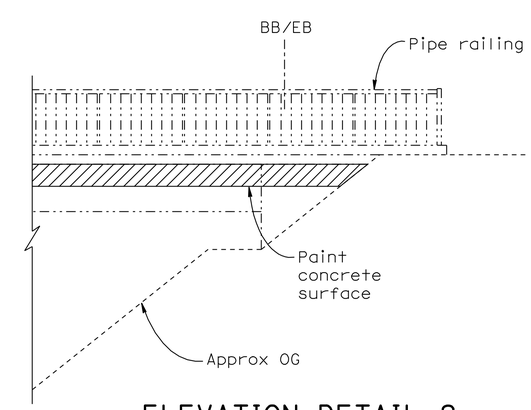

ELEVATION DETAIL 2
PAINTED GIRDER

No Scale

Fritz Hoffman
DESIGN OVERSIGHT Fritz Hoffman
Sept 8, 2009
SIGN OFF DATE

	BY	CHECKED
DESIGN	M. Stiller	T. Dudley
DETAILS	F. DeMarco	T. Dudley
QUANTITIES	M. Stiller	R. Price

PREPARED FOR THE STATE OF CALIFORNIA DEPARTMENT OF TRANSPORTATION

Stephen J. Mislinski
PROJECT ENGINEER

BRIDGE NO. VARIES
POST MILE VARIES

ROUTE 99 OVERCROSSING
PAINT CONCRETE SURFACE PLAN NO. 1

DESIGN DETAIL SHEET (ENGLISH) (REV. 2/25/05)

ORIGINAL SCALE IN INCHES FOR REDUCED PLANS 0 1 2 3

CU 06249
EA 324501

DISREGARD PRINTS BEARING EARLIER REVISION DATES
REVISION DATES (PRELIMINARY STAGE ONLY) 04/28/09 05/27/09 09/01/09

SHEET 1 OF 2

FILE => 46-u-consurf_det01.dgn

USERNAME => trrright DATE PLOTTED => 04-AUG-2010 TIME PLOTTED => 15:09

DIST	COUNTY	ROUTE	POST MILES TOTAL PROJECT	SHEET No	TOTAL SHEETS
06	Tul,Fre	99	41.3/R53.9, R0.0/R1.2	687	687

Robert A. Price 9/1/09
REGISTERED CIVIL ENGINEER DATE

1-25-10
PLANS APPROVAL DATE

The State of California or its officers or agents shall not be responsible for the accuracy or completeness of electronic copies of this plan sheet.

REGISTERED PROFESSIONAL ENGINEER Robert A. Price No. C56855 Exp. 06/30/2011 CIVIL STATE OF CALIFORNIA

LIM & NASCIMENTO ENGINEERING
20 EMPIRE DRIVE
LAKE FOREST, CALIFORNIA 92630

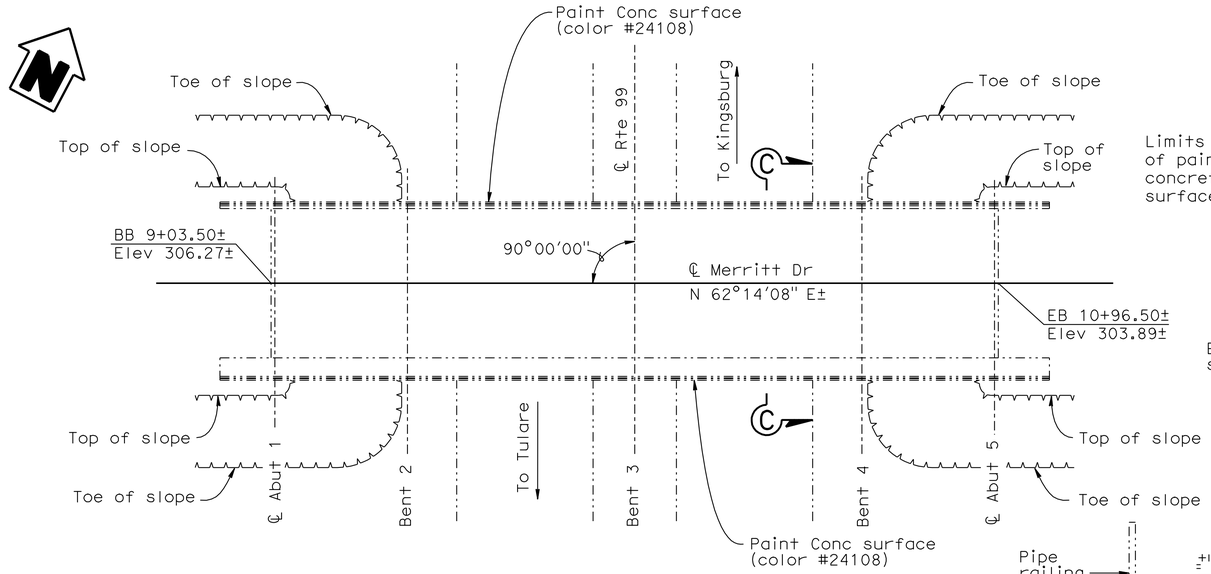

MERRITT DRIVE OVERCROSSING
BR. NO. 46-0176 RTE 99 P.M. 48.7

1"=20'

QUANTITIES

PREPARE AND PAINT CONCRETE 705 SQFT

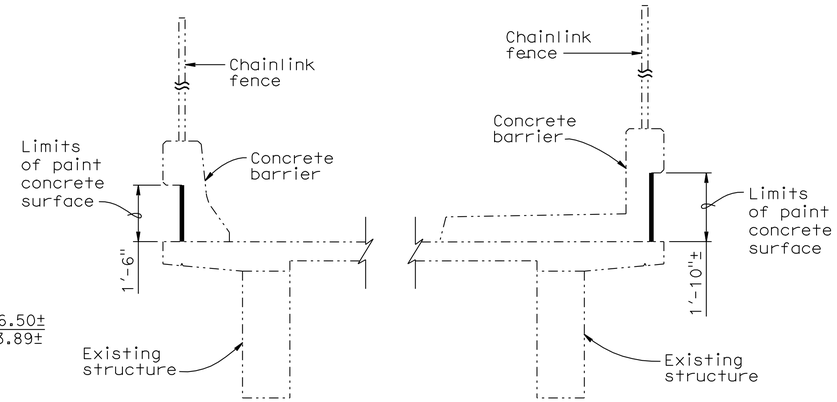

SECTION C-C

½"=1'-0"

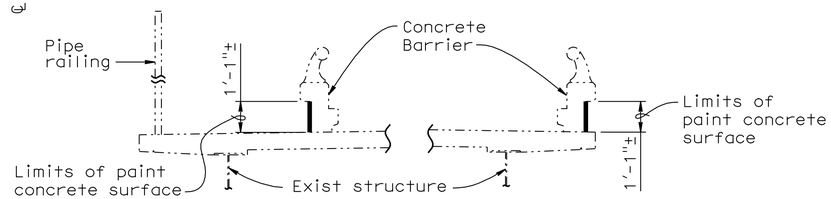

SECTION D-D

⅜"=1'-0"

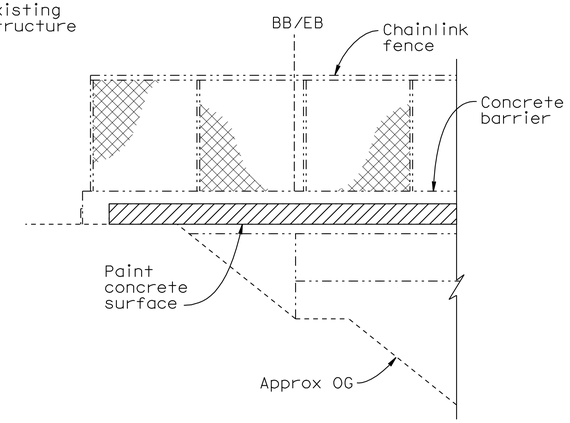

ELEVATION DETAIL 3
PAINTED BARRIER

No Scale

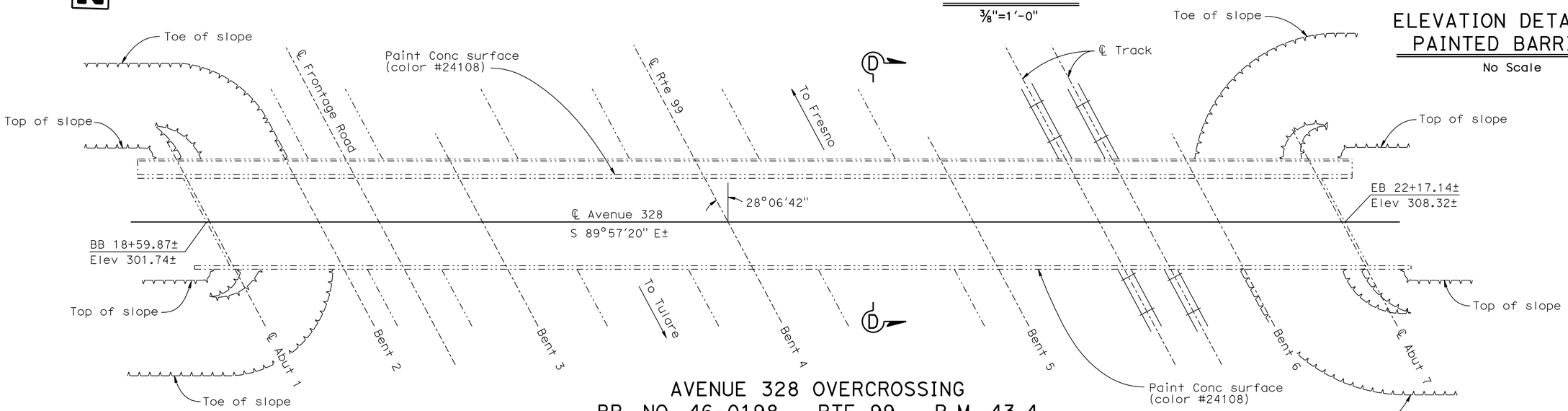

AVENUE 328 OVERCROSSING
BR. NO. 46-0198 RTE 99 P.M. 43.4

1"=20'

QUANTITIES

PREPARE AND PAINT CONCRETE 970 SQFT

Note:
The Contractor shall verify all controlling field dimensions before ordering or fabricating any material.

Fritz Hoffman
DESIGN OVERSIGHT Fritz Hoffman
Sept 8, 2009
SIGN OFF DATE

	BY	CHECKED
DESIGN	M. Stiller	T. Dudley
DETAILS	F. DeMarco	T. Dudley
QUANTITIES	M. Stiller	R. Price

PREPARED FOR THE STATE OF CALIFORNIA DEPARTMENT OF TRANSPORTATION

Stephen J. Mislinski
PROJECT ENGINEER

BRIDGE NO. VARIES
POST MILE VARIES

ROUTE 99 OVERCROSSING
PAINT CONCRETE SURFACE PLAN NO. 2

DESIGN DETAIL SHEET (ENGLISH) (REV. 2/25/05)

ORIGINAL SCALE IN INCHES FOR REDUCED PLANS 0 1 2 3

CU 06249
EA 324501

DISREGARD PRINTS BEARING EARLIER REVISION DATES

REVISION DATES (PRELIMINARY STAGE ONLY) 04/28/09 05/27/09 09/01/09

SHEET 2 OF 2

FILE => 46-u-consurf_det02.dgn

USERNAME => trrright DATE PLOTTED => 04-AUG-2010 TIME PLOTTED => 15:09