Dist	COUNTY	ROUTE	POST MILES TOTAL PROJECT	SHEET No.	TOTAL SHEETS
06	Tul,Fre	99	41.3/R53.9, R0.0/R1.2	2	687

REGISTERED CIVIL ENGINEER 9/30/09 DATE

1-25-10
PLANS APPROVAL DATE

REGISTERED PROFESSIONAL ENGINEER MICHAEL D. FOSTER No. 62493 Exp. 9/30/11 CIVIL STATE OF CALIFORNIA

THE STATE OF CALIFORNIA OR ITS OFFICERS OR AGENTS SHALL NOT BE RESPONSIBLE FOR THE ACCURACY OR COMPLETENESS OF SCANNED COPIES OF THIS PLAN SHEET.

DESIGN DESIGNATION (ROUTE 99)

DESIGN PERIOD	2010-2040	2010-2050
ADT (2010)	57,000	57,000
ADT (2040)	97,500	
ADT (2050)		117,500
DHV (2040)	9,800	
DHV (2050)		11,700
D	67%	67%
T (DH)	17%	17%
T (ADT)	35%	35%
TI	17.5	18.5

NOTES:

1. DIMENSIONS OF THE PAVEMENT STRUCTURES (STRUCTURAL SECTIONS) ARE SUBJECT TO TOLERANCES SPECIFIED IN THE STANDARD SPECIFICATIONS.
2. SUPERELEVATION AS SHOWN OR AS DIRECTED BY THE ENGINEER.
3. CONSTRUCT RUMBLE STRIPS ON ALL MEDIAN AND OUTSIDE SHOULDERS.
4. SHOULDERS NARROW AT Exist OVERCROSSINGS (MERRITT DRIVE, Ave 384, AND MENDOCINO Ave)
5. SEE LAYOUT PLANS FOR LOCATIONS OF TREES AND DUAL CONCRETE BARRIER TRANSITIONS.
6. AT LOCATIONS WHERE OFFSET FROM ES TO FACE OF CONCRETE BARRIER IS 8′ OR LESS, PAVE THE AREA WITH 0.33′ HMA. SEE CONSTRUCTION DETAILS.
7. ALL SIDE SLOPES SHALL BE CONSTRUCTED AT 4:1 OR FLATTER UON.
8. SEE CONSTRUCTION DETAIL FOR IMPORTED MATERIAL (SHOULDER BACKING).
9. FOR ACCURATE RIGHT OF WAY AND ACCESS DATA, CONTACT RIGHT OF WAY ENGINEERING AT THE DISTRICT OFFICE.
10. MEDIAN CONCRETE BARRIER HMA PAD SHALL EXTEND 1′ INTO UNPAVED PORTIONS OF THE MEDIAN AS SHOWN.

2

ABBREVIATIONS

SAMI-F	STRESS ABSORBING MEMBRANE INTERLAYER (FABRIC)
RHMA	RUBBERIZED HOT MIXED ASPHALT

Exist SHOULDER STRUCTURAL SECTIONS

2

A	Var 0.13′ TO 0.25′ AC 0.33′ AB
B	0.25′ AC 0.33′ AB
C	0.4′ AC 0.75 AB Var 0 TO 0.8′ AS
D	0.3′ AC Var 0 TO 0.4′ AB
E	Var 0.12′ TO 0.25′ AC Var 0.27′ TO 0.42′ CTB
F	0.25′ AC 0.35′ CTB
G	0.25′ AC/SAMI-F/0.1′ AC 0.4′ AB
H	0.6′ AC 0.5′ AB
I	0.7′ AC 1.1′ AB

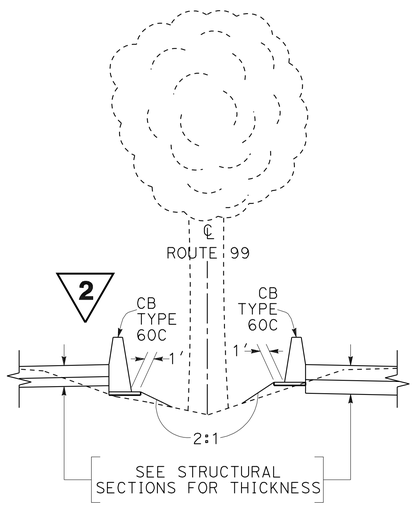

DUAL CONCRETE BARRIERS AT TREE LOCATIONS (SEE NOTE 5)

SOUTHBOUND

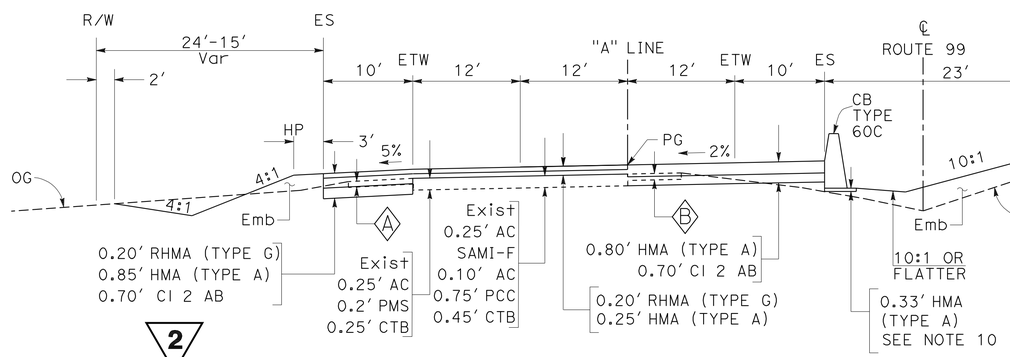

Sta 145+77.37 TO Sta 260+44.37 "A" LINE

NORTHBOUND

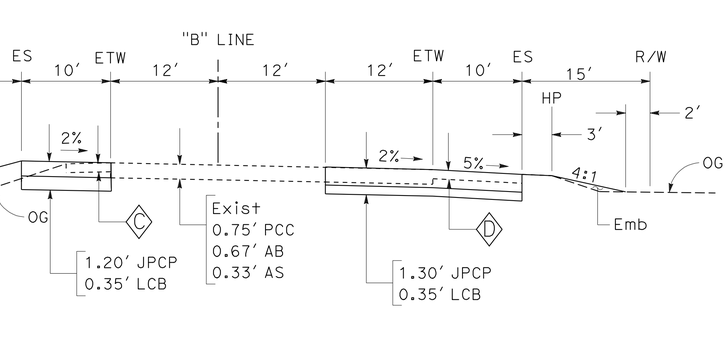

Sta 146+08.04 TO Sta 260+75.00 "B" LINE

ROUTE 99

SOUTHBOUND

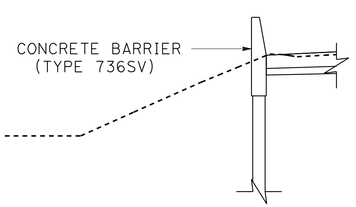

Sta 106+69.98 TO Sta 109+50.00 "A" LINE

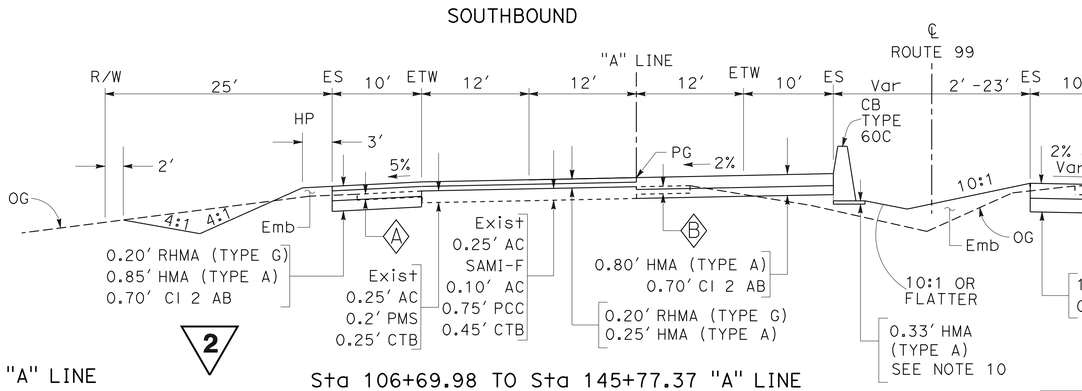

Sta 106+69.98 TO Sta 145+77.37 "A" LINE

NORTHBOUND

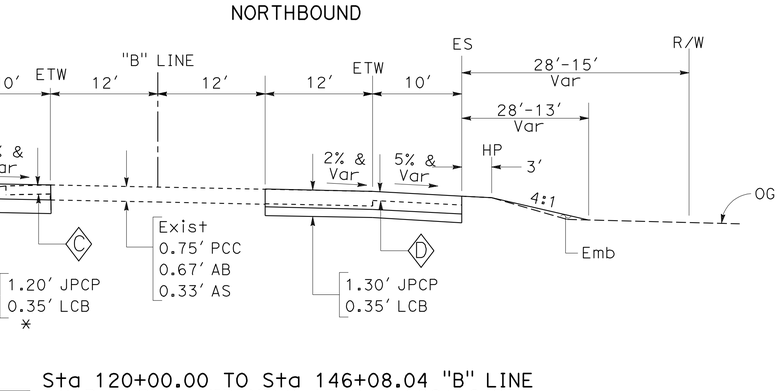

Sta 120+00.00 TO Sta 146+08.04 "B" LINE
* Beg Shld WIDENING AT Sta 106+19.25

ROUTE 99

REVISED PER ADDENDUM No. 2 DATED OCTOBER 14, 2010

TYPICAL CROSS SECTIONS

NO SCALE

X-1

STATE OF CALIFORNIA - DEPARTMENT OF TRANSPORTATION
Caltrans®
DESIGN
FUNCTIONAL SUPERVISOR: JUN XU
CALCULATED-DESIGNED BY: SUKHJINDER SINGH
CHECKED BY: MICHAEL FOSTER
REVISED BY
DATE REVISED

LAST REVISION 08-24-09
DATE PLOTTED => 13-OCT-2010
TIME PLOTTED => 15:42

Dist	COUNTY	ROUTE	POST MILES TOTAL PROJECT	SHEET No.	TOTAL SHEETS
06	Tul,Fre	99	41.3/R53.9, R0.0/R1.2	3	687

REGISTERED CIVIL ENGINEER 9/30/09 DATE

1-25-10
PLANS APPROVAL DATE

REGISTERED PROFESSIONAL ENGINEER MICHAEL D. FOSTER No. 62493 Exp. 9/30/11 CIVIL STATE OF CALIFORNIA

THE STATE OF CALIFORNIA OR ITS OFFICERS OR AGENTS SHALL NOT BE RESPONSIBLE FOR THE ACCURACY OR COMPLETENESS OF SCANNED COPIES OF THIS PLAN SHEET.

NOTE: FOR ACCURATE RIGHT OF WAY AND ACCESS DATA, CONTACT RIGHT OF WAY ENGINEERING AT THE DISTRICT OFFICE.

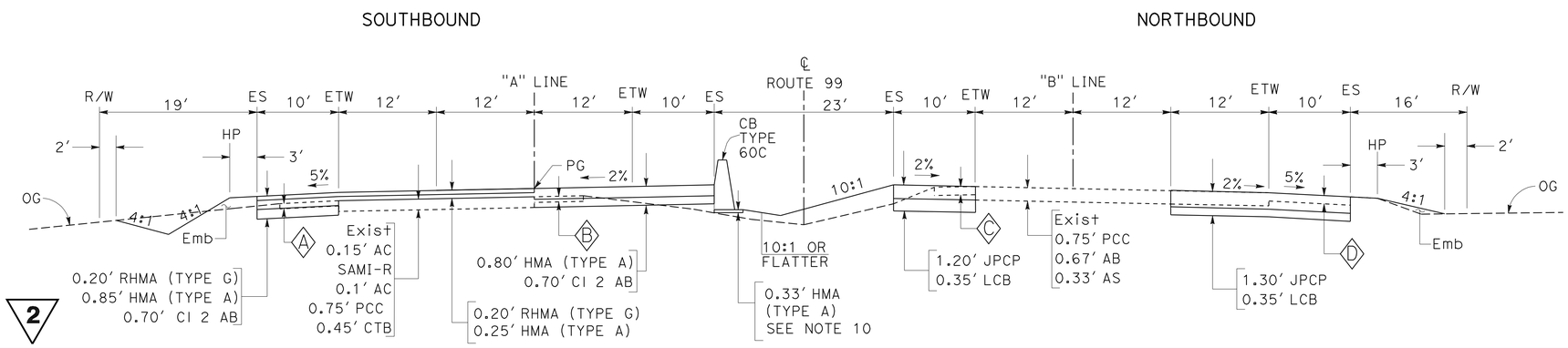

Sta 297+76.47 TO Sta 402+50.00 "A" LINE

Sta 297+89.27 TO Sta 402+50.00 "B" LINE

ROUTE 99

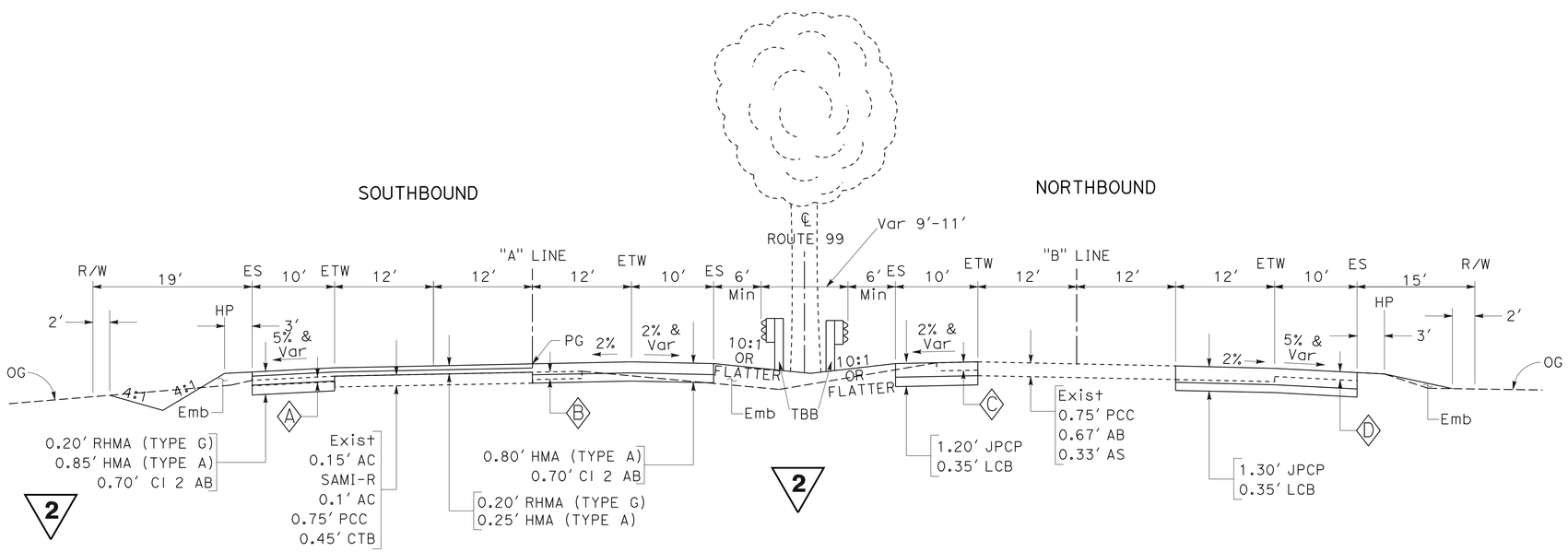

Sta 260+44.37 TO Sta 297+76.47 "A" LINE

Sta 260+75.00 TO STA 297+89.27 "B" LINE

ROUTE 99

REVISED PER ADDENDUM No. 2 DATED OCTOBER 14, 2010

TYPICAL CROSS SECTIONS

NO SCALE

X-2

STATE OF CALIFORNIA - DEPARTMENT OF TRANSPORTATION
Caltrans
DESIGN
FUNCTIONAL SUPERVISOR: JUN XU
CALCULATED-DESIGNED BY: SUKHJINDER SINGH
CHECKED BY: MICHAEL FOSTER
REVISED BY
DATE REVISED

LAST REVISION 08-24-09
DATE PLOTTED => 13-OCT-2010
TIME PLOTTED => 15:42

Dist	COUNTY	ROUTE	POST MILES TOTAL PROJECT	SHEET No.	TOTAL SHEETS
06	Tul,Fre	99	41.3/R53.9, R0.0/R1.2	4	687

REGISTERED CIVIL ENGINEER 9/30/09 DATE

1-25-10
PLANS APPROVAL DATE

REGISTERED PROFESSIONAL ENGINEER MICHAEL D. FOSTER No. 62493 Exp. 9/30/11 CIVIL STATE OF CALIFORNIA

THE STATE OF CALIFORNIA OR ITS OFFICERS OR AGENTS SHALL NOT BE RESPONSIBLE FOR THE ACCURACY OR COMPLETENESS OF SCANNED COPIES OF THIS PLAN SHEET.

NOTE: FOR ACCURATE RIGHT OF WAY AND ACCESS DATA, CONTACT RIGHT OF WAY ENGINEERING AT THE DISTRICT OFFICE.

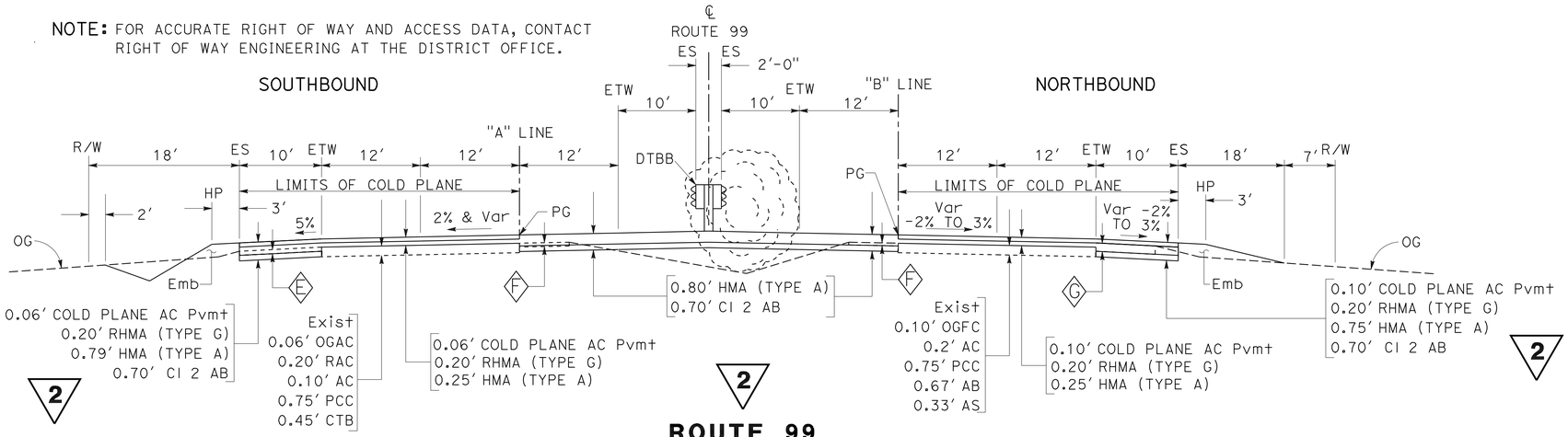

Sta 524+26.55 TO Sta 525+69.86 "A" LINE

ROUTE 99

Sta 524+48.59 TO Sta 526+63.88 "B" LINE

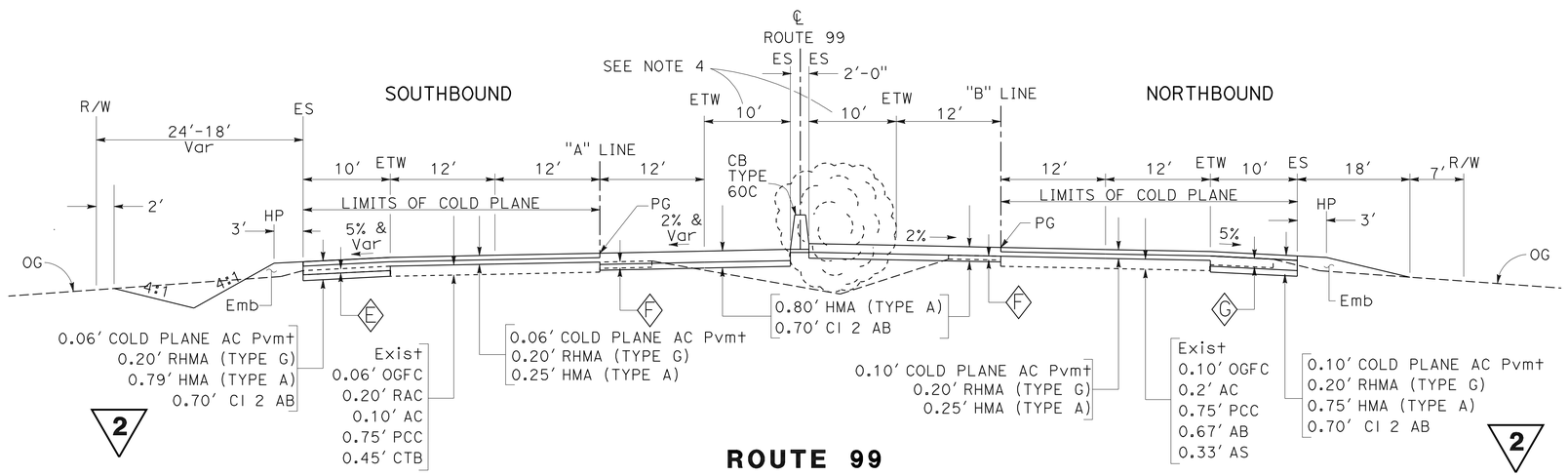

ROUTE 99

Sta 469+00.00 TO Sta 524+26.55 "A" LINE

Sta 469+43.83 TO Sta 494+50.00 "B" LINE
Sta 502+00.00 TO Sta 524+48.59 "B" LINE

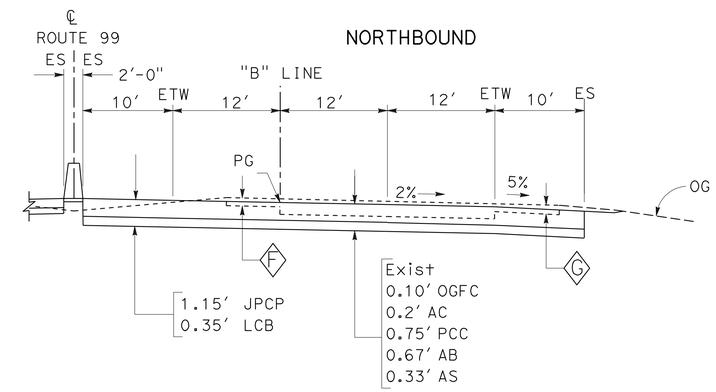

Sta 494+50.00 TO Sta 502+00.00 "B" LINE

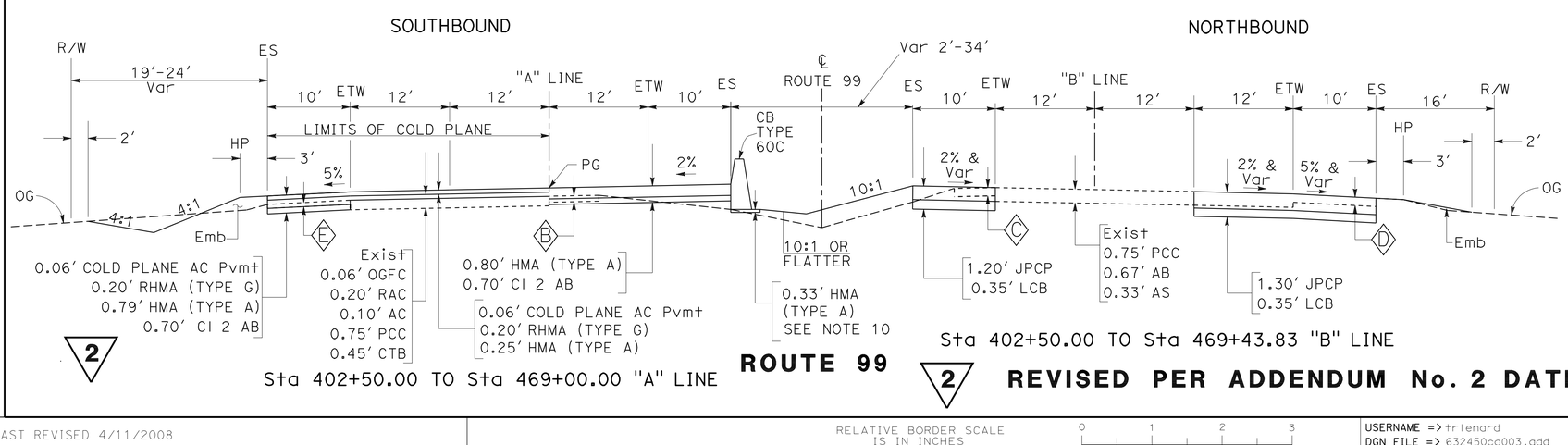

Sta 402+50.00 TO Sta 469+00.00 "A" LINE

ROUTE 99

Sta 402+50.00 TO Sta 469+43.83 "B" LINE

REVISED PER ADDENDUM No. 2 DATED OCTOBER 14, 2010

TYPICAL CROSS SECTIONS

NO SCALE

X-3

STATE OF CALIFORNIA - DEPARTMENT OF TRANSPORTATION
Caltrans® DESIGN
FUNCTIONAL SUPERVISOR JUN XU
CALCULATED-DESIGNED BY SUKHJINDER SINGH
CHECKED BY MICHAEL FOSTER
REVISED BY
DATE REVISED

LAST REVISION DATE PLOTTED => 13-OCT-2010
08-24-09 TIME PLOTTED => 15:42

Dist	COUNTY	ROUTE	POST MILES TOTAL PROJECT	SHEET No.	TOTAL SHEETS
06	Tul,Fre	99	41.3/R53.9, R0.0/R1.2	5	687

REGISTERED CIVIL ENGINEER 9/30/09 DATE

1-25-10
PLANS APPROVAL DATE

REGISTERED PROFESSIONAL ENGINEER MICHAEL D. FOSTER No. 62493 Exp. 9/30/11 CIVIL STATE OF CALIFORNIA

THE STATE OF CALIFORNIA OR ITS OFFICERS OR AGENTS SHALL NOT BE RESPONSIBLE FOR THE ACCURACY OR COMPLETENESS OF SCANNED COPIES OF THIS PLAN SHEET.

NOTE: FOR ACCURATE RIGHT OF WAY AND ACCESS DATA, CONTACT RIGHT OF WAY ENGINEERING AT THE DISTRICT OFFICE.

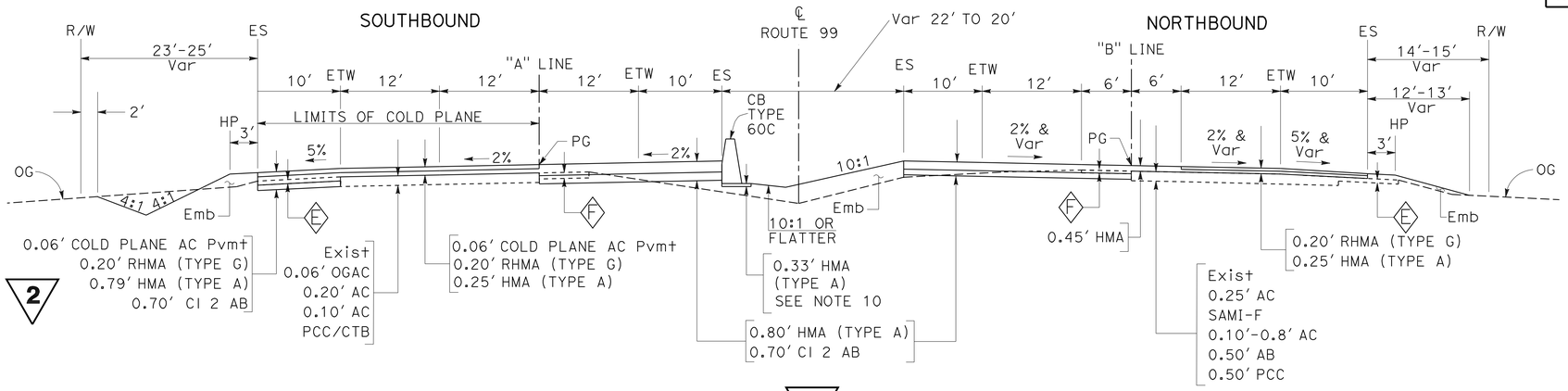

Sta 534+50.00 TO Sta 632+00.00 "A" LINE

2

Sta 534+50.00 TO Sta 632+00.00 "B" LINE

ROUTE 99

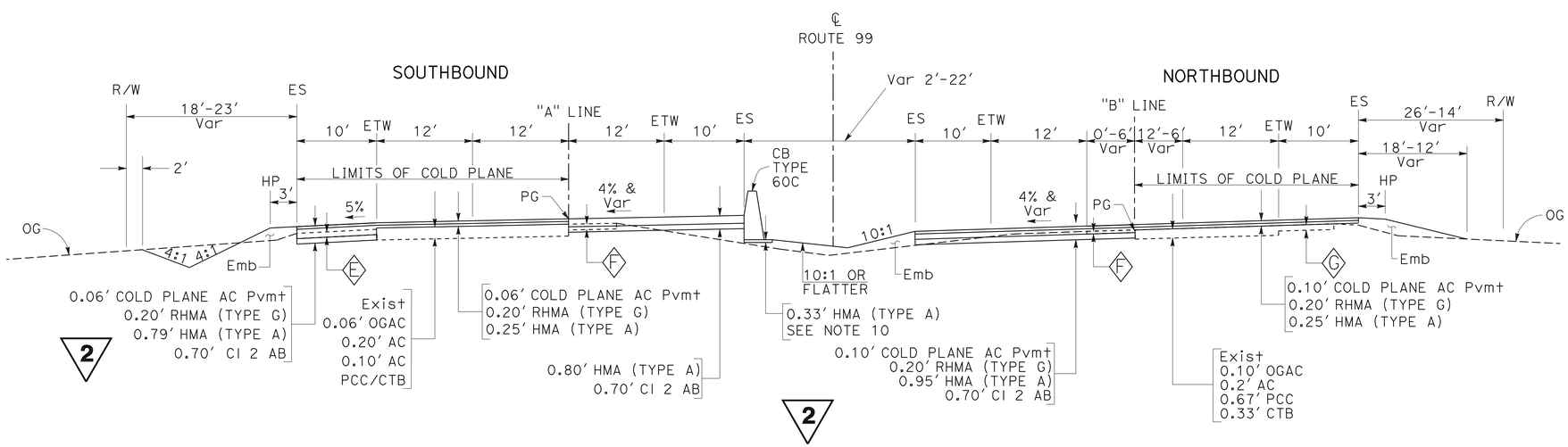

Sta 525+69.86 TO Sta 534+50.00 "A" LINE

2

Sta 526+63.88 TO Sta 534+50.00 "B" LINE

ROUTE 99

2 **REVISED PER ADDENDUM No. 2 DATED OCTOBER 14, 2010**

TYPICAL CROSS SECTIONS

NO SCALE

X-4

STATE OF CALIFORNIA - DEPARTMENT OF TRANSPORTATION
Caltrans
DESIGN
FUNCTIONAL SUPERVISOR: JUN XU
CALCULATED-DESIGNED BY: SUKHJINDER SINGH
CHECKED BY: MICHAEL FOSTER
REVISED BY
DATE REVISED

LAST REVISION 01-19-10
DATE PLOTTED => 13-OCT-2010
TIME PLOTTED => 15:42

Dist	COUNTY	ROUTE	POST MILES TOTAL PROJECT	SHEET No.	TOTAL SHEETS
06	Tul,Fre	99	41.3/R53.9, R0.0/R1.2	6	687

REGISTERED CIVIL ENGINEER 9/30/09 DATE

1-25-10
PLANS APPROVAL DATE

REGISTERED PROFESSIONAL ENGINEER MICHAEL D. FOSTER No. 62493 Exp. 9/30/11 CIVIL STATE OF CALIFORNIA

THE STATE OF CALIFORNIA OR ITS OFFICERS OR AGENTS SHALL NOT BE RESPONSIBLE FOR THE ACCURACY OR COMPLETENESS OF SCANNED COPIES OF THIS PLAN SHEET.

NOTE: FOR ACCURATE RIGHT OF WAY AND ACCESS DATA, CONTACT RIGHT OF WAY ENGINEERING AT THE DISTRICT OFFICE.

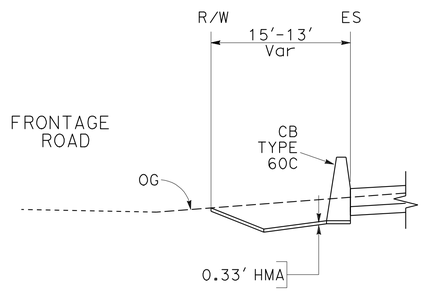

Sta 672+68.06 TO Sta 690+00.00 "A" LINE

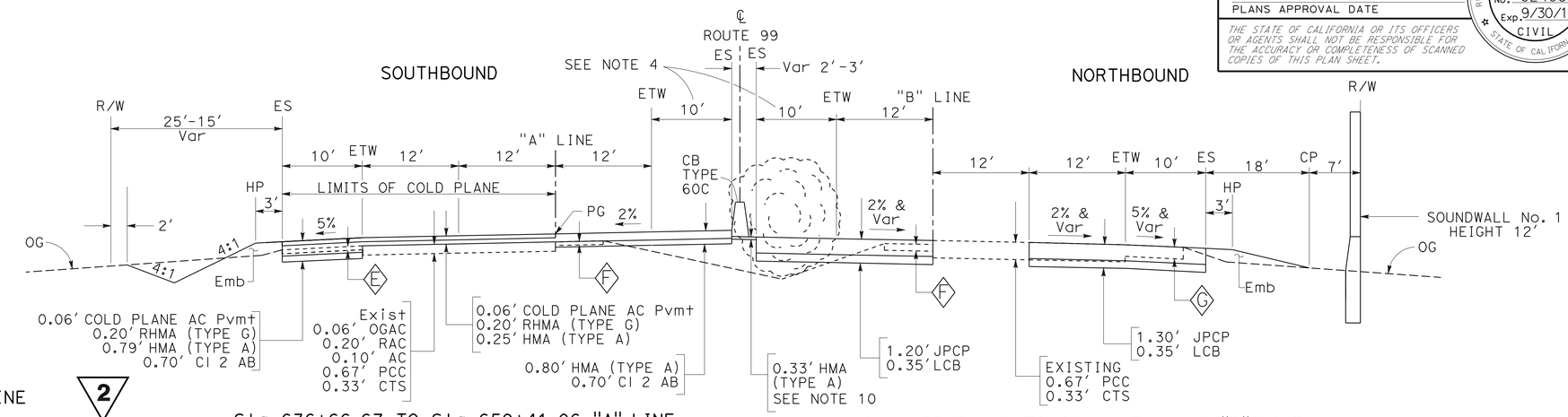

Sta 636+66.67 TO Sta 659+41.06 "A" LINE
Sta 665+21.56 TO Sta 687+00.00 "A" LINE

Sta 637+32.81 TO Sta 687+68.80 "B" LINE

ROUTE 99

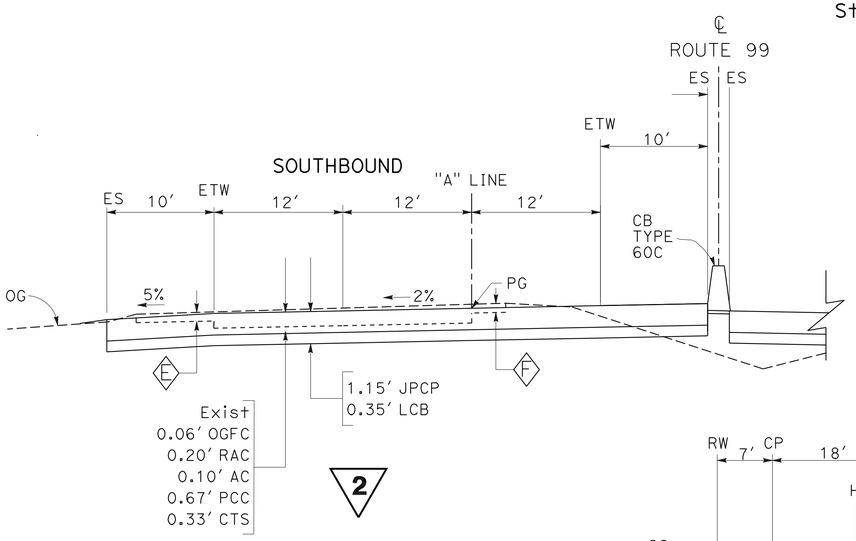

Sta 659+41.06 TO Sta 665+21.56 "A" LINE

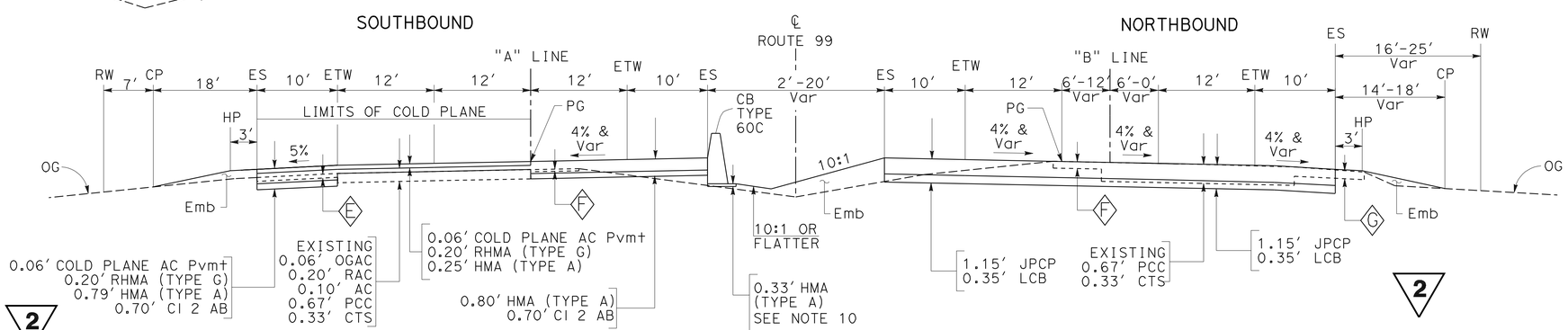

Sta 632+00.00 TO Sta 636+66.67 "A" LINE

Sta 632+00.00 TO Sta 637+32.81 "B" LINE

ROUTE 99

REVISED PER ADDENDUM No. 2 DATED OCTOBER 14, 2010

TYPICAL CROSS SECTIONS

NO SCALE

X-5

STATE OF CALIFORNIA - DEPARTMENT OF TRANSPORTATION
Caltrans
DESIGN
FUNCTIONAL SUPERVISOR: JUN XU
CALCULATED-DESIGNED BY: SUKHJINDER SINGH
CHECKED BY: MICHAEL FOSTER
REVISED BY
DATE REVISED

LAST REVISION 01-19-10 | DATE PLOTTED => 13-OCT-2010 | TIME PLOTTED => 15:42

Dist	COUNTY	ROUTE	POST MILES TOTAL PROJECT	SHEET No.	TOTAL SHEETS
06	Tul,Fre	99	41.3/R53.9, R0.0/R1.2	7	687

REGISTERED CIVIL ENGINEER 9/30/09 DATE

1-25-10
PLANS APPROVAL DATE

REGISTERED PROFESSIONAL ENGINEER MICHAEL D. FOSTER No. 62493 Exp. 9/30/11 CIVIL STATE OF CALIFORNIA

THE STATE OF CALIFORNIA OR ITS OFFICERS OR AGENTS SHALL NOT BE RESPONSIBLE FOR THE ACCURACY OR COMPLETENESS OF SCANNED COPIES OF THIS PLAN SHEET.

NOTE: FOR ACCURATE RIGHT OF WAY AND ACCESS DATA, CONTACT RIGHT OF WAY ENGINEERING AT THE DISTRICT OFFICE.

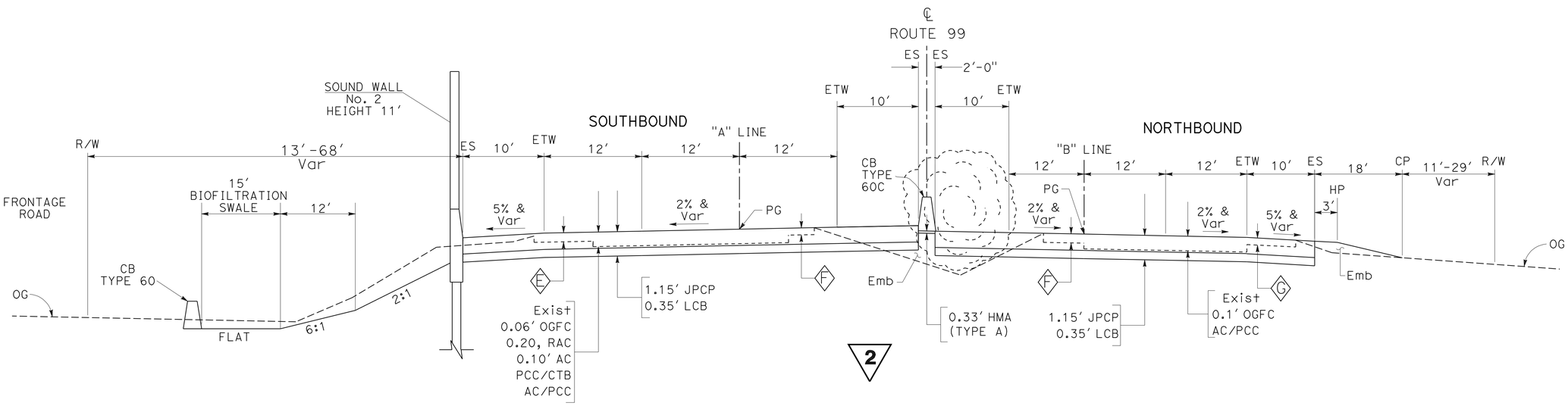

Sta 687+00.00 TO Sta 704+34.45 "A" LINE

Sta 687+68.80 TO Sta 705+10.25 "B" LINE
Sta 710+10.25 TO Sta 714+50.00 "B" LINE

ROUTE 99

2 **REVISED PER ADDENDUM No. 2 DATED OCTOBER 14, 2010**

TYPICAL CROSS SECTIONS

NO SCALE

X-6

STATE OF CALIFORNIA - DEPARTMENT OF TRANSPORTATION
Caltrans®
DESIGN

FUNCTIONAL SUPERVISOR: JUN XU

CALCULATED-DESIGNED BY: SUKHJINDER SINGH
CHECKED BY: MICHAEL FOSTER

REVISED BY
DATE REVISED

LAST REVISION 08-24-09
DATE PLOTTED => 13-OCT-2010
TIME PLOTTED => 15:42

Dist	COUNTY	ROUTE	POST MILES TOTAL PROJECT	SHEET No.	TOTAL SHEETS
06	Tul,Fre	99	41.3/R53.9, R0.0/R1.2	8	687

REGISTERED CIVIL ENGINEER 9/30/09 DATE

1-25-10
PLANS APPROVAL DATE

REGISTERED PROFESSIONAL ENGINEER MICHAEL D. FOSTER No. 62493 Exp. 9/30/11 CIVIL STATE OF CALIFORNIA

THE STATE OF CALIFORNIA OR ITS OFFICERS OR AGENTS SHALL NOT BE RESPONSIBLE FOR THE ACCURACY OR COMPLETENESS OF SCANNED COPIES OF THIS PLAN SHEET.

NOTE: FOR ACCURATE RIGHT OF WAY AND ACCESS DATA, CONTACT RIGHT OF WAY ENGINEERING AT THE DISTRICT OFFICE.

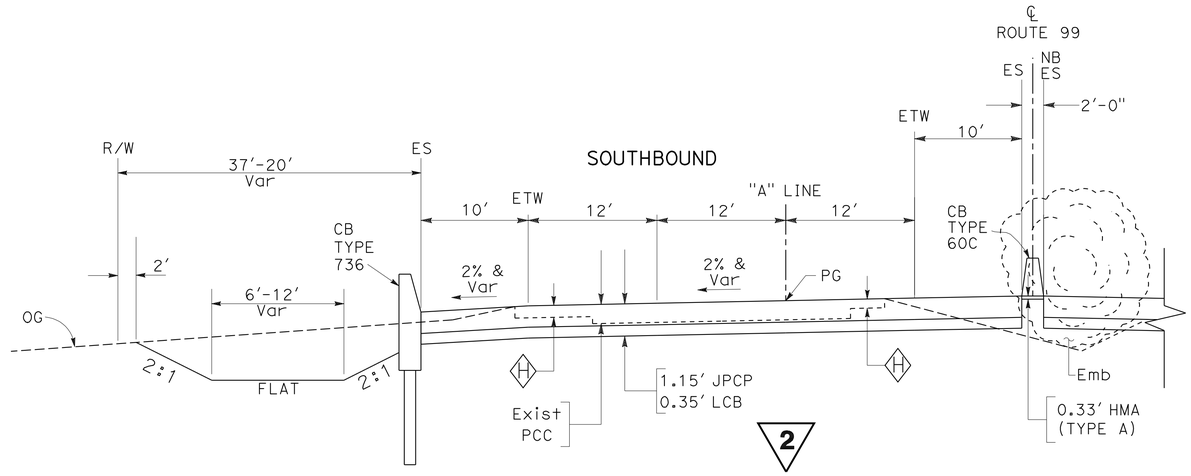

Sta 720+00.00 TO Sta 747+60.00 "A" LINE

ROUTE 99

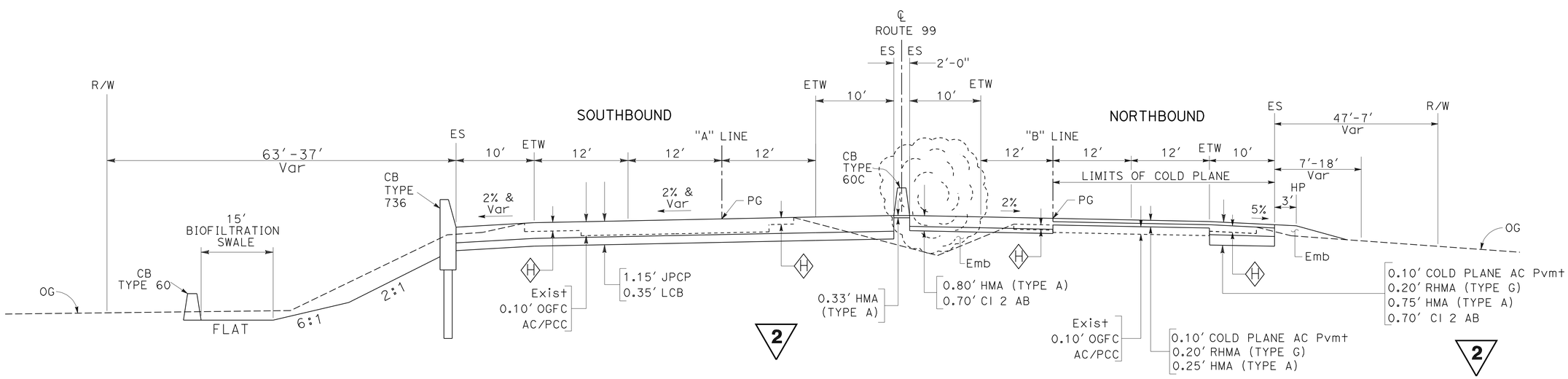

Sta 709+34.52 TO Sta 720+00.00 "A" LINE

Sta 714+50.00 TO Sta 745+68.00 "B" LINE

ROUTE 99

2 **REVISED PER ADDENDUM No. 2 DATED OCTOBER 14, 2010**

TYPICAL CROSS SECTIONS

NO SCALE

X-7

STATE OF CALIFORNIA - DEPARTMENT OF TRANSPORTATION
Caltrans
DESIGN
FUNCTIONAL SUPERVISOR: JUN XU
CALCULATED-DESIGNED BY: SUKHJINDER SINGH
CHECKED BY: MICHAEL FOSTER
REVISED BY
DATE REVISED

LAST REVISION 08-24-09
DATE PLOTTED => 13-OCT-2010
TIME PLOTTED => 15:42

Dist	COUNTY	ROUTE	POST MILES TOTAL PROJECT	SHEET No.	TOTAL SHEETS
06	Tul,Fre	99	41.3/R53.9, R0.0/R1.2	9	687

Michael D. Foster 9/30/09
REGISTERED CIVIL ENGINEER DATE

1-25-10
PLANS APPROVAL DATE

REGISTERED PROFESSIONAL ENGINEER MICHAEL D. FOSTER No. 62493 Exp. 9/30/11 CIVIL STATE OF CALIFORNIA

THE STATE OF CALIFORNIA OR ITS OFFICERS OR AGENTS SHALL NOT BE RESPONSIBLE FOR THE ACCURACY OR COMPLETENESS OF SCANNED COPIES OF THIS PLAN SHEET.

NOTE: FOR ACCURATE RIGHT OF WAY AND ACCESS DATA, CONTACT RIGHT OF WAY ENGINEERING AT THE DISTRICT OFFICE.

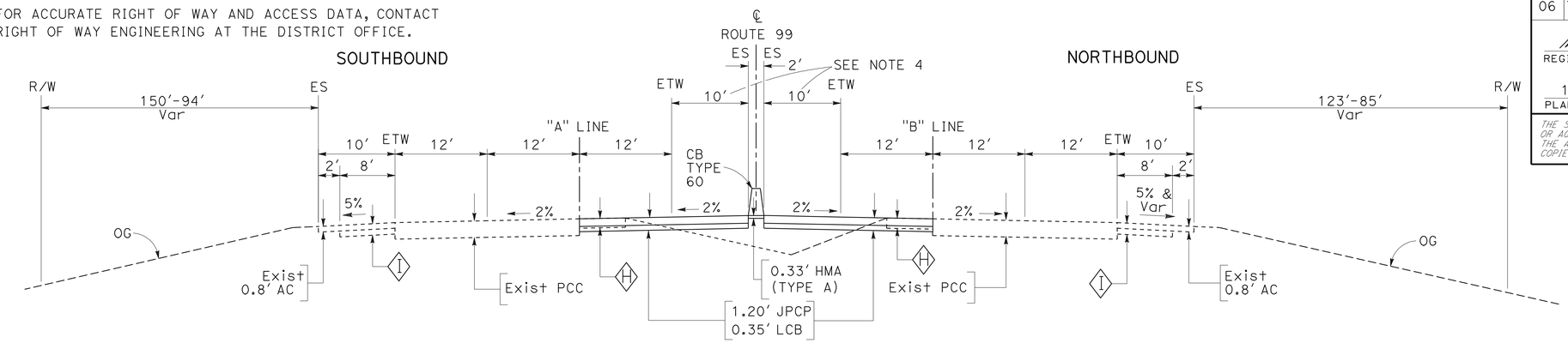

Sta 828+75.00 TO Sta 834+91.57 "A" LINE

Sta 828+25.00 TO Sta 835+53.85 "B" LINE

ROUTE 99 2

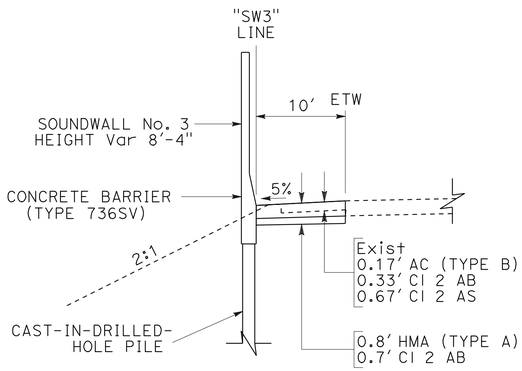

Sta 782+00.29 TO Sta 799+14.29 "SW3" LINE

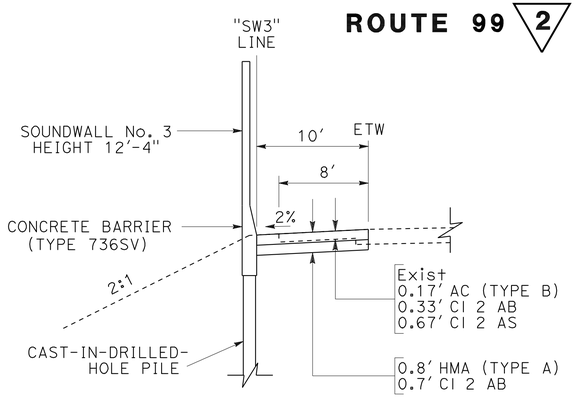

Sta 799+14.29 TO 816+65.96 "SW3" LINE"

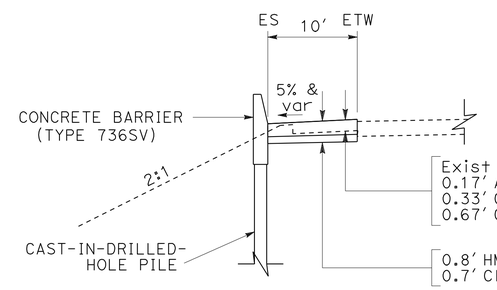

Sta 815+31.66 TO Sta 828+60.36 "A" LINE

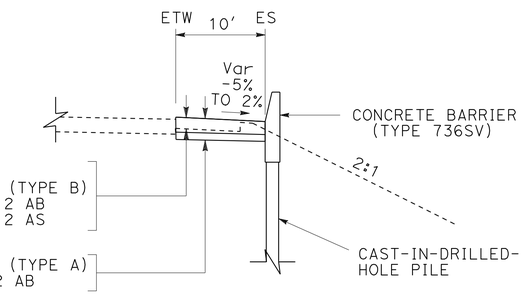

Sta 795+70.61 TO Sta 808+59.41 "B" LINE
Sta 815+93.94 TO Sta 828+19.80 "B" LINE

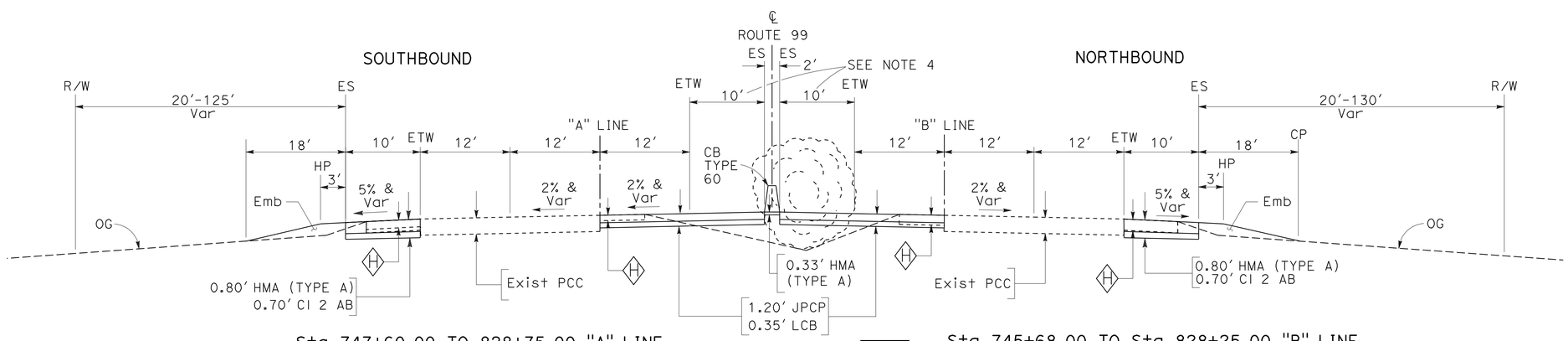

Sta 747+60.00 TO 828+75.00 "A" LINE

Sta 745+68.00 TO Sta 828+25.00 "B" LINE

2

ROUTE 99

2 **REVISED PER ADDENDUM No. 2 DATED OCTOBER 14, 2010**

TYPICAL CROSS SECTIONS

NO SCALE

X-8

REVISED BY	DATE REVISED

CALCULATED-DESIGNED BY: SUKHJINDER SINGH
CHECKED BY: MICHAEL FOSTER
FUNCTIONAL SUPERVISOR: JUN XU

STATE OF CALIFORNIA - DEPARTMENT OF TRANSPORTATION
Caltrans
DESIGN

LAST REVISION 08-24-09
DATE PLOTTED => 13-OCT-2010
TIME PLOTTED => 15:42

Dist	COUNTY	ROUTE	POST MILES TOTAL PROJECT	SHEET No.	TOTAL SHEETS
06	Tul,Fre	99	41.3/R53.9, R0.0/R1.2	391	687

REGISTERED CIVIL ENGINEER 9/30/09 DATE

1-25-10
PLANS APPROVAL DATE

REGISTERED PROFESSIONAL ENGINEER MICHAEL D. FOSTER No. 62493 Exp. 9/30/11 CIVIL STATE OF CALIFORNIA

THE STATE OF CALIFORNIA OR ITS OFFICERS OR AGENTS SHALL NOT BE RESPONSIBLE FOR THE ACCURACY OR COMPLETENESS OF SCANNED COPIES OF THIS PLAN SHEET.

ABBREVIATIONS:

AFETS ALTERNATE FLARED END TERMINAL SYSTEM
AILTS ALTERNATE IN-LINE TERMINAL SYSTEM
EAA END ANCHOR ASSEMBLY (TYPE SFT)

NOTE:

ROADWAY ITEMS AND EARTHWORK TABLES ARE REFERENCED TO "B" LINE, BUT QUANTITIES INCLUDE BOTH "A" AND "B" LINES.

ROADWAY ITEMS

2

LOCATION STATION TO STATION	JOINTED PLAIN Conc PAVEMENT	LEAN CONCRETE BASE	HOT MIX ASPHALT (TYPE A)	CLASS 2 AGGREGATE BASE	RUBBERIZED HOT MIX ASPHALT (GAP GRADED)	COLD PLANE ASPHALT CONCRETE PAVEMENT	TACK COAT
	CY	CY	TON	CY	TON	SQYD	TON
106+19.25 TO 402+50.00 "B" LINE	41,763	11,722	~~68,893~~ 61,539	24,196	13,853		123
402+80.60 TO 469+43.88 "B" LINE	9,805	2,915	15,437	5,528	2,842	25,122	27
469+43.83 TO 526+63.88 "B" LINE	1,778	541	22,349	9,072	3,714	37,551	39
526+63.88 TO 632+00.00 "B" LINE			46,229	16,391	7,865	42,866	81
632+00.00 TO 637+32.82 "B" LINE	1,271	387	1,216	444	230	1,763	2
637+32.82 TO 687+68.80 "B" LINE	11,665	3,301	5,041	3,328	1,079	19,015	20
687+68.80 TO 714+50.00 "B" LINE	10,359	3,159	128				2
714+50.00 TO 745+68.00 "B" LINE	7,608	2,323	6,931	2,587	1,198	11,779	10
745+68.00 TO 835+53.85 "B" LINE	17,234	5,025	9,940	4,407			15
21+63.60 TO 26+83.50 "R" LINE			291	135			1
FROM PANEL REPAIR TABLE	738.8	195.5					
HMA DIKE			120				
HMA UNDER MEDIAN CONCRETE BARRIER			7,354				
HMA (Misc AREA)			512.6				
CONSTRUCT DETOUR			14,944	9381			
TOTAL	102,222	29,569	198,264	75,945	30,781	138,096	320

RUMBLE STRIP

LOCATION	RUMBLE STRIP	SHOULDER RUMBLE STRIP (CONCRETE PAVEMENT, GROUND-IN INDENTATIONS)
	STA	STA
STA 106+69.98 TO 110+00.00 "A" LINE, R†	3	
STA 110+00.00 TO 687+00.00 "A" LINE, L† & R†	1154	
STA 687+00.00 TO 747+60.00 "A" LINE, L† & R†		121
STA 747+60.00 TO 828+60.36 "A" LINE, L† & R†	81	
STA 746+60.00 TO 834+91.57 "A" LINE, L† & R†		88
STA 106+19.15 TO 120+00.00 "B" LINE, L†		14
STA 120+00.00 TO 469+43.83 "B" LINE, L† & R†		699
STA 469+43.83 TO 494+50.00 "B" LINE, L† & R†	50	
STA 494+50.00 TO 502+00.00 "B" LINE, L† & R†		15
STA 502+00.00 TO 632+00.00 "B" LINE, L† & R†	260	
STA 632+00.00 TO 835+53.85 "B" LINE, L† & R†		204
STA 714+50.00 TO 828+11.44 "B" LINE, L† & R†	114	
TOTAL	1662	1141

SEAL JOINT

DESCRIPTION	SEAL PAVEMENT JOINT	SEAL ISOLATION JOINT
	LF	LF
120+00.00-469+50.00 "B" LINE	35,000	70,000
494+50.00-502+00.00 "B" LINE	3,000	
632+00.00-637+40.00 "B" LINE	2,160	
637+40.00-687+70.00 "B" LINE	10,060	10,060
687+70.00-714+50.00 "B" LINE	8,720	
745+70.00-835+00.00 "B" LINE	24,000	
687+00.00-747+00.00 "A" LINE	8,990	8,990
747+00.00-835+00.00 "A" LINE	8,740	8,740
TOTAL	100,670	97,790

EARTHWORK

DESCRIPTION	* ROADWAY EXCAVATION	(N) EMBANKMENT	IMPORTED BORROW
	CY	CY	CY
106+69.98 TO 402+50.00 "B" LINE	82,239	31,470	
402+50.00 TO 469+43.83 "B" LINE	20,434	4,420	
469+43.83 TO 494+50.00 "B" LINE	4,933	1,201	
494+50.00 TO 502+00.00 "B" LINE	3,004	197	
502+00.00 TO 526+63.88 "B" LINE	4,088	1,785	
526+63.88 TO 632+00.00 "B" LINE	15,798	21,679	8,251
632+00.00 TO 637+32.81 "B" LINE	2,189	317	
637+32.81 TO 687+68.80 "B" LINE	17,824	2,206	
687+68.80 TO 714+50.00 "B" LINE	15,730	414	
714+50.00 TO 745+68.00 "B" LINE	15,226	4,055	
745+68.00 TO 835+62.32 "B" LINE	22,207	3,763	
BASINS	2,191		
CONSTRUCT DETOUR	7312		
REMOVE DETOUR	21,741		
TOTAL	234,916	71,507	8,251

(N) - NOT A SEPARATE PAY ITEM, FOR INFORMATION ONLY.
* ROADWAY EXCAVATION QUANTITY OF 19,900 CUBIC YARDS OF CONCRETE PAVEMENT INCLUDED IN TOTAL

DETOUR QUANTITIES

DETOUR	ROADWAY * EXCAVATION		HMA (TYPE A)	CLASS 2 AB
	CONSTRUCT	REMOVE	**	**
	CY	CY	TON	CY
1	793	3173	2669	1708
2	710	2839	2388	1529
3	5305	10,610	8112	5008
4	504	2016	1695	1085
5		95	80	51
TOTAL	7312	21,741	14,944	9381

* QUANTITY INCLUDED IN EARTHWORK TABLE
** QUANTITY INCLUDED IN ROADWAY ITEMS TABLE

2 **REVISED PER ADDENDUM No. 2 DATED OCTOBER 14, 2010**

SUMMARY OF QUANTITIES

Q-1

STATE OF CALIFORNIA - DEPARTMENT OF TRANSPORTATION
Caltrans DESIGN
FUNCTIONAL SUPERVISOR JUN XU
CALCULATED-DESIGNED BY SUKHJINDER SINGH
CHECKED BY MICHAEL FOSTER
REVISED BY
DATE REVISED

LAST REVISION 09-27-09 DATE PLOTTED => 14-OCT-2010 TIME PLOTTED => 07:01

Dist	COUNTY	ROUTE	POST MILES TOTAL PROJECT	SHEET No.	TOTAL SHEETS
06	Tul,Fre	99	41.3/R53.9, R0.0/R1.2	401	687

REGISTERED CIVIL ENGINEER 9/30/09 DATE

1-25-10
PLANS APPROVAL DATE

REGISTERED PROFESSIONAL ENGINEER MICHAEL D. FOSTER No. 62493 Exp. 9/30/11 CIVIL STATE OF CALIFORNIA

THE STATE OF CALIFORNIA OR ITS OFFICERS OR AGENTS SHALL NOT BE RESPONSIBLE FOR THE ACCURACY OR COMPLETENESS OF SCANNED COPIES OF THIS PLAN SHEET.

SIGN STRUCTURES

SIGN TYPE	STATION	ORIEN-TATION	"h" (Ft)	FURNISH SIGN STRUCTURE (TRUSS) (LB)	INSTALL SIGN STRUCTURE (TRUSS) (LB)	60" Dia CIDH Conc PILE (SIGN Fdn) (LF)
FULL CANTILEVER CMS TYPE 500	466+00	FNBT	19	15,677	15,677	22
FULL CANTILEVER CMS TYPE 500	589+00	FSBT	21	15,933	15,933	22
FULL CANTILEVER CMS TYPE 500	685+00	FSBT	22	15,933	15,933	22
FULL CANTILEVER CMS TYPE 500	724+00	FSBT	22	15,933	15,933	22
FULL CANTILEVER CMS TYPE 500	786+00	FSBT	21	15,933	15,933	22
FROM OVERHEAD SIGN STRUCTURE QUANTITIES TABLE				206,740	206,740	223
TOTAL				286,149	286,149	333

NOTE: QUANTITIES ARE BASED ON WALKWAYS ON 2-SIDES

DOWNDRAIN AND OVERSIDE DRAIN QUANTITIES

STATION	Rt/Lt	LAYOUT SHEET No.	TYPE	REMOVE DOWNDRAIN	12" ENTRANCE TAPER	12" SLIP JOINT	12" CSP DD	PLACE HMA (Misc AREA) *	HMA (TYPE A) *	RSP (BACKING No. 2, METHOD B) **	RSP FABRIC **
				EA	EA	EA	LF	SQYD	TON	CY	SQYD
696+45.79 "B"	Rt	L-43	Pipe	1							
764+54.86 "A"	Lt	L-47	Flume	1							
765+14.21 "B"	Rt	L-47	Flume	1							
766+40.00 "B"	Rt	L-48	CSP		1	1	6.3	1.39	0.2	0.78	5.3
766+67.44 "B"	Rt	L-48	Flume	1							
769+00.00 "B"	Rt	L-48	CSP		1	1	7.2	1.39	0.2	0.78	5.3
769+00.00 "A"	Lt	L-48	CSP				7.3	1.39	0.2	0.78	5.3
769+32.06 "A"	Lt	L-48	Flume	1							
772+22.66 "B"	Rt	L-48	Flume	1	1	1	6.4	1.39	0.2	0.78	5.3
774+71.40 "B"	Rt	L-48	Flume	1	1	1	7.2	1.39	0.2	0.78	5.3
777+28.70 "B"	Rt	L-48	Flume	1	1	1	10.7	1.39	0.2	0.78	5.3
781+50.00 "B"	Rt	L-49	CSP		1	1	7.2	1.39	0.2	0.78	5.3
785+00.00 "B"	Rt	L-49	HMA					6.75	1.1		
788+00.00 "B"	Rt	L-49	HMA					10.30	1.6		
791+00.00 "B"	Rt	L-49	CMP		1	1	24.6	1.39	0.2	0.78	5.3
794+25.96 "B"	Rt	L-49	CMP	1							
794+83.22 "A"	Lt	L-50	CMP	1							
805+93.24 "A"	Lt	L-50	CMP	1							
818+82.00 "A"	Lt	L-51	CMP	1							
820+94.50 "B"	Rt	L-51	Pipe	1							
Total				13	7	7	76.9	28.16	4.4	6.22	42.4

* QUANTITIES INCLUDED IN HMA (Misc AREA) TABLE
** QUANTITIES INCLUDED IN ROCK SLOPE PROTECTION QUANTITY TABLE

ROCK SLOPE PROTECTION QUANTITIES

STATION	MINOR Conc (MINOR STRUCTRURE)	RSP (BACKING No. 2, METHOD B)	RSP FABRIC
	CY	CY	SQYD
Br No. 46-0033L	-	33	89
Br No. 46-0033R	-	29	79
704+50.00 "A", Lt	2.0	45	112
709+30.82 "A", Lt	2.0	45	112
KINGS RIVER Br No. 46-0267	-	~~45~~	~~112~~
FROM DQ-SHEETS	603.6	68.4	234.3
FROM DD AND OVERSIDE DRAIN QUANTITIES TABLE		6.22	42.4
TOTAL	607.3	~~271.6~~ 897.62	~~700.7~~ 2011.7

671
1343

2

HMA (Misc AREA)

LOCATION	PLACE HMA (Misc AREA)	HMA (TYPE A) *	DESCRIPTION
	SQYD	TON	
672+68.06-690+00.00 "A" LINE	2513	504	GUTTER
704+00.00 "A" LINE	27.8	4.2	WEATHER STATION PAD
FROM DD AND OVERSIDE DRAIN QUANTITIES TABLE	28.16	4.4	
TOTAL	2569	512.6	

* QUANTITIES INCLUDED ROADWAY ITEMS TABLE

2 REVISED PER ADDENDUM No. 2 DATED OCTOBER 14, 2010

SUMMARY OF QUANTITIES
Q-11

STATE OF CALIFORNIA - DEPARTMENT OF TRANSPORTATION
Caltrans DESIGN
FUNCTIONAL SUPERVISOR JUN XU
CALCULATED-DESIGNED BY H. KIRAN\S. GONZALEZ
CHECKED BY MICHAEL FOSTER
REVISED BY
DATE REVISED

LAST REVISION 09-28-09
DATE PLOTTED => 13-OCT-2010
TIME PLOTTED => 15:43

Dist	COUNTY	ROUTE	POST MILES TOTAL PROJECT	SHEET No.	TOTAL SHEETS
06	Tul,Fre	99	41.3/R53.9, R0.0/R1.2	402	687

REGISTERED CIVIL ENGINEER 9/30/09 DATE

1-25-10
PLANS APPROVAL DATE

REGISTERED PROFESSIONAL ENGINEER MICHAEL D. FOSTER No. 62493 Exp. 9/30/11 CIVIL STATE OF CALIFORNIA

THE STATE OF CALIFORNIA OR ITS OFFICERS OR AGENTS SHALL NOT BE RESPONSIBLE FOR THE ACCURACY OR COMPLETENESS OF SCANNED COPIES OF THIS PLAN SHEET.

CONCRETE BARRIER (TYPE 736SV)

LOCATION	(N) NUMBER OF PILES	16 INCH CIDH Conc PILING (BARRIER)	CONCRETE BARRIER (TYPE 736SV) He = 1'-0"	He = 2'-0"	He = 4'-0"
		LF	LF	LF	LF
106+69.98 TO 109+50.00 "A" LINE	34	544		280	
702+50.07 TO 704+14.52 "A" LINE	45	720			185
709+34.52 TO 715+12.09 "A" LINE	137	2192			578
715+40.70 TO 747+60.00 "A" LINE	392	6277		3226	
781+40.00 TO 782+00.00 "A" LINE	7	112		60	
704+84.52 TO 705+14.52 "A" LINE	7	112			30
815+31.68 "A" LINE,Lt TO 824+69.99"A" LINE,Lt	114	1824		938	
815+93.96 "B" LINE,Rt TO 824+17.17 "B" LINE,Lt	100	1600		823	
826+64.99 "A" LINE,Lt TO 827+57.52 "A" LINE,Lt	11	176		93	
826+02.65 "B" LINE,Rt TO 828+19.80 "B" LINE,Rt	26	416		223	
SOUND WALL QUANTITIES TABLE		12,454	1234	3031	252
SUBTOTAL	~~588~~	~~21,877~~	1234	~~8394~~	1045
TOTAL 873	~~588~~	~~21,877~~		~~10,673~~	

8674

26,427

10,953

(N) - NOT A SEPARATE PAY ITEM, FOR INFORMATION ONLY.

EROSION CONTROL

LOCATION	EROSION CONTROL (HYDROSEED) ACRE	STRAW (N) TON	FIBER (N) LB	PURE LIVE SEED (TYPE1) (N) LB	PURE LIVE SEED (TYPE 2) (N) LB	TACKIFIER (N) LB	MULCH (N) CY
Sta 100+36 to Sta 760+00	65	130	39,000	1592.5		8125	
Sta 700+00 to Sta 705+50 *	0.55	1.1	330		13.5	68.8	
Sta 709+60 to Sta 714+00 *	0.45	0.9	270		11.1	56.3	
Sta 663+80 to Sta 670+30 **	1.35	2.7	810	33.3		168.9	
Sta 759+80 to Sta 831+10							8600
TOTAL	67.35	134.7	40,410	1625.8	24.6	8419	8600

* BIOFILTRATION SWALES
** DRAINAGE BASIN
(N) - NOT A SEPARATE PAY ITEM, FOR INFORMATION ONLY.

CLEAN EXISTING CULVERT

LOCATION	DRAINAGE SYSTEM No.	CLEAN EXISTING CULVERT EA
114+45.90	1	2
117+73.34	2	1
129+83.50	3	2
146+39.11	4	2
166+08.18	5	1
187+08.72	7	2
207+09.03	8	2
228+90.43	9	1
245+58.73	10	2
258+59.27	11	2
268+59.41	12	2
275+59.12	13	2
315+58.69	14	2
327+59.57	15	2
334+84.30	16	2
348+59.69	17	1
357+59.44	18	2
370+78.82	19	2
374+09.53	20	1
379+59.40	21	1
390+59.59	22	2
404+59.92	23	2
418+60.03	24	2
SUBTOTAL		40

LOCATION	DRAINAGE SYSTEM No.	CLEAN EXISTING CULVERT EA
431+50.76	25	1
435+60.65	26	2
446+61.16	27	1
450+66.88	28	1
498+27.85	32	1
499+68.00	33	1
534+77.61	37	2
572+74.46	39	2
596+75.31	40	2
623+49.35	42	2
661+20.95	44	2
663+21.54	45	2
684+70.82	47	2
SUBTOTAL		29
TOTAL		69

2 REVISED PER ADDENDUM No. 2 DATED OCTOBER 14, 2010

SUMMARY OF QUANTITIES
Q-12

STATE OF CALIFORNIA - DEPARTMENT OF TRANSPORTATION
Caltrans
DESIGN
FUNCTIONAL SUPERVISOR JUN XU
CALCULATED-DESIGNED BY H. KIRAN\S. GONZALEZ
CHECKED BY MICHAEL FOSTER
REVISED BY
DATE REVISED

LAST REVISION 09-28-09
DATE PLOTTED => 13-OCT-2010
TIME PLOTTED => 15:43

DIST	COUNTY	ROUTE	POST MILES TOTAL PROJECT	SHEET No	TOTAL SHEETS
06	Tul,Fre	99	41.3/R53.9, R0.0/R1.2	656	687

Robert C Fish 1/13/10
REGISTERED CIVIL ENGINEER DATE

1-25-10
PLANS APPROVAL DATE

REGISTERED PROFESSIONAL ENGINEER Robert C. Fish No. C39540 Exp. 12/31/2011 CIVIL STATE OF CALIFORNIA

The State of California or its officers or agents shall not be responsible for the accuracy or completeness of electronic copies of this plan sheet.

LIM & NASCIMENTO ENGINEERING
20 EMPIRE DRIVE
LAKE FOREST, CALIFORNIA 92630

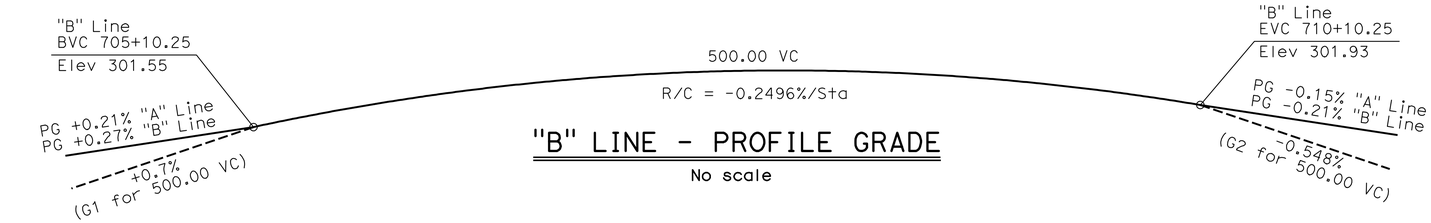

"B" LINE - PROFILE GRADE

No scale

LEGEND:

- Limits of Bridge Removal
- Existing Structure
- New Structure

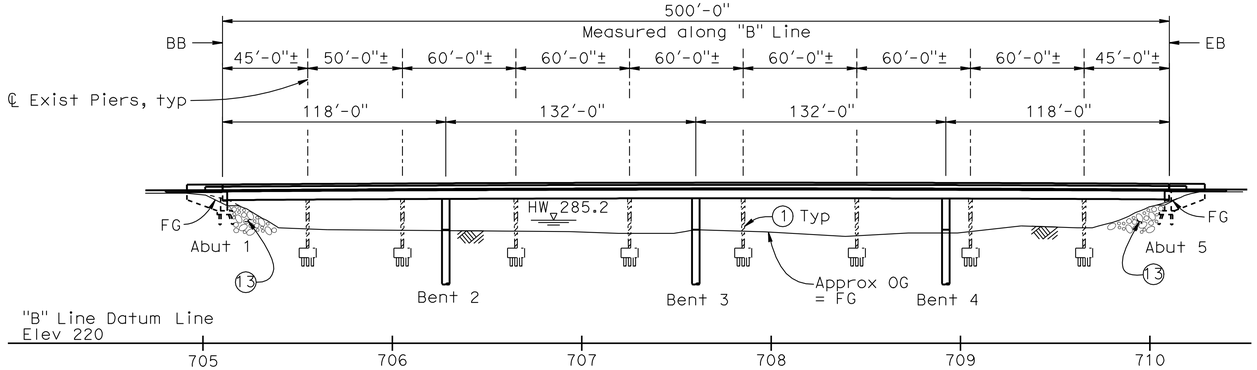

ELEVATION

1"=40'

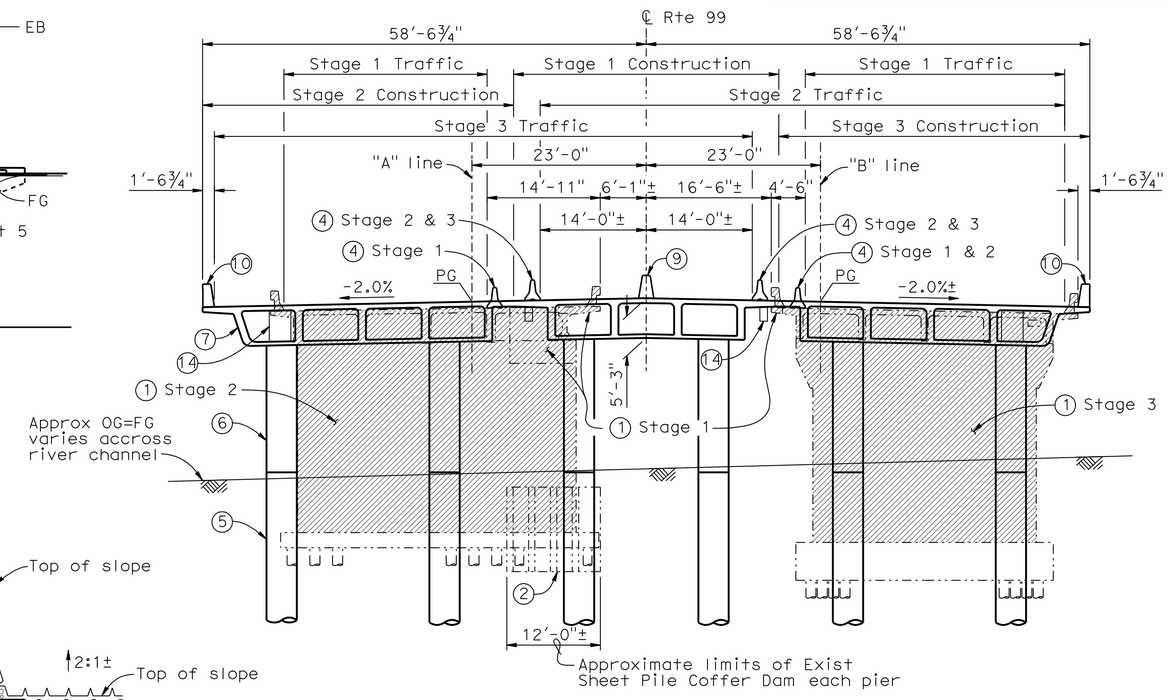

TYPICAL SECTION

1"=10'

NOTES:

1. Remove Existing Bridges 46-0036R/L
2. Remove Existing Cofferdam to top of Pile Cap at all Piers
3. Remove Existing Structure Approach
4. Temporary Railing Type K, see "DEMOLITION AND STAGING" sheet and "Road Plans"
5. 48"Ø CISS Pile
6. 48"Ø CIP Column Extension
7. Cast-in-Place PS Concrete Box Girder
8. Structure Approach Type N(30S)
9. Concrete Barrier Type 60A (Mod)
10. Concrete Barrier Type 736 (Mod)
11. Paint "Bridge No 46-0036R/L"
12. Paint "Kings River Bridge"
13. ~~Grouted Rip Rap by District~~ RSP, see "ROAD PLANS"
14. Bat Habitat

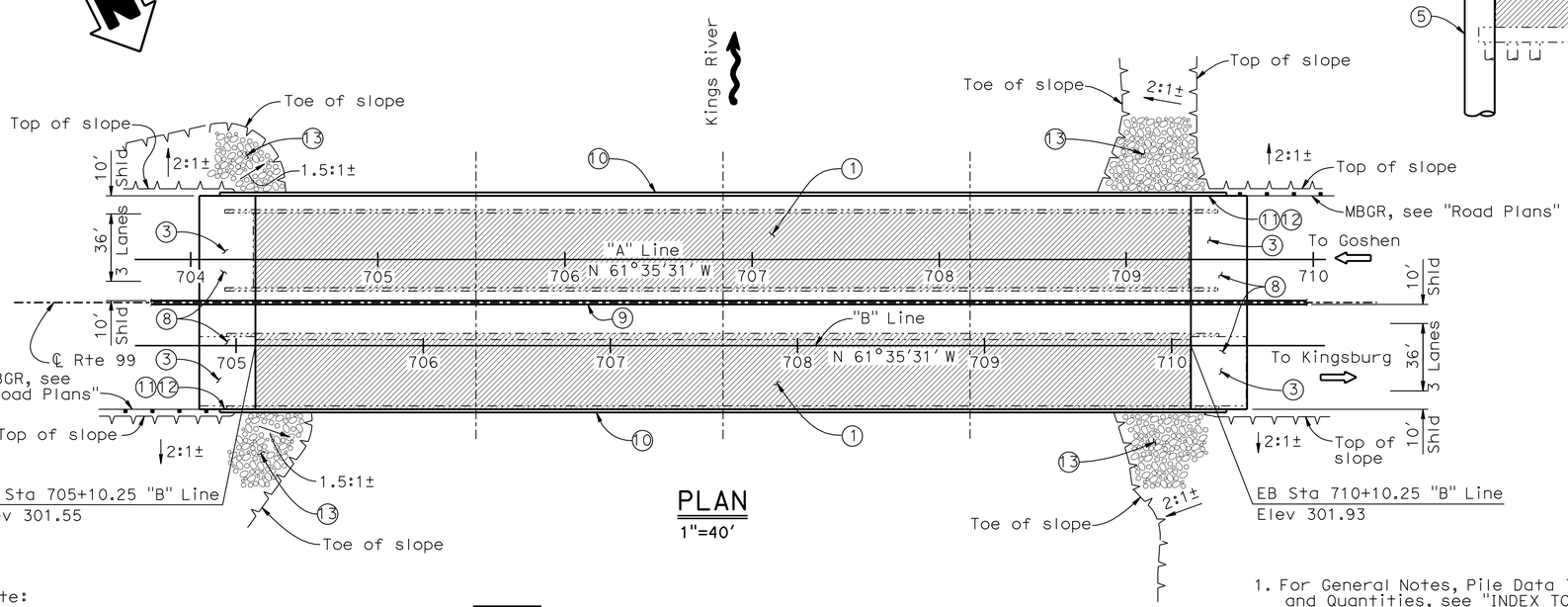

PLAN

1"=40'

1. For General Notes, Pile Data Table, Index to Plans and Quantities, see "INDEX TO PLANS" sheet.

Note:
The Contractor shall verify all controlling field dimensions before ordering or fabricating any material.

2 **REVISED PER ADDENDUM NO. 2 DATED OCTOBER 14, 2010**

Fritz Hoffman — DESIGN OVERSIGHT Fritz Hoffman, Sept 8, 2009 — SIGN OFF DATE	DESIGN	BY R. Fish	CHECKED M. Stiller / R. Price	LOAD AND RESISTANCE FACTOR DESIGN	LIVE LOADING: HL-93 W/ "LOW BOY" AND PERMIT DESIGN VEHICLE
	DETAILS	BY C. Lee / Y. Ng	CHECKED M. Stiller / R. Price	LAYOUT: BY C. Lee	CHECKED X
	QUANTITIES	BY R. Fish	CHECKED M. Stiller	SPECIFICATIONS: BY R. Price	PLANS AND SPECS COMPARED B. Fish

PREPARED FOR THE STATE OF CALIFORNIA DEPARTMENT OF TRANSPORTATION

Stephen J. Mislinski
PROJECT ENGINEER

BRIDGE NO. 46-0267
POST MILES 52.6

KINGS RIVER BRIDGE (REPLACE)
GENERAL PLAN

DESIGN GENERAL PLAN SHEET (ENGLISH) (REV.2/25/05)

ORIGINAL SCALE IN INCHES FOR REDUCED PLANS 0 1 2 3

CU 06249
EA 324501

DISREGARD PRINTS BEARING EARLIER REVISION DATES

REVISION DATES (PRELIMINARY STAGE ONLY): ~~7/28/08~~ ~~11/10/08~~ ~~01/16/09~~ ~~04/27/09~~ ~~05/13/09~~ ~~05/27/09~~ ~~09/01/09~~ 1-11-10

SHEET 1 OF 30

FILE => 46-0267-agp.add

USERNAME => rfrietford DATE PLOTTED => 13-OCT-2010 TIME PLOTTED => 15:45