Dist	COUNTY	ROUTE	POST MILES TOTAL PROJECT	SHEET No.	TOTAL SHEETS
06	Tul,Fre	99	41.3/R53.9, R0.0/R1.2	169	687

Michael D. Foster 9/30/09
REGISTERED CIVIL ENGINEER DATE

1-25-10
PLANS APPROVAL DATE

REGISTERED PROFESSIONAL ENGINEER MICHAEL D. FOSTER No. 62493 Exp. 9/30/11 CIVIL STATE OF CALIFORNIA

THE STATE OF CALIFORNIA OR ITS OFFICERS OR AGENTS SHALL NOT BE RESPONSIBLE FOR THE ACCURACY OR COMPLETENESS OF SCANNED COPIES OF THIS PLAN SHEET.

NOTES:

1. MAXIMUM RCP DIAMETER 48".
2. REBAR TO BE EPOXY-COATED.
3. LONGITUDINAL JOINT SAW CUT DEPTH Max @ 2" PER WIDTH OF REINFORCED SLAB.

LEGEND

1

MINOR CONCRETE (MINOR STRUCTURE)

HMA

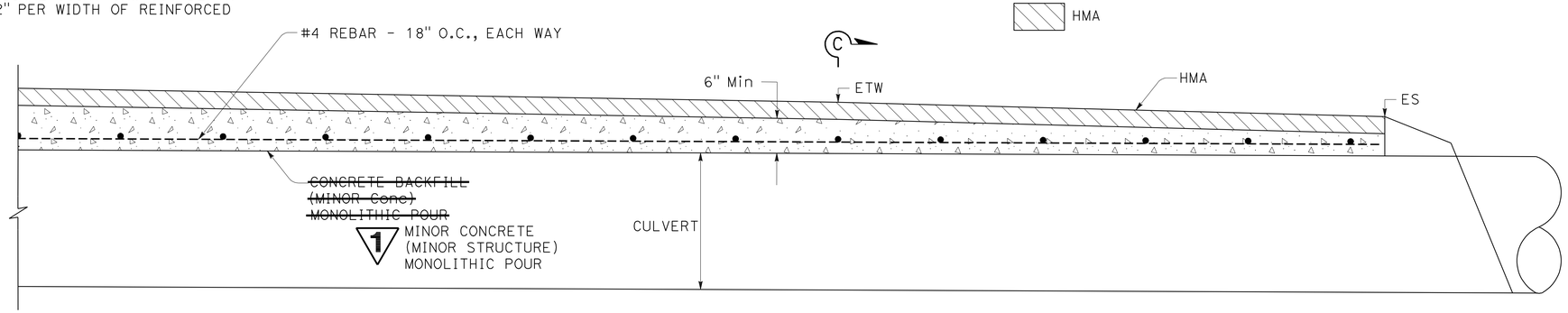

SITUATION No. 1
PROFILE

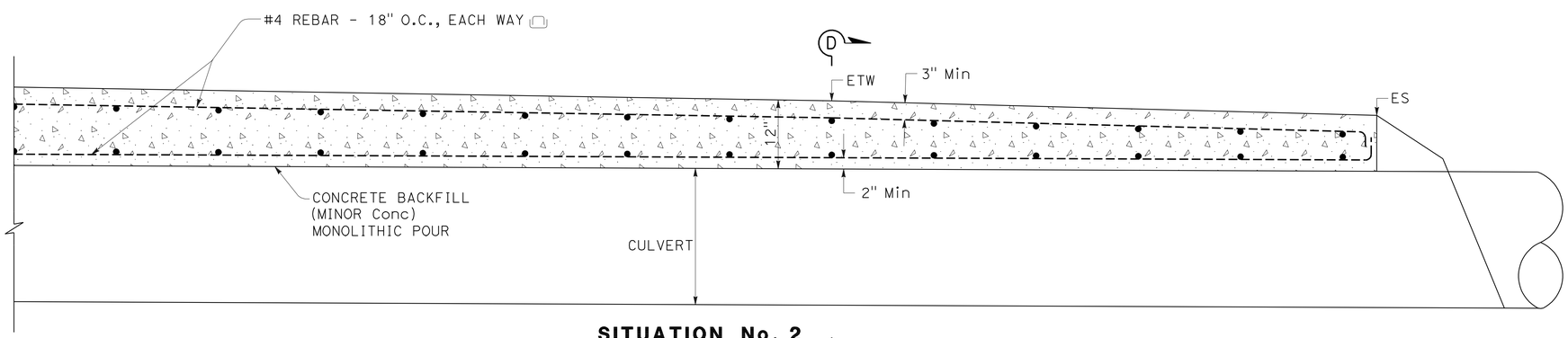

SITUATION No. 2
PROFILE

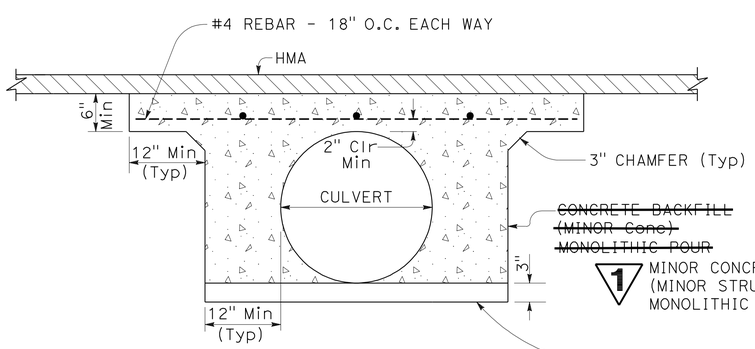

SECTION C-C
SEE NOTE 1

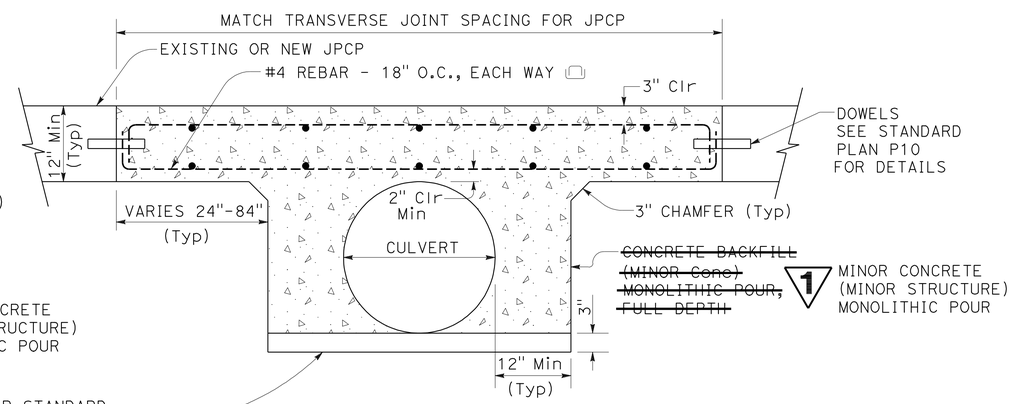

SECTION D-D
SEE NOTE 1

LOW CLEARANCE SLAB FOR REINFORCED CONCRETE CULVERT

1 REVISED PER ADDENDUM No. 1 DATED OCTOBER 1, 2010

DRAINAGE DETAILS
NO SCALE
DD-5

STATE OF CALIFORNIA - DEPARTMENT OF TRANSPORTATION
Caltrans
DESIGN
FUNCTIONAL SUPERVISOR: JUN XU
CALCULATED-DESIGNED BY: SUKHJINDER SINGH
CHECKED BY: MICHAEL FOSTER
REVISED BY
DATE REVISED

LAST REVISION 04-16-09
DATE PLOTTED => 30-SEP-2010
TIME PLOTTED => 05:51

DIST	COUNTY	ROUTE	POST MILES TOTAL PROJECT	SHEET No	TOTAL SHEETS
06	Tul,Fre	99	41.3/R53.9, R0.0/R1.2	632	687

REGISTERED CIVIL ENGINEER — DATE 09/01/09

1-25-10
PLANS APPROVAL DATE

The State of California or its officers or agents shall not be responsible for the accuracy or completeness of electronic copies of this plan sheet.

REGISTERED PROFESSIONAL ENGINEER — DANNY C. VANG — No. C60613 — Exp. 12/31/10 — CIVIL — STATE OF CALIFORNIA

MGE ENGINEERING, INC.
7415 GREENHAVEN DRIVE, SUITE 100
SACRAMENTO, CALIFORNIA 95831

LIM & NASCIMENTO ENGINEERING
20 EMPIRE DRIVE
LAKE FOREST, CALIFORNIA 92630

QUANTITIES 1

BRIDGE REMOVAL ~~(PORTION)~~, LOCATION I	LUMP	SUM
STRUCTURAL CONCRETE, BOX CULVERT	285	CY
ARCHITECTURAL TEXTURE (DRY STACKED STONE)	181	SQFT
BAR REINFORCING STEEL (BOX CULVERT)	55,850	LB
PREPARE AND STAIN CONCRETE	181	SQFT
CONCRETE BARRIER (TYPE 736 MODIFIED)	170	LF

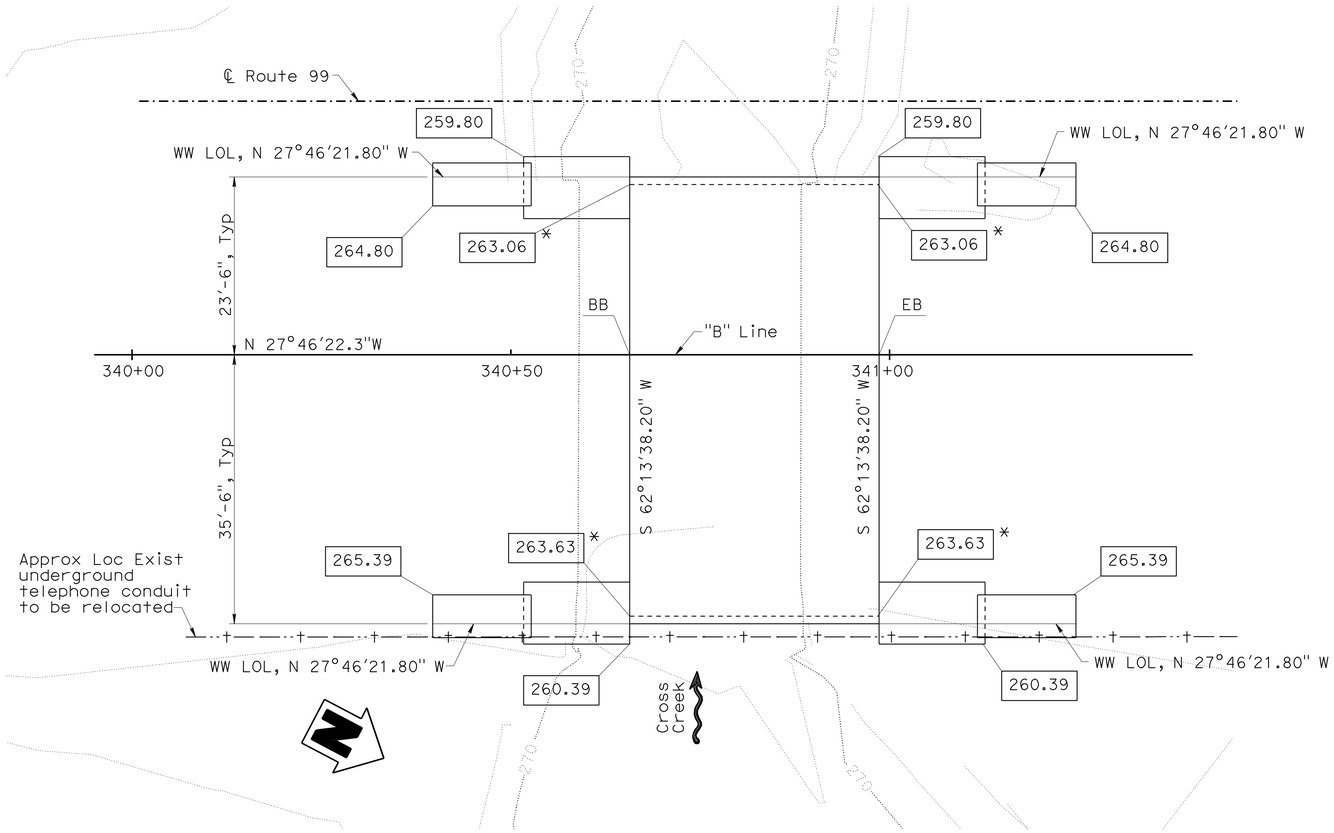

FOUNDATION PLAN

(Existing bridge not shown for clarity)

SCALE: 1" = 10'-0"

GENERAL NOTES
LOAD AND RESISTANCE FACTOR DESIGN

Design: AASHTO LRFD Bridge Design Specifications, 3rd Edition with Interims through 2006 and the Caltrans Amendments V3.06.01; except that the culvert walls, invert slab and bridge details including barriers and wingwalls taken from Standard Plans May 2006 are designed using Bridge Design Specifications ('96 AASHTO with Revisions by Caltrans).

Dead Load: Includes 35 psf for future wearing surface.

Live Loading: HL93 and permit design load.

Earth Pressure: (1) Vertical: 140 pcf; Horizontal: 140 pcf
(2) Vertical: 140 pcf; Horizontal: 42 pcf

Reinforced Concrete: fy = 60 ksi
f'c = 3.6 ksi
n = 8

SPREAD FOOTING DATA TABLE

Support Location	Allowable Bearing Capacity q_{all}	Nominal Bearing Resistance q_n
All	3.0 ksf	6.0 ksf

HYDROLOGIC SUMMARY

	Max Discharge Design Flood Max Capacity
Frequency (Years)	
Discharge (Cubic feet per second)	680
Water Surface (Elevation at bridge)	271.0

Flood plain data are based upon information available when the plans were prepared and are shown to meet federal requirements. The accuracy of said information is not warranted by the State and interested or affected parties should make their own investigation.

LEGEND

Indicates New Structure

Indicates Direction of Flow

xxx.xx — Indicates Bottom of Footing Elevation

xxx.xx * — Indicates Bottom of Invert Slab Elevation

Note:
The Contractor shall verify all controlling field dimensions before ordering or fabricating any material.

1 REVISED PER ADDENDUM No. 1 DATED OCTOBER 1, 2010

DESIGN OVERSIGHT Fritz Hoffman	SCALE:	VERT.DATUM NAVD 88	HORZ.DATUM NAD 83	DESIGN BY D. Vang	CHECKED G. Xu	PREPARED FOR THE STATE OF CALIFORNIA DEPARTMENT OF TRANSPORTATION	Guoping Xu PROJECT ENGINEER
Sept 8, 2009	PHOTOGRAMMETRY AS OF:	ALIGNMENT TIES Dist. Traverse Sheet		DETAILS BY X. Sun	CHECKED G. Xu		
SIGN OFF DATE	SURVEYED BY District	DRAFTED BY J. Martinez		QUANTITIES BY D. Vang	CHECKED K. Wang		
	FIELD CHECKED BY T. Gillett	CHECKED BY T. Zolnikova					

BRIDGE NO. 46-0034R
POST MILE 45.70

CROSS CREEK BRIDGE (REPLACE)
FOUNDATION PLAN

FOUNDATION PLAN SHEET (ENGLISH) (REV. 2-25-05)

ORIGINAL SCALE IN INCHES FOR REDUCED PLANS 0 1 2 3

CU 06
EA 324501

DISREGARD PRINTS BEARING EARLIER REVISION DATES

REVISION DATES (PRELIMINARY STAGE ONLY) 10/16/08 01/12/09 4/22/09 05/15/09 09/01/09

SHEET 2 OF 7

FILE => 46-0034r-e-fdp101.add

USERNAME => trmikesl DATE PLOTTED => 30-SEP-2010 TIME PLOTTED => 05:55