INFORMATION HANDOUT

FOR CONTRACT NO.: 06-0S2804

Project ID: 0614000186

IN KERN COUNTY, ON ROUTE 58, PM 136.0/R143.8

1) Alternative Flared Terminal System

Type Fleet-SP-MGS
Type SRT-31
Type 31" X-Tension

2) Alternative Crash Cushion System

Type CAT
Type Brakemaster 350
Type Fleat-MT

ITEM NO.	PART NUMBER	DESCRIPTION	QTY	UOM
1	BSI-1301252-KT	X-Tension Terminal Comp, 31 in	1	EACH
2	K070202	X-Tension Hardware Kit, GT,	1	EACH
3	K070206	X-Tension System Hardware Kit,	1	EACH
4	K070210	X-Tension GT Guardrail	1	EACH
5	B061100	BSI, I-Beam Post, Middle, X350	1	EACH
6	MANXT1	X-TENSION Installation Manual	1	EACH

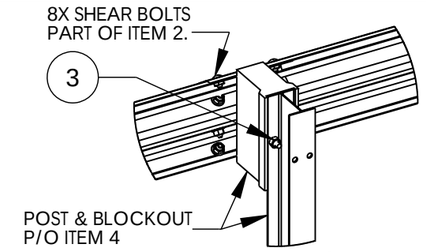

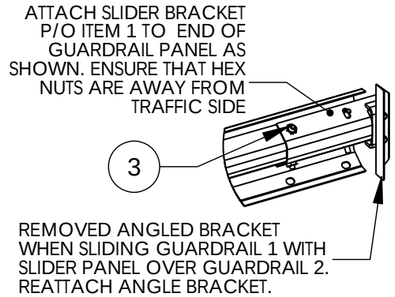

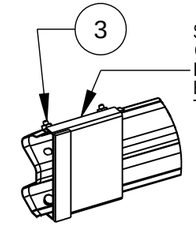

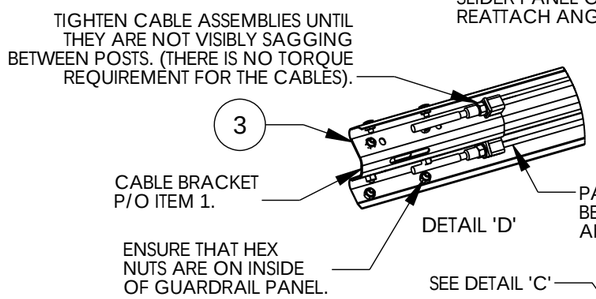

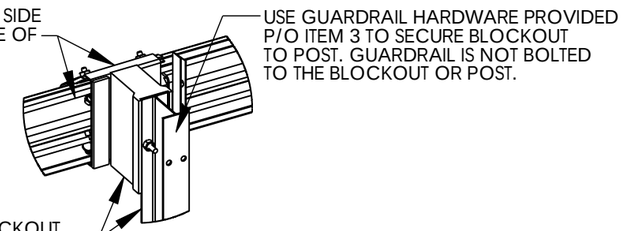

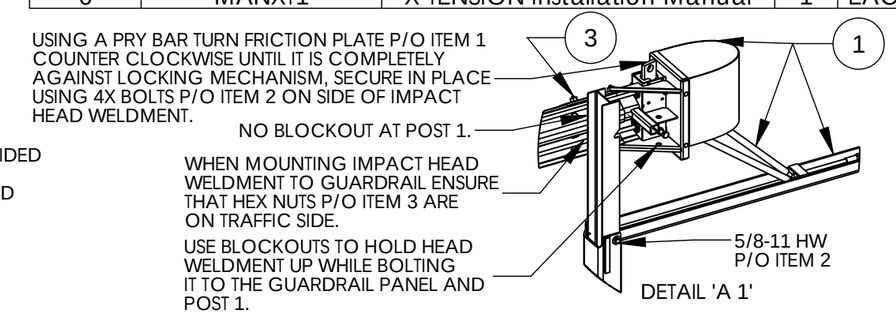

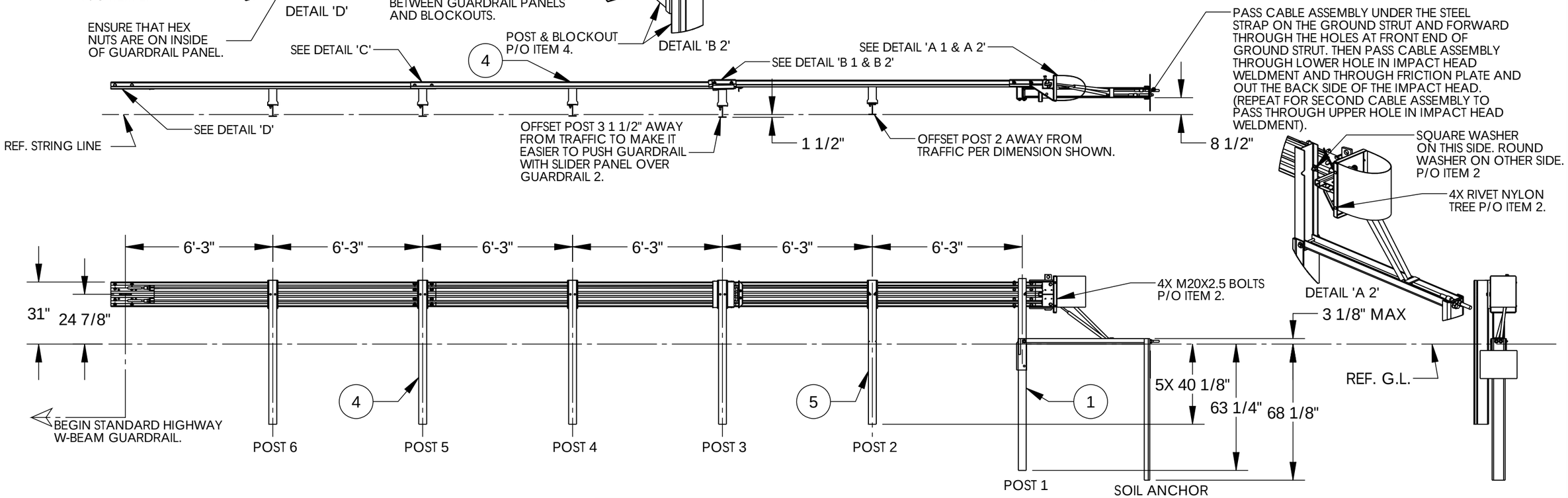

NOTES: UNLESS OTHERWISE SPECIFIED.

1. SYSTEM TO BE INSTALLED PER MANUFACTURER SPECIFICATIONS.
2. ONLY TIGHTEN THE CABLE ASSEMBLIES USING THE NUTS AT THE CABLE BRACKET (SEE DETAIL 'D'). DO NOT TIGHTEN THE CABLES AT THE FRONT OF THE GROUND ANCHOR.
3. WHEN DRIVING STEEL POST, ENSURE THAT A DRIVING CAP WITH TIMBER OR PLASTIC INSERT IS USED TO PREVENT DAMAGE TO THE GALVANIZING TO THE TOP OF THE POST.

© 2012 BARRIER SYSTEMS INC. THE INFORMATION CONTAINED IN THIS DRAWING IS THE SOLE PROPERTY OF BARRIER SYSTEMS INC. ANY REPRODUCTION IN PART OR WHOLE WITHOUT THE WRITTEN PERMISSION OF BARRIER SYSTEMS INC. IS PROHIBITED.

APPROVALS

DRAWN BY:	NMV
DRAWN DATE:	2/08/13
APPR'D BY:	JMT
APPR'D DATE:	2/08/13

UNLESS OTHERWISE SPECIFIED DIMENSIONS ARE IN INCHES. TOLERANCES ARE:
FRACTIONS ±1/16 DECIMAL .XX = ±.03 .XXX = ±.010 ANGLES ±1/2°
INTERPRET DIMENSIONS AND TOLERANCES PER ASME Y14.5-1994

THIRD ANGLE PROJECTION

DO NOT SCALE DRAWING

REV	ECN#	DATE
B	2067	05/02/13
A	2022	2/08/13

LINDSAY™ TRANSPORTATION SOLUTIONS

BARRIER SYSTEMS INC.
3333 Vaca Valley Parkway Ste 800
Vacaville, CA 95688
Tel: 888-800-3691
www.barriersystemsinc.com

TITLE
X-TENSION GUARDRAIL TERMINAL SYSTEM STEEL POST WITH COMPOSITE BLOCKOUT 31" RAIL HEIGHT

SIZE	DWG NO.	REV.
B	XTGTSS5	B

SCALE 1:50 SHEET 1 OF 1

Doc. B100108

Last Saved by: jeff.thompson; Friday, May 03, 2013 1:23:29 PM

OFFSET NOTES:
1) POST OFFSET DIMENSIONS ARE GIVEN TO THE CENTER OF THE TRAFFIC FACE OF POSTS, EXCEPT AT POSTS #7 & #8, WHERE DIMENSION IS TO CENTER OF THE TRAFFIC FACE OF THE BLOCKOUTS.
2) GUARDRAIL BETWEEN POST 1-7 IS ON A STRAIGHT LINE FLARE.

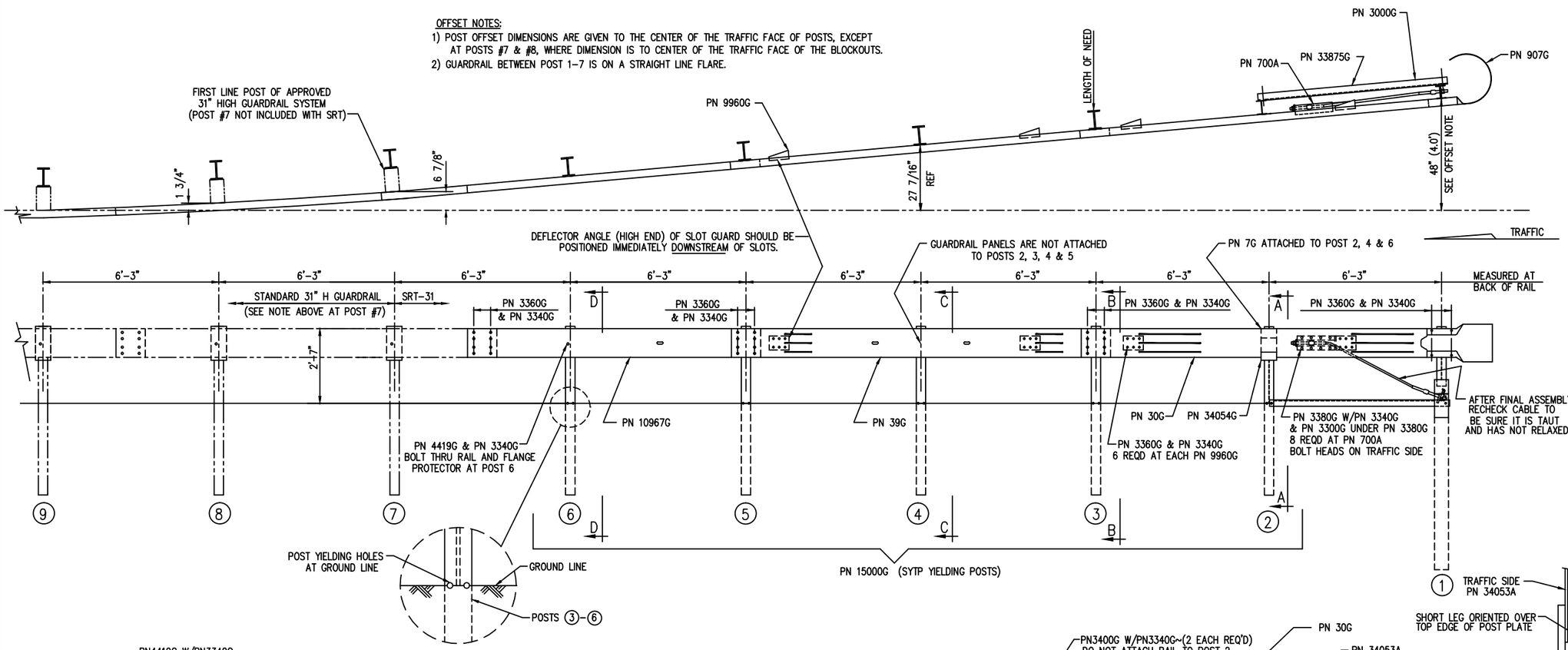

BILL OF MATERIAL

	PN	QTY	DESCRIPTION
	7G	3	12/6"/FLG PROTECTOR (AT POST 2, 4 & 6)
	30G	1	12/12'6/S SRT-1 (GUARDRAIL)
	39G	1	12/12'6/S SRT-2 (GUARDRAIL)
	700A	1	CABLE ANCHOR BRACKET
	907G	1	12/BUFFER/ROLLED (TERMINAL)
	3000G	1	3/4 x 6'-6" CABLE
HARDWARE	3240G	2	5/16" WASHER (AT POST 1)
HARDWARE	3245G	2	5/16" HEX NUT (AT POST 1)
HARDWARE	3300G	12	5/8" WASHER
HARDWARE	3340G	67	5/8" HEX HGR NUT
HARDWARE	3360G	52	5/8"ø x 1 1/4" HGR SPLICE BOLT
HARDWARE	3380G	8	5/8"ø x 1 1/2" HEX HD BOLT
HARDWARE	3400G	4	5/8"ø x 2" HGR POST BOLT (AT POSTS 1, 2 & 4)
HARDWARE	3391G	2	5/8"ø x 1 3/4" HEX BOLT (A325) (AT STRUT)
HARDWARE	3900G	2	1" WASHER (AT CABLE)
HARDWARE	3910G	2	1" HEX NUT (AT CABLE)
HARDWARE	4211G	2	5/16"ø x 1 3/4" HEX BOLT (AT POST 1)
HARDWARE	4419G	1	5/8"ø x 1 3/4" COUNTERSUNK HD BOLT (AT POST 6)
	9960G	4	SLOT GUARD BRACKET
	10967G	1	12/9'4.5/3'1.5/S SRT-3 (GUARDRAIL)
	15000G	5	6'-0" SYT POST (W6 X 8.5)
	33909G	1	CABLE ANCHOR BRACKET (AT POST 1)
	33875G	1	ANGLE STRUT 3 x 3 x 1/4
	34052A	1	CR POST 1 BOT (W6 x 15)
	34053A	1	CR POST 1 TOP (W6 x 8.5)
	34054G	1	POST SHELF ANGLE (AT POST 2)

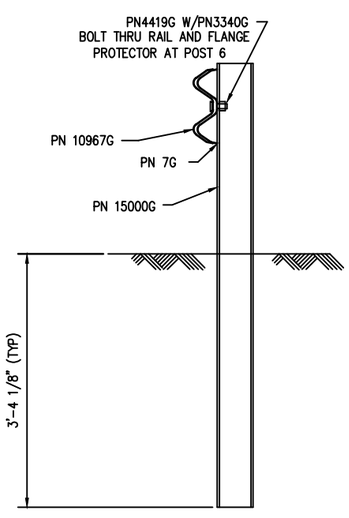

SECTION "D-D"
(@ POST #6)

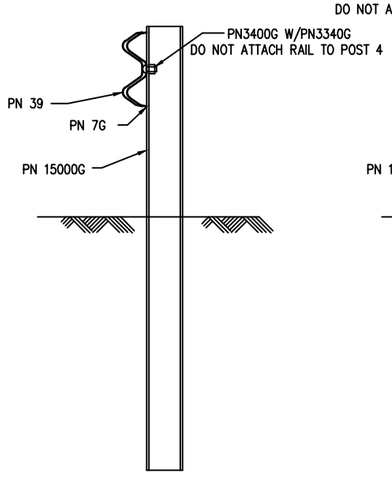

SECTION "C-C"
(@ POST #4)

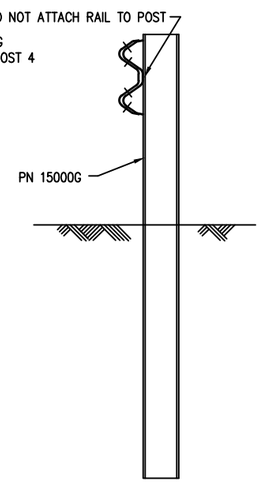

SECTION "B-B"
(@ POST #3 & #5)

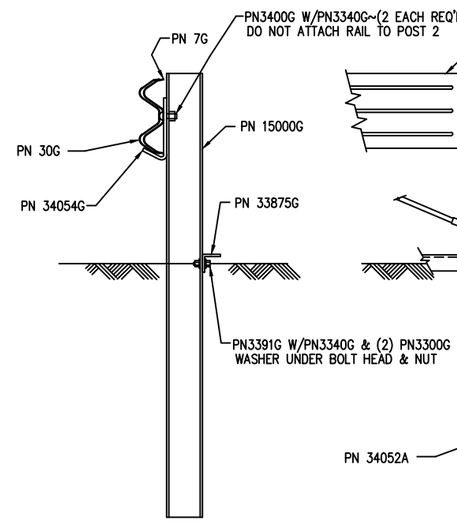

SECTION "A-A"
(@ POST #2)

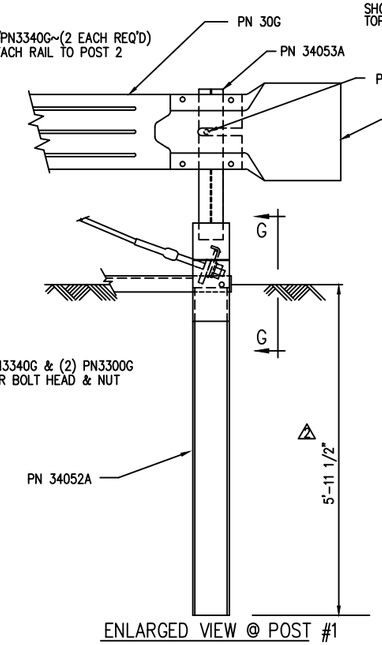

ENLARGED VIEW @ POST #1

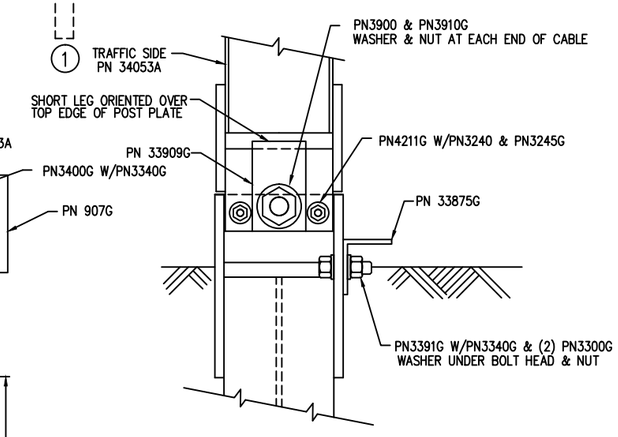

VIEW "G-G"
(@ POST #1)

REV.	CHK'D	BY	DATE	REMARKS
4	BT	LH	10/6/10	OFFSET POSTS #7 & #8
3	BT	LH	2/26/09	REVISED HARDWARE
2	SG	LH	7/28/08	REVISED POST #1 LENGTH IN GROUND
1	SG	LH	1/16/08	REVISED HARDWARE QUANTITY IN BILL OF MATERIAL

SRT-31

SLOTTED RAIL TERMINAL SRT-31 (31" H)
ERECTION DETAILS
(3 PANELS, CR AND SYT POSTS)

DRAWN	BT
CHECKED	SG
SCALE	NTS
DATE	10/30/07
ENG. FILE #	SS436-01E
SHT.No.	E1 OF 1
DRAWING NO.	SS 436
REV.	4

The drawings and the information shown thereon are copyrighted by Trinity Highway Products (2010) and the sole property of Trinity Highway Products. Neither the drawings nor such information is to be used for any purpose other than that for which it was specifically furnished from Trinity Highway Products, LLC., nor is any reproduction authorized without written permission.

TRINITY HIGHWAY PRODUCTS, LLC.
2525 STEMMONS FREEWAY
DALLAS, TX 75207

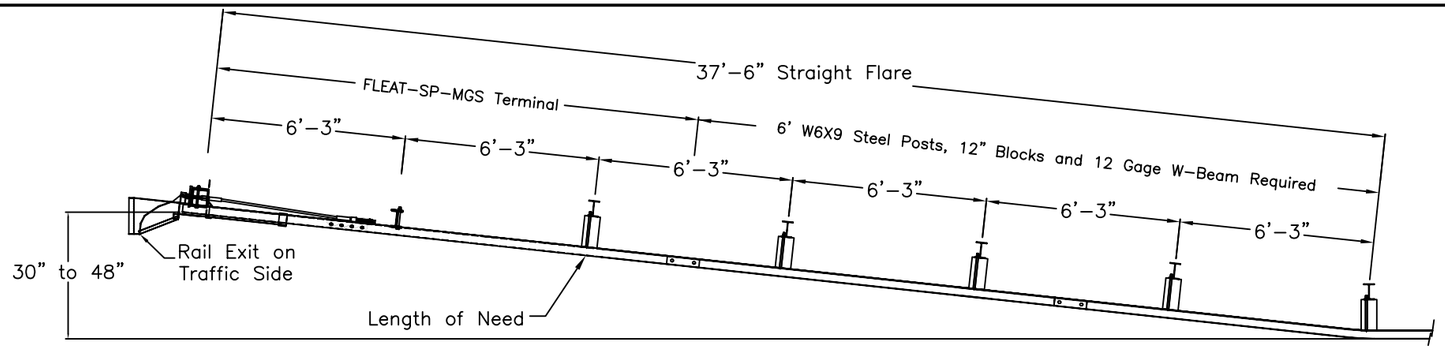

PLAN

TRAFFIC

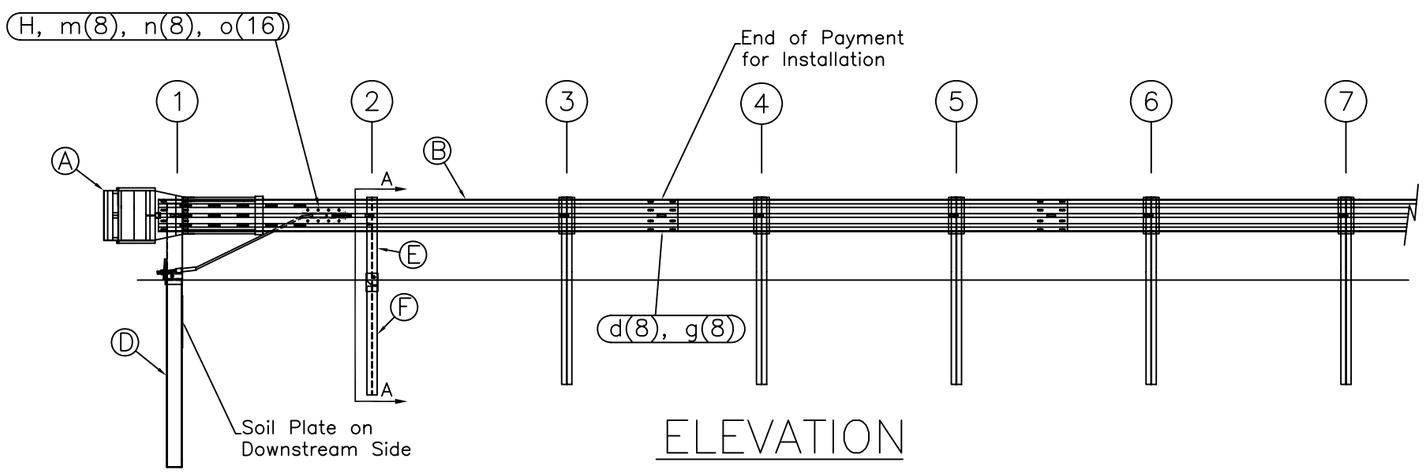

ELEVATION

ITEM	QTY	BILL OF MATERIALS	ITEM NO.
A	1	IMPACT HEAD	F3000
B	1	W-BEAM GUARDRAIL END SECTION, 12 Ga.	MGS-SF1303
C	1	FIRST POST TOP (6X6X$\frac{1}{8}$" Tube)	TPHP1A
D	1	FIRST POST BOTTOM (6' W6X15)	TPHP1B
E	1	SECOND POST ASSEMBLY TOP	UHP2A
F	1	SECOND POST ASSEMBLY BOTTOM	HP3B
G	1	BEARING PLATE	E750
H	1	CABLE ANCHOR BOX	S760
J	1	BCT CABLE ANCHOR ASSEMBLY	E770
		HARDWARE (ALL DIMENSIONS IN INCHES)	
a	2	5/16 x 1 HEX BOLT GRD 5	B5160104A
b	4	5/16 WASHER	W0516
c	2	5/16 HEX NUT	N0516
d	9	5/8 Dia. x 1 1/4 SPLICE BOLT (POST #2)	B580122
e	1	5/8 Dia. x 9 HEX BOLT GRD 5	B580904A
f	3	5/8 WASHER	W050
g	10	5/8 Dia. H.G.R NUT	N050
h	1	3/4 Dia. x 8 1/2 HEX BOLT GRD A449	B340854A
j	1	3/4 Dia. HEX NUT	N030
k	2	1 ANCHOR CABLE HEX NUT	N100
l	2	1 ANCHOR CABLE WASHER	W100
m	8	CABLE ANCHOR BOX SHOULDER BOLT	SB58A
n	8	1/2 A325 STRUCTURAL NUT	N055A
o	16	1 1/16 OD x 9/16 ID A325 STR. WASHER	W050A

GENERAL NOTES:
1. All bolts, nuts, cable assemblies, cable anchors and bearing plates shall be galvanized.
2. The lower sections of the Posts 1&2 shall not protrude more than 4 in above the ground (measured along a 5' cord). Site grading may be necessary to meet this requirement.
3. The lower sections of the hinged posts should not be driven with the upper post attached. If the post is placed in a drilled hole, the backfill material must be satisfactorily compacted to prevent settlement.
4. When competent rock is encountered, a 12" Ø post hole, 20 in. deep cored into the rock surface may be used if approved by the engineer for post 1. Granular material will be placed in the bottom of the hole, approximately 2.5" deep to provide drainage. The first post can be field cut to length, placed in the hole and backfilled with suitable backfill. The soil plate may be trimmed if required.
5. The breakaway cable assembly must be taut. A locking device (vice grips or channel lock pliers) should be used to prevent the cable from twisting when tightening nuts.

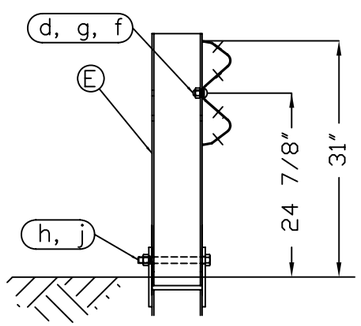

SECTION A-A
Post #2

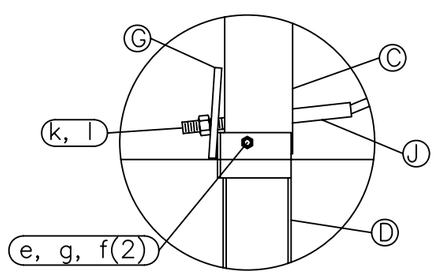

Post #1 Connection Detail

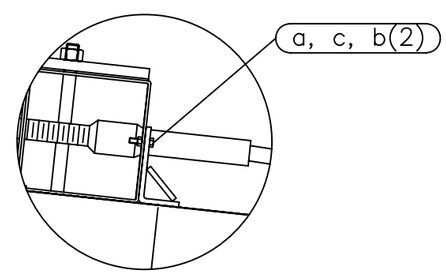

Impact Head Connection Detail

Road Systems, Inc.
Big Spring, TX
Phone: 432-263-2435
or Phone: 330-346-0721

FLEAT-SP-MGS Terminal
Midwest Guardrail System
31" Top of Rail

Sheet: 1
Date: 02/24/10
By: JRR
Drawing Name: FLT-SP-S-MGS
Scale: None
Rev: 0

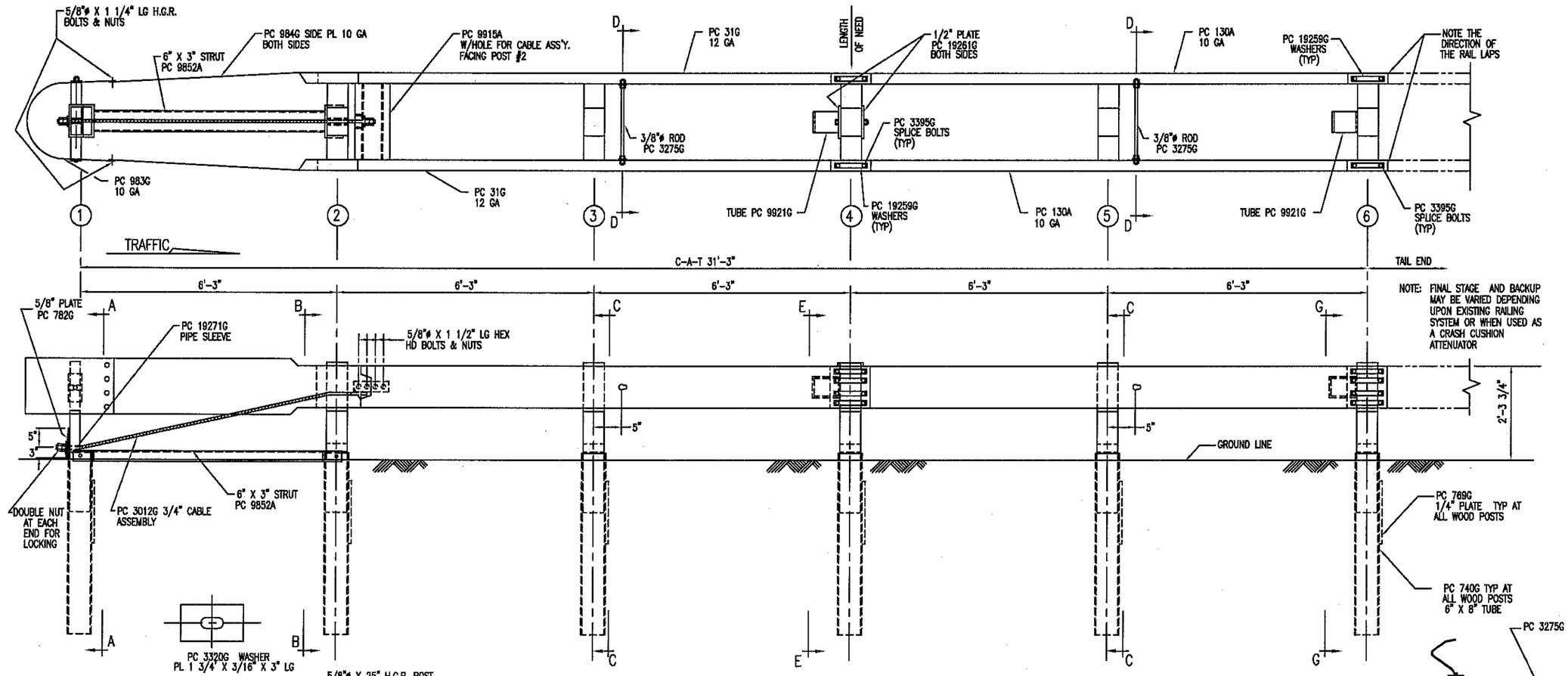

NOTE:
PC 3395G SPLICE BOLTS ARE USED TO ALLOW TELESCOPING ACTION.

C-A-T BILL OF MATERIAL

PRODUCT CODE	QTY	DESCRIPTION
31G	2	12/12'6/0 CAT (GUARDRAIL)
130A	2	10/12'6/5'10:6'8/SP CAT (GUARDRAIL)
705G	1	2" x 5 1/2" PIPE
740G	6	4'6 TUBE SLEEVE
769G	6	1/4 x 18 x 24 SOIL PLATE
782G	1	5/8" x 8" x 8" BEARING PLATE
983G	1	10/NOSE PLATE/CAT/ROLLED
984G	2	10/SIDE PLATE CAT
3012G	1	CABLE 3/4 x 8'0/DBL SWG
3074B	5	WD 3'6 POST #2, 3, 4, 5, 6 CAT
3075B	1	WD 3'6 POST #1 CAT
3100B	2	WD BLOCK 1'2 #1 CAT
3101B	10	WD BLOCK 1'2 #2-6 CAT
3255G	4	3/8" FLAT WASHER
3263G	4	3/8"ø x 2" LAG SCREW
3275G	2	3/8"ø x 24 1/2" RESTRAINT ROD
3300G	20	5/8" FLAT WASHER
3320G	4	3/16" x 1 3/4" x 3" RECT WASHER
3340G	85	5/8" G.R. NUT
3360G	16	5/8"ø x 1 1/4" G.R. BOLT
3380G	8	5/8"ø x 1 1/2" HEX BOLT
3395G	32	5/8"ø x 1 3/4" HEX BOLT CAT
3478G	13	5/8"ø x 7 1/2" HEX BOLT
3497G	6	5/8"ø x 9 1/2" HEX BOLT
3650G	2	5/8"ø x 25" G.R. BOLT
3900G	2	1" FLAT WASHER
3910G	4	1" HEX NUT
4252G	8	3/8" HEX NUT
4258G	4	3/8" LOCK WASHER
4640G	8	5/8"ø x 24" HEX BOLT
9852A	1	CHANNEL STRUT x 6'-6"
9915A	1	SPACER CHANNEL CAT
9916A	1	10/BENT PLATE SLEEVE
9921G	2	6" SLEEVE 6 x 8
19259G	32	3/16" x 2" x 10" PLATE WASHER
19261G	2	1/2 x 3 x 7 POST PLATE
19271G	1	1" x 2 1/2" PIPE SLEEVE CAT

REV.	CHK'D	BY	DATE	REMARKS
6		BT	8-9-00	CHANGED SYSTEM HEIGHT, WAS 2'-3"
5		LH	6-22-00	REPLACED PC 766 WITH PC 769, CHANGED TITLE BLOCK
4		BT	4-10-97	ROTATED BLOCK PC 9921 90° AT POST 4 & 6
3		BT	3-10-97	DELETED PC 3072, 3073, 4470, CHG QTY 3074 & 3478
2		BT	8-12-96	SECTIONS A-A & B-B, CORRECTED PIPE SLEEVE PC No
1		BT	5-1-96	REVISED PC No 31G & 130A

C-A-T

CRASH-CUSHION ATTENUATING TERMINAL PLAN, ELEVATION & SECTIONS FOR USE AS A LONGITUDINAL MEDIAN BARRIER TERMINAL OR CRASH CUSHION ATTENUATOR

TRINITY INDUSTRIES, INC.
HIGHWAY SAFETY PRODUCTS
2525 STEMMONS FREEWAY, DALLAS, TX 75207

DRAWN	BT
CHECKED	EN
SCALE	N.T.S.
DATE	7-15-94
ENG. FILE #	SS245-01E
SHT.No.	E1 OF 1
DRAWING NO.	SS-245
REV.	6

This drawing and the information shown thereon is the sole property of TRINITY INDUSTRIES, INC. Neither the drawing nor such information is to be used for any purpose other than that for which it was specifically furnished by TRINITY INDUSTRIES, INC., nor is any reproduction authorized without written permission.

Brakemaster® 350

PARTS LIST

ITEM	STOCK NO.	DESCRIPTION	REQ'D
1	9202024-0000	ANCHOR ASSY,FOUNDATION TUBE,6 1/2 FT.	1
2	9204010-0000	BREAKAWAY ASSY	1
3	9206010-0000	BRAKE/TENSION SUPPORT ASSY	1
4	9208010-0000	CABLE/BRAKE ASSY	1
5	9210011-0000	DIAPHRAGM,BRS	3
6	9212010-0000	PANEL/STRAP ASSY	6
7	9214010-0000	TRANSITION STRAP ASSY	2

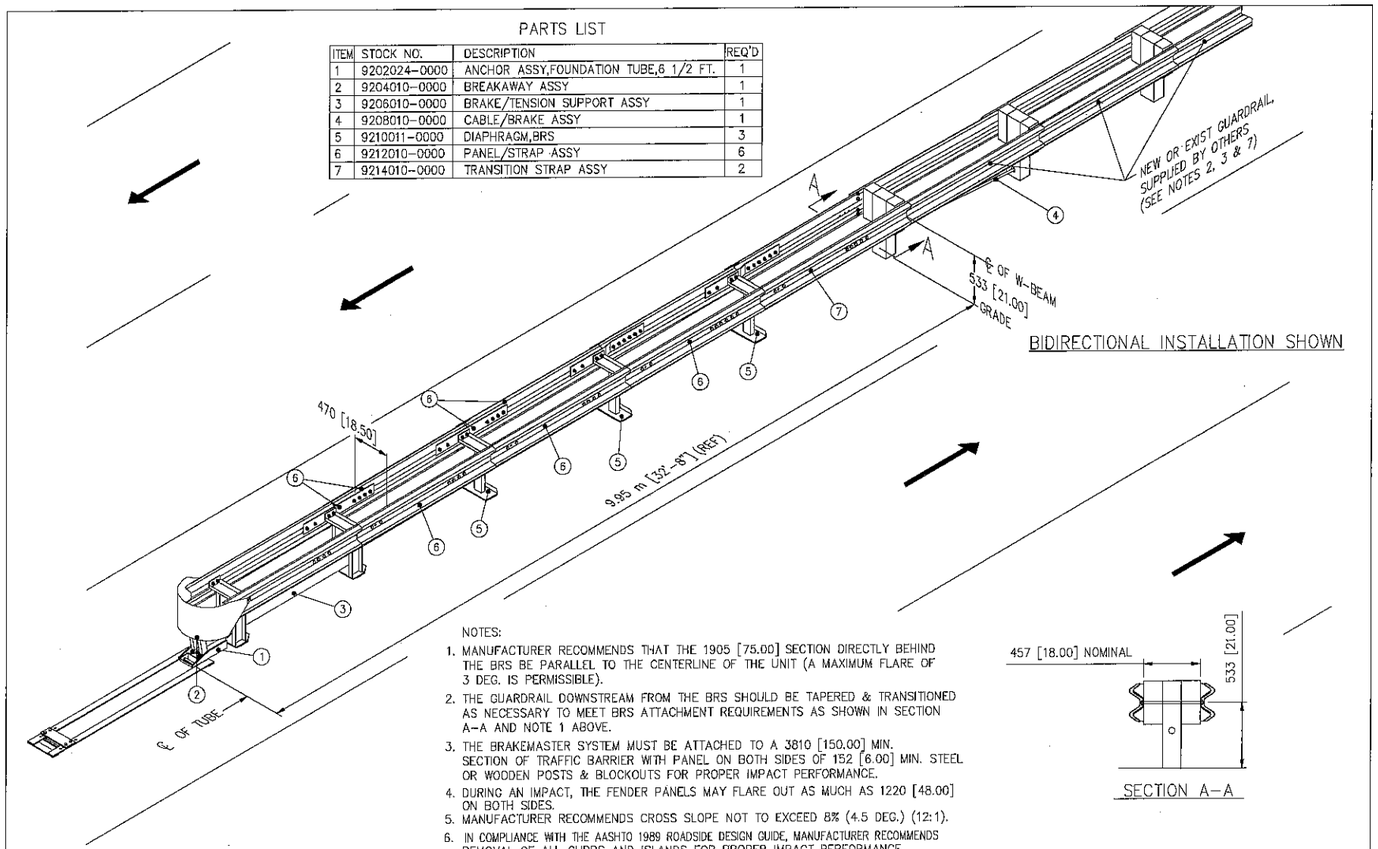

BIDIRECTIONAL INSTALLATION SHOWN

SECTION A–A

NOTES:

1. MANUFACTURER RECOMMENDS THAT THE 1905 [75.00] SECTION DIRECTLY BEHIND THE BRS BE PARALLEL TO THE CENTERLINE OF THE UNIT (A MAXIMUM FLARE OF 3 DEG. IS PERMISSIBLE).
2. THE GUARDRAIL DOWNSTREAM FROM THE BRS SHOULD BE TAPERED & TRANSITIONED AS NECESSARY TO MEET BRS ATTACHMENT REQUIREMENTS AS SHOWN IN SECTION A–A AND NOTE 1 ABOVE.
3. THE BRAKEMASTER SYSTEM MUST BE ATTACHED TO A 3810 [150.00] MIN. SECTION OF TRAFFIC BARRIER WITH PANEL ON BOTH SIDES OF 152 [6.00] MIN. STEEL OR WOODEN POSTS & BLOCKOUTS FOR PROPER IMPACT PERFORMANCE.
4. DURING AN IMPACT, THE FENDER PANELS MAY FLARE OUT AS MUCH AS 1220 [48.00] ON BOTH SIDES.
5. MANUFACTURER RECOMMENDS CROSS SLOPE NOT TO EXCEED 8% (4.5 DEG.) (12:1).
6. IN COMPLIANCE WITH THE AASHTO 1989 ROADSIDE DESIGN GUIDE, MANUFACTURER RECOMMENDS REMOVAL OF ALL CURBS AND ISLANDS FOR PROPER IMPACT PERFORMANCE.
7. DOWNSTREAM GUARDRAIL MUST BE ANCHORED TO WITHSTAND A TENSION OF 534 kN [120,000 LBS.] WHICH COULD DEVELOP DURING A SIDE ANGLE IMPACT.
8. CAUTION: DO NOT ATTACH THE BRAKEMASTER SYSTEM DIRECTLY TO A RIGID CONCRETE BARRIER. A GUARDRAIL TRANSITION SECTION IS REQUIRED. CONTACT ENERGY ABSORPTION SYSTEMS AT (312) 467-6750 FOR MORE INFORMATION.
9. UNITS OF MEASURE ARE MILLIMETERS [INCHES] UNLESS OTHERWISE NOTED.
10. SEE THE "BRAKEMASTER SYSTEM DESIGN MANUAL" CODED ENE 704-1091 FOR A DESCRIPTION OF ITS IMPACT PERFORMANCE CHARACTERISTICS AND DESIGN LIMITATIONS BEFORE PLACING A SYSTEM AT A GIVEN SITE. INFORMATION AND ADDITIONAL COPIES OF ABOVE MANUAL ARE AVAILABLE BY CALLING THE CUSTOMER SERVICE DEPARTMENT AT (312) 467-6750.

MODEL NO. 105106BRS5

ENERGY ABSORPTION SYSTEMS, INC.
ENGINEERING AND RESEARCH DEPARTMENT

BRAKEMASTER®350 SYSTEM (BRS)
GENERAL ASSEMBLY
(BIDIRECTIONAL SYSTEM)

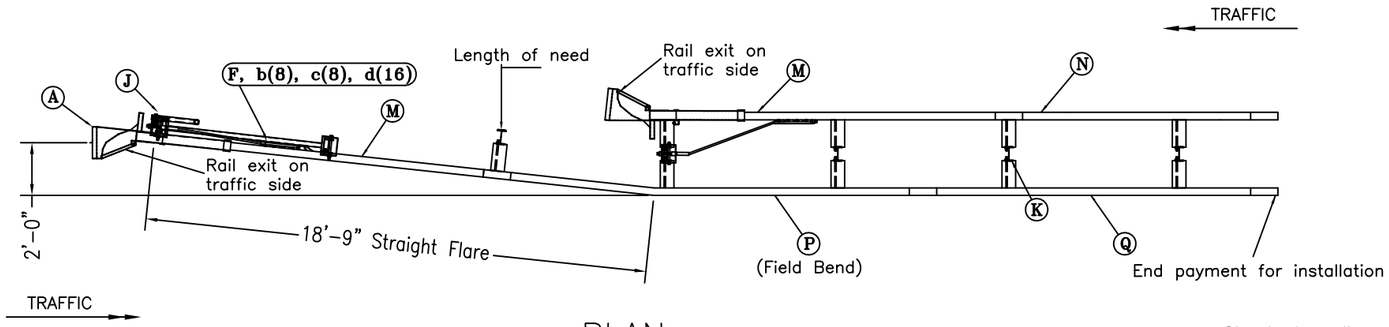

PLAN

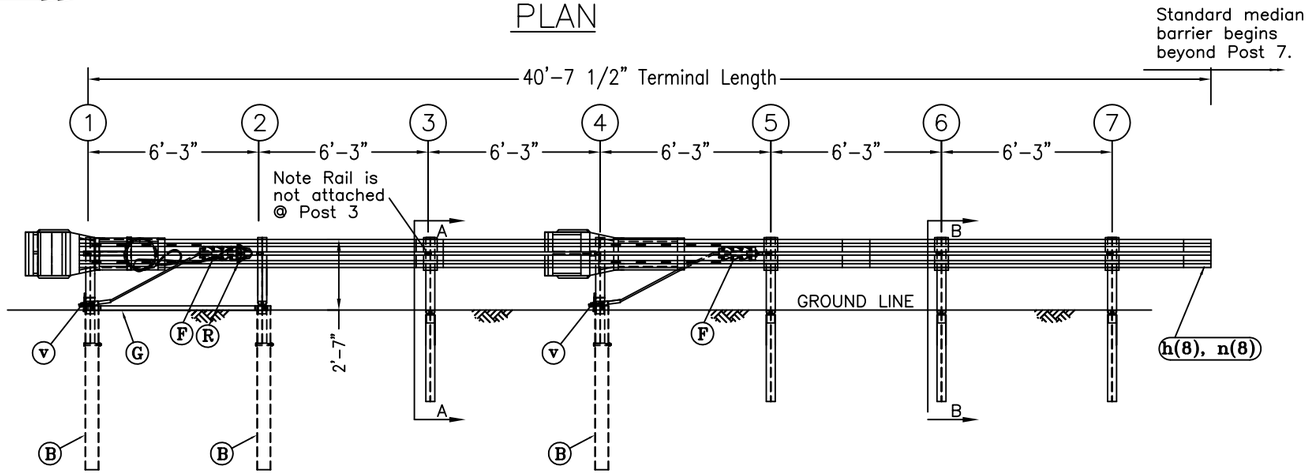

ELEVATION

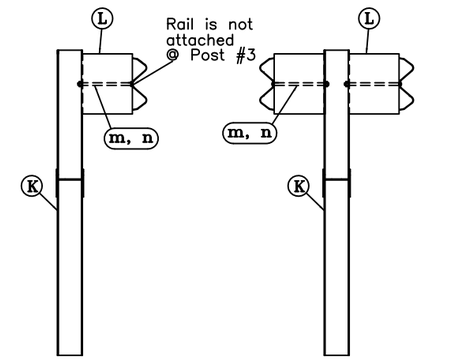

SECTION A–A (Post 3)

SECTION B–B (Typical @ Post 5, 6 & 7)

ITEM	QTY	DESCRIPTION	PART#
A	2	FLEAT IMPACT HEAD	F3000
B	3	SOIL TUBE, 6" x 8" x 6'–0"	S730
C	2	BEARING PLATE	E750
D	1	3/8" GALV Cable 20'–0"	C3820
E	2	BCT CABLE ANCHOR ASSEMBLY	E770
F	2	CABLE ANCHOR BOX	S760
G	1	GROUND STRUT	E780
H	3	BREAKAWAY END POSTS 1, 2, & 4	MGSPB620
J	1	POST BREAKER	PBMT
K	4	BREAKAWAY LINE POSTS 3, 5, 6 & 7	MGSPB621
L	9	TIMBER BLOCKOUT OR RECYCLED EQUIV	P675
M	2	W–BEAM END SECTION, 12 GA. 12.5'	SF1303
N	1	W–BEAM GUARDRAIL, 12 GA. 9'–4 1/4"	G1202A
P	1	W–BEAM GUARDRAIL, 12 GA. 15'–7 1/2"	G1204A
Q	1	W–BEAM GUARDRAIL, 12 GA. 12'–6"	G1203A
R	1	DEFLECTOR BOX	DBMT
		HARDWARE	
a	2	5/16" DIA. x 3" HEX BOLT	B5160304A
b	2	5/16" HEX NUT	N0516
c	4	5/16" WASHER	W0516
d	2	3/8" DIA. x 3" LAG SCREW	E350
e	16	1/2" DIA. SHOULDER BOLT	SB58A
f	16	1/2" A325 NUT	N055A
g	32	1/2" WASHER	W050A
h	41	5/8" DIA. X 1 1/4" SPLICE BOLT	B580122
j	1	5/8" DIA. x 3" HEX BOLT	B580304
k	3	5/8" DIA. x 7 1/2" HEX BOLT	B580754
m	9	5/8" DIA. x 14" H.G.R. BOLT	B581402
n	54	5/8" H.G.R. NUT	N050
p	1	5/8" H.G.R. WASHER	W050
q	3	3/4" DIA. x 10" HEX BOLT	B341004
r	3	3/4" HEX NUT	N030
s	6	3/4" WASHER	W030
t	4	1" ANCHOR CABLE HEX NUT	N100
u	4	1" ANCHOR CABLE WASHER	W100
v	3	CABLE TIE	CT100ST

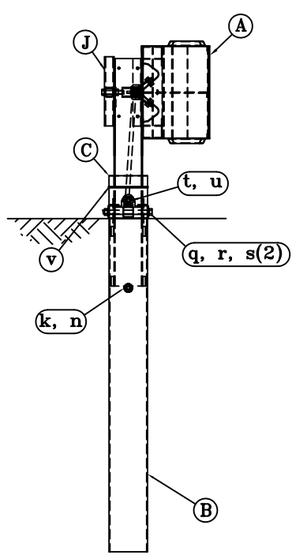

END VIEW OF POST 1

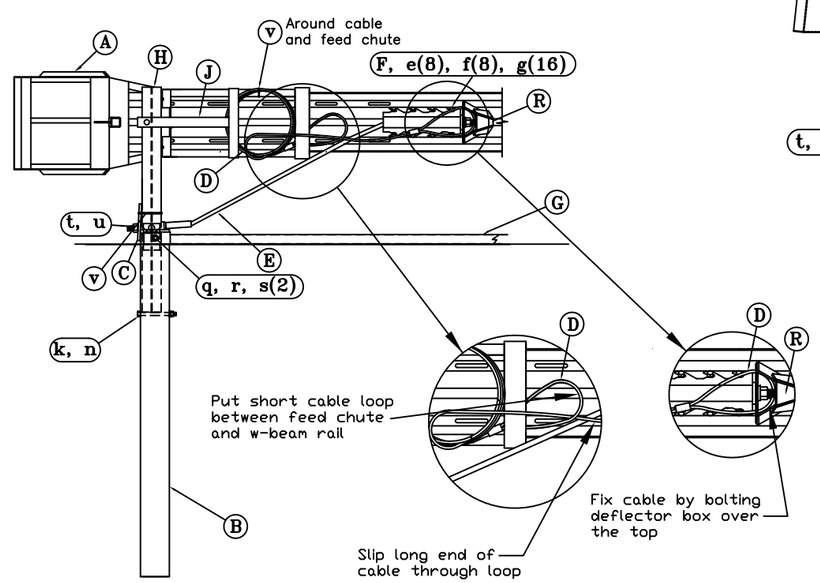

BACK VIEW OF POST 1

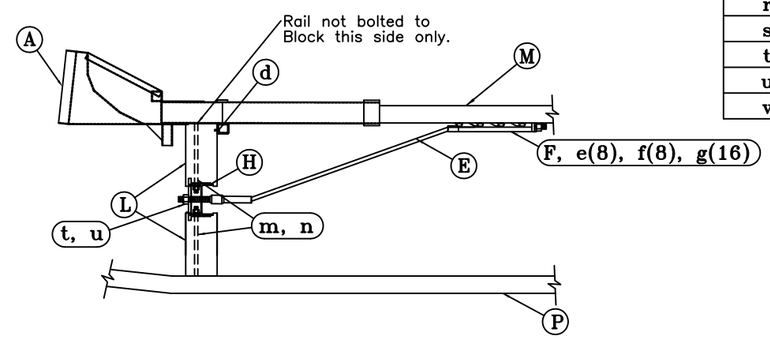

SECOND IMPACT HEAD CONNECTING DETAIL (Post 4)

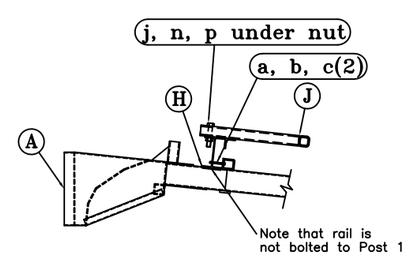

IMPACT HEAD CONNECTING DETAIL (Post 1)

GENERAL NOTES:
1. Breakaway posts are required with the FLEAT–MT.
2. All bolts, nuts, cable assemblies, cable anchors and plates shall be galvanized.
3. The soil tubes shall not protrude more than 4" above the ground (measured along a 5' cord). Site grading may be necessary to meet this requirement.
4. The soil tubes may be driven with an approved driving head. Soil tubes should not be driven with the post in the tube. If the tubes are placed in drilled holes, the backfill material must be satisfactorily compacted to prevent settlement.
5. When rock is encountered during excavation, a 12' Dia. post hole, 20" deep may be used if approved by the engineer. Granular material will be placed in the bottom of the hole approx. 2 1/2" deep to provide drainage. The soil tubes will be field cut to length, placed in the hole and backfilled with adequately compacted material excavated from the hole.
6. The breakaway cable assembly must be taut. A locking device (vice grips or channel lock pliers) should be used to prevent the cable from twisting when tightening nuts.

RSI Road Systems, Inc.
Big Spring, TX
Phone: 432–263–2435
or Phone: 330–346–0721

Median FLEAT Terminal
Midwest Guardrail System
Steel Posts

Sheet: S1
Date: 09/20/11
Drawing Name: MEDFLT-S-MGS
Scale: NONE
By: JRR
Rev: 0