Dist	COUNTY	ROUTE	POST MILES TOTAL PROJECT	SHEET No.	TOTAL SHEETS
06	Fre	168,180	Var	1	204

STATE OF CALIFORNIA

DEPARTMENT OF TRANSPORTATION

ACSTP-X019(027)E

PROJECT PLANS FOR CONSTRUCTION ON

STATE HIGHWAY

IN FRESNO COUNTY
AT VARIOUS LOCATIONS

TO BE SUPPLEMENTED BY STANDARD PLANS DATED 2010

INDEX OF PLANS

SHEET No.	DESCRIPTION
1	TITLE AND LOCATION MAP
2	CONSTRUCTION DETAILS
3	CONSTRUCTION AREA SIGNS
4-39	IRRIGATION SPRINKLER SCHEDULE
40-61	LANDSCAPE DETAILS
62-66	LANDSCAPE QUANTITIES
67-68	LANDSCAPE BOOSTER PUMP
69-182	ELECTRICAL SYSTEMS
183-185	ELECTRICAL DETAILS
186-187	ELECTRICAL QUANTITIES
188-204	REVISED STANDARD PLAN

THE STANDARD PLANS LIST APPLICABLE TO THIS CONTRACT IS INCLUDED IN THE NOTICE TO BIDDERS AND SPECIAL PROVISIONS BOOK.

LOCATION MAP

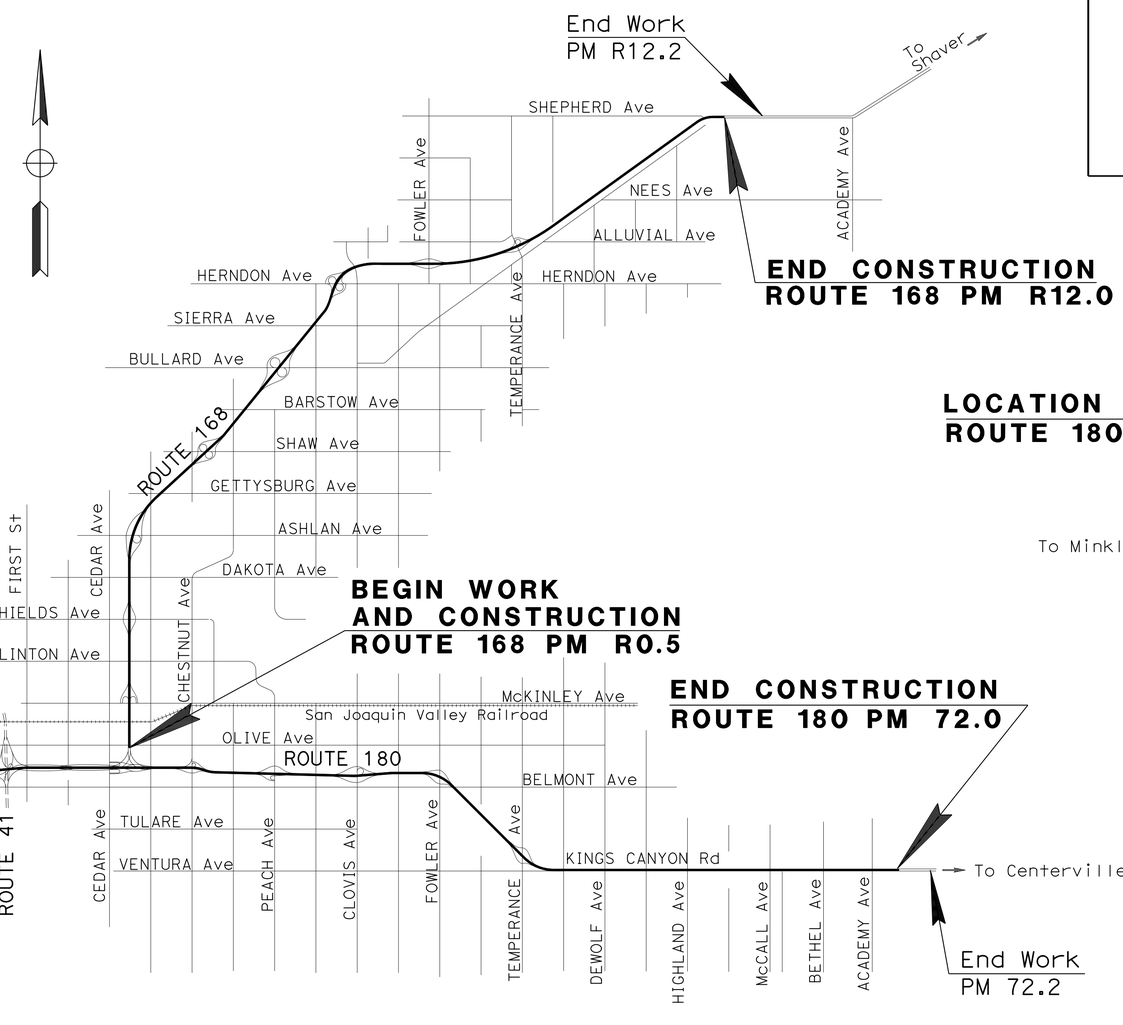

NO SCALE

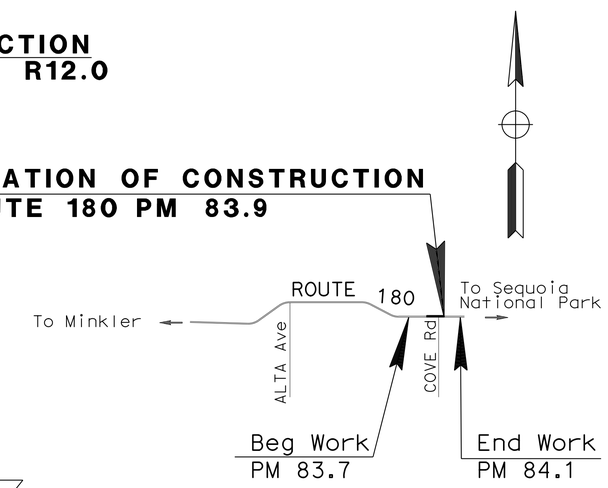

THE CONTRACTOR SHALL POSSESS THE CLASS (OR CLASSES) OF LICENSE AS SPECIFIED IN THE "NOTICE TO BIDDERS."

PROJECT MANAGER ANAND KAPOOR

DESIGN ENGINEER GETACHEW ESHETE

PROJECT ENGINEER REGISTERED CIVIL ENGINEER — DATE 8-1-13

August 5, 2013
PLANS APPROVAL DATE

REGISTERED PROFESSIONAL ENGINEER JUNIUS PAUL JENSEN No. 66320 Exp. 6-30-14 CIVIL STATE OF CALIFORNIA

THE STATE OF CALIFORNIA OR ITS OFFICERS OR AGENTS SHALL NOT BE RESPONSIBLE FOR THE ACCURACY OR COMPLETENESS OF SCANNED COPIES OF THIS PLAN SHEET.

CONTRACT No.	06-0Q5504
PROJECT ID	0613000266

LAST REVISION 07-31-13 DATE PLOTTED => 19-AUG-2013 TIME PLOTTED => 10:14

Dist	COUNTY	ROUTE	POST MILES TOTAL PROJECT	SHEET No.	TOTAL SHEETS
06	Fre	168,180	Var	2	204

Getachew Eshete 8-04-13
REGISTERED CIVIL ENGINEER DATE

8-5-13
PLANS APPROVAL DATE

REGISTERED PROFESSIONAL ENGINEER GETACHEW ESHETE No. 52245 Exp. 12-31-14 CIVIL STATE OF CALIFORNIA

THE STATE OF CALIFORNIA OR ITS OFFICERS OR AGENTS SHALL NOT BE RESPONSIBLE FOR THE ACCURACY OR COMPLETENESS OF SCANNED COPIES OF THIS PLAN SHEET.

WATER POLLUTION CONTROL

Co-ROUTE	NAME OF NEAREST BRIDGE	TEMPORARY DRAINAGE INLET PROTECTION *
		EACH
Fre-168	McKINLEY AVENUE	1
Fre-168	SHIELDS AVENUE	1
Fre-168	ASHLAN AVENUE	3
	TOTAL	5

* NECESSITY AND LOCATION TO BE DETERMINED BY THE ENGINEER.

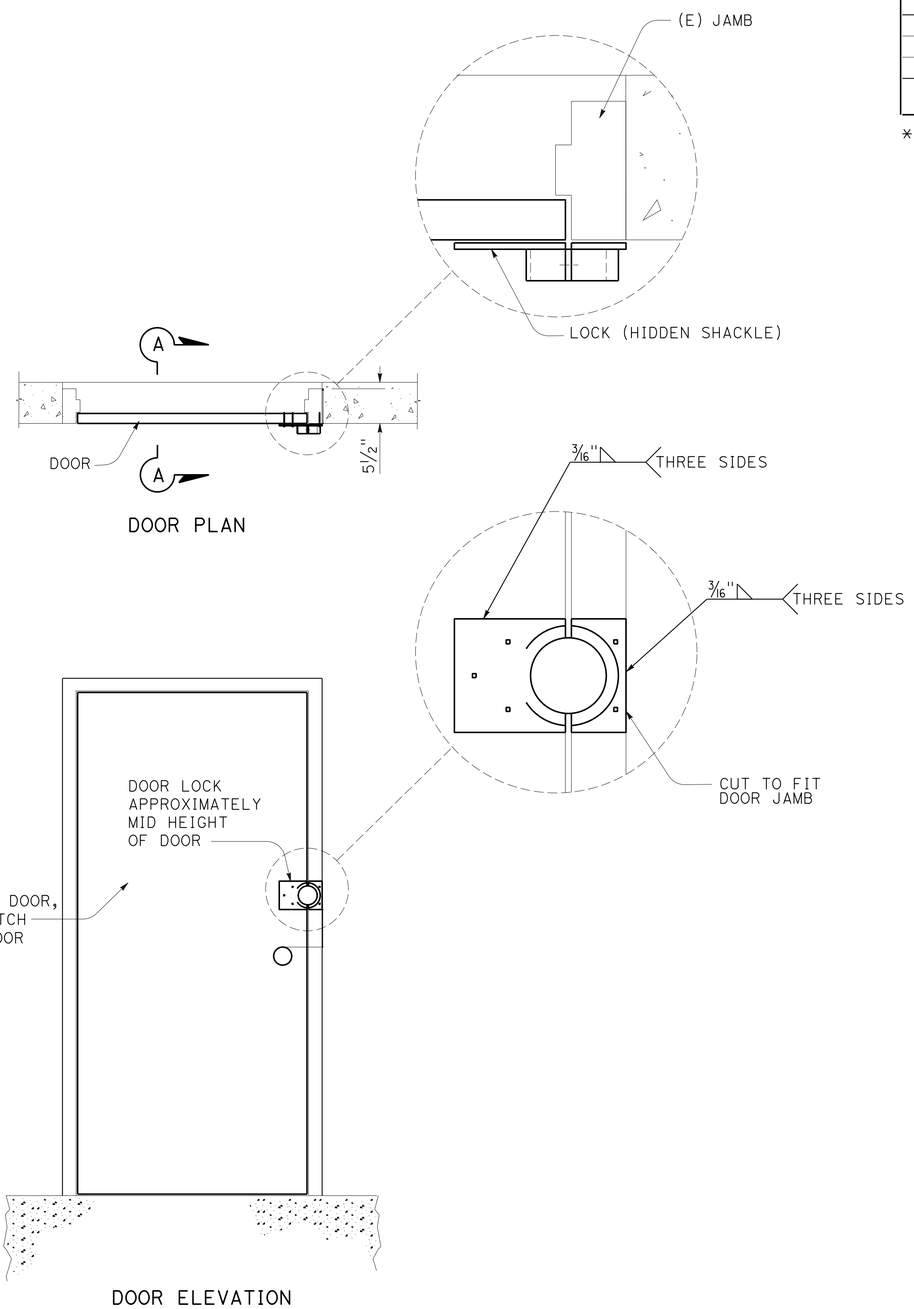

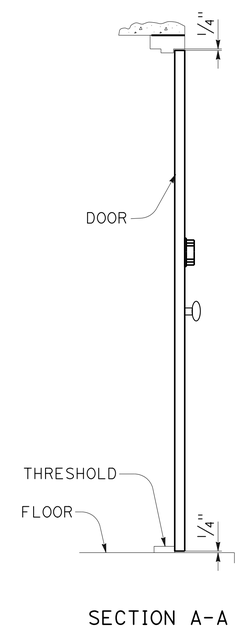

NOTES:

1. FABRICATE PUMP HOUSE DOORS IN CONFORMANCE WITH SDI A 250.8 OR NAAMM-HMMA 861.
2. HINGES MUST COMPLY WITH BHMA A 156.1.
3. GALVANNEALED STEEL SHEET MUST BE COMMERCIAL STEEL, TYPE B, COMPLYING WITH ASTM A 1008/A 1008M WITH AT LEAST AN A60 METALLIC COATING COMPLYING WITH ASTM A 653/A 653M.
4. THE PUMP HOUSE DOORS CONSIST OF THE DOOR AND DOOR HARDWARE. FURNISH THE FACTORY APPLIED FINISH COATING SYSTEM.
5. THE PUMP HOUSE DOORS MUST BE AT LEAST 1 3/4" THICK, FULL FLUSH, SEAMLESS HOLLOW METAL CONSTRUCTION. THE DOORS MUST COMPLY WITH SDI A250.4, PHYSICAL ENDURANCE LEVEL A, AND THE FOLLOWING:
   a. FABRICATE FACE SHEETS, VERTICAL STIFFENERS, AND TOP AND BOTTOM CHANNELS FROM 0.053" THICK GALVANNEALED STEEL SHEET.
   b. FABRICATE THE STEEL- STIFFENED CORE USING VERTICAL STIFFENERS THAT EXTEND FULL DOOR HEIGHT. INSTALL STIFFENERS NOT MORE THAN 6" APART AND SPOT WELD TO BOTH FACE SHEETS NO MORE THAN 5" IN CENTER. FILL SPACES BETWEEN STIFFENERS WITH GLASS-FIBER INSULATION OR MINERAL-FIBER INSULATION.
   c. TOP AND BOTTOM CHANNELS MUST BE CONTINUOUS AND SPOT WELDED TO BOTH FACE SHEETS. THE TOP CHANNEL MUST BE FLUSH AND THE BOTTOM CHANNEL MUST BE INVERTED.
   d. INCLUDE MOISTURE VENTS IN THE BOTTOM CHANNEL.

PUMP PLANT DOOR

PUMP HOUSE	LOCATION	ROUTE	POST MILE	PUMP PLANT DOOR
				EA
Br No. 42-0339W	168 & DAKOTA Ave	168	2.80	1
Br No. 42-0359W	168 & WILLOW Ave	168	4.50	1
Br No. 42-0402W	168 & VILLA Ave	168	5.59	1
Br No. 42-0407W	168 & SUNNYSIDE Ave	168	6.78	1
Br No. 42-0408W	168 & FOWLER Ave	168	7.49	1
Br No. 42-0434W	180 & HUGHES Ave	180	55.38	1
Br No. 42-0326W	180 & CEDAR Ave	180	59.50	1
Br No. 42-0398W	180 & MAPLE Ave	180	60.40	1
Br No. 42-0418W	180 & PEACH Ave	180	61.54	1
Br No. 42-0420W	180 & CLOVIS Ave	180	62.56	1
			TOTAL	10

PUMP PLANT DOOR

CONSTRUCTION DETAILS AND SUMMARY OF QUANTITIES

NO SCALE

C-1

STATE OF CALIFORNIA - DEPARTMENT OF TRANSPORTATION
Caltrans DESIGN
FUNCTIONAL SUPERVISOR GETACHEW ESHETE
CALCULATED-DESIGNED BY SAUL AGUILAR
CHECKED BY SATWINDER BRAR
REVISED BY
DATE REVISED

LAST REVISION 08-04-13
DATE PLOTTED => 15-AUG-2013
TIME PLOTTED => 09:26

Dist	COUNTY	ROUTE	POST MILES TOTAL PROJECT	SHEET No.	TOTAL SHEETS
06	Fre	180,168	Var	3	204

Hassan Taha 07-29-13
REGISTERED CIVIL ENGINEER DATE

8-5-13
PLANS APPROVAL DATE

REGISTERED PROFESSIONAL ENGINEER HASSAN M. TAHA No. 60130 Exp. 06/30/14 CIVIL STATE OF CALIFORNIA

THE STATE OF CALIFORNIA OR ITS OFFICERS OR AGENTS SHALL NOT BE RESPONSIBLE FOR THE ACCURACY OR COMPLETENESS OF SCANNED COPIES OF THIS PLAN SHEET.

NOTE:
EXISTING UTILITY FACILITIES HAVE NOT BEEN PLOTTED ON THESE PLANS.

LEGEND:
CONSTRUCTION AREA

CONSTRUCTION AREA SIGNS (PORTABLE)

SIGN No.	SIGN CODE	PANEL SIZE (in X in)	SIGN MESSAGE	No. OF SIGNS
A	G20-2	48" x 24"	END ROAD WORK	136
B	W20-1	48" x 48"	ROAD WORK AHEAD	136

NOTE: LOCATIONS OF CONSTRUCTION AREA SIGNS (PORTABLE) SHOWN ARE APPROXIMATE. EXACT LOCATIONS TO BE DETERMINED BY THE ENGINEER.

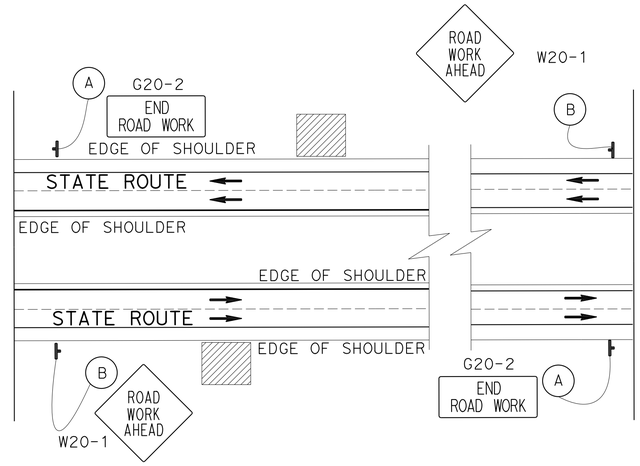

TYPICAL PLACEMENT OF CONSTRUCTION AREA SIGNS (PORTABLE) DURING LANE AND SHOULDER CLOSURE

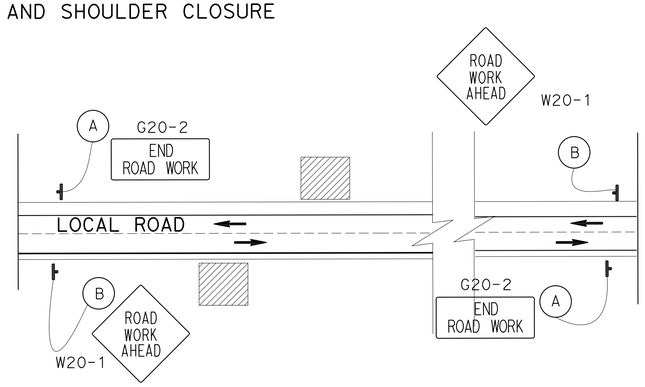

TYPICAL PLACEMENT OF CONSTRUCTION AREA SIGNS (PORTABLE) ON LOCAL ROAD

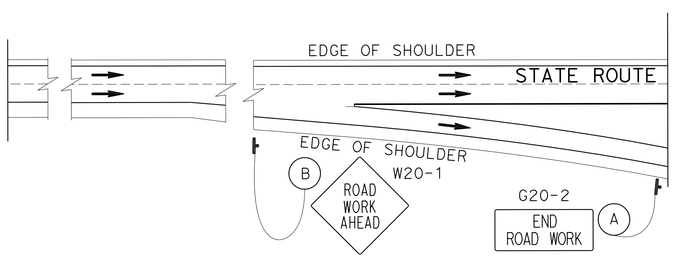

TYPICAL PLACEMENT OF CONSTRUCTION AREA SIGNS (PORTABLE) AT OFF RAMP/CONNECTOR

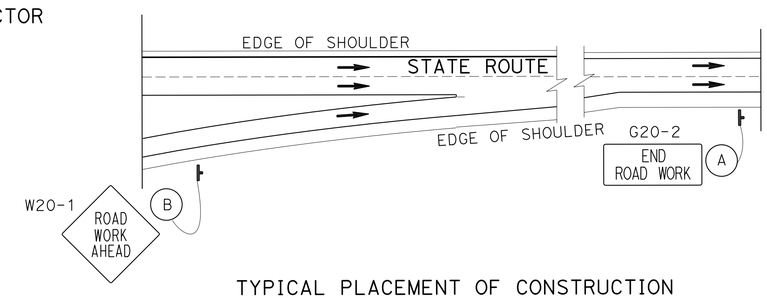

TYPICAL PLACEMENT OF CONSTRUCTION AREA SIGNS (PORTABLE) AT ON RAMP/CONNECTOR

APPROVED FOR CONSTRUCTION AREA SIGN WORK ONLY

CONSTRUCTION AREA SIGNS
CS-1

NO SCALE

REVISED BY | DATE REVISED
HASSAN M. TAHA | SANDY LE
CALCULATED-DESIGNED BY | CHECKED BY
FUNCTIONAL SUPERVISOR: MOHAMMED QATAMI
STATE OF CALIFORNIA - DEPARTMENT OF TRANSPORTATION
Caltrans
TRAFFIC DESIGN

LAST REVISION 07-29-13 | DATE PLOTTED => 15-AUG-2013 | TIME PLOTTED => 09:26

Dist	COUNTY	ROUTE	POST MILES TOTAL PROJECT	SHEET No.	TOTAL SHEETS
06	Fre	168,180	Var	4	204

LICENSED LANDSCAPE ARCHITECT

08-05-13

PLANS APPROVAL DATE

LICENSED LANDSCAPE ARCHITECT MICHAEL W. MILLS No. 4720 Expiration Date 11/30/14 Renewal Date 7/31/13 Date STATE OF CALIFORNIA

THE STATE OF CALIFORNIA OR ITS OFFICERS OR AGENTS SHALL NOT BE RESPONSIBLE FOR THE ACCURACY OR COMPLETENESS OF SCANNED COPIES OF THIS PLAN SHEET.

NOTES:

1. LOCATION NUMBERS ARE USED FOR IRRIGATION WORK ONLY.
2. DATA IN THESE TABLES IS FOR REFERENCE ONLY. THIS DATA IS TAKEN FROM PRIOR HIGHWAY PLANTING CONTRACTS. IT IS FURNISHED ONLY TO PROVIDE INFORMATION FOR LOCATING THE EXISTING IRRIGATION FACILITIES.
3. 'M' INDICATES DATA IS MISSING. CONTRACTOR TO VERIFY TYPE, SIZE, QUANTITY, AND LOCATION OF THE FACILITIES IN THE PRESENCE OF THE ENGINEER.

EXISTING IRRIGATION LOCATION

		POINT OF CONNECTION							Irr SERVICE AREA			
				Loc	DIRECTION				FROM		TO	
Loc	Co-ROUTE	ICC No.	SHEET	PM	EB	WB	NAME OF NEAREST Br	Br PM	PM	DESCRIPTION	PM	DESCRIPTION
1	Fre-168	822	LD-1	R0.50		X	OLIVE Ave	R0.52	R0.50	NW QUADRANT 168/180 Conn	R0.50	OLIVE Ave
2	Fre-168	681	LD-1	R0.70	X		FLORADORA Ave	R0.73	R0.55	OLIVE Ave	R0.73	FLORADORA Ave
		682	LD-1	R0.70	X		FLORADORA Ave	R0.73	R0.55	OLIVE Ave	R0.73	FLORADORA Ave
3	Fre-168	683	LD-1	R0.75	X		FLORADORA Ave	R0.73	R0.73	FLORADORA Ave	R0.97	McKINLEY Ave
4	Fre-168	A	LD-1	R0.87	X		FLORADORA Ave	R0.73	R0.73	FLORADORA Ave	R0.97	McKINLEY Ave
5	Fre-168	684	LD-2	R0.99	X		McKINLEY Ave	R0.97	R0.97	McKINLEY Ave	R1.21	WELDON Ave POC
6	Fre-168	686	LD-2	R1.43	X		CLINTON Ave	R1.49	R0.97	McKINLEY Ave	R1.73	PRINCETON Ave POC
7	Fre-168	685	LD-2	R0.99		X	McKINLEY Ave	R0.97	R0.97	McKINLEY Ave	R1.21	WELDON Ave POC
8	Fre-168	687	LD-2	R1.46		X	CLINTON Ave	R1.49	R0.97	McKINLEY Ave	R1.73	PRINCETON Ave POC
9	Fre-168	688	LD-3	R1.86	X		SHIELDS Ave	R2.02	R1.73	PRINCETON Ave POC	R2.02	SHIELDS Ave
10	Fre-168	690	LD-3	R1.93	X		SHIELDS Ave	R2.02	R2.02	SHIELDS Ave	R2.21	END EB ON-RAMP AT SHIELDS Ave
11	Fre-168	689	LD-3	R2.00		X	SHIELDS Ave	R2.02	R1.73	PRINCETON Ave POC	R2.02	SHIELDS Ave
12	Fre-168	691	LD-3	R2.05		X	SHIELDS Ave	R2.02	R2.02	SHIELDS Ave	R2.21	Beg WB OFF-RAMP AT SHIELDS Ave
13	Fre-168	610	LD-4	R2.48	X		DAKOTA Ave	R2.52	R2.21	END EB ON-RAMP AT SHIELDS Ave	R2.68	800' EAST OF DAKOTA Ave
14	Fre-168	611	LD-4	R2.54		X	DAKOTA Ave	R2.52	R2.21	Beg WB OFF-RAMP AT SHIELDS Ave	R2.68	800' EAST OF DAKOTA Ave
15	Fre-168	692	LD-4	R3.02		X	ASHLAN Ave	R3.04	R2.68	800' EAST OF DAKOTA Ave	R3.04	ASHLAN Ave
		694	LD-4	3.06		X	ASHLAN Ave	R3.04	R3.04	ASHLAN Ave	R3.65	GETTYSBURG Ave
16	Fre-168	693	LD-4	R3.02	X		ASHLAN Ave	R3.04	R2.68	800' EAST OF DAKOTA Ave	R3.04	ASHLAN Ave
		695	LD-4	3.06	X		ASHLAN Ave	R3.04	R3.04	ASHLAN Ave	R3.65	GETTYSBURG Ave
17	Fre-168	801	LD-5	R3.67	X		GETTYSBURG Ave	R3.65	R3.65	GETTYSBURG Ave	R4.12	Beg EB OFF-RAMP AT SHAW Ave
18	Fre-168	702	LD-5	R3.95		X	SHAW Ave	R4.26	R3.65	GETTYSBURG Ave	R4.26	SHAW Ave
		703	LD-5	R4.24		X	SHAW Ave	R4.26	R4.26	SHAW Ave	R4.81	WILLOW Ave
19	Fre-168	704	LD-5	R4.24	X		SHAW Ave	R4.26	R4.12	Beg EB OFF-RAMP AT SHAW Ave	R4.26	SHAW Ave
		705	LD-5	R4.24	X		SHAW Ave	R4.26	R4.26	SHAW Ave	R4.81	WILLOW Ave
20	Fre-168	706	LD-5	R4.97		X	BARSTOW Ave	R4.95	R4.81	WILLOW Ave	R5.63	BULLARD Ave
		708	LD-5	R5.61		X	BULLARD Ave	R5.63	R4.95	BARSTOW Ave	R5.63	BULLARD Ave
21	Fre-168	707	LD-6	R5.61	X		BULLARD Ave	R5.63	R4.95	BARSTOW Ave	R5.63	BULLARD Ave
		709	LD-6	R5.61	X		BULLARD Ave	R5.63	R5.47	Beg EB OFF-RAMP AT BULLARD Ave	R5.63	BULLARD Ave
22	Fre-168	625	LD-6	R5.65	X		BULLARD Ave	R5.63	R5.63	BULLARD Ave	R6.30	SIERRA Ave
23	Fre-168	626	LD-6	R5.65		X	BULLARD Ave	R5.63	R5.63	BULLARD Ave	R5.79	Beg WB OFF-RAMP AT BULLARD Ave
		627	LD-6	R5.65		X	BULLARD Ave	R5.63	R5.79	Beg WB OFF-RAMP AT BULLARD Ave	R6.30	SIERRA Ave
24	Fre-168	628	LD-6	6.63	X		PALO ALTO TRAIL	R6.66	R6.30	SIERRA Ave	R6.66	PALO ALTO TRAIL
25	Fre-168	629	LD-7	R6.85	X		HERNDON Ave	R6.87	R6.66	PALO ALTO TRAIL	R6.87	HERNDON Ave
		630	LD-7	R6.85	X		HERNDON Ave	R6.87	R6.87	HERNDON Ave	R7.13	CLOVIS Ave
26	Fre-168	631	LD-7	R6.89		X	HERNDON Ave	R6.87	R6.30	SIERRA Ave	R6.87	HERNDON Ave
		632	LD-7	R6.89		X	HERNDON Ave	R6.87	R6.87	HERNDON Ave	R7.02	Beg WB OFF-RAMP AT HERNDON Ave
27	Fre-168	633	LD-7	R8.02	X		FOWLER Ave	R8.04	R7.13	CLOVIS Ave	R8.04	FOWLER Ave
28	Fre-168	634	LD-7	R8.06	X		FOWLER Ave	R8.04	R8.04	FOWLER Ave	R8.54	ARMSTRONG Ave
		635	LD-7	R8.06	X		FOWLER Ave	R8.04	R8.54	ARMSTRONG Ave	R8.91	Beg EB OFF-RAMP AT TEMPERANCE Ave
29	Fre-168	636	LD-8	R8.02		X	FOWLER Ave	R8.04	R7.13	CLOVIS Ave	R7.55	SUNNYSIDE Ave
		637	LD-8	R8.02		X	FOWLER Ave	R8.04	R7.55	SUNNYSIDE Ave	R8.04	FOWLER Ave
30	Fre-168	638	LD-8	R8.06		X	FOWLER Ave	R8.04	R8.04	FOWLER Ave	R8.54	ARMSTRONG Ave
31	Fre-168	639	LD-8	R9.13	X		TEMPERANCE Ave	R9.15	R8.91	Beg EB OFF-RAMP AT TEMPERANCE Ave	R9.32	END EB ON-RAMP AT TEMPERANCE Ave
32	Fre-168	640	LD-8	R9.17	X		TEMPERANCE Ave	R9.15	R9.15	TEMPERANCE Ave	10.25	DeWOLF Ave
		641	LD-8	R9.17	X		TEMPERANCE Ave	R9.15	10.25	DeWOLF Ave	11.67	SHEPHERD Ave
33	Fre-168	642	LD-9	R9.13		X	TEMPERANCE Ave	R9.15	R8.54	ARMSTRONG Ave	R9.15	TEMPERANCE Ave
34	Fre-168	643	LD-9	R9.17		X	TEMPERANCE Ave	R9.15	R9.15	TEMPERANCE Ave	9.36	1000' EAST OF TEMPERANCE Ave
		644	LD-9	R9.17		X	TEMPERANCE Ave	R9.15	9.36	1000' EAST OF TEMPERANCE Ave	11.67	SHEPHERD Ave
35	Fre-180	803	LD-9	R56.39		X	WB 180 FROM NB99	R56.39	(99) 22.1	Rte 99 AND NIELSEN Ave	R56.66	G STREET
36	Fre-180	806	LD-9	R56.64		X	G STREET	R56.66	R56.66	G STREET	R56.78	H STREET
37	Fre-180	807	LD-10	R57.05		X	BROADWAY St	R57.07	R56.78	H STREET	R57.07	BROADWAY St

IRRIGATION SPRINKLER SCHEDULE

ISS-1

STATE OF CALIFORNIA - DEPARTMENT OF TRANSPORTATION

Caltrans® LANDSCAPE ARCHITECTURE

SENIOR LANDSCAPE ARCHITECT: BRAD COLE

CALCULATED-DESIGNED BY: SHERRY ALEXANDER

CHECKED BY: MICHAEL MILLS

REVISED BY / DATE REVISED

LAST REVISION 07-31-13

DATE PLOTTED => 15-AUG-2013

TIME PLOTTED => 09:26

Dist	COUNTY	ROUTE	POST MILES TOTAL PROJECT	SHEET No.	TOTAL SHEETS
06	Fre	168,180	Var	5	204

LICENSED LANDSCAPE ARCHITECT

08-05-13

PLANS APPROVAL DATE

LICENSED LANDSCAPE ARCHITECT MICHAEL W. MILLS No. 4779 Expiration Date 11/30/14 Renewal Date 7/31/13 Date STATE OF CALIFORNIA

THE STATE OF CALIFORNIA OR ITS OFFICERS OR AGENTS SHALL NOT BE RESPONSIBLE FOR THE ACCURACY OR COMPLETENESS OF SCANNED COPIES OF THIS PLAN SHEET.

EXISTING IRRIGATION LOCATION

		POINT OF CONNECTION							Irr SERVICE AREA			
				Loc	DIRECTION				FROM		TO	
Loc	Co-ROUTE	ICC No.	SHEET	PM	EB	WB	NAME OF NEAREST Br	Br PM	PM	DESCRIPTION	PM	DESCRIPTION
38	Fre-180	X	LD-10	R57.05	X		BROADWAY St	R57.07	R56.78	H STREET	R57.07	BROADWAY St
39	Fre-180	808	LD-10	R57.22		X	FULTON St	R57.24	R57.07	BROADWAY St	R57.24	FULTON St
40	Fre-180	Y	LD-10	R57.09	X		BROADWAY St	R57.07	R57.07	BROADWAY St	R57.24	FULTON St
41	Fre-180	809	LD-11	R57.32		X	VAN NESS Ave	R57.34	R57.24	FULTON St	R57.34	VAN NESS Ave
42	Fre-180	810	LD-11	R57.36		X	VAN NESS Ave	R57.34	R57.34	VAN NESS Ave	R57.45	BELMONT Ave
43	Fre-180	811	LD-11	R57.72		X	BLACKSTONE Ave	R57.84	R57.58	SAN PABLO Ave	R57.84	BLACKSTONE Ave
		750	LD-11	R57.72		X	BLACKSTONE Ave	R57.84	R57.58	SAN PABLO Ave	R57.92	ABBY St
44	Fre-180	812	LD-11	R57.90	X		ABBY St	R57.92	R57.92	ABBY St	R58.36	FRESNO St
45	Fre-180	Z	LD-12	R57.88		X	BLACKSTONE Ave	R57.84	R57.84	BLACKSTONE Ave	R57.92	ABBY St
46	Fre-180	813	LD-12	R58.13		X	DIANA St	R58.04	R58.04	DIANA St	R58.36	FRESNO St
47	Fre-180	814	LD-12	R58.44	X		Rte 180/41 SEPARATION	R58.66	R58.36	FRESNO St	(41)R24.2	Rte 41 AND BLEMONT Ave
		815	LD-12	R58.44	X		Rte 180/41 SEPARATION	R58.66	R58.66	SW QUADRANT Rte 180/41 Sep	R58.67	Rte 41
48	Fre-180	816	LD-12	R58.84	X		FIRST St	R58.86	(41)R24.2	Rte 41 AND BLEMONT Ave	R58.86	SE QUADRANT Rte 180/41 Sep; FIRST St
49	Fre-180	817	LD-13	R58.84		X	FIRST St	R58.86	R58.67	NE QUADRANT Rte 180/41 Sep	R58.86	FIRST St
		818	LD-13	R58.84		X	FIRST St	R58.86	(41)R25.0	Rte 41 AND FLORADORA Ave	R58.86	FIRST St
50	Fre-180	B	LD-13	R58.99		X	FIRST St	R58.86	R58.86	FIRST St	R59.49	3300' EAST OF FIRST St
51	Fre-180	C	LD-13	R58.98	X		FIRST St	R58.86	R58.86	FIRST St	R59.36	2600' EAST OF FIRST St
52	Fre-180	D	LD-13	R59.86		X	CEDAR Ave	R59.88	R59.49	3300' EAST OF FIRST St	R59.88	CEDAR Ave
53	Fre-180	E	LD-14	R59.86	X		CEDAR Ave	R59.88	R59.36	2600' EAST OF FIRST St	R59.88	CEDAR Ave
54	Fre-180	F	LD-14	R59.88		X	Rte 168/180 Conn	R60.59	R59.88	CEDAR Ave	R60.10	NW QUADRANT OF Rte 180/168 Conn
55	Fre-180	823	LD-14	R60.17	X		MAPLE Ave	R60.40	R59.88	CEDAR Ave	R60.07	WEST SIDE EB OFF-RAMP AT CEDAR Ave
56	Fre-180	824	LD-14	R60.35	X		MAPLE Ave	R60.40	R60.07	EAST SIDE EB OFF-RAMP AT CEDAR Ave	R60.40	MAPLE Ave
57	Fre-180	825	LD-15	R60.30		X	MAPLE Ave	R60.40	(41)R0.5	Rte 41 AND OLIVE Ave	R60.40	NE QUADRANT Rte180/168 Conn
58	Fre-180	826	LD-15	R60.61	X		CHESTNUT Ave	R60.90	R60.40	MAPLE Ave	R60.90	CHESTNUT Ave
59	Fre-180	827	LD-15	R60.61		X	CHESTNUT Ave	R60.90	R60.40	MAPLE Ave	R60.90	CHESTNUT Ave
60	Fre-180	828	LD-15	R61.13	X		WILLOW Ave	R61.40	R60.90	CHESTNUT Ave	R61.40	WILLOW Ave
61	Fre-180	829	LD-16	R60.92		X	CHESTNUT Ave	R60.90	R60.90	CHESTNUT Ave	R61.04	Beg WB OFF-RAMP AT CHESTNUT Ave
62	Fre-180	830	LD-16	R61.12		X	WILLOW Ave	R61.40	R61.04	Beg WB OFF-RAMP AT CHESTNUT Ave	R61.40	WILLOW Ave
63	Fre-180	831	LD-16	R61.85	X		PEACH Ave	R61.90	R61.40	WILLOW Ave	R61.90	PEACH Ave
64	Fre-180	832	LD-16	R61.88		X	PEACH Ave	R61.90	R61.40	WILLOW Ave	R61.90	PEACH Ave
65	Fre-180	833	LD-17	R61.92	X		PEACH Ave	R61.90	R61.90	PEACH Ave	R62.42	2700' EAST OF PEACH Ave
66	Fre-180	834	LD-17	R61.92		X	PEACH Ave	R61.90	R61.90	PEACH Ave	R62.42	2700' EAST OF PEACH Ave
67	Fre-180	835	LD-17	R62.86	X		CLOVIS Ave	R62.90	R62.42	2700' EAST OF PEACH Ave	R62.90	CLOVIS Ave
68	Fre-180	836	LD-17	R62.86		X	CLOVIS Ave	R62.90	R62.42	2700' EAST OF PEACH Ave	R62.90	CLOVIS Ave
69	Fre-180	837	LD-18	R62.92	X		CLOVIS Ave	R62.90	R62.90	CLOVIS Ave	R63.37	2300' EAST OF CLOVIS Ave
70	Fre-180	838	LD-18	R62.92		X	CLOVIS Ave	R62.90	R62.90	CLOVIS Ave	R63.37	2300' EAST OF CLOVIS Ave
71	Fre-180	839	LD-18	R63.88	X		FOWLER Ave	R63.90	R63.37	2300' EAST OF CLOVIS Ave	R63.90	FOWLER Ave
72	Fre-180	840	LD-18	R63.88		X	FOWLER Ave	R63.90	R63.37	2300' EAST OF CLOVIS Ave	R63.90	FOWLER Ave
73	Fre-180	841	LD-19	R63.92	X		FOWLER Ave	R63.90	R63.90	FOWLER Ave	R64.15	1300' EAST OF FOWLER Ave
74	Fre-180	842	LD-19	R63.92		X	FOWLER Ave	R63.90	R63.90	FOWLER Ave	R64.15	1300' EAST OF FOWLER Ave
75	Fre-180	843	LD-19	R64.50	X		ARMSTRONG Ave	R64.48	R64.15	1300' EAST OF FOWLER Ave	R64.89	FANCHER CREEK CANAL
76	Fre-180	848	LD-19	R65.24	X		TEMPERANCE Ave	R65.30	R65.60	1500' EAST OF TEMPERANCE Ave	R66.30	5200' EAST OF TEMPERANCE Ave
77	Fre-180	844	LD-20	R65.28	X		TEMPERANCE Ave	R65.30	R64.89	FANCHER CREEK CANAL	R65.30	TEMPERANCE Ave
		845	LD-20	R65.28	X		TEMPERANCE Ave	R65.30	R64.89	FANCHER CREEK CANAL	R65.30	TEMPERANCE Ave
78	Fre-180	846	LD-20	R65.32	X		TEMPERANCE Ave	R65.30	R65.30	TEMPERANCE Ave	R65.60	1500' EAST OF TEMPERANCE Ave
		847	LD-20	R65.32	X		TEMPERANCE Ave	R65.30	R65.30	TEMPERANCE Ave	R65.60	1500' EAST OF TEMPERANCE Ave

IRRIGATION SPRINKLER SCHEDULE
ISS-2

REVISED BY | DATE REVISED

SHERRY ALEXANDER | MICHAEL MILLS

CALCULATED-DESIGNED BY | CHECKED BY

SENIOR LANDSCAPE ARCHITECT | BRAD COLE

STATE OF CALIFORNIA - DEPARTMENT OF TRANSPORTATION

Caltrans® LANDSCAPE ARCHITECTURE

LAST REVISION 07-31-13 | DATE PLOTTED => 15-AUG-2013 | TIME PLOTTED => 09:26

Dist	COUNTY	ROUTE	POST MILES TOTAL PROJECT	SHEET No.	TOTAL SHEETS
06	Fre	168,180	Var	6	204

LICENSED LANDSCAPE ARCHITECT

08-05-13

PLANS APPROVAL DATE

LICENSED LANDSCAPE ARCHITECT MICHAEL W. MILLS No. 4779 Expiration 11/30/14 Renewal Date 7/31/13 Date STATE OF CALIFORNIA

THE STATE OF CALIFORNIA OR ITS OFFICERS OR AGENTS SHALL NOT BE RESPONSIBLE FOR THE ACCURACY OR COMPLETENESS OF SCANNED COPIES OF THIS PLAN SHEET.

EXISTING IRRIGATION CONTROLLERS

		CONTROLLER STATION								
Loc	Co-ROUTE	ICC No.	RCV No.	RCV SIZE INCHES	FLOW GPM	No. HEADS EA	TYPE OF HEADS	DIRECTION EB	DIRECTION WB	REMARKS
1	Fre-168	822	1	1.5	31	122	SPRAY		X	W OF EB 180 & WB CEDAR Ave OFF-RAMP
			2	1.5	31	122	SPRAY		X	
			3	1.5	31	122	SPRAY		X	
			4	2	48	100	SPRAY		X	
			5	1.5	27	109	SPRAY		X	160′ S OF OLIVE Ave & W OF WB 168 ON-RAMP
			6	1.5	27	109	SPRAY		X	
			7	1.5	29	115	SPRAY		X	
			8	1.5	26	104	SPRAY		X	
			9	1.5	30	119	SPRAY		X	
			10	2	44	100	SPRAY		X	
			11	1.5	31	111	SPRAY		X	
			12	1.5	30	112	SPRAY		X	
	Fre-168		13	1.5	28	107	SPRAY		X	
			14	1.5	28	107	SPRAY		X	
2	Fre-168	681	1	1	11	3	ROTOR	X		10′ N OF OLIVE Ave; BETWEEN WB & EB 168
			2	1	18	5	ROTOR	X		
			3	1	15	4	ROTOR	X		
			4	2	44	7	IMPACT		X	240′ N OF OLIVE Ave; E SIDE OF BARTON Ave
			5	2	39	8	IMPACT		X	
			6	1	11	18	SPRAY		X	
			7	2	44	8	IMPACT		X	
			8	1.5	39	8	IMPACT		X	
			9	2	44	8	IMPACT		X	180′ N OF HEDGES Ave; E SIDE OF BARTON Ave
			10	2	44	8	IMPACT		X	
			11	1.5	4	M	SPRAY		X	
			12	2	44	8	IMPACT		X	
	Fre-168		13	2	44	8	IMPACT		X	
		682	1	2	33	6	IMPACT	X		20′ W OF HAMMOND Ave; END OF CUL-DE-SAC
			2	2	33	6	IMPACT	X		
			3	2	39	7	IMPACT	X		
			4	2	39	10	SPRAY	X		
			5	2	44	8	IMPACT	X		
			6	1	44	6	IMPACT	X		
			7	1.5	34	86	SPRAY	X		
			8	2	17	8	IMPACT	X		
			9	2	39	7	ROTOR	X		
			10	1	16	41	ROTOR	X		
			11	1	21	54	SPRAY	X		
			12	2	44	168	IMPACT	X		200′ S OF FLORADORA Ave; E SIDE
			13	1	14	35	SPRAY	X		
			14	1	15	4	ROTOR	X		
3	Fre-168	683	1	1	6	12	ROTOR	X		
			2	1	18	10	SPRAY	X		70′ S OF McKINLEY Ave; E SIDE OF EB 168
			3	1	22	56	SPRAY	X		
			4	1	8	22	IMPACT	X		300′ S OF MCKINLEY Ave; E SIDE OF EB 168
			5	1	32	82	SPRAY	X		
			6	1	13	33	ROTOR	X		
			7	1	19	47	SPRAY	X		
			8	1	7	2	ROTOR	X		60′ N OF FLORADORA Ave; IN MEDIAN
			9	1	17	43	SPRAY	X		
			10	1.5	34	10	ROTOR		X	
			11	1.25	22	56	ROTOR		X	60′ N OF McKINLEY Ave; W SIDE OF WB 168
			12	1.5	36	90	SPRAY		X	
4	Fre-168	A	1	2	44	6	IMPACT	X		60′ W OF THE INTERSECTION E HOME Ave & BARTON Ave
			2	2	44	8	IMPACT	X		
			3	2	44	8	IMPACT	X		60′ S OF MCKINLEY Ave; W SIDE OF WB 168
			4	2	44	8	IMPACT	X		180′ N OF E HOME Ave CUL-DE-SAC; E SIDE OF EB 168
			5	2	44	7	IMPACT	X		
			6	2	44	7	IMPACT	X		
			7	2	33	6	IMPACT	X		
			8	2	44	7	SPRAY		X	80′ N OF E HOME Ave CUL-DE-SAC; S SIDE OF EB 168

IRRIGATION SPRINKLER SCHEDULE

ISS-3

REVISED BY | DATE REVISED

SHERRY ALEXANDER | MICHAEL MILLS

CALCULATED-DESIGNED BY | CHECKED BY

SENIOR LANDSCAPE ARCHITECT

BRAD COLE

STATE OF CALIFORNIA - DEPARTMENT OF TRANSPORTATION

Caltrans® LANDSCAPE ARCHITECTURE

LAST REVISION 07-31-13 | DATE PLOTTED => 15-AUG-2013 | TIME PLOTTED => 09:26

Dist	COUNTY	ROUTE	POST MILES TOTAL PROJECT	SHEET No.	TOTAL SHEETS
06	Fre	168,180	Var	7	204

Michael W. Mills
LICENSED LANDSCAPE ARCHITECT
08-05-13
PLANS APPROVAL DATE

LICENSED LANDSCAPE ARCHITECT MICHAEL W. MILLS No. 4770 Expiration Date 11/30/14 Renewal Date 7/31/13 Date STATE OF CALIFORNIA

THE STATE OF CALIFORNIA OR ITS OFFICERS OR AGENTS SHALL NOT BE RESPONSIBLE FOR THE ACCURACY OR COMPLETENESS OF SCANNED COPIES OF THIS PLAN SHEET.

EXISTING IRRIGATION CONTROLLERS

		CONTROLLER STATION								
Loc	Co-ROUTE	ICC No.	RCV No.	RCV SIZE INCHES	FLOW GPM	No. HEADS EA	TYPE OF HEADS	DIRECTION EB	DIRECTION WB	REMARKS
4	Fre-168	A	9	2	44	8	IMPACT		X	200′ S OF THE INTERSECTION OF E HOME Ave & BARTON Ave; E SIDE OF BARTON Ave
			10	2	39	7	IMPACT		X	
			11	2	39	7	IMPACT		X	
			12	2	39	7	IMPACT		X	180′ N OF INTERSECTION OF E HOME Ave & BARTON Ave
			13	2	39	63	SPRAY		X	
			14	2	39	7	IMPACT		X	
5	Fre-168	684	1	1	18	5	ROTOR		X	180′ N OF MCKINLEY Ave; E SIDE OF WB RAMP
			2	1½	37	93	SPRAY		X	
			3	1½	33	9	ROTOR		X	
			4	1¼	26	7	ROTOR	X		180′ N OF MCKINLEY Ave; E SIDE OF EB 168
			5	1	22	6	ROTOR	X		
			6	1	20	9	ROTOR	X		
			7	1	14	8	SPRAY		X	30′ N OF MCKINLEY Ave; IN MEDIAN; WB 168 ON-RAMP
			8	1¼	22	9	ROTOR		X	
			9	1	20	49	SPRAY		X	
			10	1	12	30	SPRAY		X	100′ N OF MCKINLEY Ave; WB ON-RAMP AT MCKINLEY Ave
			11	1½	41	11	ROTOR		X	
			12	1	15	4	ROTOR		X	
			13	1	14	8	ROTOR		X	
			14	1	14	8	SPRAY		X	
			15	1	14	8	SPRAY	X		450′ N OF MCKINLEY Ave; IN MEDIAN BETWEEN WB 168 ON-RAMP/EB 168
			16	1¼	26	12	SPRAY	X		
			17	1	9	5	SPRAY	X		
			18	1	13	7	IMPACT	X		480′ N OF MCKINLEY Ave; N SIDE EB ON-RAMP
			19	1	16	7	IMPACT	X		
			20	1½	35	7	IMPACT	X		
			21	1½	46	25	IMPACT	X		500′ N OF MCKINLEY Ave; W SIDE EB 168 ON-RAMP
			22	1½	42	9	IMPACT	X		
			23	1	15	4	IMPACT	X		
6	Fre-168	686	1	2	44	8	ROTOR	X		20′ W OF BROWN Ave CUL-DE-SAC; TOP OF SLOPE
			2	2	44	9	ROTOR	X		
			3	2	44	8	ROTOR	X		
			4	2	44	8	ROTOR	X		
			5	2	44	8	ROTOR	X		60′ N OF CLINTON Ave; E SIDE OF EB 168
			6	2	44	8	ROTOR	X		
			7	2	44	8	ROTOR	X		
			8	2	M	15	SPRAY	X		
			9	M						M
			10	2	40	8	ROTOR	X		10′ W OF THE INTERSECTION OF VASSAR Ave & HAYSTON Ave; E SIDE OF EB 168
			11	2	40	30	SPRAY	X		
			12	2	55	8	ROTOR	X		10′ W OF THE INTERSECTION OF VASSAR Ave & HAYSTON Ave; ESE SIDE OF EB 168
			13	2	M	20	SPRAY	X		
			14	1½	24	60	SPRAY	X		50′ WSW OF INTERSECTION OF HAYSTON Ave & CAMBRIDGE Ave; SE SIDE EB 168 ON-RAMP
			15	2	55	8	ROTOR	X		
			16	2	55	8	ROTOR	X		
			17	1	10	24	SPRAY	X		500′ N OF MCKINLEY Ave; E SIDE EB 168 ON-RAMP
			18	1¼	28	15	SPRAY	X		
			19	1¼	22	12	SPRAY	X		
			20	1	13	32	SPRAY	X		
			21	1½	31	77	SPRAY	X		
7	Fre-168	685	1	1½	3	4	SPRAY	X		10′ N OF McKINLEY Ave; E SIDE OF WB 168
			2	1	6	14	SPRAY	X		
			3	1¼	1	7	SPRAY	X		
			4	1	11	27	SPRAY		X	10′ N OF McKINLEY Ave; WB 168 ON-RAMP
			5	1½	35	6	SPRAY		X	
			6	1½	46	9	SPRAY		X	
			7	1	39	7	SPRAY		X	
			8	1	16	9	SPRAY		X	120′ N OF MCKINLEY Ave; E SIDE OF WB 168 ON-RAMP
			9	1	16	9	SPRAY		X	
			10	1	16	9	SPRAY		X	
			11	1¼	22	6	SPRAY		X	480′ N OF McKINLEY Ave; SE SIDE OF WB 168 McKINLEY OFF-RAMP

IRRIGATION SPRINKLER SCHEDULE

ISS-4

REVISED BY | DATE REVISED
SHERRY ALEXANDER | MICHAEL MILLS
CALCULATED-DESIGNED BY | CHECKED BY
SENIOR LANDSCAPE ARCHITECT
BRAD COLE

STATE OF CALIFORNIA - DEPARTMENT OF TRANSPORTATION
Caltrans® LANDSCAPE ARCHITECTURE

LAST REVISION 07-31-13 | DATE PLOTTED => 15-AUG-2013 | TIME PLOTTED => 09:26

Dist	COUNTY	ROUTE	POST MILES TOTAL PROJECT	SHEET No.	TOTAL SHEETS
06	Fre	168,180	Var	8	204

LICENSED LANDSCAPE ARCHITECT

08-05-13

PLANS APPROVAL DATE

LICENSED LANDSCAPE ARCHITECT MICHAEL W. MILLS No. 4770 Expiration 11/30/14 Renewal Date 7/31/13 Date STATE OF CALIFORNIA

THE STATE OF CALIFORNIA OR ITS OFFICERS OR AGENTS SHALL NOT BE RESPONSIBLE FOR THE ACCURACY OR COMPLETENESS OF SCANNED COPIES OF THIS PLAN SHEET.

EXISTING IRRIGATION CONTROLLERS

		CONTROLLER STATION								
Loc	Co-ROUTE	ICC No.	RCV No.	RCV SIZE INCHES	FLOW GPM	No. HEADS EA	TYPE OF HEADS	DIRECTION EB	DIRECTION WB	REMARKS
7	Fre-168	685	12	1	20	9	SPRAY		X	480′ N OF McKINLEY Ave; SE SIDE OF WB 168 McKINLEY Ave OFF-RAMP
			13	1	16	9	SPRAY		X	
			14	1	14	8	SPRAY		X	
			15	1	14	8	SPRAY		X	
			16	1½	39	19	SPRAY		X	
			17	1	30	8	SPRAY		X	
			18	1½	43	20	SPRAY		X	200′ S OF Sep OF WB 168 McKINLEY Ave OFF-RAMP AND WB 168
			19	1½	48	13	SPRAY		X	
			20	1¼	22	6	SPRAY		X	
			21	1	11	3	SPRAY		X	
			22	1½	37	10	SPRAY		X	
8	Fre-168	687	1	2	M	6	ROTOR		X	60′ S OF PRINCETON Ave; E SIDE OF BARTON Ave; W SIDE OF WB 168
			2	2	44	6	ROTOR		X	
			3	2	44	8	ROTOR		X	
			4	2	44	8	ROTOR		X	
			5	2	44	8	ROTOR		X	
			6	2	44	8	ROTOR		X	100′ N OF CLINTON Ave; W SIDE OF WB 168
			7	1	19	30	SPRAY		X	
			8	2	44	8	ROTOR		X	
			9	2	44	9	ROTOR		X	
			10	2	24	60	SPRAY		X	130′ S OF CLINTON Ave; 10′ E OF BARTON Ave; W SIDE
			11	2	44	8	ROTOR		X	
			12	2	44	8	ROTOR		X	
			13	2	41	9	ROTOR		X	100′ S OF YALE Ave; E SIDE OF BARTON Ave; W SIDE
			14	2	45	13	ROTOR		X	
			15	2	44	8	ROTOR		X	
			16	2	48	14	ROTOR		X	20′ E OF BARTON Ave; 100′ N OF Ped OC; W SIDE OF McKINLEY Ave WB 168 OFF-RAMP
			17	1	19	48	SPRAY		X	
			18	2	48	14	ROTOR		X	
			19	1	8	32	SPRAY		X	30′ SE OF THE INTERSECTION OF BARTON Ave & BRENTWOOD Ave; W SIDE OF McKINLEY Ave WB 168 OFF-RAMP
			20	1	8	20	ROTOR		X	
			21	1½	33	9	ROTOR		X	
			22	1¼	26	7	SPRAY		X	
			23	1	20	7	ROTOR		X	200′ N OF MCKINLEY Ave; W SIDE OF WB 168 McKINLEY Ave OFF-RAMP
			24	1	11	6	IMPACT		X	
			25	1	11	6	IMPACT		X	
9	Fre-168	688	1	2	44	8	ROTOR	X		700′ S OF SHIELDS Ave 168 OFF-RAMP; E SIDE
			2	2	44	8	ROTOR	X		
			3	1½	40	100	SPRAY	X		
			4	2	44	6	ROTOR	X		
			5	1	21	52	SPRAY	X		
			6	2	44	8	ROTOR	X		
			7	2	44	4	ROTOR	X		
			8	1½	40	6	ROTOR	X		250′ S OF SHIELDS Ave 168 OFF-RAMP; W SIDE
			9	1½	40	22	SPRAY	X		
			10	1	11	3	ROTOR	X		
			11	1½	26	6	ROTOR	X		
			12	1	18	5	ROTOR	X		
			13	1¼	28	8	ROTOR	X		
			14	1	18	9	IMPACT	X		100′ S OF SHIELDS Ave 168 OFF-RAMP; W SIDE
			15	1¼	51	8	SPRAY	X		
			16	1	16	8	IMPACT	X		
			17	1½	3	10	IMPACT	X		
			18	1	18	7	IMPACT	X		
			19	2	M	9	ROTOR	X		M
10	Fre-168	690	1	1¼	24	59	SPRAY	X		250′ S OF DAKOTA Ave; E SIDE OF EB 168
			2	1	17	43	SPRAY	X		1500′ N OF SHIELDS AVE; E SIDE
			3	1	16	40	SPRAY	X		250′ N OF SHIELDS Ave EB 168 ON-RAMP; E SIDE
			4	1	M	91	SPRAY	X		N OF SHIELDS Ave EB 168 ON-RAMP; E SIDE
			5	1	13	5	ROTOR	X		
			6	1	21	53	ROTOR	X		

IRRIGATION SPRINKLER SCHEDULE

ISS-5

REVISED BY | DATE REVISED

SHERRY ALEXANDER | MICHAEL MILLS

CALCULATED-DESIGNED BY | CHECKED BY

SENIOR LANDSCAPE ARCHITECT | BRAD COLE

STATE OF CALIFORNIA - DEPARTMENT OF TRANSPORTATION

Caltrans® LANDSCAPE ARCHITECTURE

LAST REVISION 07-31-13 | DATE PLOTTED => 15-AUG-2013 | TIME PLOTTED => 09:26

Dist	COUNTY	ROUTE	POST MILES TOTAL PROJECT	SHEET No.	TOTAL SHEETS
06	Fre	168,180	Var	9	204

Michael W. Mills
LICENSED LANDSCAPE ARCHITECT
08-05-13
PLANS APPROVAL DATE

LICENSED LANDSCAPE ARCHITECT MICHAEL W. MILLS No. 4770 Expiration 11/30/14 Renewal Date 7/31/13 Date STATE OF CALIFORNIA

THE STATE OF CALIFORNIA OR ITS OFFICERS OR AGENTS SHALL NOT BE RESPONSIBLE FOR THE ACCURACY OR COMPLETENESS OF SCANNED COPIES OF THIS PLAN SHEET.

EXISTING IRRIGATION CONTROLLERS

Loc	Co-ROUTE	CONTROLLER STATION ICC No.	RCV No.	RCV SIZE INCHES	FLOW GPM	No. HEADS EA	TYPE OF HEADS	DIRECTION EB	DIRECTION WB	REMARKS
10	Fre-168	690	7	1½	33	84	SPRAY	X		N OF SHIELDS Ave EB 168 ON-RAMP; E SIDE
			8	1½	41	11	ROTOR	X		
			9	1½	33	9	ROTOR	X		
			10	1	15	4	ROTOR	X		350′ N OF SHIELDS Ave EB 168 ON-RAMP; E SIDE
			11	1	11	3	ROTOR	X		
			12	1	19	4	ROTOR	X		
			13	1½	39	7	ROTOR	X		
			14	1½	27	5	ROTOR	X		
			15	1	18	10	SPRAY	X		
11	Fre-168	689	1	2	39	7	ROTOR	X		INTERSECTION OF PRINCETON Ave & BARTON Ave; W SIDE OF EB 168
			2	2	44	8	ROTOR	X		
			3	1	7	18	SPRAY	X	X	
			4	2	39	7	ROTOR		X	420′ S OF SHIELDS Ave; W SIDE
			5	2	39	7	ROTOR		X	
			6	2	39	7	ROTOR		X	
			7	1½	39	99	SPRAY		X	220′ S OF SHIELDS Ave; W SIDE
			8	1	11	28	SPRAY		X	
			9	1¼	24	59	SPRAY		X	
			10	1¼	23	5	ROTOR		X	200′ S OF SHIELDS Ave; WB 168 ON-RAMP
			11	1¼	23	5	ROTOR		X	
			12	1¼	22	6	ROTOR		X	
			13	1½	43	18	SPRAY		X	
			14	1½	45	114	SPRAY		X	
			15	1½	36	92	SPRAY		X	
			16	1½	41	11	SPRAY		X	
			17	1	13	6	ROTOR		X	
			18	1¼	22	6	ROTOR		X	
12	Fre-168	691	1	1¼	25	62	SPRAY		X	60′ E OF ROBINSON Ave; E SIDE OF BARTON Ave
			2	1	19	47	SPRAY		X	
			3	1	21	54	SPRAY		X	200′ S OF GARLAND Ave; W SIDE OF WB 168
			4	1	7	17	ROTOR		X	
			5	1	19	48	ROTOR		X	120′ S OF DAYTON Ave; W SIDE OF WB 168
			6	1	5	13	ROTOR		X	
			7	1½	44	11	SPRAY		X	200′ N OF SHIELDS Ave; W SIDE OF SHIELDS Ave WB 168 ON-RAMP
			8	1	15	6	ROTOR		X	130′ N OF SHIELDS Ave; E SIDE OF SHIELDS Ave WB 168 ON-RAMP
			9	1½	30	76	SPRAY		X	
			10	1½	34	11	ROTOR		X	
			11	1¼	26	7	ROTOR		X	
			12	1½	30	75	SPRAY		X	
			13	1½	30	8	ROTOR		X	
			14	1½	32	4	ROTOR		X	400′ N OF SHIELDS Ave; E SIDE OF SHIELDS Ave WB 168 ON-RAMP
			15	1½	36	5	ROTOR		X	
			16	1½	36	5	ROTOR		X	
			17	1	18	5	ROTOR		X	
			18	1¼	24	13	SPRAY		X	
13	Fre-168	610	1	2	44	8	ROTOR	X		BETWEEN GARLAND Ave & ROBINSON Ave; W SIDE OF HAYSTON Ave
			2	2	44	8	ROTOR	X		
			3	2	44	8	ROTOR	X		S SIDE OF FEDORA Ave & HAYSTON Ave; TOP OF SLOPE
			4	2	44	8	ROTOR	X		
			5	2	44	8	ROTOR	X		
			6	2	44	8	ROTOR	X		
			7	2	44	8	ROTOR	X		360′ S OF DAKOTA Ave; 120′ N OF GARLAND Ave
			8	2	44	8	ROTOR	X		
			9	2	44	8	ROTOR	X		
			10	2	44	8	ROTOR	X		
			11	2	44	11	ROTOR	X		200′ N OF DAKOTA Ave; E SIDE; ON HAYSTON Ave
			12	2	44	8	ROTOR	X		
			13	2	44	8	ROTOR	X		
			14	2	48	14	ROTOR	X		
			15	2	48	18	ROTOR	X		
			16	M	58	16	ROTOR	X		

IRRIGATION SPRINKLER SCHEDULE
ISS-6

REVISED BY | DATE REVISED
SHERRY ALEXANDER | MICHAEL MILLS
CALCULATED-DESIGNED BY | CHECKED BY
SENIOR LANDSCAPE ARCHITECT
BRAD COLE

STATE OF CALIFORNIA - DEPARTMENT OF TRANSPORTATION
Caltrans® LANDSCAPE ARCHITECTURE

LAST REVISION 07-31-13 | DATE PLOTTED => 15-AUG-2013 | TIME PLOTTED => 09:26

Dist	COUNTY	ROUTE	POST MILES TOTAL PROJECT	SHEET No.	TOTAL SHEETS
06	Fre	168,180	Var	10	204

Michael W. Mills
LICENSED LANDSCAPE ARCHITECT
08-05-13
PLANS APPROVAL DATE

LICENSED LANDSCAPE ARCHITECT MICHAEL W. MILLS No. 4720 Expiration 11/30/14 Renewal Date 7/31/13 Date STATE OF CALIFORNIA

THE STATE OF CALIFORNIA OR ITS OFFICERS OR AGENTS SHALL NOT BE RESPONSIBLE FOR THE ACCURACY OR COMPLETENESS OF SCANNED COPIES OF THIS PLAN SHEET.

EXISTING IRRIGATION CONTROLLERS

Loc	Co-ROUTE	CONTROLLER STATION ICC No.	RCV No.	RCV SIZE INCHES	FLOW GPM	No. HEADS EA	TYPE OF HEADS	DIRECTION EB	DIRECTION WB	REMARKS
14	Fre-168	611	1							M
			2							
			3							
			4							
			5	2	16	13	ROTOR		X	1500′ N OF SHIELDS Ave; W SIDE
			6	2	22	14	ROTOR		X	
			7	2	40	8	ROTOR		X	
			8	2	40	8	ROTOR		X	
			9							M
			10							
			11							
			12							
			13	2	41	7	ROTOR		X	100′ N OF DAKOTA Ave; W SIDE
			14	2	30	14	ROTOR		X	M
			15	2	31	14	ROTOR		X	
			16	2	31	14	ROTOR		X	
15	Fre-168	692	1	1	8	20	SPRAY	X		180′ N OF DAKOTA Ave; E SIDE OF EB 168
			2	1	17	42	SPRAY	X		
			3	1	13	7	ROTOR	X		N OF DAKOTA Ave; E SIDE
			4	1½	40	100	SPRAY	X		
			5	1½	32	82	SPRAY	X		
			6	1	8	21	SPRAY	X		
			7	1	16	40	SPRAY	X		N OF DAKOTA Ave; W SIDE OF WB 168
			8	1	10	84	SPRAY	X		N OF DAKOTA Ave; S OF ASHLAN Ave; W SIDE OF WB 168
			9	1 1/5	33	26	SPRAY	X		
			10	1½	40	100	SPRAY		X	S SIDE OF ASHLAN Ave; WB 168 ASHLAN Ave ON-RAMP
			11	1½	44	110	SPRAY		X	
			12	1	11	28	SPRAY		X	
			13	1½	37	93	SPRAY		X	
			14	1½	35	19	SPRAY		X	S OF ASHLAN Ave; WB 168 ASHLAN Ave ON-RAMP
			15	1½	28	15	SPRAY		X	
			16	1½	37	20	SPRAY		X	
			17	1½	31	77	SPRAY		X	
			18	1	15	4	ROTOR		X	
			19	1½	30	9	ROTOR		X	
		694	1							M
			2							
			3	1½	28	71	SPRAY		X	N OF ASHLAN Ave/S OF SHAW Ave; WB 168 SW SIDE
			4	1	8	20	SPRAY		X	
			5	1½	31	78	SPRAY		X	
			6	1	14	36	SPRAY		X	
			7	1	20	50	SPRAY		X	400′ N OF ASHLAN Ave WB 168 OFF-RAMP; NW SIDE
			8	1	18	46	SPRAY		X	
			9	1¼	24	10	ROTOR		X	450′ N OF ASHLAN Ave; WB 168 ASHLAN Ave OFF-RAMP; SE SIDE
			10	1½	35	12	ROTOR		X	
			11	1½	53	12	ROTOR		X	
			12	1½	41	11	ROTOR		X	
			13	1½	41	11	ROTOR		X	
			14	1½	40	102	SPRAY		X	150′ N OF ASHLAN Ave; ASHLAN Ave WB 168 OFF-RAMP
			15	1	14	35	SPRAY		X	
			16	1¼	28	70	SPRAY		X	
			17	1½	41	11	ROTOR		X	
			18	1	18	5	ROTOR		X	
			19	1	19	4	ROTOR		X	100′ N OF ASHLAN Ave; S SIDE
			20	1½	32	4	ROTOR		X	
16	Fre-168	693	1	1¼	22	12	SPRAY	X		S OF ASHLAN Ave; ASHLAN Ave EB 168 OFF-RAMP; W SIDE
			2	1½	31	78	SPRAY	X		
			3	1	18	7	ROTOR	X		
			4	1½	16	8	ROTOR	X		
			5	1½	37	10	SPRAY	X		
			6	1	37	8	ROTOR	X		

IRRIGATION SPRINKLER SCHEDULE
ISS-7

REVISED BY | DATE REVISED
SHERRY ALEXANDER | MICHAEL MILLS
CALCULATED-DESIGNED BY | CHECKED BY
SENIOR LANDSCAPE ARCHITECT
BRAD COLE
STATE OF CALIFORNIA - DEPARTMENT OF TRANSPORTATION
Caltrans® LANDSCAPE ARCHITECTURE

LAST REVISION 07-31-13 | DATE PLOTTED => 15-AUG-2013 | TIME PLOTTED => 09:26

Dist	COUNTY	ROUTE	POST MILES TOTAL PROJECT	SHEET No.	TOTAL SHEETS
06	Fre	168,180	Var	11	204

LICENSED LANDSCAPE ARCHITECT

08-05-13

PLANS APPROVAL DATE

LICENSED LANDSCAPE ARCHITECT MICHAEL W. MILLS No. 4770 Expiration 11/30/14 Renewal Date 7/31/13 Date STATE OF CALIFORNIA

THE STATE OF CALIFORNIA OR ITS OFFICERS OR AGENTS SHALL NOT BE RESPONSIBLE FOR THE ACCURACY OR COMPLETENESS OF SCANNED COPIES OF THIS PLAN SHEET.

EXISTING IRRIGATION CONTROLLERS

		CONTROLLER STATION								
Loc	Co-ROUTE	ICC No.	RCV No.	RCV SIZE INCHES	FLOW GPM	No. HEADS EA	TYPE OF HEADS	DIRECTION EB	DIRECTION WB	REMARKS
16	Fre-168	693	7	1	63	42	SPRAY	X		S OF ASHLAN Ave; SHIELDS Ave EB 168 OFF-RAMP; W SIDE
			8	1 1/4	98	14	SPRAY	X		
			9	1 1/4	89	12	SPRAY	X		
			10	1 1/2	117	78	SPRAY	X		
			11	1	77	11	SPRAY	X		
			12	1 1/2	154	22	SPRAY	X		
			13	1	56	4	ROTOR	X		
			14	1 1/2	126	9	ROTOR	X		
			15	1 1/2	119	79	SPRAY	X		
			16	1	48	32	SPRAY	X		S OF ASHLAN Ave; EB 168 OFF-RAMP; E SIDE
			17	1 1/2	154	11	ROTOR	X		
			18	1 1/2	126	9	ROTOR	X		S OF ASHLAN Ave; ASHLAN Ave EB OFF-RAMP
			19	1 1/2	112	8	ROTOR	X		S OF ASHLAN Ave OC; EB 168 ON-RAMP
			20	1	66	44	SPRAY	X		
			21	1 1/4	91	3	ROTOR	X		
			22	1 1/2	145	6	ROTOR	X		
			23	1 1/2	152	5	ROTOR	X		
			24	1 1/2	182	6	ROTOR	X		
		695	1	1 1/2	117	6	ROTOR	X		S OF GETTYSBURG Ave UC; IN MEDIAN
			2	1	61	2	ROTOR	X		
			3	1	59	39	SPRAY	X		S OF GETTYSBURG Ave UC; SE SIDE
			4	1	60	40	SPRAY	X		
			5	1 1/2	117	78	SPRAY	X		
			6	1 1/4	92	7	ROTOR	X		N OF ASHLAN Ave/S OF SHAW Ave; SE SIDE
			7	1	81	54	SPRAY	X		
			8	1	35	23	SPRAY	X		
			9	1	54	22	SPRAY	X		200′ N OF ASHLAN Ave/ASHLAN Ave EB 168 ON-RAMP SE SIDE
			10	1 1/2	162	10	ROTOR	X		
			11	1	125	20	SPRAY	X		
			12	1 1/2	154	11	ROTOR	X		
			13	1	146	12	ROTOR	X		150′ N OF ASHLAN Ave/ASHLAN Ave EB 168 ON-RAMP NW SIDE
			14	1 1/2	125	11	ROTOR	X		
			15	1 1/2	162	108	SPRAY	X		
			16	1	54	8	ROTOR	X		
			17	1	30	10	SPRAY	X		200′ N OF ASHLAN Ave/ASHLAN Ave EB 168 ON-RAMP NW SIDE
			18	1 1/2	139	8	IMPACT	X		
			19	1 1/2	146	9	IMPACT	X		
			20	1	70	10	SPRAY	X		
17	Fre-168	801	1	1 1/4	84	6	ROTOR	X		240′ N OF GETTYSBURG Ave; E SIDE
			2	1 1/4	84	6	ROTOR	X		
			3	1	47	31	SPRAY	X		
			4	1 1/2	111	74	SPRAY	X		
			5	2	168	8	ROTOR	X		
			6	2	168	8	ROTOR	X		
			7	1 1/2	132	88	SPRAY	X		N OF GETTSBURG Ave; E SIDE
			8	2	168	8	ROTOR	X		
			9	2	168	8	ROTOR	X		
			10	2	168	10	ROTOR	X		
			11	1	47	31	SPRAY	X		
			12	1	81	54	SPRAY	X		
			13	2	168	11	ROTOR	X		
			14	1 1/2	111	74	SPRAY	X		
			15	1 1/2	150	100	SPRAY	X		60′ S OF SHAW Ave EB 168 OFF-RAMP; E SIDE
			16	1 1/2	108	72	SPRAY	X		
			17	2	168	8	ROTOR	X		BETWEEN ASHLAN Ave & GETTYSBURG Ave; E SIDE
			18	2	168	8	ROTOR	X		
			19	2	168	7	ROTOR	X		
			20	2	168	8	ROTOR	X		
			21	2	168	8	ROTOR	X		
			22	2	168	9	ROTOR	X		
			23	2	168	8	ROTOR	X		

IRRIGATION SPRINKLER SCHEDULE

ISS-8

REVISED BY | DATE REVISED

SHERRY ALEXANDER | MICHAEL MILLS

CALCULATED-DESIGNED BY | CHECKED BY

SENIOR LANDSCAPE ARCHITECT | BRAD COLE

STATE OF CALIFORNIA - DEPARTMENT OF TRANSPORTATION

Caltrans® LANDSCAPE ARCHITECTURE

LAST REVISION 07-31-13 | DATE PLOTTED => 15-AUG-2013 | TIME PLOTTED => 09:26

Dist	COUNTY	ROUTE	POST MILES TOTAL PROJECT	SHEET No.	TOTAL SHEETS
06	Fre	168,180	Var	12	204

LICENSED LANDSCAPE ARCHITECT

08-05-13

PLANS APPROVAL DATE

LICENSED LANDSCAPE ARCHITECT MICHAEL W. MILLS No. 4770 Expiration 11/30/14 Renewal Date 7/31/13 Date STATE OF CALIFORNIA

THE STATE OF CALIFORNIA OR ITS OFFICERS OR AGENTS SHALL NOT BE RESPONSIBLE FOR THE ACCURACY OR COMPLETENESS OF SCANNED COPIES OF THIS PLAN SHEET.

EXISTING IRRIGATION CONTROLLERS

Loc	Co-ROUTE	CONTROLLER STATION ICC No.	RCV No.	RCV SIZE INCHES	FLOW GPM	No. HEADS EA	TYPE OF HEADS	DIRECTION EB	DIRECTION WB	REMARKS
17	Fre-168	801	24	2	44	8	ROTOR	X		BETWEEN ASHLAN Ave & GETTYSBURG Ave; E SIDE
			25	2	44	8	ROTOR	X		
			26	2	44	8	ROTOR	X		
			27	2	44	8	ROTOR	X		N OF GETTYSBURG Ave; E SIDE
			28	2	44	8	ROTOR	X		
			29	2	44	8	ROTOR	X		
			30	2	44	8	ROTOR	X		
			31	2	44	8	ROTOR	X		
			32	2	44	8	ROTOR	X		
			33	2	44	8	ROTOR	X		S OF SHAW Ave EB 168 OFF-RAMP
			34	2	44	9	ROTOR	X		
			35	2	44	8	ROTOR	X		
			36	2	44	8	ROTOR	X		
			37	2	44	8	ROTOR	X		
18	Fre-168	702	1							M
			2							
			3	1½	33	9	ROTOR		X	200′ N OF GETTYSBURG Ave
			4	1¼	22	6	ROTOR		X	
			5	1¼	24	60	SPRAY		X	
			6	1	10	24	SPRAY		X	
			7							M
			8	1	21	52	SPRAY		X	S OF CHESTNUT Ave; NW SIDE
			9	1	14	66	SPRAY		X	
			10	1	16	39	SPRAY		X	
			11	1¼	26	7	ROTOR		X	200′ N OF GETTYSBURG Ave
			12	1½	28	15	ROTOR		X	S OF SHAW Ave WB 168 ON-RAMP; IN MEDIAN
			13	1½	30	16	ROTOR		X	
			14	1½	44	12	ROTOR		X	
			15	1½	44	12	ROTOR		X	
			16	1½	41	22	SPRAY		X	
			17	1	10	24	SPRAY		X	
			18	1½	41	20	SPRAY		X	
			19	1	18	48	SPRAY		X	
			20	1¼	26	7	ROTOR		X	120′ S OF SHAW Ave WB 168 ON-RAMP; IN MEDIAN
			21	1¼	22	6	ROTOR		X	
			22	1	15	4	ROTOR		X	
			23	2	58	17	ROTOR		X	N OF ASHLAN Ave/ASHLAN Ave WB 168 OFF-RAMP
			24	2	62	18	ROTOR		X	
			25	2	44	8	ROTOR		X	
			26	2	44	14	ROTOR		X	
			27	2	44	7	ROTOR		X	N OF ASHLAN Ave; NW SIDE
			28	2	44	7	ROTOR		X	
			29	2	44	7	ROTOR		X	
			30	2	44	7	ROTOR		X	
			31	2	44	7	ROTOR		X	
			32	2	44	7	ROTOR		X	
			33	2	44	7	ROTOR		X	
			34	2	44	8	ROTOR		X	
			35	2	44	8	ROTOR		X	
			36	2	44	8	ROTOR		X	
			37	2	44	8	ROTOR		X	
			38	2	44	8	ROTOR		X	
			39	2	44	8	ROTOR		X	
			40	2	44	8	ROTOR		X	S OF SHAW Ave; NW SIDE
			41	2	44	8	ROTOR		X	
			42	2	44	8	ROTOR		X	
			43	2	44	8	ROTOR		X	
			44	2	44	8	ROTOR		X	
			45	2	44	8	ROTOR		X	
		703	1	1¼	24	61	SPRAY		X	10′ N OF SHAW Ave; END OF WB 168 SHAW Ave; NW SIDE
			2	1½	35	88	SPRAY		X	

IRRIGATION SPRINKLER SCHEDULE

ISS-9

REVISED BY | DATE REVISED

SHERRY ALEXANDER | MICHAEL MILLS

CALCULATED-DESIGNED BY | CHECKED BY

SENIOR LANDSCAPE ARCHITECT

BRAD COLE

STATE OF CALIFORNIA - DEPARTMENT OF TRANSPORTATION

Caltrans® LANDSCAPE ARCHITECTURE

LAST REVISION 07-31-13 | DATE PLOTTED => 15-AUG-2013 | TIME PLOTTED => 09:26

Dist	COUNTY	ROUTE	POST MILES TOTAL PROJECT	SHEET No.	TOTAL SHEETS
06	Fre	168,180	Var	13	204

LICENSED LANDSCAPE ARCHITECT

08-05-13

PLANS APPROVAL DATE

LICENSED LANDSCAPE ARCHITECT MICHAEL W. MILLS No. 4770 Expiration 11/30/14 Renewal Date 7/31/13 Date STATE OF CALIFORNIA

THE STATE OF CALIFORNIA OR ITS OFFICERS OR AGENTS SHALL NOT BE RESPONSIBLE FOR THE ACCURACY OR COMPLETENESS OF SCANNED COPIES OF THIS PLAN SHEET.

EXISTING IRRIGATION CONTROLLERS

		CONTROLLER STATION								
Loc	Co-ROUTE	ICC No.	RCV No.	RCV SIZE INCHES	FLOW GPM	No. HEADS EA	TYPE OF HEADS	DIRECTION EB	DIRECTION WB	REMARKS
18	Fre-168	703	3	2	44	12	ROTOR		X	100′ N OF SHAW Ave WB 168 OFF-RAMP; IN MEDIAN
			4	1 1/4	27	67	SPRAY		X	
			5	1 1/4	27	68	ROTOR		X	40′ N OF SHAW Ave WB 168 ON-RAMP; IN MEDIAN
			6	1	6	15	ROTOR		X	
			7	1 1/2	39	12	ROTOR		X	
			8	1 1/2	33	9	ROTOR		X	360′ N OF SHAW Ave WB 168 OFF-RAMP; IN MEDIAN
			9	1 1/2	37	10	ROTOR		X	
			10	1	21	53	SPRAY		X	
			11	1 1/2	34	86	SPRAY		X	
			12	1 1/2	40	21	SPRAY		X	
			13	1 1/2	13	26	SPRAY		X	
			14	1 1/4	34	75	SPRAY		X	Beg SHAW Ave WB 168 OFF-RAMP & WB SHAW Ave; N SIDE
			15	1	9	23	SPRAY		X	
			16	1	9	23	SPRAY		X	BETWEEN N SHAW Ave & WILLOW Ave WB 168; NW SIDE
			17	1	17	42	SPRAY		X	
			18	1	14	36	SPRAY		X	
			19	2	45	38	SPRAY		X	200′ S OF WILLOW Ave; NW SIDE
			20	1	8	21	SPRAY		X	
			21	1	9	33	SPRAY		X	
			22	2	45	13	ROTOR		X	
			23	2	44	8	ROTOR		X	
19	Fre-168	704	1	1	14	18	SPRAY	X		250′ S OF SHAW Ave 168 EB OFF-RAMP NW SIDE
			2	1 1/2	33	18	SPRAY	X		
			3	1 1/2	30	16	SPRAY	X		
			4	1 1/2	37	14	SPRAY	X		
			5	1 1/4	22	56	SPRAY	X		
			6	1 1/4	22	56	SPRAY	X		
			7	1	18	5	ROTOR	X		200′ S OF SHAW Ave OFF-RAMP NW SIDE
			8	1	15	4	ROTOR	X		
			9	1 1/4	26	7	ROTOR	X		
			10	1 1/2	37	10	ROTOR	X		
			11	1 1/2	48	13	ROTOR	X		60′ S OF SHAW Ave OFF-RAMP NW SIDE; IN MEDIAN
			12	1 1/4	24	60	SPRAY	X		
			13	1 1/2	28	15	ROTOR	X		
			14	1 1/2	35	19	SPRAY	X		
			15	1 1/2	40	6	ROTOR	X		150′ S OF SHAW Ave OFF-RAMP NW SIDE; IN MEDIAN
			16	1 1/2	31	5	ROTOR	X		
			17	1 1/2	33	9	ROTOR	X		
			18	1 1/4	22	6	ROTOR	X		
			19	1 1/4	24	59	SPRAY	X		
		705	1	2	45	13	ROTOR	X		200′ S OF WILLOW Ave; S SIDE OF EB 168
			2	2	45	13	ROTOR	X		
			3	1	14	5	ROTOR	X		
			4	1	8	20	SPRAY	X		
			5	2	42	20	SPRAY	X		
			6	2	42	20	SPRAY	X		
			7	1 1/4	23	57	SPRAY	X		150′ N OF SHAW Ave; IN MEDIAN BETWEEN EB 168 ON-RAMP & EB 168
			8	1	20	51	SPRAY	X		150′ N OF SHAW Ave; IN MEDIAN BETWEEN N EB 168 ON-RAMP & EB 168
			9	1	26	66	SPRAY	X		
			10	1	20	11	SPRAY	X		
			11	1	16	9	IMPACT	X		
			12	1 1/2	29	74	SPRAY	X		
			13	1	20	7	IMPACT	X		
20	Fre-168	706	1	2	48	12	ROTOR		X	INTERSECTION WILLOW Ave/BARSTOW Ave; IN MEDIAN
			2	2	48	12	ROTOR		X	
			3	2	48	15	ROTOR		X	
			4	2	44	10	ROTOR		X	150′ N OF BARSTOW Ave; NW SIDE
			5	2	44	10	ROTOR		X	
			6	2	44	10	ROTOR		X	
			7	1 1/4	23	57	SPRAY	X		300′ N OF SHAW Ave; E SIDE; IN MEDIAN
			8	1	20	51	SPRAY	X		

IRRIGATION SPRINKLER SCHEDULE

ISS-10

REVISED BY | DATE REVISED

SHERRY ALEXANDER | MICHAEL MILLS

CALCULATED-DESIGNED BY | CHECKED BY

SENIOR LANDSCAPE ARCHITECT

BRAD COLE

STATE OF CALIFORNIA - DEPARTMENT OF TRANSPORTATION

Caltrans® LANDSCAPE ARCHITECTURE

LAST REVISION 07-31-13 | DATE PLOTTED => 15-AUG-2013 | TIME PLOTTED => 09:26

Dist	COUNTY	ROUTE	POST MILES TOTAL PROJECT	SHEET No.	TOTAL SHEETS
06	Fre	168,180	Var	14	204

LICENSED LANDSCAPE ARCHITECT

08-05-13

PLANS APPROVAL DATE

LICENSED LANDSCAPE ARCHITECT MICHAEL W. MILLS No. 4770 Expiration 11/30/14 Renewal Date 7/31/13 Date STATE OF CALIFORNIA

THE STATE OF CALIFORNIA OR ITS OFFICERS OR AGENTS SHALL NOT BE RESPONSIBLE FOR THE ACCURACY OR COMPLETENESS OF SCANNED COPIES OF THIS PLAN SHEET.

EXISTING IRRIGATION CONTROLLERS

		CONTROLLER STATION								
Loc	Co-ROUTE	ICC No.	RCV No.	RCV SIZE INCHES	FLOW GPM	No. HEADS EA	TYPE OF HEADS	DIRECTION EB	DIRECTION WB	REMARKS
20	Fre-168	706	9	1¼	26	66	SPRAY	X		300′ N OF SHAW Ave; E SIDE; IN MEDIAN
			10	1	20	11	SPRAY	X		
			11	1	16	9	ROTOR	X		200′ N OF SHAW Ave EB 168 ON-RAMP; IN MEDIAN W SIDE
			12	1½	29	74	SPRAY		X	
			13	1	20	7	ROTOR		X	
			14	2	44	7	ROTOR		X	
			15	2	44	7	ROTOR		X	
			16	2	44	10	ROTOR		X	
			17	2	44	10	ROTOR		X	N OF BARSTOW Ave; NW SIDE
			18	2	44	9	ROTOR		X	
			19	2	44	9	ROTOR		X	
			20	2	48	9	ROTOR		X	
		708	1	1¼	28	15	SPRAY		X	
			2	1½	41	22	SPRAY		X	300′ S OF BULLARD Ave WB 168 ON-RAMP; IN MEDIAN
			3	1½	37	10	ROTOR		X	
			4	1¼	26	14	ROTOR		X	
			5	1	21	54	SPRAY		X	
			6	1	18	46	SPRAY			
			7	1¼	3	8	SPRAY		X	
			8	1½	36	9	ROTOR		X	100′ S OF BULLARD Ave WB 168 ON-RAMP; IN MEDIAN
			9	1¼	26	7	ROTOR		X	
			10	1¼	22	6	ROTOR		X	
			11	1½	48	18	ROTOR		X	
			12	1	17	44	SPRAY		X	150′ S OF BULLARD Ave WB 168 ON-RAMP; IN MEDIAN
			13	1	13	32	SPRAY		X	
			14	1	8	21	SPRAY		X	50′ N OF BARSTOW Ave
			15	1	13	23	SPRAY		X	
			16	1	14	36	SPRAY		X	300′ N OF BARSTOW Ave; NW SIDE
			17							M
			18							
			19	1¼	25	63	SPRAY		X	BETWEEN WILLOW Ave & BARSTOW Ave OC; N SIDE
21	Fre-168	707	1	1	15	38	SPRAY	X		500′ S OF EB 168; BULLARD Ave OFF-RAMP; SE SIDE
			2	1	15	21	SPRAY	X		1000′ N OF BARSTOW Ave; SE SIDE
			3	1	8	38	SPRAY	X		
			4	1	16	40	SPRAY	X		2200′ S OF BARSTOW Ave; SE SIDE
			5	1	13	32	SPRAY	X		420′ N OF BARSTOW Ave; S SIDE
			6	1	10	24	SPRAY	X		
			7	1¼	23	58	SPRAY	X		240′ N OF WILLOW Ave; S SIDE
			8	2	48	7	ROTOR	X		
			9	2	48	14	ROTOR	X		
			10	2	48	14	ROTOR	X		
			11	2	48	7	ROTOR	X		
			12	2	48	14	ROTOR	X		
			13	2	48	7	ROTOR	X		
			14	2	41	11	ROTOR	X		
			15	2	34	5	ROTOR	X		N OF WILLOW Ave/S OF BARSTOW Ave; SE SIDE
			16	2	48	26	SPRAY	X		
			17	2	48	10	ROTOR	X		
			18	2	48	10	ROTOR	X		
			19	2	48	10	ROTOR	X		
			20	2	41	10	ROTOR	X		
			21	2	41	10	ROTOR	X		
			22	2	48	14	ROTOR	X		
			23	2	48	14	ROTOR	X		N OF BARSTOW Ave; SE SIDE
			24	2	48	15	ROTOR	X		
			25	2	48	14	ROTOR	X		
		709	1	1½	41	10	SPRAY	X		
			2	1½	41	11	ROTOR	X		200′ S OF BULLARD Ave; EB 168 OFF-RAMP; IN MEDIAN
			3	1¼	18	10	SPRAY	X		
			4	1	25	62	SPRAY	X		
			5	1	20	50	SPRAY	X		40′ S OF BULLARD Ave; BULLARD Ave EB 168 OFF-RAMP; NW SIDE

IRRIGATION SPRINKLER SCHEDULE

ISS-11

REVISED BY | DATE REVISED

SHERRY ALEXANDER | MICHAEL MILLS

CALCULATED-DESIGNED BY | CHECKED BY

SENIOR LANDSCAPE ARCHITECT

BRAD COLE

STATE OF CALIFORNIA - DEPARTMENT OF TRANSPORTATION

Caltrans® LANDSCAPE ARCHITECTURE

LAST REVISION 07-31-13

DATE PLOTTED => 15-AUG-2013

TIME PLOTTED => 09:26

Dist	COUNTY	ROUTE	POST MILES TOTAL PROJECT	SHEET No.	TOTAL SHEETS
06	Fre	168,180	Var	15	204

LICENSED LANDSCAPE ARCHITECT

08-05-13

PLANS APPROVAL DATE

LICENSED LANDSCAPE ARCHITECT MICHAEL W. MILLS No. 4779 Expiration Date 11/30/14 Renewal Date 7/31/13 Date STATE OF CALIFORNIA

THE STATE OF CALIFORNIA OR ITS OFFICERS OR AGENTS SHALL NOT BE RESPONSIBLE FOR THE ACCURACY OR COMPLETENESS OF SCANNED COPIES OF THIS PLAN SHEET.

EXISTING IRRIGATION CONTROLLERS

Loc	Co-ROUTE	CONTROLLER STATION ICC No.	RCV No.	RCV SIZE INCHES	FLOW GPM	No. HEADS EA	TYPE OF HEADS	DIRECTION EB	DIRECTION WB	REMARKS
21	Fre-168	709	6	1½	35	19	SPRAY	X		40′ S OF BULLARD Ave; BULLARD EB 168 OFF-RAMP; NW SIDE
			7	1½	48	13	SPRAY	X		
			8	1½	43	23	SPRAY	X		
			9	1½	39	21	SPRAY	X		60′ S OF BULLARD Ave; BULLARD EB 168 OFF-RAMP; SE SIDE
			10	1¼	28	15	SPRAY	X		
			11	1¼	22	56	SPRAY	X		
			12	1	11	27	SPRAY	X		
			13	1½	33	9	ROTOR	X		BULLARD EB 168 OFF-RAMP; S OF BULLARD Ave; NW SIDE
			14	1½	30	8	ROTOR	X		
			15	1½	28	71	SPRAY	X		
			16	1½	30	16	SPRAY	X		
			17	1	6	14	SPRAY	X		
			18	1½	50	27	SPRAY	X		
			19	1	7	17	SPRAY	X		
			20	1½	37	15	SPRAY	X		
			21	1	33	18	SPRAY	X		
			22	2	48	8	ROTOR	X		E OF BARSTOW Ave; SE SIDE
			23	2	48	8	ROTOR	X		
			24	2	48	8	ROTOR	X		
			25	2	48	8	ROTOR	X		
			26	2	48	8	ROTOR	X		S OF BULLARD Ave; SE SIDE
			27	2	48	8	ROTOR	X		
			28	2	48	8	ROTOR	X		
			29	2	48	8	ROTOR	X		
			30	2	48	8	ROTOR	X		BULLARD Ave 168 OFF-RAMP; E SIDE
			31	2	48	8	ROTOR	X		
			32	2	46	33	SPRAY	X		
			33	2	46	25	SPRAY	X		
			34	2	48	25	SPRAY	X		
22	Fre-168	625	1	1	13	12	ROTOR	X		100′ N OF BULLARD Ave; IN MEDIAN; EB 168 ON-RAMP; N SIDE
			2	1¼	41	32	SPRAY	X		
			3	1¼	38	20	SPRAY	X		
			4	1¼	34	10	ROTOR	X		
			5	1¼	34	32	SPRAY	X		
			6	1¼	48	12	ROTOR	X		130′ N OF BULLARD Ave; IN MEDIAN; EB 168 ON-RAMP; S SIDE
			7	1¼	49	46	SPRAY	X		
			8	1½	80	12	ROTOR	X		
			9	1¼	38	18	ROTOR	X		230′ N OF BULLARD Ave; IN MEDIAN; EB 168 ON-RAMP; S SIDE
			10	1¼	38	18	ROTOR	X		
			11	1¼	35	27	SPRAY	X		
			12	1¼	44	42	SPRAY	X		180′ S OF VILLA Ave; N OF BULLARD Ave; SE SIDE
			13	1¼	38	28	SPRAY	X		
			14	1¼	41	12	ROTOR	X		
			15	1¼	38	13	ROTOR	X		
			16	1	19	14	ROTOR	X		120′ N OF VILLA Ave; SE SIDE
			17	1¼	44	13	ROTOR	X		
			18	1¼	41	20	ROTOR	X		
			19	1¼	38	36	ROTOR	X		
			20	1¼	41	42	SPRAY	X		400′ N OF VILLA Ave; SE SIDE
			21	1½	63	42	SPRAY	X		
			22	1½	63	42	SPRAY	X		
			23	1½	66	42	SPRAY	X		650′ N OF VILLA Ave; SE SIDE
			24	1½	63	42	SPRAY	X		
			25	1½	63	30	SPRAY	X		600′ S OF SIERRA Ave; SE SIDE
			26	1½	63	30	SPRAY	X		
			27	1½	78	30	SPRAY	X		
			28	1¼	36	34	SPRAY	X		180′ S OF SIERRA Ave; SE SIDE
			29	1¼	44	11	ROTOR	X		
			30	1¼	48	15	ROTOR	X		
			31	1	22	15	ROTOR	X		
23	Fre-168	626	1	1½	48	15	ROTOR		X	540′ N OF BULLARD Ave; WB 168 OFF-RAMP; SE SIDE CENTER MEDIAN

IRRIGATION SPRINKLER SCHEDULE

ISS-12

REVISED BY | DATE REVISED

SHERRY ALEXANDER | MICHAEL MILLS

CALCULATED-DESIGNED BY | CHECKED BY

SENIOR LANDSCAPE ARCHITECT | BRAD COLE

STATE OF CALIFORNIA - DEPARTMENT OF TRANSPORTATION

Caltrans® LANDSCAPE ARCHITECTURE

LAST REVISION 07-31-13 | DATE PLOTTED => 15-AUG-2013 | TIME PLOTTED => 09:26

Dist	COUNTY	ROUTE	POST MILES TOTAL PROJECT	SHEET No.	TOTAL SHEETS
06	Fre	168,180	Var	16	204

LICENSED LANDSCAPE ARCHITECT

08-05-13

PLANS APPROVAL DATE

LICENSED LANDSCAPE ARCHITECT MICHAEL W. MILLS No. 4770 Expiration Date 11/30/14 Renewal Date 7/31/13 Date STATE OF CALIFORNIA

THE STATE OF CALIFORNIA OR ITS OFFICERS OR AGENTS SHALL NOT BE RESPONSIBLE FOR THE ACCURACY OR COMPLETENESS OF SCANNED COPIES OF THIS PLAN SHEET.

EXISTING IRRIGATION CONTROLLERS

Loc	Co-ROUTE	CONTROLLER STATION ICC No.	RCV No.	RCV SIZE INCHES	FLOW GPM	No. HEADS EA	TYPE OF HEADS	DIRECTION EB	DIRECTION WB	REMARKS
23	Fre-168	626	2	1½	48	15	ROTOR		X	540′ N OF BULLARD Ave; WB 168 OFF-RAMP; SE SIDE CENTER MEDIAN
			3	1½	67	21	ROTOR		X	500′ N OF BULLARD Ave; NW SIDE OF CENTER MEDIAN
			4	1½	85	18	ROTOR		X	
			5	1	27	26	SPRAY		X	
			6	1½	57	14	ROTOR		X	360′ N OF BULLARD Ave; E SIDE OF CENTER MEDIAN
			7	1¼	44	16	ROTOR		X	
			8	1¼	40	38	SPRAY		X	400′ N OF BULLARD Ave; WB 168 OFF-RAMP; SE SIDE CENTER MEDIAN
			9	1½	55	19	ROTOR		X	
			10	1½	57	18	ROTOR		X	350′ N OF BULLARD Ave; WB 168 OFF-RAMP; SE SIDE CENTER MEDIAN
			11	2	82	14	ROTOR		X	
			12	1½	57	18	ROTOR		X	150′ N OF BULLARD Ave; SE SIDE
			13	1½	63	9	ROTOR		x	120′ N OF BULLARD Ave; WB 168 ON-RAMP; SE SIDE
			14	1¼	44	5	ROTOR		X	10′ N OF BULLARD Ave; WB 168 ON-RAMP; NE SIDE
			15	1½	52	7	ROTOR		X	
			16	1¼	34	32	SPRAY		X	
			17	1	20	19	SPRAY		X	200′ N OF BULLARD Ave; WB 168 OFF-RAMP; NW SIDE
			18	1½	60	23	ROTOR		X	100′ N OF BULLARD Ave; WB 168 OFF-RAMP; SE SIDE
			19	1	20	15	SPRAY		X	
			20	1	76	4	SPRAY		X	
		627	1	1¼	40	10	SPRAY		X	40′ S OF SIERRA Ave; N SIDE
			2	1¼	32	24	SPRAY		X	
			3	1¼	44	9	ROTOR		X	
			4	1¼	38	36	SPRAY		X	
			5	2	89	38	SPRAY		X	300′ S OF SIERRA Ave; N SIDE
			6	1	20	30	SPRAY		X	
			7	2	84	30	SPRAY		X	
			8	2	85	35	SPRAY		X	
			9	1¼	35	10	ROTOR		X	700′ S OF SIERRA Ave; N SIDE
			10	1¼	29	10	ROTOR		X	
			11	1¼	29	8	ROTOR		X	
			12	1¼	44	6	ROTOR		X	950′ S SIERRA Ave; N SIDE
			13	1¼	44	6	ROTOR		X	
			14	1¼	11	5	SPRAY		X	
			15	1	25	26	SPRAY		X	NW OF WB 168; ACCESS Rd FROM SIERRA Ave; AT VILLA Ave BASIN
			16	1¼	22	7	ROTOR		X	60′ E OF VILLA Ave OC; SE SIDE
			17	1¼	38	15	ROTOR		X	
			18	1¼	41	13	ROTOR		X	200′ SW OF VILLA Ave; W SIDE
			19	1¼	10	36	SPRAY		X	
			20	1¼	38	144	ROTOR		X	
			21	1½	74	5	ROTOR		X	360′ SW OF VILLA Ave; N SIDE
			22	1¼	38	11	ROTOR		X	
			23	1½	41	10	ROTOR		X	
			24	1¼	41	12	SPRAY		X	
24	Fre-168	628	1	1½	76	24	ROTOR	X		300′ N OF SIERRA Ave; SE SIDE
			2	1½	76	24	ROTOR	X		
			3	1½	76	24	ROTOR	X		
			4	1¼	44	42	SPRAY	X		
			5	1¼	44	42	SPRAY	X		300′ S OF PALO ALTO TRAIL; SE SIDE
			6	1½	76	24	ROTOR	X		
			7	1½	73	23	ROTOR	X		
			8	1½	73	23	ROTOR	X		
25	Fre-168	629	1	1¼	44	6	ROTOR	X		100′ N OF FRESNO/CLOVIS TRAIL; EB 168 OFF-RAMP
			2	1¼	44	6	ROTOR	X		
			3	1½	57	54	SPRAY	X		
			4	1½	68	26	ROTOR	X		200′ N OF FRESNO/CLOVIS TRAIL; E SIDE OF EB 168
			5	1½	52	3	ROTOR	X		540′ S OF HERNDON Ave; NW SIDE CENTER MEDIAN
			6	1½	59	5	ROTOR	X		
			7	1½	67	7	ROTOR	X		
			8	1½	59	56	SPRAY	X		S OF HERNDON Ave; EB 168 HERNDON Ave OFF-RAMP; SE SIDE
			9	1¼	42	40	SPRAY	X		
			10	1¼	38	12	ROTOR	X		

IRRIGATION SPRINKLER SCHEDULE

ISS-13

REVISED BY | DATE REVISED

SHERRY ALEXANDER | MICHAEL MILLS

CALCULATED-DESIGNED BY | CHECKED BY

SENIOR LANDSCAPE ARCHITECT

BRAD COLE

STATE OF CALIFORNIA - DEPARTMENT OF TRANSPORTATION

Caltrans® LANDSCAPE ARCHITECTURE

LAST REVISION 07-31-13 | DATE PLOTTED => 15-AUG-2013 | TIME PLOTTED => 09:26

Dist	COUNTY	ROUTE	POST MILES TOTAL PROJECT	SHEET No.	TOTAL SHEETS
06	Fre	168,180	Var	17	204

Michael W. Mills
LICENSED LANDSCAPE ARCHITECT
08-05-13
PLANS APPROVAL DATE

LICENSED LANDSCAPE ARCHITECT MICHAEL W. MILLS No. 4770 Expiration 11/30/14 Renewal Date 7/31/13 Date STATE OF CALIFORNIA

THE STATE OF CALIFORNIA OR ITS OFFICERS OR AGENTS SHALL NOT BE RESPONSIBLE FOR THE ACCURACY OR COMPLETENESS OF SCANNED COPIES OF THIS PLAN SHEET.

EXISTING IRRIGATION CONTROLLERS

Loc	Co-ROUTE	CONTROLLER STATION ICC No.	RCV No.	RCV SIZE INCHES	FLOW GPM	No. HEADS EA	TYPE OF HEADS	DIRECTION EB	DIRECTION WB	REMARKS
25	Fre-168	629	11	1¼	38	M	SPRAY	X		S OF HERNDON Ave; EB 168 HERNDON Ave OFF-RAMP; SE SIDE
			12	1½	63	60	SPRAY	X		
			13	1½	52	13	ROTOR	X		540′ S OF HERNDON Ave; EB 168 HERNDON Ave OFF-RAMP; SE SIDE
			14	1¼	49	23	ROTOR	X		
			15	1½	53	23	ROTOR	X		
			16	1½	63	60	SPRAY	X		S OF HERNDON Ave; EB 168 HERNDON Ave OFF-RAMP; SE SIDE
			17	1½	53	21	ROTOR	X		
			18	1½	53	25	ROTOR	X		540′ S OF HERNDON Ave; HERNDON Ave EB 168 ON-RAMP; NW SIDE
			19	1½	53	25	ROTOR	X		
			20	1½	76	72	SPRAY	X		
			21	1½	74	10	ROTOR	X		
			22	1½	52	7	ROTOR	X		220′ S OF HERNDON Ave; NW SIDE OF MEDIAN
			23	1½	52	7	ROTOR	X		
			24	1¼	44	7	ROTOR	X		
			25	1¼	34	14	ROTOR	X		
			26	1½	67	10	ROTOR	X		
			27	1½	54	17	ROTOR	X		250′ S OF HERNDON Ave; HERNDON Ave EB 168 ON-RAMP; N SIDE OF RAMP
			28	1	19	18	SPRAY	X		
		630	1	1¼	48	14	SPRAY	X		
			2	1¼	44	11	SPRAY	X		300′ S OF HERNDON Ave; HERNDON Ave EB 168 OFF-RAMP; NW SIDE
			3	1½	51	12	ROTOR	X		
			4	1½	55	14	ROTOR	X		
			5	1¼	32	30	SPRAY	X		
			6	1½	70	30	SPRAY	X		250′ S OF HERNDON Ave; HERNDON Ave EB 168 OFF-RAMP; SE SIDE
			7	1½	59	28	SPRAY	X		
			8	1	29	9	ROTOR	X		30′ S OF HERNDON Ave; HERNDON Ave EB 168 OFF-RAMP; IN MEDIAN; NW SIDE
			9	1	15	14	SPRAY	X		
			10	1¼	44	10	SPRAY	X		
			11	1½	61	29	SPRAY	X		150′ N OF HERNDON Ave EB 168 ON-RAMP; SE SIDE
			12	1½	61	16	SPRAY	X		
			13	1½	76	72	SPRAY	X		
			14	2	4	25	SPRAY	X		320′ N OF HERNDON Ave OC; SE SIDE
			15	2	81	10	SPRAY	X		
			16	1½	74	10	ROTOR	X		
			17	1¼	23	21	SPRAY	X		
			18	1¼	23	21	SPRAY	X		980′ N OF HERNDON Ave OC; IN MEDIAN; N SIDE
			19	1½	78	21	SPRAY	X		
			20	1½	53	50	SPRAY	X		
			21	1¼	38	11	ROTOR	X		450′ N OF HERNDON Ave OC; SE SIDE
			22	1¼	35	6	ROTOR	X		
			23	1	19	6	ROTOR	X		
26	Fre-168	631	1	1¼	46	5	ROTOR		X	
			2	1¼	45	13	ROTOR		X	60′ S OF HERNDON Ave; WB 168 ON-RAMP; NW SIDE; IN MEDIAN
			3	1¼	53	16	ROTOR		X	
			4	2	81	2	ROTOR		X	
			5	2	81	7	ROTOR		X	200′ S OF HERNDON Ave; WB 168 ON-RAMP; NW SIDE; IN MEDIAN
			6	2	81	11	ROTOR		X	
			7	2	81	11	ROTOR		X	
			8	1½	61	58	SPRAY		X	120′ S OF HERNDON Ave; WB 168 ON-RAMP; SW SIDE
			9	1½	53	50	SPRAY		X	
			10	1	30	28	SPRAY		X	
			11	2	94	17	SPRAY		X	200′ S OF HERNDON Ave; WB 168 ON-RAMP; NW SIDE
			12	2	93	30	SPRAY		X	
			13	1¼	48	15	SPRAY		X	500′ S OF HERNDON Ave; WB 168 ON-RAMP; SE SIDE
			14	1¼	49	11	SPRAY		X	
			15	1¼	35	50	SPRAY		X	
			16	1	29	8	ROTOR		X	120′ N OF FRESNO-CLOVIS TRAIL
			17	1	35	9	ROTOR		X	
			18	1¼	12	5	ROTOR		X	
			19	1½	57	18	ROTOR		X	240′ S OF FRESNO-CLOVIS TRAIL
			20	1½	57	18	ROTOR		X	

IRRIGATION SPRINKLER SCHEDULE
ISS-14

REVISED BY | DATE REVISED
SHERRY ALEXANDER | MICHAEL MILLS
CALCULATED-DESIGNED BY | CHECKED BY
SENIOR LANDSCAPE ARCHITECT
BRAD COLE
STATE OF CALIFORNIA - DEPARTMENT OF TRANSPORTATION
Caltrans® LANDSCAPE ARCHITECTURE

LAST REVISION 07-31-13 | DATE PLOTTED => 15-AUG-2013 | TIME PLOTTED => 09:26

Dist	COUNTY	ROUTE	POST MILES TOTAL PROJECT	SHEET No.	TOTAL SHEETS
06	Fre	168,180	Var	18	204

LICENSED LANDSCAPE ARCHITECT

08-05-13

PLANS APPROVAL DATE

LICENSED LANDSCAPE ARCHITECT MICHAEL W. MILLS No. 4770 Expiration 11/30/14 Renewal Date 7/31/13 Date STATE OF CALIFORNIA

THE STATE OF CALIFORNIA OR ITS OFFICERS OR AGENTS SHALL NOT BE RESPONSIBLE FOR THE ACCURACY OR COMPLETENESS OF SCANNED COPIES OF THIS PLAN SHEET.

EXISTING IRRIGATION CONTROLLERS

Loc	Co-ROUTE	CONTROLLER STATION ICC No.	RCV No.	RCV SIZE INCHES	FLOW GPM	No. HEADS EA	TYPE OF HEADS	DIRECTION EB	DIRECTION WB	REMARKS
26	Fre-168	631	21	1½	57	9	ROTOR		X	240′ S OF FRESNO-CLOVIS TRAIL
			22	1½	53	50	SPRAY		X	600′ N OF SIERRA Ave; NW SIDE
			23	1½	67	9	ROTOR		X	
			24	1½	67	15	ROTOR		X	
			25	1½	67	40	SPRAY		X	
			26	1½	74	10	ROTOR		X	350′ N OF SIERRA Ave;; NW SIDE
			27	1½	74	11	ROTOR		X	
			28	1½	74	15	ROTOR		X	
			29	1¼	42	40	SPRAY		X	
			30	1½	67	40	ROTOR		X	100′ N OF SIERRA Ave; NE SIDE
			31	1½	74	10	ROTOR		X	
			32	1½	74	10	ROTOR		X	
			33	1½	52	20	SPRAY		X	
		632	1							M
			2	1½	79	25	ROTOR		X	N OF HERNDON Ave; IN MEDIAN; BETWEEN WB 168 & WB 168 OFF-RAMP
			3	2	86	81	SPRAY		X	
			4	1½	70	19	ROTOR		X	
			5	2	85	80	SPRAY		X	N OF HERNDON Ave; IN MEDIAN; NW SIDE
			6	1½	54	10	ROTOR		X	
			7	1½	63	18	SPRAY		X	
			8	1½	63	20	ROTOR		X	
			9	1½	63	24	ROTOR		X	N OF HERNDON Ave; SE SIDE CENTER MEDIAN
			10	1½	64	9	ROTOR		X	
			11	1½	60	10	ROTOR		X	200′ N OF HERNDON Ave; HERNDON Ave WB 168 ON-RAMP; SE SIDE
			12	1	21	20	SPRAY		X	
			13	1½	57	18	ROTOR		X	
			14	1½	63	14	ROTOR		X	300′ N OF HERNDON Ave; WB 168 HERNDON Ave OFF-RAMP; IN MEDIAN; SE SIDE
			15	1½	76	24	ROTOR		X	
			16	1½	78	26	ROTOR		X	
			17	1½	59	56	SPRAY		X	260′ N OF HERNDON Ave; WB 168 OFF-RAMP; NW SIDE
			18	1½	59	24	ROTOR		X	
			19	2	85	80	SPRAY		X	
			20	1½	78	35	ROTOR		X	
			21	1½	59	12	ROTOR		X	
			22	1¼	42	17	ROTOR		X	30′ N OF HERNDON Ave; HERNDON Ave WB 168 OFF-RAMP; IN MEDIAN; SE SIDE
			23	1	12	11	SPRAY		X	
			24	1¼	35	8	ROTOR		X	
27	Fre-168	633	1	1½	62	59	SPRAY	X		100′ E OF CLOVIS Ave; S SIDE
			2	1¼	38	12	ROTOR	X		
			3	1¼	41	13	ROTOR	X		
			4	1½	63	24	SPRAY	X		250′ E OF CLOVIS Ave; S SIDE
			5	1½	78	74	SPRAY	X		
			6	1¼	36	17	SPRAY	X		
			7	1½	63	60	SPRAY	X		650′ E OF CLOVIS Ave; S SIDE
			8	1¼	446	21	SPRAY	X		
			9	1¼	46	35	SPRAY	X		
			10	1½	59	15	SPRAY	X		
			11	1½	61	16	SPRAY	X		60′ W OF SUNNYSIDE Ave OC; S SIDE
			12	1¼	44	21	SPRAY	X		
			13	1¼	46	19	SPRAY	X		
			14	1	6	6	SPRAY	X		
			15	2	74	10	ROTOR	X		
			16	2	74	10	ROTOR	X		
			17	1	23	22	SPRAY	X		360′ E OF SUNNYSIDE Ave OC; S SIDE
			18	2	74	10	ROTOR	X		
			19	2	74	10	ROTOR	X		
			20	1½	67	10	ROTOR	X		800′ E OF SUNNYSIDE Ave OC; S SIDE
			21	1½	67	10	ROTOR	X		
			22	2	74	10	ROTOR	X		1100′ E OF SUNNYSIDE Ave OC; S SIDE
			23	1½	67	9	ROTOR	X		
			24	1½	70	29	SPRAY	X		BEGINNING EB 168 FOWLER Ave OFF-RAMP; N SIDE OF MEDIAN

IRRIGATION SPRINKLER SCHEDULE

ISS-15

STATE OF CALIFORNIA - DEPARTMENT OF TRANSPORTATION

Caltrans® LANDSCAPE ARCHITECTURE

SENIOR LANDSCAPE ARCHITECT: BRAD COLE

CALCULATED-DESIGNED BY: SHERRY ALEXANDER

CHECKED BY: MICHAEL MILLS

REVISED BY

DATE REVISED

LAST REVISION 07-31-13 | DATE PLOTTED => 15-AUG-2013 | TIME PLOTTED => 09:26

Dist	COUNTY	ROUTE	POST MILES TOTAL PROJECT	SHEET No.	TOTAL SHEETS
06	Fre	168,180	Var	19	204

LICENSED LANDSCAPE ARCHITECT

08-05-13

PLANS APPROVAL DATE

LICENSED LANDSCAPE ARCHITECT MICHAEL W. MILLS No. 4770 Expiration Date 11/30/14 Renewal Date 7/31/13 Date STATE OF CALIFORNIA

THE STATE OF CALIFORNIA OR ITS OFFICERS OR AGENTS SHALL NOT BE RESPONSIBLE FOR THE ACCURACY OR COMPLETENESS OF SCANNED COPIES OF THIS PLAN SHEET.

EXISTING IRRIGATION CONTROLLERS

Loc	Co-ROUTE	CONTROLLER STATION ICC No.	RCV No.	RCV SIZE INCHES	FLOW GPM	No. HEADS EA	TYPE OF HEADS	DIRECTION EB	DIRECTION WB	REMARKS
27	Fre-168	633	25	1	21	20	SPRAY	X		BEGINNING EB FOWLER Ave 168 OFF-RAMP; S SIDE OF MEDIAN
			26	1½	35	22	ROTOR	X		450′ W OF FOWLER Ave; EB 168 OFF-RAMP; S SIDE
			27	1½	80	34	SPRAY	X		
			28	1½	78	37	SPRAY	X		
			29	1½	73	30	SPRAY	X		
			30	1¼	42	40	SPRAY		X	220′ W OF FOWLER Ave; IN MEDIAN; S SIDE
			31	1	25	24	SPRAY		X	
			32	1½	72	26	SPRAY		X	
			33	1½	78	29	SPRAY		X	
			34	1	12	11	SPRAY		X	180′ W OF FOWLER Ave; EB 168 OFF-RAMP; S SIDE
			35	1½	61	29	SPRAY		X	
			36	1½	60	19	ROTOR		X	10′ W OF FOWLER Ave OC; S SIDE
28	Fre-168	634	1	2	82	32	SPRAY	X		10′ E OF EB FOWLER Ave ON-RAMP; N SIDE; IN MEDIAN
			2	1½	57	54	SPRAY	X		
			3	1½	79	30	SPRAY	X		80′ E OF FOWLER Ave OC; S SIDE; IN MEDIAN
			4	1½	78	35	SPRAY	X		
			5	1½	61	26	SPRAY	X		
			6	1	14	13	SPRAY	X		
			7	1½	78	37	SPRAY	X		
			8	1½	78	37	SPRAY	X		140′ E OF 168 EB FOWLER Ave ON-RAMP; S SIDE
			9	1½	78	21	SPRAY	X		
			10	1½	78	21	SPRAY	X		
			11	1½	76	32	SPRAY	X		240′ E OF EB 168 FOWLER Ave ON-RAMP; N SIDE
			12	1½	66	62	SPRAY	X		
			13	1½	68	32	SPRAY	X		500′ E OF FOWLER Ave; S SIDE; IN MEDIAN
			14	1½	71	30	SPRAY	X		
			15	1½	67	14	SPRAY	X		
			16	1½	78	12	SPRAY	X		
			17	1½	57	54	SPRAY	X		
			18	1½	78	15	SPRAY	X		600′ E OF EB 168 FOWLER Ave ON-RAMP; S SIDE
			19	1½	78	23	SPRAY	X		
			20	1½	74	20	SPRAY	X		
			21	1½	78	12	SPRAY	X		
			22	1½	78	20	SPRAY	X		
			23	1½	76	21	SPRAY	X		
			24	1½	76	15	SPRAY	X		
			25	1½	78	52	SPRAY	X		
			26	2	80	15	SPRAY	X		1000′ E OF FOWLER Ave OC; S SIDE
			27	1½	15	100	SPRAY	X		
			28	1½	78	15	SPRAY	X		
			29	1½	78	15	SPRAY	X		
			30	1½	78	15	SPRAY	X		
		635	1	1½	78	20	SPRAY	X		
			2	1½	78	20	SPRAY	X		
			3	1½	73	20	SPRAY	X		
			4	1½	55	52	SPRAY	X		360′ W OF ARMSTRONG Ave; S SIDE
			5	1½	78	10	SPRAY	X		
			6	1½	57	10	SPRAY	X		
			7	1½	70	10	SPRAY	X		
			8	1½	57	10	SPRAY	X		
			9	1½	65	10	SPRAY	X		
			10	1½	76	10	SPRAY	X		200′ E OF ARMSTRONG Ave; S SIDE
			11	2	82	20	SPRAY	X		
			12	1½	70	10	SPRAY	X		
			13	1¼	44	42	SPRAY	X		350′ E OF ARMSTRONG Ave; S SIDE
			14	2	82	20	SPRAY	X		600′ E OF ARMSTRONG Ave; S SIDE
			15	2	82	20	SPRAY	X		
			16	1¼	41	20	SPRAY	X		1000′ E OF ARMSTRONG Ave; S SIDE
			17	2	82	24	SPRAY	X		
			18	2	82	20	SPRAY	X		1120′ E OF ARMSTRONG Ave; S SIDE
			19	1½	63	60	SPRAY	X		

IRRIGATION SPRINKLER SCHEDULE

ISS-16

STATE OF CALIFORNIA - DEPARTMENT OF TRANSPORTATION

Caltrans® LANDSCAPE ARCHITECTURE

SENIOR LANDSCAPE ARCHITECT: BRAD COLE

CALCULATED-DESIGNED BY: SHERRY ALEXANDER

CHECKED BY: MICHAEL MILLS

REVISED BY / DATE REVISED

LAST REVISION 07-31-13

DATE PLOTTED => 15-AUG-2013

TIME PLOTTED => 09:26

Dist	COUNTY	ROUTE	POST MILES TOTAL PROJECT	SHEET No.	TOTAL SHEETS
06	Fre	168,180	Var	20	204

Michael W. Mills
LICENSED LANDSCAPE ARCHITECT
08-05-13
PLANS APPROVAL DATE

LICENSED LANDSCAPE ARCHITECT MICHAEL W. MILLS No. 4770 Expiration 11/30/14 Renewal Date 7/31/13 Date STATE OF CALIFORNIA

THE STATE OF CALIFORNIA OR ITS OFFICERS OR AGENTS SHALL NOT BE RESPONSIBLE FOR THE ACCURACY OR COMPLETENESS OF SCANNED COPIES OF THIS PLAN SHEET.

EXISTING IRRIGATION CONTROLLERS

		CONTROLLER STATION								
Loc	Co-ROUTE	ICC No.	RCV No.	RCV SIZE INCHES	FLOW GPM	No. HEADS EA	TYPE OF HEADS	DIRECTION EB	DIRECTION WB	REMARKS
28	Fre-168	635	20	2	82	46	SPRAY	X		Beg OF EB 168 TEMPERANCE Ave OFF-RAMP; S SIDE
			21	2	85	20	SPRAY	X		
			22	1½	74	20	SPRAY	X		
29	Fre-168	636	1	1	6	6	SPRAY	X		60′ W OF SUNNYSIDE Ave; N SIDE
			2	1¼	30	28	SPRAY	X		
			3	1½	78	21	SPRAY	X		240′ W OF SUNNYSIDE Ave; N SIDE
			4	1½	78	36	SPRAY	X		
			5	1½	76	36	SPRAY	X		
			6	1¼	41	39	SPRAY	X		540′ W OF SUNNYSIDE Ave; N SIDE
			7	1½	78	30	SPRAY	X		540′ E OF CLOVIS Ave; N SIDE
			8	1½	74	70	SPRAY	X		
			9	1½	66	31	SPRAY	X		
			10	1½	68	32	SPRAY	X		
			11	1½	74	10	ROTOR	X		140′ E OF CLOVIS Ave; N SIDE
			12	1½	74	9	ROTOR	X		
			13	1½	59	21	SPRAY	X		10′ E OF CLOVIS Ave; N SIDE
			14	1½	59	21	SPRAY	X		
			15	1½	71	16	SPRAY	X		30′ W OF CLOVIS Ave; N SIDE; TOP OF SLOPE
			16	1½	70	24	SPRAY	X		
			17	1½	63	20	ROTOR	X		240′ W OF CLOVIS Ave OC; N SIDE
			18	1½	60	19	ROTOR	X		
			19	1½	54	17	ROTOR	X		
			20	2	80	76	SPRAY	X		
			21	1½	77	73	SPRAY	X		
		637	1	1½	52	5	SPRAY		X	ON FOWLER Ave S OF WB 168 ON-RAMP; IN MEDIAN
			2	1½	59	24	SPRAY		X	
			3	1½	63	16	SPRAY		X	
			4	1½	78	31	SPRAY		X	200′ W OF FOWLER Ave; IN MEDIAN; S SIDE
			5	1½	77	31	SPRAY		X	
			6	1½	70	27	SPRAY		X	
			7	1½	72	30	SPRAY		X	200′ W OF FOWLER Ave; WB 168 ON-RAMP; IN MEDIAN; S SIDE
			8	1½	79	19	SPRAY		X	
			9	2	80	76	SPRAY		X	
			10	1½	74	35	SPRAY		X	
			11	1½	76	29	SPRAY		X	
			12	2	80	76	SPRAY		X	
			13	2	82	32	SPRAY		X	
			14	1½	64	28	SPRAY		X	200′ W OF FOWLER Ave; WB 168 ON-RAMP; N SIDE
			15	1½	51	24	SPRAY		X	
			16	1½	74	20	SPRAY		X	620′ W OF FOWLER Ave; WB 168 ON-RAMP; IN MEDIAN; S SIDE
			17	1½	59	28	SPRAY		X	
			18	1½	74	51	SPRAY		X	720′ W OF FOWLER Ave; WB 168 ON-RAMP; IN MEDIAN; S SIDE
			19	1½	78	37	SPRAY		X	
			20	2	80	76	SPRAY		X	
			21	1½	77	15	SPRAY		X	
			22	1½	78	30	SPRAY		X	
			23	2	78	28	SPRAY		X	WB 168 ON-RAMP & WB TRANSITION; N SIDE
			24	2	74	20	SPRAY		X	
			25	2	72	33	SPRAY		X	
			26	2	74	19	SPRAY		X	
			27	2	78	37	SPRAY		X	
			28	2	78	37	SPRAY		X	
			29	1½	54	51	SPRAY		X	WB 168; N SIDE
			30	1½	67	18	SPRAY		X	
			31	2	78	74	SPRAY		X	
			32	2	78	37	SPRAY		X	100′ E OF SUNNYSIDE Ave OC; N SIDE OF WB 168
			33	1½	78	38	SPRAY		X	
			34	1½	81	6	SPRAY		X	
			35	1	6	6	SPRAY		X	
30	Fre-168	638	1	1½	75	10	SPRAY		X	360′ W OF ARMSTRONG Ave; TOP OF SLOPE; N SIDE
			2	1½	59	20	SPRAY		X	

IRRIGATION SPRINKLER SCHEDULE

ISS-17

REVISED BY | DATE REVISED
SHERRY ALEXANDER | MICHAEL MILLS
CALCULATED-DESIGNED BY | CHECKED BY
SENIOR LANDSCAPE ARCHITECT
BRAD COLE

STATE OF CALIFORNIA - DEPARTMENT OF TRANSPORTATION
Caltrans® LANDSCAPE ARCHITECTURE

LAST REVISION 07-31-13 | DATE PLOTTED => 15-AUG-2013 | TIME PLOTTED => 09:26

Dist	COUNTY	ROUTE	POST MILES TOTAL PROJECT	SHEET No.	TOTAL SHEETS
06	Fre	168,180	Var	21	204

Michael W. Mills
LICENSED LANDSCAPE ARCHITECT
08-05-13
PLANS APPROVAL DATE

LICENSED LANDSCAPE ARCHITECT MICHAEL W. MILLS No. 4170 Expiration Date 11/30/14 Renewal Date 7/31/13 Date STATE OF CALIFORNIA

THE STATE OF CALIFORNIA OR ITS OFFICERS OR AGENTS SHALL NOT BE RESPONSIBLE FOR THE ACCURACY OR COMPLETENESS OF SCANNED COPIES OF THIS PLAN SHEET.

EXISTING IRRIGATION CONTROLLERS

		CONTROLLER STATION								
Loc	Co-ROUTE	ICC No.	RCV No.	RCV SIZE INCHES	FLOW GPM	No. HEADS EA	TYPE OF HEADS	DIRECTION EB	DIRECTION WB	REMARKS
30	Fre-168	638	3	1½	78	10	SPRAY		X	360′ W OF ARMSTRONG Ave; TOP OF SLOPE; N SIDE
			4	1½	74	10	SPRAY		X	
			5	1½	78	10	SPRAY		X	
			6	1½	61	58	SPRAY		X	
			7	1	80	21	SPRAY		X	Beg OF WB 168 /WB 168 OFF-RAMP; TOP OF SLOPE; N SIDE
			8	1½	74	4	SPRAY		X	
			9	1½	78	36	SPRAY		X	
			10	1½	78	10	SPRAY		X	
			11	2	49	10	SPRAY		X	
			12	1½	66	62	SPRAY		X	120′ W OF WB 168 /WB 168 OFF-RAMP; IN MEDIAN; N SIDE
			13	1½	78	8	SPRAY		X	
			14	1½	78	9	SPRAY		X	
			15	1½	78	21	SPRAY		X	
			16	1½	53	21	SPRAY		X	Beg OF WB 168 /WB 168 OFF-RAMP; IN MEDIAN; S SIDE
			17	1½	50	19	SPRAY		X	
			18	1½	54	25	SPRAY		X	600′ N OF FOWLER Ave; N SIDE
			19	1½	62	24	SPRAY		X	
			20	1¼	49	46	SPRAY		X	400′ N OF FOWLER Ave WB 168 OFF-RAMP; IN MEDIAN; S SIDE
			21	1½	78	31	SPRAY		X	
			22	1½	78	25	SPRAY		X	
			23	1¼	44	42	SPRAY		X	
			24	1½	53	22	SPRAY		X	350′ N OF FOWLER Ave; ON N SIDE
			25	1½	58	12	SPRAY		X	
			26	1½	53	20	SPRAY		X	
			27	1½	67	9	ROTOR		X	
			28	1½	78	28	SPRAY		X	230′ N OF FOWLER Ave WB 168 OFF-RAMP; S SIDE
			29	1½	78	35	SPRAY		X	
			30	1¼	48	15	ROTOR		X	200′ N OF FOWLER Ave WB 168 OFF-RAMP; N SIDE BY R/W FENCE
			31	1¼	49	46	SPRAY		X	
			32	1½	57	27	SPRAY		X	200′ N OF FOWLER Ave WB 168 OFF-RAMP; S SIDE
			33	1½	59	16	SPRAY		X	
			34	1¼	46	22	SPRAY		X	
			35	1¼	41	18	SPRAY		X	
			36							M
31	Fre-168	639	1	1¼	42	12	SPRAY	X		290′ E OF Beg EB 168 TEMPERANCE Ave OFF-RAMP; S SIDE
			2	1	26	4	SPRAY	X		
			3	1¼	41	7	ROTOR	X		660′ W OF TEMPERANCE Ave IN MEDIAN; N SIDE
			4	1¼	41	13	ROTOR	X		
			5	1½	55	52	SPRAY	X		
			6	2	85	80	SPRAY	X		450′ W OF TEMPERANCE Ave IN MEDIAN; N SIDE
			7	2	82	78	SPRAY	X		
			8	1½	72	68	SPRAY	X		660′ W OF TEMPERANCE Ave OC; S SIDE
			9	2	82	26	ROTOR	X		
			10	2	82	26	ROTOR	X		
			11	1½	70	22	ROTOR	X		
			12	1¼	36	10	ROTOR	X		
			13	1½	59	13	ROTOR	X		250′ W OF TEMPERANCE Ave EB 168 OFF-RAMP; N SIDE
			14	1¼	49	16	SPRAY	X		
			15	1¼	49	15	SPRAY	X		
			16	1¼	36	14	ROTOR	X		200′ E OF TEMPERANCE Ave OC; S SIDE
			17	1¼	38	12	ROTOR	X		
			18	1¼	48	22	ROTOR	X		
			19	1½	53	50	SPRAY	X		
			20	1¼	44	30	ROTOR	X		
			21	1	22	21	ROTOR	X		650′ E OF TEMPERANCE Ave OC; IN MEDIAN; S SIDE
			22	1	26	7	ROTOR	X		
			23	1¼	36	17	SPRAY	X		
32	Fre-168	640	1	1¼	44	15	SPRAY	X		180′ E OF TEMPERANCE Ave ON EB 168 ON-RAMP; S SIDE
			2	1¼	42	23	SPRAY	X		
			3	1¼	44	33	SPRAY	X		
			4	1¼	37	10	SPRAY	X		500 ′E OF TEMPERANCE Ave ON EB 168 ON-RAMP; S SIDE

IRRIGATION SPRINKLER SCHEDULE
ISS-18

REVISED BY | DATE REVISED
SHERRY ALEXANDER | MICHAEL MILLS
CALCULATED-DESIGNED BY | CHECKED BY
SENIOR LANDSCAPE ARCHITECT
BRAD COLE

STATE OF CALIFORNIA - DEPARTMENT OF TRANSPORTATION
Caltrans® LANDSCAPE ARCHITECTURE

LAST REVISION 07-31-13 | DATE PLOTTED => 15-AUG-2013 | TIME PLOTTED => 09:26

Dist	COUNTY	ROUTE	POST MILES TOTAL PROJECT	SHEET No.	TOTAL SHEETS
06	Fre	168,180	Var	22	204

LICENSED LANDSCAPE ARCHITECT

08-05-13

PLANS APPROVAL DATE

LICENSED LANDSCAPE ARCHITECT MICHAEL W. MILLS No. 4770 Expiration 11/30/14 Renewal Date 7/31/13 Date STATE OF CALIFORNIA

THE STATE OF CALIFORNIA OR ITS OFFICERS OR AGENTS SHALL NOT BE RESPONSIBLE FOR THE ACCURACY OR COMPLETENESS OF SCANNED COPIES OF THIS PLAN SHEET.

EXISTING IRRIGATION CONTROLLERS

Loc	Co-ROUTE	CONTROLLER STATION ICC No.	RCV No.	RCV SIZE INCHES	FLOW GPM	No. HEADS EA	TYPE OF HEADS	DIRECTION EB	DIRECTION WB	REMARKS
32	Fre-168	640	5	1¼	46	12	SPRAY	X		500′ E OF TEMPERANCE Ave; EB 168 ON-RAMP; S SIDE
			6	1¼	44	21	SPRAY	X		
			7	1¼	48	8	SPRAY	X		
			8	1¼	38	36	SPRAY	X		
			9	1½	70	19	SPRAY	X		1100′ E OF TEMPERANCE Ave; EB 168 ON-RAMP; S SIDE
			10	1½	57	27	SPRAY	X		
			11	1½	59	28	SPRAY	X		
			12	1½	74	10	SPRAY	X		
			13	1½	61	10	SPRAY	X		
			14	1½	59	10	SPRAY	X		
			15	1¼	38	36	SPRAY	X		1340′ E OF TEMPERANCE Ave; EB 168 ON-RAMP; SW SIDE
			16	1¼	45	43	SPRAY	X		
			17	2	87	82	SPRAY	X		1260′ E OF ENTERPRISE CANAL UC
			18	2	82	78	SPRAY	X		
			19	1½	75	71	SPRAY	X		
			20	2	85	80	SPRAY	X		1820′ E OF ENTERPRISE CANAL UC
			21	1½	67	63	SPRAY	X		
			22	1½	66	62	SPRAY	X		1960′ W OF DEWOLF Ave; S SIDE
			23	2	87	82	SPRAY	X		
			24	1½	61	58	SPRAY	X		
			25	2	91	86	SPRAY	X		180′ E OF NEES Ave; S SIDE
			26	1½	63	60	SPRAY	X		
			27	1½	70	66	SPRAY	X		
			28	1½	74	10	ROTOR			220′ W OF DEWOLF Ave; S SIDE
			29	1½	32	30	SPRAY			
			30	1½	67	9	ROTOR			
			31	1½	74	10	ROTOR			
		641	1	1½	67	9	ROTOR	X		360′ E OF DEWOLF Ave; S SIDE
			2	1½	67	9	ROTOR	X		
			3	1½	59	56	SPRAY	X		
			4	1½	59	8	ROTOR	X		
			5	1½	59	8	ROTOR	X		
			6	1½	59	56	SPRAY	X		1100′ E OF DEWOLF Ave; S SIDE
			7	1½	67	63	SPRAY	X		
			8	1½	61	58	SPRAY	X		1760 ′E OF DEWOLF Ave; S SIDE
			9	2	85	80	SPRAY	X		
			10	1½	70	66	SPRAY	X		
			11	1½	57	71	SPRAY	X		2800′ E OF DEWOLF Ave; S SIDE
			12	1½	73	54	SPRAY	X		
			13	1½	73	60	SPRAY	X		
			14	1½	77	73	SPRAY	X		1600′ W OF SHEPHERD Ave; S SIDE
			15	1½	68	64	SPRAY	X		
			16	2	82	70	SPRAY	X		
			17	1½	54	51	SPRAY	X		
			18	1½	66	62	SPRAY	X		1000′ W OF SHEPHERD Ave; S SIDE
			19	1½	70	66	SPRAY	X		
			20	2	56	78	SPRAY	X		
			21	1½	62	59	SPRAY	X		540′ W OF SHEPHERD Ave; S SIDE
			22	2	78	74	SPRAY	X		
			23	1½	76	72	SPRAY	X		
33	Fre-168	642	1	1¼	32	12	SPRAY		X	10′ S OF SB TEMPERANCE Ave; 60′ E OF WB 168 ON-RAMP
			2	1½	57	27	SPRAY		X	80′ S OF WB 168 ON-RAMP FROM TEMPERANCE Ave; NW SIDE
			3	1½	55	26	SPRAY		X	
			4	1½	63	25	SPRAY		X	
			5	1½	59	16	SPRAY		X	100′ S OF WB 168 ON-RAMP FROM TEMPERANCE Ave; NW SIDE
			6	1½	70	16	SPRAY		X	
			7	1½	60	19	ROTOR		X	300′ S OF WB 168 ON-RAMP FROM TEMPERANCE Ave; IN MEDIAN
			8	1½	57	11	ROTOR		X	
			9	1½	70	66	SPRAY		X	400′ S OF WB 168 ON-RAMP FROM TEMPERANCE Ave; IN MEDIAN
			10	1½	57	15	ROTOR		X	
			11	1¼	32	10	ROTOR		X	550′ S OF WB 168 ON-RAMP FROM TEMPERANCE Ave; N SIDE

IRRIGATION SPRINKLER SCHEDULE

ISS-19

REVISED BY | DATE REVISED

SHERRY ALEXANDER | MICHAEL MILLS

CALCULATED-DESIGNED BY | CHECKED BY

SENIOR LANDSCAPE ARCHITECT

BRAD COLE

STATE OF CALIFORNIA - DEPARTMENT OF TRANSPORTATION

Caltrans® LANDSCAPE ARCHITECTURE

LAST REVISION 07-31-13 | DATE PLOTTED => 15-AUG-2013 | TIME PLOTTED => 09:26

Dist	COUNTY	ROUTE	POST MILES TOTAL PROJECT	SHEET No.	TOTAL SHEETS
06	Fre	168,180	Var	23	204

LICENSED LANDSCAPE ARCHITECT

08-05-13

PLANS APPROVAL DATE

LICENSED LANDSCAPE ARCHITECT MICHAEL W. MILLS No. 4770 Expiration Date 11/30/14 Renewal Date 7/31/13 Date STATE OF CALIFORNIA

THE STATE OF CALIFORNIA OR ITS OFFICERS OR AGENTS SHALL NOT BE RESPONSIBLE FOR THE ACCURACY OR COMPLETENESS OF SCANNED COPIES OF THIS PLAN SHEET.

EXISTING IRRIGATION CONTROLLERS

		CONTROLLER STATION								
Loc	Co-ROUTE	ICC No.	RCV No.	RCV SIZE INCHES	FLOW GPM	No. HEADS EA	TYPE OF HEADS	DIRECTION EB	DIRECTION WB	REMARKS
33	Fre-168	642	12	1 1/4	52	7	ROTOR		X	550' S OF WB 168 ON-RAMP FROM TEMPERANCE Ave; N SIDE
			13	1 1/2	48	7	ROTOR		X	
			14	1 1/4	48	13	SPRAY		X	600' S OF WB 168 ON-RAMP FROM TEMPERANCE Ave; N SIDE
			15	1 1/4	53	25	SPRAY		X	
			16	2	80	50	SPRAY		X	920' S OF WB 168 ON-RAMP FROM TEMPERANCE Ave; N SIDE
			17	2	85	8	SPRAY		X	
			18	2	85	15	SPRAY		X	
			19	2	85	37	SPRAY		X	
			20	2	85	12	SPRAY		X	
			21	2	85	6	SPRAY		X	1120' S OF WB 168 ON-RAMP FROM TEMPERANCE Ave; N SIDE
			22	2	81	20	SPRAY		X	
			23	2	82	26	SPRAY		X	1200' E OF ARMSTRONG Ave OC; N SIDE; TOP OF SLOPE
			24	2	82	37	SPRAY		X	
			25	2	85	12	SPRAY		X	
			26	1 1/2	59	15	SPRAY		X	800' E OF ARMSTRONG Ave OC; N SIDE
			27	2	85	16	SPRAY		X	
			28	1 1/2	68	32	SPRAY		X	
			29	1 1/2	67	14	SPRAY		X	
			30	1 1/2	61	15	SPRAY		X	
			31	2	87	82	SPRAY		X	700' E OF ARMSTRONG Ave OC; N SIDE
			32	2	85	15	SPRAY		X	240' E OF ARMSTRONG Ave OC; N SIDE
			33	2	82	31	SPRAY		X	
			34	1 1/2	59	10	SPRAY		X	
			35	1 1/2	74	12	SPRAY		X	
34	Fre-168	643	1	1 1/4	46	44	SPRAY			1600' E OF TEMPERANCE Ave; N SIDE
			2	1 1/2	67	63	SPRAY		X	
			3	1 1/2	53	50	SPRAY		X	
			4	1 1/2	51	48	SPRAY		X	
			5	1 1/2	57	54	SPRAY		X	
			6	1 1/4	37	10	SPRAY		X	Beg WB 168 OFF-RAMP; N SIDE
			7	1 1/4	44	10	SPRAY		X	
			8	1 1/4	32	10	ROTOR		X	920' E OF TEMPERANCE Ave; TEMPERANCE Ave WB 168 OFF-RAMP; N SIDE
			9	1 1/4	35	11	ROTOR		X	
			10	1 1/2	67	9	ROTOR		X	700' E OF TEMPERANCE Ave; TEMPERANCE Ave WB 168 OFF-RAMP; S SIDE
			11	1 1/2	59	56	SPRAY		X	
			12	1 1/2	53	64	SPRAY		X	700' E OF TEMPERANCE Ave; TEMPERANCE Ave WB 168 OFF-RAMP; N SIDE
			13	1 1/2	53	25	SPRAY		X	
			14	1 1/2	74	38	SPRAY		X	
			15	1 1/2	68	64	SPRAY		X	
			16	1 1/2	51	14	ROTOR		X	
			17	1 1/2	59	7	ROTOR		X	700' E OF TEMPERANCE Ave; N SIDE
			18	1 1/2	59	8	ROTOR		X	
			19	1 1/2	59	56	SPRAY		X	360' E OF TEMPERANCE Ave; N SIDE
			20	1	22	7	SPRAY		X	
			21	1	25	7	ROTOR		X	
			22	1	22	7	ROTOR		X	
			23	1 1/4	32	10	ROTOR		X	220' E OF TEMPERANCE Ave; E SIDE OF WB 168 ON-RAMP
			24	1 1/4	33	9	SPRAY		X	340' E OF TEMPERANCE Ave; S SIDE OF WB 168 OFF-RAMP
			25	1 1/4	40	15	SPRAY		X	
			26	1 1/4	42	13	SPRAY		X	
			27	1 1/2	33	9	SPRAY		X	
			28	1 1/4	38	12	ROTOR		X	
			29	1 1/4	67	9	ROTOR		X	240' E OF TEMPERANCE Ave; IN MEDIAN
			30	1 1/2	67	9	ROTOR		X	
			31	2	81	22	SPRAY		X	200' E OF TEMPERANCE Ave; S SIDE OF WB 168 OFF-RAMP
			32	1 1/4	55	22	SPRAY		X	
			33	1 1/2	46	26	SPRAY		X	
			34	1 1/4	34	7	ROTOR		X	60' N OF WB 168 OC ON TEMPERANCE Ave; E SIDE
			35	1 1/2	59	8	ROTOR		X	
			36	1 1/2	52	32	SPRAY		X	
		644	1	1 1/4	49	46	SPRAY		X	460' E OF SHEPHERD Ave; WB; N SIDE

IRRIGATION SPRINKLER SCHEDULE
ISS-20

REVISED BY | DATE REVISED

SHERRY ALEXANDER | MICHAEL MILLS

CALCULATED-DESIGNED BY | CHECKED BY

SENIOR LANDSCAPE ARCHITECT

BRAD COLE

STATE OF CALIFORNIA - DEPARTMENT OF TRANSPORTATION

Caltrans® LANDSCAPE ARCHITECTURE

LAST REVISION 07-31-13 | DATE PLOTTED => 15-AUG-2013 | TIME PLOTTED => 09:26

Dist	COUNTY	ROUTE	POST MILES TOTAL PROJECT	SHEET No.	TOTAL SHEETS
06	Fre	168,180	Var	24	204

LICENSED LANDSCAPE ARCHITECT

08-05-13

PLANS APPROVAL DATE

LICENSED LANDSCAPE ARCHITECT MICHAEL W. MILLS No. 4779 Expiration 11/30/14 Renewal Date 7/31/13 Date STATE OF CALIFORNIA

THE STATE OF CALIFORNIA OR ITS OFFICERS OR AGENTS SHALL NOT BE RESPONSIBLE FOR THE ACCURACY OR COMPLETENESS OF SCANNED COPIES OF THIS PLAN SHEET.

EXISTING IRRIGATION CONTROLLERS

Loc	Co-ROUTE	CONTROLLER STATION ICC No.	RCV No.	RCV SIZE INCHES	FLOW GPM	No. HEADS EA	TYPE OF HEADS	DIRECTION EB	DIRECTION WB	REMARKS
34	Fre-168	644	2	1¼	32	20	SPRAY		X	460′ E OF SHEPHERD Ave; N SIDE
			3	2	79	75	SPRAY		X	
			4	1½	59	56	SPRAY		X	480′ W OF SHEPHERD Ave; N SIDE
			5	2	81	77	SPRAY		X	
			6	1	25	24	SPRAY		X	
			7	1½	69	65	SPRAY		X	1000′ W OF SHEPHERD Ave; N SIDE
			8	1½	61	58	SPRAY		X	
			9	1½	67	63	SPRAY		X	
			10	2	82	78	SPRAY		X	2400′ W OF SHEPHERD Ave; N SIDE
			11	1½	55	52	SPRAY		X	
			12	1½	63	57	SPRAY		X	2100′ E OF DEWOLF Ave; N SIDE
			13	1½	69	58	SPRAY		X	
			14	1½	71	67	SPRAY		X	
			15	1½	51	48	SPRAY		X	1000′ E OF DEWOLF Ave; N SIDE
			16	1½	55	52	SPRAY		X	540′ E OF DEWOLF Ave; N SIDE
			17	1½	74	20	SPRAY		X	
			18	1½	74	25	SPRAY		X	
			19	1½	74	35	SPRAY		X	
			20	1½	74	20	SPRAY		X	
			21	1½	70	19	SPRAY		X	
			22	1½	76	36	SPRAY		X	
			23	1½	74	35	SPRAY		X	
			24	1½	70	38	SPRAY		X	200′ E OF DEWOLF Ave; N SIDE
			25	1½	57	18	ROTOR		X	130′ E OF DEWOLF Ave; N SIDE
			26	1½	57	54	SPRAY		X	5300′ E OF TEMPERANCE Ave; N SIDE
			27	1½	46	44	SPRAY		X	
			28	1½	55	52	SPRAY		X	
			29	1½	55	52	SPRAY		X	
			30	2	80	76	SPRAY		X	4122′ E OF TEMPERANCE Ave; N SIDE
			31	1½	78	74	SPRAY		X	
			32	2	80	76	SPRAY		X	3000′ E OF TEMPERANCE Ave; N SIDE
35	Fre-180	803	1	1	20	92	SPRAY		X	IN MEDIAN; 300′ SW OF NIELSEN Ave; NW OF WB 180 ON-RAMP
			2	1	23	113	SPRAY		X	IN MEDIAN; N SIDE OF WB 180 ON-RAMP
			3	1	10	32	SPRAY		X	N SIDE OF WB 180 ON-RAMP
			4	1¼	37	5	ROTOR		X	
			5	2	59	3	ROTOR		X	
			6	2	59	7	ROTOR		X	
			7	2	67	16	SPRAY		X	
			8	1	11	53	SPRAY		X	300′ E OF THE END OF 99 NB ON-RAMP; N SIDE
			9							REMOVED
			10	1½	33	21	SPRAY			300′ E OF THE END OF 99 NB ON-RAMP
			11	1	8	18	SPRAY			300′ E OF THE END OF 99 NB ON-RAMP; S SIDE
			12	1½	49	246	SPRAY			
			13	1	17	73	IMPACT			400′ E OF THE Beg OF 99 NB ON-RAMP; N SIDE
			14	2	50	10	IMPACT			500′ E OF THE Beg OF 99 NB ON-RAMP; N SIDE
			15	2	45	9	IMPACT			
			16	2	45	9	IMPACT			
			17	2	45	9	IMPACT			
			18	2	40	8	IMPACT		X	300′ W OF ′G′ St UC; N SIDE
			19	2	40	8	IMPACT		X	
			20	2	40	8	IMPACT		X	
			21	2	57	228	SPRAY		X	300′ E OF THE END OF 99 NB ON-RAMP; N SIDE
			22	1½	29	135	SPRAY			240′ W OF ′G′ St UC; N SIDE
36	Fre-180	806	1							M
			2	1¼	13	54	SPRAY			40′ E OF ′G′ St UC; N SIDE
			3	1	14	67	SPRAY			360′ E OF ′G′ St UC; MEDIAN
			4	1	9	48	SPRAY			120′ E OF ′G′ St UC; MEDIAN
			5	1½	19	84	SPRAY			30′ E OF ′G′ St UC; S SIDE
			6	2	32	126	SPRAY			
37	Fre-180	807	1							M
			2							

IRRIGATION SPRINKLER SCHEDULE

ISS-21

STATE OF CALIFORNIA - DEPARTMENT OF TRANSPORTATION

Caltrans® LANDSCAPE ARCHITECTURE

SENIOR LANDSCAPE ARCHITECT: BRAD COLE

CALCULATED-DESIGNED BY: SHERRY ALEXANDER

CHECKED BY: MICHAEL MILLS

REVISED BY

DATE REVISED

LAST REVISION 07-31-13

DATE PLOTTED => 15-AUG-2013

TIME PLOTTED => 09:26

Dist	COUNTY	ROUTE	POST MILES TOTAL PROJECT	SHEET No.	TOTAL SHEETS
06	Fre	168,180	Var	25	204

LICENSED LANDSCAPE ARCHITECT

08-05-13

PLANS APPROVAL DATE

LICENSED LANDSCAPE ARCHITECT MICHAEL W. MILLS No. 4770 Expiration 11/30/14 Renewal Date 7/31/13 Date STATE OF CALIFORNIA

THE STATE OF CALIFORNIA OR ITS OFFICERS OR AGENTS SHALL NOT BE RESPONSIBLE FOR THE ACCURACY OR COMPLETENESS OF SCANNED COPIES OF THIS PLAN SHEET.

EXISTING IRRIGATION CONTROLLERS

Loc	Co-ROUTE	CONTROLLER STATION ICC No.	RCV No.	RCV SIZE INCHES	FLOW GPM	No. HEADS EA	TYPE OF HEADS	DIRECTION EB	DIRECTION WB	REMARKS
37	Fre-180	807	3	1	36	178	SPRAY		X	70' W OF ROOSEVELT Ave; N SIDE
			4	1 1/4	15	58	SPRAY		X	
			5	2	45	9	IMPACT		X	
			6	2	45	9	IMPACT		X	
			7	1 1/2	35	7	IMPACT		X	10' W OF BROADWAY Ave; N SIDE
			8	1 1/2	52	196	SPRAY		X	30' W OF BROADWAY Ave; N SIDE
			9	2	45	9	IMPACT		X	190' W OF BROADWAY Ave; N SIDE
38	Fre-180	X	1	1 1/2	30	148	SPRAY	X		30' E OF 'H' St; S SIDE
			2	1 1/4	8	34	SPRAY	X		30' E OF 'H' St UC; S SIDE
			3	1 1/2	35	8	IMPACT	X		190' E OF 'H' St UC; S SIDE
			4	1 1/2	35	7	IMPACT	X		
			5	1 1/2	35	7	IMPACT	X		120' W OF BROADWAY Ave; S SIDE
			6	1 1/2	14	56	SPRAY	X		20' W OF BROADWAY Ave; S SIDE
			7							M
			8	1	22	53	SPRAY	X		110' W OF BROADWAY Ave; IN MEDIAN
			9	1	25	16	M	X		
			10	1 1/2	38	168	SPRAY	X		20' W OF BROADWAY Ave; S SIDE
39	Fre-180	808	1	1 1/2	79	102	M		X	M
			2						X	
			3	1	12	26	SPRAY		X	90' W OF FULTON St; FULTON St/VAN NESS Ave WB 180 OFF-RAMP
			4	1	19	94	SPRAY		X	
			5	1 1/2	22	109	SPRAY		X	50' E OF YOSEMITE Ave & FRANKLIN Ave TRANSITION
			6	1 1/2	17	85	SPRAY		X	
			7	1	10	21	SPRAY		X	50' W OF FULTON St AT FULTON St/VAN NESS Ave WB 180 OFF-RAMP
			8	1	23	16	SPRAY		X	
			9	1 1/2	21	99	SPRAY		X	150' E OF BROADWAY AT FULTON St/VAN NESS Ave WB 180 OFF-RAMP
			10	2	35	M	IMPACT		X	120' E OF FULTON St; FULTON St/VAN NESS Ave WB 180 OFF-RAMP
			11	2	40	M	IMPACT		X	
			12	2	30	M	IMPACT		X	
40	Fre-180	Y	1	1 1/2	37	17	SPRAY	X		10' W OF YOSEMITE Ave
			2	1 1/2	18	91	SPRAY	X		
			3	1	18	87	SPRAY	X		10' W OF YOSEMITE Ave
			4	1 1/2	28	139	SPRAY	X		200' W OF FULTON St
			5	1 1/2	20	100	SPRAY	X		
			6	1	16	41	SPRAY	X		40' E OF BROADWAY Ave, AT OC
			7	1	23	16	SPRAY	X		
			8	1	11	46	SPRAY	X		
			9	1	18	47	SPRAY	X		120' W OF FULTON St WB 180 FULTON St/VAN NESS Ave OFF-RAMP, AT OC
			10	1	18	16	SPRAY	X		
			11	2	45	170	SPRAY	X		10' W OF YOSEMITE Ave
41	Fre-180	809	1	1	19	95	SPRAY		X	10' E OF FULTON St; WB 180 FULTON St/VAN NESS Ave OFF-RAMP
			2	1 1/2	14	70	SPRAY		X	
			3	1	15	37	SPRAY		X	70' E OF FULTON St; IN MEDIAN
			4	1	18	44	SPRAY		X	120' W OF VAN NESS Ave; IN MEDIAN
			5	1	20	98	SPRAY		X	
			6	1	25	62	SPRAY		X	150' E OF FULTON St; IN MEDIAN
			7	1	17	84	SPRAY		X	60' W OF VAN NESS St; FULTON St/VAN NESS Ave EB 180 OFF-RAMP
			8	1	8	31	SPRAY		X	
			9	1 1/2	35	7	IMPACT		X	
			10	1 1/2	35	7	IMPACT		X	
			11	1 1/4	9	37	SPRAY		X	10' E OF FULTON St; FULTON St/VAN NESS Ave WB 180 OFF-RAMP
			12	1 1/2	35	6	IMPACT		X	180' E OF FULTON St; FULTON St/VAN NESS Ave WB 180 OFF-RAMP
			13	1 1/2	35	7	IMPACT		X	
			14	1 1/4	12	49	SPRAY		X	60' W OF VAN NESS Ave; FULTON St/VAN NESS Ave EB 180 OFF-RAMP
42	Fre-180	810	1	1	15	75	SPRAY		X	60' E OF T-INTERSECTION OF FULTON St/VAN NESS Ave WB OFF-RAMP (E SIDE OF VAN NESS)
			2	1	12	57	SPRAY		X	
			3	1	18	46	SPRAY		X	120' E OF VAN NESS Ave; IN MEDIAN
			4	1	24	16	SPRAY		X	
			5	1	18	30	SPRAY		X	200' SW OF INTERSECTION OF BELMONT Ave & PARK Ave; IN MEDIAN
			6	1 1/2	35	20	SPRAY		X	
			7	1	12	62	SPRAY		X	150' E OF VAN NESS Ave; EB ON-RAMP

IRRIGATION SPRINKLER SCHEDULE

ISS-22

STATE OF CALIFORNIA - DEPARTMENT OF TRANSPORTATION

Caltrans® LANDSCAPE ARCHITECTURE

SENIOR LANDSCAPE ARCHITECT: BRAD COLE

CALCULATED-DESIGNED BY: SHERRY ALEXANDER

CHECKED BY: MICHAEL MILLS

REVISED BY / DATE REVISED

LAST REVISION 07-31-13

DATE PLOTTED => 15-AUG-2013

TIME PLOTTED => 09:26

Dist	COUNTY	ROUTE	POST MILES TOTAL PROJECT	SHEET No.	TOTAL SHEETS
06	Fre	168,180	Var	26	204

LICENSED LANDSCAPE ARCHITECT

08-05-13

PLANS APPROVAL DATE

LICENSED LANDSCAPE ARCHITECT MICHAEL W. MILLS No. 4770 Expiration Date 11/30/14 Renewal Date 7/31/13 Date STATE OF CALIFORNIA

THE STATE OF CALIFORNIA OR ITS OFFICERS OR AGENTS SHALL NOT BE RESPONSIBLE FOR THE ACCURACY OR COMPLETENESS OF SCANNED COPIES OF THIS PLAN SHEET.

EXISTING IRRIGATION CONTROLLERS

		CONTROLLER STATION								
Loc	Co-ROUTE	ICC No.	RCV No.	RCV SIZE INCHES	FLOW GPM	No. HEADS EA	TYPE OF HEADS	DIRECTION EB	DIRECTION WB	REMARKS
42	Fre-180	810	8	1½	27	125	SPRAY		X	150′ E OF VAN NESS Ave; EB 180 ON-RAMP
			9	1½	25	117	SPRAY		X	75′ W OF PARK Ave; EB 180 ON-RAMP
			10	1½	20	78	SPRAY		X	60′ E OF INTERSECTION OF FULTON St/VAN NESS Ave WB 180 OFF-RAMP
			11	1¼	11	43	SPRAY		X	150′ E OF VAN NESS Ave; EB 180 ON-RAMP
43	Fre-180	811	1	1	31	128	SPRAY		X	30′ E OF SAN PABLO Ave; E SIDE OF SAN PABLO Ave/WHITE Ave T-INTERSECTION
			2	1	39	163	SPRAY		X	
			3	1¼	10	39	SPRAY		X	
			4	2	45	9	IMPACT		X	
			5	2	45	9	IMPACT		X	
			6	2	15	76	SPRAY		X	50′ S OF THOMAS Ave
			7	2	45	8	IMPACT		X	
			8	2	50	7	IMPACT		X	
			9	1	26	128	SPRAY		X	10′ N OF WB 180 BLACKSTONE Ave/ABBY St OFF-RAMP
			10	1	17	86	SPRAY		X	
			11	1½	12	20	SPRAY		X	10′ S OF WB 180 BLACKSTONE Ave/ABBY St OFF-RAMP
			12	1	8	41	SPRAY		X	
			13	1	10	49	SPRAY		X	10′ W OF BLACKSTONE Ave; AT WB BLACKSTONE Ave/ABBY St OFF-RAMP
			14	1½	15	49	SPRAY		X	
			15	2	50	10	IMPACT		X	
			16	2	45	9	IMPACT		X	
			17	2	45	9	IMPACT		X	
			18	1½	27	19	SPRAY		X	
		750	1	1	9	41	SPRAY	X		100′ W OF SAN PABLO Ave; IN MEDIAN
			2	1	4	16	SPRAY	X		
			3	1¼	11	43	SPRAY	X		60′ E OF SAN PABLO Ave; S SIDE
			4	1½	9	43	SPRAY	X		
			5	1	5	25	IMPACT	X		
			6	2	40	7	IMPACT	X		120′ E OF SAN PABLO Ave; S SIDE
			7	2	40	7	IMPACT	X		
			8	2	40	8	IMPACT	X		450′ E OF SAN PABLO Ave; S SIDE
			9	2	45	9	IMPACT	X		
			10	2	40	6	IMPACT	X		
			11	2	45	9	IMPACT	X		60′ W OF BLACKSTONE Ave; S SIDE
			12	2	45	9	IMPACT	X		
			13	1½	16	63	SPRAY	X		
			14	1½	33	163	SPRAY	X		
			15	1½	23	114	SPRAY	X		180′ E OF BLACKSTONE Ave; S SIDE
			16	1½	13	64	SPRAY	X		
			17	2	40	7	IMPACT	X		
			18	1½	35	7	IMPACT	X		
			19	1½	8	43	SPRAY	X		30′ E OF EB 180 BLACKSTONE Ave/ABBY St OFF-RAMP
			20	1½	8	8	SPRAY	X		
			21	2	M	65	SPRAY	X		
44	Fre-180	812	1	2	35	10	IMPACT	X		10′ S OF EB 180; 200′ E OF ABBY St
			2	2	40	7	IMPACT	X		
			3	2	40	7	IMPACT	X		
			4	1	M	17	SPRAY	X		
			5	1	6	29	IMPACT	X		
			6	1½	7	33	SPRAY	X		
			7	1	M	40	SPRAY	X		80′ SE OF EB BLACKSTONE Ave/ABBY St OFF-RAMP; 20′ NW OF DIANA St
			8	1	M	?	SPRAY	X		
			9	1	M	?	SPRAY	X		
			10	1½	36	5	SPRAY	X		120′ E OF DIANA St; S SIDE
			11	2	43	6	SPRAY	X		
			12	2	43	6	SPRAY	X		
			13	2	43	6	SPRAY	X		
			14	2	43	6	SPRAY	X		
			15	2	43	6	SPRAY	X		
			16	2	38	152	SPRAY	X		
			17	1½	36	5	IMPACT	X		180′ W OF FRESNO St; S SIDE
			18	2	43	6	IMPACT	X		

IRRIGATION SPRINKLER SCHEDULE
ISS-23

STATE OF CALIFORNIA - DEPARTMENT OF TRANSPORTATION
Caltrans® LANDSCAPE ARCHITECTURE

SENIOR LANDSCAPE ARCHITECT: BRAD COLE
CALCULATED-DESIGNED BY: SHERRY ALEXANDER
CHECKED BY: MICHAEL MILLS
REVISED BY
DATE REVISED

LAST REVISION 07-31-13
DATE PLOTTED => 15-AUG-2013
TIME PLOTTED => 09:26

Dist	COUNTY	ROUTE	POST MILES TOTAL PROJECT	SHEET No.	TOTAL SHEETS
06	Fre	168,180	Var	27	204

LICENSED LANDSCAPE ARCHITECT

08-05-13

PLANS APPROVAL DATE

LICENSED LANDSCAPE ARCHITECT MICHAEL W. MILLS No. 4770 Expiration Date 11/30/14 Renewal Date 7/31/13 Date STATE OF CALIFORNIA

THE STATE OF CALIFORNIA OR ITS OFFICERS OR AGENTS SHALL NOT BE RESPONSIBLE FOR THE ACCURACY OR COMPLETENESS OF SCANNED COPIES OF THIS PLAN SHEET.

EXISTING IRRIGATION CONTROLLERS

Loc	Co-ROUTE	CONTROLLER STATION ICC No.	RCV No.	RCV SIZE INCHES	FLOW GPM	No. HEADS EA	TYPE OF HEADS	DIRECTION EB	DIRECTION WB	REMARKS
44	Fre-180	812	19	2	43	6	IMPACT	X		180′ W OF FRESNO St; S SIDE
			20	1½	36	5	IMPACT	X		
			21	1½	36	5	IMPACT	X		
			22	1½	36	5	IMPACT	X		
			23	1¼	24	12	SPRAY	X		
			24	2	6	147	SPRAY	X		60′ W OF FRESNO St; IN MEDIAN
45	Fre-180	Z	1	1	9	46	SPRAY		X	100′ N OF WB 180 BLACKSTONE OC & 60′ E OF BLACKSTONE Ave
			2	1	28	?	SPRAY		X	
			3	1	48	191	SPRAY		X	
			4	1	10	49	SPRAY		X	60′ W OF ABBY St; IN MEDIAN
			5	1½	15	20	SPRAY		X	
			6	1½	7	35	SPRAY		X	20′ W OF BLACKSTONE Ave; IN MEDIAN
			7	1	23	20	SPRAY		X	
46	Fre-180	813	1	1½	17	44	SPRAY		X	120′ E OF ABBY St; IN MEDIAN
			2	1	31	20	SPRAY		X	
			3	1½	16	39	SPRAY		X	80′ W OF DIANA St; IN MEDIAN
			4	1½	36	20	SPRAY		X	
			5	M	M	M	M		X	M
			6	M	M	M	M		X	
			7	2	43		IMPACT		X	420′ W OF RR TRACKS (BNSF RAILWAY) & DIANA St; N SIDE
			8	2	43	6	IMPACT		X	
			9	2	43	6	IMPACT		X	
			10	2	43	6	IMPACT		X	
			11	2	43	6	IMPACT		X	
			12	2	43	6	IMPACT		X	
			13	2	41	154	SPRAY		X	
			14	2	43	6	IMPACT		X	180′ W OF FRESNO St; N SIDE
			15	2	43	6	IMPACT		X	
			16	2	43	6	IMPACT		X	
			17	2	43	6	IMPACT		X	
			18	2	43	6	IMPACT		X	
			19	1¼	30	13	SPRAY		X	
47	Fre-180	814	1							M
			2	2	43	6	ROTOR	X		990′ FROM INTERSECTION 180/41 ON EB 180/SB 41
			3	2	43	6	ROTOR	X		
			4	2	43	6	ROTOR	X		
			5	2	43	6	ROTOR	X		
			6	2	43	6	ROTOR	X		
			7	2	43	6	ROTOR	X		
			8	2	43	6	ROTOR	X		
			9	2	43	6	ROTOR	X		
			10	1½	25	84	SPRAY	X		
			11	1½	36	5	ROTOR	X		SB 41 N OF BELMONT Ave OC
			12	1½	36	9	ROTOR	X		
			13	2	45	8	ROTOR	X		
			14	2	45	9	ROTOR	X		
			15	2	45	8	ROTOR	X		
			16	2	45	9	ROTOR	X		
			17	1½	36	8	ROTOR	X		
		815	1							M
			2	2	43	6	ROTOR	X		S OF EB 180/NB 41 Conn; IN MEDIAN
			3	2	43	5	ROTOR	X		
			4	1½	M	25	SPRAY	X		
			5	2	M	60	SPRAY	X		
			6	2	M	60	SPRAY	X		
			7	2	M	30	SPRAY	X		
			8	2	43	6	ROTOR	X		SB 41 AT WB 180/SB 41 UC
			9	2	43	6	ROTOR	X		
			10	2	45	9	ROTOR	X		
			11	2	44	22	SPRAY	X		
			12	2	36	5	ROTOR	X		

IRRIGATION SPRINKLER SCHEDULE
ISS-24

STATE OF CALIFORNIA - DEPARTMENT OF TRANSPORTATION
Caltrans LANDSCAPE ARCHITECTURE

SENIOR LANDSCAPE ARCHITECT: BRAD COLE
SHERRY ALEXANDER
MICHAEL MILLS
CALCULATED-DESIGNED BY
CHECKED BY
REVISED BY
DATE REVISED

LAST REVISION 07-31-13
DATE PLOTTED => 15-AUG-2013
TIME PLOTTED => 09:26

Dist	COUNTY	ROUTE	POST MILES TOTAL PROJECT	SHEET No.	TOTAL SHEETS
06	Fre	168,180	Var	28	204

LICENSED LANDSCAPE ARCHITECT

08-05-13

PLANS APPROVAL DATE

LICENSED LANDSCAPE ARCHITECT MICHAEL W. MILLS No. 4770 Expiration Date 11/30/14 Renewal Date 7/31/13 Date STATE OF CALIFORNIA

THE STATE OF CALIFORNIA OR ITS OFFICERS OR AGENTS SHALL NOT BE RESPONSIBLE FOR THE ACCURACY OR COMPLETENESS OF SCANNED COPIES OF THIS PLAN SHEET.

EXISTING IRRIGATION CONTROLLERS

Loc	Co-ROUTE	CONTROLLER STATION ICC No.	RCV No.	RCV SIZE INCHES	FLOW GPM	No. HEADS EA	TYPE OF HEADS	DIRECTION EB	DIRECTION WB	REMARKS
47	Fre-180	815	13	2	43	6	ROTOR	X		SB 41 AT WB 180/SB 41 UC
			14	2	36	5	ROTOR	X		
			15	2	44	11	SPRAY	X		
			16	1½	36	13	SPRAY	X		
48	Fre-180	816	1	1½	M	13	SPRAY	X		UC OF EB 180 AT 1ST St - UNDER CONSTRUCTION
			2	1½	M	14	SPRAY	X		
			3	1½	M	100	SPRAY	X		
			4	1½	M	100	SPRAY	X		
			5	1½	M	15	SPRAY	X		E OF NB R41/WB 180; S OF WB 180 IN MEDIAN
			6	2	M	24	SPRAY	X		
			7	2	M	22	SPRAY	X		
			8	1½	M	80	SPRAY	X		
			9	2	40	8	ROTOR	X		
			10	2	40	8	ROTOR	X		
			11	2	40	8	ROTOR	X		
			12	2	41	17	SPRAY	X		
			13	1½	M	80	SPRAY	X		E OF NB 41/WB 180; S OF WB 180
			14	1½	M	80	SPRAY	X		
			15	1½	M	100	SPRAY	X		
			16	2	40	100	SPRAY	X		
49	Fre-180	817	1	1½	M	80	SPRAY		X	BETWEEN EB 180 & NB 41 Conn; IN MEDIAN
			2	1½	M	100	SPRAY		X	
			3	1½	M	80	SPRAY		X	
			4	2	M	21	SPRAY		X	
			5	1½	M	80	SPRAY		X	BETWEEN SB 41 & 180 WB Conn
			6	1½	M	80	SPRAY		X	
			7	1½	M	10	SPRAY		X	
			8	1½	M	8	SPRAY		X	
			9	1½	M	7	SPRAY		X	
			10	1½	M	12	SPRAY		X	
			11	2	45	8	ROTOR		X	BETWEEN 180/41 NB Conn; ON N SIDE OF LOOP/MEDIAN
			12	2	45	8	ROTOR		X	
			13	1½	45	7	ROTOR		X	
			14	2	45	9	ROTOR		X	
			15	1½	M	3	ROTOR		X	N OF 180/41 NB Conn; N OF THE LOOP/MEDIAN
			16	1½	M	37	SPRAY		X	
			17	1½	M	7	ROTOR		X	
			18	2	40	8	ROTOR		X	E SIDE OF NB 41, NEAR LOOP
			19	2	45	9	ROTOR		X	
			20	2	45	9	ROTOR		X	
			21	2	45	9	ROTOR		X	
		818	1	1½	M	100	SPRAY		X	N OF WB 180/NB 41 Conn
			2	1½	M	100	SPRAY		X	
			3	1½	M	100	SPRAY		X	
			4	1½	M	80	SPRAY		X	S OF OLIVE Ave ON ANGUS St; SB 41 TO WB 180 TRANSITION
			5	1½	M	80	SPRAY		X	
			6	1½	M	M	SPRAY		X	N OF OLIVE Ave BETWEEN NB 41/WB 180 Conn IN MEDIAN
			7	1¼	M	10	SPRAY		X	
			8	1½	M	80	SPRAY		X	M
			9	1½	M	80	SPRAY		X	
			10	1½	M	35	SPRAY		X	
			11	1½	M	M	SPRAY		X	BETWEEN OLIVE Ave & FLORADORA Ave
			12	1½	M	8	IMPACT		X	
			13	1½	M	8	IMPACT		X	
			14	1½	M	9	IMPACT		X	
			15						X	
50	Fre-180	B	1	1½	23	12	SPRAY		X	M
			2	1½	30	13	SPRAY		X	
			3	1½	35	14	SPRAY		X	
			4	1½	37	147	SPRAY		X	400' E OF N 1ST St; N SIDE OF W 180/N 41 Conn Sep
			5	1½	27	107	SPRAY		X	

IRRIGATION SPRINKLER SCHEDULE

ISS-25

REVISED BY | DATE REVISED

SHERRY ALEXANDER | MICHAEL MILLS

CALCULATED-DESIGNED BY | CHECKED BY

SENIOR LANDSCAPE ARCHITECT | BRAD COLE

STATE OF CALIFORNIA - DEPARTMENT OF TRANSPORTATION

Caltrans® LANDSCAPE ARCHITECTURE

LAST REVISION 07-31-13 | DATE PLOTTED => 15-AUG-2013 | TIME PLOTTED => 09:26

Dist	COUNTY	ROUTE	POST MILES TOTAL PROJECT	SHEET No.	TOTAL SHEETS
06	Fre	168,180	Var	29	204

LICENSED LANDSCAPE ARCHITECT

08-05-13

PLANS APPROVAL DATE

LICENSED LANDSCAPE ARCHITECT MICHAEL W. MILLS No. 4770 Expiration 11/30/14 Renewal Date 7/31/13 Date STATE OF CALIFORNIA

THE STATE OF CALIFORNIA OR ITS OFFICERS OR AGENTS SHALL NOT BE RESPONSIBLE FOR THE ACCURACY OR COMPLETENESS OF SCANNED COPIES OF THIS PLAN SHEET.

EXISTING IRRIGATION CONTROLLERS

Loc	Co-ROUTE	CONTROLLER STATION ICC No.	RCV No.	RCV SIZE INCHES	FLOW GPM	No. HEADS EA	TYPE OF HEADS	DIRECTION EB	DIRECTION WB	REMARKS
50	Fre-180	B	6	1½	27	107	SPRAY		X	
			7	1½	35	7	IMPACT		X	
			8	1½	25	13	SPRAY		X	400′ E OF N 1ST St; N SIDE OF W 180/N 41 Conn Sep
			9	1½	35	7	IMPACT		X	
			10	1½	34	7	IMPACT		X	
			11	1½	34	7	IMPACT		X	
			12	1½	34	8	IMPACT		X	
			13	1½	34	7	IMPACT		X	
			14	1½	30	6	IMPACT		X	
			15	1½	25	5	IMPACT		X	1400′ E OF N 1ST St; N OF N 41 ON-RAMP
			16	1½	36	145	SPRAY		X	
			17	1½	30	120	SPRAY		X	
			18	1½	35	138	SPRAY		X	
			19	1½	30	121	SPRAY		X	
			20	1½	28	112	SPRAY		X	
			21	1½	37	148	SPRAY		X	BETWEEN E 180/N 41 Conn Sep: S OF MILLBROOK Ave
			22	1½	29	115	SPRAY		X	
51	Fre-180	C	1	1½	32	15	SPRAY	X		M
			2	1½	29	14	SPRAY	X		
			3	1½	27	108	SPRAY	X		
			4	1½	27	107	SPRAY	X		
			5	1½	28	112	SPRAY	X		
			6	2	44	23	SPRAY	X		
			7	2	46	24	SPRAY	X		480′ E SIDE OF N 1ST St ON S 41/E 180 Conn Sep; N SIDE; IN MEDIAN
			8	1½	40	21	SPRAY	X		
			9	2	48	25	SPRAY	X		
			10	2	44	18	ROTOR	X		
			11	2	36	16	ROTOR	X		
			12	1½	34	137	SPRAY	X		
			13	1½	35	138	SPRAY	X		700′ E SIDE OF N 1ST St; S SIDE OF 41/180 Conn
			14	1½	34	7	IMPACT	X		
			15	1½	34	7	IMPACT	X		
			16	1½	34	7	IMPACT	X		700′ E SIDE OF N 1ST St; S SIDE OF 41/180 Conn
			17	1½	4	7	IMPACT	X		
			18	1½	45	178	SPRAY	X		
			19	1½	30	121	SPRAY	X		
			20	1½	32	128	SPRAY	X		1700′ E OF N 1ST St; S OF EB 180 ON-RAMP
			21	1½	36	145	SPRAY	X		
			22	1½	30	121	SPRAY	X		
			23	1½	26	102	SPRAY	X		1800′ E OF N 1ST St; N OF EB 180 ON-RAMP
			24	1.½	26	102	SPRAY	X		
52	Fre-180	D	1	1½	35	20	ROTOR		X	
			2	1½	33	19	ROTOR		X	
			3	1½	35	20	ROTOR		X	
			4	1½	26	104	SPRAY		X	N OF E 180/N 41 Conn Sep; UNDER CONSTRUCTION; S OF N MILLBROOK Ave
			5	1½	27	109	SPRAY		X	
			6	1½	25	109	SPRAY		X	
			7	1½	29	114	SPRAY		X	
			8	1½	29	114	SPRAY		X	1300′ W OF CEDAR Ave; N OF WB 180 ON-RAMP
			9	1½	29	115	SPRAY		X	
			10	1½	24	14	ROTOR		X	
			11	1½	26	15	ROTOR		X	1280′ W OF CEDAR Ave; S OF WB 180 ON-RAMP; IN MEDIAN
			12	1½	35	141	SPRAY		X	
			13	1½	35	141	SPRAY		X	
			14	1½	37	146	SPRAY		X	
			15	1½	36	145	SPRAY		X	60′ W OF CEDAR Ave; IN MEDIAN
			16	1½	38	22	ROTOR		X	
			17	1½	33	132	SPRAY		X	
			18	1½	31	123	SPRAY		X	260′ W OF CEDAR Ave WB; N OF WB 180 ON-RAMP; ADJACENT TO TYLER Ave
			19	1½	49	14	SPRAY		X	
			20	1½	41	19	SPRAY		X	

IRRIGATION SPRINKLER SCHEDULE

ISS-26

STATE OF CALIFORNIA - DEPARTMENT OF TRANSPORTATION

Caltrans® LANDSCAPE ARCHITECTURE

SENIOR LANDSCAPE ARCHITECT: BRAD COLE

CALCULATED-DESIGNED BY: SHERRY ALEXANDER

CHECKED BY: MICHAEL MILLS

REVISED BY

DATE REVISED

LAST REVISION 07-31-13

DATE PLOTTED => 15-AUG-2013

TIME PLOTTED => 09:26

Dist	COUNTY	ROUTE	POST MILES TOTAL PROJECT	SHEET No.	TOTAL SHEETS
06	Fre	168,180	Var	30	204

Michael W. Mills
LICENSED LANDSCAPE ARCHITECT
08-05-13
PLANS APPROVAL DATE

LICENSED LANDSCAPE ARCHITECT
MICHAEL W. MILLS No. 4770
Expiration Date 11/30/14
Renewal Date 7/31/13
Date
STATE OF CALIFORNIA

THE STATE OF CALIFORNIA OR ITS OFFICERS OR AGENTS SHALL NOT BE RESPONSIBLE FOR THE ACCURACY OR COMPLETENESS OF SCANNED COPIES OF THIS PLAN SHEET.

EXISTING IRRIGATION CONTROLLERS

		CONTROLLER STATION								
Loc	Co-ROUTE	ICC No.	RCV No.	RCV SIZE INCHES	FLOW GPM	No. HEADS EA	TYPE OF HEADS	DIRECTION EB	DIRECTION WB	REMARKS
52	Fre-180	D	21	1½	41	20	SPRAY		X	260′ W OF CEDAR Ave WB; N OF WB 180 ON-RAMP; ADJACENT TO TYLER Ave
			22	1½	43	19	SPRAY		X	
53	Fre-180	E	1	1½	28	110	SPRAY	X		1340′ W OF CEDAR Ave; IN MEDIAN; BETWEEN EB 180 AND E 180/N 168 Conn
			2	1½	24	94	SPRAY	X		
			3	1½	26	102	SPRAY	X		
			4	1½	27	109	SPRAY	X		
			5	1½	30	17	ROTOR	X		
			6	1½	31	7	ROTOR	X		
			7	1½	26	15	ROTOR	X		
			8	1¼	16	9	ROTOR	X		400′ W OF CEDAR Ave; S SIDE OF E 180/N 168 Conn
			9	1½	26	15	ROTOR	X		
			10	1½	30	118	SPRAY	X		
			11	1½	29	117	SPRAY	X		
			12	1½	27	109	SPRAY	X		1240′ W OF CEDAR Ave; S OF E 180/N 168 Conn
			13	1½	28	112	SPRAY	X		
			14	1½	28	110	SPRAY	X		
			15	1½	30	18	ROTOR	X		
			16	1½	30	17	ROTOR	X		130′ W OF CEDAR Ave; S OF E 180/N 168 Conn
			17	1½	28	16	ROTOR	X		
			18	1½	30	121	SPRAY	X		
			19	1½	29	115	SPRAY	X		
54	Fre-180	F	1	1½	26	102	SPRAY		X	700′ E OF CEDAR Ave; ON WB ON-RAMP; IN MEDIAN
			2	1½	28	111	SPRAY		X	
			3	1½	27	109	SPRAY		X	
			4	1½	30	119	SPRAY		X	
			5	1½	28	111	SPRAY		X	
			6	2	32	113	SPRAY		X	
			7	2	41	112	SPRAY		X	
			8	2	41	109	SPRAY		X	
			9	1½	35	141	SPRAY		X	350′ E OF CEDAR Ave; AT INTERSECTION OF CLAY Ave & ROWELL Ave
			10	1½	35	141	SPRAY		X	
			11	1½	35	139	SPRAY		X	
			12	1½	34	8	ROTOR		X	
			13	1½	42	8	ROTOR		X	
			14	2	40	8	ROTOR		X	
			15	2	44	8	ROTOR		X	
			16	2	44	8	ROTOR		X	
			17	1½	25	98	SPRAY		X	480′ E OF CEDAR Ave; N SIDE OF WB 180 OFF-RAMP
			18	1½	28	111	SPRAY		X	
			19	1½	26	104	SPRAY		X	
			20	1½	32	20	SPRAY		X	
			21	1½	34	18	SPRAY		X	
			22	2	46	24	SPRAY		X	
			23	2	46	24	SPRAY		X	
55	Fre-180	823	1	1½	25	99	SPRAY	X		60′ E OF CEDAR Ave; EB ON-RAMP; N SIDE
			2	1½	28	112	SPRAY	X		
			3	1½	29	15	SPRAY	X		
			4	1½	36	19	SPRAY	X		
			5	1½	36	19	SPRAY	X		
			6	1½	36	19	SPRAY	X		
			7	1½	26	105	SPRAY	X		MEDIAN BETWEEN EB 180 AND EB 180 OFF-RAMP
			8	1½	25	98	SPRAY	X		
			9	2	57	29	SPRAY	X		
			10	1½	30	121	SPRAY	X		LOOP AREA; EB 180 OFF-RAMP
			11	2	39	157	SPRAY	X		
			12	2	41	162	SPRAY	X		
			13	1½	28	111	SPRAY	X		
			14	1½	28	113	SPRAY	X		
			15	1½	28	112	SPRAY	X		
			16	1½	28	112	SPRAY	X		
			17	1½	30	16	SPRAY	X		

IRRIGATION SPRINKLER SCHEDULE
ISS-27

REVISED BY | DATE REVISED
SHERRY ALEXANDER | MICHAEL MILLS
CALCULATED-DESIGNED BY | CHECKED BY
SENIOR LANDSCAPE ARCHITECT
BRAD COLE
STATE OF CALIFORNIA - DEPARTMENT OF TRANSPORTATION
Caltrans® LANDSCAPE ARCHITECTURE

LAST REVISION 07-31-13 | DATE PLOTTED => 15-AUG-2013 | TIME PLOTTED => 09:26

Dist	COUNTY	ROUTE	POST MILES TOTAL PROJECT	SHEET No.	TOTAL SHEETS
06	Fre	168,180	Var	31	204

LICENSED LANDSCAPE ARCHITECT

08-05-13

PLANS APPROVAL DATE

LICENSED LANDSCAPE ARCHITECT MICHAEL W. MILLS No. 4770 Expiration Date 11/30/14 Renewal Date 7/31/13 Date STATE OF CALIFORNIA

THE STATE OF CALIFORNIA OR ITS OFFICERS OR AGENTS SHALL NOT BE RESPONSIBLE FOR THE ACCURACY OR COMPLETENESS OF SCANNED COPIES OF THIS PLAN SHEET.

EXISTING IRRIGATION CONTROLLERS

Loc	Co-ROUTE	CONTROLLER STATION ICC No.	RCV No.	RCV SIZE INCHES	FLOW GPM	No. HEADS EA	TYPE OF HEADS	DIRECTION EB	DIRECTION WB	REMARKS
55	Fre-180	823	18	2	55	27	SPRAY	X		LOOP AREA; EB 180 OFF-RAMP
			19	1 1/2	36	19	SPRAY	X		
			20	2	45	21	SPRAY	X		
			21	1 1/2	29	15	SPRAY	X		
			22	2	42	22	SPRAY	X		
56	Fre-180	824	1	1 1/2	33	133	SPRAY	X		90' NW OF EB CEDAR Ave ON-RAMP; IN MEDIAN
			2	1 1/2	34	134	SPRAY	X		
			3	1 1/2	33	133	SPRAY	X		
			4	1 1/2	31	124	SPRAY	X		
			5	1 1/2	32	15	SPRAY	X		
			6	1 1/2	49	15	SPRAY	X		
			7	2	57	30	SPRAY	X		700' W OF MAPLE Ave; S OF EB 180 ON-RAMP FROM CEDAR Ave
			8	1 1/2	25	99	SPRAY	X		
			9	1 1/2	26	105	SPRAY	X		
			10	1 1/2	23	93	SPRAY	X		
			11	1 1/2	29	116	SPRAY	X		
			12	1 1/2	24	97	SPRAY	X		
			13	1 1/2	M	M	SPRAY	X		
57	Fre-180	825	1	1 1/2	33	132	SPRAY		X	90' E OF E CLAY Ave & N JACKSON Ave; S OF CLAY Ave
			2	1 1/4	34	90	SPRAY		X	800' W OF MAPLE Ave; SW SIDE OF WB 180 RAMP
			3	1 1/2	39	126	SPRAY		X	
			4	1 1/2	38	131	SPRAY		X	
			5	1 1/4	27	112	SPRAY		X	
			6	1 1/2	40	132	SPRAY		X	90' E OF INTERSECTION OF E CLAY Ave & N JACKSON Ave; S SIDE; S SIDE OF CLAY Ave
			7	1 1/2	45	150	SPRAY		X	
			8	1 1/2	46	156	SPRAY		X	
			9	1 1/4	30	6	IMPACT		X	270' W OF MAPLE Ave; S SIDE OF TYLER Ave; NEAR WB 180 OFF-RAMP TO EB 168
			10	1 1/2	34	8	IMPACT		X	
			11	1 1/4	30	8	IMPACT		X	
			12	1 1/2	46	156	SPRAY		X	390' W OF MAPLE Ave; S SIDE OF WB ON-RAMP FROM CHESTNUT Ave
58	Fre-180	826	1	1 1/2	32	137	SPRAY		X	120' E OF MAPLE Ave; S OF EB 180 OFF-RAMP TO CHESTNUT Ave
			2	1 1/2	29	115	SPRAY		X	
			3	1 1/2	34	137	SPRAY		X	
			4	1 1/2	34	133	SPRAY		X	150' W OF SIERRA VISTA Ave; N SIDE OF HARVEY Ave
			5	1 1/2	27	106	SPRAY		X	
			6	1 1/2	26	105	SPRAY		X	
			7	1 1/2	29	106	SPRAY		X	
			8	1 1/2	27	133	SPRAY		X	
			9	1 1/2	29	107	SPRAY		X	20' N OF INTERSECTION OF HARVEY Ave & RECREATION Ave
			10	1 1/2	38	127	SPRAY		X	330' E OF MAPLE Ave; S OF EB 180 OFF-RAMP
			11	1 1/2	38	126	SPRAY		X	
			12	1 1/2	37	124	SPRAY		X	
			13	1 1/4	27	101	SPRAY		X	400' W OF CHESTNUT Ave; N SIDE OF EB 180 OFF-RAMP
			14	2	48	182	SPRAY		X	
59	Fre-180	827	1	1 1/2	34	135	SPRAY		X	150' W OF BACKER Ave; N SIDE OF WB 180 ON-RAMP
			2	1 1/2	26	106	SPRAY		X	
			3	1 1/2	26	105	SPRAY		X	
			4	2	49	40	SPRAY		X	
			5	2	49	40	SPRAY		X	
			6	1 1/2	31	125	SPRAY		X	30' W OF SIERRA VISTA Ave; N SIDE OF WB 180 ON-RAMP
			7	1 1/2	37	148	SPRAY		X	
			8	1 1/2	33	131	SPRAY		X	
			9	1 1/2	16	91	SPRAY		X	570' W OF CHESTNUT Ave; N SIDE OF WB 180 ON-RAMP
			10	1 1/2	24	95	SPRAY		X	
			11	1 1/4	23	64	SPRAY		X	
			12	1 1/2	49	163	SPRAY		X	150' W OF BACKER Ave; N SIDE OF WB 180 ON-RAMP
			13	1 1/2	40	139	SPRAY		X	
			14	1 1/2	39	131	SPRAY		X	200' W OF CHESTNUT Ave; S SIDE OF WB 180 ON-RAMP
			15	1 1/4	32	107	SPRAY		X	
			16	1 1/4	36	30	SPRAY		X	
			17	1 1/2	32	30	SPRAY		X	

IRRIGATION SPRINKLER SCHEDULE

ISS-28

REVISED BY | DATE REVISED

SHERRY ALEXANDER | MICHAEL MILLS

CALCULATED-DESIGNED BY | CHECKED BY

SENIOR LANDSCAPE ARCHITECT

BRAD COLE

STATE OF CALIFORNIA - DEPARTMENT OF TRANSPORTATION

Caltrans® LANDSCAPE ARCHITECTURE

LAST REVISION 07-31-13 | DATE PLOTTED => 15-AUG-2013 | TIME PLOTTED => 09:26

Dist	COUNTY	ROUTE	POST MILES TOTAL PROJECT	SHEET No.	TOTAL SHEETS
06	Fre	168,180	Var	32	204

LICENSED LANDSCAPE ARCHITECT

08-05-13

PLANS APPROVAL DATE

LICENSED LANDSCAPE ARCHITECT MICHAEL W. MILLS No. 4770 Expiration Date 11/30/14 Renewal Date 7/31/13 Date STATE OF CALIFORNIA

THE STATE OF CALIFORNIA OR ITS OFFICERS OR AGENTS SHALL NOT BE RESPONSIBLE FOR THE ACCURACY OR COMPLETENESS OF SCANNED COPIES OF THIS PLAN SHEET.

EXISTING IRRIGATION CONTROLLERS

		CONTROLLER STATION								
Loc	Co-ROUTE	ICC No.	RCV No.	RCV SIZE INCHES	FLOW GPM	No. HEADS EA	TYPE OF HEADS	DIRECTION EB	DIRECTION WB	REMARKS
60	Fre-180	828	1	1½	34	7	IMPACT	X		150′ E OF CHESTNUT Ave; N SIDE OF EB 180 ON-RAMP
			2	1½	34	8	IMPACT	X		
			3	1¼	30	5	IMPACT	X		
			4	1¼	29	15	SPRAY	X		
			5	1½	39	120	SPRAY	X		480′ E OF CHESTNUT Ave; S SIDE OF EB 180 ON-RAMP
			6	1½	41	120	SPRAY	X		
			7	1½	38	120	SPRAY	X		
			8	1½	38	120	SPRAY	X		
			9	1½	36	118	SPRAY	X		
			10	1½	35	118	SPRAY	X		
			11	1½	15	100	SPRAY	X		120′ E OF WINERY Ave & HARVEY Ave INTERSECTION; E OF S ENTRANCE OF Ped OC
			12	1½	40	100	SPRAY	X		
			13	1½	34	100	SPRAY	X		
			14	1½	34	100	SPRAY	X		
			15	1½	34	100	SPRAY	X		
61	Fre-180	829	1	1	19	57	SPRAY		X	60′ WNW AT THE END OF TYLER Ave CUL-DE-SAC; NEAR WB 180 OFF-RAMP TO CHESTNUT Ave
			2	1½	48	42	SPRAY		X	
			3	2	57	35	SPRAY		X	150′ E OF CHESTNUT Ave; IN WB 180 ON-RAMP LOOP
			4	1¼	26	80	SPRAY		X	
			5	1½	42	124	SPRAY		X	SW SIDE OF WB 180 OFF-RAMP TO CHESTNUT Ave; 420′ E OF CHESTNUT Ave
			6	1½	49	17	SPRAY		X	
			7	1¼	30	13	SPRAY		X	
			8	2	61	204	SPRAY		X	
			9	1¼	M	8	SPRAY		X	
			10	2	57	8	SPRAY		X	
			11		M				X	M
62	Fre-180	830	1	1½	46	155	SPRAY		X	SW OF HARVEY Ave & WINERY Ave; WB 180 CHESTNUT Ave OFF-RAMP
			2	1½	45	150	SPRAY		X	50′ E OF INTERSECTION OF FINE Ave & HARVEY Ave; E OF HARVEY Ave; WB CHESTNUT Ave OFF-RAMP
			3	1¼	30	7	IMPACT		X	
			4	1½	34	7	IMPACT		X	
			5	1½	34	7	IMPACT		X	
63	Fre-180	831	1	1¼	28	94	IMPACT	X		1400′ W OF PEACH Ave OC; W OF BREMER Ave; IN CALTRANS FENCED MAINTENANCE AREA
			2	1½	34	7	IMPACT	X		
			3	1½	34	7	IMPACT	X		
			4	1½	34	7	IMPACT	X		
			5	1¼	31	103	SPRAY	X		900′ W OF PEACH Ave OC; BETWEEN BREMER Ave & HELM Ave ON THOMAS Ave; S SIDE OF EB 180 PEACH Ave OFF-RAMP
			6	1½	39	8	IMPACT	X		
			7	1½	39	7	IMPACT	X		
			8	1½	39	7	IMPACT	X		
			9	1½	49	8	IMPACT	X		200′ W OF PEACH Ave; S SIDE OF EB 180 PEACH Ave OFF-RAMP
			10	1	15	42	SPRAY	X		200′ W OF PEACH Ave; S SIDE OF EB 180 PEACH Ave OFF-RAMP
			11	1½	49	50	SPRAY	X		
			12	2½	55	186	SPRAY	X		200′ W OF PEACH Ave; N SIDE OF EB 180 PEACH Ave ON-RAMP
			13	1¼	48	161	SPRAY	X		
			14	1½	30	6	IMPACT	X		
			15	1½	34	6	IMPACT	X		
			16	1½	34	7	IMPACT	X		
			17	1½	38	130	SPRAY	X		690′ W OF PEACH Ave; S SIDE OF EB 180; AT MAINTENANCE VEHICLE PULLOUT
			18	1½	48	162	SPRAY	X		
			19	1½	38	20	SPRAY	X		
			20	1½	53	150	SPRAY	X		
			21	1½	40	20	SPRAY	X		
			22	1½	34	7	IMPACT	X		
64	Fre-180	832	1	1½	35	119	ROTOR		X	900′ W OF PEACH Ave OC; N SIDE AT TOP OF SLOPE NEXT TO WALL
			2	1½	43	145	ROTOR		X	
			3	1½	34	7	IMPACT		X	
			4	1½	34	7	IMPACT		X	
			5	1½	39	8	IMPACT		X	
			6	1½	39	6	IMPACT		X	
			7	1¼	30	7	IMPACT		X	180′ W OF PEACH Ave; N SIDE OF WB 180 PEACH Ave ON-RAMP
			8	1½	34	151	SPRAY		X	

IRRIGATION SPRINKLER SCHEDULE

ISS-29

STATE OF CALIFORNIA - DEPARTMENT OF TRANSPORTATION

Caltrans® LANDSCAPE ARCHITECTURE

SENIOR LANDSCAPE ARCHITECT: BRAD COLE

CALCULATED-DESIGNED BY: SHERRY ALEXANDER

CHECKED BY: MICHAEL MILLS

REVISED BY

DATE REVISED

LAST REVISION 07-31-13

DATE PLOTTED => 15-AUG-2013

TIME PLOTTED => 09:26

Dist	COUNTY	ROUTE	POST MILES TOTAL PROJECT	SHEET No.	TOTAL SHEETS
06	Fre	168,180	Var	33	204

LICENSED LANDSCAPE ARCHITECT

08-05-13

PLANS APPROVAL DATE

LICENSED LANDSCAPE ARCHITECT MICHAEL W. MILLS No. 4770 Expiration 11/30/14 Renewal Date 7/31/13 Date STATE OF CALIFORNIA

THE STATE OF CALIFORNIA OR ITS OFFICERS OR AGENTS SHALL NOT BE RESPONSIBLE FOR THE ACCURACY OR COMPLETENESS OF SCANNED COPIES OF THIS PLAN SHEET.

EXISTING IRRIGATION CONTROLLERS

Loc	Co-ROUTE	CONTROLLER STATION ICC No.	RCV No.	RCV SIZE INCHES	FLOW GPM	No. HEADS EA	TYPE OF HEADS	DIRECTION EB	DIRECTION WB	REMARKS
64	Fre-180	832	9	1½	38	128	SPRAY		X	180′ W OF PEACH Ave; N SIDE OF WB 180 PEACH ON-RAMP
			10	1½	40	100	SPRAY		X	
			11	1½	44	20	SPRAY		X	
			12	1	21	20	SPRAY		X	
			13	1½	36	120	SPRAY		X	
			14	1½	39	8	IMPACT		X	
			15	1½	34	8	IMPACT		X	
			16	1½	34	7	IMPACT		X	
			17	1½	34	7	IMPACT		X	
			18	1½	39	8	IMPACT		X	
65	Fre-180	833	1	1½	39	8	IMPACT	X		10′ E OF PEACH Ave; N SIDE OF EB 180 SERVICE ROAD
			2	1½	39	8	IMPACT	X		
			3	1½	39	8	IMPACT	X		
			4	1¼	25	82	SPRAY	X		
			5	1¼	32	106	SPRAY	X		
			6	1½	39	8	IMPACT	X		1040′ E OF PEACH OC; S SIDE OF EB 180; TOP OF SLOPE
			7	1½	39	8	IMPACT	X		
			8	1½	39	8	IMPACT	X		
			9	1½	39	8	IMPACT	X		
			10	1½	39	8	IMPACT	X		
			11	1½	44	146	SPRAY	X		
			12	1½	39	8	IMPACT	X		2500′ E OF PEACH Ave; S SIDE OF EB 180; TOP OF SLOPE
			13	1½	39	8	IMPACT	X		
			14	1½	39	8	IMPACT	X		
			15	1½	39	8	IMPACT	X		
			16	1¼	31	105	SPRAY	X		
			17	1¼	32	109	SPRAY	X		
66	Fre-180	834	1	1½	39	8	IMPACT		X	150′ E OF PEACH OC; WB 180 OFF-RAMP; S SIDE OF MEDIAN
			2	1½	34	8	IMPACT		X	
			3	1½	39	8	IMPACT		X	
			4	1½	39	8	IMPACT		X	
			5	1½	39	8	IMPACT		X	150′ E OF PEACH OC; WB 180 OFF-RAMP; S SIDE OF MEDIAN
			6	1½	39	8	IMPACT		X	
			7	1	19	20	SPRAY		X	
			8	1¼	33	110	SPRAY		X	
			9	1¼	32	107	SPRAY		X	
			10	1¼	32	30	SPRAY		X	
			11	1¼	30	30	SPRAY		X	
			12	1½	39	8	IMPACT		X	1280′ E OF PEACH Ave; N OF WB 180; Beg OF WB PEACH OFF-RAMP
			13	1½	39	8	IMPACT		X	
			14	1½	39	8	IMPACT		X	
			15	1½	39	8	IMPACT		X	
			16	1½	34	7	IMPACT		X	
			17	1½	34	7	IMPACT		X	
			18	1½	39	8	IMPACT		X	
			19	1½	39	8	IMPACT		X	
			20	1½	39	8	IMPACT		X	
			21	1¼	35	119	SPRAY		X	
			22	1¼	32	107	SPRAY		X	
			23	1½	37	124	SPRAY		X	
67	Fre-180	835	1	1½	39	8	IMPACT	X		510′ W OF CLOVIS Ave; S SIDE OF EB CLOVIS Ave OFF-RAMP
			2	1½	39	8	IMPACT	X		
			3	1½	39	8	IMPACT	X		
			4	1½	39	7	IMPACT	X		
			5	1½	39	169	IMPACT	X		
			6	2	39	223	SPRAY	X		
			7	1¼	39	20	SPRAY	X		150′ W OF CLOVIS Ave; N SIDE OF EB CLOVIS Ave OFF-RAMP
			8	1¼	50	20	SPRAY	X		
			9	1¼	59	93	SPRAY	X		
			10	1¼	29	113	SPRAY	X		
			11	1¼	30	20	SPRAY	X		

IRRIGATION SPRINKLER SCHEDULE
ISS-30

REVISED BY | DATE REVISED

SHERRY ALEXANDER | MICHAEL MILLS

CALCULATED-DESIGNED BY | CHECKED BY

SENIOR LANDSCAPE ARCHITECT

BRAD COLE

STATE OF CALIFORNIA - DEPARTMENT OF TRANSPORTATION

Caltrans® LANDSCAPE ARCHITECTURE

LAST REVISION 07-31-13 | DATE PLOTTED => 15-AUG-2013 | TIME PLOTTED => 09:26

Dist	COUNTY	ROUTE	POST MILES TOTAL PROJECT	SHEET No.	TOTAL SHEETS
06	Fre	168,180	Var	34	204

LICENSED LANDSCAPE ARCHITECT

08-05-13

PLANS APPROVAL DATE

LICENSED LANDSCAPE ARCHITECT MICHAEL W. MILLS No. 4770 Expiration Date 11/30/14 Renewal Date 7/31/13 Date STATE OF CALIFORNIA

THE STATE OF CALIFORNIA OR ITS OFFICERS OR AGENTS SHALL NOT BE RESPONSIBLE FOR THE ACCURACY OR COMPLETENESS OF SCANNED COPIES OF THIS PLAN SHEET.

EXISTING IRRIGATION CONTROLLERS

Loc	Co-ROUTE	CONTROLLER STATION ICC No.	RCV No.	RCV SIZE INCHES	FLOW GPM	No. HEADS EA	TYPE OF HEADS	DIRECTION EB	DIRECTION WB	REMARKS
67	Fre-180	835	12	1½	34	7	IMPACT	X		150′ W OF CLOVIS Ave; N SIDE OF EB 180 CLOVIS Ave OFF-RAMP
			13	1½	34	7	IMPACT	X		
			14	1½	39	9	IMPACT	X		
			15	1½	39	7	IMPACT	X		
			16	1½	39	8	IMPACT	X		
			17	1½	34	7	IMPACT	X		
68	Fre-180	836	1	1½	42	142	SPRAY		X	2400′ E OF PEACH OC; N SIDE OF WB 180; TOP OF SLOPE
			2	1½	34	7	IMPACT		X	
			3	1½	34	7	IMPACT		X	
			4	1½	34	7	IMPACT		X	
			5	1½	34	7	IMPACT		X	
			6	1½	34	7	IMPACT		X	
			7	1½	42	140	SPRAY		X	1230′ W OF CLOVIS Ave; N SIDE OF WB 180; TOP OF SLOPE
			8	1½	34	7	IMPACT		X	
			9	1½	34	7	IMPACT		X	
			10	1½	34	7	IMPACT		X	
			11	1½	34	7	IMPACT		X	200′ W OF CLOVIS Ave; N SIDE OF WB 180 CLOVIS Ave ON-RAMP
			12	1½	34	7	IMPACT		X	
			13	1½	39	8	IMPACT		X	
			14	1¼	29	98	SPRAY		X	
			15	1¼	30	15	SPRAY		X	
			16	1¼	30	30	SPRAY		X	90′ WOF CLOVIS Ave; BETWEEN CLOVIS Ave & WB 180 CLOVIS Ave ON-RAMP
			17	1¼	27	30	SPRAY		X	
			18	1¼	26	87	SPRAY		X	
			19	1¼	32	50	SPRAY		X	
			20	1½	40	151	SPRAY		X	
			21	1½	39	7	IMPACT		X	
			22	1½	39	8	IMPACT		X	
69	Fre-180	837	1	1½	14	54	SPRAY	X		300′ E OF CLOVIS Ave; S SIDE OF CLOVIS Ave
			2	1½	45	9	IMPACT	X		
			3	1½	40	8	SPRAY	X		
			4	1½	41.8	22	SPRAY	X		
			5	1½	40.7	11	SPRAY	X		
			6	1½	35	7	IMPACT	X		
			7	1½	40	8	IMPACT	X		
			8	1½	40	8	IMPACT	X		
			9	1½	45.6	24	SPRAY	X		300′ E OF CLOVIS Ave; S SIDE OF CLOVIS Ave; EB 180 ON-RAMP
			10	1½	45.6	24	SPRAY	X		
			11	1½	45.6	24	SPRAY	X		
			12	1½	34.8	134	SPRAY	X		
			13	1½	45.6	24	SPRAY	X		
			14	1¼	49.5	26	SPRAY	X		
			15	1¼	24.4	94	SPRAY	X		2125′ E OF CLOVIS Ave OC; S SIDE OF EB 180
70	Fre-180	838	1	1½	26.6	14	SPRAY		X	INSIDE OF LOOP RAMP; NB CLOVIS Ave TO WB 180
			2	1½	33.3	9	SPRAY		X	
			3	1½	45.9	9	SPRAY		X	
			4	1½	50	10	IMPACT		X	
			5	1½	40.8	8	SPRAY		X	
			6	1½	10.9	42	SPRAY		X	
			7	1½	35	7	IMPACT		X	550′ E OF CLOVIS Ave; S SIDE OF WB 180 CLOVIS Ave OFF-RAMP
			8	1½	30.6	8	SPRAY		X	
			9	1½	35	7	IMPACT		X	
			10	1½	35	7	IMPACT		X	
			11	1½	23.9	92	SPRAY		X	650′ E OF CLOVIS Ave; S SIDE OF WB 180 CLOVIS Ave OFF-RAMP
			12	1½	35	7	IMPACT		X	
			13	1½	35	7	IMPACT		X	600′ E OF CLOVIS Ave OC; N SIDE OF WB 180
			14	1½	35	7	IMPACT		X	
			15	1½	41.4	18	SPRAY		X	
			16	1½	30.6	6	IMPACT		X	90′ W OF CLOVIS Ave; BETWEEN CLOVIS Ave & WB 180 CLOVIS Ave ON-RAMP
			17	1½	35	7	IMPACT		X	
			18	1½	35	7	IMPACT		X	

IRRIGATION SPRINKLER SCHEDULE

ISS-31

REVISED BY | DATE REVISED

SHERRY ALEXANDER | MICHAEL MILLS

CALCULATED-DESIGNED BY | CHECKED BY

SENIOR LANDSCAPE ARCHITECT | BRAD COLE

STATE OF CALIFORNIA - DEPARTMENT OF TRANSPORTATION

Caltrans® LANDSCAPE ARCHITECTURE

LAST REVISION 07-31-13 | DATE PLOTTED => 15-AUG-2013 | TIME PLOTTED => 09:26

Dist	COUNTY	ROUTE	POST MILES TOTAL PROJECT	SHEET No.	TOTAL SHEETS
06	Fre	168,180	Var	35	204

LICENSED LANDSCAPE ARCHITECT

08-05-13

PLANS APPROVAL DATE

LICENSED LANDSCAPE ARCHITECT MICHAEL W. MILLS No. 4770 Expiration 11/30/14 Renewal Date 7/31/13 Date STATE OF CALIFORNIA

THE STATE OF CALIFORNIA OR ITS OFFICERS OR AGENTS SHALL NOT BE RESPONSIBLE FOR THE ACCURACY OR COMPLETENESS OF SCANNED COPIES OF THIS PLAN SHEET.

EXISTING IRRIGATION CONTROLLERS

Loc	Co-ROUTE	CONTROLLER STATION ICC No.	RCV No.	RCV SIZE INCHES	FLOW GPM	No. HEADS EA	TYPE OF HEADS	DIRECTION EB	DIRECTION WB	REMARKS
70	Fre-180	838	19	1½	47.1	21	SPRAY		X	500′ E OF CLOVIS Ave; N SIDE OF WB 180 CLOVIS Ave OFF-RAMP
			20	1½	38	20	SPRAY		X	
			21	1½	36.9	142	SPRAY		X	650′ E OF CLOVIS Ave; N SIDE OF WB 180 CLOVIS Ave OFF-RAMP
			22	1½	36.9	21	SPRAY		X	
			23	1½	39.9	21	SPRAY		X	925′ E OF CLOVIS Ave; N SIDE OF WB 180 CLOVIS Ave OFF-RAMP
			24	1½	39.9	21	SPRAY		X	
			25	1½	24.4	94	SPRAY		X	2125′ E OF CLOVIS Ave OC; N SIDE OF WB 180
71	Fre-180	839	1	1½	24.9	94	SPRAY	X		1950′ W OF FOWLER Ave UC; S SIDE
			2	1½	57.6	8	IMPACT	X		900′ W OF FOWLER Ave; S SIDE OF EB 180 FOWLER Ave OFF-RAMP
			3	1½	14	54	SPRAY	X		
			4	1½	57.6	8	IMPACT	X		
			5	1½	40	8	IMPACT	X		
			6	1½	55.5	10	SPRAY	X		450′ W OF FOWLER Ave; S SIDE OF EB 180 OFF-RAMP
			7	1½	39.9	21	SPRAY	X		
			8	1½	41.8	11	SPRAY	X		
			9	1½	55.5	15	SPRAY	X		
			10	1½	41.8	22	SPRAY	X		
			11	1½	59.2	16	SPRAY	X		
			12	1½	39.9	21	SPRAY	X		
			13	1½	25	5	IMPACT	X		200′ W OF FOWLER Ave; S SIDE OF EB 180 OFF-RAMP
			14	1½	25	5	IMPACT	X		
			15	1½	54.7	25	SPRAY	X		100′ W OF FOWLER Ave; N SIDE OF EB 180 OFF-RAMP
			16	1½	52.5	21	SPRAY	X		
			17	1½	52.5	22	SPRAY	X		
			18	1½	58.9	27	SPRAY	X		
			19	1½	50.4	7	IMPACT	X		100′ S OF FOWLER Ave UC; W SIDE OF FOWLER Ave
			20	1½	22.9	88	SPRAY	X		
			21	1½	57.6	8	IMPACT	X		
			22	1½	35	7	IMPACT	X		300′ W OF FOWLER Ave; N SIDE OF EB 180 OFF-RAMP
			23	1½	38	20	SPRAY	X		
			24	1½	25.9	7	IMPACT	X		
			25	1½	40	8	IMPACT	X		
			26	1½	40	8	IMPACT	X		
			27	1½	35	7	IMPACT	X		
			28	1½	43.5	6	IMPACT	X		
			29	1½	50.4	7	IMPACT	X		
			30	1½	57.6	8	IMPACT	X		
			31	1½	35	7	IMPACT	X		
			32	1½	37.4	144	SPRAY	X		FOWLER Ave PARK AND RIDE
			33	1½	26.8	103	SPRAY	X		
72	Fre-180	840	1	1½	24.4	94	SPRAY		X	1950′ W OF FOWLER Ave UC; N SIDE OF WB
			2	1½	16.6	64	SPRAY		X	900′ W OF FOWLER Ave; N SIDE OF WB 180 FOWLER Ave ON-RAMP
			3	1½	57.6	8	IMPACT		X	
			4	1½	57.6	8	IMPACT		X	
			5	1½	57.6	8	IMPACT		X	
			6	1½	35	7	IMPACT		X	
			7	1½	35	7	IMPACT		X	
			8	1½	62.7	33	SPRAY		X	250′ W OF FOWLER Ave; N SIDE OF WB 180 FOWLER Ave ON-RAMP
			9	1½	45	18	SPRAY		X	
			10	1½	43.4	20	SPRAY		X	
			11	1½	62.4	30	SPRAY		X	
			12	1½	60	24	SPRAY		X	
			13	1½	62	26	SPRAY		X	
			14	1½	55	28	SPRAY		X	150′ N OF FOWLER Ave UC; W SIDE OF FOWLER Ave
			15	1½	50.4	7	IMPACT		X	
			16	1½	50.4	7	IMPACT		X	
			17	1½	50.4	7	IMPACT		X	
			18	1½	57.6	5	IMPACT		X	
			19	1½	51.3	27	SPRAY		X	
			20	1½	21.3	82	SPRAY		X	
			21	1½	41.8	22	SPRAY		X	250′ W OF FOWLER Ave; S SIDE OF WB 180 FOWLER Ave ON-RAMP

IRRIGATION SPRINKLER SCHEDULE

ISS-32

STATE OF CALIFORNIA - DEPARTMENT OF TRANSPORTATION

Caltrans® LANDSCAPE ARCHITECTURE

SENIOR LANDSCAPE ARCHITECT: BRAD COLE

CALCULATED-DESIGNED BY: SHERRY ALEXANDER

CHECKED BY: MICHAEL MILLS

REVISED BY

DATE REVISED

LAST REVISION 07-31-13

DATE PLOTTED => 15-AUG-2013

TIME PLOTTED => 09:27

Dist	COUNTY	ROUTE	POST MILES TOTAL PROJECT	SHEET No.	TOTAL SHEETS
06	Fre	168,180	Var	36	204

LICENSED LANDSCAPE ARCHITECT

08-05-13

PLANS APPROVAL DATE

LICENSED LANDSCAPE ARCHITECT MICHAEL W. MILLS No. 4770 Expiration Date 11/30/14 Renewal Date 7/31/13 Date STATE OF CALIFORNIA

THE STATE OF CALIFORNIA OR ITS OFFICERS OR AGENTS SHALL NOT BE RESPONSIBLE FOR THE ACCURACY OR COMPLETENESS OF SCANNED COPIES OF THIS PLAN SHEET.

EXISTING IRRIGATION CONTROLLERS

		CONTROLLER STATION								
Loc	Co-ROUTE	ICC No.	RCV No.	RCV SIZE INCHES	FLOW GPM	No. HEADS EA	TYPE OF HEADS	DIRECTION EB	DIRECTION WB	REMARKS
72	Fre-180	840	22	1½	25.9	7	SPRAY		X	
			23	1½	40	8	IMPACT		X	
			24	1½	50.4	30	SPRAY		X	
			25	1½	67.8	30	SPRAY		X	250′ W OF FOWLER Ave; S SIDE OF WB 180 FOWLER Ave ON-RAMP
			26	1½	67.5	27	SPRAY		X	
			27	1½	50.4	7	IMPACT		X	
			28	1½	57.6	8	IMPACT		X	
73	Fre-180	841	1	1½	67.8	8	IMPACT		X	
			2	1½	57.6	30	SPRAY		X	
			3	1½	65.6	76	SPRAY		X	
			4	1½	64.8	8	SPRAY		X	
			5	1½	19.7	26	SPRAY		X	150′ E OF FOWLER Ave; N SIDE OF EB ON-RAMP
			6	1½	50.4	8	IMPACT		X	
			7	1½	64.8	9	IMPACT		X	
			8	1½	48.1	13	SPRAY		X	
			9	1½	43.7	23	SPRAY		X	
			10	1½	30	6	IMPACT		X	
			11	1½	71.5	31	SPRAY		X	
			12	1½	52.9	25	SPRAY		X	
			13	1½	61.9	23	SPRAY		X	250′ E OF FOWLER Ave; S SIDE OF EB ON-RAMP
			14	1½	52.5	8	IMPACT		X	
			15	1½	60	27	SPRAY		X	
			16	1½	52.4	25	SPRAY		X	
			17	1½	20.8	8	SPRAY		X	
			18	1½	40	80	IMPACT		X	
			19	1½	67.5	27	SPRAY		X	600′ E OF FOWLER Ave; S SIDE OF EB ON-RAMP
			20	1½	63.9	25	SPRAY		X	
			21	1½	57.6	8	IMPACT		X	
74	Fre-180	842	1	1½	49.4	26	SPRAY		X	
			2	1½	21.6	3	IMPACT		X	
			3	1½	64.8	9	IMPACT		X	
			4	1½	15	58	SPRAY		X	
			5	1½	57.6	8	ROTOR		X	300′ E OF FOWLER Ave; INSIDE WB 180 LOOP RAMP TO 180
			6	1½	35	8	ROTOR		X	
			7	1½	65.9	12	SPRAY		X	
			8	1½	62.7	33	SPRAY		X	
			9	1½	28.4	14	SPRAY		X	
			10	1½	22.4	86	SPRAY		X	
			11	1½	35.7	7	ROTOR		X	600′ E OF FOWLER Ave UC; N SIDE OF WB 180
			12	1½	35.7	7	ROTOR		X	
			13	1½	57.6	8	IMPACT		X	
			14	1½	67.5	27	SPRAY		X	
			15	1½	28.8	4	IMPACT		X	650′ E OF FOWLER Ave UC; N SIDE OF WB 180
			16	1½	57.6	8	IMPACT		X	
			17	1½	40.8	8	IMPACT		X	
			18	1½	57.6	8	IMPACT		X	
			19	1½	43.7	23	SPRAY		X	
			20	1½	23.4	90	SPRAY		X	
			21	1½	45.3	21	SPRAY		X	550′ E OF FOWLER Ave; N SIDE OF WB 180 FOWLER Ave OFF-RAMP
			22	1½	57.6	8	IMPACT		X	
			23	1½	57.6	4	IMPACT		X	
			24	1½	57.6	8	IMPACT		X	850′ E OF FOWLER Ave; N SIDE OF WB 180 FOWLER Ave OFF-RAMP
			25	1½	30.7	118	SPRAY		X	
			26	1½	50.4	7	IMPACT		X	
			27	1½	57.6	8	IMPACT		X	1200′ E OF FOWLER Ave; N SIDE OF WB FOWLER Ave OFF-RAMP
			28	1½	57.6	8	IMPACT		X	
75	Fre-180	843	1	1½	18.2	70	SPRAY	X		
			2	1½	16.1	62	SPRAY	X		550′ W OF BELMONT Ave UC; S SIDE
			3	1½	27.6	106	SPRAY	X		
			4	1½	60	201	SPRAY	X		350′ E OF BELMONT Ave UC; S SIDE
			5	1½	16.6	64	SPRAY	X		750′ E OF ARMSTRONG Ave UC; S SIDE

IRRIGATION SPRINKLER SCHEDULE

ISS-33

REVISED BY | DATE REVISED

SHERRY ALEXANDER | MICHAEL MILLS

CALCULATED-DESIGNED BY | CHECKED BY

SENIOR LANDSCAPE ARCHITECT | BRAD COLE

STATE OF CALIFORNIA - DEPARTMENT OF TRANSPORTATION

Caltrans® LANDSCAPE ARCHITECTURE

LAST REVISION 07-31-13 | DATE PLOTTED => 15-AUG-2013 | TIME PLOTTED => 09:27

Dist	COUNTY	ROUTE	POST MILES TOTAL PROJECT	SHEET No.	TOTAL SHEETS
06	Fre	168,180	Var	37	204

LICENSED LANDSCAPE ARCHITECT

08-05-13

PLANS APPROVAL DATE

LICENSED LANDSCAPE ARCHITECT MICHAEL W. MILLS No. 4779 Expiration 11/30/14 Renewal Date 7/31/13 Date STATE OF CALIFORNIA

THE STATE OF CALIFORNIA OR ITS OFFICERS OR AGENTS SHALL NOT BE RESPONSIBLE FOR THE ACCURACY OR COMPLETENESS OF SCANNED COPIES OF THIS PLAN SHEET.

EXISTING IRRIGATION CONTROLLERS

		CONTROLLER STATION								
Loc	Co-ROUTE	ICC No.	RCV No.	RCV SIZE INCHES	FLOW GPM	No. HEADS EA	TYPE OF HEADS	DIRECTION EB	DIRECTION WB	REMARKS
75	Fre-180	843	6	1½	16.6	64	SPRAY	X		750′ E OF ARMSTRONG Ave UC; S SIDE
			7	1½	22.4	86	SPRAY		X	500′ W OF BELMONT Ave UC; N SIDE
			8	1½	22.4	86	SPRAY		X	
			9	1½	17.2	66	SPRAY		X	50′ E OF BELMONT Ave UC; N SIDE
			10	1½	18.7	72	SPRAY		X	400′ E OF ARMSTRONG Ave UC; N SIDE
			11	1½	19.2	74	SPRAY		X	
			12	1½	18.7	72	SPRAY	X		600′ W OF FOWLER CREEK BRIDGE; S SIDE
			13	1½	18.7	72	SPRAY	X		
76	Fre-180	848	1	1½	21.8	84	SPRAY	X		1700′ E OF TEMPERANCE Ave UC; S SIDE
			2	1½	21.3	82	SPRAY	X		3150′ E OF TEMPERANCE Ave UC; S SIDE
			3	1½	21.8	84	SPRAY	X		1700′ E OF TEMPERANCE Ave UC; N SIDE
			4	1½	21.8	84	SPRAY		X	2850′ E OF TEMPERANCE Ave UC; N SIDE
77	Fre-180	844	1	1½	7.8	30	SPRAY	X		100′ E OF FANCHER CREEK BRIDGE; S SIDE
			2	1½	57.6	8	IMPACT	X		
			3	1½	64.8	7	IMPACT	X		
			4	1½	57.6	8	IMPACT		X	250′ E FANCHER CREEK BRIDGE; N SIDE
			5	1½	72.2	19	SPRAY		X	
			6	1½	57.6	8	IMPACT		X	
			7	1½	66.5	35	SPRAY		X	
			8	1½	30	6	IMPACT		X	
			9	1½	29.2	112	SPRAY		X	
			10	1½	63.8	26	SPRAY		X	950′ W OF TEMPERANCE Ave UC; N SIDE OF WB 180 ON-RAMP
			11	1½	63.7	25	SPRAY		X	
			12	1½	70.3	37	SPRAY		X	
			13	1½	63.8	26	SPRAY		X	
			14	1½	71.2	25	SPRAY		X	
			15	1½	72.2	38	SPRAY		X	
			16	1½	57.6	36	SPRAY		X	300′ W OF TEMPERANCE Ave; N SIDE OF WB 180 ON-RAMP
			17	1½	74.1	39	SPRAY		X	
			18	1½	74.1	39	SPRAY		X	
			19	1½	40	8	IMPACT		X	
			20	1½	69.7	31	SPRAY		X	
			21	1½	64.8	6	IMPACT		X	100′ W OF TEMPERANCE Ave; IN TRIANGLE BETWEEN TEMPERANCE Ave/WB 180 ON-RAMP
			22	1½	36	5	IMPACT		X	
			23	1½	50.4	7	IMPACT		X	
			24	1½	23.4	90	IMPACT		X	
			25	1½	76	22	SPRAY		X	
			26	1½	74.1	35	SPRAY		X	
			27	1½	57.6	6	IMPACT		X	400′ W OF TEMPERANCE Ave UC; N SIDE
			28	1½	57.6	8	IMPACT		X	
			29	1½	57.6	8	IMPACT		X	
			30	1½	57.6	8	IMPACT		X	
			31	1½	30	6	IMPACT		X	
			32	1½	44.6	14	SPRAY		X	
			33	1½	45.6	24	SPRAY		X	
		845	1	1½	26.6	14	SPRAY	X		1600′ W OF TEMPERANCE Ave; S SIDE OF EB 180 TEMPERANCE Ave OFF-RAMP
			2	1½	57.6	8	IMPACT	X		
			3	1½	57.6	8	IMPACT	X		
			4	1½	57.6	8	IMPACT	X		
			5	1½	22.4	86	SPRAY	X		1200′ W OF TEMPERANCE Ave; S SIDE OF EB 180 TEMPERANCE Ave OFF-RAMP
			6	1½	28.8	4	IMPACT	X		
			7	1½	57.6	8	IMPACT	X		
			8	1½	57.6	8	IMPACT	X		
			9	1½	28.8	4	IMPACT	X		900′ W OF TEMPERANCE Ave; S SIDE OF EB 180 TEMPERANCE Ave OFF-RAMP
			10	1½	28.8	4	IMPACT	X		
			11	1½	57.6	8	IMPACT	X		
			12	1½	57.6	8	IMPACT	X		
			13	1½	23.4	90	SPRAY	X		600′ W OF TEMPERANCE Ave; S SIDE OF EB 180 TEMPERANCE Ave OFF-RAMP
			14	1½	36	5	IMPACT	X		
			15	1½	36	5	IMPACT	X		
			16	1½	30	6	IMPACT	X		250′ W OF TEMPERANCE Ave; S OF EB 180 TEMPERANCE Ave OFF-RAMP

IRRIGATION SPRINKLER SCHEDULE

ISS-34

STATE OF CALIFORNIA - DEPARTMENT OF TRANSPORTATION

Caltrans® LANDSCAPE ARCHITECTURE

SENIOR LANDSCAPE ARCHITECT: BRAD COLE

CALCULATED-DESIGNED BY: SHERRY ALEXANDER

CHECKED BY: MICHAEL MILLS

REVISED BY / DATE REVISED

LAST REVISION 07-31-13

DATE PLOTTED => 15-AUG-2013

TIME PLOTTED => 09:27

Dist	COUNTY	ROUTE	POST MILES TOTAL PROJECT	SHEET No.	TOTAL SHEETS
06	Fre	168,180	Var	38	204

LICENSED LANDSCAPE ARCHITECT

08-05-13

PLANS APPROVAL DATE

LICENSED LANDSCAPE ARCHITECT MICHAEL W. MILLS No. 4770 Expiration Date 11/30/14 Renewal Date 7/31/13 Date STATE OF CALIFORNIA

THE STATE OF CALIFORNIA OR ITS OFFICERS OR AGENTS SHALL NOT BE RESPONSIBLE FOR THE ACCURACY OR COMPLETENESS OF SCANNED COPIES OF THIS PLAN SHEET.

EXISTING IRRIGATION CONTROLLERS

		CONTROLLER STATION								
Loc	Co-ROUTE	ICC No.	RCV No.	RCV SIZE INCHES	FLOW GPM	No. HEADS EA	TYPE OF HEADS	DIRECTION EB	DIRECTION WB	REMARKS
77	Fre-180	845	17	1½	35	7	IMPACT	X		250′ W OF TEMPERANCE Ave; S SIDE OF EB 180 TEMPERANCE Ave OFF-RAMP
			18	1½	35	7	IMPACT	X		
			19	1½	40	8	IMPACT	X		
			20	1½	40	8	IMPACT	X		400′ W OF TEMPERANCE Ave; IN TRIANGLE BETWEEN TEMPERANCE Ave/EB 180 OFF-RAMP
			21	1½	35	7	IMPACT	X		
			22	1½	40	8	IMPACT	X		
			23	1½	40	8	IMPACT	X		
			24	1½	30	7	IMPACT	X		100′ W OF TEMPERANCE Ave; IN TRIANGLE BETWEEN TEMPERANCE Ave/ EB 180 OFF-RAMP
			25	1½	30	7	IMPACT	X		
			26	1½	64.8	9	IMPACT	X		
			27	1½	57.6	8	IMPACT	X		250′ W OF TEMPERANCE Ave; IN TRIANGLE BETWEEN TEMPERANCE Ave/EB 180 OFF-RAMP
			28	1½	57.6	7	IMPACT	X		
			29	1½	50.4	7	IMPACT	X		
			30	1½	27	104	SPRAY	X		400′ W OF TEMPERANCE Ave; IN TRIANGLE BETWEEN TEMPERANCE Ave/EB 180 OFF-RAMP
			31	1½	67.6	28	SPRAY	X		
			32	1½	67.2	24	SPRAY	X		
			33	1½	57.6	8	IMPACT	X		
			34	1½	36	5	IMPACT	X		
			35	1½	40	8	IMPACT	X		
			36	1½	43.2	6	IMPACT	X		
			37	1½	50.4	7	IMPACT	X		
			38	1½	57.6	8	IMPACT	X		
78	Fre-180	846	1	1½	35.7	3	IMPACT		X	100′ E OF TEMPERANCE Ave; ON WB TEMPERANCE Ave; N SIDE; IN MEDIAN
			2	1½	18	70	SPRAY		X	
			3	1½	57.6	8	IMPACT		X	
			4	1½	28.8	4	IMPACT		X	
			5	1½	40.8	8	ROTOR		X	
			6	1½	43.1	17	SPRAY		X	400′ E OF TEMPERANCE Ave UC; N SIDE
			7	1½	43.2	17	SPRAY		X	
			8	1½	43.1	17	SPRAY		X	
			9	1½	45.9	9	IMPACT		X	
			10	1½	43.2	6	IMPACT		X	
			11	1½	50.4	7	IMPACT		X	
			12	1½	37.4	14	SPRAY		X	
			13	1½	50.4	7	IMPACT		X	450′ E OF TEMPERANCE Ave UC; N SIDE
			14	1½	57.6	8	IMPACT		X	
			15	1½	43.7	166	SPRAY		X	
			16	1½	61.7	23	SPRAY		X	
			17	1½	40.8	8	ROTOR		X	
			18	1½	57.6	7	IMPACT		X	800′ E OF TEMPERANCE Ave UC; N SIDE
			19	1½	50.4	7	IMPACT		X	
			20	1½	36	5	IMPACT		X	
			21	1½	50.4	7	IMPACT		X	
			22	1½	57.8	20	SPRAY		X	
			23	1½	60	24	SPRAY		X	
			24	1½	60.1	25	SPRAY		X	300′ E OF TEMPERANCE Ave; N SIDE OF WB 180 TEMPERANCE Ave OFF-RAMP
			25	1½	57.6	4	IMPACT		X	
			26	1½	75.9	39	SPRAY		X	
			27	1½	61.6	23	SPRAY		X	
			28	1½	25	6	IMPACT		X	550′ E OF TEMPERANCE Ave; N SIDE OF WB 180 TEMPERANCE Ave OFF-RAMP
			29	1½	25	5	IMPACT		X	
			30	1½	57.6	16	IMPACT		X	
			31	1½	57.6	8	IMPACT		X	
			32	1½	45	9	IMPACT		X	1050′ E OF TEMPERANCE Ave; N SIDE OF WB 180 TEMPERANCE Ave OFF-RAMP
			33	1½	42.1	162	SPRAY		X	
			34	1½	57.6	8	IMPACT		X	
			35	1½	57.6	8	IMPACT		X	
			36	1½	54.6	210	SPRAY		X	
			37	1½	50.4	7	IMPACT		X	1300′ E OF TEMPERANCE Ave; N SIDE OF WB 180 TEMPERANCE Ave OFF-RAMP
			38	1½	50.4	7	IMPACT		X	
			39	1½	43.2	8	IMPACT		X	

IRRIGATION SPRINKLER SCHEDULE

ISS-35

STATE OF CALIFORNIA - DEPARTMENT OF TRANSPORTATION

Caltrans® LANDSCAPE ARCHITECTURE

SENIOR LANDSCAPE ARCHITECT: BRAD COLE

CALCULATED-DESIGNED BY: SHERRY ALEXANDER

CHECKED BY: MICHAEL MILLS

REVISED BY

DATE REVISED

LAST REVISION 07-31-13

DATE PLOTTED => 15-AUG-2013

TIME PLOTTED => 09:27

Dist	COUNTY	ROUTE	POST MILES TOTAL PROJECT	SHEET No.	TOTAL SHEETS
06	Fre	168,180	Var	39	204

LICENSED LANDSCAPE ARCHITECT

08-05-13

PLANS APPROVAL DATE

LICENSED LANDSCAPE ARCHITECT MICHAEL W. MILLS No. 4720 Expiration Date 11/30/14 Renewal Date 7/31/13 Date STATE OF CALIFORNIA

THE STATE OF CALIFORNIA OR ITS OFFICERS OR AGENTS SHALL NOT BE RESPONSIBLE FOR THE ACCURACY OR COMPLETENESS OF SCANNED COPIES OF THIS PLAN SHEET.

EXISTING IRRIGATION CONTROLLERS

Loc	Co-ROUTE	CONTROLLER STATION ICC No.	RCV No.	RCV SIZE INCHES	FLOW GPM	No. HEADS EA	TYPE OF HEADS	DIRECTION EB	DIRECTION WB	REMARKS
78	Fre-180	847	1	1½	52.5	21	SPRAY	X		150′ E OF TEMPERANCE Ave; N SIDE OF EB 180 ON-RAMP
			2	1½	48.9	21	SPRAY	X		
			3	1½	50.6	20	SPRAY	X		
			4	1½	57.6	8	IMPACT	X		
			5	1½	28.8	8	IMPACT	X		
			6	1½	57.6	8	IMPACT	X		
			7	1½	57.6	8	IMPACT	X		
			8	1½	28.8	4	IMPACT	X		
			9	1½	28.6	110	SPRAY	X		
			10	1½	35	7	IMPACT	X		400′ E OF TEMPERANCE Ave; N SIDE OF EB 180 ON-RAMP
			11	1½	36	5	IMPACT	X		
			12	1½	43.2	6	IMPACT	X		
			13	1½	57.6	6	IMPACT	X		
			14	1½	30	6	IMPACT	X		
			15	1½	48	14	IMPACT	X		
			16	1½	49.4	26	SPRAY	X		
			17	1½	37.8	18	SPRAY	X		100′ E OF TEMPERANCE Ave; E SIDE OF TRANSITION OF NB TEMPERANCE Ave/EB 180 ON-RAMP
			18	1½	41.2	16	SPRAY	X		
			19	1½	35	7	IMPACT	X		
			20	1½	35	6	IMPACT	X		550′ E OF TEMPERANCE Ave; S SIDE OF EB 180 ON-RAMP
			21	1½	35	7	IMPACT	X		
			22	1½	35	7	IMPACT	X		
			23	1½	35	7	IMPACT	X		
			24	1½	26	100	SPRAY	X		1000′ E OF TEMPERANCE Ave; S SIDE OF EB 180 ON-RAMP
			25	1½	35	6	IMPACT	X		
			26	1½	35	7	IMPACT	X		
			27	1½	40	8	IMPACT	X		

IRRIGATION SPRINKLER SCHEDULE
ISS-36

REVISED BY | DATE REVISED

SHERRY ALEXANDER | MICHAEL MILLS

CALCULATED-DESIGNED BY | CHECKED BY

SENIOR LANDSCAPE ARCHITECT

BRAD COLE

STATE OF CALIFORNIA - DEPARTMENT OF TRANSPORTATION

Caltrans® LANDSCAPE ARCHITECTURE

LAST REVISION 07-31-13 | DATE PLOTTED => 15-AUG-2013 TIME PLOTTED => 09:27

Dist	COUNTY	ROUTE	POST MILES TOTAL PROJECT	SHEET No.	TOTAL SHEETS
06	Fre	168,180	Var	40	204

LICENSED LANDSCAPE ARCHITECT

08-05-13

PLANS APPROVAL DATE

LICENSED LANDSCAPE ARCHITECT MICHAEL W. MILLS No. 4770 STATE OF CALIFORNIA
Expiration 11/30/14
Renewal Date 7/31/13
Date

THE STATE OF CALIFORNIA OR ITS OFFICERS OR AGENTS SHALL NOT BE RESPONSIBLE FOR THE ACCURACY OR COMPLETENESS OF SCANNED COPIES OF THIS PLAN SHEET.

NOTES:

1. * Min CONTROL DIMENSION.
2. ** EXACT LOCATION TO BE DETERMINED BY THE ENGINEER.
3. ALL NEW CONCRETE PADS TO HAVE 0.5% POSITIVE DRAINAGE AWAY FROM FACILITIES.
4. EXTEND ALL EXISTING CONDUIT BEYOND NEW CONCRETE PAD.
5. SEE SHEET LD-21 FOR GATE, FENCE, AND MINOR CONCRETE DETAILS.
6. SEE SHEET E-115, DETAIL A FOR REPLACE PB DETAIL.
7. LOCATION NUMBERS ARE USED FOR IRRIGATION WORK ONLY.
8. EXISTING UTILITY FACILITIES HAVE NOT BEEN PLOTTED ON THESE PLANS.

LEGEND:

BOOSTER PUMP

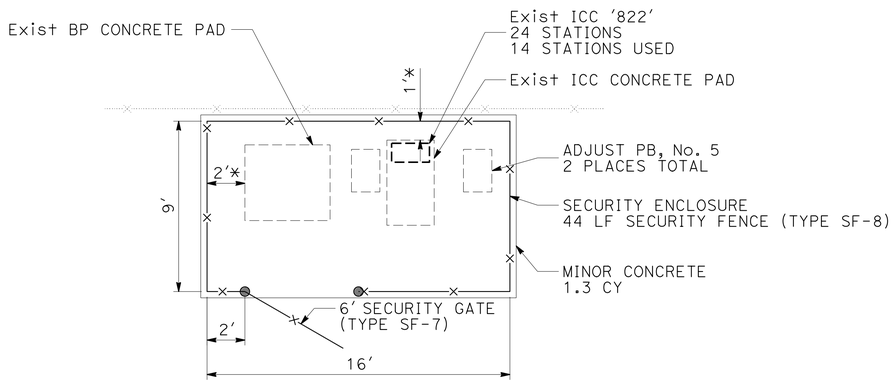

PLAN
LOCATION 1

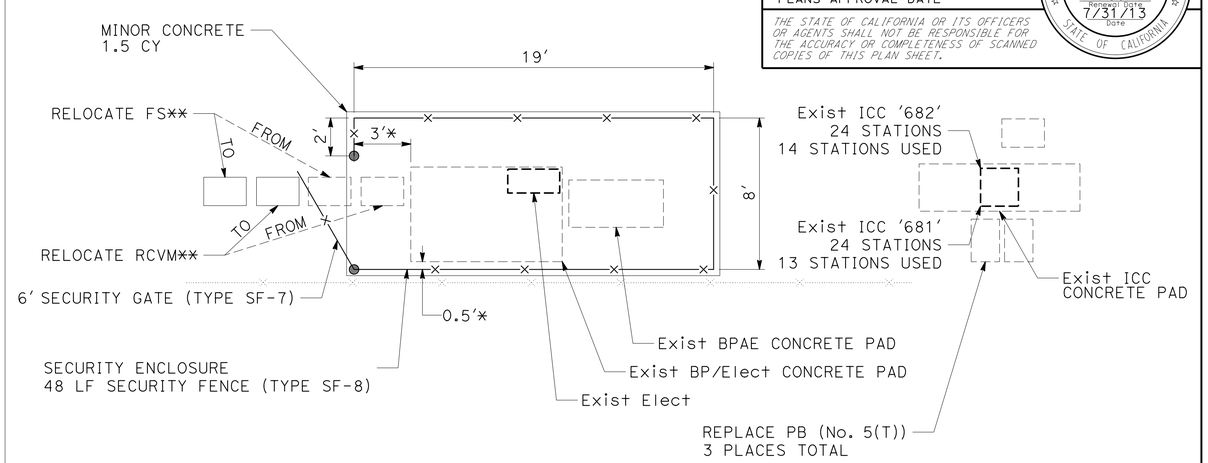

PLAN
LOCATION 2

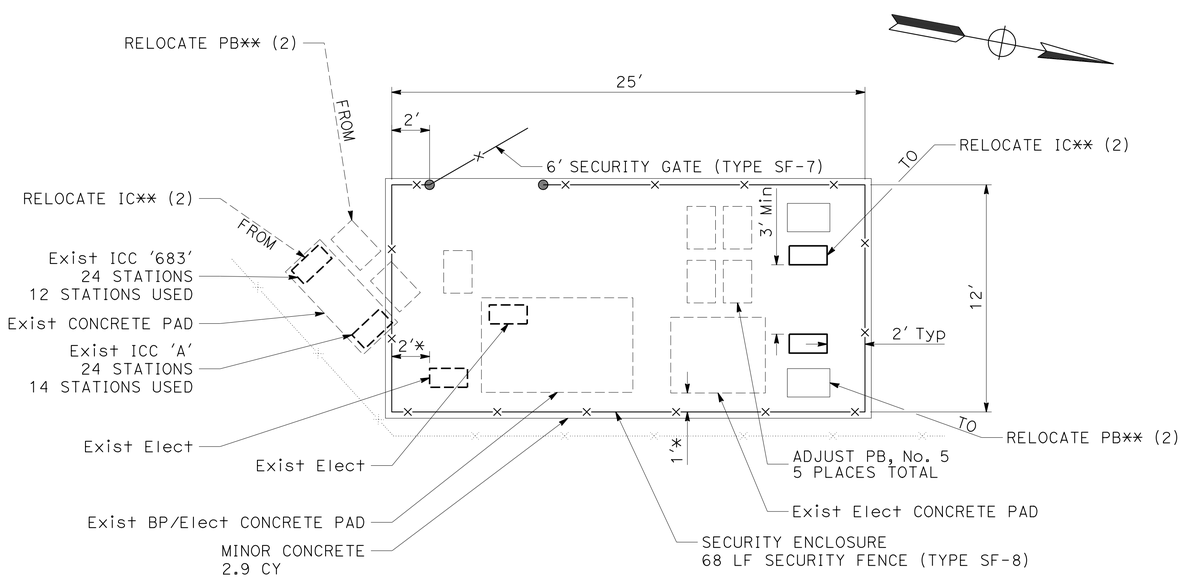

PLAN
LOCATION 3

NOTE:

THIS LOCATION SERVICES ICC 'A'.
SEE LOCATION 3 FOR ICC 'A'.

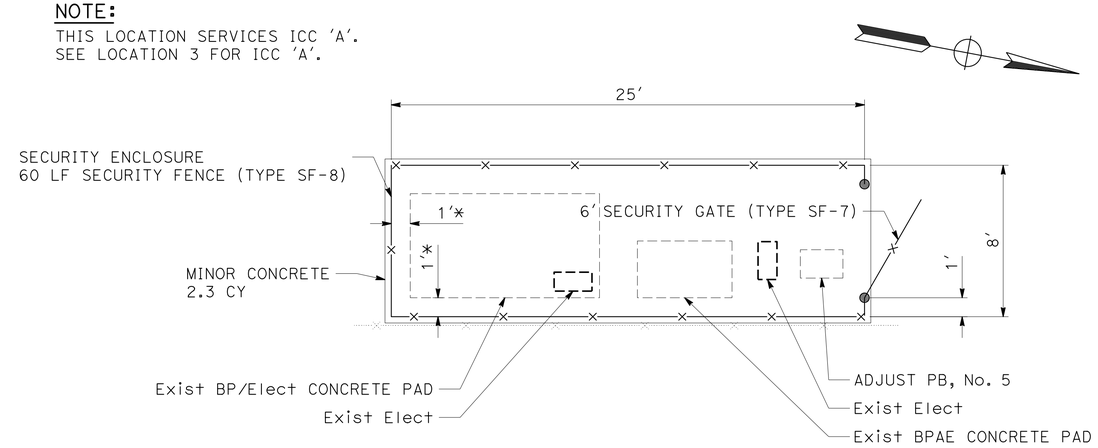

PLAN
LOCATION 4

LANDSCAPE DETAILS

NO SCALE

LD-1

LAST REVISION 07-31-13
DATE PLOTTED => 15-AUG-2013
TIME PLOTTED => 09:27

STATE OF CALIFORNIA - DEPARTMENT OF TRANSPORTATION
Caltrans® LANDSCAPE ARCHITECTURE

SENIOR LANDSCAPE ARCHITECT: BRAD COLE
CALCULATED-DESIGNED BY: GLORIA RAMIREZ
CHECKED BY: KEVIN GALLO
REVISED BY
DATE REVISED

Dist	COUNTY	ROUTE	POST MILES TOTAL PROJECT	SHEET No.	TOTAL SHEETS
06	Fre	168,180	Var	41	204

LICENSED LANDSCAPE ARCHITECT

08-05-13

PLANS APPROVAL DATE

LICENSED LANDSCAPE ARCHITECT MICHAEL W. MILLS No. 4770 STATE OF CALIFORNIA Expiration 11/30/14 Renewal Date 7/31/13 Date

THE STATE OF CALIFORNIA OR ITS OFFICERS OR AGENTS SHALL NOT BE RESPONSIBLE FOR THE ACCURACY OR COMPLETENESS OF SCANNED COPIES OF THIS PLAN SHEET.

NOTE:

EXISTING UTILITY FACILITIES HAVE NOT BEEN PLOTTED ON THESE PLANS.

NOTE:

THIS LOCATION SERVICES ICC '684'.
SEE LOCATION 6 FOR ICC '684'.

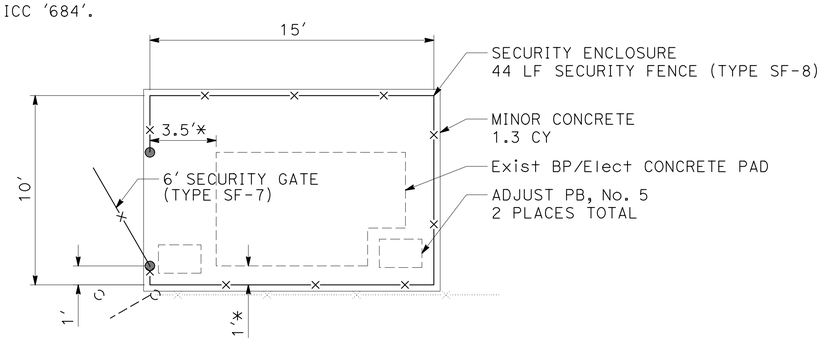

PLAN
LOCATION 5

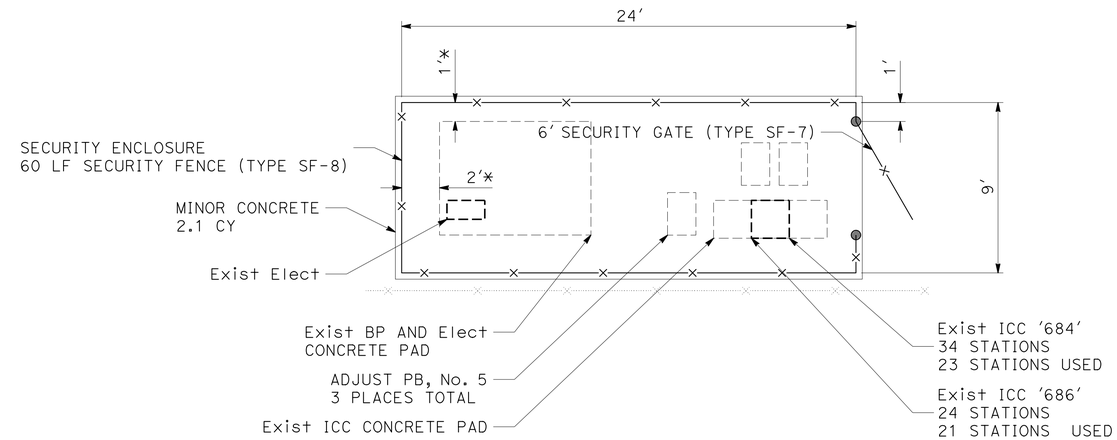

PLAN
LOCATION 6

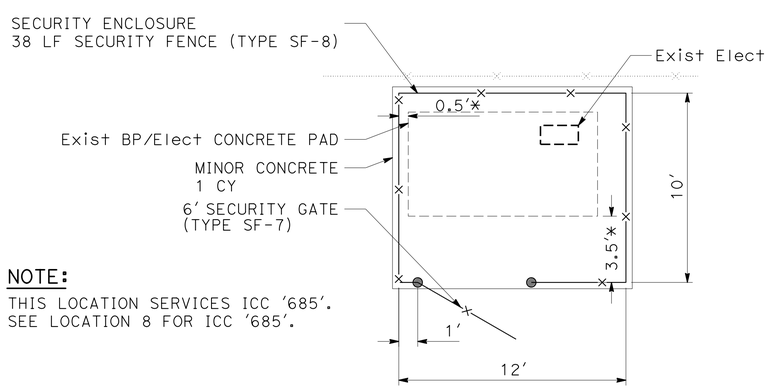

NOTE:

THIS LOCATION SERVICES ICC '685'.
SEE LOCATION 8 FOR ICC '685'.

PLAN
LOCATION 7

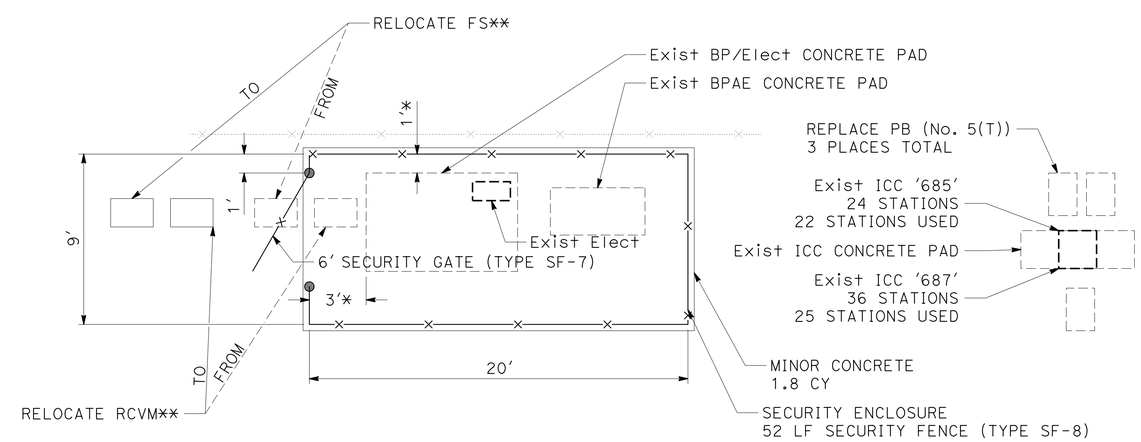

PLAN
LOCATION 8

LANDSCAPE DETAILS

NO SCALE

LD-2

STATE OF CALIFORNIA - DEPARTMENT OF TRANSPORTATION
Caltrans® LANDSCAPE ARCHITECTURE

SENIOR LANDSCAPE ARCHITECT: BRAD COLE
CALCULATED-DESIGNED BY: GLORIA RAMIREZ
CHECKED BY: KEVIN GALLO
REVISED BY
DATE REVISED

LAST REVISION 07-31-13
DATE PLOTTED => 15-AUG-2013
TIME PLOTTED => 09:27

Dist	COUNTY	ROUTE	POST MILES TOTAL PROJECT	SHEET No.	TOTAL SHEETS
06	Fre	168,180	Var	42	204

LICENSED LANDSCAPE ARCHITECT

08-05-13

PLANS APPROVAL DATE

LICENSED LANDSCAPE ARCHITECT MICHAEL W. MILLS No. 4770 STATE OF CALIFORNIA
Expiration 11/30/14
Renewal Date 7/31/13
Date

THE STATE OF CALIFORNIA OR ITS OFFICERS OR AGENTS SHALL NOT BE RESPONSIBLE FOR THE ACCURACY OR COMPLETENESS OF SCANNED COPIES OF THIS PLAN SHEET.

NOTE:

EXISTING UTILITY FACILITIES HAVE NOT BEEN PLOTTED ON THESE PLANS.

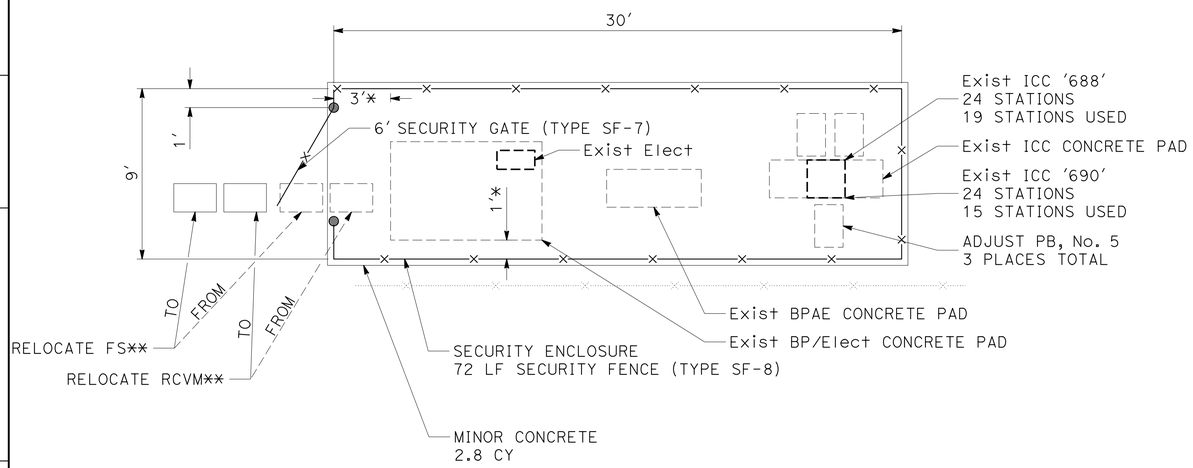

PLAN
LOCATION 9

NOTE:

THIS LOCATION SERVICES ICC '690'.
SEE LOCATION 9 FOR ICC '690'.

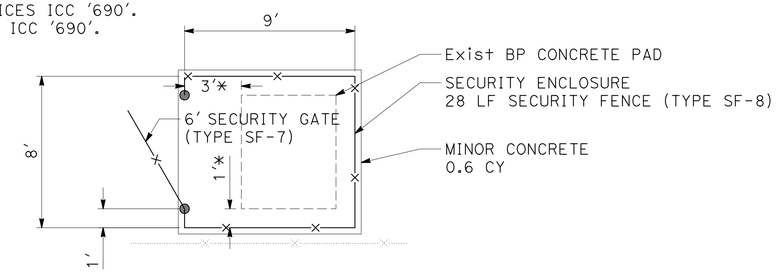

PLAN
LOCATION 10

NOTE:

THIS LOCATION SERVICES ICC '689'.
SEE LOCATION 12 FOR ICC '689'.

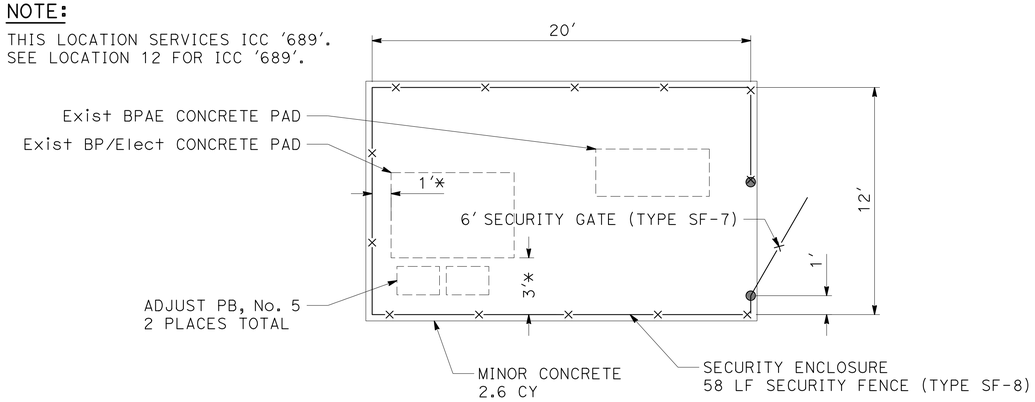

PLAN
LOCATION 11

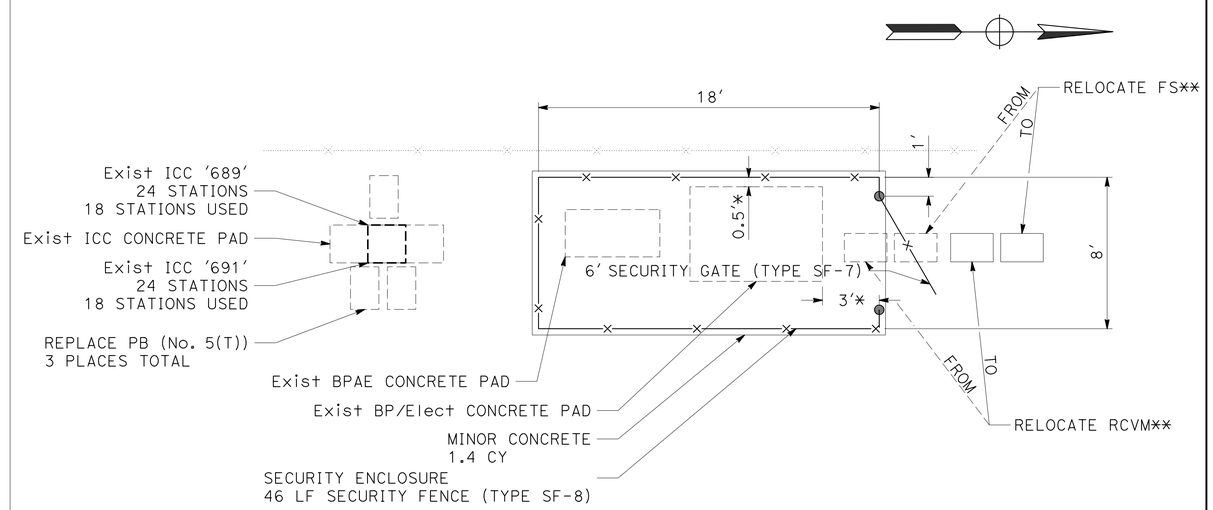

PLAN
LOCATION 12

LANDSCAPE DETAILS

NO SCALE

LD-3

STATE OF CALIFORNIA - DEPARTMENT OF TRANSPORTATION
Caltrans® LANDSCAPE ARCHITECTURE

SENIOR LANDSCAPE ARCHITECT: BRAD COLE
CALCULATED-DESIGNED BY: GLORIA RAMIREZ
CHECKED BY: KEVIN GALLO
REVISED BY
DATE REVISED

LAST REVISION 07-31-13
DATE PLOTTED => 15-AUG-2013
TIME PLOTTED => 09:27

Dist	COUNTY	ROUTE	POST MILES TOTAL PROJECT	SHEET No.	TOTAL SHEETS
06	Fre	168,180	Var	43	204

LICENSED LANDSCAPE ARCHITECT

08-05-13

PLANS APPROVAL DATE

LICENSED LANDSCAPE ARCHITECT MICHAEL W. MILLS No. 4780 STATE OF CALIFORNIA Expiration Date 11/30/14 Renewal Date 7/31/13 Date

THE STATE OF CALIFORNIA OR ITS OFFICERS OR AGENTS SHALL NOT BE RESPONSIBLE FOR THE ACCURACY OR COMPLETENESS OF SCANNED COPIES OF THIS PLAN SHEET.

NOTE:

EXISTING UTILITY FACILITIES HAVE NOT BEEN PLOTTED ON THESE PLANS.

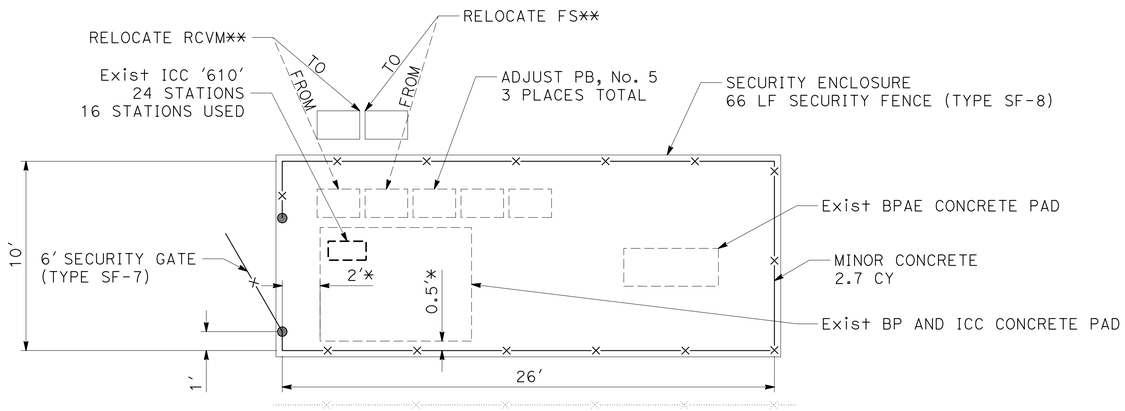

PLAN
LOCATION 13

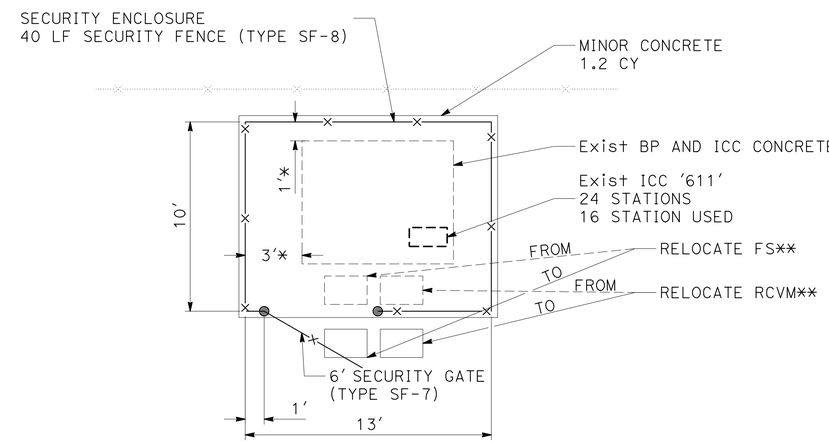

PLAN
LOCATION 14

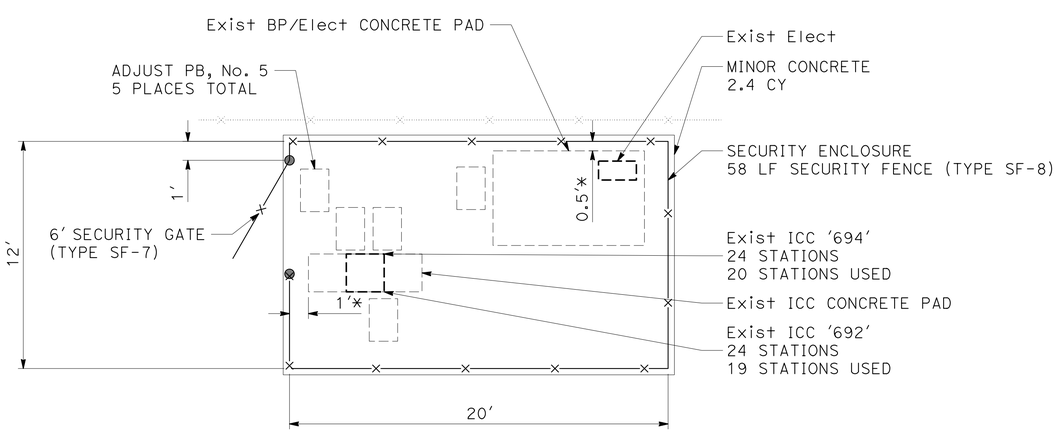

PLAN
LOCATION 15

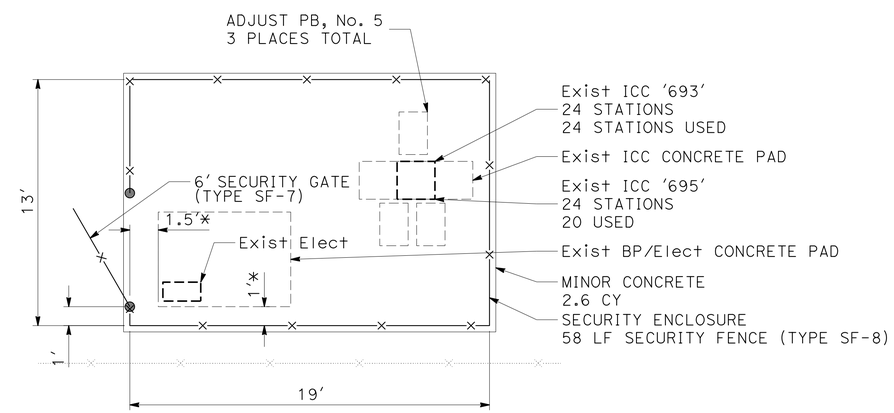

PLAN
LOCATION 16

LANDSCAPE DETAILS

NO SCALE

LD-4

STATE OF CALIFORNIA - DEPARTMENT OF TRANSPORTATION
Caltrans® LANDSCAPE ARCHITECTURE

SENIOR LANDSCAPE ARCHITECT: BRAD COLE
CALCULATED-DESIGNED BY: GLORIA RAMIREZ
CHECKED BY: KEVIN GALLO
REVISED BY / DATE REVISED

LAST REVISION 07-31-13
DATE PLOTTED => 15-AUG-2013
TIME PLOTTED => 09:27

Dist	COUNTY	ROUTE	POST MILES TOTAL PROJECT	SHEET No.	TOTAL SHEETS
06	Fre	168,180	Var	44	204

LICENSED LANDSCAPE ARCHITECT

08-05-13

PLANS APPROVAL DATE

LICENSED LANDSCAPE ARCHITECT MICHAEL W. MILLS No. 4770 STATE OF CALIFORNIA
Expiration 11/30/14
Renewal Date 7/31/13
Date

THE STATE OF CALIFORNIA OR ITS OFFICERS OR AGENTS SHALL NOT BE RESPONSIBLE FOR THE ACCURACY OR COMPLETENESS OF SCANNED COPIES OF THIS PLAN SHEET.

NOTE:

EXISTING UTILITY FACILITIES HAVE NOT BEEN PLOTTED ON THESE PLANS.

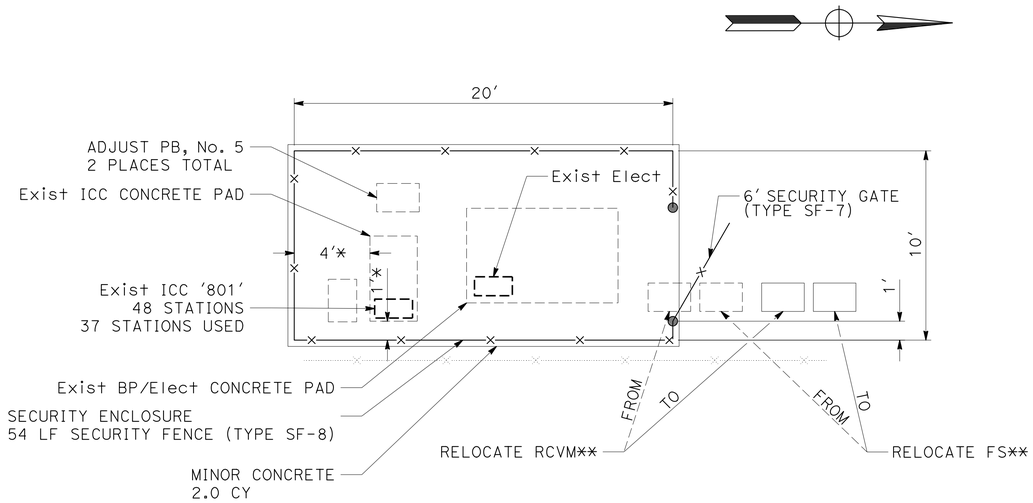

PLAN
LOCATION 17

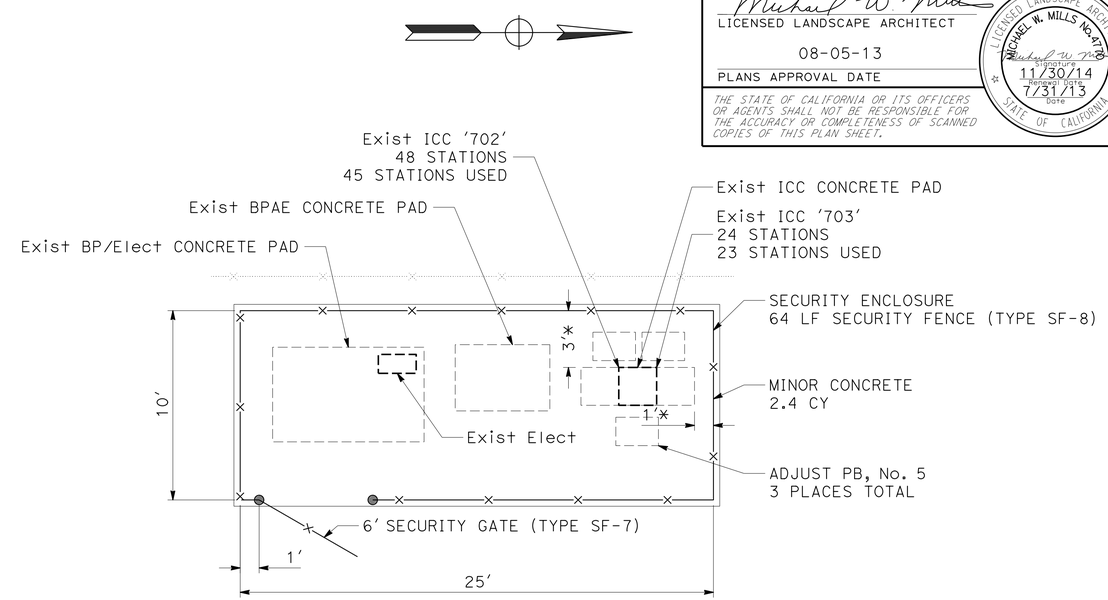

PLAN
LOCATION 18

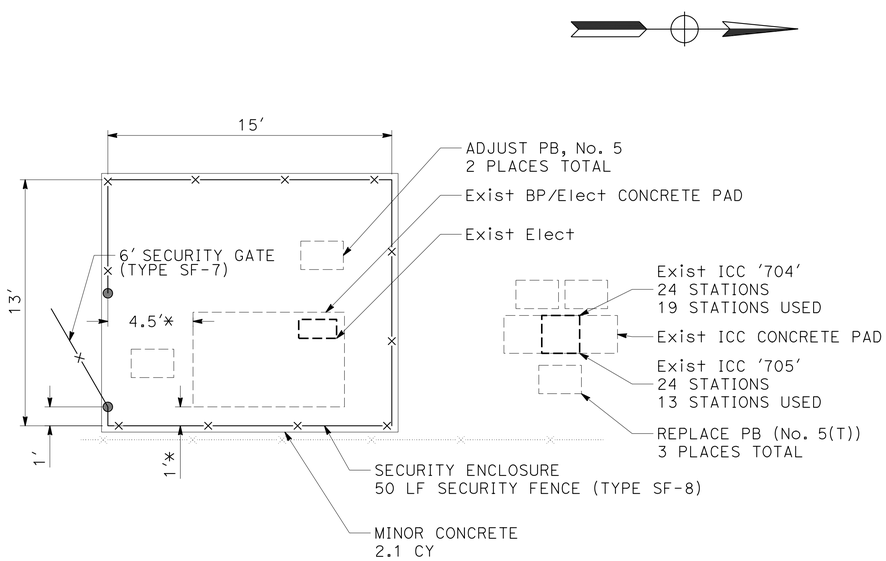

PLAN
LOCATION 19

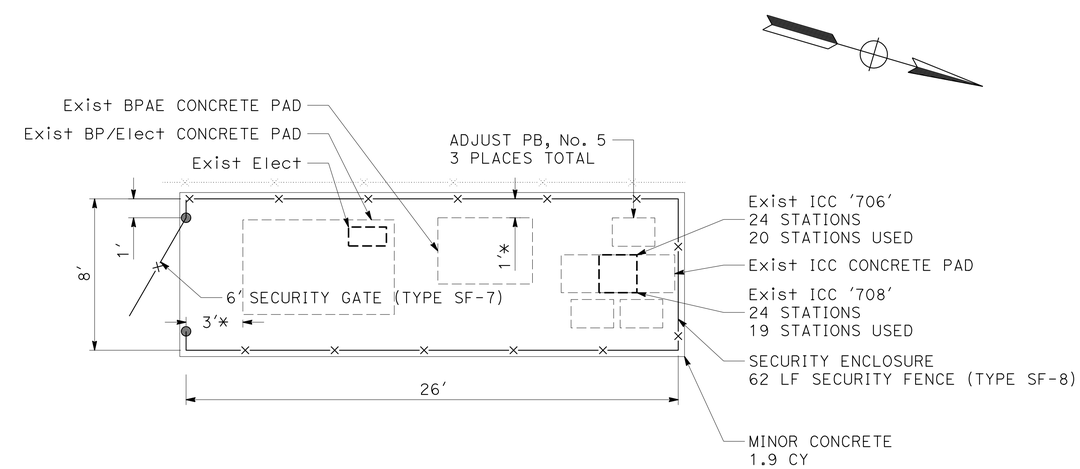

PLAN
LOCATION 20

LANDSCAPE DETAILS

NO SCALE

LD-5

STATE OF CALIFORNIA - DEPARTMENT OF TRANSPORTATION
Caltrans® LANDSCAPE ARCHITECTURE

SENIOR LANDSCAPE ARCHITECT: BRAD COLE
CALCULATED-DESIGNED BY: GLORIA RAMIREZ
CHECKED BY: KEVIN GALLO
REVISED BY
DATE REVISED

LAST REVISION 07-31-13
DATE PLOTTED => 15-AUG-2013
TIME PLOTTED => 09:27

Dist	COUNTY	ROUTE	POST MILES TOTAL PROJECT	SHEET No.	TOTAL SHEETS
06	Fre	168,180	Var	45	204

LICENSED LANDSCAPE ARCHITECT

08-05-13

PLANS APPROVAL DATE

LICENSED LANDSCAPE ARCHITECT MICHAEL W. MILLS No. 4720 STATE OF CALIFORNIA
Expiration 11/30/14
Renewal Date 7/31/13
Date

THE STATE OF CALIFORNIA OR ITS OFFICERS OR AGENTS SHALL NOT BE RESPONSIBLE FOR THE ACCURACY OR COMPLETENESS OF SCANNED COPIES OF THIS PLAN SHEET.

NOTE:

EXISTING UTILITY FACILITIES HAVE NOT BEEN PLOTTED ON THESE PLANS.

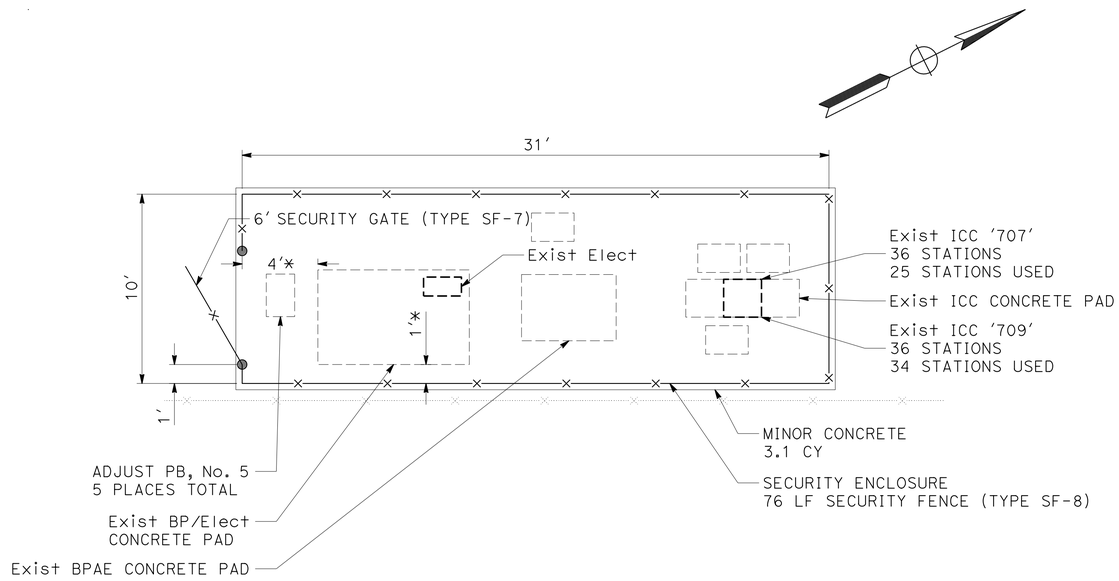

PLAN
LOCATION 21

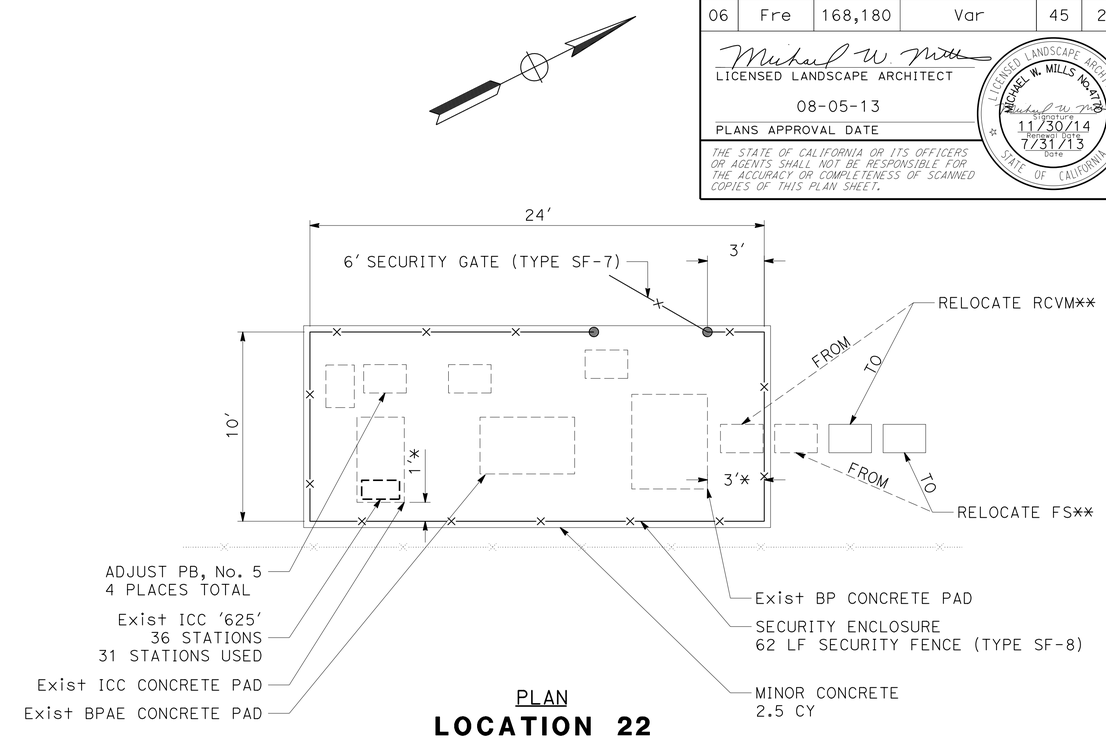

PLAN
LOCATION 22

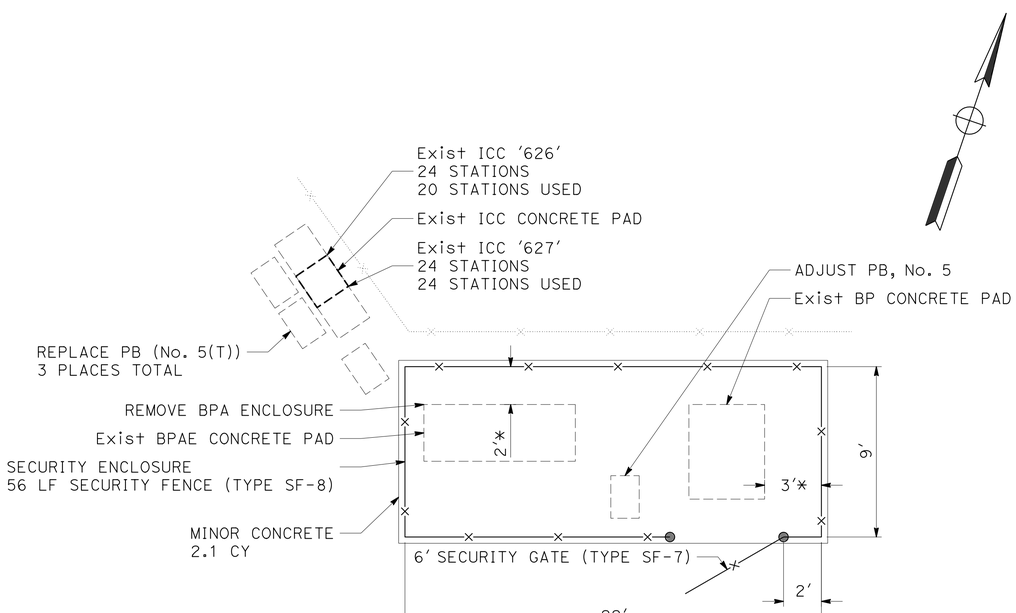

PLAN
LOCATION 23

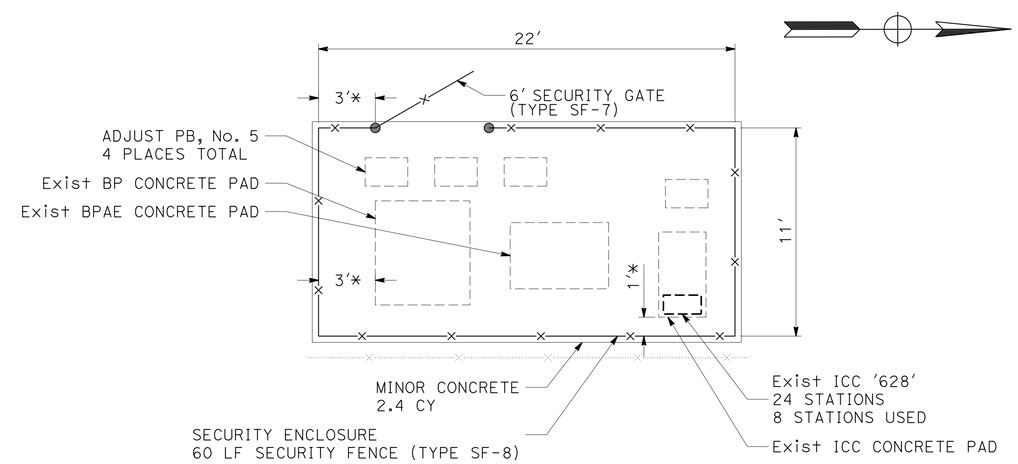

PLAN
LOCATION 24

LANDSCAPE DETAILS

NO SCALE

LD-6

STATE OF CALIFORNIA - DEPARTMENT OF TRANSPORTATION
Caltrans® LANDSCAPE ARCHITECTURE

SENIOR LANDSCAPE ARCHITECT: BRAD COLE
CALCULATED-DESIGNED BY: GLORIA RAMIREZ
CHECKED BY: KEVIN GALLO
REVISED BY
DATE REVISED

LAST REVISION 07-31-13
DATE PLOTTED => 15-AUG-2013
TIME PLOTTED => 09:27

Dist	COUNTY	ROUTE	POST MILES TOTAL PROJECT	SHEET No.	TOTAL SHEETS
06	Fre	168,180	Var	46	204

LICENSED LANDSCAPE ARCHITECT

08-05-13

PLANS APPROVAL DATE

LICENSED LANDSCAPE ARCHITECT MICHAEL W. MILLS No. 4770 STATE OF CALIFORNIA
Expiration 11/30/14
Renewal Date 7/31/13
Date

THE STATE OF CALIFORNIA OR ITS OFFICERS OR AGENTS SHALL NOT BE RESPONSIBLE FOR THE ACCURACY OR COMPLETENESS OF SCANNED COPIES OF THIS PLAN SHEET.

NOTE:

EXISTING UTILITY FACILITIES HAVE NOT BEEN PLOTTED ON THESE PLANS.

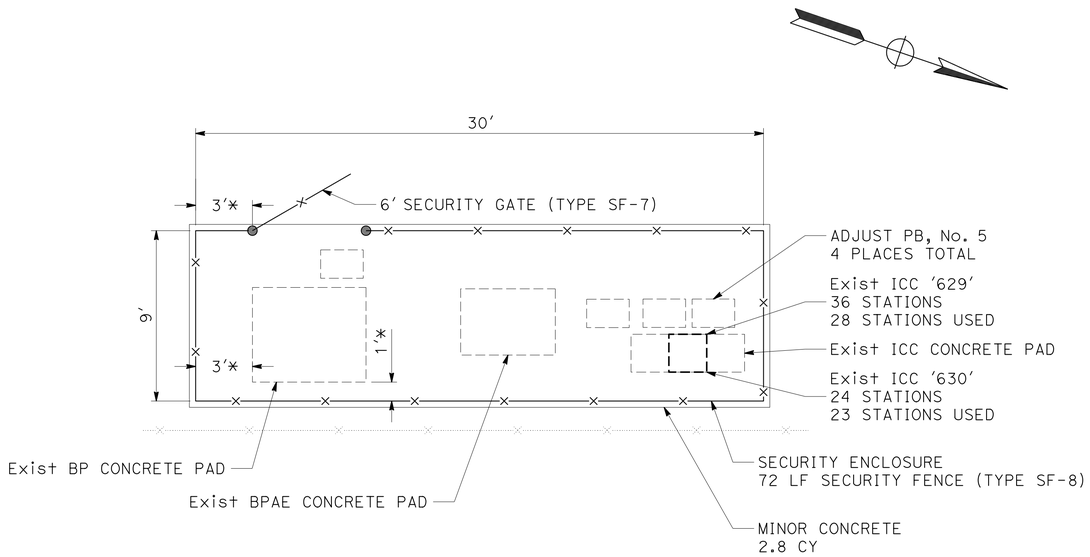

PLAN
LOCATION 25

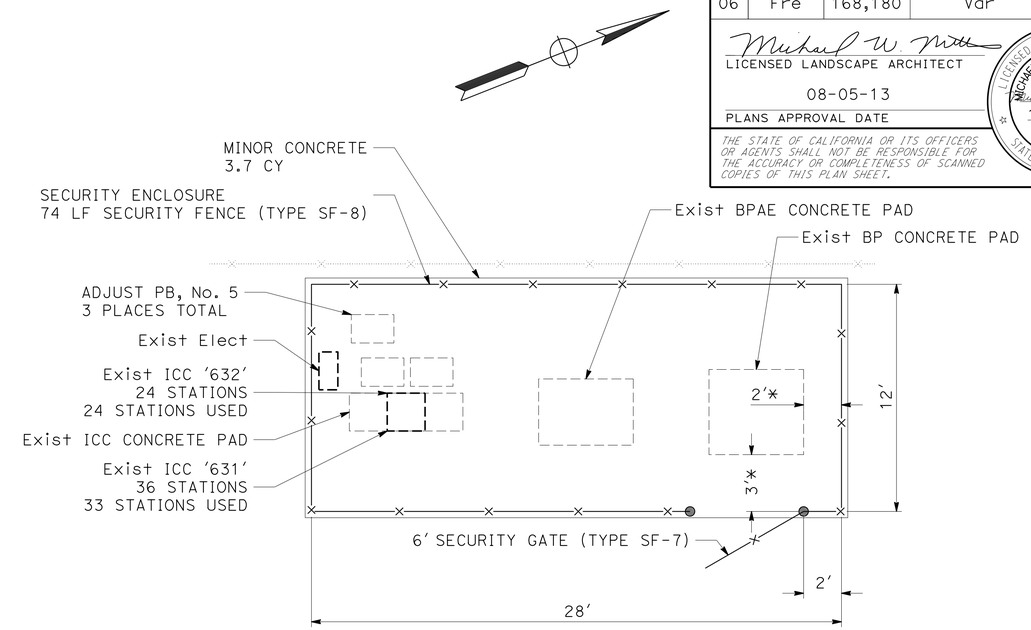

PLAN
LOCATION 26

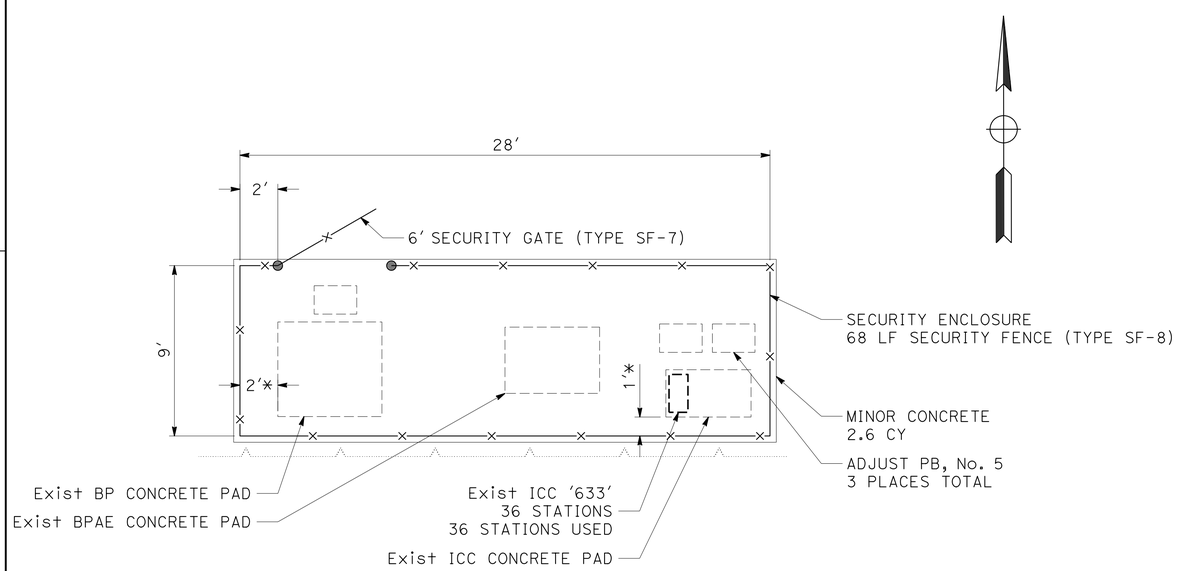

PLAN
LOCATION 27

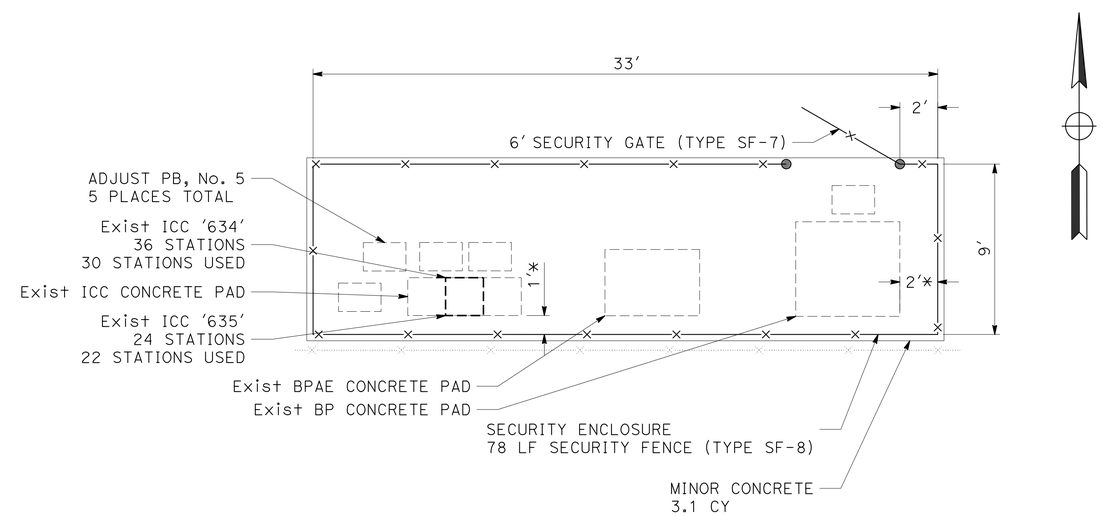

PLAN
LOCATION 28

LANDSCAPE DETAILS

NO SCALE

LD-7

REVISED BY | DATE REVISED
GLORIA RAMIREZ | KEVIN GALLO
CALCULATED-DESIGNED BY | CHECKED BY
SENIOR LANDSCAPE ARCHITECT
BRAD COLE

STATE OF CALIFORNIA - DEPARTMENT OF TRANSPORTATION
Caltrans® LANDSCAPE ARCHITECTURE

LAST REVISION 07-31-13 | DATE PLOTTED => 15-AUG-2013 | TIME PLOTTED => 09:27

Dist	COUNTY	ROUTE	POST MILES TOTAL PROJECT	SHEET No.	TOTAL SHEETS
06	Fre	168,180	Var	47	204

LICENSED LANDSCAPE ARCHITECT

08-05-13

PLANS APPROVAL DATE

LICENSED LANDSCAPE ARCHITECT MICHAEL W. MILLS No. 4770 STATE OF CALIFORNIA

Expiration 11/30/14
Renewal Date 7/31/13
Date

THE STATE OF CALIFORNIA OR ITS OFFICERS OR AGENTS SHALL NOT BE RESPONSIBLE FOR THE ACCURACY OR COMPLETENESS OF SCANNED COPIES OF THIS PLAN SHEET.

NOTE:

EXISTING UTILITY FACILITIES HAVE NOT BEEN PLOTTED ON THESE PLANS.

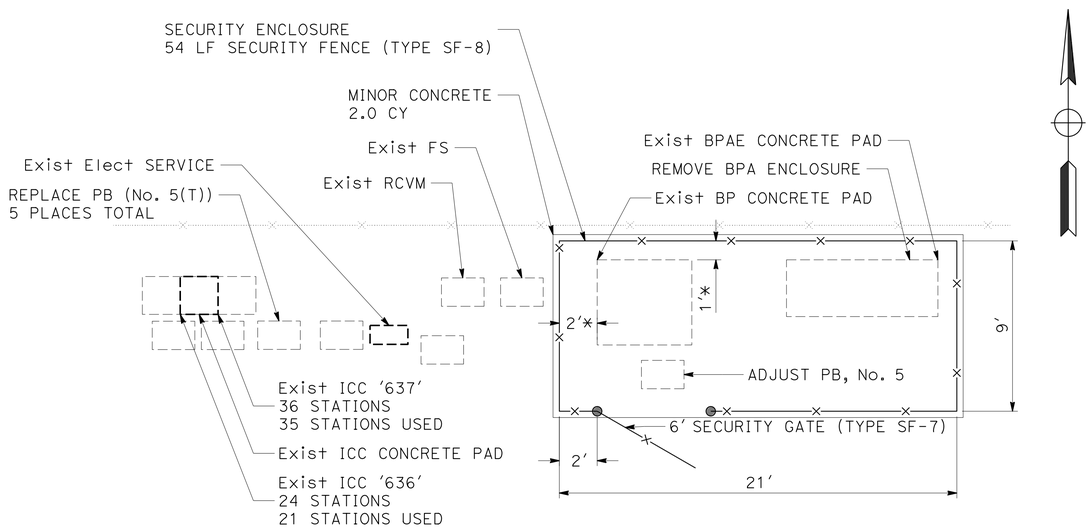

PLAN
LOCATION 29

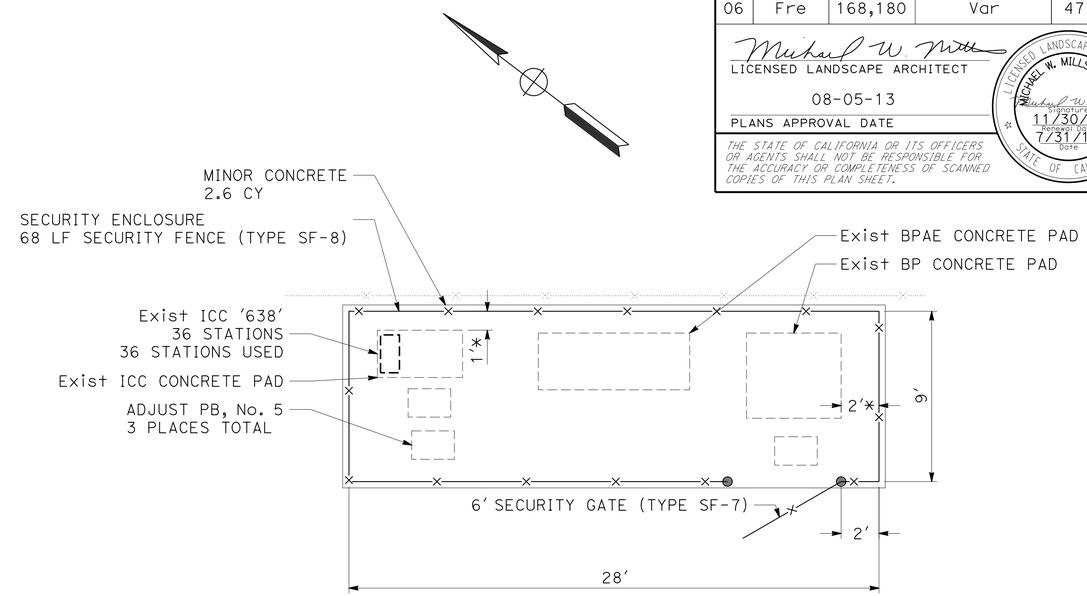

PLAN
LOCATION 30

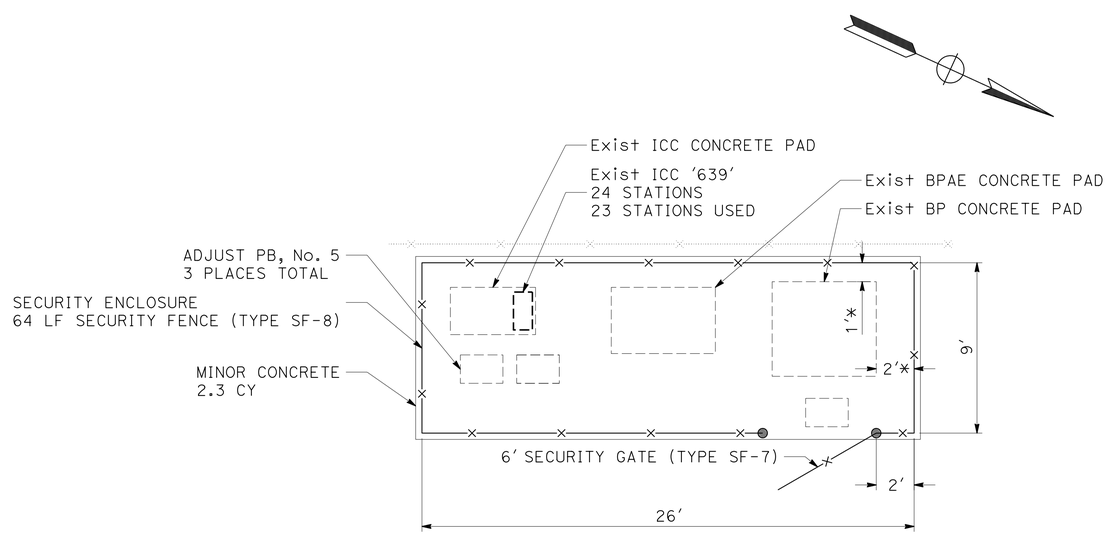

PLAN
LOCATION 31

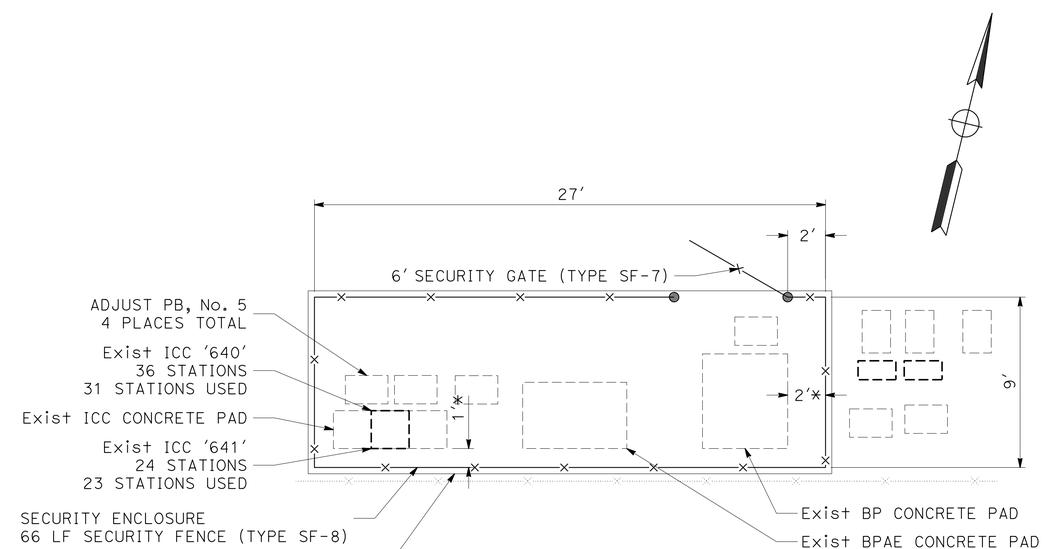

PLAN
LOCATION 32

LANDSCAPE DETAILS

NO SCALE

LD-8

STATE OF CALIFORNIA - DEPARTMENT OF TRANSPORTATION
Caltrans® LANDSCAPE ARCHITECTURE

SENIOR LANDSCAPE ARCHITECT: BRAD COLE
CALCULATED-DESIGNED BY: GLORIA RAMIREZ
CHECKED BY: KEVIN GALLO
REVISED BY
DATE REVISED

LAST REVISION 07-31-13
DATE PLOTTED => 15-AUG-2013
TIME PLOTTED => 09:27

Dist	COUNTY	ROUTE	POST MILES TOTAL PROJECT	SHEET No.	TOTAL SHEETS
06	Fre	168,180	Var	48	204

LICENSED LANDSCAPE ARCHITECT

08-05-13

PLANS APPROVAL DATE

LICENSED LANDSCAPE ARCHITECT MICHAEL W. MILLS No. 4770 Expiration 11/30/14 Renewal Date 7/31/13 Date STATE OF CALIFORNIA

THE STATE OF CALIFORNIA OR ITS OFFICERS OR AGENTS SHALL NOT BE RESPONSIBLE FOR THE ACCURACY OR COMPLETENESS OF SCANNED COPIES OF THIS PLAN SHEET.

NOTE:

EXISTING UTILITY FACILITIES HAVE NOT BEEN PLOTTED ON THESE PLANS.

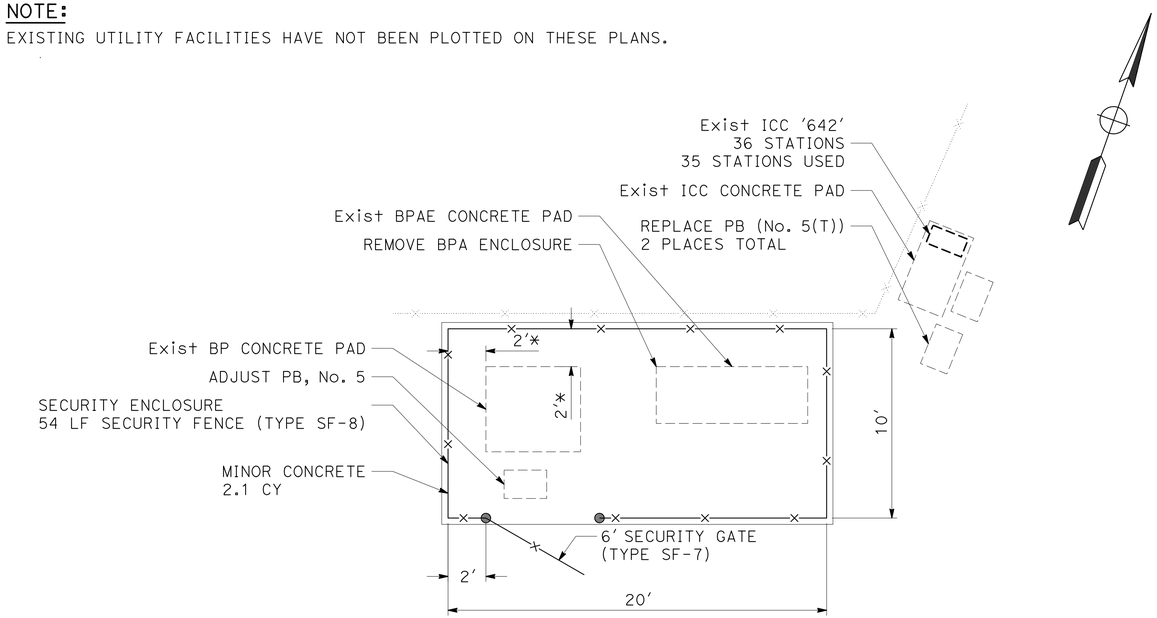

PLAN
LOCATION 33

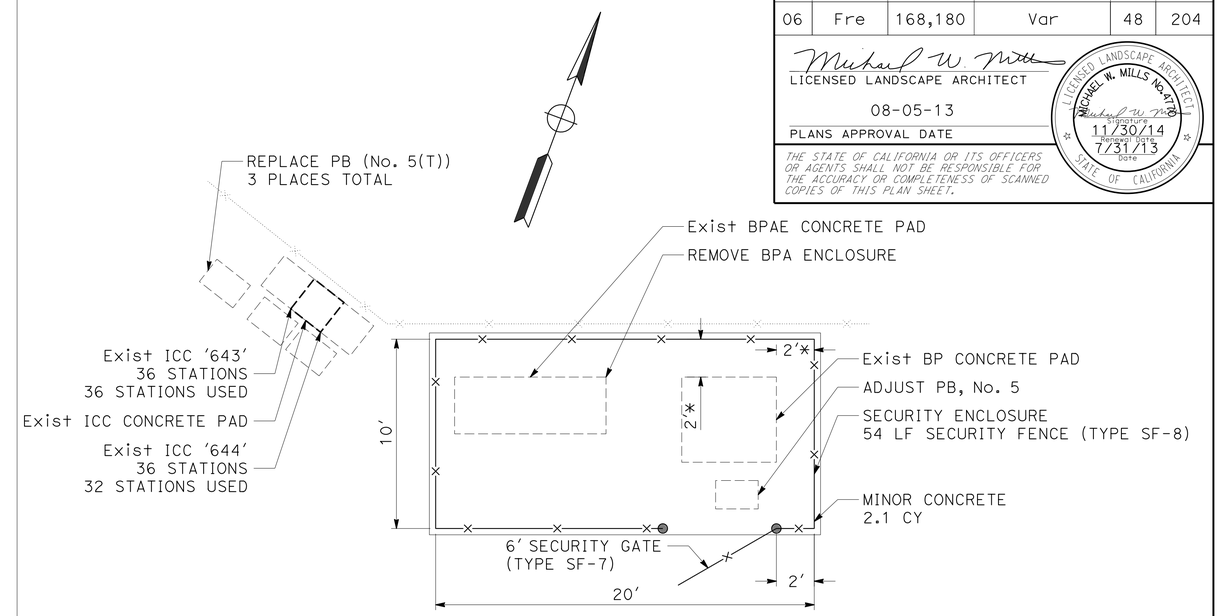

PLAN
LOCATION 34

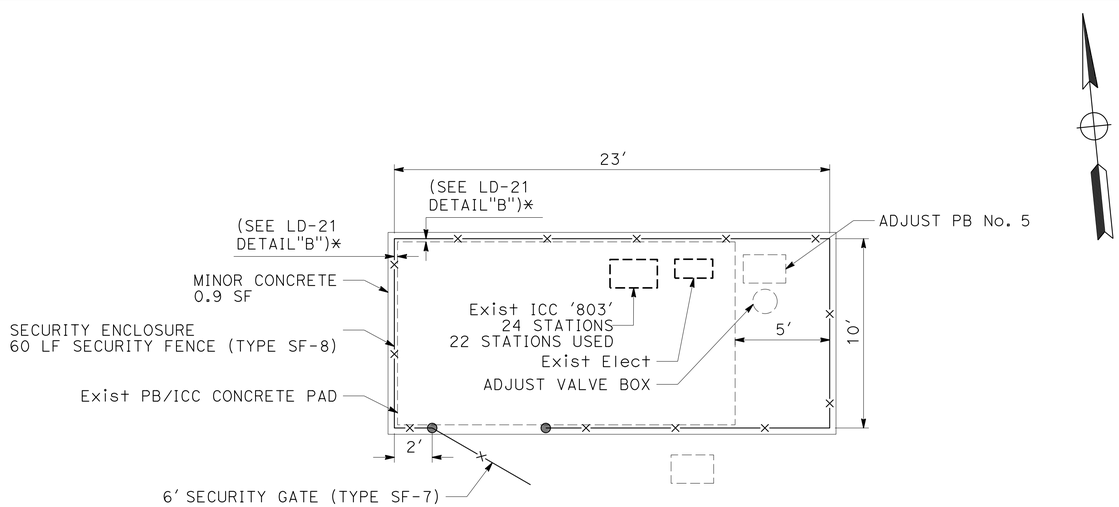

PLAN
LOCATION 35

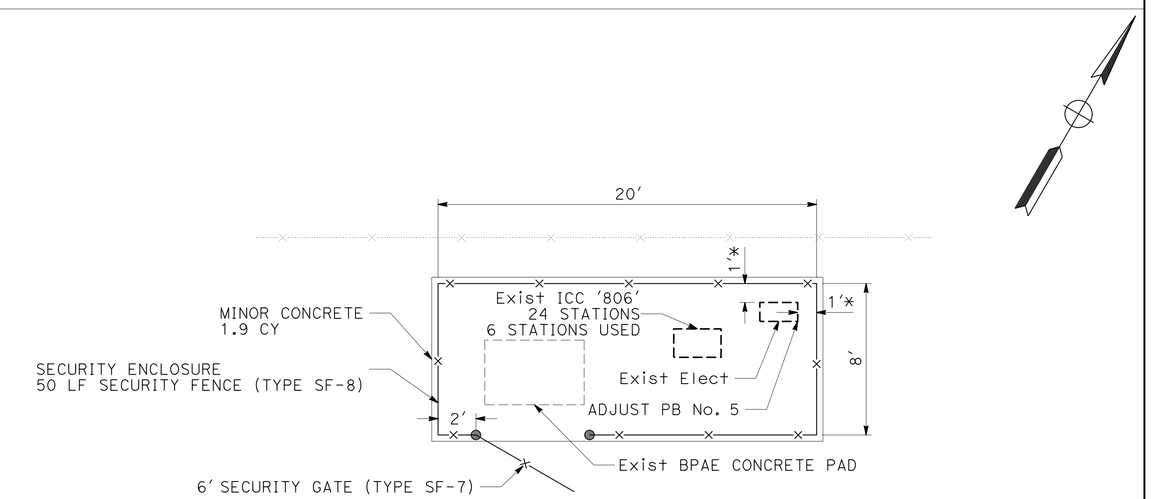

PLAN
LOCATION 36

LANDSCAPE DETAILS

NO SCALE

LD-9

STATE OF CALIFORNIA - DEPARTMENT OF TRANSPORTATION
Caltrans® LANDSCAPE ARCHITECTURE

SENIOR LANDSCAPE ARCHITECT: BRAD COLE

CALCULATED-DESIGNED BY: GLORIA RAMIREZ
CHECKED BY: KEVIN GALLO

REVISED BY | DATE REVISED

LAST REVISION 07-31-13
DATE PLOTTED => 15-AUG-2013
TIME PLOTTED => 09:27

Dist	COUNTY	ROUTE	POST MILES TOTAL PROJECT	SHEET No.	TOTAL SHEETS
06	Fre	168,180	Var	49	204

LICENSED LANDSCAPE ARCHITECT

08-05-13

PLANS APPROVAL DATE

LICENSED LANDSCAPE ARCHITECT MICHAEL W. MILLS No. 4770 Expiration 11/30/14 Renewal Date 7/31/13 Date STATE OF CALIFORNIA

THE STATE OF CALIFORNIA OR ITS OFFICERS OR AGENTS SHALL NOT BE RESPONSIBLE FOR THE ACCURACY OR COMPLETENESS OF SCANNED COPIES OF THIS PLAN SHEET.

NOTE:

EXISTING UTILITY FACILITIES HAVE NOT BEEN PLOTTED ON THESE PLANS.

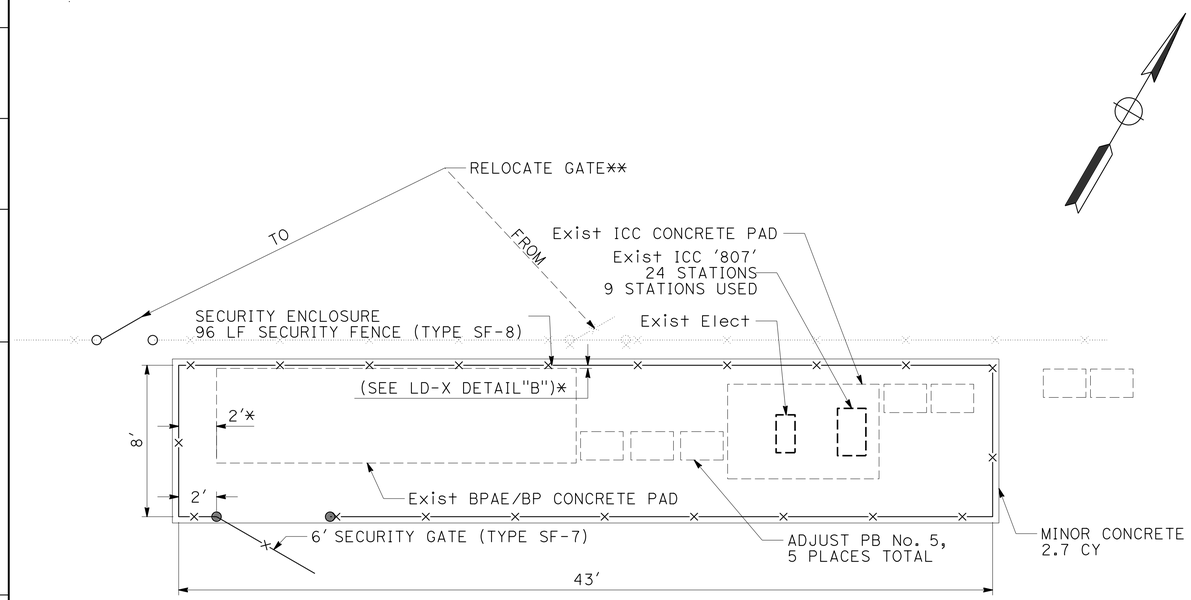

PLAN
LOCATION 37

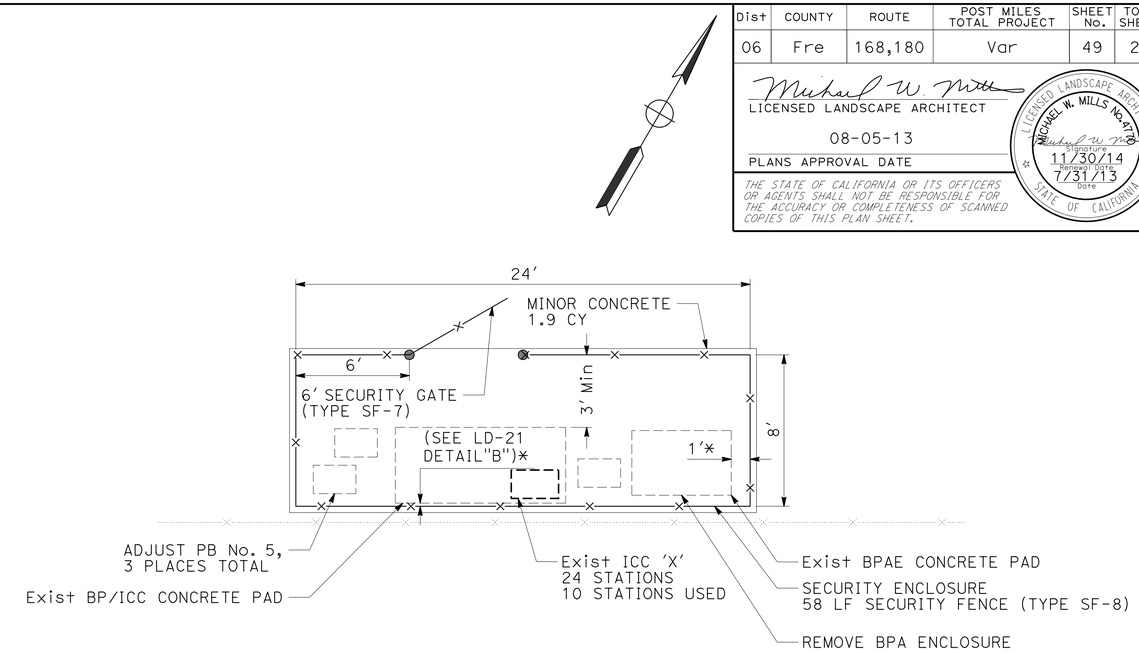

PLAN
LOCATION 38

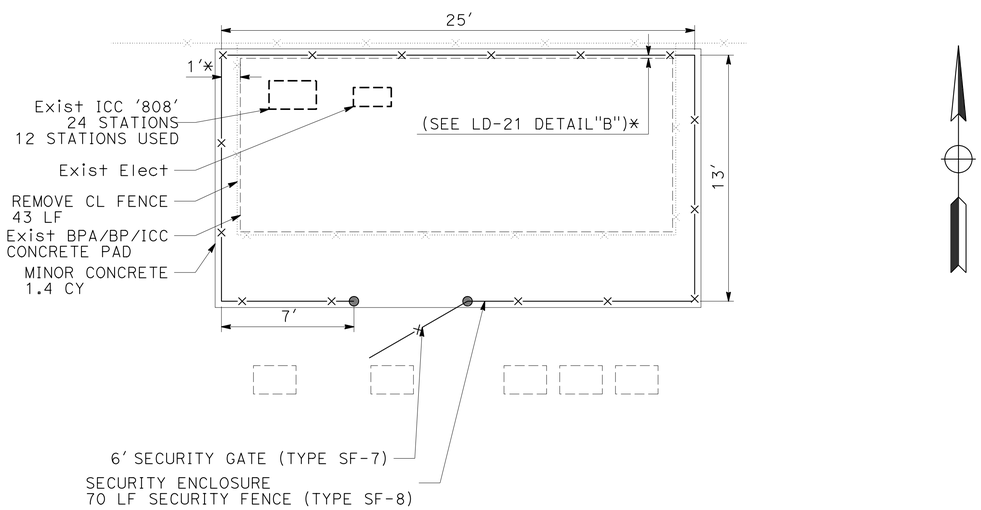

PLAN
LOCATION 39

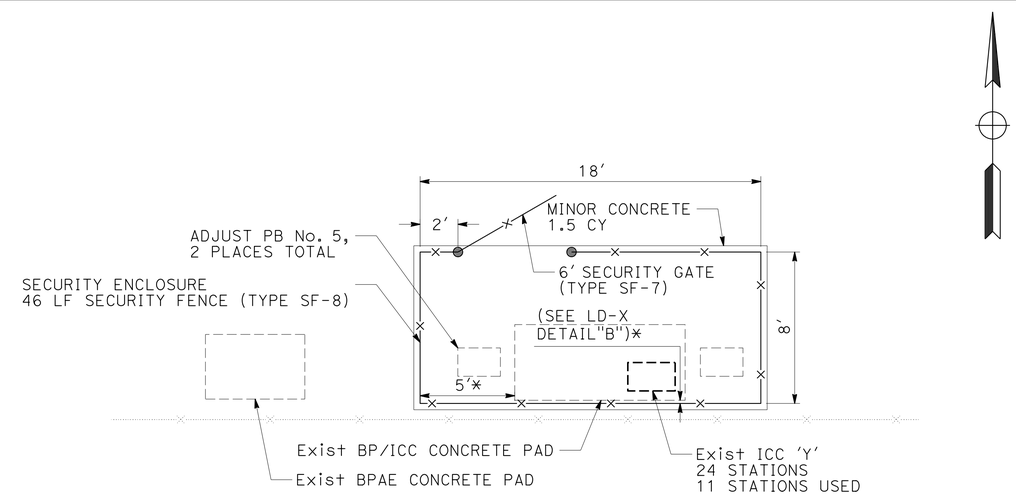

PLAN
LOCATION 40

LANDSCAPE DETAILS

NO SCALE

LD-10

REVISED BY | DATE REVISED

GLORIA RAMIREZ | KEVIN GALLO

CALCULATED-DESIGNED BY | CHECKED BY

SENIOR LANDSCAPE ARCHITECT | BRAD COLE

STATE OF CALIFORNIA - DEPARTMENT OF TRANSPORTATION

Caltrans® LANDSCAPE ARCHITECTURE

LAST REVISION 07-31-13 | DATE PLOTTED => 15-AUG-2013 | TIME PLOTTED => 09:27

Dist	COUNTY	ROUTE	POST MILES TOTAL PROJECT	SHEET No.	TOTAL SHEETS
06	Fre	168,180	Var	50	204

LICENSED LANDSCAPE ARCHITECT

08-05-13

PLANS APPROVAL DATE

LICENSED LANDSCAPE ARCHITECT MICHAEL W. MILLS No. 4770 STATE OF CALIFORNIA
Expiration Date 11/30/14
Renewal Date 7/31/13
Date

THE STATE OF CALIFORNIA OR ITS OFFICERS OR AGENTS SHALL NOT BE RESPONSIBLE FOR THE ACCURACY OR COMPLETENESS OF SCANNED COPIES OF THIS PLAN SHEET.

NOTE:

EXISTING UTILITY FACILITIES HAVE NOT BEEN PLOTTED ON THESE PLANS.

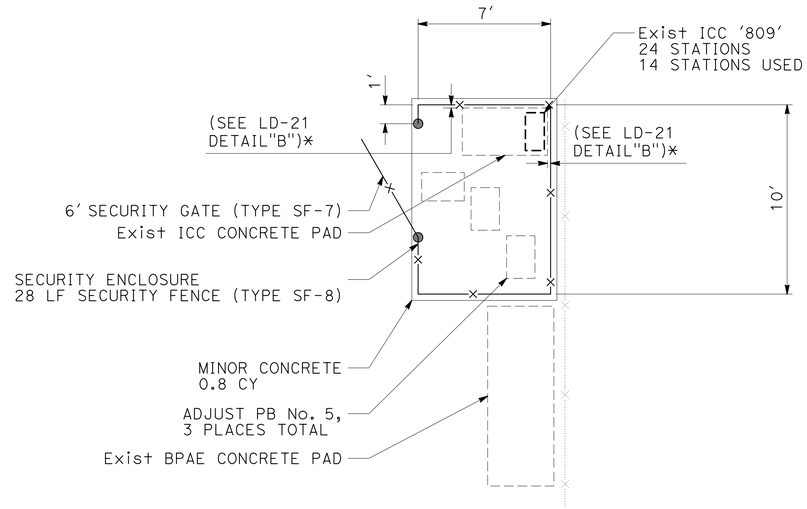

PLAN
LOCATION 41

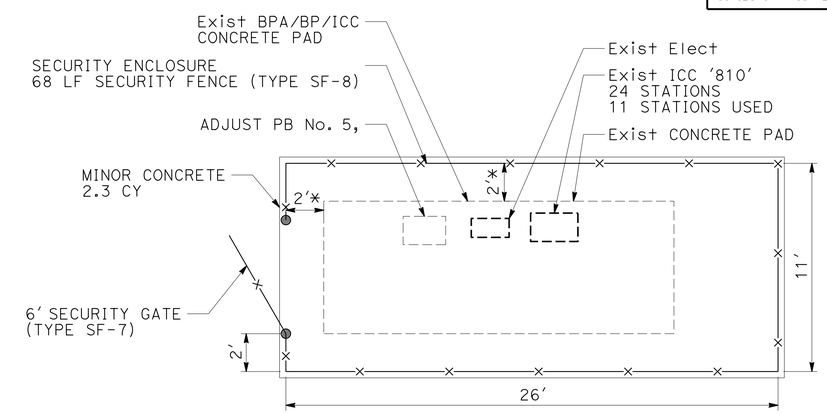

PLAN
LOCATION 42

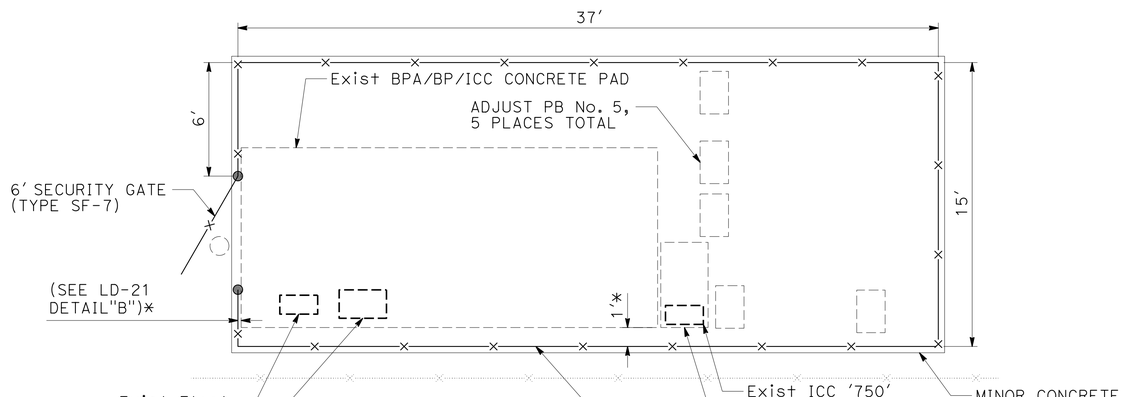

PLAN
LOCATION 43

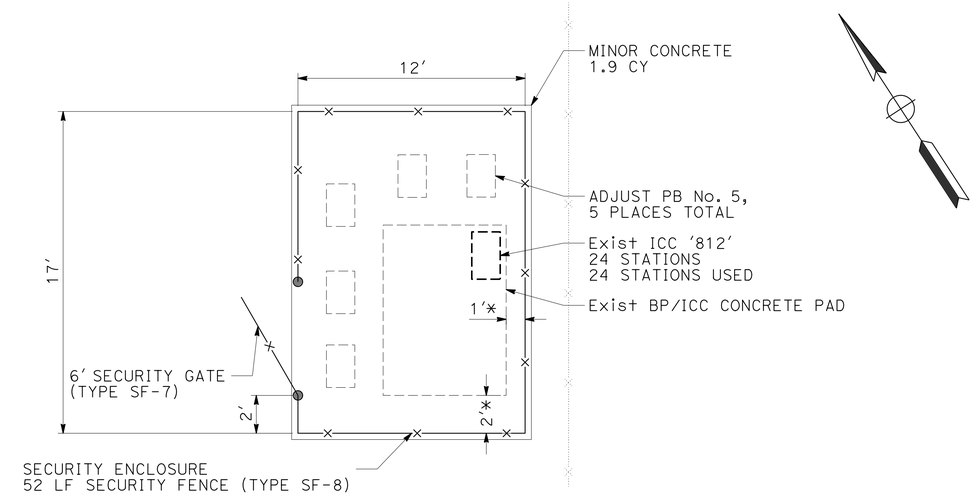

PLAN
LOCATION 44

LANDSCAPE DETAILS

NO SCALE

LD-11

STATE OF CALIFORNIA - DEPARTMENT OF TRANSPORTATION
Caltrans® LANDSCAPE ARCHITECTURE

SENIOR LANDSCAPE ARCHITECT: BRAD COLE
CALCULATED-DESIGNED BY: GLORIA RAMIREZ
CHECKED BY: KEVIN GALLO
REVISED BY
DATE REVISED

LAST REVISION 07-31-13
DATE PLOTTED => 15-AUG-2013
TIME PLOTTED => 09:27

Dist	COUNTY	ROUTE	POST MILES TOTAL PROJECT	SHEET No.	TOTAL SHEETS
06	Fre	168,180	Var	51	204

LICENSED LANDSCAPE ARCHITECT

08-05-13

PLANS APPROVAL DATE

LICENSED LANDSCAPE ARCHITECT MICHAEL W. MILLS No. 4780 STATE OF CALIFORNIA
Expiration 11/30/14
Renewal Date 7/31/13
Date

THE STATE OF CALIFORNIA OR ITS OFFICERS OR AGENTS SHALL NOT BE RESPONSIBLE FOR THE ACCURACY OR COMPLETENESS OF SCANNED COPIES OF THIS PLAN SHEET.

NOTE:

EXISTING UTILITY FACILITIES HAVE NOT BEEN PLOTTED ON THESE PLANS.

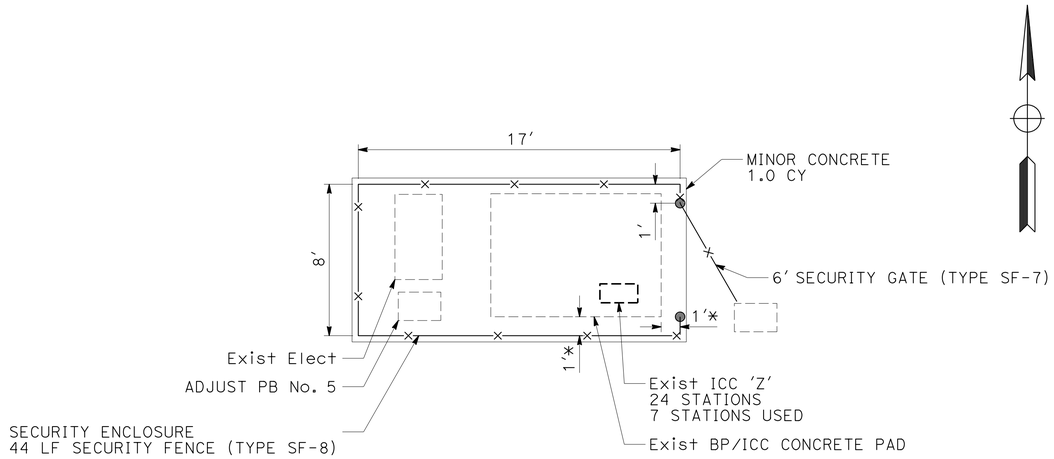

PLAN
LOCATION 45

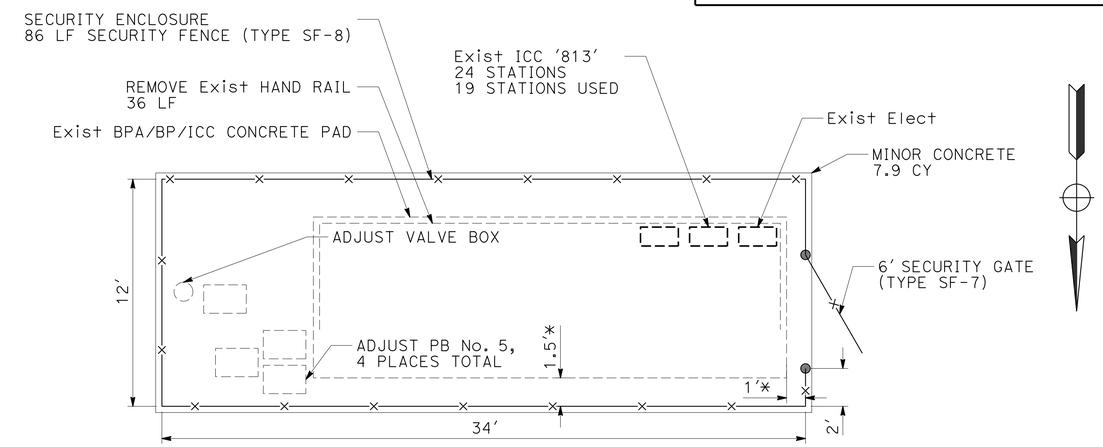

PLAN
LOCATION 46

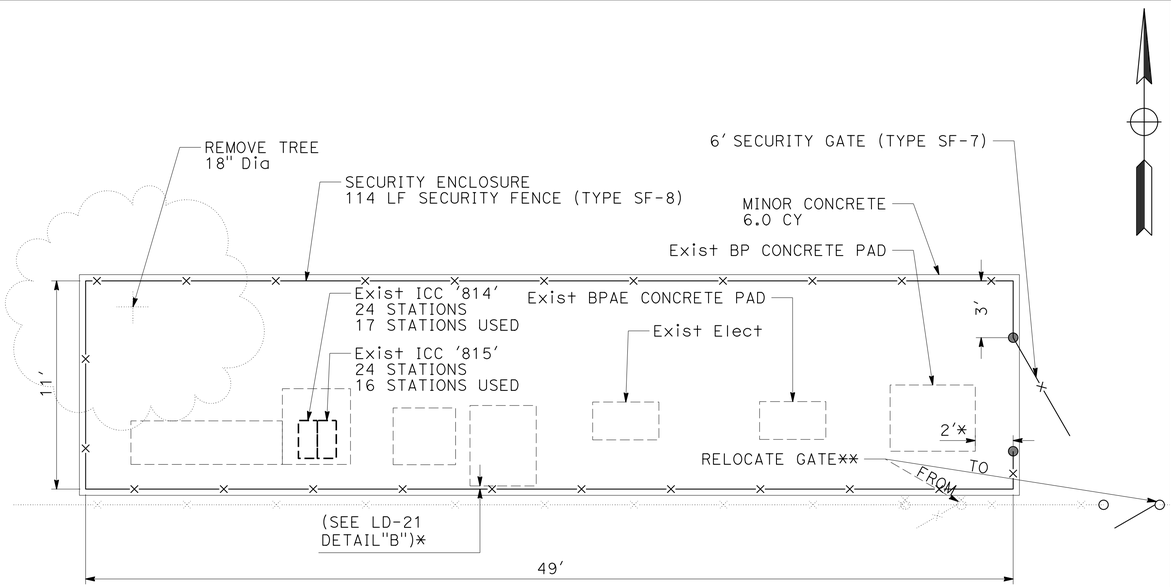

PLAN
LOCATION 47

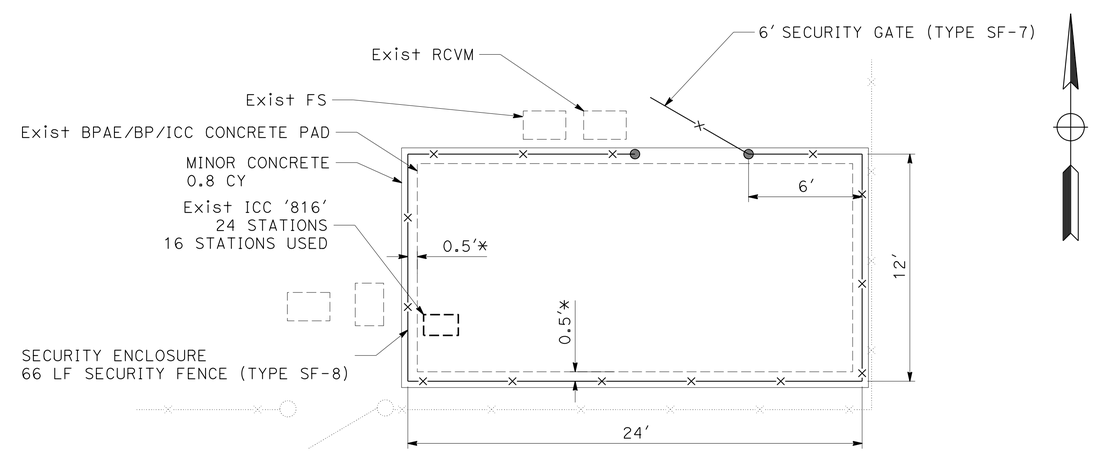

PLAN
LOCATION 48

LANDSCAPE DETAILS

NO SCALE

LD-12

REVISED BY | DATE REVISED
GLORIA RAMIREZ | KEVIN GALLO
CALCULATED-DESIGNED BY | CHECKED BY
SENIOR LANDSCAPE ARCHITECT | BRAD COLE

STATE OF CALIFORNIA - DEPARTMENT OF TRANSPORTATION
Caltrans® LANDSCAPE ARCHITECTURE

LAST REVISION 07-31-13 | DATE PLOTTED => 15-AUG-2013 | TIME PLOTTED => 09:27

Dist	COUNTY	ROUTE	POST MILES TOTAL PROJECT	SHEET No.	TOTAL SHEETS
06	Fre	168,180	Var	52	204

LICENSED LANDSCAPE ARCHITECT

08-05-13

PLANS APPROVAL DATE

LICENSED LANDSCAPE ARCHITECT MICHAEL W. MILLS No. 4770 STATE OF CALIFORNIA
Expiration 11/30/14
Renewal Date 7/31/13
Date

THE STATE OF CALIFORNIA OR ITS OFFICERS OR AGENTS SHALL NOT BE RESPONSIBLE FOR THE ACCURACY OR COMPLETENESS OF SCANNED COPIES OF THIS PLAN SHEET.

NOTE:

EXISTING UTILITY FACILITIES HAVE NOT BEEN PLOTTED ON THESE PLANS.

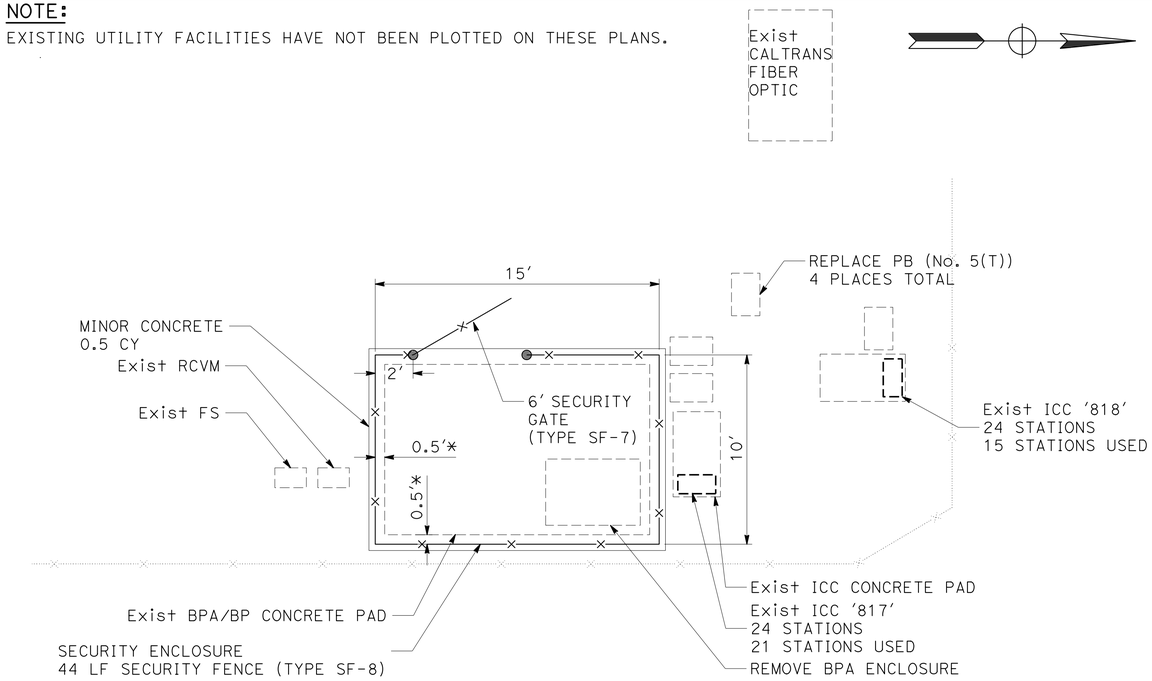

PLAN
LOCATION 49

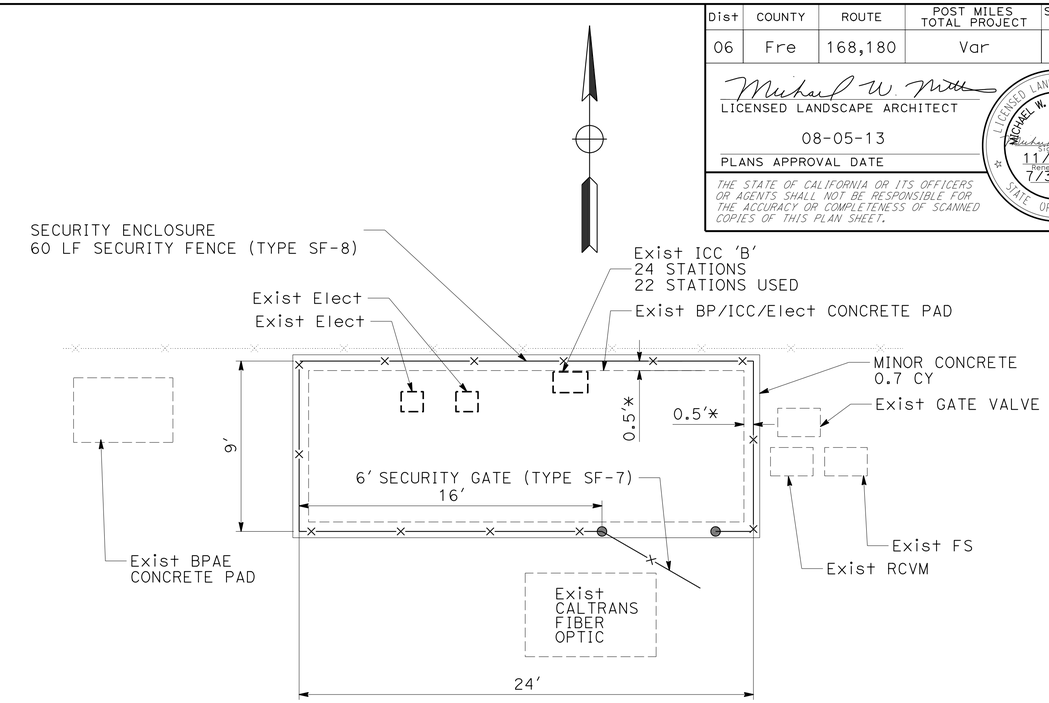

PLAN
LOCATION 50

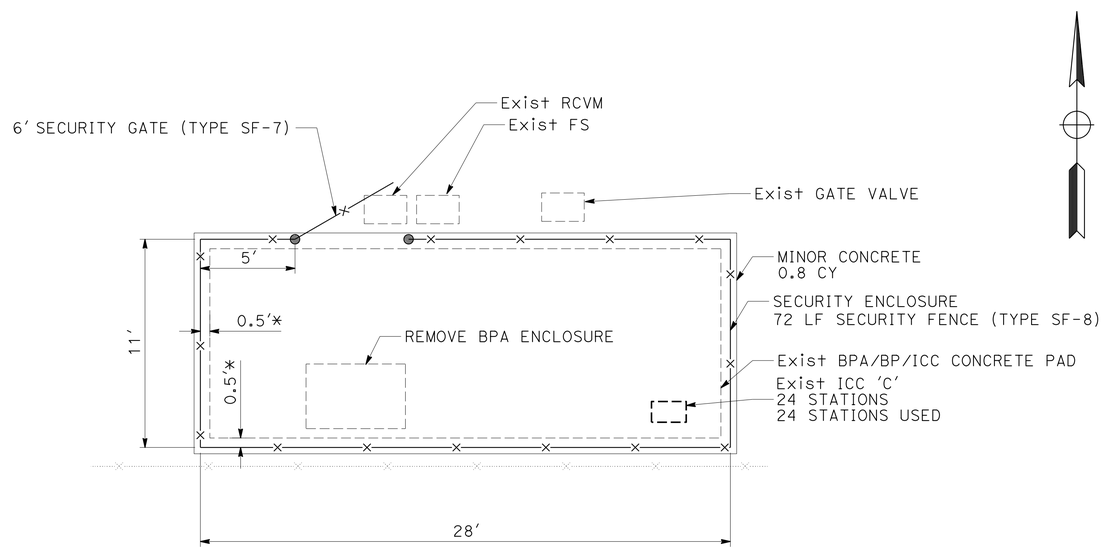

PLAN
LOCATION 51

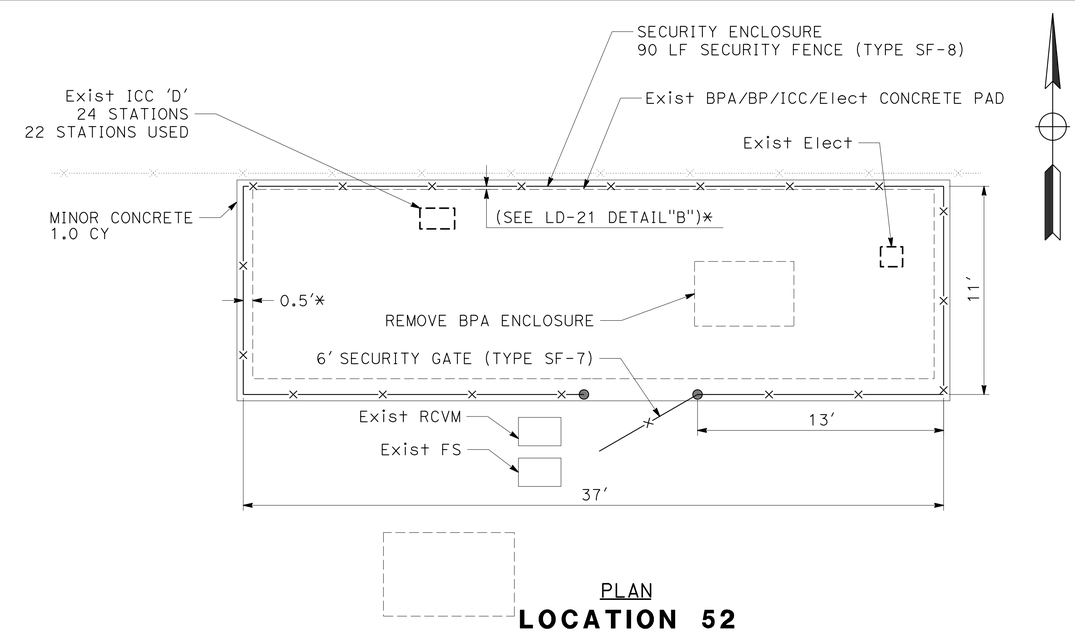

PLAN
LOCATION 52

LANDSCAPE DETAILS

NO SCALE

LD-13

STATE OF CALIFORNIA - DEPARTMENT OF TRANSPORTATION
Caltrans® LANDSCAPE ARCHITECTURE

SENIOR LANDSCAPE ARCHITECT: BRAD COLE

CALCULATED-DESIGNED BY: GLORIA RAMIREZ
CHECKED BY: KEVIN GALLO

REVISED BY | DATE REVISED

LAST REVISION 07-31-13 | DATE PLOTTED => 15-AUG-2013 | TIME PLOTTED => 09:27

Dist	COUNTY	ROUTE	POST MILES TOTAL PROJECT	SHEET No.	TOTAL SHEETS
06	Fre	168,180	Var	53	204

LICENSED LANDSCAPE ARCHITECT

08-05-13

PLANS APPROVAL DATE

LICENSED LANDSCAPE ARCHITECT MICHAEL W. MILLS No. 4779 Expiration 11/30/14 Renewal Date 7/31/13 Date STATE OF CALIFORNIA

THE STATE OF CALIFORNIA OR ITS OFFICERS OR AGENTS SHALL NOT BE RESPONSIBLE FOR THE ACCURACY OR COMPLETENESS OF SCANNED COPIES OF THIS PLAN SHEET.

NOTE:

EXISTING UTILITY FACILITIES HAVE NOT BEEN PLOTTED ON THESE PLANS.

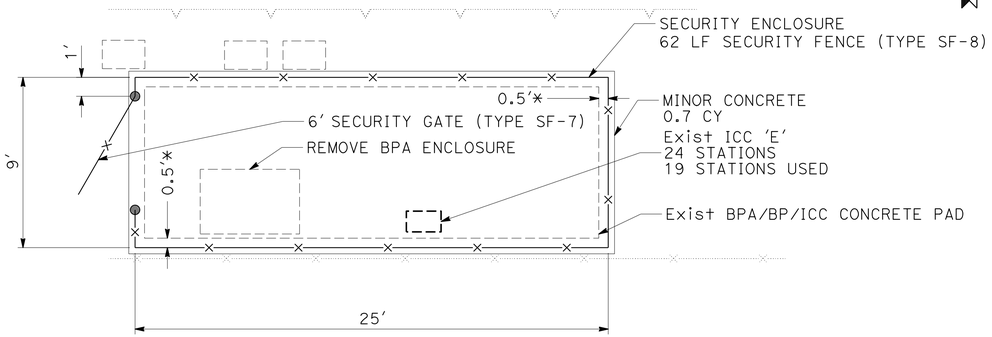

PLAN
LOCATION 53

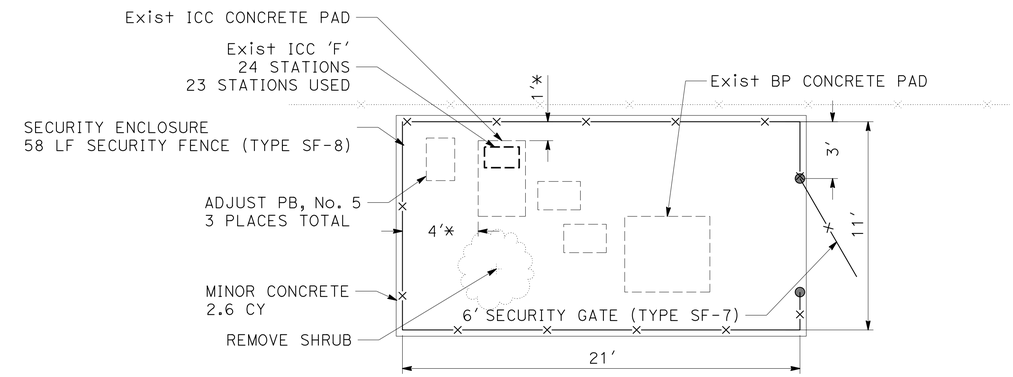

PLAN
LOCATION 54

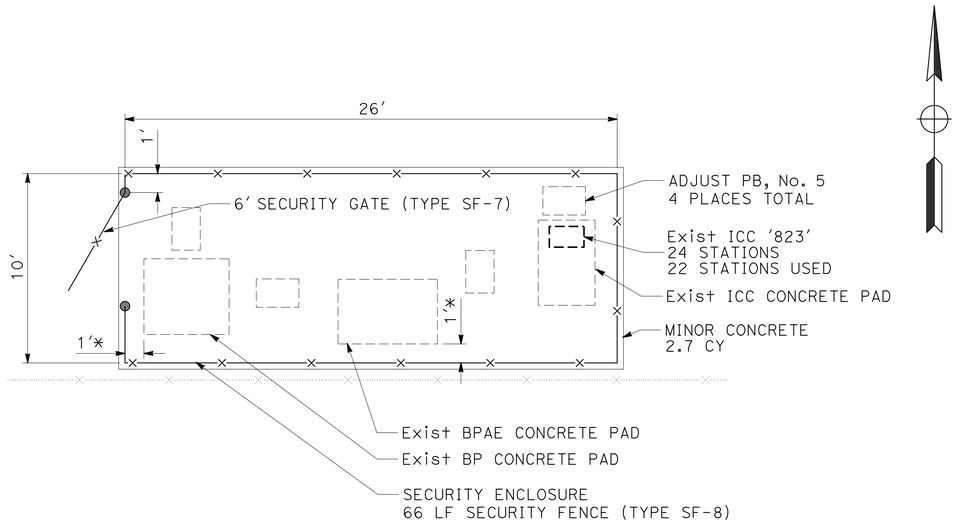

PLAN
LOCATION 55

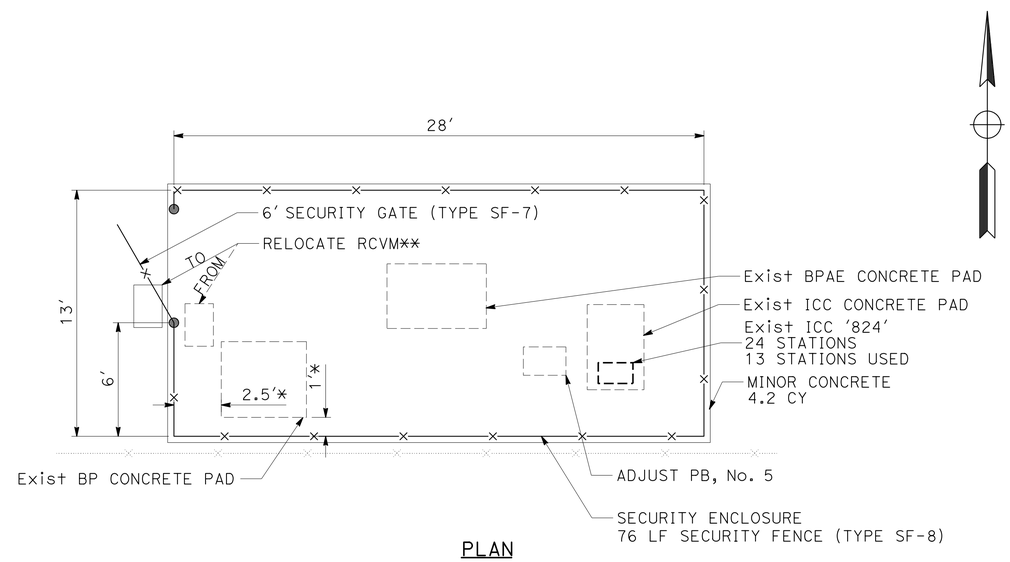

PLAN
LOCATION 56

LANDSCAPE DETAILS

NO SCALE

LD-14

STATE OF CALIFORNIA - DEPARTMENT OF TRANSPORTATION
Caltrans® LANDSCAPE ARCHITECTURE

SENIOR LANDSCAPE ARCHITECT: BRAD COLE
CALCULATED-DESIGNED BY: GLORIA RAMIREZ
CHECKED BY: KEVIN GALLO
REVISED BY / DATE REVISED

LAST REVISION 07-31-13
DATE PLOTTED => 15-AUG-2013
TIME PLOTTED => 09:27

Dist	COUNTY	ROUTE	POST MILES TOTAL PROJECT	SHEET No.	TOTAL SHEETS
06	Fre	168,180	Var	54	204

LICENSED LANDSCAPE ARCHITECT

08-05-13

PLANS APPROVAL DATE

LICENSED LANDSCAPE ARCHITECT MICHAEL W. MILLS No. 4779 STATE OF CALIFORNIA

Expiration 11/30/14
Renewal Date 7/31/13
Date

THE STATE OF CALIFORNIA OR ITS OFFICERS OR AGENTS SHALL NOT BE RESPONSIBLE FOR THE ACCURACY OR COMPLETENESS OF SCANNED COPIES OF THIS PLAN SHEET.

NOTE:

EXISTING UTILITY FACILITIES HAVE NOT BEEN PLOTTED ON THESE PLANS.

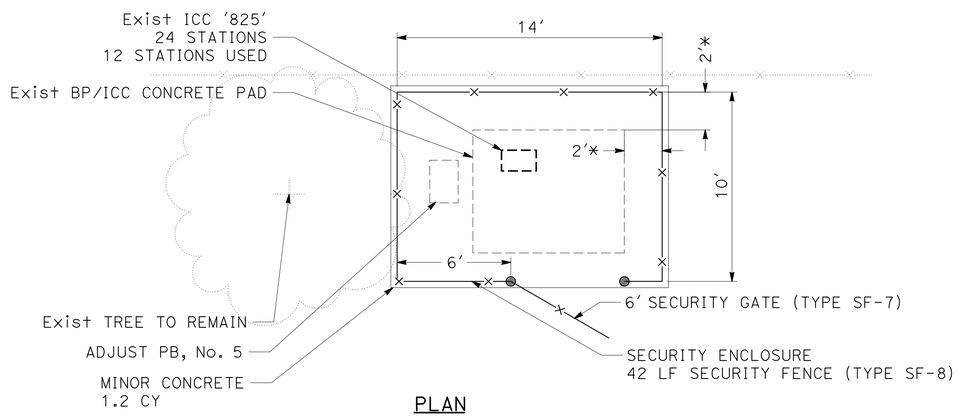

PLAN
LOCATION 57

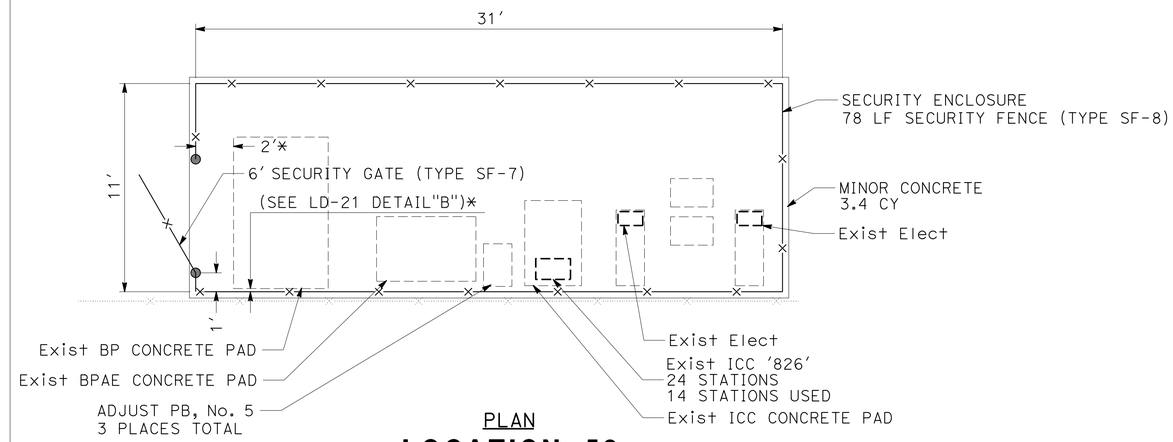

PLAN
LOCATION 58

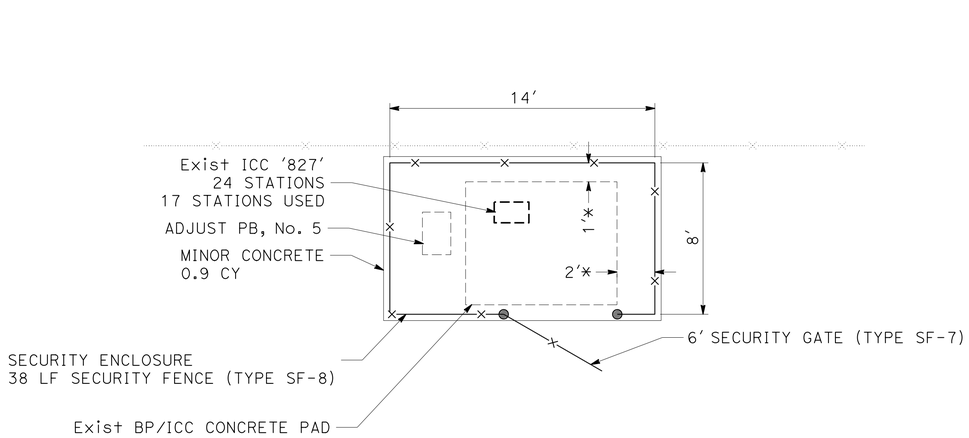

PLAN
LOCATION 59

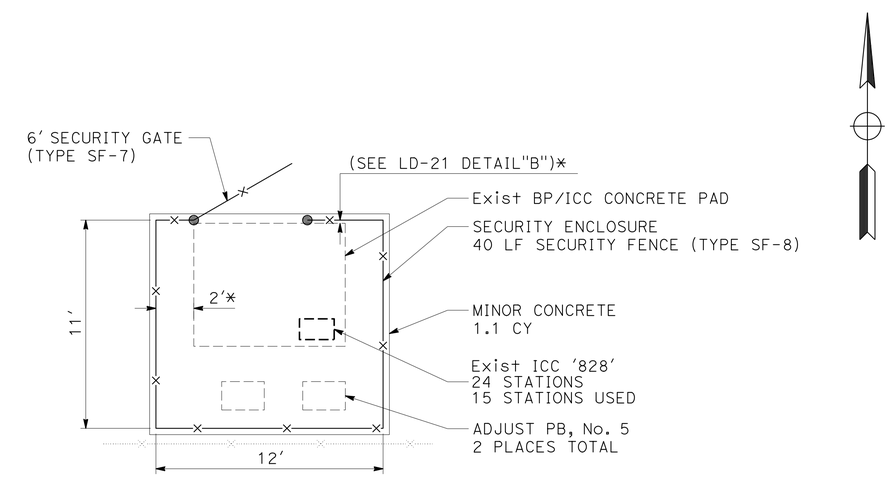

PLAN
LOCATION 60

LANDSCAPE DETAILS

NO SCALE

LD-15

STATE OF CALIFORNIA - DEPARTMENT OF TRANSPORTATION
Caltrans® LANDSCAPE ARCHITECTURE

SENIOR LANDSCAPE ARCHITECT: BRAD COLE

CALCULATED-DESIGNED BY: GLORIA RAMIREZ
CHECKED BY: KEVIN GALLO

REVISED BY | DATE REVISED

LAST REVISION 07-31-13
DATE PLOTTED => 15-AUG-2013
TIME PLOTTED => 09:27

Dist	COUNTY	ROUTE	POST MILES TOTAL PROJECT	SHEET No.	TOTAL SHEETS
06	Fre	168,180	Var	55	204

LICENSED LANDSCAPE ARCHITECT

08-05-13

PLANS APPROVAL DATE

LICENSED LANDSCAPE ARCHITECT MICHAEL W. MILLS No. 4779 STATE OF CALIFORNIA
Expiration 11/30/14
Renewal Date 7/31/13
Date

THE STATE OF CALIFORNIA OR ITS OFFICERS OR AGENTS SHALL NOT BE RESPONSIBLE FOR THE ACCURACY OR COMPLETENESS OF SCANNED COPIES OF THIS PLAN SHEET.

NOTE:

EXISTING UTILITY FACILITIES HAVE NOT BEEN PLOTTED ON THESE PLANS.

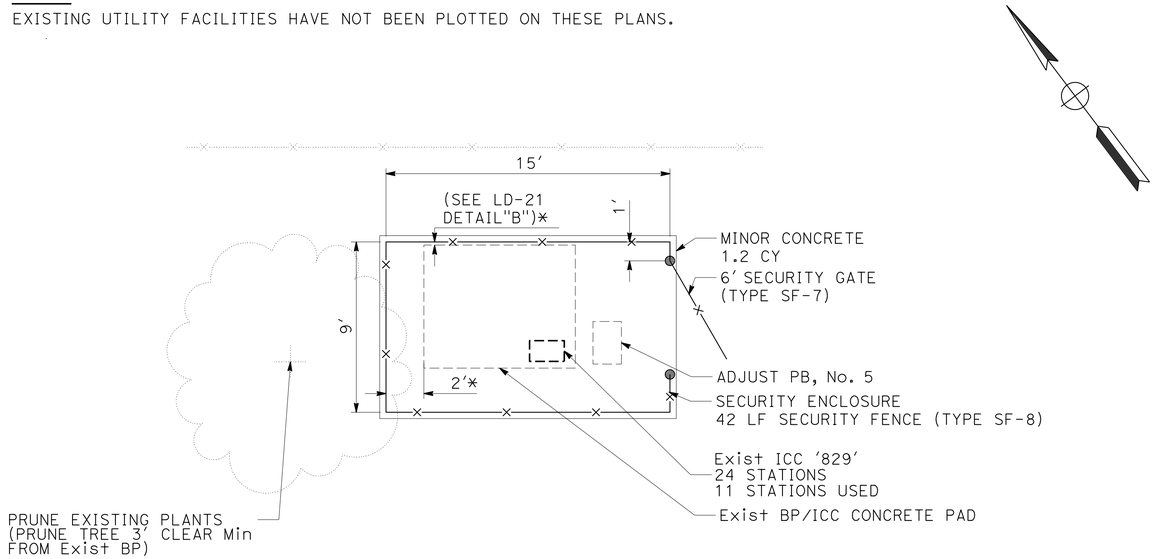

PLAN
LOCATION 61

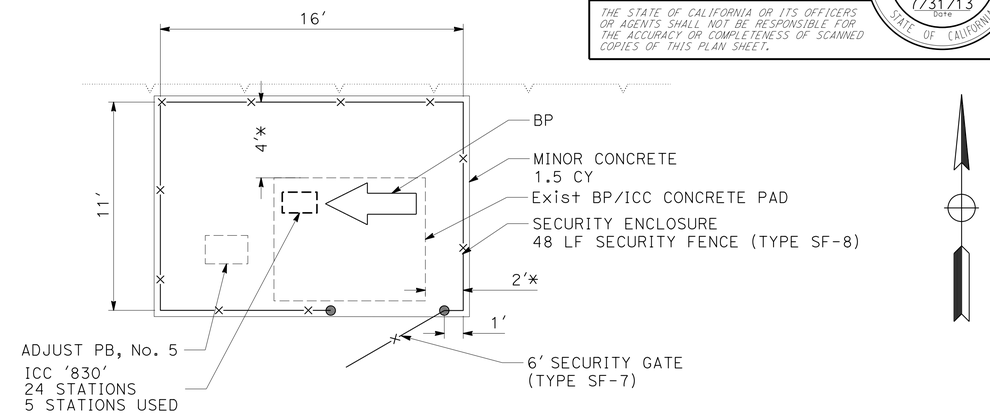

PLAN
LOCATION 62

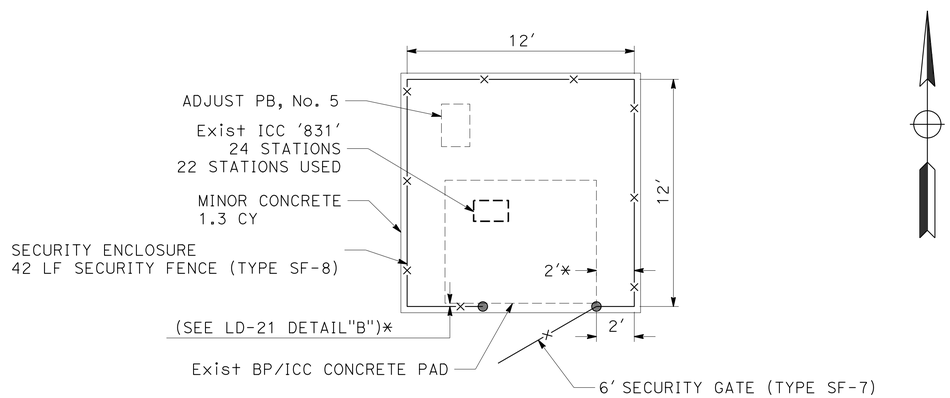

PLAN
LOCATION 63

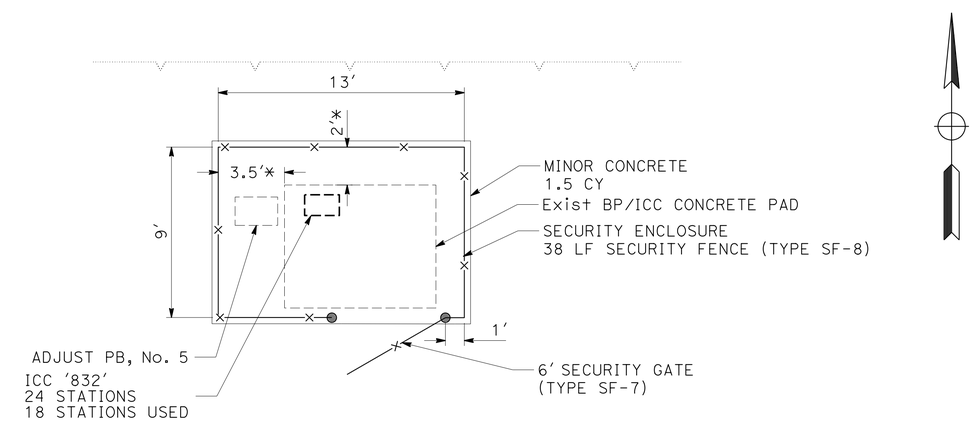

PLAN
LOCATION 64

LANDSCAPE DETAILS

NO SCALE

LD-16

STATE OF CALIFORNIA - DEPARTMENT OF TRANSPORTATION
Caltrans® LANDSCAPE ARCHITECTURE

SENIOR LANDSCAPE ARCHITECT: BRAD COLE
CALCULATED-DESIGNED BY: GLORIA RAMIREZ
CHECKED BY: KEVIN GALLO
REVISED BY / DATE REVISED

LAST REVISION 07-31-13
DATE PLOTTED => 15-AUG-2013
TIME PLOTTED => 09:27

Dist	COUNTY	ROUTE	POST MILES TOTAL PROJECT	SHEET No.	TOTAL SHEETS
06	Fre	168,180	Var	56	204

LICENSED LANDSCAPE ARCHITECT

08-05-13

PLANS APPROVAL DATE

LICENSED LANDSCAPE ARCHITECT MICHAEL W. MILLS No. 4780 STATE OF CALIFORNIA

Expiration 11/30/14
Renewal Date 7/31/13
Date

THE STATE OF CALIFORNIA OR ITS OFFICERS OR AGENTS SHALL NOT BE RESPONSIBLE FOR THE ACCURACY OR COMPLETENESS OF SCANNED COPIES OF THIS PLAN SHEET.

NOTE:

EXISTING UTILITY FACILITIES HAVE NOT BEEN PLOTTED ON THESE PLANS.

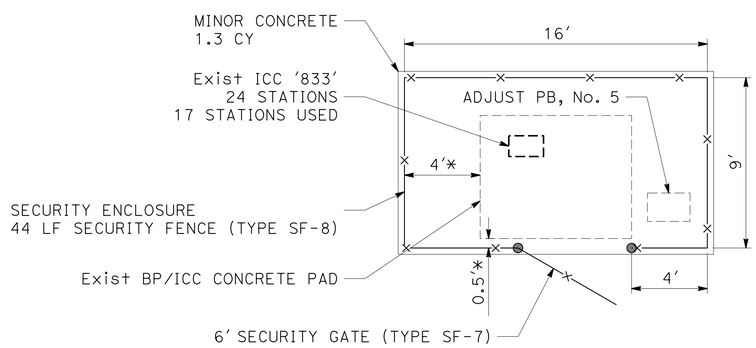

PLAN
LOCATION 65

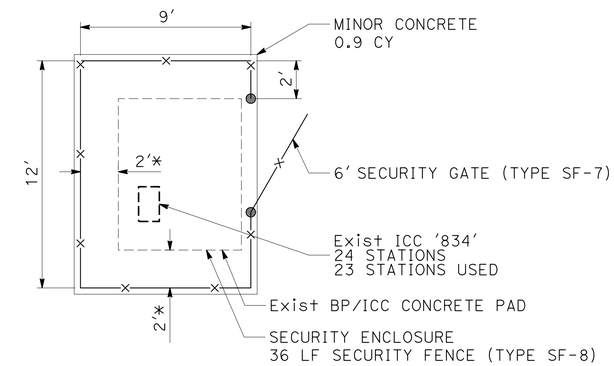

PLAN
LOCATION 66

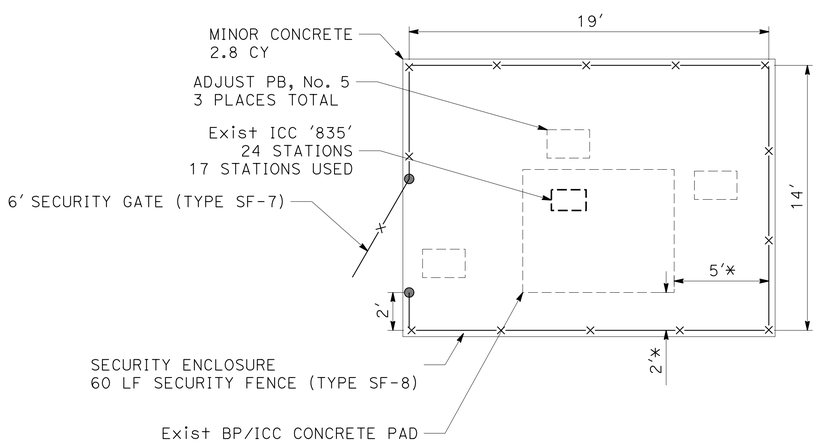

PLAN
LOCATION 67

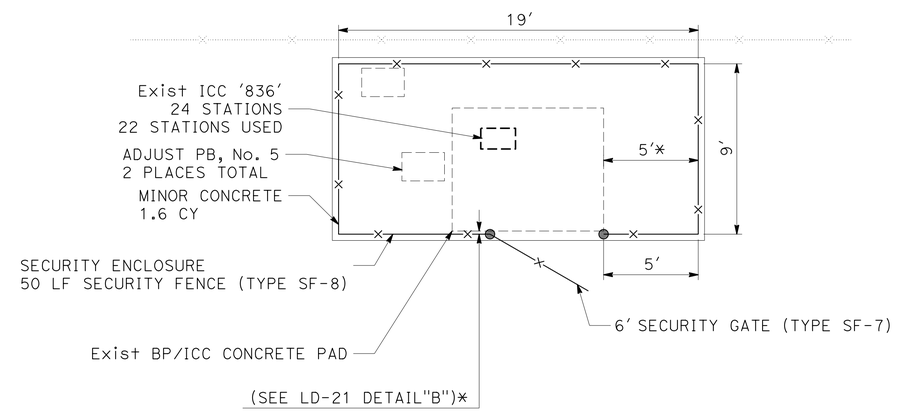

PLAN
LOCATION 68

LANDSCAPE DETAILS

NO SCALE

LD-17

STATE OF CALIFORNIA - DEPARTMENT OF TRANSPORTATION
Caltrans® LANDSCAPE ARCHITECTURE

SENIOR LANDSCAPE ARCHITECT: BRAD COLE
CALCULATED-DESIGNED BY: GLORIA RAMIREZ
CHECKED BY: KEVIN GALLO
REVISED BY
DATE REVISED

LAST REVISION 07-31-13
DATE PLOTTED => 15-AUG-2013
TIME PLOTTED => 09:27

Dist	COUNTY	ROUTE	POST MILES TOTAL PROJECT	SHEET No.	TOTAL SHEETS
06	Fre	168,180	Var	57	204

LICENSED LANDSCAPE ARCHITECT

08-05-13

PLANS APPROVAL DATE

LICENSED LANDSCAPE ARCHITECT MICHAEL W. MILLS No. 4720 STATE OF CALIFORNIA Expiration Date 11/30/14 Renewal Date 7/31/13 Date

THE STATE OF CALIFORNIA OR ITS OFFICERS OR AGENTS SHALL NOT BE RESPONSIBLE FOR THE ACCURACY OR COMPLETENESS OF SCANNED COPIES OF THIS PLAN SHEET.

NOTE:

EXISTING UTILITY FACILITIES HAVE NOT BEEN PLOTTED ON THESE PLANS.

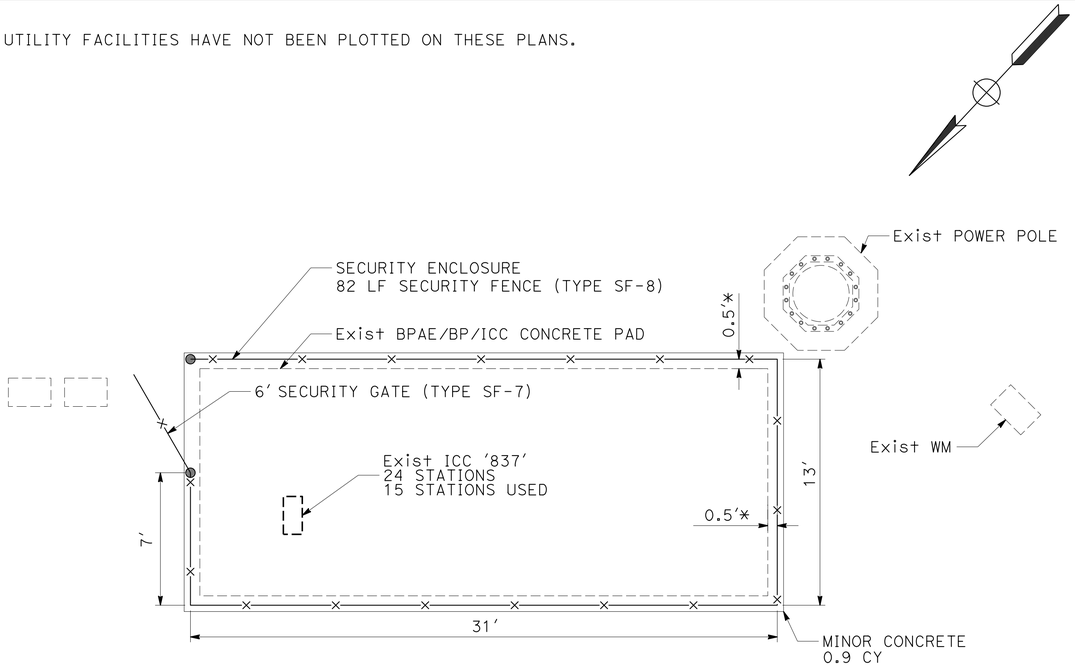

PLAN
LOCATION 69

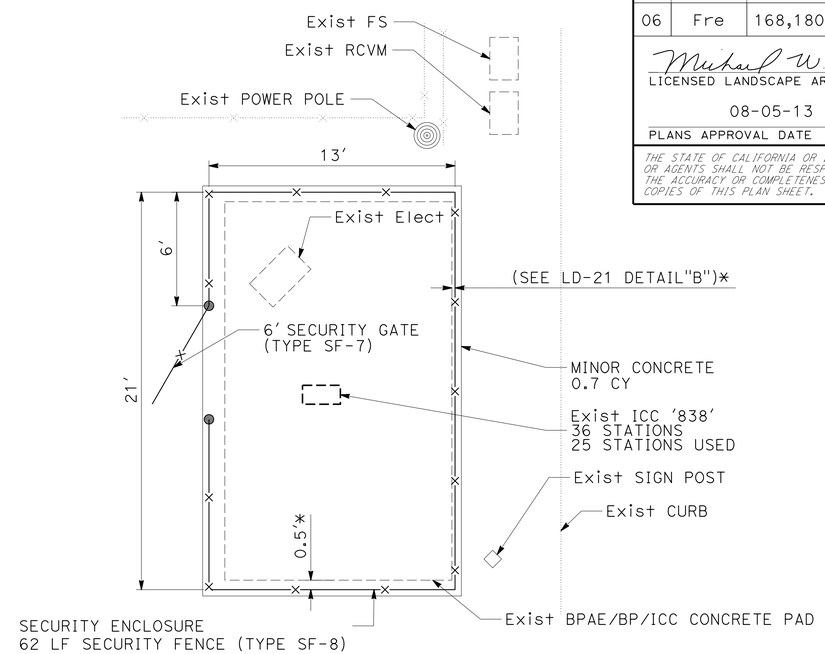

PLAN
LOCATION 70

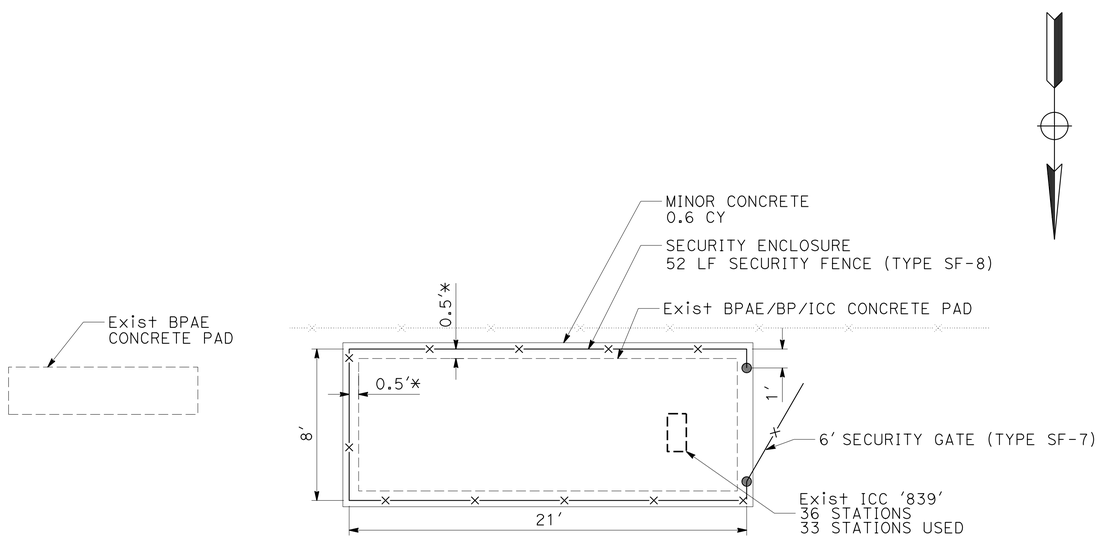

PLAN
LOCATION 71

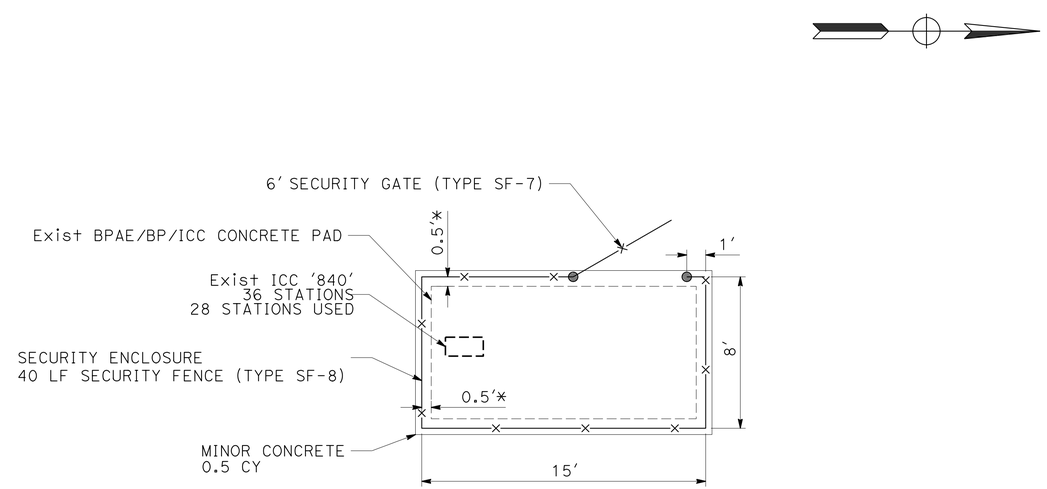

PLAN
LOCATION 72

LANDSCAPE DETAILS

NO SCALE

LD-18

REVISED BY	DATE REVISED
GLORIA RAMIREZ	KEVIN GALLO

CALCULATED-DESIGNED BY / CHECKED BY

SENIOR LANDSCAPE ARCHITECT: BRAD COLE

STATE OF CALIFORNIA - DEPARTMENT OF TRANSPORTATION

Caltrans® LANDSCAPE ARCHITECTURE

LAST REVISION 07-31-13

DATE PLOTTED => 15-AUG-2013
TIME PLOTTED => 09:27

Dist	COUNTY	ROUTE	POST MILES TOTAL PROJECT	SHEET No.	TOTAL SHEETS
06	Fre	168,180	Var	58	204

LICENSED LANDSCAPE ARCHITECT

08-05-13

PLANS APPROVAL DATE

LICENSED LANDSCAPE ARCHITECT MICHAEL W. MILLS No. 4770 Expiration 11/30/14 Renewal Date 7/31/13 Date STATE OF CALIFORNIA

THE STATE OF CALIFORNIA OR ITS OFFICERS OR AGENTS SHALL NOT BE RESPONSIBLE FOR THE ACCURACY OR COMPLETENESS OF SCANNED COPIES OF THIS PLAN SHEET.

NOTE:

EXISTING UTILITY FACILITIES HAVE NOT BEEN PLOTTED ON THESE PLANS.

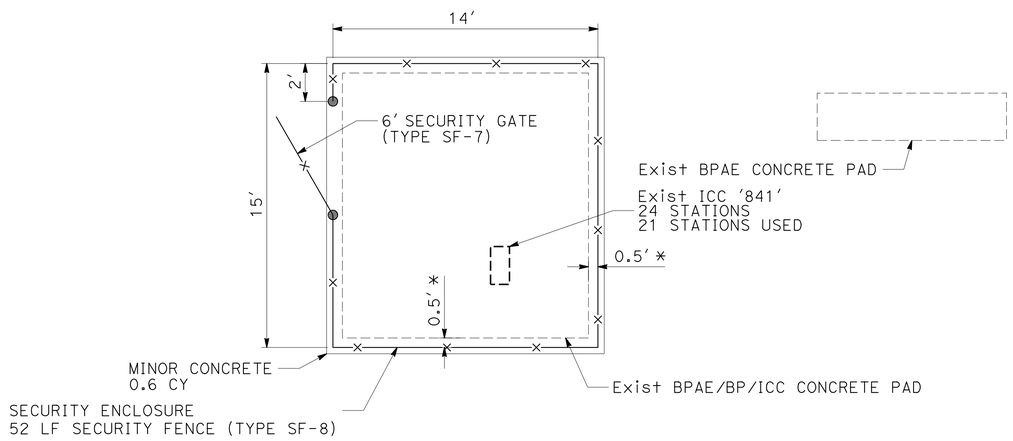

PLAN
LOCATION 73

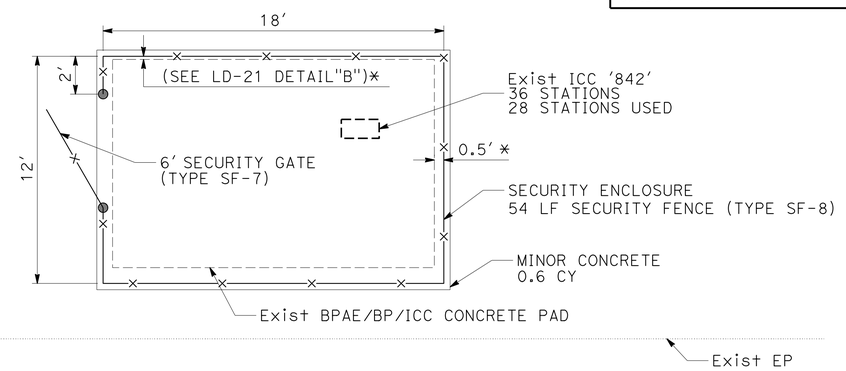

PLAN
LOCATION 74

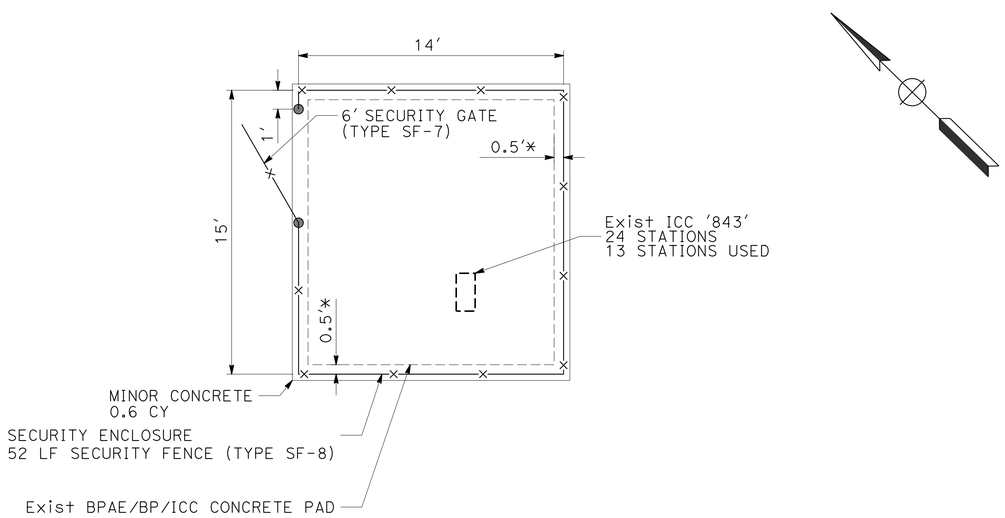

PLAN
LOCATION 75

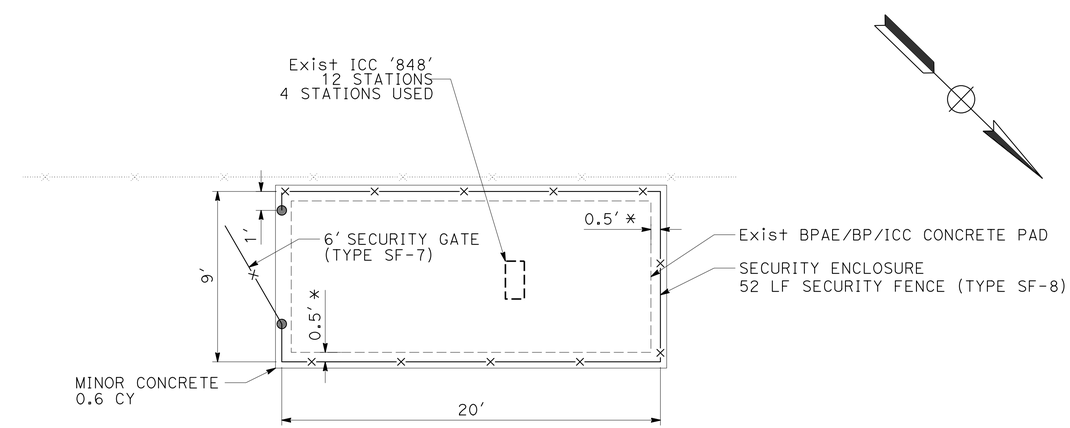

PLAN
LOCATION 76

LANDSCAPE DETAILS

NO SCALE

LD-19

STATE OF CALIFORNIA - DEPARTMENT OF TRANSPORTATION
Caltrans® LANDSCAPE ARCHITECTURE

SENIOR LANDSCAPE ARCHITECT: BRAD COLE

CALCULATED-DESIGNED BY: GLORIA RAMIREZ
CHECKED BY: KEVIN GALLO

REVISED BY | DATE REVISED

LAST REVISION 07-31-13 | DATE PLOTTED => 15-AUG-2013 | TIME PLOTTED => 09:27

Dist	COUNTY	ROUTE	POST MILES TOTAL PROJECT	SHEET No.	TOTAL SHEETS
06	Fre	168,180	Var	59	204

LICENSED LANDSCAPE ARCHITECT

08-05-13

PLANS APPROVAL DATE

LICENSED LANDSCAPE ARCHITECT MICHAEL W. MILLS No. 4779 STATE OF CALIFORNIA Expiration 11/30/14 Renewal Date 7/31/13 Date

THE STATE OF CALIFORNIA OR ITS OFFICERS OR AGENTS SHALL NOT BE RESPONSIBLE FOR THE ACCURACY OR COMPLETENESS OF SCANNED COPIES OF THIS PLAN SHEET.

NOTE:

EXISTING UTILITY FACILITIES HAVE NOT BEEN PLOTTED ON THESE PLANS.

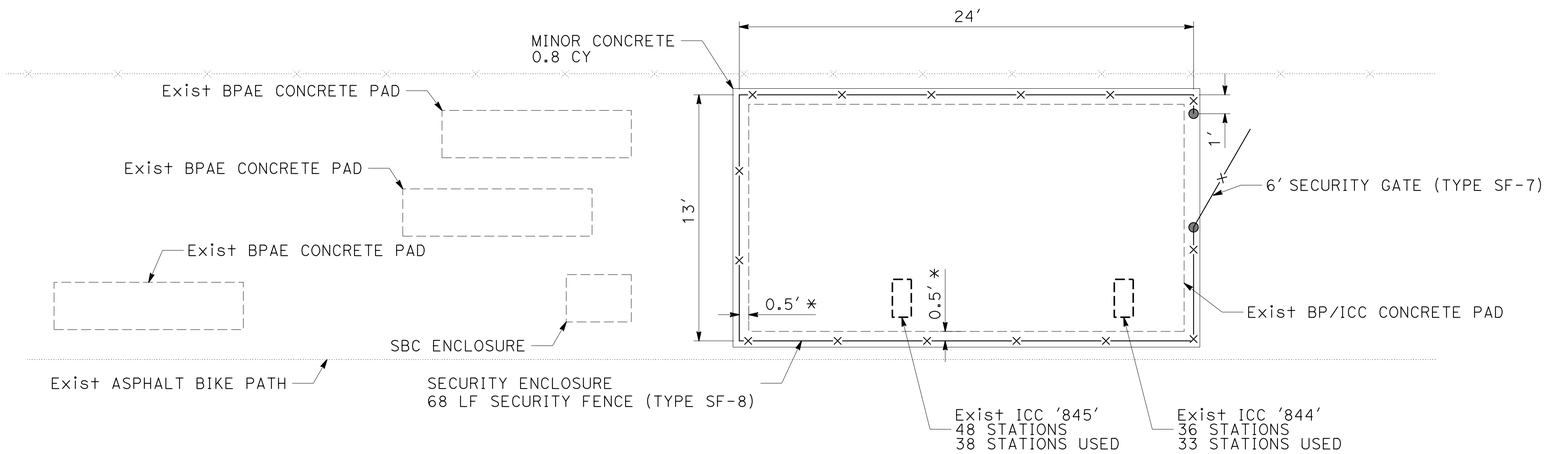

PLAN

LOCATION 77

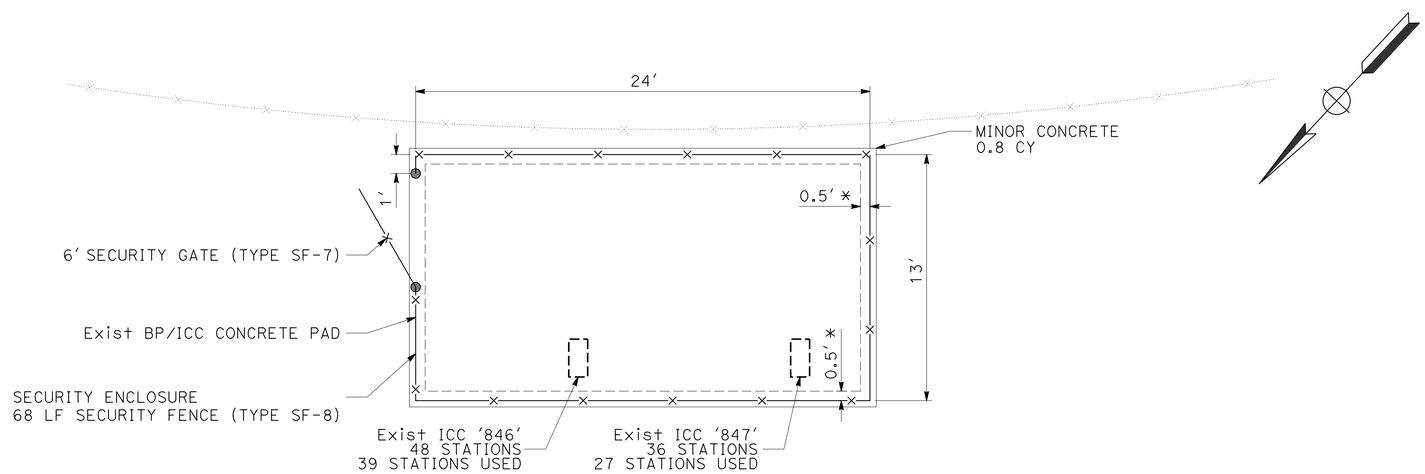

PLAN

LOCATION 78

LANDSCAPE DETAILS

NO SCALE

LD-20

STATE OF CALIFORNIA - DEPARTMENT OF TRANSPORTATION

Caltrans® LANDSCAPE ARCHITECTURE

SENIOR LANDSCAPE ARCHITECT: BRAD COLE

CALCULATED-DESIGNED BY: GLORIA RAMIREZ

CHECKED BY: KEVIN GALLO

REVISED BY / DATE REVISED

LAST REVISION 07-31-13

DATE PLOTTED => 15-AUG-2013

TIME PLOTTED => 09:27

Dist	COUNTY	ROUTE	POST MILES TOTAL PROJECT	SHEET No.	TOTAL SHEETS
06	Fre	168,180	Var	60	204

LICENSED LANDSCAPE ARCHITECT

8-5-13

PLANS APPROVAL DATE

LICENSED LANDSCAPE ARCHITECT MICHAEL W. MILLS No. 4770 Signature 11/30/14 Renewal Date 7/31/13 Date STATE OF CALIFORNIA

THE STATE OF CALIFORNIA OR ITS OFFICERS OR AGENTS SHALL NOT BE RESPONSIBLE FOR THE ACCURACY OR COMPLETENESS OF SCANNED COPIES OF THIS PLAN SHEET.

NOTE:

EXISTING UTILITY FACILITIES HAVE NOT BEEN PLOTTED ON THESE PLANS.

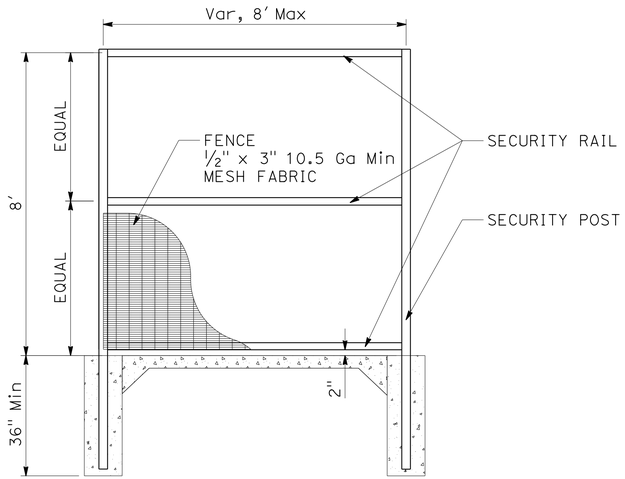

ELEVATION

SECURITY FENCE (TYPE SF-8)

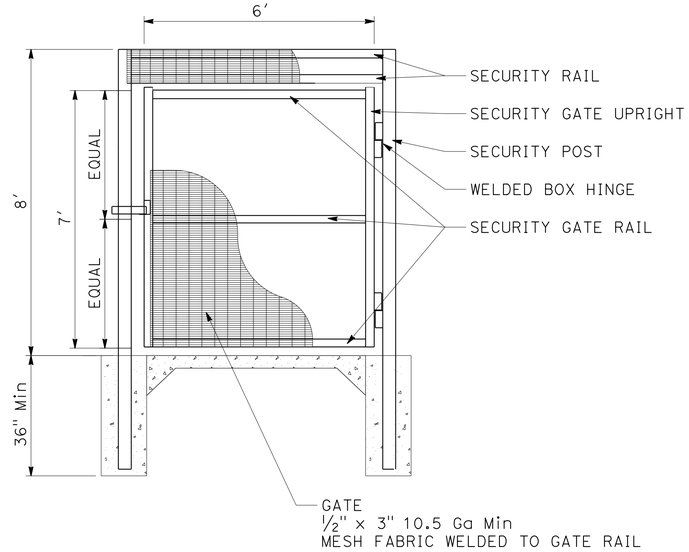

ELEVATION

6' SECURITY GATE (TYPE SF-7)

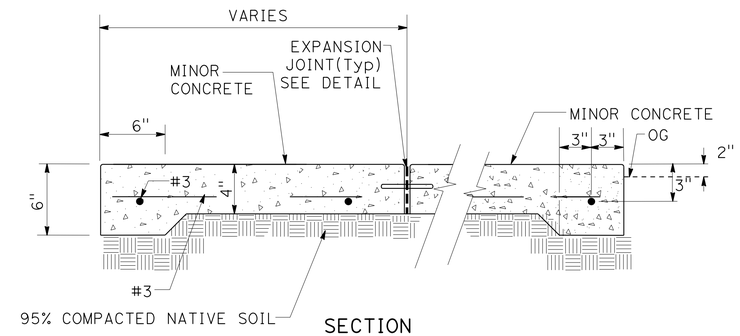

SECTION

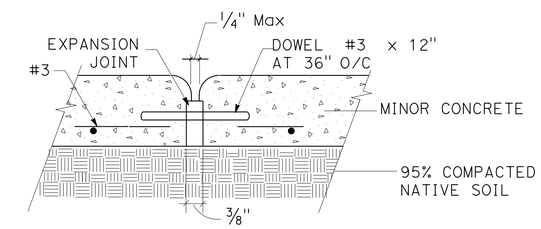

SECTION

EXPANSION JOINT

NOTE: EXPANSION JOINTS TO BE PLACED PERPENDICULAR TO ALL SIDES AT CORNERS OF EXISTING CONCRETE PADS

MINOR CONCRETE

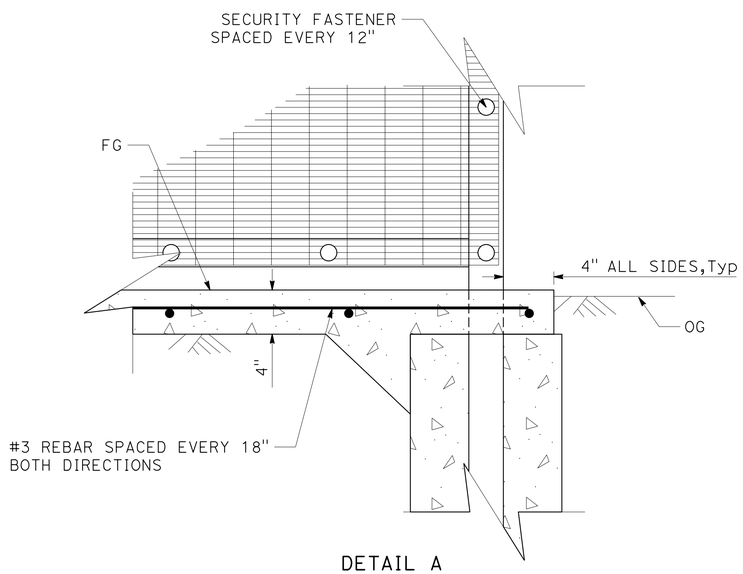

DETAIL A

MINOR CONCRETE PAD

NOTE: THIS DETAIL IS APPLICABLE GENERALLY

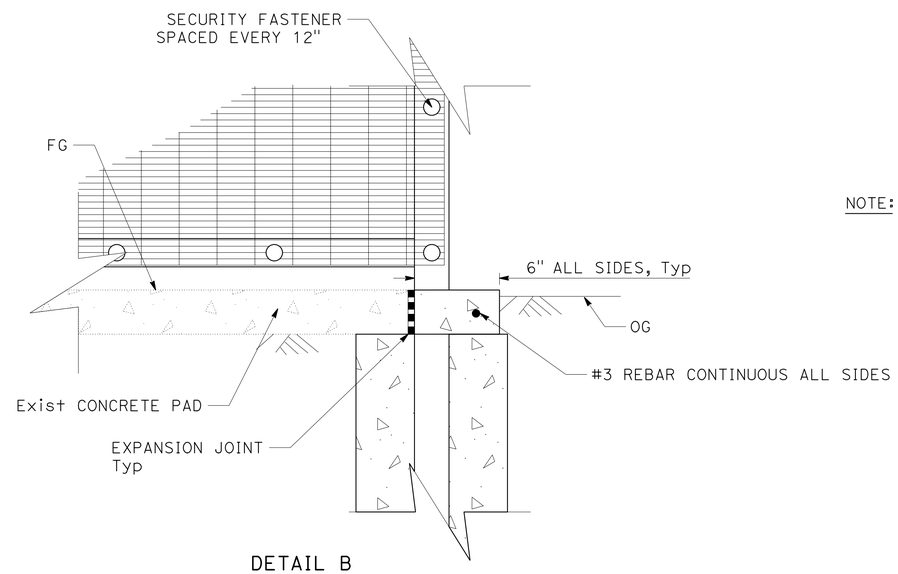

DETAIL B

MINOR CONCRETE PAD, Mod

NOTE: THIS DETAIL IS APPLICABLE WHEN NOTED ON THE DETAIL SHEETS

SECURITY ENCLOSURE

LANDSCAPE DETAILS

NO SCALE

LD-21

REVISED BY	DATE REVISED
MICHAEL MILLS	KEVIN GALLO
CALCULATED-DESIGNED BY	CHECKED BY
SENIOR LANDSCAPE ARCHITECT	BRAD COLE

STATE OF CALIFORNIA - DEPARTMENT OF TRANSPORTATION

Caltrans® LANDSCAPE ARCHITECTURE

LAST REVISION 07-31-13 | DATE PLOTTED => 15-AUG-2013 | TIME PLOTTED => 09:27

Dist	COUNTY	ROUTE	POST MILES TOTAL PROJECT	SHEET No.	TOTAL SHEETS
06	Fre	168,180	Var	61	204

LICENSED LANDSCAPE ARCHITECT

08-05-13

PLANS APPROVAL DATE

LICENSED LANDSCAPE ARCHITECT MICHAEL W. MILLS No. 4778 STATE OF CALIFORNIA
Expiration Date 11/30/14
Renewal Date 7/31/13
Date

THE STATE OF CALIFORNIA OR ITS OFFICERS OR AGENTS SHALL NOT BE RESPONSIBLE FOR THE ACCURACY OR COMPLETENESS OF SCANNED COPIES OF THIS PLAN SHEET.

NOTES:

1. REMOVE EXISTING BRASS RCV AND REPLACE WITH PLASTIC RCV OF EQUAL SIZE.
2. ¾" BRASS RCV TO BE REPLACED WITH 1" PLASTIC RCV.
3. SEE ISS SHEETS FOR LOCATION AND SIZE OF RCV REPLACEMENT.
4. FOR PB Repl AND VALVE BOX Repl, YOU MUST FURNISH AND INSTALL ½"-13 COARSE THREAD PENTA-HEAD BOLTS.
5. VALVE BOX COLLAR MUST BE ANCHORED TO THE BOX WITH ¼" x 2¼" CONCRETE ANCHORS. SIX CONCRETE ANCHORS MUST BE INCLUDED FOR EACH BOX; ONE ANCHOR PLACED IN EACH CORNER AND ONE ANCHOR AT THE MIDDLE OF EACH OF THE LONGER SIDES.
6. FOR Repl PB DETAILS SEE ELECTRICAL DETAILS SHEETS, USE "No. 5(T) PB ON EXISTING EXTENSION" DETAIL.
7. EXISTING UTILITY FACILITIES HAVE NOT BEEN PLOTTED ON THESE PLANS.

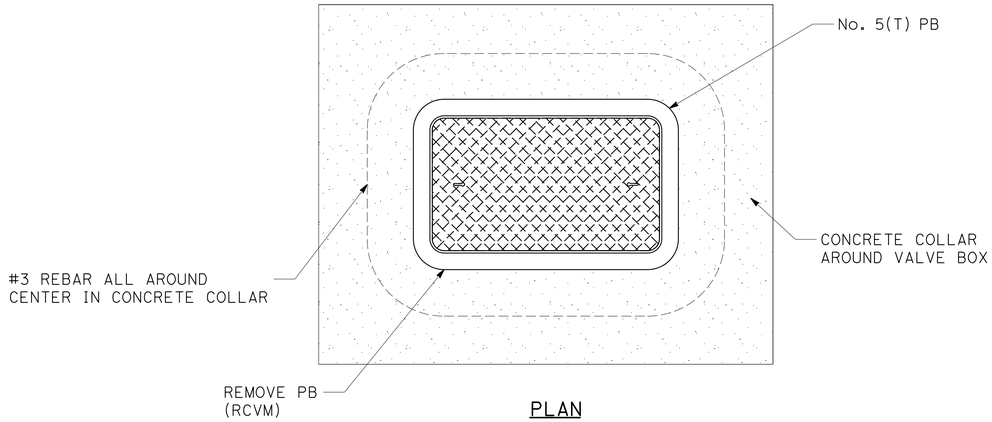

PLAN

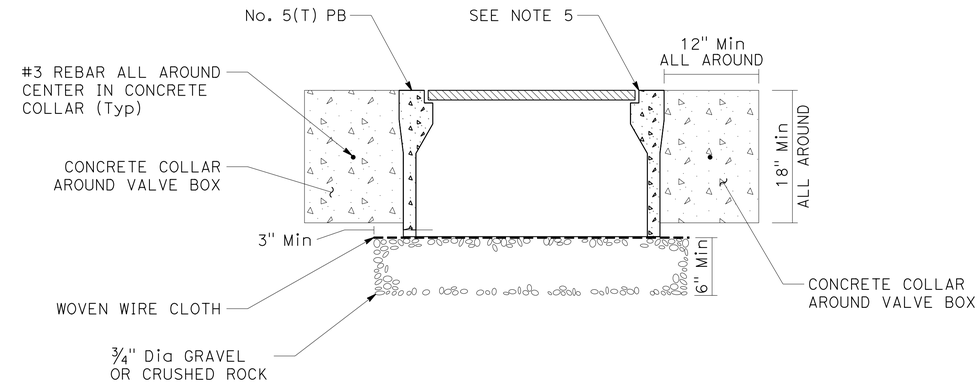

SECTION

REPLACE BOX, RCVM BOX

REPLACE VALVE BOX (No. 5(T))

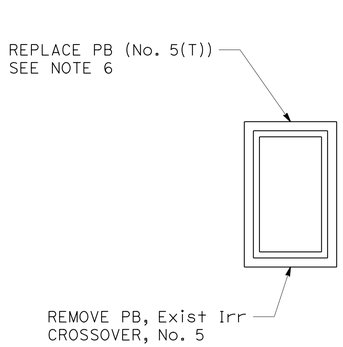

PLAN

REPLACE BOX, Irr CROSSOVER PB

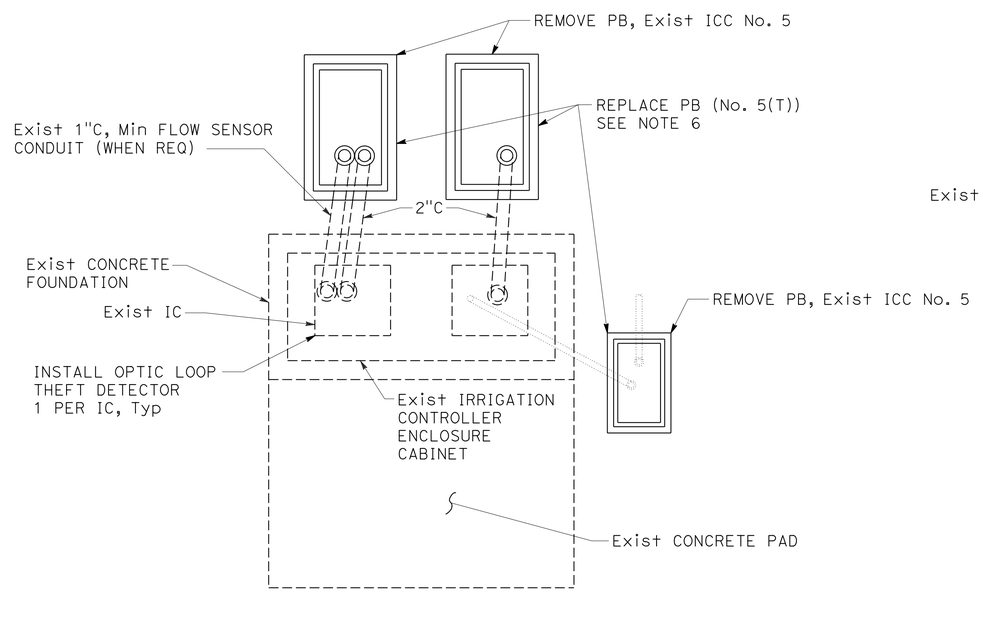

PLAN

REPLACE BOX, ICC PB

REPLACE PB AND OPTIC LOOP THEFT DETECTOR

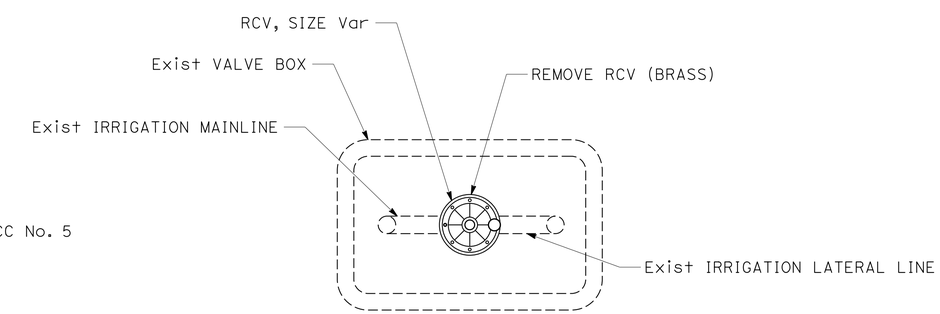

PLAN

RCV LOCATIONS, Typ

REPLACE VALVE

LANDSCAPE DETAILS

NO SCALE

LD-22

STATE OF CALIFORNIA - DEPARTMENT OF TRANSPORTATION
Caltrans® LANDSCAPE ARCHITECTURE

SENIOR LANDSCAPE ARCHITECT: BRAD COLE
CALCULATED-DESIGNED BY: GLORIA RAMIREZ
CHECKED BY: KEVIN GALLO
REVISED BY
DATE REVISED

LAST REVISION 07-31-13
DATE PLOTTED => 06-SEP-2013
TIME PLOTTED => 10:53

Dist	COUNTY	ROUTE	POST MILES TOTAL PROJECT	SHEET No.	TOTAL SHEETS
06	Fre	168,180	Var	62	204

LICENSED LANDSCAPE ARCHITECT

08-05-13

PLANS APPROVAL DATE

LICENSED LANDSCAPE ARCHITECT MICHAEL W. MILLS No. 4770 Expiration Date 11/30/14 Renewal Date 7/31/13 Date STATE OF CALIFORNIA

THE STATE OF CALIFORNIA OR ITS OFFICERS OR AGENTS SHALL NOT BE RESPONSIBLE FOR THE ACCURACY OR COMPLETENESS OF SCANNED COPIES OF THIS PLAN SHEET.

NOTES:

1. LOCATION NUMBERS ARE USED FOR IRRIGATION WORK ONLY.
2. FOR LOCATION OF RCV WORK, SEE ISS SHEETS.
3. MULCH IS 6" IN DEPTH.

SECURITY ENCLOSURE QUANTITIES

Loc	ICC No.	SHEET	SECURITY FENCE (TYPE SF-8) LF	6' SECURITY GATE (TYPE SF-7) EA	MINOR CONCRETE (Misc Const) CY	ADJUST PB EA	ADJUST VALVE BOX EA	OPTIC LOOP THEFT DETECTOR EA
1	822	LD-1	44	1	1.3	2		1
2	681	LD-1	48	1	1.5			1
	682	LD-1						1
3	683	LD-1	68	1	2.9	5		2
4	A	LD-1	60	1	2.3	1		
5	684	LD-2	44	1	1.3	2		
6	686	LD-2	60	1	2.1	3		2
7	685	LD-2	38	1	1.0			
8	687	LD-2	52	1	1.8			2
9	688	LD-3	72	1	2.8	3		2
10	690	LD-3	28	1	0.6			
11	689	LD-3	58	1	2.6	2		
12	691	LD-3	46	1	1.4			2
13	610	LD-4	66	1	2.7	3		1
14	611	LD-4	40	1	1.2			1
15	692	LD-4	58	1	2.4	5		1
	694	LD-4						1
16	693	LD-4	58	1	2.6	3		1
	695	LD-4						1
17	801	LD-5	54	1	2.0	2		1
18	702	LD-5	64	1	2.4	3		1
	703	LD-5						1
19	704	LD-5	50	1	2.1	2		1
	705	LD-5						1
20	706	LD-5	62	1	1.9	3		1
	708	LD-5						1
21	707	LD-6	76	1	3.1	5		1
	709	LD-6						1
22	625	LD-6	62	1	2.5	4		1
23	626	LD-6	56	1	2.1	1		1
	627	LD-6						1
24	628	LD-6	60	1	2.4	4		1
25	629	LD-7	72	1	2.8	4		1
	630	LD-7						1
26	631	LD-7	74	1	3.7	3		1
	632	LD-7						1
27	633	LD-7	68	1	2.6	3		1
28	634	LD-7	78	1	3.1	5		1
	635	LD-7						1
29	636	LD-8	54	1	2.0	1		1
	637	LD-8						1
30	638	LD-8	68	1	2.6	3		1
31	639	LD-8	64	1	2.3	3		1
32	640	LD-8	66	1	2.5	4		1
	641	LD-8						1
33	642	LD-9	54	1	2.1	1		1
34	643	LD-9	54	1	2.1	1		1
	644	LD-9						1
35	803	LD-9	60	1	0.9	1	1	1
36	806	LD-9	50	1	1.9	1		1
37	807	LD-10	96	1	2.7	5		1
38	X	LD-10	58	1	1.9	3		1
39	808	LD-10	70	1	1.4			1
40	Y	LD-10	46	1	1.5	2		1
41	809	LD-11	28	1	0.8	3		1
42	810	LD-11	68	1	2.3	1		1
43	811	LD-11	98	1	4.4	5		1
SUBTOTAL 1			2550	43	92.6	102	1	57

Loc	ICC No.	SHEET	SECURITY FENCE (TYPE SF-8) LF	6' SECURITY GATE (TYPE SF-7) EA	MINOR CONCRETE (Misc Const) CY	ADJUST PB EA	ADJUST VALVE BOX EA	OPTIC LOOP THEFT DETECTOR EA
43	750	LD-11	52	1	1.9	5		1
44	812	LD-11						1
45	Z	LD-12	44	1	1.0	1		1
46	813	LD-12	86	1	7.9	4	1	1
47	814	LD-12	114	1	6.0			1
	815	LD-12						1
48	816	LD-12	66	1	0.8			1
49	817	LD-13	44	1	0.5			1
	818	LD-13						1
50	B	LD-13	60	1	0.7			1
51	C	LD-13	72	1	0.8			1
52	D	LD-13	90	1	1.0			1
53	E	LD-14	62	1	0.7			1
54	F	LD-14	58	1	2.6	3		1
55	823	LD-14	66	1	2.7	4		1
56	824	LD-14	76	1	4.2	1		1
57	825	LD-15	42	1	1.2	1		1
58	826	LD-15	78	1	3.4	3		1
59	827	LD-15	38	1	0.9	1		1
60	828	LD-15	40	1	1.1	2		1
61	829	LD-16	42	1	1.2	1		1
62	830	LD-16	48	1	1.5	1		1
63	831	LD-16	42	1	1.3	1		1
64	832	LD-16	38	1	1.5	1		1
65	833	LD-17	44	1	1.3	1		1
66	834	LD-17	36	1	0.9			1
67	835	LD-17	60	1	2.8	3		1
68	836	LD-17	50	1	1.6	2		1
69	837	LD-18	82	1	0.9			1
70	838	LD-18	62	1	0.7			1
71	839	LD-18	52	1	0.6			1
72	840	LD-18	40	1	0.5			1
73	841	LD-19	52	1	0.6			1
74	842	LD-19	54	1	0.6			1
75	843	LD-19	52	1	0.6			1
76	848	LD-19	52	1	0.6			1
77	844	LD-20	68	1	0.8			1
	845	LD-20						1
78	846	LD-20	68	1	0.8			1
	847	LD-20						1
SUBTOTAL 2			2030	35	56.2	35	1	40
SUBTOTAL 1			2550	43	92.6	102	1	57
TOTAL			4580	78	148.8	137	2	97

LANDSCAPE QUANTITIES

LQ-1

STATE OF CALIFORNIA - DEPARTMENT OF TRANSPORTATION

Caltrans® LANDSCAPE ARCHITECTURE

SENIOR LANDSCAPE ARCHITECT: BRAD COLE

CALCULATED-DESIGNED BY: SHERRY ALEXANDER

CHECKED BY: MICHAEL MILLS

REVISED BY

DATE REVISED

LAST REVISION 07-31-13

DATE PLOTTED => 06-SEP-2013

TIME PLOTTED => 09:10

Dist	COUNTY	ROUTE	POST MILES TOTAL PROJECT	SHEET No.	TOTAL SHEETS
06	Fre	168,180	Var	63	204

LICENSED LANDSCAPE ARCHITECT

08-05-13

PLANS APPROVAL DATE

LICENSED LANDSCAPE ARCHITECT MICHAEL W. MILLS No. 4770 Expiration 11/30/14 Renewal Date 7/31/13 Date STATE OF CALIFORNIA

THE STATE OF CALIFORNIA OR ITS OFFICERS OR AGENTS SHALL NOT BE RESPONSIBLE FOR THE ACCURACY OR COMPLETENESS OF SCANNED COPIES OF THIS PLAN SHEET.

CHAIN LINK FENCE QUANTITIES

Loc	Co-ROUTE	ICC No.	SHEET	RELOCATE GATE EA	REMOVE FENCE LF
37	Fre-180	807	LD-10	1	
39	Fre-180	808	LD-10		43
47	Fre-180	814	LD-12	1	
		815	LD-12		
TOTAL				2	43

NEW IRRIGATION FACILITY QUANTITIES

Loc	Co-ROUTE	ICC No.	SHEET	BOOSTER PUMP EA	REMARKS
62	Fre-180	830	LD-16	1	2" IRRIGATION MAINLINE
TOTAL				1	

REMOVE IRRIGATION FACILITY

Loc	Co-ROUTE	ICC No.	SHEET	REMOVE BPA ENCLOSURE (N) EA
23	Fre-168	626	LD-6	1
		627	LD-6	
29	Fre-168	636	LD-8	1
		637	LD-8	
33	Fre-168	642	LD-9	1
34	Fre-168	643	LD-9	1
		644	LD-9	
38	Fre-180	X	LD-10	1
46	Fre-180	813	LD-12	
49	Fre-180	817	LD-13	1
		818	LD-13	
51	Fre-180	C	LD-13	1
52	Fre-180	D	LD-13	1
53	Fre-180	E	LD-14	1

(N) NOT A SEPARATE PAY ITEM, FOR INFORMATION ONLY

RELOCATE IRRIGATION QUANTITIES

Loc	Co-ROUTE	ICC No.	SHEET	RELOCATE IC EA	RELOCATE Irr FACILITIES RCVM (N) EA	FS (N) EA	PB (N) EA	REMARKS
2	Fre-168	681	LD-1		1	1		
		682	LD-1					
3	Fre-168	683	LD-1	2			2	RELOCATE ICC, PB 50' NORTH
8	Fre-168	687	LD-2		1	1		
9	Fre-168	688	LD-3		1	1		
12	Fre-168	691	LD-3		1	1		
13	Fre-168	610	LD-4		1	1		
14	Fre-168	611	LD-4		1	1		
17	Fre-168	801	LD-5		1	1		
22	Fre-168	625	LD-6		1	1		
56	Fre-180	824	LD-14		1			
TOTAL				2				

(N) NOT A SEPARATE PAY ITEM, FOR INFORMATION ONLY

LANDSCAPE QUANTITIES

LQ-2

STATE OF CALIFORNIA - DEPARTMENT OF TRANSPORTATION

Caltrans® LANDSCAPE ARCHITECTURE

SENIOR LANDSCAPE ARCHITECT: BRAD COLE

CALCULATED-DESIGNED BY: SHERRY ALEXANDER

CHECKED BY: MICHAEL MILLS

REVISED BY / DATE REVISED

LAST REVISION 07-31-13

DATE PLOTTED => 15-AUG-2013

TIME PLOTTED => 09:28

Dist	COUNTY	ROUTE	POST MILES TOTAL PROJECT	SHEET No.	TOTAL SHEETS
06	Fre	168,180	Var	64	204

Michael W. Mills
LICENSED LANDSCAPE ARCHITECT
08-05-13
PLANS APPROVAL DATE

LICENSED LANDSCAPE ARCHITECT MICHAEL W. MILLS No. 4770 Expiration Date 11/30/14 Renewal Date 7/31/13 Date STATE OF CALIFORNIA

THE STATE OF CALIFORNIA OR ITS OFFICERS OR AGENTS SHALL NOT BE RESPONSIBLE FOR THE ACCURACY OR COMPLETENESS OF SCANNED COPIES OF THIS PLAN SHEET.

REPLACE BOXES AND VALVES

			REPLACE BOX				REPLACE VALVE				
			REMOVE PB (N)	REPLACE PB (No. 5(T))		REPLACE VALVE BOX (No. 5(T))	REMOVE RCV (BRASS)	REMOTE CONTROL VALVE			
				ICC PB	Irr CROSSOVER PB	RCVM BOX		1"	1¼"	1½"	2"
Loc	Co-ROUTE	ICC No.	EA	EA	EA	EA	EA	EA	EA	EA	EA
1	Fre-168	822	11		10	1	7			6	1
2	Fre-168	681	10	3	6	1	6	2		1	3
		682	6		6		7	2		1	4
3	Fre-168	683	7		6	1	6	4	1	1	
4	Fre-168	A	7		6	1	7				7
5	Fre-168	684	15		14	1	12	7	2	3	
6	Fre-168	686	3		2	1	10	1	1	1	7
7	Fre-168	685	15		14	1	11	6	2	3	
8	Fre-168	687	6	3	2	1	13	3	1	1	8
9	Fre-168	688	7		6	1	9	3	1	2	3
10	Fre-168	690	9		8	1	8	4	1	3	
11	Fre-168	689	7		6	1	9	1	3	2	3
12	Fre-168	691	8	3	4	1	9	3	2	4	
13	Fre-168	610	3		2	1	8				8
14	Fre-168	611	3		2	1	8				8
15	Fre-168	692	11		10	1	9	4		5	
		694	6		6		10	3	1	5	1
16	Fre-168	693	7		6	1	12	4	2	6	
		695	6		6		10	5	1	4	
17	Fre-168	801	3		2	1	19	2	1	3	13
18	Fre-168	702	11		10	1	22	3	3	3	13
		703	6		6		12	4	2	4	2
19	Fre-168	704	12	3	8	1	9	2	3	4	
		705	4		4		7	3	1	1	2
20	Fre-168	706	5		4	1	10	2	1	1	6
		708	4		4		9	3	3	2	1
21	Fre-168	707	5		4	1	13	3	1		9
		709	4		4		17	3	2	6	6
22	Fre-168	625	7		6	1	15	2	10	3	
23	Fre-168	626	10	3	6	1	10	2	2	5	1
		627	2		2		12	1	8	1	2
24	Fre-168	628	3		2	1	4		1	3	
25	Fre-168	629	9		8	1	14	1	4	9	
		630	2		2		12	2	4	5	1
26	Fre-168	631	9		8	1	16	1	4	8	3
		632	12		12		12	1	1	8	2
27	Fre-168	633	5		4	1	18	2	4	9	3
28	Fre-168	634	5		4	1	15	1		13	1
		635	6		6		11		1	4	6
29	Fre-168	636	10	5	4	1	11	1	1	8	1
		637	6		6		17	1		10	6
30	Fre-168	638	5		4	1	18	1	3	13	1
31	Fre-168	639	7		6	1	12	2	5	3	2
32	Fre-168	640	5		4	1	15		5	8	2
		641	4		4		12			10	2
33	Fre-168	642	9	2	6	1	17		2	8	7
34	Fre-168	643	8	3	4	1	18	1	6	10	1
		644	4		4		16	1	1	12	2
35	Fre-180	803	9		8	1	11	3	1	1	6
36	Fre-180	806	5		4	1	3	1		1	1
37	Fre-180	807	5		4	1	5	1	1	1	2
SUBTOTAL SHEET LQ-3				25	286	37	583	102	99	225	157

(N) NOT A SEPARATE PAY ITEM, FOR INFORMATION ONLY.

LANDSCAPE QUANTITIES
LQ-3

STATE OF CALIFORNIA - DEPARTMENT OF TRANSPORTATION
Caltrans® LANDSCAPE ARCHITECTURE
SENIOR LANDSCAPE ARCHITECT: BRAD COLE
CALCULATED-DESIGNED BY: SHERRY ALEXANDER
CHECKED BY: MICHAEL MILLS
REVISED BY / DATE REVISED

LAST REVISION 07-31-13
DATE PLOTTED => 15-AUG-2013
TIME PLOTTED => 09:28

Dist	COUNTY	ROUTE	POST MILES TOTAL PROJECT	SHEET No.	TOTAL SHEETS
06	Fre	168,180	Var	65	204

LICENSED LANDSCAPE ARCHITECT

08-05-13

PLANS APPROVAL DATE

LICENSED LANDSCAPE ARCHITECT MICHAEL W. MILLS No. 4779 Expiration 11/30/14 Renewal Date 7/31/13 Date STATE OF CALIFORNIA

THE STATE OF CALIFORNIA OR ITS OFFICERS OR AGENTS SHALL NOT BE RESPONSIBLE FOR THE ACCURACY OR COMPLETENESS OF SCANNED COPIES OF THIS PLAN SHEET.

REPLACE BOXES AND VALVES

Loc	Co-ROUTE	ICC No.	REPLACE BOX: REMOVE PB (N)	REPLACE BOX: REPLACE PB (No. 5(T)) ICC PB	REPLACE BOX: REPLACE PB (No. 5(T)) Irr CROSSOVER PB	REPLACE BOX: REPLACE VALVE BOX (No. 5(T)) RCVM BOX	REPLACE VALVE: REMOVE RCV (BRASS)	REPLACE VALVE: REMOTE CONTROL VALVE 1"	REPLACE VALVE: REMOTE CONTROL VALVE 1¼"	REPLACE VALVE: REMOTE CONTROL VALVE 1½"	REPLACE VALVE: REMOTE CONTROL VALVE 2"
			EA	EA	EA	EA	EA	EA	EA	EA	EA
38	Fre-180	X	5		4	1	5	1		3	1
39	Fre-180	808	9		8	1	6	2		2	2
40	Fre-180	Y	5		4	1	5	2		2	1
41	Fre-180	809	7		6	1	7	3	1	3	
42	Fre-180	810	7		6	1	7	3	1	3	
43	Fre-180	811	11		10	1	9	3		1	5
44	Fre-180	750	10		10		10	1		4	5
		812	9		8	1	12	2	1	3	6
45	Fre-180	Z	3		2	1	4	3		1	
46	Fre-180	813	5		4	1	9	1		2	6
47	Fre-180	814	9		8	1	9			3	6
		815	8		8		8			1	7
48	Fre-180	816	9		8	1	8			5	3
49	Fre-180	817	15	4	10	1	10			6	4
		818	4		4		8		1	6	1
50	Fre-180	B	5		4	1	11			11	
51	Fre-180	C	5		4	1	12			10	2
52	Fre-180	D	3		2	1	11			11	
53	Fre-180	E	3		2	1	9		1	8	
54	Fre-180	F	7		6	1	12			8	4
55	Fre-180	823	5		4	1	11			8	3
56	Fre-180	824	5		4	1	6			5	1
57	Fre-180	825	3		2	1	6		1	5	
58	Fre-180	826	5		4	1	7		1	5	1
59	Fre-180	827	7		6	1	8		1	6	1
60	Fre-180	828	5		4	1	8		1	7	
61	Fre-180	829	5		4	1	5	1	1	1	2
62	Fre-180	830	1			1	3		1	2	
63	Fre-180	831	5		4	1	11	1	1	9	
64	Fre-180	832	3		2	1	9	1	1	7	
65	Fre-180	833	1			1	8		2	6	
66	Fre-180	834	3		2	1	12	1	2	9	
67	Fre-180	835	3		2	1	8		1	6	1
68	Fre-180	836	3		2	1	11		2	9	
69	Fre-180	837	3		2	1	8		1	7	
70	Fre-180	838	7		6	1	12			12	
71	Fre-180	839	5		4	1	16			16	
72	Fre-180	840	5		4	1	14			14	
73	Fre-180	841	5		4	1	10			10	
74	Fre-180	842	9		8	1	14			14	
75	Fre-180	843	13		12	1	6			6	
76	Fre-180	848	1			1	2			2	
77	Fre-180	844	11		10	1	17			17	
		845	9		8	1	20			20	
78	Fre-180	846	9		8	1	19			19	
		847	11		10	1	14			14	
SUBTOTAL THIS SHEET				4	234	43	437	25	21	329	62
SUBTOTAL SHEET LQ-3				25	286	37	583	102	99	225	157
TOTAL				29	520						
GRAND TOTAL				549		80	1020	127	120	554	219

(N) NOT A SEPARATE PAY ITEM, FOR INFORMATION ONLY.

LANDSCAPE QUANTITIES
LQ-4

REVISED BY | DATE REVISED

SHERRY ALEXANDER | MICHAEL MILLS

CALCULATED-DESIGNED BY | CHECKED BY

SENIOR LANDSCAPE ARCHITECT

BRAD COLE

STATE OF CALIFORNIA - DEPARTMENT OF TRANSPORTATION

Caltrans® LANDSCAPE ARCHITECTURE

LAST REVISION 07-31-13 | DATE PLOTTED => 15-AUG-2013 | TIME PLOTTED => 09:28

Dist	COUNTY	ROUTE	POST MILES TOTAL PROJECT	SHEET No.	TOTAL SHEETS
06	Fre	168,180	Var	66	204

LICENSED LANDSCAPE ARCHITECT

08-05-13

PLANS APPROVAL DATE

LICENSED LANDSCAPE ARCHITECT MICHAEL W. MILLS No. 4779 Expiration 11/30/14 Renewal Date 7/31/13 Date STATE OF CALIFORNIA

THE STATE OF CALIFORNIA OR ITS OFFICERS OR AGENTS SHALL NOT BE RESPONSIBLE FOR THE ACCURACY OR COMPLETENESS OF SCANNED COPIES OF THIS PLAN SHEET.

WOOD MULCH

Loc	Co-ROUTE	ICC No.	MULCH CY
1	Fre-168	822	14.7
2	Fre-168	681	15.4
		682	1.4
3	Fre-168	683	29.0
4	Fre-168	A	19.9
5	Fre-168	684	16.2
6	Fre-168	686	22.1
7	Fre-168	685	13.3
8	Fre-168	687	19.2
9	Fre-168	688	26.9
10	Fre-168	690	8.2
11	Fre-168	689	24.0
12	Fre-168	691	15.1
13	Fre-168	610	25.7
14	Fre-168	611	13.6
15	Fre-168	692	24.1
		694	2.0
16	Fre-168	693	25.2
		695	2.0
17	Fre-168	801	22.2
18	Fre-168	702	27.6
		703	2.3
19	Fre-168	704	19.9
		705	1.3
20	Fre-168	706	21.2
		708	1.9
21	Fre-168	707	31.2
		709	3.4
22	Fre-168	625	25.3
23	Fre-168	626	20.3
		627	2.4
24	Fre-168	628	23.2
25	Fre-168	629	27.8
		630	2.3
26	Fre-168	631	34.4
		632	2.4
27	Fre-168	633	26.9
28	Fre-168	634	30.5
		635	2.2
29	Fre-168	636	19.6
		637	3.5
30	Fre-168	638	26.9
31	Fre-168	639	23.9
32	Fre-168	640	25.6
		641	2.3
33	Fre-168	642	22.0
34	Fre-168	643	22.1
		644	3.2
35	Fre-180	803	23.5
36	Fre-180	806	15.4
37	Fre-180	807	32.7
38	Fre-180	X	18.8
39	Fre-180	808	31.3
40	Fre-180	Y	14.4
41	Fre-180	809	7.9
42	Fre-180	810	27.6
43	Fre-180	811	53.1
SUBTOTAL 1			1020.5

Loc	Co-ROUTE	ICC No.	MULCH CY
44	Fre-180	750	53.4
		812	21.3
45	Fre-180	Z	13.3
46	Fre-180	813	39.6
47	Fre-180	814	51.6
		815	1.6
48	Fre-180	816	28.2
49	Fre-180	817	16.0
		818	1.5
50	Fre-180	B	22.2
51	Fre-180	C	30.9
52	Fre-180	D	39.8
53	Fre-180	E	22.7
54	Fre-180	F	23.7
55	Fre-180	823	26.3
56	Fre-180	824	35.0
57	Fre-180	825	14.2
58	Fre-180	826	32.8
59	Fre-180	827	12.1
60	Fre-180	828	13.7
61	Fre-180	829	13.6
62	Fre-180	830	15.3
63	Fre-180	831	15.5
64	Fre-180	832	12.6
65	Fre-180	833	15.0
66	Fre-180	834	12.3
67	Fre-180	835	26.3
68	Fre-180	836	18.0
69	Fre-180	837	38.8
70	Fre-180	838	27.8
71	Fre-180	839	18.6
72	Fre-180	840	13.9
73	Fre-180	841	21.5
74	Fre-180	842	22.8
75	Fre-180	843	20.6
76	Fre-180	848	17.1
77	Fre-180	844	32.2
		845	4.0
78	Fre-180	846	32.8
		847	2.7
SUBTOTAL THIS TABLE			881.3
SUBTOTAL 1			1020.5
TOTAL			1901.8

CLEARING AND GRUBBING

Loc	Co-ROUTE	ICC No.	SHEET	REMOVE TREE (N) EA	REMOVE HANDRAIL (N) LF
46	Fre-180	813	LD-12		36
47	Fre-180	814	LD-12	1	
		815	LD-12		
54	Fre-180	F	LD-14	1	

(N) NOT A SEPARATE PAY ITEM, FOR INFORMATION ONLY

PRUNE EXISTING PLANTS

Loc	Co-ROUTE	ICC No.	SHEET	PRUNE TREE (N) EA
61	Fre-180	829	LD-16	1

(N) NOT A SEPARATE PAY ITEM, FOR INFORMATION ONLY

LANDSCAPE QUANTITIES

LQ-5

STATE OF CALIFORNIA - DEPARTMENT OF TRANSPORTATION

Caltrans® LANDSCAPE ARCHITECTURE

SENIOR LANDSCAPE ARCHITECT: BRAD COLE

CALCULATED-DESIGNED BY: SHERRY ALEXANDER

CHECKED BY: MICHAEL MILLS

REVISED BY

DATE REVISED

LAST REVISION 07-31-13

DATE PLOTTED => 15-AUG-2013

TIME PLOTTED => 09:28

DIST.	COUNTY	ROUTE	POST MILES TOTAL PROJECT	SHEET NO.	TOTAL SHEETS
06	Fre	168,180	Var	67	204

REGISTERED ELECTRICAL ENGINEER — 07-31-13 DATE

REGISTERED PROFESSIONAL ENGINEER — Imran Saeed — No. E 18781 — Exp. 06-30-15 — ELEC — STATE OF CALIFORNIA

8-5-13
PLANS APPROVAL DATE

The State of California or its officers or agents shall not be responsible for the accuracy or completeness of electronic copies of this plan sheet.

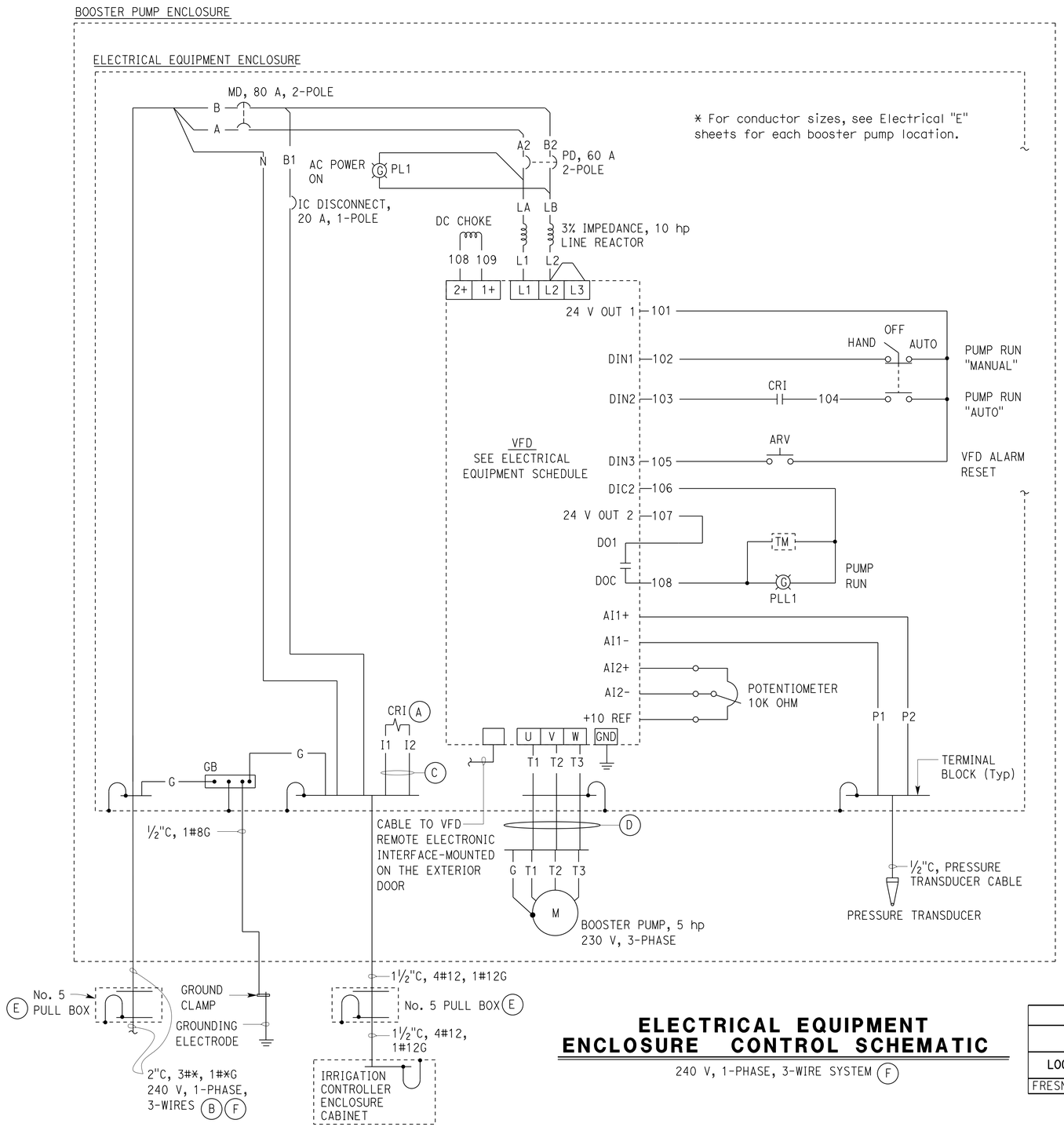

ELECTRICAL EQUIPMENT ENCLOSURE CONTROL SCHEMATIC

240 V, 1-PHASE, 3-WIRE SYSTEM (F)

GENERAL NOTES:

1. For location of Electrical Equipment Enclosure, see Electrical "E" sheets for each booster pump location.
2. Install power distribution blocks on both sides of the Main Disconnect.
3. Not all pull boxes are shown here for clarity. For location and number of pull boxes, see Electrical "E" sheets for each booster pump location.

NOTES:

(A) Control relay irrigation, 24 Volts AC coil.

(B) To existing Service Equipment Enclosure. For continuation, see Electrical "E" sheets for each booster pump location.

(C) To master valve/pump start terminals inside the irrigation controller enclosure cabinet.

(D) Booster pump motor cables integrated with equipment grounding conductor.

(E) For location of pull boxes, see Electrical "E" sheets for each booster pump location.

(F) Verify available electrical power type at each booster pump site before equipment manufacturing.

VFD I/O BOARD

TERMINAL		DESCRIPTION
1	24 V OUT 1	24 V CONTROL VOLTAGE 1
2	DIN1	DIGITAL INPUT 1-MANUAL OVERRIDE
3	DIN2	DIGITAL INPUT 2-START FORWARD
4	DIN3	DIGITAL INPUT 3-FAULT RESET
5	AI1+	ANALOG INPUT
6	AI1-	ANALOG INPUT, COMMON
7	AI2+	ANALOG INPUT, VOLTAGE
8	AI2-	ANALOG INPUT, COMMON
9	+10 REF	REFERENCE VOLTAGE
10	DO1	DIGITAL OUTPUT 1
11	DOC	COMMON
12	24 V OUT 2	24 V CONTROL VOLTAGE 2
13	DIC2	DIGITAL INPUT COMMON 2

LEGEND:

SYMBOL	DESCRIPTION
	CIRCUIT BREAKER, SINGLE POLE
	CIRCUIT BREAKER, TWO POLE
	CONTACT, NORMALLY OPEN
	CONTACT, NORMALLY CLOSED
	SWITCH, SINGLE-POLE, 3-POSITION
	OPERATING COIL
	THERMAL OVERLOAD
M	MOTOR
	GROUNDING ELECTRODE
MC	CONDUIT, RIGID STEEL, UNDERGROUND
	CONDUIT, FLEXIBLE
	CONDUIT, TURN UP
	CONDUIT, TURN DOWN
	PUSHBUTTON SWITCH, NORMALLY OPEN
	TRANSFORMER WINDING

ABBREVIATIONS:

ARV	ALARM RESET VFD
CR	CONTROL RELAY
CRI	CONTROL RELAY IRRIGATION
MD	MAIN DISCONNECT
PD	PUMP DISCONNECT
PL	PILOT LIGHT
PLL	PILOT LIGHT LOW VOLTAGE
POT	POTENTIOMETER
SS	SELECTOR SWITCH
TB	TERMINAL BLOCK
TM	TIME METER
VFD	VARIABLE FREQUENCY DRIVE
WP	WEATHERPROOF

BOOSTER PUMP INFORMATION AND EQUIPMENT SCHEDULE

BOOSTER PUMP			ELECTRICAL EQUIPMENT ENCLOSURE									
LOCATION	HP	VOLTS	(MD) MAIN DISCONNECT	(PD) PUMP DISCONNECT	TYPE	VFD RATING	3% IMPEDANCE LINE REACTOR RATING	INPUT VOLTS	OUTPUT VOLTS	CONTROLS	OPTION
FRESNO 180	5	230/3 Ø	80/2	60/2	VFD	10 HP	10 HP	230/1 Ø	230/3 Ø	4-20 Milli Amps	External Readout

DESIGN SUPERVISOR	DESIGN	BY Jagtar Dhaliwal	CHECKED Imran Saeed
DESIGN ENGINEER	DETAILS	BY	CHECKED Imran Saeed
	QUANTITIES	BY Jagtar Dhaliwal	CHECKED Imran Saeed

STATE OF CALIFORNIA
DEPARTMENT OF TRANSPORTATION

DIVISION OF ENGINEERING SERVICES
ELECTRICAL-MECHANICAL-WATER AND WASTEWATER DESIGN

BRIDGE NO.
POST MILE

BOOSTER PUMP
ELECTRICAL EQUIPMENT ENCLOSURE CONTROL SCHEMATIC

SHEET **EE-1**

TAEMWW Imperial Rev. 7/10

ORIGINAL SCALE IN INCHES FOR REDUCED PLANS 0 1 2 3

UNIT 3615
PROJECT NUMBER & PHASE 06130002661

DISREGARD PRINTS BEARING EARLIER REVISION DATES
REVISION DATES (PRELIMINARY STAGE ONLY) 11/15/11 9/19/12 10/4/12 7/31/13 SHEET OF

15-AUG-2013 09:28
06130002661d001.dgn

Dist	COUNTY	ROUTE	POST MILES TOTAL PROJECT	SHEET No.	TOTAL SHEETS
06	Fre	168,180	Var	68	204

REGISTERED MECHANICAL ENGINEER — DATE 07-31-13

PLANS APPROVAL DATE 8-5-13

REGISTERED PROFESSIONAL ENGINEER — Alan Torres — No. M 20155 — Exp. 09-30-14 — MECH — STATE OF CALIFORNIA

The State of California or its officers or agents shall not be responsible for the accuracy or completeness of scanned copies of this plan sheet.

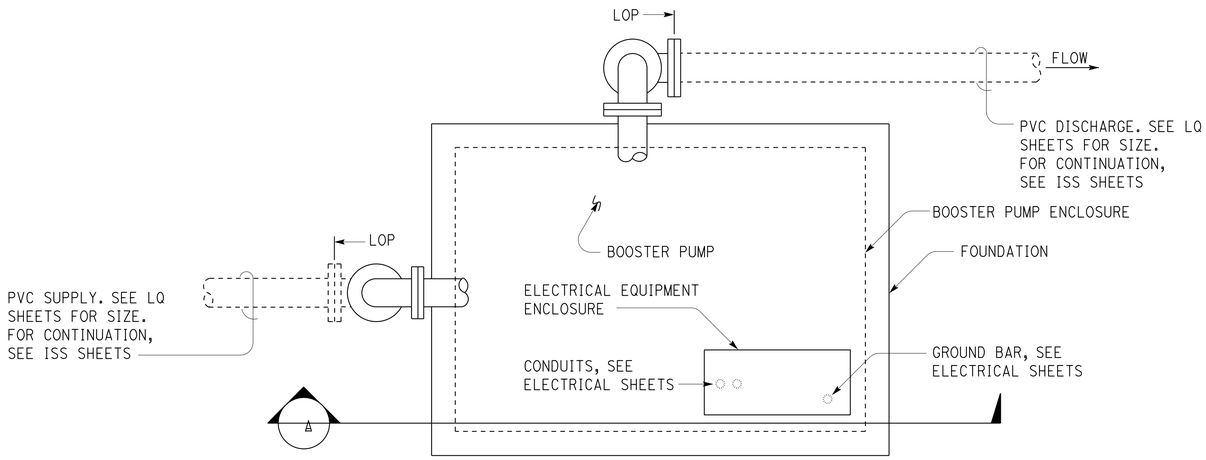

PLAN

NO SCALE

ABBREVIATIONS:

LOP LIMIT OF PAYMENT

PUMP SCHEDULE					
#	PUMP LOCATION	PUMPING RATE (GPM)	TOTAL DYNAMIC HEAD (FEET)	HP	VOLT/ PHASE
1	FRESNO 180	65	180	5	230/3

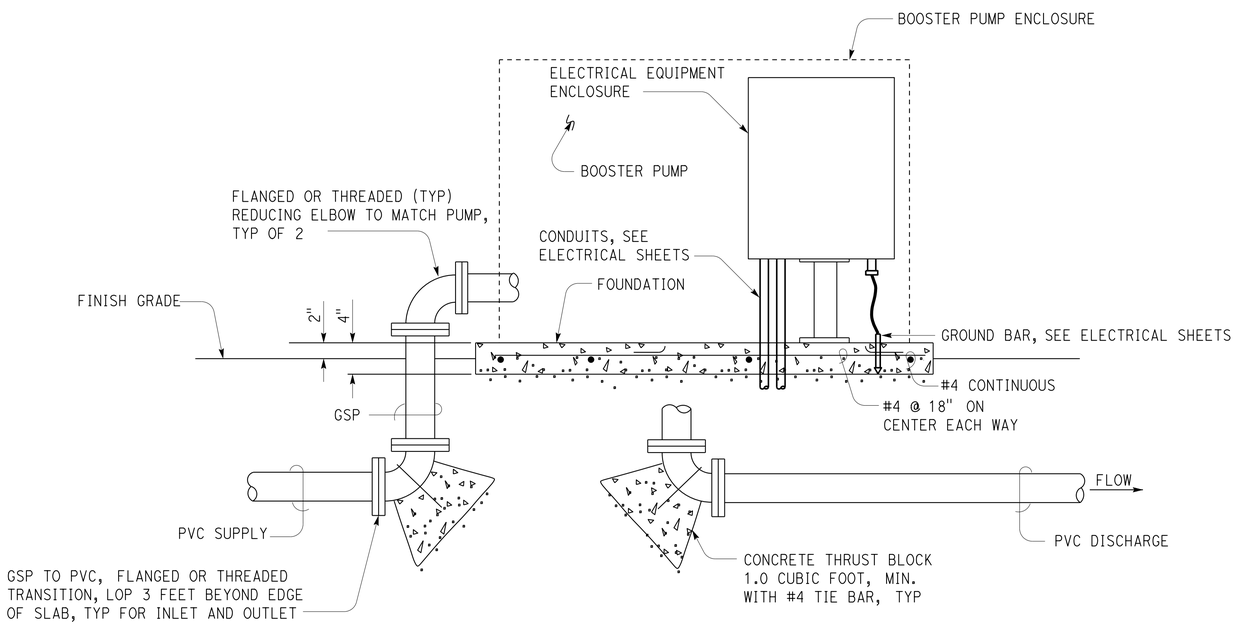

A SECTION

NO SCALE

DESIGN SUPERVISOR — DESIGN ENGINEER

	BY	CHECKED
DESIGN	Alvin Kwan	Alon Torres
DETAILS		Alon Torres
QUANTITIES	Alvin Kwan	Alon Torres

STATE OF CALIFORNIA — DEPARTMENT OF TRANSPORTATION

DIVISION OF ENGINEERING SERVICES — ELECTRICAL-MECHANICAL-WATER AND WASTEWATER DESIGN

BRIDGE No. — POST MILE

BOOSTER PUMP

BOOSTER PUMP DETAILS

SHEET M-1

TAEMWW Imperial - CCSC Rev. 02/13

ORIGINAL SCALE IN INCHES FOR REDUCED PLANS 0 1 2 3

PROJECT NUMBER & PHASE 3615 06130002661

DISREGARD PRINTS BEARING EARLIER REVISION DATES 11/18/11 07/31/13

REVISION DATES (PRELIMINARY STAGE ONLY) — SHEET — OF

L:\002_Projects\District_6\06-00550\500_Contract_Preparation\510_Plans\06-005501_CombinedLandscapePlans\0613000266td002.dgn

15-AUG-2013 09:28

Dist	COUNTY	ROUTE	POST MILES TOTAL PROJECT	SHEET No.	TOTAL SHEETS
06	Fre	168,180	Var	69	204

REGISTERED ELECTRICAL ENGINEER 7-30-13 DATE

8-5-13
PLANS APPROVAL DATE

REGISTERED PROFESSIONAL ENGINEER
PAUL MATOS
No. 18757
Exp. 6/30/15
ELECTRICAL
STATE OF CALIFORNIA

THE STATE OF CALIFORNIA OR ITS OFFICERS OR AGENTS SHALL NOT BE RESPONSIBLE FOR THE ACCURACY OR COMPLETENESS OF SCANNED COPIES OF THIS PLAN SHEET.

NOTES:

1. FOR ACCURATE RIGHT OF WAY DATA, CONTACT RIGHT OF WAY ENGINEERING AT THE DISTRICT OFFICE.
2. EXISTING UTILITY FACILITIES HAVE NOT BEEN PLOTTED ON THESE PLANS.

LEGEND: (FOR THIS SHEET ONLY)

1 RC Exist pb. INSTALL PB AS SHOWN ON DETAIL A SHEET E-115.

2 INSTALL DEPARTMENT-FURNISHED LOCK ON Exist SERVICE ENCLOSURE. YOU MUST FURNISH AND INSTALL HASPS AS SHOWN ON DETAIL B SHEET E-116.

SYMBOLS:

Exist COMMUNICATION VAULT
Exist ELECTRICAL EQUIPMENT ENCLOSURE
Exist BOOSTER PUMP
PUMP PLANT Exist PUMP PLANT

ABBREVIATIONS:

VSS - VIDEO SURVEILLANCE SYSTEM
TR - TAMPER RESISTANT

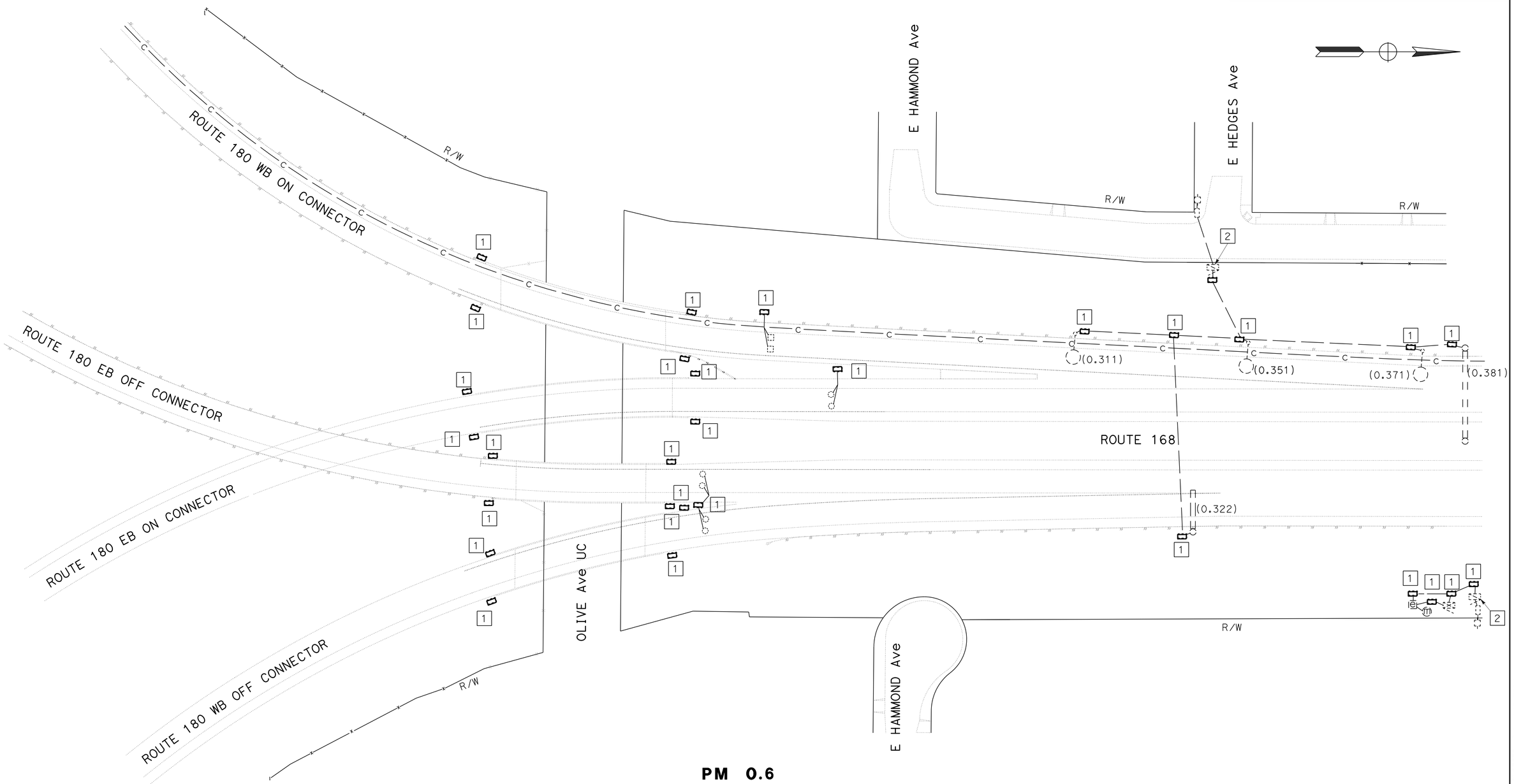

ELECTRICAL SYSTEMS (ROUTE 168)

SCALE: 1" = 50'

E-1

APPROVED FOR ELECTRICAL WORK ONLY

STATE OF CALIFORNIA - DEPARTMENT OF TRANSPORTATION
Caltrans® ELECTRICAL DESIGN

FUNCTIONAL SUPERVISOR: ALI BAKHDOUD
CALCULATED-DESIGNED BY: PAUL MATOS
CHECKED BY: ROBERTO SALCIDO
REVISED BY
DATE REVISED

LAST REVISION 08-02-13
DATE PLOTTED => 15-AUG-2013
TIME PLOTTED => 09:28

Dist	COUNTY	ROUTE	POST MILES TOTAL PROJECT	SHEET No.	TOTAL SHEETS
06	Fre	168,180	Var	70	204

REGISTERED ELECTRICAL ENGINEER 7-30-13 DATE

8-5-13
PLANS APPROVAL DATE

REGISTERED PROFESSIONAL ENGINEER PAUL MATOS No. 18757 Exp. 6/30/15 ELECTRICAL STATE OF CALIFORNIA

THE STATE OF CALIFORNIA OR ITS OFFICERS OR AGENTS SHALL NOT BE RESPONSIBLE FOR THE ACCURACY OR COMPLETENESS OF SCANNED COPIES OF THIS PLAN SHEET.

NOTES:

1. FOR ACCURATE RIGHT OF WAY DATA, CONTACT RIGHT OF WAY ENGINEERING AT THE DISTRICT OFFICE.
2. EXISTING UTILITY FACILITIES HAVE NOT BEEN PLOTTED ON THESE PLANS.

LEGEND: (FOR THIS SHEET ONLY)

1 RC Exist pb. INSTALL PB AS SHOWN ON DETAIL A SHEET E-115.

2 INSTALL DEPARTMENT-FURNISHED LOCK ON Exist SERVICE ENCLOSURE. YOU MUST FURNISH AND INSTALL HASPS AS SHOWN ON DETAIL B SHEET E-116.

3 INSTALL PB AS SHOWN ON DETAIL C SHEET E-115.

4 SEE LANDSCAPE PLANS FOR ICC RELOCATION DETAILS.

5 RC Exist pb COVER. INSTALL TAMPER RESISTANT PB COVER AS SHOWN ON DETAIL B SHEET E-115.

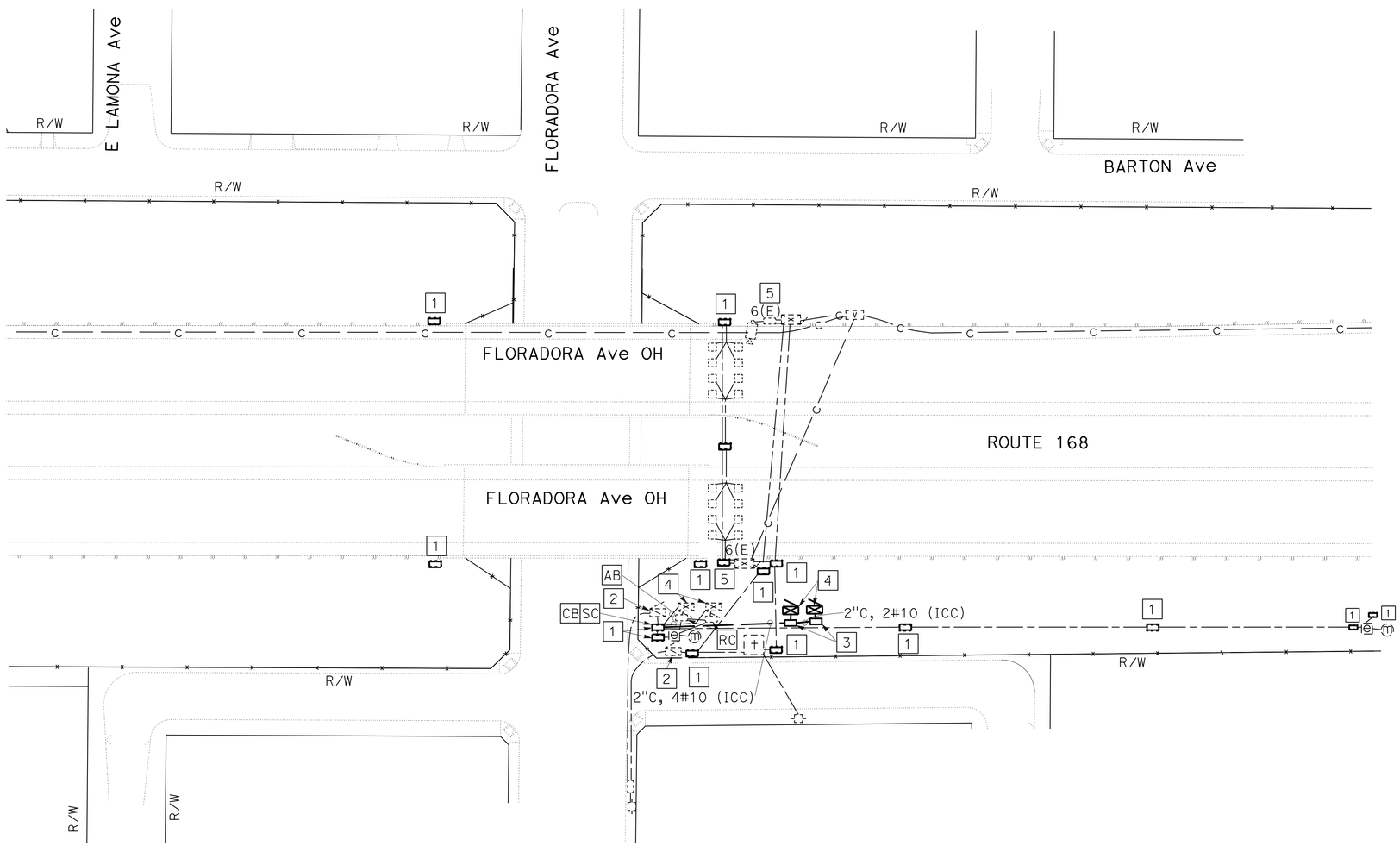

PM 0.7

APPROVED FOR ELECTRICAL WORK ONLY

ELECTRICAL SYSTEMS (ROUTE 168)
E-2

SCALE: 1" = 50'

STATE OF CALIFORNIA - DEPARTMENT OF TRANSPORTATION
Caltrans® ELECTRICAL DESIGN

FUNCTIONAL SUPERVISOR: ALI BAKHDOUD
CALCULATED-DESIGNED BY: PAUL MATOS
CHECKED BY: ROBERTO SALCIDO
REVISED BY
DATE REVISED

LAST REVISION 08-02-13 | DATE PLOTTED => 15-AUG-2013 | TIME PLOTTED => 09:28

Dist	COUNTY	ROUTE	POST MILES TOTAL PROJECT	SHEET No.	TOTAL SHEETS
06	Fre	168,180	Var	71	204

REGISTERED ELECTRICAL ENGINEER 7-30-13 DATE

8-5-13
PLANS APPROVAL DATE

REGISTERED PROFESSIONAL ENGINEER PAUL MATOS No. 18757 Exp. 6/30/15 ELECTRICAL STATE OF CALIFORNIA

THE STATE OF CALIFORNIA OR ITS OFFICERS OR AGENTS SHALL NOT BE RESPONSIBLE FOR THE ACCURACY OR COMPLETENESS OF SCANNED COPIES OF THIS PLAN SHEET.

NOTES:

1. FOR ACCURATE RIGHT OF WAY DATA, CONTACT RIGHT OF WAY ENGINEERING AT THE DISTRICT OFFICE.
2. EXISTING UTILITY FACILITIES HAVE NOT BEEN PLOTTED ON THESE PLANS.

LEGEND:

1 RC Exist pb. INSTALL PB AS SHOWN ON DETAIL A SHEET E-115.

2 INSTALL DEPARTMENT-FURNISHED LOCK ON Exist SERVICE ENCLOSURE. YOU MUST FURNISH AND INSTALL HASPS AS SHOWN ON DETAIL B SHEET E-116.

3 RC Exist pb COVER. INSTALL TAMPER RESISTANT PB COVER AS SHOWN ON DETAIL B SHEET E-115.

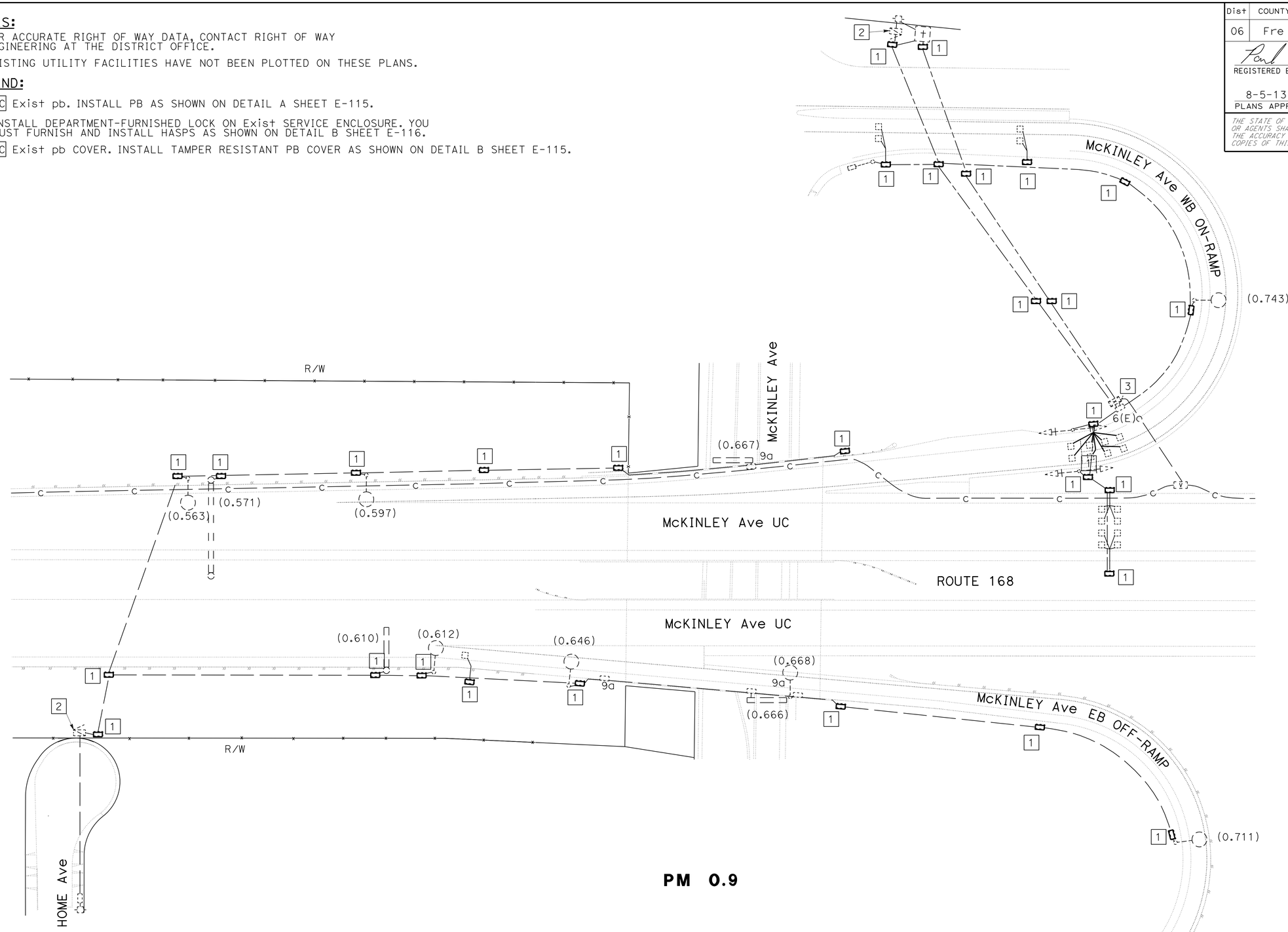

ELECTRICAL SYSTEMS (ROUTE 168)

E-3

SCALE: 1" = 50'

APPROVED FOR ELECTRICAL WORK ONLY

STATE OF CALIFORNIA - DEPARTMENT OF TRANSPORTATION
Caltrans ELECTRICAL DESIGN

FUNCTIONAL SUPERVISOR: ALI BAKHDOUD
CALCULATED-DESIGNED BY: PAUL MATOS
CHECKED BY: ROBERTO SALCIDO
REVISED BY
DATE REVISED

LAST REVISION DATE PLOTTED => 15-AUG-2013
TIME PLOTTED => 09:28
08-02-13

Dist	COUNTY	ROUTE	POST MILES TOTAL PROJECT	SHEET No.	TOTAL SHEETS
06	Fre	168,180	Var	72	204

REGISTERED ELECTRICAL ENGINEER 7-30-13 DATE

8-5-13
PLANS APPROVAL DATE

REGISTERED PROFESSIONAL ENGINEER PAUL MATOS No. 18757 Exp. 6/30/15 ELECTRICAL STATE OF CALIFORNIA

THE STATE OF CALIFORNIA OR ITS OFFICERS OR AGENTS SHALL NOT BE RESPONSIBLE FOR THE ACCURACY OR COMPLETENESS OF SCANNED COPIES OF THIS PLAN SHEET.

NOTES:

1. FOR ACCURATE RIGHT OF WAY DATA, CONTACT RIGHT OF WAY ENGINEERING AT THE DISTRICT OFFICE.
2. EXISTING UTILITY FACILITIES HAVE NOT BEEN PLOTTED ON THESE PLANS.

LEGEND: (FOR THIS SHEET ONLY)

1 RC Exist pb. INSTALL PB AS SHOWN ON DETAIL A SHEET E-115.

2 RC Exist pb COVER. INSTALL TAMPER RESISTANT PB COVER AS SHOWN ON DETAIL B SHEET E-115.

3 INSTALL DEPARTMENT-FURNISHED LOCK ON Exist SERVICE ENCLOSURE. YOU MUST FURNISH AND INSTALL HASPS AS SHOWN ON DETAIL B SHEET E-116.

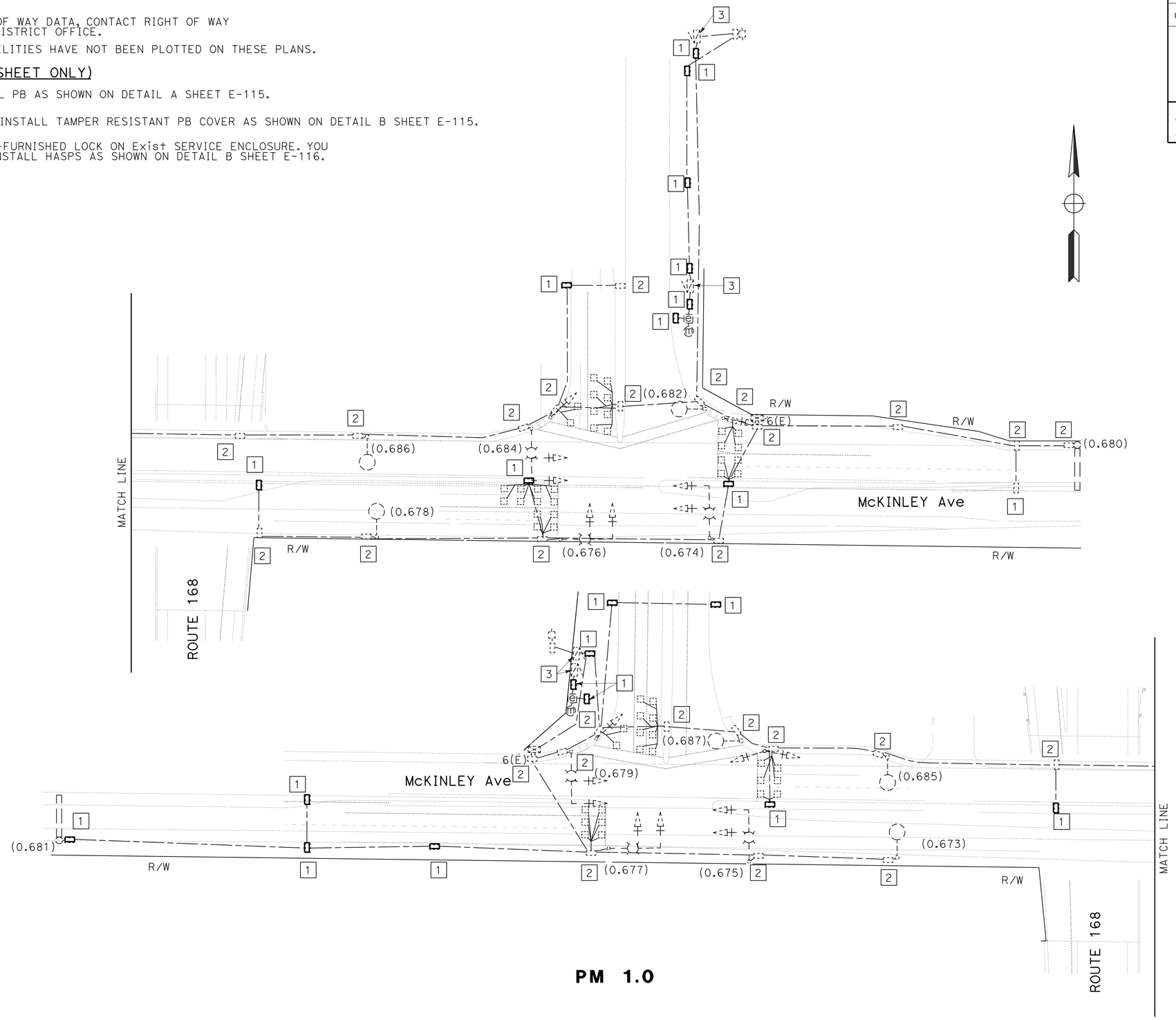

ELECTRICAL SYSTEMS (ROUTE 168)

SCALE: 1" = 50'

E-4

APPROVED FOR ELECTRICAL WORK ONLY

STATE OF CALIFORNIA - DEPARTMENT OF TRANSPORTATION
Caltrans ELECTRICAL DESIGN

FUNCTIONAL SUPERVISOR: ALI BAKHDOUD
CALCULATED-DESIGNED BY: PAUL MATOS
CHECKED BY: ROBERTO SALCIDO
REVISED BY
DATE REVISED

LAST REVISION 08-02-13
DATE PLOTTED => 15-AUG-2013
TIME PLOTTED => 09:28

Dist	COUNTY	ROUTE	POST MILES TOTAL PROJECT	SHEET No.	TOTAL SHEETS
06	Fre	168,180	Var	73	204

REGISTERED ELECTRICAL ENGINEER 7-30-13 DATE

8-5-13
PLANS APPROVAL DATE

REGISTERED PROFESSIONAL ENGINEER PAUL MATOS No. 18757 Exp. 6/30/15 ELECTRICAL STATE OF CALIFORNIA

THE STATE OF CALIFORNIA OR ITS OFFICERS OR AGENTS SHALL NOT BE RESPONSIBLE FOR THE ACCURACY OR COMPLETENESS OF SCANNED COPIES OF THIS PLAN SHEET.

NOTES:

1. FOR ACCURATE RIGHT OF WAY DATA, CONTACT RIGHT OF WAY ENGINEERING AT THE DISTRICT OFFICE.
2. EXISTING UTILITY FACILITIES HAVE NOT BEEN PLOTTED ON THESE PLANS.

LEGEND: (FOR THIS SHEET ONLY)

1 RC Exist pb. INSTALL PB AS SHOWN ON DETAIL A SHEET E-115.

2 INSTALL DEPARTMENT-FURNISHED LOCK ON Exist SERVICE ENCLOSURE. YOU MUST FURNISH AND INSTALL HASPS AS SHOWN ON DETAIL B SHEET E-116.

3 RC Exist pb COVER. INSTALL TAMPER RESISTANT PB COVER AS SHOWN ON DETAIL B SHEET E-115.

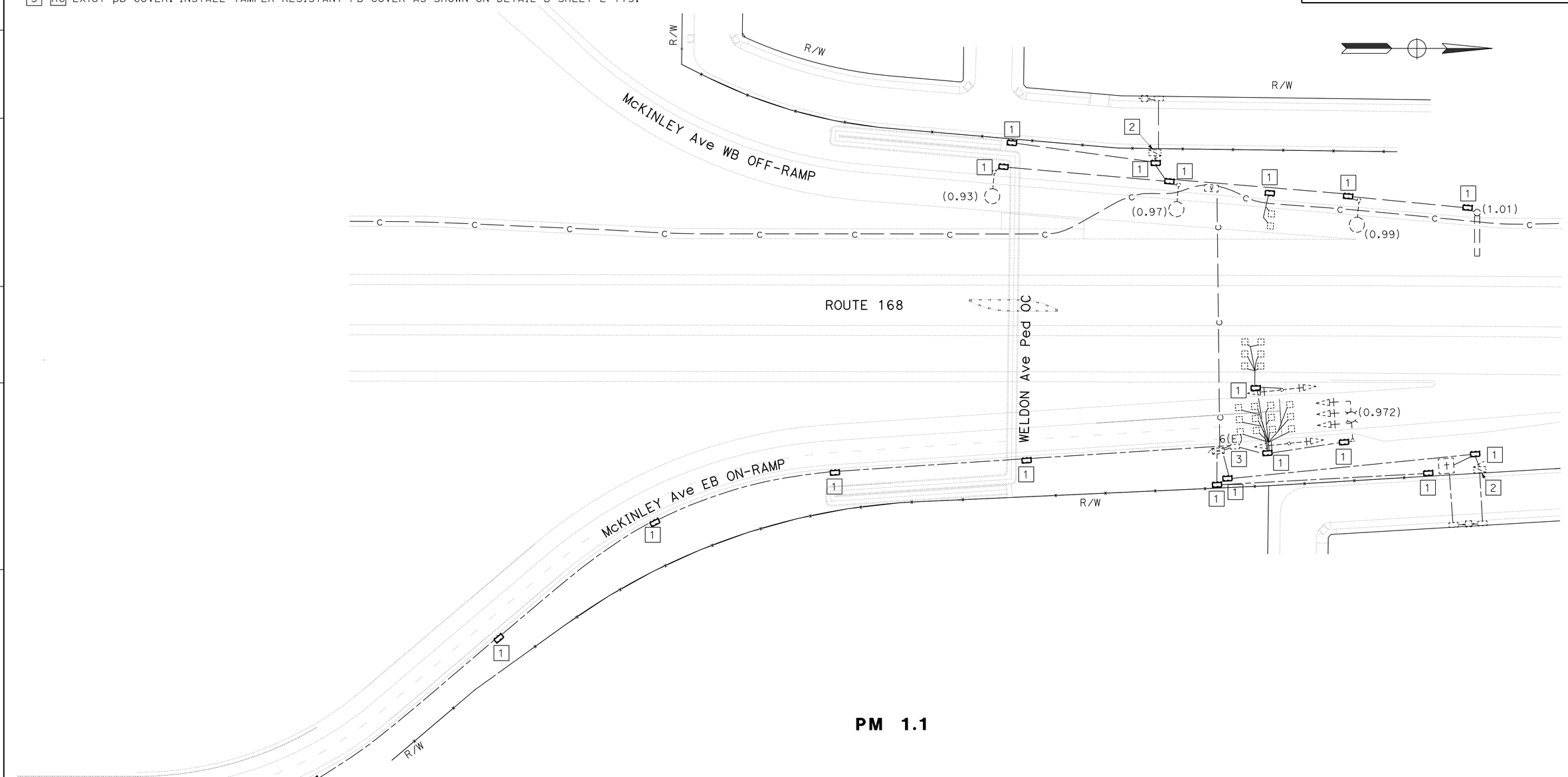

APPROVED FOR ELECTRICAL WORK ONLY

ELECTRICAL SYSTEMS (ROUTE 168)

SCALE: 1" = 50'

E-5

STATE OF CALIFORNIA - DEPARTMENT OF TRANSPORTATION
Caltrans ELECTRICAL DESIGN

FUNCTIONAL SUPERVISOR: ALI BAKHDOUD
CALCULATED-DESIGNED BY: ROBERTO SALCIDO
CHECKED BY: PAUL MATOS
REVISED BY
DATE REVISED

LAST REVISION DATE PLOTTED => 15-AUG-2013
TIME PLOTTED => 09:28

Dist	COUNTY	ROUTE	POST MILES TOTAL PROJECT	SHEET No.	TOTAL SHEETS
06	Fre	168,180	Var	74	204

REGISTERED ELECTRICAL ENGINEER 7-30-13 DATE

8-5-13
PLANS APPROVAL DATE

REGISTERED PROFESSIONAL ENGINEER PAUL MATOS No. 18757 Exp. 6/30/15 ELECTRICAL STATE OF CALIFORNIA

THE STATE OF CALIFORNIA OR ITS OFFICERS OR AGENTS SHALL NOT BE RESPONSIBLE FOR THE ACCURACY OR COMPLETENESS OF SCANNED COPIES OF THIS PLAN SHEET.

NOTES:

1. FOR ACCURATE RIGHT OF WAY DATA, CONTACT RIGHT OF WAY ENGINEERING AT THE DISTRICT OFFICE.
2. EXISTING UTILITY FACILITIES HAVE NOT BEEN PLOTTED ON THESE PLANS.

LEGEND: (FOR THIS SHEET ONLY)

1 RC Exist pb. INSTALL PB AS SHOWN ON DETAIL A SHEET E-115.

2 INSTALL DEPARTMENT-FURNISHED LOCK ON Exist SERVICE ENCLOSURE. YOU MUST FURNISH AND INSTALL HASPS AS SHOWN ON DETAIL B SHEET E-116.

3 RC Exist pb COVER. INSTALL TAMPER RESISTANT PB COVER AS SHOWN ON DETAIL B SHEET E-115.

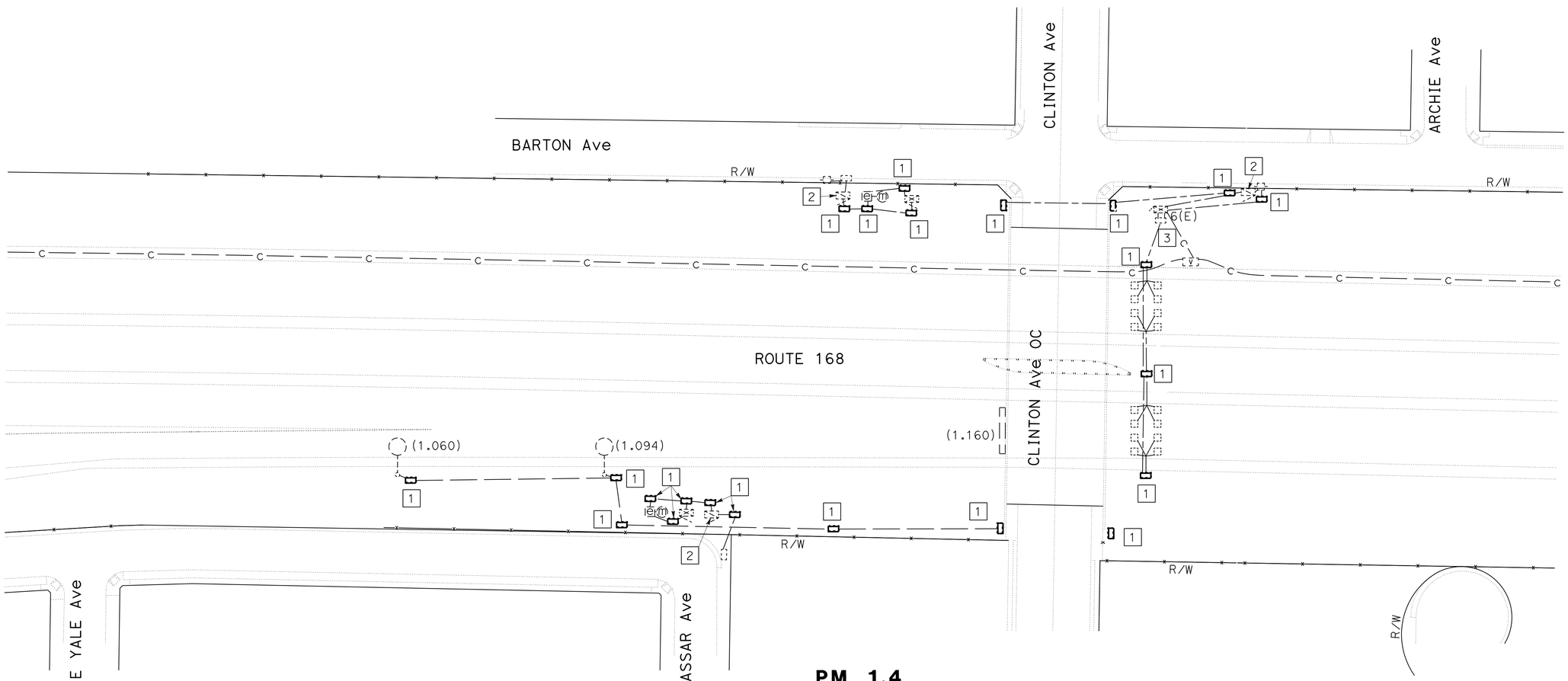

ELECTRICAL SYSTEMS (ROUTE 168)

E-6

APPROVED FOR ELECTRICAL WORK ONLY

SCALE: 1" = 50'

STATE OF CALIFORNIA - DEPARTMENT OF TRANSPORTATION
Caltrans ELECTRICAL DESIGN

FUNCTIONAL SUPERVISOR: ALI BAKHDOUD
CALCULATED-DESIGNED BY: PAUL MATOS
CHECKED BY: ROBERTO SALCIDO
REVISED BY
DATE REVISED

LAST REVISION 08-02-13
DATE PLOTTED => 15-AUG-2013
TIME PLOTTED => 09:28

Dist	COUNTY	ROUTE	POST MILES TOTAL PROJECT	SHEET No.	TOTAL SHEETS
06	Fre	168,180	Var	75	204

REGISTERED ELECTRICAL ENGINEER 7-30-13 DATE

8-5-13
PLANS APPROVAL DATE

REGISTERED PROFESSIONAL ENGINEER PAUL MATOS No. 18757 Exp. 6/30/15 ELECTRICAL STATE OF CALIFORNIA

THE STATE OF CALIFORNIA OR ITS OFFICERS OR AGENTS SHALL NOT BE RESPONSIBLE FOR THE ACCURACY OR COMPLETENESS OF SCANNED COPIES OF THIS PLAN SHEET.

NOTES:

1. FOR ACCURATE RIGHT OF WAY DATA, CONTACT RIGHT OF WAY ENGINEERING AT THE DISTRICT OFFICE.
2. EXISTING UTILITY FACILITIES HAVE NOT BEEN PLOTTED ON THESE PLANS.

LEGEND: (FOR THIS SHEET ONLY)

1 RC Exist pb. INSTALL PB AS SHOWN ON DETAIL A SHEET E-115.

2 INSTALL DEPARTMENT-FURNISHED LOCK ON Exist SERVICE ENCLOSURE. YOU MUST FURNISH AND INSTALL HASPS AS SHOWN ON DETAIL B SHEET E-116.

3 RC Exist pb COVER. INSTALL TAMPER RESISTANT PB COVER AS SHOWN ON DETAIL B SHEET E-115.

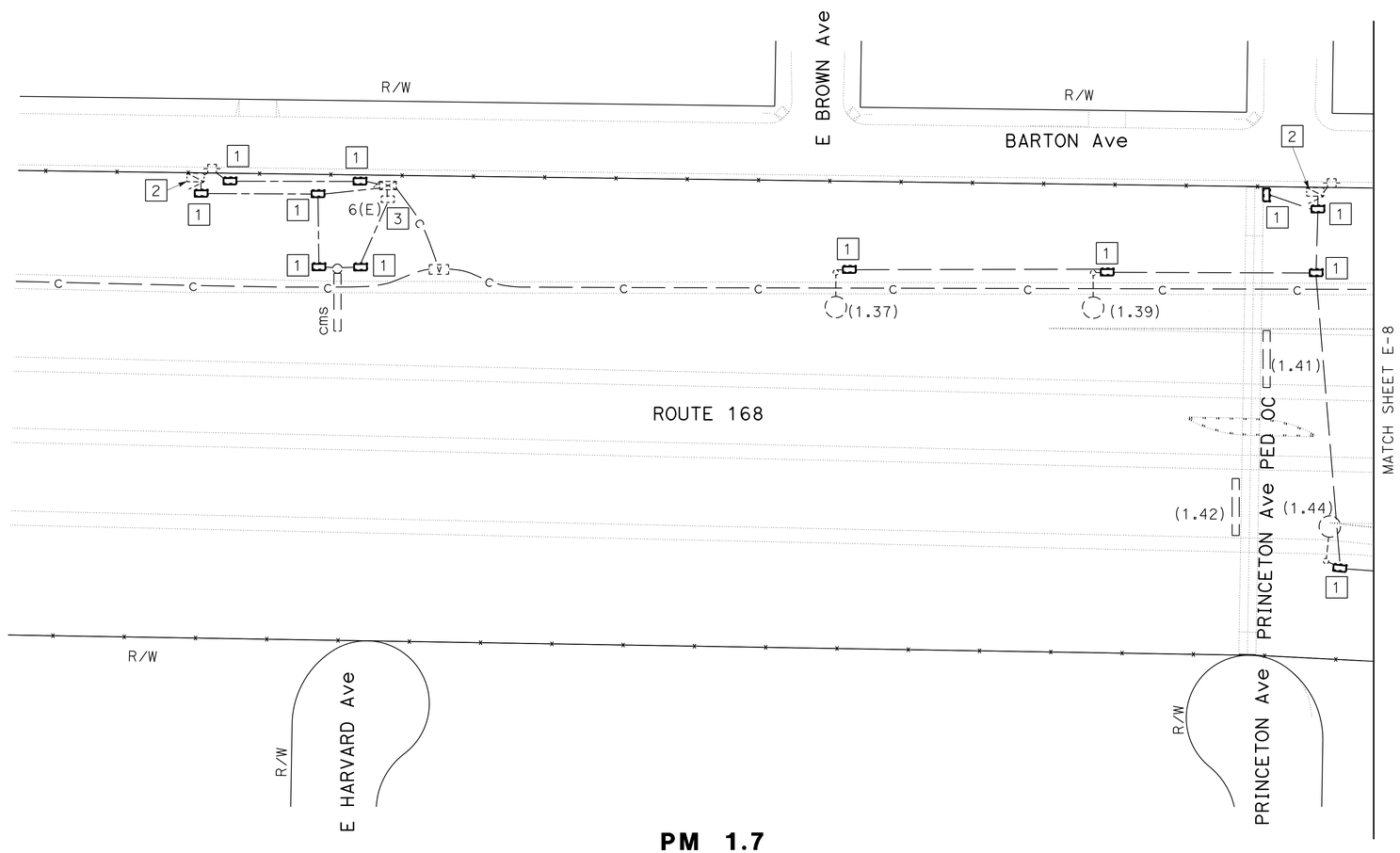

PM 1.7

ELECTRICAL SYSTEMS (ROUTE 168)

E-7

SCALE: 1" = 50'

APPROVED FOR ELECTRICAL WORK ONLY

STATE OF CALIFORNIA - DEPARTMENT OF TRANSPORTATION
Caltrans® ELECTRICAL DESIGN

FUNCTIONAL SUPERVISOR: ALI BAKHDOUD
CALCULATED-DESIGNED BY: PAUL MATOS
CHECKED BY: ROBERTO SALCIDO
REVISED BY
DATE REVISED

LAST REVISION 08-02-13
DATE PLOTTED => 15-AUG-2013
TIME PLOTTED => 09:28

Dist	COUNTY	ROUTE	POST MILES TOTAL PROJECT	SHEET No.	TOTAL SHEETS
06	Fre	168,180	Var	76	204

REGISTERED ELECTRICAL ENGINEER 7-30-13 DATE

8-5-13
PLANS APPROVAL DATE

REGISTERED PROFESSIONAL ENGINEER
PAUL MATOS
No. 18757
Exp. 6/30/15
ELECTRICAL
STATE OF CALIFORNIA

THE STATE OF CALIFORNIA OR ITS OFFICERS OR AGENTS SHALL NOT BE RESPONSIBLE FOR THE ACCURACY OR COMPLETENESS OF SCANNED COPIES OF THIS PLAN SHEET.

NOTES:

1. FOR ACCURATE RIGHT OF WAY DATA, CONTACT RIGHT OF WAY ENGINEERING AT THE DISTRICT OFFICE.
2. EXISTING UTILITY FACILITIES HAVE NOT BEEN PLOTTED ON THESE PLANS.

LEGEND: (FOR THIS SHEET ONLY)

1 RC Exist pb. INSTALL PB AS SHOWN ON DETAIL A SHEET E-115.

2 INSTALL DEPARTMENT-FURNISHED LOCK ON Exist SERVICE ENCLOSURE. YOU MUST FURNISH AND INSTALL HASPS AS SHOWN ON DETAIL B SHEET E-116.

3 RC Exist pb COVER. INSTALL TAMPER RESISTANT PB COVER AS SHOWN ON DETAIL B SHEET E-115.

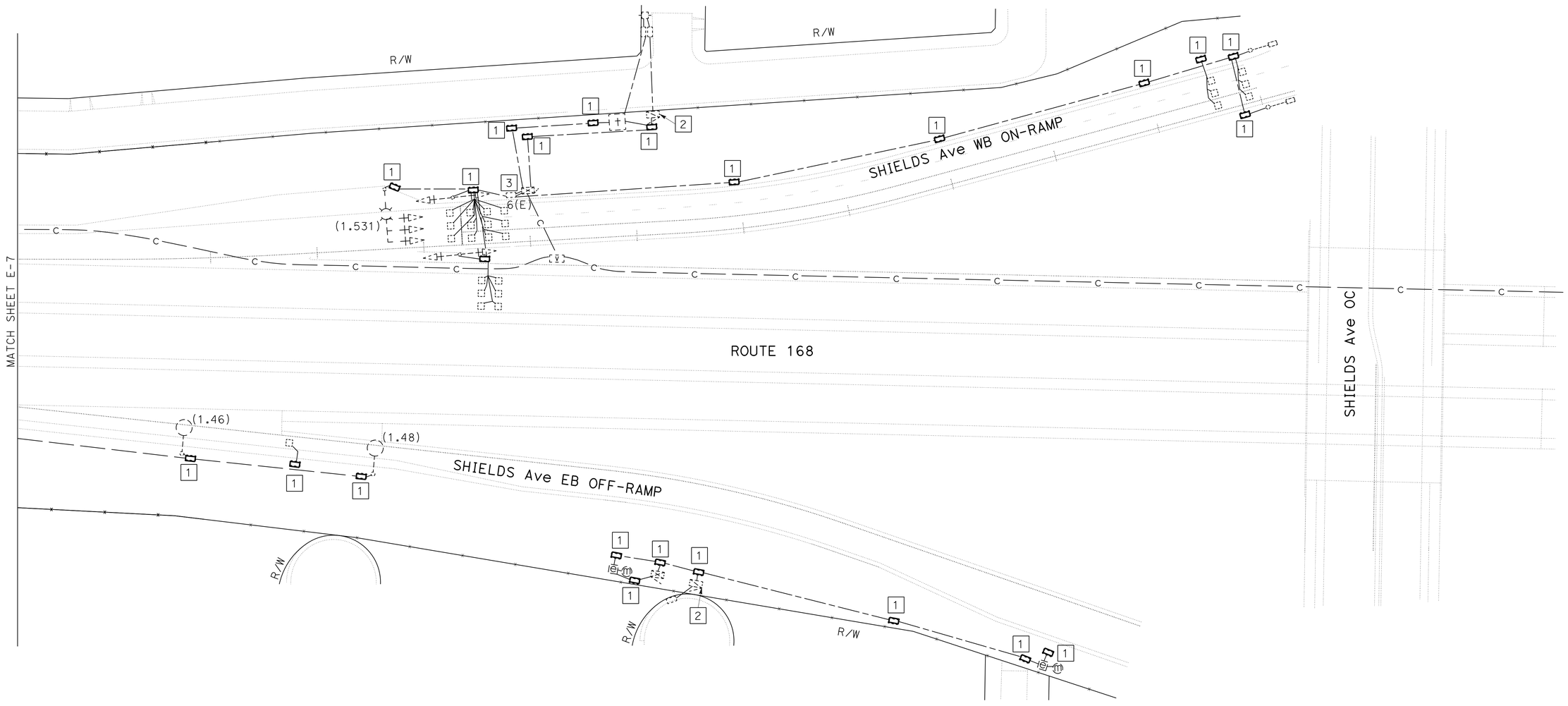

PM 1.9

ELECTRICAL SYSTEMS (ROUTE 168)

E-8

APPROVED FOR ELECTRICAL WORK ONLY

SCALE: 1" = 50'

STATE OF CALIFORNIA - DEPARTMENT OF TRANSPORTATION
Caltrans ELECTRICAL DESIGN

FUNCTIONAL SUPERVISOR: ALI BAKHDOUD
CALCULATED-DESIGNED BY: PAUL MATOS
CHECKED BY: ROBERTO SALCIDO
REVISED BY
DATE REVISED

LAST REVISION DATE PLOTTED => 15-AUG-2013
TIME PLOTTED => 09:28

Dist	COUNTY	ROUTE	POST MILES TOTAL PROJECT	SHEET No.	TOTAL SHEETS
06	Fre	168,180	Var	77	204

REGISTERED ELECTRICAL ENGINEER 7-30-13 DATE

8-5-13
PLANS APPROVAL DATE

REGISTERED PROFESSIONAL ENGINEER PAUL MATOS No. 18757 Exp. 6/30/15 ELECTRICAL STATE OF CALIFORNIA

THE STATE OF CALIFORNIA OR ITS OFFICERS OR AGENTS SHALL NOT BE RESPONSIBLE FOR THE ACCURACY OR COMPLETENESS OF SCANNED COPIES OF THIS PLAN SHEET.

NOTES:

1. FOR ACCURATE RIGHT OF WAY DATA, CONTACT RIGHT OF WAY ENGINEERING AT THE DISTRICT OFFICE.
2. EXISTING UTILITY FACILITIES HAVE NOT BEEN PLOTTED ON THESE PLANS.

LEGEND: (FOR THIS SHEET ONLY)

1 RC Exist pb. INSTALL PB AS SHOWN ON DETAIL A SHEET E-115.

2 RC Exist pb COVER. INSTALL TAMPER RESISTANT PB COVER AS SHOWN ON DETAIL B SHEET E-115.

3 INSTALL DEPARTMENT-FURNISHED LOCK ON Exist SERVICE ENCLOSURE. YOU MUST FURNISH AND INSTALL HASPS AS SHOWN ON DETAIL B SHEET E-116.

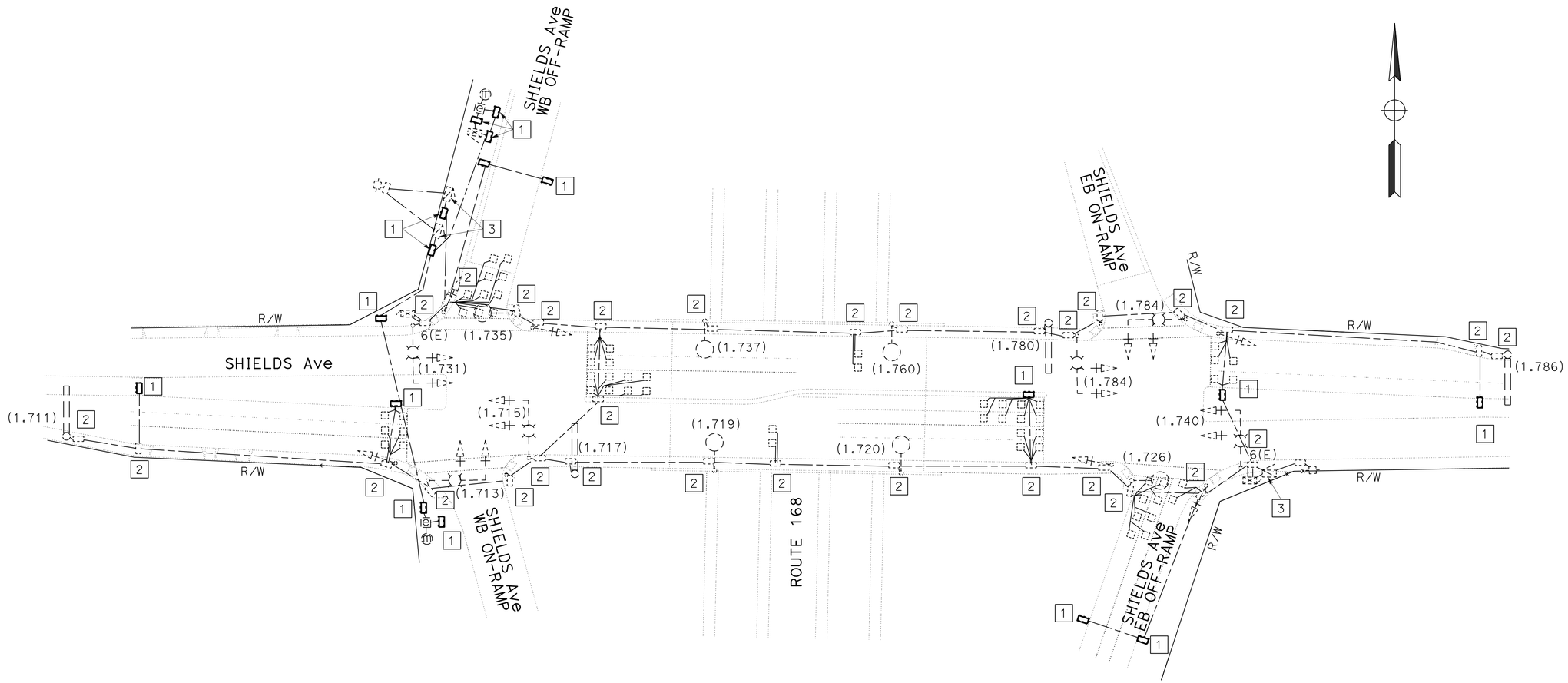

PM 2.0

ELECTRICAL SYSTEMS (ROUTE 168)

E-9

SCALE: 1" = 50'

APPROVED FOR ELECTRICAL WORK ONLY

STATE OF CALIFORNIA - DEPARTMENT OF TRANSPORTATION
Caltrans® **ELECTRICAL DESIGN**

FUNCTIONAL SUPERVISOR: ALI BAKHDOUD
CALCULATED-DESIGNED BY: PAUL MATOS
CHECKED BY: ROBERTO SALCIDO
REVISED BY
DATE REVISED

LAST REVISION 08-02-13 DATE PLOTTED => 15-AUG-2013 TIME PLOTTED => 09:28

Dist	COUNTY	ROUTE	POST MILES TOTAL PROJECT	SHEET No.	TOTAL SHEETS
06	Fre	168,180	Var	78	204

REGISTERED ELECTRICAL ENGINEER 7-30-13 DATE

8-5-13
PLANS APPROVAL DATE

REGISTERED PROFESSIONAL ENGINEER
PAUL MATOS
No. 18757
Exp. 6/30/15
ELECTRICAL
STATE OF CALIFORNIA

THE STATE OF CALIFORNIA OR ITS OFFICERS OR AGENTS SHALL NOT BE RESPONSIBLE FOR THE ACCURACY OR COMPLETENESS OF SCANNED COPIES OF THIS PLAN SHEET.

NOTES:

1. FOR ACCURATE RIGHT OF WAY DATA, CONTACT RIGHT OF WAY ENGINEERING AT THE DISTRICT OFFICE.
2. EXISTING UTILITY FACILITIES HAVE NOT BEEN PLOTTED ON THESE PLANS.

LEGEND: (FOR THIS SHEET ONLY)

1 RC Exist pb. INSTALL PB AS SHOWN ON DETAIL A SHEET E-115.

2 INSTALL DEPARTMENT-FURNISHED LOCK ON Exist SERVICE ENCLOSURE. YOU MUST FURNISH AND INSTALL HASPS AS SHOWN ON DETAIL B SHEET E-116.

3 RC Exist pb COVER. INSTALL TAMPER RESISTANT PB COVER AS SHOWN ON DETAIL B SHEET E-115.

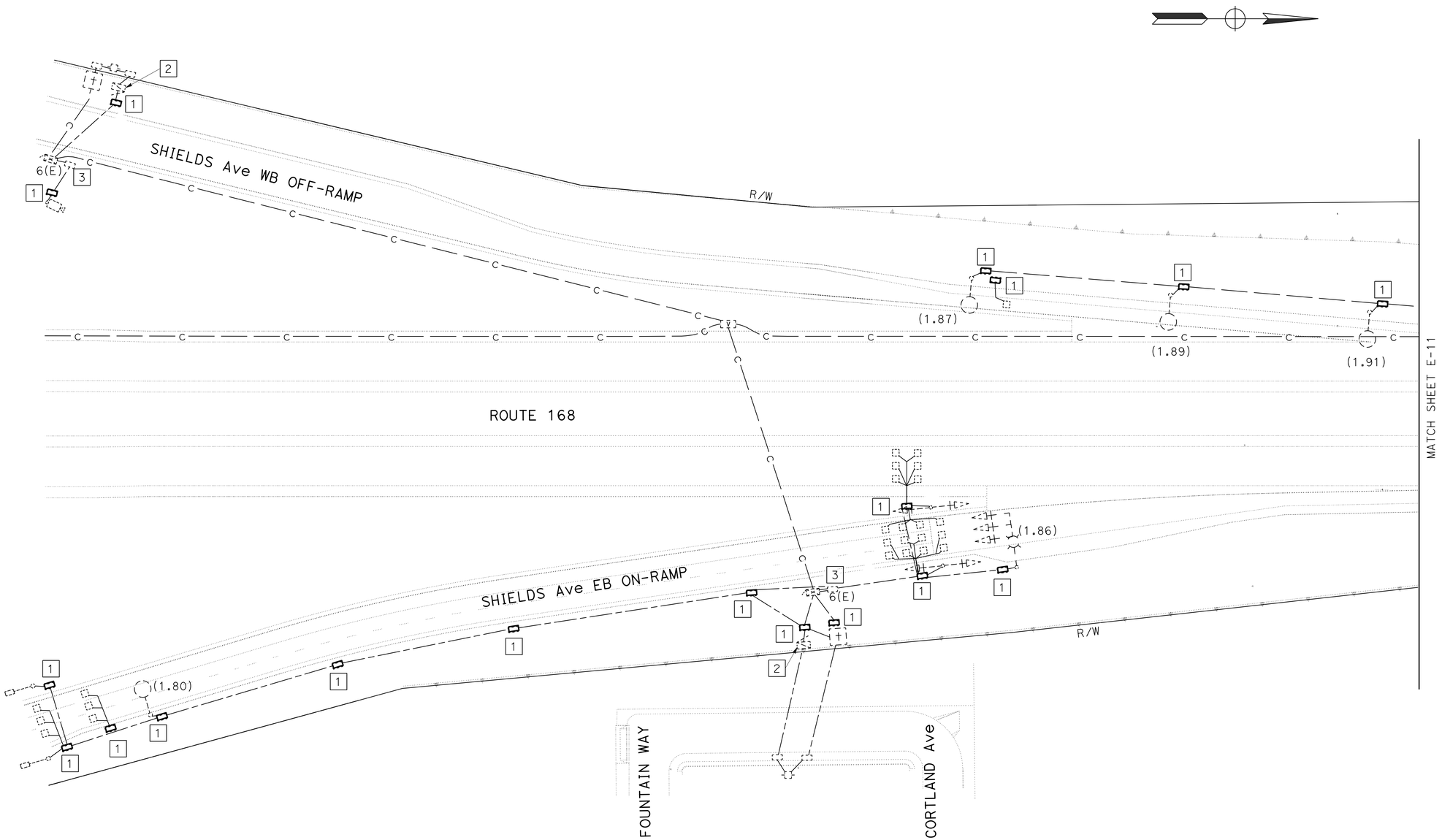

PM 2.1

ELECTRICAL SYSTEMS (ROUTE 168)

E-10

APPROVED FOR ELECTRICAL WORK ONLY

SCALE: 1" = 50'

STATE OF CALIFORNIA - DEPARTMENT OF TRANSPORTATION
Caltrans® ELECTRICAL DESIGN

FUNCTIONAL SUPERVISOR: ALI BAKHDOUD
CALCULATED-DESIGNED BY: PAUL MATOS
CHECKED BY: ROBERTO SALCIDO
REVISED BY
DATE REVISED

LAST REVISION 08-02-13
DATE PLOTTED => 15-AUG-2013
TIME PLOTTED => 09:28

Dist	COUNTY	ROUTE	POST MILES TOTAL PROJECT	SHEET No.	TOTAL SHEETS
06	Fre	168,180	Var	79	204

REGISTERED ELECTRICAL ENGINEER 7-30-13 DATE

8-5-13
PLANS APPROVAL DATE

REGISTERED PROFESSIONAL ENGINEER
PAUL MATOS
No. 18757
Exp. 6/30/15
ELECTRICAL
STATE OF CALIFORNIA

THE STATE OF CALIFORNIA OR ITS OFFICERS OR AGENTS SHALL NOT BE RESPONSIBLE FOR THE ACCURACY OR COMPLETENESS OF SCANNED COPIES OF THIS PLAN SHEET.

NOTES:

1. FOR ACCURATE RIGHT OF WAY DATA, CONTACT RIGHT OF WAY ENGINEERING AT THE DISTRICT OFFICE.
2. EXISTING UTILITY FACILITIES HAVE NOT BEEN PLOTTED ON THESE PLANS.

LEGEND: (FOR THIS SHEET ONLY)

1 RC Exist pb. INSTALL PB AS SHOWN ON DETAIL A SHEET E-115.

2 VIDEO SURVEILLANCE SYSTEM ON VDS 30 POLE. SEE SHEET E-117 FOR DETAILS.

3 INSTALL PB AS SHOWN ON DETAIL C SHEET E-115.

4 INSTALL DEPARTMENT-FURNISHED LOCK AND HASPS ON Exist PUMP PLANT SERVICE ENCLOSURE AS SHOWN ON DETAIL A SHEET E-116.

5 INSTALL DEPARTMENT-FURNISHED LOCK ON Exist SERVICE ENCLOSURE. YOU MUST FURNISH AND INSTALL HASPS AS SHOWN ON DETAIL B SHEET E-116.

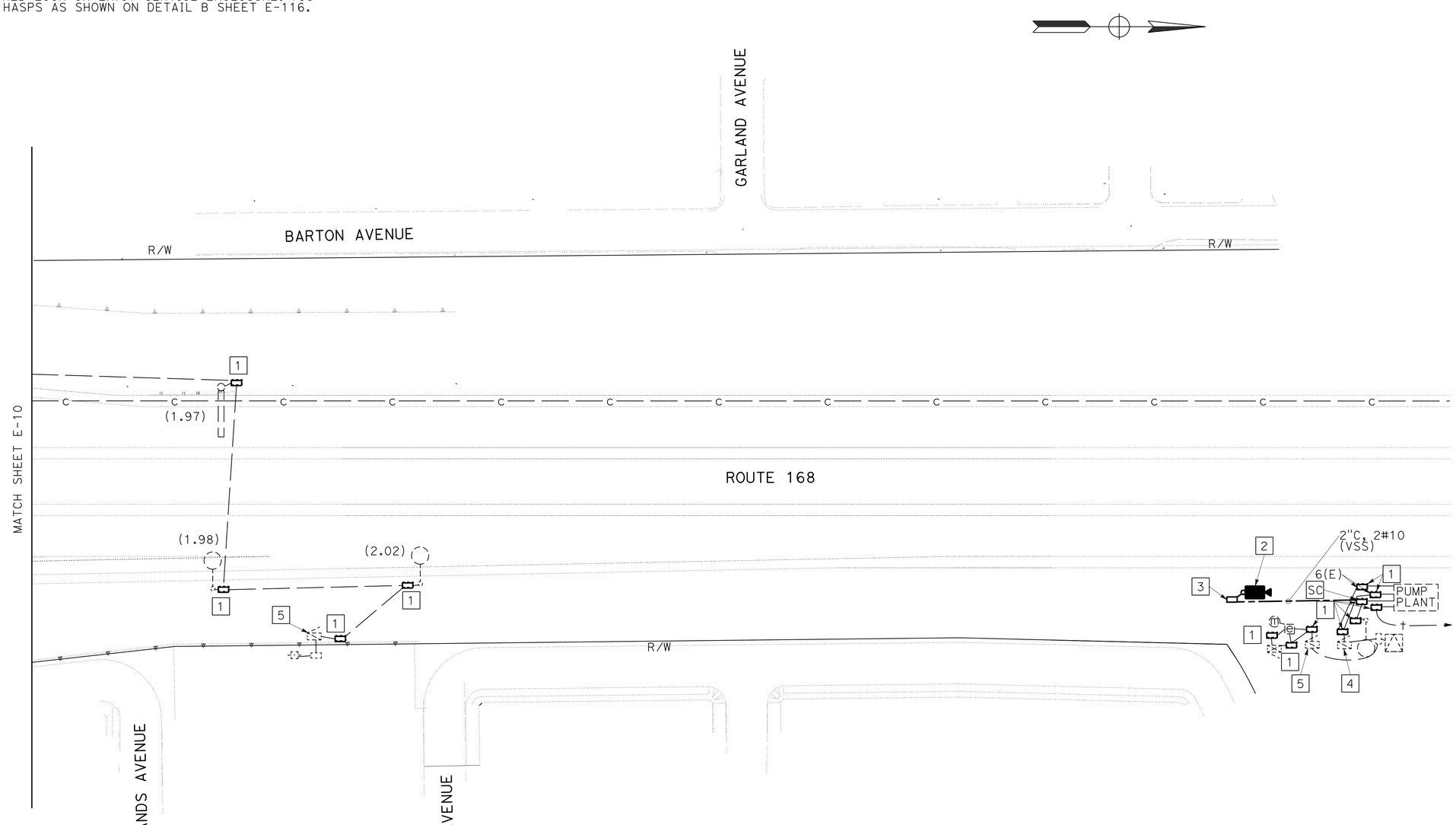

ELECTRICAL SYSTEMS (ROUTE 168)

SCALE: 1" = 50'

E-11

APPROVED FOR ELECTRICAL WORK ONLY

STATE OF CALIFORNIA - DEPARTMENT OF TRANSPORTATION
Caltrans® ELECTRICAL DESIGN

FUNCTIONAL SUPERVISOR: ALI BAKHDOUD
CALCULATED-DESIGNED BY: PAUL MATOS
CHECKED BY: ROBERTO SALCIDO
REVISED BY
DATE REVISED

LAST REVISION 08-02-13
DATE PLOTTED => 15-AUG-2013
TIME PLOTTED => 09:28

Dist	COUNTY	ROUTE	POST MILES TOTAL PROJECT	SHEET No.	TOTAL SHEETS
06	Fre	168,180	Var	80	204

REGISTERED ELECTRICAL ENGINEER 7-30-13 DATE

8-5-13
PLANS APPROVAL DATE

REGISTERED PROFESSIONAL ENGINEER PAUL MATOS No. 18757 Exp. 6/30/15 ELECTRICAL STATE OF CALIFORNIA

THE STATE OF CALIFORNIA OR ITS OFFICERS OR AGENTS SHALL NOT BE RESPONSIBLE FOR THE ACCURACY OR COMPLETENESS OF SCANNED COPIES OF THIS PLAN SHEET.

NOTES:

1. FOR ACCURATE RIGHT OF WAY DATA, CONTACT RIGHT OF WAY ENGINEERING AT THE DISTRICT OFFICE.
2. EXISTING UTILITY FACILITIES HAVE NOT BEEN PLOTTED ON THESE PLANS.

LEGEND: (FOR THIS SHEET ONLY)

1 RC Exist pb. INSTALL PB AS SHOWN ON DETAIL A SHEET E-115.

2 INSTALL DEPARTMENT-FURNISHED LOCK ON Exist SERVICE ENCLOSURE. YOU MUST FURNISH AND INSTALL HASPS AS SHOWN ON DETAIL B SHEET E-116.

3 RC Exist pb COVER. INSTALL TAMPER RESISTANT PB COVER AS SHOWN ON DETAIL B SHEET E-115.

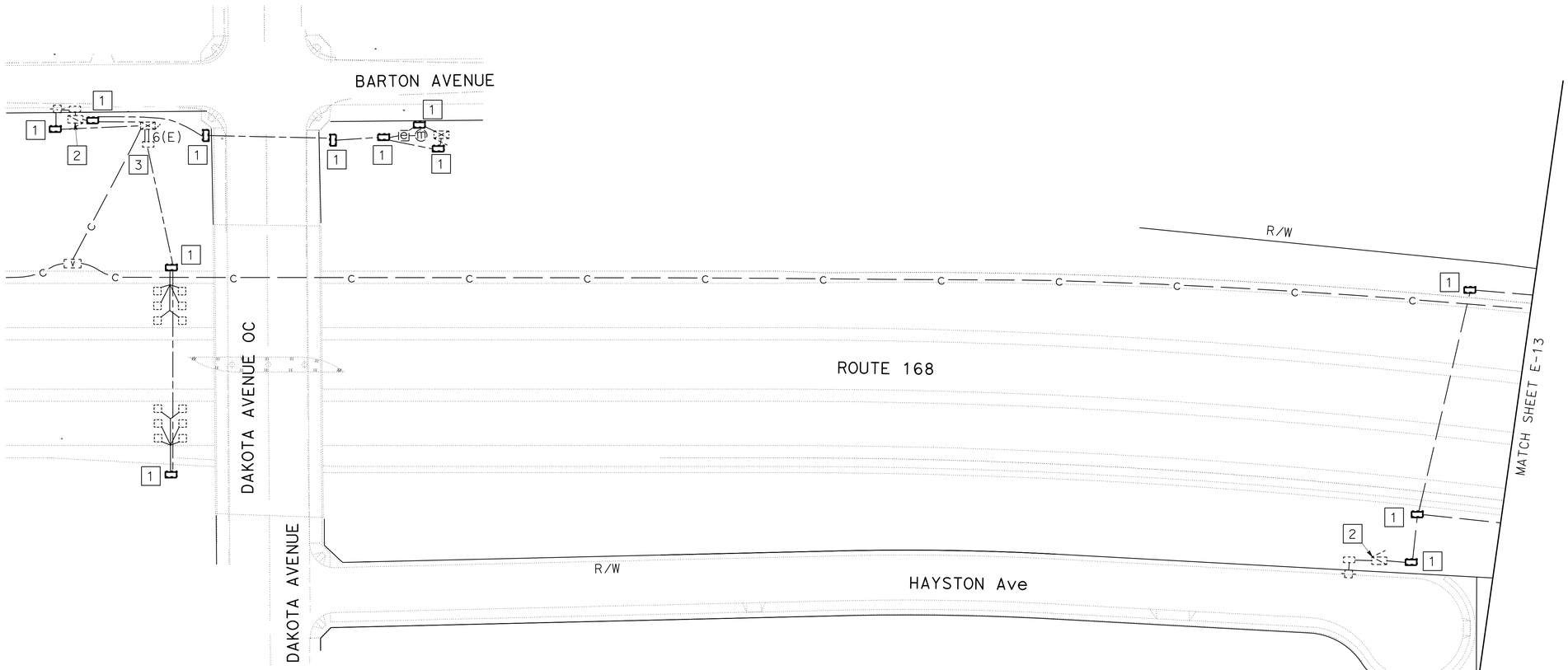

PM 2.6

ELECTRICAL SYSTEMS (ROUTE 168)

SCALE: 1" = 50'

E-12

APPROVED FOR ELECTRICAL WORK ONLY

STATE OF CALIFORNIA - DEPARTMENT OF TRANSPORTATION
Caltrans® ELECTRICAL DESIGN

FUNCTIONAL SUPERVISOR: ALI BAKHDOUD
CALCULATED-DESIGNED BY: PAUL MATOS
CHECKED BY: ROBERTO SALCIDO
REVISED BY
DATE REVISED

LAST REVISION 08-02-13
DATE PLOTTED => 15-AUG-2013
TIME PLOTTED => 09:28

Dist	COUNTY	ROUTE	POST MILES TOTAL PROJECT	SHEET No.	TOTAL SHEETS
06	Fre	168,180	Var	81	204

REGISTERED ELECTRICAL ENGINEER 7-30-13 DATE

8-5-13
PLANS APPROVAL DATE

REGISTERED PROFESSIONAL ENGINEER
PAUL MATOS
No. 18757
Exp. 6/30/15
ELECTRICAL
STATE OF CALIFORNIA

THE STATE OF CALIFORNIA OR ITS OFFICERS OR AGENTS SHALL NOT BE RESPONSIBLE FOR THE ACCURACY OR COMPLETENESS OF SCANNED COPIES OF THIS PLAN SHEET.

NOTES:

1. FOR ACCURATE RIGHT OF WAY DATA, CONTACT RIGHT OF WAY ENGINEERING AT THE DISTRICT OFFICE.
2. EXISTING UTILITY FACILITIES HAVE NOT BEEN PLOTTED ON THESE PLANS.

LEGEND: (FOR THIS SHEET ONLY)

1 RC Exist pb. INSTALL PB AS SHOWN ON DETAIL A SHEET E-115.

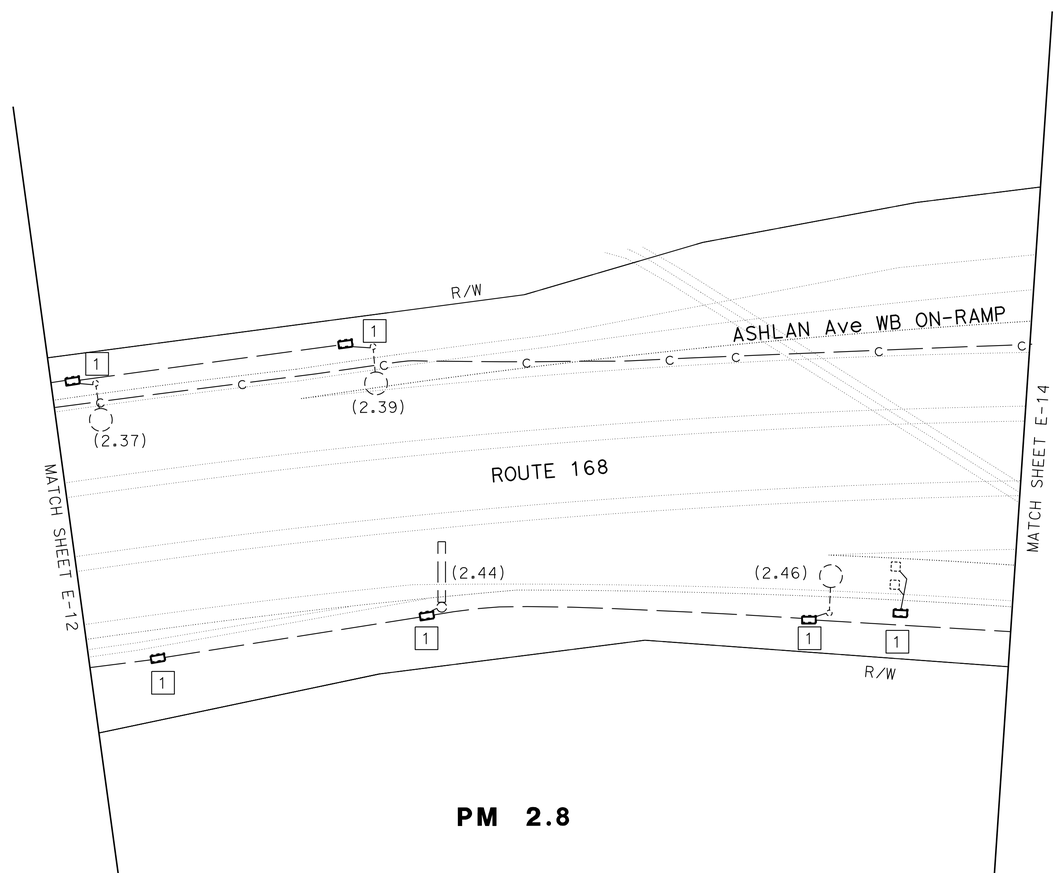

PM 2.8

APPROVED FOR ELECTRICAL WORK ONLY

ELECTRICAL SYSTEMS (ROUTE 168)

SCALE: 1" = 50'

E-13

STATE OF CALIFORNIA - DEPARTMENT OF TRANSPORTATION
Caltrans® ELECTRICAL DESIGN

FUNCTIONAL SUPERVISOR: ALI BAKHDOUD
CALCULATED-DESIGNED BY: PAUL MATOS
CHECKED BY: ROBERTO SALCIDO
REVISED BY
DATE REVISED

LAST REVISION 08-02-13
DATE PLOTTED => 15-AUG-2013
TIME PLOTTED => 09:28

Dist	COUNTY	ROUTE	POST MILES TOTAL PROJECT	SHEET No.	TOTAL SHEETS
06	Fre	168,180	Var	82	204

REGISTERED ELECTRICAL ENGINEER 7-30-13 DATE

8-5-13
PLANS APPROVAL DATE

REGISTERED PROFESSIONAL ENGINEER PAUL MATOS No. 18757 Exp. 6/30/15 ELECTRICAL STATE OF CALIFORNIA

THE STATE OF CALIFORNIA OR ITS OFFICERS OR AGENTS SHALL NOT BE RESPONSIBLE FOR THE ACCURACY OR COMPLETENESS OF SCANNED COPIES OF THIS PLAN SHEET.

NOTES:

1. FOR ACCURATE RIGHT OF WAY DATA, CONTACT RIGHT OF WAY ENGINEERING AT THE DISTRICT OFFICE.
2. EXISTING UTILITY FACILITIES HAVE NOT BEEN PLOTTED ON THESE PLANS.

LEGEND: (FOR THIS SHEET ONLY)

1 RC Exist pb. INSTALL PB AS SHOWN ON DETAIL A SHEET E-115.

2 RC Exist pb COVER. INSTALL TAMPER RESISTANT PB COVER AS SHOWN ON DETAIL B SHEET E-115.

3 INSTALL DEPARTMENT-FURNISHED LOCK ON Exist SERVICE ENCLOSURE. YOU MUST FURNISH AND INSTALL HASPS AS SHOWN ON DETAIL B SHEET E-116.

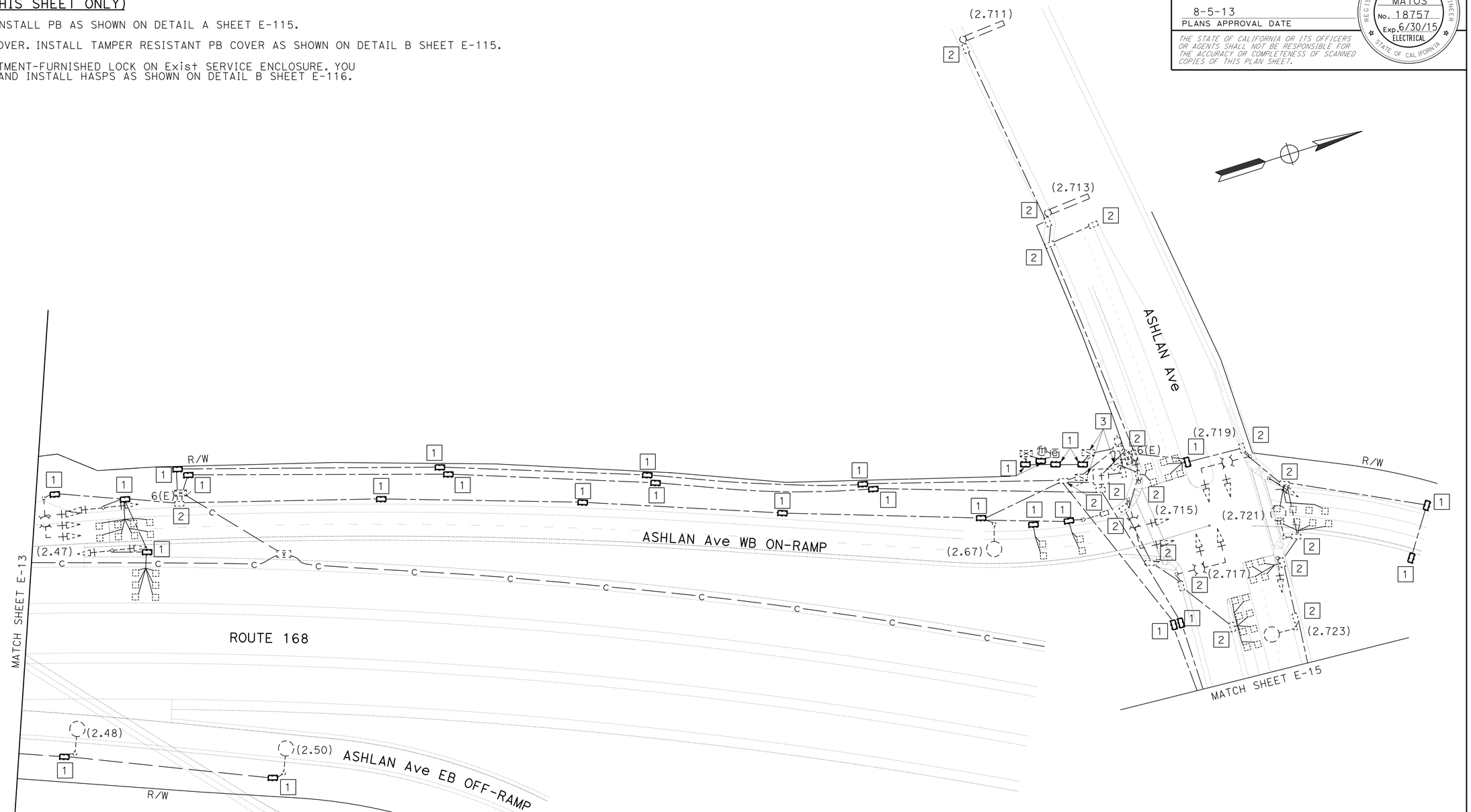

ELECTRICAL SYSTEMS (ROUTE 168)

E-14

APPROVED FOR ELECTRICAL WORK ONLY

SCALE: 1" = 50'

STATE OF CALIFORNIA - DEPARTMENT OF TRANSPORTATION
Caltrans® ELECTRICAL DESIGN

FUNCTIONAL SUPERVISOR: ALI BAKHDOUD
CALCULATED-DESIGNED BY: PAUL MATOS
CHECKED BY: ROBERTO SALCIDO
REVISED BY
DATE REVISED

LAST REVISION 08-02-13 | DATE PLOTTED => 15-AUG-2013 | TIME PLOTTED => 09:28

BORDER LAST REVISED 7/2/2010 | USERNAME => s118789 | DGN FILE => 0613000266ua014.dgn | RELATIVE BORDER SCALE IS IN INCHES 0 1 2 3 | UNIT 1515 | PROJECT NUMBER & PHASE 06130002661

Dist	COUNTY	ROUTE	POST MILES TOTAL PROJECT	SHEET No.	TOTAL SHEETS
06	Fre	168,180	Var	83	204

REGISTERED ELECTRICAL ENGINEER 7-30-13 DATE

8-5-13
PLANS APPROVAL DATE

REGISTERED PROFESSIONAL ENGINEER PAUL MATOS No. 18757 Exp. 6/30/15 ELECTRICAL STATE OF CALIFORNIA

THE STATE OF CALIFORNIA OR ITS OFFICERS OR AGENTS SHALL NOT BE RESPONSIBLE FOR THE ACCURACY OR COMPLETENESS OF SCANNED COPIES OF THIS PLAN SHEET.

NOTES:

1. FOR ACCURATE RIGHT OF WAY DATA, CONTACT RIGHT OF WAY ENGINEERING AT THE DISTRICT OFFICE.
2. EXISTING UTILITY FACILITIES HAVE NOT BEEN PLOTTED ON THESE PLANS.

LEGEND: (FOR THIS SHEET ONLY)

1 RC Exist pb. INSTALL PB AS SHOWN ON DETAIL A SHEET E-115.

2 RC Exist pb COVER. INSTALL TAMPER RESISTANT PB COVER AS SHOWN ON DETAIL B SHEET E-115.

3 INSTALL DEPARTMENT-FURNISHED LOCK ON Exist SERVICE ENCLOSURE. YOU MUST FURNISH AND INSTALL HASPS AS SHOWN ON DETAIL B SHEET E-116.

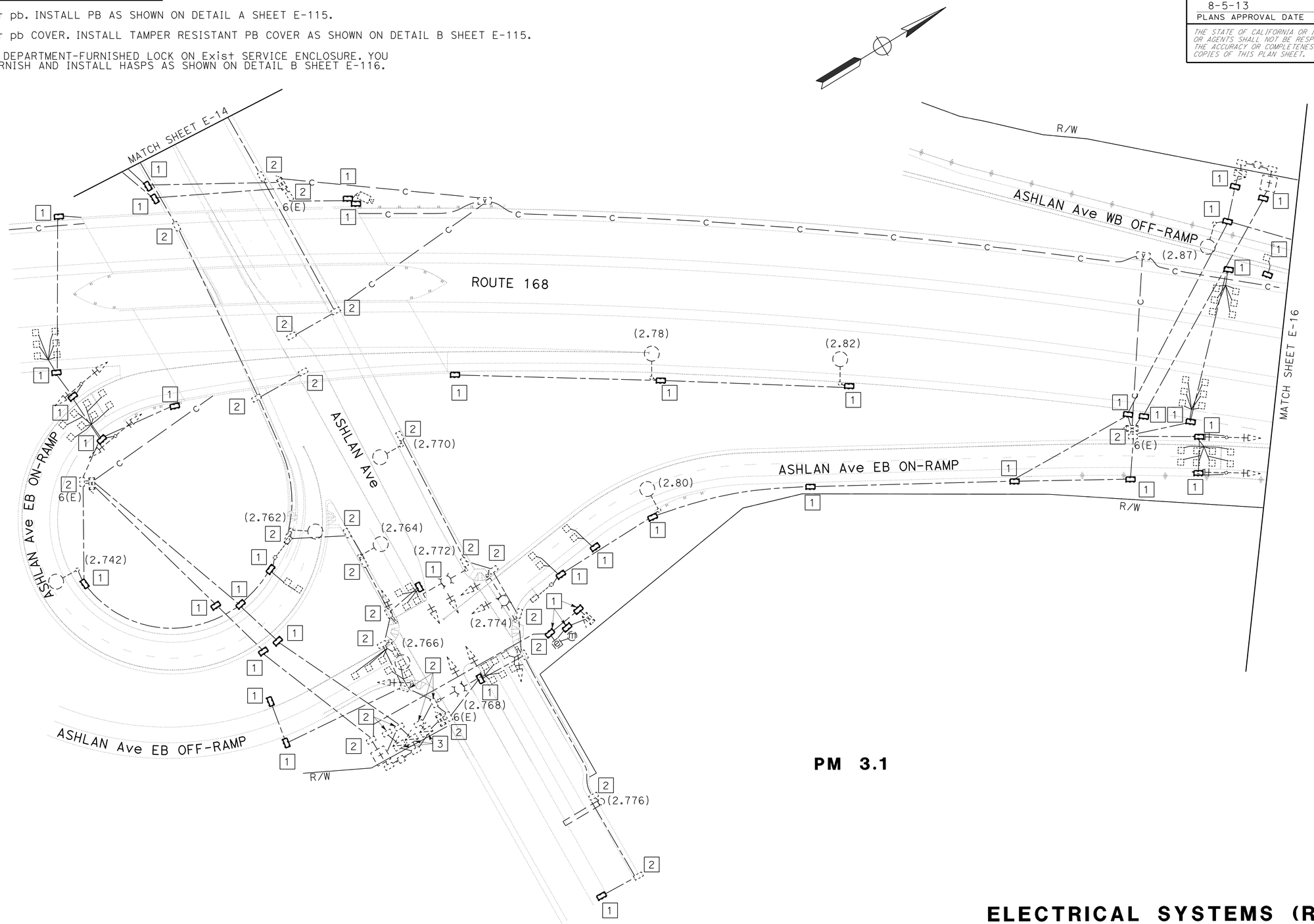

APPROVED FOR ELECTRICAL WORK ONLY

ELECTRICAL SYSTEMS (ROUTE 168)

SCALE: 1" = 50'

E-15

STATE OF CALIFORNIA - DEPARTMENT OF TRANSPORTATION
Caltrans® ELECTRICAL DESIGN

FUNCTIONAL SUPERVISOR: ALI BAKHDOUD
CALCULATED-DESIGNED BY: PAUL MATOS
CHECKED BY: ROBERTO SALCIDO
REVISED BY
DATE REVISED

LAST REVISION 08-02-13
DATE PLOTTED => 15-AUG-2013
TIME PLOTTED => 09:28

Dist	COUNTY	ROUTE	POST MILES TOTAL PROJECT	SHEET No.	TOTAL SHEETS
06	Fre	168,180	Var	84	204

REGISTERED ELECTRICAL ENGINEER 7-30-13 DATE

8-5-13
PLANS APPROVAL DATE

REGISTERED PROFESSIONAL ENGINEER PAUL MATOS No. 18757 Exp. 6/30/15 ELECTRICAL STATE OF CALIFORNIA

THE STATE OF CALIFORNIA OR ITS OFFICERS OR AGENTS SHALL NOT BE RESPONSIBLE FOR THE ACCURACY OR COMPLETENESS OF SCANNED COPIES OF THIS PLAN SHEET.

NOTES:

1. FOR ACCURATE RIGHT OF WAY DATA, CONTACT RIGHT OF WAY ENGINEERING AT THE DISTRICT OFFICE.
2. EXISTING UTILITY FACILITIES HAVE NOT BEEN PLOTTED ON THESE PLANS.

LEGEND: (FOR THIS SHEET ONLY)

1 RC Exist pb. INSTALL PB AS SHOWN ON DETAIL A SHEET E-115.

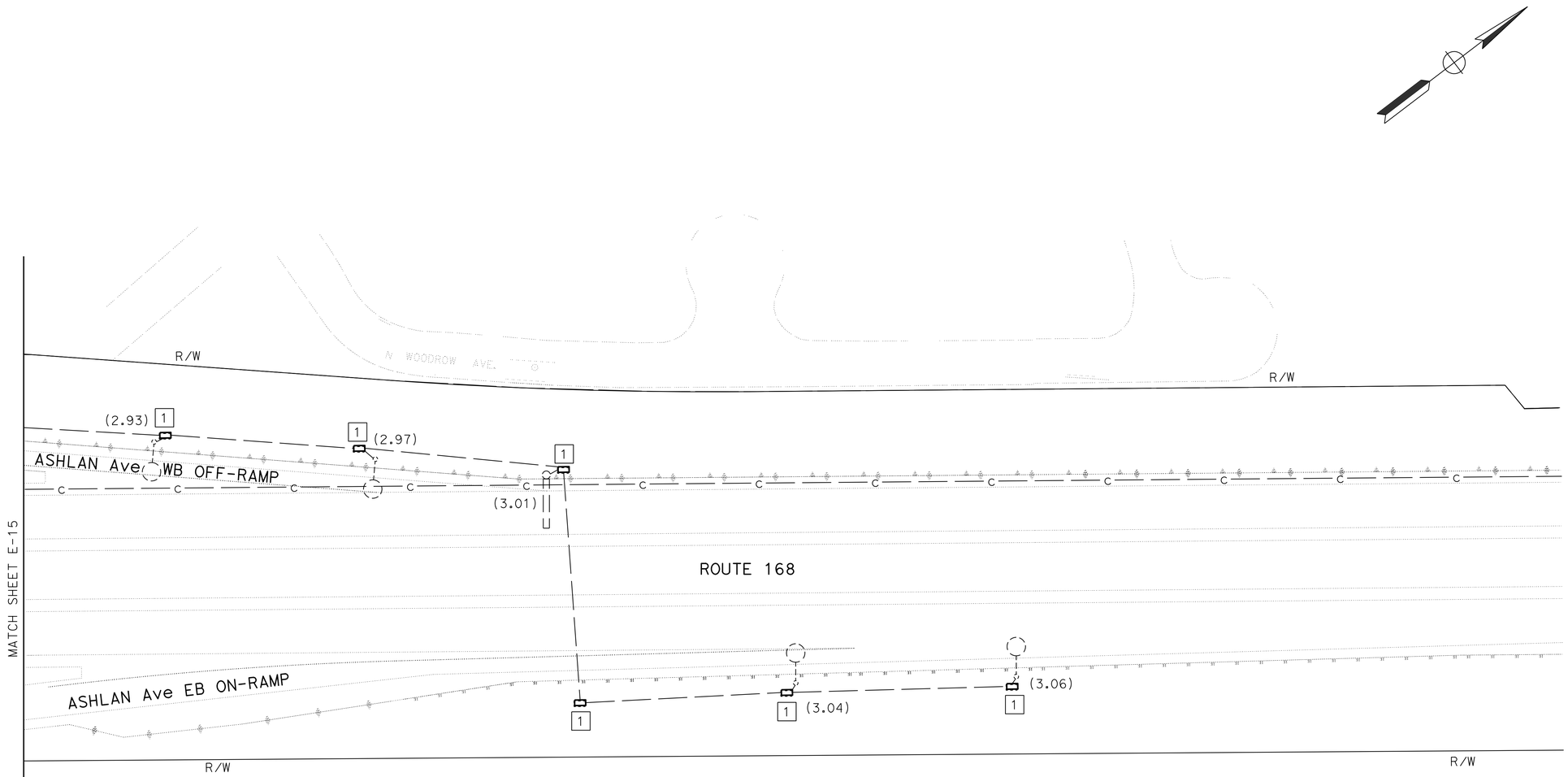

PM 3.3

ELECTRICAL SYSTEMS (ROUTE 168)

E-16

SCALE: 1" = 50'

APPROVED FOR ELECTRICAL WORK ONLY

STATE OF CALIFORNIA - DEPARTMENT OF TRANSPORTATION
Caltrans ELECTRICAL DESIGN

FUNCTIONAL SUPERVISOR: ALI BAKHDOUD
CALCULATED-DESIGNED BY: PAUL MATOS
CHECKED BY: ROBERTO SALCIDO
REVISED BY
DATE REVISED

LAST REVISION DATE PLOTTED => 15-AUG-2013
TIME PLOTTED => 09:28

Dist	COUNTY	ROUTE	POST MILES TOTAL PROJECT	SHEET No.	TOTAL SHEETS
06	Fre	168,180	Var	85	204

REGISTERED ELECTRICAL ENGINEER 7-30-13 DATE

8-5-13
PLANS APPROVAL DATE

REGISTERED PROFESSIONAL ENGINEER
PAUL MATOS
No. 18757
Exp. 6/30/15
ELECTRICAL
STATE OF CALIFORNIA

THE STATE OF CALIFORNIA OR ITS OFFICERS OR AGENTS SHALL NOT BE RESPONSIBLE FOR THE ACCURACY OR COMPLETENESS OF SCANNED COPIES OF THIS PLAN SHEET.

NOTES:

1. FOR ACCURATE RIGHT OF WAY DATA, CONTACT RIGHT OF WAY ENGINEERING AT THE DISTRICT OFFICE.
2. EXISTING UTILITY FACILITIES HAVE NOT BEEN PLOTTED ON THESE PLANS.

LEGEND: (FOR THIS SHEET ONLY)

1 RC Exist pb. INSTALL PB AS SHOWN ON DETAIL A SHEET E-115.

2 INSTALL DEPARTMENT-FURNISHED LOCK ON Exist SERVICE ENCLOSURE. YOU MUST FURNISH AND INSTALL HASPS AS SHOWN ON DETAIL B SHEET E-116.

3 RC Exist pb COVER. INSTALL TAMPER RESISTANT PB COVER AS SHOWN ON DETAIL B SHEET E-115.

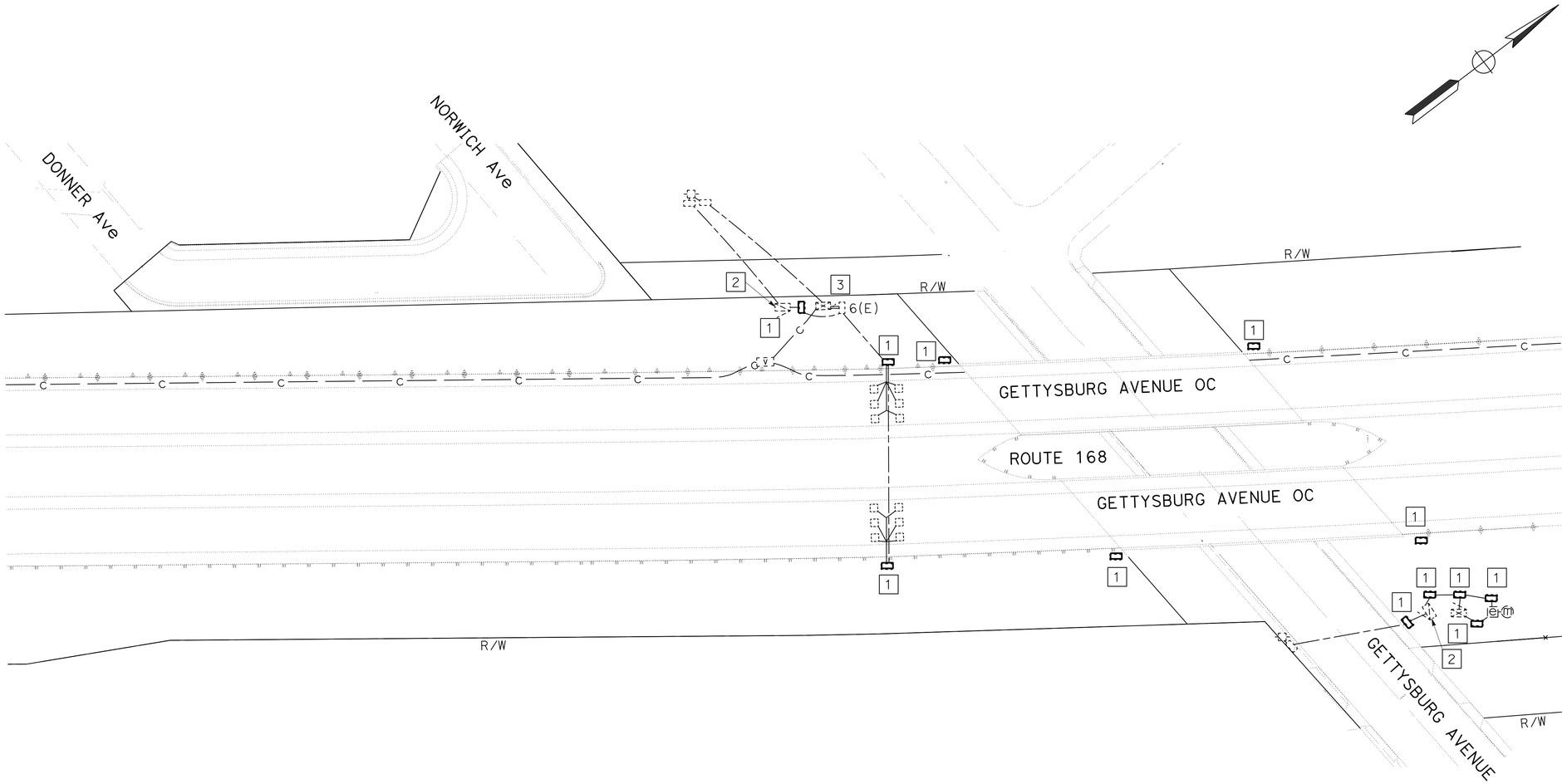

PM 3.5

APPROVED FOR ELECTRICAL WORK ONLY

ELECTRICAL SYSTEMS (ROUTE 168)

SCALE: 1" = 50'

E-17

STATE OF CALIFORNIA - DEPARTMENT OF TRANSPORTATION
Caltrans® ELECTRICAL DESIGN

FUNCTIONAL SUPERVISOR: ALI BAKHDOUD
CALCULATED-DESIGNED BY: PAUL MATOS
CHECKED BY: ROBERTO SALCIDO
REVISED BY
DATE REVISED

LAST REVISION 08-02-13
DATE PLOTTED => 15-AUG-2013
TIME PLOTTED => 09:28

Dist	COUNTY	ROUTE	POST MILES TOTAL PROJECT	SHEET No.	TOTAL SHEETS
06	Fre	168,180	Var	86	204

REGISTERED ELECTRICAL ENGINEER 7-30-13 DATE

8-5-13
PLANS APPROVAL DATE

REGISTERED PROFESSIONAL ENGINEER
PAUL MATOS
No. 18757
Exp. 6/30/15
ELECTRICAL
STATE OF CALIFORNIA

THE STATE OF CALIFORNIA OR ITS OFFICERS OR AGENTS SHALL NOT BE RESPONSIBLE FOR THE ACCURACY OR COMPLETENESS OF SCANNED COPIES OF THIS PLAN SHEET.

NOTES:

1. FOR ACCURATE RIGHT OF WAY DATA, CONTACT RIGHT OF WAY ENGINEERING AT THE DISTRICT OFFICE.
2. EXISTING UTILITY FACILITIES HAVE NOT BEEN PLOTTED ON THESE PLANS.

LEGEND: (FOR THIS SHEET ONLY)

1 RC Exist pb. INSTALL PB AS SHOWN ON DETAIL A SHEET E-115.

2 RC Exist pb COVER. INSTALL TAMPER RESISTANT PB COVER AS SHOWN ON DETAIL B SHEET E-115.

3 INSTALL DEPARTMENT-FURNISHED LOCK ON Exist SERVICE ENCLOSURE. YOU MUST FURNISH AND INSTALL HASPS AS SHOWN ON DETAIL B SHEET E-116.

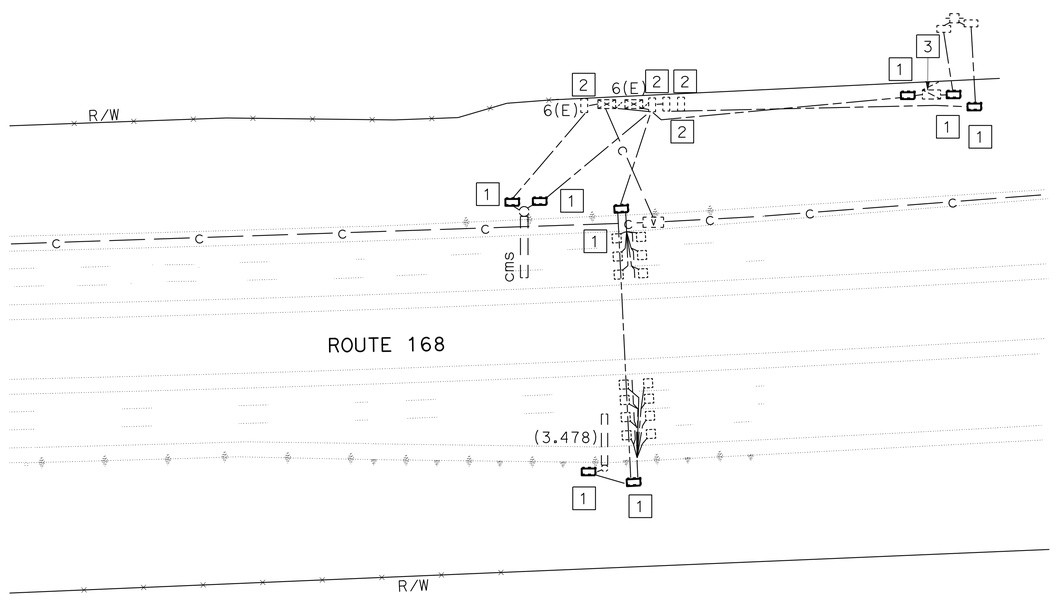

PM 3.8

APPROVED FOR ELECTRICAL WORK ONLY

ELECTRICAL SYSTEMS (ROUTE 168)

SCALE: 1" = 50'

E-18

STATE OF CALIFORNIA - DEPARTMENT OF TRANSPORTATION
Caltrans® ELECTRICAL DESIGN

FUNCTIONAL SUPERVISOR: ALI BAKHDOUD
CALCULATED-DESIGNED BY: PAUL MATOS
CHECKED BY: ROBERTO SALCIDO
REVISED BY
DATE REVISED

LAST REVISION 08-02-13
DATE PLOTTED => 15-AUG-2013
TIME PLOTTED => 09:28

BORDER LAST REVISED 7/2/2010
USERNAME => s118789
DGN FILE => 0613000266ua018.dgn
RELATIVE BORDER SCALE IS IN INCHES 0 1 2 3
UNIT 1515
PROJECT NUMBER & PHASE 06130002661

Dist	COUNTY	ROUTE	POST MILES TOTAL PROJECT	SHEET No.	TOTAL SHEETS
06	Fre	168,180	Var	87	204

REGISTERED ELECTRICAL ENGINEER 7-30-13 DATE

8-5-13
PLANS APPROVAL DATE

REGISTERED PROFESSIONAL ENGINEER PAUL MATOS No. 18757 Exp. 6/30/15 ELECTRICAL STATE OF CALIFORNIA

THE STATE OF CALIFORNIA OR ITS OFFICERS OR AGENTS SHALL NOT BE RESPONSIBLE FOR THE ACCURACY OR COMPLETENESS OF SCANNED COPIES OF THIS PLAN SHEET.

NOTES:

1. FOR ACCURATE RIGHT OF WAY DATA, CONTACT RIGHT OF WAY ENGINEERING AT THE DISTRICT OFFICE.
2. EXISTING UTILITY FACILITIES HAVE NOT BEEN PLOTTED ON THESE PLANS.

LEGEND: (FOR THIS SHEET ONLY)

1 RC Exist pb. INSTALL PB AS SHOWN ON DETAIL A SHEET E-115.

2 RC Exist pb COVER. INSTALL TAMPER RESISTANT PB COVER AS SHOWN ON DETAIL B SHEET E-115.

3 INSTALL DEPARTMENT-FURNISHED LOCK ON Exist SERVICE ENCLOSURE. YOU MUST FURNISH AND INSTALL HASPS AS SHOWN ON DETAIL B SHEET E-116.

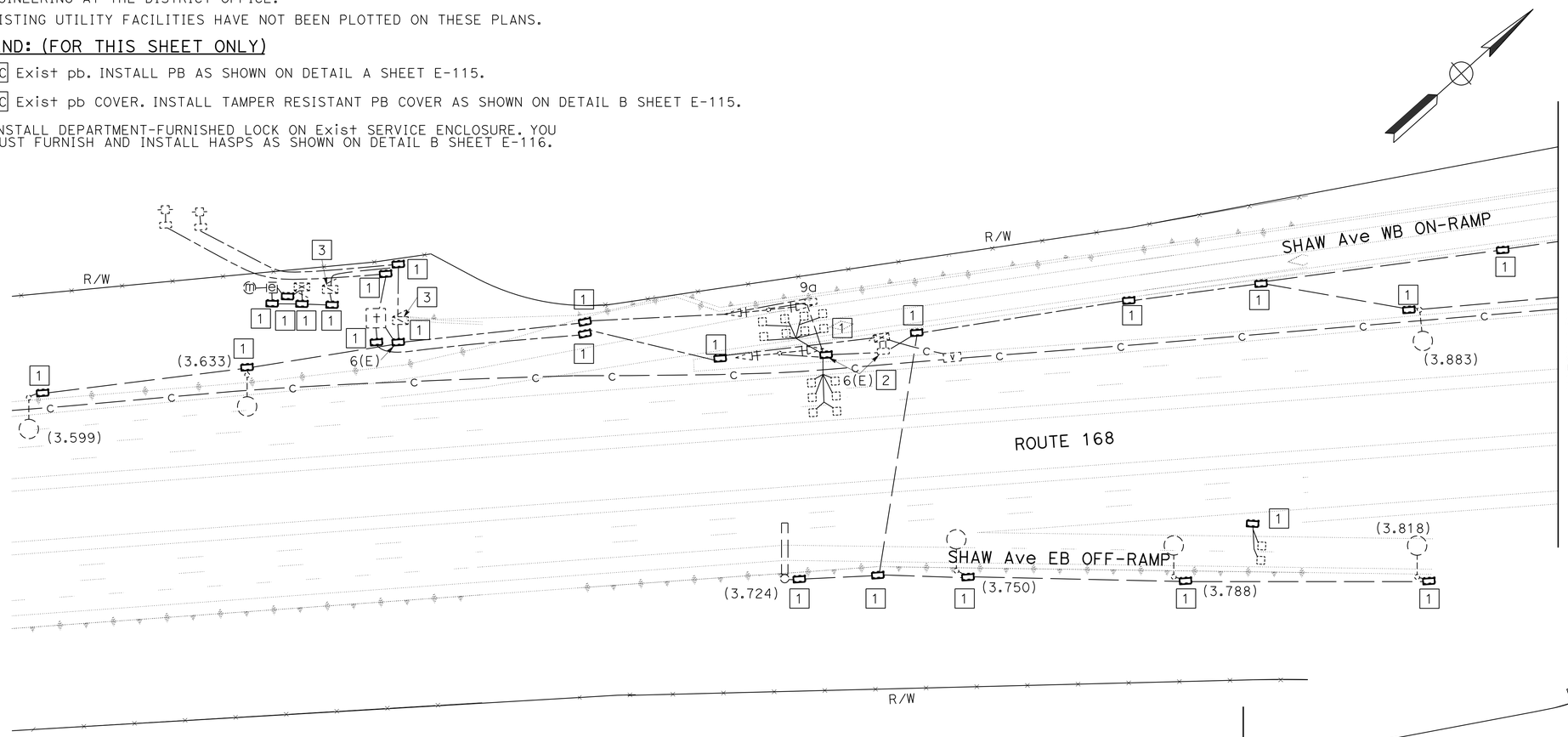

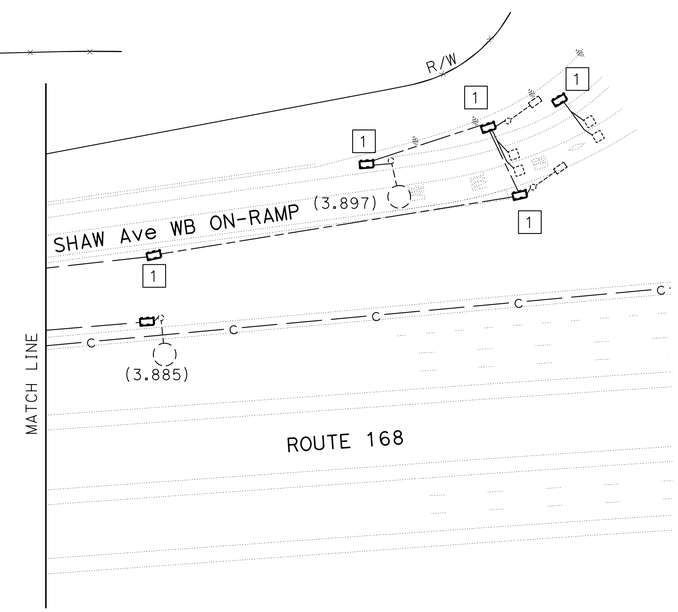

PM 4.1

ELECTRICAL SYSTEMS (ROUTE 168)

E-19

SCALE: 1" = 50'

APPROVED FOR ELECTRICAL WORK ONLY

STATE OF CALIFORNIA - DEPARTMENT OF TRANSPORTATION
Caltrans ELECTRICAL DESIGN

FUNCTIONAL SUPERVISOR: ALI BAKHDOUD
CALCULATED-DESIGNED BY: PAUL MATOS
CHECKED BY: ROBERTO SALCIDO
REVISED BY / DATE REVISED

LAST REVISION 08-02-13
DATE PLOTTED => 15-AUG-2013
TIME PLOTTED => 09:28

Dist	COUNTY	ROUTE	POST MILES TOTAL PROJECT	SHEET No.	TOTAL SHEETS
06	Fre	168,180	Var	88	204

REGISTERED ELECTRICAL ENGINEER 7-30-13 DATE

8-5-13
PLANS APPROVAL DATE

REGISTERED PROFESSIONAL ENGINEER PAUL MATOS No. 18757 Exp. 6/30/15 ELECTRICAL STATE OF CALIFORNIA

THE STATE OF CALIFORNIA OR ITS OFFICERS OR AGENTS SHALL NOT BE RESPONSIBLE FOR THE ACCURACY OR COMPLETENESS OF SCANNED COPIES OF THIS PLAN SHEET.

NOTES:

1. FOR ACCURATE RIGHT OF WAY DATA, CONTACT RIGHT OF WAY ENGINEERING AT THE DISTRICT OFFICE.
2. EXISTING UTILITY FACILITIES HAVE NOT BEEN PLOTTED ON THESE PLANS.

LEGEND: (FOR THIS SHEET ONLY)

1 RC Exist pb. INSTALL PB AS SHOWN ON DETAIL A SHEET E-115.

2 RC Exist pb COVER. INSTALL TAMPER RESISTANT PB COVER AS SHOWN ON DETAIL B SHEET E-115.

3 INSTALL DEPARTMENT-FURNISHED LOCK ON Exist SERVICE ENCLOSURE. YOU MUST FURNISH AND INSTALL HASPS AS SHOWN ON DETAIL B SHEET E-116.

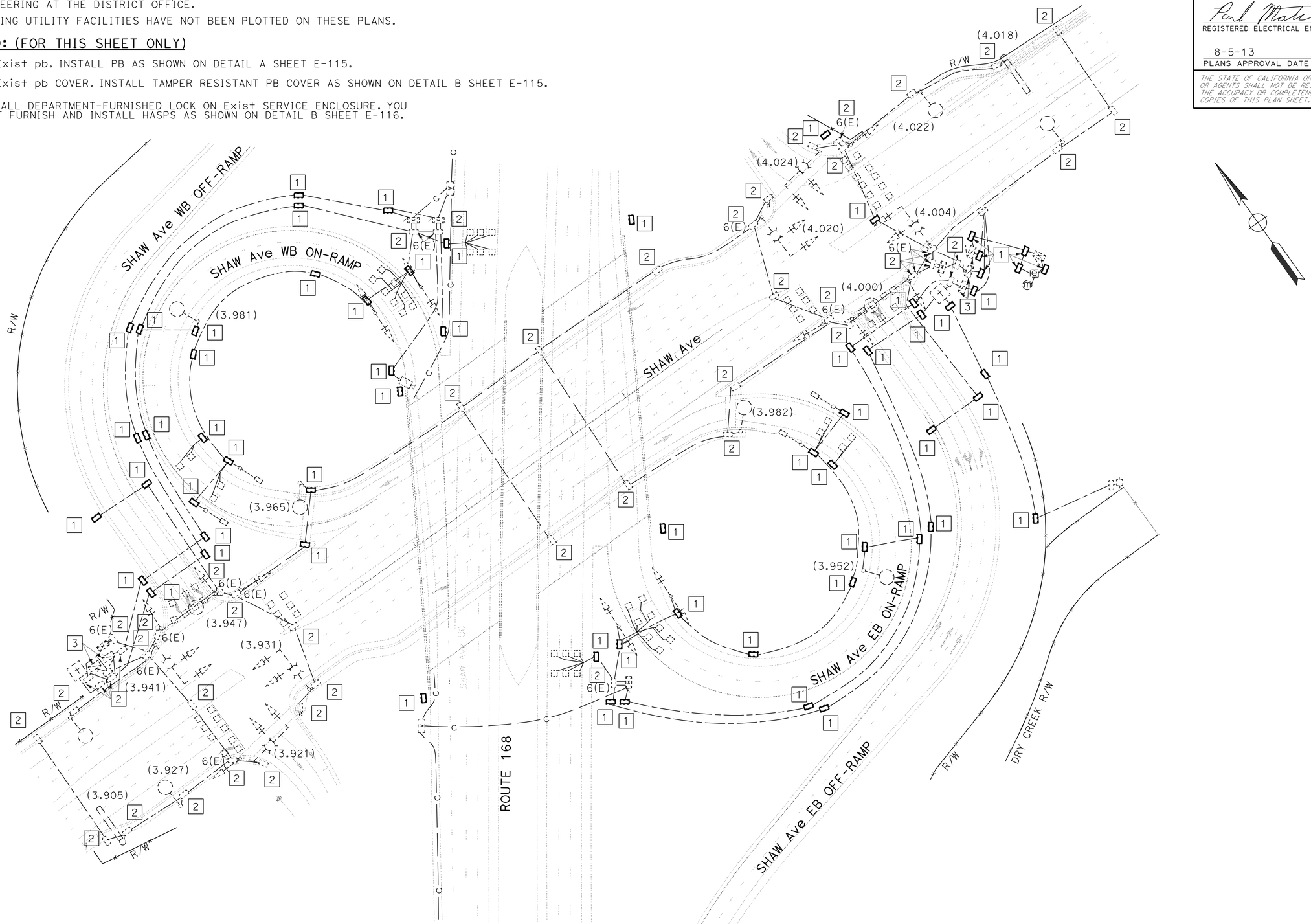

PM 4.2

APPROVED FOR ELECTRICAL WORK ONLY

ELECTRICAL SYSTEMS (ROUTE 168)

SCALE: 1" = 50'

E-20

STATE OF CALIFORNIA - DEPARTMENT OF TRANSPORTATION
Caltrans® ELECTRICAL DESIGN

FUNCTIONAL SUPERVISOR: ALI BAKHDOUD
CALCULATED-DESIGNED BY: PAUL MATOS
CHECKED BY: ROBERTO SALCIDO
REVISED BY
DATE REVISED

LAST REVISION 08-02-13
DATE PLOTTED => 15-AUG-2013
TIME PLOTTED => 09:28

Dist	COUNTY	ROUTE	POST MILES TOTAL PROJECT	SHEET No.	TOTAL SHEETS
06	Fre	168,180	Var	89	204

REGISTERED ELECTRICAL ENGINEER 7-30-13 DATE

8-5-13
PLANS APPROVAL DATE

REGISTERED PROFESSIONAL ENGINEER
PAUL MATOS
No. 18757
Exp. 6/30/15
ELECTRICAL
STATE OF CALIFORNIA

THE STATE OF CALIFORNIA OR ITS OFFICERS OR AGENTS SHALL NOT BE RESPONSIBLE FOR THE ACCURACY OR COMPLETENESS OF SCANNED COPIES OF THIS PLAN SHEET.

NOTES:

1. FOR ACCURATE RIGHT OF WAY DATA, CONTACT RIGHT OF WAY ENGINEERING AT THE DISTRICT OFFICE.
2. EXISTING UTILITY FACILITIES HAVE NOT BEEN PLOTTED ON THESE PLANS.

LEGEND: (FOR THIS SHEET ONLY)

1 RC Exist pb. INSTALL PB AS SHOWN ON DETAIL A SHEET E-115.

2 INSTALL DEPARTMENT-FURNISHED LOCK ON Exist SERVICE ENCLOSURE. YOU MUST FURNISH AND INSTALL HASPS AS SHOWN ON DETAIL B SHEET E-116.

3 RC Exist pb COVER. INSTALL TAMPER RESISTANT PB COVER AS SHOWN ON DETAIL B SHEET E-115.

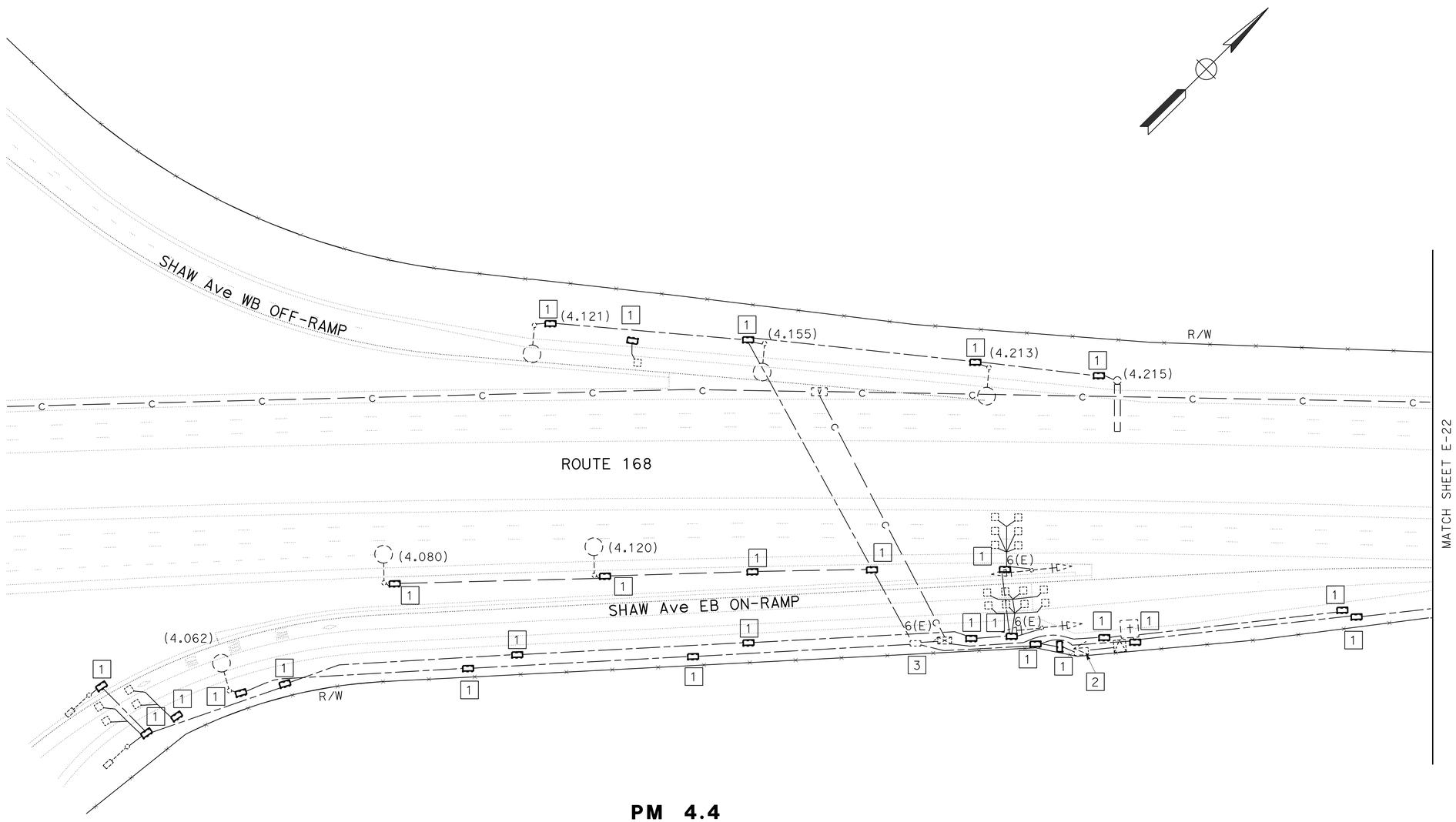

PM 4.4

APPROVED FOR ELECTRICAL WORK ONLY

ELECTRICAL SYSTEMS (ROUTE 168)

SCALE: 1" = 50'

E-21

STATE OF CALIFORNIA - DEPARTMENT OF TRANSPORTATION
Caltrans® ELECTRICAL DESIGN

FUNCTIONAL SUPERVISOR: ALI BAKHDOUD
CALCULATED-DESIGNED BY: PAUL MATOS
CHECKED BY: ROBERTO SALCIDO
REVISED BY
DATE REVISED

LAST REVISION 08-02-13
DATE PLOTTED => 15-AUG-2013
TIME PLOTTED => 09:28

Dist	COUNTY	ROUTE	POST MILES TOTAL PROJECT	SHEET No.	TOTAL SHEETS
06	Fre	168,180	Var	90	204

REGISTERED ELECTRICAL ENGINEER 7-30-13 DATE

8-5-13
PLANS APPROVAL DATE

REGISTERED PROFESSIONAL ENGINEER
PAUL MATOS
No. 18757
Exp. 6/30/15
ELECTRICAL
STATE OF CALIFORNIA

THE STATE OF CALIFORNIA OR ITS OFFICERS OR AGENTS SHALL NOT BE RESPONSIBLE FOR THE ACCURACY OR COMPLETENESS OF SCANNED COPIES OF THIS PLAN SHEET.

NOTES:

1. FOR ACCURATE RIGHT OF WAY DATA, CONTACT RIGHT OF WAY ENGINEERING AT THE DISTRICT OFFICE.
2. EXISTING UTILITY FACILITIES HAVE NOT BEEN PLOTTED ON THESE PLANS.

LEGEND: (FOR THIS SHEET ONLY)

1 RC Exist pb. INSTALL PB AS SHOWN ON DETAIL A SHEET E-115.

2 VIDEO SURVEILLANCE SYSTEM ON VDS 30 POLE. SEE SHEET E-117 FOR DETAILS.

3 INSTALL PB AS SHOWN ON DETAIL C SHEET E-115.

4 INSTALL DEPARTMENT-FURNISHED LOCK AND HASPS ON Exist PUMP PLANT SERVICE ENCLOSURE AS SHOWN ON DETAIL A SHEET E-116.

5 INSTALL DEPARTMENT-FURNISHED LOCK ON Exist SERVICE ENCLOSURE. YOU MUST FURNISH AND INSTALL HASPS AS SHOWN ON DETAIL B SHEET E-116.

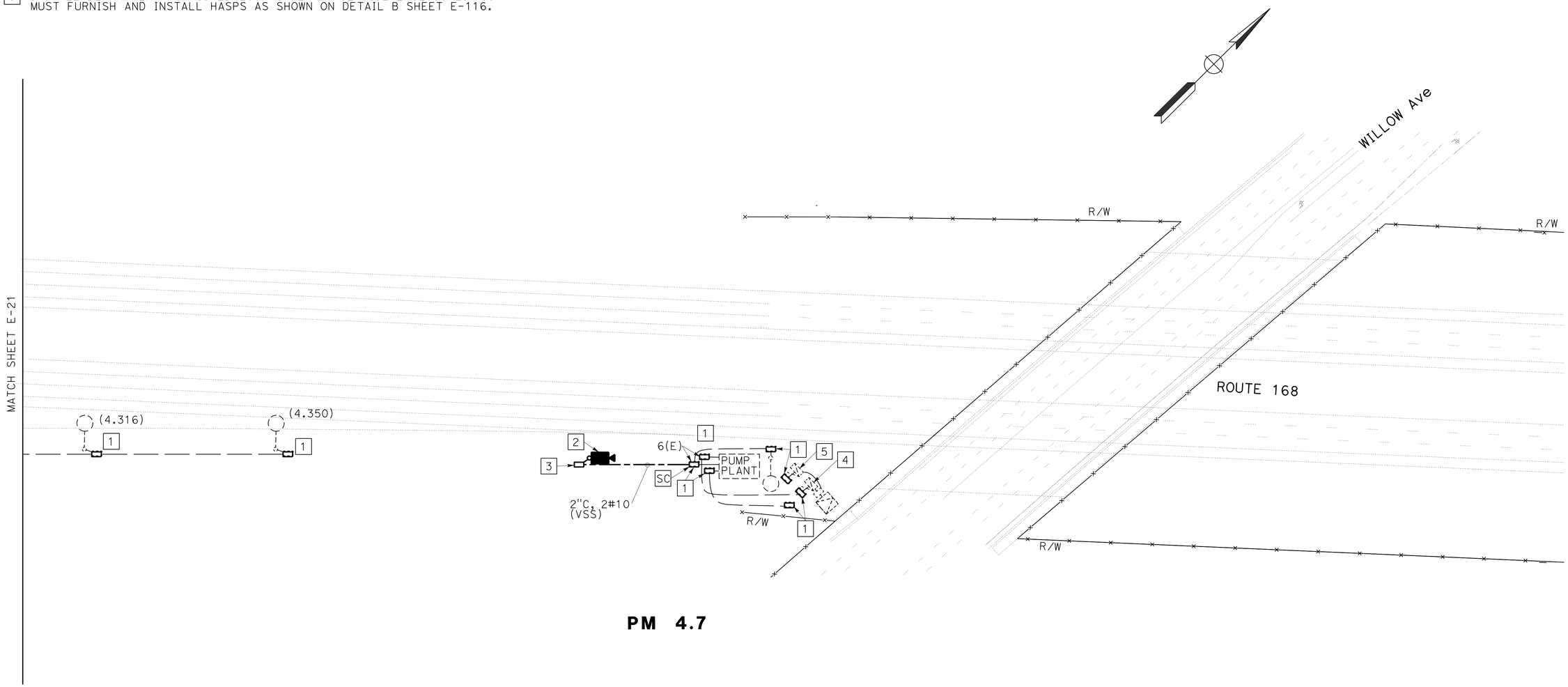

ELECTRICAL SYSTEMS (ROUTE 168)

E-22

SCALE: 1" = 50'

APPROVED FOR ELECTRICAL WORK ONLY

STATE OF CALIFORNIA - DEPARTMENT OF TRANSPORTATION
Caltrans ELECTRICAL DESIGN

FUNCTIONAL SUPERVISOR: ALI BAKHDOUD
CALCULATED-DESIGNED BY: PAUL MATOS
CHECKED BY: ROBERTO SALCIDO
REVISED BY
DATE REVISED

LAST REVISION DATE PLOTTED => 15-AUG-2013
TIME PLOTTED => 09:28
08-02-13

Dist	COUNTY	ROUTE	POST MILES TOTAL PROJECT	SHEET No.	TOTAL SHEETS
06	Fre	168,180	Var	91	204

REGISTERED ELECTRICAL ENGINEER 7-30-13 DATE

8-5-13
PLANS APPROVAL DATE

REGISTERED PROFESSIONAL ENGINEER
PAUL MATOS
No. 18757
Exp. 6/30/15
ELECTRICAL
STATE OF CALIFORNIA

THE STATE OF CALIFORNIA OR ITS OFFICERS OR AGENTS SHALL NOT BE RESPONSIBLE FOR THE ACCURACY OR COMPLETENESS OF SCANNED COPIES OF THIS PLAN SHEET.

NOTES:

1. FOR ACCURATE RIGHT OF WAY DATA, CONTACT RIGHT OF WAY ENGINEERING AT THE DISTRICT OFFICE.
2. EXISTING UTILITY FACILITIES HAVE NOT BEEN PLOTTED ON THESE PLANS.

LEGEND: (FOR THIS SHEET ONLY)

1 RC Exist pb. INSTALL PB AS SHOWN ON DETAIL A SHEET E-115.

2 INSTALL DEPARTMENT-FURNISHED LOCK ON Exist SERVICE ENCLOSURE. YOU MUST FURNISH AND INSTALL HASPS AS SHOWN ON DETAIL B SHEET E-116.

3 RC Exist pb COVER. INSTALL TAMPER RESISTANT PB COVER AS SHOWN ON DETAIL B SHEET E-115.

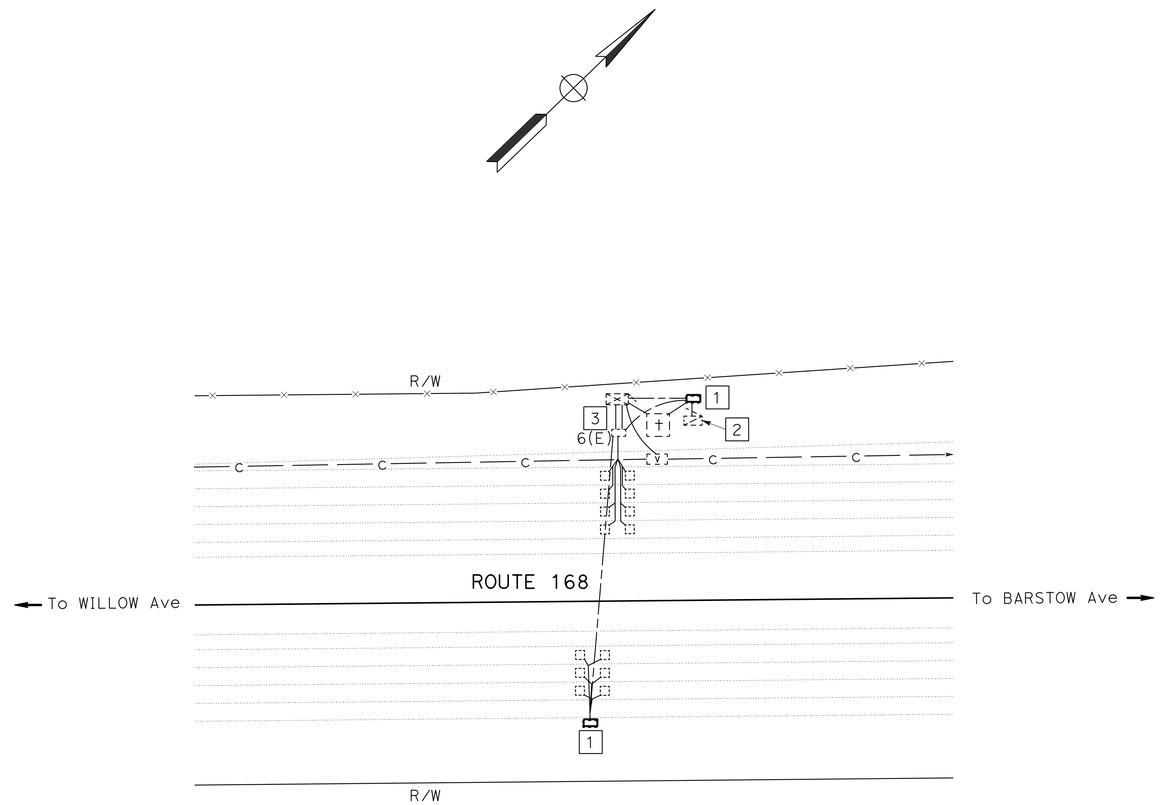

PM 4.9

ELECTRICAL SYSTEMS (ROUTE 168)

E-23

SCALE: 1" = 50'

APPROVED FOR ELECTRICAL WORK ONLY

STATE OF CALIFORNIA - DEPARTMENT OF TRANSPORTATION
Caltrans® ELECTRICAL DESIGN

FUNCTIONAL SUPERVISOR: ALI BAKHDOUD
CALCULATED-DESIGNED BY: PAUL MATOS
CHECKED BY: ROBERTO SALCIDO
REVISED BY
DATE REVISED

LAST REVISION 08-02-13
DATE PLOTTED => 15-AUG-2013
TIME PLOTTED => 09:28

Dist	COUNTY	ROUTE	POST MILES TOTAL PROJECT	SHEET No.	TOTAL SHEETS
06	Fre	168,180	Var	92	204

REGISTERED ELECTRICAL ENGINEER 7-30-13 DATE

8-5-13
PLANS APPROVAL DATE

REGISTERED PROFESSIONAL ENGINEER
PAUL MATOS
No. 18757
Exp. 6/30/15
ELECTRICAL
STATE OF CALIFORNIA

THE STATE OF CALIFORNIA OR ITS OFFICERS OR AGENTS SHALL NOT BE RESPONSIBLE FOR THE ACCURACY OR COMPLETENESS OF SCANNED COPIES OF THIS PLAN SHEET.

NOTES:

1. FOR ACCURATE RIGHT OF WAY DATA, CONTACT RIGHT OF WAY ENGINEERING AT THE DISTRICT OFFICE.
2. EXISTING UTILITY FACILITIES HAVE NOT BEEN PLOTTED ON THESE PLANS.

LEGEND: (FOR THIS SHEET ONLY)

1 RC Exist pb. INSTALL PB AS SHOWN ON DETAIL A SHEET E-115.

2 RC Exist pb COVER. INSTALL TAMPER RESISTANT PB COVER AS SHOWN ON DETAIL B SHEET E-115.

3 INSTALL DEPARTMENT-FURNISHED LOCK ON Exist SERVICE ENCLOSURE. YOU MUST FURNISH AND INSTALL HASPS AS SHOWN ON DETAIL B SHEET E-116.

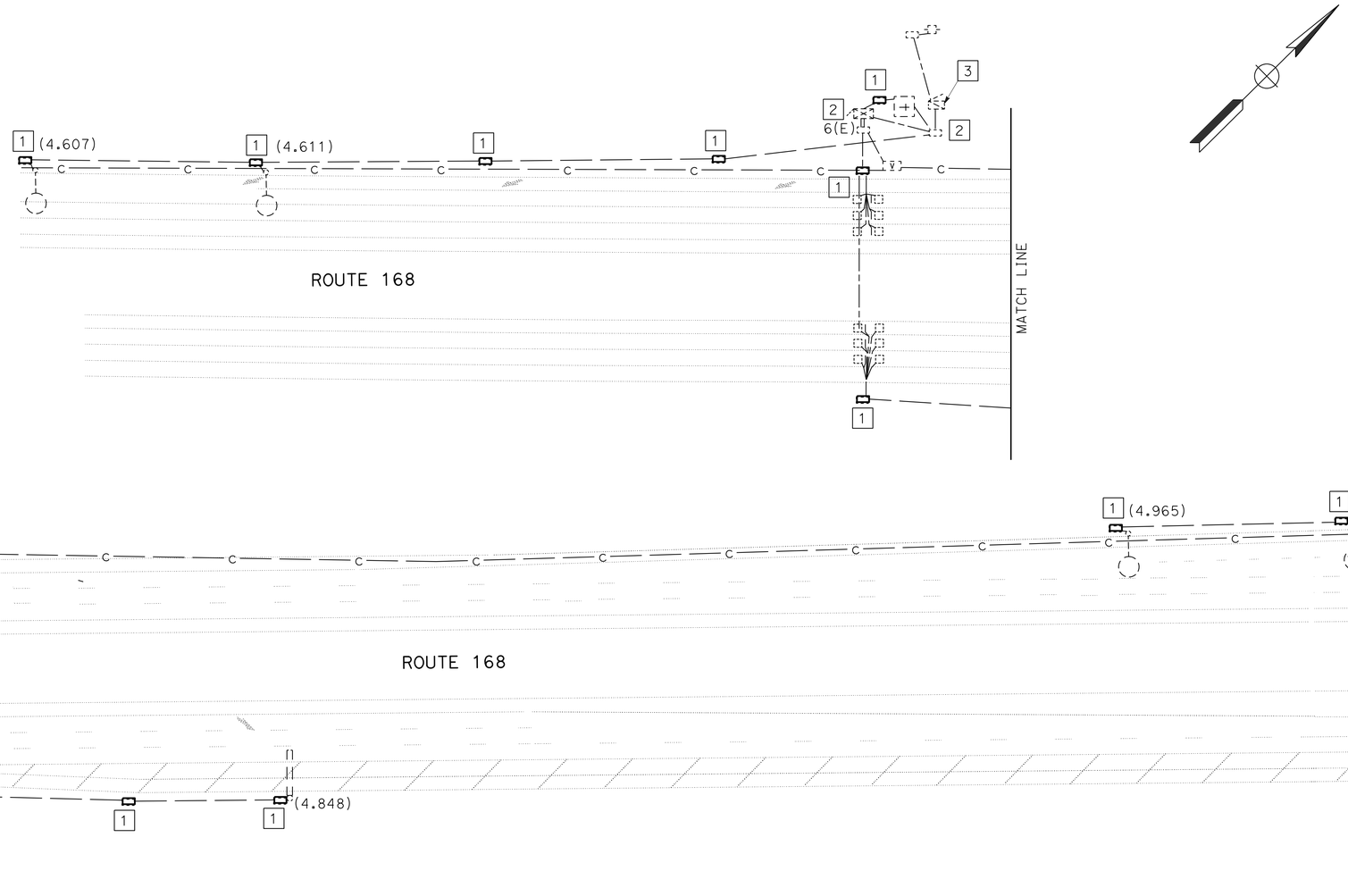

PM 5.1

ELECTRICAL SYSTEMS (ROUTE 168)

E-24

APPROVED FOR ELECTRICAL WORK ONLY

SCALE: 1" = 50'

STATE OF CALIFORNIA - DEPARTMENT OF TRANSPORTATION
Caltrans® **ELECTRICAL DESIGN**

FUNCTIONAL SUPERVISOR: ALI BAKHDOUD
CALCULATED-DESIGNED BY: PAUL MATOS
CHECKED BY: ROBERTO SALCIDO
REVISED BY
DATE REVISED

LAST REVISION 08-02-13
DATE PLOTTED => 15-AUG-2013
TIME PLOTTED => 09:28

Dist	COUNTY	ROUTE	POST MILES TOTAL PROJECT	SHEET No.	TOTAL SHEETS
06	Fre	168,180	Var	93	204

REGISTERED ELECTRICAL ENGINEER 7-30-13 DATE

8-5-13
PLANS APPROVAL DATE

REGISTERED PROFESSIONAL ENGINEER PAUL MATOS No. 18757 Exp. 6/30/15 ELECTRICAL STATE OF CALIFORNIA

THE STATE OF CALIFORNIA OR ITS OFFICERS OR AGENTS SHALL NOT BE RESPONSIBLE FOR THE ACCURACY OR COMPLETENESS OF SCANNED COPIES OF THIS PLAN SHEET.

NOTES:

1. FOR ACCURATE RIGHT OF WAY DATA, CONTACT RIGHT OF WAY ENGINEERING AT THE DISTRICT OFFICE.
2. EXISTING UTILITY FACILITIES HAVE NOT BEEN PLOTTED ON THESE PLANS.

LEGEND: (FOR THIS SHEET ONLY)

1 RC Exist pb. INSTALL PB AS SHOWN ON DETAIL A SHEET E-115.

2 RC Exist pb COVER. INSTALL TAMPER RESISTANT PB COVER AS SHOWN ON DETAIL B SHEET E-115.

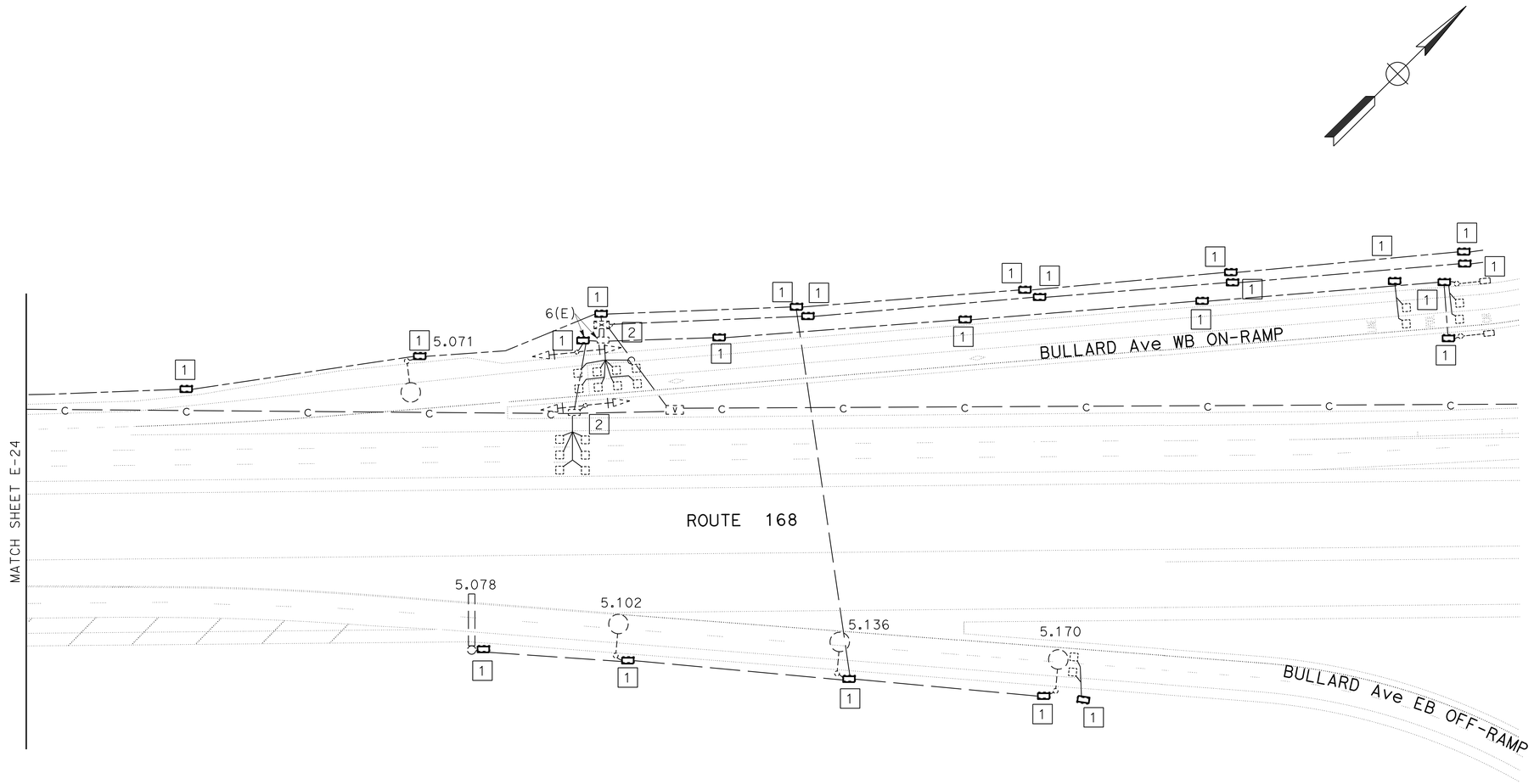

PM 5.4

ELECTRICAL SYSTEMS (ROUTE 168)

E-25

SCALE: 1" = 50'

APPROVED FOR ELECTRICAL WORK ONLY

STATE OF CALIFORNIA - DEPARTMENT OF TRANSPORTATION
Caltrans® ELECTRICAL DESIGN

FUNCTIONAL SUPERVISOR: ALI BAKHDOUD
CALCULATED-DESIGNED BY: PAUL MATOS
CHECKED BY: ROBERTO SALCIDO
REVISED BY
DATE REVISED

LAST REVISION 08-02-13
DATE PLOTTED => 15-AUG-2013
TIME PLOTTED => 09:28

Dist	COUNTY	ROUTE	POST MILES TOTAL PROJECT	SHEET No.	TOTAL SHEETS
06	Fre	168,180	Var	94	204

REGISTERED ELECTRICAL ENGINEER 7-30-13 DATE

8-5-13
PLANS APPROVAL DATE

REGISTERED PROFESSIONAL ENGINEER PAUL MATOS No. 18757 Exp. 6/30/15 ELECTRICAL STATE OF CALIFORNIA

THE STATE OF CALIFORNIA OR ITS OFFICERS OR AGENTS SHALL NOT BE RESPONSIBLE FOR THE ACCURACY OR COMPLETENESS OF SCANNED COPIES OF THIS PLAN SHEET.

NOTES:

1. FOR ACCURATE RIGHT OF WAY DATA, CONTACT RIGHT OF WAY ENGINEERING AT THE DISTRICT OFFICE.
2. EXISTING UTILITY FACILITIES HAVE NOT BEEN PLOTTED ON THESE PLANS.

LEGEND: (FOR THIS SHEET ONLY)

1 RC Exist pb. INSTALL PB AS SHOWN ON DETAIL A SHEET E-115.

2 RC Exist pb COVER. INSTALL TAMPER RESISTANT PB COVER AS SHOWN ON DETAIL B SHEET E-115.

3 INSTALL DEPARTMENT-FURNISHED LOCK ON Exist SERVICE ENCLOSURE. YOU MUST FURNISH AND INSTALL HASPS AS SHOWN ON DETAIL B SHEET E-116.

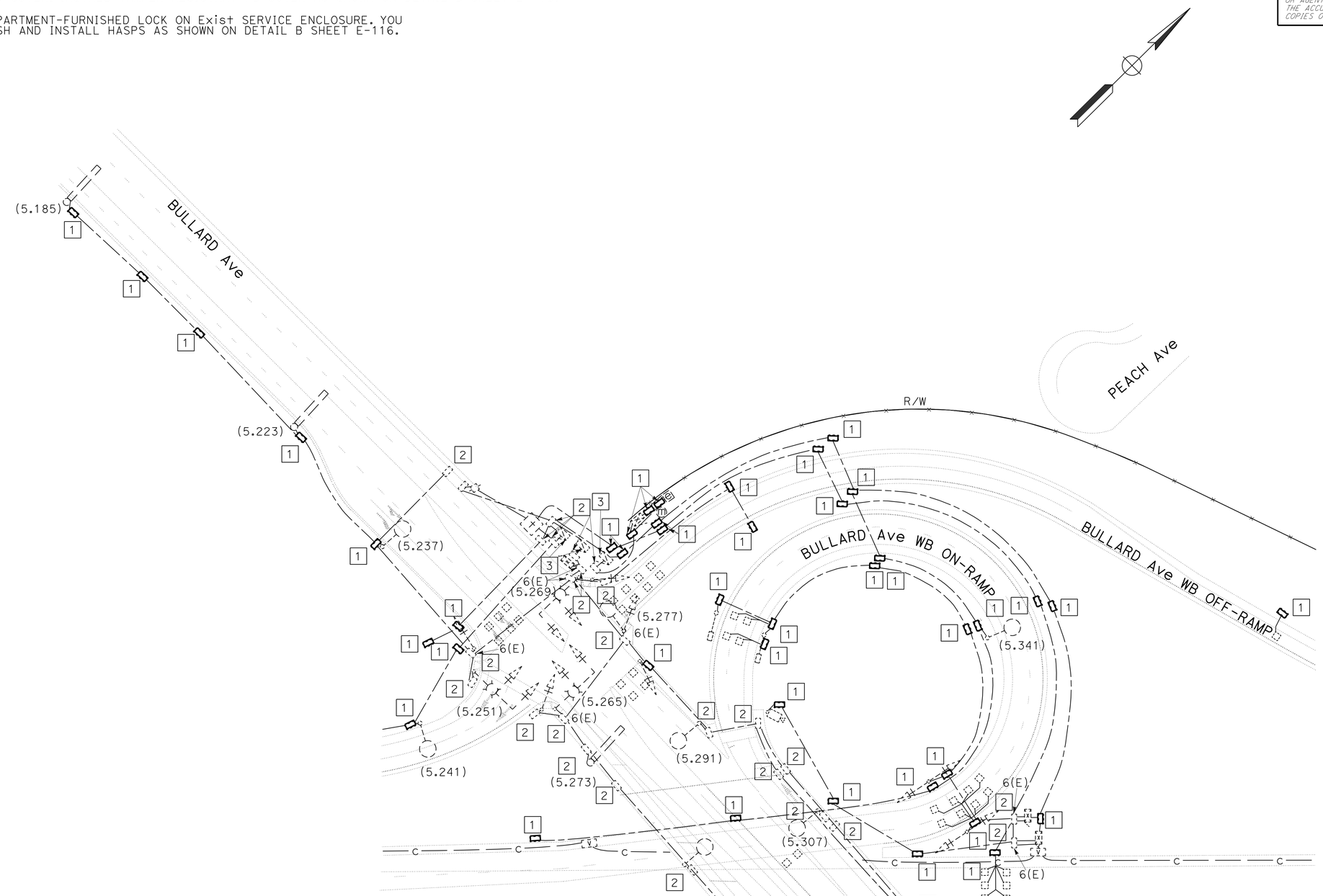

PM 5.6

APPROVED FOR ELECTRICAL WORK ONLY

ELECTRICAL SYSTEMS (ROUTE 168)

SCALE: 1" = 50'

E-26

STATE OF CALIFORNIA - DEPARTMENT OF TRANSPORTATION
Caltrans® ELECTRICAL DESIGN

FUNCTIONAL SUPERVISOR: ALI BAKHDOUD
CALCULATED-DESIGNED BY: PAUL MATOS
CHECKED BY: ROBERTO SALCIDO
REVISED BY / DATE REVISED

LAST REVISION 08-02-13 | DATE PLOTTED => 15-AUG-2013 | TIME PLOTTED => 09:28

Dist	COUNTY	ROUTE	POST MILES TOTAL PROJECT	SHEET No.	TOTAL SHEETS
06	Fre	168,180	Var	95	204

REGISTERED ELECTRICAL ENGINEER 7-30-13 DATE

8-5-13
PLANS APPROVAL DATE

REGISTERED PROFESSIONAL ENGINEER PAUL MATOS No. 18757 Exp. 6/30/15 ELECTRICAL STATE OF CALIFORNIA

THE STATE OF CALIFORNIA OR ITS OFFICERS OR AGENTS SHALL NOT BE RESPONSIBLE FOR THE ACCURACY OR COMPLETENESS OF SCANNED COPIES OF THIS PLAN SHEET.

NOTES:

1. FOR ACCURATE RIGHT OF WAY DATA, CONTACT RIGHT OF WAY ENGINEERING AT THE DISTRICT OFFICE.
2. EXISTING UTILITY FACILITIES HAVE NOT BEEN PLOTTED ON THESE PLANS.

LEGEND: (FOR THIS SHEET ONLY)

1 RC Exist pb. INSTALL PB AS SHOWN ON DETAIL A SHEET E-115.

2 RC Exist pb COVER. INSTALL TAMPER RESISTANT PB COVER AS SHOWN ON DETAIL B SHEET E-115.

3 INSTALL DEPARTMENT-FURNISHED LOCK ON Exist SERVICE ENCLOSURE. YOU MUST FURNISH AND INSTALL HASPS AS SHOWN ON DETAIL B SHEET E-116.

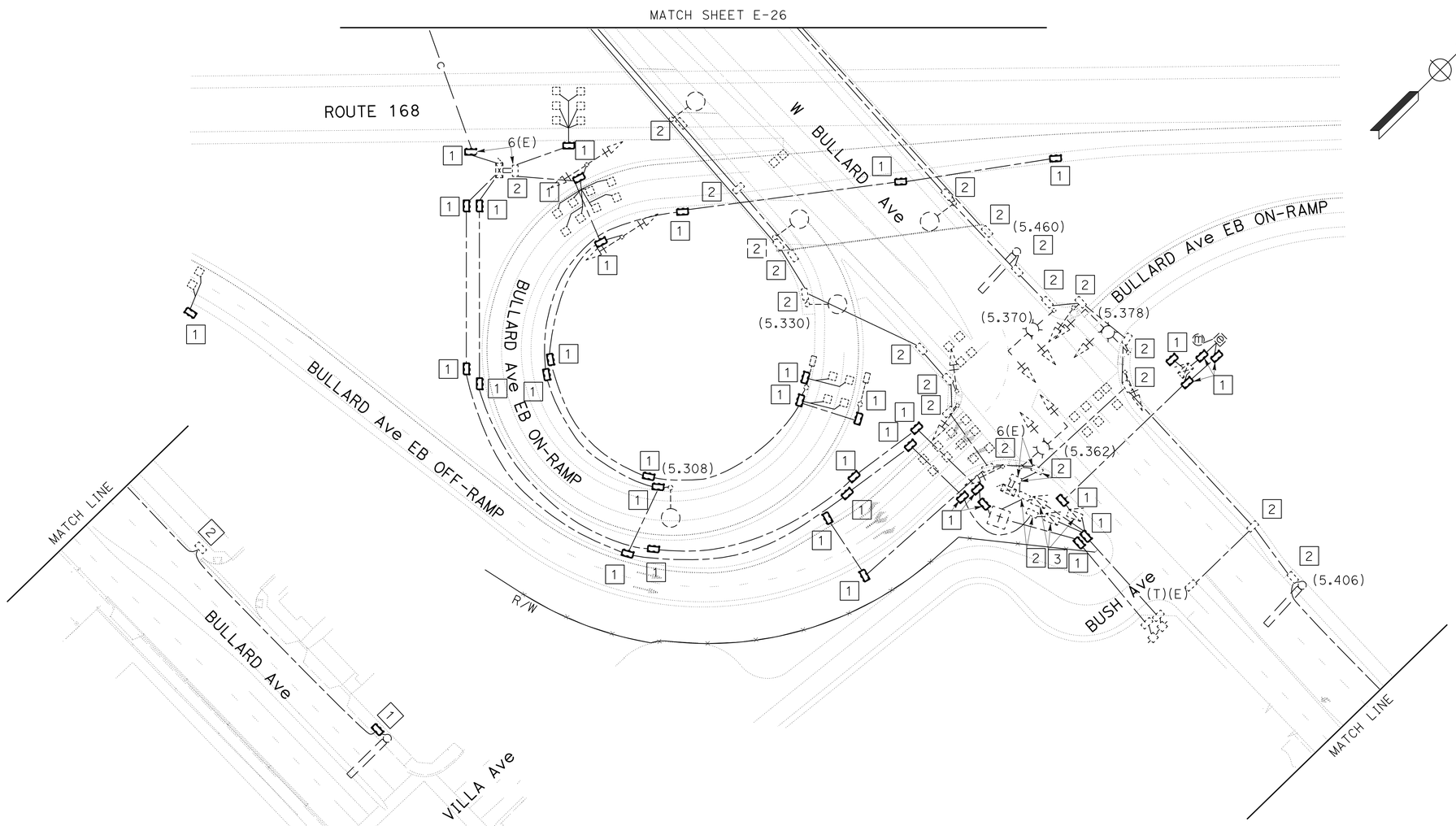

PM 5.7

ELECTRICAL SYSTEMS (ROUTE 168)

E-27

SCALE: 1" = 50'

APPROVED FOR ELECTRICAL WORK ONLY

STATE OF CALIFORNIA - DEPARTMENT OF TRANSPORTATION
Caltrans ELECTRICAL DESIGN

FUNCTIONAL SUPERVISOR: ALI BAKHDOUD
CALCULATED-DESIGNED BY: PAUL MATOS
CHECKED BY: ROBERTO SALCIDO
REVISED BY
DATE REVISED

LAST REVISION 08-02-13
DATE PLOTTED => 15-AUG-2013
TIME PLOTTED => 09:28

Dist	COUNTY	ROUTE	POST MILES TOTAL PROJECT	SHEET No.	TOTAL SHEETS
06	Fre	168,180	Var	96	204

REGISTERED ELECTRICAL ENGINEER 7-30-13 DATE

8-5-13
PLANS APPROVAL DATE

REGISTERED PROFESSIONAL ENGINEER PAUL MATOS No. 18757 Exp. 6/30/15 ELECTRICAL STATE OF CALIFORNIA

THE STATE OF CALIFORNIA OR ITS OFFICERS OR AGENTS SHALL NOT BE RESPONSIBLE FOR THE ACCURACY OR COMPLETENESS OF SCANNED COPIES OF THIS PLAN SHEET.

NOTES:

1. FOR ACCURATE RIGHT OF WAY DATA, CONTACT RIGHT OF WAY ENGINEERING AT THE DISTRICT OFFICE.
2. EXISTING UTILITY FACILITIES HAVE NOT BEEN PLOTTED ON THESE PLANS.

LEGEND: (FOR THIS SHEET ONLY)

1 RC Exist pb. INSTALL PB AS SHOWN ON DETAIL A SHEET E-115.

2 RC Exist pb COVER. INSTALL TAMPER RESISTANT PB COVER AS SHOWN ON DETAIL B SHEET E-115.

3 VIDEO SURVEILLANCE SYSTEM ON VDS 30 POLE. SEE SHEET E-117 FOR DETAILS.

4 INSTALL PB AS SHOWN ON DETAIL C SHEET E-115.

5 INSTALL DEPARTMENT-FURNISHED LOCK AND HASPS ON Exist PUMP PLANT SERVICE ENCLOSURE AS SHOWN ON DETAIL A SHEET E-116.

6 INSTALL DEPARTMENT-FURNISHED LOCK ON Exist SERVICE ENCLOSURE. YOU MUST FURNISH AND INSTALL HASPS AS SHOWN ON DETAIL B SHEET E-116.

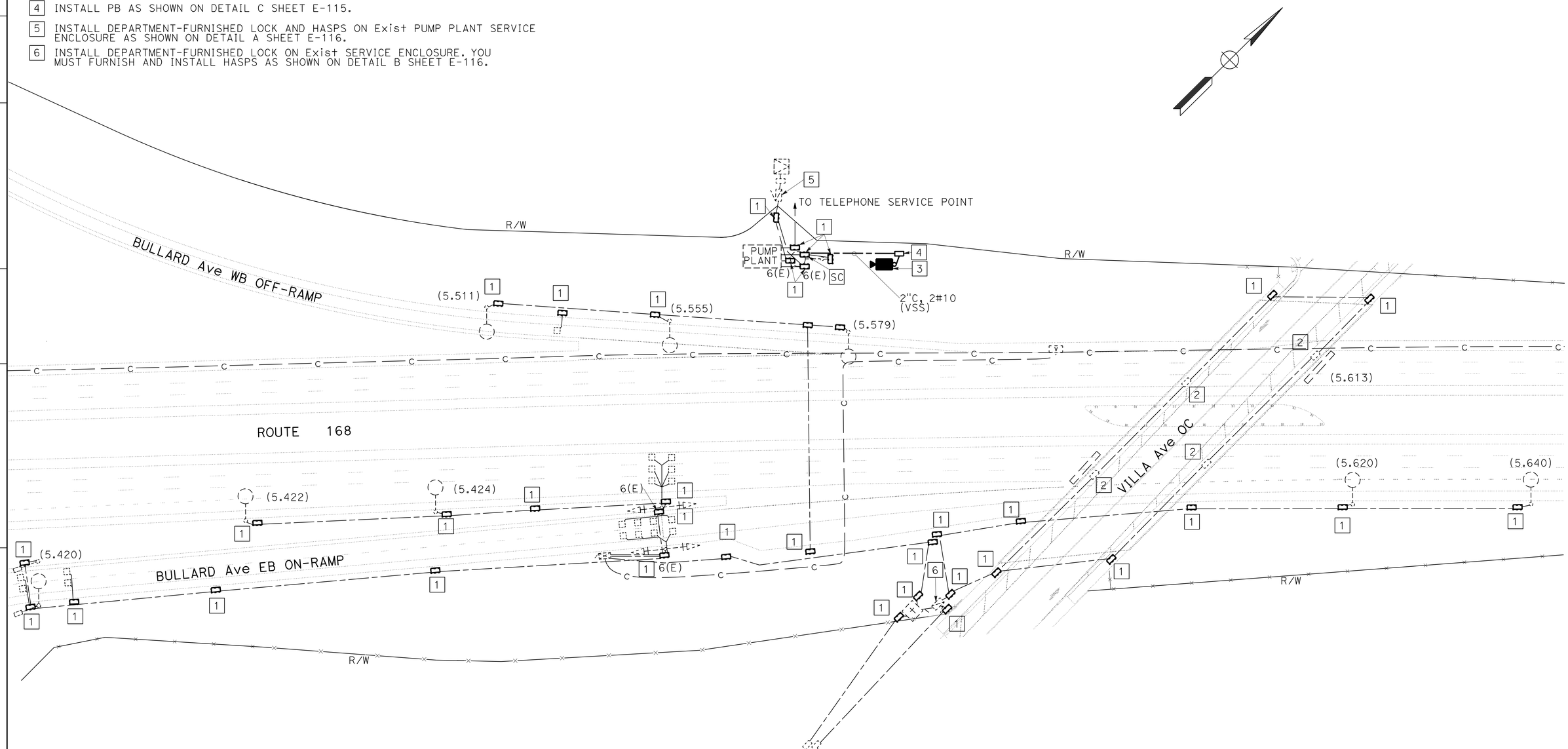

PM 5.8

ELECTRICAL SYSTEMS (ROUTE 168)

E-28

SCALE: 1" = 50'

APPROVED FOR ELECTRICAL WORK ONLY

STATE OF CALIFORNIA - DEPARTMENT OF TRANSPORTATION
Caltrans ELECTRICAL DESIGN

FUNCTIONAL SUPERVISOR: ALI BAKHDOUD
CALCULATED-DESIGNED BY: PAUL MATOS
CHECKED BY: ROBERTO SALCIDO
REVISED BY
DATE REVISED

LAST REVISION DATE PLOTTED => 15-AUG-2013
TIME PLOTTED => 09:28

Dist	COUNTY	ROUTE	POST MILES TOTAL PROJECT	SHEET No.	TOTAL SHEETS
06	Fre	168,180	Var	97	204

REGISTERED ELECTRICAL ENGINEER 7-30-13 DATE

8-5-13
PLANS APPROVAL DATE

REGISTERED PROFESSIONAL ENGINEER
PAUL MATOS
No. 18757
Exp. 6/30/15
ELECTRICAL
STATE OF CALIFORNIA

THE STATE OF CALIFORNIA OR ITS OFFICERS OR AGENTS SHALL NOT BE RESPONSIBLE FOR THE ACCURACY OR COMPLETENESS OF SCANNED COPIES OF THIS PLAN SHEET.

NOTES:

1. FOR ACCURATE RIGHT OF WAY DATA, CONTACT RIGHT OF WAY ENGINEERING AT THE DISTRICT OFFICE.
2. EXISTING UTILITY FACILITIES HAVE NOT BEEN PLOTTED ON THESE PLANS.

LEGEND: (FOR THIS SHEET ONLY)

1 RC Exist pb. INSTALL PB AS SHOWN ON DETAIL A SHEET E-115.

2 RC Exist pb COVER. INSTALL TAMPER RESISTANT PB COVER AS SHOWN ON DETAIL B SHEET E-115.

3 INSTALL DEPARTMENT-FURNISHED LOCK ON Exist SERVICE ENCLOSURE. YOU MUST FURNISH AND INSTALL HASPS AS SHOWN ON DETAIL B SHEET E-116.

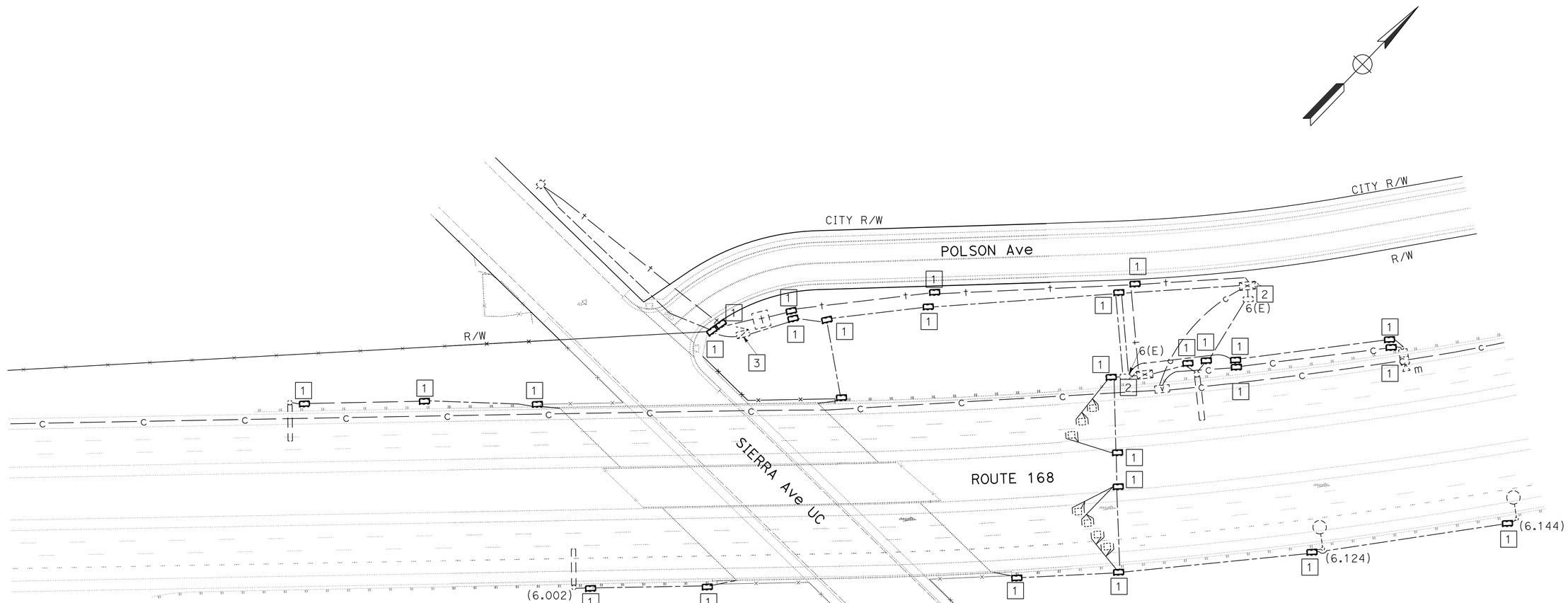

PM 6.3

ELECTRICAL SYSTEMS (ROUTE 168)

E-29

SCALE: 1" = 50'

APPROVED FOR ELECTRICAL WORK ONLY

STATE OF CALIFORNIA - DEPARTMENT OF TRANSPORTATION
Caltrans® ELECTRICAL DESIGN

FUNCTIONAL SUPERVISOR: ALI BAKHDOUD
CALCULATED-DESIGNED BY: PAUL MATOS
CHECKED BY: ROBERTO SALCIDO
REVISED BY
DATE REVISED

LAST REVISION 08-02-13 | DATE PLOTTED => 15-AUG-2013 | TIME PLOTTED => 09:28

Dist	COUNTY	ROUTE	POST MILES TOTAL PROJECT	SHEET No.	TOTAL SHEETS
06	Fre	168,180	Var	98	204

REGISTERED ELECTRICAL ENGINEER 7-30-13 DATE

8-5-13
PLANS APPROVAL DATE

REGISTERED PROFESSIONAL ENGINEER PAUL MATOS No. 18757 Exp. 6/30/15 ELECTRICAL STATE OF CALIFORNIA

THE STATE OF CALIFORNIA OR ITS OFFICERS OR AGENTS SHALL NOT BE RESPONSIBLE FOR THE ACCURACY OR COMPLETENESS OF SCANNED COPIES OF THIS PLAN SHEET.

NOTES:

1. FOR ACCURATE RIGHT OF WAY DATA, CONTACT RIGHT OF WAY ENGINEERING AT THE DISTRICT OFFICE.
2. EXISTING UTILITY FACILITIES HAVE NOT BEEN PLOTTED ON THESE PLANS.

LEGEND: (FOR THIS SHEET ONLY)

1 RC Exist pb. INSTALL PB AS SHOWN ON DETAIL A SHEET E-115.

2 INSTALL DEPARTMENT-FURNISHED LOCK ON Exist SERVICE ENCLOSURE. YOU MUST FURNISH AND INSTALL HASPS AS SHOWN ON DETAIL B SHEET E-116.

3 RC Exist pb COVER. INSTALL TAMPER RESISTANT PB COVER AS SHOWN ON DETAIL B SHEET E-115.

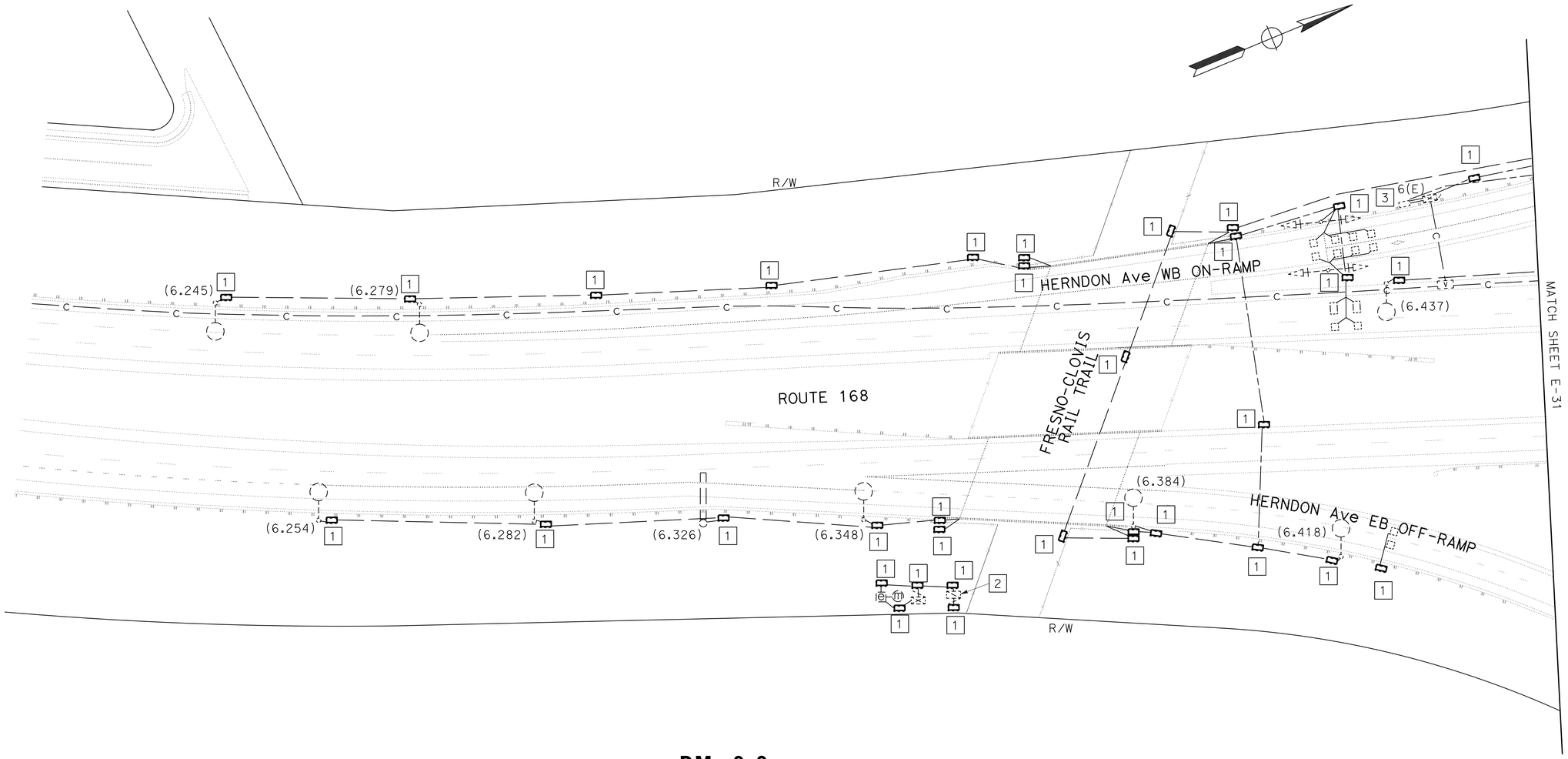

PM 6.6

ELECTRICAL SYSTEMS (ROUTE 168)

E-30

SCALE: 1" = 50'

APPROVED FOR ELECTRICAL WORK ONLY

STATE OF CALIFORNIA - DEPARTMENT OF TRANSPORTATION
Caltrans® ELECTRICAL DESIGN

FUNCTIONAL SUPERVISOR: ALI BAKHDOUD
CALCULATED-DESIGNED BY: PAUL MATOS
CHECKED BY: ROBERTO SALCIDO
REVISED BY
DATE REVISED

LAST REVISION 08-02-13
DATE PLOTTED => 15-AUG-2013
TIME PLOTTED => 09:29

Dist	COUNTY	ROUTE	POST MILES TOTAL PROJECT	SHEET No.	TOTAL SHEETS
06	Fre	168,180	Var	99	204

REGISTERED ELECTRICAL ENGINEER 7-30-13 DATE

8-5-13
PLANS APPROVAL DATE

REGISTERED PROFESSIONAL ENGINEER PAUL MATOS No. 18757 Exp. 6/30/15 ELECTRICAL STATE OF CALIFORNIA

THE STATE OF CALIFORNIA OR ITS OFFICERS OR AGENTS SHALL NOT BE RESPONSIBLE FOR THE ACCURACY OR COMPLETENESS OF SCANNED COPIES OF THIS PLAN SHEET.

NOTES:

1. FOR ACCURATE RIGHT OF WAY DATA, CONTACT RIGHT OF WAY ENGINEERING AT THE DISTRICT OFFICE.
2. EXISTING UTILITY FACILITIES HAVE NOT BEEN PLOTTED ON THESE PLANS.

LEGEND: (FOR THIS SHEET ONLY)

1 RC Exist pb. INSTALL PB AS SHOWN ON DETAIL A SHEET E-115.

2 RC Exist pb COVER. INSTALL TAMPER RESISTANT PB COVER AS SHOWN ON DETAIL B SHEET E-115.

3 INSTALL DEPARTMENT-FURNISHED LOCK ON Exist SERVICE ENCLOSURE. YOU MUST FURNISH AND INSTALL HASPS AS SHOWN ON DETAIL B SHEET E-116.

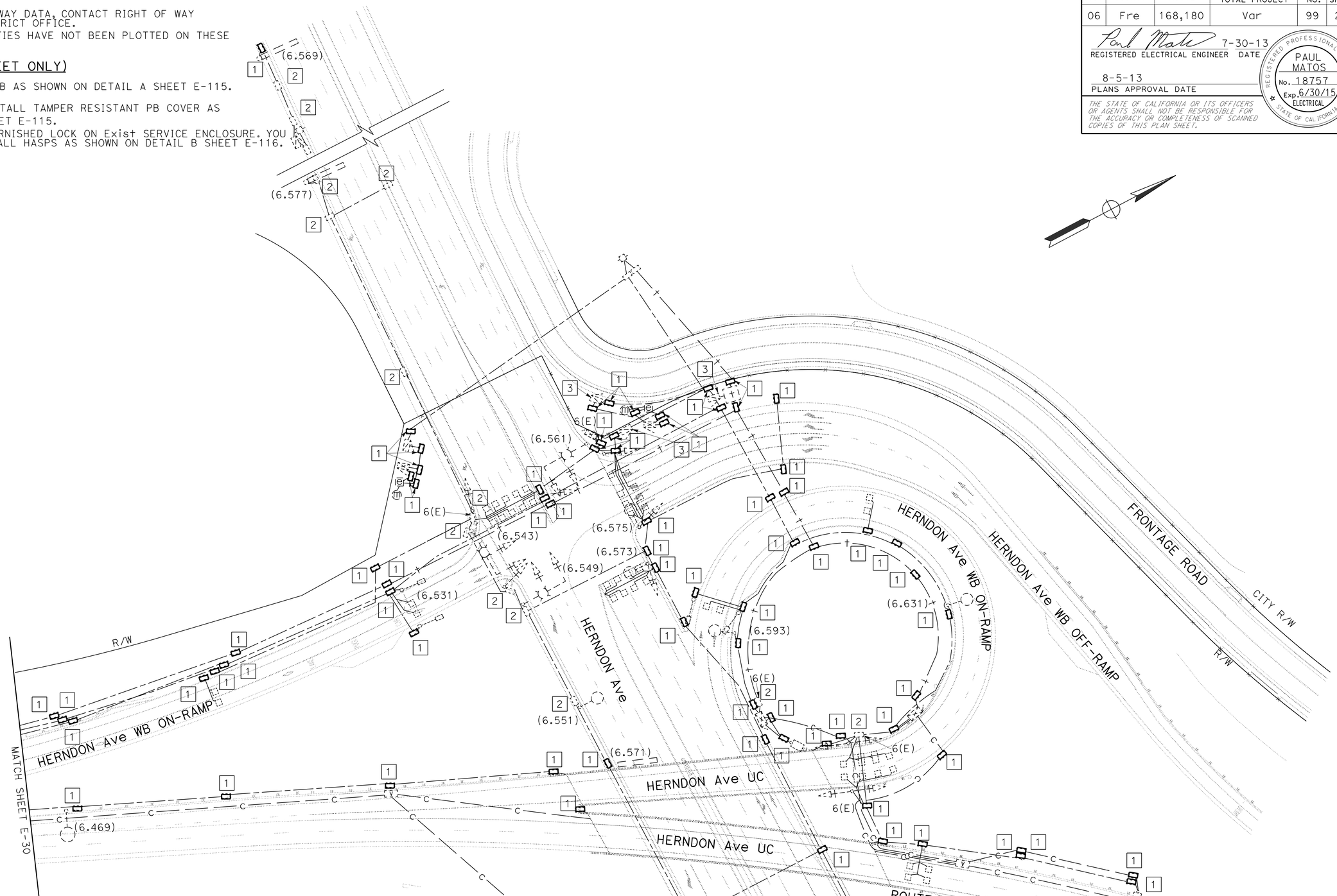

PM 6.7

ELECTRICAL SYSTEMS (ROUTE 168)

E-31

APPROVED FOR ELECTRICAL WORK ONLY

SCALE: 1" = 50'

STATE OF CALIFORNIA - DEPARTMENT OF TRANSPORTATION
Caltrans® **ELECTRICAL DESIGN**

FUNCTIONAL SUPERVISOR: ALI BAKHDOUD
CALCULATED-DESIGNED BY: PAUL MATOS
CHECKED BY: ROBERTO SALCIDO
REVISED BY
DATE REVISED

LAST REVISION DATE PLOTTED => 15-AUG-2013
08-02-13 TIME PLOTTED => 09:29

BORDER LAST REVISED 7/2/2010
USERNAME => s118789
DGN FILE => 0613000266ua031.dgn
RELATIVE BORDER SCALE IS IN INCHES 0 1 2 3
UNIT 1515
PROJECT NUMBER & PHASE 06130002661

Dist	COUNTY	ROUTE	POST MILES TOTAL PROJECT	SHEET No.	TOTAL SHEETS
06	Fre	168,180	Var	100	204

REGISTERED ELECTRICAL ENGINEER 7-30-13 DATE

8-5-13
PLANS APPROVAL DATE

REGISTERED PROFESSIONAL ENGINEER PAUL MATOS No. 18757 Exp. 6/30/15 ELECTRICAL STATE OF CALIFORNIA

THE STATE OF CALIFORNIA OR ITS OFFICERS OR AGENTS SHALL NOT BE RESPONSIBLE FOR THE ACCURACY OR COMPLETENESS OF SCANNED COPIES OF THIS PLAN SHEET.

NOTES:

1. FOR ACCURATE RIGHT OF WAY DATA, CONTACT RIGHT OF WAY ENGINEERING AT THE DISTRICT OFFICE.
2. EXISTING UTILITY FACILITIES HAVE NOT BEEN PLOTTED ON THESE PLANS.

LEGEND: (FOR THIS SHEET ONLY)

1 RC Exist pb. INSTALL PB AS SHOWN ON DETAIL A SHEET E-115.

2 RC Exist pb COVER. INSTALL TAMPER RESISTANT PB COVER AS SHOWN ON DETAIL B SHEET E-115.

3 INSTALL DEPARTMENT-FURNISHED LOCK ON Exist SERVICE ENCLOSURE. YOU MUST FURNISH AND INSTALL HASPS AS SHOWN ON DETAIL B SHEET E-116.

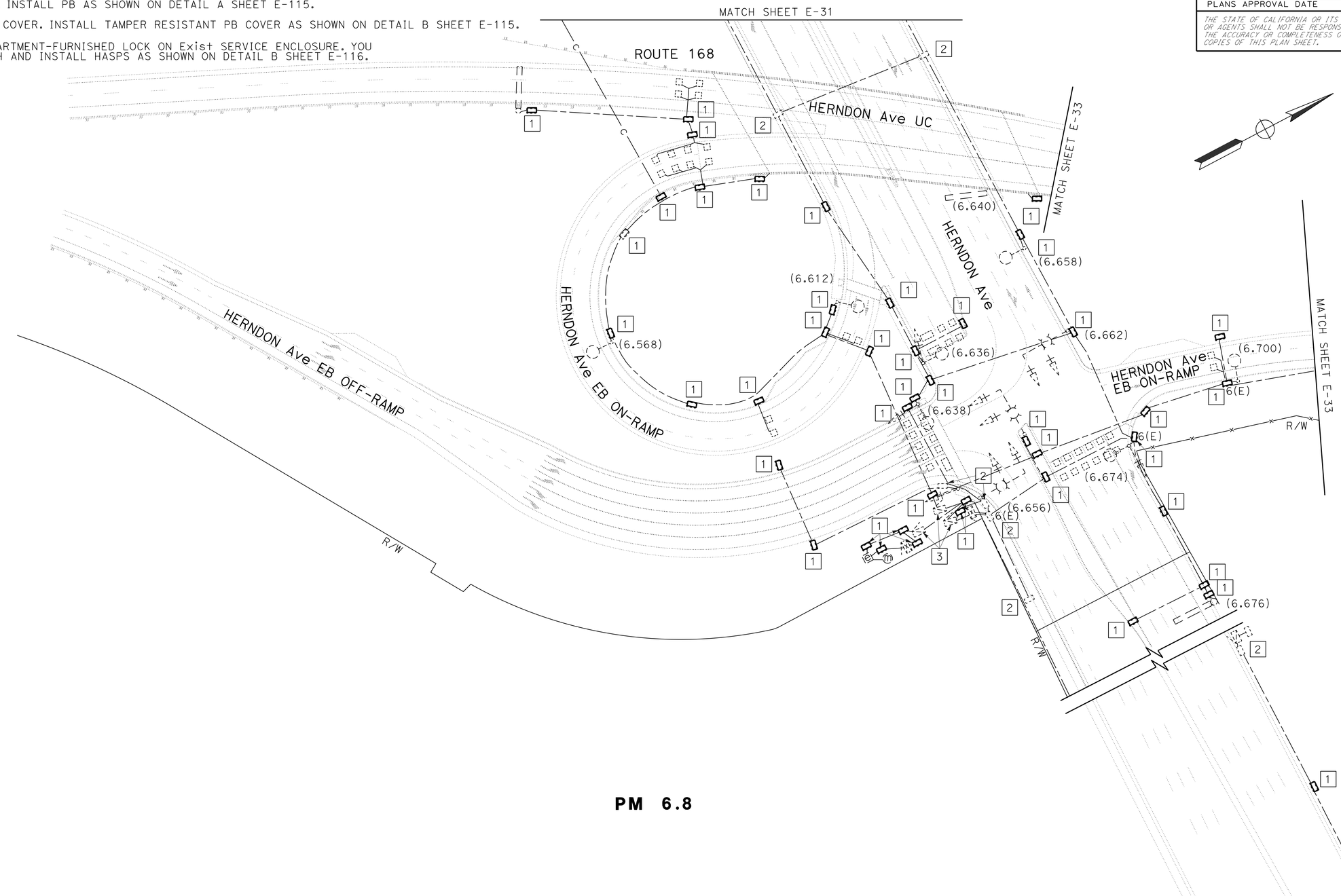

PM 6.8

ELECTRICAL SYSTEMS (ROUTE 168)

SCALE: 1" = 50'

E-32

APPROVED FOR ELECTRICAL WORK ONLY

STATE OF CALIFORNIA - DEPARTMENT OF TRANSPORTATION
Caltrans® ELECTRICAL DESIGN

FUNCTIONAL SUPERVISOR: ALI BAKHDOUD
CALCULATED-DESIGNED BY: PAUL MATOS
CHECKED BY: ROBERTO SALCIDO
REVISED BY
DATE REVISED

LAST REVISION 08-02-13
DATE PLOTTED => 15-AUG-2013
TIME PLOTTED => 09:29