Dist	COUNTY	ROUTE	POST MILES TOTAL PROJECT	SHEET No.	TOTAL SHEETS
06	Mad	152	R0.0/1.1	1	87

ACHSNHPG-P152(084)E

STATE OF CALIFORNIA
DEPARTMENT OF TRANSPORTATION

PROJECT PLANS FOR CONSTRUCTION ON
STATE HIGHWAY
IN MADERA COUNTY
NEAR CHOWCHILLA
FROM THE MERCED COUNTY LINE
TO 0.1 MILE WEST OF ROAD 4

TO BE SUPPLEMENTED BY STANDARD PLANS DATED JULY 2010

INDEX OF PLANS

SHEET No.	DESCRIPTION
1	TITLE AND LOCATION MAP
2	TYPICAL CROSS SECTIONS
3-5	LAYOUTS
6-8	CONSTRUCTION DETAILS
9-22	DRAINAGE PLANS, PROFILES, DETAILS AND QUANTITIES
23	CONSTRUCTION AREA SIGNS
24-26	STAGE CONSTRUCTION PLANS
27-30	TRAFFIC HANDLING PLANS AND QUANTITIES
31-34	PAVEMENT DELINEATION PLANS, DETAILS AND QUANTITIES
35-36	SIGN PLANS, DETAILS AND QUANTITIES
37	SUMMARY OF QUANTITIES
38-41	EROSION CONTROL PLANS
42-45	ELECTRICAL PLANS
46-87	REVISED STANDARD PLANS

THE STANDARD PLANS LIST APPLICABLE TO THIS CONTRACT IS INCLUDED IN THE NOTICE TO BIDDERS AND SPECIAL PROVISIONS BOOK.

LOCATION MAP

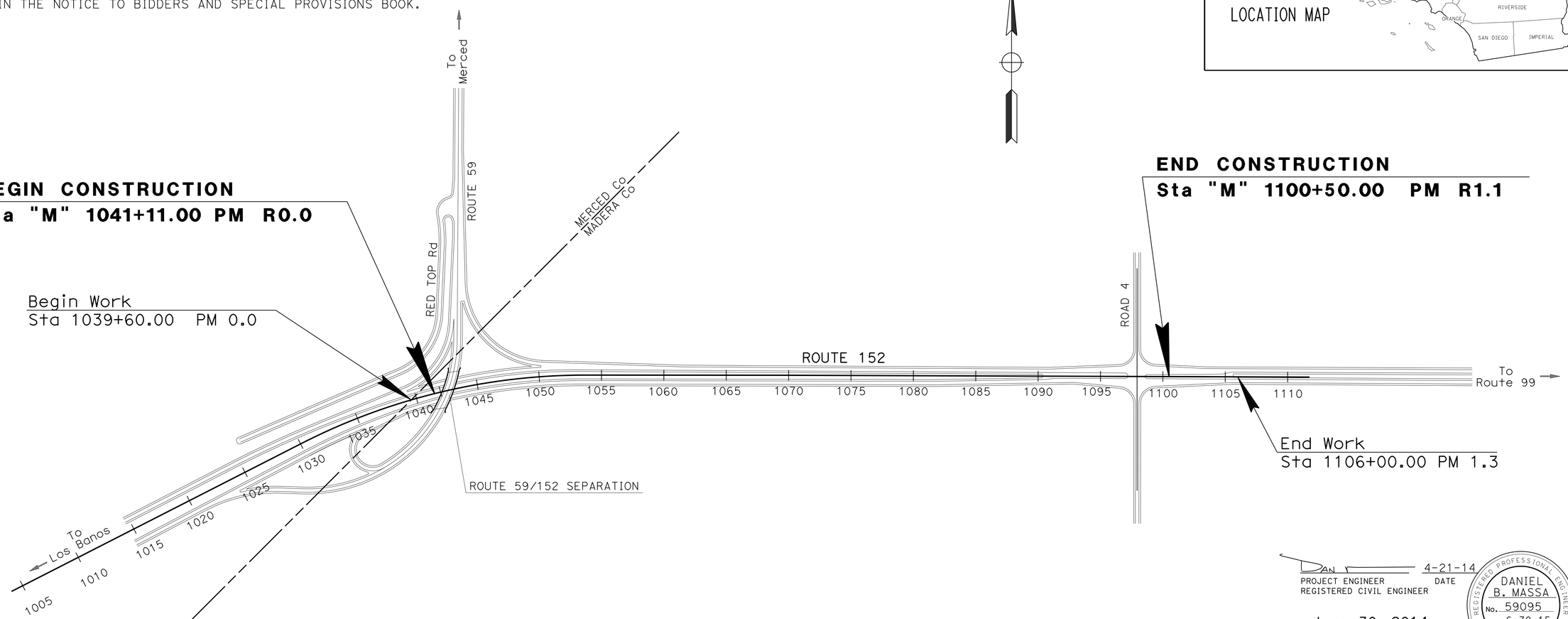

BEGIN CONSTRUCTION
Sta "M" 1041+11.00 PM R0.0

Begin Work
Sta 1039+60.00 PM 0.0

END CONSTRUCTION
Sta "M" 1100+50.00 PM R1.1

End Work
Sta 1106+00.00 PM 1.3

NO SCALE

PROJECT MANAGER ANAND KAPOOR

DESIGN ENGINEER GETACHEW ESHETE

4-21-14
PROJECT ENGINEER DATE
REGISTERED CIVIL ENGINEER

June 30, 2014
PLANS APPROVAL DATE

REGISTERED PROFESSIONAL ENGINEER
DANIEL B. MASSA
No. 59095
Exp. 6-30-15
CIVIL
STATE OF CALIFORNIA

THE STATE OF CALIFORNIA OR ITS OFFICERS OR AGENTS SHALL NOT BE RESPONSIBLE FOR THE ACCURACY OR COMPLETENESS OF SCANNED COPIES OF THIS PLAN SHEET.

THE CONTRACTOR SHALL POSSESS THE CLASS (OR CLASSES) OF LICENSE AS SPECIFIED IN THE "NOTICE TO BIDDERS."

CONTRACT No.	06-0P9704
PROJECT ID	0612000319

LAST REVISION 06-10-14 DATE PLOTTED => 29-AUG-2014 TIME PLOTTED => 08:51

Dist	COUNTY	ROUTE	POST MILES TOTAL PROJECT	SHEET No.	TOTAL SHEETS
06	Mad	152	R0.0/1.1	2	87

DAN 04-21-14
REGISTERED CIVIL ENGINEER DATE

6-30-14
PLANS APPROVAL DATE

REGISTERED PROFESSIONAL ENGINEER DANIEL B. MASSA No. 59095 Exp. 6-30-15 CIVIL STATE OF CALIFORNIA

THE STATE OF CALIFORNIA OR ITS OFFICERS OR AGENTS SHALL NOT BE RESPONSIBLE FOR THE ACCURACY OR COMPLETENESS OF SCANNED COPIES OF THIS PLAN SHEET.

NOTES:

1. HIGH TENSION CABLE BARRIER POST Max SPACING IS 10.5 FEET.
2. DIMENSIONS OF THE PAVEMENT STRUCTURES (STRUCTURAL SECTIONS) ARE SUBJECT TO TOLERANCES SPECIFIED IN THE STANDARD SPECIFICATIONS.
3. SEE DRAINAGE SHEETS FOR DITCH LOCATIONS.

DESIGN DESIGNATION

ADT (2015)	20,100	D	59%
ADT (2035)	47,500	T	8%
DHV	4,400	V	65 mph
ESAL	47,140,000	TI_{20}	14

PAVEMENT CLIMATE REGION: INLAND VALLEY

1 Exist 0.67′ PCC 0.33′ CTB 0.50′ AS

2 Exist 0.25′ AC 0.33′ AB Var AS

3 Exist 0.20′ AC 0.40′ AB Var AS

4 Exist 0.85′ AC Var AB

5 Exist 0.40′ AC 0.34′ AB

6 0.70′ HMA (TYPE A) 0.55′ CI 2 AB

7 0.30′ HMA (TYPE A) 0.50′ CI 2 AB

WEST BOUND

* = -2%
Sta 1041+50.00 TO 1053+75.00
Sta 1056+25.00 TO 1063+00.00
Sta 1070+00.00 TO 1071+50.00
Sta 1087+25.00 TO 1092+60.00

* = -5%
Sta 1054+00.00 TO 1056+00.00
Sta 1063+25.00 TO 1069+75.00
Sta 1071+75.00 TO 1087+00.00

* = -7% TO -10%
Sta 1092+70.00 TO 1093+00.00 (CONFORM)

EAST BOUND

** = -5%
Sta 1054+00.00 TO 1065+25.00
Sta 1068+25.00 TO 1087+00.00

** = -2%
Sta 1065+50.00 TO 1068+00.00
Sta 1065+50.00 TO 1068+00.00
Sta 1087+25.00 TO 1092+60.00

** = -6% TO -7%
Sta 1092+70.00 TO 1093+00.00 (CONFORM)

ABBREVIATON:

HTCB = HIGH TENSION CABLE BARRIER

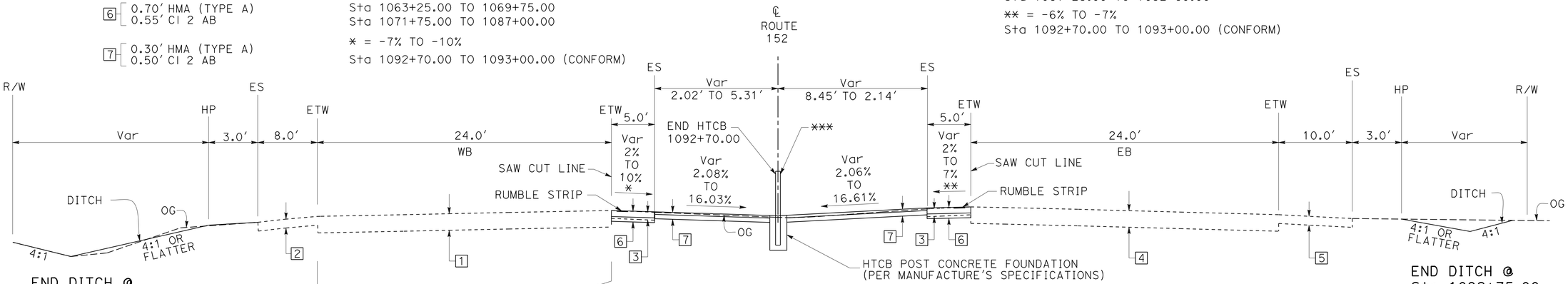

END DITCH @ Sta 1092+75.00

END DITCH @ Sta 1092+75.00

ROUTE 152
Sta 1053+50.00 TO Sta 1093+00.00

*** PLACEMENT OF HTCB ALONG ℄

Sta 1070+75.00 TO 1092+70.00 6" Rt OF ℄
Sta 1062+00.00 TO 1070+75.00 ON ℄
Sta 1053+50.00 TO 1062+00.00 1′ Rt OF ℄

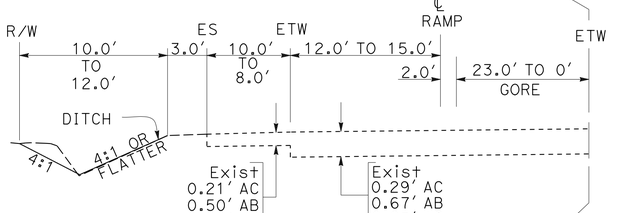

WB-OFF RAMP
Sta 1050+00.00 TO Sta 1055+50.00

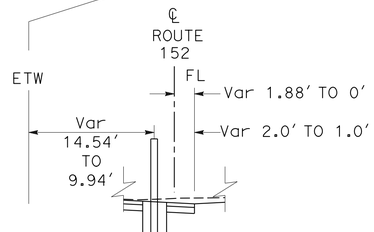

Sta 1046+00.00 TO Sta 1053+50.00

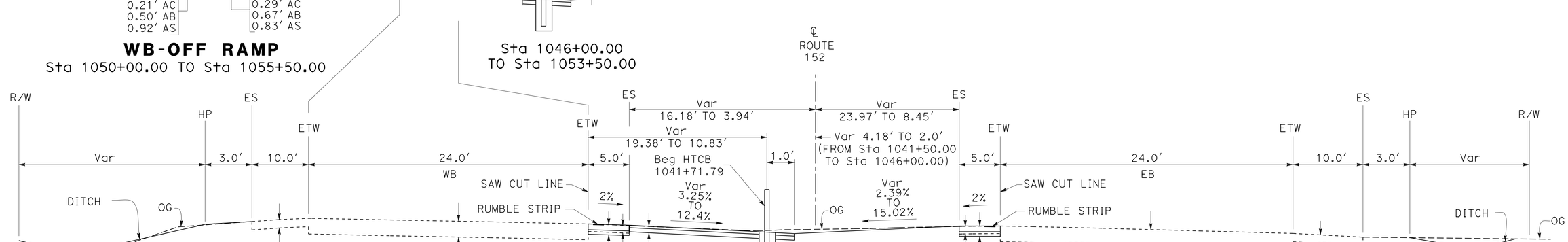

BEGIN DITCH @ Sta 1052+50.00

BEGIN DITCH @ Sta 1051+00.00

ROUTE 152
Sta 1041+50.00 TO Sta 1053+50.00

TYPICAL CROSS SECTIONS

NO SCALE

X-1

STATE OF CALIFORNIA - DEPARTMENT OF TRANSPORTATION
Caltrans® DESIGN

FUNCTIONAL SUPERVISOR: GETACHEW ESHETE
CALCULATED-DESIGNED BY: TRIET LY
CHECKED BY: DAN MASSA
REVISED BY / DATE REVISED

LAST REVISION 06-30-14
DATE PLOTTED => 03-SEP-2014
TIME PLOTTED => 10:46

Dist	COUNTY	ROUTE	POST MILES TOTAL PROJECT	SHEET No.	TOTAL SHEETS
06	Mad	152	R0.0/1.1	3	87

REGISTERED CIVIL ENGINEER DATE 04-21-14

PLANS APPROVAL DATE 6-30-14

REGISTERED PROFESSIONAL ENGINEER DANIEL B. MASSA No. 59095 Exp. 6-30-15 CIVIL STATE OF CALIFORNIA

THE STATE OF CALIFORNIA OR ITS OFFICERS OR AGENTS SHALL NOT BE RESPONSIBLE FOR THE ACCURACY OR COMPLETENESS OF SCANNED COPIES OF THIS PLAN SHEET.

NOTES:

1. FOR ACCURATE RIGHT OF WAY DATA, CONTACT RIGHT OF WAY ENGINEERING AT THE DISTRICT OFFICE.
2. HIGH TENSION CABLE BARRIER POST MAXIMUM SPACING IS 10.5 FEET.

LEGEND:

- 0.30' HMA (TYPE A) 0.50' Cl 2 AB
- HIGH TENSION CABLE BARRIER
- 0.70' HMA (TYPE A) 0.55' HMA Cl 2 AB
- PLACE HMA MISC AREA 0.30' HMA (TYPE A)
- DITCH FL (GRADE TO DRAIN)
- DITCH FL (DITCH EXCAVATION)

ABBREVIATONS:

HTCB = HIGH TENSION CABLE BARRIER
ACCS = ALTERNATIVE CRASH CUSHION SYSTEM
AFTS = ALTERNATIVE FLARED TERMINAL SYSTEM

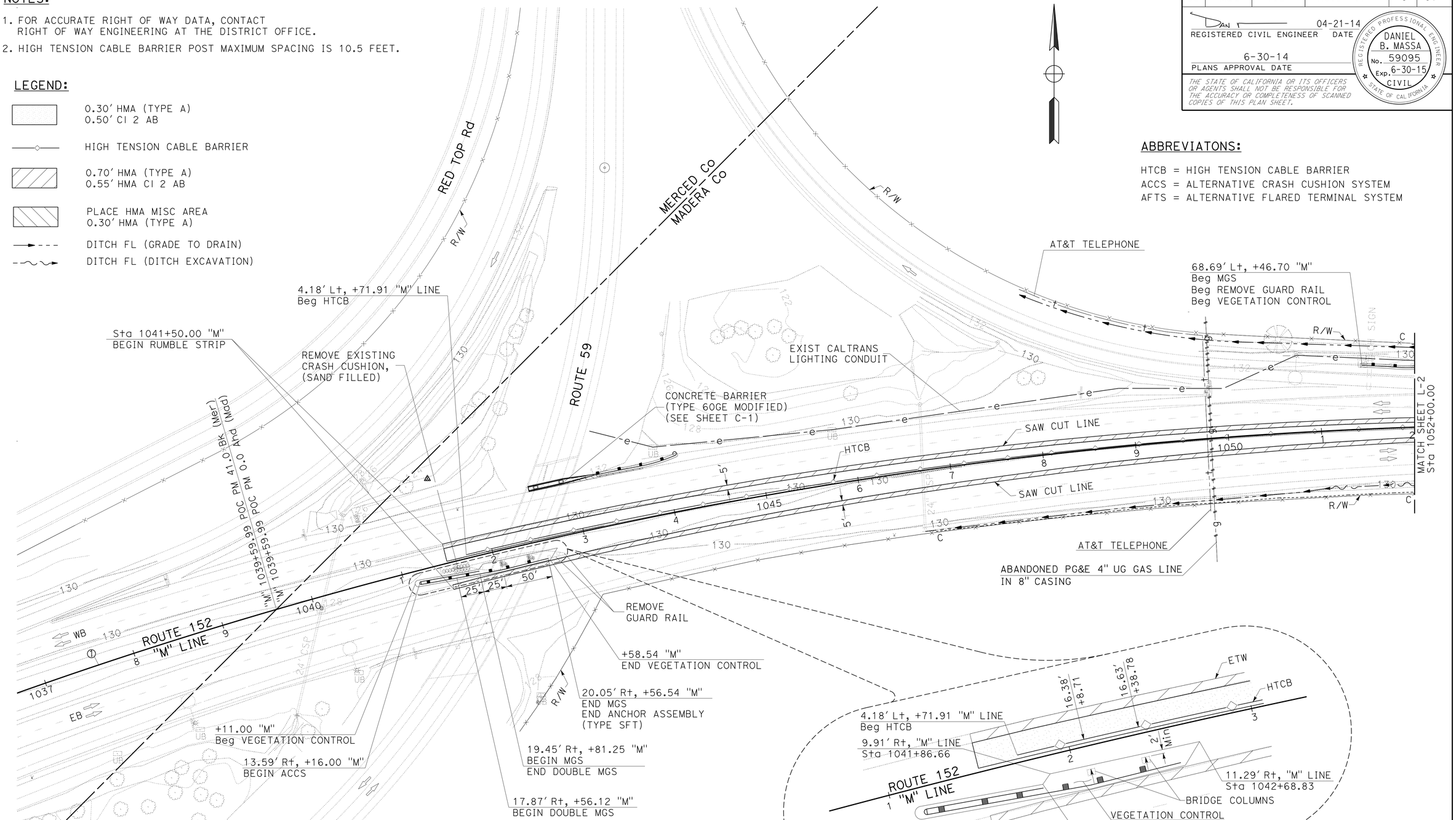

CURVE DATA

No.	R	Δ	T	L
①	5000'	17°33'36"	772.26'	1532.40'

LAYOUT

SCALE: 1"=50'

L-1

STATE OF CALIFORNIA - DEPARTMENT OF TRANSPORTATION
Caltrans DESIGN

FUNCTIONAL SUPERVISOR: GETACHEW ESHETE
CALCULATED-DESIGNED BY: TRIET LY
CHECKED BY: DAN MASSA
REVISED BY / DATE REVISED

LAST REVISION 06-19-14
DATE PLOTTED => 19-AUG-2014
TIME PLOTTED => 10:34

Dist	COUNTY	ROUTE	POST MILES TOTAL PROJECT	SHEET No.	TOTAL SHEETS
06	Mad	152	R0.0/1.1	4	87

DAN 04-21-14
REGISTERED CIVIL ENGINEER DATE

6-30-14
PLANS APPROVAL DATE

REGISTERED PROFESSIONAL ENGINEER
DANIEL B. MASSA
No. 59095
Exp. 6-30-15
CIVIL
STATE OF CALIFORNIA

THE STATE OF CALIFORNIA OR ITS OFFICERS OR AGENTS SHALL NOT BE RESPONSIBLE FOR THE ACCURACY OR COMPLETENESS OF SCANNED COPIES OF THIS PLAN SHEET.

NOTE:

FOR ACCURATE RIGHT OF WAY DATA, CONTACT
RIGHT OF WAY ENGINEERING AT THE DISTRICT OFFICE.

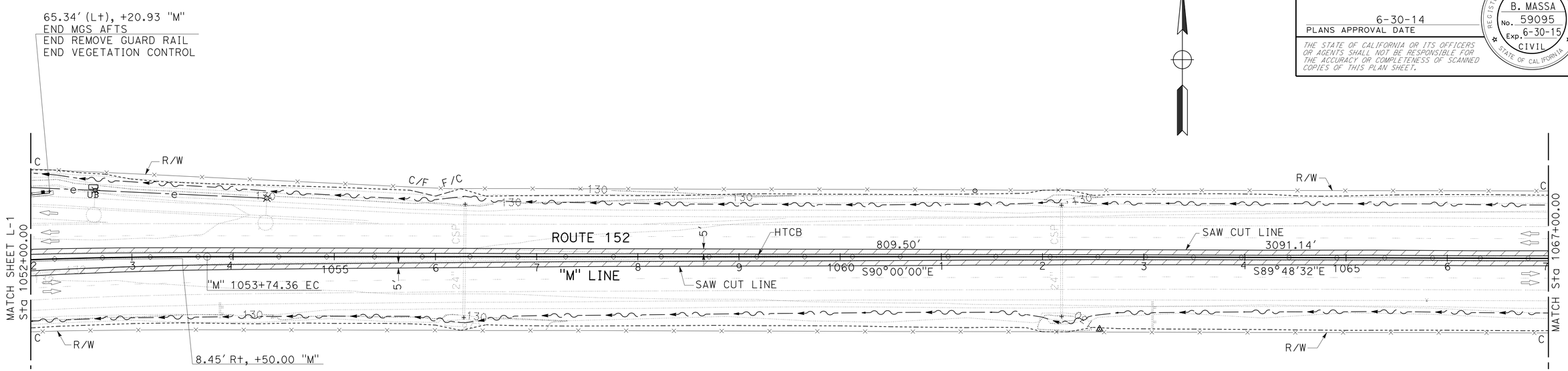

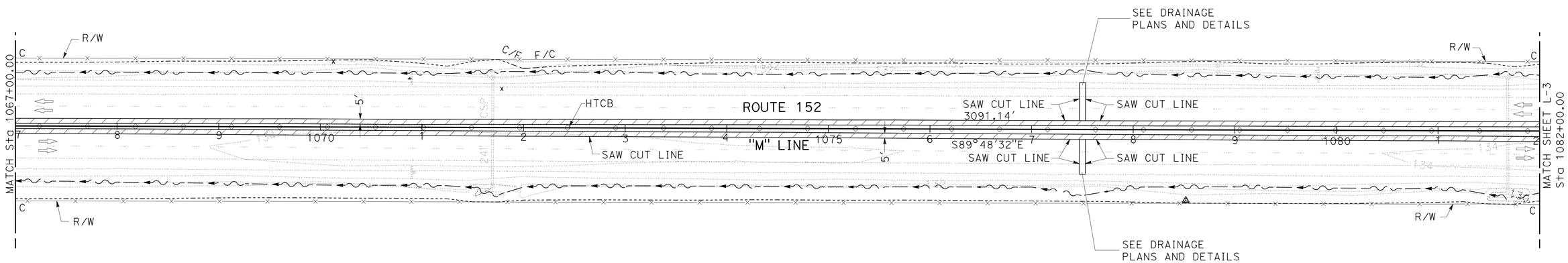

LAYOUT

SCALE: 1"=50′

L-2

REVISED BY	DATE REVISED

TRIET LY — DAN MASSA

CALCULATED-DESIGNED BY — CHECKED BY

FUNCTIONAL SUPERVISOR — GETACHEW ESHETE

STATE OF CALIFORNIA - DEPARTMENT OF TRANSPORTATION

Caltrans® **DESIGN**

LAST REVISION 06-19-14 — DATE PLOTTED => 19-AUG-2014 — TIME PLOTTED => 10:34

Dist	COUNTY	ROUTE	POST MILES TOTAL PROJECT	SHEET No.	TOTAL SHEETS
06	Mad	152	R0.0/1.1	5	87

DAN 04-21-14
REGISTERED CIVIL ENGINEER DATE

6-30-14
PLANS APPROVAL DATE

REGISTERED PROFESSIONAL ENGINEER
DANIEL B. MASSA
No. 59095
Exp. 6-30-15
CIVIL
STATE OF CALIFORNIA

THE STATE OF CALIFORNIA OR ITS OFFICERS OR AGENTS SHALL NOT BE RESPONSIBLE FOR THE ACCURACY OR COMPLETENESS OF SCANNED COPIES OF THIS PLAN SHEET.

NOTE:

FOR ACCURATE RIGHT OF WAY DATA, CONTACT RIGHT OF WAY ENGINEERING AT THE DISTRICT OFFICE.

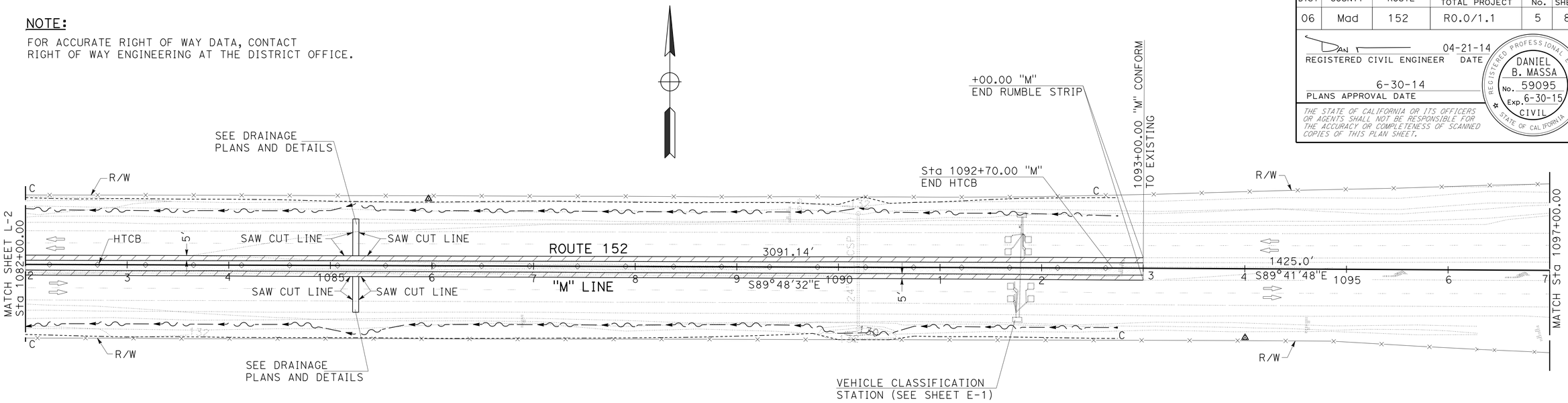

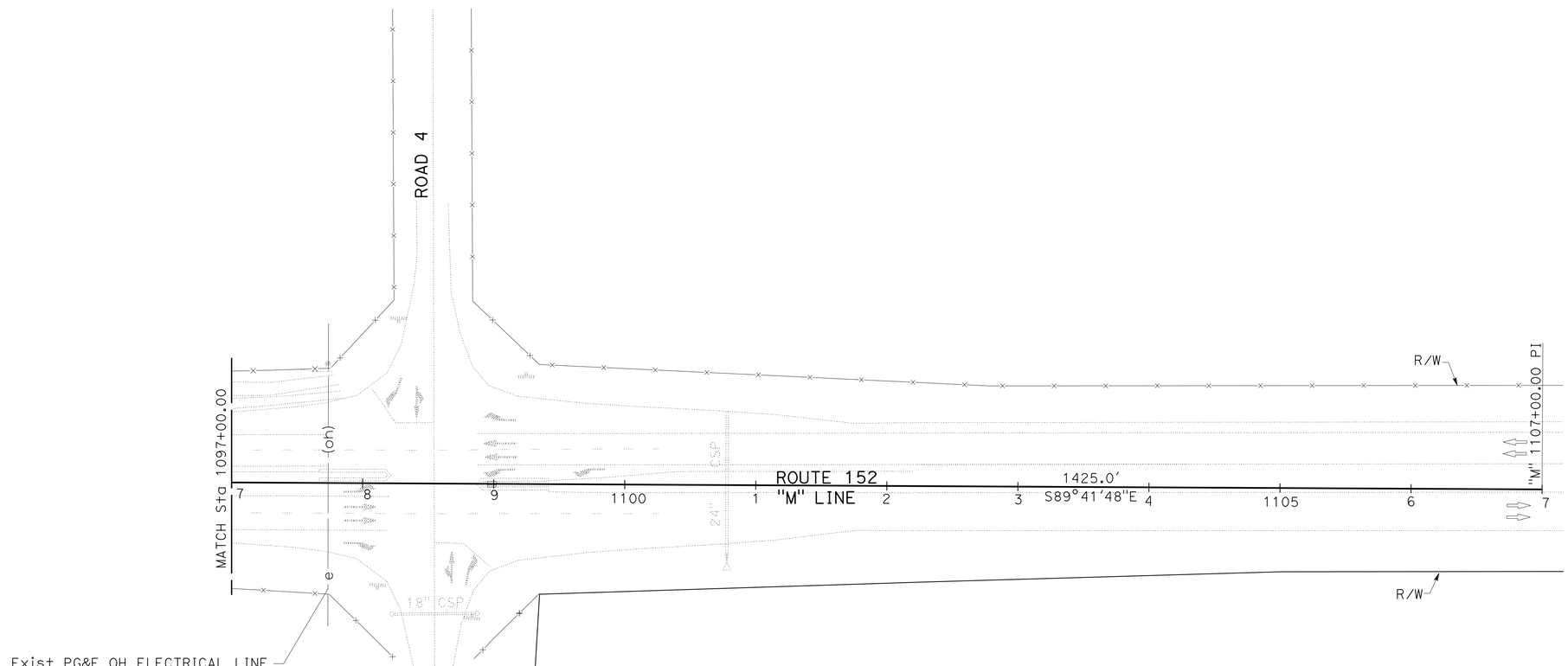

SCALE: 1"=50'

LAYOUT

L-3

STATE OF CALIFORNIA - DEPARTMENT OF TRANSPORTATION
Caltrans
DESIGN

FUNCTIONAL SUPERVISOR: GETACHEW ESHETE
CALCULATED-DESIGNED BY: TRIET LY
CHECKED BY: DAN MASSA
REVISED BY
DATE REVISED

LAST REVISION 06-19-14
DATE PLOTTED => 19-AUG-2014
TIME PLOTTED => 10:34

Dist	COUNTY	ROUTE	POST MILES TOTAL PROJECT	SHEET No.	TOTAL SHEETS
06	Mad	152	R0.0/1.1	6	87

REGISTERED CIVIL ENGINEER 04-21-14 DATE

PLANS APPROVAL DATE 6-30-14

REGISTERED PROFESSIONAL ENGINEER DANIEL B. MASSA No. 59095 Exp. 6-30-15 CIVIL STATE OF CALIFORNIA

THE STATE OF CALIFORNIA OR ITS OFFICERS OR AGENTS SHALL NOT BE RESPONSIBLE FOR THE ACCURACY OR COMPLETENESS OF SCANNED COPIES OF THIS PLAN SHEET.

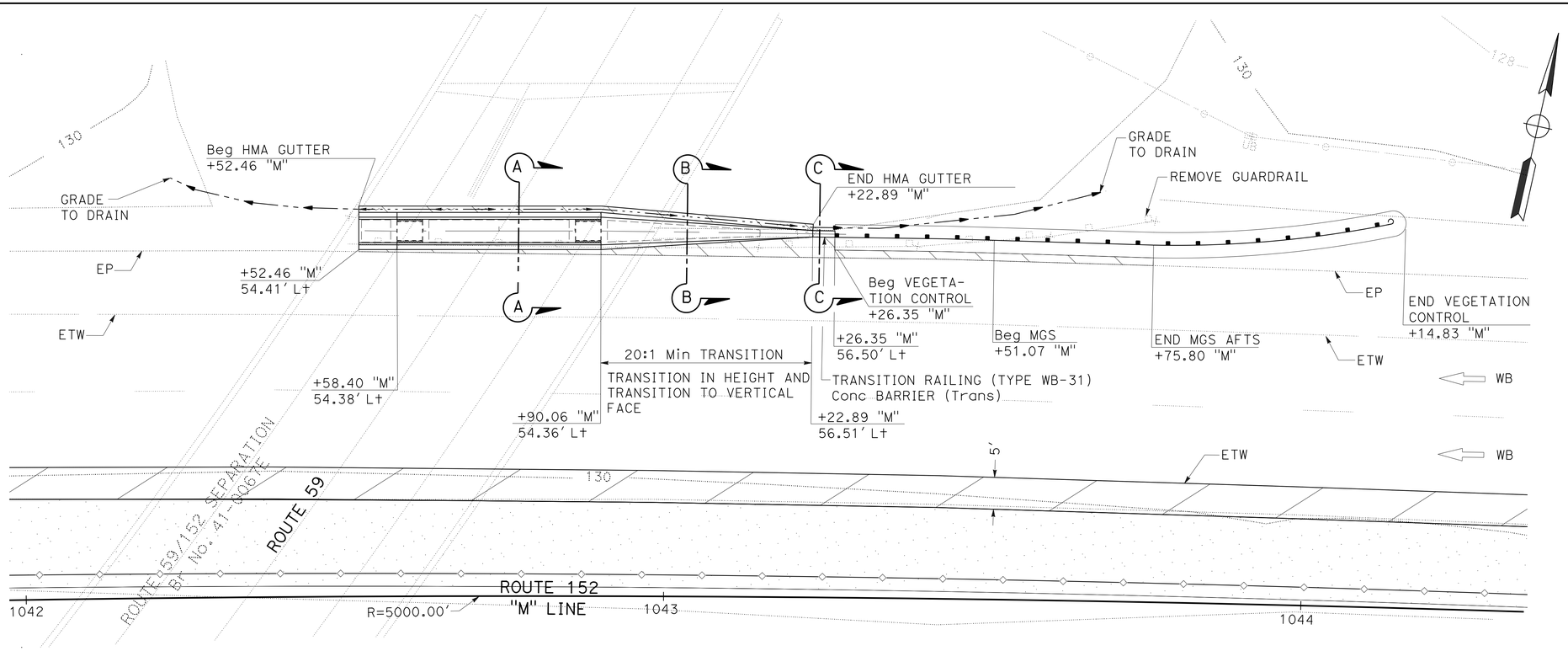

PLAN

SCALE: 1"=10'

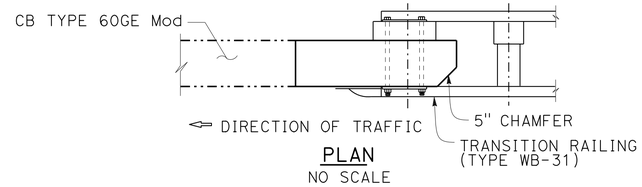

PLAN
NO SCALE

LEGEND:

- 0.30' HMA (TYPE A) / 0.50' CL 2 AB
- HIGH TENSION CABLE BARRIER
- 0.70' HMA (TYPE A) / 0.55' HMA CL 2 AB
- PLACE HMA (Misc AREA) / 0.30' HMA (TYPE A)

NOTES:

1. FOR MORE INFORMATION SEE Std PLAN A76F
2. 0.3% Min FL SLOPE FOR Misc HMA Gtr

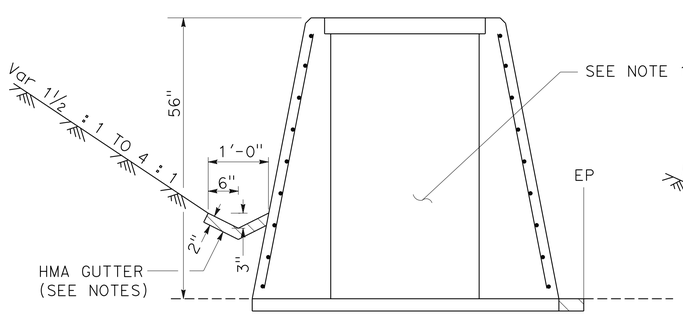

SECTION A-A
NO SCALE

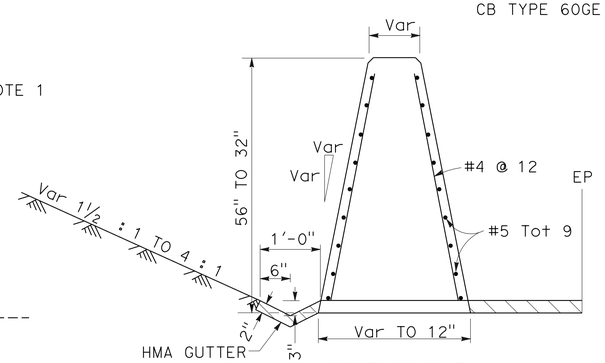

SECTION B-B
NO SCALE

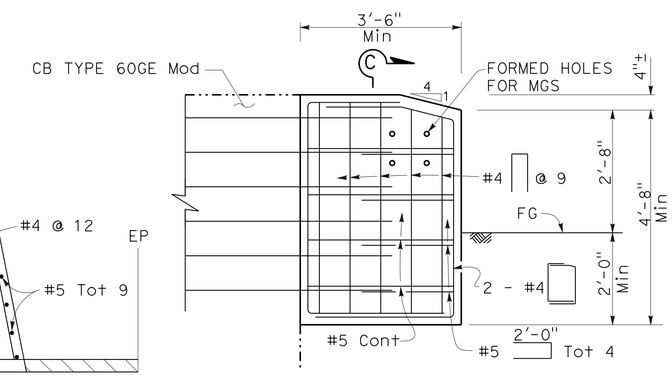

ELEVATION
NO SCALE

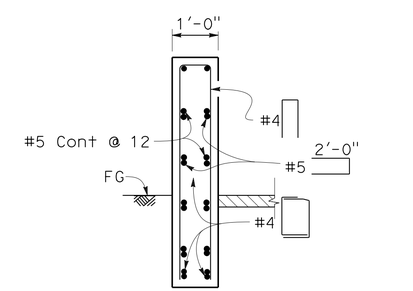

NOTE:
DRILL AND BOND DOWELS NOT SHOWN

SECTION C-C
NO SCALE

CONCRETE BARRIER TYPE 60GE MODIFIED

Conc BARRIER (Trans)

CONSTRUCTION DETAILS

SCALE AS SHOWN

C-1

STATE OF CALIFORNIA - DEPARTMENT OF TRANSPORTATION
Caltrans DESIGN
FUNCTIONAL SUPERVISOR GETACHEW ESHETE
CALCULATED-DESIGNED BY TRIET LY
CHECKED BY DAN MASSA
REVISED BY
DATE REVISED

LAST REVISION 06-26-14
DATE PLOTTED => 19-AUG-2014
TIME PLOTTED => 10:34

Dist	COUNTY	ROUTE	POST MILES TOTAL PROJECT	SHEET No.	TOTAL SHEETS
06	Mad	152	R0.0/1.1	7	87

DAN 04-21-14
REGISTERED CIVIL ENGINEER DATE

6-30-14
PLANS APPROVAL DATE

REGISTERED PROFESSIONAL ENGINEER
DANIEL B. MASSA
No. 59095
Exp. 6-30-15
CIVIL
STATE OF CALIFORNIA

THE STATE OF CALIFORNIA OR ITS OFFICERS OR AGENTS SHALL NOT BE RESPONSIBLE FOR THE ACCURACY OR COMPLETENESS OF SCANNED COPIES OF THIS PLAN SHEET.

NOTE:

1. USE 15'-7½" LENGTH RAIL.

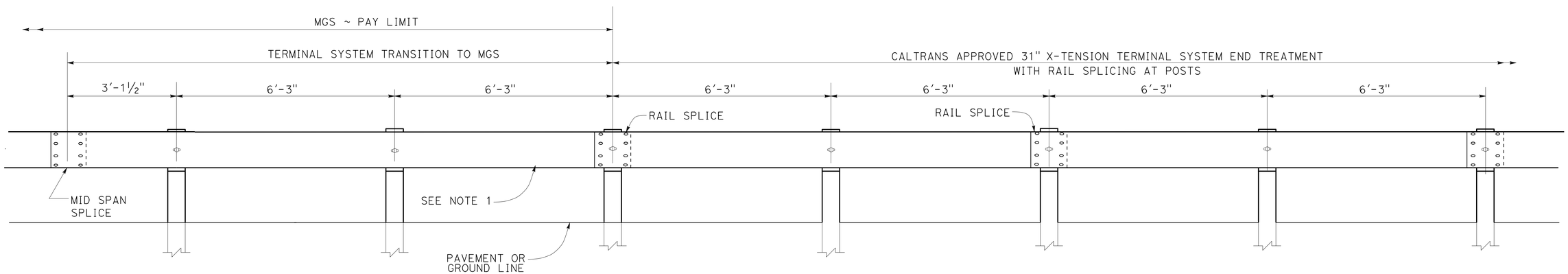

TRANSITION DETAIL FOR 31" X-TENSION TERMINAL SYSTEM END TREATMENT WITH RAIL SPLICING AT POSTS TO MIDWEST GUARDRAIL SYSTEM

CONSTRUCTION DETAILS

NO SCALE

C-2

STATE OF CALIFORNIA - DEPARTMENT OF TRANSPORTATION
Caltrans
DESIGN

FUNCTIONAL SUPERVISOR: GETACHEW ESHETE
CALCULATED-DESIGNED BY: ADEL NAJAR
CHECKED BY: DAN MASSA
REVISED BY
DATE REVISED

LAST REVISION 05-27-14
DATE PLOTTED => 19-AUG-2014
TIME PLOTTED => 10:34

Dist	COUNTY	ROUTE	POST MILES TOTAL PROJECT	SHEET No.	TOTAL SHEETS
06	Mad	152	R0.0/1.1	8	87

REGISTERED CIVIL ENGINEER DATE 06-12-14

PLANS APPROVAL DATE 6-30-14

REGISTERED PROFESSIONAL ENGINEER DANIEL B. MASSA No. 59095 Exp. 6-30-15 CIVIL STATE OF CALIFORNIA

THE STATE OF CALIFORNIA OR ITS OFFICERS OR AGENTS SHALL NOT BE RESPONSIBLE FOR THE ACCURACY OR COMPLETENESS OF SCANNED COPIES OF THIS PLAN SHEET.

NOTES(THIS SHEET ONLY):

1. REFER TO REVISED STANDARD PLANS RSP A77L1 AND RSP A77L2 FOR COMPONENT DETAILS FOR MGS NOT SHOWN ON THIS PLAN.
2. ALL POSTS FOR ANY STANDARD BARRIER RUN SHALL BE OF THE SAME TYPE: WOOD OR STEEL.
3. REFER TO REVISED STANDARD PLAN RSP A77R2, TYPE 15A LAYOUT, FOR DOUBLE MGS CONNECTION TO DETAIL A.
4. INSTALL POSTS IN SOIL.

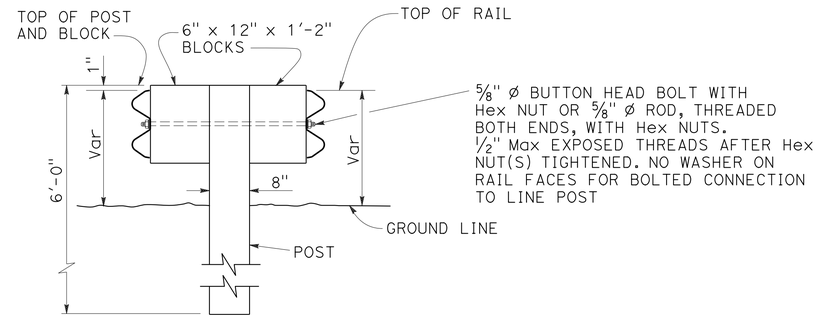

TYPICAL DOUBLE MIDWEST GUARDRAIL SYSTEM

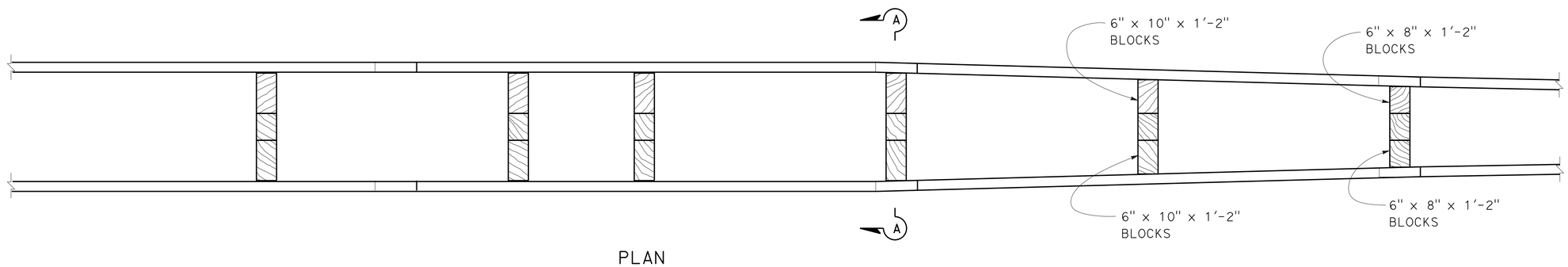

PLAN

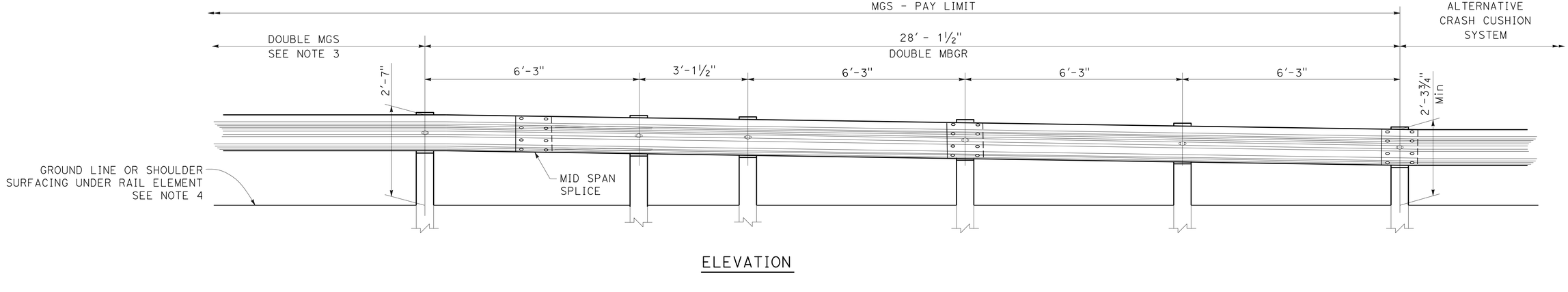

ELEVATION

TRANSITION DETAIL FOR 27 3/4" CRASH CUSHION TO DOUBLE MIDWEST GUARDRAIL SYSTEM

CONSTRUCTION DETAILS

NO SCALE

C-3

STATE OF CALIFORNIA - DEPARTMENT OF TRANSPORTATION

Caltrans DESIGN

FUNCTIONAL SUPERVISOR: GETACHEW ESHETE

CALCULATED-DESIGNED BY: ADEL NAJAR

CHECKED BY: DAN MASSA

REVISED BY

DATE REVISED

LAST REVISION 06-12-14

DATE PLOTTED => 19-AUG-2014

TIME PLOTTED => 10:34

Dist	COUNTY	ROUTE	POST MILES TOTAL PROJECT	SHEET No.	TOTAL SHEETS
06	Mad	152	R0.0/1.1	9	87

DAN 04-21-14
REGISTERED CIVIL ENGINEER DATE

6-30-14
PLANS APPROVAL DATE

REGISTERED PROFESSIONAL ENGINEER
DANIEL B. MASSA
No. 59095
Exp. 6-30-15
CIVIL
STATE OF CALIFORNIA

THE STATE OF CALIFORNIA OR ITS OFFICERS OR AGENTS SHALL NOT BE RESPONSIBLE FOR THE ACCURACY OR COMPLETENESS OF SCANNED COPIES OF THIS PLAN SHEET.

NOTE:

FOR ACCURATE RIGHT OF WAY DATA, CONTACT RIGHT OF WAY ENGINEERING AT THE DISTRICT OFFICE.

LEGEND:

DITCH FL (GRADE TO DRAIN)

DITCH FL (DITCH EXCAVATION)

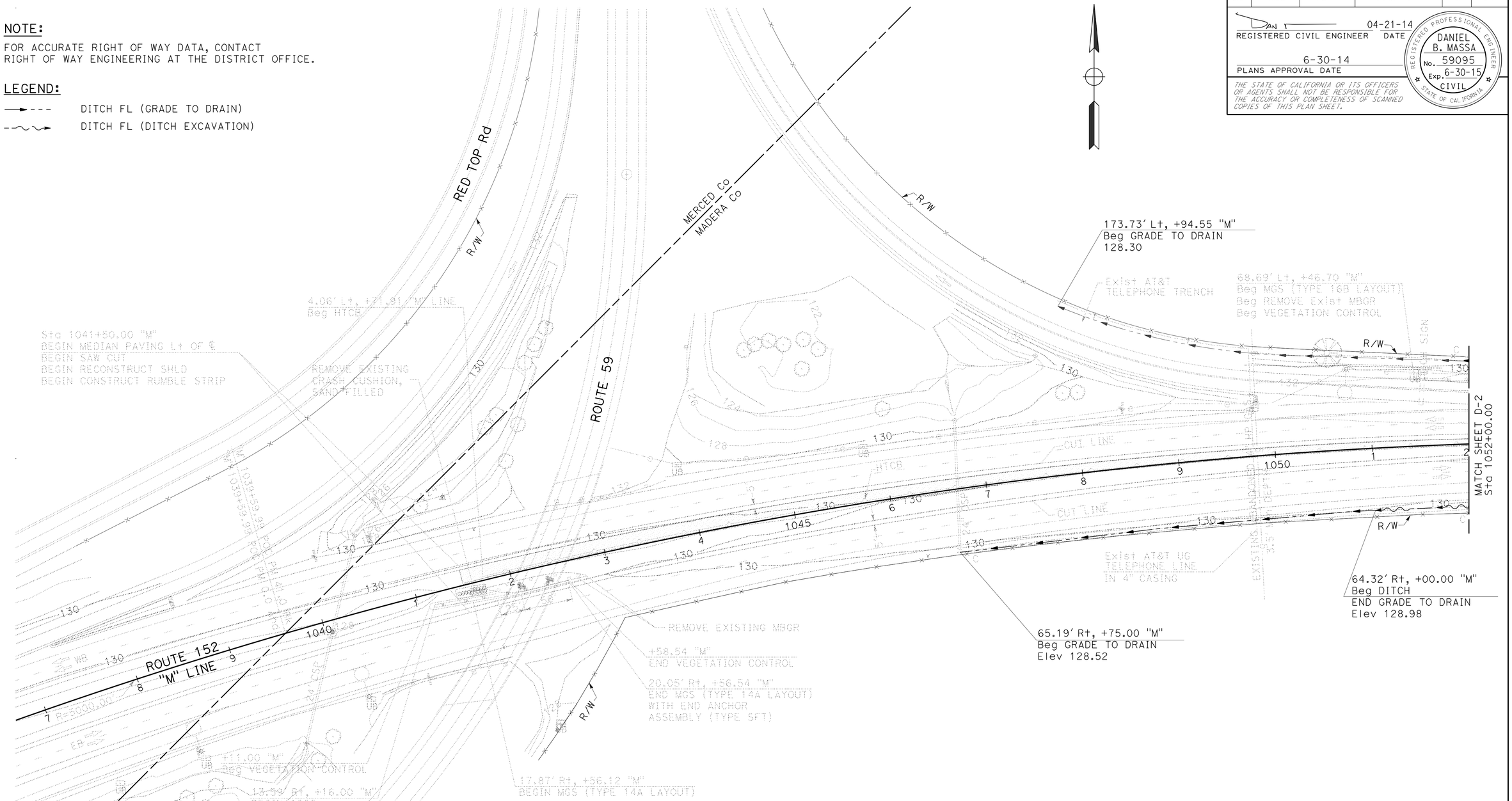

APPROVED FOR DRAINAGE WORK ONLY

DRAINAGE PLAN

SCALE: 1"=50'

D-1

STATE OF CALIFORNIA - DEPARTMENT OF TRANSPORTATION
Caltrans
DESIGN

FUNCTIONAL SUPERVISOR: GETACHEW ESHETE
CALCULATED-DESIGNED BY: M. ZAMORA
CHECKED BY: DAN MASSA
REVISED BY
DATE REVISED

LAST REVISION 06-18-14
DATE PLOTTED => 19-AUG-2014
TIME PLOTTED => 10:34

Dist	COUNTY	ROUTE	POST MILES TOTAL PROJECT	SHEET No.	TOTAL SHEETS
06	Mad	152	R0.0/1.1	10	87

REGISTERED CIVIL ENGINEER DATE 04-21-14

PLANS APPROVAL DATE 6-30-14

REGISTERED PROFESSIONAL ENGINEER DANIEL B. MASSA No. 59095 Exp. 6-30-15 CIVIL STATE OF CALIFORNIA

THE STATE OF CALIFORNIA OR ITS OFFICERS OR AGENTS SHALL NOT BE RESPONSIBLE FOR THE ACCURACY OR COMPLETENESS OF SCANNED COPIES OF THIS PLAN SHEET.

NOTE:

FOR ACCURATE RIGHT OF WAY DATA, CONTACT RIGHT OF WAY ENGINEERING AT THE DISTRICT OFFICE.

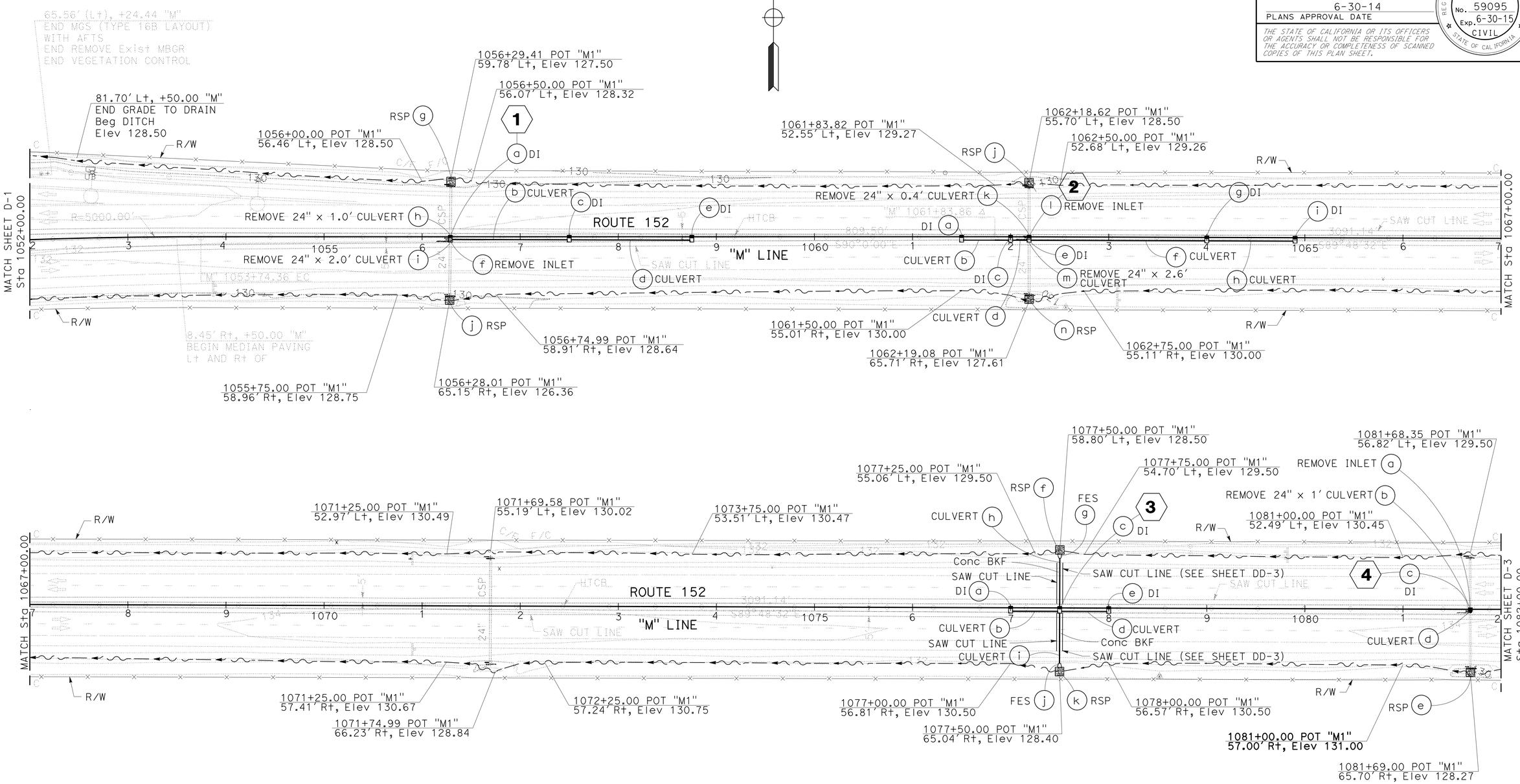

APPROVED FOR DRAINAGE WORK ONLY

DRAINAGE PLAN

SCALE: 1"=50'

D-2

STATE OF CALIFORNIA - DEPARTMENT OF TRANSPORTATION

Caltrans DESIGN

FUNCTIONAL SUPERVISOR: GETACHEW ESHETE

CALCULATED-DESIGNED BY: BILL LEE

CHECKED BY: DAN MASSA

REVISED BY / DATE REVISED

LAST REVISION 06-18-14 | DATE PLOTTED => 19-AUG-2014 | TIME PLOTTED => 10:34

Dist	COUNTY	ROUTE	POST MILES TOTAL PROJECT	SHEET No.	TOTAL SHEETS
06	Mad	152	R0.0/1.1	11	87

DAN 04-21-14
REGISTERED CIVIL ENGINEER DATE

6-30-14
PLANS APPROVAL DATE

REGISTERED PROFESSIONAL ENGINEER
DANIEL B. MASSA
No. 59095
Exp. 6-30-15
CIVIL
STATE OF CALIFORNIA

THE STATE OF CALIFORNIA OR ITS OFFICERS OR AGENTS SHALL NOT BE RESPONSIBLE FOR THE ACCURACY OR COMPLETENESS OF SCANNED COPIES OF THIS PLAN SHEET.

NOTE:

FOR ACCURATE RIGHT OF WAY DATA, CONTACT RIGHT OF WAY ENGINEERING AT THE DISTRICT OFFICE.

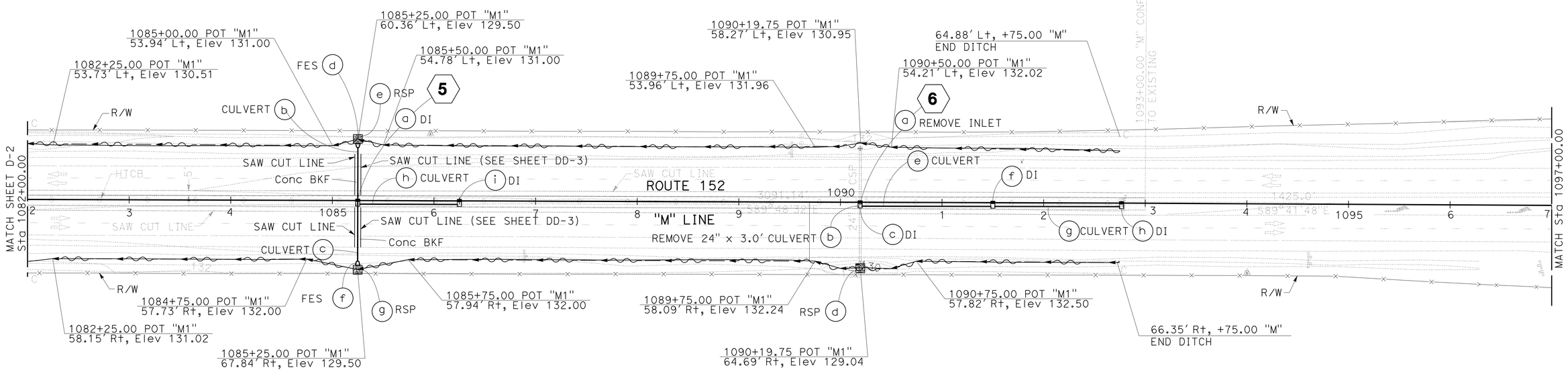

APPROVED FOR DRAINAGE WORK ONLY

DRAINAGE PLAN

SCALE: 1"=50'

D-3

STATE OF CALIFORNIA - DEPARTMENT OF TRANSPORTATION
Caltrans
DESIGN

FUNCTIONAL SUPERVISOR: GETACHEW ESHETE
CALCULATED-DESIGNED BY: M. ZAMORA
CHECKED BY: DAN MASSA
REVISED BY
DATE REVISED

LAST REVISION 06-18-14
DATE PLOTTED => 19-AUG-2014
TIME PLOTTED => 10:34

Dist	COUNTY	ROUTE	POST MILES TOTAL PROJECT	SHEET No.	TOTAL SHEETS
06	Mad	152	R0.0/1.1	12	87

REGISTERED CIVIL ENGINEER DATE 04-21-14

PLANS APPROVAL DATE 6-30-14

REGISTERED PROFESSIONAL ENGINEER DANIEL B. MASSA No. 59095 Exp. 6-30-15 CIVIL STATE OF CALIFORNIA

THE STATE OF CALIFORNIA OR ITS OFFICERS OR AGENTS SHALL NOT BE RESPONSIBLE FOR THE ACCURACY OR COMPLETENESS OF SCANNED COPIES OF THIS PLAN SHEET.

LEGEND:

- CONCRETE BACKFILL - W/ PAVEMENT REPLACEMENT (SEE DD-3)
- ROCK SLOPE PROTECTION

ABBREVIATON:

S = SLOPE
RSC = RAPID STRENGTH CONCRETE
SFES = STEEL FLARED END SECTION

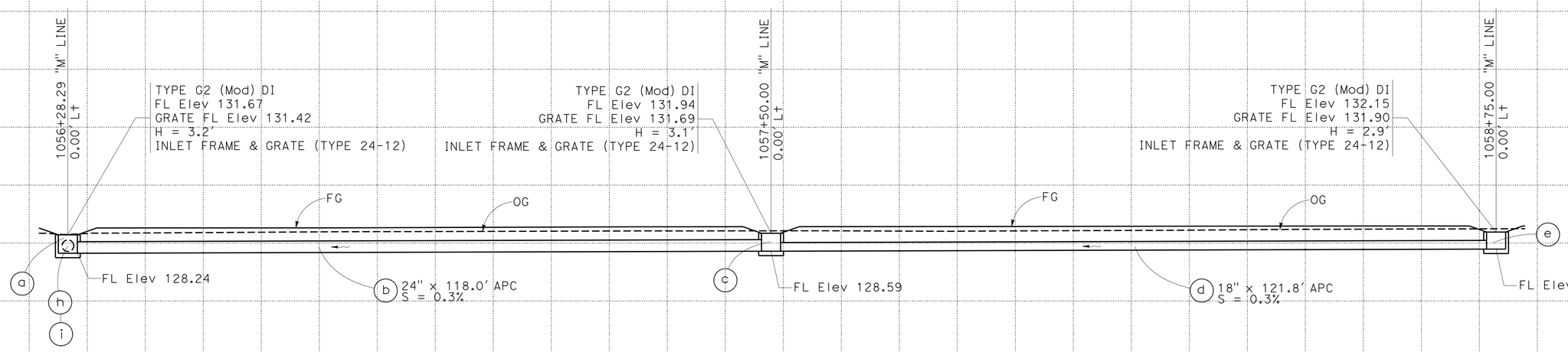

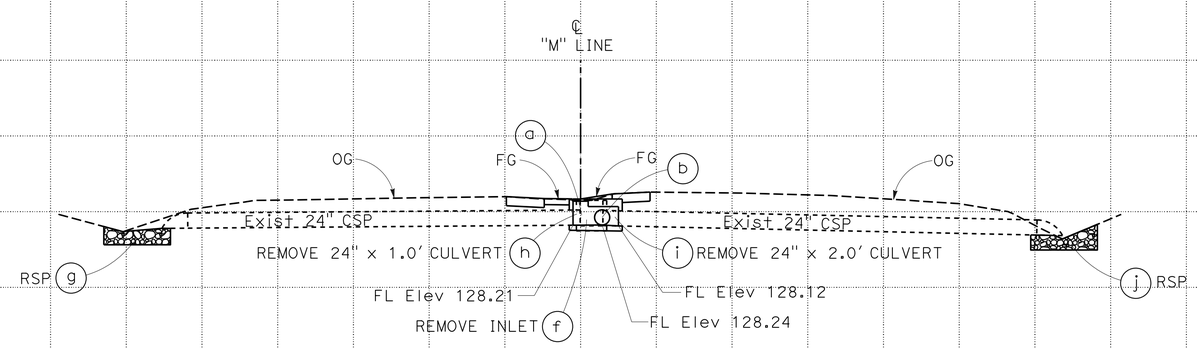

DRAINAGE SYSTEM No. 1

"M" 1056+28.29

DRAINAGE PROFILES

SCALE: Horiz 1"=10'
Vert 1"=10'

DP-1

REVISED BY | DATE REVISED
BILL LEE | DAN MASSA
CALCULATED-DESIGNED BY | CHECKED BY
FUNCTIONAL SUPERVISOR: GETACHEW ESHETE

STATE OF CALIFORNIA - DEPARTMENT OF TRANSPORTATION
Caltrans® DESIGN

LAST REVISION | DATE PLOTTED => 19-AUG-2014
06-18-14 | TIME PLOTTED => 10:34

Dist	COUNTY	ROUTE	POST MILES TOTAL PROJECT	SHEET No.	TOTAL SHEETS
06	Mad	152	R0.0/1.1	13	87

DAN 04-21-14
REGISTERED CIVIL ENGINEER DATE

6-30-14
PLANS APPROVAL DATE

REGISTERED PROFESSIONAL ENGINEER
DANIEL B. MASSA
No. 59095
Exp. 6-30-15
CIVIL
STATE OF CALIFORNIA

THE STATE OF CALIFORNIA OR ITS OFFICERS OR AGENTS SHALL NOT BE RESPONSIBLE FOR THE ACCURACY OR COMPLETENESS OF SCANNED COPIES OF THIS PLAN SHEET.

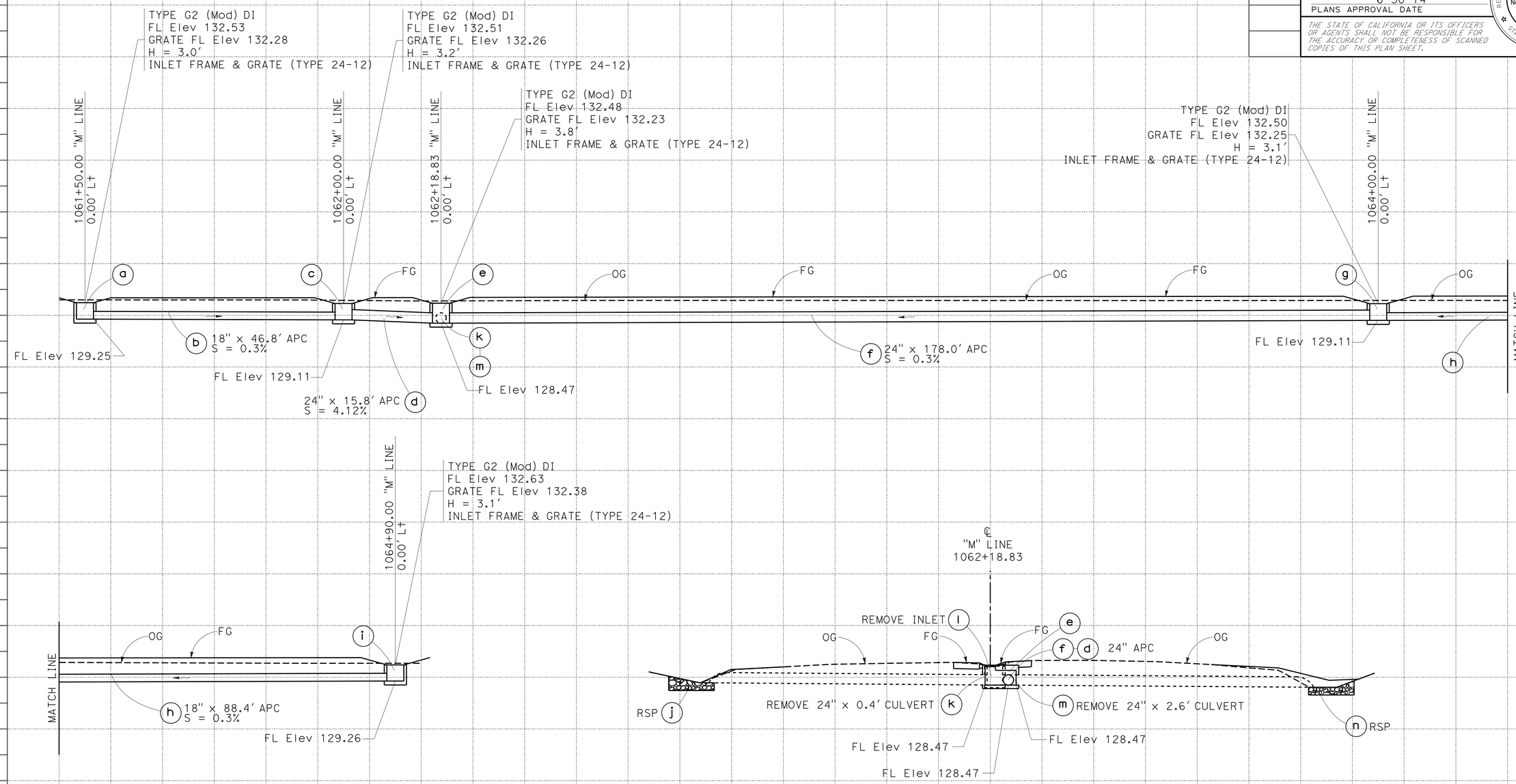

DRAINAGE SYSTEM No. 2

DRAINAGE PROFILES

SCALE: Horiz 1"=10'
Vert 1"=10'

DP-2

REVISED BY | DATE REVISED
BILL LEE | DAN MASSA
CALCULATED-DESIGNED BY | CHECKED BY
FUNCTIONAL SUPERVISOR | GETACHEW ESHETE
STATE OF CALIFORNIA - DEPARTMENT OF TRANSPORTATION
Caltrans
DESIGN

LAST REVISION OG-18-14 | DATE PLOTTED => 19-AUG-2014 | TIME PLOTTED => 10:35

Dist	COUNTY	ROUTE	POST MILES TOTAL PROJECT	SHEET No.	TOTAL SHEETS
06	Mad	152	R0.0/1.1	14	87

REGISTERED CIVIL ENGINEER DATE 04-21-14

PLANS APPROVAL DATE 6-30-14

REGISTERED PROFESSIONAL ENGINEER DANIEL B. MASSA No. 59095 Exp. 6-30-15 CIVIL STATE OF CALIFORNIA

THE STATE OF CALIFORNIA OR ITS OFFICERS OR AGENTS SHALL NOT BE RESPONSIBLE FOR THE ACCURACY OR COMPLETENESS OF SCANNED COPIES OF THIS PLAN SHEET.

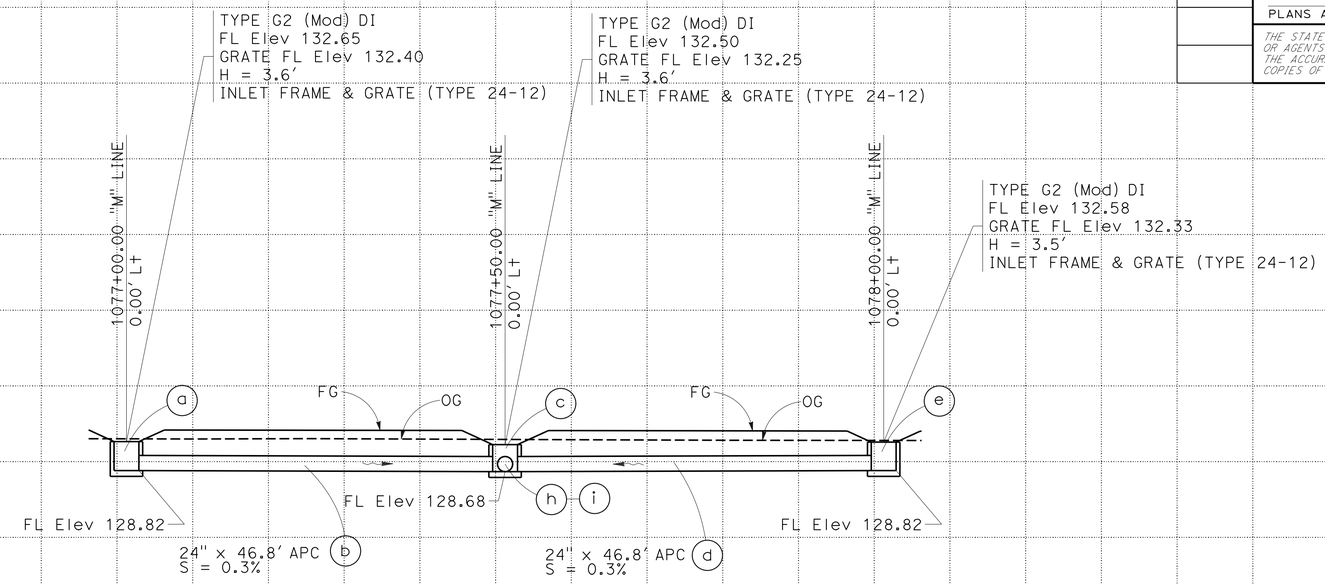

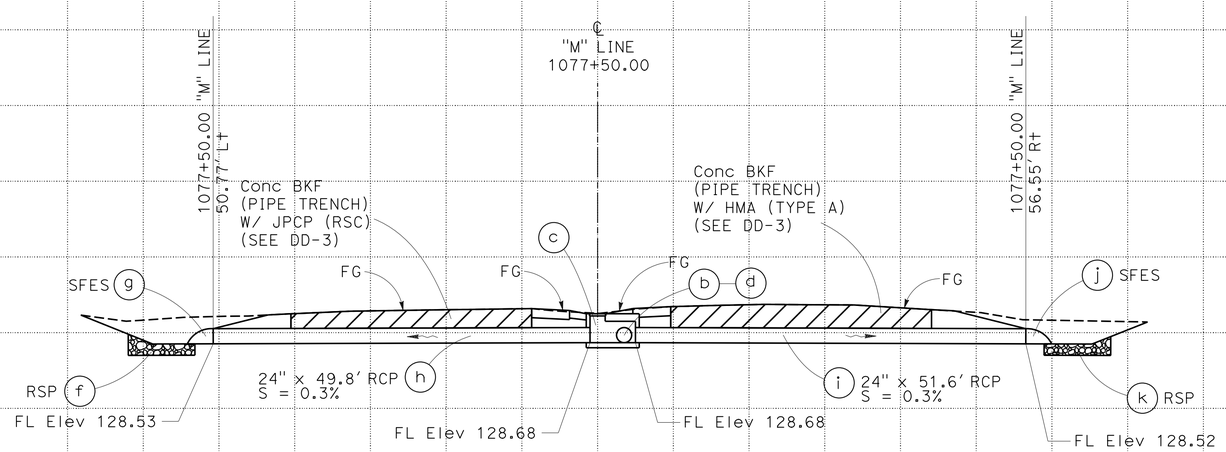

DRAINAGE SYSTEM No. 3

DRAINAGE PROFILES

SCALE: Horiz 1"=10'
Vert 1"=10'

DP-3

STATE OF CALIFORNIA - DEPARTMENT OF TRANSPORTATION
Caltrans DESIGN

FUNCTIONAL SUPERVISOR: GETACHEW ESHETE
CALCULATED-DESIGNED BY: BILL LEE
CHECKED BY: DAN MASSA
REVISED BY
DATE REVISED

LAST REVISION 06-18-14 | DATE PLOTTED => 19-AUG-2014 | TIME PLOTTED => 10:35

Dist	COUNTY	ROUTE	POST MILES TOTAL PROJECT	SHEET No.	TOTAL SHEETS
06	Mad	152	R0.0/1.1	15	87

DAN 04-21-14
REGISTERED CIVIL ENGINEER DATE

6-30-14
PLANS APPROVAL DATE

REGISTERED PROFESSIONAL ENGINEER
DANIEL B. MASSA
No. 59095
Exp. 6-30-15
CIVIL
STATE OF CALIFORNIA

THE STATE OF CALIFORNIA OR ITS OFFICERS OR AGENTS SHALL NOT BE RESPONSIBLE FOR THE ACCURACY OR COMPLETENESS OF SCANNED COPIES OF THIS PLAN SHEET.

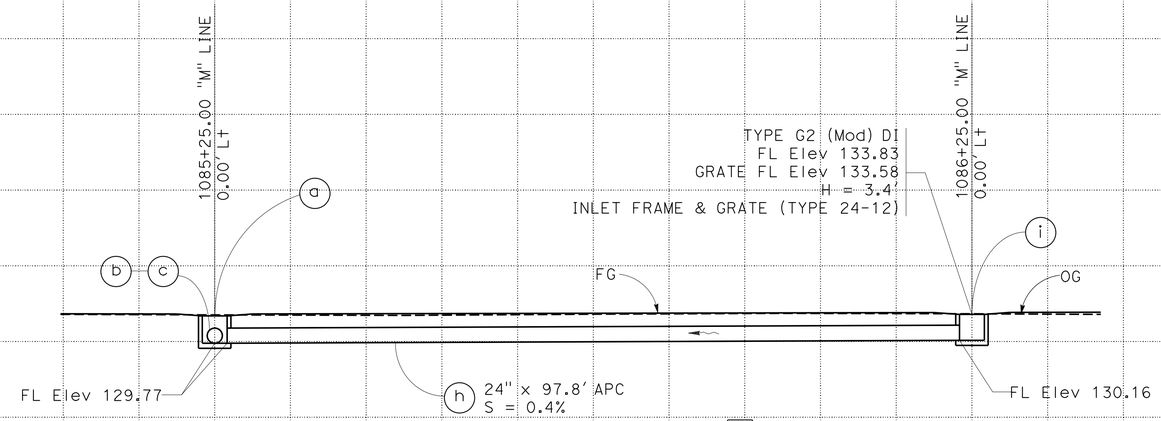

DRAINAGE SYSTEM No. 5

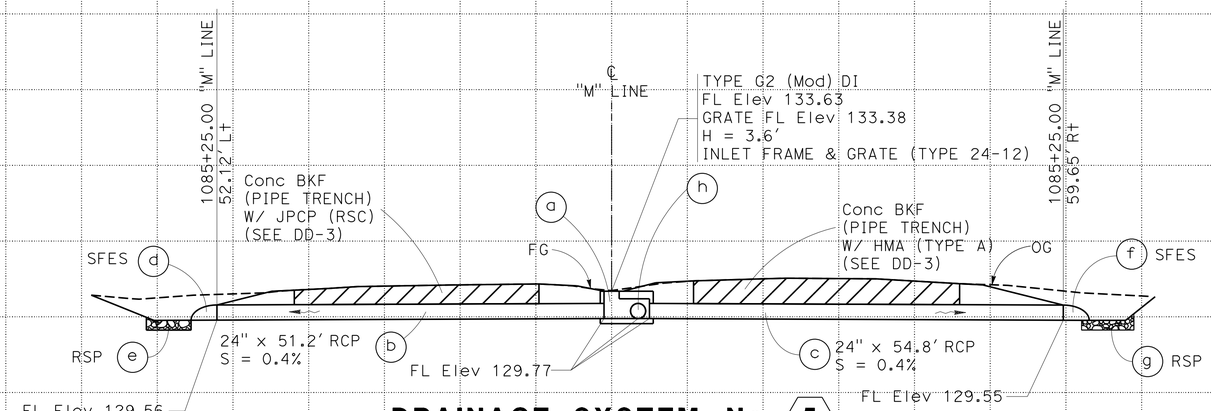

DRAINAGE SYSTEM No. 5

"M" 1085+25.00

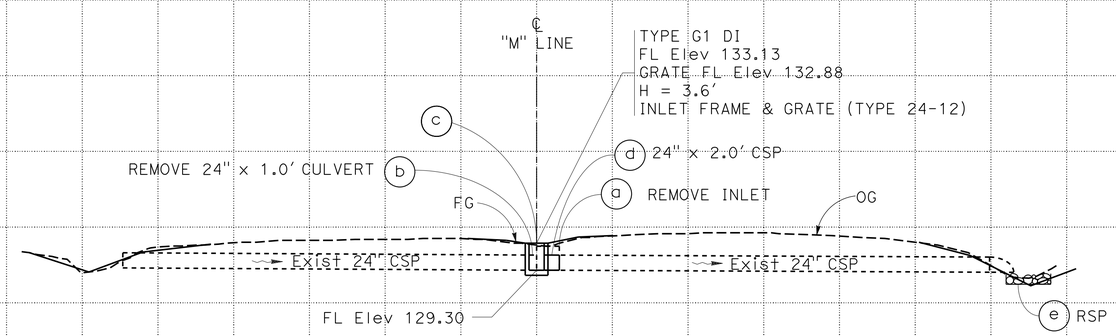

DRAINAGE SYSTEM No. 4

"M" 1081+68.18

DRAINAGE PROFILES

DP-4

SCALE: Horiz 1"=10'
Vert 1"=10'

STATE OF CALIFORNIA - DEPARTMENT OF TRANSPORTATION
Caltrans
DESIGN

FUNCTIONAL SUPERVISOR: GETACHEW ESHETE
CALCULATED-DESIGNED BY: M. ZAMORA
CHECKED BY: DAN MASSA
REVISED BY
DATE REVISED

LAST REVISION 06-18-14
DATE PLOTTED => 19-AUG-2014
TIME PLOTTED => 10:35

Dist	COUNTY	ROUTE	POST MILES TOTAL PROJECT	SHEET No.	TOTAL SHEETS
06	Mad	152	R0.0/1.1	16	87

DAN 04-21-14
REGISTERED CIVIL ENGINEER DATE

6-30-14
PLANS APPROVAL DATE

REGISTERED PROFESSIONAL ENGINEER
DANIEL B. MASSA
No. 59095
Exp. 6-30-15
CIVIL
STATE OF CALIFORNIA

THE STATE OF CALIFORNIA OR ITS OFFICERS OR AGENTS SHALL NOT BE RESPONSIBLE FOR THE ACCURACY OR COMPLETENESS OF SCANNED COPIES OF THIS PLAN SHEET.

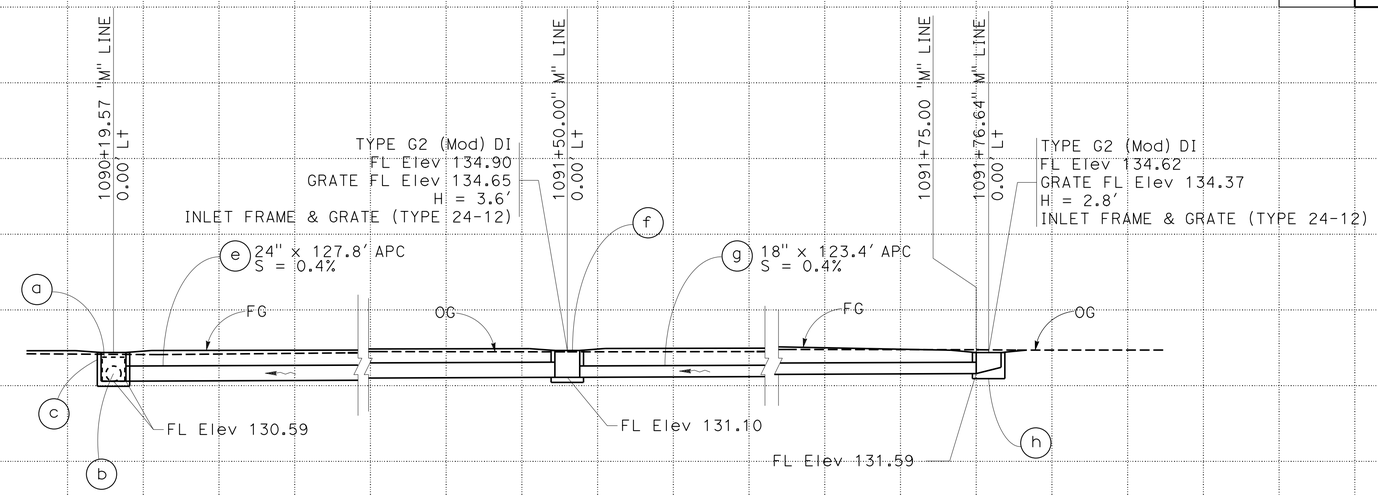

DRAINAGE SYSTEM No. 6

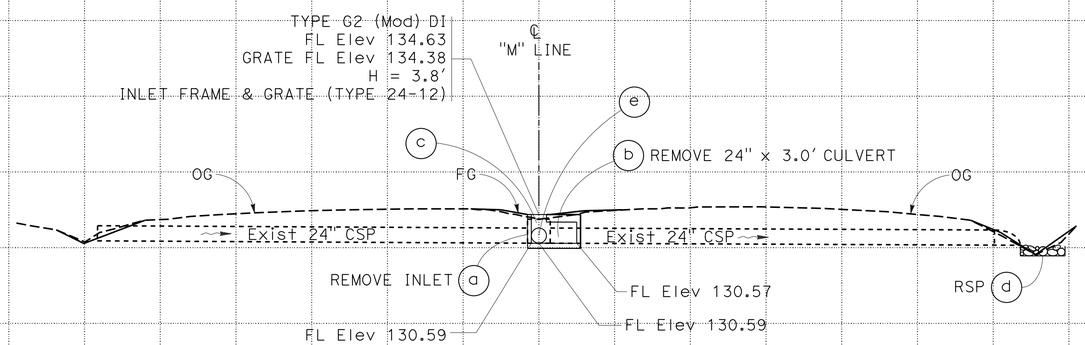

DRAINAGE SYSTEM No. 6

"M" 1090+19.57

DRAINAGE PROFILES

SCALE: Horiz 1"=10'
Vert 1"=10'

DP-5

STATE OF CALIFORNIA - DEPARTMENT OF TRANSPORTATION
Caltrans DESIGN

FUNCTIONAL SUPERVISOR: GETACHEW ESHETE
CALCULATED-DESIGNED BY: M. ZAMORA
CHECKED BY: DAN MASSA
REVISED BY
DATE REVISED

LAST REVISION DATE PLOTTED => 19-AUG-2014
06-18-14 TIME PLOTTED => 10:35

Dist	COUNTY	ROUTE	POST MILES TOTAL PROJECT	SHEET No.	TOTAL SHEETS
06	Mad	152	R0.0/1.1	17	87

DAN 04-21-14
REGISTERED CIVIL ENGINEER DATE

6-30-14
PLANS APPROVAL DATE

REGISTERED PROFESSIONAL ENGINEER
DANIEL B. MASSA
No. 59095
Exp. 6-30-15
CIVIL
STATE OF CALIFORNIA

THE STATE OF CALIFORNIA OR ITS OFFICERS OR AGENTS SHALL NOT BE RESPONSIBLE FOR THE ACCURACY OR COMPLETENESS OF SCANNED COPIES OF THIS PLAN SHEET.

NOTES:

1. "D" REPRESENTS THE OUTSIDE DIAMETER OF THE PIPE CONNECTED TO THE FLARED-END SECTION.
2. "W" REPRESENTS THE WIDTH OF FLARED END SECTION OPENING AS SHOWN ON STANDARD PLAN.

ABBREVIATIONS:

RSC - RAPID STRENGTH CONCRETE

LEGEND:

- JOINTED PLAIN CONCRETE PAVEMENT (RSC)
- CLASS 2 AGGREGATE BASE (AB)
- HMA (TYPE A)
- BACKFILL
- ROCK SLOPE PROTECTION (RSP)
- HMA APRON

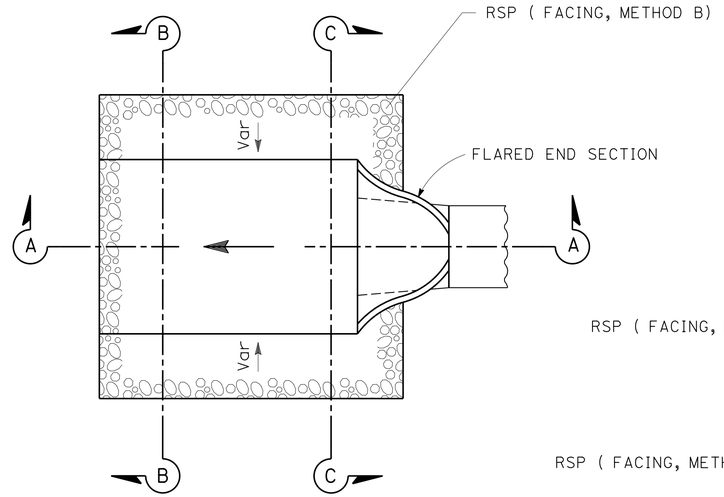

PLAN

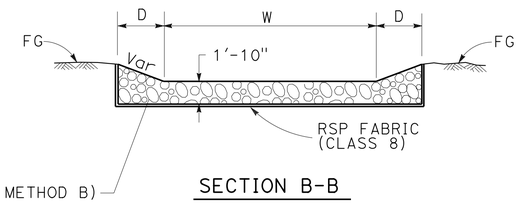

SECTION B-B

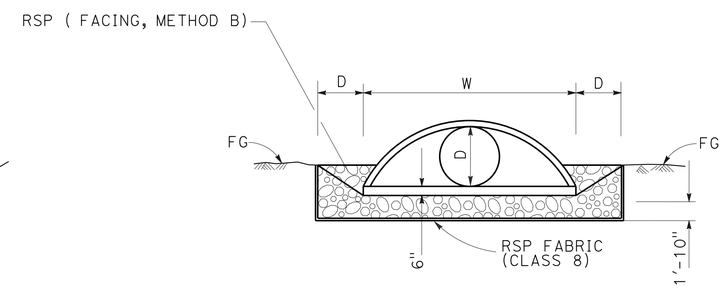

SECTION C-C

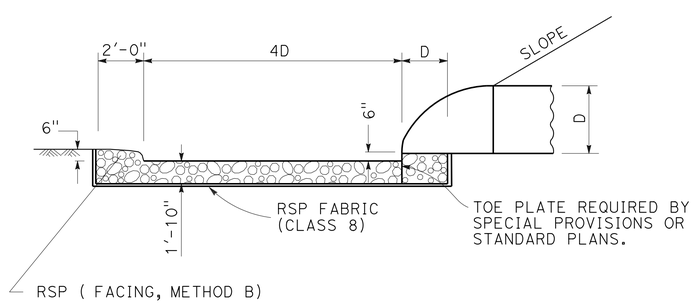

SECTION A-A

ROCK SLOPE PROTECTION

DRAINAGE DETAILS

NO SCALE

DD-1

STATE OF CALIFORNIA - DEPARTMENT OF TRANSPORTATION
Caltrans® DESIGN

FUNCTIONAL SUPERVISOR: GETACHEW ESHETE
CALCULATED-DESIGNED BY: BILL LEE
CHECKED BY: DAN MASSA
REVISED BY
DATE REVISED

LAST REVISION 06-18-14
DATE PLOTTED => 19-AUG-2014
TIME PLOTTED => 10:35

Dist	COUNTY	ROUTE	POST MILES TOTAL PROJECT	SHEET No.	TOTAL SHEETS
06	Mad	152	R0.0/1.1	18	87

REGISTERED CIVIL ENGINEER DATE 04-21-14

PLANS APPROVAL DATE 6-30-14

REGISTERED PROFESSIONAL ENGINEER DANIEL B. MASSA No. 59095 Exp. 6-30-15 CIVIL STATE OF CALIFORNIA

THE STATE OF CALIFORNIA OR ITS OFFICERS OR AGENTS SHALL NOT BE RESPONSIBLE FOR THE ACCURACY OR COMPLETENESS OF SCANNED COPIES OF THIS PLAN SHEET.

NOTES (THIS SHEET ONLY):

1. SEE STANDARD PLAN D73 FOR DETAILS NOT SHOWN.
2. INLET DEPRESSIONS AT 0.25′ TYPICAL.
3. DI TYPE G1 AND G2 (Mod) WALL THICKNESS IS 1.0′.

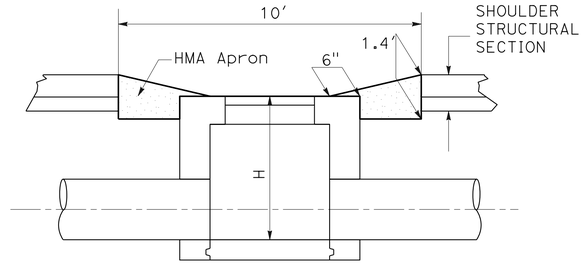

SECTION A-A (G2)

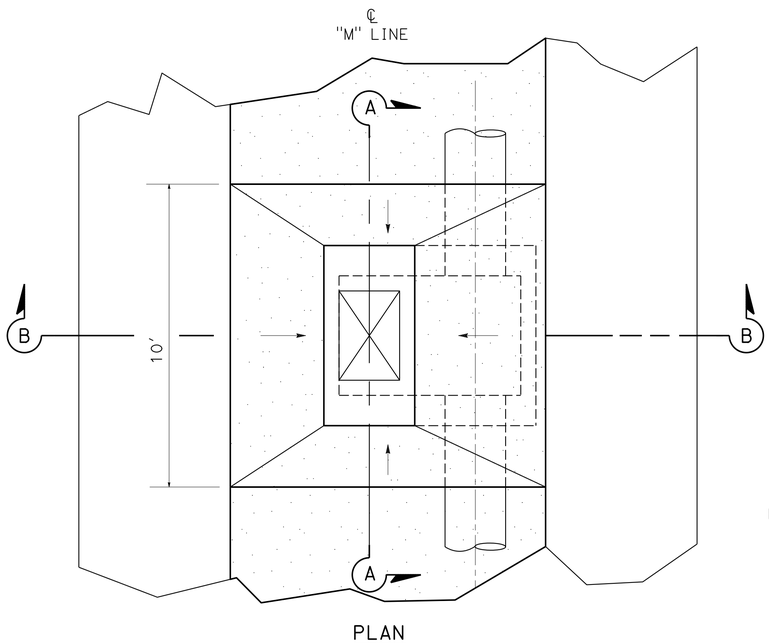

PLAN

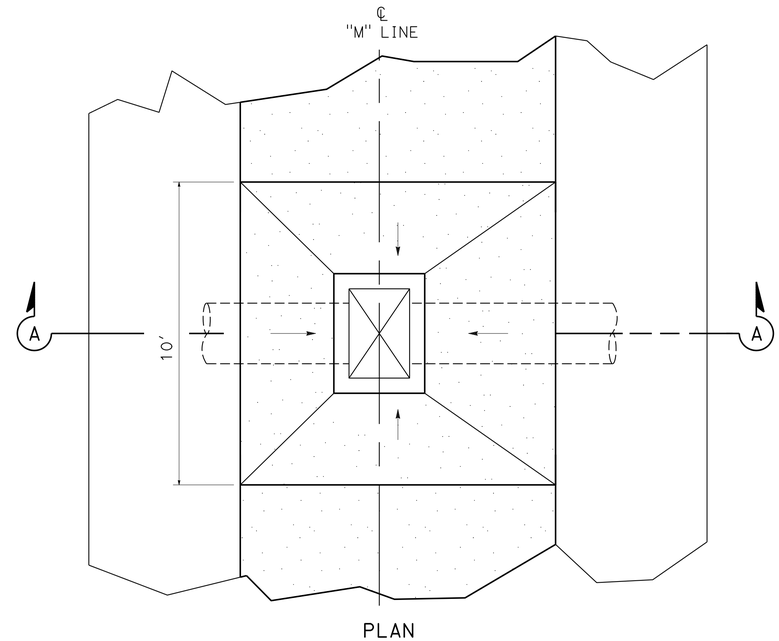

PLAN

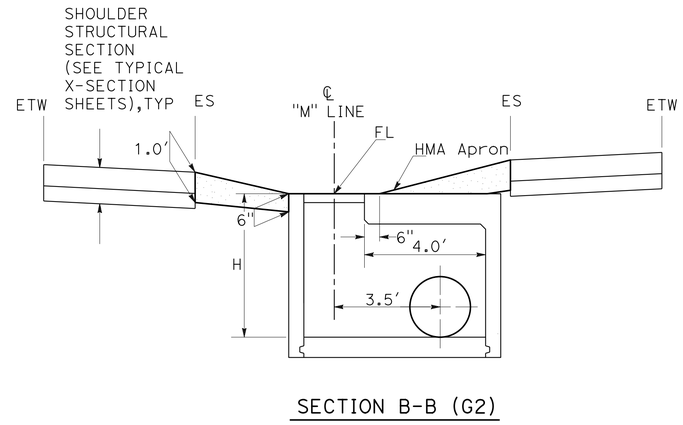

SECTION B-B (G2)

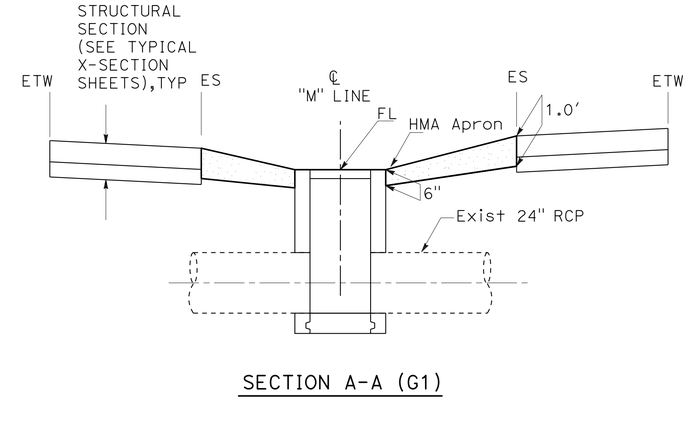

SECTION A-A (G1)

TYPE G1 and G2 (Mod) DI and HMA APRON DETAILS

DRAINAGE DETAILS

NO SCALE

DD-2

STATE OF CALIFORNIA - DEPARTMENT OF TRANSPORTATION

Caltrans® DESIGN

FUNCTIONAL SUPERVISOR: GETACHEW ESHETE

CALCULATED-DESIGNED BY: M. ZAMORA

CHECKED BY: DAN MASSA

REVISED BY | DATE REVISED

LAST REVISION 06-03-14 | DATE PLOTTED => 19-AUG-2014 | TIME PLOTTED => 10:35

Dist	COUNTY	ROUTE	POST MILES TOTAL PROJECT	SHEET No.	TOTAL SHEETS
06	Mad	152	R0.0/1.1	19	87

DAN 04-21-14
REGISTERED CIVIL ENGINEER DATE

6-30-14
PLANS APPROVAL DATE

REGISTERED PROFESSIONAL ENGINEER
DANIEL B. MASSA
No. 59095
Exp. 6-30-15
CIVIL
STATE OF CALIFORNIA

THE STATE OF CALIFORNIA OR ITS OFFICERS OR AGENTS SHALL NOT BE RESPONSIBLE FOR THE ACCURACY OR COMPLETENESS OF SCANNED COPIES OF THIS PLAN SHEET.

NOTES(THIS SHEET ONLY):

1. SEE DRAINAGE LAYOUTS AND PROFILES FOR FURTHER INFORMATION ON SAW CUT LIMITS AND CULVERT DETAILS.
2. THE CONTRACTOR SHOULD DETERMINE THE EXACT SAW CUT LIMITS AND WIDTH OF TRENCH NECESSARY TO PLACE DRAINAGE CULVERT.

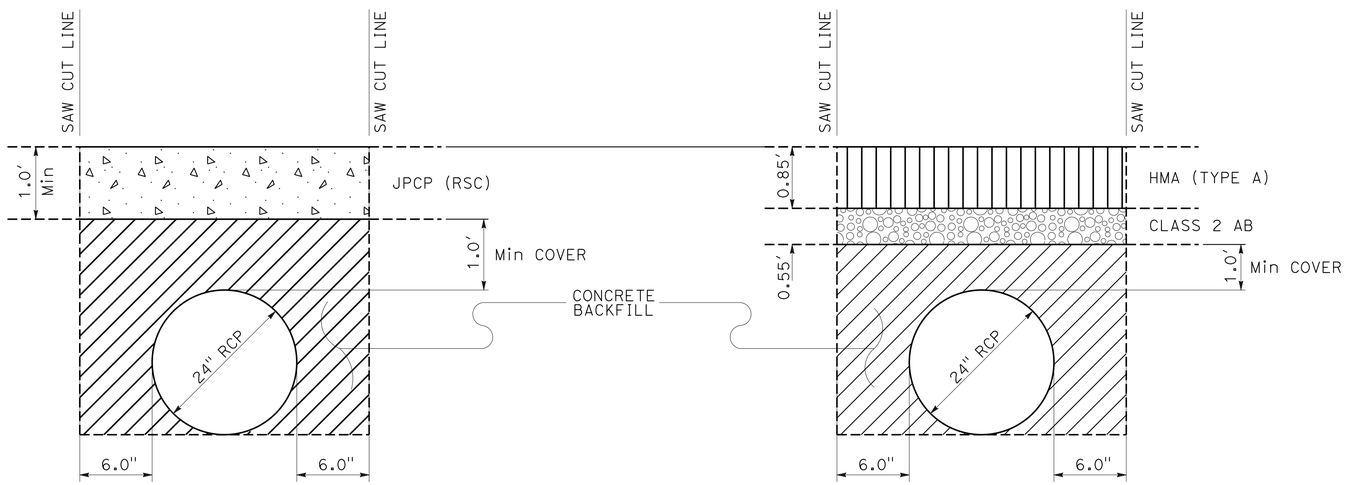

WESTBOUND TRAVEL LANES

EASTBOUND TRAVEL LANES AND BOTH EASTBOUND AND WESTBOUND OUTSIDE SHOULDERS

QUANTITIES SUMMARY

LOCATION	JOINTED PLAIN CONCRETE PAVEMENT (RAPID STRENGTH CONCRETE)	PLACE HMA (Misc AREA) *	HMA (Type A) *	CLASS 2 AB *
	CY	SQYD	TON	CY
DRAINAGE SYSTEM 3, Sta 1077+50.00	3.5	11.5	6.6	5.8
DRAINAGE SYSTEM 5, Sta 1085+25.00	3.6	11.7	6.6	5.8
TOTAL	7.1	23.2	13.2	11.6

* SEE SHEET Q-1 FOR TOTAL QUANITY

ROUTE 152 CULVERT CROSSINGS AT DRAINAGE SYSTEM Nos. 3 AND 5

DRAINAGE DETAILS AND QUANTITIES

NO SCALE

DD-3

STATE OF CALIFORNIA - DEPARTMENT OF TRANSPORTATION
Caltrans
DESIGN

FUNCTIONAL SUPERVISOR: GETACHEW ESHETE
CALCULATED-DESIGNED BY: BILL LEE
CHECKED BY: DAN MASSA
REVISED BY
DATE REVISED

LAST REVISION 06-03-14
DATE PLOTTED => 19-AUG-2014
TIME PLOTTED => 10:35

Dist	COUNTY	ROUTE	POST MILES TOTAL PROJECT	SHEET No.	TOTAL SHEETS
06	Mad	152	R0.0/1.1	20	87

REGISTERED CIVIL ENGINEER DATE 04-21-14

PLANS APPROVAL DATE 6-30-14

REGISTERED PROFESSIONAL ENGINEER DANIEL B. MASSA No. 59095 Exp. 6-30-15 CIVIL STATE OF CALIFORNIA

THE STATE OF CALIFORNIA OR ITS OFFICERS OR AGENTS SHALL NOT BE RESPONSIBLE FOR THE ACCURACY OR COMPLETENESS OF SCANNED COPIES OF THIS PLAN SHEET.

DRAINAGE PLAN SHEET No.	DRAINAGE SYSTEM No.	DRAINAGE UNIT	MISCELLANEOUS IRON AND STEEL	MINOR CONCRETE (MINOR STRUCTURE)	DESIGN HEIGHT "H" (N)	18" ALTERNATIVE PIPE CULVERT	24" ALTERNATIVE PIPE CULVERT	24" CORRIGATED STEEL PIPE (0.064" THICK)	24" REINFORCED CONCRETE PIPE (RCP)	CONCRETE BACKFILL (PIPE TRENCH)	ROCK SLOPE PROTECTION (FACING, METHOD B)	ROCK SLOPE PROTECTION FABRIC (CLASS 8)	24" STEEL FLARED END SECTION	REMOVE CULVERT	REMOVE INLET	MAXIMUM COVER (N)	DESCRIPTION	STATION	DRAINAGE PLAN SHEET No.	DRAINAGE SYSTEM No.	DRAINAGE UNIT
			LB	CY	LF	LF	LF	LF	LF	CY	CY	SQYD	EA	LF	EA	LF					
D-2	1	a	326	2.20	3.2												TYPE G2 (Mod) DI W/ TYPE 24-12 GRATE	Sta 1056+28.29 "M" LINE, 0.00' Lt	D-2	1	a
		b					118.0									2.46	24" APC				b
		c	326	2.36	3.1												TYPE G2 (Mod) DI W/ TYPE 24-12 GRATE	Sta 1057+50.00 "M" LINE, 0.00' Lt			c
		d				121.8										2.39	18" APC				d
		e	326	2.32	2.9												TYPE G2 (Mod) DI W/ TYPE 24-12 GRATE	Sta 1058+75.00 "M" LINE, 0.00' Lt			e
		f													1		REMOVE Exist DI	Sta 1056+28.29 "M" LINE, 0.00' Lt			f
		g									8	20					RSP	Sta 1056+28.27 "M" LINE, Lt			g
		h												1.0			REMOVE CULVERT				h
		i												2.0			REMOVE CULVERT				i
D-2	1	j									8	20					RSP	Sta 1056+28.27 "M" LINE, Rt	D-2	1	J
D-2	2	a	326	2.34	3.0												TYPE G2 (Mod) DI W/ TYPE 24-12 GRATE	Sta 1061+50.00 "M" LINE, 0.00' Lt	D-2	2	a
		b				46.8										2.51	18" APC				b
		c	326	2.40	3.2												TYPE G2 (Mod) DI W/ TYPE 24-12 GRATE	Sta 1062+00.00 "M" LINE, 0.00' Lt			c
		d					15.8									3.10	24" APC				d
		e	326	2.44	3.8												TYPE G2 (Mod) DI W/ TYPE 24-12 GRATE	Sta 1062+18.83 "M" LINE, 0.00' Lt			e
		f					178.0									2.81	24" APC				f
		g	326	2.40	3.2												TYPE G2 (Mod) DI W/ TYPE 24-12 GRATE	Sta 1064+00.00 "M" LINE, 0.00' Lt			g
		h				88.4										2.53	18" APC				h
		i	326	2.37	3.1												TYPE G2 (Mod) DI W/ TYPE 24-12 GRATE	Sta 1064+90.00 "M" LINE, 0.00' Lt			i
		j									8	20					RSP	Sta 1062+18.83 "M" LINE, Lt			j
D-2	2	k												0.4			REMOVE CULVERT		D-2	2	k
			2608	18.83		257.0	311.8				24	60		3.4	1		SHEET TOTAL				

(N) - NOT A SEPARATE PAY ITEM, FOR INFORMATION ONLY

Abbreviation:
SFES - Steel Flared End Section

ALTERNATIVE PIPE CULVERT (APC) ALLOWABLE PIPE MATERIAL AND ALTERNATIVE FLARED END SECTION ALLOWABLE MATERIALS

	RCP SIZE	PLASTIC TYPE S SIZE
18" APC	X	X
24" APC	X	X

DRAINAGE QUANTITIES

DQ-1

STATE OF CALIFORNIA - DEPARTMENT OF TRANSPORTATION
Caltrans® DESIGN
FUNCTIONAL SUPERVISOR: GETACHEW ESHETE
CALCULATED-DESIGNED BY: M. ZAMORA
CHECKED BY: DAN MASSA
REVISED BY
DATE REVISED

LAST REVISION 06-18-14
DATE PLOTTED => 19-AUG-2014
TIME PLOTTED => 10:35

Dist	COUNTY	ROUTE	POST MILES TOTAL PROJECT	SHEET No.	TOTAL SHEETS
06	Mad	152	R0.0/1.1	21	87

REGISTERED CIVIL ENGINEER DATE 04-21-14

PLANS APPROVAL DATE 6-30-14

REGISTERED PROFESSIONAL ENGINEER DANIEL B. MASSA No. 59095 Exp. 6-30-15 CIVIL STATE OF CALIFORNIA

THE STATE OF CALIFORNIA OR ITS OFFICERS OR AGENTS SHALL NOT BE RESPONSIBLE FOR THE ACCURACY OR COMPLETENESS OF SCANNED COPIES OF THIS PLAN SHEET.

DRAINAGE PLAN SHEET No.	DRAINAGE SYSTEM No.	DRAINAGE UNIT	MISCELLANEOUS IRON AND STEEL	MINOR CONCRETE (MINOR STRUCTURE)	DESIGN HEIGHT "H" (N)	18" ALTERNATIVE PIPE CULVERT	24" ALTERNATIVE PIPE CULVERT	24" CORRIGATED STEEL PIPE (0.064" THICK)	24" REINFORCED CONCRETE PIPE (RCP)	CONCRETE BACKFILL	ROCK SLOPE PROTECTION (FACING, METHOD B)	ROCK SLOPE PROTECTION FABRIC (CLASS 8)	24" STEEL FLARED END SECTION	REMOVE CULVERT	REMOVE INLET	MAXIMUM COVER (N)	DESCRIPTION	STATION	DRAINAGE PLAN SHEET No.	DRAINAGE SYSTEM No.	DRAINAGE UNIT
			LB	CY	LF	LF	LF	LF	LF	CY	CY	SQYD	EA	LF	EA	LF					
D-2	2	l													1		REMOVE Exist DI	Sta 1062+18.49 "M" LINE, 0.00' Lt	D-2	2	l
		m												2.6			REMOVE CULVERT				m
D-2	2	n									8	20					RSP	Sta 1062+18.83 "M" LINE, Rt	D-2	2	n
D-2	3	a	326	2.92	3.6												TYPE G2 DI W/ TYPE 24-12 GRATE	Sta 1077+00.00 "M" LINE, 0.00' Lt	D-2	3	a
		b					46.8									2.31	24" APC				b
		c	326	2.92	3.6												TYPE G2 DI W/ TYPE 24-12 GRATE	Sta 1077+50.00 "M" LINE, 0.00' Lt			c
		d					46.8									2.45	24" APC				d
		e	326	2.88	3.5												TYPE G2 DI W/ TYPE 24-12 GRATE	Sta 1078+00.00 "M" LINE, 0.00' Lt			e
		f									8	20					RSP	Sta 1077+50.00 "M" LINE, Lt			f
		g											1				24" SFES				g
		h							49.8	7.7						2.38	24" RCP, CONCRETE BACKFILL				h
		i							51.6	8.0						2.52	24" RCP, CONCRETE BACKFILL				i
		j											1				24" SFES				j
D-2	3	k									8	20					RSP	Sta 1077+50.00 "M" LINE, Rt	D-2	3	k
D-2	4	a													1		REMOVE Exist DI	Sta 1081+68.18 "M" LINE, 0.00' Lt	D-2	4	a
		b												1.0			REMOVE CULVERT				b
		c	326	2.92	3.6												TYPE G1 DI W/ TYPE 24-12 GRATE	Sta 1081+68.18 "M" LINE, 0.00' Lt			c
		d						2.0									24" CSP				d
D-2	4	e									8	20					RSP		D-2	4	e
			1304	11.64			93.6	2.0	101.4	15.7	32	80	2	3.6	2		SHEET TOTAL				

(N) - NOT A SEPARATE PAY ITEM, FOR INFORMATION ONLY

DRAINAGE QUANTITIES

DQ-2

STATE OF CALIFORNIA - DEPARTMENT OF TRANSPORTATION

Caltrans

DESIGN

FUNCTIONAL SUPERVISOR: GETACHEW ESHETE

CALCULATED-DESIGNED BY: M. ZAMORA

CHECKED BY: DAN MASSA

REVISED BY

DATE REVISED

LAST REVISION 06-18-14 | DATE PLOTTED => 19-AUG-2014 | TIME PLOTTED => 10:35

Dist	COUNTY	ROUTE	POST MILES TOTAL PROJECT	SHEET No.	TOTAL SHEETS
06	Mad	152	R0.0/1.1	22	87

REGISTERED CIVIL ENGINEER DATE 04-21-14

PLANS APPROVAL DATE 6-30-14

REGISTERED PROFESSIONAL ENGINEER DANIEL B. MASSA No. 59095 Exp. 6-30-15 CIVIL STATE OF CALIFORNIA

THE STATE OF CALIFORNIA OR ITS OFFICERS OR AGENTS SHALL NOT BE RESPONSIBLE FOR THE ACCURACY OR COMPLETENESS OF SCANNED COPIES OF THIS PLAN SHEET.

DRAINAGE PLAN SHEET No.	DRAINAGE SYSTEM No.	DRAINAGE UNIT	MISCELLANEOUS IRON AND STEEL LB	MINOR CONCRETE (MINOR STRUCTURE) CY	DESIGN HEIGHT "H" (N) LF	18" ALTERNATIVE PIPE CULVERT LF	24" ALTERNATIVE PIPE CULVERT LF	24" CORRIGATED STEEL PIPE (0.064" THICK) LF	24" REINFORCED CONCRETE PIPE (RCP) LF	CONCRETE BACKFILL (PIPE TRENCH) CY	ROCK SLOPE PROTECTION (FACING, METHOD B) CY	ROCK SLOPE PROTECTION FABRIC (CLASS 8) SQYD	24" STEEL FLARED END SECTION EA	REMOVE CULVERT LF	REMOVE INLET EA	MAXIMUM COVER (N) LF	DESCRIPTION	STATION	DRAINAGE PLAN SHEET No.	DRAINAGE SYSTEM No.	DRAINAGE UNIT
D-3	5	a	326	2.59	3.6												TYPE G2 (Mod) DI W/ TYPE 24-12 GRATE	Sta 1085+25.00 "M" LINE, 0.00' Lt	D-3	5	a
		b							51.2	7.9						3.26	24" APC, CONCRETE BACKFILL				b
		c							54.8	9.5						3.12	24" APC, CONCRETE BACKFILL				c
		d											1				24" SFES				d
		e									8	20					RSP	Sta 1085+25.00 "M" LINE, Lt			e
		f											1				24" SFES				f
		g									8	20					RSP	Sta 1085+25.00 "M" LINE, Rt			g
		h					97.8									1.62	24" APC				h
D-3	5	i	326	2.51	3.4												TYPE G2 (Mod) DI W/ TYPE 24-12 GRATE	Sta 1086+25.00 "M" LINE, 0.00' Lt	D-3	5	i
D-3	6	a													1		REMOVE Exist DI	Sta 1090+19.07 "M" LINE, 0.00' Lt	D-3	6	a
		b												3.0			REMOVE CULVERT				b
		c	326	2.68	3.8												TYPE G2 (Mod) DI W/ TYPE 24-12 GRATE	Sta 1090+19.07 "M" LINE, 0.00' Lt			c
		d									8	20					RSP	Sta 1090+19.57 "M" LINE, Rt			d
		e					127.8									1.58	24" APC				e
		f	326	2.57	3.6												TYPE G2 (Mod) DI W/ TYPE 24-12 GRATE	Sta 1091+50.00 "M" LINE, 0.00' Lt			f
		g				123.4											18" APC				g
D-3	6	h	326	2.32	2.8											2.35	TYPE G2 (Mod) DI W/ TYPE 24-12 GRATE	Sta 1091+76.64 "M" LINE, 0.00' Lt	D-3	6	h
			1630	12.67		123.4	225.6		106.0	17.4	24	60	2	3.0	1		SHEET TOTAL				
			2608	18.83		257.0	311.8				24	60		3.4	1		TOTAL FOR SHEET DQ-1				
			1304	11.64			93.6	2.0	101.4	15.7	32	80	2	3.6	2		TOTAL FOR SHEET DQ-2				
																	TOTAL FOR SHEET DD-3				
			5542	43.14		380.4	631.0	2.0	207.4	33.1	80	200	4	10.0	4		GRAND TOTAL				

(N) - NOT A SEPARATE PAY ITEM, FOR INFORMATION ONLY

DRAINAGE QUANTITIES

DQ-3

STATE OF CALIFORNIA - DEPARTMENT OF TRANSPORTATION

Caltrans DESIGN

FUNCTIONAL SUPERVISOR: GETACHEW ESHETE

CALCULATED-DESIGNED BY: M. ZAMORA

CHECKED BY: DAN MASSA

REVISED BY

DATE REVISED

LAST REVISION 06-18-14

DATE PLOTTED => 19-AUG-2014

TIME PLOTTED => 10:35

Dist	COUNTY	ROUTE	POST MILES TOTAL PROJECT	SHEET No.	TOTAL SHEETS
06	Mad	152	R0.0/1.1	23	87

REGISTERED CIVIL ENGINEER 04-21-14 DATE

6-30-14
PLANS APPROVAL DATE

REGISTERED PROFESSIONAL ENGINEER FAWZI YAGHMOUR No. C-54750 Exp. 12/31/15 CIVIL STATE OF CALIFORNIA

THE STATE OF CALIFORNIA OR ITS OFFICERS OR AGENTS SHALL NOT BE RESPONSIBLE FOR THE ACCURACY OR COMPLETENESS OF SCANNED COPIES OF THIS PLAN SHEET.

NOTES:

1. EXACT LOCATIONS OF SIGN TO BE DETERMINED BY THE ENGINEER.
2. FOR SIGN "C40" (TRAFFIC FINES DOUBLED IN CONSTRUCTION ZONES), ALL LETTERS SHALL BE BLACK ON WHITE BACKGROUND.
3. SEE TRAFFIC HANDLING PLANS FOR MORE CAS.

STATIONARY MOUNTED CONSTRUCTION AREA SIGNS

SIGN No.	SIGN CODE	PANEL SIZE	SIGN MESSAGE	No. OF POSTS	POST SIZE	No. OF SIGNS
1	W20-1	48" x 48"	ROAD WORK AHEAD	1	6" x 6"	5
2	G20-2	36" x 18"	END ROAD WORK	1	4" x 4"	5
3	C40(CA)	102" x 42"	TRAFFIC FINES DOUBLED IN CONSTRUCTION ZONES	2	6" x 6"	2

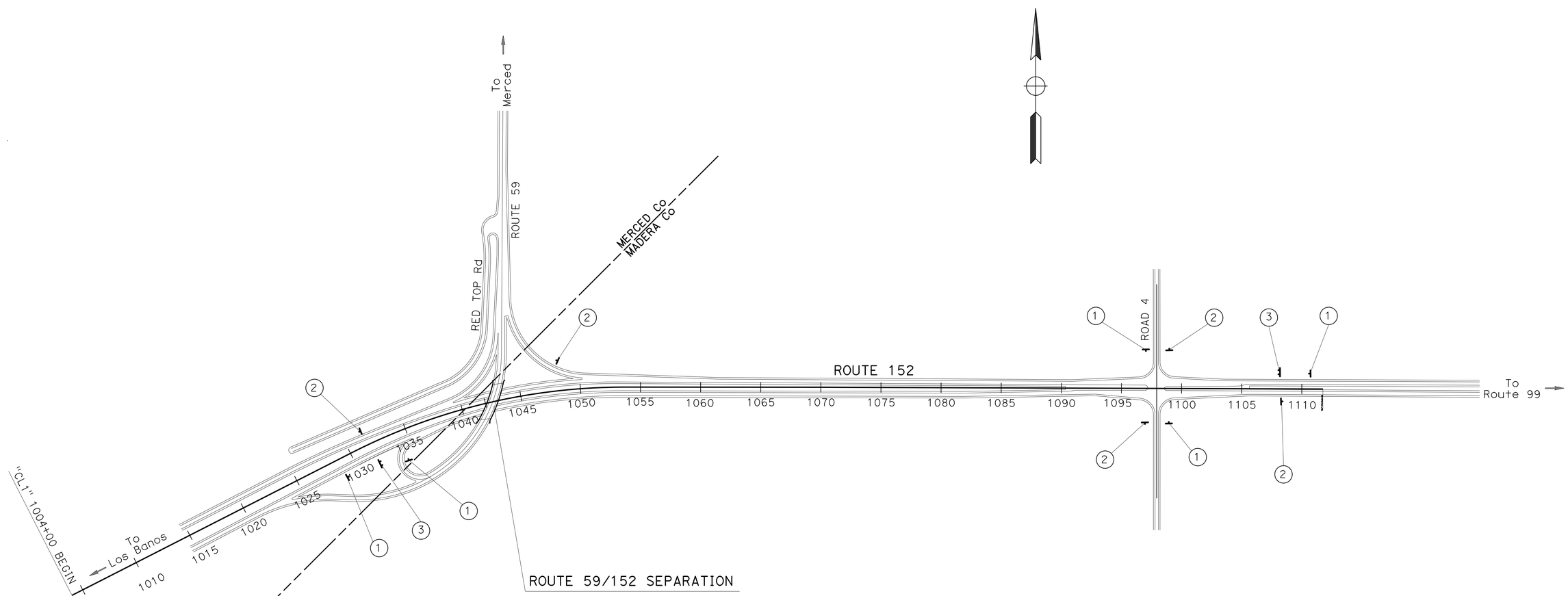

CONSTRUCTION AREA SIGN

NO SCALE

CS-1

APPROVED FOR CONSTRUCTION AREA SIGN WORK ONLY

STATE OF CALIFORNIA - DEPARTMENT OF TRANSPORTATION
Caltrans 05-TRAFFIC DESIGN

FUNCTIONAL SUPERVISOR: MOHAMMED QATAMI
CALCULATED-DESIGNED BY: DAVID BLACK
CHECKED BY: FAWZI YAGHMOUR
REVISED BY / DATE REVISED

LAST REVISION 06-23-14
DATE PLOTTED => 19-AUG-2014
TIME PLOTTED => 10:35

Dist	COUNTY	ROUTE	POST MILES TOTAL PROJECT	SHEET No.	TOTAL SHEETS
06	Mad	152	R0.0/1.1	24	87

DAN 04-21-14
REGISTERED CIVIL ENGINEER DATE

6-30-14
PLANS APPROVAL DATE

REGISTERED PROFESSIONAL ENGINEER
DANIEL B. MASSA
No. 59095
Exp. 6-30-15
CIVIL
STATE OF CALIFORNIA

THE STATE OF CALIFORNIA OR ITS OFFICERS OR AGENTS SHALL NOT BE RESPONSIBLE FOR THE ACCURACY OR COMPLETENESS OF SCANNED COPIES OF THIS PLAN SHEET.

NOTE: FOR MORE INFORMATION SEE TRAFFIC HANDLING PLANS

STAGE 1: PHASE 1

1. UNDER TEMPORARY TRAFFIC CONTROL, PERFORM DITCH EXCAVATION FOR BOTH EASTBOUND AND WESTBOUND, CONSTRUCT DRAINAGE CULVERTS CROSSING ROUTE 152, FOR DRAINAGE SYSTEMS 3 AND 5 LOCATED AT STATION 1077+50 AND STATION 1085+25, RESPECTIVELY.
2. UNDER TEMPORARY TRAFFIC CONTROL, RECONSTRUCT INSIDE SHOULDERS ALONG THE EASTBOUND FROM STATION 1041+50 TO 1093+00 AND ALONG THE WESTBOUND FROM STATION 1041+50 TO 1045+00.
3. UNDER TEMPORARY TRAFFIC CONTROL, PLACE TEMPORARY RAILING (TYPE K) ALONG THE INSIDE SHOULDERS OF THE EASTBOUND FROM STATION 1040+70 TO STATION 1093+70 AND ALONG THE WESTBOUND FROM STATION 1040+70 TO STATION 1046+10.

STAGE 1: PHASE 2

1. CONSTRUCT PROJECT RELATED IMPROVEMENTS IN THE ROADWAY MEDIAN UTILIZING TEMPORARY RAILING (TYPE K) PLACED IN PHASE 1 AND TEMPORARY TRAFFIC CONTROL ALONG THE WESTBOUND DIRECTION OF TRAVEL.

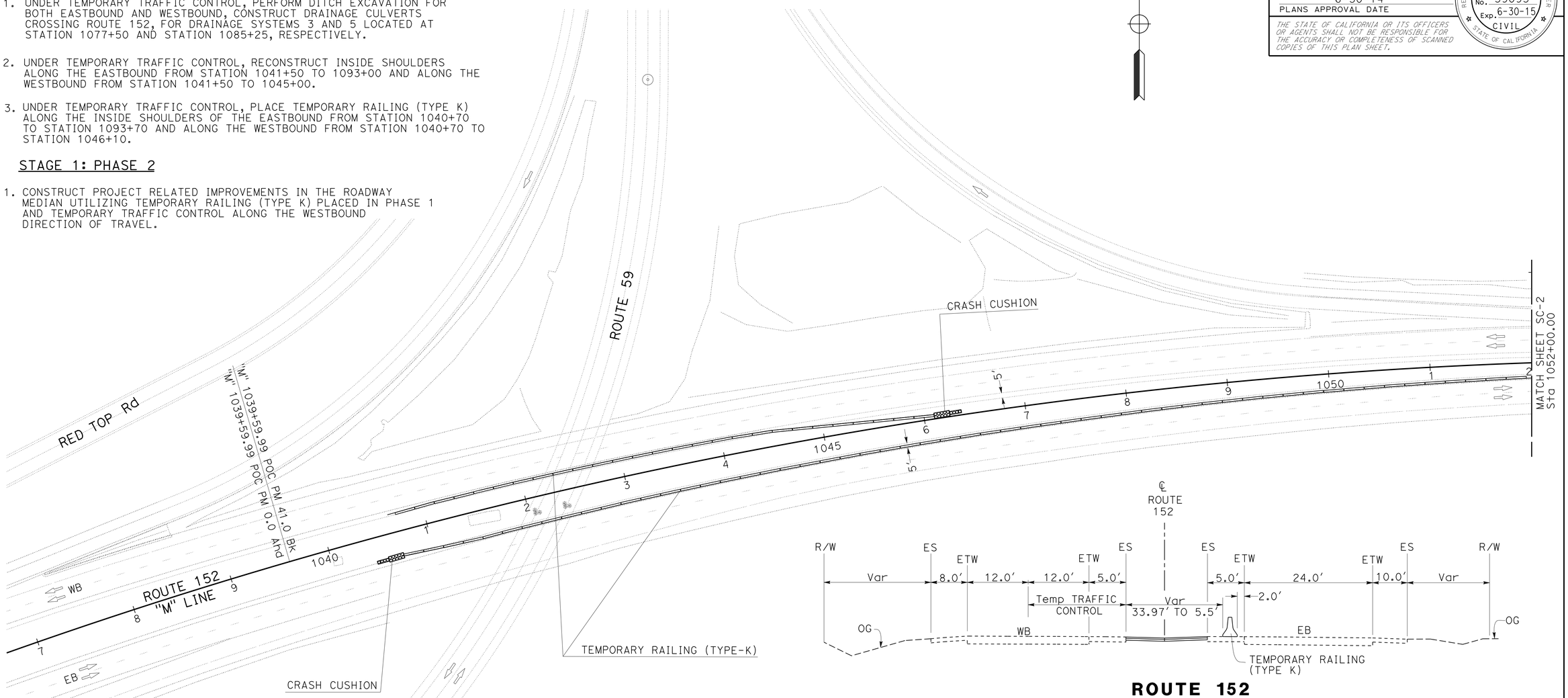

ROUTE 152
Sta 1046+10.00 TO Sta 1093+70.00

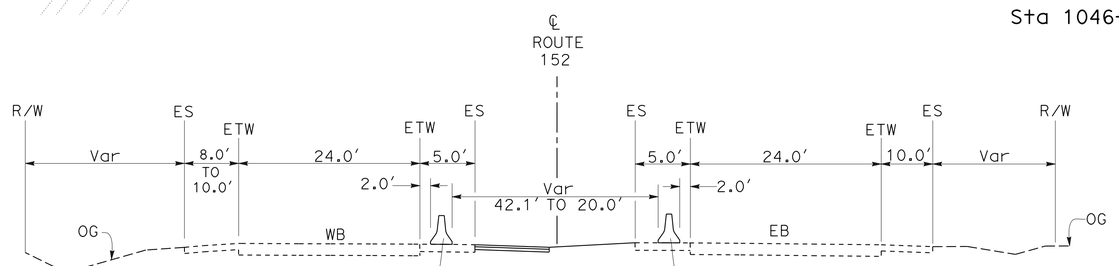

ROUTE 152
Sta 1040+70.00 TO Sta 1046+10.00

APPROVED FOR STAGE CONSTRUCTION WORK ONLY

STAGE CONSTRUCTION
STAGE 1 PHASE 1
AND STAGE 1 PHASE 2
SCALE: 1"=50'

SC-1

REVISED BY	DATE REVISED

CALCULATED-DESIGNED BY	CHECKED BY
TRIET LY	DAN MASSA

FUNCTIONAL SUPERVISOR: GETACHEW ESHETE

STATE OF CALIFORNIA - DEPARTMENT OF TRANSPORTATION
Caltrans
DESIGN

LAST REVISION 06-24-14 | DATE PLOTTED => 19-AUG-2014 | TIME PLOTTED => 10:35

Dist	COUNTY	ROUTE	POST MILES TOTAL PROJECT	SHEET No.	TOTAL SHEETS
06	Mad	152	R0.0/1.1	25	87

DAN 04-21-14
REGISTERED CIVIL ENGINEER DATE

6-30-14
PLANS APPROVAL DATE

REGISTERED PROFESSIONAL ENGINEER
DANIEL B. MASSA
No. 59095
Exp. 6-30-15
CIVIL
STATE OF CALIFORNIA

THE STATE OF CALIFORNIA OR ITS OFFICERS OR AGENTS SHALL NOT BE RESPONSIBLE FOR THE ACCURACY OR COMPLETENESS OF SCANNED COPIES OF THIS PLAN SHEET.

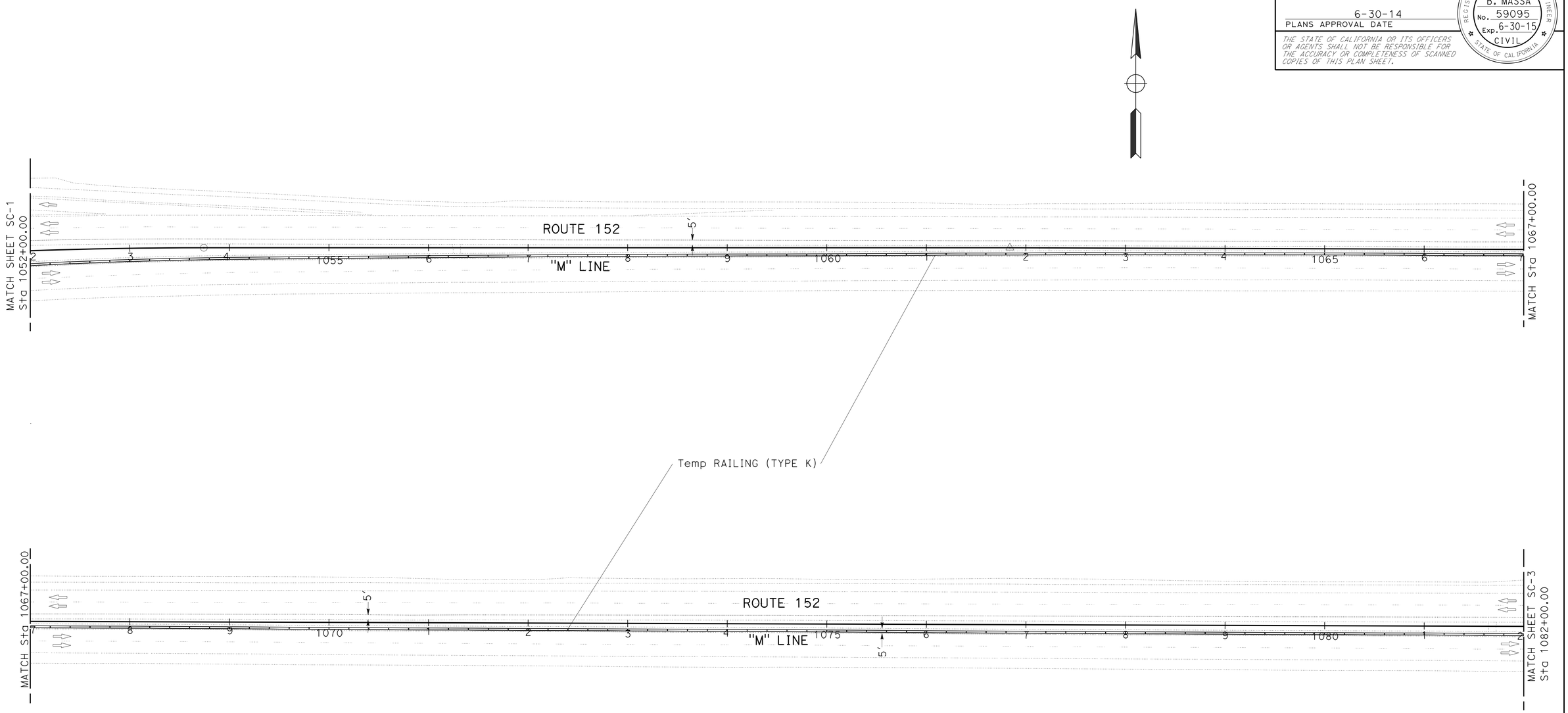

APPROVED FOR STAGE CONSTRUCTION WORK ONLY

STAGE CONSTRUCTION
STAGE 1 PHASE 1
AND STAGE 1 PHASE 2

SCALE: 1"=50'

SC-2

STATE OF CALIFORNIA - DEPARTMENT OF TRANSPORTATION
Caltrans
DESIGN

FUNCTIONAL SUPERVISOR: GETACHEW ESHETE
CALCULATED-DESIGNED BY: TRIET LY
CHECKED BY: DAN MASSA
REVISED BY
DATE REVISED

LAST REVISION 06-24-14
DATE PLOTTED => 19-AUG-2014
TIME PLOTTED => 10:35

Dist	COUNTY	ROUTE	POST MILES TOTAL PROJECT	SHEET No.	TOTAL SHEETS
06	Mad	152	R0.0/1.1	26	87

DAN 04-21-14
REGISTERED CIVIL ENGINEER DATE

6-30-14
PLANS APPROVAL DATE

REGISTERED PROFESSIONAL ENGINEER
DANIEL B. MASSA
No. 59095
Exp. 6-30-15
CIVIL
STATE OF CALIFORNIA

THE STATE OF CALIFORNIA OR ITS OFFICERS OR AGENTS SHALL NOT BE RESPONSIBLE FOR THE ACCURACY OR COMPLETENESS OF SCANNED COPIES OF THIS PLAN SHEET.

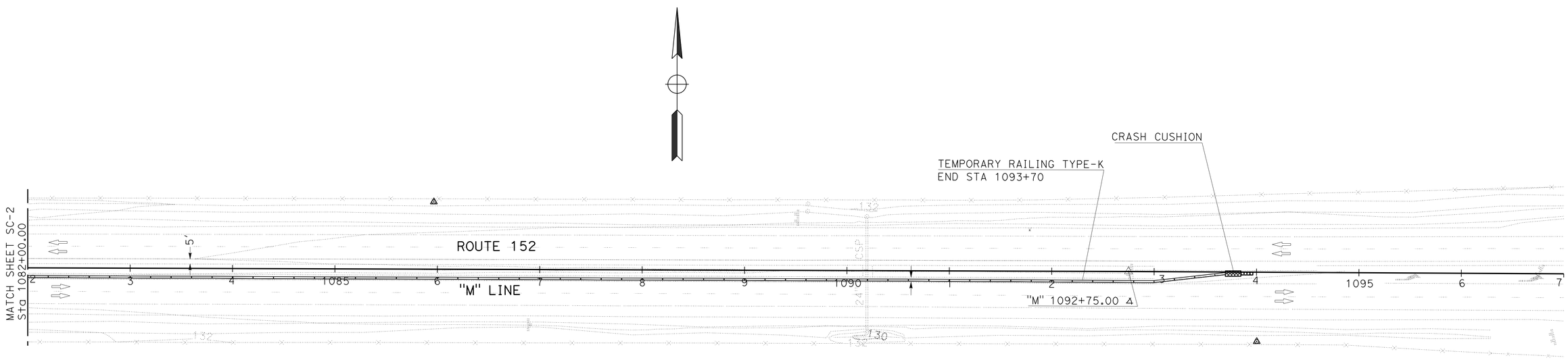

APPROVED FOR STAGE CONSTRUCTION WORK ONLY

STAGE CONSTRUCTION
STAGE 1 PHASE 1
AND STAGE 1 PHASE 2

SCALE: 1"=50'

SC-3

STATE OF CALIFORNIA - DEPARTMENT OF TRANSPORTATION
Caltrans
DESIGN

FUNCTIONAL SUPERVISOR: GETACHEW ESHETE
CALCULATED-DESIGNED BY: TRIET LY
CHECKED BY: DAN MASSA
REVISED BY
DATE REVISED

LAST REVISION 06-24-14
DATE PLOTTED => 19-AUG-2014
TIME PLOTTED => 10:35

Dist	COUNTY	ROUTE	POST MILES TOTAL PROJECT	SHEET No.	TOTAL SHEETS
06	Mad	152	R0.0/1.1	27	87

REGISTERED CIVIL ENGINEER 04-21-14 DATE

6-30-14
PLANS APPROVAL DATE

REGISTERED PROFESSIONAL ENGINEER FAWZI YAGHMOUR No. C-54750 Exp. 12/31/15 CIVIL STATE OF CALIFORNIA

THE STATE OF CALIFORNIA OR ITS OFFICERS OR AGENTS SHALL NOT BE RESPONSIBLE FOR THE ACCURACY OR COMPLETENESS OF SCANNED COPIES OF THIS PLAN SHEET.

NOTE: ALL CAS ARE TO BE BLACK ON ORANGE UNLESS NOTED OTHERWISE

LEGEND

- TEMPORARY RAILING (Type K)
- TEMPORARY CRASH CUSHION ARRAY TS'14'
- CHANNELIZER (SURFACE MOUNTED)

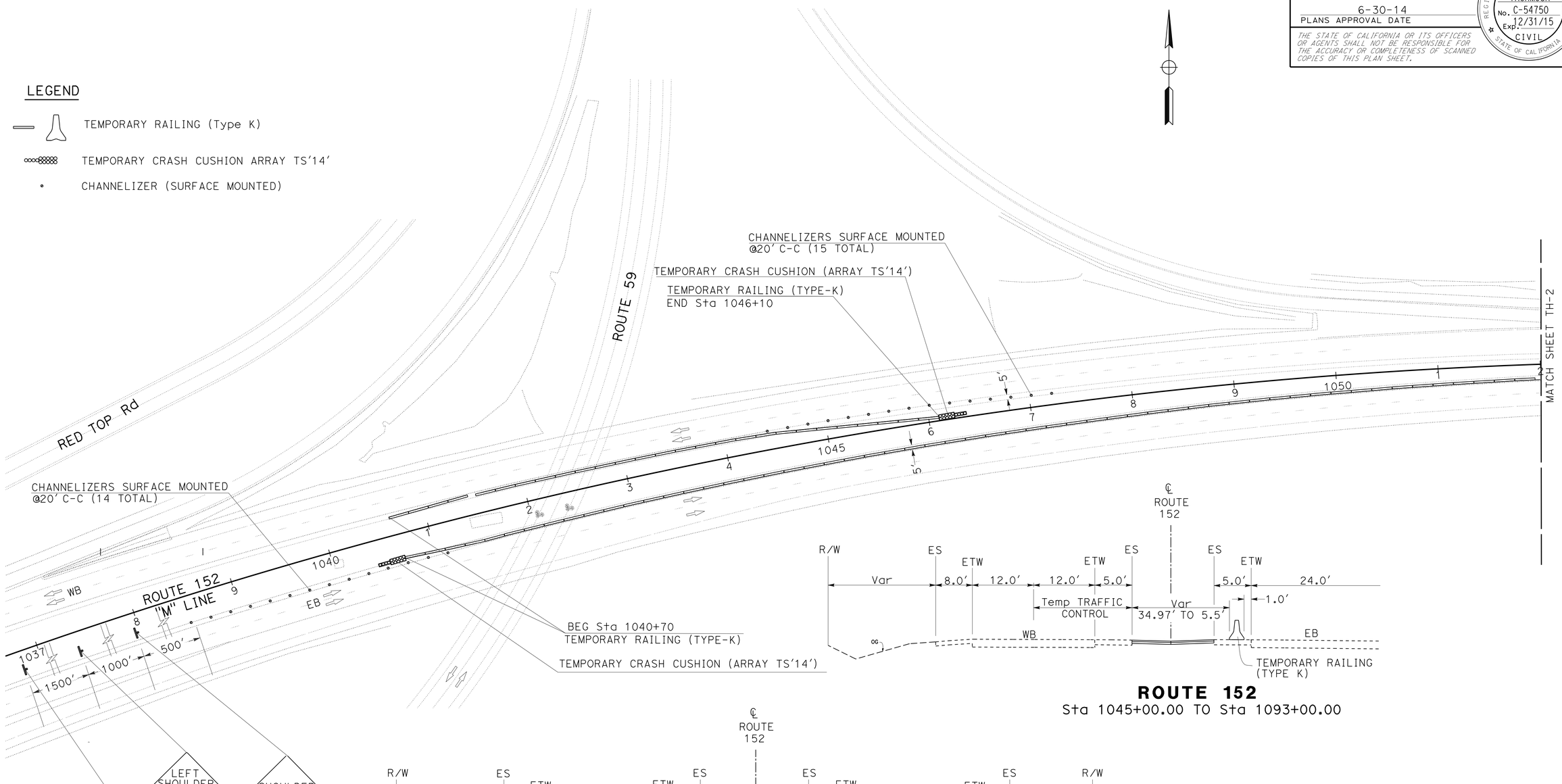

ROUTE 152
Sta 1045+00.00 TO Sta 1093+00.00

ROUTE 152
Sta 1041+50.00 TO Sta 1045+00.00

TRAFFIC HANDLING PLAN

(PHASE 1, 2)

SCALE:1"=50'

TH-1

APPROVED FOR TRAFFIC HANDLING WORK ONLY

STATE OF CALIFORNIA - DEPARTMENT OF TRANSPORTATION
Caltrans® **TRAFFIC DESIGN**

FUNCTIONAL SUPERVISOR: MOHAMMED QATAMI
CALCULATED-DESIGNED BY: DAVID BLACK
CHECKED BY: FAWZI YAGHMOUR
REVISED BY / DATE REVISED

LAST REVISION 06-23-14 | DATE PLOTTED => 19-AUG-2014 | TIME PLOTTED => 10:35

Dist	COUNTY	ROUTE	POST MILES TOTAL PROJECT	SHEET No.	TOTAL SHEETS
06	Mad	152	R0.0/1.1	28	87

REGISTERED CIVIL ENGINEER DATE 04-21-14

PLANS APPROVAL DATE 6-30-14

REGISTERED PROFESSIONAL ENGINEER FAWZI YAGHMOUR No. C-54750 Exp. 12/31/15 CIVIL STATE OF CALIFORNIA

THE STATE OF CALIFORNIA OR ITS OFFICERS OR AGENTS SHALL NOT BE RESPONSIBLE FOR THE ACCURACY OR COMPLETENESS OF SCANNED COPIES OF THIS PLAN SHEET.

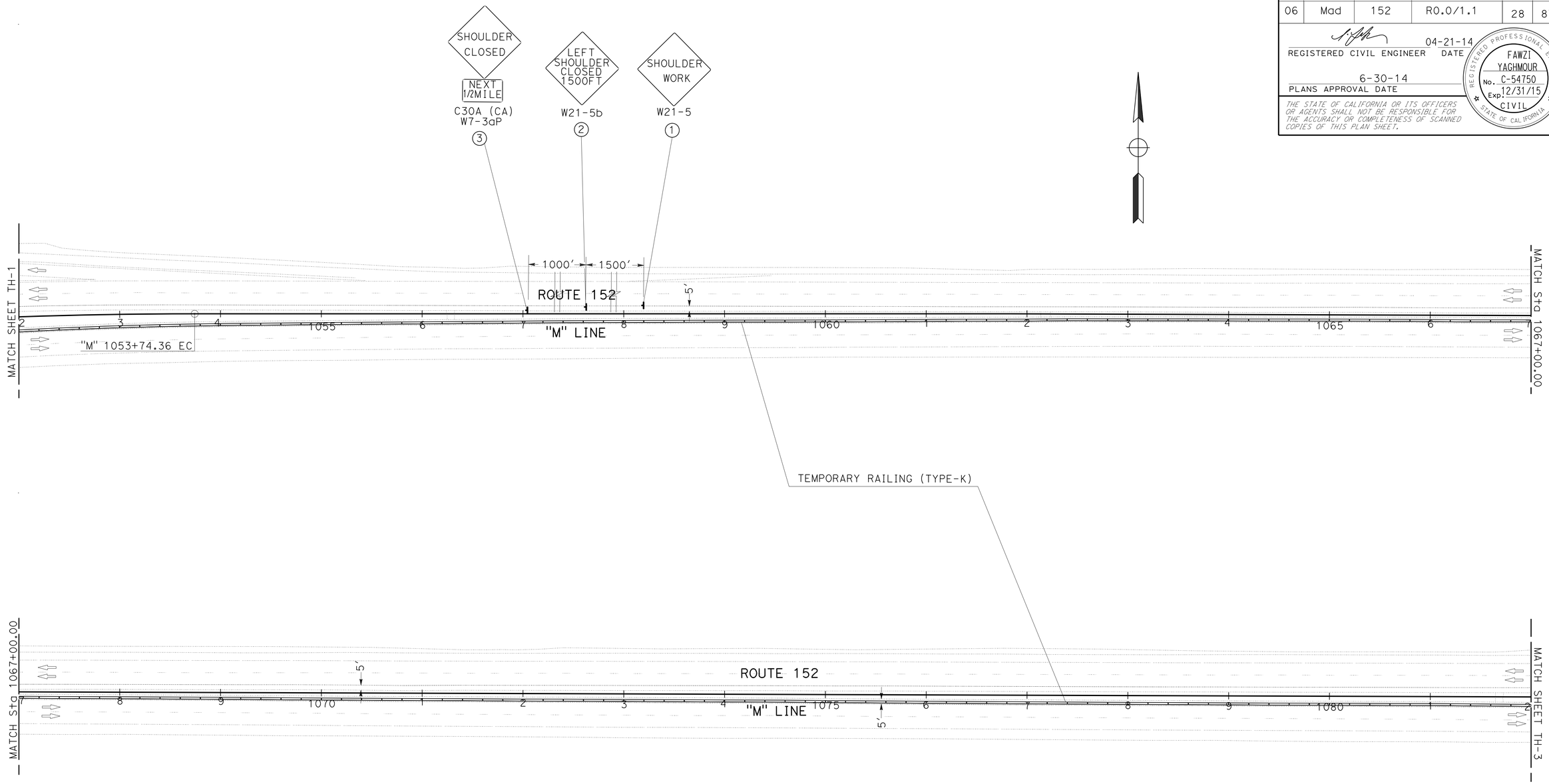

TRAFFIC HANDLING PLAN

(PHASE 1, 2)

SCALE: 1"=50'

TH-2

APPROVED FOR TRAFFIC HANDLING WORK ONLY

STATE OF CALIFORNIA - DEPARTMENT OF TRANSPORTATION

Caltrans® **TRAFFIC DESIGN**

FUNCTIONAL SUPERVISOR: MOHAMMED QATAMI

CALCULATED-DESIGNED BY: DAVID BLACK

CHECKED BY: FAWZI YAGHMOUR

REVISED BY

DATE REVISED

LAST REVISION 06-23-14

DATE PLOTTED => 19-AUG-2014

TIME PLOTTED => 10:35

Dist	COUNTY	ROUTE	POST MILES TOTAL PROJECT	SHEET No.	TOTAL SHEETS
06	Mad	152	R0.0/1.1	29	87

REGISTERED CIVIL ENGINEER 04-21-14 DATE

6-30-14
PLANS APPROVAL DATE

REGISTERED PROFESSIONAL ENGINEER
FAWZI YAGHMOUR
No. C-54750
Exp. 12/31/15
CIVIL
STATE OF CALIFORNIA

THE STATE OF CALIFORNIA OR ITS OFFICERS OR AGENTS SHALL NOT BE RESPONSIBLE FOR THE ACCURACY OR COMPLETENESS OF SCANNED COPIES OF THIS PLAN SHEET.

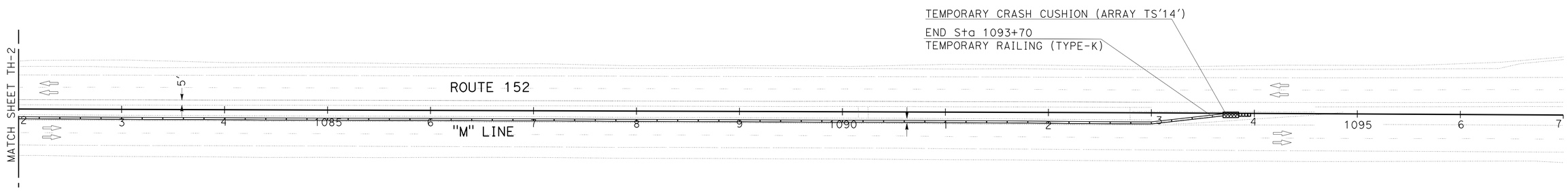

TRAFFIC HANDLING PLAN

(PHASE 1, 2)

TH-3

SCALE: 1"=50'

APPROVED FOR TRAFFIC HANDLING WORK ONLY

STATE OF CALIFORNIA - DEPARTMENT OF TRANSPORTATION
Caltrans® **TRAFFIC DESIGN**

FUNCTIONAL SUPERVISOR: MOHAMMED QATAMI
CALCULATED-DESIGNED BY: DAVID BLACK
CHECKED BY: FAWZI YAGHMOUR
REVISED BY
DATE REVISED

LAST REVISION 06-23-14
DATE PLOTTED => 19-AUG-2014
TIME PLOTTED => 10:35

Dist	COUNTY	ROUTE	POST MILES TOTAL PROJECT	SHEET No.	TOTAL SHEETS
06	Mad	152	R0.0/1.1	30	87

REGISTERED CIVIL ENGINEER 04-21-14 DATE

6-30-14
PLANS APPROVAL DATE

REGISTERED PROFESSIONAL ENGINEER
FAWZI YAGHMOUR
No. C-54750
Exp. 12/31/15
CIVIL
STATE OF CALIFORNIA

THE STATE OF CALIFORNIA OR ITS OFFICERS OR AGENTS SHALL NOT BE RESPONSIBLE FOR THE ACCURACY OR COMPLETENESS OF SCANNED COPIES OF THIS PLAN SHEET.

STATIONARY MOUNTED CONSTRUCTION AREA SIGNS

SIGN No. ⊗	SIGN CODE		PANEL SIZE	SIGN MESSAGE	NUMBER OF POSTS AND SIZE	No. OF SIGNS
	FEDERAL	CALIFORNIA				
1	W21-5		48"x48"	SHOULDER WORK	1-4"x6"	2
2	W21-5b		48"x48"	LEFT SHOULDER CLOSED 1500FT	1-4"x6"	2
3		C30A (CA)	48"x48"	SHOULDER CLOSED	1-6"x6"	2
	W7-3aP		32"x18"	NEXT 1/2, 1 MILE		

NOTE: SEE CS-1 SHEET FOR MORE CAS.

TEMPORARY RAILING (TYPE K)

LOCATION	SHEET	ROUTE	DIRECTION	STAGE	PHASE	TEMPORARY RAILING (TYPE K)	CHANNELIZER (SURFACE MOUNTED)	TEMPORARY CRASH CUSHION MODULE TYPE 'TS14'
						LF	EA	EA
LOL "M" STA 1040+70 to 1046+10	TH-1	152	WB	1	1	540	15	14
LOL "M" STA 1040+70 to 1093+70	TH-1,TH-2,TH-3	152	EB	1	1	5360	14	28
TOTAL						5900	29	42

EXACT LOCATION OF TEMPORARY RAILING (TYPE K) TO BE DETERMINED BY THE ENGINEER

TRAFFIC HANDLING QUANTITIES
THQ-1

REVISED BY | DATE REVISED
DAVID BLACK | FAWZI YAGHMOUR
CALCULATED-DESIGNED BY | CHECKED BY
FUNCTIONAL SUPERVISOR
MOHAMMED QATAMI

STATE OF CALIFORNIA - DEPARTMENT OF TRANSPORTATION
Caltrans
TRAFFIC DESIGN

LAST REVISION 06-23-14 | DATE PLOTTED => 19-AUG-2014 | TIME PLOTTED => 10:35

Dist	COUNTY	ROUTE	POST MILES TOTAL PROJECT	SHEET No.	TOTAL SHEETS
06	Mad	152	R0.0/1.1	31	87

REGISTERED CIVIL ENGINEER 04-21-14 DATE

6-30-14
PLANS APPROVAL DATE

REGISTERED PROFESSIONAL ENGINEER FAWZI YAGHMOUR No. C-54750 Exp. 12/31/15 CIVIL STATE OF CALIFORNIA

THE STATE OF CALIFORNIA OR ITS OFFICERS OR AGENTS SHALL NOT BE RESPONSIBLE FOR THE ACCURACY OR COMPLETENESS OF SCANNED COPIES OF THIS PLAN SHEET.

LEGEND

- LIMITS OF DESIGNATED TRAFFIC STRIPING DETAIL
- ▲ RESET ROADSIDE SIGN
- ■ REMOVE ROADSIDE SIGN
- (No.) OVERHEAD SIGN Nos

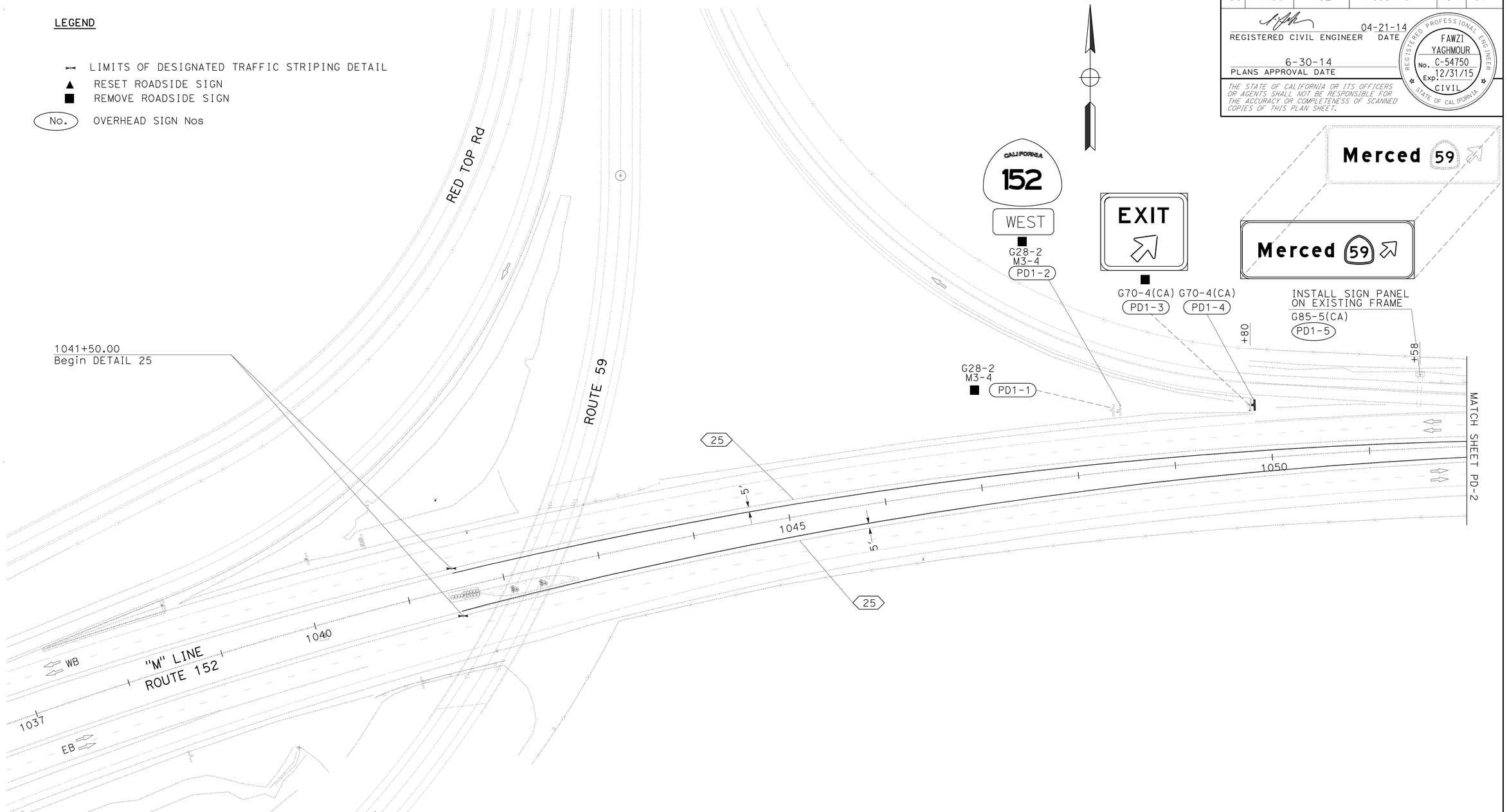

PAVEMENT DELINEATION AND SIGN PLAN

SCALE: 1"=50'

PD-1

APPROVED FOR PAVEMENT DELINEATION AND SIGN WORK ONLY

STATE OF CALIFORNIA - DEPARTMENT OF TRANSPORTATION
Caltrans 05-TRAFFIC DESIGN

FUNCTIONAL SUPERVISOR: MOHAMMED QATAMI
CALCULATED-DESIGNED BY: DAVID BLACK
CHECKED BY: FAWZI YAGHMOUR
REVISED BY
DATE REVISED

LAST REVISION 06-23-14
DATE PLOTTED => 19-AUG-2014
TIME PLOTTED => 10:35

Dist	COUNTY	ROUTE	POST MILES TOTAL PROJECT	SHEET No.	TOTAL SHEETS
06	Mad	152	R0.0/1.1	32	87

REGISTERED CIVIL ENGINEER 04-21-14 DATE

6-30-14
PLANS APPROVAL DATE

REGISTERED PROFESSIONAL ENGINEER FAWZI YAGHMOUR No. C-54750 Exp. 12/31/15 CIVIL STATE OF CALIFORNIA

THE STATE OF CALIFORNIA OR ITS OFFICERS OR AGENTS SHALL NOT BE RESPONSIBLE FOR THE ACCURACY OR COMPLETENESS OF SCANNED COPIES OF THIS PLAN SHEET.

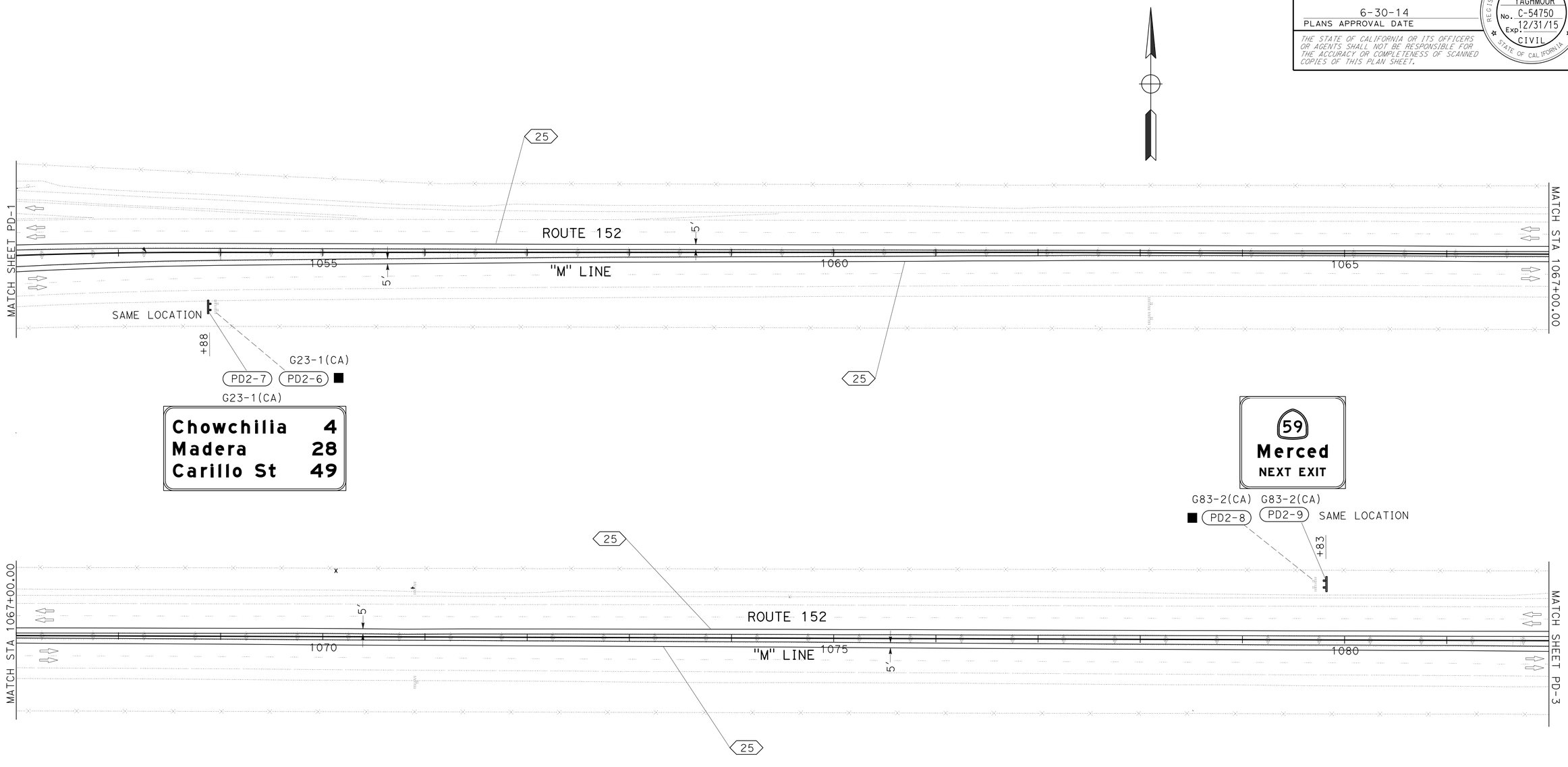

PAVEMENT DELINEATION AND SIGN PLAN

SCALE: 1"=50'

PD-2

APPROVED FOR PAVEMENT DELINEATION AND SIGN WORK ONLY

STATE OF CALIFORNIA - DEPARTMENT OF TRANSPORTATION
Caltrans® 05-TRAFFIC DESIGN

FUNCTIONAL SUPERVISOR: MOHAMMED QATAMI
CALCULATED-DESIGNED BY: DAVID BLACK
CHECKED BY: FAWZI YAGHMOUR
REVISED BY
DATE REVISED

LAST REVISION 06-23-14
DATE PLOTTED => 19-AUG-2014
TIME PLOTTED => 10:35

Dist	COUNTY	ROUTE	POST MILES TOTAL PROJECT	SHEET No.	TOTAL SHEETS
06	Mad	152	R0.0/1.1	33	87

REGISTERED CIVIL ENGINEER 04-21-14 DATE

6-30-14
PLANS APPROVAL DATE

REGISTERED PROFESSIONAL ENGINEER FAWZI YAGHMOUR No. C-54750 Exp. 12/31/15 CIVIL STATE OF CALIFORNIA

THE STATE OF CALIFORNIA OR ITS OFFICERS OR AGENTS SHALL NOT BE RESPONSIBLE FOR THE ACCURACY OR COMPLETENESS OF SCANNED COPIES OF THIS PLAN SHEET.

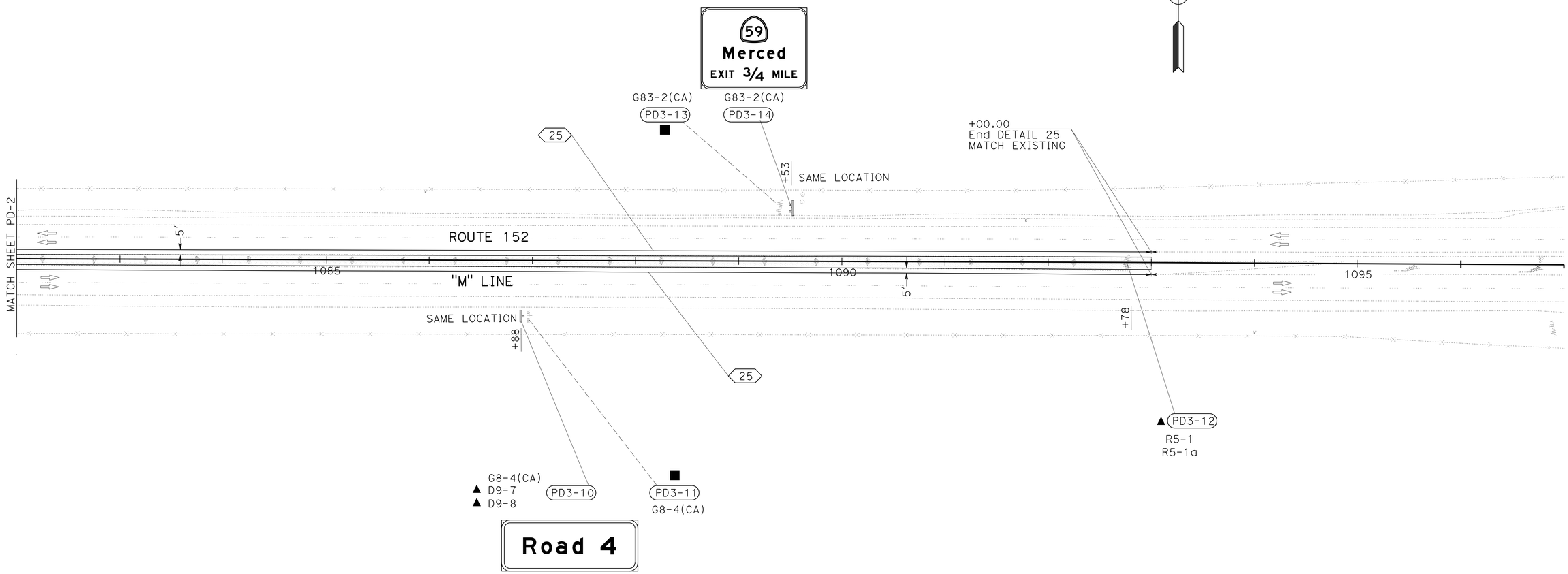

APPROVED FOR PAVEMENT DELINEATION AND SIGN WORK ONLY

PAVEMENT DELINEATION AND SIGN PLAN

SCALE: 1"=50'

PD-3

STATE OF CALIFORNIA - DEPARTMENT OF TRANSPORTATION
Caltrans® 05-TRAFFIC DESIGN

FUNCTIONAL SUPERVISOR: MOHAMMED QATAMI

CALCULATED-DESIGNED BY: DAVID BLACK
CHECKED BY: FAWZI YAGHMOUR

REVISED BY | DATE REVISED

LAST REVISION | DATE PLOTTED => 19-AUG-2014
06-23-14 | TIME PLOTTED => 10:35

Dist	COUNTY	ROUTE	POST MILES TOTAL PROJECT	SHEET No.	TOTAL SHEETS
06	Mad	152	R0.0/1.1	34	87

REGISTERED CIVIL ENGINEER 04-21-14 DATE

6-30-14
PLANS APPROVAL DATE

REGISTERED PROFESSIONAL ENGINEER FAWZI YAGHMOUR No. C-54750 Exp. 12/31/11 CIVIL STATE OF CALIFORNIA

THE STATE OF CALIFORNIA OR ITS OFFICERS OR AGENTS SHALL NOT BE RESPONSIBLE FOR THE ACCURACY OR COMPLETENESS OF SCANNED COPIES OF THIS PLAN SHEET.

PAVEMENT DELINEATION QUANTITIES

SHEET No.	LOCATION/STATION	DIRECTION	DETAIL No.	THERMOPLASTIC TRAFFIC STRIPE (ENHANCED WET NIGHT VISABILITY) 4" STRIPE			PAVEMENT MARKERS (RETROREFLECTIVE)		
				SOLID WHITE	BROKEN WHITE	SOLID YELLOW	TYPE G	TYPE H	TYPE C
				LF			EA		
PD1-PD3	MAINLINE STA 1041+50 TO 1093+00	EB	25			5150		109	
PD1-PD3	MAINLINE STA 1041+50 TO 1093+00	WB	25			5150		109	
	TOTAL			10300			218		

ROADSIDE SIGN QUANTITIES

LOCATION MAD-152 PM	SIGN No.	SIGN CODE	SIGN MESSAGE	POST LENGTH FOR LAMINATED WOOD BOX POST SIGN LEFT	POST LENGTH FOR LAMINATED WOOD BOX POST SIGN RIGHT	DIRECTION SIGN FACING	No. OF POST AND POST SIZE	PANEL SIZE	BACKGROUND SHEETING COLOR	BACKGROUND RETRO-REFLECTIVITY ASTM TYPE	LEGEND SHEETING COLOR	LEGEND RETRO-REFLECTIVITY ASTM TYPE	GRAFFITI FLOW STANDARD	GRAFFITI FLOW PREMIUM	FURNISH SINGLE SHEET ALUMINUM SIGN UNFRAMED 0.063"	FURNISH SINGLE SHEET ALUMINUM SIGN UNFRAMED 0.080"	FURNISH SINGLE SHEET ALUMINUM SIGN FRAMED 0.063"	FURNISH SINGLE SHEET ALUMINUM SIGN FRAMED 0.080"	ROADSIDE SIGN ONE POST	ROADSIDE SIGN TWO POST	RESET ROADSIDE SIGN (ONE POST)	REMOVE ROADSIDE SIGN	INSTALL ROADSIDE SIGN (LAMINATED WOOD BOX POST)	INSTALL SIGN PANEL ON EXISTING FRAME	FURNISH LAMINATE PANEL SIGN (1"-TYPE B)	FURNISH LAMINATE PANEL (2½"-TYPE B)	FURNISH LAMINATED PANEL SIGN (1"-TYPE A)	TREATED WOOD WASTE
															SQFT	SQFT	SQFT	SQFT	EA	EA	EA	EA	EA	SQFT	SQFT	SQFT	SQFT	LB
0.158	1	G28-2	ROUTE 152 SHIELD			FWBT	1-4"x 6"	24"x 28"	GREEN	VIII	WHITE	VIII		X	4.66							1						45
0.158	2	M3-4	WEST			FWBT		30"x 15"	WHITE	VIII	BLACK			X	3.12				1									
0.183	3	G70-4(CA)	EXIT WITH ARROW			FWBT	1-6"x 6"	54"x 48"	GREEN	VIII	WHITE	VIII		X			18		1									
0.183	4	G70-4(CA)	EXIT WITH ARROW			FWBT	1-6"x 6"	54"x 48"	GREEN	VIII	WHITE	VIII		X			18					1						72
0.219	5	G85-5(CA)	MERCED, 59 WITH ARROW			FWBT		216"x 72"	GREEN	VIII	WHITE	VIII		X										108			108	
0.261	6	G23-1(CA)	DISTANCE GUIDE, CHOWCHILLA, MADERA	23′	23′	FEBT	L	216"x 100"	GREEN	VIII	WHITE	VIII		X								1						
0.261	7	G23-1(CA)	DISTANCE GUIDE, CHOWCHILLA, MADERA	23′	23′	FEBT	L	216"x 100"	GREEN	VIII	WHITE	VIII		X									1			150		
0.711	8	G83-2(CA)	59, MERCED NEXT EXIT	23′	23′	FWBT	M	126"x 110"	GREEN	VIII	WHITE	VIII		X				96.25				1						
0.711	9	G83-2(CA)	59, MERCED NEXT EXIT	23′	23′	FWBT	M	126"x 110"	GREEN	VIII	WHITE	VIII		X				96.25					1					
0.998	10	D9-7	FOOD											X							1							
		D9-8	FUEL											X							1							
		G8-4(CA)	ROAD 4			FEBT	2-4"x 6"	48"x 18"	GREEN	VIII	WHITE	VIII		X		6				1								
0.998	11	G8-4(CA)	ROAD 4			FEBT	2-4"x 6"	48"x 18"	GREEN	VIII	WHITE	VIII		X		6						1						90
0.964	12	R5-1	DO NOT ENTER											X							1							
		R5-1a	WRONG WAY											X							1							
0.907	13	G83-2(CA)	59, MERCED EXIT ¾ MILE	22′	22′	FWBT	M	144"x 100"	GREEN	VIII	WHITE	VIII		X								1			100			
0.907	14	G83-2(CA)	59, MERCED EXIT ¾ MILE	22′	22′	FWBT	M	144"x 100"	GREEN	VIII	WHITE	VIII		X									1		100			
TOTAL															7.78	6	18	96.25	2	1	2	6	3	108	100	150	108	207 *

* TOTAL INCLUDED IN "GUARD RAILLING AND HIGH TENSION CABLE BARRIER TABLE" IN SUMMARY OF QUANTITIES SHEETS.

PAVEMENT DELINEATION AND SIGN QUANTITIES

PDQ-1

REVISED BY | DATE REVISED

DAVID BLACK | FAWZI YAGHMOUR

CALCULATED-DESIGNED BY | CHECKED BY

FUNCTIONAL SUPERVISOR: MOHAMMED QATAMI

STATE OF CALIFORNIA - DEPARTMENT OF TRANSPORTATION

Caltrans 05-TRAFFIC DESIGN

LAST REVISION 06-23-14 | DATE PLOTTED => 19-AUG-2014 | TIME PLOTTED => 10:35

Dist	COUNTY	ROUTE	POST MILES TOTAL PROJECT	SHEET No.	TOTAL SHEETS
06	Mad	152	R0.0/1.1	35	87

REGISTERED CIVIL ENGINEER 04-21-14 DATE

PLANS APPROVAL DATE 6-30-14

REGISTERED PROFESSIONAL ENGINEER FAWZI YAGHMOUR No. 54750 Exp. 12-31-15 CIVIL STATE OF CALIFORNIA

THE STATE OF CALIFORNIA OR ITS OFFICERS OR AGENTS SHALL NOT BE RESPONSIBLE FOR THE ACCURACY OR COMPLETENESS OF SCANNED COPIES OF THIS PLAN SHEET.

PD2-7

G23-1(CA); 12.0" Radius, 2.0" Border, White on Green;
[Chowchilia] E Mod; [4] E Mod; [Madera] E Mod; [28] E Mod; [Carillo St] E Mod; [49] E Mod;

PD3-10

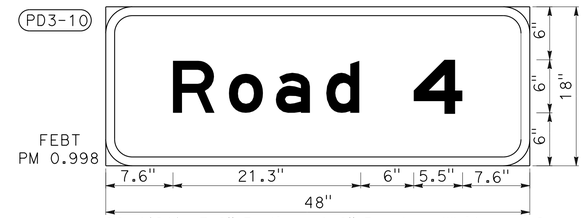

G8-4(CA); 3.0" Radius, 1.0" Border, White on Green;
[Road] E; [4] E Mod;

PD3-14

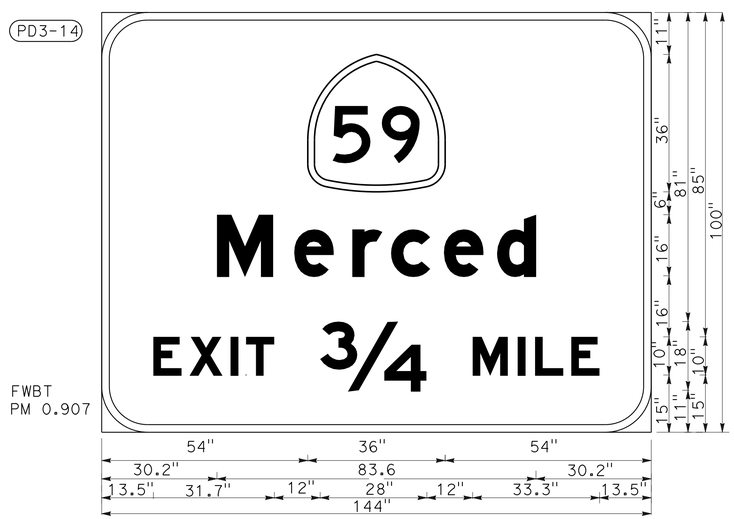

G83-2(CA); 12.0" Radius, 2.0" Border, White on Green;
[Merced] E Mod; [EXIT 6/64 MILE] E Mod;

PD3-14

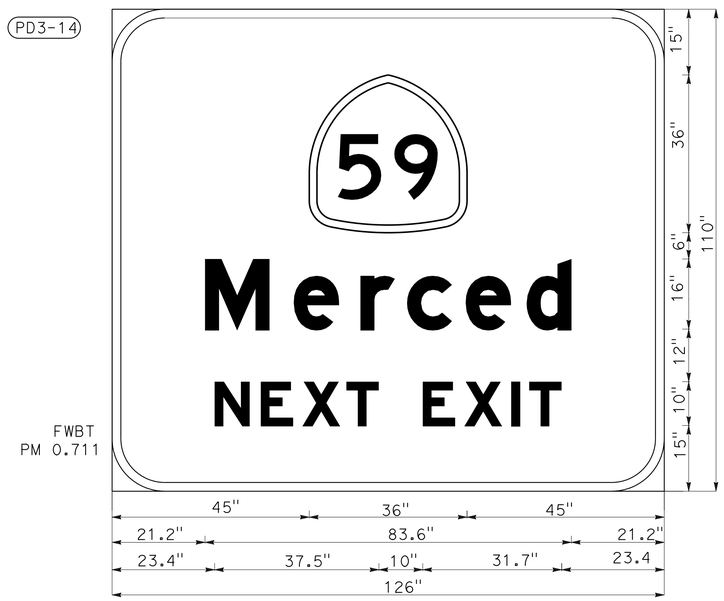

G83-2(CA); 12.0" Radius, 2.0" Border, White on Green;
[Merced] E Mod; [NEXT EXIT] E Mod;

SIGN DETAILS
SD-1

STATE OF CALIFORNIA - DEPARTMENT OF TRANSPORTATION
Caltrans®
TRAFFIC DESIGN

FUNCTIONAL SUPERVISOR: MOHAMMED QATAMI
CALCULATED-DESIGNED BY: DAVID BLACK
CHECKED BY: FAWZI YAGHMOUR
REVISED BY
DATE REVISED

LAST REVISION 04-03-14
DATE PLOTTED => 03-SEP-2014
TIME PLOTTED => 10:29

Dist	COUNTY	ROUTE	POST MILES TOTAL PROJECT	SHEET No.	TOTAL SHEETS
06	Mad	152	R0.0/1.1	36	87

REGISTERED CIVIL ENGINEER 04-21-14 DATE

6-30-14
PLANS APPROVAL DATE

REGISTERED PROFESSIONAL ENGINEER
FAWZI YAGHMOUR
No. 54750
Exp. 12-31-15
CIVIL
STATE OF CALIFORNIA

THE STATE OF CALIFORNIA OR ITS OFFICERS OR AGENTS SHALL NOT BE RESPONSIBLE FOR THE ACCURACY OR COMPLETENESS OF SCANNED COPIES OF THIS PLAN SHEET.

PD1-5

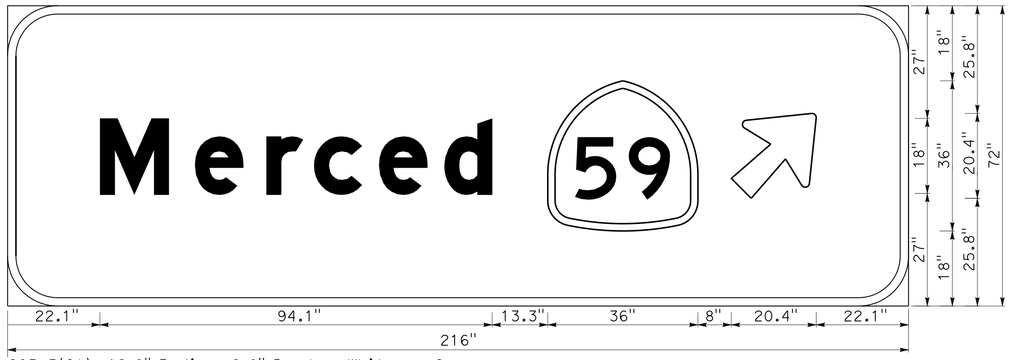

G85-5(CA); 12.0" Radius, 2.0" Border, White on Green;
[Merced] E Mod; Arrow 16CAP-1L - 25.0" 45{;

PD1-4

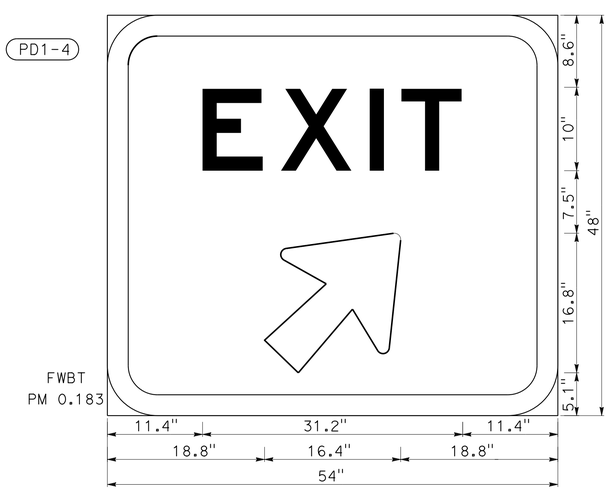

G70-4(CA); 6.0" Radius, 2.5" Border, White on Green;

[EXIT] E; Arrow 12CAP-1L - 20.3" 46{;

SIGN DETAILS
SD-2

STATE OF CALIFORNIA - DEPARTMENT OF TRANSPORTATION
Caltrans
TRAFFIC DESIGN

FUNCTIONAL SUPERVISOR: MOHAMMED QATAMI
CALCULATED-DESIGNED BY: DAVID BLACK
CHECKED BY: FAWZI YAGHMOUR
REVISED BY
DATE REVISED

LAST REVISION 05-28-14
DATE PLOTTED => 03-SEP-2014
TIME PLOTTED => 10:29

Dist	COUNTY	ROUTE	POST MILES TOTAL PROJECT	SHEET No.	TOTAL SHEETS
06	Mad	152	R0.0/1.1	37	87

DAN 04-21-14
REGISTERED CIVIL ENGINEER DATE

6-30-14
PLANS APPROVAL DATE

REGISTERED PROFESSIONAL ENGINEER DANIEL B. MASSA No. 59095 Exp. 6-30-15 CIVIL STATE OF CALIFORNIA

THE STATE OF CALIFORNIA OR ITS OFFICERS OR AGENTS SHALL NOT BE RESPONSIBLE FOR THE ACCURACY OR COMPLETENESS OF SCANNED COPIES OF THIS PLAN SHEET.

EARTHWORK QUANTITIES SUMMARY

STATION	DIRECTION	ROADWAY EXCAVATION	EMBANKMENT (N)	DITCH EXCAVATION
		CY	CY	CY
Sta 1051+00.00 TO Sta 1092+75.00	EB			2029
Sta 1052+00.00 TO Sta 1092+75.00	WB			1851
Sta 1041+50.00 TO Sta 1093+00.00		5415	30	
Sta 1047+94.55 TO Sta 1052+50.00	WB			10 *
Sta 1046+75.00 TO Sta 1051+00.00	EB			10 *
TOTAL		5415	30	3900

(N) NOT A SEPERATE PAY ITEM, FOR INFORMATION ONLY

* GRADE TO DRAIN

PAVEMENT QUANTITIES SUMMARY

STATION	LOCATIONS	HMA (TYPE A)	CLASS 2 AB	TACK COAT
		TON	CY	TON
Sta 1041+50.00 TO 1093+00.00 (EB)	INSIDE Shld	1333	525.0	0.7
Sta 1041+50.00 TO 1093+00.00 (WB)	INSIDE Shld	1335	525.0	0.7
Sta 1041+50.00 TO 1053+50.00	MEDIAN	275.1	229.5	0.2
Sta 1053+50.00 TO 1093+00.00	MEDIAN	710.7	592.9	0.4
FROM SHEET DD-3			11.6	
FROM MISCELLANEOUS TABLE		36.2		
TOTAL		3653.8	1884.0	2.0

METAL BEAM GUARD RAILING & HIGH TENSION CABLE BARRIER

STATION	DIRECTION	LAYOUT TYPE (N)	REMOVE GUARDRAIL	REMOVE CRASH CUSHION (SAND FILLED)	TREATED WOOD WASTE	MGS (WOOD POST)	MGS (STEEL POST)	DOUBLE MGS (WOOD POST)	ALTERNATIVE FLARED TERMINAL SYSTEM	ALTERNATIVE CRASH CUSHION SYSTEM	END ANCHOR ASSEMBLY (TYPE SFT)	HIGH TENSION CABLE BARRIER	HIGH TENSION CABLE BARRIER TERMINAL	VEGETATION CONTROL (MINOR CONCRETE)	CONCRETE BARRIER (TYPE 60GE MODIFIED)	TRANSITION RAILING (TYPE WB-31)	CONCRETE BARRIER (TRANSITION)
			LF	EA	LB	LF	LF	LF	EA	EA	EA	LF	EA	SQYD	LF	EA	LF
Sta 1041+73.2 TO 1042+75.4, Rt 10.0′	MEDIAN		210	1	2180												
Sta 1042+51.0 TO 1043+76.1, Lt 56.0′	WB		128		1870		25		1					39.7	75.5	1	
Sta 1041+56.1 TO 1042+56.5, Rt 17.5′	EB	14A				75		25		1	1			160.0			3.5
Sta 1051+68.7 TO 1052+65.6, Lt 68.7′	WB	16B	60		1218		37.5		1					26.7			
Sta 1041+71.91 TO 1093+00.00, Lt 4.1′	MEDIAN											5130	2				
FROM SHEET PDQ-1					207												
TOTAL			398	1	5475	75	62.5	25	2	1	1	5130	2	226.4	75.5	1	3.5

(N) NOT A SEPERATE PAY ITEM, FOR INFORMATION ONLY

MISCELLANEOUS

STATION	DESCRIPTION	HMA (TYPE A)	PLACE HOT MIX ASPHALT (MISCELLANOUS AREA)	SHOULDER RUMBLE STRIP (HMA GROUND-IN INDENTATION)
		TON	SQYD	Sta
Sta 1041+50.00 TO 1093+00.00	EB	10		52.0
Sta 1041+50.00 TO 1093+00.00	WB	10		52.0
Sta 1042+52.46 TO 1043+75.80	WB	2.0	18.0	
Sta 1042+52.46 TO 1043+75.80	GUTTER	1.0	8.9	
FROM SHEET DD-3		13.2	23.2	
TOTAL		36.2*	50.1	104.0

* TOTAL INCLUDED IN PAVEMENT QUANTITIES SUMMARY TABLE

TEMPORARY WATER POLLUTION CONTROL QUANTITIES

PLAN SHEET NO.	STATION	TEMPORARY DRAINAGE INLET PROTECTION	**TEMP CONSTRUCTION ENTRANCE
		EA	EA
L-1	Sta 1040+60.00		1
L-1	Sta 1046+20.00		1
D-2	Various	12	
D-3	Various	5	
TOTAL		17	2

** TEMPORARY CONSTRUCTION ENTRANCE MUST BE TYPE 2.

SUMMARY OF QUANTITIES
Q-1

REVISED BY | DATE REVISED
TRIET LY | DAN MASSA
CALCULATED-DESIGNED BY | CHECKED BY
FUNCTIONAL SUPERVISOR | GETACHEW ESHETE
STATE OF CALIFORNIA - DEPARTMENT OF TRANSPORTATION
Caltrans® DESIGN

LAST REVISION 06-10-14
DATE PLOTTED => 19-AUG-2014
TIME PLOTTED => 10:35

Dist	COUNTY	ROUTE	POST MILES TOTAL PROJECT	SHEET No.	TOTAL SHEETS
06	Mad	152	R0.0/1.1	38	87

LICENSED LANDSCAPE ARCHITECT

6-30-14
PLANS APPROVAL DATE

LICENSED LANDSCAPE ARCHITECT
MICHAEL W. MILLS No. 4770
Expiration Date 11/30/14
Renewal Date 06/10/14
Date
STATE OF CALIFORNIA

THE STATE OF CALIFORNIA OR ITS OFFICERS OR AGENTS SHALL NOT BE RESPONSIBLE FOR THE ACCURACY OR COMPLETENESS OF SCANNED COPIES OF THIS PLAN SHEET.

EROSION CONTROL

SEQUENCE	ITEM	MATERIAL DESCRIPTION	MATERIAL TYPE	APPLICATION RATE	REMARKS
STEP 1	COMPOST	COMPOST	MEDIUM	130 CY/ACRE	
STEP 2	INCORPORATE MATERIALS	COMPOST			4" DEPTH
STEP 3	FIBER ROLLS	FIBER ROLL	8" TO 10" Dia		TYPE 1 FIBER ROLL INSTALLATION
STEP 4	BONDED FIBER MATRIX	FIBER		2500 LB/ACRE FOR SLOPES ≤ 4:1 (Horiz:Vert) 3000 LB/ACRE FOR SLOPES > 4:1 and ≤ 3:1 (Horiz:Vert) 3500 LB/ACRE FOR SLOPES > 3:1 and ≤ 2:1 (Horiz:Vert)	APPLICATION RATE IS FOR FIBER AND TACKIFIER COMBINED
		TACKIFIER			
STEP 5	BONDED FIBER MATRIX	FIBER		500 LB/ACRE	
		TACKIFIER			
		SEED	SEED MIX	36 LB/ACRE	

SEED MIX

BOTANICAL NAME (COMMON NAME)	PERCENT GERMINATION (MINIMUM)	POUNDS PURE LIVE SEED PER ACRE (SLOPE MEASUREMENT)
ACHILLEA MILLEFOLIUM (WESTERN YARROW)	85	1
BROMUS CARINATUS (CALIFORNIA BROME)	80	25
ERIOGONUM FASCICULATUM (CALIFORNIA BUCKWHEAT)	20	2
ERIOPHYLLUM CONFERTIFLORUM (GOLDEN YARROW)	70	1
LOTUS SCOPARIUS (DEER LOTUS)	80	7

EROSION CONTROL QUANTITIES

SHEET	DESCRIPTION	COMPOST	INCORPORATE MATERIALS	BONDED FIBER MATRIX	FIBER ROLLS
		SQFT	SQFT	SQFT	LF
EC-1	EROSION CONTROL	26,860	26,860	26,860	
	FIBER ROLLS				530
EC-2	EROSION CONTROL	134,000	134,000	134,000	
	FIBER ROLLS				6000
EC-3	EROSION CONTROL	48,100	48,100	48,100	
	FIBER ROLLS				2150
	TOTAL	208,960	208,960	208,960	8680

EROSION CONTROL LEGEND AND QUANTITIES
ECL-1

REVISED BY | DATE REVISED
MICHAEL MILLS | CHARLES LaRUE
CALCULATED-DESIGNED BY | CHECKED BY
SENIOR LANDSCAPE ARCHITECT | BRAD COLE
STATE OF CALIFORNIA - DEPARTMENT OF TRANSPORTATION
Caltrans® LANDSCAPE ARCHITECTURE

LAST REVISION 06-10-14 | DATE PLOTTED => 03-SEP-2014 | TIME PLOTTED => 10:29

Dist	COUNTY	ROUTE	POST MILES TOTAL PROJECT	SHEET No.	TOTAL SHEETS
06	Mad	152	R0.0/1.1	39	87

LICENSED LANDSCAPE ARCHITECT

6-30-14

PLANS APPROVAL DATE

LICENSED LANDSCAPE ARCHITECT
MICHAEL W. MILLS No. 4770
Expiration Date 11/30/14
Renewal Date 06/10/14
Date
STATE OF CALIFORNIA

THE STATE OF CALIFORNIA OR ITS OFFICERS OR AGENTS SHALL NOT BE RESPONSIBLE FOR THE ACCURACY OR COMPLETENESS OF SCANNED COPIES OF THIS PLAN SHEET.

NOTE:

FOR ACCURATE RIGHT OF WAY DATA, CONTACT RIGHT OF WAY ENGINEERING AT THE DISTRICT OFFICE.

LEGEND:

EROSION CONTROL
CUT AND FILL SLOPES BETWEEN 2:1 AND FLATTER

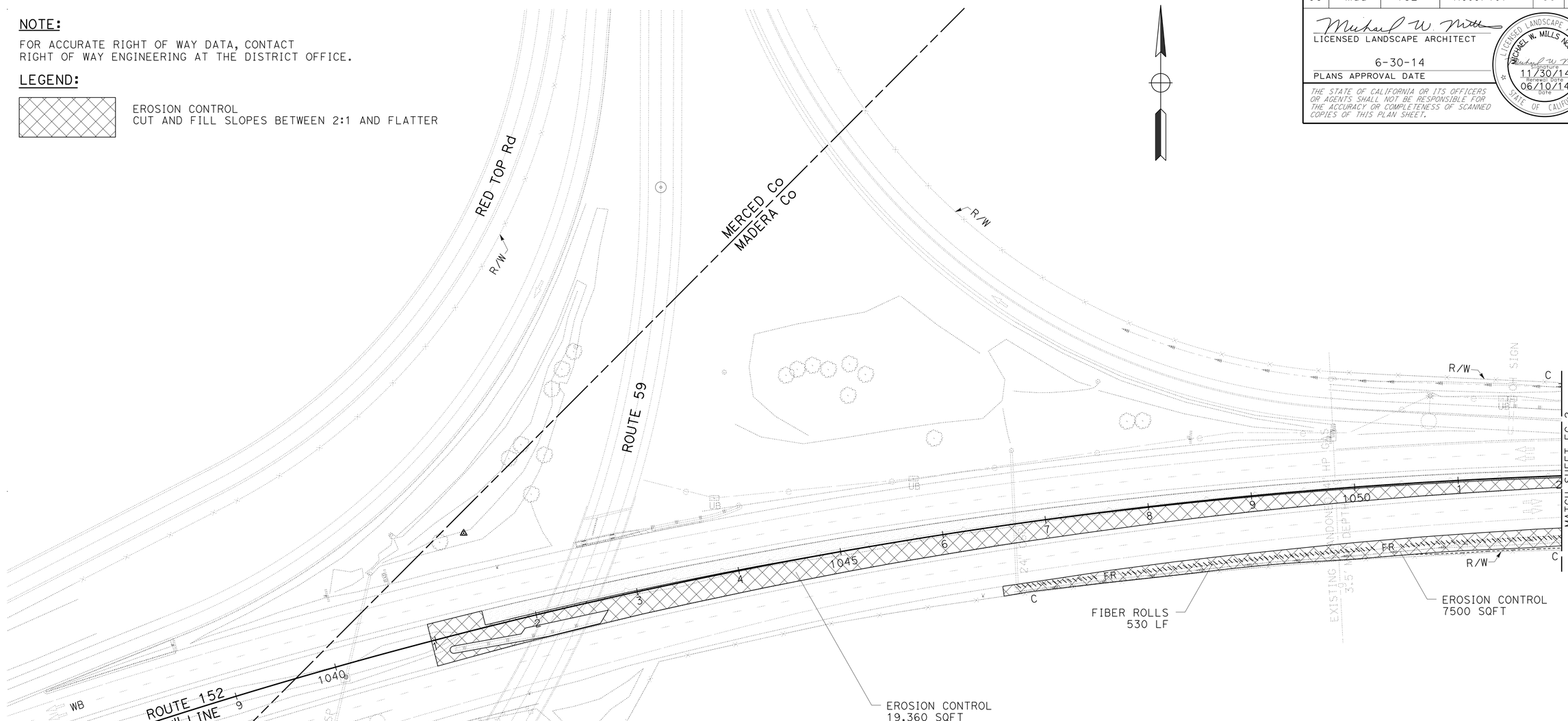

APPROVED FOR EROSION CONTROL WORK ONLY

EROSION CONTROL PLAN

SCALE: 1"=50'

EC-1

STATE OF CALIFORNIA - DEPARTMENT OF TRANSPORTATION
Caltrans® LANDSCAPE ARCHITECTURE

SENIOR LANDSCAPE ARCHITECT: BRAD COLE

CALCULATED-DESIGNED BY: MICHAEL MILLS
CHECKED BY: CHARLES LaRUE

REVISED BY
DATE REVISED

LAST REVISION 06-10-14
DATE PLOTTED => 19-AUG-2014
TIME PLOTTED => 10:35

Dist	COUNTY	ROUTE	POST MILES TOTAL PROJECT	SHEET No.	TOTAL SHEETS
06	Mad	152	R0.0/1.1	40	87

LICENSED LANDSCAPE ARCHITECT

6-30-14
PLANS APPROVAL DATE

LICENSED LANDSCAPE ARCHITECT
MICHAEL W. MILLS No. 4770
Expiration Date
11/30/14
Renewal Date
06/10/14
Date
STATE OF CALIFORNIA

THE STATE OF CALIFORNIA OR ITS OFFICERS OR AGENTS SHALL NOT BE RESPONSIBLE FOR THE ACCURACY OR COMPLETENESS OF SCANNED COPIES OF THIS PLAN SHEET.

NOTE:

FOR ACCURATE RIGHT OF WAY DATA, CONTACT RIGHT OF WAY ENGINEERING AT THE DISTRICT OFFICE.

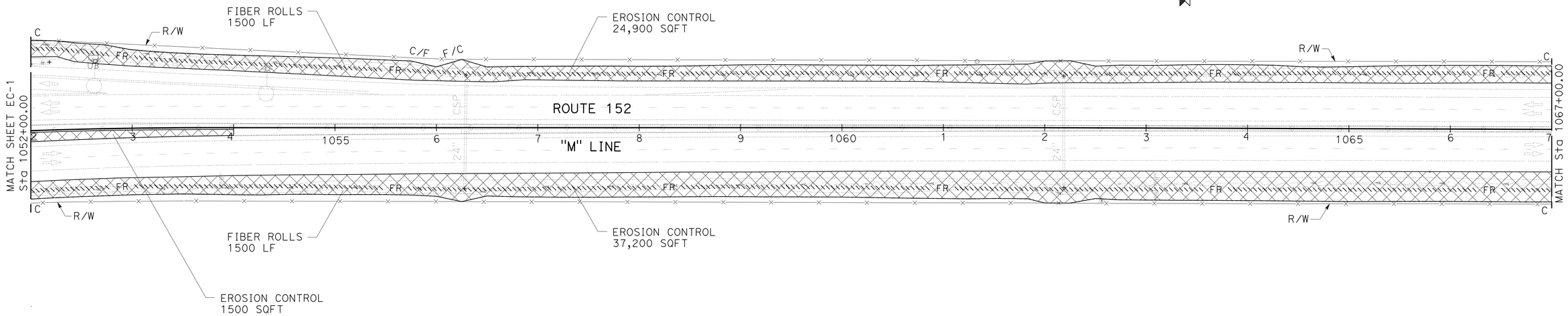

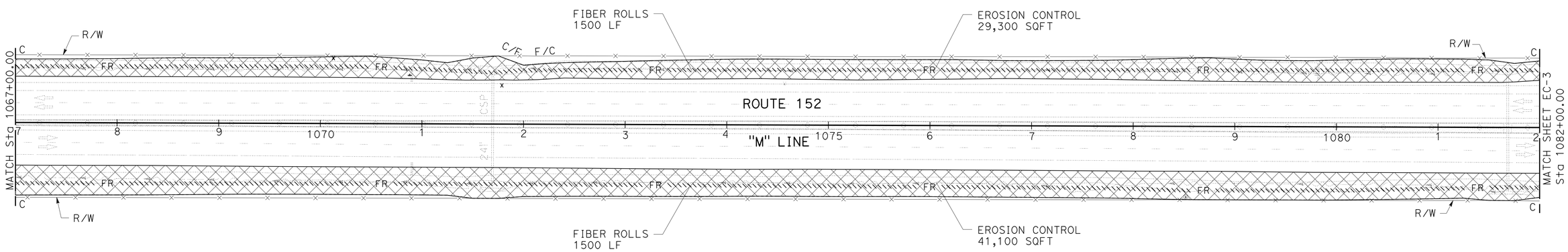

APPROVED FOR EROSION CONTROL WORK ONLY

EROSION CONTROL PLAN

SCALE: 1"=50'

EC-2

REVISED BY | DATE REVISED

MICHAEL MILLS | CHARLES LaRUE

CALCULATED-DESIGNED BY | CHECKED BY

SENIOR LANDSCAPE ARCHITECT | BRAD COLE

STATE OF CALIFORNIA - DEPARTMENT OF TRANSPORTATION
Caltrans® LANDSCAPE ARCHITECTURE

LAST REVISION 06-10-14 | DATE PLOTTED => 19-AUG-2014 | TIME PLOTTED => 10:35

Dist	COUNTY	ROUTE	POST MILES TOTAL PROJECT	SHEET No.	TOTAL SHEETS
06	Mad	152	R0.0/1.1	41	87

LICENSED LANDSCAPE ARCHITECT

6-30-14

PLANS APPROVAL DATE

LICENSED LANDSCAPE ARCHITECT
MICHAEL W. MILLS No. 4770
Expiration Date 11/30/14
Renewal Date 06/10/14
Date
STATE OF CALIFORNIA

THE STATE OF CALIFORNIA OR ITS OFFICERS OR AGENTS SHALL NOT BE RESPONSIBLE FOR THE ACCURACY OR COMPLETENESS OF SCANNED COPIES OF THIS PLAN SHEET.

NOTE:

FOR ACCURATE RIGHT OF WAY DATA, CONTACT RIGHT OF WAY ENGINEERING AT THE DISTRICT OFFICE.

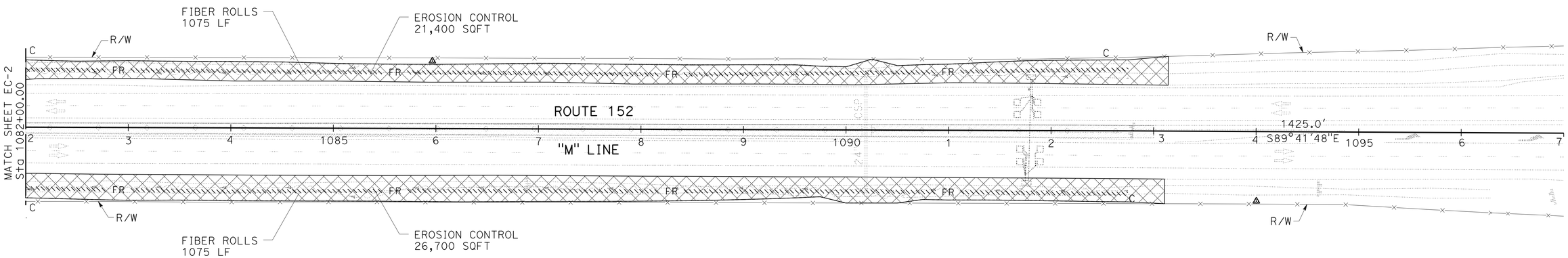

APPROVED FOR EROSION CONTROL WORK ONLY

EROSION CONTROL PLAN

SCALE: 1"=50'

EC-3

STATE OF CALIFORNIA - DEPARTMENT OF TRANSPORTATION
Caltrans® LANDSCAPE ARCHITECTURE

SENIOR LANDSCAPE ARCHITECT: BRAD COLE

CALCULATED-DESIGNED BY: MICHAEL MILLS
CHECKED BY: CHARLES LaRUE

REVISED BY
DATE REVISED

LAST REVISION 06-10-14
DATE PLOTTED => 19-AUG-2014
TIME PLOTTED => 10:35

Dist	COUNTY	ROUTE	POST MILES TOTAL PROJECT	SHEET No.	TOTAL SHEETS
06	Mad	152	R0.0/1.1	42	87

REGISTERED ELECTRICAL ENGINEER 06-29-14 DATE

6-30-14
PLANS APPROVAL DATE

REGISTERED PROFESSIONAL ENGINEER PAUL MATOS No. 18757 Exp. 6/30/15 ELECTRICAL STATE OF CALIFORNIA

THE STATE OF CALIFORNIA OR ITS OFFICERS OR AGENTS SHALL NOT BE RESPONSIBLE FOR THE ACCURACY OR COMPLETENESS OF SCANNED COPIES OF THIS PLAN SHEET.

LEGEND:

1 120/240 V, 1Ø, 3-WIRE, TYPE III-BF SERVICE EQUIPMENT ENCLOSURE WITH THE FOLLOWING CIRCUIT BREAKERS:

Ctid No. 06411520001042L

AMPERES	VOLTS	POLES	LOAD	METER	PHOTOELECTRIC CONTROL TYPE
100	240	2	MAIN BREAKER	YES	——
40	120	1	VCS	YES	——
40	240	2	SPARE	YES	——
30	120	1	SPARE	YES	——

2 MODEL 334L CABINET WITH ATC AND WIRELESS MODEM FOR VCS. DEPARTMENT-FURNISHED MODEL 2070E CONTROLLER UNIT FOR TMS.

3 SEE DETAIL A ON SHEET E-2 FOR PIEZO AXLE SENSOR INSTALLATION. SEE DETAIL B FOR LOOP DETECTOR AND PIEZO AXLE SENSOR PLACEMENT AND DESIGNATION.

4 PG&E APPROVED PULL BOX.

5 TYPE III SERVICE EQUIPMENT ENCLOSURE WITH 3 POINT LOCK. SEE DETAIL C ON SHEET E-3.

ABBREVIATIONS:

STC - SCREENED TRASMISSION CABLE
VCS - VEHICLE CLASSIFICATION STATION
ATC - AUTOMATED TRAFFIC COUNTER

NOTES:

1. ALL PULL BOXES MUST BE No. 5(T)(E) UNLESS OTHERWISE NOTED.
2. FOR ACCURATE RIGHT OF WAY DATA, CONTACT RIGHT OF WAY ENGINEERING AT THE DISTRICT OFFICE.

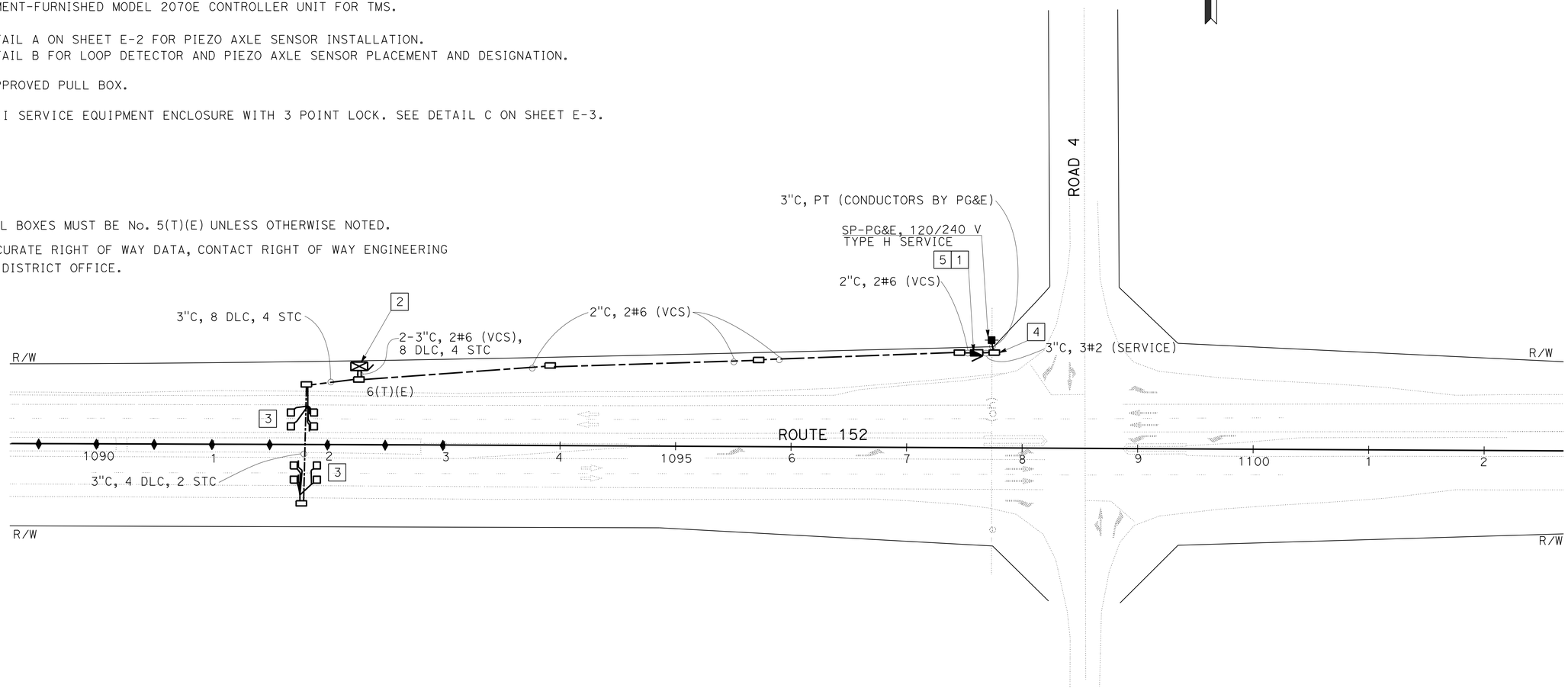

VEHICLE CLASSIFICATION STATION

SCALE:1"=50'

E-1

APPROVED FOR ELECTRICAL WORK ONLY

STATE OF CALIFORNIA - DEPARTMENT OF TRANSPORTATION
Caltrans® **ELECTRICAL DESIGN**
FUNCTIONAL SUPERVISOR: ALI BAKHDOUD
CALCULATED-DESIGNED BY: KARIM ABDOLLAHIAN
CHECKED BY: PAUL MATOS
REVISED BY
DATE REVISED

LAST REVISION 06-23-14
DATE PLOTTED => 19-AUG-2014
TIME PLOTTED => 10:36

Dist	COUNTY	ROUTE	POST MILES TOTAL PROJECT	SHEET No.	TOTAL SHEETS
06	Mad	152	R0.0/1.1	43	87

REGISTERED ELECTRICAL ENGINEER 06-29-14 DATE

6-30-14
PLANS APPROVAL DATE

REGISTERED PROFESSIONAL ENGINEER PAUL MATOS No. 18757 Exp. 6/30/15 ELECTRICAL STATE OF CALIFORNIA

THE STATE OF CALIFORNIA OR ITS OFFICERS OR AGENTS SHALL NOT BE RESPONSIBLE FOR THE ACCURACY OR COMPLETENESS OF SCANNED COPIES OF THIS PLAN SHEET.

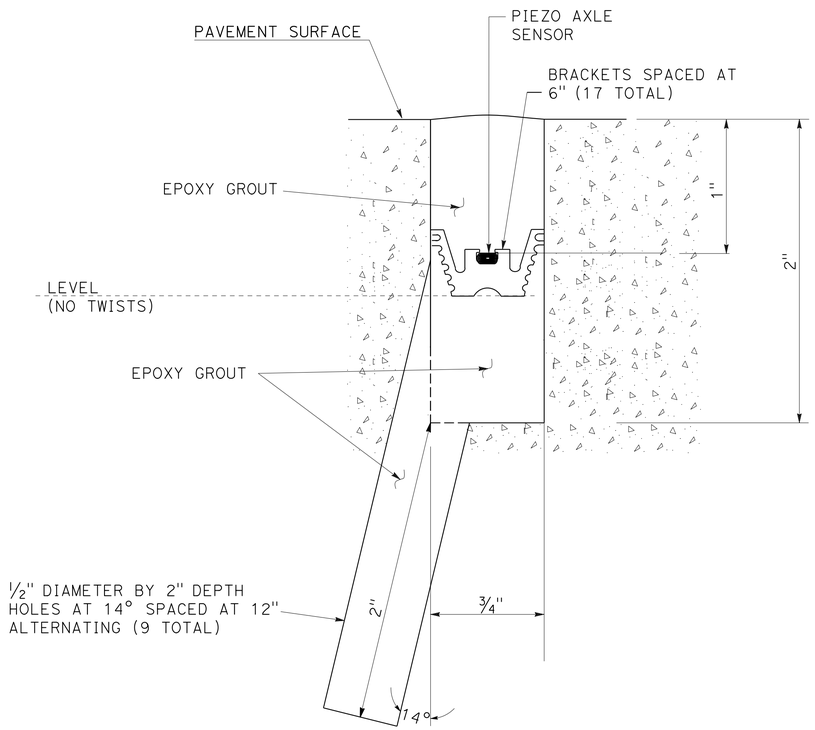

SECTION A-A

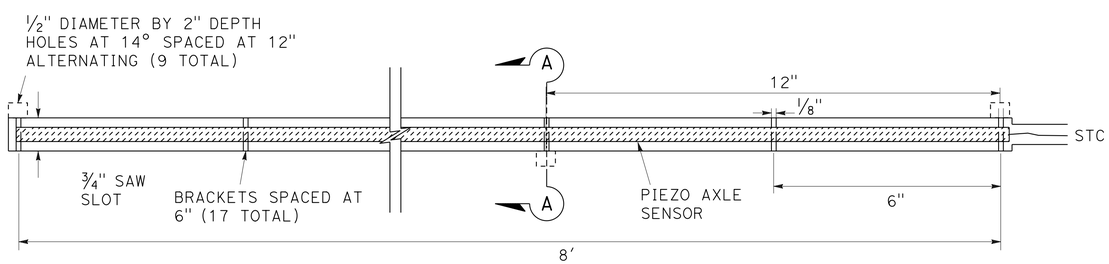

PIEZO AXLE SENSOR INSTALLATION

TOP VIEW
DETAIL A

INDUCTIVE LOOP DETECTOR SENSOR DESIGNATION

N-1-2

- DIRECTION OF TRAFFIC
  - N - NORTHBOUND , S - SOUTHBOUND
  - E - EASTBOUND , W - WESTBOUND
- 1 - ENTERING
- 2 - LEAVING
- LANE NUMBER
  - 1 - FIRST LANE FROM LEFT
  - 2 - SECOND LANE

PIEZO AXLE SENSOR DESIGNATION

N-P-1-1

- DIRECTION OF TRAFFIC
  - N - NORTHBOUND, S - SOUTHBOUND
  - E - EASTBOUND, W - WESTBOUND
- PIEZO AXLE SENSOR
- 1 - FOR ALL PIEZO AXLE SENSORS
- LANE NUMBER
  - 1 - FIRST LANE FROM LEFT
  - 2 - SECOND LANE

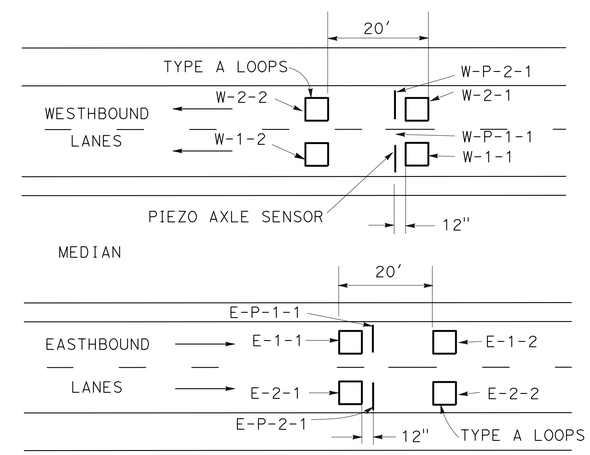

LOOP DETECTOR AND PIEZO AXLE SENSOR PLACEMENT AND DESIGNATION

DETAIL B

APPROVED FOR ELECTRICAL WORK ONLY

ELECTRICAL DETAILS
E-2

NO SCALE

STATE OF CALIFORNIA - DEPARTMENT OF TRANSPORTATION
Caltrans® ELECTRICAL DESIGN

FUNCTIONAL SUPERVISOR: ALI BAKHDOUD
CALCULATED-DESIGNED BY: KARIM ABDOLLAHIAN
CHECKED BY: PAUL MATOS
REVISED BY
DATE REVISED

LAST REVISION 06-23-14
DATE PLOTTED => 19-AUG-2014
TIME PLOTTED => 10:36

Dist	COUNTY	ROUTE	POST MILES TOTAL PROJECT	SHEET No.	TOTAL SHEETS
06	Mad	152	R0.0/1.1	44	87

Paul Matos 06-29-14
REGISTERED ELECTRICAL ENGINEER DATE

6-30-14
PLANS APPROVAL DATE

REGISTERED PROFESSIONAL ENGINEER PAUL MATOS No. 18757 Exp. 6/30/15 ELECTRICAL STATE OF CALIFORNIA

THE STATE OF CALIFORNIA OR ITS OFFICERS OR AGENTS SHALL NOT BE RESPONSIBLE FOR THE ACCURACY OR COMPLETENESS OF SCANNED COPIES OF THIS PLAN SHEET.

NOTE:

SEE STANDARD PLANS FOR DETAILS NOT SHOWN.

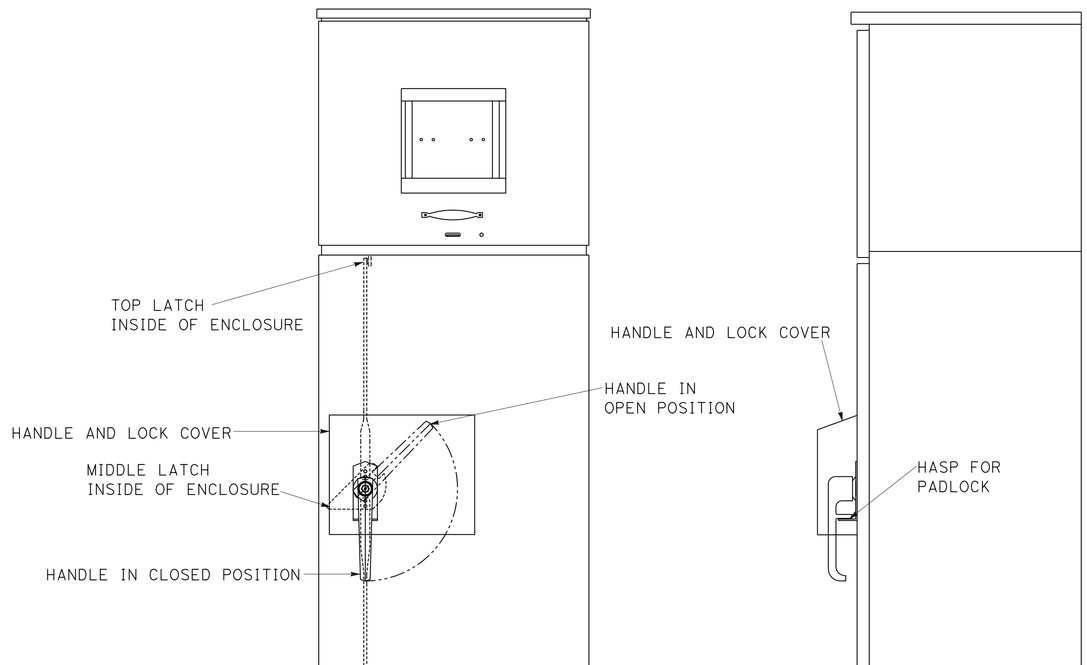

TYPE III SERVICE EQUIPMENT ENCLOSURE 3 POINT LOCK AND COVER

DETAIL C

APPROVED FOR ELECTRICAL WORK ONLY

ELECTRICAL DETAILS E-3

NO SCALE

STATE OF CALIFORNIA - DEPARTMENT OF TRANSPORTATION
Caltrans® ELECTRICAL DESIGN

FUNCTIONAL SUPERVISOR: ALI BAKHDOUD
CALCULATED-DESIGNED BY: KARIM ABDOLLAHIAN
CHECKED BY: PAUL MATOS
REVISED BY
DATE REVISED

LAST REVISION 06-23-14
DATE PLOTTED => 19-AUG-2014
TIME PLOTTED => 10:36

Dist	COUNTY	ROUTE	POST MILES TOTAL PROJECT	SHEET No.	TOTAL SHEETS
06	Mad	152	R0.0/1.1	45	87

Paul Matos 06-29-14
REGISTERED ELECTRICAL ENGINEER DATE

6-30-14
PLANS APPROVAL DATE

REGISTERED PROFESSIONAL ENGINEER PAUL MATOS No. 18757 Exp. 6/30/15 ELECTRICAL STATE OF CALIFORNIA

THE STATE OF CALIFORNIA OR ITS OFFICERS OR AGENTS SHALL NOT BE RESPONSIBLE FOR THE ACCURACY OR COMPLETENESS OF SCANNED COPIES OF THIS PLAN SHEET.

NOTE:

ITEMS SHOWN IN TABLE ARE NOT A SEPARATE PAY ITEM, FOR INFORMATION ONLY.

VEHICLE CLASSIFICATION STATION

SHEET No.	DLC	No. 2 CONDUCTOR	No. 6 CONDUCTOR	No. 8 CONDUCTOR (G)	2"C, TYPE 3	2"C, TYPE 1	3"C, TYPE 3	3"C, TYPE 1	PG&E PB	No. 5 (E)(T) PB	No. 6 (E) PB	TYPE A DETECTOR LOOP	PIEZO AXLE SENSOR WITH STC	WIRELESS MODEM	TYPE III-BF SERVICE CABINET WITH FOUNDATION	TYPE 334L CONTROLLER CABINET WITH FOUNDATION	ATC
	LF								EA								
E-1	800	30	1360	550	530	5	265	15	1	6	1	8	4	1	1	1	1

APPROVED FOR ELECTRICAL WORK ONLY

ELECTRICAL QUANTITIES
E-4

STATE OF CALIFORNIA - DEPARTMENT OF TRANSPORTATION
Caltrans ELECTRICAL DESIGN

FUNCTIONAL SUPERVISOR: ALI BAKHDOUD
CALCULATED-DESIGNED BY: KARIM ABDOLLAHIAN
CHECKED BY: PAUL MATOS
REVISED BY
DATE REVISED

LAST REVISION 06-23-14
DATE PLOTTED => 19-AUG-2014
TIME PLOTTED => 10:36

M

Maint	MAINTENANCE
Max	MAXIMUM
MB	METAL BEAM
MBB	METAL BEAM BARRIER
MBGR	METAL BEAM GUARD RAILING
Med	MEDIAN
MGS	MIDWEST GUARDRAIL SYSTEM
MH	MANHOLE
Min	MINIMUM
Misc	MISCELLANEOUS
Misc I & S	MISCELLANEOUS IRON AND STEEL
Mkr	MARKER
Mod	MODIFIED, MODIFY
Mon	MONUMENT
MP	METAL PLATE
MPGR	METAL PLATE GUARD RAILING
MR	MOVEMENT RATING
MSE	MECHANICALLY STABILIZED EMBANKMENT
Mt	MOUNTAIN, MOUNT
Mtl	MATERIAL
MVP	MAINTENANCE VEHICLE PULLOUT

N

N	NORTH
NB	NORTHBOUND
No.	NUMBER (MUST HAVE PERIOD)
Nos.	NUMBERS (MUST HAVE PERIOD)
NPS	NOMINAL PIPE SIZE
NS	NEAR SIDE
NSP	NEW STANDARD PLAN
NTS	NOT TO SCALE

O

Oblr	OBLITERATE
OC	OVERCROSSING
OD	OUTSIDE DIAMETER
OF	OUTSIDE FACE
OG	ORIGINAL GROUND
OGAC	OPEN GRADED ASPHALT CONCRETE
OGFC	OPEN GRADED FRICTION COURSE
OH	OVERHEAD
OHWM	ORDINARY HIGH WATER MARK
O-O	OUT TO OUT
Opp	OPPOSITE
OSD	OVERSIDE DRAIN

P

P	PAGE
PAP	PERFORATED ALUMINUM PIPE
PB	PULL BOX
PC	POINT OF CURVATURE, PRECAST
PCC	POINT OF COMPOUND CURVE, PORTLAND CEMENT CONCRETE
PCMS	PORTABLE CHANGEABLE MESSAGE SIGN
PCP	PERFORATED CONCRETE PIPE, PRESTRESSED CONCRETE PIPE
PCVC	POINT OF COMPOUND VERTICAL CURVE
PEC	PERMIT TO ENTER AND CONSTRUCT
Ped	PEDESTRIAN
Ped OC	PEDESTRIAN OVERCROSSING
Ped UC	PEDESTRIAN UNDERCROSSING
Perm Mtl	PERMEABLE MATERIAL

P continued

PG	PROFILE GRADE
PI	POINT OF INTERSECTION
PJP	PARTIAL JOINT PENETRATION
Pkwy	PARKWAY
ℙL,PL	PLATE
P/L	PROPERTY LINE
PM	POST MILE, TIME FROM NOON TO MIDNIGHT
PN	PAVING NOTCH
POC	POINT OF HORIZONTAL CURVE
POT	POINT OF TANGENT
POVC	POINT OF VERTICAL CURVE
PP	PIPE PILE, PLASTIC PIPE, POWER POLE
PPL	PREFORMED PERMEABLE LINER
PPP	PERFORATED PLASTIC PIPE
PRC	POINT OF REVERSE CURVE
PRF	PAVEMENT REINFORCING FABRIC
PRVC	POINT OF REVERSE VERTICAL CURVE
PS&E	PLANS, SPECIFICATIONS AND ESTIMATES
PS, P/S	PRESTRESSED
PSP	PERFORATED STEEL PIPE
PT	POINT OF TANGENCY
PVC	POLYVINYL CHLORIDE
Pvmt	PAVEMENT

Q

Qty	QUANTITY

R

R	RADIUS
R & D	REMOVE AND DISPOSE
R & S	REMOVE AND SALVAGE
R/C	RATE OF CHANGE
RCA	REINFORCED CONCRETE ARCH
RCB	REINFORCED CONCRETE BOX
RCP	REINFORCED CONCRETE PIPE
RCPA	REINFORCED CONCRETE PIPE ARCH
Rd	ROAD
Reinf	REINFORCED, REINFORCEMENT, REINFORCING
Rel	RELOCATE
Repl	REPLACEMENT
Ret	RETAINING
Rev	REVISED, REVISION
Rdwy	ROADWAY
RHMA	RUBBERIZED HOT MIX ASPHALT
Riv	RIVER
RM	ROAD-MIXED
RP	RADIUS POINT, REFERENCE POINT
RR	RAILROAD
RSP	ROCK SLOPE PROTECTION, REVISED STANDARD PLAN
Rt	RIGHT
Rte	ROUTE
RW	REDWOOD, RETAINING WALL
R/W	RIGHT OF WAY
Rwy	RAILWAY

S

S	SOUTH, SUPPLEMENT
SAE	STRUCTURE APPROACH EMBANKMENT
Salv	SALVAGE
SAPP	STRUCTURAL ALUMINUM PLATE PIPE
SB	SOUTHBOUND
SC	SAND CUSHION
SCSP	SLOTTED CORRUGATED STEEL PIPE
SD	STORM DRAIN
Sec	SECOND, SECTION
Sep	SEPARATION
SG	SUBGRADE
Shld	SHOULDER
Sht	SHEET
Sim	SIMILAR
℄	STATION LINE
SM	SELECTED MATERIAL
Spec	SPECIAL, SPECIFICATIONS
SPP	SLOTTED PLASTIC PIPE
SS	SLOPE STAKE
SSBM	STRAP AND SADDLE BRACKET METHOD
SSD	STRUCTURAL SECTION DRAIN
SSPA	STRUCTURAL STEEL PLATE ARCH
SSPP	STRUCTURAL STEEL PLATE PIPE
SSPPA	STRUCTURAL STEEL PLATE PIPE ARCH
SSRP	STEEL SPIRAL RIB PIPE
St	STREET
Sta	STATION
STBB	SINGLE THRIE BEAM BARRIER
Std	STANDARD
Str	STRUCTURE
Surf	SURFACING
SW	SIDEWALK, SOUND WALL
Swr	SEWER
Sym	SYMMETRICAL
S4S	SURFACE 4 SIDES

T

T	SEMI-TANGENT
Tan	TANGENT
TBB	THRIE BEAM BARRIER
Tbr	TIMBER
TC	TOP OF CURB
TCB	TRAFFIC CONTROL BOX
TCE	TEMPORARY CONSTRUCTION EASEMENT
Tel	TELEPHONE
Temp	TEMPORARY
TG	TOP OF GRADE
Tot	TOTAL
TP	TELEPHONE POLE
TPB	TREATED PERMEABLE BASE
TPM	TREATED PERMEABLE MATERIAL
Trans	TRANSITION

T continued

TS	TRANSVERSE, TRAFFIC SIGNAL, TUBULAR STEEL
Typ	TYPICAL

U

UC	UNDERCROSSING
UD	UNDERDRAIN
UG	UNDERGROUND
UON	UNLESS OTHERWISE NOTED
UP	UNDERPASS

V

V	VALVE, DESIGN SPEED
Var	VARIABLE, VARIES
VC	VERTICAL CURVE
VCP	VITRIFIED CLAY PIPE
Vert	VERTICAL
Via	VIADUCT
Vol	VOLUME

W

W	WEST, WIDTH
WB	WESTBOUND
WH	WEEP HOLE
WM	WIRE MESH
WS	WATER SURFACE
WSP	WELDED STEEL PIPE
Wt	WEIGHT
WV	WATER VALVE
WW	WINGWALL
WWLOL	WINGWALL LAYOUT LINE

X

X Sec	CROSS SECTION
Xing	CROSSING

Y

Yr	YEAR
Yrs	YEARS

Dist	COUNTY	ROUTE	POST MILES TOTAL PROJECT	SHEET No.	TOTAL SHEETS
06	Mad	152	R0.0/1.1	46	87

Grace M. Tsushima
REGISTERED CIVIL ENGINEER

July 19, 2013
PLANS APPROVAL DATE

REGISTERED PROFESSIONAL ENGINEER Grace M. Tsushima No. C49814 Exp. 9-30-14 CIVIL STATE OF CALIFORNIA

THE STATE OF CALIFORNIA OR ITS OFFICERS OR AGENTS SHALL NOT BE RESPONSIBLE FOR THE ACCURACY OR COMPLETENESS OF SCANNED COPIES OF THIS PLAN SHEET.

TO ACCOMPANY PLANS DATED 6-30-14

UNIT OF MEASUREMENT SYMBOLS:

Some of the symbols used in the project plan quantity tables and in the Bid Item List are:

TABLE A

SYMBOL USED	DEFINITIONS
ACRE	ACRE
CF	CUBIC FOOT
CY	CUBIC YARD
EA	EACH
GAL	GALLON
LB	POUND
LF	LINEAR FOOT
SQFT	SQUARE FOOT
SQYD	SQUARE YARD
STA	100 FEET
TAB	TABLET
TON	2,000 POUNDS

Some of the symbols used in the plans other than in the project plan quantity tables are:

TABLE B

SYMBOL USED	DEFINITIONS
ksi	KIPS PER SQUARE INCH
ksf	KIPS PER SQUARE FOOT
psi	POUNDS PER SQUARE INCH
psf	POUNDS PER SQUARE FOOT
lb/ft^3, pcf	POUNDS PER CUBIC FOOT
tsf	TONS PER SQUARE FOOT
mph, MPH *	MILES PER HOUR
ø	NOMINAL DIAMETER
oz	OUNCE
lb	POUND
kip	1,000 POUNDS
cal	CALORIE
ft	FOOT OR FEET
gal	GALLON

* For use on a sign panel only

STATE OF CALIFORNIA
DEPARTMENT OF TRANSPORTATION

ABBREVIATIONS (SHEET 2 OF 2)

NO SCALE

RSP A10B DATED JULY 19, 2013 SUPERSEDES STANDARD PLAN A10B DATED MAY 20, 2011 - PAGE 2 OF THE STANDARD PLANS BOOK DATED 2010.

REVISED STANDARD PLAN RSP A10B

2010 REVISED STANDARD PLAN RSP A10B

6-7-13

Dist	COUNTY	ROUTE	POST MILES TOTAL PROJECT	SHEET No.	TOTAL SHEETS
06	Mad	152	R0.0/1.1	47	87

REGISTERED CIVIL ENGINEER

July 18, 2014
PLANS APPROVAL DATE

REGISTERED PROFESSIONAL ENGINEER
Carl M. Duan
No. C59976
Exp. 6-30-16
CIVIL
STATE OF CALIFORNIA

THE STATE OF CALIFORNIA OR ITS OFFICERS OR AGENTS SHALL NOT BE RESPONSIBLE FOR THE ACCURACY OR COMPLETENESS OF SCANNED COPIES OF THIS PLAN SHEET.

TO ACCOMPANY PLANS DATED 6-30-14

2010 REVISED STANDARD PLAN RSP A62DA

DESIGN NOTES:

Design: AASHTO LRFD Bridge Design Specifications, 4th edition with California Amendments. ACPA DESIGN DATA 1, October 2007. INDIRECT DESIGN METHOD

Soil: w Fe = 162 pcf Installation Type 1
w Fe = 168 pcf Installation Types 2 & 3
w = Unit weight of soil (pcf)
Fe = Soil-structure interaction factor

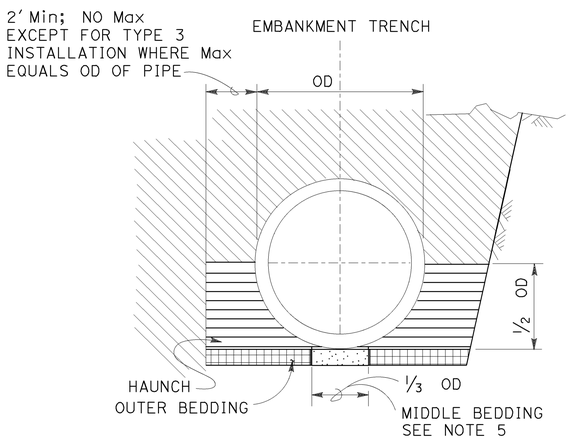

BACKFILL

LEGEND:

- ROADWAY EMBANKMENT
- STRUCTURE BACKFILL (CULVERT) FOR HAUNCH SEE NOTE 6
- STRUCTURE BACKFILL (CULVERT) FOR OUTER BEDDING SEE NOTE 6
- LOOSE BACKFILL
- STRUCTURE EXCAVATION (CULVERT)

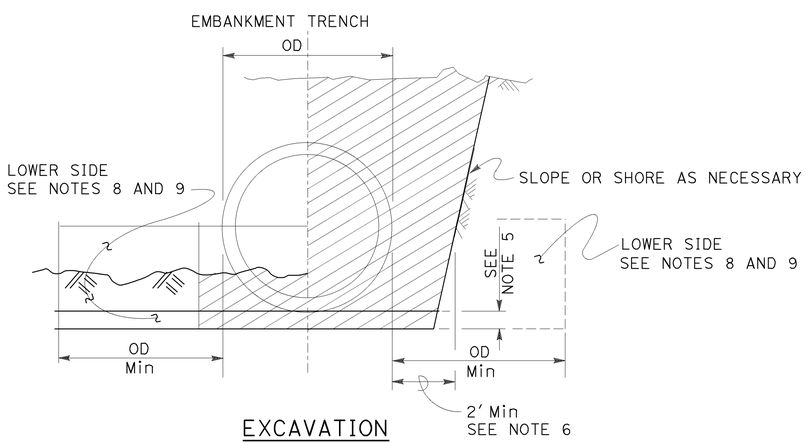

EXCAVATION

INSTALLATION TYPE 1:

The haunch and outer bedding shall be compacted to a minimum 90 percent relative compaction. In addition, the minimum sand equivalent in these areas shall be 30 and the maximum percentage passing the No. 200 sieve size shall be 12.

INSTALLATION TYPE 2:

The haunch and outer bedding shall be compacted to a minimum 90 percent relative compaction. In addition, the minimum sand equivalent in these areas shall be 25.

INSTALLATION TYPE 3:

The haunch and outer bedding shall be compacted to a minimum 85 percent relative compaction. 90 percent relative compaction will be required where the fill over the pipe is less than 4′-0″ or 1/2 OD. In addition, the minimum sand equivalent in these areas shall be 25 and the material shall not contain rocks, broken concrete, or other solid material exceeding 3″ in greatest dimension.

INSTALLATION TYPE 1

MINIMUM CLASS AND D-LOAD	COVER	
	60″ Dia AND SMALLER	OVER 60″ Dia TO 120″ Dia Max
CLASS II 1000D	14.9′	12.9′
CLASS III 1350D	15.0′ - 21.9′	13.0′ - 18.9′
CLASS III SPECIAL 1700D	22.0′ - 27.9′	19.0′ - 24.9′
CLASS IV 2000D	28.0′ - 32.9′	25.0′ - 29.9′
CLASS IV SPECIAL 2500D	33.0′ - 41.9′	30.0′ - 38.9′
CLASS V 3000D	42.0′ - 49.9′	39.0′ - 46.9′
CLASS V SPECIAL 3600D	50.0′ - 60.0′	47.0′ - 58.0′

INSTALLATION TYPE 2

MINIMUM CLASS AND D-LOAD	COVER	
	60″ Dia AND SMALLER	OVER 60″ Dia TO 120″ Dia Max
CLASS II 1000D	11.9′	9.9′
CLASS III 1350D	12.0′ - 15.9′	10.0′ - 14.9′
CLASS III SPECIAL 1700D	16.0′ - 20.9′	15.0′ - 19.9′
CLASS IV 2000D	21.0′ - 24.9′	20.0′ - 23.9′
CLASS IV SPECIAL 2500D	25.0′ - 31.9′	24.0′ - 30.9′
CLASS V 3000D	32.0′ - 37.9′	31.0′ - 37.9′
CLASS V SPECIAL 3600D	38.0′ - 46.0′	38.0′ - 46.0′

INSTALLATION TYPE 3

MINIMUM CLASS AND D-LOAD	COVER	
	60″ Dia AND SMALLER	OVER 60″ Dia TO 120″ Dia Max
CLASS II 1000D	8.9′	5.9′
CLASS III 1350D	9.0′ - 11.9′	6.0′ - 10.9′
CLASS III SPECIAL 1700D	12.0′ - 15.9′	11.0′ - 13.9′
CLASS IV 2000D	16.0′ - 18.9′	14.0′ - 17.9′
CLASS IV SPECIAL 2500D	19.0′ - 24.9′	18.0′ - 22.9′
CLASS V 3000D	25.0′ - 29.9′	23.0′ - 28.9′
CLASS V SPECIAL 3600D	30.0′ - 36.0′	29.0′ - 35.0′

NOTES:

1. Unless otherwise shown on the plans or specified in the special provision, the Contractor shall have the option of selecting the class of RCP and the type of installation to be used, provided the height of cover does not exceed the value shown for the RCP selected.
   Example: 24″ RCP culvert with maximum cover of 24′-0″ the options are:
   a) Class III Special or stronger with Installation Type 1.
   b) Class IV or stronger with Installation Type 2.
   c) Class IV Special or stronger with Installation Type 3.
   Cover is defined as the maximum vertical distance from top of the pipe to finished grade within the length of any given culvert.
2. The class of RCP and Installation Type selected shall be the same throughout the length of any given culvert.
3. The "length of any culvert" is defined as the culvert between:
   a) Successive drainage structure (inlets, junction boxes, headwalls, etc.).
   b) A drainage structure and the inlet or outlet end of the culvert.
   c) The inlet and outlet end of the culvert when there are no intervening drainage structures.
4. Oval and arch shaped RCP shall not be used.
5. Bedding depth: 1/25 OD Min, not less than 3″.
6. Slurry cement backfill may be substituted for backfill in the outer bedding and haunch areas. If slurry is used, the outer and middle beddings shall be omitted. Prior to installation, the soil under the middle 1/3 of the outside diameter of the pipe shall be softened by scarifying or other means to a minimum depth of 1/25 OD, but not less than 3″. Where slurry cement backfill is used, clear distance to trench wall may be reduced as set forth in the Standard Specifications.
7. Backfill shall be placed full width of excavation except where dimensions are shown for backfill width or thickness. Dimensions shown are minimum.
8. Lower side shall be suitable material as determined by the Engineer. Otherwise it shall be considered unsuitable as set forth in of the Standard Specifications. See Note 9.
9. Where the pipe is placed in a trench, if the trench walls are sloped at 5 vertical to 1 horizontal or steeper for at least 90 percent of the trench height or up to not less than 12″ from the grading plane, the firmness of the soil in the lower side need not be considered.
10. Non-reinforced precast concrete pipe sizes 3′-0″ or smaller may be placed under installation Types 1, 2 or 3.

STATE OF CALIFORNIA
DEPARTMENT OF TRANSPORTATION

EXCAVATION AND BACKFILL CONCRETE PIPE CULVERTS INDIRECT DESIGN METHOD

NO SCALE

RSP A62DA DATED JULY 18, 2014 SUPERSEDES STANDARD PLAN A62DA DATED MAY 20, 2011 - PAGE 24 OF THE STANDARD PLANS BOOK DATED 2010.

REVISED STANDARD PLAN RSP A62DA

Dist	COUNTY	ROUTE	POST MILES TOTAL PROJECT	SHEET No.	TOTAL SHEETS
06	Mad	152	R0.0/1.1	48	87

Randell D. Hiatt
REGISTERED CIVIL ENGINEER

July 19, 2013
PLANS APPROVAL DATE

REGISTERED PROFESSIONAL ENGINEER
Randell D. Hiatt
No. C50200
Exp. 6-30-15
CIVIL
STATE OF CALIFORNIA

THE STATE OF CALIFORNIA OR ITS OFFICERS OR AGENTS SHALL NOT BE RESPONSIBLE FOR THE ACCURACY OR COMPLETENESS OF SCANNED COPIES OF THIS PLAN SHEET.

TO ACCOMPANY PLANS DATED 6-30-14

2010 REVISED STANDARD PLAN RSP A77L1

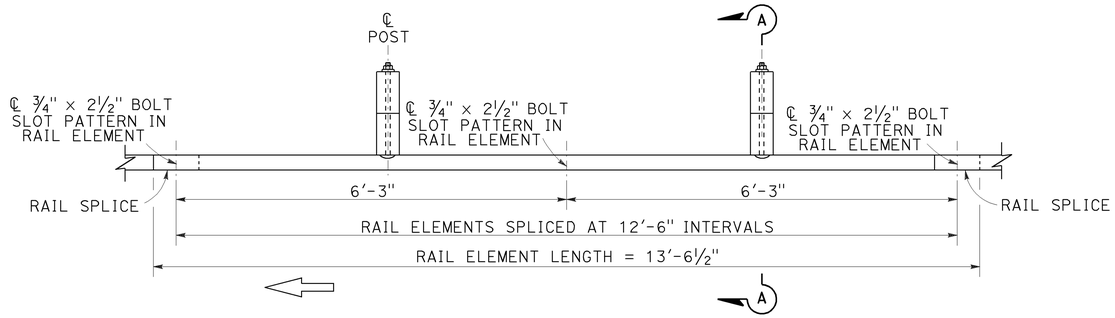

PLAN

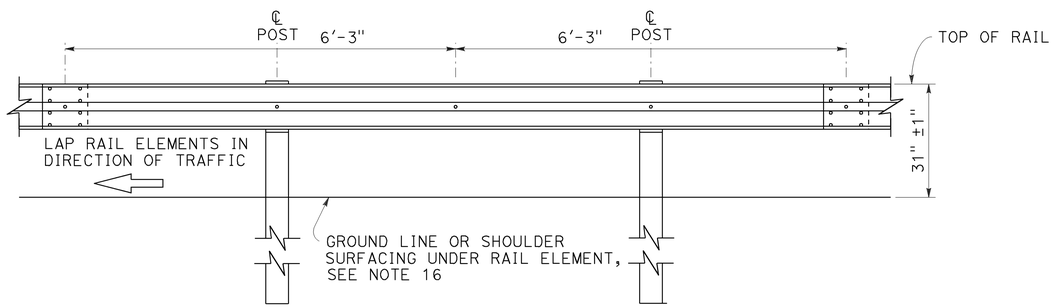

ELEVATION

MIDWEST GUARDRAIL SYSTEM WITH WOOD POST AND BLOCKS

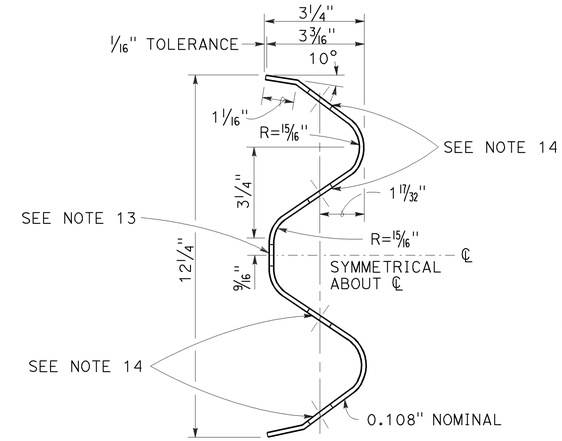

SECTION THRU RAIL ELEMENT

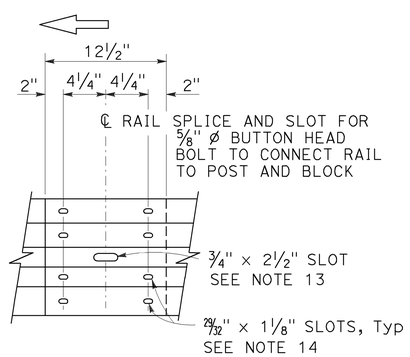

ELEVATION

RAIL ELEMENT SPLICE DETAIL

a) Connect the over lapped end of the rail elements with ⅝" ø × 1⅜" button head oval shoulder splice bolts inserted into the 29/32" × 1⅛" slots and bolted together with ⅝" ø recessed hex nuts. Recess of hex nut points toward rail element. A total of 8 bolts and nuts are to be used at each rail splice connection.

b) The ends of the rail elements are to be overlapped in the direction of traffic (see details).

c) Where end cap is to be attached to the end of a rail element, a total of 4 of the above described splice bolts and nuts are to be used.

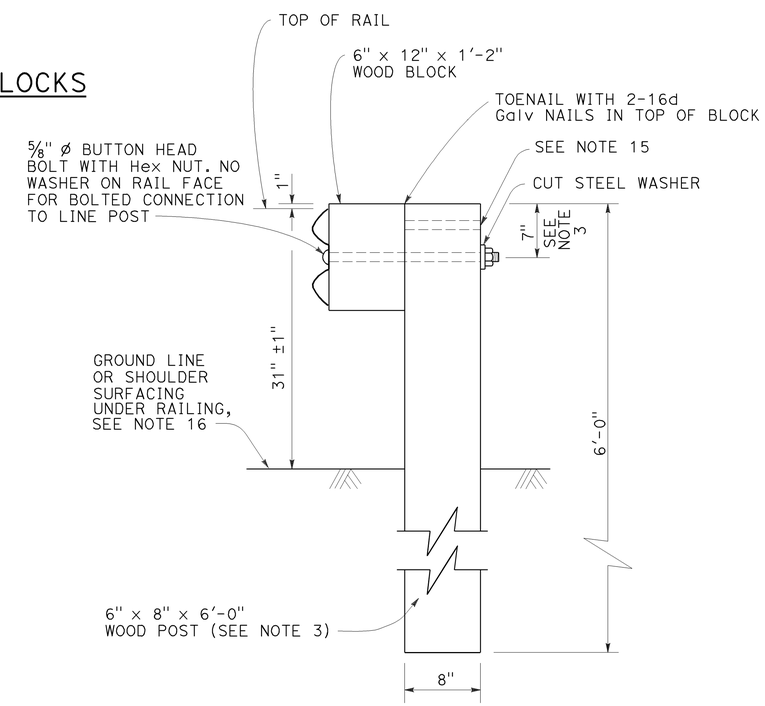

SECTION A-A

TYPICAL WOOD LINE POST INSTALLATION

See Note 4

NOTES:

1. For details of steel post installations, see Revised Standard Plan RSP A77L2.
2. For details of standard hardware used to construct MGS, see Revised Standard Plan RSP A77M1.
3. For details of wood posts and wood blocks used to construct MGS, see Revised Standard Plan RSP A77N1.
4. For additional installation details, see Revised Standard Plan RSP A77N3.
5. MGS post spacing to be 6'-3" center to center, except as otherwise noted.
6. For MGS typical layouts, see the A77P, A77Q and A77R Series of Standard Plans.
7. If railing is connected to terminal system end treatment, use 31" height terminal system end treatment.
8. For MGS end anchor details, see Revised Standard Plans RSP A77S1 and RSP A77T2.
9. For details of MGS transition to bridge railing, see Revised Standard Plan RSP A77U4.
10. For additional details of MSG connection to bridge railing, see Revised Standard Plans RSP A77U1, RSP A77U2 and RSP A77V1.
11. For MGS connection details to abutments and walls, see Revised Standard Plan RSP A77U3.
12. For typical MGS delineation and dike positioning details, see Revised Standard Plan RSP A77N4.
13. Slotted hole for bolted connection of rail element to block and post. See "Section Thru Rail Element".
14. Slotted holes for splice bolts to overlap ends of rail element. See "Section Thru Rail Element".
15. Additional hole in uppermost portion of line post is for potential future adjustments of railing height. See Revised Standard Plan RSP A77N1.
16. Install posts in soil.

STATE OF CALIFORNIA
DEPARTMENT OF TRANSPORTATION

MIDWEST GUARDRAIL SYSTEM STANDARD RAILING SECTION (WOOD POST WITH WOOD BLOCK)

NO SCALE

RSP A77L1 DATED JULY 19, 2013 SUPPLEMENTS STANDARD PLANS BOOK DATED 2010.

REVISED STANDARD PLAN RSP A77L1

Dist	COUNTY	ROUTE	POST MILES TOTAL PROJECT	SHEET No.	TOTAL SHEETS
06	Mad	152	R0.0/1.1	49	87

Randell D. Hiatt
REGISTERED CIVIL ENGINEER

July 19, 2013
PLANS APPROVAL DATE

REGISTERED PROFESSIONAL ENGINEER
Randell D. Hiatt
No. C50200
Exp. 6-30-15
CIVIL
STATE OF CALIFORNIA

THE STATE OF CALIFORNIA OR ITS OFFICERS OR AGENTS SHALL NOT BE RESPONSIBLE FOR THE ACCURACY OR COMPLETENESS OF SCANNED COPIES OF THIS PLAN SHEET.

TO ACCOMPANY PLANS DATED 6-30-14

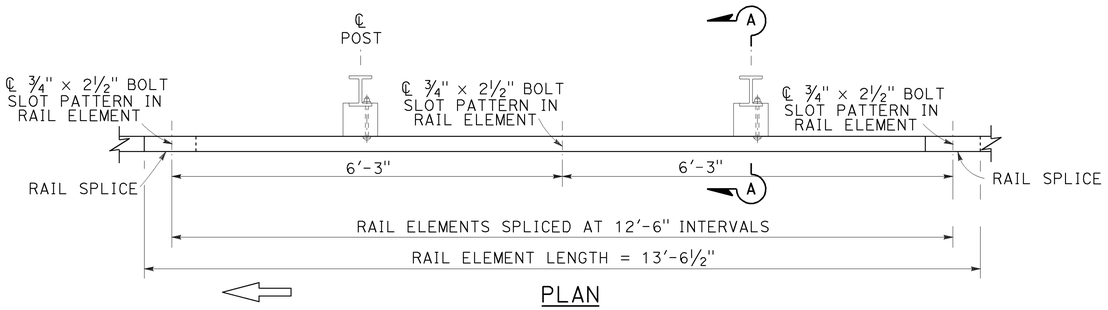

PLAN

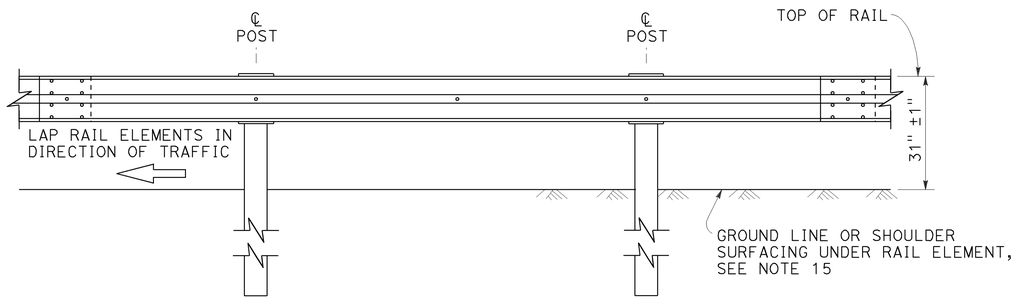

ELEVATION

MIDWEST GUARDRAIL SYSTEM WITH STEEL POSTS AND NOTCHED WOOD OR NOTCHED RECYCLED PLASTIC BLOCKS

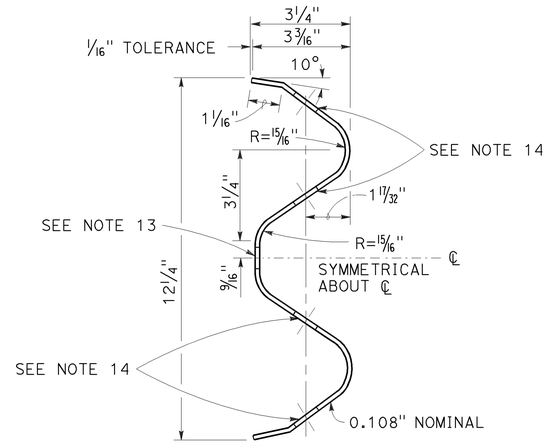

SECTION THRU RAIL ELEMENT

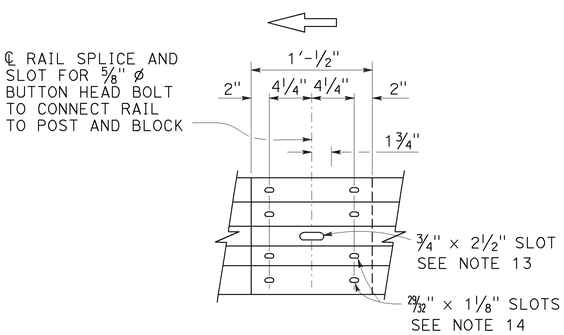

ELEVATION

RAIL ELEMENT SPLICE DETAIL

a) Connect the over lapped end of the rail elements with ⅝" ø × 1⅜" button head oval shoulder splice bolts inserted into the 29⁄32" × 1⅛" slots and bolted together with ⅝" ø recessed hex nuts. Recess of hex nut points toward rail element. A total of 8 bolts and nuts are to be used at each rail splice connection.

b) The ends of the rail elements are to be overlapped in the direction of traffic (see details).

c) Where end cap is to be attached to the end of a rail element, a total of 4 of the above described splice bolts and nuts are to be used.

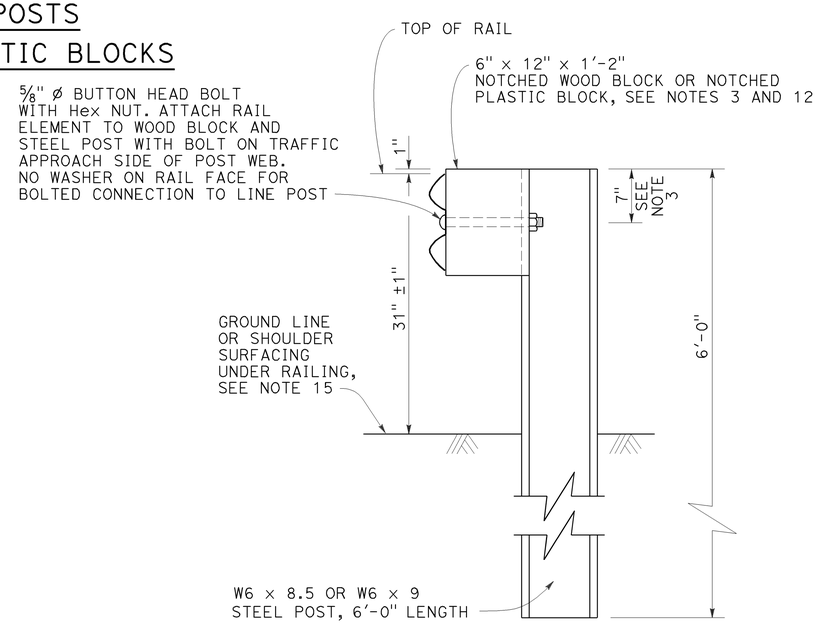

SECTION A-A

TYPICAL STEEL LINE POST INSTALLATION

See Note 4

NOTES:

1. For details of wood post installations, see Revised Standard Plan RSP A77L1.
2. For details of standard hardware used to construct MGS, see Revised Standard Plan RSP A77M1.
3. For details of steel posts and notched wood blocks used to construct MGS, see Revised Standard Plan RSP A77N2.
4. For additional installation details, see Revised Standard Plan RSP A77N3.
5. MGS post spacing to be 6'-3" center to center, except as otherwise noted.
6. For MGS typical layouts, see the A77P, A77Q and A77R Series of Standard Plans.
7. If railing is connected to terminal system end treatment, use 31" height terminal system end treatment.
8. For MGS end anchor details, see Revised Standard Plans RSP A77S1 and RSP A77T2.
9. For details of MGS transition to bridge railing, see Revised Standard Plan RSP A77U4.
10. For additional details of MGS connection to bridge railings, see Revised Standard Plans RSP A77U1, RSP A77U2 and RSP A77V1.
11. For dike positioning and MGS delineation details, see Revised Standard Plan RSP A77N4.
12. Notched face of block faces steel post.
13. Slotted hole for bolted connection of rail element to block and post. See "Section Thru Rail Element".
14. Slotted holes for splice bolts to overlap ends of rail element. See "Section Thru Rail Element".
15. Install posts in soil.

STATE OF CALIFORNIA
DEPARTMENT OF TRANSPORTATION

MIDWEST GUARDRAIL SYSTEM STANDARD RAILING SECTION (STEEL POST WITH NOTCHED WOOD OR NOTCHED RECYCLED PLASTIC BLOCK)

NO SCALE

RSP A77L2 DATED JULY 19, 2013 SUPPLEMENTS THE STANDARD PLANS BOOK DATED 2010.

REVISED STANDARD PLAN RSP A77L2

2010 REVISED STANDARD PLAN RSP A77L2

7-3-13

Dist	COUNTY	ROUTE	POST MILES TOTAL PROJECT	SHEET No.	TOTAL SHEETS
06	Mad	152	R0.0/1.1	50	87

Randell D. Hiatt
REGISTERED CIVIL ENGINEER

July 19, 2013
PLANS APPROVAL DATE

REGISTERED PROFESSIONAL ENGINEER
Randell D. Hiatt
No. C50200
Exp. 6-30-15
CIVIL
STATE OF CALIFORNIA

THE STATE OF CALIFORNIA OR ITS OFFICERS OR AGENTS SHALL NOT BE RESPONSIBLE FOR THE ACCURACY OR COMPLETENESS OF SCANNED COPIES OF THIS PLAN SHEET.

TO ACCOMPANY PLANS DATED 6-30-14

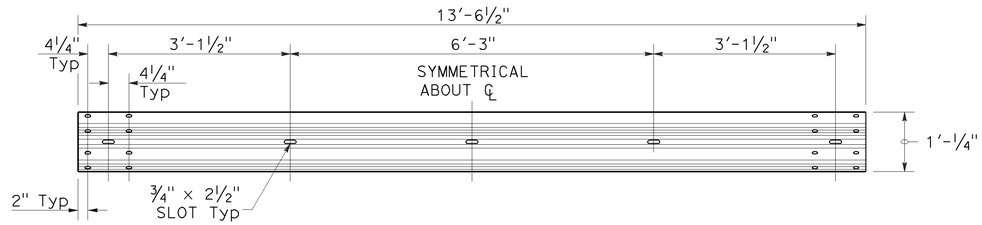

TYPICAL RAIL ELEMENT

NOTE:

1. Slotted holes for splice bolts to overlap ends of rail element.

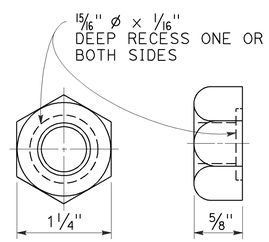

⅝" ø RECESS NUT

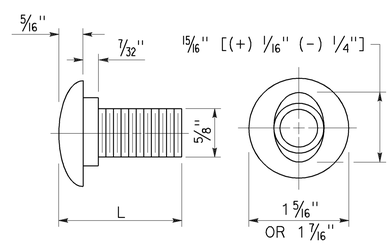

⅝" ø BUTTON HEAD BOLT

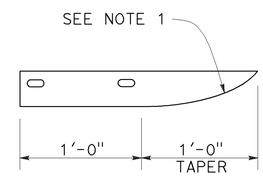

PLAN

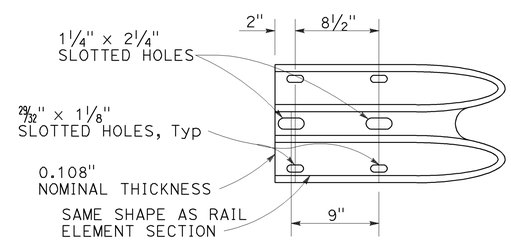

ELEVATION

END CAP
(TYPE A)

BUTTON HEAD BOLT

L	THREAD LENGTH
1⅜"	FULL THREAD LENGTH
2"	FULL THREAD LENGTH
10"	4" Min THREAD LENGTH
18"	4" Min THREAD LENGTH
20"	4" Min THREAD LENGTH
22"	4" Min THREAD LENGTH
26"	4" Min THREAD LENGTH
36"	4" Min THREAD LENGTH
** 2¾"	2" Min THREAD LENGTH
** 19"	4" Min THREAD LENGTH

** For nested rail applications.

STATE OF CALIFORNIA
DEPARTMENT OF TRANSPORTATION

MIDWEST GUARDRAIL SYSTEM STANDARD HARDWARE

NO SCALE

RSP A77M1 DATED JULY 19, 2013 SUPPLEMENTS THE STANDARD PLANS BOOK DATED 2010.

REVISED STANDARD PLAN RSP A77M1

2010 REVISED STANDARD PLAN RSP A77M1

7-3-13

Dist	COUNTY	ROUTE	POST MILES TOTAL PROJECT	SHEET No.	TOTAL SHEETS
06	Mad	152	R0.0/1.1	51	87

Randell D. Hiatt
REGISTERED CIVIL ENGINEER

July 19, 2013
PLANS APPROVAL DATE

REGISTERED PROFESSIONAL ENGINEER
Randell D. Hiatt
No. C50200
Exp. 6-30-15
CIVIL
STATE OF CALIFORNIA

THE STATE OF CALIFORNIA OR ITS OFFICERS OR AGENTS SHALL NOT BE RESPONSIBLE FOR THE ACCURACY OR COMPLETENESS OF SCANNED COPIES OF THIS PLAN SHEET.

TO ACCOMPANY PLANS DATED 6-30-14

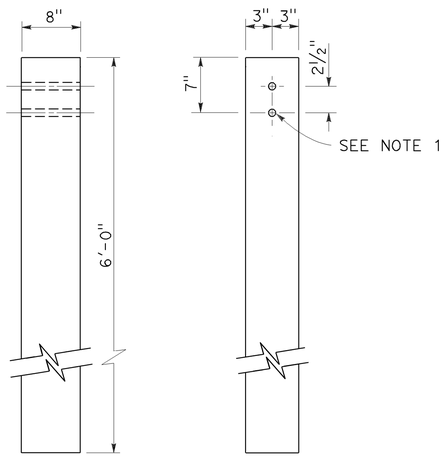

SIDE FRONT

6" x 8" WOOD POST
See Note 3

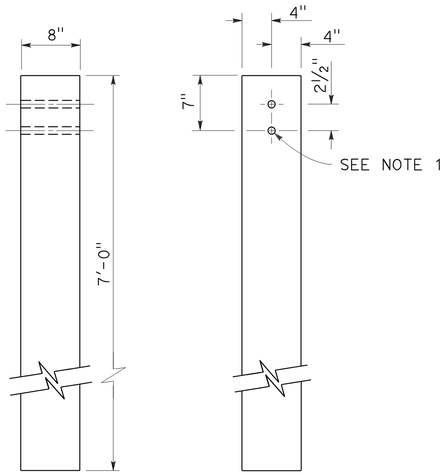

SIDE FRONT

8" x 8" WOOD POST
See Note 4

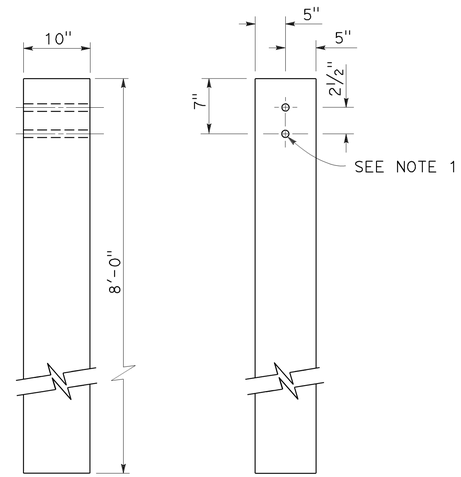

SIDE FRONT

10" x 10" WOOD POST
See Note 5

NOTES:

1. All holes in wood posts and blocks shall be ¾" Dia ± 1/16".
2. Dimensions shown for wood post are nominal.
3. This post and block combination used for standard line post sections of MGS.
4. This post and 8" x 12" block combination used for line post sections of MGS on narrow roadways.
5. This post and 8" x 12" block combination is typically used where strengthened line post sections of MGS are warranted to shield fixed objects.
6. See Revised Standard Plan RSP A77L3 for use of 6" x 8" and 8" x 8" wood blocks.

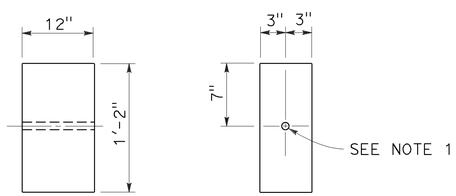

SIDE FRONT

6" x 12" WOOD BLOCK
See Note 3

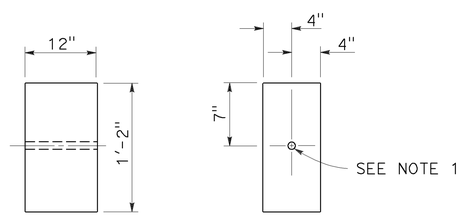

SIDE FRONT

8" x 12" WOOD BLOCK

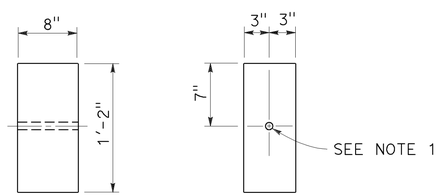

SIDE FRONT

6" x 8" WOOD BLOCK
Only for use with metal beam guard rail see Note 6

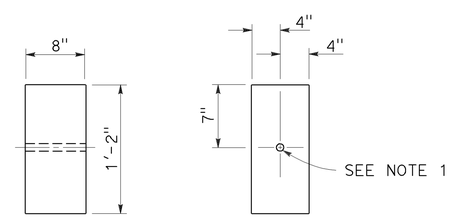

SIDE FRONT

8" x 8" WOOD BLOCK
Only for use with metal beam guard rail see Note 6

STATE OF CALIFORNIA
DEPARTMENT OF TRANSPORTATION

MIDWEST GUARDRAIL SYSTEM WOOD POST AND WOOD BLOCK DETAILS

NO SCALE

RSP A77N1 DATED JULY 19, 2013 SUPPLEMENTS THE STANDARD PLANS BOOK DATED 2010.

REVISED STANDARD PLAN RSP A77N1

2010 REVISED STANDARD PLAN RSP A77N1

7-3-13

Dist	COUNTY	ROUTE	POST MILES TOTAL PROJECT	SHEET No.	TOTAL SHEETS
06	Mad	152	R0.0/1.1	52	87

Randell D. Hiatt
REGISTERED CIVIL ENGINEER

November 15, 2013
PLANS APPROVAL DATE

REGISTERED PROFESSIONAL ENGINEER
Randell D. Hiatt
No. C50200
Exp. 6-30-15
CIVIL
STATE OF CALIFORNIA

THE STATE OF CALIFORNIA OR ITS OFFICERS OR AGENTS SHALL NOT BE RESPONSIBLE FOR THE ACCURACY OR COMPLETENESS OF SCANNED COPIES OF THIS PLAN SHEET.

TO ACCOMPANY PLANS DATED 6-30-14

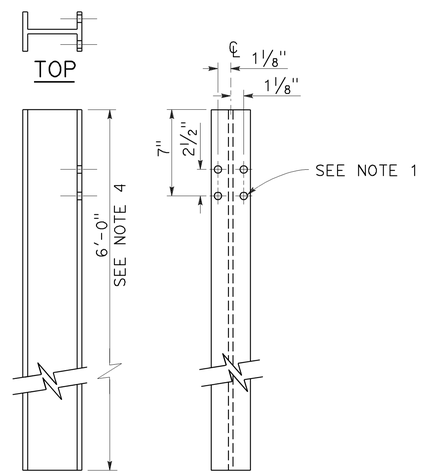

SIDE FRONT

W6 x 9 OR W6 x 8.5 STEEL POST

See Note 4

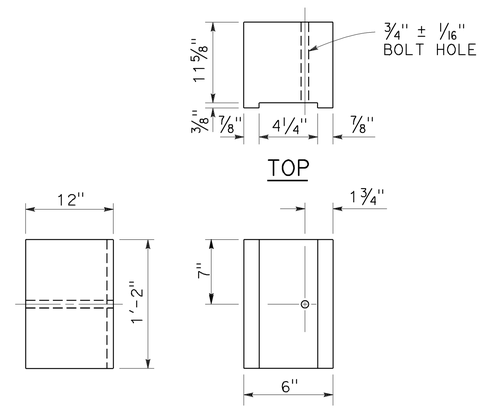

SIDE FRONT

6" x 12" NOTCHED WOOD BLOCK

See Notes 2 and 3

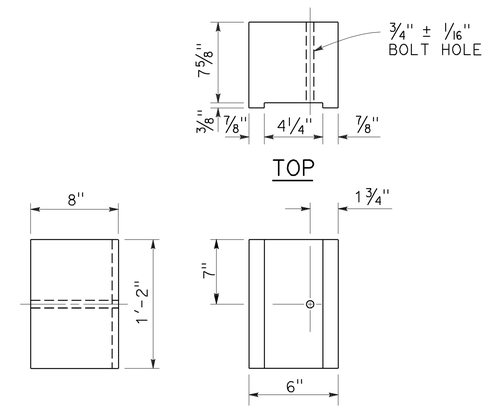

SIDE FRONT

6" x 8" NOTCHED WOOD BLOCK

Only for use with metal beam guard railing. See Note 5

NOTES:

1. All holes in steel post shall be 13/16" Dia maximum.
2. Dimensions shown for wood block are nominal.
3. Notched face of block faces steel post.
4. 6'-0" length posts to be used for typical roadway installation. See Revised Standard Plan RSP A77N3.
5. See Revised Standard Plan RSP A77L3 for use of 6" x 8" and 8" x 8" notched wood blocks.
6. This post and 8" x 12" block combination to be used for line post sections of MGS on narrow roadways and where strengthened line post sections of MGS are warranted to shield fixed objects.

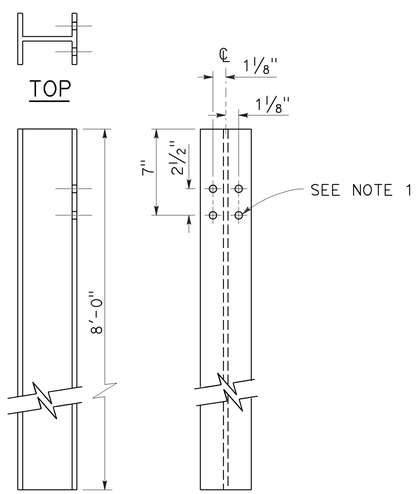

SIDE FRONT

W6 x 15 STEEL POST

See Note 6

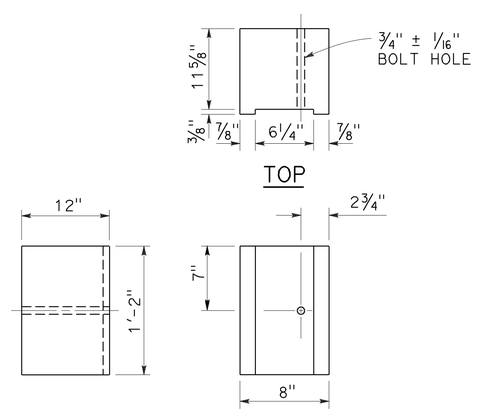

SIDE FRONT

8" x 12" NOTCHED WOOD BLOCK

See Notes 2 and 3

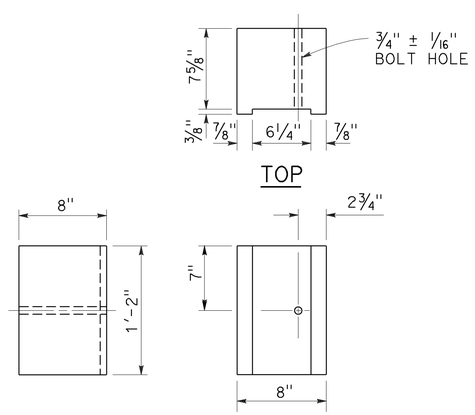

SIDE FRONT

8" x 8" NOTCHED WOOD BLOCK

Only for use with metal beam guard railing. See Note 5

STATE OF CALIFORNIA
DEPARTMENT OF TRANSPORTATION

MIDWEST GUARDRAIL SYSTEM STEEL POST AND NOTCHED WOOD BLOCK DETAILS

NO SCALE

RSP A77N2 DATED NOVEMBER 15, 2013 SUPERSEDES RSP A77N2 DATED JULY 19, 2013 THAT SUPPLEMENTS THE STANDARD PLANS BOOK DATED 2010.

REVISED STANDARD PLAN RSP A77N2

2010 REVISED STANDARD PLAN RSP A77N2

10-29-13

Dist	COUNTY	ROUTE	POST MILES TOTAL PROJECT	SHEET No.	TOTAL SHEETS
06	Mad	152	R0.0/1.1	53	87

Randell D. Hiatt
REGISTERED CIVIL ENGINEER

July 19, 2013
PLANS APPROVAL DATE

REGISTERED PROFESSIONAL ENGINEER
Randell D. Hiatt
No. C50200
Exp. 6-30-15
CIVIL
STATE OF CALIFORNIA

THE STATE OF CALIFORNIA OR ITS OFFICERS OR AGENTS SHALL NOT BE RESPONSIBLE FOR THE ACCURACY OR COMPLETENESS OF SCANNED COPIES OF THIS PLAN SHEET.

TO ACCOMPANY PLANS DATED 6-30-14

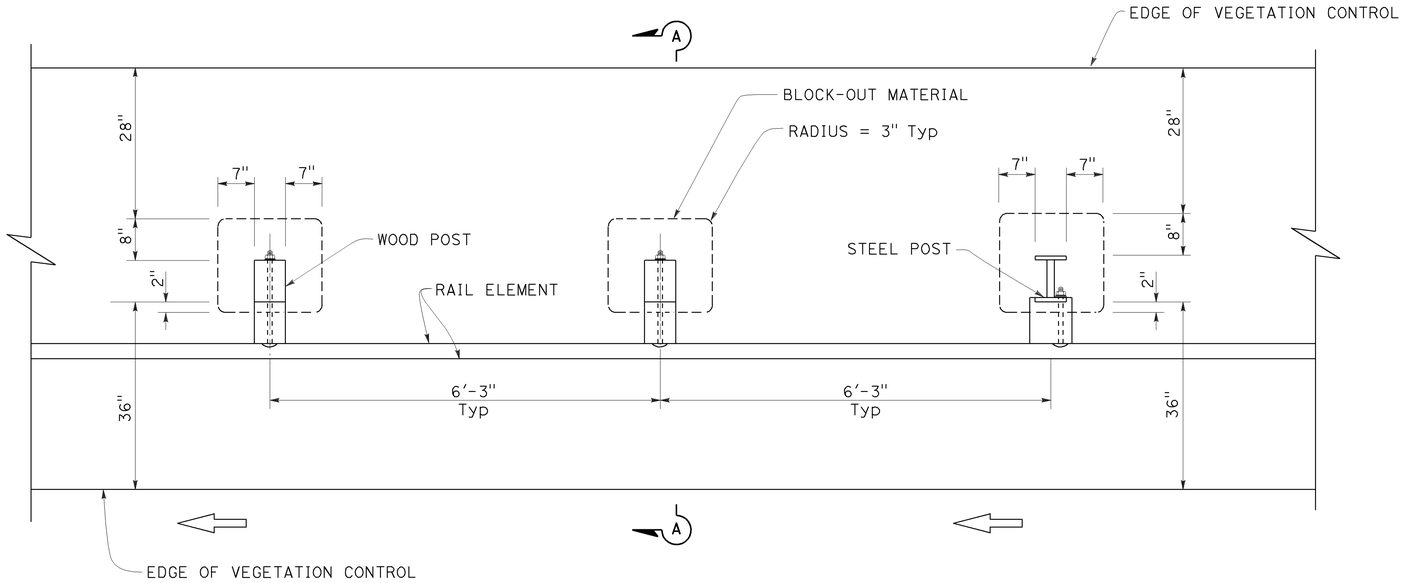

PLAN

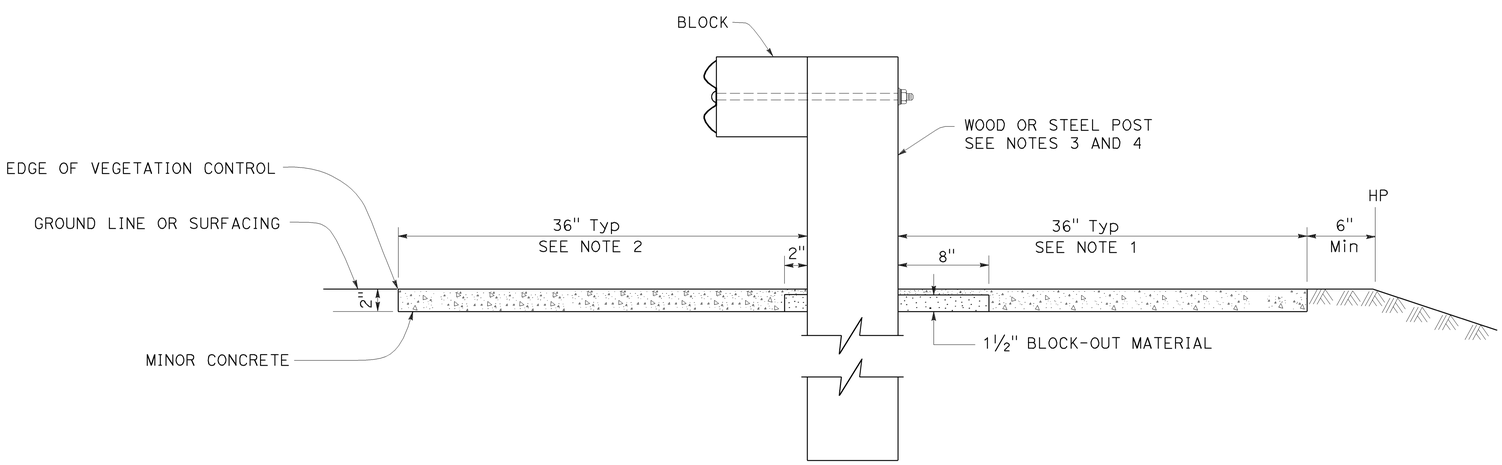

SECTION A-A

NOTES:

1. Where the distance between back of post and hinge point is less than 42", construct vegetation control to 6" from hinge point while maintaining the 8" block-out at back of post. If the 8" block-out at back of post can not be maintained, construct vegetation control flush with the back edge of post.
2. Where dike is constructed under railing, construct vegetation control to back edge of dike. Where paved shoulder is constructed within 36" in front of the post, construct vegetation control to the edge of paved shoulder.
3. For wood post sizes, see Revised Standard Plan RSP A77N1.
4. For steel post sizes, see Revised Standard Plan RSP A77N2.
5. For details not shown, see Revised Standard Plans RSP A77L1 and RSP A77L2.

STATE OF CALIFORNIA
DEPARTMENT OF TRANSPORTATION

MIDWEST GUARDRAIL SYSTEM TYPICAL VEGETATION CONTROL STANDARD RAILING SECTION

NO SCALE

RSP A77N5 DATED JULY 19, 2013 SUPPLEMENTS THE STANDARD PLANS BOOK DATED 2010.

REVISED STANDARD PLAN RSP A77N5

2010 REVISED STANDARD PLAN RSP A77N5

7-3-13

Dist	COUNTY	ROUTE	POST MILES TOTAL PROJECT	SHEET No.	TOTAL SHEETS
06	Mad	152	R0.0/1.1	54	87

Randell D. Hiatt
REGISTERED CIVIL ENGINEER

July 19, 2013
PLANS APPROVAL DATE

REGISTERED PROFESSIONAL ENGINEER
Randell D. Hiatt
No. C50200
Exp. 6-30-15
CIVIL
STATE OF CALIFORNIA

THE STATE OF CALIFORNIA OR ITS OFFICERS OR AGENTS SHALL NOT BE RESPONSIBLE FOR THE ACCURACY OR COMPLETENESS OF SCANNED COPIES OF THIS PLAN SHEET.

TO ACCOMPANY PLANS DATED 6-30-14

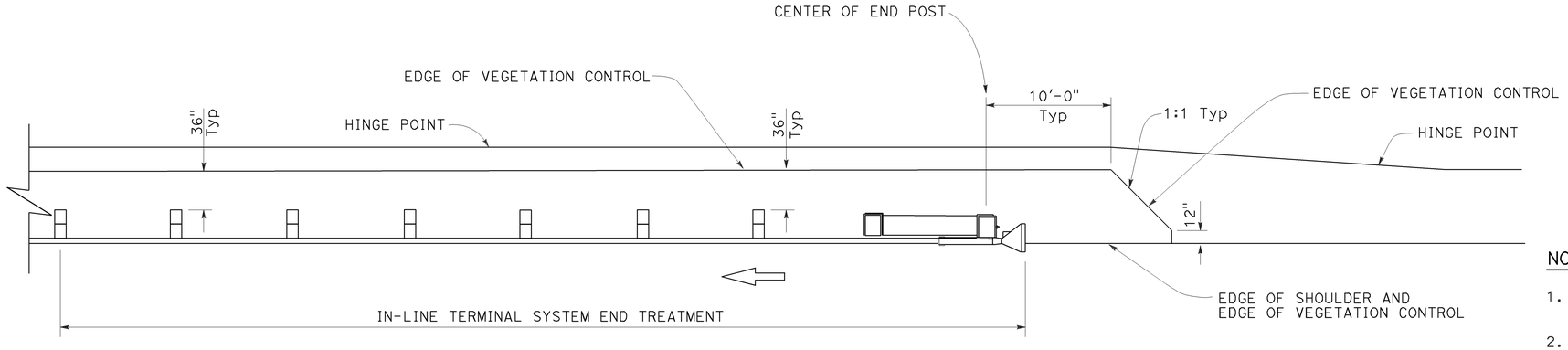

PLAN

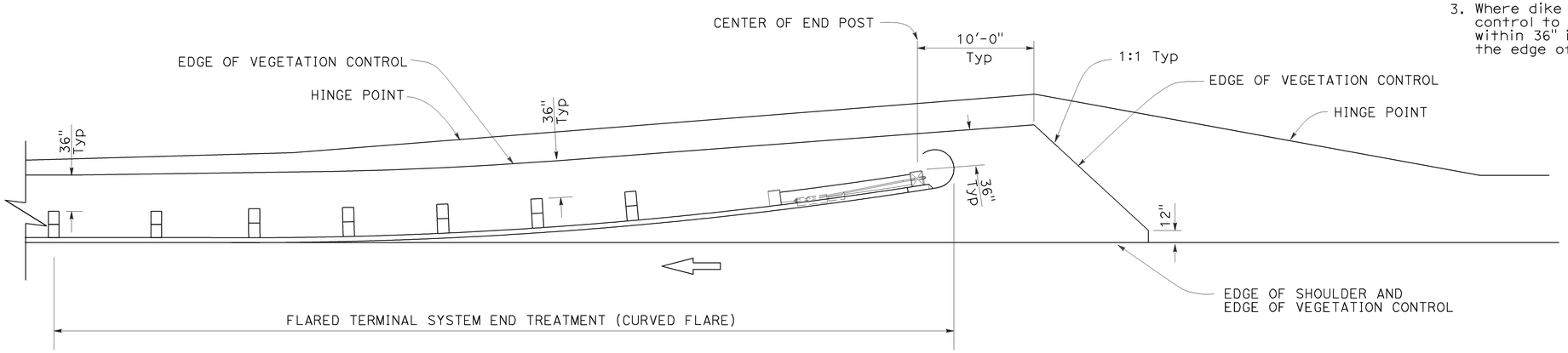

PLAN

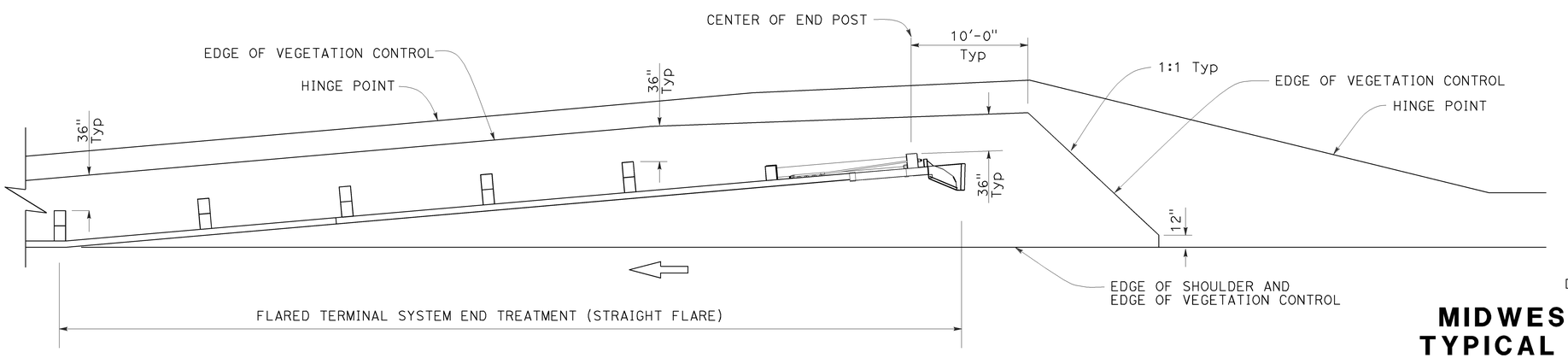

PLAN

NOTES:

1. See Revised Standard Plan RSP A77N5 for additional vegetation control details.
2. Where the distance between back of post and hinge point is less than 42", construct vegetation control to 6" from hinge point while maintaining the 8" block-out at back of post. If the 8" block-out at back of post can not be maintained, construct vegetation control flush with the back edge of post.
3. Where dike is constructed under railing, construct vegetation control to back edge of dike. Where paved shoulder is constructed within 36" in front of the post, construct vegetation control to the edge of paved shoulder.

STATE OF CALIFORNIA
DEPARTMENT OF TRANSPORTATION

MIDWEST GUARDRAIL SYSTEM TYPICAL VEGETATION CONTROL FOR TERMINAL SYSTEM END TREATMENTS

NO SCALE

RSP A77N6 DATED JULY 19, 2013 SUPPLEMENTS THE STANDARD PLANS BOOK DATED 2010.

REVISED STANDARD PLAN RSP A77N6

2010 REVISED STANDARD PLAN RSP A77N6

6-12-13

Dist	COUNTY	ROUTE	POST MILES TOTAL PROJECT	SHEET No.	TOTAL SHEETS
06	Mad	152	R0.0/1.1	55	87

Randell D. Hiatt
REGISTERED CIVIL ENGINEER

July 19, 2013
PLANS APPROVAL DATE

REGISTERED PROFESSIONAL ENGINEER
Randell D. Hiatt
No. C50200
Exp. 6-30-15
CIVIL
STATE OF CALIFORNIA

THE STATE OF CALIFORNIA OR ITS OFFICERS OR AGENTS SHALL NOT BE RESPONSIBLE FOR THE ACCURACY OR COMPLETENESS OF SCANNED COPIES OF THIS PLAN SHEET.

TO ACCOMPANY PLANS DATED 6-30-14

NOTES:

1. See Revised Standard Plan RSP A77N5 for additional vegetation control details.
2. Where the distance between back of post and hinge point is less than 42", construct vegetation control to 6" from hinge point while maintaining the 8" block-out at back of post. If the 8" block-out at back of post can not be maintained, construct vegetation control flush with the back edge of post.
3. Where dike is constructed under railing, construct vegetation control to back edge of dike. Where paved shoulder is constructed within 36" in front of the post, construct vegetation control to the edge of paved shoulder.

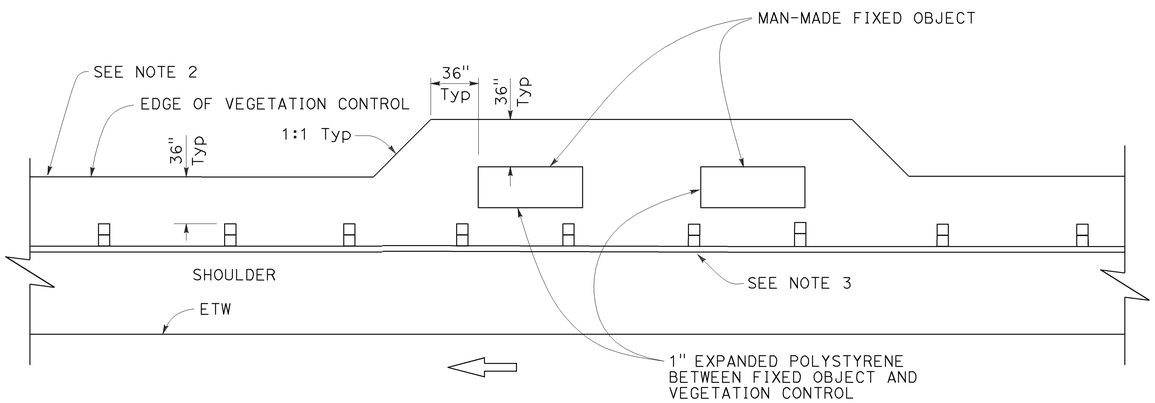

PLAN

Fixed object(s) on shoulder

STATE OF CALIFORNIA
DEPARTMENT OF TRANSPORTATION

MIDWEST GUARDRAIL SYSTEM TYPICAL VEGETATION CONTROL AT FIXED OBJECT

NO SCALE

RSP A77N8 DATED JULY 19, 2013 SUPPLEMENTS THE STANDARD PLANS BOOK DATED 2010.

REVISED STANDARD PLAN RSP A77N8

2010 REVISED STANDARD PLAN RSP A77N8

Dist	COUNTY	ROUTE	POST MILES TOTAL PROJECT	SHEET No.	TOTAL SHEETS
06	Mad	152	R0.0/1.1	56	87

Randell D. Hiatt
REGISTERED CIVIL ENGINEER

July 19, 2013
PLANS APPROVAL DATE

REGISTERED PROFESSIONAL ENGINEER
Randell D. Hiatt
No. C50200
Exp. 6-30-15
CIVIL
STATE OF CALIFORNIA

THE STATE OF CALIFORNIA OR ITS OFFICERS OR AGENTS SHALL NOT BE RESPONSIBLE FOR THE ACCURACY OR COMPLETENESS OF SCANNED COPIES OF THIS PLAN SHEET.

TO ACCOMPANY PLANS DATED 6-30-14

NOTES:

1. See Revised Standard Plan RSP A77N5 for additional vegetation control details.
2. Where dike is constructed under railing, construct vegetation control to back edge of dike. Where paved shoulder is constructed within 36" in front of the post, construct vegetation control to the edge of paved shoulder.

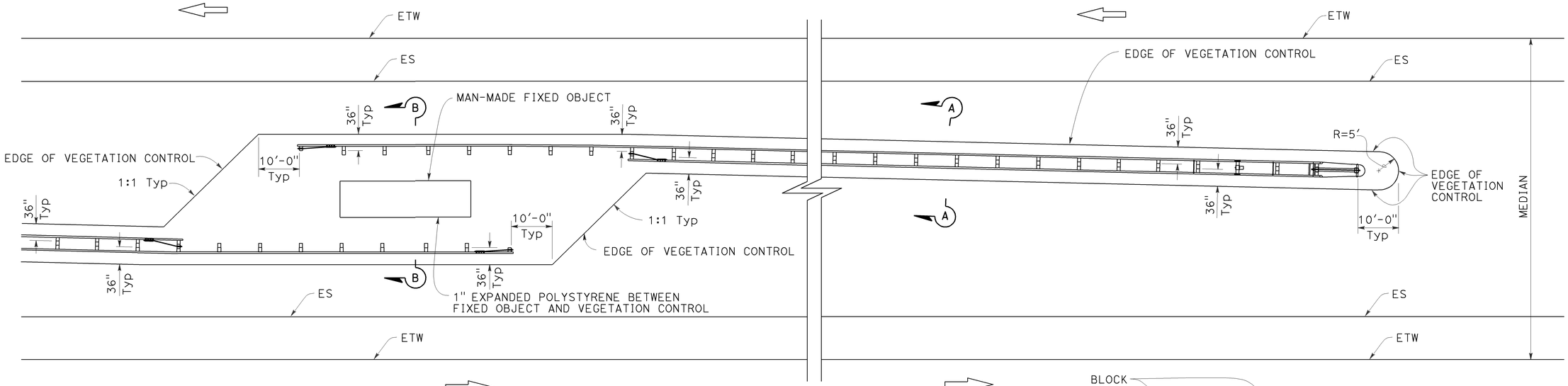

PLAN

Fixed object(s) in median

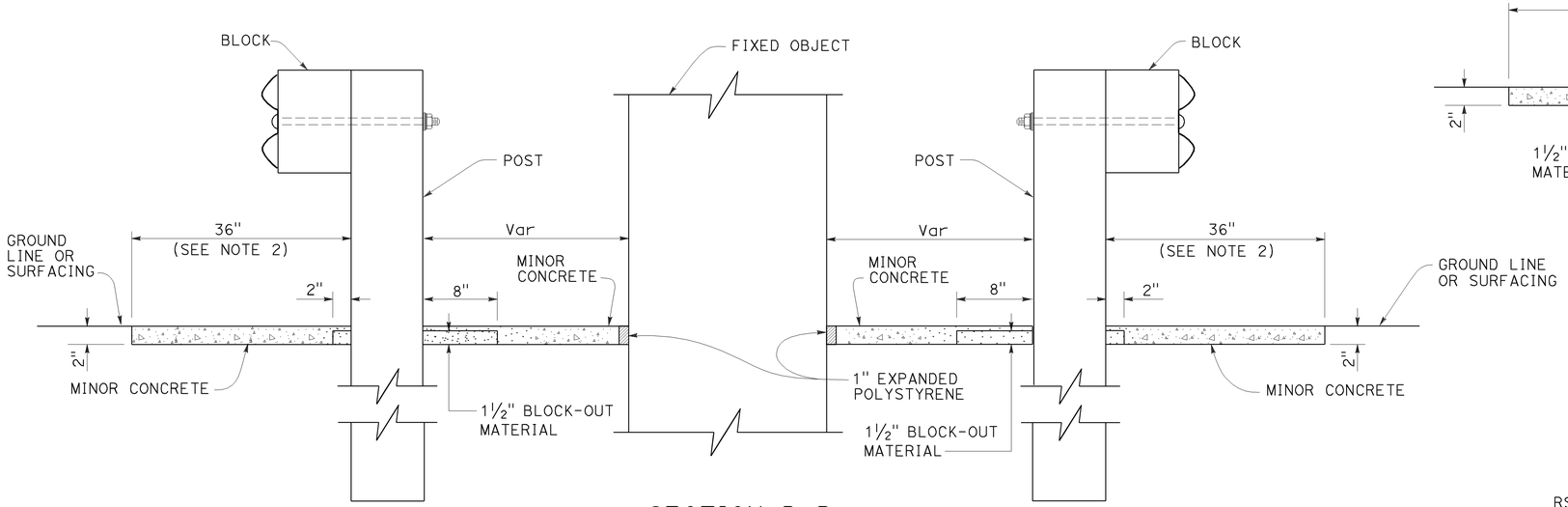

SECTION B-B

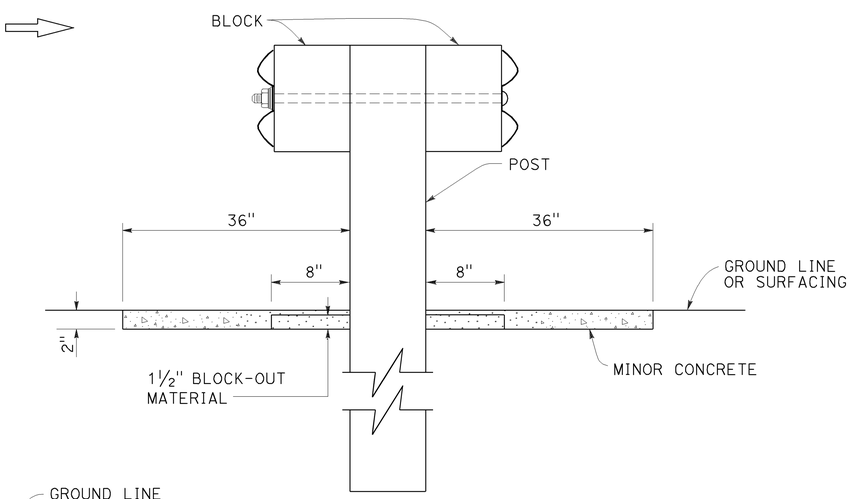

SECTION A-A

STATE OF CALIFORNIA
DEPARTMENT OF TRANSPORTATION

MIDWEST GUARDRAIL SYSTEM TYPICAL VEGETATION CONTROL AT FIXED OBJECT

NO SCALE

RSP A77N9 DATED JULY 19, 2013 SUPPLEMENTS THE STANDARD PLANS BOOK DATED 2010.

REVISED STANDARD PLAN RSP A77N9

2010 REVISED STANDARD PLAN RSP A77N9

6-12-13

Dist	COUNTY	ROUTE	POST MILES TOTAL PROJECT	SHEET No.	TOTAL SHEETS
06	Mad	152	R0.0/1.1	57	87

Randell D. Hiatt
REGISTERED CIVIL ENGINEER

July 19, 2013
PLANS APPROVAL DATE

REGISTERED PROFESSIONAL ENGINEER
Randell D. Hiatt
No. C50200
Exp. 6-30-15
CIVIL
STATE OF CALIFORNIA

THE STATE OF CALIFORNIA OR ITS OFFICERS OR AGENTS SHALL NOT BE RESPONSIBLE FOR THE ACCURACY OR COMPLETENESS OF SCANNED COPIES OF THIS PLAN SHEET.

TO ACCOMPANY PLANS DATED 6-30-14

2010 REVISED STANDARD PLAN RSP A77N10

NOTES:

1. See Revised Standard Plan RSP A77N5 for additional vegetation control details.
2. Where dike is constructed under railing, construct vegetation control to back edge of dike. Where paved shoulder is constructed within 36" in front of the post, construct vegetation control to the edge of paved shoulder.

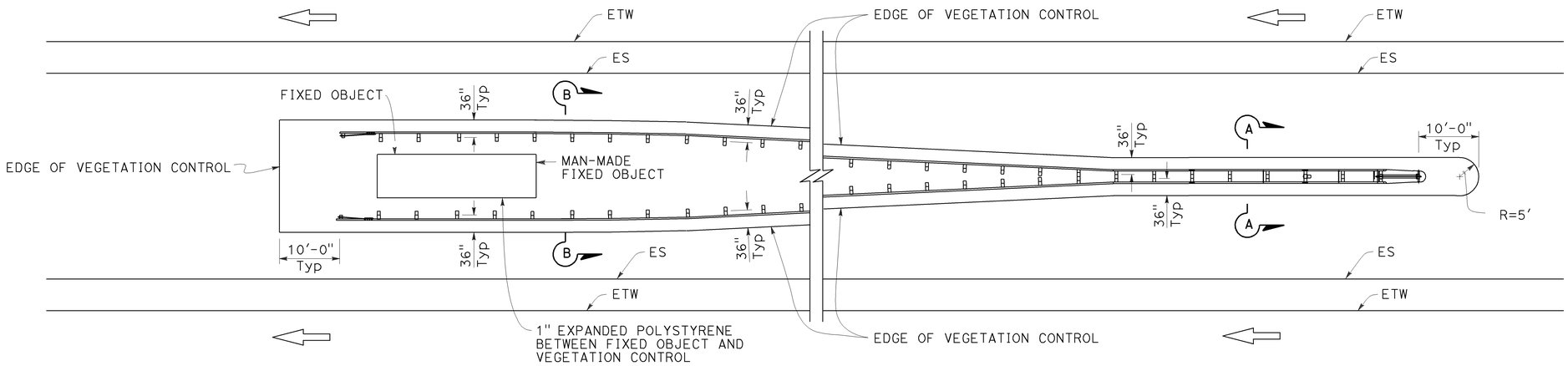

PLAN

Fixed object(s) between separate roadbeds
(One-Way Traffic)

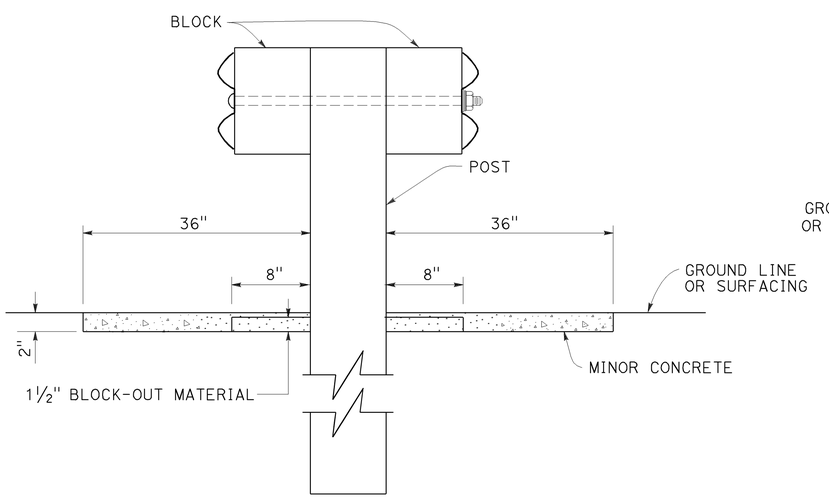

SECTION A-A

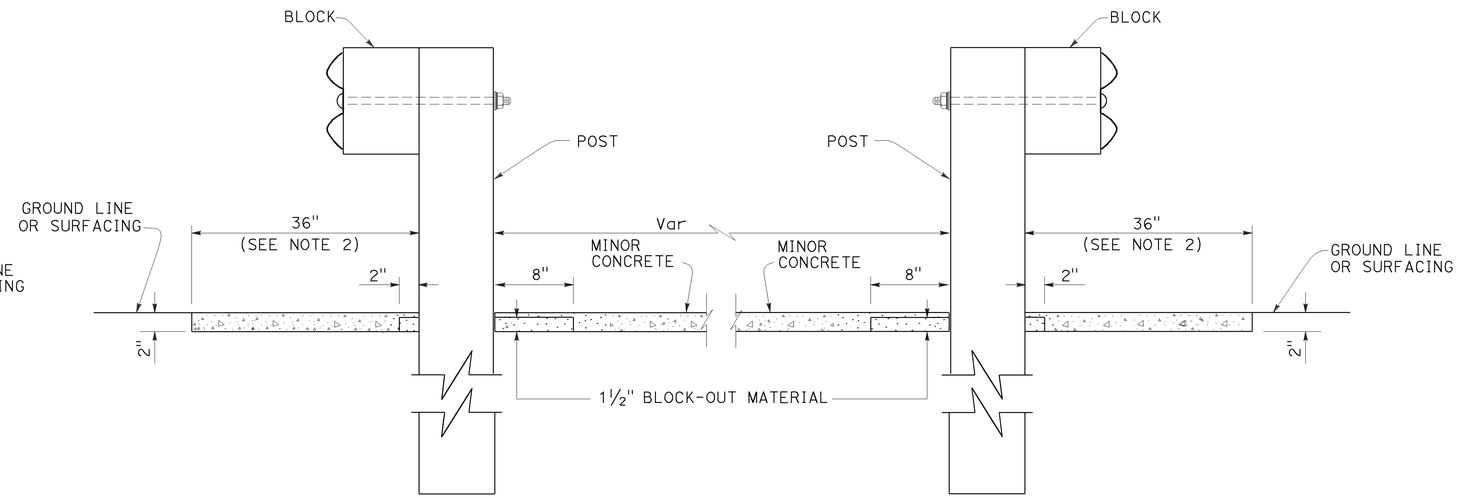

SECTION B-B

STATE OF CALIFORNIA
DEPARTMENT OF TRANSPORTATION

MIDWEST GUARDRAIL SYSTEM TYPICAL VEGETATION CONTROL AT FIXED OBJECT

NO SCALE

RSP A77N10 DATED JULY 19, 2013 SUPPLEMENTS THE STANDARD PLANS BOOK DATED 2010.

REVISED STANDARD PLAN RSP A77N10

6-12-13

Dist	COUNTY	ROUTE	POST MILES TOTAL PROJECT	SHEET No.	TOTAL SHEETS
06	Mad	152	R0.0/1.1	58	87

Randell D. Hiatt
REGISTERED CIVIL ENGINEER

July 19, 2013
PLANS APPROVAL DATE

REGISTERED PROFESSIONAL ENGINEER
Randell D. Hiatt
No. C50200
Exp. 6-30-15
CIVIL
STATE OF CALIFORNIA

THE STATE OF CALIFORNIA OR ITS OFFICERS OR AGENTS SHALL NOT BE RESPONSIBLE FOR THE ACCURACY OR COMPLETENESS OF SCANNED COPIES OF THIS PLAN SHEET.

TO ACCOMPANY PLANS DATED 6-30-14

NOTES:

1. Line post, blocks and hardware to be used are shown on Revised Standard Plans RSP A77L1, RSP A77L2, RSP A77M1, RSP A77N1, and RSP A77N2.
2. MGS post spacing to be 6′-3″ center to center, except as otherwise noted.
3. Except as noted, line posts are 6″ x 8″ x 6′-0″ wood with 6″ x 12″ x 1′-2″ wood blocks. W6 x 8.5 or W6 x 9 steel posts, 6′-0″ in length, with 6″ x 12″ x 1′-2″ notched wood blocks or notched recycled plastic blocks may be used for 6″ x 8″ x 6′-0″ wood line posts with 6″ x 12″ x 1′-2″ wood blocks where applicable and when specified.
4. A 4′-0″ minimum clearance is required between the face of the railing and the face of a fixed object located directly behind MGS sections with post spacing of 6′-3″. Construct MGS as shown in the detail "Strengthened Midwest Guardrail System Sections for Fixed Object" on this plan, where the clearance between the face of the railing and the face of a fixed object is less than 4′-0″, but not less than 3′-0″. Where the clearance is less than 3′-0″, a concrete wall or barrier should be constructed to shield the fixed object(s).
5. For End Anchor Assembly (Type SFT) details, see Revised Standard Plan RSP A77S1.
6. For details of Rail Tensioning Assembly, see Revised Standard Plan RSP A77S2.
7. The type of crash cushion to be used will be shown on the Project Plans.
8. Type 14A layout is typically used on multilane freeways or expressways to shield fixed objects where a median type barrier is not constructed between the separated roadbeds.
9. For typical flare offsets for 25′-0″ length parabola with maximum offset of 1′-0″, see Revised Standard Plan RSP A77P1.
10. The 15:1 or flatter flare is measured off of the edge of traveled way.
11. W6 x 15 steel post, 8′-0″ in length, with 8″ x 12″ x 1′-2″ notched wood block or notched recycled plastic block may be used in place of the 10″ x 10″ x 8′-0″ wood post with 8″ x 12″ x 1′-2″ wood block shown in the detail "Strengthened Midwest Guardrail System Sections for Fixed Object".

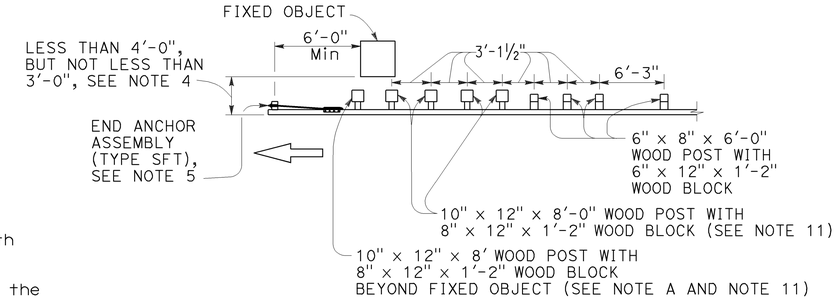

NOTE A: For a series of fixed objects (bridge columns, overhead sign supports, etc.) additional 10″ x 10″ x 8′-0″ wood post with 8″ x 12″ x 1′-2″ wood blocks at 3′-1½″ center to center spacing are to be used between fixed objects.

STRENGTHENED MIDWEST GUARDRAIL SYSTEM SECTIONS FOR FIXED OBJECT

Use strengthened MGS sections with Type 14A layout where minimum clearance between the face of the railing and fixed object(s) is less than 4′-0″, but not less than 3′-0″, See Note 4.

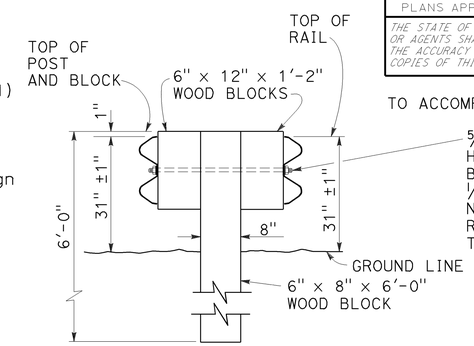

SECTION A-A
TYPICAL DOUBLE MIDWEST GUARDRAIL SYSTEM

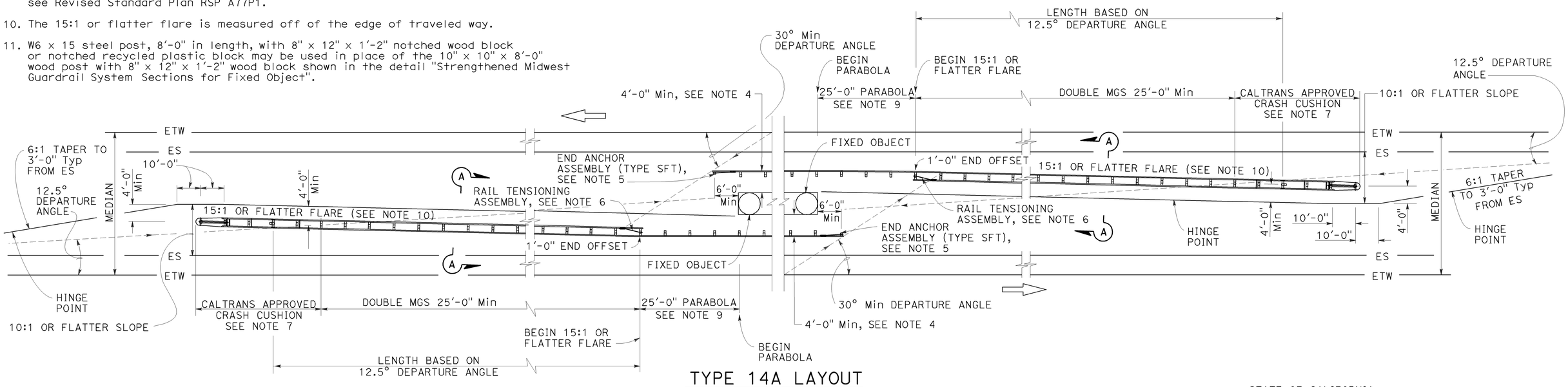

TYPE 14A LAYOUT

See Note 8

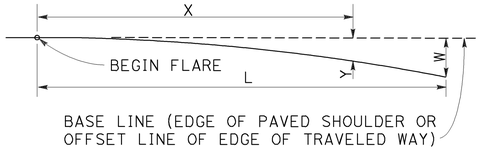

$$Y = \frac{WX^2}{L^2}$$

Y = OFFSET FROM BASE LINE
W = MAXIMUM OFFSET
X = DISTANCE ALONG BASE LINE
L = LENGTH OF FLARE

PARABOLIC FLARE OFFSETS

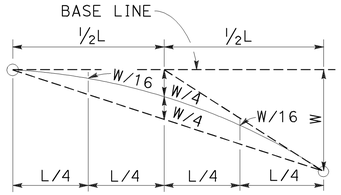

TYPICAL PARABOLIC LAYOUT

STATE OF CALIFORNIA
DEPARTMENT OF TRANSPORTATION

MIDWEST GUARDRAIL SYSTEM TYPICAL LAYOUTS FOR FIXED OBJECTS BETWEEN SEPARATE ROADBEDS (TWO-WAY TRAFFIC)

NO SCALE

RSP A77R1 DATED JULY 19, 2013 SUPPLEMENTS THE STANDARD PLANS BOOK DATED 2010.

REVISED STANDARD PLAN RSP A77R1

2010 REVISED STANDARD PLAN RSP A77R1

7-16-13

Dist	COUNTY	ROUTE	POST MILES TOTAL PROJECT	SHEET No.	TOTAL SHEETS
06	Mad	152	R0.0/1.1	59	87

Randell D. Hiatt
REGISTERED CIVIL ENGINEER

November 15, 2013
PLANS APPROVAL DATE

REGISTERED PROFESSIONAL ENGINEER
Randell D. Hiatt
No. C50200
Exp. 6-30-15
CIVIL
STATE OF CALIFORNIA

THE STATE OF CALIFORNIA OR ITS OFFICERS OR AGENTS SHALL NOT BE RESPONSIBLE FOR THE ACCURACY OR COMPLETENESS OF SCANNED COPIES OF THIS PLAN SHEET.

TO ACCOMPANY PLANS DATED 6-30-14

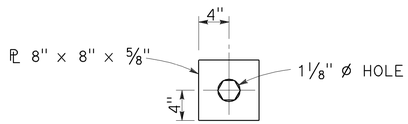

DETAIL "A"
CABLE CONNECTION
END PLATE

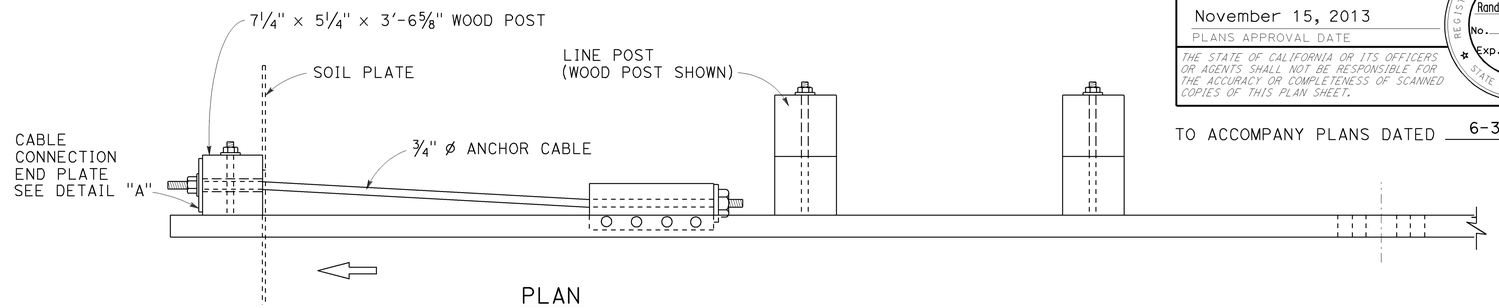

PLAN

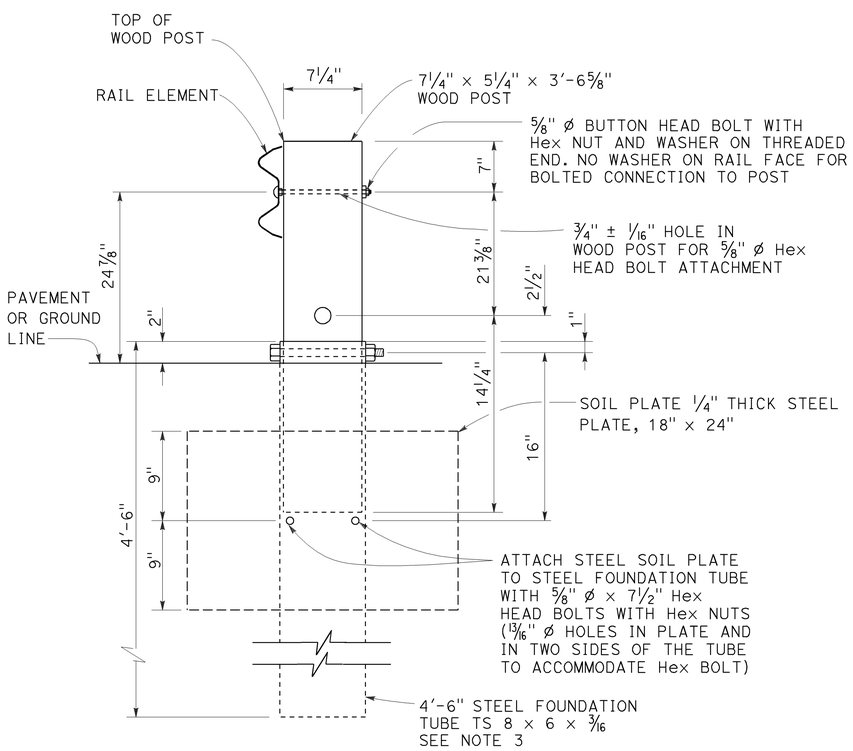

SECTION A-A

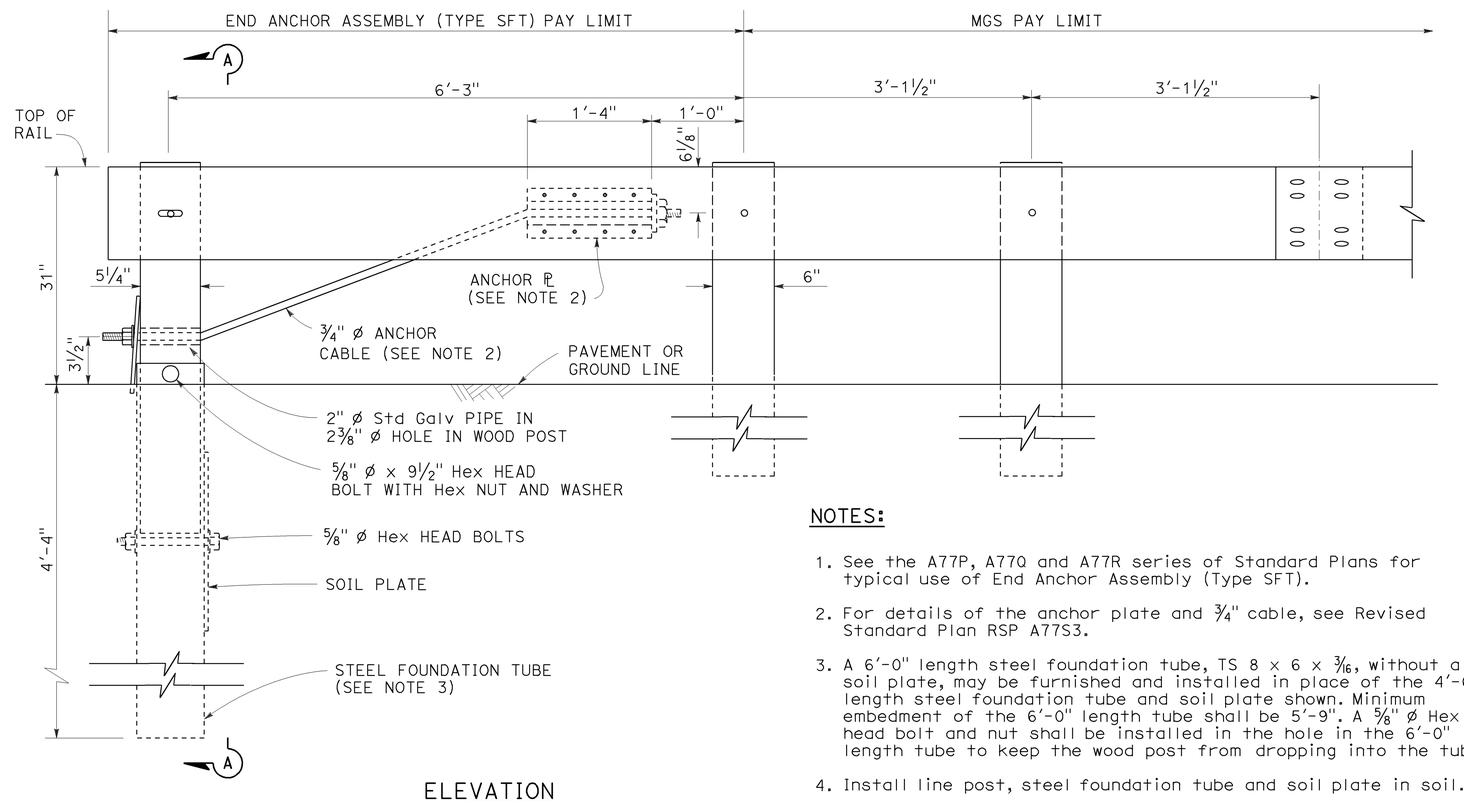

ELEVATION

END ANCHOR
ASSEMBLY (TYPE SFT)
See Note 1

NOTES:

1. See the A77P, A77Q and A77R series of Standard Plans for typical use of End Anchor Assembly (Type SFT).
2. For details of the anchor plate and 3/4" cable, see Revised Standard Plan RSP A77S3.
3. A 6'-0" length steel foundation tube, TS 8 x 6 x 3/16, without a soil plate, may be furnished and installed in place of the 4'-6" length steel foundation tube and soil plate shown. Minimum embedment of the 6'-0" length tube shall be 5'-9". A 5/8" ø Hex head bolt and nut shall be installed in the hole in the 6'-0" length tube to keep the wood post from dropping into the tube.
4. Install line post, steel foundation tube and soil plate in soil.

STATE OF CALIFORNIA
DEPARTMENT OF TRANSPORTATION

MIDWEST GUARDRAIL SYSTEM END ANCHOR ASSEMBLY (TYPE SFT)

NO SCALE

RSP A77S1 DATED NOVEMBER 15, 2013 SUPERSEDES RSP A77S1
DATED JULY 19, 2013 THAT SUPPLEMENTS THE STANDARD PLANS BOOK DATED 2010.

REVISED STANDARD PLAN RSP A77S1

2010 REVISED STANDARD PLAN RSP A77S1

10-4-13

Dist	COUNTY	ROUTE	POST MILES TOTAL PROJECT	SHEET No.	TOTAL SHEETS
06	Mad	152	R0.0/1.1	60	87

Randell D. Hiatt
REGISTERED CIVIL ENGINEER

July 19, 2013
PLANS APPROVAL DATE

REGISTERED PROFESSIONAL ENGINEER
Randell D. Hiatt
No. C50200
Exp. 6-30-15
CIVIL
STATE OF CALIFORNIA

THE STATE OF CALIFORNIA OR ITS OFFICERS OR AGENTS SHALL NOT BE RESPONSIBLE FOR THE ACCURACY OR COMPLETENESS OF SCANNED COPIES OF THIS PLAN SHEET.

TO ACCOMPANY PLANS DATED 6-30-14

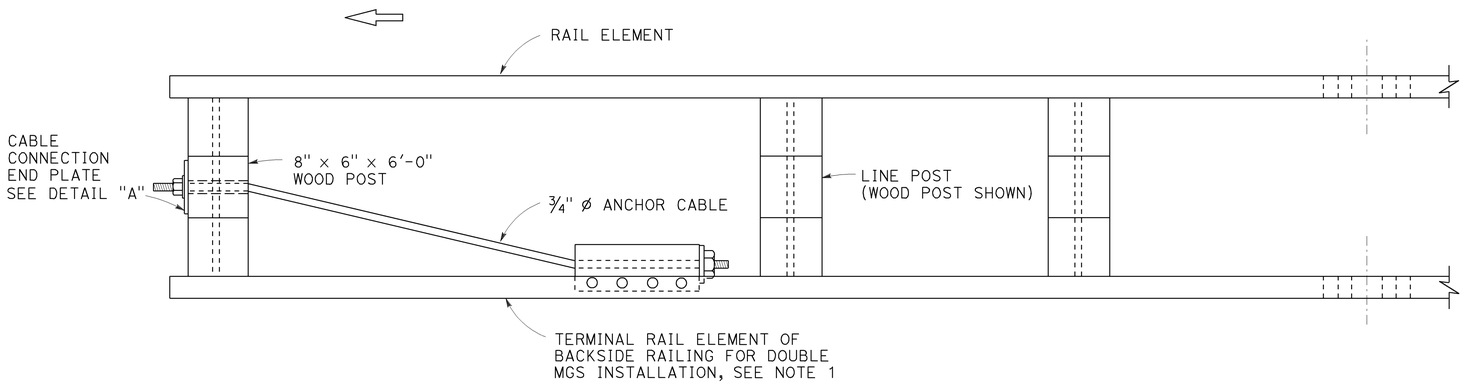

PLAN

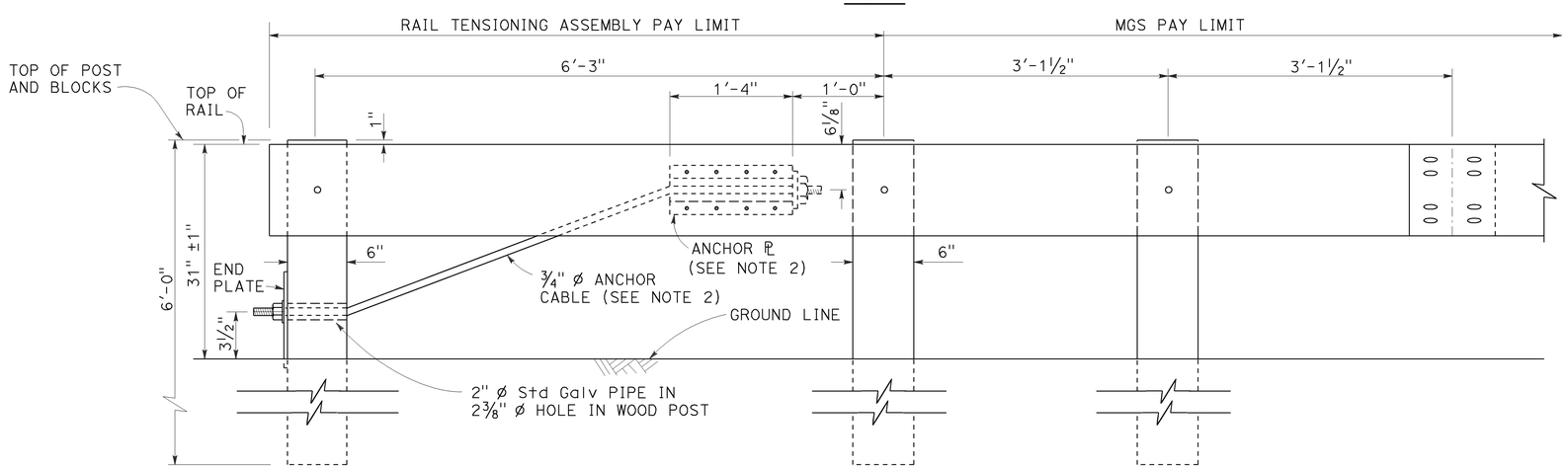

ELEVATION
RAIL TENSIONING ASSEMBLY
See Note 1

NOTES:

1. See Revised Standard Plans RSP A77Q3 and RSP A77R1 for typical use of rail tensioning assembly.
2. For details of the anchor plate and ¾" cable, see Revised Standard Plan RSP A77S3.

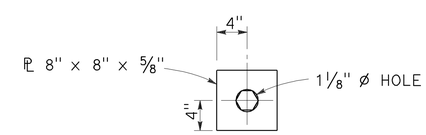

DETAIL "A"
CABLE CONNECTION END PLATE

STATE OF CALIFORNIA
DEPARTMENT OF TRANSPORTATION

MIDWEST GUARDRAIL SYSTEM RAIL TENSIONING ASSEMBLY

NO SCALE

RSP A77S2 DATED JULY 19, 2013 SUPPLEMENTS THE STANDARD PLANS BOOK DATED 2010.

REVISED STANDARD PLAN RSP A77S2

2010 REVISED STANDARD PLAN RSP A77S2

7-3-13

Dist	COUNTY	ROUTE	POST MILES TOTAL PROJECT	SHEET No.	TOTAL SHEETS
06	Mad	152	R0.0/1.1	61	87

Randell D. Hiatt
REGISTERED CIVIL ENGINEER

November 15, 2013
PLANS APPROVAL DATE

REGISTERED PROFESSIONAL ENGINEER
Randell D. Hiatt
No. C50200
Exp. 6-30-15
CIVIL
STATE OF CALIFORNIA

THE STATE OF CALIFORNIA OR ITS OFFICERS OR AGENTS SHALL NOT BE RESPONSIBLE FOR THE ACCURACY OR COMPLETENESS OF SCANNED COPIES OF THIS PLAN SHEET.

TO ACCOMPANY PLANS DATED 6-30-14

NOTE:

See Revised Standard Plans RSP A77S1, RSP A77S2 and RSP A77T1 for typical use of anchor cable and anchor plate.

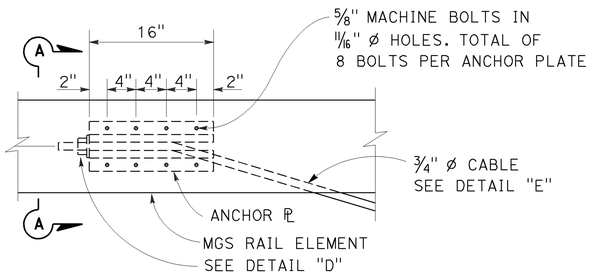

ANCHOR PLATE DETAIL

(MGS shown, TBB similar)

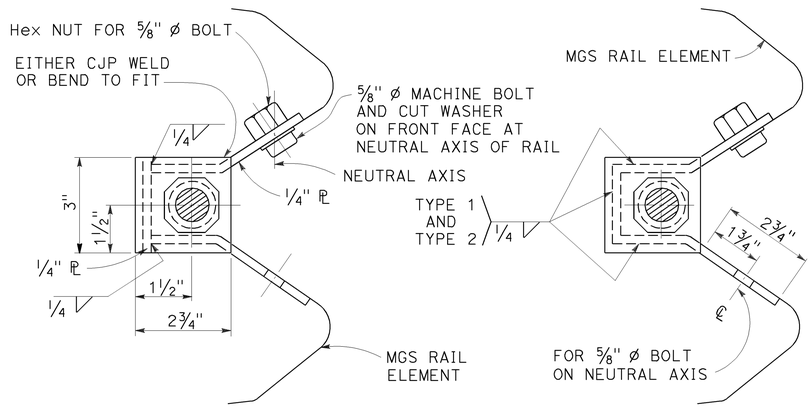

NOTE:

Dimensioning applies to both types.

SECTION A-A
(ALTERNATIVE TYPE 1)

SECTION A-A
(ALTERNATIVE TYPE 2)

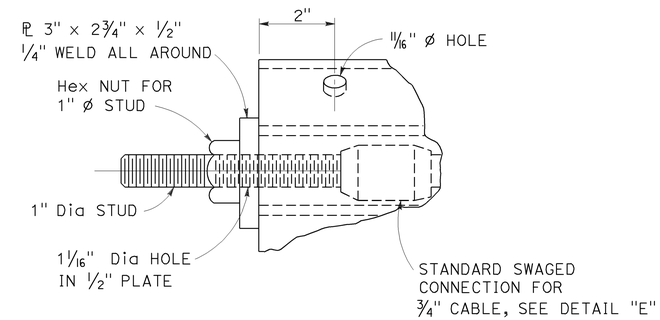

DETAIL "D"

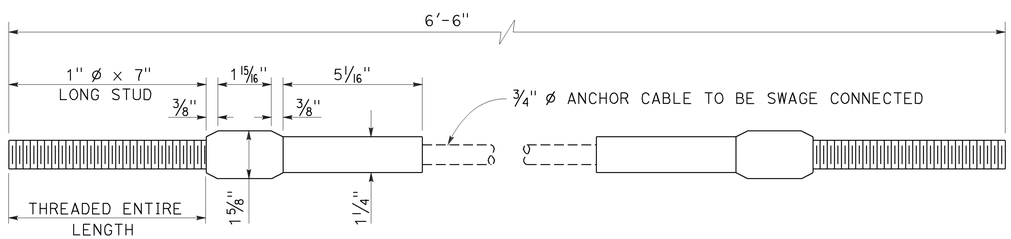

ANCHOR CABLE WITH SWAGED FITTING AND STUD

DETAIL "E"

STATE OF CALIFORNIA
DEPARTMENT OF TRANSPORTATION

METAL RAILING ANCHOR CABLE AND ANCHOR PLATE DETAILS

NO SCALE

RSP A77S3 DATED NOVEMBER 15, 2013 SUPERSEDES RSP A77S3
DATED JULY 19, 2013 THAT SUPPLEMENTS THE STANDARD PLANS BOOK DATED 2010.

REVISED STANDARD PLAN RSP A77S3

2010 REVISED STANDARD PLAN RSP A77S3

10-4-13

Dist	COUNTY	ROUTE	POST MILES TOTAL PROJECT	SHEET No.	TOTAL SHEETS
06	Mad	152	R0.0/1.1	62	87

Randell D. Hiatt
REGISTERED CIVIL ENGINEER

November 15, 2013
PLANS APPROVAL DATE

REGISTERED PROFESSIONAL ENGINEER
Randell D. Hiatt
No. C50200
Exp. 6-30-15
CIVIL
STATE OF CALIFORNIA

THE STATE OF CALIFORNIA OR ITS OFFICERS OR AGENTS SHALL NOT BE RESPONSIBLE FOR THE ACCURACY OR COMPLETENESS OF SCANNED COPIES OF THIS PLAN SHEET.

TO ACCOMPANY PLANS DATED 6-30-14

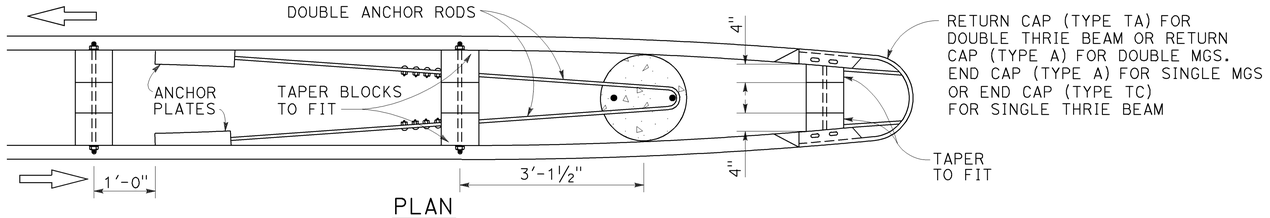

PLAN
See Note 4

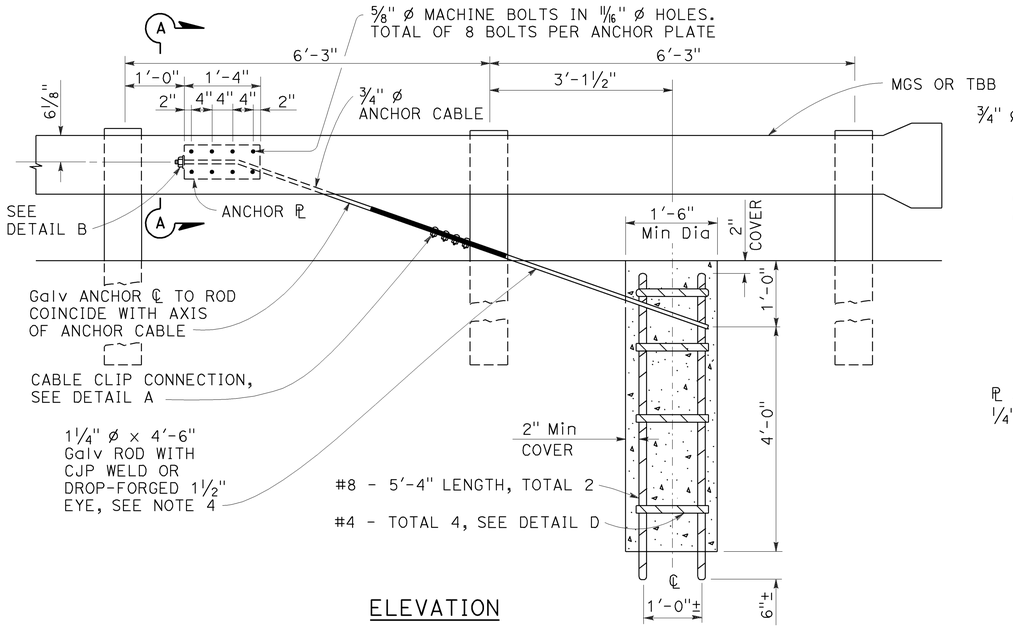

ELEVATION
END ANCHOR ASSEMBLY
(TYPE CA)
(Wood post, MGS shown, details similar for Thrie Beam Barrier.)

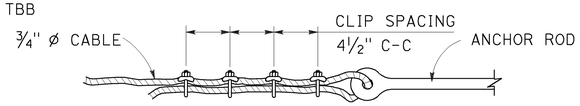

"U" bolts of clip on short end of cable only
"U" bolts tightened to 50 ft/lb torque

DETAIL A
CABLE CLIP CONNECTION

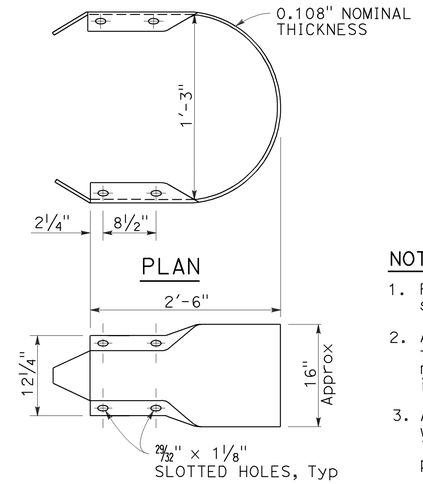

ELEVATION
RETURN CAP
(TYPE A)

NOTES:

1. For typical use of this type of end anchor, see Revised Standard Plan RSP A78E2.
2. Anchor cable to be parallel to railing for straight runs of rail. Anchor cable may have angle point at anchor plate if railing is curved.
3. Anchor rod hooks to be in contact with anchor reinforcement when concrete is placed. Wire ties may be used to position anchor rods.
4. Single sided railing installations require only one anchor plate, anchor rod and anchor cable. Single sided railing will not have a rail element or blockouts on backside of line posts as shown in the plan view.

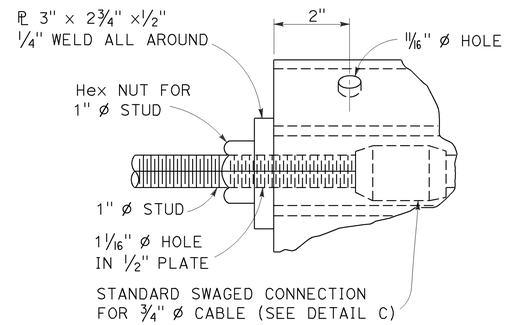

DETAIL B

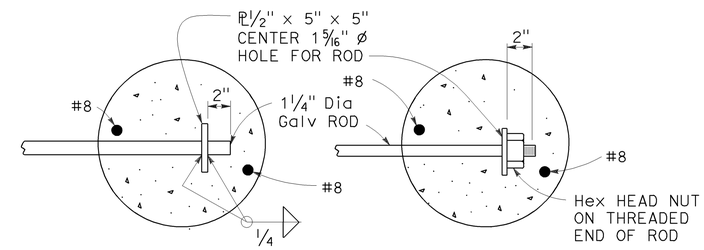

OPTIONAL ENDS ON SINGLE ANCHOR ROD
(Not to be used for double anchors)

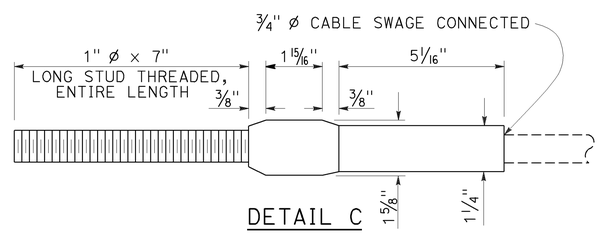

DETAIL C

ANCHOR CABLE WITH
SWAGED FITTING AND STUD

NOTE:
Use two 1¼" ø Galv rods with hook and eye for double MGS anchor.

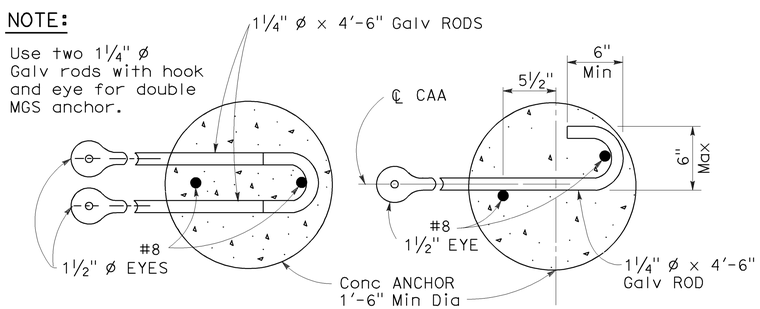

DOUBLE ANCHOR SINGLE ANCHOR
ANCHOR RODS

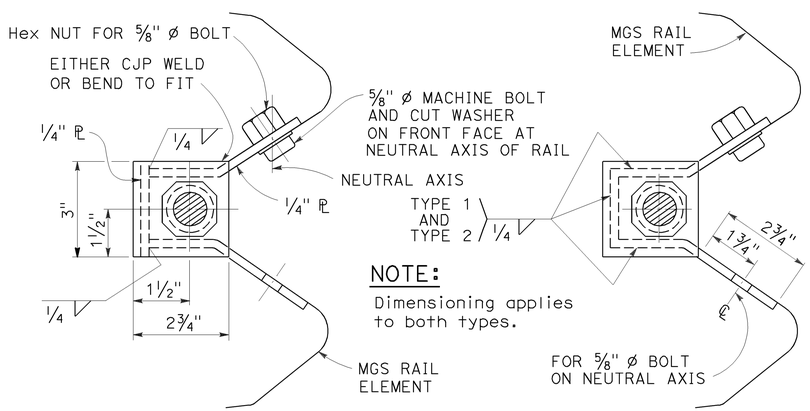

NOTE:
Dimensioning applies to both types.

SECTION A-A
(Alternative Type 1)

SECTION A-A
(Alternative Type 2)

ANCHOR PLATE DETAILS

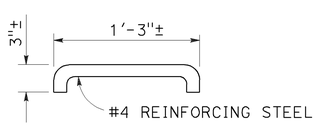

DETAIL D

STATE OF CALIFORNIA
DEPARTMENT OF TRANSPORTATION

METAL RAILING END ANCHOR ASSEMBLY (TYPE CA)

NO SCALE

RSP A77T1 DATED NOVEMBER 15, 2013 SUPERSEDES RSP A77T1 DATED JULY 19, 2013 THAT SUPPLEMENTS THE STANDARD PLANS BOOK DATED 2010.

REVISED STANDARD PLAN RSP A77T1

2010 REVISED STANDARD PLAN RSP A77T1

10-22-13

Dist	COUNTY	ROUTE	POST MILES TOTAL PROJECT	SHEET No.	TOTAL SHEETS
06	Mad	152	R0.0/1.1	63	87

Randell D. Hiatt
REGISTERED CIVIL ENGINEER

July 19, 2013
PLANS APPROVAL DATE

REGISTERED PROFESSIONAL ENGINEER
Randell D. Hiatt
No. C50200
Exp. 6-30-15
CIVIL
STATE OF CALIFORNIA

THE STATE OF CALIFORNIA OR ITS OFFICERS OR AGENTS SHALL NOT BE RESPONSIBLE FOR THE ACCURACY OR COMPLETENESS OF SCANNED COPIES OF THIS PLAN SHEET.

TO ACCOMPANY PLANS DATED 6-30-14

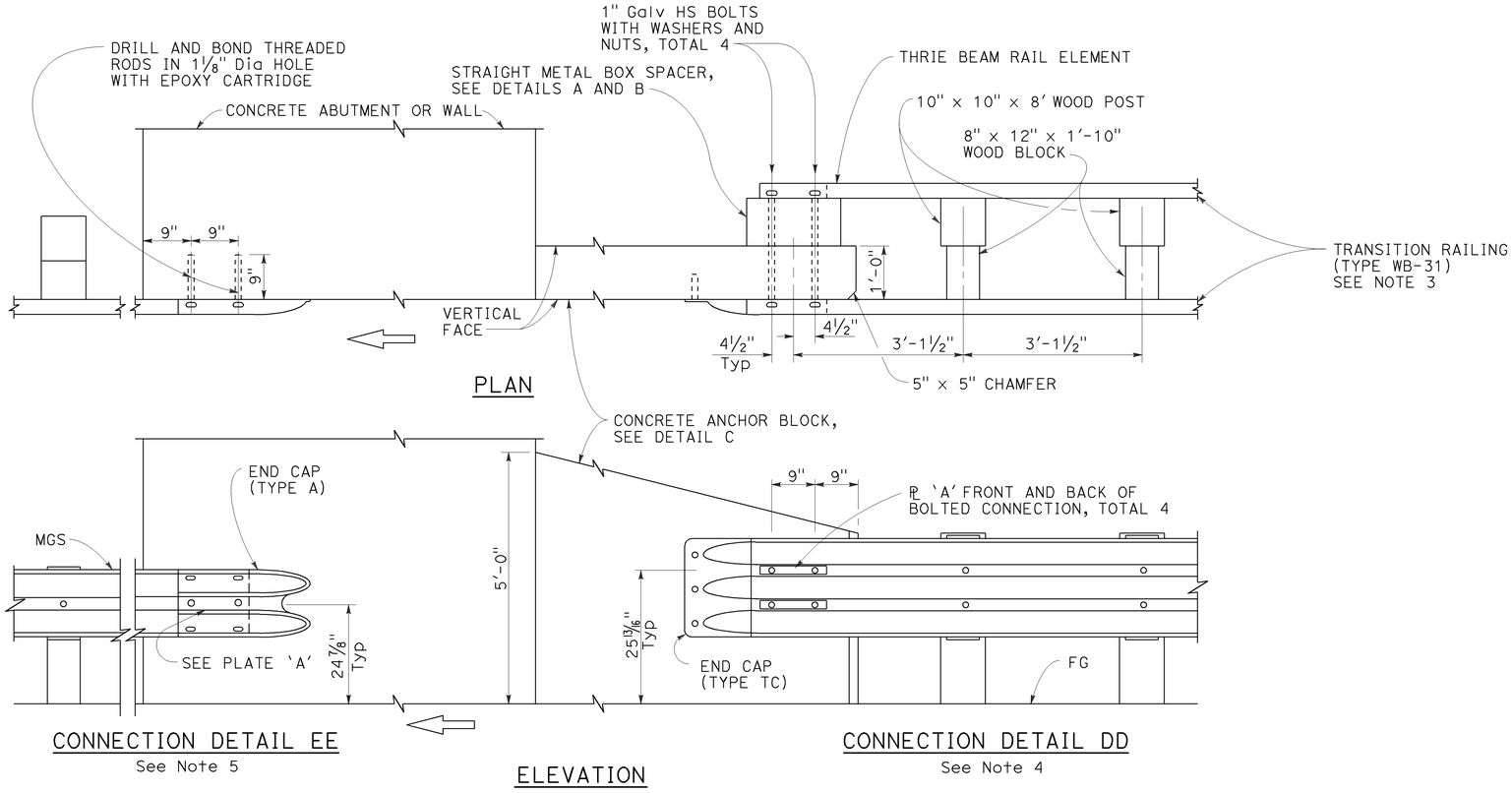

MIDWEST GUARDRAIL SYSTEM CONNECTION TO ABUTMENT OR WALL

NOTES:

1. These connection details apply to abutments and walls.
2. Additional details of posts, blocks and hardware are shown on Revised Standard Plans RSP A77M1, RSP A77N1 and RSP A77N2.
3. For additional details of Transition Railing (Type WB-31), see Revised Standard Plan RSP A77U4. Transition Railing (Type WB-31) transitions the 12 gauge MGS railing section to a heavier gage nested thrie beam railingsection which is connected to the concrete anchor block.
4. For typical use of Connection Details DD, see Layout Types 12A and 12B on Revised Standard Plan RSP A77Q1 and Layout Types 12C and 12D on Revised Standard Plan RSP A77Q2.
5. For typical use of Connection Detail EE, see Layout Type 12D on Revised Standard Plan RSP A77Q2 and Layout Type 12DD on Revised Standard Plan RSP A77Q5.

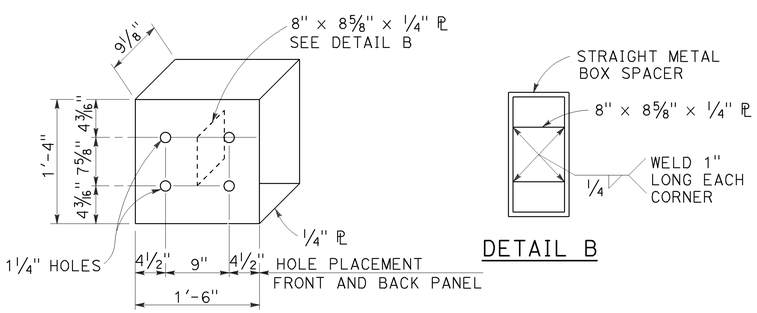

STRAIGHT METAL BOX SPACER

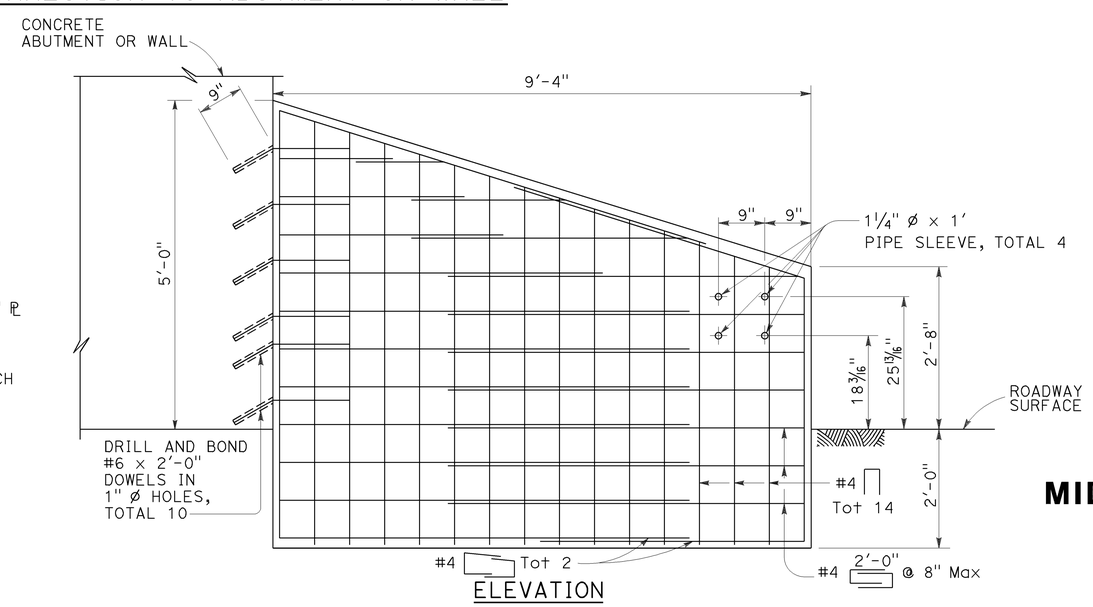

ELEVATION

ANCHOR BLOCK FOR TRANSITION RAILING CONNECTION

DETAIL C

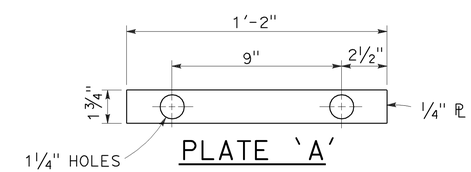

PLATE 'A'

STATE OF CALIFORNIA
DEPARTMENT OF TRANSPORTATION

MIDWEST GUARDRAIL SYSTEM CONNECTIONS TO ABUTMENTS AND WALLS

NO SCALE

RSP A77U3 DATED JULY 19, 2013 SUPPLEMENTS THE STANDARD PLANS BOOK DATED 2010.

REVISED STANDARD PLAN RSP A77U3

2010 REVISED STANDARD PLAN RSP A77U3

7-8-13

Dist	COUNTY	ROUTE	POST MILES TOTAL PROJECT	SHEET No.	TOTAL SHEETS
06	Mad	152	R0.0/1.1	64	87

Randell D. Hiatt
REGISTERED CIVIL ENGINEER

November 15, 2013
PLANS APPROVAL DATE

REGISTERED PROFESSIONAL ENGINEER
Randell D. Hiatt
No. C50200
Exp. 6-30-15
CIVIL
STATE OF CALIFORNIA

THE STATE OF CALIFORNIA OR ITS OFFICERS OR AGENTS SHALL NOT BE RESPONSIBLE FOR THE ACCURACY OR COMPLETENESS OF SCANNED COPIES OF THIS PLAN SHEET.

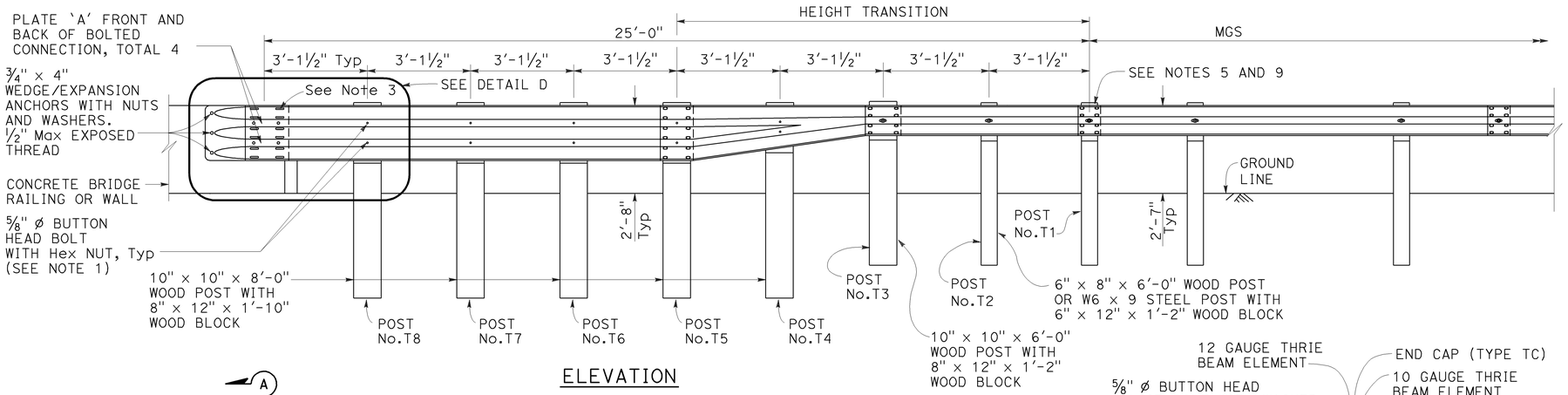

ELEVATION

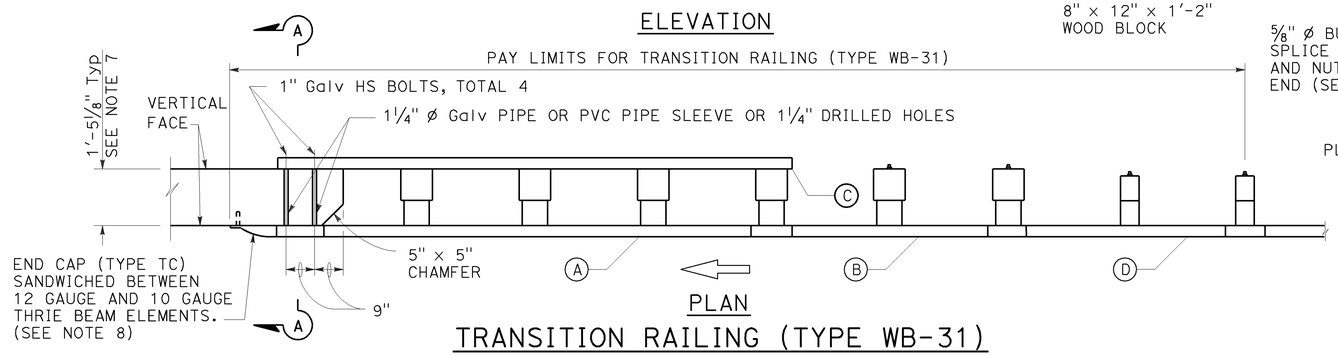

PLAN

TRANSITION RAILING (TYPE WB-31)

(No Blockout Attachment)

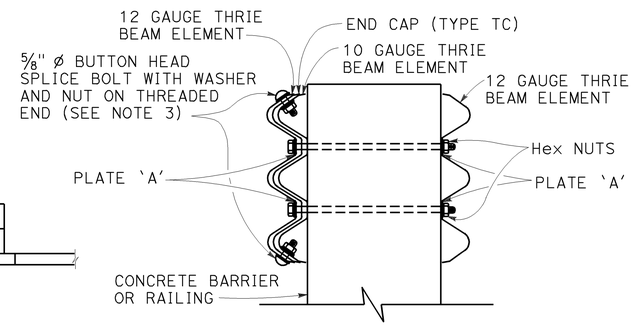

SECTION A-A

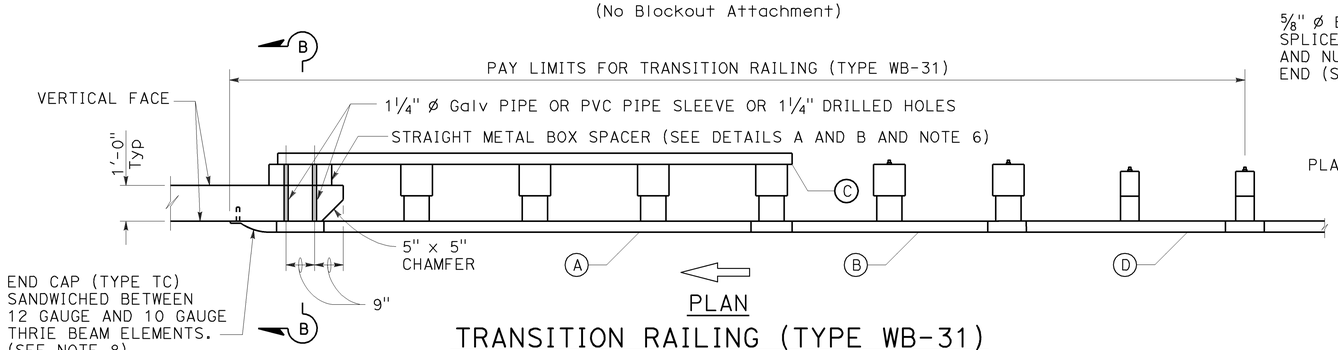

PLAN

TRANSITION RAILING (TYPE WB-31)

(Blockout Attachment)

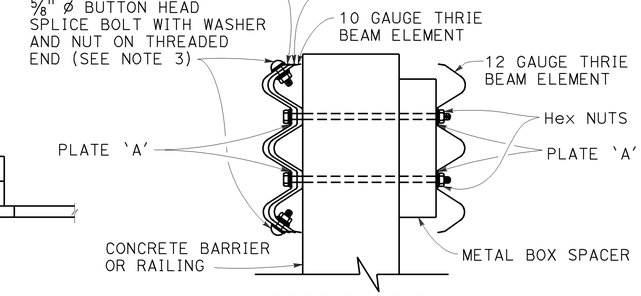

SECTION B-B

NOTES:

TO ACCOMPANY PLANS DATED 6-30-14

1. Use 5/8" ø Button head bolts and hex nuts for connections to posts. No washer on rail face for bolted connections to post.
2. The nested rail elements, end cap, and 'W' beam to thrie beam element may be spliced together prior to bolting the elements to the wood post and concrete barrier or railing.
3. Exterior splice bolt holes for rail element splices at Post No. T5 and the connection to the concrete barrier or railing shall be the standard 29/32" x 1 1/8" slot size. Interior splice bolt holes at these locations may be increased up to 1 1/4" ø. Only the top 4 and the bottom 4 splice bolts with washers and nuts are required for rail splices at Post No. T5 and the connection to the concrete barrier or railing.
4. The top elevation of Posts No. T2 through No. T7 shall not project more than 1" above the top elevation of the rail element.
5. Typically, the railing connected to Transition Railing (Type WB-31) will be either standard railing section of MGS with height transition ratio of 150:1 or a Caltrans approved 31" end treatment attached to Post No. T1.
6. The depth of the metal box spacer varies from the 9 1/8" to 1 1/2" and is dependent on the width of the concrete railing or wall. The combined dimension for the depth of the metal box spacer plus the width of railing or wall is typically 21 1/8". Where the space between the backside of the concrete railing or wall and the rear thrie beam element is less than 1 1/2", metal plates similar to Plate 'A' are to be used as spacers.
7. Where the width of the concrete railing or wall is greater than 17 1/8", wood blocks are to be used to fill the space created between the backside of Posts No. T5 through No. T8 and the rear thrie beam element. These wood blocks shall be 8" in width and 1'-2" in length. The dimension between the front thrie beam element and the rear thrie beam element is to match the width of the concrete railing or wall.
8. End cap may be installed over 12 gauge and 10 gauge thrie beam elements where transition railing is installed on the departure end of bridge railing.
9. Conform standard railing section height to 31" at Post No. T1 using height transition ratio of 150:1.

LEGEND:

(A) NESTED THRIE BEAM ELEMENTS (ONE 12 GAUGE ELEMENT NESTED OVER ONE 10 GAUGE ELEMENT).

(B) ONE ASYMMETRICAL 10 GAUGE "W" BEAM TO THRIE BEAM ELEMENT.

(C) ONE 12 GAUGE THRIE BEAM ELEMENT.

(D) ONE 10 GAUGE "W" BEAM RAIL ELEMENT (7'-3 1/2" LENGTH)

10 GAUGE = 0.138" THICK
12 GAUGE = 0.108" THICK

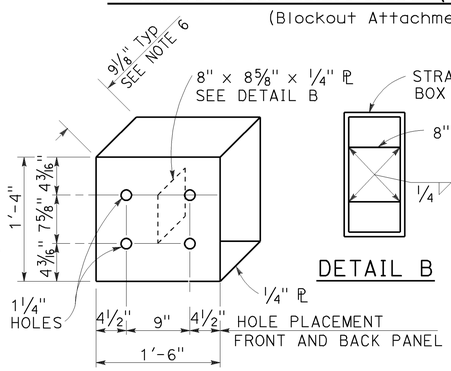

DETAIL A

STRAIGHT METAL BOX SPACER

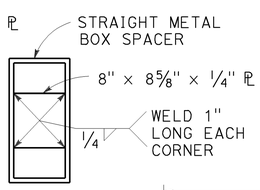

DETAIL B

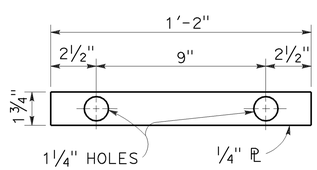

DETAIL C

PLATE 'A'

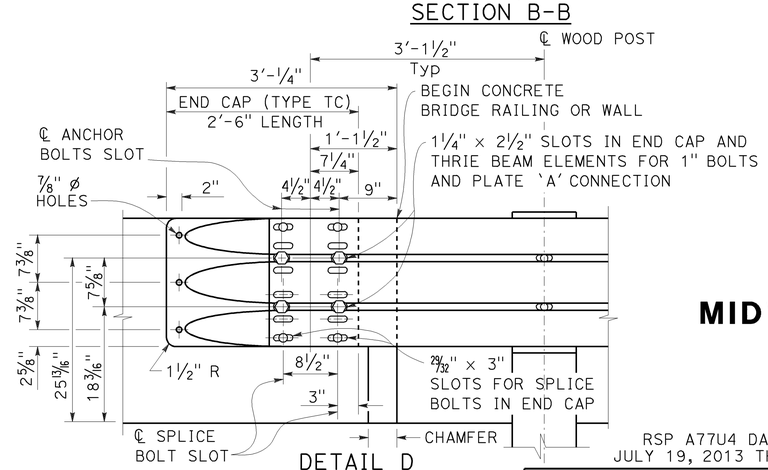

DETAIL D

STATE OF CALIFORNIA
DEPARTMENT OF TRANSPORTATION

MIDWEST GUARDRAIL SYSTEM TRANSITION RAILING (TYPE WB-31)

NO SCALE

RSP A77U4 DATED NOVEMBER 15, 2013 SUPERSEDES RSP A77U4 DATED JULY 19, 2013 THAT SUPPLEMENTS THE STANDARD PLANS BOOK DATED 2010.

REVISED STANDARD PLAN RSP A77U4

2010 REVISED STANDARD PLAN RSP A77U4

10-4-13

Dist	COUNTY	ROUTE	POST MILES TOTAL PROJECT	SHEET No.	TOTAL SHEETS
06	Mad	152	R0.0/1.1	65	87

William K. Farnbach
REGISTERED CIVIL ENGINEER

July 19, 2013
PLANS APPROVAL DATE

REGISTERED PROFESSIONAL ENGINEER
William K. Farnbach
No. C49042
Exp. 9-30-14
CIVIL
STATE OF CALIFORNIA

THE STATE OF CALIFORNIA OR ITS OFFICERS OR AGENTS SHALL NOT BE RESPONSIBLE FOR THE ACCURACY OR COMPLETENESS OF SCANNED COPIES OF THIS PLAN SHEET.

TO ACCOMPANY PLANS DATED 6-30-14

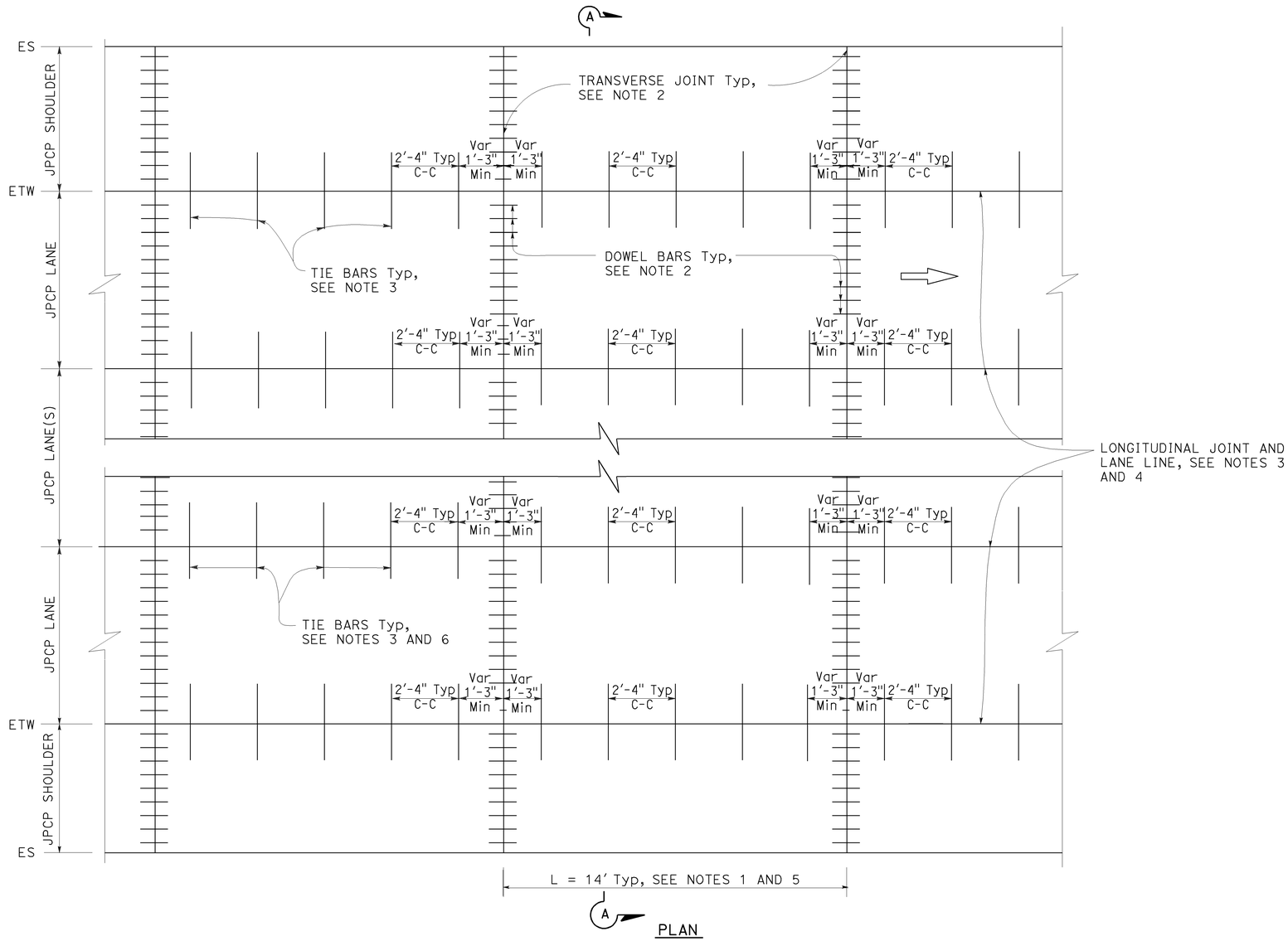

PLAN

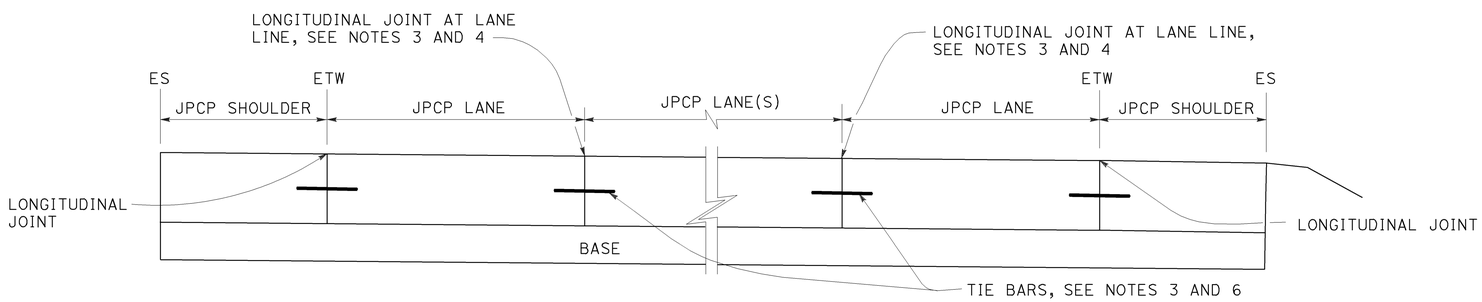

SECTION A-A

NOTES:

1. Transverse joint spacing may be adjusted to no less than 10' and no more than 14' to conform to bridges, change in pavement type, and hardened concrete pavement.
2. For transverse joint and dowel bar details not shown, see Revised Standard Plan RSP P10.
3. For longitudinal joint and tie bar details not shown, see Revised Standard Plan RSP P15.
4. For additional longitudinal joint layout details, see Revised Standard Plan RSP P18.
5. For joint layout at intersections, see Project Plans.
6. For dowel bars at longitudinal joint. see Revised Standard Plan RSP P18.

STATE OF CALIFORNIA
DEPARTMENT OF TRANSPORTATION

JOINTED PLAIN CONCRETE PAVEMENT NEW CONSTRUCTION

NO SCALE

RSP P1 DATED JULY 19, 2013 SUPERSEDES STANDARD PLAN P1 DATED MAY 20, 2011 - PAGE 125 OF THE STANDARD PLANS BOOK DATED 2010.

REVISED STANDARD PLAN RSP P1

2010 REVISED STANDARD PLAN RSP P1

5-31-13

Dist	COUNTY	ROUTE	POST MILES TOTAL PROJECT	SHEET No.	TOTAL SHEETS
06	Mad	152	R0.0/1.1	66	87

William K. Farnbach
REGISTERED CIVIL ENGINEER

July 19, 2013
PLANS APPROVAL DATE

REGISTERED PROFESSIONAL ENGINEER
William K. Farnbach
No. C49042
Exp. 9-30-14
CIVIL
STATE OF CALIFORNIA

THE STATE OF CALIFORNIA OR ITS OFFICERS OR AGENTS SHALL NOT BE RESPONSIBLE FOR THE ACCURACY OR COMPLETENESS OF SCANNED COPIES OF THIS PLAN SHEET.

TO ACCOMPANY PLANS DATED 6-30-14

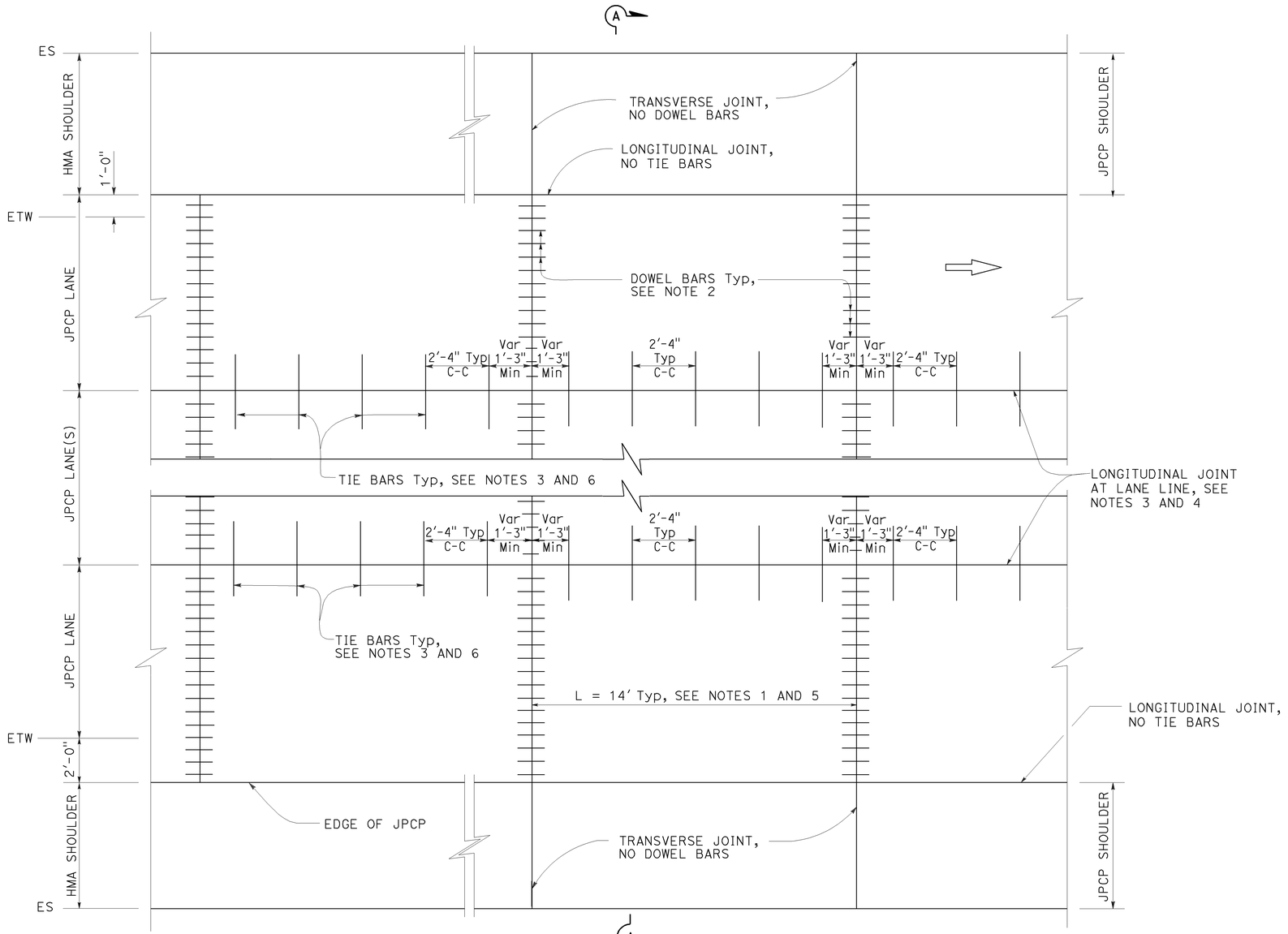

PLAN

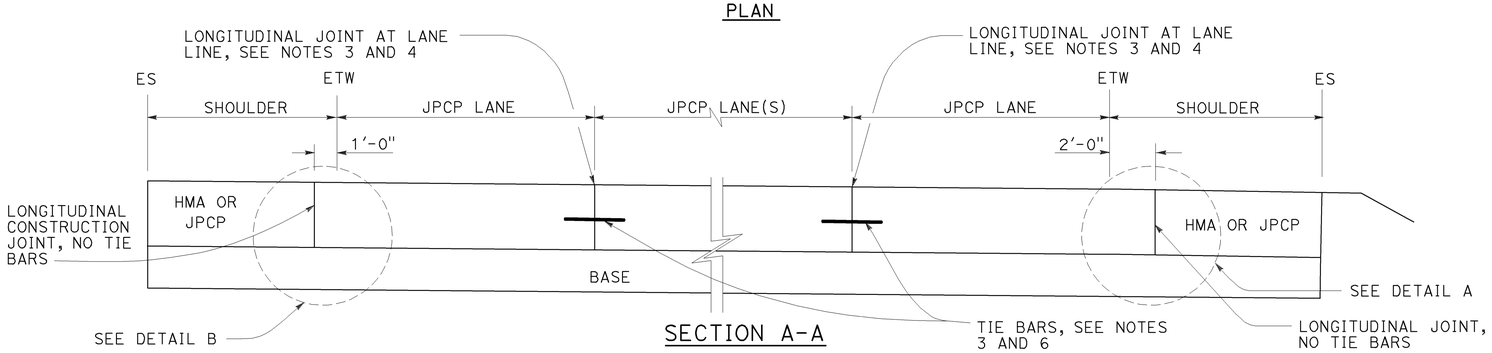

SECTION A-A

NOTES:

1. Transverse joint spacing may be adjusted to no less than 10' and no more than 14' to conform to bridges, change in pavement type, and hardened concrete pavement.
2. For transverse joint and dowel bar details not shown, see Revised Standard Plan RSP P10.
3. For longitudinal joint and tie bar details not shown, see Revised Standard Plan RSP P15.
4. For additional longitudinal joint layout details, see Revised Standard Plan RSP P18.
5. For joint layout at intersections, see Project Plans.
6. For dowel bars at longitudinal joint. see Revised Standard Plan RSP P18.
7. For limits of rumble strips, see Projects Plans.

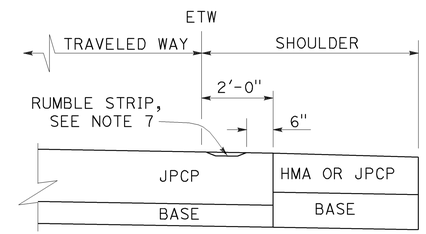

DETAIL A

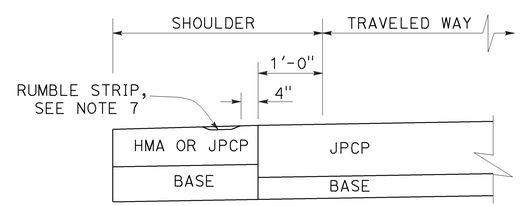

DETAIL B

STATE OF CALIFORNIA
DEPARTMENT OF TRANSPORTATION

JOINTED PLAIN CONCRETE PAVEMENT (WIDENED LANE) NEW CONSTRUCTION

NO SCALE

RSP P2 DATED JULY 19, 2013 SUPERSEDES STANDARD PLAN P2 DATED MAY 20, 2011 - PAGE 126 OF THE STANDARD PLANS BOOK DATED 2010.

REVISED STANDARD PLAN RSP P2

2010 REVISED STANDARD PLAN RSP P2

5-31-13

Dist	COUNTY	ROUTE	POST MILES TOTAL PROJECT	SHEET No.	TOTAL SHEETS
06	Mad	152	R0.0/1.1	67	87

William K. Farnbach
REGISTERED CIVIL ENGINEER

July 19, 2013
PLANS APPROVAL DATE

REGISTERED PROFESSIONAL ENGINEER
William K. Farnbach
No. C49042
Exp. 9-30-14
CIVIL
STATE OF CALIFORNIA

THE STATE OF CALIFORNIA OR ITS OFFICERS OR AGENTS SHALL NOT BE RESPONSIBLE FOR THE ACCURACY OR COMPLETENESS OF SCANNED COPIES OF THIS PLAN SHEET.

TO ACCOMPANY PLANS DATED 6-30-14

2010 REVISED STANDARD PLAN RSP P3A

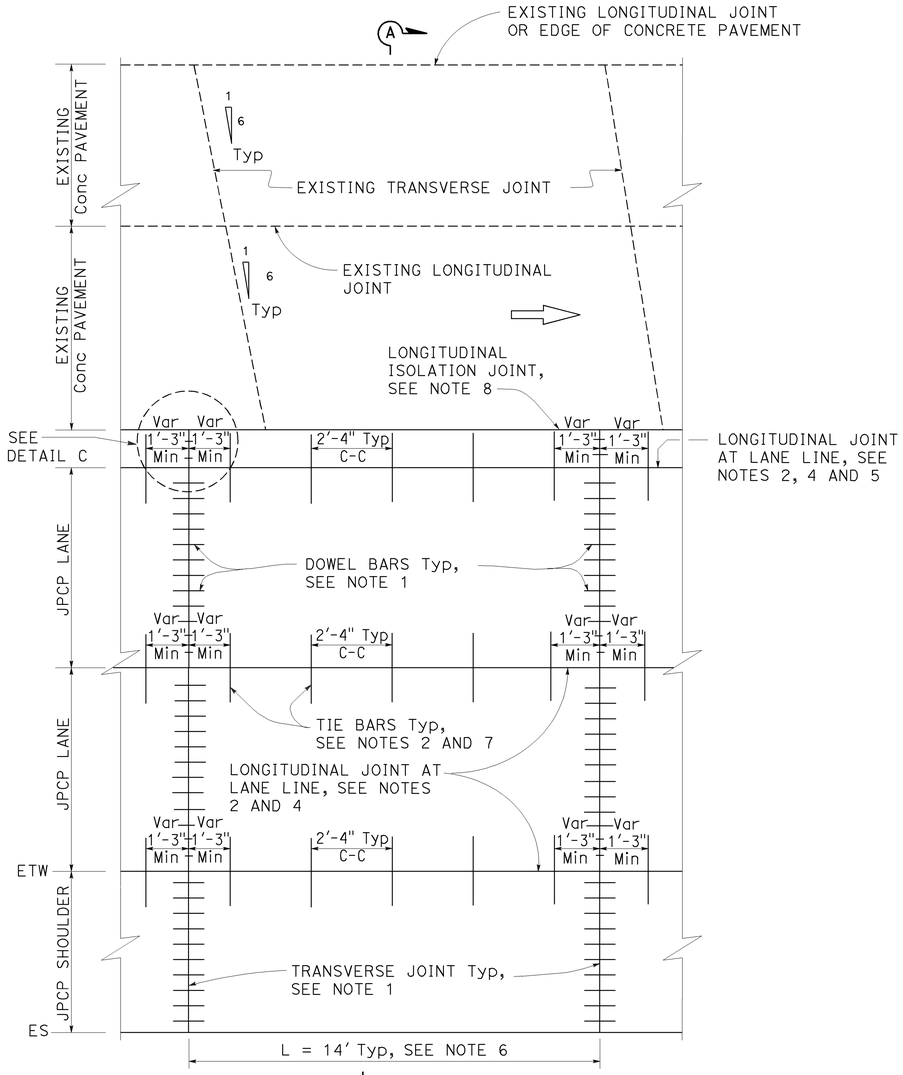

PLAN
ISOLATED
See Note 3

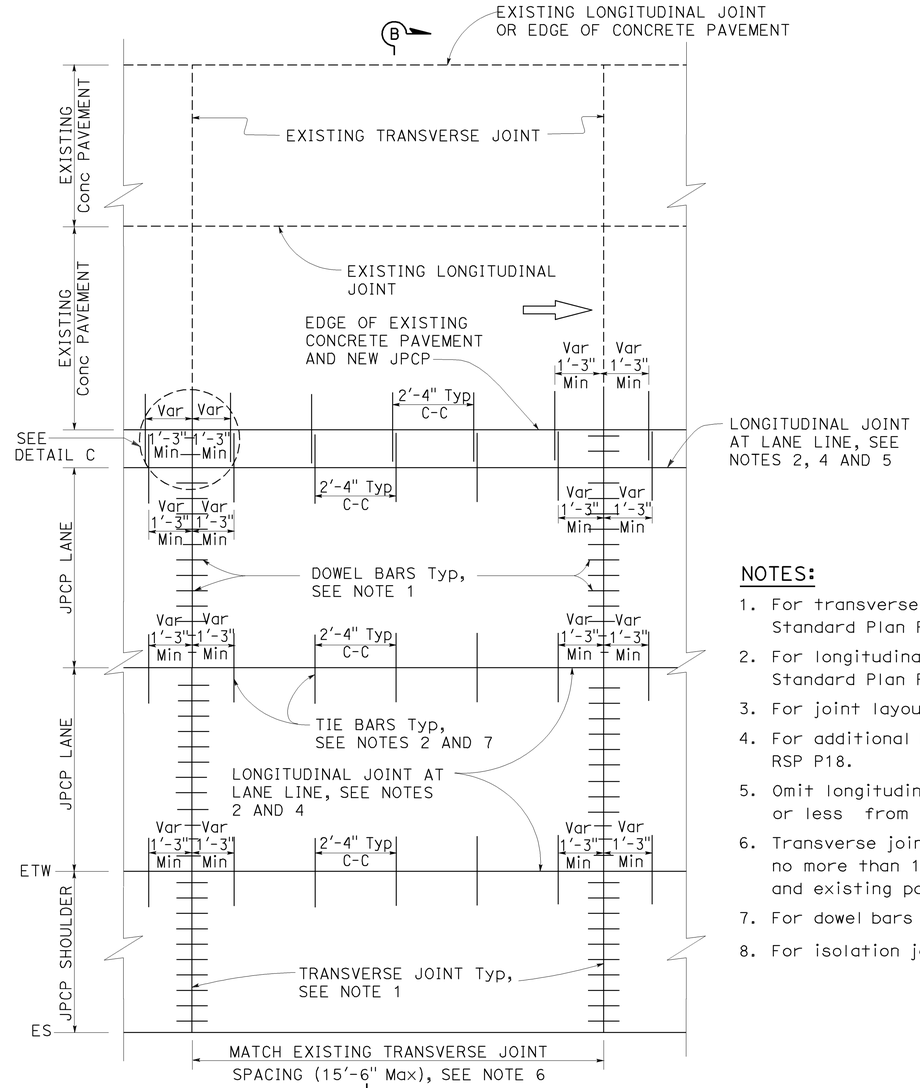

PLAN
TIED
See Note 3

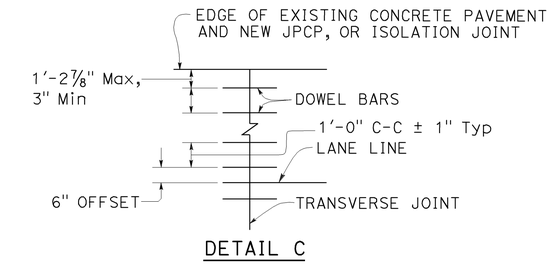

DETAIL C

NOTES:

1. For transverse joint and dowel bar details not shown, see Revised Standard Plan RSP P10.
2. For longitudinal joint and tie bar details not shown, see Revised Standard Plan RSP P15.
3. For joint layout at intersections, see Project Plans.
4. For additional longitudinal joint details, see Revised Standard Plan RSP P18.
5. Omit longitudinal joint when edge of new concrete pavement is 3'-3" or less from JPCP lane line.
6. Transverse joint spacing may be adjusted to no less than 10' and no more than 15'-6" to conform to bridges, change in pavement type and existing pavement.
7. For dowel bars at longitudinal joint. see Revised Standard Plan RSP P18.
8. For isolation joints, see Detail A on Revised Standard Plan RSP P18.

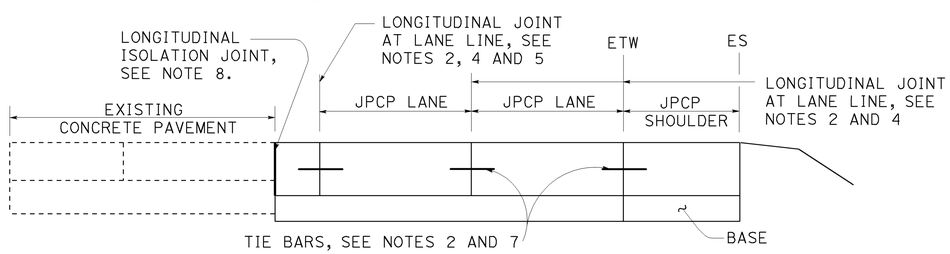

SECTION A-A

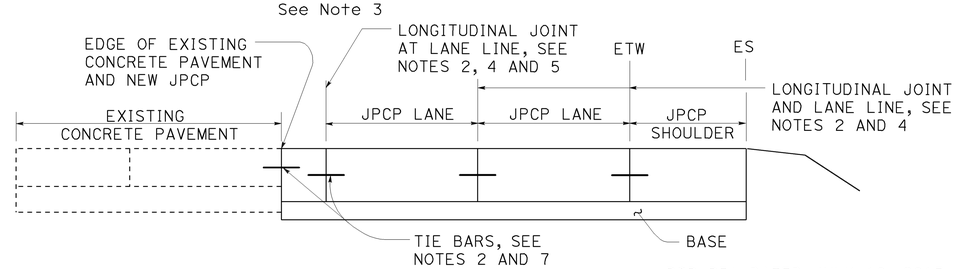

SECTION B-B

STATE OF CALIFORNIA
DEPARTMENT OF TRANSPORTATION

JOINTED PLAIN CONCRETE PAVEMENT LANE & SHOULDER ADDITION OR REPLACEMENT

NO SCALE

RSP P3A DATED JULY 19, 2013 SUPPLEMENTS THE STANDARD PLANS BOOK DATED 2010.

REVISED STANDARD PLAN RSP P3A

5-31-13

Dist	COUNTY	ROUTE	POST MILES TOTAL PROJECT	SHEET No.	TOTAL SHEETS
06	Mad	152	R0.0/1.1	68	87

William K. Farnbach
REGISTERED CIVIL ENGINEER

July 19, 2013
PLANS APPROVAL DATE

REGISTERED PROFESSIONAL ENGINEER
William K. Farnbach
No. C49042
Exp. 9-30-14
CIVIL
STATE OF CALIFORNIA

THE STATE OF CALIFORNIA OR ITS OFFICERS OR AGENTS SHALL NOT BE RESPONSIBLE FOR THE ACCURACY OR COMPLETENESS OF SCANNED COPIES OF THIS PLAN SHEET.

TO ACCOMPANY PLANS DATED 6-30-14

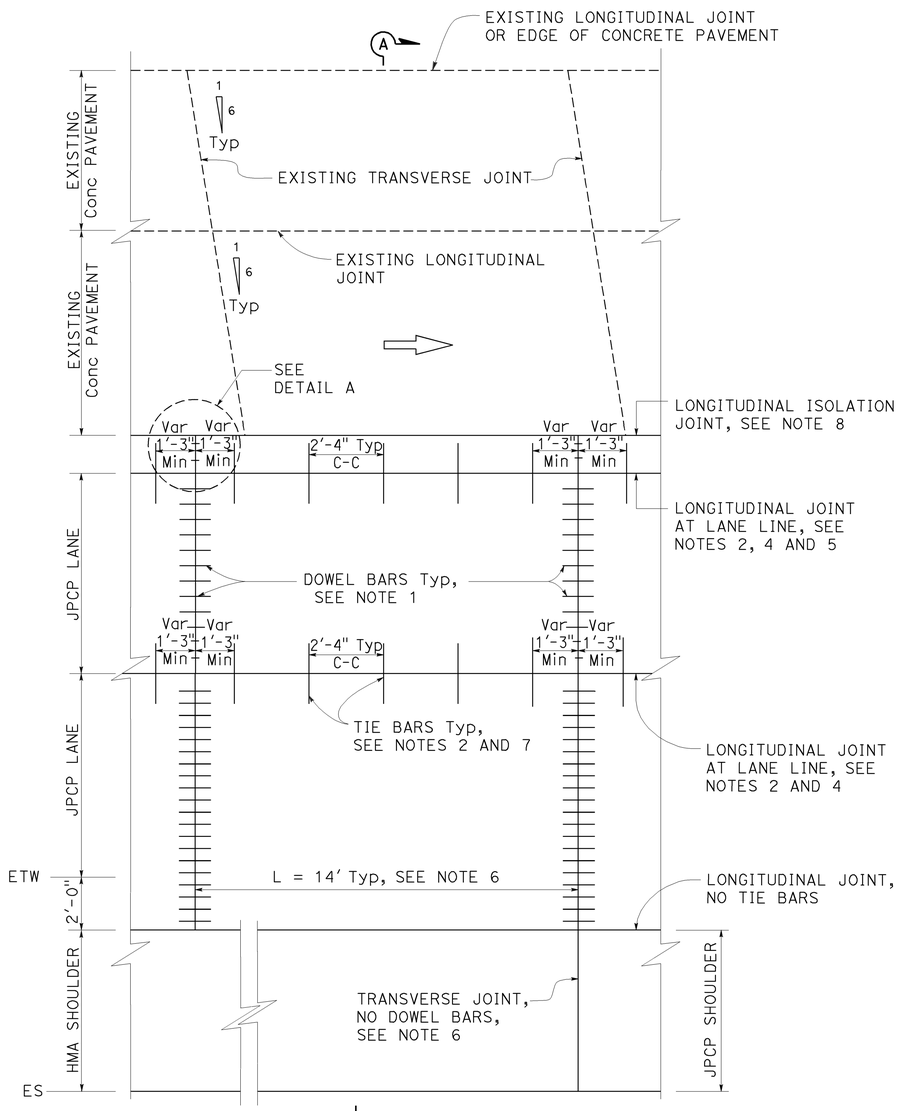

A PLAN
ISOLATED
See Note 3

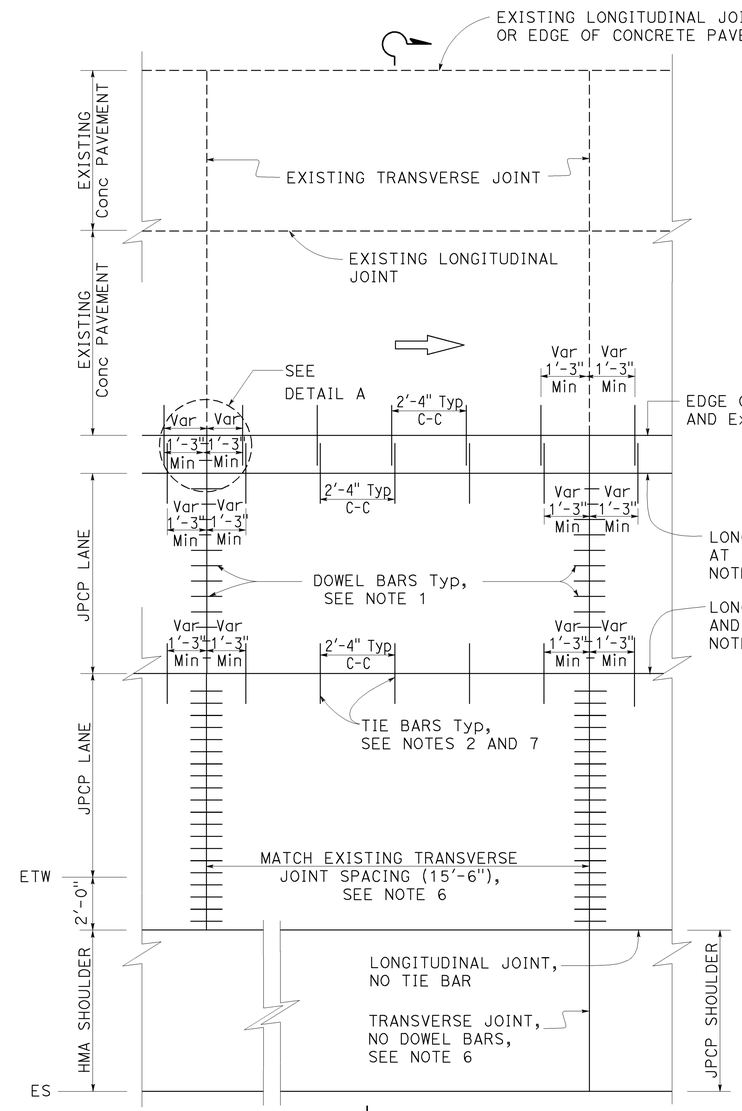

B PLAN
TIED
See Note 3

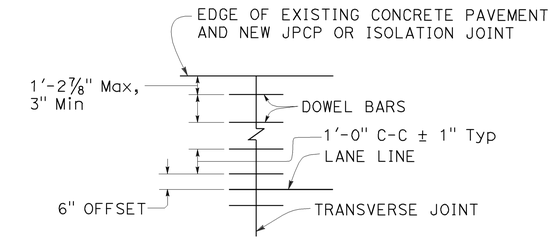

DETAIL A

NOTES:

1. For transverse joint and dowel bar details not shown, see Revised Standard Plan RSP P10.
2. For longitudinal joint and tie bar details not shown, see Revised Standard Plan RSP P15.
3. For joint layout at intersections, see Project Plans.
4. For additional longitudinal joint details, see Revised Standard Plan RSP P18.
5. Omit longitudinal joint when edge of new concrete pavement is 3'-3" or less from JPCP lane line.
6. Transverse joint spacing may be adjusted to no less than 10' and no more than 15'-6" to conform to bridges, change in pavement type and existing pavement.
7. For dowel bars at longitudinal joint. see Revised Standard Plan RSP P18.
8. For isolation joints, see Detail A on Revised Standard Plan RSP P18.

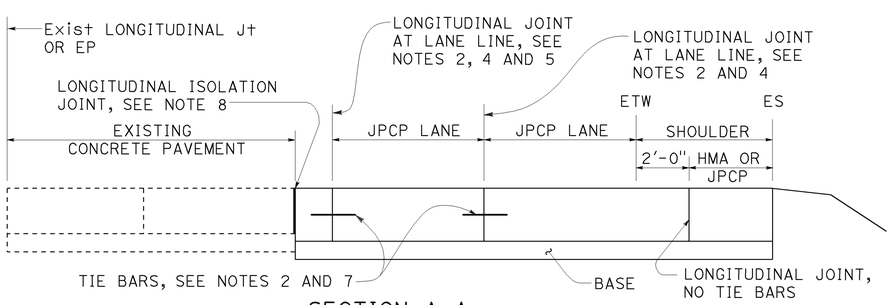

SECTION A-A

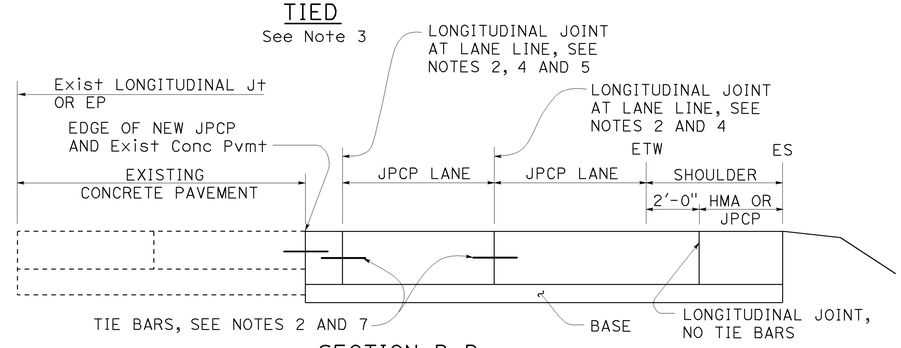

SECTION B-B

STATE OF CALIFORNIA
DEPARTMENT OF TRANSPORTATION

JOINTED PLAIN CONCRETE PAVEMENT (WIDENED LANE) LANE AND SHOULDER ADDITION OR REPLACEMENT

NO SCALE

RSP P3B DATED JULY 19, 2013 SUPPLEMENTS THE STANDARD PLANS BOOK DATED 2010.

REVISED STANDARD PLAN RSP P3B

2010 REVISED STANDARD PLAN RSP P3B

5-31-13

Dist	COUNTY	ROUTE	POST MILES TOTAL PROJECT	SHEET No.	TOTAL SHEETS
06	Mad	152	R0.0/1.1	69	87

William K. Farnbach
REGISTERED CIVIL ENGINEER

July 19, 2013
PLANS APPROVAL DATE

REGISTERED PROFESSIONAL ENGINEER
William K. Farnbach
No. C49042
Exp. 9-30-14
CIVIL
STATE OF CALIFORNIA

THE STATE OF CALIFORNIA OR ITS OFFICERS OR AGENTS SHALL NOT BE RESPONSIBLE FOR THE ACCURACY OR COMPLETENESS OF SCANNED COPIES OF THIS PLAN SHEET.

TO ACCOMPANY PLANS DATED 6-30-14

NOTES:

1. Details for skewed joints also apply to perpendicular joints.
2. Use 1′-6" ± ¼" long dowel bars with a 1¼" diameter except 1" diameter dowel bars may be used if D < 0.70′.
3. Caulk existing transverse joint at bottom and sides of the dowel bar slot prior to placing dowel bar and foam insert.
4. Foam insert thickness must match width of existing transverse joint or crack.

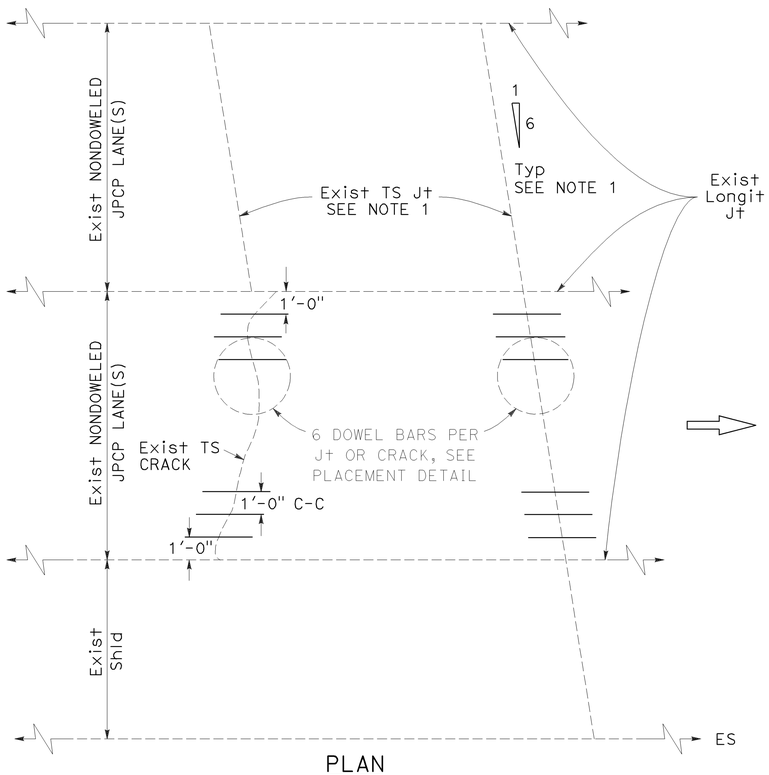

PLAN

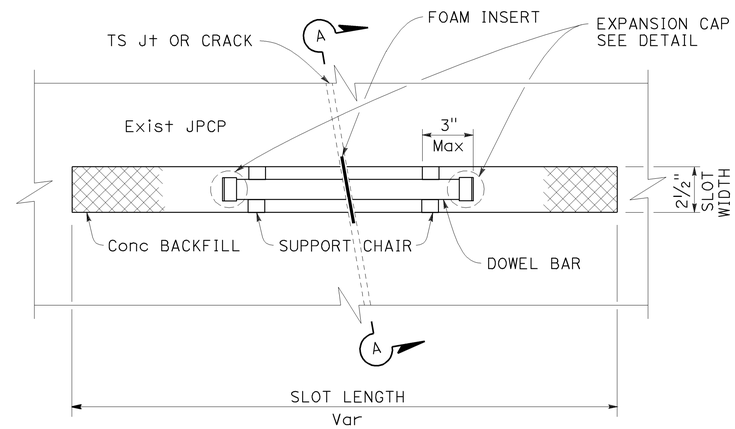

PLAN

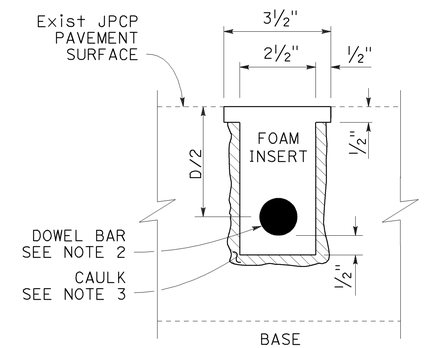

SECTION A-A

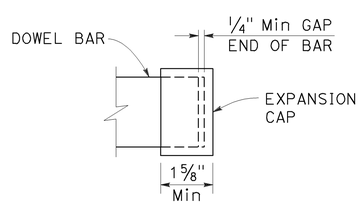

EXPANSION CAP DETAIL

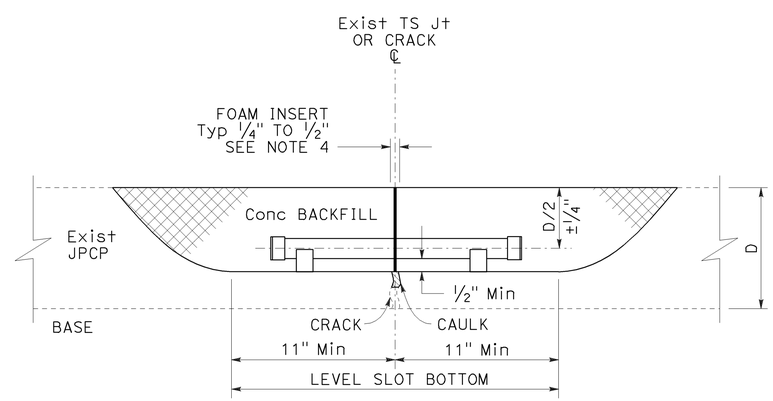

ELEVATION

DOWEL BAR PLACEMENT DETAIL

STATE OF CALIFORNIA
DEPARTMENT OF TRANSPORTATION

DOWEL BAR RETROFIT

NO SCALE

RSP P7 DATED JULY 19, 2013 SUPERSEDES STANDARD PLAN P7
DATED MAY 20, 2011 - PAGE 129 OF THE STANDARD PLANS BOOK DATED 2010.

REVISED STANDARD PLAN RSP P7

2010 REVISED STANDARD PLAN RSP P7

6-17-13

Dist	COUNTY	ROUTE	POST MILES TOTAL PROJECT	SHEET No.	TOTAL SHEETS
06	Mad	152	R0.0/1.1	70	87

William K. Farnbach
REGISTERED CIVIL ENGINEER

July 19, 2013
PLANS APPROVAL DATE

REGISTERED PROFESSIONAL ENGINEER
William K. Farnbach
No. C49042
Exp. 9-30-14
CIVIL
STATE OF CALIFORNIA

THE STATE OF CALIFORNIA OR ITS OFFICERS OR AGENTS SHALL NOT BE RESPONSIBLE FOR THE ACCURACY OR COMPLETENESS OF SCANNED COPIES OF THIS PLAN SHEET.

TO ACCOMPANY PLANS DATED 6-30-14

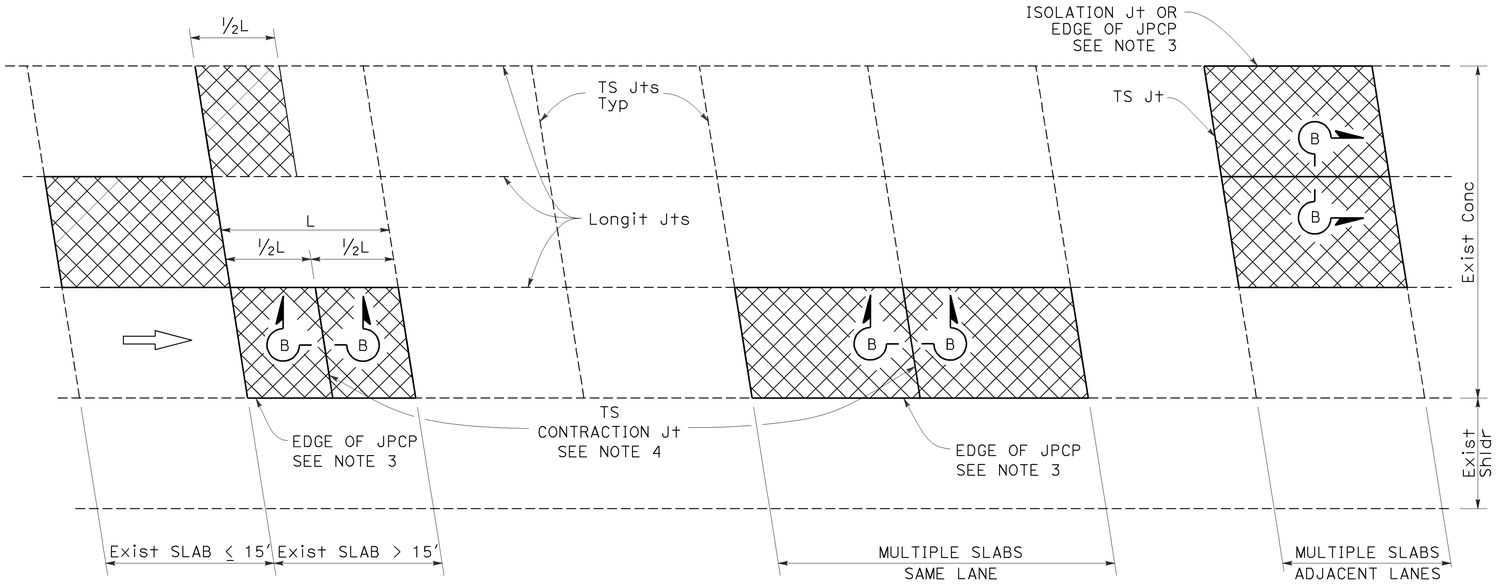

PLAN

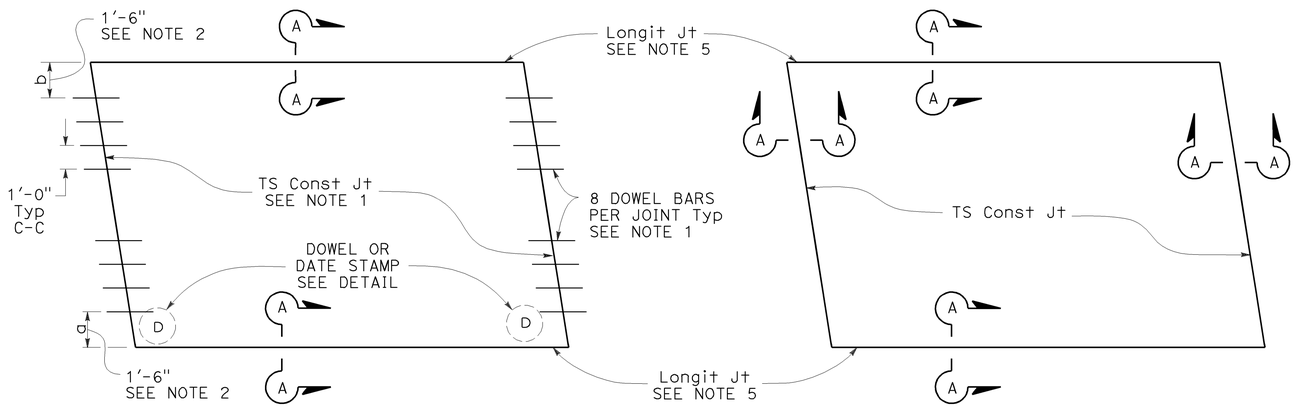

TYPE I
See Design Note 1

TYPE II
See Design Note 2

SLAB LAYOUT

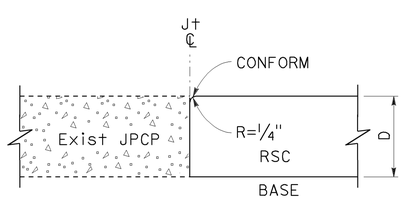

SECTION A-A

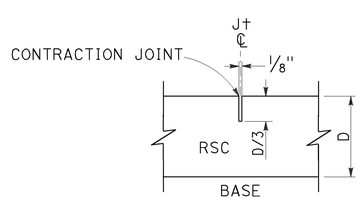

SECTION B-B

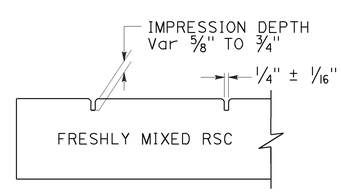

SECTION C-C

LEGEND:

RSC RAPID STRENGTH CONCRETE

INDIVIDUAL SLAB REPLACEMENT WITH RSC

NOTES:

1. For details not shown, see Revised Standard Plan RSP P10.
2. Where the existing outside shoulder is asphalt concrete pavement, "a" = 1'-0" and "b" = 2'-0".
3. Use side forms where edge of RSC pavement is adjacent to asphalt concrete.
4. Transverse contraction joint to match skew of existing joint. Omit dowel bars.
5. Do not place tie bars at longitudinal joints.

DESIGN NOTES:

1. For concrete slab repair with at least 5 years design life.
2. For short term repairs < 5 yrs design life or for slab replacements with cracking and seating.

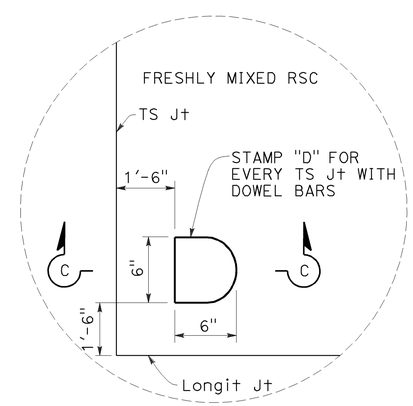

DOWEL STAMP DETAIL

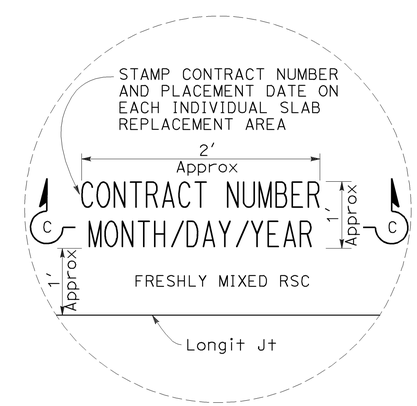

DATE STAMP DETAIL

STATE OF CALIFORNIA
DEPARTMENT OF TRANSPORTATION

INDIVIDUAL SLAB REPLACEMENT WITH RAPID STRENGTH CONCRETE

NO SCALE

RSP P8 DATED JULY 19, 2013 SUPERSEDES RSP P8 DATED APRIL 20, 2012 AND STANDARD PLAN P8 DATED MAY 20, 2011 - PAGE 130 OF THE STANDARD PLANS BOOK DATED 2010.

REVISED STANDARD PLAN RSP P8

2010 REVISED STANDARD PLAN RSP P8

5-31-13

Dist	COUNTY	ROUTE	POST MILES TOTAL PROJECT	SHEET No.	TOTAL SHEETS
06	Mad	152	R0.0/1.1	71	87

William K. Farnbach
REGISTERED CIVIL ENGINEER

July 19, 2013
PLANS APPROVAL DATE

REGISTERED PROFESSIONAL ENGINEER William K. Farnbach No. C49042 Exp. 9-30-14 CIVIL STATE OF CALIFORNIA

THE STATE OF CALIFORNIA OR ITS OFFICERS OR AGENTS SHALL NOT BE RESPONSIBLE FOR THE ACCURACY OR COMPLETENESS OF SCANNED COPIES OF THIS PLAN SHEET.

TO ACCOMPANY PLANS DATED 6-30-14

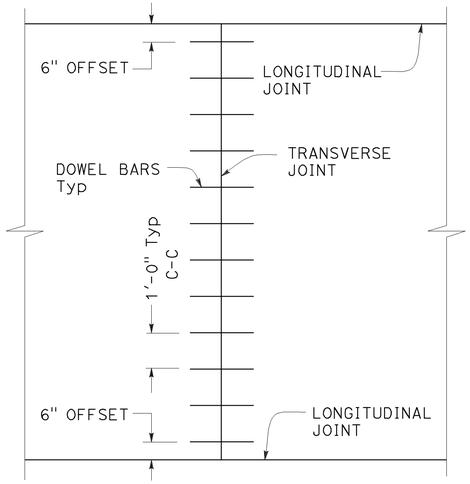

TRANSVERSE JOINT DOWEL BAR LAYOUT

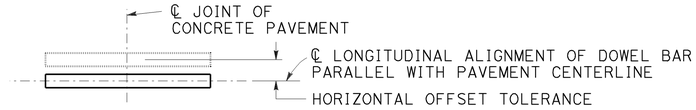

PLAN

HORIZONTAL OFFSET TOLERANCE

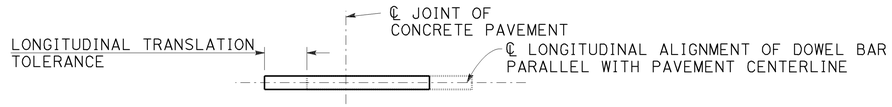

PLAN

LONGITUDINAL TRANSLATION TOLERANCE

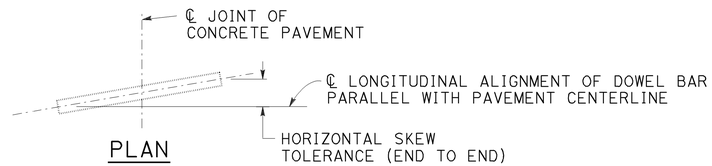

PLAN

HORIZONTAL SKEW TOLERANCE

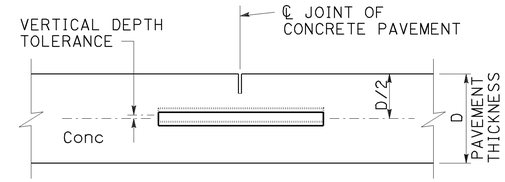

ELEVATION

VERTICAL DEPTH TOLERANCE

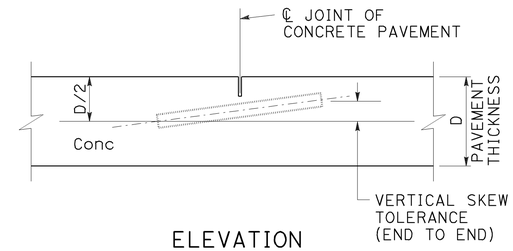

ELEVATION

VERTICAL SKEW TOLERANCE

NOTES:

1. See Revised Standard Plan RSP P1 for typical dowel bar placement and locations.
2. Where fresh concrete pavement is placed against new concrete or existing concrete pavement, rounding the corner of the existing concrete pavement is not required.
3. May also use ¾" Dia dowel bars 2'-4" ± ¼" in length. Center the length of dowel bars at the centerline of longitudinal joint.

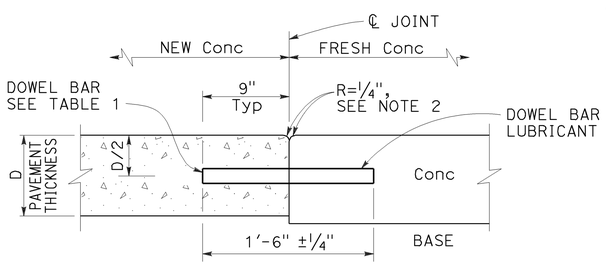

TRANSVERSE CONSTRUCTION JOINT DETAIL

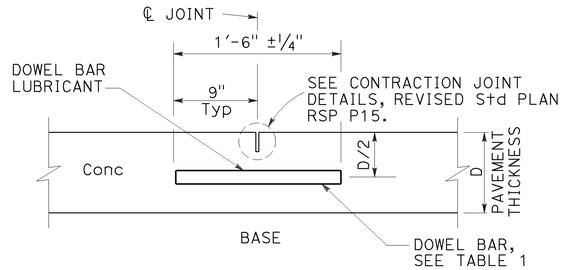

TRANSVERSE CONTRACTION JOINT

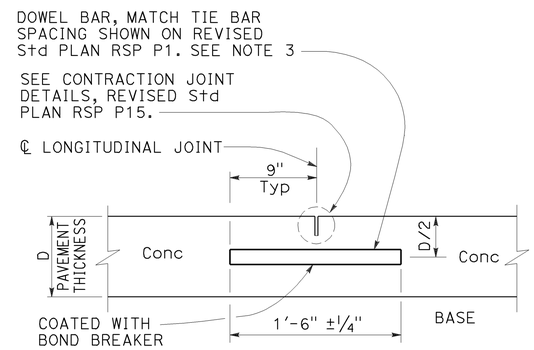

LONGITUDINAL CONTRACTION JOINT WITH DOWEL BARS

See Revised Std Plan RSP P18

TABLE 1

DOWEL BAR DIAMETER TABLE			
PAVEMENT THICKNESS	0.65'	> 0.65' - 0.85'	> 0.85'
MINIMUM DOWEL * BAR DIAMETER	1"	1¼"	1½"

* The drilled hole diameter must be ⅛" to 3/16" larger than the bar diameter.

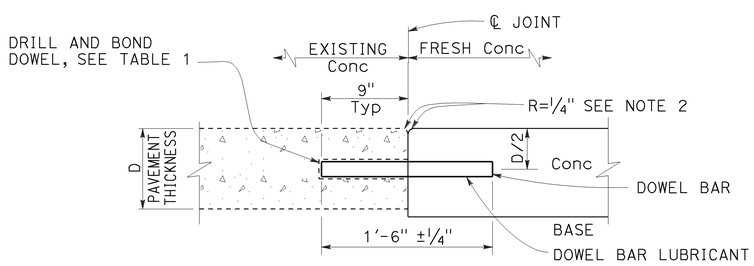

TRANSVERSE CONSTRUCTION JOINT FOR EXISTING CONCRETE PAVEMENT

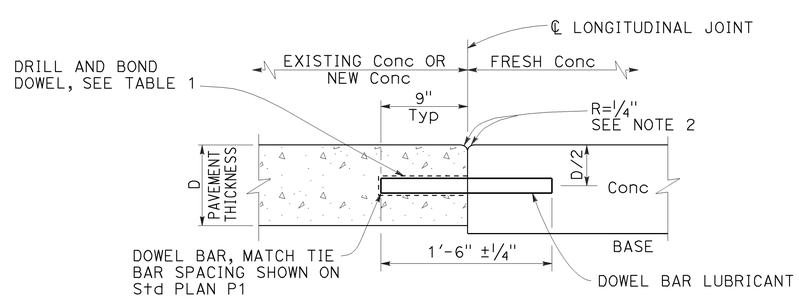

LONGITUDINAL CONSTRUCTION JOINT WITH DOWEL BARS

See Revised Std Plan RSP P18

STATE OF CALIFORNIA
DEPARTMENT OF TRANSPORTATION

CONCRETE PAVEMENT DOWEL BAR DETAILS

NO SCALE

RSP P10 DATED JULY 19, 2013 SUPERSEDES RSP P10 DATED APRIL 20, 2012 AND STANDARD PLAN P10 DATED MAY 20, 2011 - PAGE 131 OF THE STANDARD PLANS BOOK DATED 2010.

REVISED STANDARD PLAN RSP P10

2010 REVISED STANDARD PLAN RSP P10

5-31-13

TO ACCOMPANY PLANS DATED 6-30-14

Dist	COUNTY	ROUTE	POST MILES TOTAL PROJECT	SHEET No.	TOTAL SHEETS
06	Mad	152	R0.0/1.1	72	87

REGISTERED CIVIL ENGINEER

October 19, 2012
PLANS APPROVAL DATE

Glenn DeCou No. C34547 Exp. 9-30-13 CIVIL — REGISTERED PROFESSIONAL ENGINEER — STATE OF CALIFORNIA

THE STATE OF CALIFORNIA OR ITS OFFICERS OR AGENTS SHALL NOT BE RESPONSIBLE FOR THE ACCURACY OR COMPLETENESS OF SCANNED COPIES OF THIS PLAN SHEET.

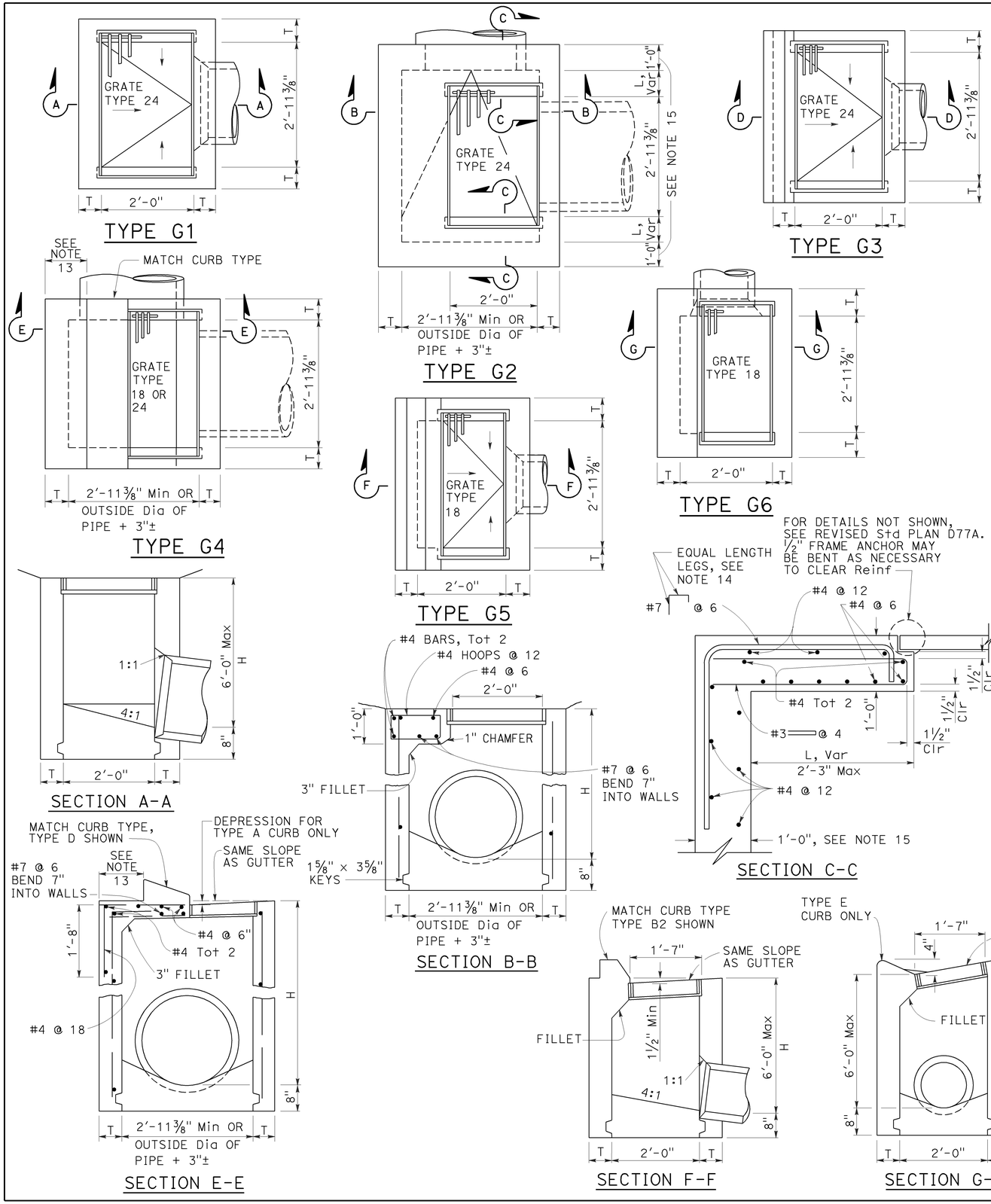

NOTES:

1. "H" is the difference in elevation between the outlet pipe flow line and the normal gutter grade line undepressed.
2. For "T" wall thickness, see Table A below.
3. Wall reinforcing not required when "H" is 8'-0" or less and the unsupported width or length is 7'-0" or less. Walls exceeding these limits shall be reinforced with #4 bars @ 1'-6" ± centers placed 1½" clear to inside of box unless otherwise shown.
4. Inlet bottom reinforcing not required. See Standard Plan D74C for alternative reinforced bottom and alternative half round bottom.
5. Steps-None required where "H" is less than 2'-6". Where "H" is 2'-6" or more, install steps with lowest rung 1'-0" above the floor and highest rung not more than 6" below top of inlet. The distance between steps shall not exceed 1'-0" and shall be uniform throughout the length of the wall. Place steps in the wall without an opening. Steps inserts may be substituted for the bar steps. Step inserts shall comply with State Industrial Safety requirements. See Standard Plan D74C for step details.
6. Details shown apply to both metal and concrete pipe.
7. Pipe(s) can be placed in any wall.
8. Curb section shall match adjacent curb.
9. Basin floors shall have wood trowel finish and a minimum slope of 12:3 from all directions toward outlet pipe.
10. Set inlet so that grate bars are parallel to direction of principal surface flow.
11. See Revised Standard Plans D77A and D77B for grate and frame details and weights of miscellaneous iron and steel.
12. See Standard Plan D78A for gutter depression details.
13. This dimenison will vary with different grates, curbs types, box width and wall thickness.
14. Bar may be rotated as necessary to clear opening. Where "L" is 6" or less, bar may be omitted.
15. Where "L" is 6" or less, wall thickness shall be as shown in Table A.
16. Cast-in-place inlets to be formed around all pipes/stubs intersecting the inlet, and concrete poured in one continuous operation. Precast inlets shall have mortared connections conforming to details for Type GCP Inlet shown on Standard Plan D75B. See Standard Specifications for mortar composition.

TABLE A

CONCRETE QUANTITIES				
TYPE	H=3'-0" TO 8'-0" (T=6")		H=8'-1" TO 20'-0" (T=8")	
	H=3'-0" (CY)	ADDITIONAL PCC PER FOOT (CY)	H=8'-1" (CY)	ADDITIONAL PCC PER FOOT (CY)
G-1	0.95	0.220	See Note A	SEE NOTE A
G-2*	1.31	0.255	3.50	0.357
G-3	1.03	0.220	See Note A	SEE NOTE A
G-4* (TYPE 24)	1.27	0.255	3.48	0.357
G-4* (TYPE 18)	1.30	0.255	3.50	0.357
G-5	1.02	0.220	SEE NOTE A	SEE NOTE A
G-6	1.04	0.220	SEE NOTE A	SEE NOTE A

TABLE BASED ON 8" FLOOR SLAB. NO DEDUCTIONS ARE TO BE MADE TO THESE QUANTITIES BECAUSE OF PIPE OPENINGS, DIFFERENT FLOOR ALTERNATIVES OR DIFFERENT CURB TYPES. * QUANTITIES FOR TYPE G-2 AND G-4 INLETS BASED ON THE MINIMUM INTERIOR DIMENSIONS.

NOTE A:

Maximum allowable height 6'-0".

STATE OF CALIFORNIA
DEPARTMENT OF TRANSPORTATION

DRAINAGE INLETS

NO SCALE

RSP D73 DATED OCTOBER 19, 2012 SUPERSEDES STANDARD PLAN D73 DATED MAY 20, 2011 - PAGE 156 OF THE STANDARD PLANS BOOK DATED 2010.

REVISED STANDARD PLAN RSP D73

2010 REVISED STANDARD PLAN RSP D73

7-19-12

Dist	COUNTY	ROUTE	POST MILES TOTAL PROJECT	SHEET No.	TOTAL SHEETS
06	Mad	152	R0.0/1.1	73	87

Raymond Don Tsztoo
REGISTERED CIVIL ENGINEER

April 19, 2013
PLANS APPROVAL DATE

REGISTERED PROFESSIONAL ENGINEER Raymond Don Tsztoo No. C37332 Exp. 6-30-14 CIVIL STATE OF CALIFORNIA

THE STATE OF CALIFORNIA OR ITS OFFICERS OR AGENTS SHALL NOT BE RESPONSIBLE FOR THE ACCURACY OR COMPLETENESS OF SCANNED COPIES OF THIS PLAN SHEET.

TO ACCOMPANY PLANS DATED 6-30-14

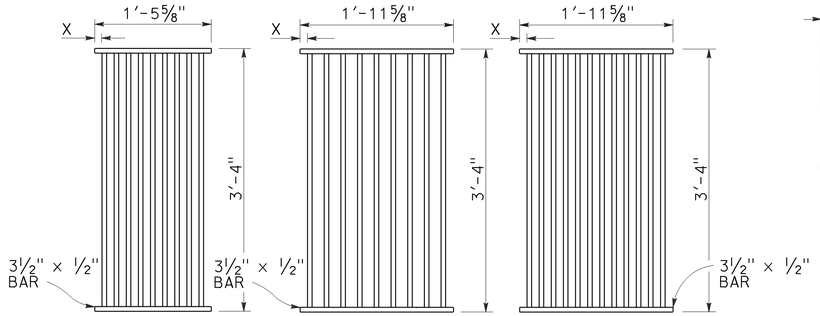

TYPE 18-9

1⅜" Clear spacing. Use within the roadbed on highways where bicycles and pedestrians are excluded.

TYPE 24-9

2" Clear spacing. Use in locations off the roadbed on all types of highways.

TYPE 24-12

1⅜" Clear spacing. Use within the roadbed on highways where bicycles and pedestrians are excluded.

RECTANGULAR GRATE DETAILS

(See table below)

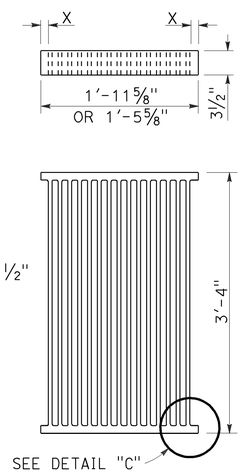

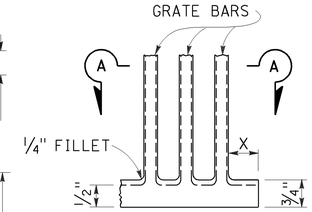

DETAIL "C"

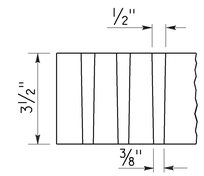

SECTION A-A

ALTERNATIVE CAST DUCTILE IRON GRATE OR CAST CARBON STEEL GRATE

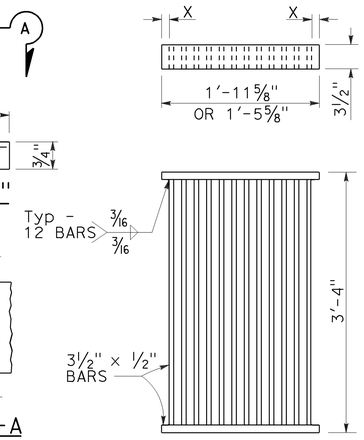

ALTERNATIVE WELDED GRATE

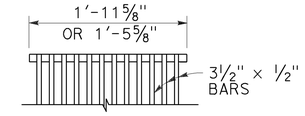

CAST END BLOCK

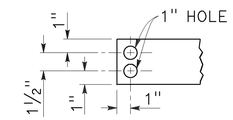

END OF BAR

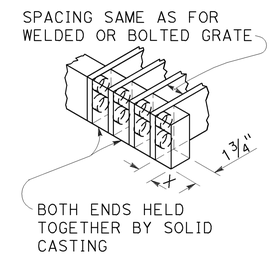

ALTERNATIVE CAST DUCTILE IRON OR CAST CARBON STEEL END BLOCK GRATE

NOTES:

1. Grate type numbers refer to approximate width of grate in inches and number of bars, respectively.
2. Contractor has the option of using cast ductile iron, cast carbon steel, welded, bolted, or cast end block grate.
3. Rounded top of bars optional on all grates.
4. Pipe inlets with a grate shall be placed so that bars parallel direction of principle surface flow.
5. Complete joint penetration butt welds may be substituted for the fillet welds on all anchors.
6. Standard square, hexagon, round or equivalent headed anchors may be substituted for the right angle hooks on the anchors shown on this plan.
7. Grate and frame weights are based on welded grates (weights of face angles, steps, protection bars, etc. are not included).
8. Connect chain to grate and frame only at locations shown on the plans. When chain is required, do not use cast ductile iron grates.

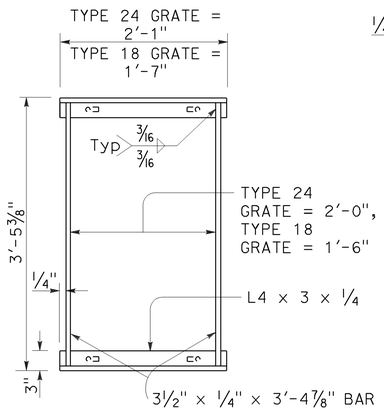

TYPICAL FRAME

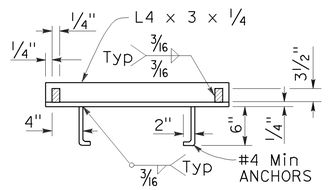

CROSS SECTION

(Thru frame)

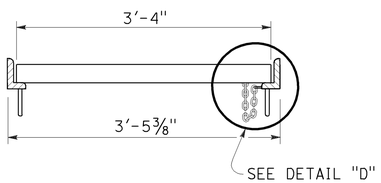

LONGITUDINAL SECTION

(Thru frame and grate)

RECTANGULAR FRAME DETAILS

(For all rectangular grates)

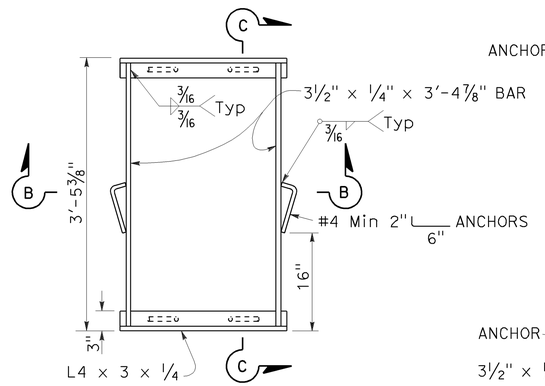

TYPICAL FRAME

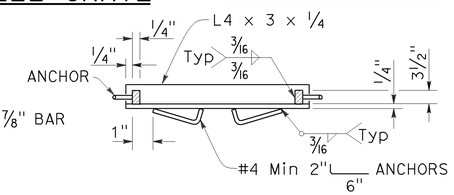

SECTION B-B

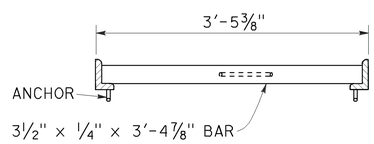

SECTION C-C

ALTERNATIVE ANCHOR FOR RECTANGULAR FRAME

(For details not shown, See Rectangular Frame Details)

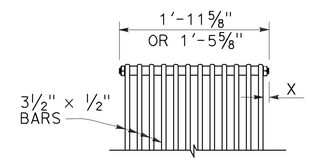

BOLTED END BLOCK

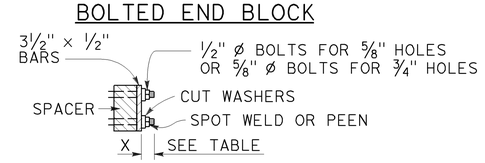

BOLTING DETAIL

ALTERNATIVE BOLTED GRATE

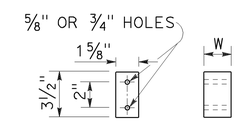

BAR SPACER

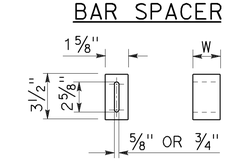

ALTERNATIVE SPACER

W = 1⅜" or 2"

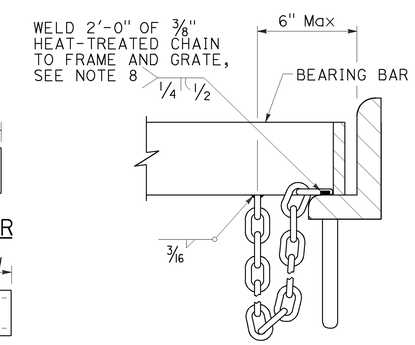

DETAIL "D"

(Steel grates only)

GRATE BAR SPACING TABLE

TYPE	No. OF BARS	CLEAR BAR SPACING	X
18-9	9	1⅜"	1 1/16"
24-9	9	2"	1 9/16"
24-12	12	1⅜"	1¼"

INLET TYPE	COVER TYPE	WEIGHT LB
OS	PLATE	174
OL-7	PLATE	170
OL-10	PLATE	170
OL-14	PLATE	170
OL-21	PLATE	170
OCP	PLATE	112
OCPI	PLATE	112
OCPI	REDWOOD	42
OMP	PLATE	177
OMPI	PLATE	177

INLET TYPE	GRATE TYPE	No. OF GRATES	WEIGHT LB
GDO	24-12	2	634
GOL-7	24-12	1	326
GOL-10	24-12	1	326
GO,G1,G2,G3,G4 (TYPE 24)	24-9	1	263
	24-12	1	326
G4 (TYPE 18),G5,G6	18-9	1	249
GT1	18-9	2	498
GT2	18-9	2	498
GT3	24-12	2	652
GT4	24-12	2	652
TRASH RACK			22
GRATE CHAIN			3

BASIS FOR Misc IRON & STEEL FINAL PAY WEIGHTS FOR DRAINAGE INLETS

(See Note 7)

STATE OF CALIFORNIA
DEPARTMENT OF TRANSPORTATION

GRATE DETAILS No. 1

NO SCALE

RSP D77A DATED APRIL 19, 2013 SUPERSEDES RSP D77A DATED JULY 20, 2012 AND STANDARD PLAN D77A DATED MAY 20, 2011 - PAGE 164 OF THE STANDARD PLANS BOOK DATED 2010.

REVISED STANDARD PLAN RSP D77A

2010 REVISED STANDARD PLAN RSP D77A

4-4-13

Dist	COUNTY	ROUTE	POST MILES TOTAL PROJECT	SHEET No.	TOTAL SHEETS
06	Mad	152	R0.0/1.1	74	87

LICENSED LANDSCAPE ARCHITECT

July 19, 2013
PLANS APPROVAL DATE

THE STATE OF CALIFORNIA OR ITS OFFICERS OR AGENTS SHALL NOT BE RESPONSIBLE FOR THE ACCURACY OR COMPLETENESS OF SCANNED COPIES OF THIS PLAN SHEET.

LICENSED LANDSCAPE ARCHITECT — Gregory A. Balzer 2576 — 10-31-13 Renewal Date — 2-28-15 Renewal Date — 7-19-13 Date — STATE OF CALIFORNIA

TO ACCOMPANY PLANS DATED 6-30-14

A

AB	AGGREGATE BASE
ABS	ACRYLONITRILE-BUTADIENE-STYRENE
AC	ASPHALT CONCRETE
ACC	ARMOR-CLAD CONDUCTORS
Adj	ADJACENT/ADJUSTABLE
AIC	AUXILIARY IRRIGATION CONTROLLER
Alt	ALTERNATIVE
AMEND	AMENDMENT
ARV	AIR RELEASE VALVE
AUTO	AUTOMATIC
AUX	AUXILIARY
AVB	ATMOSPHERIC VACUUM BREAKER

B

B&B	BALLED AND BURLAPPED
B/B	BRASS/BRONZE
B/B/PL	BRASS/BRONZE/PLASTIC
B/PL	BRASS/PLASTIC
BFM	BONDED FIBER MATRIX
Bit Ctd	BITUMINOUS COATED
BP	BOOSTER PUMP
BPA	BACKFLOW PREVENTER ASSEMBLY
BPE	BACKFLOW PREVENTER ENCLOSURE
BV	BALL VALVE

C

C	CONDUIT
CAP	CORRUGATED ALUMINUM PIPE
CARV	COMBINATION AIR RELEASE VALVE
CB	COUPLING BAND
CCA	CAM COUPLER ASSEMBLY
CEC	CONTROLLER ENCLOSURE CABINET
CHDPE	CORRUGATED HIGH DENSITY POLYETHYLENE
CL	CHAIN LINK
CNC	CONTROL AND NEUTRAL CONDUCTORS
Conc	CONCRETE
CP	COPPER PIPE
CS	COMPOST SOCK
CSP	CORRUGATED STEEL PIPE
CST	CENTER STRIP
CV	CHECK VALVE

D

Dia	DIAMETER
DIP	DUCTILE IRON PIPE
DIT	DRIP IRRIGATION TUBING
DG	DECOMPOSED GRANITE
DN	DIAMETER NOMINAL
DVA	DRIP VALVE ASSEMBLY

E

EC	EROSION CONTROL
ECTC	EROSION CONTROL TECHNOLOGY COUNCIL
Elect	ELECTRIC/ELECTRICAL
Elev	ELEVATION
ELL	ELBOW
ENCL	ENCLOSURE
EP	EDGE OF PAVEMENT
ES	EDGE OF SHOULDER
EST	END STRIP
ESTB	ESTABLISHMENT
ETW	EDGE OF TRAVELED WAY

F

F	FULL CIRCLE
F/P	FULL/PART CIRCLE
FCV	FLOW CONTROL VALVE
FERT	FERTILIZER
FG	FINISHED GRADE
FH	FLEXIBLE HOSE
FIPT	FEMALE IRON PIPE THREAD
FIS	FERTILIZER INJECTOR SYSTEM
FL	FLOW LINE
FR	FIBER ROLL
FS	FLOW SENSOR
FSC	FLOW SENSOR CABLE
FV	FLUSH VALVE

G

Galv	GALVANIZED
GARV	GARDEN VALVE
GARVA	GARDEN VALVE ASSEMBLY
GM	GRAVEL MULCH
GPH	GALLONS PER HOUR
GPM	GALLONS PER MINUTE
GSP	GALVANIZED STEEL PIPE
GV	GATE VALVE

H

H	HALF CIRCLE
HDPE	HIGH DENSITY POLYETHYLENE
HP	HORSEPOWER/HINGE POINT
HPL	HIGH PRESSURE LINE
Hwy	HIGHWAY

I

IC	IRRIGATION CONTROLLER
ICC	IRRIGATION CONTROLLER(S) IN CONTROLLER ENCLOSURE CABINET
ID	INSIDE DIAMETER
IFS	IRRIGATION FILTRATION SYSTEM
IPS	IRON PIPE SIZE
IPT	IRON PIPE THREAD
Irr	IRRIGATION

L

L	LENGTH

M

Max	MAXIMUM
MBGR	METAL BEAM GUARD RAILING
MCV	MANUAL CONTROL VALVE
MIC	MASTER IRRIGATION CONTROLLER
Min	MINIMUM
MIPT	MALE IRON PIPE THREAD
Misc	MISCELLANEOUS
Mtl	MATERIAL
MVP	MAINTENANCE VEHICLE PULLOUT

N

NCN	NO COMMON NAME
NL	NOZZLE LINE
No.	NUMBER
NPT	NATIONAL PIPE THREAD

O

O/C	ON CENTER
OD	OUTSIDE DIAMETER
OL	OVERLAP

P

P	PART CIRCLE
PB	PULL BOX
PCC	PORTLAND CEMENT CONCRETE
PE	POLYETHYLENE
Pkt	PACKET
PL	PLASTIC
PLS	PURE LIVE SEED
PLT	PLANT/PLANTING
PLT ESTB	PLANT ESTABLISHMENT
PM	POST MILE
PR	PRESSURE RATED
PRLV	PRESSURE RELIEF VALVE
PRV	PRESSURE REGULATING VALVE
PVC	POLYVINYL CHLORIDE
Pvmt	PAVEMENT

Q

Q	QUARTER CIRCLE
QCV	QUICK COUPLING VALVE

R

R	RADIUS
RCP	REINFORCED CONCRETE PIPE
RCV	REMOTE CONTROL VALVE
RCVM	REMOTE CONTROL VALVE (MASTER)
RCVMF	REMOTE CONTROL VALVE (MASTER) W/FLOW SENSOR
RCVP	REMOTE CONTROL VALVE W/PRESSURE REGULATOR
RCW	RECYCLED WATER
RECP	ROLLED EROSION CONTROL PRODUCT
REQ	REQUIRED
RICS	REMOTE IRRIGATION CONTROL SYSTEM
R/W	RIGHT OF WAY

S

S	SLIP
SCH	SCHEDULE
SF	STATE-FURNISHED
Shld	SHOULDER
Sq	SQUARE
SST	SIDE STRIP
Sta	STATION
Std	STANDARD
SW	SIDEWALK/SOUND WALL

T

T	THIRD CIRCLE/THREAD
TLS	TRUCK LOADING STANDPIPE
TQ	THREE QUARTER CIRCLE
TRM	TURF REINFORCEMENT MAT
TT	TWO-THIRDS CIRCLE
TWSA	TREE WELL SPRINKLER ASSEMBLY
Typ	TYPICAL

U

UG	UNDERGROUND

W

W	WIDTH
W/	WITH
WM	WATER METER
WS	WYE STRAINER
WSA	WYE STRAINER ASSEMBLY
WSP	WELDED STEEL PIPE
WWM	WELDED WIRE MESH

NOTE:

For additional abbreviations, see Standard Plans A10A and A10B.

STATE OF CALIFORNIA
DEPARTMENT OF TRANSPORTATION

LANDSCAPE AND EROSION CONTROL ABBREVIATIONS

NO SCALE

RSP H1 DATED JULY 19, 2013 SUPERSEDES STANDARD PLAN H1 DATED MAY 20, 2011 - PAGE 218 OF THE STANDARD PLANS BOOK DATED 2010.

REVISED STANDARD PLAN RSP H1

2010 REVISED STANDARD PLAN RSP H1

6-28-13

Dist	COUNTY	ROUTE	POST MILES TOTAL PROJECT	SHEET No.	TOTAL SHEETS
06	Mad	152	R0.0/1.1	75	87

LICENSED LANDSCAPE ARCHITECT

November 15, 2013
PLANS APPROVAL DATE

Gregory A. Balzer 2516 — LICENSED LANDSCAPE ARCHITECT — STATE OF CALIFORNIA
Expiration Date 2-28-15
Renewal Date 11-15-13
Date

THE STATE OF CALIFORNIA OR ITS OFFICERS OR AGENTS SHALL NOT BE RESPONSIBLE FOR THE ACCURACY OR COMPLETENESS OF SCANNED COPIES OF THIS PLAN SHEET.

TO ACCOMPANY PLANS DATED 6-30-14

2010 REVISED STANDARD PLAN RSP H2

EXISTING	NEW	ITEM DESCRIPTION
		WATER METER (WM)
		BACKFLOW PREVENTER ASSEMBLY (BPA)
		BACKFLOW PREVENTER ENCLOSURE (BPE)
		BOOSTER PUMP (BP)
		TRUCK LOADING STANDPIPE (TLS)
	FS	FLOW SENSOR (FS)
		MASTER IRRIGATION CONTROLLER (MIC)
		AUXILIARY IRRIGATION CONTROLLER (AIC)
		IRRIGATION CONTROLLER (IC) IRRIGATION CONTROLLER (IC) (BATTERY) IRRIGATION CONTROLLER (IC) (SOLAR) IRRIGATION CONTROLLER (IC) (TWO WIRE) IRRIGATION CONTROLLER(S) IN CONTROLLER ENCLOSURE CABINET (ICC)
acc	ACC	ARMOR-CLAD CONDUCTORS (ACC)
cnc	CNC	CONTROL AND NEUTRAL CONDUCTORS (CNC)
		IRRIGATION CONDUIT
		EXTEND IRRIGATION CONDUIT
dip	DIP	DUCTILE IRON PIPE (SUPPLY LINE) (MAIN) (DIP)
		GALVANIZED STEEL PIPE (SUPPLY LINE) (MAIN) (GSP)
		GALVANIZED STEEL PIPE (SUPPLY LINE) (LATERAL) (GSP)
		PLASTIC PIPE (SUPPLY LINE) (MAIN)
		PLASTIC PIPE (SUPPLY LINE) (LATERAL)
cp	CP	COPPER PIPE (SUPPLY LINE)
dit	DIT	DRIP IRRIGATION TUBING
		REMOTE CONTROL VALVE (RCV) REMOTE CONTROL VALVE (MASTER) (RCVM) REMOTE CONTROL VALVE (MASTER) W/FLOW METER (RCVMF)
P	P	REMOTE CONTROL VALVE W/PRESSURE REGULATOR (RCVP)
		EXISTING MANUAL CONTROL VALVE (MCV)
	V	DRIP VALVE ASSEMBLY (DVA)
	Y	WYE STRAINER ASSEMBLY (WSA)

EXISTING	NEW	ITEM DESCRIPTION
		GATE VALVE (GV)
		BALL VALVE (BV)
		QUICK COUPLING VALVE (QCV)
		CAM COUPLER ASSEMBLY (CCA)
		GARDEN VALVE ASSEMBLY (GARVA)
		PRESSURE REGULATING VALVE (PRV)
		PRESSURE RELIEF VALVE (PRLV)
		FLOW CONTROL VALVE (FCV)
		COMBINATION AIR RELEASE VALVE (CARV)
		CHECK VALVE (CV)
		FLUSH VALVE (FV)
		EXISTING NOZZLE LINE W/TURNING UNION
		EXISTING IRRIGATION SYSTEM
		EXISTING IRRIGATION SYSTEM TO BE REMOVED
		CHAIN LINK GATE
		QUICK COUPLING VALVE W/SPRINKLER PROTECTOR
3	3	SPRINKLER W/SPRINKLER PROTECTOR
	C	CONNECT TO EXISTING SYSTEM
		CAP
		CAP EXISTING
	FR	FIBER ROLL
	CS	COMPOST SOCK

- RCV SIZE
- IRRIGATION CONTROLLER
- CONTROLLER STATION
- VALVE IN PARALLEL (IF APPLICABLE)
- GPM
- QUANTITY OF SPRINKLERS (WHEN SHOWN)

* 2½"-A-2b-40-60

VALVE CODE

* VALVE CODES FOR EXISTING VALVES ARE SHOWN IN A DASHED ENCLOSURE.

STATE OF CALIFORNIA
DEPARTMENT OF TRANSPORTATION

LANDSCAPE AND EROSION CONTROL SYMBOLS

NO SCALE

RSP H2 DATED NOVEMBER 15, 2013 SUPERSEDES RSP H2 DATED JULY 19, 2013 AND STANDARD PLAN H2 DATED MAY 20, 2011 - PAGE 219 OF THE STANDARD PLANS BOOK DATED 2010.

REVISED STANDARD PLAN RSP H2

10-9-13

Dist	COUNTY	ROUTE	POST MILES TOTAL PROJECT	SHEET No.	TOTAL SHEETS
06	Mad	152	R0.0/1.1	76	87

REGISTERED CIVIL ENGINEER

July 19, 2013
PLANS APPROVAL DATE

REGISTERED PROFESSIONAL ENGINEER
Gurinderpal Bhullar
No. C48815
Exp. 9-30-14
CIVIL
STATE OF CALIFORNIA

THE STATE OF CALIFORNIA OR ITS OFFICERS OR AGENTS SHALL NOT BE RESPONSIBLE FOR THE ACCURACY OR COMPLETENESS OF SCANNED COPIES OF THIS PLAN SHEET.

TO ACCOMPANY PLANS DATED 6-30-14

2010 REVISED STANDARD PLAN RSP T9

TABLE 1

TAPER LENGTH CRITERIA AND CHANNELIZING DEVICE SPACING

SPEED (S)	MINIMUM TAPER LENGTH * FOR WIDTH OF OFFSET 12 FEET (W)				MAXIMUM CHANNELIZING DEVICE SPACING		
					X	Y	Z **
	TANGENT 2L	MERGING L	SHIFTING L/2	SHOULDER L/3	TAPER	TANGENT	CONFLICT
mph	ft	ft	ft	ft	ft	ft	ft
20	160	80	40	27	20	40	10
25	250	125	63	42	25	50	12
30	360	180	90	60	30	60	15
35	490	245	123	82	35	70	17
40	640	320	160	107	40	80	20
45	1080	540	270	180	45	90	22
50	1200	600	300	200	50	100	25
55	1320	660	330	220	55	110	27
60	1440	720	360	240	60	120	30
65	1560	780	390	260	65	130	32
70	1680	840	420	280	70	140	35

* - For other offsets, use the following merging taper length formula for L:
For speed of 40 mph or less, $L = WS^2/60$
For speed of 45 mph or more, $L = WS$

Where: L = Taper length in feet
W = Width of offset in feet
S = Posted speed limit, off-peak 85th-percentile speed prior to work starting, or the anticipated operating speed in mph

** - Use for taper and tangent sections where there are no pavement markings or where there is a conflict between existing pavement markings and channelizers (CA).

TABLE 2

LONGITUDINAL BUFFER SPACE AND FLAGGER STATION SPACING

SPEED *	Min D **	DOWNGRADE Min D ***		
		-3%	-6%	-9%
mph	ft	ft	ft	ft
20	115	116	120	126
25	155	158	165	173
30	200	205	215	227
35	250	257	271	287
40	305	315	333	354
45	360	378	400	427
50	425	446	474	507
55	495	520	553	593
60	570	598	638	686
65	645	682	728	785
70	730	771	825	891

* - Speed is posted speed limit, off-peak 85th-percentile speed prior to work starting, or the anticipated operating speed in mph

** - Longitudinal buffer space or flagger station spacing

*** - Use on sustained downgrade steeper than -3 percent and longer than 1 mile.

TABLE 3

ADVANCE WARNING SIGN SPACING

ROAD TYPE	DISTANCE BETWEEN SIGNS *		
	A	B	C
	ft	ft	ft
URBAN - 25 mph OR LESS	100	100	100
URBAN - MORE THAN 25 mph TO 40 mph	250	250	250
URBAN - MORE THAN 40 mph	350	350	350
RURAL	500	500	500
EXPRESSWAY / FREEWAY	1000	1500	2640

* - The distances are approximate, are intended for guidance purposes only, and should be applied with engineering judgment. These distances should be adjusted by the Engineer for field conditions, if necessary, by increasing or decreasing the recommmended distances.

STATE OF CALIFORNIA
DEPARTMENT OF TRANSPORTATION

TRAFFIC CONTROL SYSTEM TABLES FOR LANE AND RAMP CLOSURES

NO SCALE

RSP T9 DATED JULY 19, 2013 SUPERSEDES RSP T9 DATED APRIL 19, 2013 THAT SUPPLEMENTS THE STANDARD PLANS BOOK DATED 2010.

REVISED STANDARD PLAN RSP T9

4-30-13

Dist	COUNTY	ROUTE	POST MILES TOTAL PROJECT	SHEET No.	TOTAL SHEETS
06	Mad	152	R0.0/1.1	77	87

REGISTERED CIVIL ENGINEER

April 19, 2013
PLANS APPROVAL DATE

REGISTERED PROFESSIONAL ENGINEER Gurinderpal Bhullar No. C48815 Exp. 9-30-14 CIVIL STATE OF CALIFORNIA

THE STATE OF CALIFORNIA OR ITS OFFICERS OR AGENTS SHALL NOT BE RESPONSIBLE FOR THE ACCURACY OR COMPLETENESS OF SCANNED COPIES OF THIS PLAN SHEET.

TO ACCOMPANY PLANS DATED 6-30-14

NOTES:

See Revised Standard Plan RSP T9 for tables.

Use cone spacing X for taper segment, Y for tangent segment or Z for conflict situations, as approriate, per Table 1, unless X, Y, or Z cone spacing is shown on this sheet.

Unless otherwise specified in the special provisions, all temporary warning signs shall have black legend on fluorescent orange background.

California codes are designated by (CA). Otherwise, Federal (MUTCD) codes are shown.

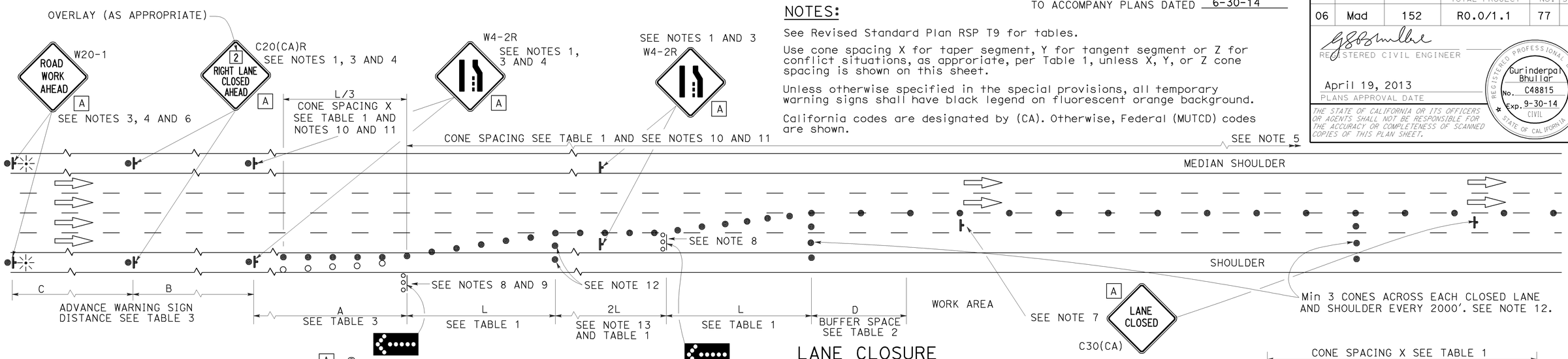

LANE CLOSURE

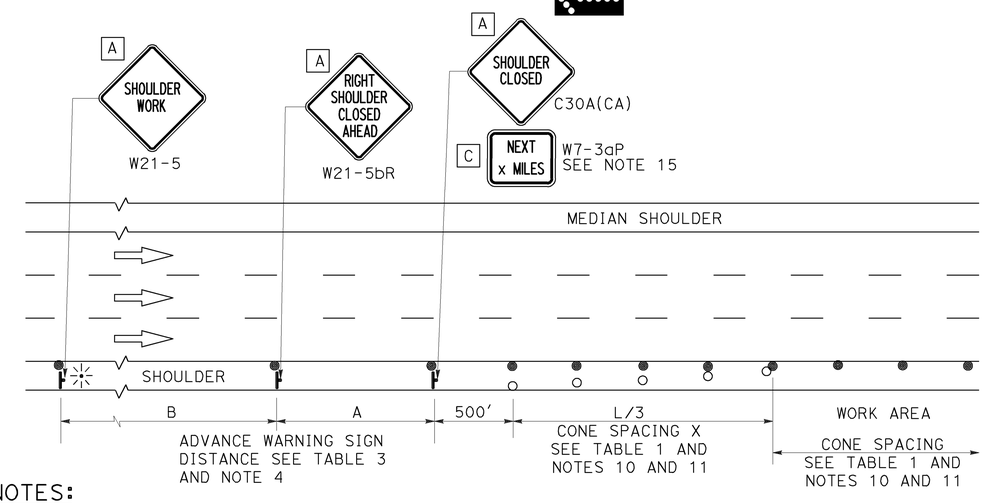

SHOULDER CLOSURE

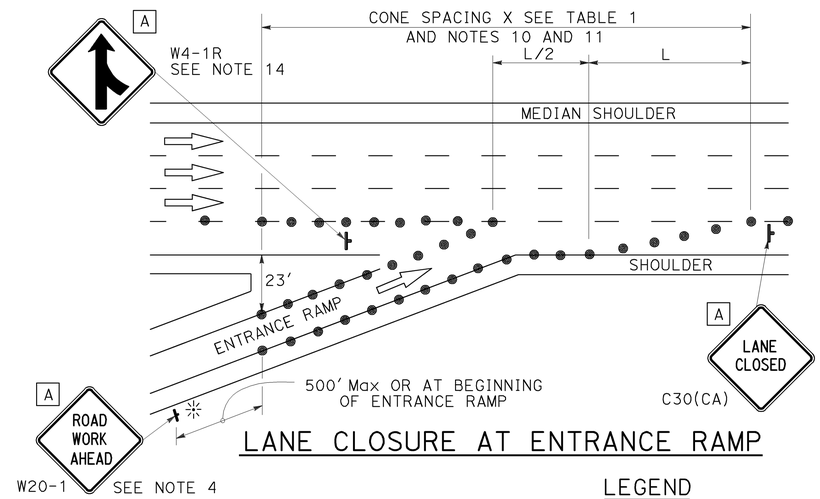

LANE CLOSURE AT ENTRANCE RAMP

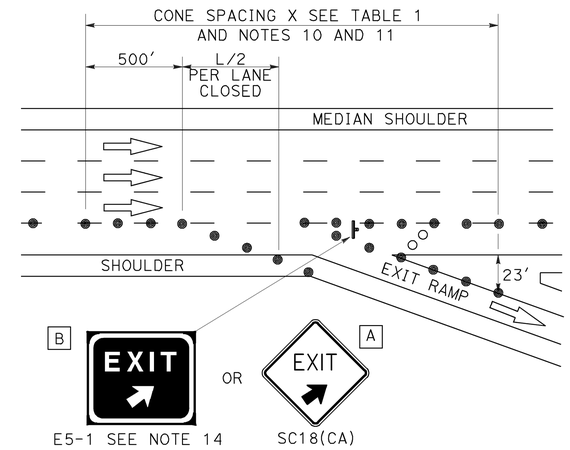

LANE CLOSURE AT EXIT RAMP

NOTES:

1. Median lane closures shall conform to the details as shown except that C20(CA)L and W4-2L signs shall be used.
2. At least one person shall be assigned to provide full time maintenance of traffic control devices for lane closures.
3. Duplicate sign installations are not required:
   a) On opposite shoulder if at least one-half of the available lanes remain open to traffic.
   b) In the median if the width of the median shoulder is less than 8' and the outside lanes are to be closed.
4. Each advance warning sign on each side of the roadway shall be equipped with at least two flags for daytime closure. Each flag shall be at least 16" x 16" in size and shall be orange or fluorescent red-orange in color. Flashing beacons shall be placed at the locations indicated for lane closure during hours of darkness.
5. A G20-2 "END ROAD WORK" sign, with minimum size of 48" x 24" as appropriate, shall be placed at the end of the lane closure unless the end of work area is obvious or ends within a larger project's limits.
6. If the W20-1 sign would follow within 2000' of a stationary W20-1 or G20-1 "ROAD WORK NEXT _____ MILES", use a C20(CA) sign for the first advance warning sign.
7. Place a C30(CA) sign every 2000' throughout length of lane closure.
8. One flashing arrow sign for each lane closed. The flashing arrow signs shall be Type I.
9. A minimum 1500' of sight distance shall be provided where possible for vehicles approaching the first flashing arrow sign. Lane closures shall not begin at top of crest vertical curve or on a horizontal curve.
10. All cones used for lane closures during the hours of darkness shall be fitted with retroreflective bands (or sleeves) as specified in the specifications.
11. Portable delineators, placed at one-half the spacing indicated for traffic cones may be used instead of cones for daytime closures only.
12. Unless otherwise specified in the special provisions, a minimum of 3 cones shall be placed transversely across each closed lane and shoulder at each location where a taper across a traffic lane ends and every 2000' as shown on the "Lane Closure" detail. Two Type II barricades may be used instead of the 3 cones. The transverse alignment of the cones or barricades on the closed shoulder may be shifted from the transverse alignment to provide access to the work.
13. Unless otherwise specified in the special provisions, the 2L tangent shown along lane lines shall be used between the L tapers required for each closed traffic lane.
14. Unless otherwise specified in the special provisions, the E5-1 or SC18(CA) and W4-1 signs shall be used as shown.
15. A W7-3aP "NEXT____ MILES" plaque must be used if theshoulder closure extends beyond the distance that can be perceived by road users.

LEGEND

- TRAFFIC CONE
- TRAFFIC CONE (OPTIONAL TAPER)
- TEMPORARY TRAFFIC CONTROL SIGN
- FLASHING ARROW SIGN (FAS)
- FAS SUPPORT OR TRAILER
- PORTABLE FLASHING BEACON

SIGN PANEL SIZE (Min)

A	48" x 48"
B	72" x 60"
C	36" x 30"

STATE OF CALIFORNIA
DEPARTMENT OF TRANSPORTATION

TRAFFIC CONTROL SYSTEM FOR LANE CLOSURE ON FREEWAYS AND EXPRESSWAYS

NO SCALE

RSP T10 DATED APRIL 19, 2013 SUPERSEDES STANDARD PLAN T10 DATED MAY 20, 2011 - PAGE 237 OF THE STANDARD PLANS BOOK DATED 2010.

REVISED STANDARD PLAN RSP T10

2010 REVISED STANDARD PLAN RSP T10

12-18-12

TO ACCOMPANY PLANS DATED 6-30-14

Dist	COUNTY	ROUTE	POST MILES TOTAL PROJECT	SHEET No.	TOTAL SHEETS
06	Mad	152	R0.0/1.1	78	87

REGISTERED CIVIL ENGINEER

April 19, 2013
PLANS APPROVAL DATE

REGISTERED PROFESSIONAL ENGINEER Gurinderpal Bhullar No. C48815 Exp. 9-30-14 CIVIL STATE OF CALIFORNIA

THE STATE OF CALIFORNIA OR ITS OFFICERS OR AGENTS SHALL NOT BE RESPONSIBLE FOR THE ACCURACY OR COMPLETENESS OF SCANNED COPIES OF THIS PLAN SHEET.

NOTES: See Revised Standard Plan RSP T9 for tables.

Use cone spacing X for taper segment, Y for tangent segment or Z for conflict situations, as approriate, per Table 1, unless X, Y, or Z cone spacing is shown on this sheet.

Unless otherwise specified in the special provisions, all temporary warning signs shall have black legend on fluorescent orange background.

California codes are designated by (CA). Otherwise, Federal (MUTCD) codes are shown.

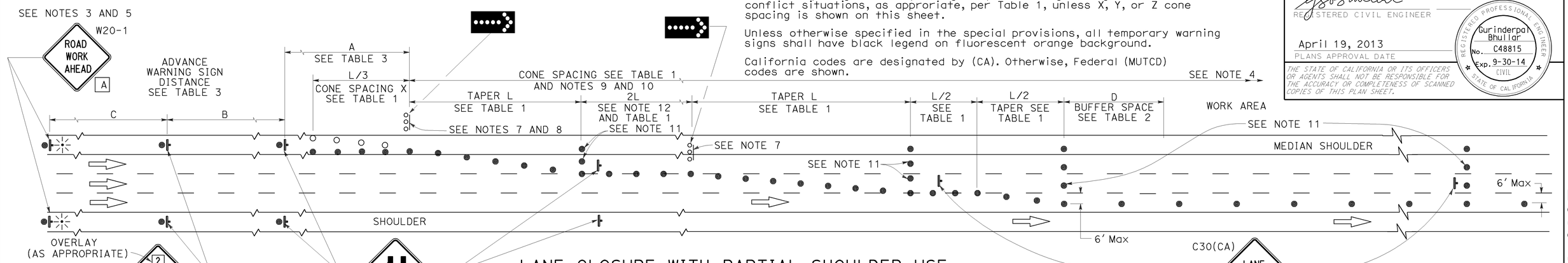

LANE CLOSURE WITH PARTIAL SHOULDER USE

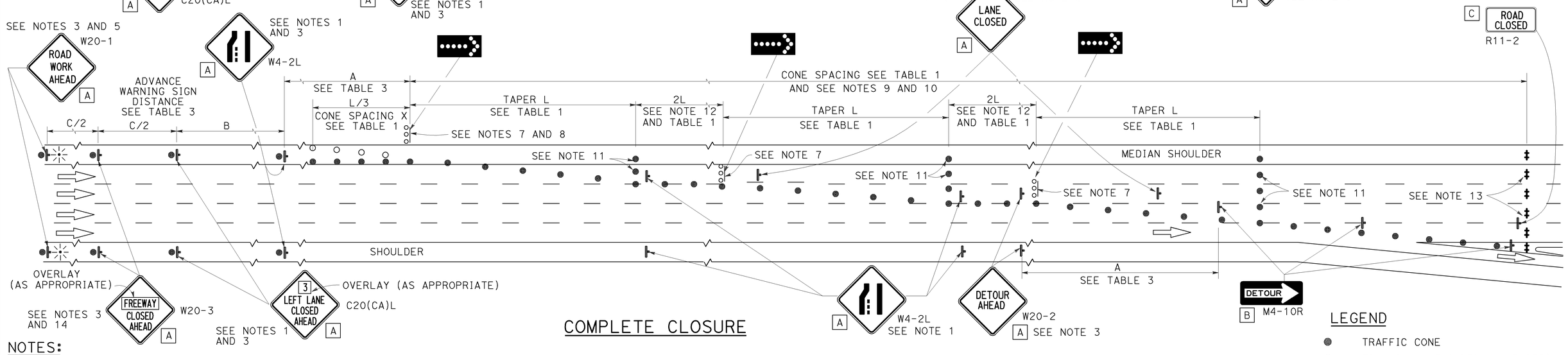

COMPLETE CLOSURE

NOTES:

1. Lane closures on the right side using partial median shoulder as a traffic lane shall conform to the details as shown except that C20(CA)R and W4-2R signs shall be used.
2. At least one person shall be assigned to provide full time maintenance of traffic control devices for lane closures.
3. Each advance warning sign on each side of the roadway shall be equipped with at least two flags for daytime closure. Each flag shall be at least 16" X 16" in size and shall be orange or fluorescent red-orange in color. Flashing beacons shall be placed at the locations indicated for lane closure during hours of darkness.
4. A G20-2 "END ROAD WORK" sign, with minimum size of 48" x 24" as appropriate, shall be placed at the end of the lane closure unless the end of work area is obvious or ends within a larger project's limits.
5. If the W20-1 sign would follow within 2000' of a stationary W20-1 or G20-1 "ROAD WORK NEXT ___ MILES", use a C20(CA) sign for the first advance warning sign.
6. Place a C30(CA) sign every 2000' throughout length of lane closure.
7. One flashing arrow sign for each lane closed. The flashing arrow signs shall be Type I.
8. A minimum 1500' of sight distance shall be provided where possible for vehicles approaching the first flashing arrow sign. Lane closures shall not begin at the top of crest vertical curve or on a horizontal curve.
9. All cones used for lane closures during the hours of darkness shall be fitted with retroreflective bands (or sleeves) as specified in the specifications.
10. Portable delineators, placed at one-half the spacing indicated for traffic cones, may be used instead of cones for daytime closures only.
11. Unless otherwise specified in the special provisions, a minimum of 3 cones shall be placed transversely across each closed lane and shoulder at each location where a taper across a traffic lane ends and every 2000' as shown on the "Lane Closure With Partial Shoulder Use" detail. Two Type II barricades may be used instead of the 3 cones. The transverse alignment of the cones or barricades on the closed shoulder may be shifted from the transverse alignment to provide access to the work.
12. Unless otherwise specified in the special provisions, the 2L tangent shown along lane lines shall be used between the L tapers required for each closed traffic lane.
13. A minimum of Two Type II or III barricades shall be placed across each closed lane and shoulder at the location shown and every 2000' within the complete closure area. Within the complete closure area, the transverse alignment of the barricades on the closed shoulder may be shifted from the transverse alignment to provide access to the work.
14. When specified in the special provisions, a W20-2 "DETOUR AHEAD" sign is to be used in place of the W20-3 "FREEWAY CLOSED AHEAD" sign.

SIGN PANEL SIZE (Min)

A	48" x 48"
B	48" x 18"
C	48" x 30"

LEGEND

- TRAFFIC CONE
- TRAFFIC CONE (OPTIONAL TAPER)
- TEMPORARY TRAFFIC CONTROL SIGN
- FLASHING ARROW SIGN (FAS)
- FAS SUPPORT OR TRAILER
- PORTABLE FLASHING BEACON

STATE OF CALIFORNIA
DEPARTMENT OF TRANSPORTATION

TRAFFIC CONTROL SYSTEM FOR LANE CLOSURES ON FREEWAYS AND EXPRESSWAYS

NO SCALE

RSP T10A DATED APRIL 19, 2013 SUPERSEDES STANDARD PLAN T10A DATED MAY 20, 2011 - PAGE 238 OF THE STANDARD PLANS BOOK DATED 2010.

REVISED STANDARD PLAN RSP T10A

2010 REVISED STANDARD PLAN RSP T10A

12-18-12

Dist	COUNTY	ROUTE	POST MILES TOTAL PROJECT	SHEET No.	TOTAL SHEETS
06	Mad	152	R0.0/1.1	79	87

REGISTERED CIVIL ENGINEER

April 19, 2013
PLANS APPROVAL DATE

REGISTERED PROFESSIONAL ENGINEER Gurinderpal Bhullar No. C48815 Exp. 9-30-14 CIVIL STATE OF CALIFORNIA

THE STATE OF CALIFORNIA OR ITS OFFICERS OR AGENTS SHALL NOT BE RESPONSIBLE FOR THE ACCURACY OR COMPLETENESS OF SCANNED COPIES OF THIS PLAN SHEET.

TO ACCOMPANY PLANS DATED 6-30-14

TYPICAL RAMP CLOSURES

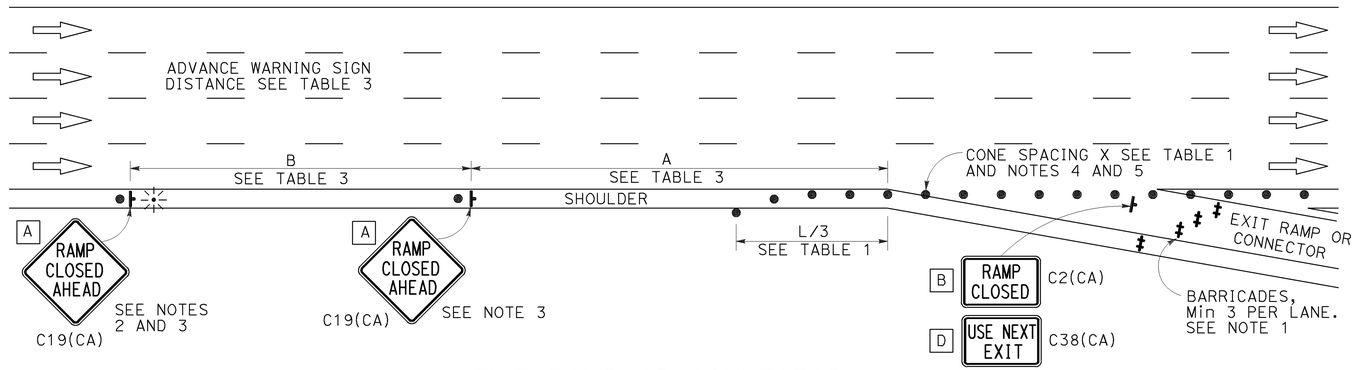

EXIT RAMP OR CONNECTOR

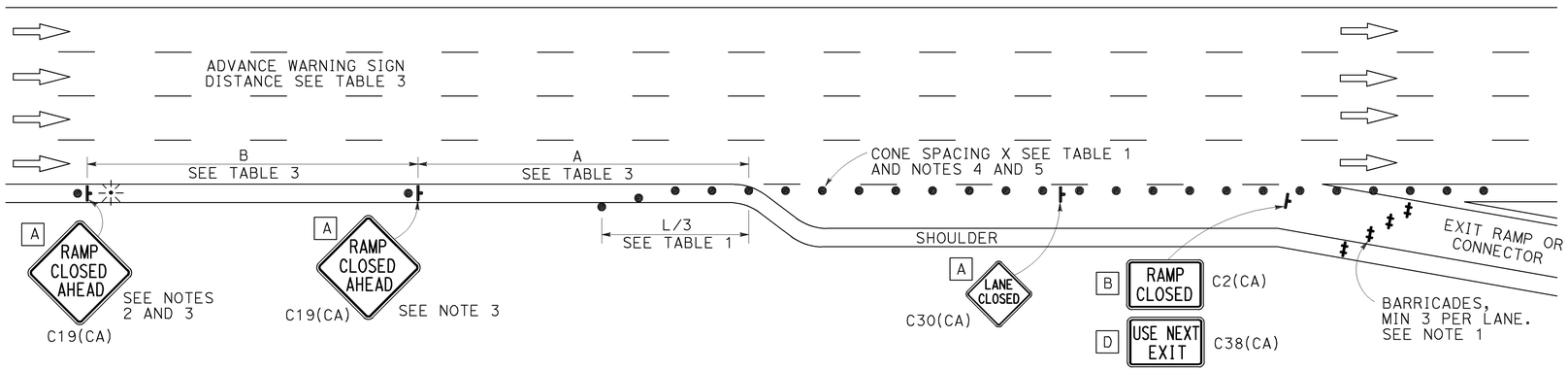

EXIT RAMP OR CONNECTOR WITH ADDITIONAL LANE

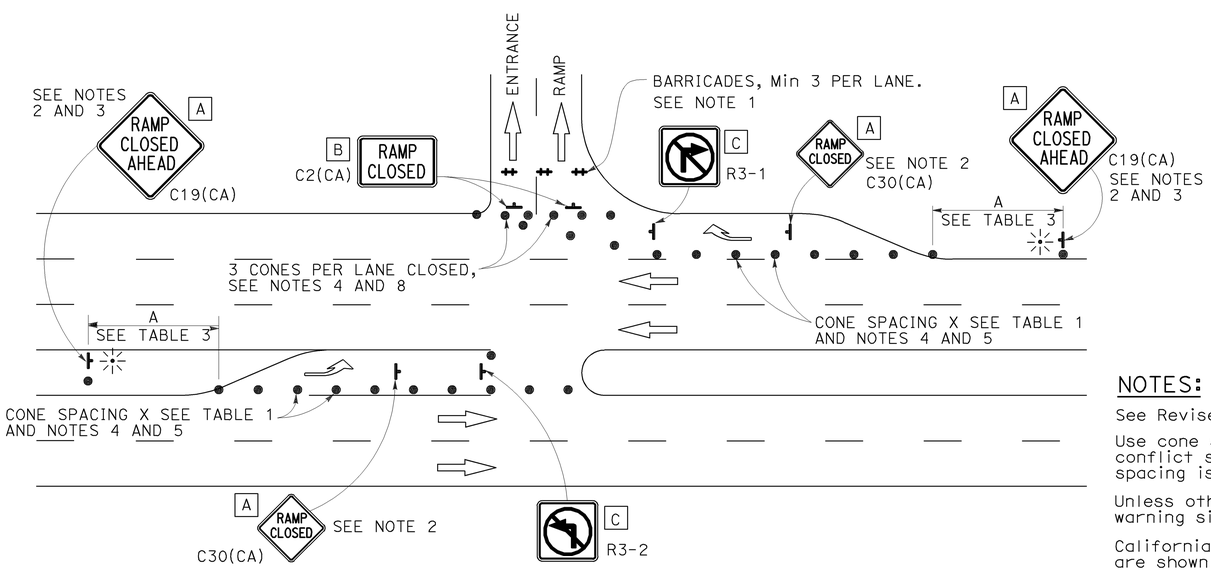

ENTRANCE RAMP WITH TURNING POCKETS

SIGN PANEL SIZE (Min)

- A 48" × 48"
- B 48" × 30"
- C 36" × 36"
- D 48" × 36"

LEGEND

- TRAFFIC CONE
- TEMPORARY TRAFFIC CONTROL SIGN
- BARRICADES
- PORTABLE FLASHING BEACON

NOTES:

1. Barricades shall be Type I, II, or III for closures lasting one week or less and Type III for closures lasting longer than one week.
2. In addition to placing the C19(CA) "RAMP CLOSED AHEAD" and C30(CA) "RAMP CLOSED" signs, black on orange overlay plates with the word "CLOSED" may be mounted, as directed by the Engineer, on all guide signs that refer to the closed ramp. The letter size on the overlay shall be the same as the guide sign.
3. Each advance C19(CA) "RAMP CLOSED AHEAD" sign shall be equipped with at least two flags for daytime closure. Each flag shall be at least 16" x 16" in size and shall be orange or fluorescent red-orange in color. A flashing beacon shall be placed on top of the first C19(CA) sign during hours of darkness.
4. All cones used for ramp closures during the hours of darkness shall be fitted with retroreflective bands (or sleeves) as specified in the specifications.
5. Portable delineators, placed at one-half the spacing indicated for traffic cones, may be used instead of cones for daytime ramp closures only.
6. At least one person shall be assigned to provide full time maintenance of traffic control devices, unless otherwise directed by the Engineer.
7. The existing "EXIT" signs shall be covered during ramp closures.
8. A minimum of 3 cones shall be placed transversely across each closed lane and shoulder.

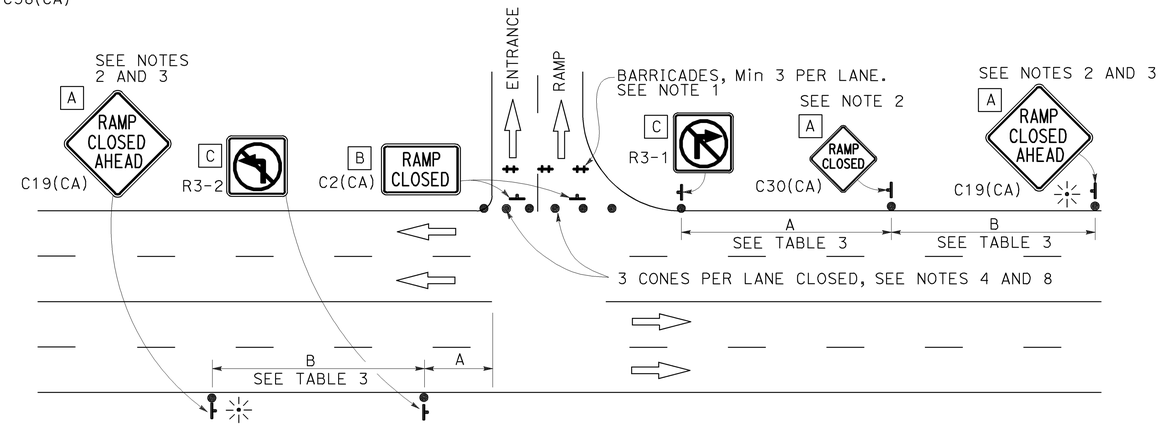

ENTRANCE RAMP WITHOUT TURNING POCKETS

NOTES:

See Revised Standard Plan RSP T9 for tables.

Use cone spacing X for taper segment, Y for tangent segment or Z for conflict situations, as approriate, per Table 1, unless X, Y, or Z cone spacing is shown on this sheet.

Unless otherwise specified in the special provisions, all temporary warning signs shall have black legend on fluorescent orange background.

California codes are designated by (CA). Otherwise, Federal (MUTCD) codes are shown.

STATE OF CALIFORNIA
DEPARTMENT OF TRANSPORTATION

TRAFFIC CONTROL SYSTEM FOR RAMP CLOSURE

NO SCALE

RSP T14 DATED APRIL 19, 2013 SUPERSEDES STANDARD PLAN T14
DATED MAY 20, 2011 - PAGE 242 OF THE STANDARD PLANS BOOK DATED 2010.

REVISED STANDARD PLAN RSP T14

2010 REVISED STANDARD PLAN RSP T14

12-18-12

Dist	COUNTY	ROUTE	POST MILES TOTAL PROJECT	SHEET No.	TOTAL SHEETS
06	Mad	152	R0.0/1.1	80	87

REGISTERED CIVIL ENGINEER

April 19, 2013
PLANS APPROVAL DATE

REGISTERED PROFESSIONAL ENGINEER Gurinderpal Bhullar No. C48815 Exp. 9-30-14 CIVIL STATE OF CALIFORNIA

THE STATE OF CALIFORNIA OR ITS OFFICERS OR AGENTS SHALL NOT BE RESPONSIBLE FOR THE ACCURACY OR COMPLETENESS OF SCANNED COPIES OF THIS PLAN SHEET.

TO ACCOMPANY PLANS DATED 6-30-14

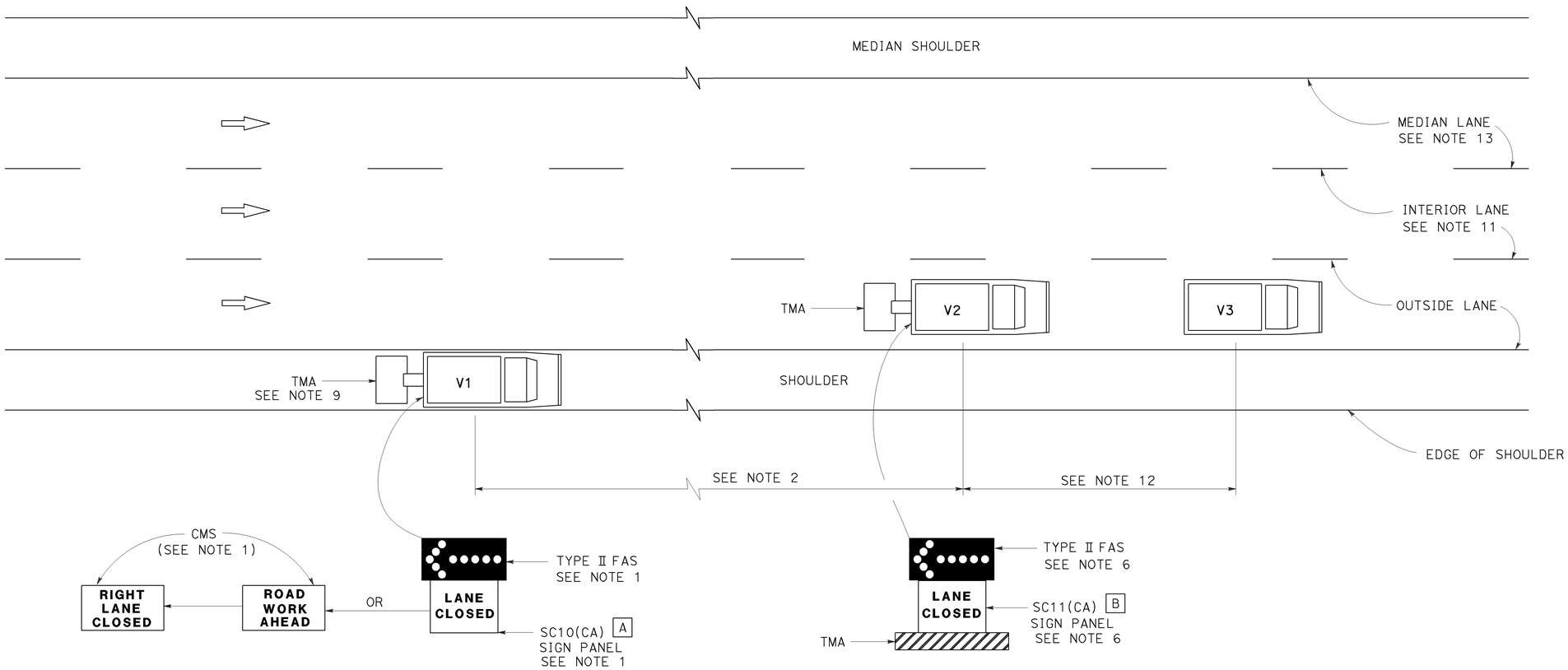

MOVING LANE CLOSURE ON MEDIAN LANE OR OUTSIDE LANE OF MULTILANE HIGHWAYS

SIGN PANEL SIZE (Min)

A 66" x 36"

B 54" x 42"

LEGEND

V1	SIGN VEHICLE
V2	SHADOW VEHICLE
V3	WORK/APPLICATION VEHICLE
	FLASHING ARROW SIGN (FAS)
CMS	CHANGEABLE MESSAGE SIGN
TMA	TRUCK-MOUNTED ATTENUATOR

NOTES:

1. Either a changeable message sign or a SC10(CA) sign panel and a Type II flashing arrow sign shall be mounted on the rear of sign vehicle V1. The changeable message sign shall be sequenced to show the "ROAD WORK AHEAD" message first, followed by the "RIGHT LANE CLOSED" message. For median lane closure, the flashing arrow symbol shall be reversed with the arrowhead on the right and the changeable message sign shall show "LEFT LANE CLOSED".
2. If traffic queues develop, sign vehicle V1 should be positioned upstream from the end of queue. Sign vehicle V1 shall be positioned where highly visible when shoulders are not available.
3. A minimum sight distance of 1500′ should be provided in advance of sign vehicle V1.
4. Sign vehicle V1 should remain at the beginning of horizontal or vertical curves until the other vehicles (V2 and V3) are far enough beyond the curve to resume the minimum sight distance of 1500′.
5. Vehicle-mounted sign panels shall have Type III or above retroreflective sheeting, black on white, or black on fluorescent orange, with 6" minimum series D letters per Caltrans sign specifications.
6. Shadow vehicle V2 shall be equipped with a truck-mounted attenuator. The sign panel shown and a Type II flashing arrow sign shall be mounted on the rear of shadow vehicle V2. For median lane closure the flashing arrow sign symbol shall be displayed with the arrowhead on the right.
7. All vehicles used for lane closures shall be equipped with two-way radios, and the vehicle operators shall maintain communication during the work or application operation.
8. All vehicles shall be equipped with flashing or rotating amber lights.
9. If sign vehicle V1 encroaches into the traffic lane due to insufficient shoulder width, sign vehicle V1 shall be equipped with a truck-mounted attenuator. Sign vehicle V1 shall stay as close to the edge of shoulder as practicable.
10. Where workers would be on foot in the work area, a stationary type lane closure (Revised Standard Plan T10, T11, etc., as applicable) shall be used instead of this plan.
11. For moving lane closure on interior lane of multilane highways, use Revised Standard Plan T16.
12. The spacing between work vehicle(s) and the shadow vehicles, and between each shadow vehicle should be minimized to deter road users from driving in between.
13. When the work/application vehicle V3 occupies the median lane, sign vehicle V1 should drive in the median shoulder and indicate left lane closed ahead.

STATE OF CALIFORNIA
DEPARTMENT OF TRANSPORTATION

TRAFFIC CONTROL SYSTEM FOR MOVING LANE CLOSURE ON MULTILANE HIGHWAYS

NO SCALE

RSP T15 DATED APRIL 19, 2013 SUPERSEDES STANDARD PLAN T15
DATED MAY 20, 2011 - PAGE 243 OF THE STANDARD PLANS BOOK DATED 2010.

REVISED STANDARD PLAN RSP T15

2010 REVISED STANDARD PLAN RSP T15

12-18-12

Dist	COUNTY	ROUTE	POST MILES TOTAL PROJECT	SHEET No.	TOTAL SHEETS
06	Mad	152	R0.0/1.1	81	87

REGISTERED CIVIL ENGINEER

April 19, 2013
PLANS APPROVAL DATE

REGISTERED PROFESSIONAL ENGINEER Gurinderpal Bhullar No. C48815 Exp. 9-30-14 CIVIL STATE OF CALIFORNIA

THE STATE OF CALIFORNIA OR ITS OFFICERS OR AGENTS SHALL NOT BE RESPONSIBLE FOR THE ACCURACY OR COMPLETENESS OF SCANNED COPIES OF THIS PLAN SHEET.

TO ACCOMPANY PLANS DATED 6-30-14

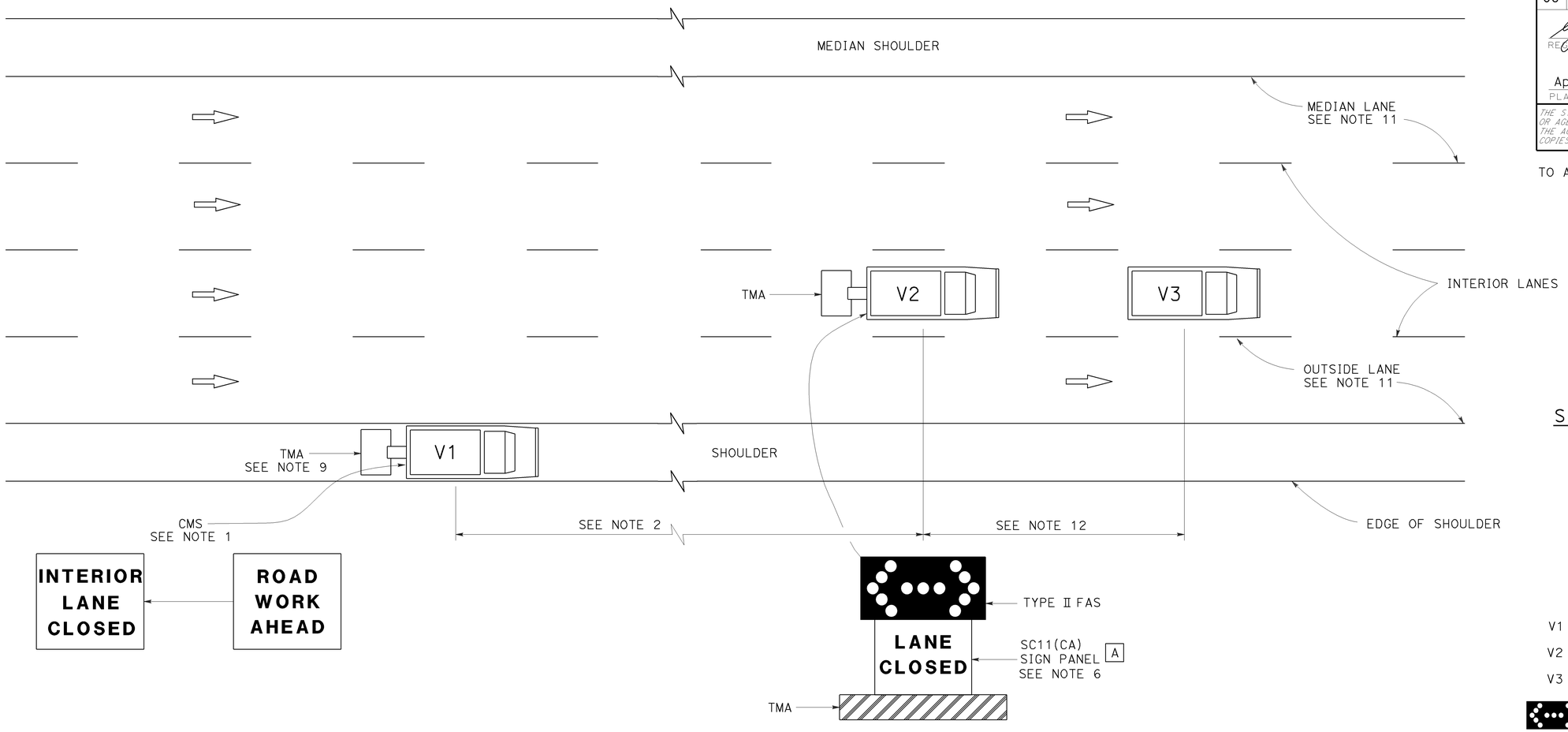

MOVING LANE CLOSURE ON INTERIOR LANE OF MULTILANE HIGHWAYS

SIGN PANEL SIZE (Min)

A 54" x 42"

LEGEND

V1	SIGN VEHICLE
V2	SHADOW VEHICLE
V3	WORK/APPLICATION VEHICLE
	FLASHING ARROW SIGN (FAS) IN FLASHING DOUBLE ARROW MODE
CMS	CHANGEABLE MESSAGE SIGN
TMA	TRUCK-MOUNTED ATTENUATOR

NOTES:

1. A changeable message sign shall be mounted on the rear of sign vehicle V1. The changeable message sign shall be sequenced to show the "ROAD WORK AHEAD" message first, followed by the "INTERIOR LANE CLOSED" message. The message "CENTER LANE CLOSED" may be used in place of the "INTERIOR LANE CLOSED" message.
2. If traffic queues develop, sign vehicle V1 should be positioned upstream from the end of queue. Sign vehicle V1 shall be positioned where highly visible when shoulders are not available.
3. A minimum sight distance of 1500′ should be provided in advance of sign vehicle V1.
4. Sign vehicle V1 should remain at the beginning of horizontal or vertical curves until the other vehicles (V2 and V3) are far enough beyond the curve to resume the minimum sight distance of 1500′.
5. Vehicle-mounted sign panels shall have Type III or above retroreflective sheeting, black on white, or black on fluorescent orange, with 6" minimum series D letters per Caltrans sign specifications.
6. Shadow vehicle V2 shall be equipped with a truck-mounted attenuator. The sign panel shown and a Type II flashing arrow sign shall be mounted on the rear of shadow vehicle V2.
7. All vehicles used for lane closures shall be equipped with two-way radios, and the vehicle operators shall maintain communication during the work or application operation.
8. All vehicles shall be equipped with flashing or rotating amber lights.
9. If sign vehicle V1 encroaches into the traffic lane due to insufficient shoulder width, sign vehicle V1 shall be equipped with a truck-mounted attenuator. Sign vehicle V1 shall stay as close to the edge of shoulder as practicable.
10. Where workers would be on foot in the work area, a stationary type lane closure (Revised Standard Plan T10, T11 etc., as applicable) shall be used instead of this plan.
11. For moving lane closure on median lane or outside lane of multilane highways, use Revised Standard Plan T15.
12. The spacing between work vehicle(s) and the shadow vehicles, and between each shadow vehicle should be minimized to deter road users from driving in between.

STATE OF CALIFORNIA
DEPARTMENT OF TRANSPORTATION

TRAFFIC CONTROL SYSTEM FOR MOVING LANE CLOSURE ON MULTILANE HIGHWAYS

NO SCALE

RSP T16 DATED APRIL 19, 2013 SUPERSEDES STANDARD PLAN T16 DATED MAY 20, 2011 - PAGE 244 OF THE STANDARD PLANS BOOK DATED 2010.

REVISED STANDARD PLAN RSP T16

2010 REVISED STANDARD PLAN RSP T16

12-18-12

Dist	COUNTY	ROUTE	POST MILES TOTAL PROJECT	SHEET No.	TOTAL SHEETS
06	Mad	152	R0.0/1.1	82	87

Theresa Gabriel
REGISTERED ELECTRICAL ENGINEER

July 19, 2013
PLANS APPROVAL DATE

REGISTERED PROFESSIONAL ENGINEER
Theresa Aziz Gabriel
No. E15129
Exp. 6-30-14
ELECTRICAL
STATE OF CALIFORNIA

THE STATE OF CALIFORNIA OR ITS OFFICERS OR AGENTS SHALL NOT BE RESPONSIBLE FOR THE ACCURACY OR COMPLETENESS OF SCANNED COPIES OF THIS PLAN SHEET.

TO ACCOMPANY PLANS DATED 6-30-14

LEGEND:

- AB — ABANDON. IF APPLIED TO CONDUIT, REMOVE CONDUCTORS
- BC — INSTALL PULL BOX IN EXISTING CONDUIT RUN
- BP — PEDESTRIAN BARRICADE, TYPE AS INDICATED ON PLAN
- CB — INSTALL CONDUIT INTO EXISTING PULL BOX
- CC — CONNECT NEW AND EXISTING CONDUIT. REMOVE EXISTING CONDUCTORS AND INSTALL CONDUCTORS AS INDICATED
- CF — CONDUIT TO REMAIN FOR FUTURE USE. REMOVE CONDUCTORS. INSTALL PULL TAPE
- DH — DETECTOR HANDHOLE
- FA — FOUNDATION TO BE ABANDONED
- IS — INSTALL SIGN ON SIGNAL MAST ARM
- NS — NO SLIP BASE ON STANDARD
- PEC — PHOTOELECTRIC CONTROL
- PEU — PHOTOELECTRIC UNIT
- RC — EQUIPMENT OR MATERIAL TO BE REMOVED AND BECOME THE PROPERTY OF THE CONTRACTOR
- RE — REMOVE ELECTROLIER, FUSES AND BALLAST. TAPE ENDS OF CONDUCTORS
- RL — RELOCATE EQUIPMENT
- RR — REMOVE AND REUSE EQUIPMENT
- RS — REMOVE AND SALVAGE EQUIPMENT
- SC — SPLICE NEW TO EXISTING CONDUCTORS
- SD — SERVICE DISCONNECT
- TSP — TELEPHONE SERVICE POINT

ABBREVIATIONS

APS	ACCESSIBLE PEDESTRIAN SIGNAL
BBS	BATTERY BACKUP SYSTEM
BC	BOLT CIRCLE
BPB	BICYCLE PUSH BUTTON
C	CONDUIT
CB	CIRCUIT BREAKER
CCTV	CLOSED CIRCUIT TELEVISION
Ckt	CIRCUIT
CMS	CHANGEABLE MESSAGE SIGN
Ctid	CALTRANS IDENTIFICATION
Comm	COMMUNICATION
DLC	LOOP DETECTOR LEAD-IN CABLE
EMS	EXTINGUISHABLE MESSAGE SIGN
EVUC	EMERGENCY VEHICLE UNIT CABLE
EVUD	EMERGENCY VEHICLE UNIT DETECTOR
FB	FLASHING BEACON
FBCA	FLASHING BEACON CONTROL ASSEMBLY
FBS	FLASHING BEACON WITH SLIP BASE
FO	FIBER OPTIC
G	EQUIPMENT GROUNDING CONDUCTOR
GB	GROUND BUS
GFCI	GROUND FAULT CIRCUIT INTERRUPTER
HAR	HIGHWAY ADVISORY RADIO
Hex	HEXAGONAL
HPS	HIGH PRESSURE SODIUM
IISNS	INTERNALLY ILLUMINATED STREET NAME SIGN
ISL	INDUCTION SIGN LIGHTING
LED	LIGHT EMITTING DIODE
LMA	LUMINAIRE MAST ARM
LPS	LOW PRESSURE SODIUM
Ltg	LIGHTING
Lum	LUMINAIRE
M	METERED
MAT	MAST ARM MOUNTING TOP ATTACHMENT
MAS	MAST ARM MOUNTING SIDE ATTACHMENT
M/M	MULTIPLE TO MULTIPLE TRANSFORMER
Mtg	MOUNTING
MV	MERCURY VAPOR LIGHTING FIXTURE
MVDS	MICROWAVE VEHICLE DETECTION SYSTEM
N	NEUTRAL (GROUNDED CONDUCTOR)
NB	NEUTRAL BUS
NC	NORMALLY CLOSE
NO	NORMALLY OPEN
P	CIRCUIT BREAKER'S POLE
PB	PULL BOX
PBA	PUSH BUTTON ASSEMBLY
PEC	PHOTOELECTRIC CONTROL
Ped	PEDESTRIAN
PEU	PHOTOELECTRIC UNIT
PT	CONDUIT WITH PULL TAPE
RE	RELOCATED EQUIPMENT
RM	RAMP METERING
RWIS	ROADSIDE WEATHER INFORMATION SYSTEM
SB	SLIP BASE
SIC	SIGNAL INTERCONNECT CABLE
Sig	SIGNAL
SMA	SIGNAL MAST ARM
SNS	STREET NAME SIGN
SP	SERVICE POINT
TDC	TELEPHONE DEMARCATION CABINET
TMS	TRAFFIC MONITORING STATION
TOS	TRAFFIC OPERATIONS SYSTEM
Veh	VEHICLE
VIVDS	VIDEO IMAGE VEHICLE DETECTION SYSTEM
WIM	WEIGH-IN-MOTION
Xfmr	TRANSFORMER

SOFFIT AND WALL MOUNTED LUMINAIRES

- PENDANT, 70 W HPS UNLESS OTHERWISE SPECIFIED
- FLUSH, 70 W HPS UNLESS OTHERWISE SPECIFIED
- WALL SURFACE, 70 W HPS UNLESS OTHERWISE SPECIFIED
- EXISTING SOFFIT OR WALL LUMINAIRE TO REMAIN UNMODIFIED
- EXISTING SOFFIT OR WALL LUMINAIRE TO BE MODIFIED AS SPECIFIED

NOTE:
Arrow indicates "street side" of luminaire.

COMMONLY USED SYMBOLS FOR UNITED STATES CUSTOMARY UNITS OF MEASUREMENT:

SYMBOL USED	DEFINITIONS
Ω	OHMS
min	MINUTE
s	SECOND
bps	BITS PER SECOND
Bps	BYTES PER SECOND
A	AMPERE
V	VOLT
V(dc)	VOLT (DIRECT CURRENT)
V(ac)	VOLT (ALTERNATING CURRENT)
FC	FOOT - CANDLE
W	WATTS
VA	VOLT-AMPERE
M	MEGA
k	KILO
m	MILLI
μ	MICRO
P	PICO
Hz	HERTZ

MISCELLANEOUS ELECTROLIERS

NEW	EXISTING	
		LUMINAIRE ON WOOD POLE
		NON-STANDARD ELECTROLIER (SEE PROJECT NOTES OR PROJECT PLANS)
		CITY ELECTROLIER
		ELECTROLIER FOUNDATION (FUTURE INSTALLATION)

NOTES:

1. HPS luminaires shall be 310 W HPS when installed on Type 21, 21D, 30, 31 and 32 Standards, unless otherwise specified. HPS luminaires shall be 200 W when installed on other type standards or poles, unless otherwise specified.
2. LED luminaires shall be 235 W when installed on Type 21, 21D, 30, 31 and 32 Standards, unless otherwise specified. LED luminaires shall be 165 W when installed on other type standards or poles, unless otherwise specified.
3. Luminaires shall be the cutoff type, ANSI Type III medium cutoff lighting distribution, unless otherwise specified.

STANDARD ELECTROLIER

NEW	EXISTING	STANDARD TYPE
		15
		15D
		15 STRUCTURE
		15D STRUCTURE
		21
		21D
		21 STRUCTURE
		21D STRUCTURE
		30
		31
		32

STATE OF CALIFORNIA
DEPARTMENT OF TRANSPORTATION

ELECTRICAL SYSTEMS (LEGEND AND ABBREVIATIONS)

NO SCALE

RSP ES-1A DATED JULY 19, 2013 SUPERSEDES STANDARD PLAN ES-1A DATED MAY 20, 2011 - PAGE 425 OF THE STANDARD PLANS BOOK DATED 2010.

REVISED STANDARD PLAN RSP ES-1A

2010 REVISED STANDARD PLAN RSP ES-1A

7-15-13

Dist	COUNTY	ROUTE	POST MILES TOTAL PROJECT	SHEET No.	TOTAL SHEETS
06	Mad	152	R0.0/1.1	83	87

Theresa Gabriel
REGISTERED ELECTRICAL ENGINEER

July 19, 2013
PLANS APPROVAL DATE

REGISTERED PROFESSIONAL ENGINEER Theresa Aziz Gabriel No. E15129 Exp. 6-30-14 ELECTRICAL STATE OF CALIFORNIA

THE STATE OF CALIFORNIA OR ITS OFFICERS OR AGENTS SHALL NOT BE RESPONSIBLE FOR THE ACCURACY OR COMPLETENESS OF SCANNED COPIES OF THIS PLAN SHEET.

TO ACCOMPANY PLANS DATED 6-30-14

CONDUIT

NEW	EXISTING	
		LIGHTING CONDUIT, UNLESS OTHERWISE INDICATED OR NOTED
		TRAFFIC SIGNAL CONDUIT
C	c	COMMUNICATION CONDUIT
T	t	TELEPHONE CONDUIT
F	f	FIRE ALARM CONDUIT
FO	fo	FIBER OPTIC CONDUIT
		CONDUIT TERMINATION
R	r	CONDUIT RISER ATTACHED TO THE STRUCTURE OR SERVICE POLE

SERVICE EQUIPMENT

NEW	EXISTING	
OH	oh	OVERHEAD LINES
U	U	WOOD POLE, "U" INDICATES UTILITY OWNED
		POLE GUY WITH ANCHOR
		UTILITY TRANSFORMER - GROUND MOUNTED
III	III	SERVICE EQUIPMENT ENCLOSURE TYPE. DOOR INDICATES FRONT OF ENCLOSURE
T	t	TELEPHONE DEMARCATION CABINET

POLE-MOUNTED SERVICE DESIGNATION

TYPE H SERVICE, 28'-10" — TYPE OF INSTALLATION AND POLE HEIGHT ABOVE GRADE

FLASHING BEACON

NEW	EXISTING	
R	R	FLASHING BEACON (ONE VEHICLE SIGNAL HEAD WITH BACKPLATE AND VISOR) "R" INDICATES RED INDICATION, "Y" INDICATES YELLOW INDICATION
Y Y	Y Y	FLASHING BEACON WITH TYPE 15-FBS STANDARD AND A SIGN.
R R	R R	FLASHING BEACON WITH TYPES 9, 9A OR 9B SIGN UNLESS OTHERWISE SPECIFIED OR INDICATED

SIGNAL EQUIPMENT

NEW	EXISTING	
C	C	PEDESTRIAN SIGNAL HEAD "C" INDICATES COUNTDOWN PEDESTRIAN HEAD
		PUSH BUTTON ASSEMBLY POST
		PEDESTRIAN BARRICADE
		VEHICLE SIGNAL HEAD (WITH BACKPLATE AND 3-SECTIONS: RED, YELLOW AND GREEN)
		VEHICLE SIGNAL HEAD WITH ANGLE VISOR
PV	PV	MODIFICATIONS OF BASIC SYMBOL: "L" INDICATES ALL NON-ARROW SECTIONS LOUVERED "LG" INDICATES LOUVERED GREEN SECTION ONLY "PV" INDICATES ALL 12" SECTIONS PROGRAMMED VISIBILITY "8" INDICATES ALL 8" SECTIONS (ONLY WHEN SPECIFIED)
		VEHICLE SIGNAL HEAD CONSISTING OF RED, YELLOW AND GREEN LEFT ARROW SECTIONS
		VEHICLE SIGNAL HEAD CONSISTING OF RED AND YELLOW SECTIONS WITH AN UP GREEN ARROW SECTION
		VEHICLE SIGNAL HEAD (5 SECTION) CONSISTING OF RED, YELLOW AND GREEN SECTIONS WITH YELLOW AND GREEN RIGHT ARROW SECTIONS
		TYPE 15TS STANDARD WITH VEHICLE SIGNAL HEAD AND LUMINAIRE
		TYPE 21TS STANDARD WITH VEHICLE SIGNAL HEAD AND LUMINAIRE
		STANDARD WITH LUMINAIRE AND SIGNAL MAST ARMS AND ATTACHED VEHICLE SIGNAL HEADS
		TYPE 1 STANDARD WITH ATTACHED VEHICLE SIGNAL HEADS
		STANDARD WITH A SIGNAL MAST ARM, ATTACHED VEHICLE SIGNAL HEADS AND INTERNALLY ILLUMINATED STREET NAME SIGN
		CONTROLLER ASSEMBLY. DOOR INDICATES FRONT OF CABINET

SIGNAL EQUIPMENT Cont

NEW	EXISTING	
		GUARD POST
		TYPE 1 STANDARD WITH RAMP METERING SIGN
		OPTICAL DETECTOR FOR THE EMERGENCY VEHICLE DETECTION SYSTEM

NOTES:

1. All signal sections shall be 12" unless shown otherwise.
2. Signal heads shall be provided with backplates unless shown otherwise.

ILLUMINATED OVERHEAD SIGN

NEW	EXISTING	
		SINGLE POST, SINGLE ILLUMINATED SIGN, BALANCED BUTTERFLY
		SINGLE POST, DOUBLE ILLUMINATED SIGN, BALANCED BUTTERFLY
		SINGLE POST, SINGLE ILLUMINATED SIGN, FULL CANTILEVER
		DOUBLE POST, SINGLE ILLUMINATED SIGN
		SINGLE ILLUMINATED SIGN MOUNTED ON STRUCTURE
		DOUBLE POST, SINGLE ILLUMINATED SIGN WITH ELECTROLIER

STATE OF CALIFORNIA
DEPARTMENT OF TRANSPORTATION

ELECTRICAL SYSTEMS (LEGEND AND ABBREVIATIONS)

NO SCALE

RSP ES-1B DATED JULY 19, 2013 SUPERSEDES STANDARD PLAN ES-1B DATED MAY 20, 2011 - PAGE 426 OF THE STANDARD PLANS BOOK DATED 2010.

REVISED STANDARD PLAN RSP ES-1B

2010 REVISED STANDARD PLAN RSP ES-1B

7-15-13

Dist	COUNTY	ROUTE	POST MILES TOTAL PROJECT	SHEET No.	TOTAL SHEETS
06	Mad	152	R0.0/1.1	84	87

Theresa Gabriel
REGISTERED ELECTRICAL ENGINEER

July 19, 2013
PLANS APPROVAL DATE

REGISTERED PROFESSIONAL ENGINEER
Theresa Aziz Gabriel
No. E15129
Exp. 6-30-14
ELECTRICAL
STATE OF CALIFORNIA

THE STATE OF CALIFORNIA OR ITS OFFICERS OR AGENTS SHALL NOT BE RESPONSIBLE FOR THE ACCURACY OR COMPLETENESS OF SCANNED COPIES OF THIS PLAN SHEET.

TO ACCOMPANY PLANS DATED 6-30-14

EQUIPMENT IDENTIFICATION

ILLUMINATED SIGN IDENTIFICATION NUMBER:

SIGN No. 12345

10 ISL SCI 1.0

- SIGN NUMBER - PLACE ON POST OR STRUCTURE
- TRANSFORMER RATING (kVA)
- LIGHTING CONTROL TYPE
- NUMBER AND TYPE OF FIXTURES

DO NOT PLACE ON STANDARD OR STRUCTURE

ELECTROLIER OR EQUIPMENT IDENTIFICATION NUMBER:

12345 - 15'-0"

- MAST ARM LENGTH, IF SHOWN. DO NOT PLACE ON STANDARD OR STRUCTURE
- EQUIPMENT NUMBER - PLACE ON STANDARD OR STRUCTURE. EXISTING EQUIPMENT NUMBERS ARE SHOWN IN PARENTHESIS

CONDUIT AND CONDUCTOR IDENTIFICATION:

1½"C, 2#10, 15#14, 2 DLC, 12P#18

- PAIR
- NUMBER AND SIZE OF CONDUCTORS AND CABLES
- SIZE OF CONDUIT IN INCHES

ø1, ø2, ø2P, etc.	TRAFFIC PHASE IDENTIFICATION FOR SIGNAL FACES, DETECTORS AND PHASE DIAGRAMS
1 2 3	LEGEND NUMBERS
A B C	EQUIPMENT, SIGNAL POLES, INSTALLATION OR ITEMS
1 2 3	CONDUIT RUN NUMBERS

SIGNAL AND LIGHTING STANDARD (TYPICAL DESIGNATION):

19A - 3 - 100

- WIND VELOCITY = 100 mph
- CASE 3 ARM LOADING
- STANDARD TYPE
- STANDARD PLAN SHEET NUMBER
- DETAIL, NUMBER, SECTION, TYPE OR ELEVATION

MISCELLANEOUS EQUIPMENT

NEW	EXISTING	
CMS	cms	CHANGEABLE MESSAGE SIGN
		CLOSED CIRCUIT TELEVISION CAMERA
		HIGHWAY ADVISORY RADIO POLE AND ANTENNA
EMS	ems	EXTINGUISHABLE MESSAGE SIGN
M V	m v	DETECTION DEVICE M = MICROWAVE SENSOR V = VIDEO IMAGE SENSOR

WIRING DIAGRAM LEGEND

- EXTERNAL CONDUCTOR
- CONDUCTOR OR BUS
- TIE POINT
- CONTACTOR COIL
- CONTACTOR, NO CONTACT
- TERMINAL BLOCKS
- CONTACTOR, NC CONTACT
- ENCLOSURE BOND
- GROUNDING ELECTRODE
- CIRCUIT BREAKER
- RECEPTACLE

PULL BOXES

NEW	EXISTING	
		PULL BOX, No. 5 UNLESS OTHERWISE INDICATED OR NOTED
3	9A(21)	PULL BOX, ADDITIONAL DESIGNATIONS OR DESCRIPTIONS

3 No. 3½ PULL BOX
5 No. 5 PULL BOX
6 No. 6 PULL BOX
7 No. 7 (CEILING PULL BOX)
8 No. 8 (PENDANT SOFFIT PULL BOX)
9 No. 9 PULL BOX
9A No. 9A PULL BOX

(C) COMMUNICATIONS PULL BOX
(E) PULL BOX WITH EXTENSION
(S) SPRINKLER CONTROL PULL BOX
(21) ANCHOR BOLTS AND CONDUIT FOR FUTURE INSTALLATION OF TYPE 21 STANDARD
(T) TRAFFIC PULL BOX

VEHICLE DETECTORS

5 J 9 U

- VEHICLE DETECTOR DESIGNATION
- U = UPPER
  L = LOWER
- SLOT NUMBER IN INPUT FILE
- INPUT FILE (I OR J)
- PHASE

NEW	EXISTING	
		TYPE A DETECTOR LOOP. OUTLINE OF SAWCUT SHOWN
		TYPE B DETECTOR LOOP. OUTLINE OF SAWCUT SHOWN
		TYPE C DETECTOR LOOP. OUTLINE OF SAWCUT SHOWN
		TYPE D DETECTOR LOOP. OUTLINE OF SAWCUT SHOWN
		TYPE E DETECTOR LOOP. OUTLINE OF SAWCUT SHOWN
		TYPE Q DETECTOR LOOP. OUTLINE OF SAWCUT SHOWN
		MAGNETIC DETECTOR
DH	dh	DETECTOR HANDHOLE
		MICROWAVE OR VIDEO DETECTION ZONE

STATE OF CALIFORNIA
DEPARTMENT OF TRANSPORTATION

ELECTRICAL SYSTEMS (LEGEND AND ABBREVIATIONS)

NO SCALE

RSP ES-1C DATED JULY 19, 2013 SUPERSEDES STANDARD PLAN ES-1C DATED MAY 20, 2011 - PAGE 427 OF THE STANDARD PLANS BOOK DATED 2010.

REVISED STANDARD PLAN RSP ES-1C

2010 REVISED STANDARD PLAN RSP ES-1C

7-11-13

Dist	COUNTY	ROUTE	POST MILES TOTAL PROJECT	SHEET No.	TOTAL SHEETS
06	Mad	152	R0.0/1.1	85	87

Theresa Gabriel
REGISTERED ELECTRICAL ENGINEER

July 19, 2013
PLANS APPROVAL DATE

REGISTERED PROFESSIONAL ENGINEER
Theresa Aziz Gabriel
No. E15129
Exp. 6-30-14
ELECTRICAL
STATE OF CALIFORNIA

THE STATE OF CALIFORNIA OR ITS OFFICERS OR AGENTS SHALL NOT BE RESPONSIBLE FOR THE ACCURACY OR COMPLETENESS OF SCANNED COPIES OF THIS PLAN SHEET.

TO ACCOMPANY PLANS DATED 6-30-14

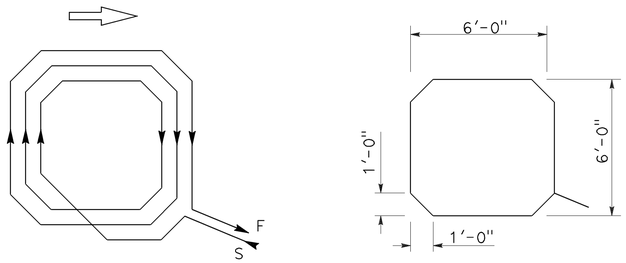

WINDING DETAIL SAWCUT DETAIL

TYPE A LOOP DETECTOR CONFIGURATION

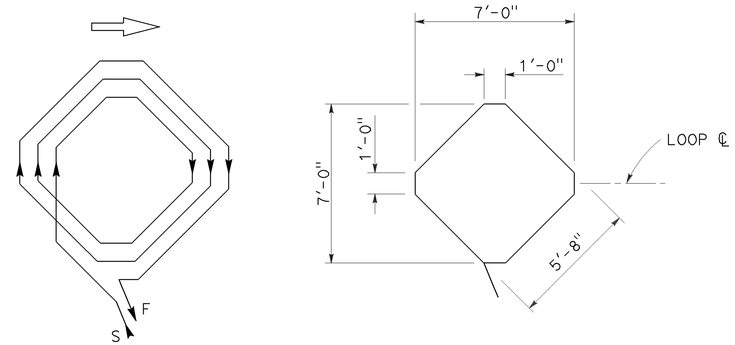

WINDING DETAIL SAWCUT DETAIL

TYPE B LOOP DETECTOR CONFIGURATION

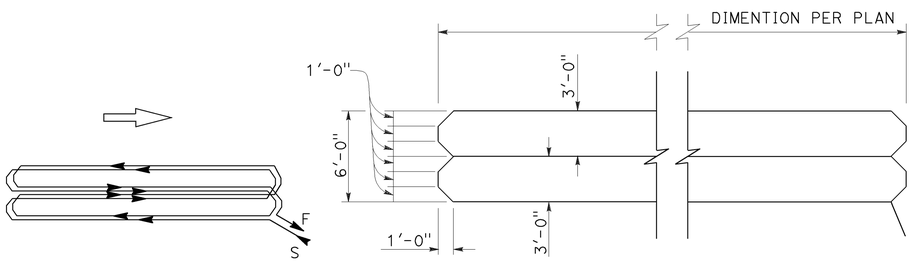

WINDING DETAIL SAWCUT DETAIL

TYPE C LOOP DETECTOR CONFIGURATION

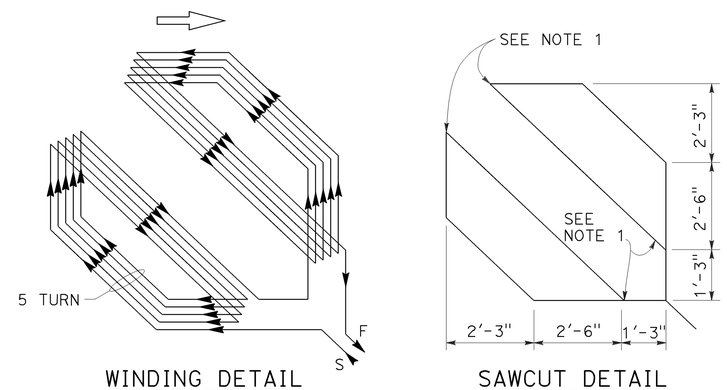

WINDING DETAIL SAWCUT DETAIL

TYPE D LOOP DETECTOR CONFIGURATION

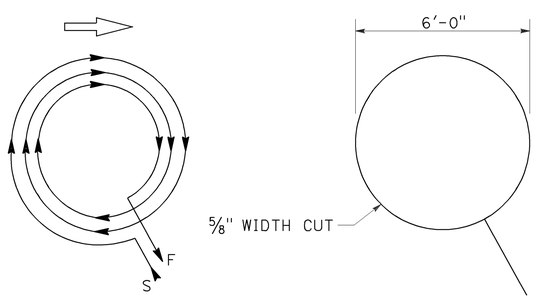

WINDING DETAIL SAWCUT DETAIL

TYPE E LOOP DETECTOR CONFIGURATION

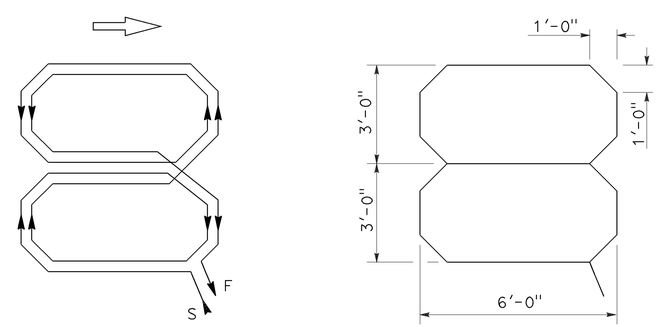

WINDING DETAIL SAWCUT DETAIL

TYPE Q LOOP DETECTOR CONFIGURATION

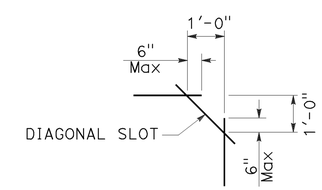

PLAN VIEW OF DIAGONAL SLOT AT CORNERS

NOTES:

1. Round corners of acute angle sawcuts to prevent damage to conductors.
2. Typical distance separating loops from edge to edge is 10' for Type A, B, D and E installation in single lane.

STATE OF CALIFORNIA
DEPARTMENT OF TRANSPORTATION

ELECTRICAL SYSTEMS (DETECTORS)

NO SCALE

RSP ES-5B DATED JULY 19, 2013 SUPERSEDES STANDARD PLAN ES-5B DATED MAY 20, 2011 - PAGE 449 OF THE STANDARD PLANS BOOK DATED 2010.

REVISED STANDARD PLAN RSP ES-5B

2010 REVISED STANDARD PLAN RSP ES-5B

7-9-13

Dist	COUNTY	ROUTE	POST MILES TOTAL PROJECT	SHEET No.	TOTAL SHEETS
06	Mad	152	R0.0/1.1	86	87

Theresa Gabriel
REGISTERED ELECTRICAL ENGINEER

July 19, 2013
PLANS APPROVAL DATE

REGISTERED PROFESSIONAL ENGINEER
Theresa Aziz Gabriel
No. E15129
Exp. 6-30-14
ELECTRICAL
STATE OF CALIFORNIA

THE STATE OF CALIFORNIA OR ITS OFFICERS OR AGENTS SHALL NOT BE RESPONSIBLE FOR THE ACCURACY OR COMPLETENESS OF SCANNED COPIES OF THIS PLAN SHEET.

TO ACCOMPANY PLANS DATED 6-30-14

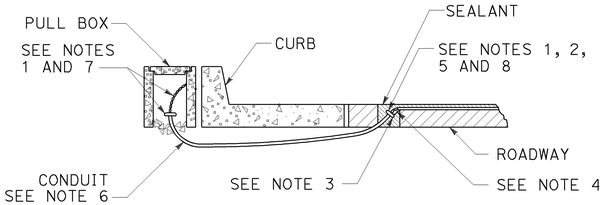

TYPE A
CURB TERMINATION DETAIL

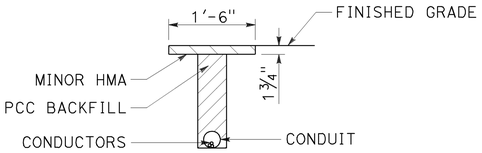

"T" TRENCH
DETAIL T

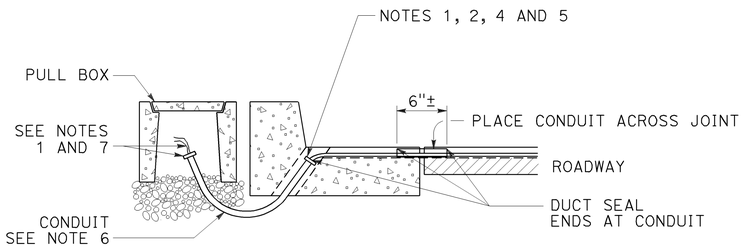

CROSS SECTION

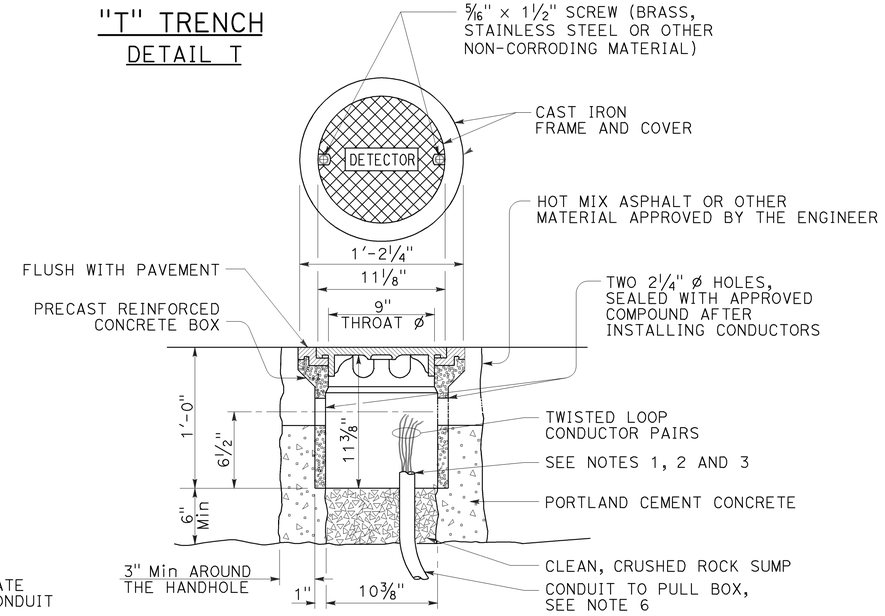

DETECTOR HANDHOLE DETAIL

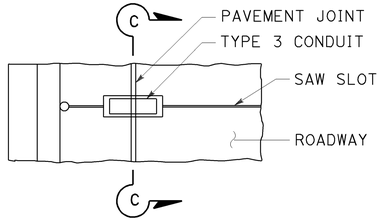

PLAN VIEW

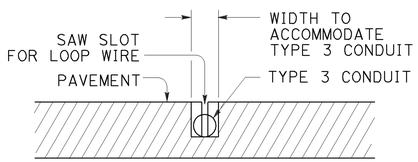

SECTION C-C

TYPE B
CURB TERMINATION DETAIL

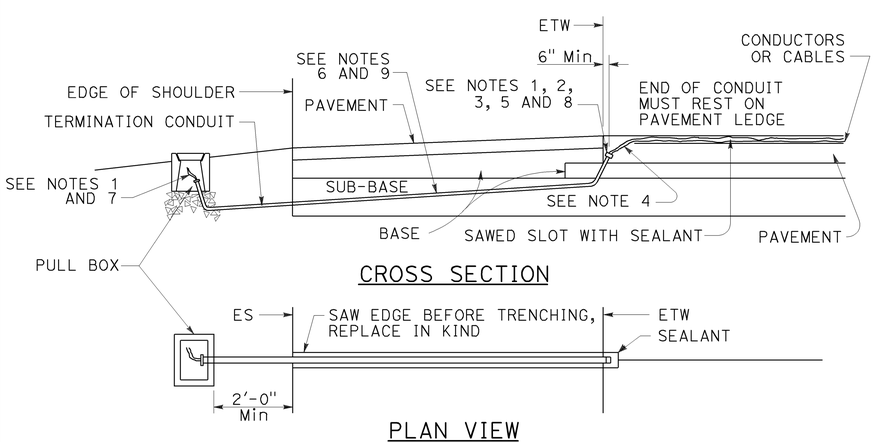

CROSS SECTION

PLAN VIEW

SHOULDER TERMINATION DETAILS

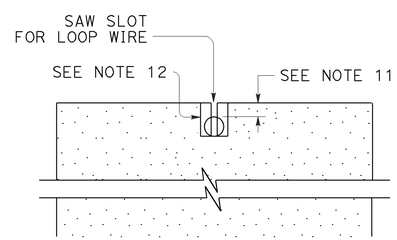

SECTION A-A

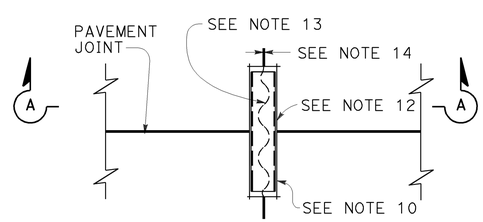

PLAN VIEW

TYPICAL LOOP LEAD-IN DETAIL AT PAVEMENT JOINT

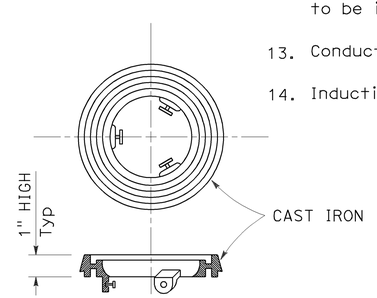

LOCKING GRADE RING

NOTES:

1. Bushing shall be used at end of conduit.
2. Tape detector conductors or cables 3" each side of bushings.
3. Install duct seal compound to each end of termination conduit before installing sealant.
4. Round all sharp edges where detector conductors or cables have to pass.
5. End of conduit shall be 3⅛" below roadway surface.
6.

Conduit size	Loop conductors
1"C minimum	1 to 2 pairs
1½"C minimum	3 to 4 pairs
2"C minimum	5 or more pairs

7. Splice detector conductors or cables to detector lead-in-cable.
8. Location of detector handhole when shown on plans.
9. When the shoulder and traveled way are paved with the same material and there is no joint between them, the conduit shall extend only 2'-0" into the shoulder pavement.
10. ¾"C, Type 3 conduit 6" long minimum, plug both ends with duct compound to keep out sealant.
11. ½" Minimum between top of conduit and pavement surface.
12. Sawcut shall not exceed 1" in width and ⅛" longer than conduit to be installed.
13. Conductors with ½" minimum slack inside conduit.
14. Inductive loop detector saw slot.

STATE OF CALIFORNIA
DEPARTMENT OF TRANSPORTATION

ELECTRICAL SYSTEMS (CURB TERMINATION AND HANDHOLE)

NO SCALE

RSP ES-5D DATED JULY 19, 2013 SUPERSEDES STANDARD PLAN ES-5D
DATED MAY 20, 2011 - PAGE 451 OF THE STANDARD PLANS BOOK DATED 2010.

REVISED STANDARD PLAN RSP ES-5D

2010 REVISED STANDARD PLAN RSP ES-5D

7-9-13

DIST	COUNTY	ROUTE	POST MILES TOTAL PROJECT	SHEET NO.	TOTAL SHEETS
06	Mad	152	R0.0/1.1	87	87

Theresa Gabriel
REGISTERED ELECTRICAL ENGINEER

July 19, 2013
PLANS APPROVAL DATE

REGISTERED PROFESSIONAL ENGINEER
Theresa Aziz Gabriel
No. E15129
Exp. 6-30-14
ELECTRICAL
STATE OF CALIFORNIA

THE STATE OF CALIFORNIA OR ITS OFFICERS OR AGENTS SHALL NOT BE RESPONSIBLE FOR THE ACCURACY OR COMPLETENESS OF SCANNED COPIES OF THIS PLAN SHEET.

TO ACCOMPANY PLANS DATED 6-30-14

2010 REVISED STANDARD PLAN RSP ES-8B

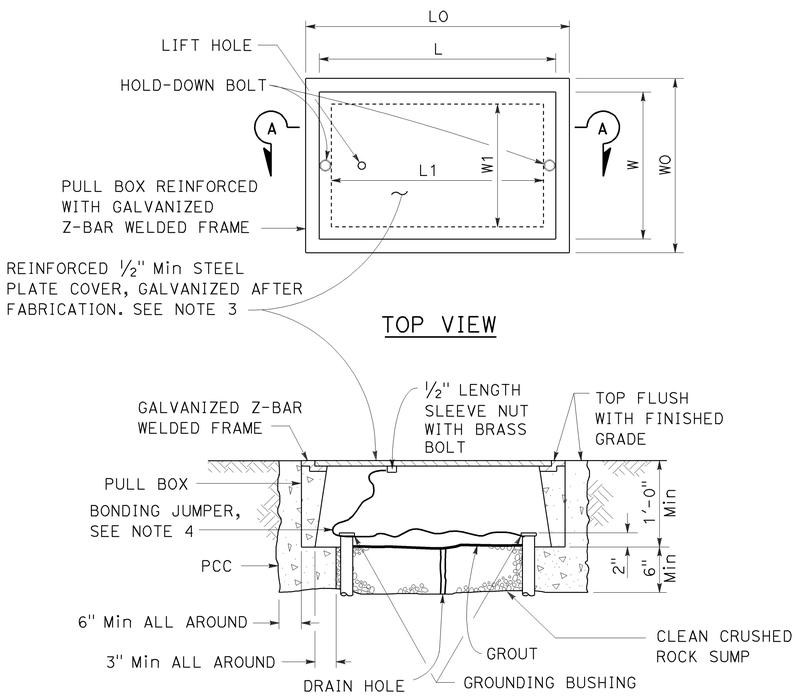

SECTION A-A

No. 3½(T), No. 5(T) AND No. 6(T) TRAFFIC PULL BOX

NOTES:

1. Traffic pull box shall be provided with steel cover and special concrete footing. Steel cover shall have embossed non-skid pattern.
2. Steel reinforcing shall be as regularly used in the standard products of the respective manufacturer.
3. Pull box covers shall be marked as follows: "SERVICE" Service circuits between service point and service disconnect; "SPRINKLER-CONTROL" Sprinkler control circuits, 50 V or less; "CALTRANS" On all pull boxes, except pull boxes marked "SPRINKLER-CONTROL"; and "TELEPHONE" Telephone service.
   - A) No. 3½(T) pull box.
     - 1) "SIGNAL" - Traffic signal circuits with or without lighting or sign lighting circuits.
     - 2) "LIGHTING" - Lighting or sign lighting circuits where voltage is under 600 V.
   - B) No. 5(T) or 6(T) pull box.
     - 1) "TRAFFIC SIGNAL" - Traffic signal circuits with or without lighting or sign lighting circuits.
     - 2) "LIGHTING" - Lighting or sign lighting circuits where voltage is under 600 V.
     - 3) "LIGHTING-HIGH VOLTAGE" - Lighting or sign lighting circuits where voltage is above 600 V.
     - 4) "IRRIGATION" - Circuits to irrigation controller 120 V or more.
     - 5) "RAMP METER" - Ramp meter circuits.
     - 6) "COUNT STATION" - Count or speed monitor circuits.
     - 7) "COMMUNICATION" - Communication circuits.
     - 8) "TOS COMMUNICATIONS" - TOS communications line.
     - 9) "TOS POWER" - TOS power.
     - 10) "TDC POWER" - Telephone demarcation cabinet power.
     - 11) "CCTV" - Closed circuit television circuits.
     - 12) "TMS" - Traffic monitoring station circuits.
     - 13) "CMS" - Changeable message sign circuits.
     - 14) "HAR" - Highway advisory radio circuits.
     - 15) "BOOSTER PUMP" - Booster pump circuit.
4. Bonding jumper for metal covers shall be 3' long, minimum.
5. The nominal dimensions of the opening in which the cover sets shall be the same as the cover dimensions except the length and width dimensions shall be ⅛" greater.
6. Covers and boxes shall be interchangeable with California standard male and female gages. When interchanged with a standard male or female gage, the top surfaces shall be flush within ⅛".

DIMENSION TABLE

PULL BOX	PULL BOX						COVER				
	MINIMUM * THICKNESS	MINIMUM DEPTH BOX AND EXTENSION	WO	LO	L1	W1	L **	W **	R	EDGE THICKNESS	EDGE TAPER
No. 3½(T)	1½"	1'-0"	1'-5"± 1"	1'-8⅞"±	1'-2½"±	10⅝"± 1"	1'-8"±	1'-1¾"±	0"	½"	NONE
No. 5(T)	1¾"	1'-0"	1'-11½"± 1"	2'-5½"±	1'-7"±	1'-1"± 1"	2'-3"±	1'-4"±	0"	½"	NONE
No. 6(T)	2"	1'-0"	2'-6"± 1"	2'-11½"±	1'-11½"±	1'-5"± 1"	2'-9"±	1'-8"±	0"	½"	NONE

* EXCLUDING CONDUIT WEB ** TOP DIMENSION

STATE OF CALIFORNIA
DEPARTMENT OF TRANSPORTATION

ELECTRICAL SYSTEMS (TRAFFIC PULL BOX)

NO SCALE

RSP ES-8B DATED JULY 19, 2013 SUPERSEDES RSP ES-8B DATED JANUARY 20, 2012 THAT SUPPLEMENTS THE STANDARD PLANS BOOK DATED 2010.

REVISED STANDARD PLAN RSP ES-8B

7-15-13