Dist	COUNTY	ROUTE	POST MILES TOTAL PROJECT	SHEET No.	TOTAL SHEETS
06	Ker	155	R14.0/41.0	1	20

INDEX OF PLANS

Sheet No.	DESCRIPTION
1	TITLE AND LOCATION MAP
2-3	CONSTRUCTION DETAILS
4-16	DRAINAGE PROFILE AND DRAINAGE QUANTITIES
17	CONSTRUCTION AREA SIGNS
18	SUMMARY OF QUANTITIES
19	TRAFFIC CONSTROL SYSTEM
20	REVISED STANDARD PLAN

THE STANDARD PLANS LIST APPLICABLE TO THIS CONTRACT INCLUDED IN THE NOTICE TO BIDDERS AND SPECIAL PROVISIONS BOOK.

STATE OF CALIFORNIA

DEPARTMENT OF TRANSPORTATION

PROJECT PLANS FOR CONSTRUCTION ON

STATE HIGHWAY

IN KERN COUNTY NEAR GLENNVILLE AT VARIOUS LOCATIONS FROM 3.1 MILES EAST OF ROUTE 65 TO 0.6 MILE EAST OF PASCOE ROAD

TO BE SUPPLEMENTED BY STANDARD PLANS DATED 2010

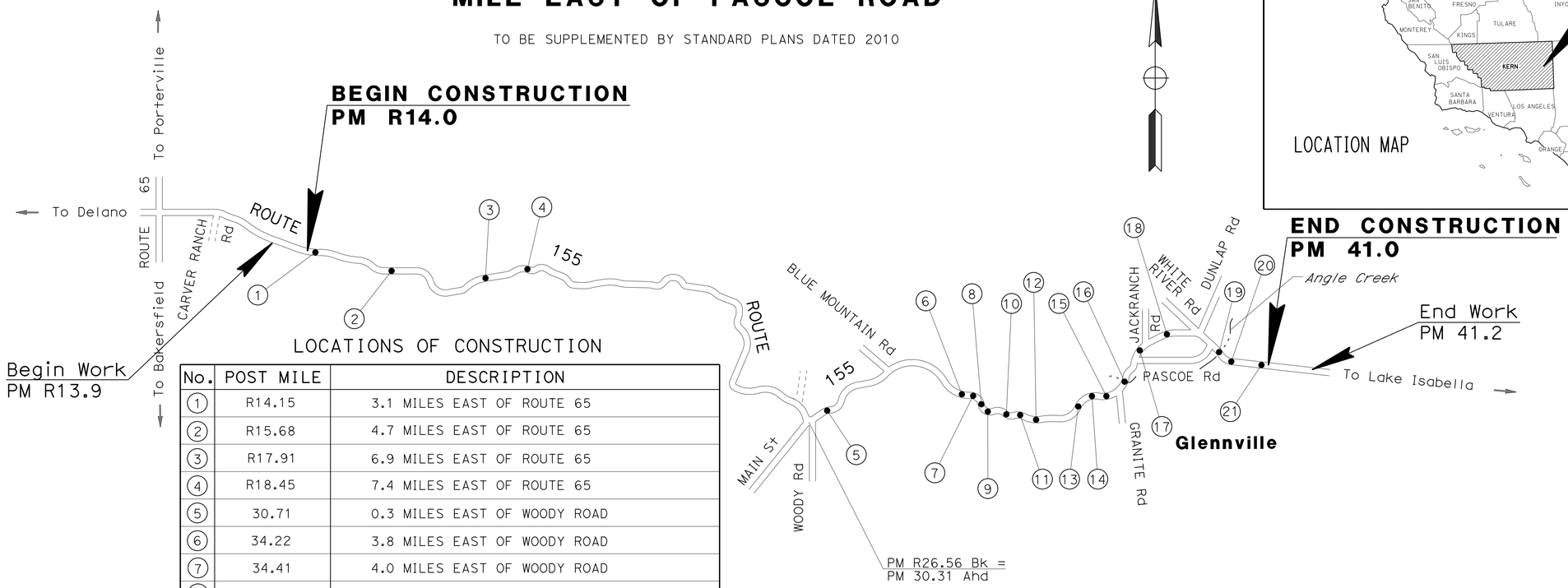

LOCATIONS OF CONSTRUCTION

No.	POST MILE	DESCRIPTION
1	R14.15	3.1 MILES EAST OF ROUTE 65
2	R15.68	4.7 MILES EAST OF ROUTE 65
3	R17.91	6.9 MILES EAST OF ROUTE 65
4	R18.45	7.4 MILES EAST OF ROUTE 65
5	30.71	0.3 MILES EAST OF WOODY ROAD
6	34.22	3.8 MILES EAST OF WOODY ROAD
7	34.41	4.0 MILES EAST OF WOODY ROAD
8	34.65	4.2 MILES EAST OF WOODY ROAD
9	34.97	4.5 MILES EAST OF WOODY ROAD
10	35.19	3.0 MILES WEST OF GRANITE ROAD
11	35.64	2.5 MILES WEST OF GRANITE ROAD
12	35.66	2.4 MILES WEST OF GRANITE ROAD
13	36.80	1.4 MILES WEST OF GRANITE ROAD
14	37.13	1.1 MILES WEST OF GRANITE ROAD
15	37.39	0.8 MILES WEST OF GRANITE ROAD
16	38.01	0.1 MILES WEST OF GRANITE ROAD
17	38.90	EAST OF PASCOE ROAD
18	39.61	0.4 MILES WEST OF WHITE RIVER ROAD
19	40.30	0.1 MILES EAST OF PASCOE ROAD
20	40.57	0.3 MILES EAST OF PASCOE ROAD
21	40.85	0.6 MILES EAST OF PASCOE ROAD (RIGHT)

NO SCALE

THE CONTRACTOR SHALL POSSESS THE CLASS (OR CLASSES) OF LICENSE AS SPECIFIED IN THE "NOTICE TO BIDDERS."

PROJECT MANAGER: BILL MOSES

DESIGN ENGINEER: FRANK GONZALEZ

Kamaldeep Kaur 12-20-12
PROJECT ENGINEER DATE
REGISTERED CIVIL ENGINEER

February 4, 2013
PLANS APPROVAL DATE

REGISTERED PROFESSIONAL ENGINEER KAMALDEEP KAUR No. C73047 Exp. 12/31/14 CIVIL STATE OF CALIFORNIA

THE STATE OF CALIFORNIA OR ITS OFFICERS OR AGENTS SHALL NOT BE RESPONSIBLE FOR THE ACCURACY OR COMPLETENESS OF SCANNED COPIES OF THIS PLAN SHEET.

CONTRACT No.	06-0P6304
PROJECT ID	0612000190

LAST REVISION 01-29-13 DATE PLOTTED => 08-FEB-2013 TIME PLOTTED => 15:49

Dist	COUNTY	ROUTE	POST MILES TOTAL PROJECT	SHEET No.	TOTAL SHEETS
06	Ker	155	R14.0/41.0	2	20

Kamaldeep Kaur 12-20-12
REGISTERED CIVIL ENGINEER DATE

2-4-13
PLANS APPROVAL DATE

REGISTERED PROFESSIONAL ENGINEER
KAMALDEEP KAUR
No. C73047
Exp. 12/31/14
CIVIL
STATE OF CALIFORNIA

THE STATE OF CALIFORNIA OR ITS OFFICERS OR AGENTS SHALL NOT BE RESPONSIBLE FOR THE ACCURACY OR COMPLETENESS OF SCANNED COPIES OF THIS PLAN SHEET.

NOTES:

1. DIMENSIONS OF THE PAVEMENT STRUCTURES (STRUCTURAL SECTIONS) ARE SUDBJECT TO TOLERANCES SPECIFIED IN THE STANDARD SPECIFICATIONS
2. SEE SHEET DP AND Q FOR THE SIZE AND TYPE OF PIPE.

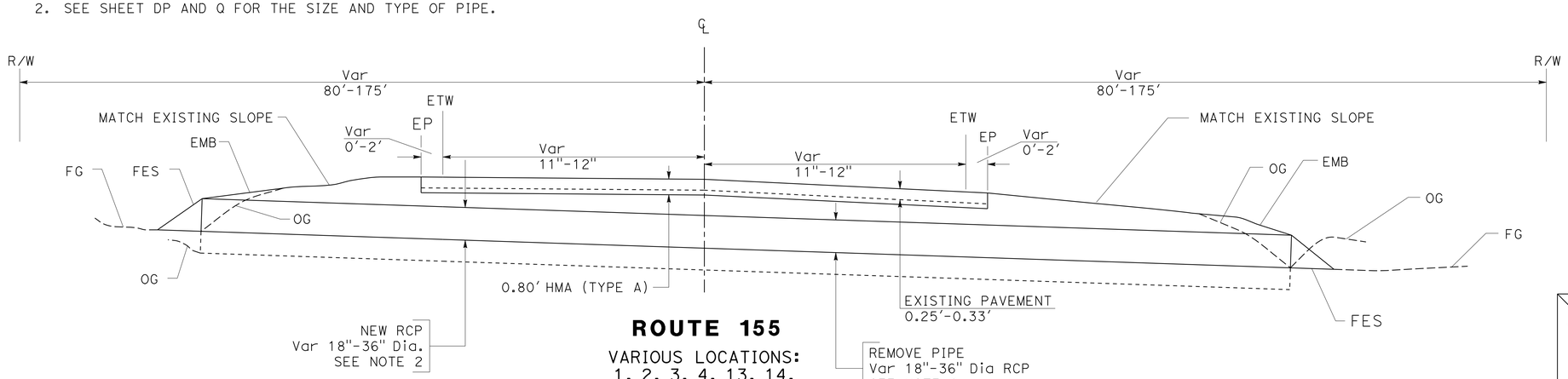

ROUTE 155

VARIOUS LOCATIONS:
1, 2, 3, 4, 13, 14, 16, 17, 18, 20, AND 21

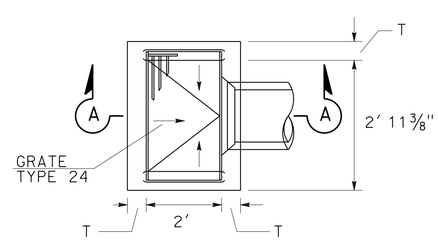

TYPICAL DI CROSS SECTION
(TYPE G1)
LOCATION 2

*SEE STANDARD PLAN D73 FOR DETAIL

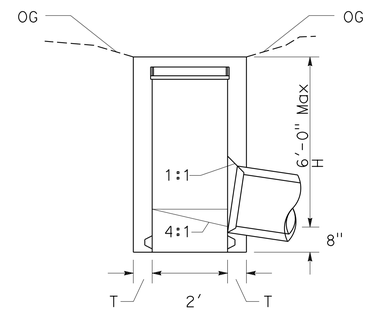

SECTION A-A

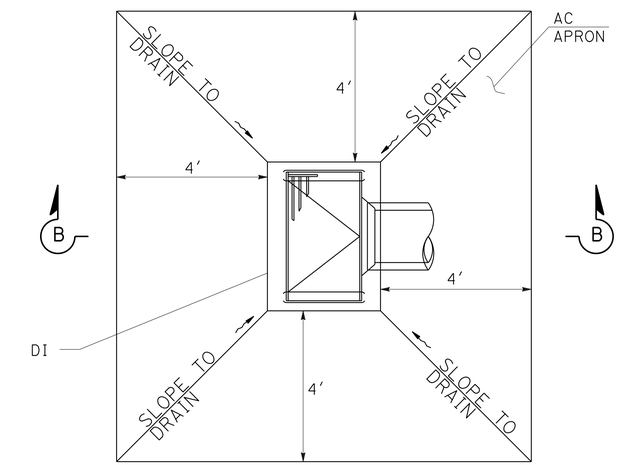

INLET DEPRESSION IN DIRT AREA
WITH HMA APRON
LOCATION 2

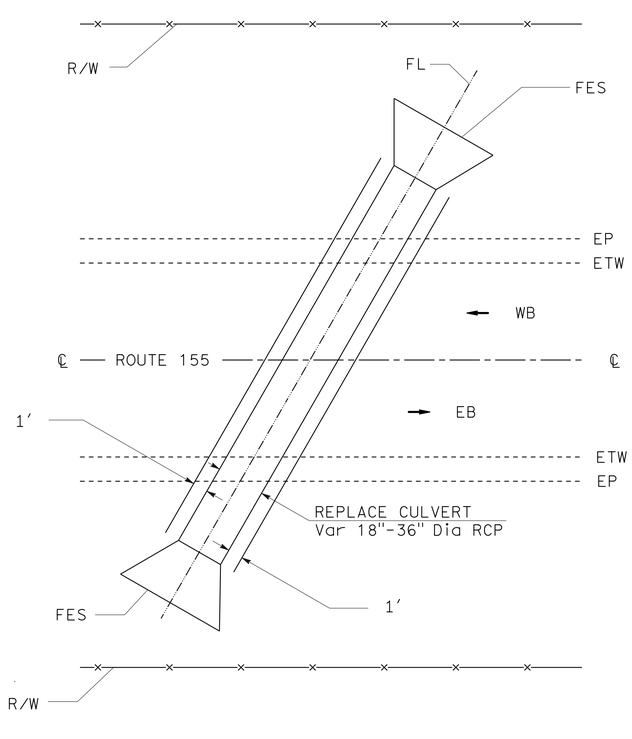

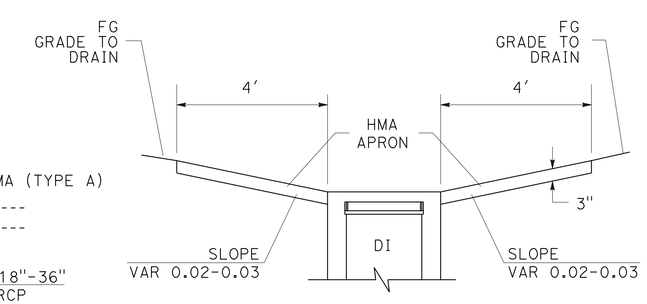

SECTION B-B

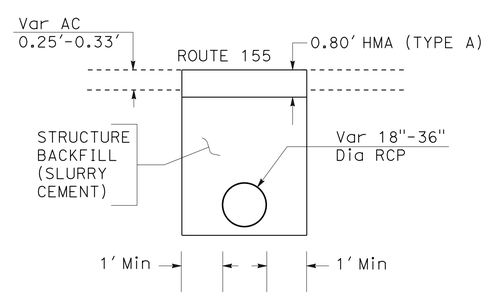

LOCATIONS:
1, 2, 3, 13, 18

TRENCH CROSS SECTION

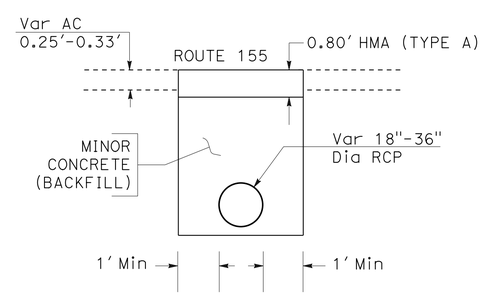

LOCATIONS:
4, 14, 16, 17, 20, 21

TRENCH CROSS SECTION

CONSTRUCTION DETAILS
(REPLACE CULVERT)

NO SCALE

C-1

REVISED BY	DATE REVISED
LEE XIONG	KAMALDEEP KAUR

CALCULATED-DESIGNED BY: KAMALDEEP KAUR
CHECKED BY:

FUNCTIONAL SUPERVISOR: FRANK GONZALEZ

STATE OF CALIFORNIA - DEPARTMENT OF TRANSPORTATION
Caltrans® MAINTENANCE DESIGN

LAST REVISION 01-29-13 | DATE PLOTTED => 08-FEB-2013 | TIME PLOTTED => 15:49

Dist	COUNTY	ROUTE	POST MILES TOTAL PROJECT	SHEET No.	TOTAL SHEETS
06	Ker	155	R14.0/41.0	3	20

Kamaldeep Kaur 12-20-12
REGISTERED CIVIL ENGINEER DATE

2-4-13
PLANS APPROVAL DATE

REGISTERED PROFESSIONAL ENGINEER
KAMALDEEP KAUR
No. C73047
Exp.12/31/14
CIVIL
STATE OF CALIFORNIA

THE STATE OF CALIFORNIA OR ITS OFFICERS OR AGENTS SHALL NOT BE RESPONSIBLE FOR THE ACCURACY OR COMPLETENESS OF SCANNED COPIES OF THIS PLAN SHEET.

NOTE:

FOR ACCURATE RIGHT OF WAY DATA, CONTACT RIGHT OF WAY ENGINEERING AT THE DISTRICT OFFICE.

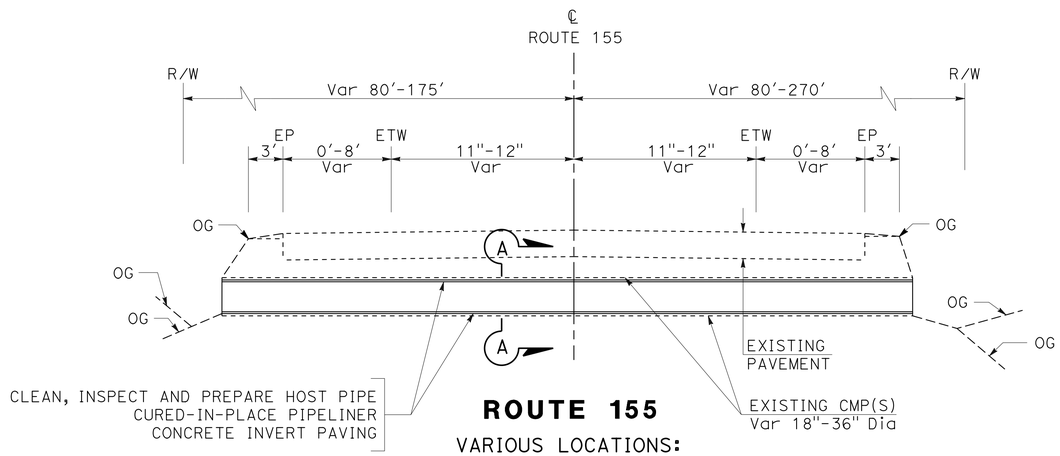

ROUTE 155

VARIOUS LOCATIONS:
5, 6, 7, 8, 9, 10,
11, 12, 15,
AND 19

CROSS SECTION FOR CURED IN PLACE PIPELINER OR CONCRETE INVERT PAVING

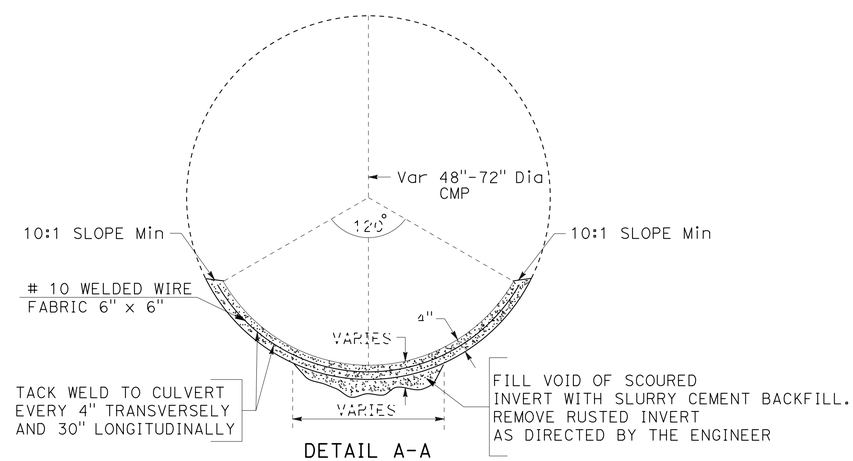

CONCRETE INVERT PAVING

CONSTRUCTION DETAILS

(CURED-IN PLACE PIPELINER)

NO SCALE

C-2

STATE OF CALIFORNIA - DEPARTMENT OF TRANSPORTATION
Caltrans® MAINTENANCE DESIGN

FUNCTIONAL SUPERVISOR: FRANK GONZALEZ

CALCULATED-DESIGNED BY: LEE XIONG
CHECKED BY: KAMALDEEP KAUR

REVISED BY | DATE REVISED

LAST REVISION 12-20-12 | DATE PLOTTED => 08-FEB-2013 | TIME PLOTTED => 15:49

Dist	COUNTY	ROUTE	POST MILES TOTAL PROJECT	SHEET No.	TOTAL SHEETS
06	Ker	155	R14.0/41.0	4	20

Kamaldeep Kaur 12-20-12
REGISTERED CIVIL ENGINEER DATE

2-4-13
PLANS APPROVAL DATE

REGISTERED PROFESSIONAL ENGINEER KAMALDEEP KAUR No. C73047 Exp. 12/31/13 CIVIL STATE OF CALIFORNIA

THE STATE OF CALIFORNIA OR ITS OFFICERS OR AGENTS SHALL NOT BE RESPONSIBLE FOR THE ACCURACY OR COMPLETENESS OF SCANNED COPIES OF THIS PLAN SHEET.

NOTES:

1. FOR ACCURATE RIGHT OF WAY DATA, CONTACT RIGHT OF WAY ENGINEERING AT DISTRICT OFFICE.
2. GRADE TO DRAIN AT INLET AND OUTLET.

LEGEND

DRAINAGE SYSTEMS No.

DRAINAGE UNIT

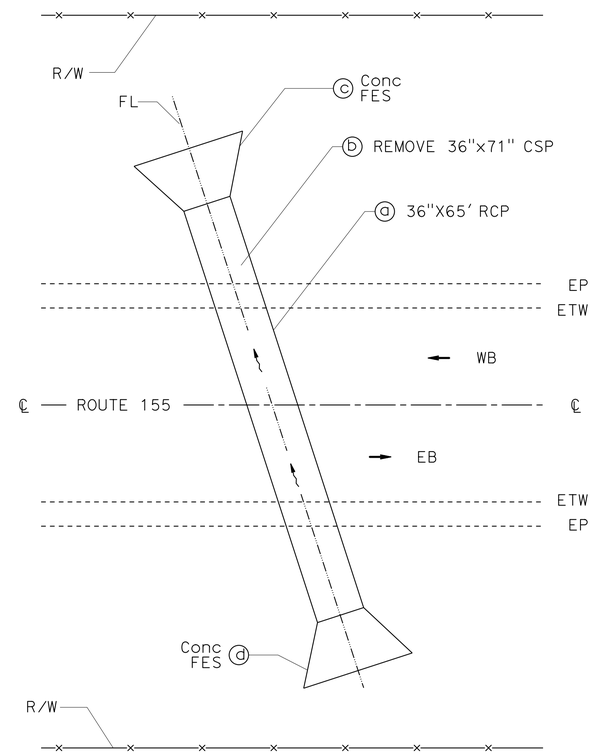

PLAN NO SCALE

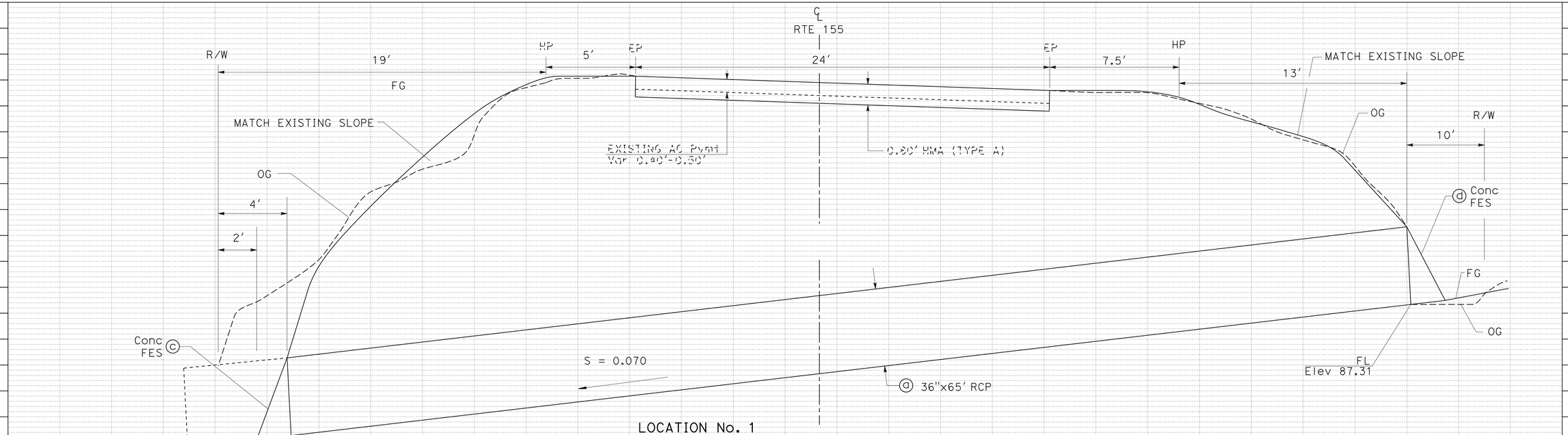

LOCATION No. 1
PM R14.15

DRAINAGE SYSTEM No. 1

SCALE: HORIZONTAL 1":3'
VERTICAL 1":2'

DRAINAGE PROFILE

DP-1

STATE OF CALIFORNIA - DEPARTMENT OF TRANSPORTATION
Caltrans® MAINTENANCE DESIGN

FUNCTIONAL SUPERVISOR: FRANK GONZALEZ

CALCULATED-DESIGNED BY: LEE XIONG
CHECKED BY: KAMALDEEP KAUR

REVISED BY
DATE REVISED

LAST REVISION 01-29-13 | DATE PLOTTED => 08-FEB-2013 | TIME PLOTTED => 15:49

Dist	COUNTY	ROUTE	POST MILES TOTAL PROJECT	SHEET No.	TOTAL SHEETS
06	Ker	155	R14.0/41.0	5	20

Kamaldeep Kaur 12-20-12
REGISTERED CIVIL ENGINEER DATE

2-4-13
PLANS APPROVAL DATE

REGISTERED PROFESSIONAL ENGINEER
KAMALDEEP KAUR
No. C73047
Exp. 12/31/14
CIVIL
STATE OF CALIFORNIA

THE STATE OF CALIFORNIA OR ITS OFFICERS OR AGENTS SHALL NOT BE RESPONSIBLE FOR THE ACCURACY OR COMPLETENESS OF SCANNED COPIES OF THIS PLAN SHEET.

NOTES:

1. FOR ACCURATE RIGHT OF WAY DATA, CONTACT RIGHT OF WAY ENGINEERING AT DISTRICT OFFICE.
2. GRADE TO DRAIN AT INLET AND OUTLET.

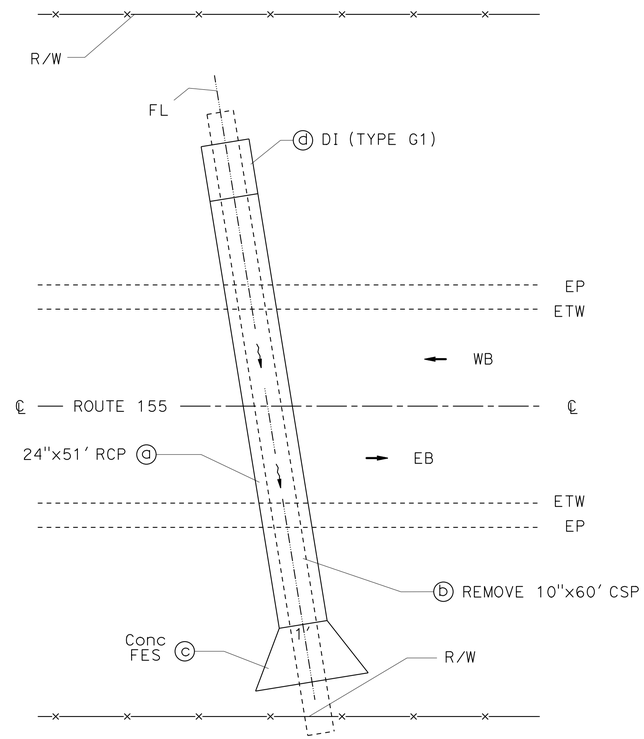

PLAN NO SCALE

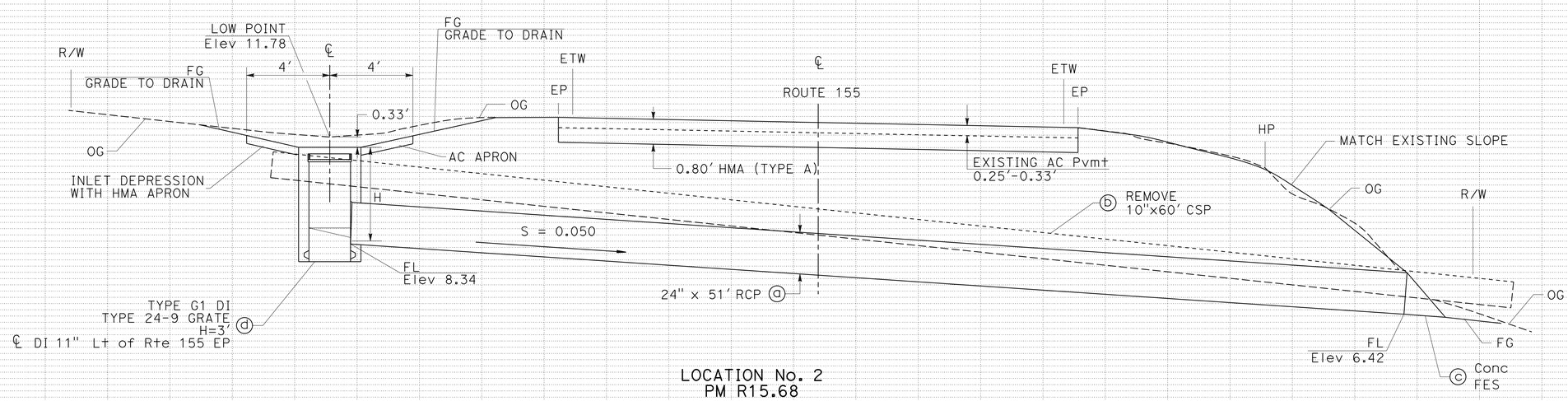

LOCATION No. 2
PM R15.68

DRAINAGE SYSTEM No. 2

SCALE: HORIZONTAL 1":3'
VERTICAL 1":2'

DRAINAGE PROFILE

DP-2

STATE OF CALIFORNIA - DEPARTMENT OF TRANSPORTATION
Caltrans MAINTENANCE DESIGN

FUNCTIONAL SUPERVISOR: FRANK GONZALEZ

CALCULATED-DESIGNED BY: LEE XIONG
CHECKED BY: KAMALDEEP KAUR

REVISED BY
DATE REVISED

LAST REVISION: DATE PLOTTED => 08-FEB-2013
01-29-13 TIME PLOTTED => 15:49

Dist	COUNTY	ROUTE	POST MILES TOTAL PROJECT	SHEET No.	TOTAL SHEETS
06	Ker	155	R14.0/41.0	6	20

Kamaldeep Kaur 12-20-12
REGISTERED CIVIL ENGINEER DATE

2-4-13
PLANS APPROVAL DATE

REGISTERED PROFESSIONAL ENGINEER
KAMALDEEP KAUR
No. C73047
Exp. 12/31/14
CIVIL
STATE OF CALIFORNIA

THE STATE OF CALIFORNIA OR ITS OFFICERS OR AGENTS SHALL NOT BE RESPONSIBLE FOR THE ACCURACY OR COMPLETENESS OF SCANNED COPIES OF THIS PLAN SHEET.

NOTES:

1. FOR ACCURATE RIGHT OF WAY DATA, CONTACT RIGHT OF WAY ENGINEERING AT DISTRICT OFFICE.
2. GRADE TO DRAIN AT INLET AND OUTLET

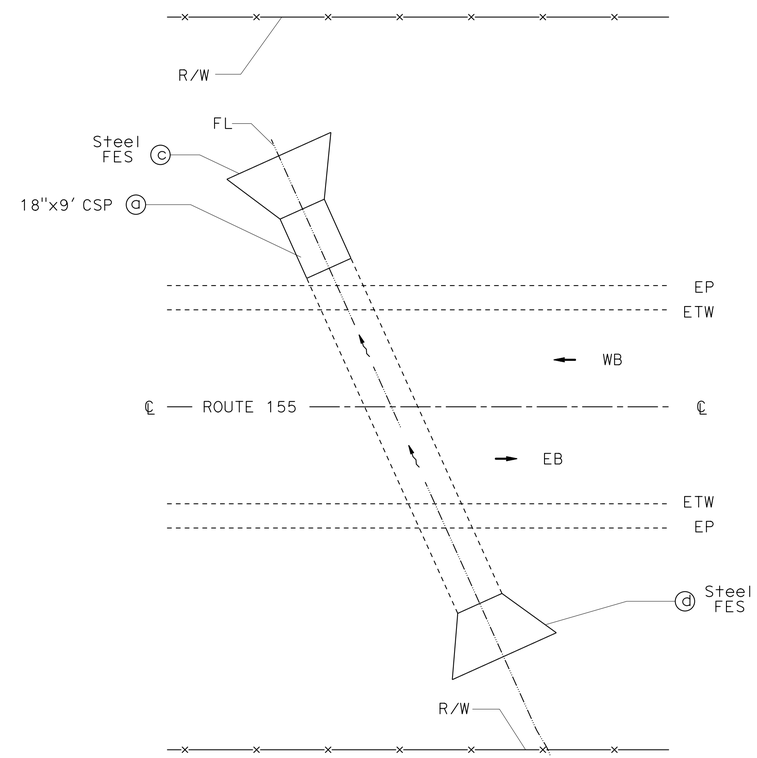

PLAN NO SCALE

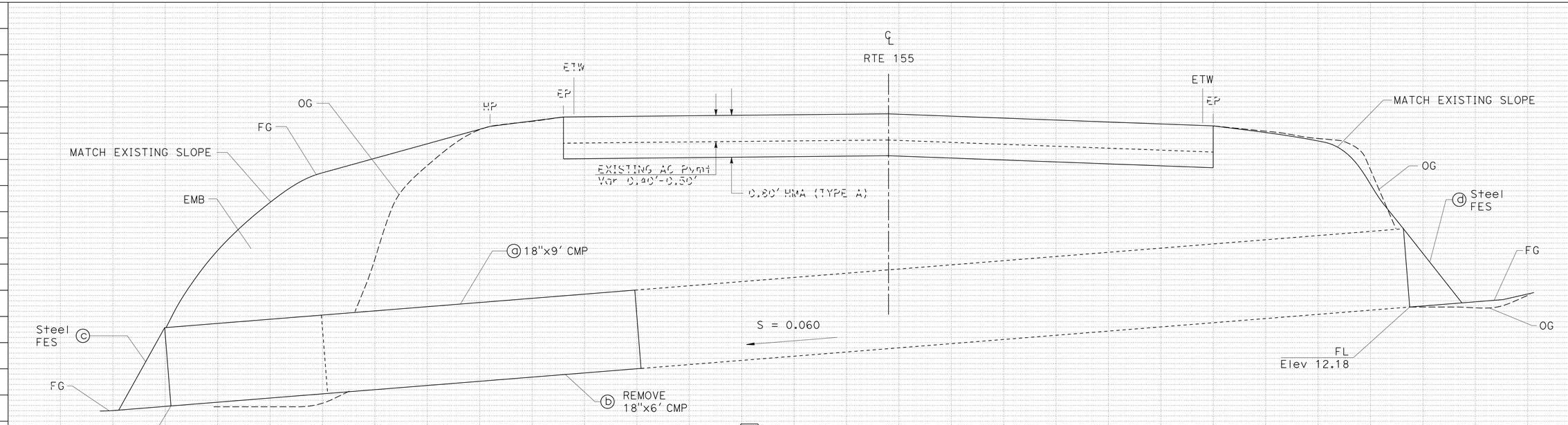

DRAINAGE SYSTEM No. 3

LOCATION No. 3
PM R17.91

SCALE: HORIZONTAL 1":2'
VERTICAL 1":1'

DRAINAGE PROFILE

DP-3

STATE OF CALIFORNIA - DEPARTMENT OF TRANSPORTATION
Caltrans® MAINTENANCE DESIGN

FUNCTIONAL SUPERVISOR: FRANK GONZALEZ
CALCULATED-DESIGNED BY: LEE XIONG
CHECKED BY: KAMALDEEP KAUR
REVISED BY
DATE REVISED

LAST REVISION 01-29-13 | DATE PLOTTED => 08-FEB-2013 | TIME PLOTTED => 15:49

Dist	COUNTY	ROUTE	POST MILES TOTAL PROJECT	SHEET No.	TOTAL SHEETS
06	Ker	155	R14.0/41.0	7	20

Kamaldeep Kaur 12-20-12
REGISTERED CIVIL ENGINEER DATE

2-4-13
PLANS APPROVAL DATE

REGISTERED PROFESSIONAL ENGINEER KAMALDEEP KAUR No. C73047 Exp. 12/31/14 CIVIL STATE OF CALIFORNIA

THE STATE OF CALIFORNIA OR ITS OFFICERS OR AGENTS SHALL NOT BE RESPONSIBLE FOR THE ACCURACY OR COMPLETENESS OF SCANNED COPIES OF THIS PLAN SHEET.

NOTES:

1. FOR ACCURATE RIGHT OF WAY DATA, CONTACT RIGHT OF WAY ENGINEERING AT DISTRICT OFFICE.
2. GRADE TO DRAIN AT INLET AND OUTLET

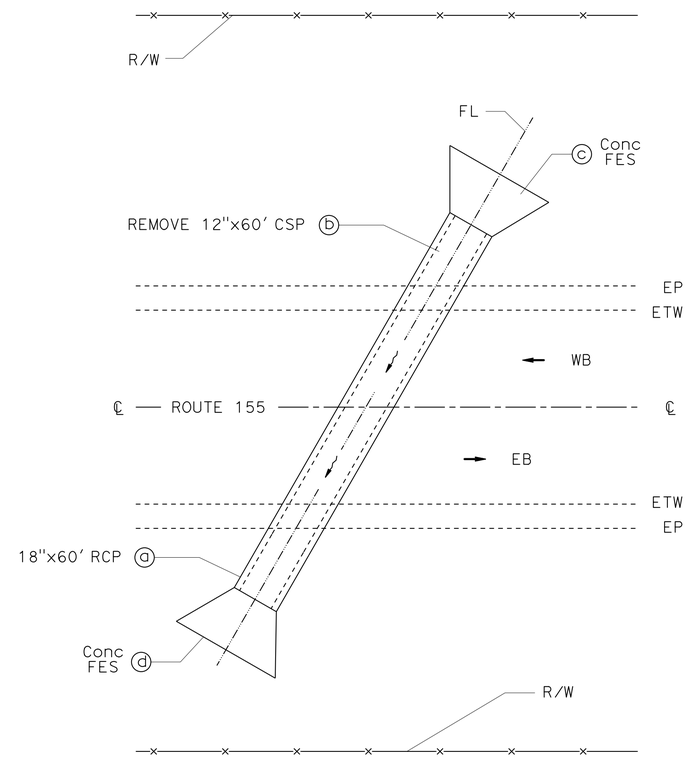

PLAN NO SCALE

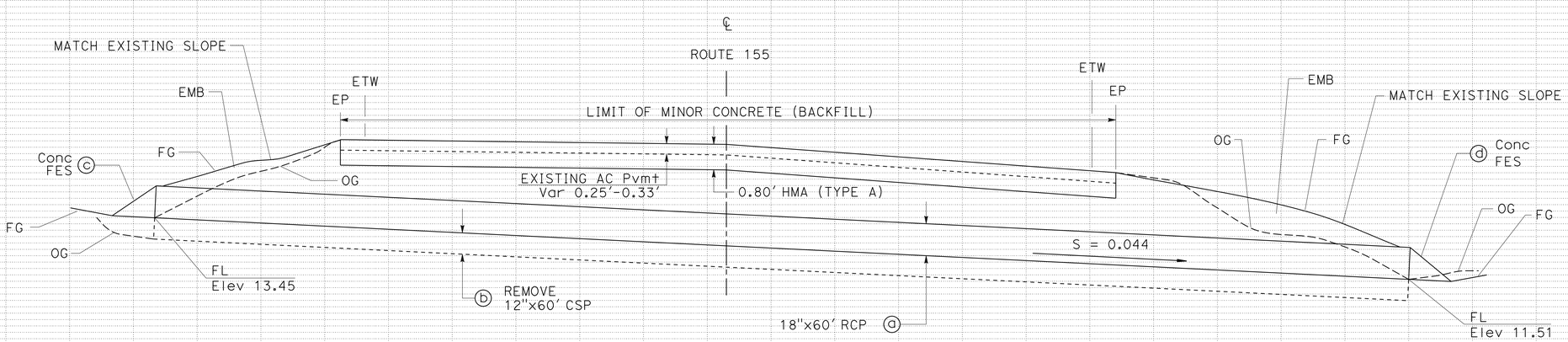

LOCATION No. 4
PM R18.45

DRAINAGE SYSTEM No. 4

SCALE: HORIZONTAL 1":3'
VERTICAL 1":2'

DRAINAGE PROFILE

DP-4

STATE OF CALIFORNIA - DEPARTMENT OF TRANSPORTATION
Caltrans MAINTENANCE DESIGN

FUNCTIONAL SUPERVISOR: FRANK GONZALEZ
CALCULATED-DESIGNED BY: LEE XIONG
CHECKED BY: KAMALDEEP KAUR
REVISED BY
DATE REVISED

LAST REVISION 01-29-13 | DATE PLOTTED => 08-FEB-2013 | TIME PLOTTED => 15:49

Dist	COUNTY	ROUTE	POST MILES TOTAL PROJECT	SHEET No.	TOTAL SHEETS
06	Ker	155	R14.0/41.0	8	20

Kamaldeep Kaur 12-20-12
REGISTERED CIVIL ENGINEER DATE

2-4-13
PLANS APPROVAL DATE

REGISTERED PROFESSIONAL ENGINEER KAMALDEEP KAUR No. C73047 Exp. 12/31/14 CIVIL STATE OF CALIFORNIA

THE STATE OF CALIFORNIA OR ITS OFFICERS OR AGENTS SHALL NOT BE RESPONSIBLE FOR THE ACCURACY OR COMPLETENESS OF SCANNED COPIES OF THIS PLAN SHEET.

NOTES:

1. FOR ACCURATE RIGHT OF WAY DATA, CONTACT RIGHT OF WAY ENGINEERING AT DISTRICT OFFICE.
2. GRADE TO DRAIN AT INLET AND OUTLET.

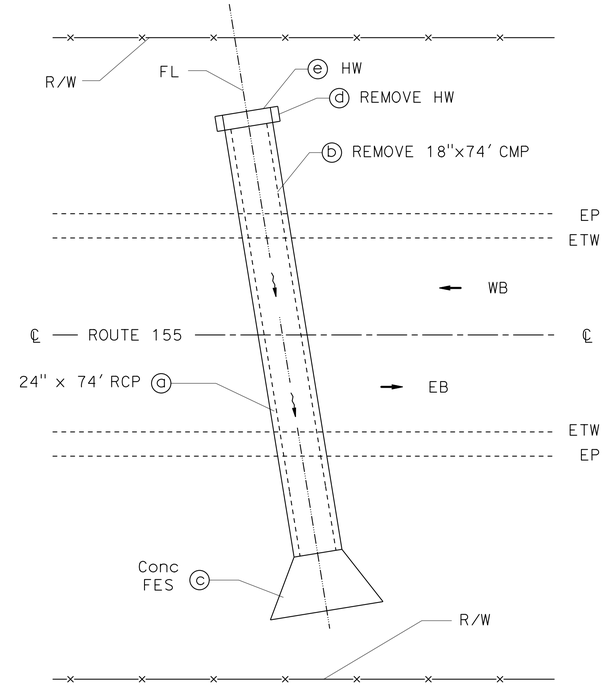

PLAN NO SCALE

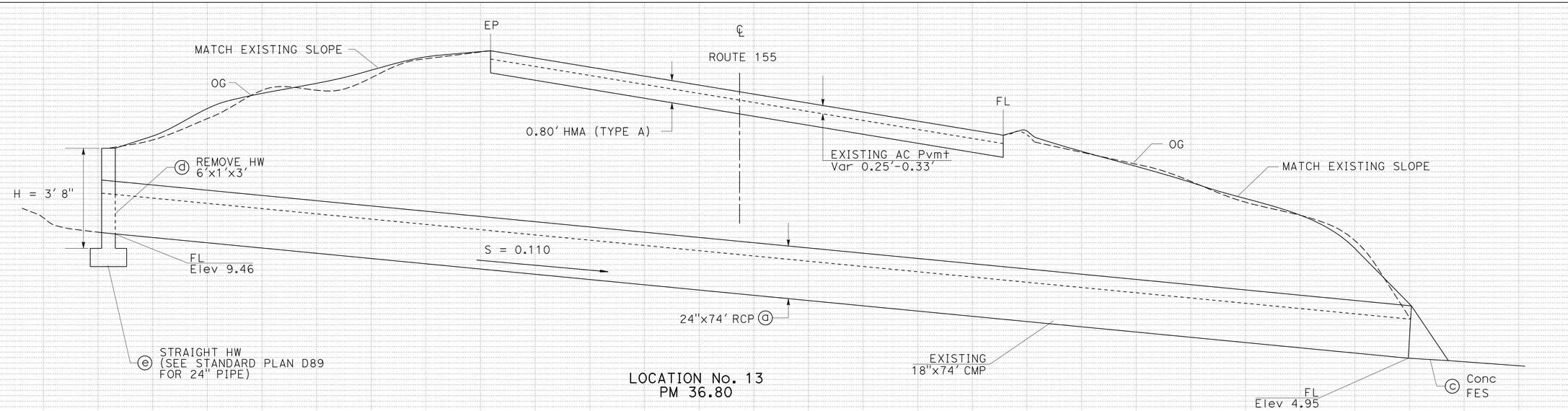

LOCATION No. 13
PM 36.80

DRAINAGE SYSTEM No. 5

SCALE: HORIZONTAL 1":3'
VERTICAL 1":2'

DRAINAGE PROFILE

DP-5

STATE OF CALIFORNIA - DEPARTMENT OF TRANSPORTATION
Caltrans MAINTENANCE DESIGN

FUNCTIONAL SUPERVISOR: FRANK GONZALEZ

CALCULATED-DESIGNED BY: LEE XIONG
CHECKED BY: KAMALDEEP KAUR

REVISED BY
DATE REVISED

LAST REVISION 01-29-13
DATE PLOTTED => 08-FEB-2013
TIME PLOTTED => 15:49

Dist	COUNTY	ROUTE	POST MILES TOTAL PROJECT	SHEET No.	TOTAL SHEETS
06	Ker	155	R14.0/41.0	9	20

Kamaldeep Kaur 12-20-12
REGISTERED CIVIL ENGINEER DATE

2-4-13
PLANS APPROVAL DATE

REGISTERED PROFESSIONAL ENGINEER
KAMALDEEP KAUR
No. C73047
Exp.12/31/14
CIVIL
STATE OF CALIFORNIA

THE STATE OF CALIFORNIA OR ITS OFFICERS OR AGENTS SHALL NOT BE RESPONSIBLE FOR THE ACCURACY OR COMPLETENESS OF SCANNED COPIES OF THIS PLAN SHEET.

NOTES:

1. FOR ACCURATE RIGHT OF WAY DATA, CONTACT RIGHT OF WAY ENGINEERING AT DISTRICT OFFICE.
2. GRADE TO DRAIN AT INLET AND OUTLET.

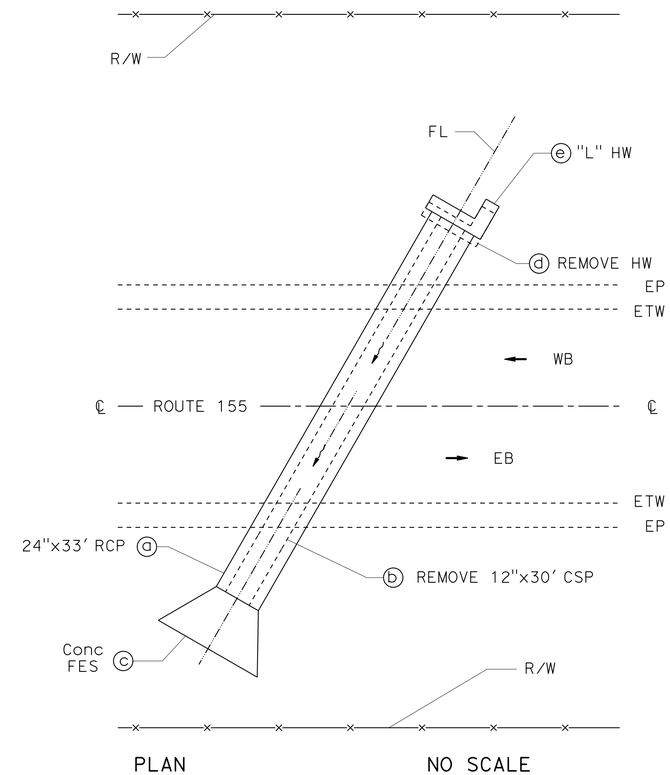

PLAN NO SCALE

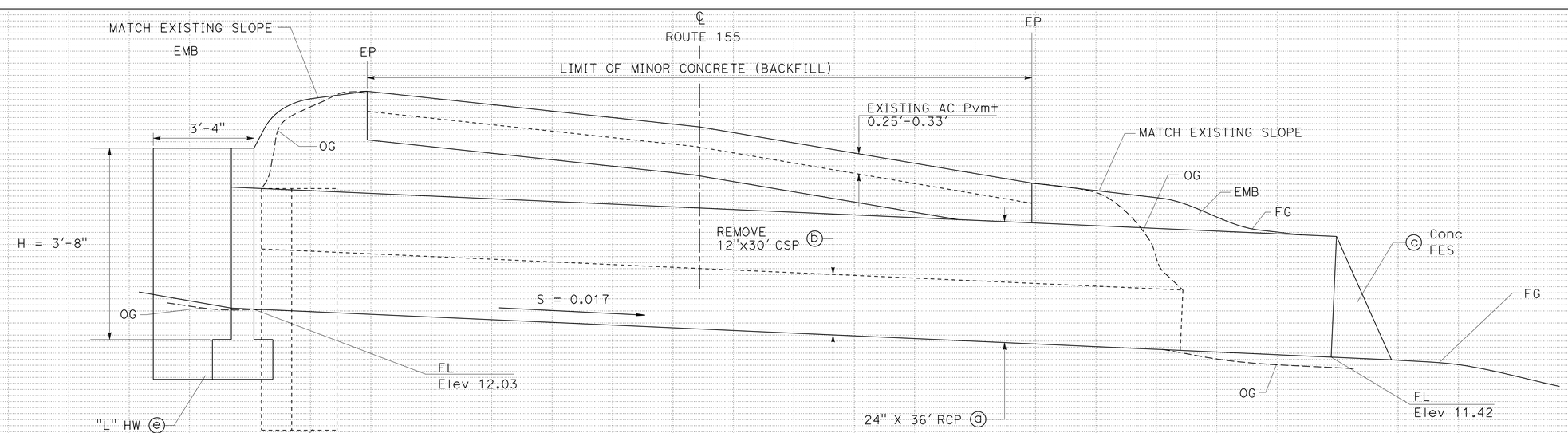

LOCATION No. 14
PM 37.1

DRAINAGE SYSTEM No. 6

SCALE: HORIZONTAL 1":2'
VERTICAL 1":1'

DRAINAGE PROFILE

DP-6

STATE OF CALIFORNIA - DEPARTMENT OF TRANSPORTATION
Caltrans MAINTENANCE DESIGN

FUNCTIONAL SUPERVISOR: FRANK GONZALEZ

CALCULATED-DESIGNED BY: LEE XIONG
CHECKED BY: KAMALDEEP KAUR

REVISED BY | DATE REVISED

LAST REVISION 01-29-13 | DATE PLOTTED => 08-FEB-2013 | TIME PLOTTED => 15:49

Dist	COUNTY	ROUTE	POST MILES TOTAL PROJECT	SHEET No.	TOTAL SHEETS
06	Ker	155	R14.0/41.0	10	20

Kamaldeep Kaur 12-20-12
REGISTERED CIVIL ENGINEER DATE

2-4-13
PLANS APPROVAL DATE

REGISTERED PROFESSIONAL ENGINEER KAMALDEEP KAUR No. C73047 Exp. 12/31/14 CIVIL STATE OF CALIFORNIA

THE STATE OF CALIFORNIA OR ITS OFFICERS OR AGENTS SHALL NOT BE RESPONSIBLE FOR THE ACCURACY OR COMPLETENESS OF SCANNED COPIES OF THIS PLAN SHEET.

NOTES:

1. FOR ACCURATE RIGHT OF WAY DATA, CONTACT RIGHT OF WAY ENGINEERING AT DISTRICT OFFICE.
2. GRADE TO DRAIN AT INLET AND OUTLET.

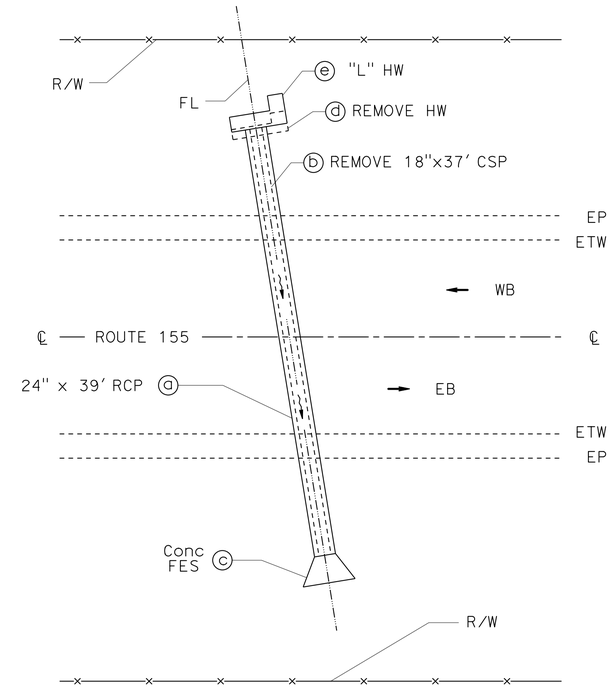

PLAN NO SCALE

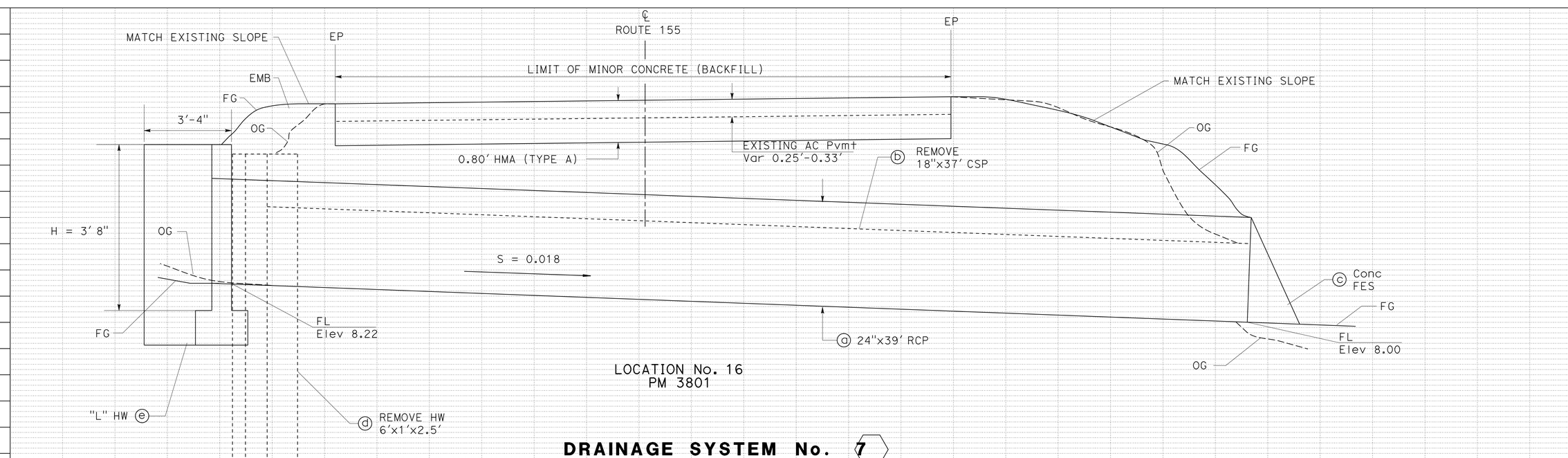

DRAINAGE SYSTEM No. 7

SCALE: HORIZONTAL 1":2'
VERTICAL 1":1'

DRAINAGE PROFILE

DP-7

REVISED BY	LEE XIONG
DATE REVISED	KAMALDEEP KAUR
CALCULATED-DESIGNED BY	
CHECKED BY	
FUNCTIONAL SUPERVISOR	FRANK GONZALEZ

STATE OF CALIFORNIA - DEPARTMENT OF TRANSPORTATION
Caltrans MAINTENANCE DESIGN

LAST REVISION 01-29-13 | DATE PLOTTED => 08-FEB-2013 | TIME PLOTTED => 15:49

Dist	COUNTY	ROUTE	POST MILES TOTAL PROJECT	SHEET No.	TOTAL SHEETS
06	Ker	155	R14.0/41.0	11	20

Kamaldeep Kaur 12-20-12
REGISTERED CIVIL ENGINEER DATE

2-4-13
PLANS APPROVAL DATE

REGISTERED PROFESSIONAL ENGINEER
KAMALDEEP KAUR
No. C73047
Exp.12/31/14
CIVIL
STATE OF CALIFORNIA

THE STATE OF CALIFORNIA OR ITS OFFICERS OR AGENTS SHALL NOT BE RESPONSIBLE FOR THE ACCURACY OR COMPLETENESS OF SCANNED COPIES OF THIS PLAN SHEET.

NOTES:

1. FOR ACCURATE RIGHT OF WAY DATA, CONTACT RIGHT OF WAY ENGINEERING AT DISTRICT OFFICE.
2. GRADE TO DRAIN AT INLET AND OUTLET.

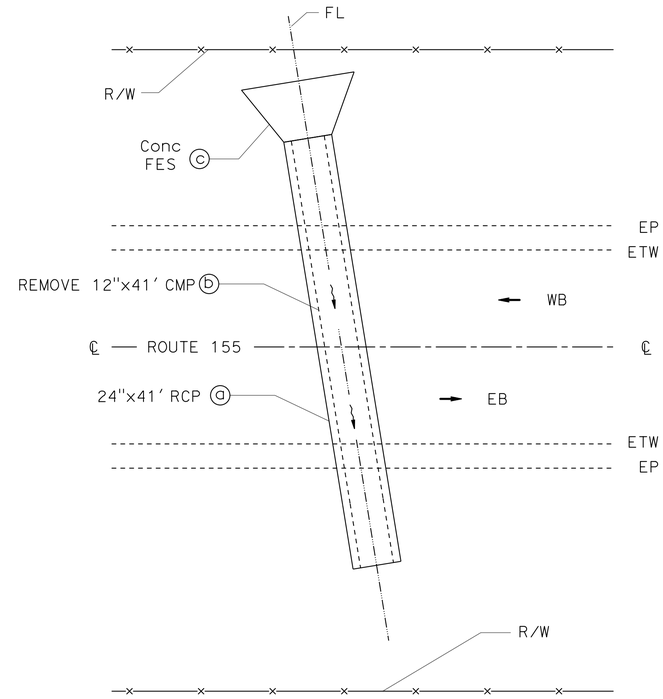

PLAN NO SCALE

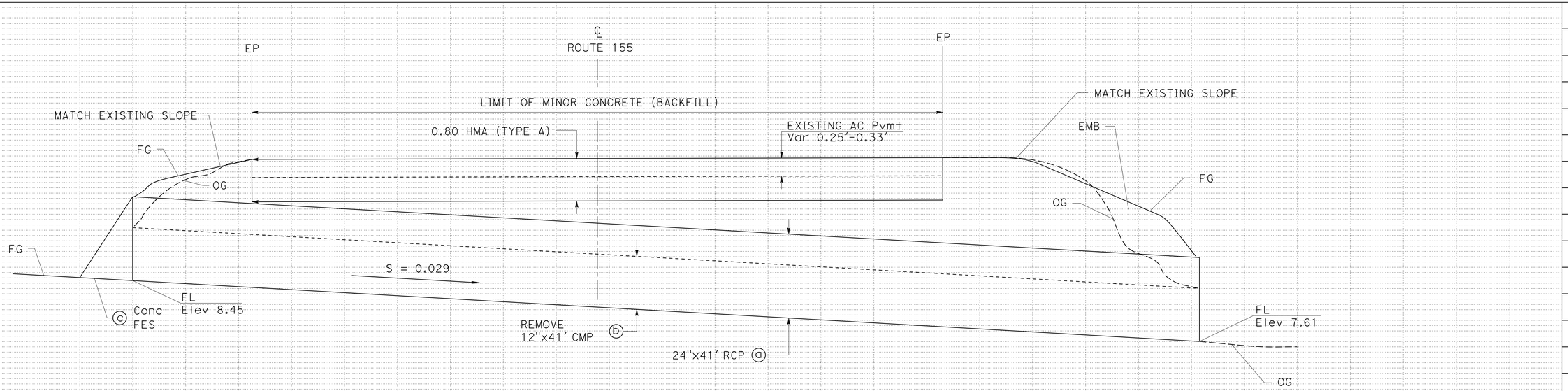

LOCATION No. 17
PM 38.90

DRAINAGE SYSTEM No. 8

SCALE: HORIZONTAL 1":2'
VERTICAL 1":1'

DRAINAGE PROFILE

DP-8

REVISED BY | DATE REVISED
LEE XIONG | KAMALDEEP KAUR
CALCULATED-DESIGNED BY | CHECKED BY
FUNCTIONAL SUPERVISOR: FRANK GONZALEZ
STATE OF CALIFORNIA - DEPARTMENT OF TRANSPORTATION
Caltrans MAINTENANCE DESIGN

LAST REVISION 01-29-13 | DATE PLOTTED => 08-FEB-2013 | TIME PLOTTED => 15:49

Dist	COUNTY	ROUTE	POST MILES TOTAL PROJECT	SHEET No.	TOTAL SHEETS
06	Ker	155	R14.0/41.0	12	20

Kamaldeep Kaur 12-20-12
REGISTERED CIVIL ENGINEER DATE

2-4-13
PLANS APPROVAL DATE

REGISTERED PROFESSIONAL ENGINEER
KAMALDEEP KAUR
No. C73047
Exp. 12/31/14
CIVIL
STATE OF CALIFORNIA

THE STATE OF CALIFORNIA OR ITS OFFICERS OR AGENTS SHALL NOT BE RESPONSIBLE FOR THE ACCURACY OR COMPLETENESS OF SCANNED COPIES OF THIS PLAN SHEET.

NOTES:

1. FOR ACCURATE RIGHT OF WAY DATA, CONTACT RIGHT OF WAY ENGINEERING AT DISTRICT OFFICE.
2. GRADE TO DRAIN AT INLET AND OUTLET.

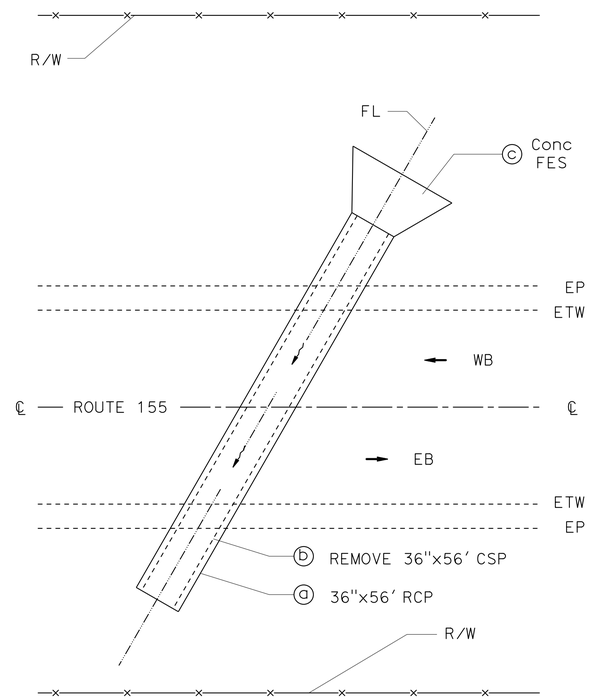

PLAN NO SCALE

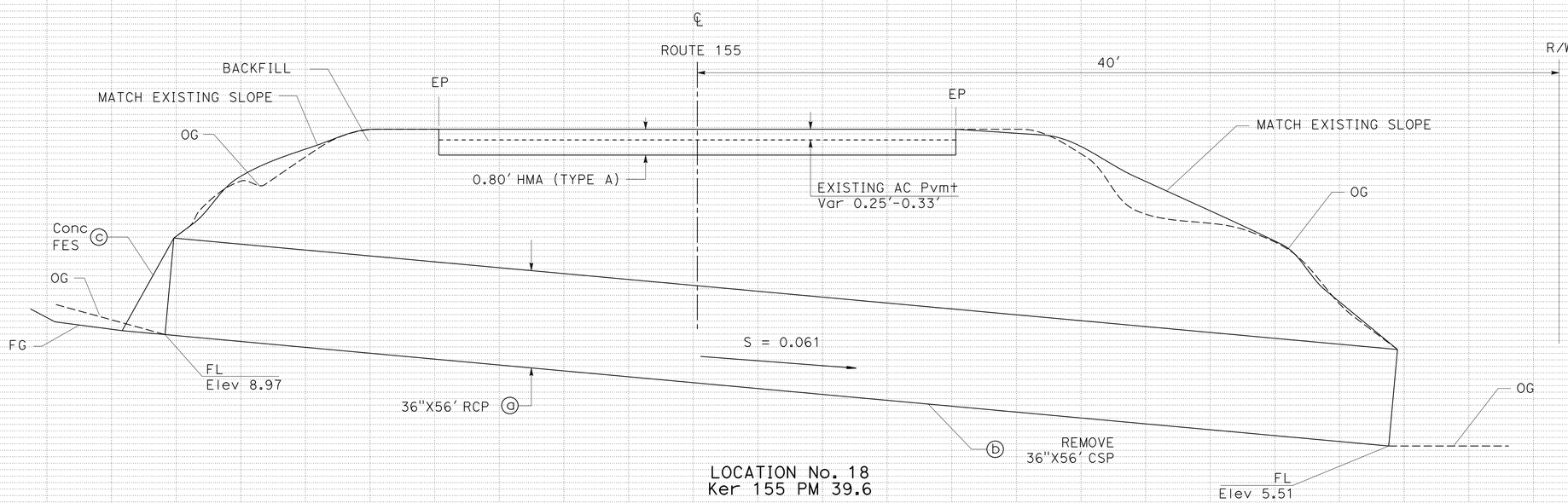

LOCATION No. 18
Ker 155 PM 39.6

DRAINAGE SYSTEM No. 9

SCALE: HORIZONTAL 1":3'
VERTICAL 1":2'

DRAINAGE PROFILE AND DRAINAGE DETAILS

DP-9

STATE OF CALIFORNIA - DEPARTMENT OF TRANSPORTATION
Caltrans MAINTENANCE DESIGN

FUNCTIONAL SUPERVISOR: FRANK GONZALEZ
CALCULATED-DESIGNED BY: LEE XIONG
CHECKED BY: KAMALDEEP KAUR
REVISED BY
DATE REVISED

LAST REVISION 01-30-13
DATE PLOTTED => 08-FEB-2013
TIME PLOTTED => 15:49

Dist	COUNTY	ROUTE	POST MILES TOTAL PROJECT	SHEET No.	TOTAL SHEETS
06	Ker	155	R14.0/41.0	13	20

Kamaldeep Kaur 12-20-12
REGISTERED CIVIL ENGINEER DATE

2-4-13
PLANS APPROVAL DATE

REGISTERED PROFESSIONAL ENGINEER
KAMALDEEP KAUR
No. C73047
Exp. 12/31/14
CIVIL
STATE OF CALIFORNIA

THE STATE OF CALIFORNIA OR ITS OFFICERS OR AGENTS SHALL NOT BE RESPONSIBLE FOR THE ACCURACY OR COMPLETENESS OF SCANNED COPIES OF THIS PLAN SHEET.

NOTES:

FOR ACCURATE RIGHT OF WAY DATA, CONTACT RIGHT OF WAY ENGINEERING AT DISTRICT OFFICE.

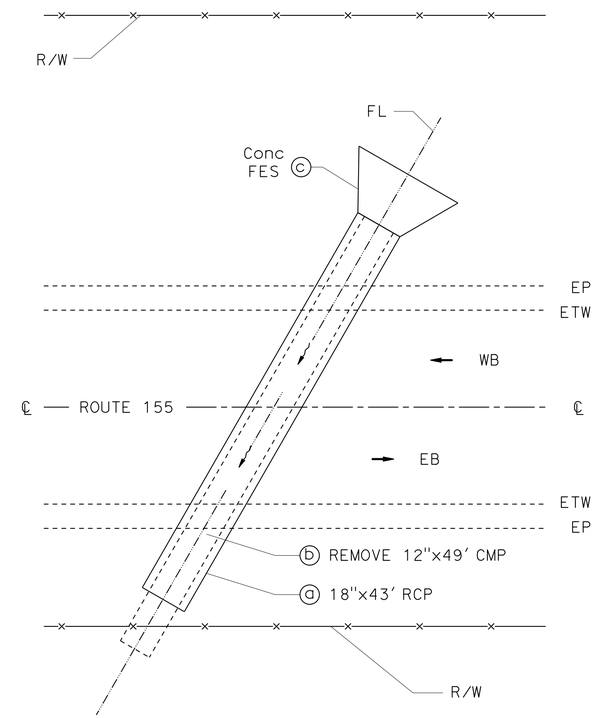

PLAN NO SCALE

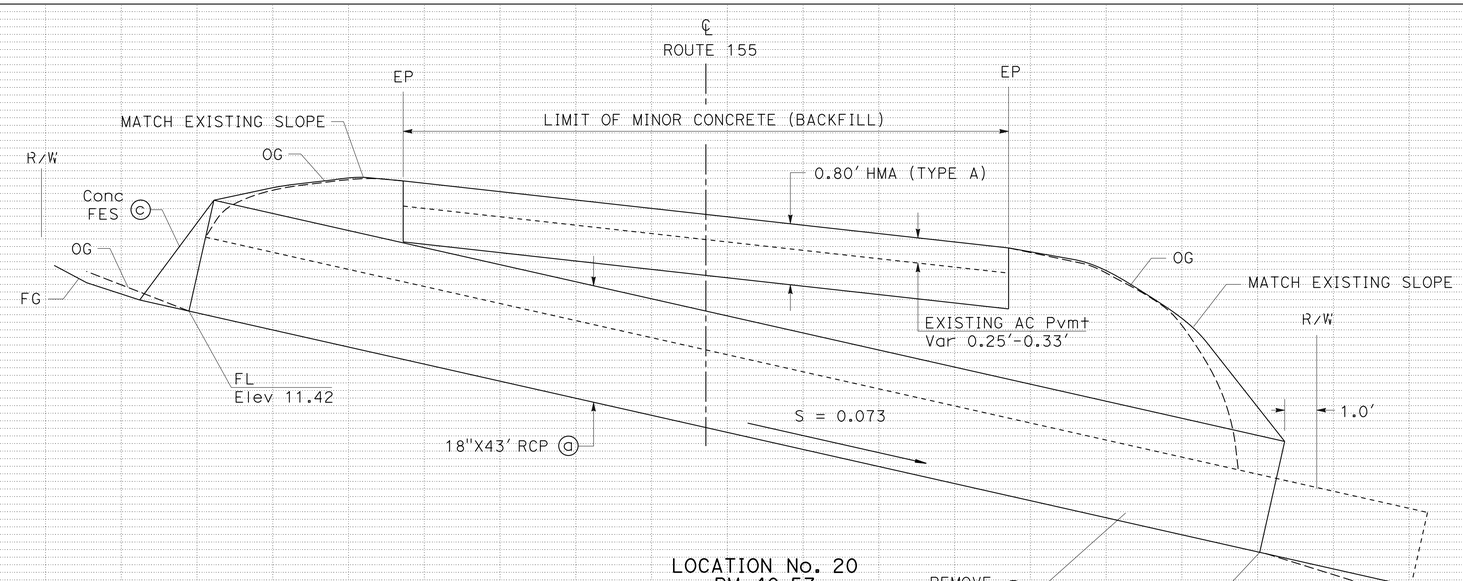

DRAINAGE SYSTEM No. 10

SCALE: HORIZONTAL 1":3'
VERTICAL 1":1'

DRAINAGE PROFILE AND DRAINAGE DETAILS

DP-10

STATE OF CALIFORNIA - DEPARTMENT OF TRANSPORTATION
Caltrans MAINTENANCE DESIGN

FUNCTIONAL SUPERVISOR: FRANK GONZALEZ
CALCULATED-DESIGNED BY: LEE XIONG
CHECKED BY: KAMALDEEP KAUR
REVISED BY
DATE REVISED

LAST REVISION 01-30-13
DATE PLOTTED => 08-FEB-2013
TIME PLOTTED => 15:49

Dist	COUNTY	ROUTE	POST MILES TOTAL PROJECT	SHEET No.	TOTAL SHEETS
06	Ker	155	R14.0/41.0	14	20

Kamaldeep Kaur 12-20-12
REGISTERED CIVIL ENGINEER DATE

2-4-13
PLANS APPROVAL DATE

REGISTERED PROFESSIONAL ENGINEER
KAMALDEEP KAUR
No. C73047
Exp. 12/31/14
CIVIL
STATE OF CALIFORNIA

THE STATE OF CALIFORNIA OR ITS OFFICERS OR AGENTS SHALL NOT BE RESPONSIBLE FOR THE ACCURACY OR COMPLETENESS OF SCANNED COPIES OF THIS PLAN SHEET.

NOTES:

FOR ACCURATE RIGHT OF WAY DATA, CONTACT RIGHT OF WAY ENGINEERING AT DISTRICT OFFICE.

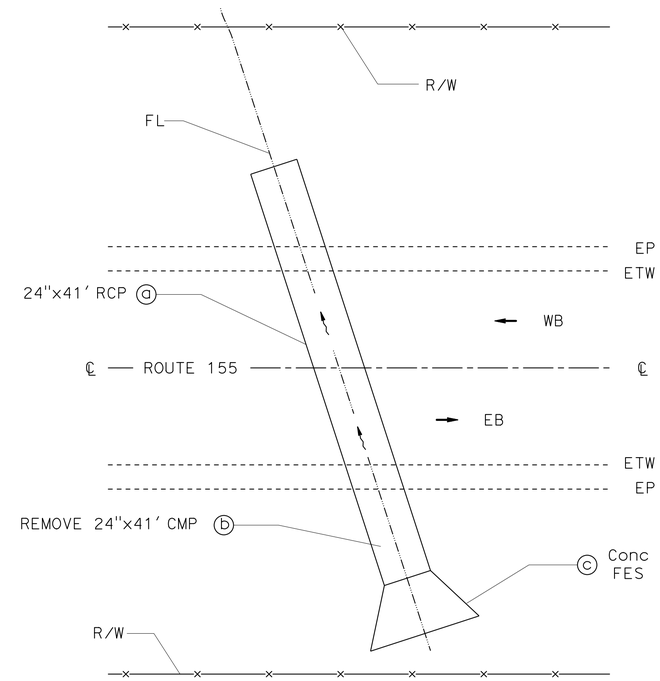

PLAN NO SCALE

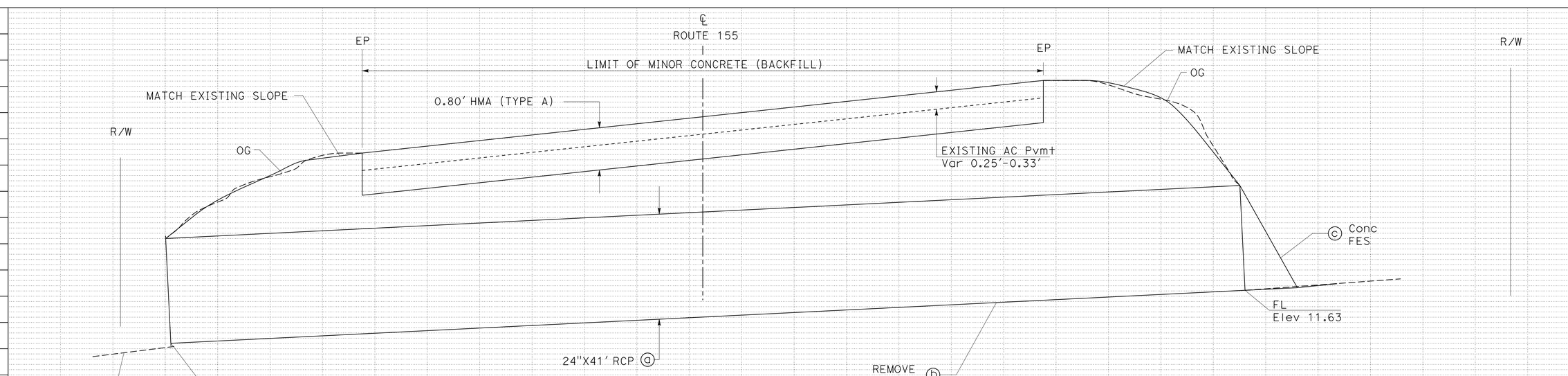

LOCATION No. 21
PM 40.85

DRAINAGE SYSTEM No. 11

SCALE: HORIZONTAL 1":2'
VERTICAL 1":1'

DRAINAGE PROFILE

DP-11

STATE OF CALIFORNIA - DEPARTMENT OF TRANSPORTATION
Caltrans MAINTENANCE DESIGN

FUNCTIONAL SUPERVISOR: FRANK GONZALEZ

CALCULATED-DESIGNED BY: LEE XIONG
CHECKED BY: KAMALDEEP KAUR

REVISED BY
DATE REVISED

LAST REVISION 01-30-13
DATE PLOTTED => 08-FEB-2013
TIME PLOTTED => 15:49

Dist	COUNTY	ROUTE	POST MILES TOTAL PROJECT	SHEET No.	TOTAL SHEETS
06	Ker	155	R14.0/41.0	15	20

Kamaldeep Kaur 12-20-12
REGISTERED CIVIL ENGINEER DATE

2-4-13
PLANS APPROVAL DATE

REGISTERED PROFESSIONAL ENGINEER
KAMALDEEP KAUR
No. C73047
Exp. 12/31/14
CIVIL
STATE OF CALIFORNIA

THE STATE OF CALIFORNIA OR ITS OFFICERS OR AGENTS SHALL NOT BE RESPONSIBLE FOR THE ACCURACY OR COMPLETENESS OF SCANNED COPIES OF THIS PLAN SHEET.

NOTES:

1. USE RGJ FOR ALL RCP'S
   USE Std Jt FOR CSP'S
2. CSP SHALL BE MADE OF ONLY GALVANIZED STEEL

ABBREVIATION:

RGJ RUBBER GASKET JOINT

DRAINAGE QUANTITIES

LOCATION	DRAINAGE SHEET No.	DRAINAGE SYSTEM No.	DRAINAGE UNIT	STRUCTURE BACKFILL (SLURRY CEMENT)	MINOR CONCRETE (BACKFILL)	REMOVE PIPE	RCP			CSP (.109" THICK)	CONCRETE FLARED END SECTION			STEEL FLARED END SECTION	HMA (TYPE A)	TACK COAT	REMOVE HEADWALL	MINOR CONCRETE (MINOR STRUCTURE)		DESIGN HEIGHT (H)	Misc IRON & STEEL	INLET DEPRESSION	DESCRIPTION	DRAINAGE UNIT	DRAINAGE SYSTEM No.	DRAINAGE SHEET No.
							18"	24"	36"	18"	18"	24"	36"	18"				DRAINAGE INLET	HEADWALLS							
				CY	CY	LF	LF	LF	LF	LF	EA	EA	EA	EA	TON	TON	EA	CY	CY	LF	LB	EA				
1	DP-1	1	a	42					65						8	0.01								a	1	DP-1
			b			71																	REMOVE 36"x71' CSP	b		
			c										1											c		
			d										1											d		
2	DP-2	2	a	15				51							6	0.01								a	2	DP-2
			b			59																		b		
			c									1												c		
			d															1.17		3	263	1	TYPE G1 DI, 24-9 GRATE	d		
3	DP-3	3	a	2						9					1									a	3	DP-3
			b			6																		b		
			c											1										c		
			d											1										d		
4	DP-4	4	a		11		60								8	0.01								a	4	DP-4
			b			60																		b		
			c								1													c		
			d								1													d		
13	DP-5	5	a	28				74							7	0.01								a	5	DP-5
			b			73																		b		
			c									1												c		
			d														1						REMOVE HW (6'x1'x3'), "L" HW H=3'8", L=8'6"	d		
			e																1.20		75			e		
14	DP-6	6	a		10			36							6	0.01								a	6	DP-6
			b			36																		b		
			c									1												c		
			d														1						REMOVE HW (4'x1'x2.5'), "L" HW H=3'8", L-2=4'3", W=3'4"	d		
			e																1.29		85			e		
SUBTOTAL				87	21	305	60	161	65	9	2	3	2	2	36	0.05	2	3.66		3	423	1				

DRAINAGE QUANTITIES

DQ-1

STATE OF CALIFORNIA - DEPARTMENT OF TRANSPORTATION
Caltrans MAINTENANCE DESIGN

FUNCTIONAL SUPERVISOR: FRANK GONZALEZ
CALCULATED-DESIGNED BY: LEE XIONG
CHECKED BY: KAMALDEEP KAUR
REVISED BY
DATE REVISED

LAST REVISION 01-30-13
DATE PLOTTED => 08-FEB-2013
TIME PLOTTED => 15:49

Dist	COUNTY	ROUTE	POST MILES TOTAL PROJECT	SHEET No.	TOTAL SHEETS
06	Ker	155	R14.0/41.0	16	20

Kamaldeep Kaur 12-20-12
REGISTERED CIVIL ENGINEER DATE

2-4-13
PLANS APPROVAL DATE

REGISTERED PROFESSIONAL ENGINEER KAMALDEEP KAUR No. C73047 Exp. 12/31/14 CIVIL STATE OF CALIFORNIA

THE STATE OF CALIFORNIA OR ITS OFFICERS OR AGENTS SHALL NOT BE RESPONSIBLE FOR THE ACCURACY OR COMPLETENESS OF SCANNED COPIES OF THIS PLAN SHEET.

NOTES:

1. USE RGJ FOR ALL RCP'S
   USE Std Jt FOR CSP'S
2. CSP SHALL BE MADE OF ONLY GALVANIZED STEEL

ABBREVIATION:

RGJ RUBBER GASKET JOINT

DRAINAGE QUANTITIES

LOCATION	DRAINAGE SHEET No.	DRAINAGE SYSTEM No.	DRAINAGE UNIT	STRUCTURE BACKFILL (SLURRY CEMENT)	MINOR CONCRETE (BACKFILL)	REMOVE PIPE	RCP 18"	RCP 24"	RCP 36"	CSP (.109" THICK) 18"	CONCRETE FLARED END SECTION 18"	CONCRETE FLARED END SECTION 24"	CONCRETE FLARED END SECTION 36"	STEEL FLARED END SECTION 18"	HMA (TYPE A)	TACK COAT	REMOVE HEADWALL	MINOR CONCRETE (MINOR STRUCTURE) DRAINAGE INLET	MINOR CONCRETE (MINOR STRUCTURE) HEADWALLS	DESIGN HEIGHT (H)	Misc IRON & STEEL	INLET DEPRESSION	DESCRIPTION	DRAINAGE UNIT	DRAINAGE SYSTEM No.	DRAINAGE SHEET No.
				CY	CY	LF	LF	LF	LF	LF	EA	EA	EA	EA	TON	TON	EA	CY	CY	LF	LB	EA				
16	DP-7	7	a					39							6	0.01								a	7	DP-7
			b		11	39																		b		
			c																					c		
			d														1						REMOVE HW (6'x1'x2.5') "L" HW H=3'8", L/2=4'3", W=3'4"	d		
			e																1.29		85			e		
17	DP-8	8	a		7			41							6	0.01								a	8	DP-8
			b			41																		b		
			c									1												c		
18	DP-9	9	a	31					56						8	0.01								a	9	DP-9
			b			55																		b		
			c										1											c		
20	DP-10	10	a		7		43								6	0.01								a	10	DP-10
			b			51																		b		
			c								1													c		
21	DP-11	11	a		14			40							5	0.01								a	11	DP-11
			b			40																		b		
			c									1												c		
SUBTOTAL				31	39	226	43	120	56		1	2	1		31	0.05	1		1.29		85					
DQ-1				87	21	305	60	161	65	9	2	3	2	2	36	0.05	2	3.66		3	423	1				
TOTAL				118	60	531	103	281	121	9	3	5	3	2	67	0.10	3	4.95			508	1				

STATE OF CALIFORNIA - DEPARTMENT OF TRANSPORTATION
Caltrans MAINTENANCE DESIGN

FUNCTIONAL SUPERVISOR: FRANK GONZALEZ
CALCULATED-DESIGNED BY: LEE XIONG
CHECKED BY: KAMALDEEP KAUR
REVISED BY
DATE REVISED

DRAINAGE QUANTITIES

DQ-2

LAST REVISION 01-30-13
DATE PLOTTED => 08-FEB-2013
TIME PLOTTED => 15:49

Dist	COUNTY	ROUTE	POST MILES TOTAL PROJECT	SHEET No.	TOTAL SHEETS
06	Ker	155	R14.0/41.0	17	20

Kamaldeep Kaur 12-20-12
REGISTERED CIVIL ENGINEER DATE

2-4-13
PLANS APPROVAL DATE

REGISTERED PROFESSIONAL ENGINEER
KAMALDEEP KAUR
No. C73047
Exp. 12/31/14
CIVIL
STATE OF CALIFORNIA

THE STATE OF CALIFORNIA OR ITS OFFICERS OR AGENTS SHALL NOT BE RESPONSIBLE FOR THE ACCURACY OR COMPLETENESS OF SCANNED COPIES OF THIS PLAN SHEET.

STATIONARY MOUNTED CONSTRUCTION AREA SIGNS

SIGN No.	SIGN CODE	PANEL SIZE	SIGN MESSAGE	No. OF POST AND SIZE	No. OF SIGNS
B	W20-1	36" x 36"	ROAD WORK AHEAD	1 - 4" x 6"	12
C	G20-2	36" x 18"	END ROAD WORK	1 - 4" x 4"	6

NOTE: SIGN LOCATIONS SHOWN ARE APPROXIMATE. EXACT SIGN LOCATIONS TO BE DETERMINED BY THE ENGINEER.

LEGEND

SIGN NUMBER

WORK LOCATION

ONE POST

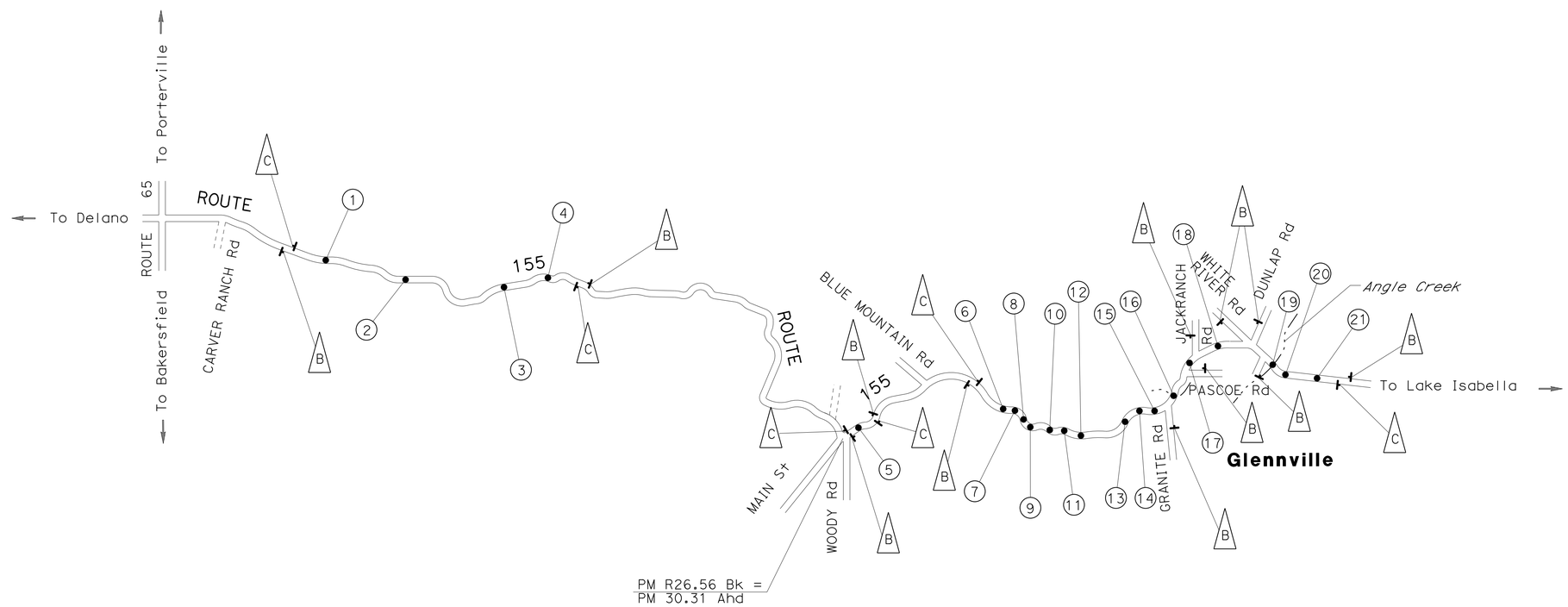

CONSTRUCTION AREA SIGNS

APPROVED FOR CONSTRUCTION AREA SIGN WORK ONLY

NO SCALE

CS-1

STATE OF CALIFORNIA - DEPARTMENT OF TRANSPORTATION
Caltrans MAINTENANCE DESIGN

FUNCTIONAL SUPERVISOR: FRANK GONZALEZ
CALCULATED-DESIGNED BY: LEE XIONG
CHECKED BY: KAMALDEEP KAUR
REVISED BY
DATE REVISED

LAST REVISION 01-30-13
DATE PLOTTED => 08-FEB-2013
TIME PLOTTED => 15:49

Dist	COUNTY	ROUTE	POST MILES TOTAL PROJECT	SHEET No.	TOTAL SHEETS
06	Ker	155	R14.0/41.0	18	20

Kamaldeep Kaur 12-20-12
REGISTERED CIVIL ENGINEER DATE

2-4-13
PLANS APPROVAL DATE

REGISTERED PROFESSIONAL ENGINEER
KAMALDEEP KAUR
No. C73047
Exp. 12/31/14
CIVIL
STATE OF CALIFORNIA

THE STATE OF CALIFORNIA OR ITS OFFICERS OR AGENTS SHALL NOT BE RESPONSIBLE FOR THE ACCURACY OR COMPLETENESS OF SCANNED COPIES OF THIS PLAN SHEET.

NOTES:

1. USE RGJ FOR ALL RCP'S
   USE Std Jt FOR CSP'S
2. CSP SHALL BE MADE OF ONLY GALVANIZED STEEL

SUMMARY OF QUANTITIES

LOCATION	CURED-IN-PLACE PIPELINER			CLEANING, INSPECTING AND PREPARING HOST PIPE	CONCRETE INVERT PAVING	TEMPORARY FIBER ROLL	DESCRIPTION
	18"	24"	36"				
	LF	LF	LF	CY	CY	EA	
3						50	
5		45		6			
6				66	7		
7	58			4			48" x 71' CMP DOUBLE CULVERTS
8			77	20			
9	56			4			
10			62	17			
11			40	11			
12			78	20			
15				26	3		60"x36' CMP
19				44	4		
SUBTOTAL	114	45	257	218	14	50	
TOTAL	114	45	257	218	14	50	

STATE OF CALIFORNIA - DEPARTMENT OF TRANSPORTATION
Caltrans MAINTENANCE DESIGN

FUNCTIONAL SUPERVISOR: FRANK GONZALEZ
CALCULATED-DESIGNED BY: LEE XIONG
CHECKED BY: KAMALDEEP KAUR
REVISED BY
DATE REVISED

SUMMARY OF QUANTITIES

Q-1

LAST REVISION 01-30-13
DATE PLOTTED => 08-FEB-2013
TIME PLOTTED => 15:49

Dist	COUNTY	ROUTE	POST MILES TOTAL PROJECT	SHEET No.	TOTAL SHEETS
06	Ker	155	R14.0/41.0,	19	20

REGISTERED CIVIL ENGINEER 12-7-12 DATE

2-4-13
PLANS APPROVAL DATE

REGISTERED PROFESSIONAL ENGINEER Gurinderpal Bhullar No. C48815 Exp. 9-30-14 CIVIL STATE OF CALIFORNIA

THE STATE OF CALIFORNIA OR ITS OFFICERS OR AGENTS SHALL NOT BE RESPONSIBLE FOR THE ACCURACY OR COMPLETENESS OF SCANNED COPIES OF THIS PLAN SHEET.

NOTES:

Unless otherwise specified in the special provisions, all temporary warning signs shall have black legend on orange background.

California code are designated by (CA). Otherwise, Federal (MUTCD) codes are shown.

TYPICAL LANE CLOSURE WITH REVERSIBLE CONTROL

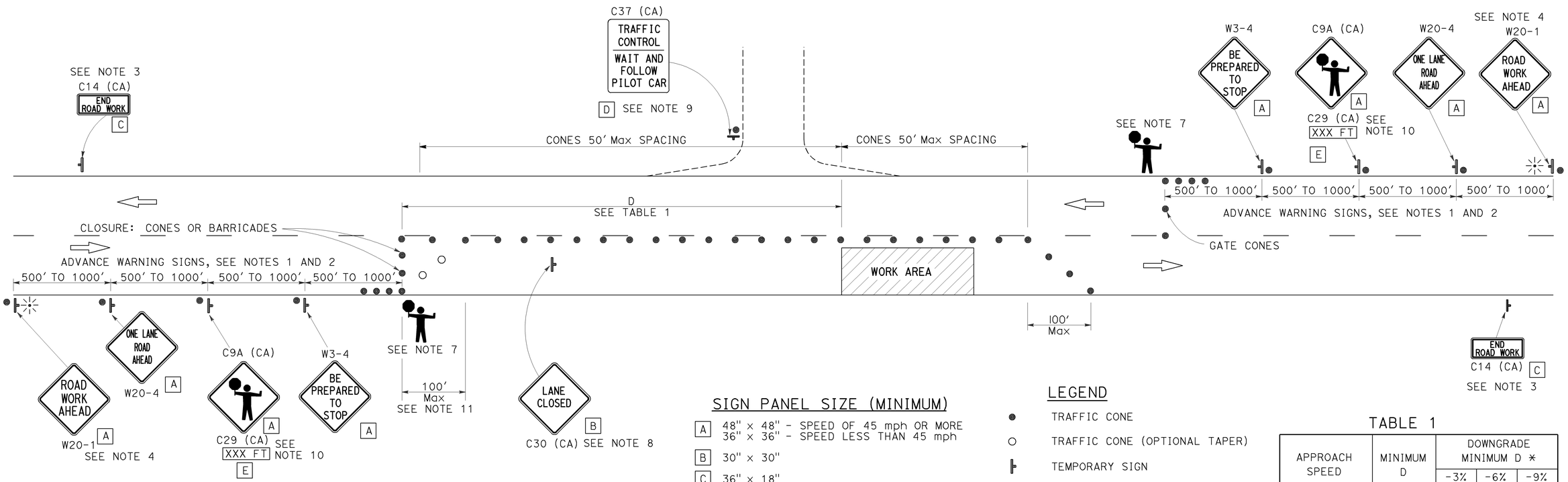

SIGN PANEL SIZE (MINIMUM)

- A: 48" x 48" - SPEED OF 45 mph OR MORE; 36" x 36" - SPEED LESS THAN 45 mph
- B: 30" x 30"
- C: 36" x 18"
- D: 36" x 42"
- E: 36" x 9"

LEGEND

- TRAFFIC CONE
- TRAFFIC CONE (OPTIONAL TAPER)
- TEMPORARY SIGN
- PORTABLE FLASHING BEACON
- FLAGGER

TABLE 1

APPROACH SPEED	MINIMUM D	DOWNGRADE MINIMUM D *		
		-3%	-6%	-9%
mph	ft	ft	ft	ft
25 AND BELOW	155	158	165	173
30	200	205	215	227
35	250	257	271	287
40	305	315	333	354
45	360	378	400	427
50	425	446	474	507
55	495	520	553	593
60	570	598	638	686
65	645	682	728	785

* USE ON SUSTAINED DOWNGRADE STEEPER THAN -3 PERCENT AND LONGER THAN 1 MILE.

NOTES:

1. Where approach speeds are low, advance warning signs may be placed at 300' spacing, and closer in urban areas.
2. Each advance warning sign in each direction of travel shall be equipped with at least two flags for daytime closure. Each flag shall be at least 16" x 16" in size and shall be orange or fluorescent red-orange in color. Flashing beacons shall be placed at the locations indicated for lane closure during hours of darkness.
3. A C14 (CA) "END ROAD WORK" sign, as appropriate, shall be placed at the end of the lane control unless the end of work area is obvious, or ends within a larger project's limits.
4. If the W20-1 sign would follow within 2000' of a stationary W20-1 or C11 (CA) "ROAD WORK NEXT _____MILES", use a W20-4 sign for the first advance warning sign.
5. All cones used for lane closures during the hours of darkness shall be fitted with retroreflective bands (or sleeves) as specified in the specifications.
6. Portable delineators, placed at one-half the spacing indicated for traffic cones, may be used instead of cones for daytime closures only.
7. Additional advance flaggers may be required. Flagger should stand in a conspicuous place, be visible to approaching traffic as well as approaching vehicles after the first vehicle has stopped. During the hours of darkness, the flagging-station and flagger shall be illuminated and clearly visible to approaching traffic. The illumination footprint of the lighting on the ground shall be at least 20' in diameter. Place a minimum of four cones at 50' intervals in advance of flagger station as shown.
8. Place C30 (CA) "LANE CLOSED" sign at 500' to 1000' intervals throughout extended work areas. They are optional if the work area is visible from the flagger station.
9. When a pilot car is used, place a C37 (CA) "TRAFFIC CONTROL-WAIT AND FOLLOW PILOT CAR" sign at all intersections within traffic control area. Signs shall be clean and visible at all times.
10. An optional C29 (CA) sign may be placed below the C9A (CA) sign.
11. Traffic cones or barricades may be placed on the optional taper as shown, barricades shall be Type I, II, or III.

STATE OF CALIFORNIA
DEPARTMENT OF TRANSPORTATION

TRAFFIC CONTROL SYSTEM FOR LANE CLOSURE ON TWO LANE CONVENTIONAL HIGHWAYS

NO SCALE

TCS-1

STATE OF CALIFORNIA - DEPARTMENT OF TRANSPORTATION
Caltrans

FUNCTIONAL SUPERVISOR | CALCULATED-DESIGNED BY | CHECKED BY | REVISED BY | DATE REVISED

LAST REVISION 00-00-00 | DATE PLOTTED => 10-DEC-2012 | TIME PLOTTED => 09:45

TO ACCOMPANY PLANS DATED 2-4-13

Dist	COUNTY	ROUTE	POST MILES TOTAL PROJECT	SHEET No.	TOTAL SHEETS
06	Ker	155	R14.0/41.0,	20	20

REGISTERED CIVIL ENGINEER

October 19, 2012
PLANS APPROVAL DATE

REGISTERED PROFESSIONAL ENGINEER Glenn DeCou No. C34547 Exp. 9-30-13 CIVIL STATE OF CALIFORNIA

THE STATE OF CALIFORNIA OR ITS OFFICERS OR AGENTS SHALL NOT BE RESPONSIBLE FOR THE ACCURACY OR COMPLETENESS OF SCANNED COPIES OF THIS PLAN SHEET.

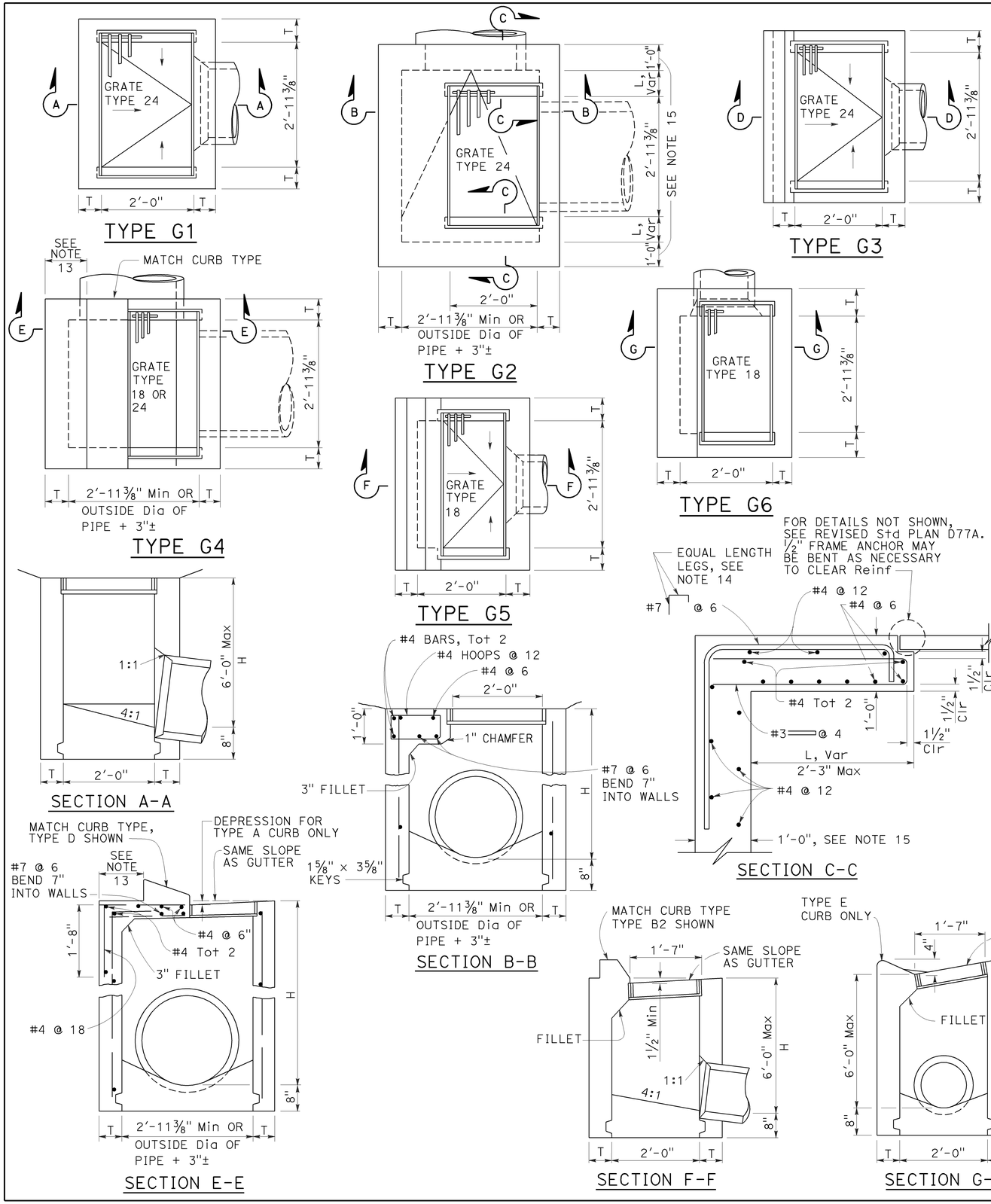

NOTES:

1. "H" is the difference in elevation between the outlet pipe flow line and the normal gutter grade line undepressed.
2. For "T" wall thickness, see Table A below.
3. Wall reinforcing not required when "H" is 8'-0" or less and the unsupported width or length is 7'-0" or less. Walls exceeding these limits shall be reinforced with #4 bars @ 1'-6" ± centers placed 1½" clear to inside of box unless otherwise shown.
4. Inlet bottom reinforcing not required. See Standard Plan D74C for alternative reinforced bottom and alternative half round bottom.
5. Steps-None required where "H" is less than 2'-6". Where "H" is 2'-6" or more, install steps with lowest rung 1'-0" above the floor and highest rung not more than 6" below top of inlet. The distance between steps shall not exceed 1'-0" and shall be uniform throughout the length of the wall. Place steps in the wall without an opening. Steps inserts may be substituted for the bar steps. Step inserts shall comply with State Industrial Safety requirements. See Standard Plan D74C for step details.
6. Details shown apply to both metal and concrete pipe.
7. Pipe(s) can be placed in any wall.
8. Curb section shall match adjacent curb.
9. Basin floors shall have wood trowel finish and a minimum slope of 12:3 from all directions toward outlet pipe.
10. Set inlet so that grate bars are parallel to direction of principal surface flow.
11. See Revised Standard Plans D77A and D77B for grate and frame details and weights of miscellaneous iron and steel.
12. See Standard Plan D78A for gutter depression details.
13. This dimenison will vary with different grates, curbs types, box width and wall thickness.
14. Bar may be rotated as necessary to clear opening. Where "L" is 6" or less, bar may be omitted.
15. Where "L" is 6" or less, wall thickness shall be as shown in Table A.
16. Cast-in-place inlets to be formed around all pipes/stubs intersecting the inlet, and concrete poured in one continuous operation. Precast inlets shall have mortared connections conforming to details for Type GCP Inlet shown on Standard Plan D75B. See Standard Specifications for mortar composition.

TABLE A

CONCRETE QUANTITIES				
TYPE	H=3'-0" TO 8'-0" (T=6")		H=8'-1" TO 20'-0" (T=8")	
	H=3'-0" (CY)	ADDITIONAL PCC PER FOOT (CY)	H=8'-1" (CY)	ADDITIONAL PCC PER FOOT (CY)
G-1	0.95	0.220	See Note A	SEE NOTE A
G-2*	1.31	0.255	3.50	0.357
G-3	1.03	0.220	See Note A	SEE NOTE A
G-4* (TYPE 24)	1.27	0.255	3.48	0.357
G-4* (TYPE 18)	1.30	0.255	3.50	0.357
G-5	1.02	0.220	SEE NOTE A	SEE NOTE A
G-6	1.04	0.220	SEE NOTE A	SEE NOTE A

TABLE BASED ON 8" FLOOR SLAB. NO DEDUCTIONS ARE TO BE MADE TO THESE QUANTITIES BECAUSE OF PIPE OPENINGS, DIFFERENT FLOOR ALTERNATIVES OR DIFFERENT CURB TYPES. * QUANTITIES FOR TYPE G-2 AND G-4 INLETS BASED ON THE MINIMUM INTERIOR DIMENSIONS.

NOTE A:

Maximum allowable height 6'-0".

STATE OF CALIFORNIA
DEPARTMENT OF TRANSPORTATION

DRAINAGE INLETS

NO SCALE

RSP D73 DATED OCTOBER 19, 2012 SUPERSEDES STANDARD PLAN D73 DATED MAY 20, 2011 - PAGE 156 OF THE STANDARD PLANS BOOK DATED 2010.

REVISED STANDARD PLAN RSP D73

2010 REVISED STANDARD PLAN RSP D73

06120001901

7-19-12