Dist	COUNTY	ROUTE	POST MILES TOTAL PROJECT	SHEET No.	TOTAL SHEETS
06	Ker	5	62.5/73.1	1	213

STATE OF CALIFORNIA **ACNHPI-005-4(195)E**

DEPARTMENT OF TRANSPORTATION

PROJECT PLANS FOR CONSTRUCTION ON

STATE HIGHWAY

IN KERN COUNTY
NEAR LOST HILLS
FROM LERDO AVENUE OVERCROSSING
TO ROUTE 5/46 SEPARATION

TO BE SUPPLEMENTED BY STANDARD PLANS DATED 2010

INDEX OF PLANS

SHEET No.	DESCRIPTION
1	TITLE SHEET AND LOCATION MAP
2-6	TYPICAL CROSS SECTIONS
7-15	CONSTRUCTION DETAILS
16-23	DRAINAGE PROFILES, DETAILS AND QUANTITIES
24	CONSTRUCTION AREA SIGNS
25-63	STAGE CONSTRUCTION
64-93	TRAFFIC HANDLING DETAILS AND QUANTITIES
94-98	DETOUR PLAN
99-100	PAVEMENT DELINEATION DETAILS AND QUANTITIES
101-107	SUMMARY OF QUANTITIES
108-149	EROSION CONTROL PLANS
150-159	ELECTRICAL PLANS
160-210	REVISED STANDARD PLANS

STRUCTURE PLANS

211-213 APPROACH SLAB REHABILITATION

THE STANDARD PLANS LIST APPLICABLE TO THIS CONTRACT IS INCLUDED IN THE NOTICE TO BIDDERS AND SPECIAL PROVISIONS BOOK.

LOCATION MAP

BEGIN CONSTRUCTION
Sta 2500+03.6
PM 62.5

END CONSTRUCTION
Sta 3085+00
PM 73.1

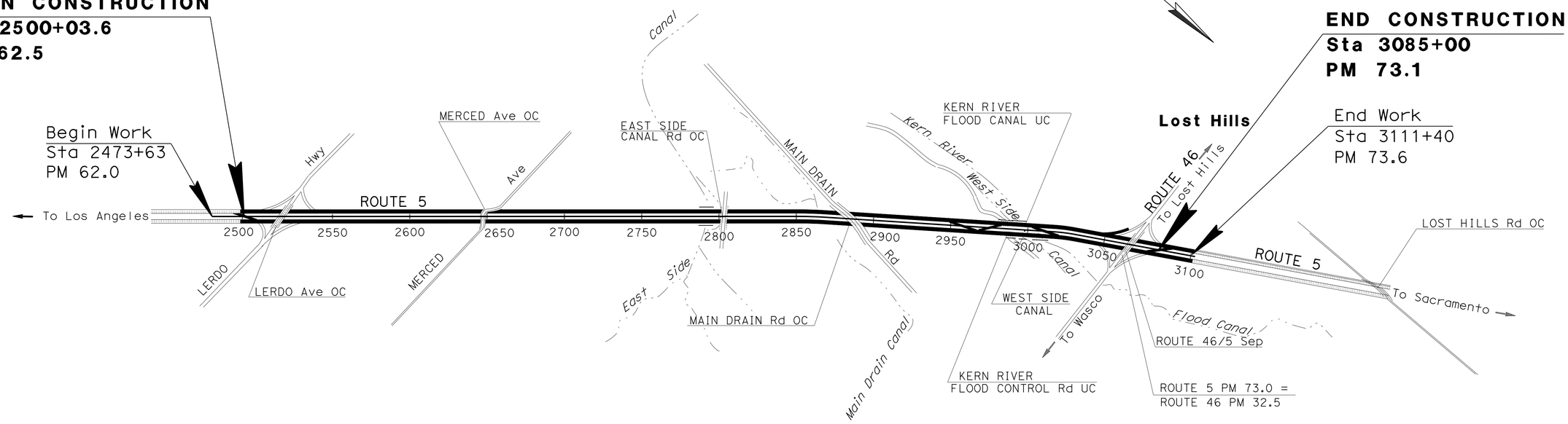

NO SCALE

THE CONTRACTOR SHALL POSSESS THE CLASS (OR CLASSES) OF LICENSE AS SPECIFIED IN THE "NOTICE TO BIDDERS."

PROJECT MANAGER MEHRAN AKHAVAN

DESIGN ENGINEER DAVID SANGHA

M Sultan 6-10-14
PROJECT ENGINEER DATE
REGISTERED CIVIL ENGINEER

June 16, 2014
PLANS APPROVAL DATE

REGISTERED PROFESSIONAL ENGINEER MAHMOOD A SULTAN No. 76344 Exp. 12-31-14 CIVIL STATE OF CALIFORNIA

THE STATE OF CALIFORNIA OR ITS OFFICERS OR AGENTS SHALL NOT BE RESPONSIBLE FOR THE ACCURACY OR COMPLETENESS OF SCANNED COPIES OF THIS PLAN SHEET.

CONTRACT No.	**06-0P1404**
PROJECT ID	**0612000091**

LAST REVISION 06-16-14 DATE PLOTTED => 25-JUL-2014 TIME PLOTTED => 12:22

Dist	COUNTY	ROUTE	POST MILES TOTAL PROJECT	SHEET No.	TOTAL SHEETS
06	Ker	5	62.5/73.1	2	213

REGISTERED CIVIL ENGINEER 06-10-14 DATE

6-16-14
PLANS APPROVAL DATE

REGISTERED PROFESSIONAL ENGINEER MAHMOOD A SULTAN No. 76344 Exp. 12-31-14 CIVIL STATE OF CALIFORNIA

THE STATE OF CALIFORNIA OR ITS OFFICERS OR AGENTS SHALL NOT BE RESPONSIBLE FOR THE ACCURACY OR COMPLETENESS OF SCANNED COPIES OF THIS PLAN SHEET.

NOTES:

1. FOR ACCURATE RIGHT OF WAY DATA, CONTACT RIGHT OF WAY ENGINEERING AT THE DISTRICT OFFICE.
2. DIMENSIONS OF THE PAVEMENT STRUCTURES (STRUCTURAL SECTIONS) ARE SUBJECT TO TOLERANCES SPECIFIED IN THE STANDARD SPECIFICATIONS.
3. SUPERELEVATION AS SHOWN OR AS DIRECTED BY THE ENGINEER.
4. UTILITY OWNERSHIP ON THIS PROJECT:
   CALL BOXES - SERVICE AUTHORITIES FOR FREEWAY EMERGENCIES (SAFE).
5. REFER TO CONSTRUCTION DETAILS AND SUMMARY OF QUANTITIES SHEETS FOR GRIND EXISTING CONCRETE PAVEMENT LOCATIONS AND QUANTITIES.
6. REFER TO SUMMARY OF QUANTITIES SHEET FOR REMOVE DIKE AND PLACE HMA DIKE, DIKE TYPES, LOCATIONS, AND QUANTITIES.
7. REFER TO SUMMARY OF QUANTITIES SHEETS FOR MIDWEST GUARDRAIL SYSTEM LOCATIONS AND QUANTITIES.
8. REFER TO CONSTRUCTION DETAIL SHEETS FOR TERMINAL JOINTS AND EXPANSION JOINTS.
9. REFER TO STAGE CONSTRUCTION AND SUMMARY OF QUANTITIES SHEETS FOR CRCP AND CRCP (RSC) LOCATIONS AND QUANTITIES.
10. REFER TO SUMMARY OF QUANTITIES SHEETS FOR STBB AND DTBB LOCATIONS AND QUANTITIES.
11. REFER TO CONSTRUCTION DETAIL AND SUMMARY OF QUANTITIES SHEETS FOR RUMBLE STRIP TYPES, LOCATIONS, AND QUANTITIES.
12. REFER TO SUMMARY OF QUANTITIES SHEET FOR RUMBLE STRIP TYPE, LOCATIONS, AND QUANTITIES.
13. FOR APPROACH SLAB STRUCTURAL SECTION, SEE STRUCTURE PLANS.

ABBREVIATIONS:

STBB	SINGLE THRIE BEAM BARRIER
DTBB	DOUBLE THRIE BEAM BARRIER
RSC	RAPID STRENGTH CONCRETE

PAVEMENT CLIMATE REGION

INLAND VALLEY

DESIGN DESIGNATION

2014 ADT = 36,500 D = 58%
2034 ADT = 59,500 T = 33%
2034 DHV = 10,100 V = 70 mph

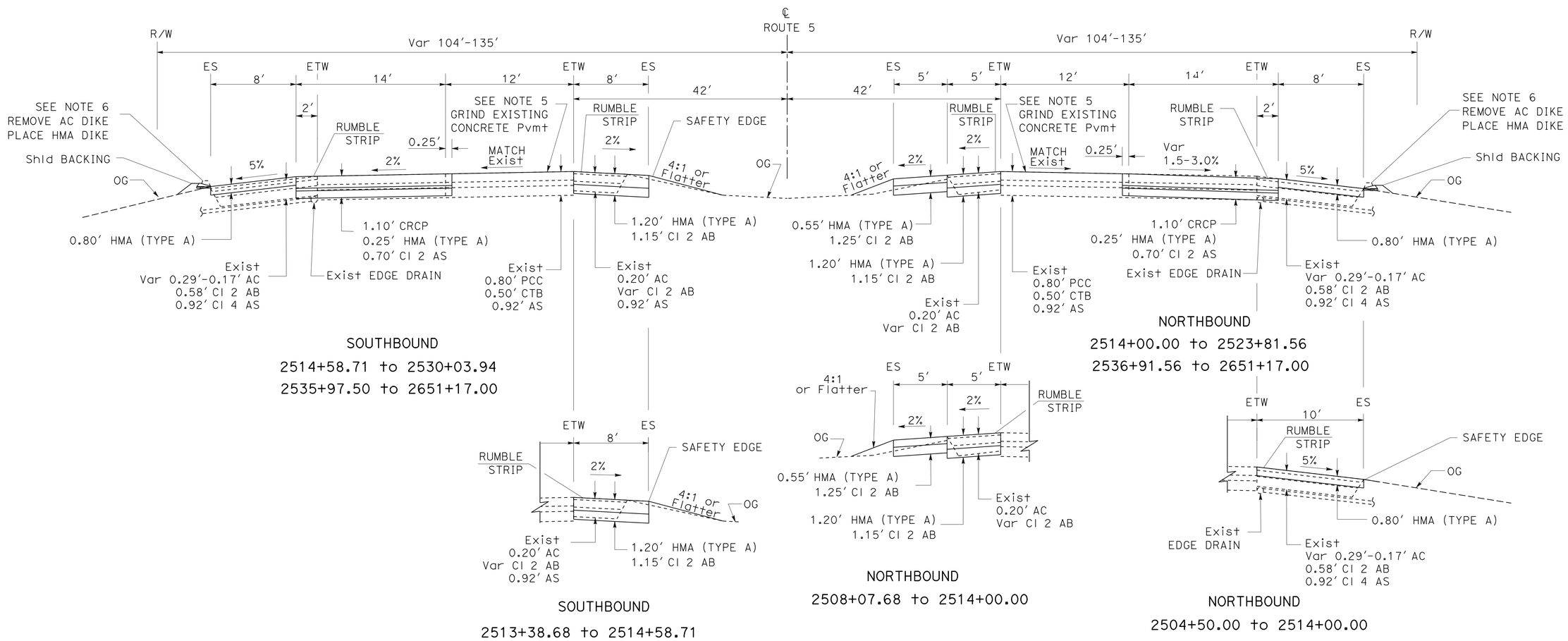

ROUTE 5

TYPICAL CROSS SECTIONS X-1

NO SCALE

EXISTING UTILITY FACILITIES HAVE NOT BEEN INCLUDED ON THESE PLANS

STATE OF CALIFORNIA - DEPARTMENT OF TRANSPORTATION
Caltrans DESIGN
FUNCTIONAL SUPERVISOR: DAVID SANGHA
CALCULATED-DESIGNED BY: MAHMOOD SULTAN
CHECKED BY: CARMELITA BELLE
REVISED BY
DATE REVISED

LAST REVISION 06-09-14
DATE PLOTTED => 24-JUL-2014
TIME PLOTTED => 10:03

Dist	COUNTY	ROUTE	POST MILES TOTAL PROJECT	SHEET No.	TOTAL SHEETS
06	Ker	5	62.5/73.1	3	213

REGISTERED CIVIL ENGINEER 06-10-14 DATE

6-16-14
PLANS APPROVAL DATE

REGISTERED PROFESSIONAL ENGINEER MAHMOOD A SULTAN No. 76344 Exp. 12-31-14 CIVIL STATE OF CALIFORNIA

THE STATE OF CALIFORNIA OR ITS OFFICERS OR AGENTS SHALL NOT BE RESPONSIBLE FOR THE ACCURACY OR COMPLETENESS OF SCANNED COPIES OF THIS PLAN SHEET.

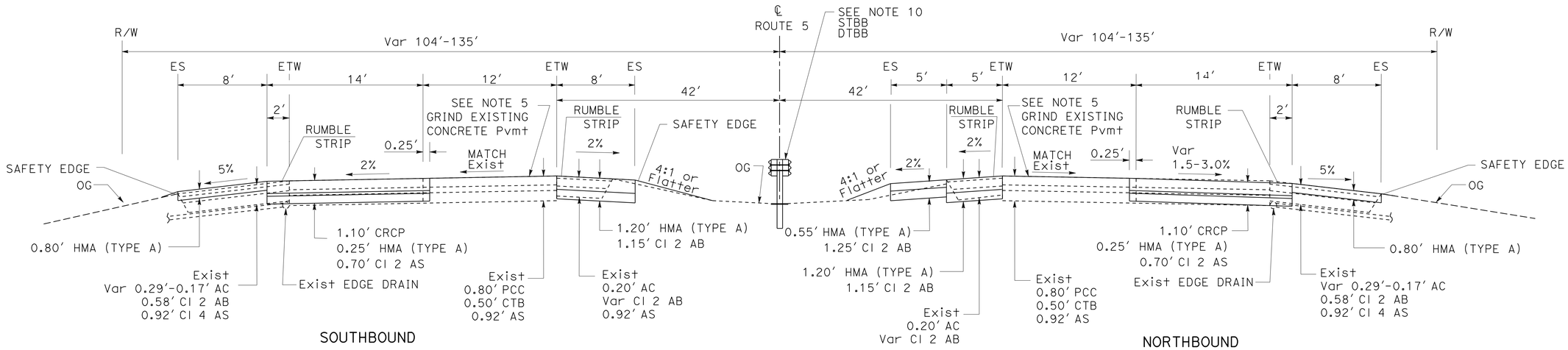

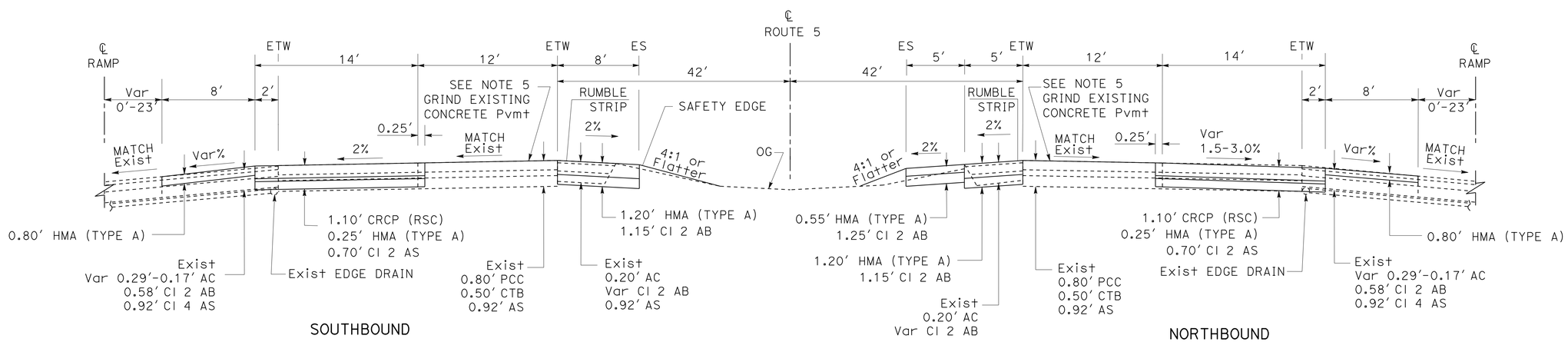

ROUTE 5

TYPICAL CROSS SECTIONS X-2

NO SCALE

REVISED BY | DATE REVISED
CARMELITA BELLE | MAHMOOD SULTAN
CALCULATED-DESIGNED BY | CHECKED BY
FUNCTIONAL SUPERVISOR | DAVID SANGHA

STATE OF CALIFORNIA - DEPARTMENT OF TRANSPORTATION
Caltrans
DESIGN

LAST REVISION 06-05-14 | DATE PLOTTED => 24-JUL-2014 | TIME PLOTTED => 10:03

Dist	COUNTY	ROUTE	POST MILES TOTAL PROJECT	SHEET No.	TOTAL SHEETS
06	Ker	5	62.5/73.1	4	213

REGISTERED CIVIL ENGINEER 06-10-14 DATE

6-16-14
PLANS APPROVAL DATE

REGISTERED PROFESSIONAL ENGINEER MAHMOOD A SULTAN No. 76344 Exp. 12-31-14 CIVIL STATE OF CALIFORNIA

THE STATE OF CALIFORNIA OR ITS OFFICERS OR AGENTS SHALL NOT BE RESPONSIBLE FOR THE ACCURACY OR COMPLETENESS OF SCANNED COPIES OF THIS PLAN SHEET.

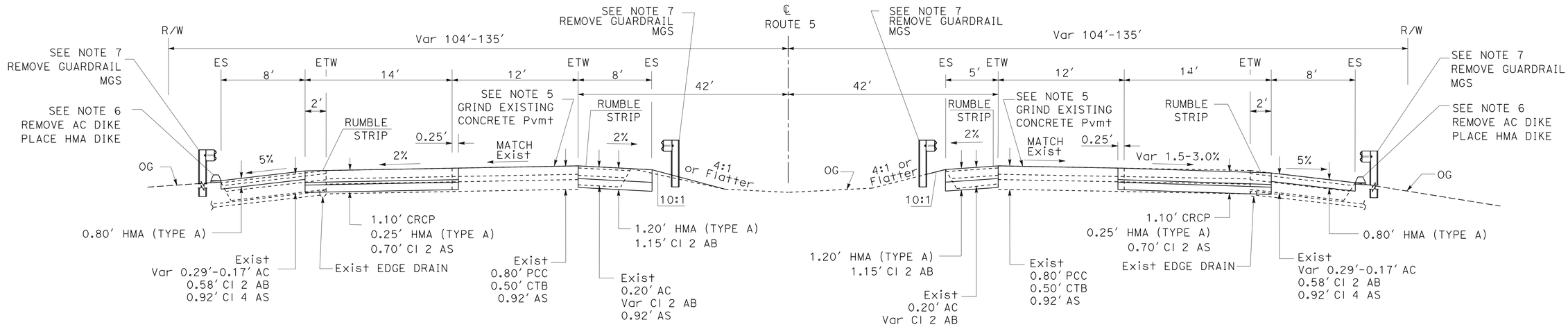

SOUTHBOUND

2990+55.71 to 2994+20.36

NORTHBOUND

2991+20.80 to 2995+70.89

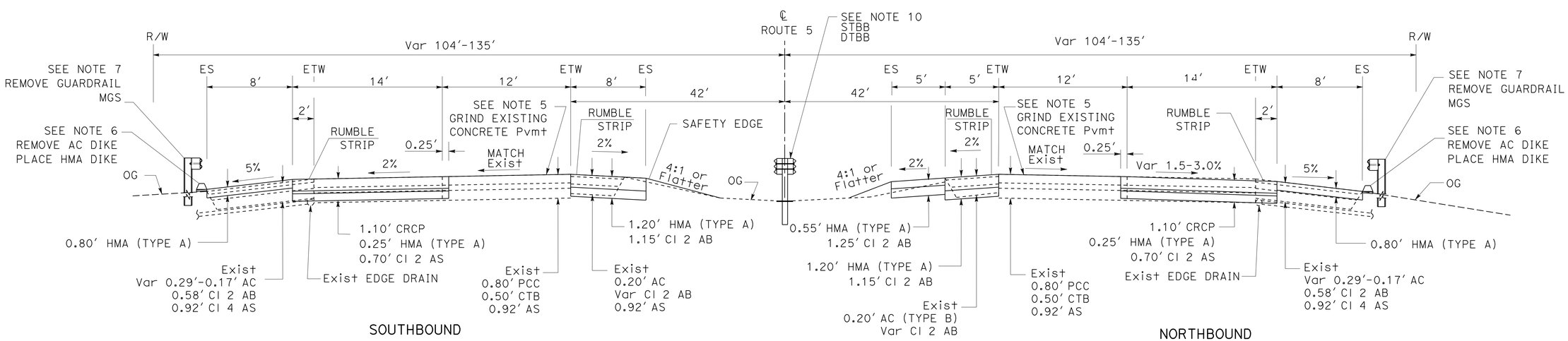

SOUTHBOUND

2977+00.00 to 2989+80.24

2996+33.64 to 3003+16.00

NORTHBOUND

2977+00.00 to 2990+46.60

2997+85.28 to 3003+16.00

ROUTE 5

TYPICAL CROSS SECTIONS X-3

NO SCALE

STATE OF CALIFORNIA - DEPARTMENT OF TRANSPORTATION

DESIGN

FUNCTIONAL SUPERVISOR: DAVID SANGHA

CALCULATED-DESIGNED BY: CARMELITA BELLE

CHECKED BY: MAHMOOD SULTAN

REVISED BY / DATE REVISED

LAST REVISION 06-05-14

DATE PLOTTED => 24-JUL-2014
TIME PLOTTED => 10:03

Dist	COUNTY	ROUTE	POST MILES TOTAL PROJECT	SHEET No.	TOTAL SHEETS
06	Ker	5	62.5/73.1	5	213

REGISTERED CIVIL ENGINEER 06-10-14 DATE

6-16-14
PLANS APPROVAL DATE

REGISTERED PROFESSIONAL ENGINEER MAHMOOD A SULTAN No. 76344 Exp. 12-31-14 CIVIL STATE OF CALIFORNIA

THE STATE OF CALIFORNIA OR ITS OFFICERS OR AGENTS SHALL NOT BE RESPONSIBLE FOR THE ACCURACY OR COMPLETENESS OF SCANNED COPIES OF THIS PLAN SHEET.

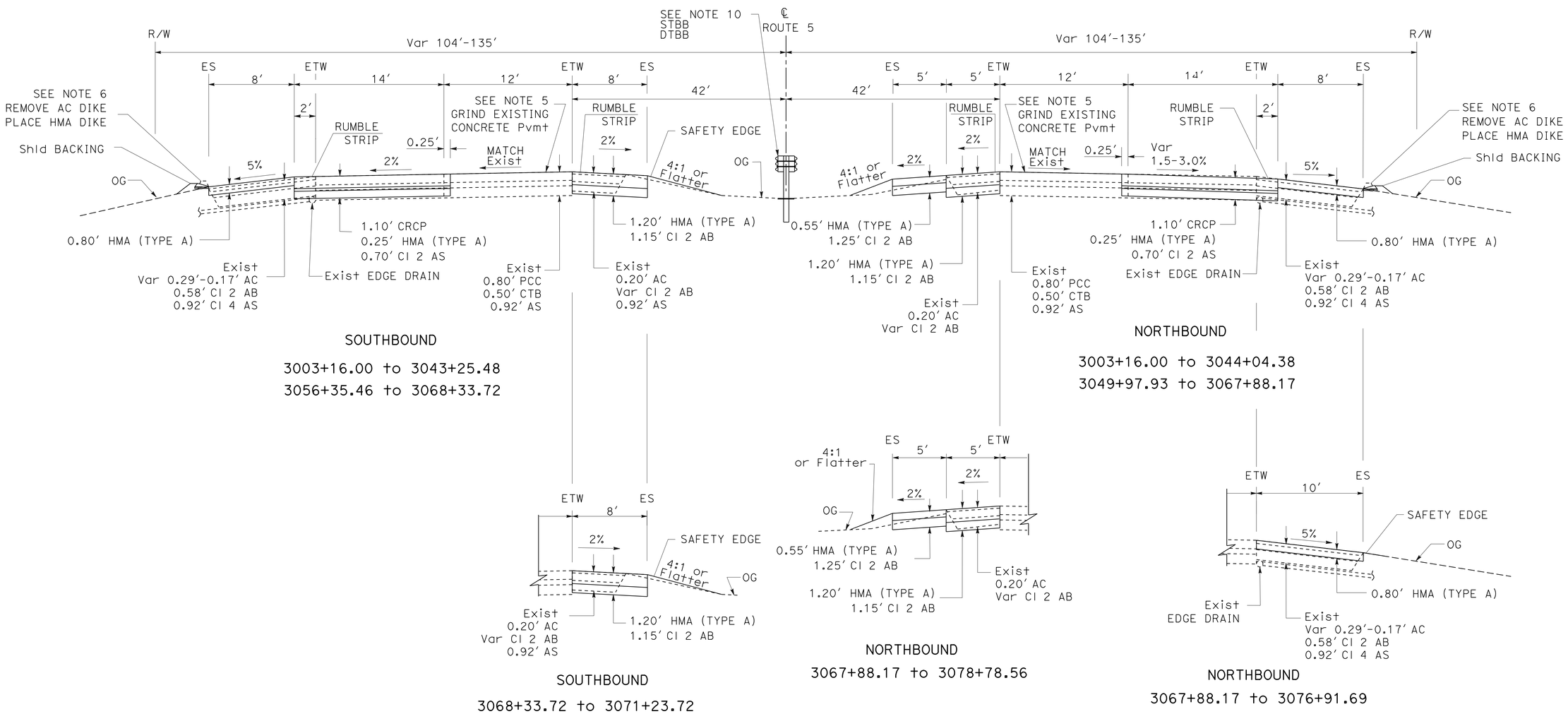

ROUTE 5

TYPICAL CROSS SECTIONS X-4

NO SCALE

STATE OF CALIFORNIA - DEPARTMENT OF TRANSPORTATION
Caltrans
DESIGN

FUNCTIONAL SUPERVISOR: DAVID SANGHA
CALCULATED-DESIGNED BY: MAHMOOD SULTAN
CHECKED BY: CARMELITA BELLE
REVISED BY
DATE REVISED

LAST REVISION 06-05-14
DATE PLOTTED => 24-JUL-2014
TIME PLOTTED => 10:03

Dist	COUNTY	ROUTE	POST MILES TOTAL PROJECT	SHEET No.	TOTAL SHEETS
06	Ker	5	62.5/73.1	6	213

REGISTERED CIVIL ENGINEER 06-10-14 DATE

6-16-14
PLANS APPROVAL DATE

REGISTERED PROFESSIONAL ENGINEER MAHMOOD A SULTAN No. 76344 Exp. 12-31-14 CIVIL STATE OF CALIFORNIA

THE STATE OF CALIFORNIA OR ITS OFFICERS OR AGENTS SHALL NOT BE RESPONSIBLE FOR THE ACCURACY OR COMPLETENESS OF SCANNED COPIES OF THIS PLAN SHEET.

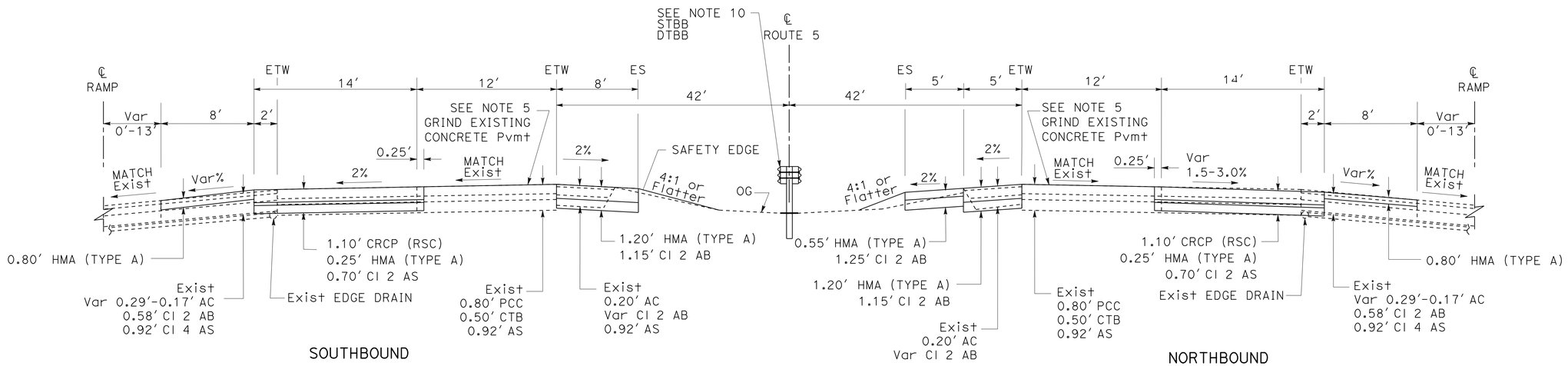

ROUTE 5

TYPICAL CROSS SECTIONS X-5

NO SCALE

STATE OF CALIFORNIA - DEPARTMENT OF TRANSPORTATION
Caltrans® DESIGN

FUNCTIONAL SUPERVISOR: DAVID SANGHA

CALCULATED-DESIGNED BY: CARMELITA BELLE
CHECKED BY: MAHMOOD SULTAN

REVISED BY
DATE REVISED

LAST REVISION 06-05-14 | DATE PLOTTED => 24-JUL-2014 | TIME PLOTTED => 10:03

Dist	COUNTY	ROUTE	POST MILES TOTAL PROJECT	SHEET No.	TOTAL SHEETS
06	Ker	5	62.5/73.1	7	213

REGISTERED CIVIL ENGINEER 06-10-14 DATE

6-16-14
PLANS APPROVAL DATE

REGISTERED PROFESSIONAL ENGINEER MAHMOOD A SULTAN No. 76344 Exp. 12-31-14 CIVIL STATE OF CALIFORNIA

THE STATE OF CALIFORNIA OR ITS OFFICERS OR AGENTS SHALL NOT BE RESPONSIBLE FOR THE ACCURACY OR COMPLETENESS OF SCANNED COPIES OF THIS PLAN SHEET.

NOTES:

1. EXISTING UTILITY FACILITIES ARE NOT SHOWN ON THESE PLANS.
2. REFER TO STRUCTURE PLANS FOR APPROACH SLABS.

LEGEND:

- 0.80′ COLD PLANE AC Pvmt
  0.80′ HMA (TYPE A)
- 1.20′ HMA (TYPE A)
  1.15′ CI 2 AB
- GRIND Exist Conc Pvmt
- 1.10′ CRCP
  0.25′ HMA (TYPE A)
  0.70′ CI 2 AS

BRIDGE LOCATION

DIRECTION	LOCATION	BRIDGE NAME (No.)	BRIDGE LENGTH LF
NORTHBOUND	PM 71.56	KERN RIVER FLOOD CONTROL UC (Br 50-0314R)	76.0
NORTHBOUND	PM 71.66	KERN RIVER FLOOD CANAL (Br 50-0315R)	213.3
SOUTHBOUND	PM 71.56	KERN RIVER FLOOD CONTROL UC (Br 50-0314L)	76.0
SOUTHBOUND	PM 71.64	KERN RIVER FLOOD CANAL (Br 50-0315L)	213.3

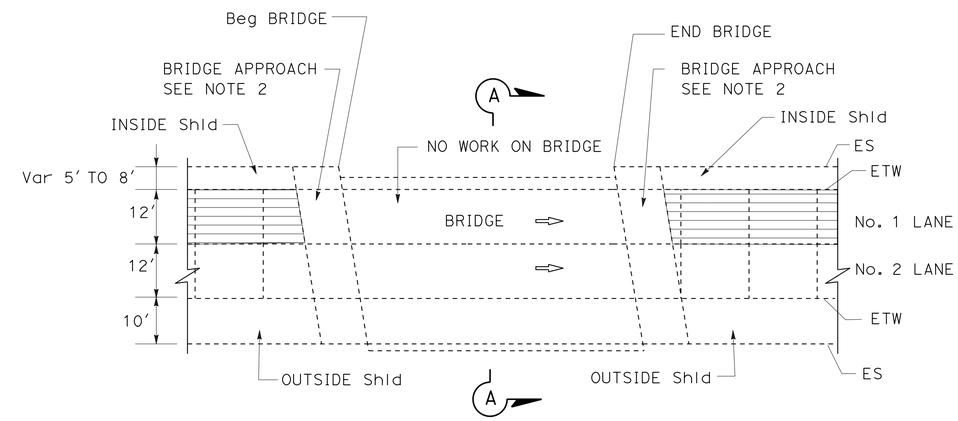

TYPICAL NO WORK ON BRIDGE DETAIL
TYPICAL GRIND Exist Conc Pvmt AT BRIDGE DETAIL
PLAN VIEW

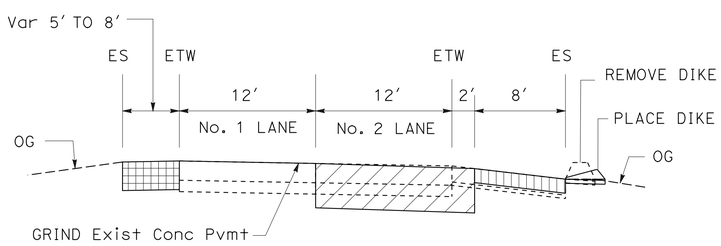

SECTION B-B

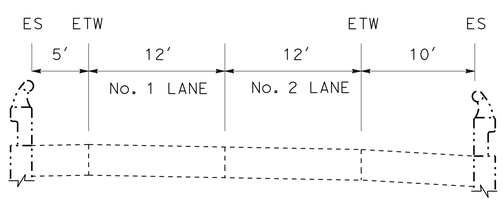

BRIDGE
SECTION A-A

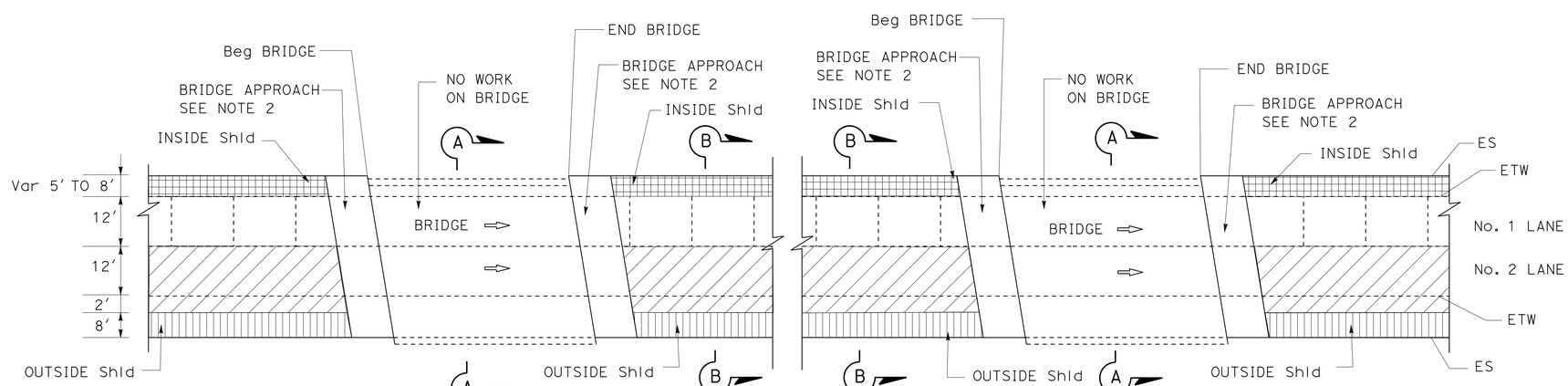

TYPICAL NO WORK ON BRIDGE DETAIL
PLAN VIEW

CONSTRUCTION DETAILS
C-1
NO SCALE

REVISED BY | DATE REVISED
CARMELITA BELLE | MAHMOOD SULTAN
CALCULATED-DESIGNED BY | CHECKED BY
FUNCTIONAL SUPERVISOR | DAVID SANGHA
STATE OF CALIFORNIA - DEPARTMENT OF TRANSPORTATION
DESIGN
Caltrans

LAST REVISION 06-16-14 | DATE PLOTTED => 24-JUL-2014 | TIME PLOTTED => 10:03

Dist	COUNTY	ROUTE	POST MILES TOTAL PROJECT	SHEET No.	TOTAL SHEETS
06	Ker	5	62.5/73.1	8	213

REGISTERED CIVIL ENGINEER 06-10-14 DATE

6-16-14
PLANS APPROVAL DATE

REGISTERED PROFESSIONAL ENGINEER MAHMOOD A SULTAN No. 76344 Exp. 12-31-14 CIVIL STATE OF CALIFORNIA

THE STATE OF CALIFORNIA OR ITS OFFICERS OR AGENTS SHALL NOT BE RESPONSIBLE FOR THE ACCURACY OR COMPLETENESS OF SCANNED COPIES OF THIS PLAN SHEET.

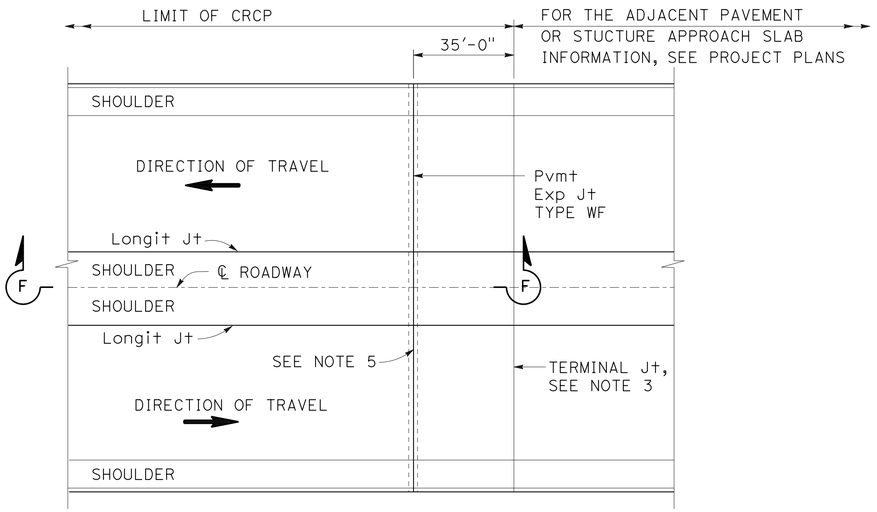

PLAN

NOTES:

1. FOR ADDITIONAL DETAILS ON REINFORCEMENT MEMBER QUANTITIES OF THE WIDE FLANGE BEAM TERMINAL AND PAVEMENT EXPANSION JOINT TYPE WF, SEE STANDARD PLAN RSP P32B.
2. FOR REINFORCEMENT (A) AND (B) DETAILS, SEE STANDARD PLAN RSP P32B.
3. FOR THE PAVEMENT TERMINAL JOINT DETAILS, SEE STANDARD PLAN RSP P31A. FOR PAVEMENT TERMINAL JOINT TYPE, SEE PROJECT PLANS.
4. SEE STANDARD PLAN RSP P4 FOR "X". FOR ADDITIONAL TERMINAL JOINT LOCATIONS NOT SHOWN, SEE PROJECTS PLANS.
5. FOR HMA SHOULDERS, THE EXPANSION JOINT TERMINATES AT THE EDGE OF CRCP.
6. D = THICKNESS OF CRCP.
7. SEE STANDARD PLAN B6-21 FOR "a".

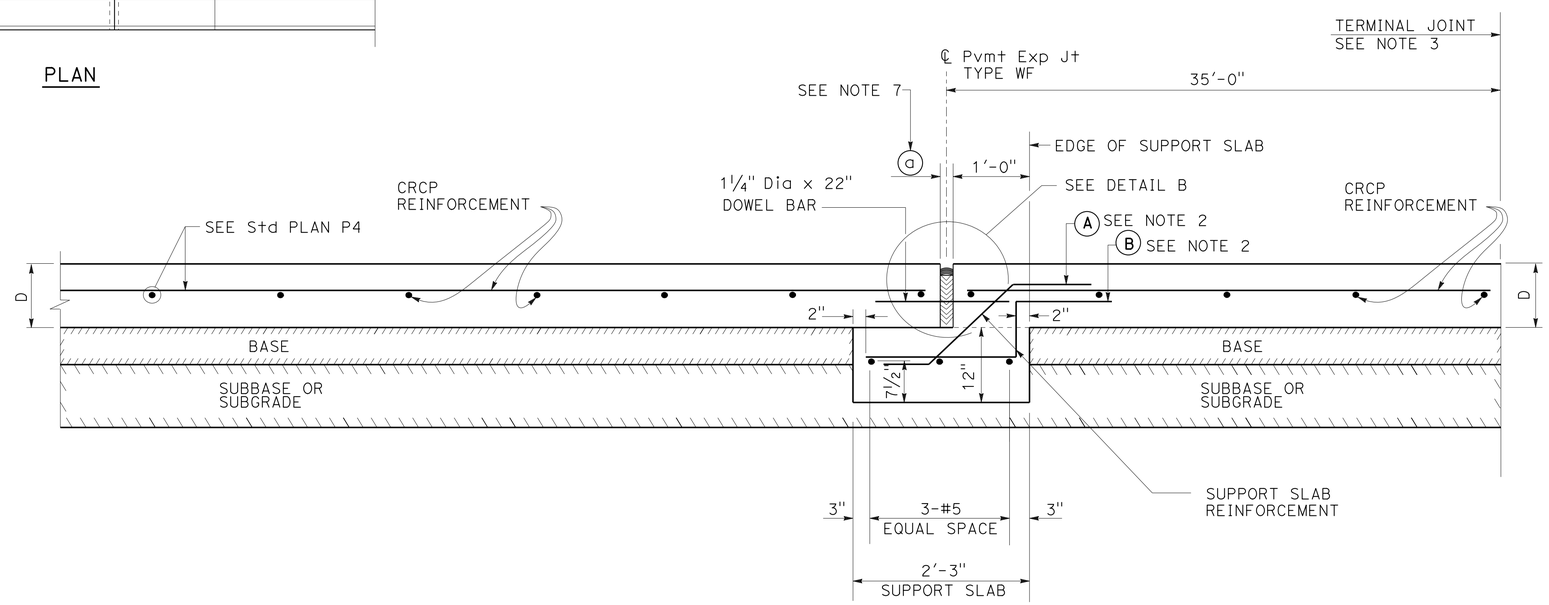

SECTION F-F

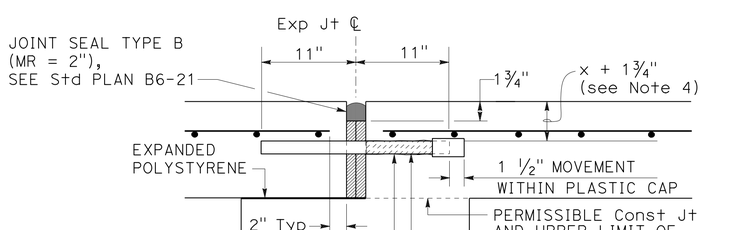

DETAIL B

(FOR LAYOUT, TOLERANCES, AND OTHER DETAILS NOT SHOWN SEE Std PLAN RSP P10.)

CONSTRUCTION DETAILS
(CRCP EXPANSION JOINT, TYPE WF)

NO SCALE **C-2**

STATE OF CALIFORNIA - DEPARTMENT OF TRANSPORTATION
Caltrans® DESIGN

FUNCTIONAL SUPERVISOR: DAVID SANGHA
CALCULATED-DESIGNED BY: FLORANTE E. BAUTISTA
CHECKED BY: WILLIAM K. FARNBACH
REVISED BY
DATE REVISED

LAST REVISION 06-03-14 | DATE PLOTTED => 24-JUL-2014 | TIME PLOTTED => 10:03

Dist	COUNTY	ROUTE	POST MILES TOTAL PROJECT	SHEET No.	TOTAL SHEETS
06	Ker	5	62.5/73.1	9	213

REGISTERED CIVIL ENGINEER 06-10-14 DATE

6-16-14
PLANS APPROVAL DATE

REGISTERED PROFESSIONAL ENGINEER MAHMOOD A SULTAN No. 76344 Exp. 12-31-14 CIVIL STATE OF CALIFORNIA

THE STATE OF CALIFORNIA OR ITS OFFICERS OR AGENTS SHALL NOT BE RESPONSIBLE FOR THE ACCURACY OR COMPLETENESS OF SCANNED COPIES OF THIS PLAN SHEET.

NOTES:

1. EXISTING UTILITY FACILITIES ARE NOT SHOWN ON THESE PLANS.
2. REFER TO STRUCTURE PLANS FOR APPROACH SLABS.
3. REFER TO CONSTRUCTION DETAILS C-2 FOR CRCP EXPANSION JOINT, TYPE WF.
4. FOR THE PAVEMENT TERMINAL JOINT DETAILS, SEE STANDARD PLAN RSP P31A. FOR PAVEMENT TERMINAL JOINT TYPE, SEE PROJECT PLANS.
5. FOR ADDITIONAL DETAILS ON REINFORCEMENT MEMBER QUANTITIES OF THE WIDE FLANGE BEAM TERMINAL AND PAVEMENT EXPANSION JOINT TYPE WF, SEE STANDARD PLAN RSP P32B.
6. FOR CRCP WIDE FLANGE BEAM TERMINAL DETAIL, SEE STANDARD PLAN RSP P32A.
7. FOR THE ADJACENT PAVEMENT OR STRUCTURE APPROACH SLAB INFORMATION, SEE PROJECT PLANS.

LEGEND:

APPROACH SLAB

BRIDGE LOCATION (N)

DIRECTION	POST MILE	LOCATION/ BRIDGE NAME (No.)	BRIDGE LENGTH	CRCP (TERMINAL JOINT, TYPE E)	CRCP (EXPANSION JOINT, TYPE WF)	JOINT SEAL (TYPE B)	CRCP (WIDE FLANGE BEAM TERMINAL)	JOINT SEAL (TYPE A)
			LF	LF	LF	LF	LF	LF
NORTHBOUND	PM 71.56	ROUTE 5/ KERN Riv FLOOD CONTROL UC (Br No. 50-0314R)	76.0	28	14	28	14	14
SOUTHBOUND	PM 71.56	ROUTE 5/ KERN Riv FLOOD CONTROL UC (Br No. 50-0314L)	76.0	28	14	28	14	14
NORTHBOUND	PM 71.66	ROUTE 5/ KERN Riv FLOOD CANAL (Br No. 50-0315R)	213.3	28	28	28	14	14
SOUTHBOUND	PM 71.64	ROUTE 5/ KERN Riv FLOOD CANAL (Br No. 50-0315L)	213.3	28	28	28	14	14

(N) NOT A SEPARATE PAY ITEM, FOR INFORMATION ONLY.

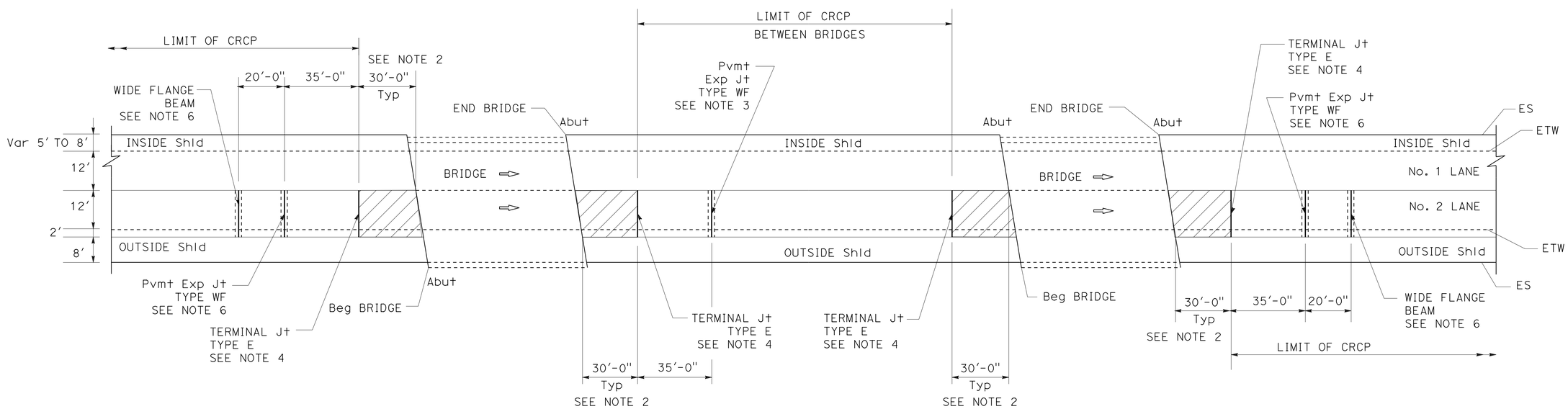

TYPICAL LOCATION OF WIDE FLANGE BEAM AND JOINTS DETAIL

PLAN VIEW

CONSTRUCTION DETAILS C-3

NO SCALE

STATE OF CALIFORNIA - DEPARTMENT OF TRANSPORTATION
DESIGN
FUNCTIONAL SUPERVISOR: DAVID SANGHA
CALCULATED-DESIGNED BY: CARMELITA BELLE
CHECKED BY: MAHMOOD SULTAN
REVISED BY
DATE REVISED

LAST REVISION 06-13-14
DATE PLOTTED => 24-JUL-2014
TIME PLOTTED => 10:03

Dist	COUNTY	ROUTE	POST MILES TOTAL PROJECT	SHEET No.	TOTAL SHEETS
06	Ker	5	62.5/73.1	10	213

REGISTERED CIVIL ENGINEER 06-10-14 DATE

PLANS APPROVAL DATE 6-16-14

MAHMOOD A SULTAN No. 76344 Exp. 12-31-14 CIVIL STATE OF CALIFORNIA REGISTERED PROFESSIONAL ENGINEER

THE STATE OF CALIFORNIA OR ITS OFFICERS OR AGENTS SHALL NOT BE RESPONSIBLE FOR THE ACCURACY OR COMPLETENESS OF SCANNED COPIES OF THIS PLAN SHEET.

NOTE:

EXISTING UTILITY FACILITIES ARE NOT SHOWN ON THESE PLANS.

LEGEND:

DIRECTION OF TRAFFIC

SHOULDER RUMBLE STRIP GROUND-IN INDENTATIONS

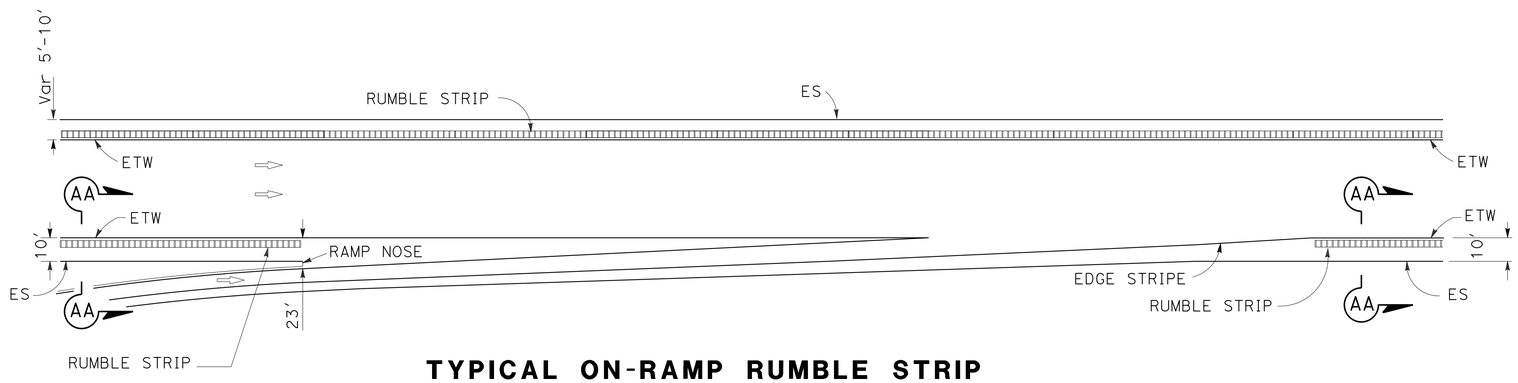

TYPICAL ON-RAMP RUMBLE STRIP

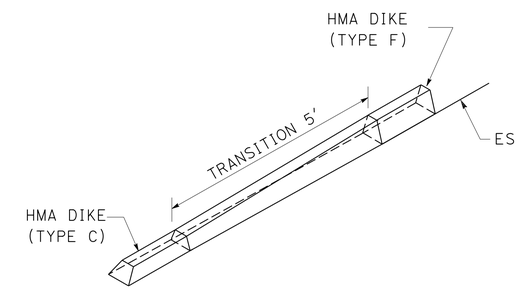

TRANSITION FROM HMA DIKE TYPE C TO TYPE F

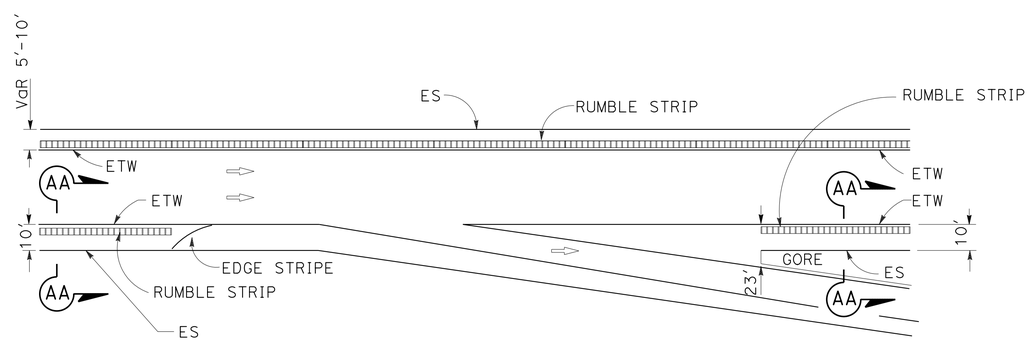

TYPICAL OFF-RAMP RUMBLE STRIP

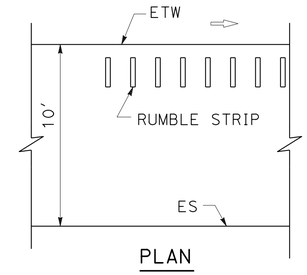

PLAN

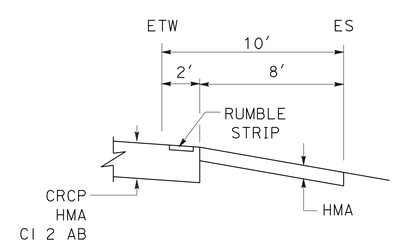

RUMBLE STRIP

SECTION AA-AA

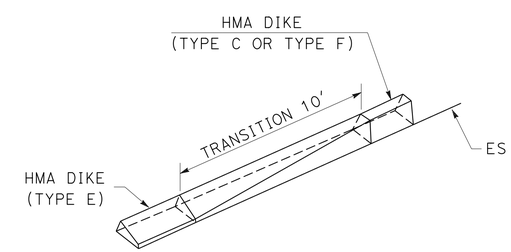

TRANSITION FROM HMA DIKE TYPE E TO TYPE C OR TYPE F

CONSTRUCTION DETAILS

NO SCALE

C-4

STATE OF CALIFORNIA - DEPARTMENT OF TRANSPORTATION

Caltrans

DESIGN

FUNCTIONAL SUPERVISOR: DAVID SANGHA

CALCULATED-DESIGNED BY: CARMELITA BELLE

CHECKED BY: MAHMOOD SULTAN

REVISED BY

DATE REVISED

LAST REVISION 05-30-14

DATE PLOTTED => 24-JUL-2014

TIME PLOTTED => 10:03

Dist	COUNTY	ROUTE	POST MILES TOTAL PROJECT	SHEET No.	TOTAL SHEETS
06	Ker	5	62.5/73.1	11	213

REGISTERED CIVIL ENGINEER DATE 06-10-14

PLANS APPROVAL DATE 6-16-14

REGISTERED PROFESSIONAL ENGINEER MAHMOOD A SULTAN No. 76344 Exp. 12-31-14 CIVIL STATE OF CALIFORNIA

THE STATE OF CALIFORNIA OR ITS OFFICERS OR AGENTS SHALL NOT BE RESPONSIBLE FOR THE ACCURACY OR COMPLETENESS OF SCANNED COPIES OF THIS PLAN SHEET.

NOTES:

1. EXISTING UTILITY FACILITIES ARE NOT SHOWN ON THESE PLANS.
2. FOR DETAILS NOT SHOWN, SEE STANDARD PLANS.
3. CUT AND REMOVE PORTION OF TYPE 1 AND BAGR AS REQUIRED.
4. FOR TRANSITION RAILING (TYPE WB-31), SEE STANDARD PLANS.
5. ALL PLATES AND BOLTS ARE GALVANIZED.

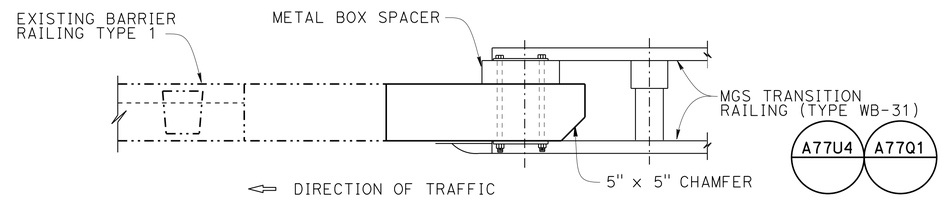

TYPICAL PLAN

3/4" = 1'-0"

LEGEND:

INDICATES EXISTING STRUCTURE

INDICATES NEW STRUCTURE

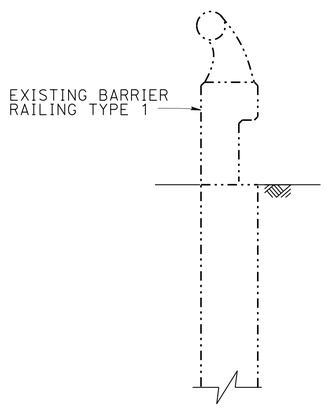

SECTION A-A

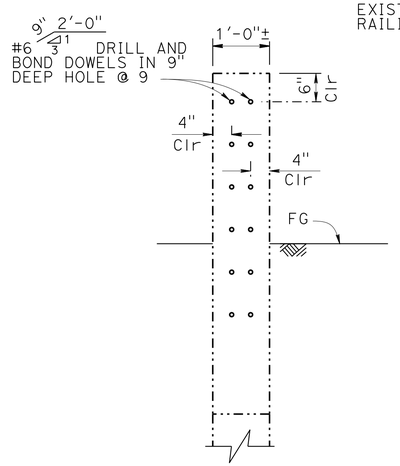

SECTION B-B

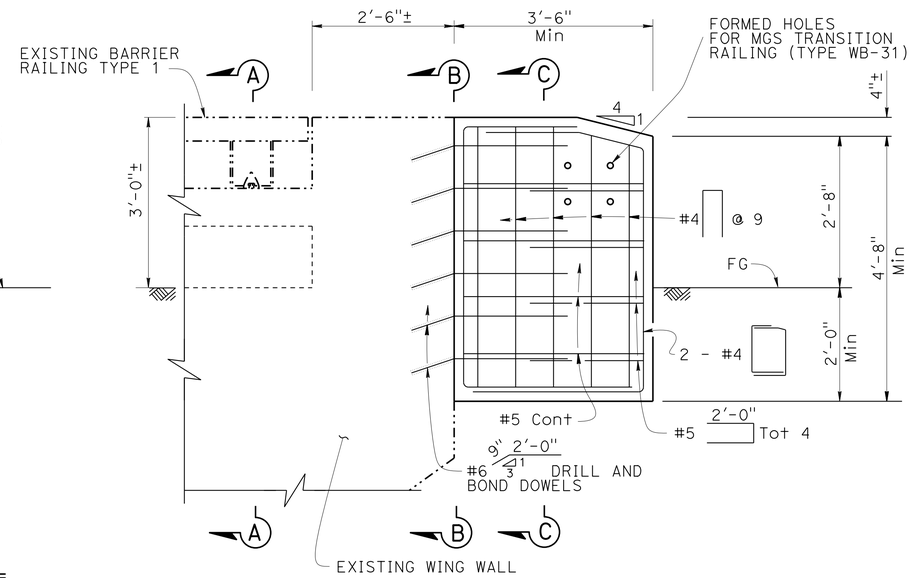

ELEVATION

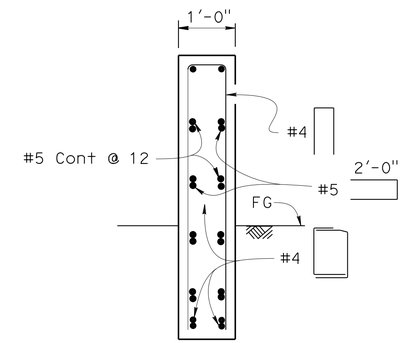

NOTE:
DRILL AND BOND DOWELS NOT SHOWN

SECTION C-C

CONCRETE BARRIER (TRANSITION) DETAIL

NORTHBOUND

PM 71.56 KERN RIVER FLOOD CONTROL UC (Br 50-0314R)

PM 71.66 KERN RIVER FLOOD CANAL (Br 50-0315R)

PM 73.02 Jct 46/5 Sep (Br 50-0316)

SOUTHBOUND

PM 71.56 KERN RIVER FLOOD CONTROL UC (Br 50-0314L)

PM 71.64 KERN RIVER FLOOD CANAL (Br 50-0315L)

PM 73.02 Jct 46/5 Sep (Br 50-0316)

CONSTRUCTION DETAILS

NO SCALE

C-5

STATE OF CALIFORNIA - DEPARTMENT OF TRANSPORTATION

DESIGN

FUNCTIONAL SUPERVISOR DAVID SANGHA

CALCULATED-DESIGNED BY AMRITPAL BADHESHA

CHECKED BY CARMELITA BELLE

REVISED BY

DATE REVISED

LAST REVISION 05-30-14

DATE PLOTTED => 24-JUL-2014

TIME PLOTTED => 10:03

Dist	COUNTY	ROUTE	POST MILES TOTAL PROJECT	SHEET No.	TOTAL SHEETS
06	Ker	5	62.5/73.1	12	213

REGISTERED CIVIL ENGINEER 06-10-14 DATE

6-16-14
PLANS APPROVAL DATE

REGISTERED PROFESSIONAL ENGINEER MAHMOOD A SULTAN No. 76344 Exp. 12-31-14 CIVIL STATE OF CALIFORNIA

THE STATE OF CALIFORNIA OR ITS OFFICERS OR AGENTS SHALL NOT BE RESPONSIBLE FOR THE ACCURACY OR COMPLETENESS OF SCANNED COPIES OF THIS PLAN SHEET.

NOTES:

1. FOR ADDITIONAL DETAILS NOT SHOWN ON THIS PLAN, REFER TO RSP A77L1 AND RSP A77L2.
2. CRT POST TO BE WOOD ONLY.

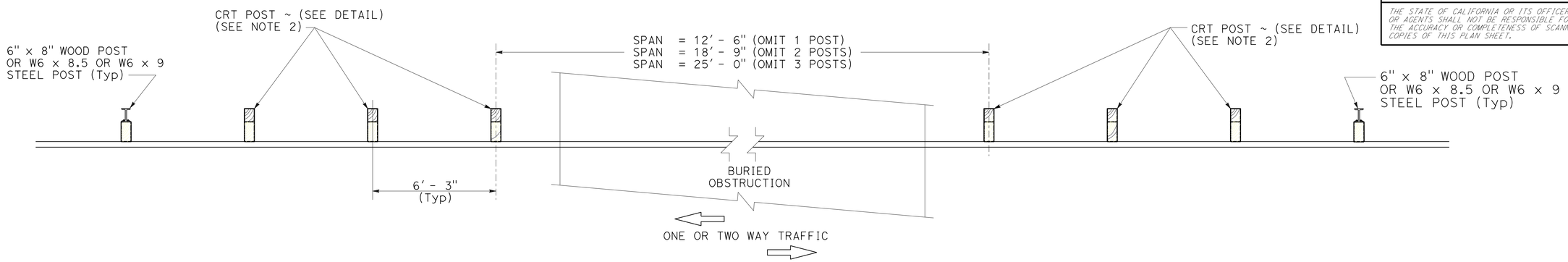

PLAN

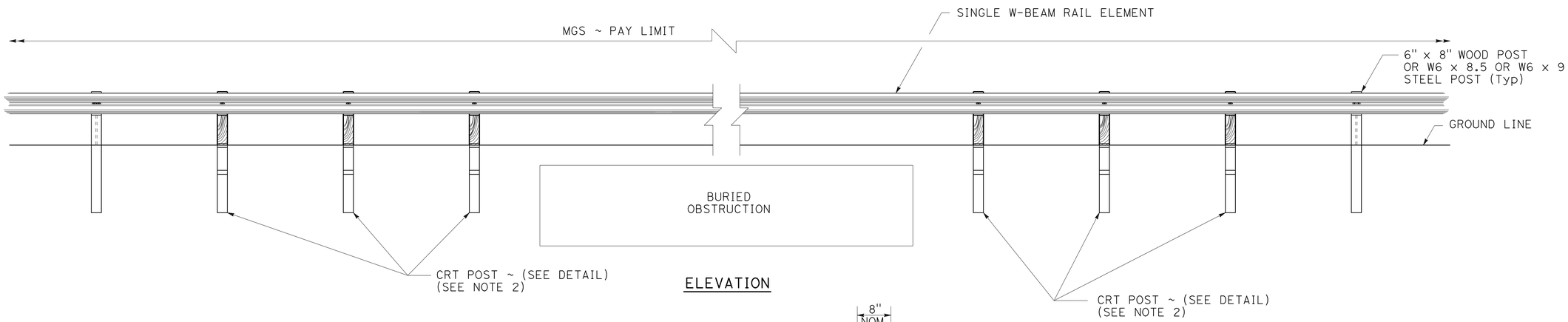

ELEVATION

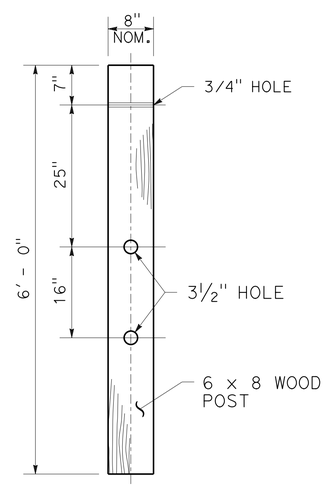

CONTROLLED RELEASING TERMINAL (CRT) POST DETAIL

CONSTRUCTION DETAILS
(MIDWEST GUARDRAIL SYSTEM DETAILS)

NO SCALE

C-6

STATE OF CALIFORNIA - DEPARTMENT OF TRANSPORTATION
Caltrans®
DESIGN

FUNCTIONAL SUPERVISOR: DAVID SANGHA
CALCULATED-DESIGNED BY: AMRITPAL BADHESHA
CHECKED BY: CARMELITA BELLE
REVISED BY
DATE REVISED

LAST REVISION 05-30-14
DATE PLOTTED => 24-JUL-2014
TIME PLOTTED => 10:03

Dist	COUNTY	ROUTE	POST MILES TOTAL PROJECT	SHEET No.	TOTAL SHEETS
06	Ker	5	62.5/73.1	13	213

REGISTERED CIVIL ENGINEER 06-10-14 DATE

6-16-14
PLANS APPROVAL DATE

REGISTERED PROFESSIONAL ENGINEER
MAHMOOD A SULTAN
No. 76344
Exp. 12-31-14
CIVIL
STATE OF CALIFORNIA

THE STATE OF CALIFORNIA OR ITS OFFICERS OR AGENTS SHALL NOT BE RESPONSIBLE FOR THE ACCURACY OR COMPLETENESS OF SCANNED COPIES OF THIS PLAN SHEET.

NOTE:
USE 15'-7½" LENGTH RAIL.

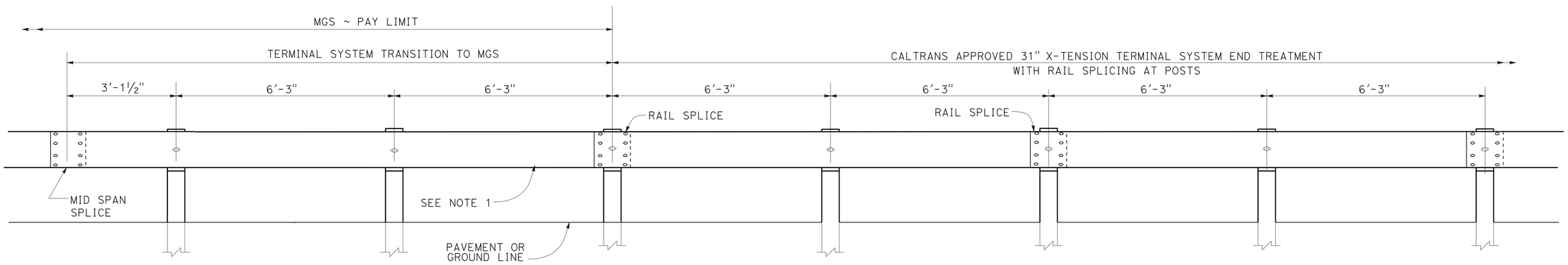

TRANSITION DETAIL FOR 31" X-TENSION TERMINAL SYSTEM END TREATMENT WITH RAIL SPLICING AT POSTS TO MIDWEST GUARDRAIL SYSTEM

CONSTRUCTION DETAILS
NO SCALE

C-7

STATE OF CALIFORNIA - DEPARTMENT OF TRANSPORTATION
Caltrans
DESIGN

FUNCTIONAL SUPERVISOR: DAVID SANGHA
CALCULATED-DESIGNED BY: AMRITPAL BADHESHA
CHECKED BY: CARMELITA BELLE
REVISED BY
DATE REVISED

LAST REVISION 06-05-14
DATE PLOTTED => 24-JUL-2014
TIME PLOTTED => 10:03

Dist	COUNTY	ROUTE	POST MILES TOTAL PROJECT	SHEET No.	TOTAL SHEETS
06	Ker	5	62.5/73.1	14	213

REGISTERED CIVIL ENGINEER 06-10-14 DATE

6-16-14
PLANS APPROVAL DATE

REGISTERED PROFESSIONAL ENGINEER MAHMOOD A SULTAN No. 76344 Exp. 12-31-14 CIVIL STATE OF CALIFORNIA

THE STATE OF CALIFORNIA OR ITS OFFICERS OR AGENTS SHALL NOT BE RESPONSIBLE FOR THE ACCURACY OR COMPLETENESS OF SCANNED COPIES OF THIS PLAN SHEET.

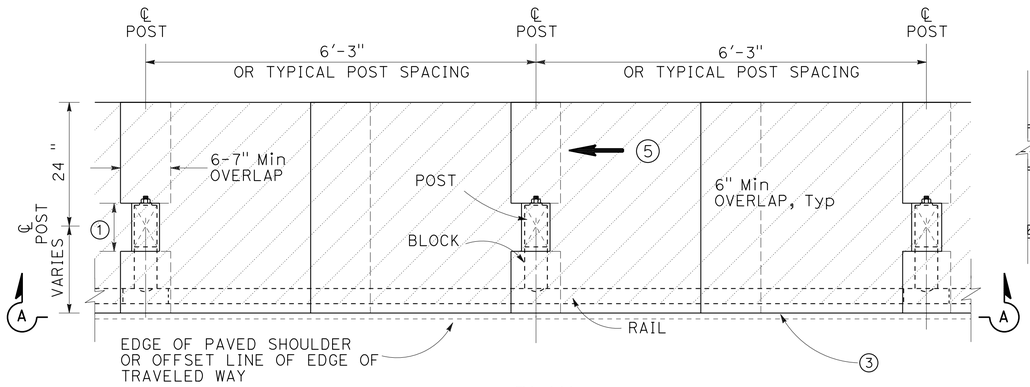

PLAN

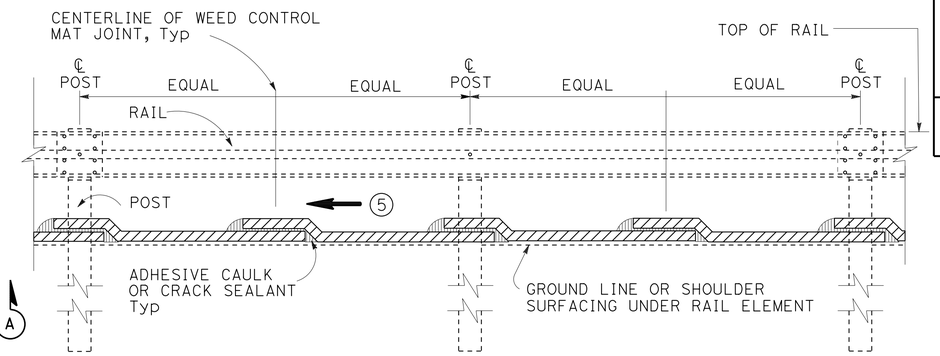

SECTION A-A

WEED CONTROL MAT (RUBBER) UNDER MGS

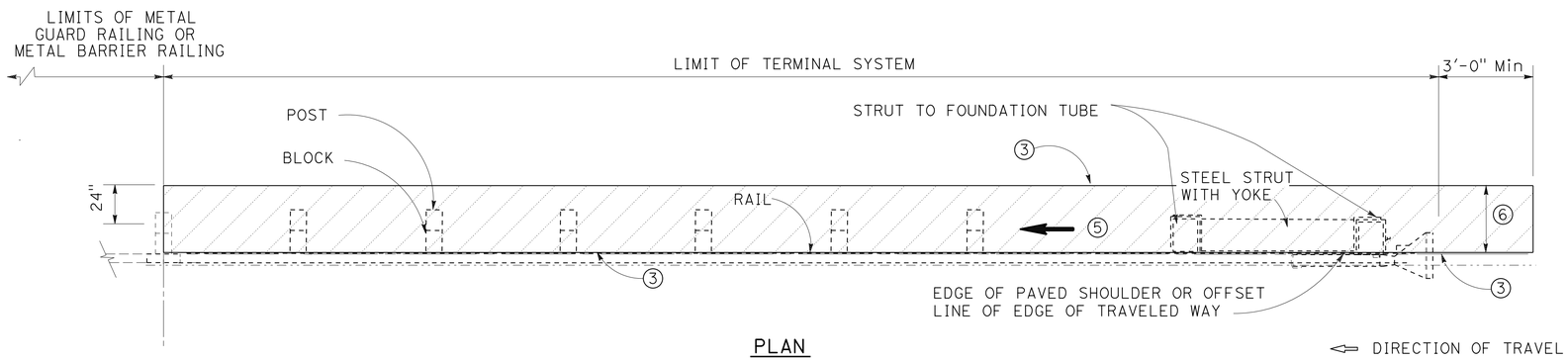

PLAN

WEED CONTROL MAT (RUBBER) AT MGS TERMINAL SYSTEM

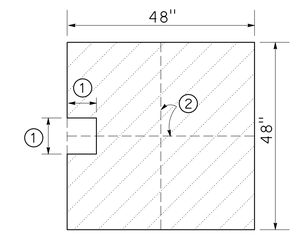

PLAN

WEED CONTROL MAT (RUBBER) TYPICAL TILE SECTION

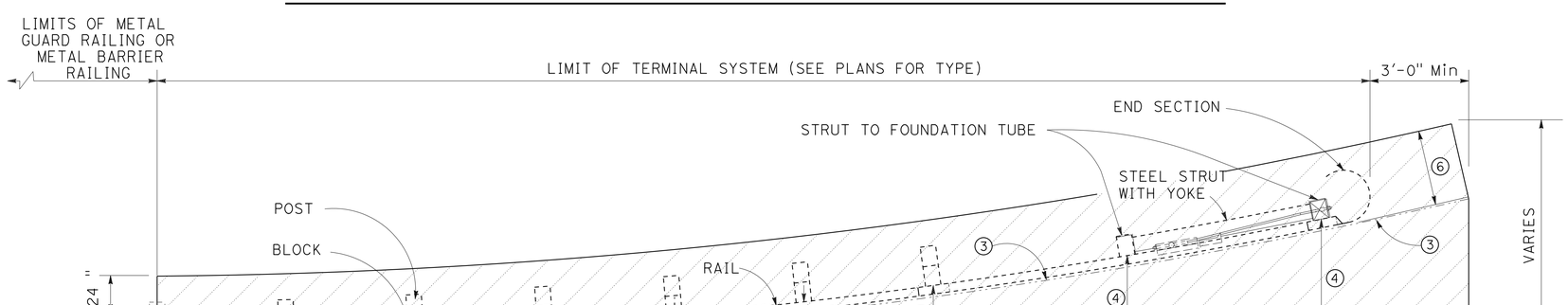

PLAN

WEED CONTROL MAT (RUBBER) AT MGS TERMINAL SYSTEM

LEGEND:

WEED CONTROL MAT (RUBBER)

NOTES:

1. CUTOUT DIMENSIONS TO FIT SNUGLY AROUND WOOD OR METAL POST FOR MGS. (SEE PLANS FOR EXACT SIZE AND DIMENSIONS)
2. WEED CONTROL MAT (RUBBER) TILE MAY BE COMPRISED OF FOUR - 24" X 24" TILE MATS.
3. TRIM WEED CONTROL MAT (RUBBER) FLUSH WITH EDGE OF SHOULDER, PAVEMENT OR WEED MAT. FILL JOINTS AND OPENINGS WITH ADHESIVE CAULKING OR CRACK SEALANT.
4. SEE STANDARD PLANS FOR CORRESPONDING POST OFFSET DIMENSIONS FOR TERMINAL SYSTEM.
5. LAP WEED CONTROL MAT IN DIRECTION OF WATER FLOW.
6. DIMENSION: 3'-0" OR GREATER. ALIGN WITH RAIL AT END SECTION.

CONSTRUCTION DETAILS C-8

NO SCALE

STATE OF CALIFORNIA - DEPARTMENT OF TRANSPORTATION
DESIGN
Caltrans
FUNCTIONAL SUPERVISOR: DAVID SANGHA
CALCULATED-DESIGNED BY: MAHMOOD SULTAN
CHECKED BY: CARMELITA BELLE
REVISED BY
DATE REVISED

LAST REVISION 06-13-14 | DATE PLOTTED => 24-JUL-2014 | TIME PLOTTED => 10:03

Dist	COUNTY	ROUTE	POST MILES TOTAL PROJECT	SHEET No.	TOTAL SHEETS
06	Ker	5	62.5/73.1	15	213

REGISTERED CIVIL ENGINEER 06-10-14 DATE

PLANS APPROVAL DATE 6-16-14

REGISTERED PROFESSIONAL ENGINEER MAHMOOD A SULTAN No. 76344 Exp. 12-31-14 CIVIL STATE OF CALIFORNIA

THE STATE OF CALIFORNIA OR ITS OFFICERS OR AGENTS SHALL NOT BE RESPONSIBLE FOR THE ACCURACY OR COMPLETENESS OF SCANNED COPIES OF THIS PLAN SHEET.

NOTES:

1. WEED CONTROL MAT (RUBBER) MUST BE 48" WIDE INDIVIDUAL MATS OR 48" WIDE CONTINUOUS ROLL PRODUCT. INDIVIDUAL MATS ARE SHOWN.
2. EDGES OF MAT TO ABUT EDGES OF POST.
3. WHERE EDGE OF PAVED SHOULDER IS MORE THAN 24" FROM BACK OF POST, EDGE OF WEED CONTROL MAT MUST BE 24" FROM BACK OF POST. WHERE PAVED SHOULDER IS CONSTRUCTED 24" OR LESS FROM BACK OF POST, ABUT EDGE OF WEED CONTROL MAT AGAINST EDGE OF PAVED SHOULDER. WHERE DIKE IS CONSTRUCTED UNDER RAILING, ABUT EDGE OF WEED CONTROL MAT AGAINST BACK OF DIKE.
4. LAP WEED CONTROL MAT IN DIRECTION OF WATER FLOW.
5. FOR CONTINUOUS ROLL PRODUCT LOCATE OVERLAP JOINT AT OR BETWEEN POSTS AS SHOWN.
6. DIRECTION OF ADJACENT TRAFFIC INDICATED BY ⇦ .

LEGEND:

WEED CONTROL MAT (RUBBER)

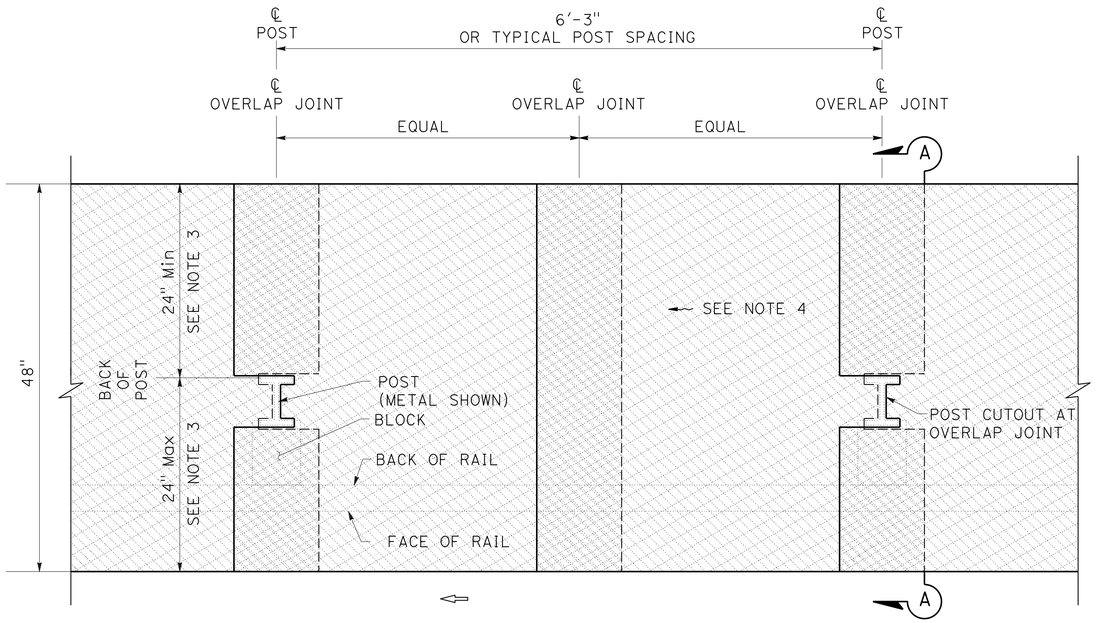

PLAN

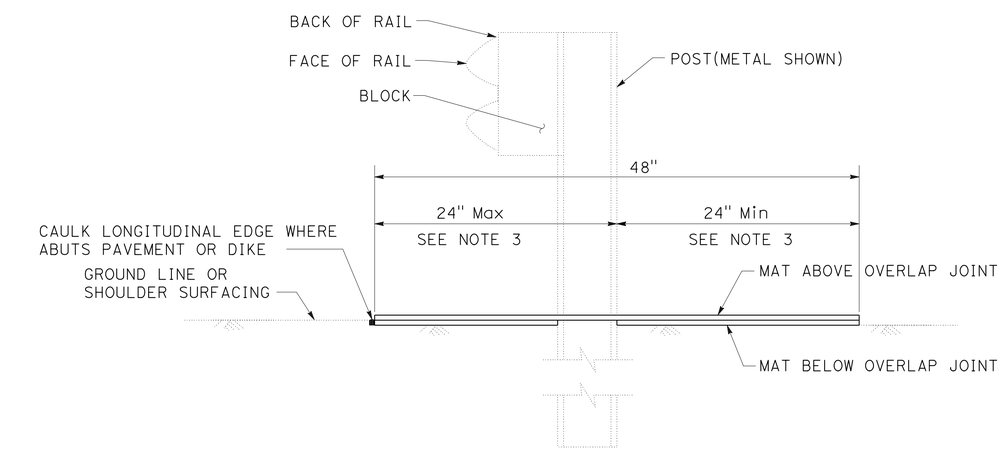

SECTION A-A

SEE NOTE 1

* DETAIL FOR MIDWEST GUARDRAIL SYSTEM IS SHOWN

WEED CONTROL MAT (RUBBER) UNDER MIDWEST GUARDRAIL SYSTEM AND THRIE BEAM BARRIER

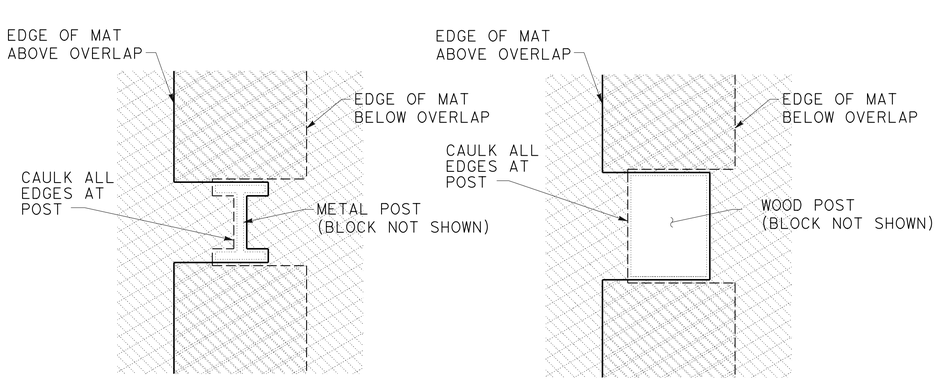

PLAN

POST CUTOUT AT OVERLAP JOINT

SEE NOTE 2

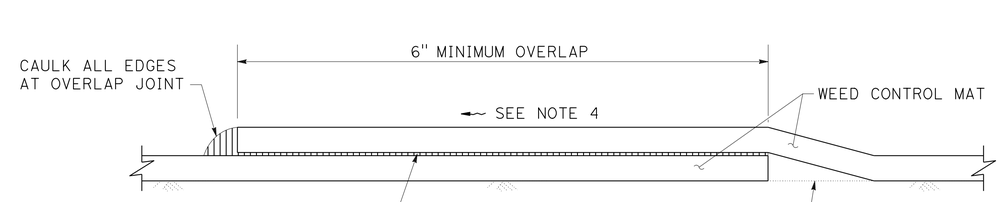

SECTION

OVERLAP JOINT

CONSTRUCTION DETAILS C-9

NO SCALE

REVISED BY	DATE REVISED

CARMELITA BELLE — MAHMOOD SULTAN

CALCULATED-DESIGNED BY — CHECKED BY

FUNCTIONAL SUPERVISOR: DAVID SANGHA

STATE OF CALIFORNIA - DEPARTMENT OF TRANSPORTATION — DESIGN — Caltrans

LAST REVISION 06-11-14 | DATE PLOTTED => 24-JUL-2014 | TIME PLOTTED => 10:03

Dist	COUNTY	ROUTE	POST MILES TOTAL PROJECT	SHEET No.	TOTAL SHEETS
06	Ker	5	62.5/73.1	16	213

REGISTERED CIVIL ENGINEER 06-10-14 DATE

6-16-14
PLANS APPROVAL DATE

REGISTERED PROFESSIONAL ENGINEER MAHMOOD A SULTAN No. 76344 Exp. 12-31-14 CIVIL STATE OF CALIFORNIA

THE STATE OF CALIFORNIA OR ITS OFFICERS OR AGENTS SHALL NOT BE RESPONSIBLE FOR THE ACCURACY OR COMPLETENESS OF SCANNED COPIES OF THIS PLAN SHEET.

LEGEND:

MINOR CONCRETE (BACKFILL)

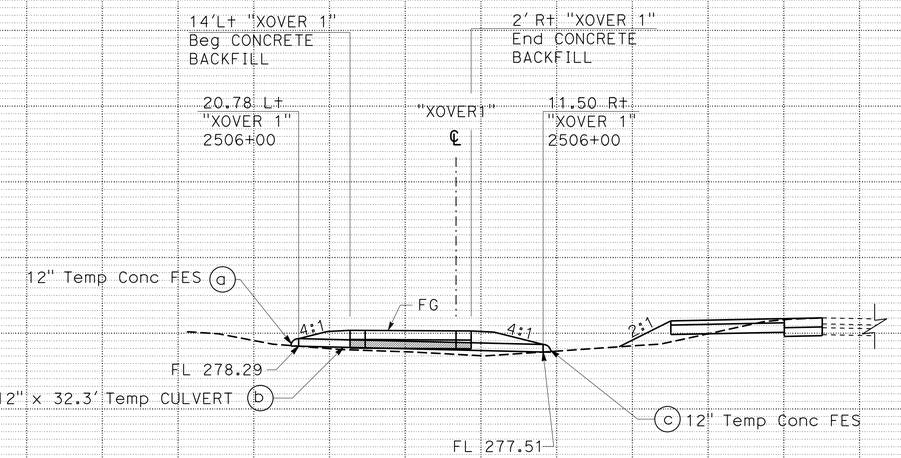

Sta 2506+00

DRAINAGE SYSTEM No. 2

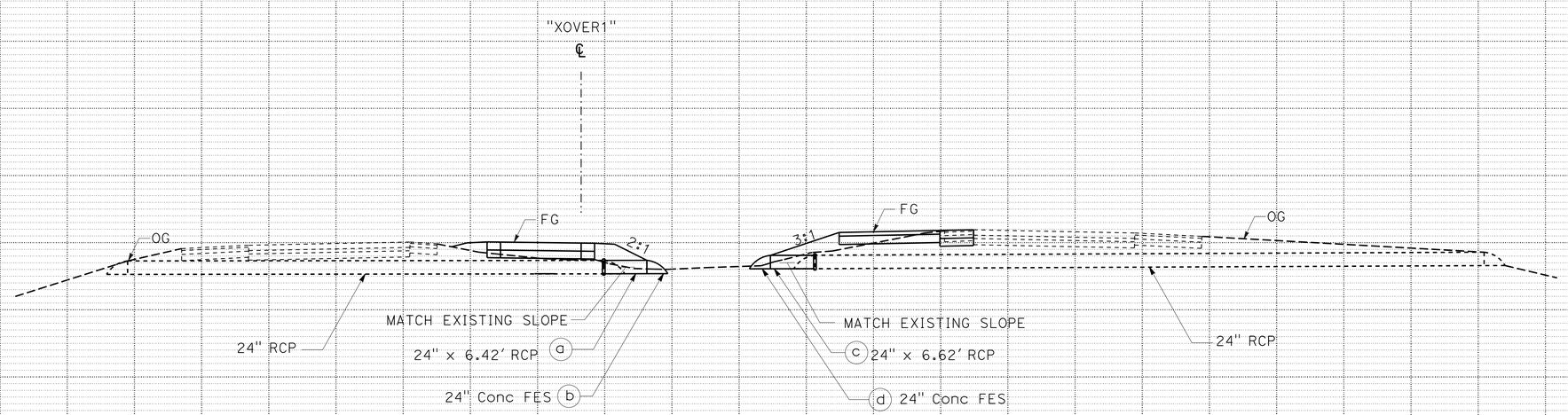

Sta 2505+07.86

DRAINAGE SYSTEM No. 1

DRAINAGE PROFILES

DP-1

SCALE: Horiz 1"=10'
Vert 1"=10'

STATE OF CALIFORNIA - DEPARTMENT OF TRANSPORTATION
Caltrans
DESIGN

FUNCTIONAL SUPERVISOR: DAVID SANGHA
CALCULATED-DESIGNED BY: MAHMOOD SULTAN
CHECKED BY: MAGDI MOHAMED
REVISED BY
DATE REVISED

LAST REVISION 06-09-14 | DATE PLOTTED => 24-JUL-2014 | TIME PLOTTED => 10:03

Dist	COUNTY	ROUTE	POST MILES TOTAL PROJECT	SHEET No.	TOTAL SHEETS
06	Ker	5	62.5/73.1	17	213

REGISTERED CIVIL ENGINEER 06-10-14 DATE

6-16-14
PLANS APPROVAL DATE

REGISTERED PROFESSIONAL ENGINEER
MAHMOOD A SULTAN
No. 76344
Exp. 12-31-14
CIVIL
STATE OF CALIFORNIA

THE STATE OF CALIFORNIA OR ITS OFFICERS OR AGENTS SHALL NOT BE RESPONSIBLE FOR THE ACCURACY OR COMPLETENESS OF SCANNED COPIES OF THIS PLAN SHEET.

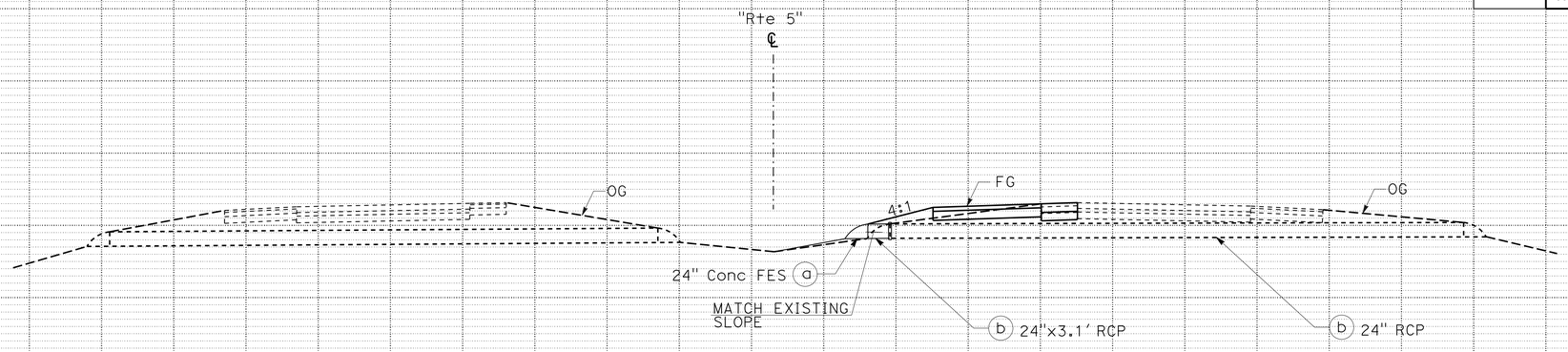

PM 63.63

DRAINAGE SYSTEM No. 4

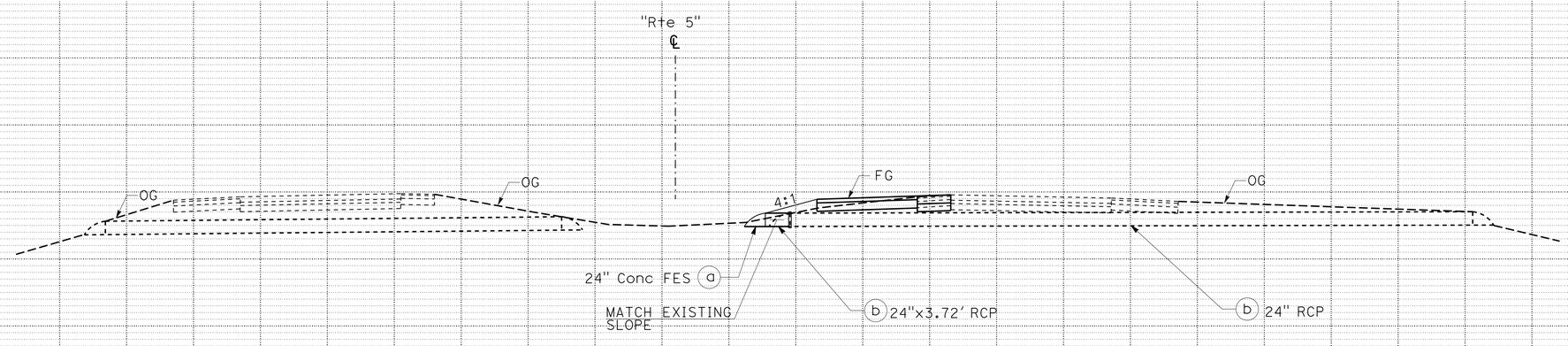

PM 62.93

DRAINAGE SYSTEM No. 3

DRAINAGE PROFILES

SCALE: Horiz 1"=10'
Vert 1"=10'

DP-2

STATE OF CALIFORNIA - DEPARTMENT OF TRANSPORTATION
Caltrans
DESIGN

FUNCTIONAL SUPERVISOR: DAVID SANGHA

CALCULATED-DESIGNED BY: MAGDI MOHAMED
CHECKED BY: MAHMOOD SULTAN

REVISED BY
DATE REVISED

LAST REVISION 06-09-14
DATE PLOTTED => 24-JUL-2014
TIME PLOTTED => 10:03

Dist	COUNTY	ROUTE	POST MILES TOTAL PROJECT	SHEET No.	TOTAL SHEETS
06	Ker	5	62.5/73.1	18	213

REGISTERED CIVIL ENGINEER 06-10-14 DATE

6-16-14
PLANS APPROVAL DATE

REGISTERED PROFESSIONAL ENGINEER MAHMOOD A SULTAN No. 76344 Exp. 12-31-14 CIVIL STATE OF CALIFORNIA

THE STATE OF CALIFORNIA OR ITS OFFICERS OR AGENTS SHALL NOT BE RESPONSIBLE FOR THE ACCURACY OR COMPLETENESS OF SCANNED COPIES OF THIS PLAN SHEET.

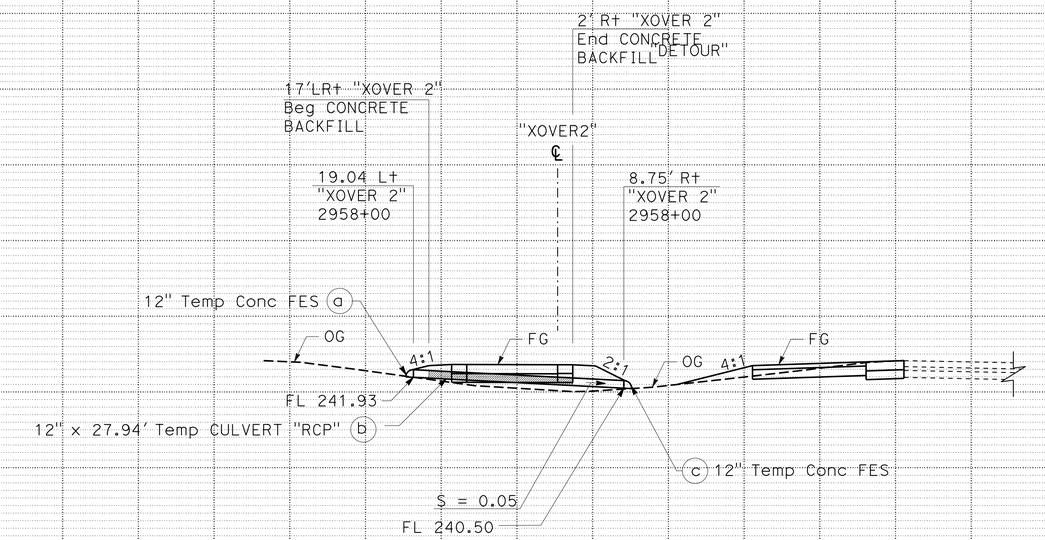

Sta 2958+00

DRAINAGE SYSTEM No. 6

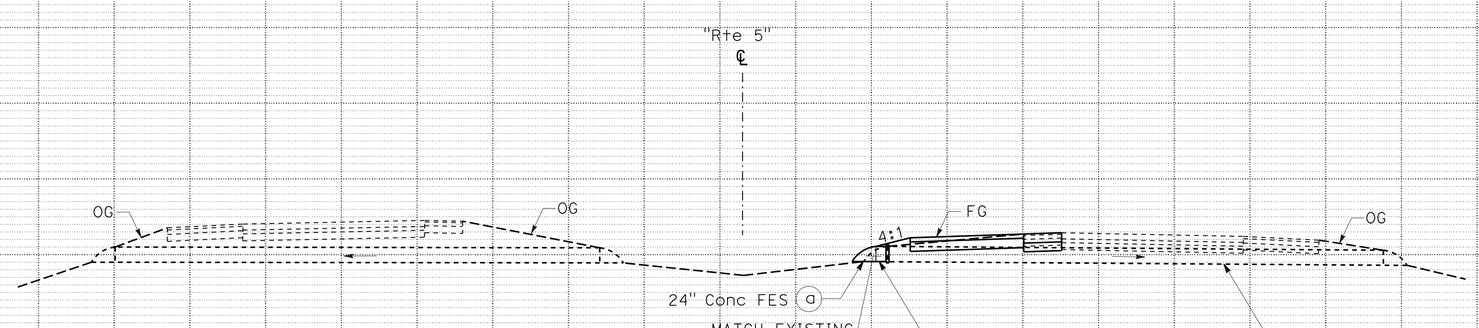

PM 67.77

DRAINAGE SYSTEM No. 5

DRAINAGE PROFILES

SCALE: Horiz 1"=10'
Vert 1"=10'

DP-3

REVISED BY | DATE REVISED
MAGDI MOHAMED | MAHMOOD SULTAN
CALCULATED-DESIGNED BY | CHECKED BY
FUNCTIONAL SUPERVISOR: DAVID SANGHA

STATE OF CALIFORNIA - DEPARTMENT OF TRANSPORTATION
Caltrans
DESIGN

LAST REVISION 06-16-14 | DATE PLOTTED => 24-JUL-2014 | TIME PLOTTED => 10:03

Dist	COUNTY	ROUTE	POST MILES TOTAL PROJECT	SHEET No.	TOTAL SHEETS
06	Ker	5	62.5/73.1	19	213

REGISTERED CIVIL ENGINEER 06-10-14 DATE

6-16-14
PLANS APPROVAL DATE

REGISTERED PROFESSIONAL ENGINEER MAHMOOD A SULTAN No. 76344 Exp. 12-31-14 CIVIL STATE OF CALIFORNIA

THE STATE OF CALIFORNIA OR ITS OFFICERS OR AGENTS SHALL NOT BE RESPONSIBLE FOR THE ACCURACY OR COMPLETENESS OF SCANNED COPIES OF THIS PLAN SHEET.

NOTE:

* CONSTRUCT CONCRETE APRON AFTER THE REMOVAL OF XOVERS

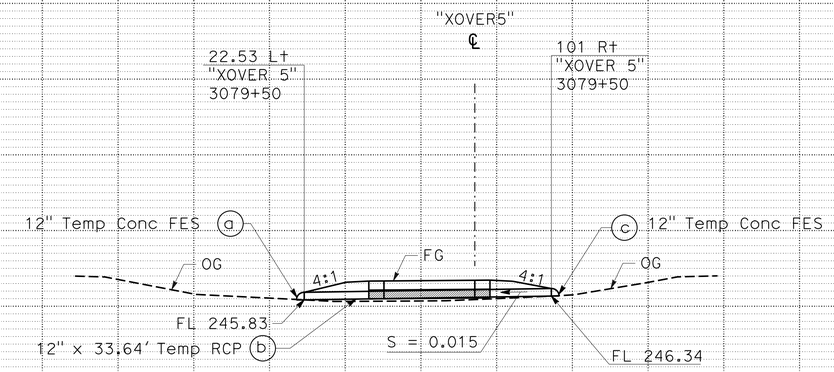

Sta 3079+50

DRAINAGE SYSTEM No. 9

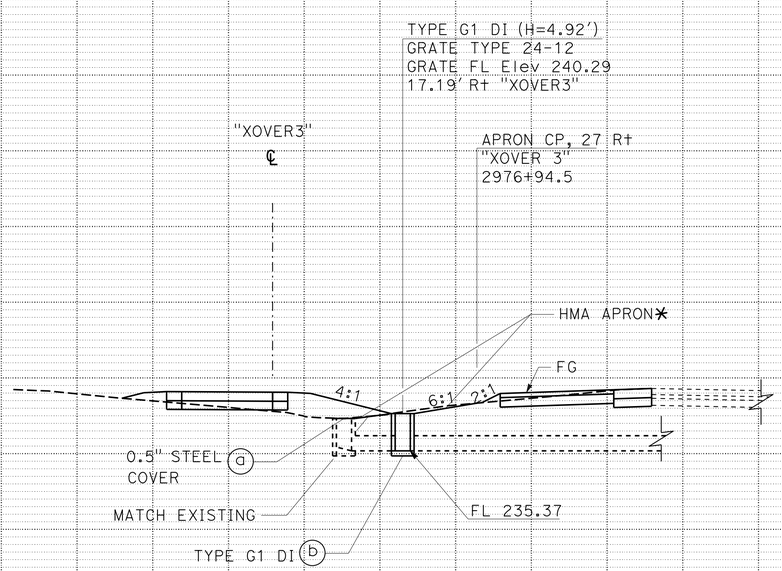

Sta 2976+94.50

DRAINAGE SYSTEM No. 7

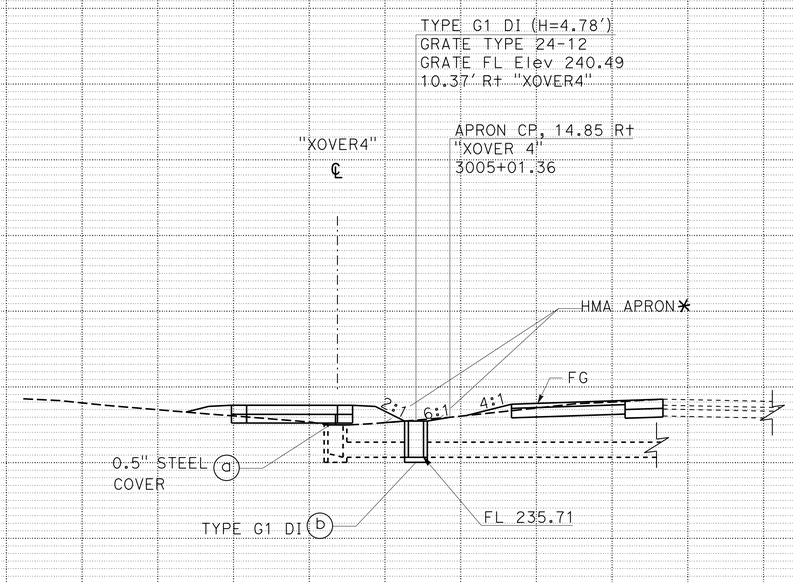

Sta 3005+01.36

DRAINAGE SYSTEM No. 8

DRAINAGE PROFILES

SCALE: Horiz 1"=10'
Vert 1"=10'

DP-4

REVISED BY | DATE REVISED
MAGDI MOHAMED | MAHMOOD SULTAN
CALCULATED-DESIGNED BY | CHECKED BY
FUNCTIONAL SUPERVISOR: DAVID SANGHA

STATE OF CALIFORNIA - DEPARTMENT OF TRANSPORTATION
Caltrans
DESIGN

LAST REVISION 06-16-14 | DATE PLOTTED => 24-JUL-2014 | TIME PLOTTED => 10:03

Dist	COUNTY	ROUTE	POST MILES TOTAL PROJECT	SHEET No.	TOTAL SHEETS
06	Ker	5	62.5/73.1	20	213

REGISTERED CIVIL ENGINEER 06-10-14 DATE

6-16-14
PLANS APPROVAL DATE

REGISTERED PROFESSIONAL ENGINEER
MAHMOOD A SULTAN
No. 76344
Exp. 12-31-14
CIVIL
STATE OF CALIFORNIA

THE STATE OF CALIFORNIA OR ITS OFFICERS OR AGENTS SHALL NOT BE RESPONSIBLE FOR THE ACCURACY OR COMPLETENESS OF SCANNED COPIES OF THIS PLAN SHEET.

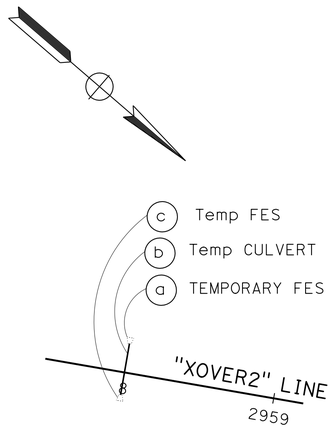

Sta 2958+00

6

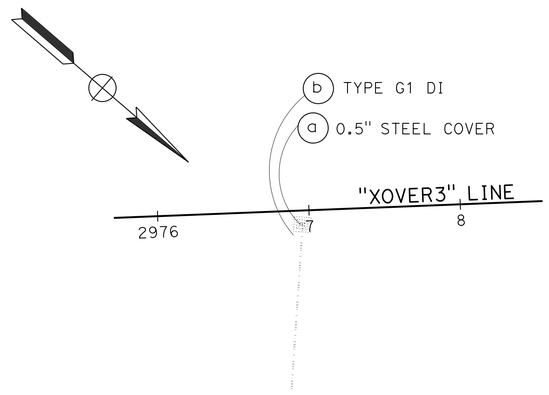

Sta 2976+94.50

7

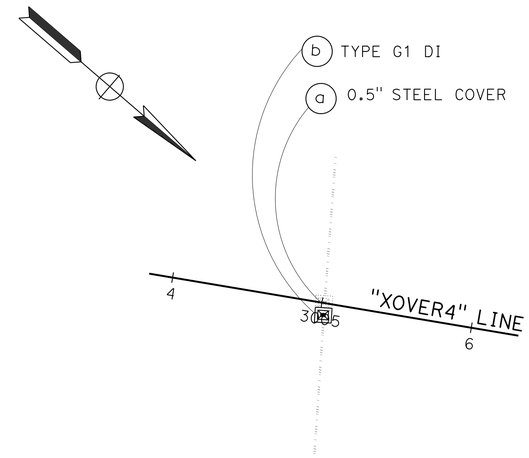

Sta 3005+01.36

8

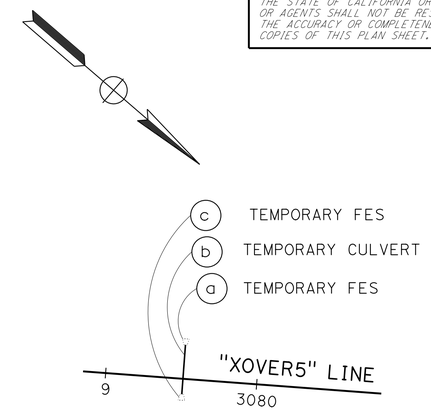

Sta 3079+50

9

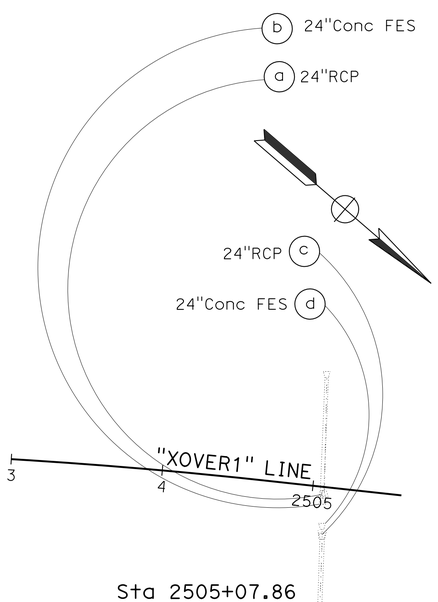

Sta 2505+07.86

1

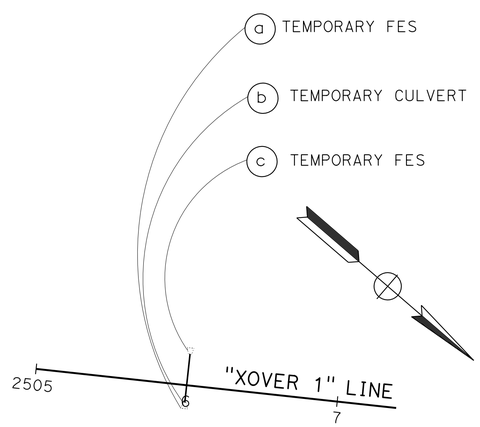

Sta 2506+00

2

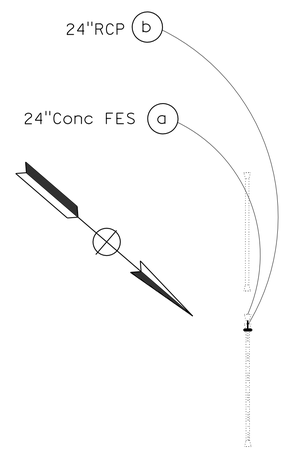

PM 62.93

3

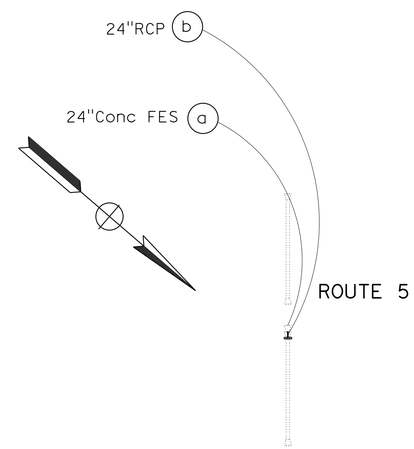

PM 63.63

4

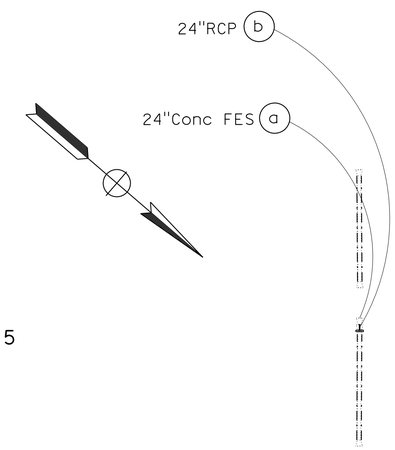

PM 67.77

5

DRAINAGE DETAILS
DD-1

NO SCALE

STATE OF CALIFORNIA - DEPARTMENT OF TRANSPORTATION
Caltrans®
DESIGN

FUNCTIONAL SUPERVISOR: DAVID SANGHA
CALCULATED-DESIGNED BY: MAGDI MOHAMED
CHECKED BY: MAHMOOD SULTAN
REVISED BY
DATE REVISED

LAST REVISION 06-09-14
DATE PLOTTED => 24-JUL-2014
TIME PLOTTED => 10:03

Dist	COUNTY	ROUTE	POST MILES TOTAL PROJECT	SHEET No.	TOTAL SHEETS
06	Ker	5	62.5/73.1	21	213

REGISTERED CIVIL ENGINEER 06-10-14 DATE

6-16-14
PLANS APPROVAL DATE

REGISTERED PROFESSIONAL ENGINEER MAHMOOD A SULTAN No. 76344 Exp. 12-31-14 CIVIL STATE OF CALIFORNIA

THE STATE OF CALIFORNIA OR ITS OFFICERS OR AGENTS SHALL NOT BE RESPONSIBLE FOR THE ACCURACY OR COMPLETENESS OF SCANNED COPIES OF THIS PLAN SHEET.

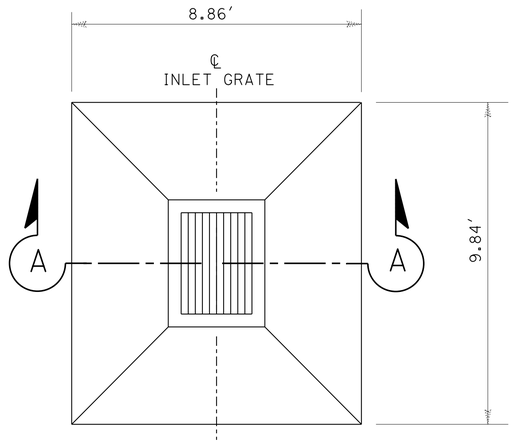

PLAN

MEDIAN INLET AND HMA APRON
(TYPE G1 DI)

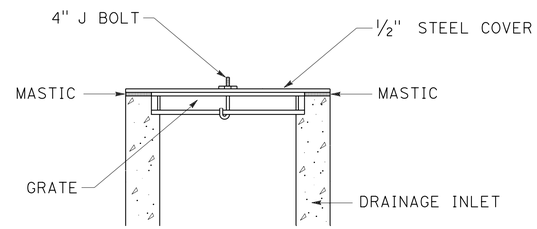

TEMPORARY STEEL COVER FOR DRAINAGE INLET
NO SCALE

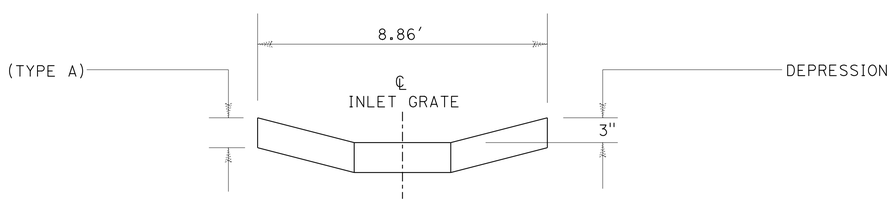

SECTION A-A

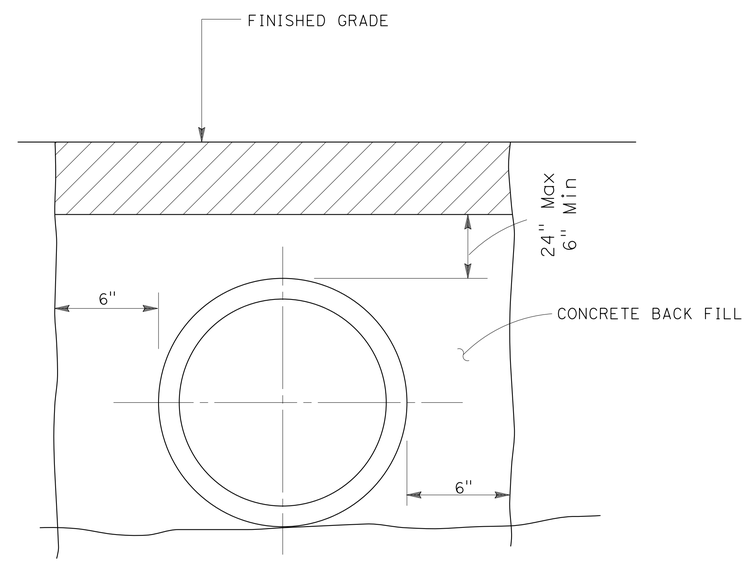

CONCRETE BACKFILL
(PIPE TRENCH)

DRAINAGE DETAILS
NO SCALE

DD-2

STATE OF CALIFORNIA - DEPARTMENT OF TRANSPORTATION
Caltrans®
06-DESIGN

FUNCTIONAL SUPERVISOR: DAVID SANGHA
CALCULATED-DESIGNED BY: MAGDI MOHAMED
CHECKED BY: MAH-MOOD SULTAN
REVISED BY
DATE REVISED

LAST REVISION 06-16-14 | DATE PLOTTED => 24-JUL-2014 | TIME PLOTTED => 10:03

Dist	COUNTY	ROUTE	POST MILES TOTAL PROJECT	SHEET No.	TOTAL SHEETS
06	Ker	5	62.5/73.1	22	213

REGISTERED CIVIL ENGINEER 06-10-14 DATE

PLANS APPROVAL DATE 6-16-14

REGISTERED PROFESSIONAL ENGINEER MAHMOOD A SULTAN No. 76344 Exp. 12-31-14 CIVIL STATE OF CALIFORNIA

THE STATE OF CALIFORNIA OR ITS OFFICERS OR AGENTS SHALL NOT BE RESPONSIBLE FOR THE ACCURACY OR COMPLETENESS OF SCANNED COPIES OF THIS PLAN SHEET.

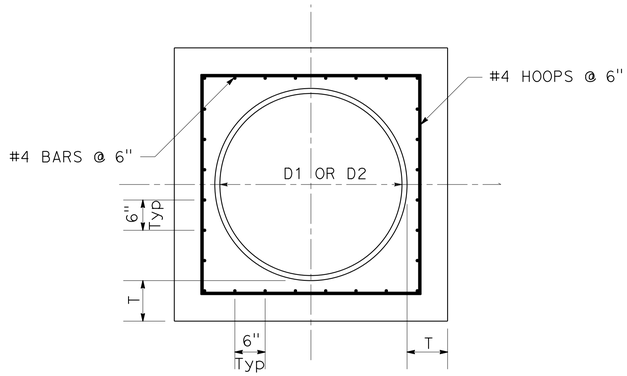

SECTION B-B

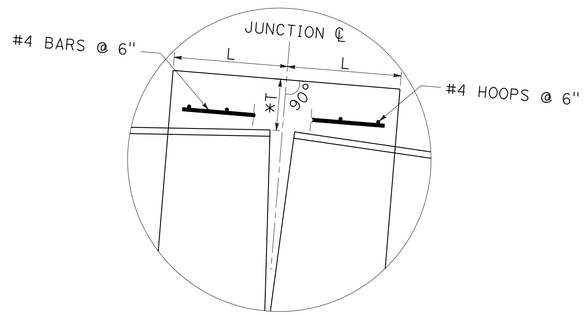

DETAIL C

* MEASURED ALONG JUNCTION ℄

TABLE D

D	L (Min)	T (Min)
1'-6"	1'-0"	6"
2'-0"	1'-0"	6"
3'-0"	1'-6"	8"
4'-0"	1'-6"	8"
4'-6"	1'-6"	9"
5'-0"	2'-0"	1'-0"
5'-6"	2'-0"	1'-0"
6'-0"	2'-0"	1'-0"

NOTES:

1. WHERE PIPES OF DIFFERENT DIAMETERS ARE JOINED WITH A Conc COLLAR, L & T SHALL CORRESPOND WITH THE LARGER OF THE TWO PIPE DIAMETERS.
2. JOIN PIPES AT INVERTS

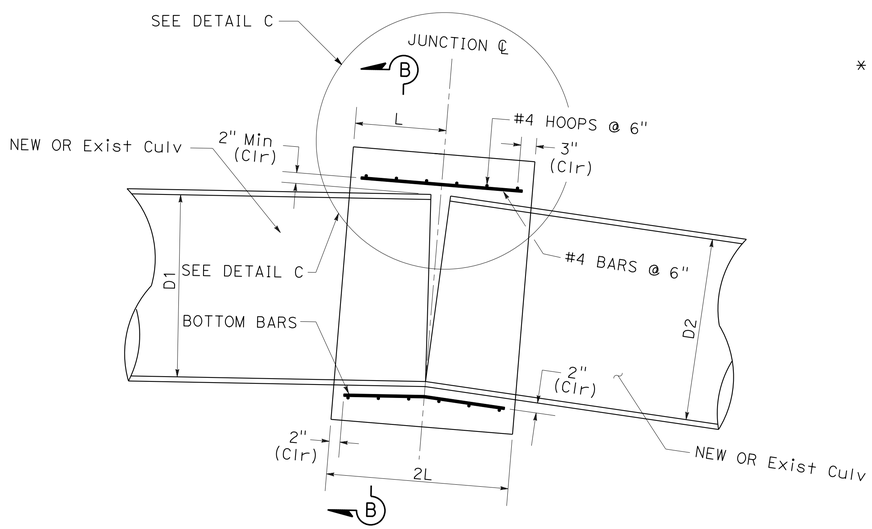

SECTION A-A

NOTE: BEND BOTTOM BARS AS NECESSARY TO MAINTAIN 2" CLEARANCE

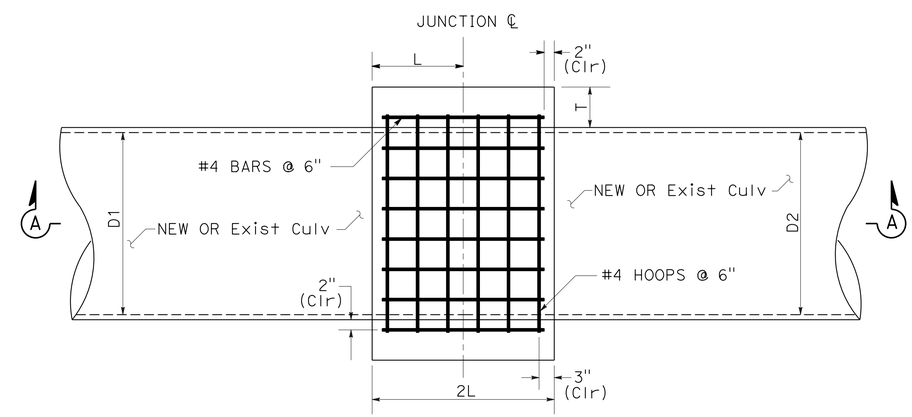

CONCTRETE COLLAR PLAN

CONCRETE PIPE COLLAR

DRAINAGE DETAILS

NO SCALE

DD-3

REVISED BY | DATE REVISED

MAGDI MOHAMED | MAH-MOOD SULTAN

CALCULATED-DESIGNED BY | CHECKED BY

FUNCTIONAL SUPERVISOR | DAVID SANGHA

STATE OF CALIFORNIA - DEPARTMENT OF TRANSPORTATION | 06-DESIGN | Caltrans

LAST REVISION 05-29-14 | DATE PLOTTED => 24-JUL-2014 | TIME PLOTTED => 10:03

Dist	COUNTY	ROUTE	POST MILES TOTAL PROJECT	SHEET No.	TOTAL SHEETS
06	Ker	5	62.5/73.1	23	213

REGISTERED CIVIL ENGINEER 06-10-14 DATE

6-16-14
PLANS APPROVAL DATE

REGISTERED PROFESSIONAL ENGINEER MAHMOOD A SULTAN No. 76344 Exp. 12-31-14 CIVIL STATE OF CALIFORNIA

THE STATE OF CALIFORNIA OR ITS OFFICERS OR AGENTS SHALL NOT BE RESPONSIBLE FOR THE ACCURACY OR COMPLETENESS OF SCANNED COPIES OF THIS PLAN SHEET.

* DISPOSE of MINOR CONCRETE (BACKFILL)
WHEN TEMPORARY CULVERT NO LONGER NEEDED

DRAINAGE QUANTITIES

DRAINAGE PLAN SHEET No.	DRAINAGE SYSTEM No. ⬡	DRAINAGE UNIT ○	12" TEMPORARY CULVERT LF	12" Conc FES LF	24" RCP LF	(N) CONCRETE COLLAR EA	(N) Max COVER FT	24" CFES EA	CONCRETE BACKFILL (PIPE TRENCH) CY	DRAINAGE INLET (N) DI (TYPE G1) EA	MINOR CONCRETE (MINOR STRUCTURE) CY	Misc IRON and STEEL LB	(N) DESIGN, H LF	DESCRIPTION	STATION	DRAINAGE UNIT ○	DRAINAGE SYSTEM No. ⬡
DD-1	1	a			6.4	1								24" RCP	"XOVER1", 2505+07.86	a	1
		b						1						24" CONCRETE FES	"XOVER1", 2505+07.86	b	
		c			6.6	1								24" RCP	"XOVER1", 2505+07.86	c	
		d						1						24" CONCRETE FES	"XOVER1", 2505+07.86	d	
	2	a		1										12" TEMPORARY CONCRETE FES	"XOVER1", 2506+00	a	2
		b	32.3				1.6							12" TEMPORARY RCP	"XOVER1", 2506+00	b	
		c		1										12" TEMPORARY CONCRETE FES	"XOVER1", 2506+00	c	
									1.0					MINOR CONCRETE (PIPE TRENCH)	"XOVER1", 2506+00		
	3	a						1						24" CONCRETE FES		a	3
		b			3.7									24" RCP	PM 62.93	b	
	4	a						1						24" CONCRETE FES	PM 63.63	a	4
		b			3.1									24" RCP	PM 63.63	b	
	5	a						1						24" CONCRETE FES	PM 67.77	a	5
		b			1.5									24" RCP		b	
	6	a		1										12" TEMPORARY CONCRETE FES	"XOVER2", 2958+00	a	6
		b	27.9				1.8							12" TEMPORARY RCP	"XOVER2", 2958+00	b	
		c		1										12" TEMPORARY CONCRETE FES	"XOVER2", 2958+00	c	
									1.2					MINOR CONCRETE (BACK FILL)	"XOVER2", 2958+00		
	7	a										510		0.5" STEEL COVER	"XOVER3", 2976+94.50	a	7
		b								1	1.37	326	4.92	DI TYPE "G1" WITH GRATE (24-12)	"XOVER3", 2976+94.50	b	
	8	a										510		0.5" STEEL COVER	"XOVER4", 3005+01.36	a	8
		b								1	1.34	326	4.78	DI TYPE "G1" WITH GRATE (24-12)	"XOVER4", 3005+01.36	b	
	9	a		1										12" TEMPORARY CONCRETE FES	"XOVER5", 3079+50	a	9
		b	33.6				1.4							12" TEMPORARY RCP	"XOVER5", 3079+50	b	
		c		1										12" TEMPORARY CONCRETE FES	"XOVER5", 3079+50	c	
									1.2					MINOR CONCRETE (BACK FILL)	"XOVER5", 3079+50		
TOTAL			93.8	6	21.3			5	3.4		2.71	1672					

DRAINAGE INLET MARKER

Drainage System	Sta/PM	EA
1	2505+07.86 "XOVER1"	4
EXISTING	62.546	2
EXISTING	62.655	2
3	62.93	4
4	63.63	4
EXISTING	65.14	2
EXISTING	65.69	2
EXISTING	66.351	2
EXISTING	66.67	2
EXISTING	66.936	2
5	67.769	4
EXISTING	68.156	2
EXISTING	68.629	2
EXISTING	69.164	2
EXISTING	69.768	2
EXISTING	70.23	2
EXISTING	70.382	2
7	2976+94.50 "XOVER3"	4
8	3005+01.36 "XOVER4"	4
EXISTING	71.935	2
EXISTING	72.024	2
EXISTING	72.043	2
EXISTING	72.487	2
EXISTING	72.638	2
EXISTING	72.757	2
EXISTING	72.962	2
EXISTING	73.095	2
TOTAL		66

DRAINAGE QUANTITIES
DQ-1

REVISED BY | DATE REVISED
MAGDI MOHAMED | MAH-MOOD SULTAN
CALCULATED-DESIGNED BY | CHECKED BY
FUNCTIONAL SUPERVISOR: DAVID SANGHA

STATE OF CALIFORNIA - DEPARTMENT OF TRANSPORTATION
Caltrans
06-DESIGN

LAST REVISION 06-16-14 | DATE PLOTTED => 24-JUL-2014 | TIME PLOTTED => 10:03

Dist	COUNTY	ROUTE	POST MILES TOTAL PROJECT	SHEET No.	TOTAL SHEETS
06	Ker	5	62.5/73.1	24	213

REGISTERED CIVIL ENGINEER 06-06-14 DATE

6-16-14
PLANS APPROVAL DATE

REGISTERED PROFESSIONAL ENGINEER
ANDREY CHEVYCHALOV
No. 68378
Exp. 9-30-15
CIVIL
STATE OF CALIFORNIA

THE STATE OF CALIFORNIA OR ITS OFFICERS OR AGENTS SHALL NOT BE RESPONSIBLE FOR THE ACCURACY OR COMPLETENESS OF SCANNED COPIES OF THIS PLAN SHEET.

STATIONARY MOUNTED CONSTRUCTION AREA SIGNS

SIGN No.	SIGN CODE	SIGN MESSAGE	PANEL SIZE	No. OF POSTS AND SIZE	No. OF SIGNS
A	W20-1	ROAD WORK AHEAD	48" x 48"	1 - 6" x 6"	4
B	W20-1	ROAD WORK AHEAD	36" x 36"	1 - 4" x 6"	4
C	C14(CA)	END ROAD WORK	48" x 24"	1 - 4" x 6"	2
D	C40(CA)	TRAFFIC FINES DOUBLED IN CONSTRUCTION ZONES	144" x 60"	2 - 6" x 8"	2

NOTES:

1. ALL TEMPORARY WARNING SIGNS SHALL HAVE BLACK LEGEND ON FLUORESCENT ORANGE BACKGROUND
2. EXACT SIGN LOCATIONS TO BE DETERMINED BY THE ENGINEER
3. FOR ADDITIONAL CONSTRUCTION AREA SIGNS, REFER TO TH AND DE PLANS
4. CALIFORNIA CODES ARE DESIGNATED BY (CA). OTHERWISE, FEDERAL (MUTCD) CODES ARE SHOWN

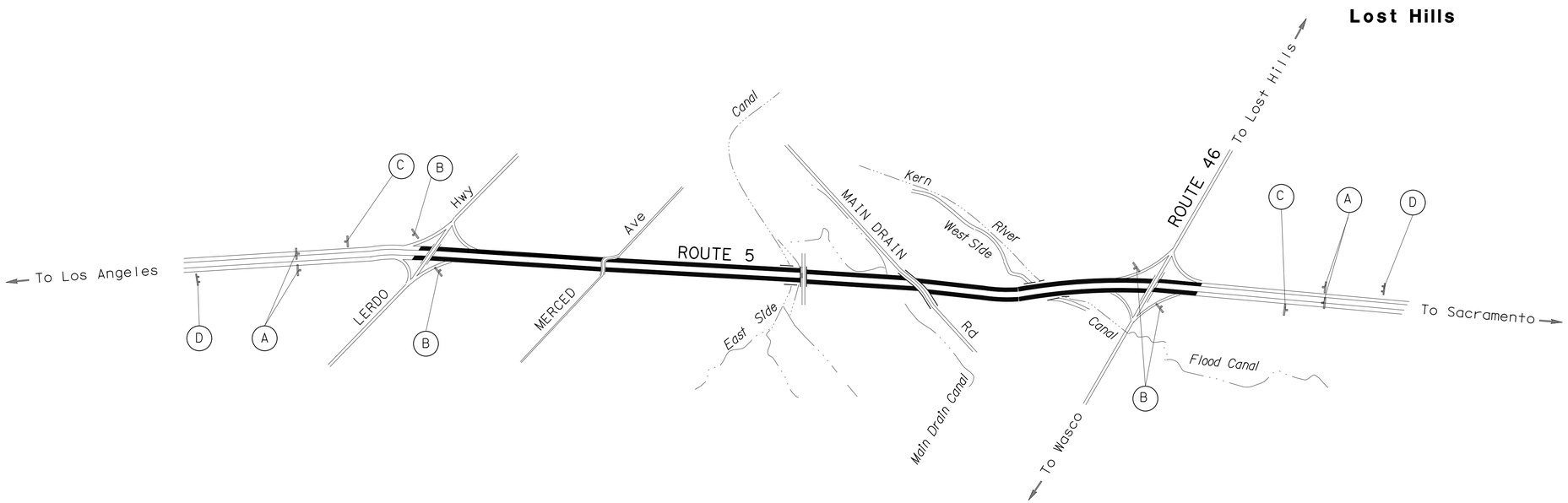

CONSTRUCTION AREA SIGNS

NO SCALE

CS-1

APPROVED FOR CONSTRUCTION AREA SIGN WORK ONLY

STATE OF CALIFORNIA - DEPARTMENT OF TRANSPORTATION
Caltrans
TRAFFIC DESIGN

FUNCTIONAL SUPERVISOR: MOHAMMED QATAMI
CALCULATED-DESIGNED BY: VANIK POGOSYAN
CHECKED BY: ANDREY CHEVYCHALOV
REVISED BY
DATE REVISED

LAST REVISION 06-06-14
DATE PLOTTED => 24-JUL-2014
TIME PLOTTED => 10:03

Dist	COUNTY	ROUTE	POST MILES TOTAL PROJECT	SHEET No.	TOTAL SHEETS
06	Ker	5	62.5/73.1	25	213

REGISTERED CIVIL ENGINEER 06-10-14 DATE

6-16-14
PLANS APPROVAL DATE

REGISTERED PROFESSIONAL ENGINEER MAHMOOD A SULTAN No. 76344 Exp. 12-31-14 CIVIL STATE OF CALIFORNIA

THE STATE OF CALIFORNIA OR ITS OFFICERS OR AGENTS SHALL NOT BE RESPONSIBLE FOR THE ACCURACY OR COMPLETENESS OF SCANNED COPIES OF THIS PLAN SHEET.

SUMMARY ORDER OF WORK

	SHEET No.	STAGE/PHASE	LOCATION	CONSTRUCTION
			LERDO Hwy TO Rte 46	SLAB REPLACEMENT FOR NB AND SB LANE 1 TO BE DONE BEFORE STAGE 1 BEGINS, AND GRIND ENTIRE NB AND SB LANE 1.
	(SC-2 TO SC-4)	STAGE 1, PHASE 1	LERDO Hwy TO Rte 46	NB OUTSIDE Shld & SB INSIDE Shld. REPLACE THRIE BEAM THIS STAGE.
	(SC-5 TO SC-7)	STAGE 1, PHASE 2	LERDO Hwy TO Rte 46	WIDEN NB OUTSIDE Shld BEFORE Rte 46 NB OFF-RAMP. WIDEN Rte 46 SB ON-RAMP WITH SB OUTSIDE Shld. WIDEN SB OUTSIDE Shld BEFORE LERDO Hwy SB OFF-RAMP. WIDEN NB OUTSIDE Shld NEAR LERDO Hwy NB ON-RAMP. REPLACE THRIE BEAM THIS STAGE.
SEGMENT 1	(SC-8 TO SC-10)	STAGE 2	WSC TO Rte 46	MEDIAN SHOULDER DETOUR AND CROSSOVERS Nos. 2,3,4,5
	(SC-11)	STAGE 3, PHASE 1	WSC TO Rte 46	SB LANE 2 AT Rte 46 SB ON-RAMP AREA
	(SC-12 TO SC-14)	STAGE 3, PHASE 2	WSC TO Rte 46	SB LANE 2 & OUTSIDE Shld. REPLACE THRIE BEAM THIS STAGE.
	(SC-15)	STAGE 4, PHASE 1	WSC TO Rte 46	NB LANE 2 AT Rte 46 NB OFF-RAMP AREA
	(SC-16 TO SC-18)	STAGE 4, PHASE 2	WSC TO Rte 46	NB LANE 2
SEGMENT 2	(SC-19 TO SC-20)	STAGE 5	LERDO Hwy TO WSC	MEDIAN SHOULDER DETOUR AND CROSSOVER No. 1
	(SC-21)	STAGE 6, PHASE 1	LERDO Hwy TO WSC	SB LANE 2, LERDO Hwy SB OFF-RAMP AREA & HMA OUTSIDE Shld
	(SC-22 TO SC-23)	STAGE 6, PHASE 2	LERDO Hwy TO WSC	SB LANE 2 & OUTSIDE Shld
	(SC-24)	STAGE 7, PHASE 1	LERDO Hwy TO WSC	NB LANE 2, LERDO Hwy NB ON-RAMP AREA
	(SC-25 TO SC-26)	STAGE 7, PHASE 2	LERDO Hwy TO WSC	NB LANE 2
	(SC-27 TO SC-30)	STAGE 8	LERDO Hwy TO Rte 46	OBLITERATE MEDIAN DETOUR AND LEAVE IN PLACE, REMOVE CROSSOVERS, REPLACE THRIE BEAM & MGS THIS STAGE, AND INSTALL NB & SB RUMBLE STRIPS FOR BOTH INSIDE & OUTSIDE Shld.

LEGEND:

- EXISTING ROADBED
- PERMANENT CONSTRUCTION THIS STAGE
- OBLITERATE IN PLACE
- REMOVE ROADWAY OR STRUCTURE
- COLD PLANE AC PAVEMENT
- (#) CONSTRUCTION PHASE FEATURE
- ←(#) TRAFFIC DIRECTION (NUMBER OF LANES)

ABBREVIATIONS:

LL	LANE LINE
TRK	TEMPORARY RAILING (TYPE K)
WSC	WEST SIDE CANAL

NOTES:

1. EXISTING UTILITY FACILITIES ARE NOT SHOWN ON THESE PLANS.
2. WORK NOT NECESSARY FOR STAGING OPERATION CAN BE DONE AT ANYTIME AND IS NOT SHOWN.
3. FOR DETAILS OF TRAFFIC HANDLING DURING STAGE CONSTRUCTION, SEE TRAFFIC HANDLING PLANS.

CURVE DATA

No. ⊕	R	Δ	T	L
1	26,000′	03°38′00"	824.65′	1648.75′
2	10,963′	06°48′18"	651.80′	1302.06′

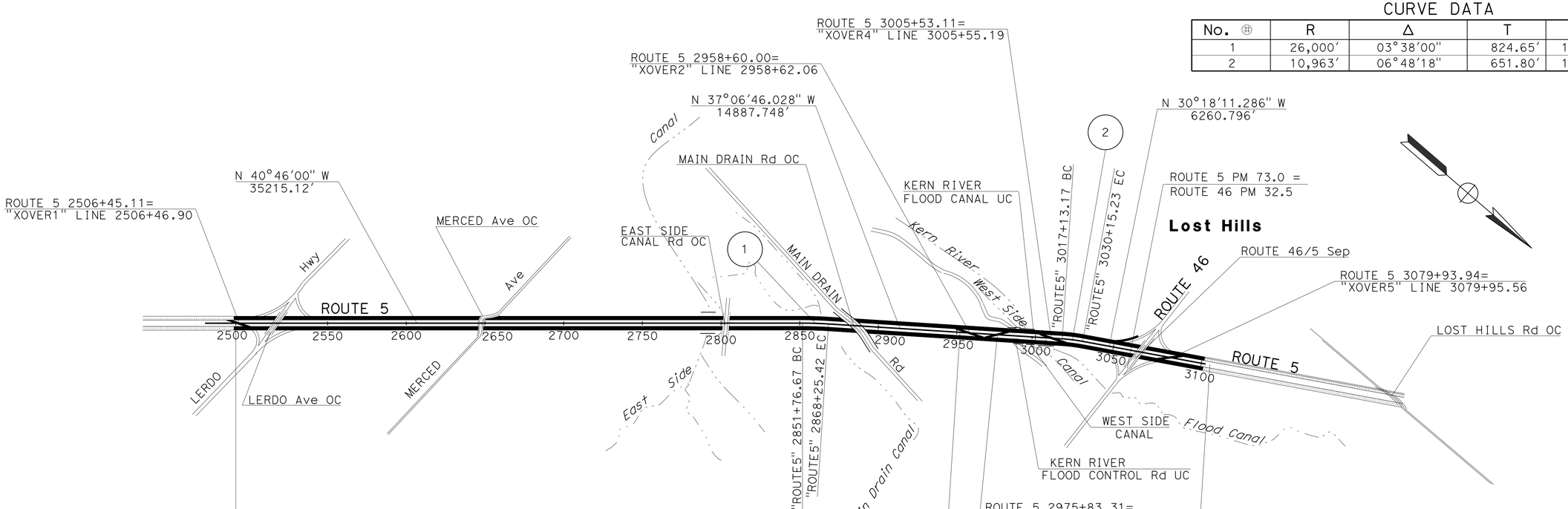

STAGE CONSTRUCTION PLAN

NO SCALE

SC-1

APPROVED FOR STAGE CONSTRUCTION WORK ONLY

STATE OF CALIFORNIA - DEPARTMENT OF TRANSPORTATION
DESIGN
FUNCTIONAL SUPERVISOR: DAVID SANGHA
CALCULATED-DESIGNED BY: MAHMOOD SULTAN
CHECKED BY: CARMELITA BELLE
REVISED BY / DATE REVISED

LAST REVISION 06-10-14 | DATE PLOTTED => 24-JUL-2014 | TIME PLOTTED => 10:03

Dist	COUNTY	ROUTE	POST MILES TOTAL PROJECT	SHEET No.	TOTAL SHEETS
06	Ker	5	62.5/73.1	26	213

REGISTERED CIVIL ENGINEER 06-10-14 DATE

6-16-14
PLANS APPROVAL DATE

REGISTERED PROFESSIONAL ENGINEER
MAHMOOD A SULTAN
No. 76344
Exp. 12-31-14
CIVIL
STATE OF CALIFORNIA

THE STATE OF CALIFORNIA OR ITS OFFICERS OR AGENTS SHALL NOT BE RESPONSIBLE FOR THE ACCURACY OR COMPLETENESS OF SCANNED COPIES OF THIS PLAN SHEET.

CONSTRUCTION - STAGE 1 PHASE 1

(1) ON NORTHBOUND DIRECTION FROM LERDO HIGHWAY TO ROUTE 46 INTERCHANGE (Sta 2504+50.00 TO Sta 3076+92.00), CONSTRUCT OUTSIDE SHOULDERS. FOR TRAFFIC HANDLING (STAGE 1), SEE LANE CLOSURE CHARTS.

(2) ON SOUTHBOUND DIRECTION FROM LERDO Hwy TO ROUTE 46 INTERCHANGE (Sta 2513+38.00 TO Sta 3071+24.00), CONSTRUCT INSIDE SHOULDERS BEHIND Temp RAILING (TYPE K). FOR TRAFFIC HANDLING (STAGE 1), SEE LANE CLOSURE CHARTS.

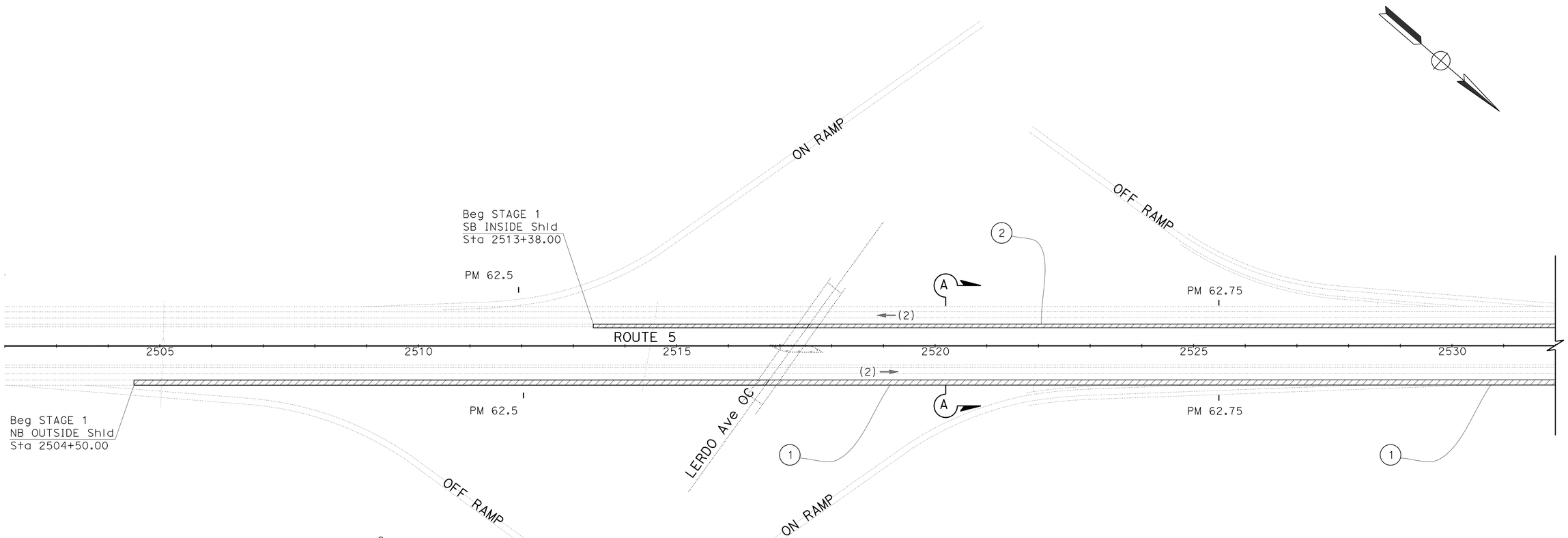

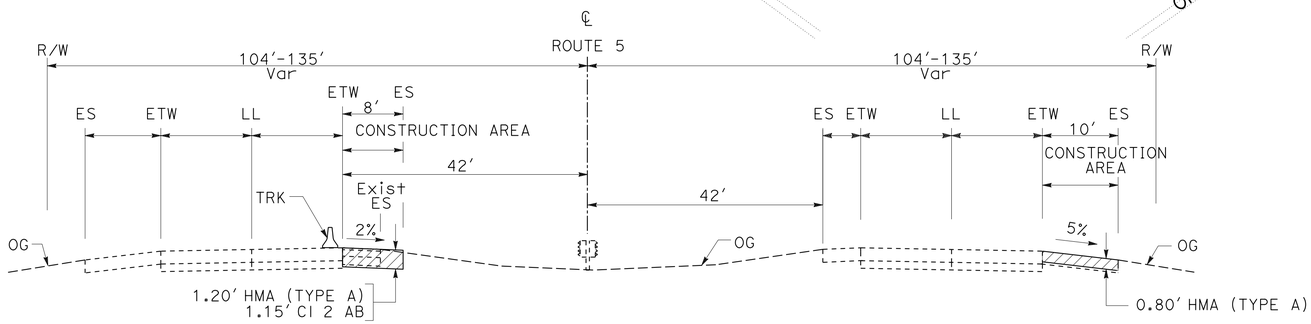

SOUTHBOUND
Sta 2513+38.00 TO Sta 3071+24.00

NORTHBOUND
Sta 2504+50.00 TO Sta 3076+92.00

SECTION A-A
TYPICAL

APPROVED FOR STAGE CONSTRUCTION WORK ONLY

STAGE CONSTRUCTION PLAN
(STAGE 1 PHASE 1)

NO SCALE

SC-2

REVISED BY | DATE REVISED
CARMELITA BELLE | MAHMOOD SULTAN
CALCULATED-DESIGNED BY | CHECKED BY
FUNCTIONAL SUPERVISOR: DAVID SANGHA
STATE OF CALIFORNIA - DEPARTMENT OF TRANSPORTATION
Caltrans® DESIGN

LAST REVISION 06-05-14 | DATE PLOTTED => 24-JUL-2014 | TIME PLOTTED => 10:03

Dist	COUNTY	ROUTE	POST MILES TOTAL PROJECT	SHEET No.	TOTAL SHEETS
06	Ker	5	62.5/73.1	27	213

REGISTERED CIVIL ENGINEER 06-10-14 DATE

6-16-14
PLANS APPROVAL DATE

REGISTERED PROFESSIONAL ENGINEER MAHMOOD A SULTAN No. 76344 Exp. 12-31-14 CIVIL STATE OF CALIFORNIA

THE STATE OF CALIFORNIA OR ITS OFFICERS OR AGENTS SHALL NOT BE RESPONSIBLE FOR THE ACCURACY OR COMPLETENESS OF SCANNED COPIES OF THIS PLAN SHEET.

CONSTRUCTION - STAGE 1 PHASE 1

(3) ON SOUTHBOUND DIRECTION AT BRIDGE APPROACHES, REMOVE CONCRETE BARRIER (TRANSITION) TO CONSTRUCT INSIDE SHOULDERS. SEE QUANTITY SHEETS.

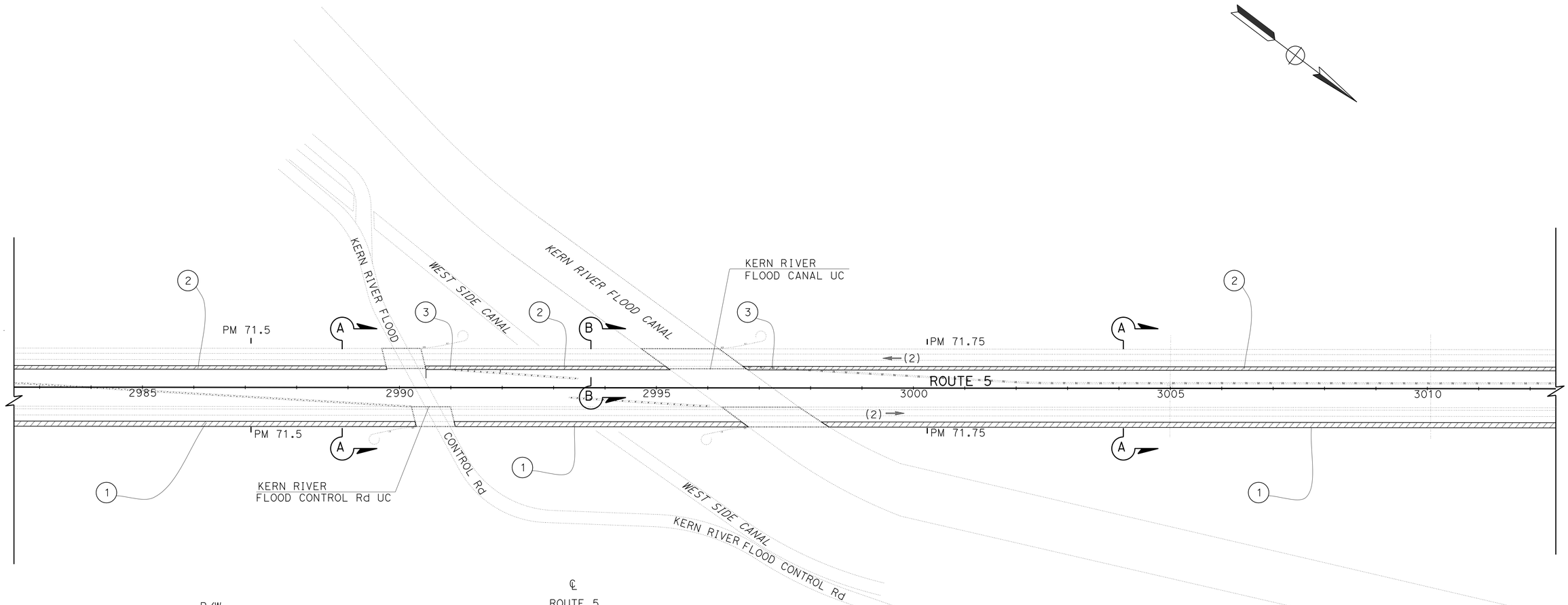

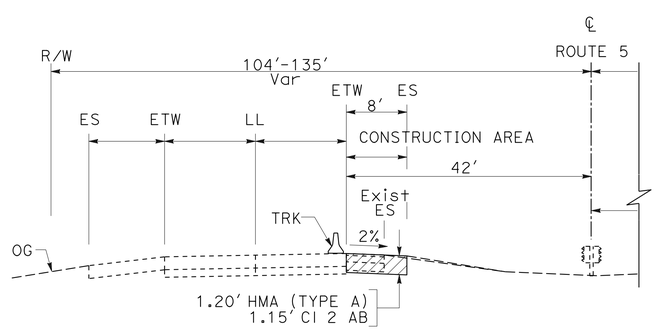

SOUTHBOUND

Sta 2990+51.00 TO Sta 2995+22.00

SECTION B-B

STAGE CONSTRUCTION PLAN
(STAGE 1 PHASE 1)

NO SCALE

SC-3

APPROVED FOR STAGE CONSTRUCTION WORK ONLY

STATE OF CALIFORNIA - DEPARTMENT OF TRANSPORTATION
Caltrans
DESIGN

FUNCTIONAL SUPERVISOR: DAVID SANGHA
CALCULATED-DESIGNED BY: CARMELITA BELLE
CHECKED BY: MAHMOOD SULTAN
REVISED BY
DATE REVISED

LAST REVISION 06-05-14
DATE PLOTTED => 24-JUL-2014
TIME PLOTTED => 10:03

Dist	COUNTY	ROUTE	POST MILES TOTAL PROJECT	SHEET No.	TOTAL SHEETS
06	Ker	5	62.5/73.1	28	213

REGISTERED CIVIL ENGINEER 06-10-14 DATE

6-16-14
PLANS APPROVAL DATE

REGISTERED PROFESSIONAL ENGINEER MAHMOOD A SULTAN No. 76344 Exp. 12-31-14 CIVIL STATE OF CALIFORNIA

THE STATE OF CALIFORNIA OR ITS OFFICERS OR AGENTS SHALL NOT BE RESPONSIBLE FOR THE ACCURACY OR COMPLETENESS OF SCANNED COPIES OF THIS PLAN SHEET.

SOUTHBOUND
Sta 2513+38.00 TO Sta 3071+24.00

NORTHBOUND
Sta 2504+50.00 TO Sta 3076+92.00

SECTION A-A
TYPICAL

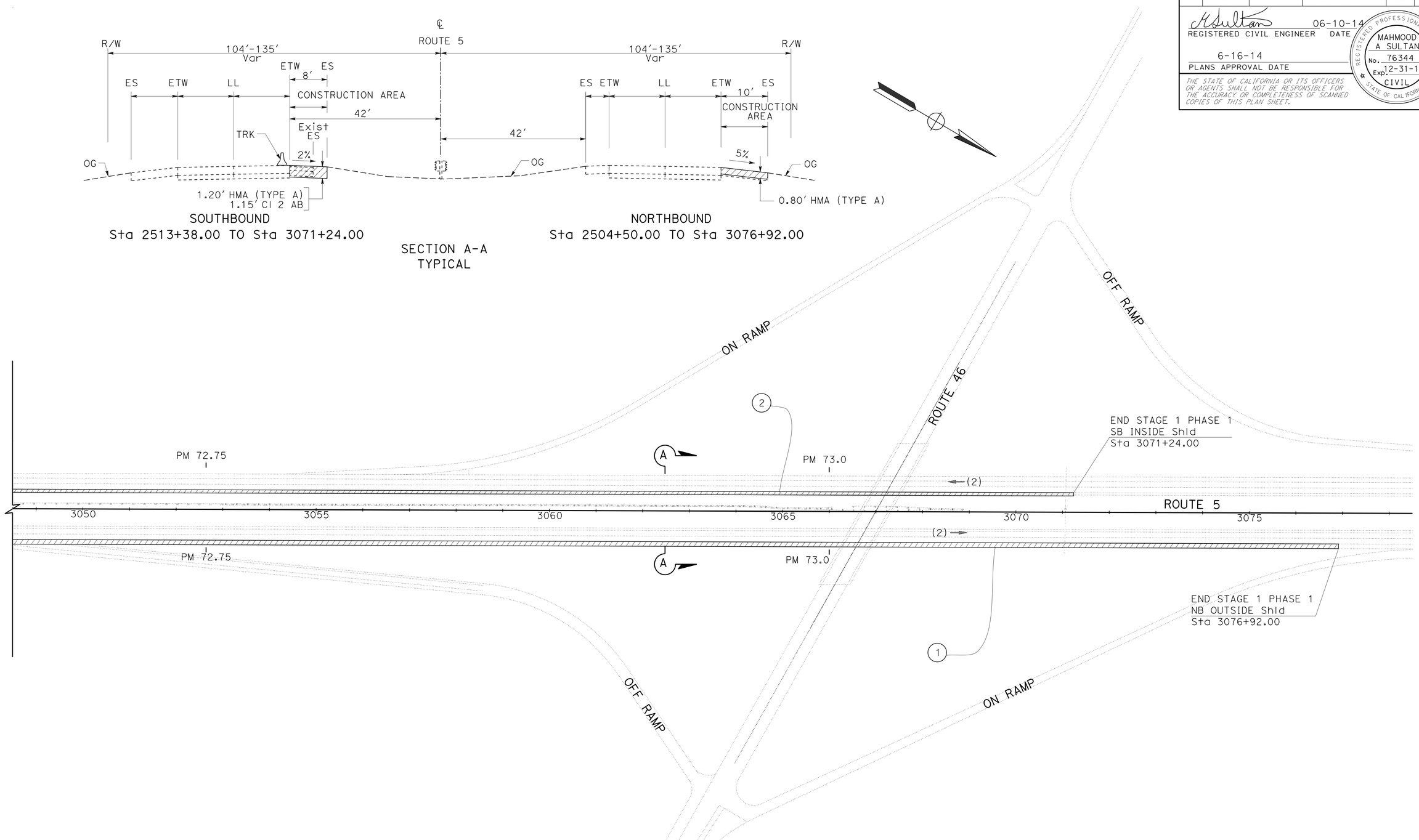

STAGE CONSTRUCTION PLAN
(STAGE 1, PHASE 1)

NO SCALE

SC-4

APPROVED FOR STAGE CONSTRUCTION WORK ONLY

STATE OF CALIFORNIA - DEPARTMENT OF TRANSPORTATION
Caltrans
DESIGN

FUNCTIONAL SUPERVISOR: DAVID SANGHA
CALCULATED-DESIGNED BY: MAHMOOD SULTAN
CHECKED BY: CARMELITA BELLE
REVISED BY
DATE REVISED

LAST REVISION 06-05-14
DATE PLOTTED => 24-JUL-2014
TIME PLOTTED => 10:03

Dist	COUNTY	ROUTE	POST MILES TOTAL PROJECT	SHEET No.	TOTAL SHEETS
06	Ker	5	62.5/73.1	29	213

REGISTERED CIVIL ENGINEER 06-10-14 DATE

6-16-14
PLANS APPROVAL DATE

REGISTERED PROFESSIONAL ENGINEER MAHMOOD A SULTAN No. 76344 Exp. 12-31-14 CIVIL STATE OF CALIFORNIA

THE STATE OF CALIFORNIA OR ITS OFFICERS OR AGENTS SHALL NOT BE RESPONSIBLE FOR THE ACCURACY OR COMPLETENESS OF SCANNED COPIES OF THIS PLAN SHEET.

CONSTRUCTION - STAGE 1 PHASE 2

1. ON NORTHBOUND DIRECTION CONSTRUCT OUTSIDE SHOULDER WIDENING FOR OFF-RAMP DETOUR. COLD PLANE AC PAVEMENT NB OFF-RAMP.
2. ON SOUTHBOUND DIRECTION CONSTRUCT OUTSIDE SHOULDER WIDENING WITH SB OUTSIDE SHOULDER FOR ON-RAMP DETOUR.
3. ON SOUTHBOUND DIRECTION COLD PLANE AC PAVEMENT SB ON-RAMP WITH SB OUTSIDE SHOULDER.

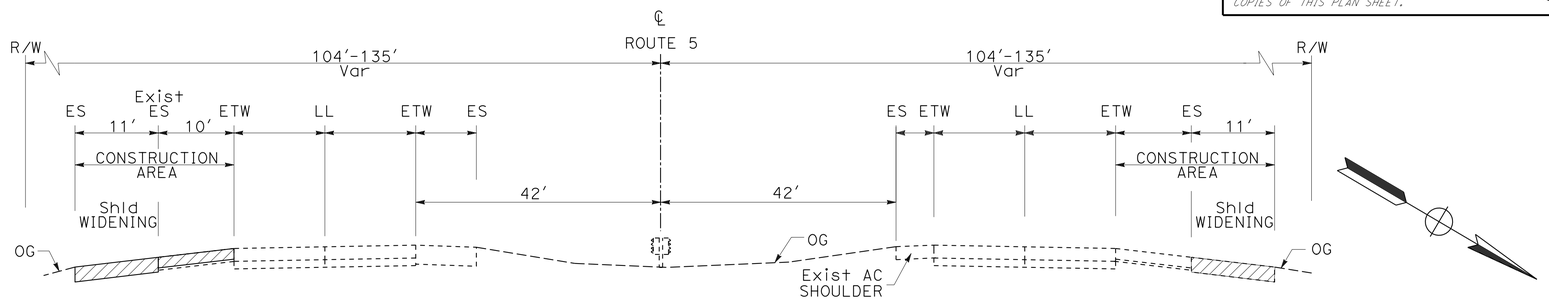

SECTION K-K

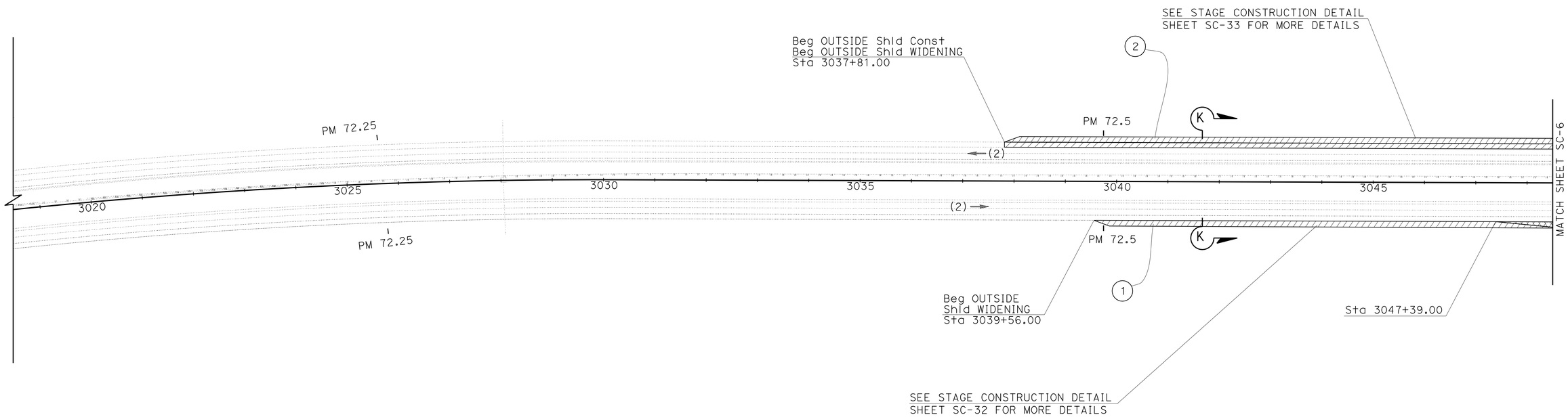

STAGE CONSTRUCTION PLAN
(STAGE 1, PHASE 2)

NO SCALE

SC-5

APPROVED FOR STAGE CONSTRUCTION WORK ONLY

STATE OF CALIFORNIA - DEPARTMENT OF TRANSPORTATION
Caltrans
DESIGN

FUNCTIONAL SUPERVISOR: DAVID SANGHA
CALCULATED-DESIGNED BY: MAHMOOD SULTAN
CHECKED BY: CARMELITA BELLE
REVISED BY
DATE REVISED

LAST REVISION 06-05-14
DATE PLOTTED => 24-JUL-2014
TIME PLOTTED => 10:03

Dist	COUNTY	ROUTE	POST MILES TOTAL PROJECT	SHEET No.	TOTAL SHEETS
06	Ker	5	62.5/73.1	30	213

REGISTERED CIVIL ENGINEER 06-10-14 DATE

6-16-14
PLANS APPROVAL DATE

REGISTERED PROFESSIONAL ENGINEER
MAHMOOD A SULTAN
No. 76344
Exp. 12-31-14
CIVIL
STATE OF CALIFORNIA

THE STATE OF CALIFORNIA OR ITS OFFICERS OR AGENTS SHALL NOT BE RESPONSIBLE FOR THE ACCURACY OR COMPLETENESS OF SCANNED COPIES OF THIS PLAN SHEET.

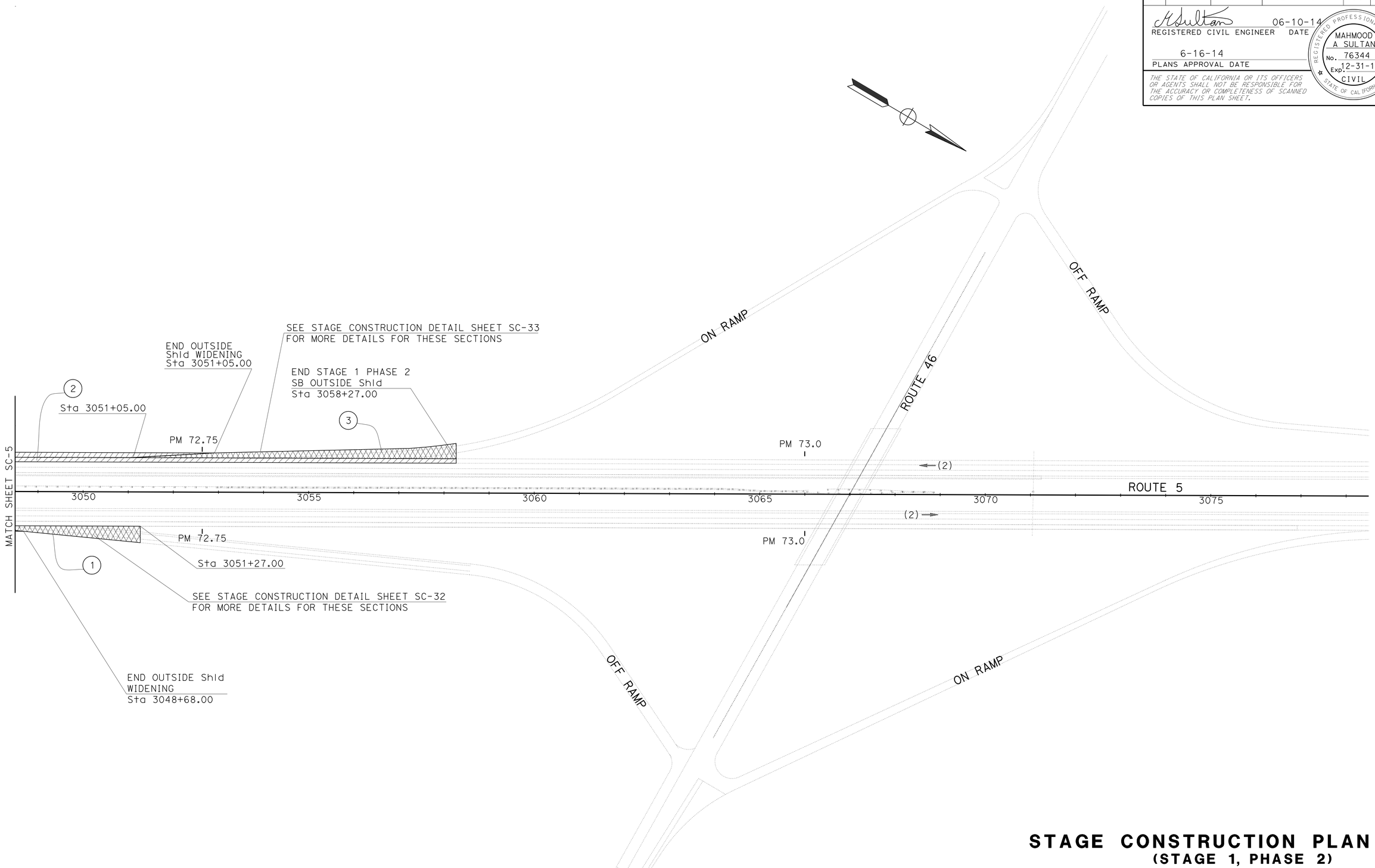

STAGE CONSTRUCTION PLAN
(STAGE 1, PHASE 2)

NO SCALE

SC-6

APPROVED FOR STAGE CONSTRUCTION WORK ONLY

STATE OF CALIFORNIA - DEPARTMENT OF TRANSPORTATION
Caltrans
DESIGN

FUNCTIONAL SUPERVISOR: DAVID SANGHA
CALCULATED-DESIGNED BY: MAHMOOD SULTAN
CHECKED BY: CARMELITA BELLE
REVISED BY
DATE REVISED

LAST REVISION 06-05-14
DATE PLOTTED => 24-JUL-2014
TIME PLOTTED => 10:03

Dist	COUNTY	ROUTE	POST MILES TOTAL PROJECT	SHEET No.	TOTAL SHEETS
06	Ker	5	62.5/73.1	31	213

REGISTERED CIVIL ENGINEER 06-10-14 DATE

6-16-14
PLANS APPROVAL DATE

REGISTERED PROFESSIONAL ENGINEER MAHMOOD A SULTAN No. 76344 Exp. 12-31-14 CIVIL STATE OF CALIFORNIA

THE STATE OF CALIFORNIA OR ITS OFFICERS OR AGENTS SHALL NOT BE RESPONSIBLE FOR THE ACCURACY OR COMPLETENESS OF SCANNED COPIES OF THIS PLAN SHEET.

CONSTRUCTION - STAGE 1 PHASE 2

(4) ON SOUTHBOUND DIRECTION AT LERDO HIGHWAY OFF RAMP CONSTRUCT OUTSIDE SHOULDER AND SHOULDER WIDENING. FOR TRAFFIC HANDLING (STAGE 1), SEE LANE CLOSURE CHARTS.

(5) ON NORTHBOUND DIRECTION NEAR LERDO HIGHWAY ON RAMP CONSTRUCT OUTSIDE SHOULDER WIDENING FOR ON-RAMP DETOUR. FOR TRAFFIC HANDLING (STAGE 1), SEE LANE CLOSURE CHARTS.

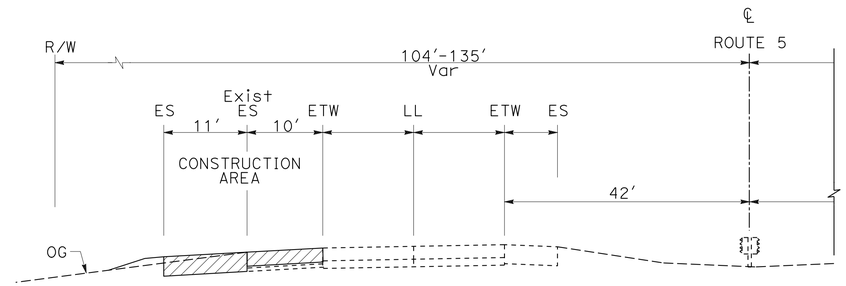

SOUTHBOUND
Sta 2532+76.00 TO Sta 2540+27.00

SECTION L-L

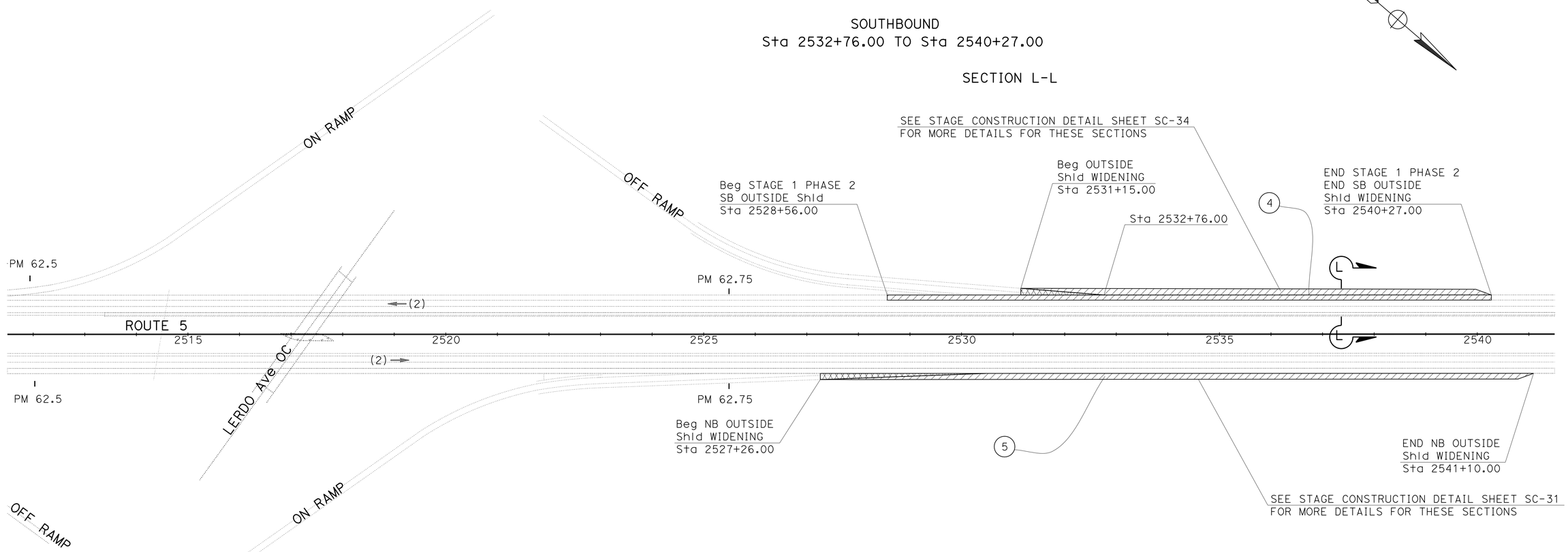

STAGE CONSTRUCTION PLAN
(STAGE 1 PHASE 2)

NO SCALE

SC-7

APPROVED FOR STAGE CONSTRUCTION WORK ONLY

STATE OF CALIFORNIA - DEPARTMENT OF TRANSPORTATION
DESIGN
Caltrans

FUNCTIONAL SUPERVISOR: DAVID SANGHA
CALCULATED-DESIGNED BY: MAHMOOD SULTAN
CHECKED BY: CARMELITA BELLE
REVISED BY
DATE REVISED

LAST REVISION 06-06-14
DATE PLOTTED => 24-JUL-2014
TIME PLOTTED => 10:03

Dist	COUNTY	ROUTE	POST MILES TOTAL PROJECT	SHEET No.	TOTAL SHEETS
06	Ker	5	62.5/73.1	32	213

REGISTERED CIVIL ENGINEER 06-10-14 DATE

6-16-14
PLANS APPROVAL DATE

REGISTERED PROFESSIONAL ENGINEER MAHMOOD A SULTAN No. 76344 Exp. 12-31-14 CIVIL STATE OF CALIFORNIA

THE STATE OF CALIFORNIA OR ITS OFFICERS OR AGENTS SHALL NOT BE RESPONSIBLE FOR THE ACCURACY OR COMPLETENESS OF SCANNED COPIES OF THIS PLAN SHEET.

CONSTRUCTION - STAGE 2

1. ON NORTHBOUND DIRECTION CONSTRUCT INSIDE MEDIAN DETOUR LANE AND CROSSOVERS BEHIND Temp RAILING (TYPE K) PER TRAFFIC HANDLING (STAGE 2), SEE TH-PLANS.
2. REMOVE THRIE BEAM TO CONSTRUCT CROSSOVER DETOURS. SEE QUANTITY SHEETS.
3. ON NORTHBOUND DIRECTION AT BRIDGE APPROACH, REMOVE THRIE BEAM & GUARDRAIL TO CONSTRUCT INSIDE SHOULDER MEDIAN DETOUR. SEE QUANTITY SHEETS.

NOTES: * SEE SUPERELEVATION DIAGRAM
** SEE DRAINAGE PLAN SHEET

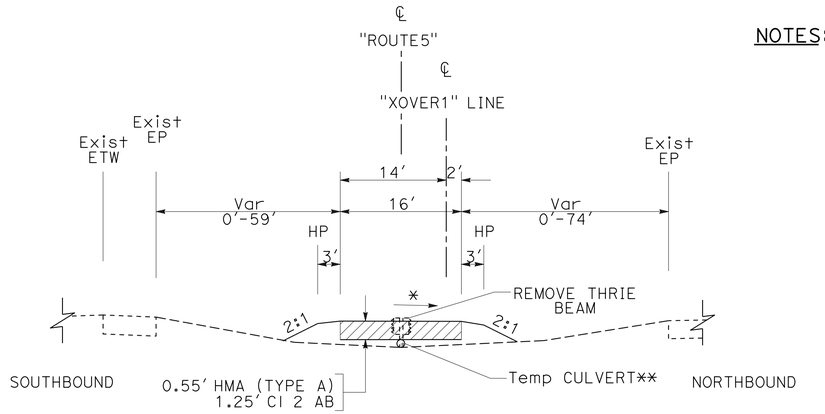

Sta 2954+43.00 TO Sta 2962+01.00 "XOVER2" LINE
Sta 2972+73.00 TO Sta 2980+25.00 "XOVER3" LINE
Sta 3001+08.00 TO Sta 3008+93.00 "XOVER4" LINE
Sta 3076+67.00 TO Sta 3086+31.00 "XOVER5" LINE

SECTION D-D

CROSSOVER

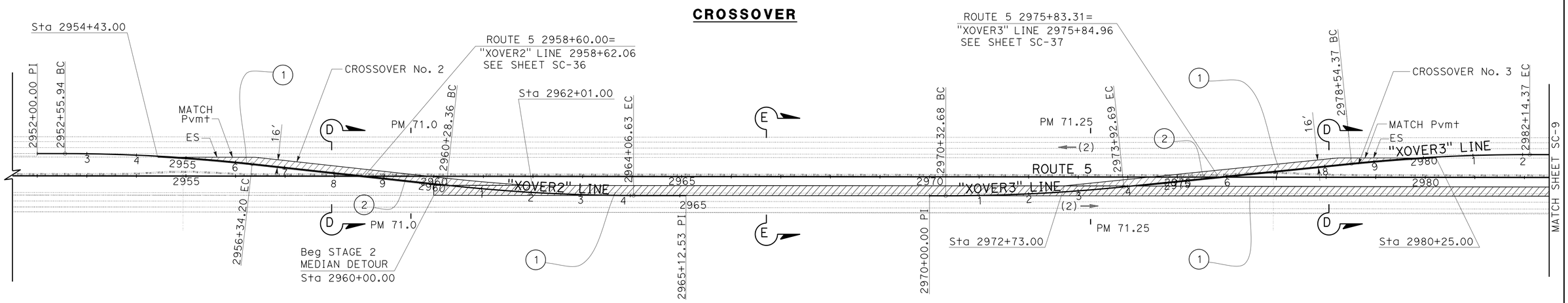

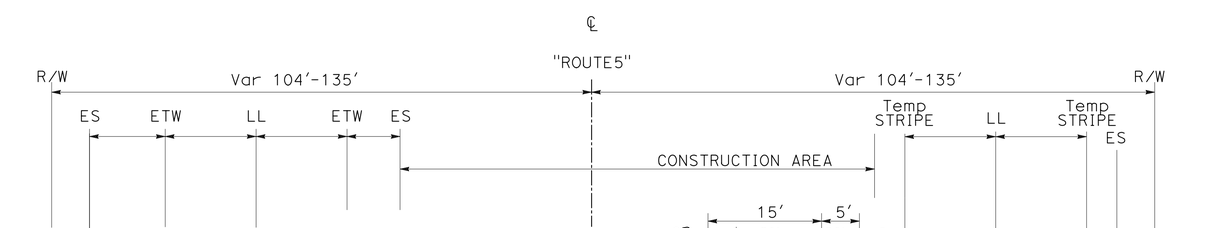

Sta 2960+00.00 TO Sta 3078+79.00

SECTION E-E
TYPICAL

APPROVED FOR STAGE CONSTRUCTION WORK ONLY

STAGE CONSTRUCTION PLAN
(STAGE 2)

NO SCALE

SC-8

CALCULATED- DESIGNED BY	CARMELITA BELLE
CHECKED BY	MAHMOOD SULTAN
REVISED BY	
DATE REVISED	
FUNCTIONAL SUPERVISOR	DAVID SANGHA

STATE OF CALIFORNIA - DEPARTMENT OF TRANSPORTATION
Caltrans® DESIGN

LAST REVISION 06-06-14 | DATE PLOTTED => 24-JUL-2014 | TIME PLOTTED => 10:03

Dist	COUNTY	ROUTE	POST MILES TOTAL PROJECT	SHEET No.	TOTAL SHEETS
06	Ker	5	62.5/73.1	33	213

REGISTERED CIVIL ENGINEER 06-10-14 DATE

6-16-14
PLANS APPROVAL DATE

REGISTERED PROFESSIONAL ENGINEER MAHMOOD A SULTAN No. 76344 Exp. 12-31-14 CIVIL STATE OF CALIFORNIA

THE STATE OF CALIFORNIA OR ITS OFFICERS OR AGENTS SHALL NOT BE RESPONSIBLE FOR THE ACCURACY OR COMPLETENESS OF SCANNED COPIES OF THIS PLAN SHEET.

CONSTRUCTION - STAGE 2

(3) ON NORTHBOUND DIRECTION AT BRIDGE APPROACH, REMOVE THRIE BEAM TO CONSTRUCT INSIDE MEDIAN DETOUR. REPLACE THRIE BEAM THIS STAGE. SEE QUANTITY SHEETS.

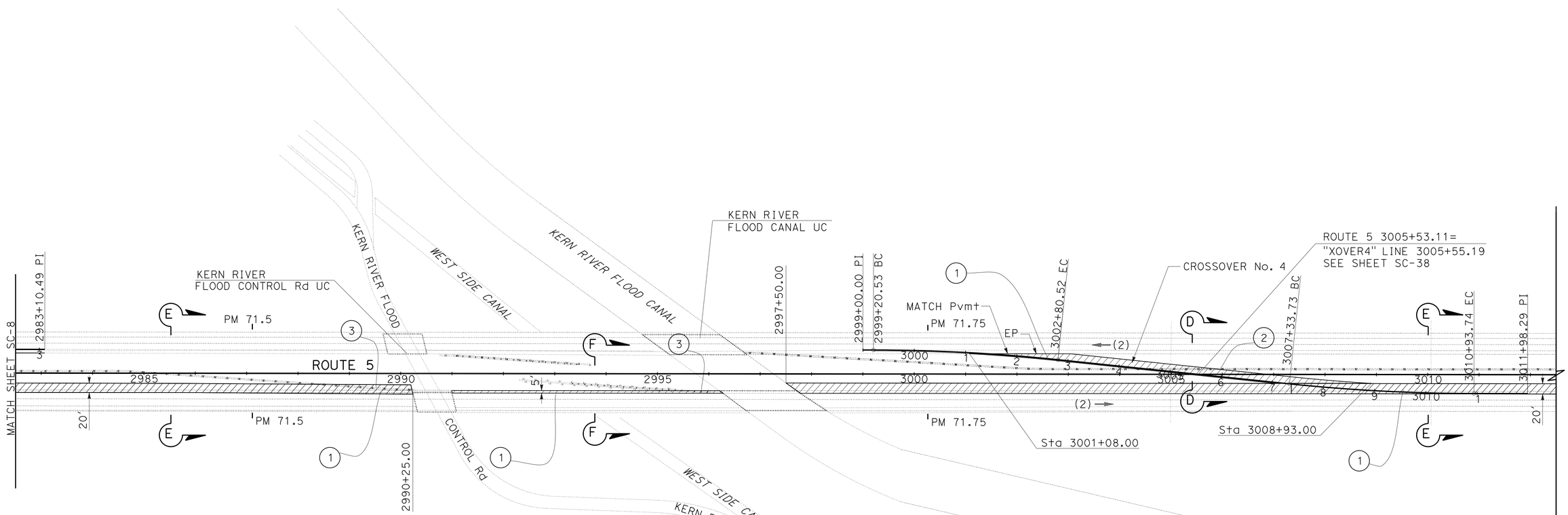

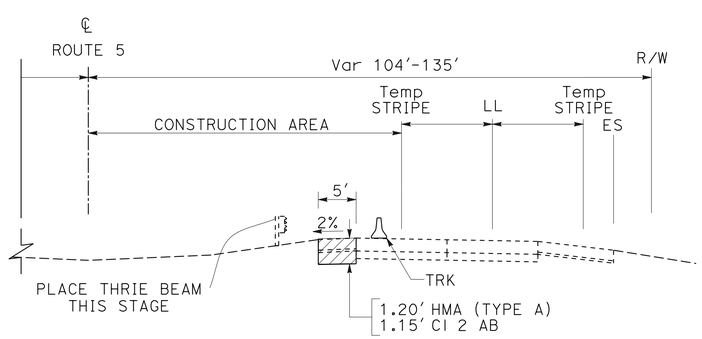

Sta 2991+00.00 TO Sta 2996+25.00
SECTION F-F
BETWEEN BRIDGES

STAGE CONSTRUCTION PLAN
(STAGE 2)

NO SCALE

SC-9

APPROVED FOR STAGE CONSTRUCTION WORK ONLY

STATE OF CALIFORNIA - DEPARTMENT OF TRANSPORTATION
Caltrans® DESIGN

FUNCTIONAL SUPERVISOR: DAVID SANGHA
CALCULATED-DESIGNED BY: CARMELITA BELLE
CHECKED BY: MAHMOOD SULTAN
REVISED BY
DATE REVISED

LAST REVISION 06-06-14 | DATE PLOTTED => 24-JUL-2014 | TIME PLOTTED => 10:03

Dist	COUNTY	ROUTE	POST MILES TOTAL PROJECT	SHEET No.	TOTAL SHEETS
06	Ker	5	62.5/73.1	34	213

REGISTERED CIVIL ENGINEER 06-10-14 DATE

6-16-14
PLANS APPROVAL DATE

REGISTERED PROFESSIONAL ENGINEER
MAHMOOD A SULTAN
No. 76344
Exp. 12-31-14
CIVIL
STATE OF CALIFORNIA

THE STATE OF CALIFORNIA OR ITS OFFICERS OR AGENTS SHALL NOT BE RESPONSIBLE FOR THE ACCURACY OR COMPLETENESS OF SCANNED COPIES OF THIS PLAN SHEET.

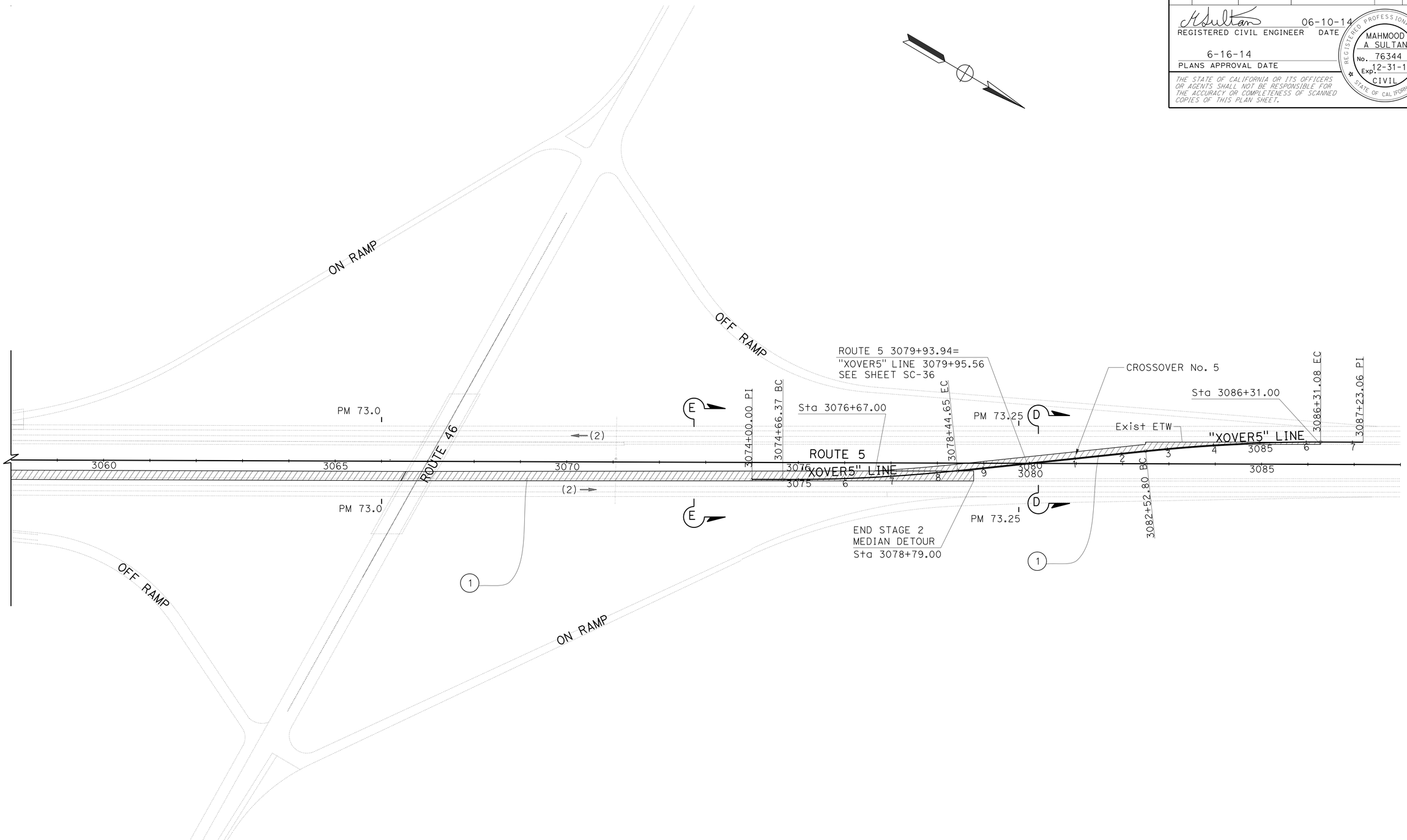

STAGE CONSTRUCTION PLAN
(STAGE 2)

NO SCALE

SC-10

APPROVED FOR STAGE CONSTRUCTION WORK ONLY

STATE OF CALIFORNIA - DEPARTMENT OF TRANSPORTATION
Caltrans
DESIGN

FUNCTIONAL SUPERVISOR: DAVID SANGHA
CALCULATED-DESIGNED BY: MAHMOOD SULTAN
CHECKED BY
REVISED BY
DATE REVISED
CARMELITA BELLE

LAST REVISION 06-06-14
DATE PLOTTED => 24-JUL-2014
TIME PLOTTED => 10:03

Dist	COUNTY	ROUTE	POST MILES TOTAL PROJECT	SHEET No.	TOTAL SHEETS
06	Ker	5	62.5/73.1	35	213

REGISTERED CIVIL ENGINEER DATE 06-10-14

PLANS APPROVAL DATE 6-16-14

REGISTERED PROFESSIONAL ENGINEER MAHMOOD A SULTAN No. 76344 Exp. 12-31-14 CIVIL STATE OF CALIFORNIA

THE STATE OF CALIFORNIA OR ITS OFFICERS OR AGENTS SHALL NOT BE RESPONSIBLE FOR THE ACCURACY OR COMPLETENESS OF SCANNED COPIES OF THIS PLAN SHEET.

CONSTRUCTION - STAGE 3 PHASE 1

PHASE 1

(1) CONSTRUCT SOUTHBOUND LANE #2 AND OUTSIDE Shld AT ROUTE 46/5 SEPARATION ON-RAMP, USING Temp RAILING (TYPE K).

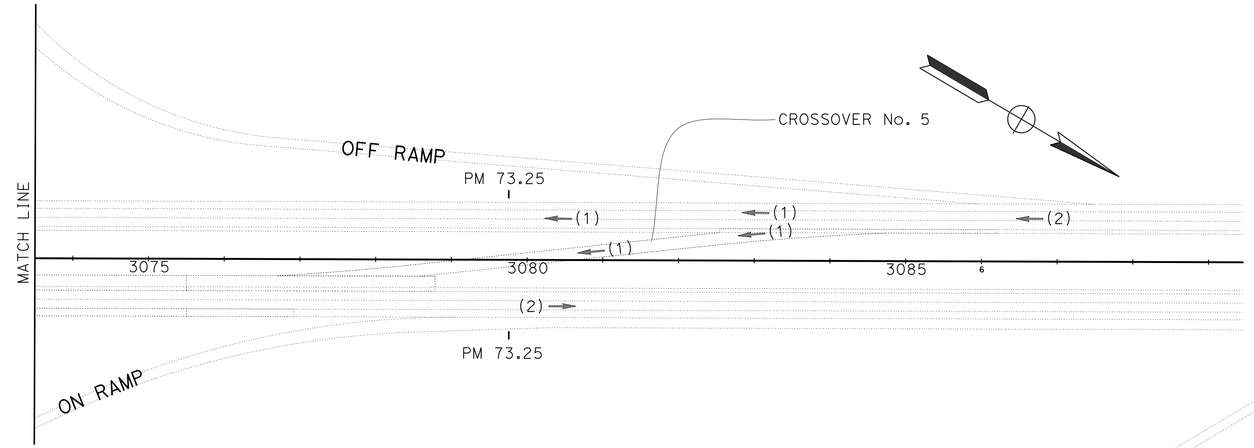

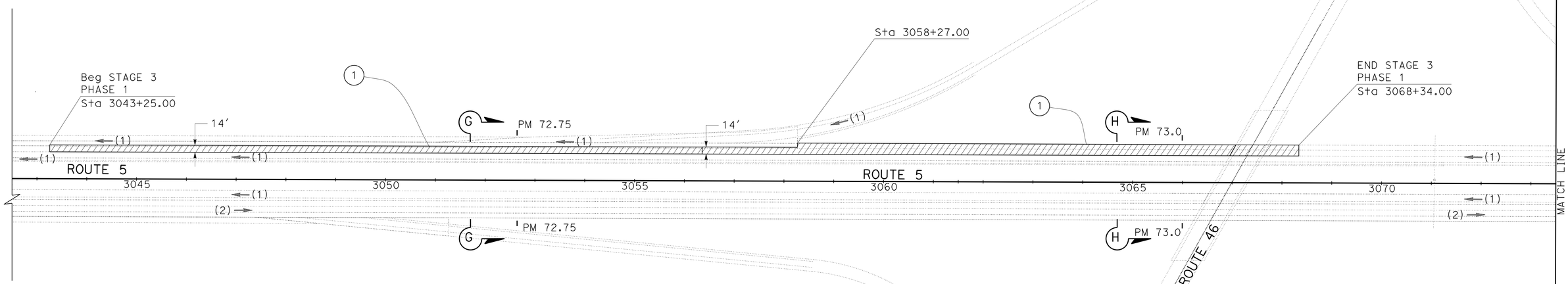

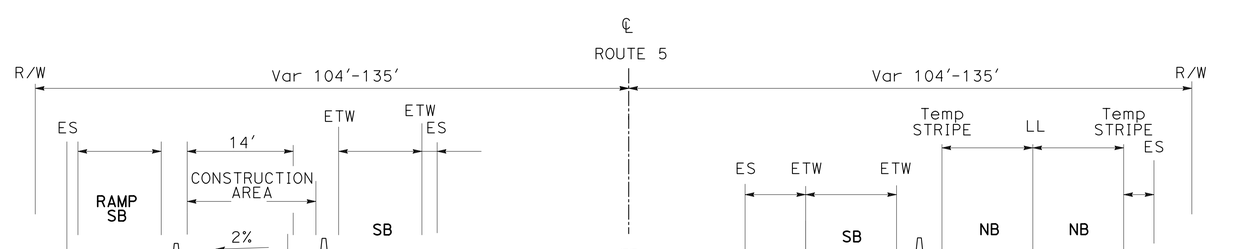

Sta 3043+25.00 TO Sta 3058+27.00

SECTION G-G

APPROVED FOR STAGE CONSTRUCTION WORK ONLY

STAGE CONSTRUCTION PLAN
(STAGE 3 PHASE 1)

NO SCALE

SC-11

STATE OF CALIFORNIA - DEPARTMENT OF TRANSPORTATION

Caltrans® **DESIGN**

FUNCTIONAL SUPERVISOR: DAVID SANGHA

CALCULATED-DESIGNED BY: MAHMOOD SULTAN

CHECKED BY: CARMELITA BELLE

REVISED BY

DATE REVISED

LAST REVISION 06-06-14 | DATE PLOTTED => 24-JUL-2014 | TIME PLOTTED => 10:03

Dist	COUNTY	ROUTE	POST MILES TOTAL PROJECT	SHEET No.	TOTAL SHEETS
06	Ker	5	62.5/73.1	36	213

REGISTERED CIVIL ENGINEER 06-10-14 DATE

6-16-14
PLANS APPROVAL DATE

REGISTERED PROFESSIONAL ENGINEER MAHMOOD A SULTAN No. 76344 Exp. 12-31-14 CIVIL STATE OF CALIFORNIA

THE STATE OF CALIFORNIA OR ITS OFFICERS OR AGENTS SHALL NOT BE RESPONSIBLE FOR THE ACCURACY OR COMPLETENESS OF SCANNED COPIES OF THIS PLAN SHEET.

CONSTRUCTION - STAGE 3

CONSTRUCT FROM KERN RIVER FLOOD CONTROL UC TO ROUTE 46/5 SEPARATION BEHIND Temp RAILING (TYPE K) PER TRAFFIC HANDLING (STAGE 3, PHASE 3) , SEE TH-PLANS.

PHASE 2

(2) CONSTRUCT SOUTHBOUND LANE #2 AND OUTSIDE SHOULDER, REMOVE AC DIKE, AND PLACE HMA DIKE.

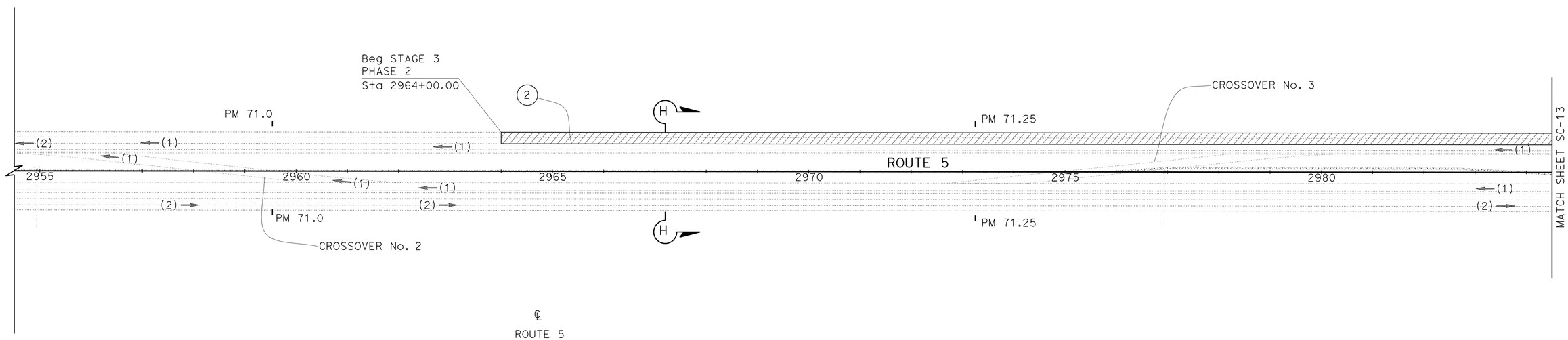

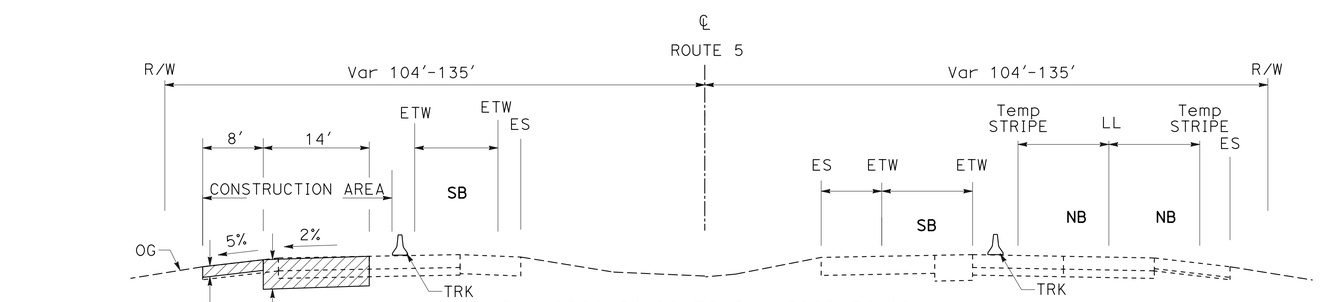

STAGE CONSTRUCTION PLAN
(STAGE 3 PHASE 2)

NO SCALE

SC-12

APPROVED FOR STAGE CONSTRUCTION WORK ONLY

REVISED BY | DATE REVISED
CARMELITA BELLE | MAHMOOD SULTAN
CALCULATED-DESIGNED BY | CHECKED BY
FUNCTIONAL SUPERVISOR: DAVID SANGHA
STATE OF CALIFORNIA - DEPARTMENT OF TRANSPORTATION
Caltrans
DESIGN

LAST REVISION 06-06-14 | DATE PLOTTED => 24-JUL-2014 | TIME PLOTTED => 10:03

Dist	COUNTY	ROUTE	POST MILES TOTAL PROJECT	SHEET No.	TOTAL SHEETS
06	Ker	5	62.5/73.1	37	213

REGISTERED CIVIL ENGINEER 06-10-14 DATE

6-16-14
PLANS APPROVAL DATE

REGISTERED PROFESSIONAL ENGINEER MAHMOOD A SULTAN No. 76344 Exp. 12-31-14 CIVIL STATE OF CALIFORNIA

THE STATE OF CALIFORNIA OR ITS OFFICERS OR AGENTS SHALL NOT BE RESPONSIBLE FOR THE ACCURACY OR COMPLETENESS OF SCANNED COPIES OF THIS PLAN SHEET.

CONSTRUCTION - STAGE 3 PHASE 2

(3) ON SOUTHBOUND DIRECTION AT BRIDGE APPROACH, REMOVE AC DIKES AND PLACE HMA DIKES TO CONSTRUCT OUTSIDE SHOULDERS. REMOVE AC DIKES AND PLACE HMA DIKES. SEE QUANTITY SHEETS.

(4) ON SOUTHBOUND DIRECTION AT BRIDGE APPROACH, REMOVE GUARDRAIL AND PLACE MGS & CONCRETE BARRIER (TRANSITION) TO CONSTRUCT OUTSIDE SHOULDERS.

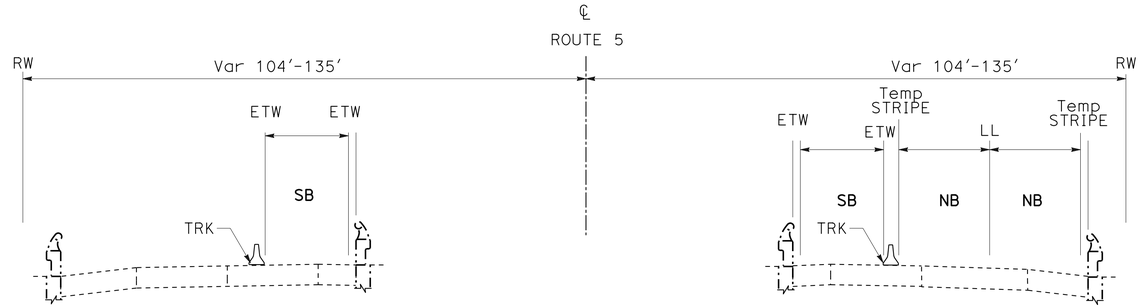

SOUTHBOUND

SECTION J-J

NORTHBOUND

KERN RIVER FLOOD CONTROL Rd UC (Br 50-0314)
KERN RIVER FLOOD CANAL UC (Br 50-0315)

BRIDGES

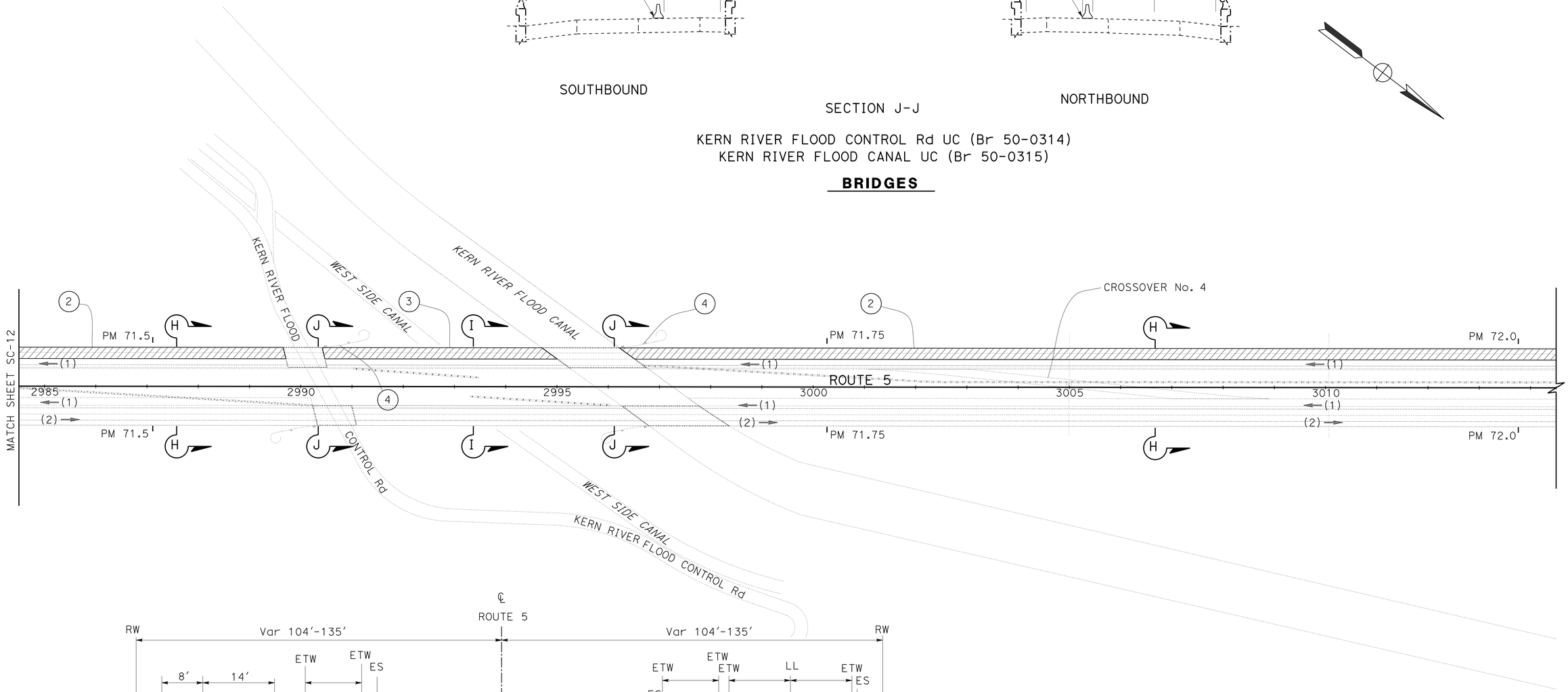

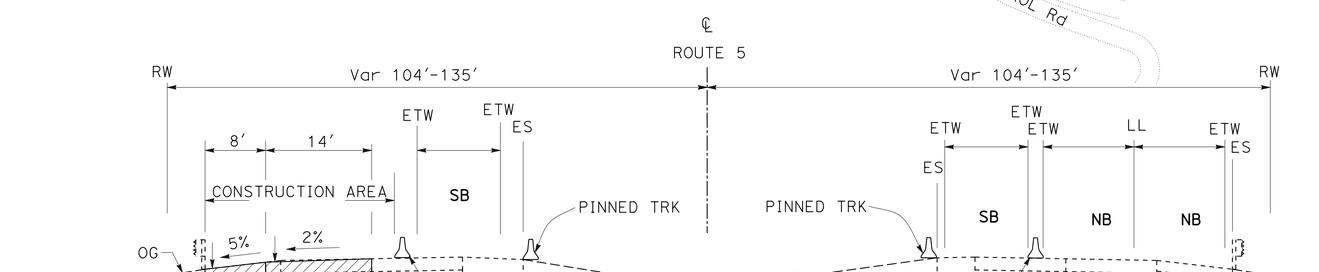

SOUTHBOUND

NORTHBOUND

Sta 2990+42.00 TO Sta 2995+00.00

SECTION I-I

BETWEEN BRIDGES

APPROVED FOR STAGE CONSTRUCTION WORK ONLY

STAGE CONSTRUCTION PLAN
(STAGE 3 PHASE 2)

NO SCALE

SC-13

STATE OF CALIFORNIA - DEPARTMENT OF TRANSPORTATION
Caltrans® DESIGN

FUNCTIONAL SUPERVISOR: DAVID SANGHA
CALCULATED-DESIGNED BY: MAHMOOD SULTAN
CHECKED BY: CARMELITA BELLE
REVISED BY
DATE REVISED

LAST REVISION 06-06-14
DATE PLOTTED => 24-JUL-2014
TIME PLOTTED => 10:03

Dist	COUNTY	ROUTE	POST MILES TOTAL PROJECT	SHEET No.	TOTAL SHEETS
06	Ker	5	62.5/73.1	38	213

REGISTERED CIVIL ENGINEER 06-10-14 DATE

PLANS APPROVAL DATE 6-16-14

REGISTERED PROFESSIONAL ENGINEER MAHMOOD A SULTAN No. 76344 Exp. 12-31-14 CIVIL STATE OF CALIFORNIA

THE STATE OF CALIFORNIA OR ITS OFFICERS OR AGENTS SHALL NOT BE RESPONSIBLE FOR THE ACCURACY OR COMPLETENESS OF SCANNED COPIES OF THIS PLAN SHEET.

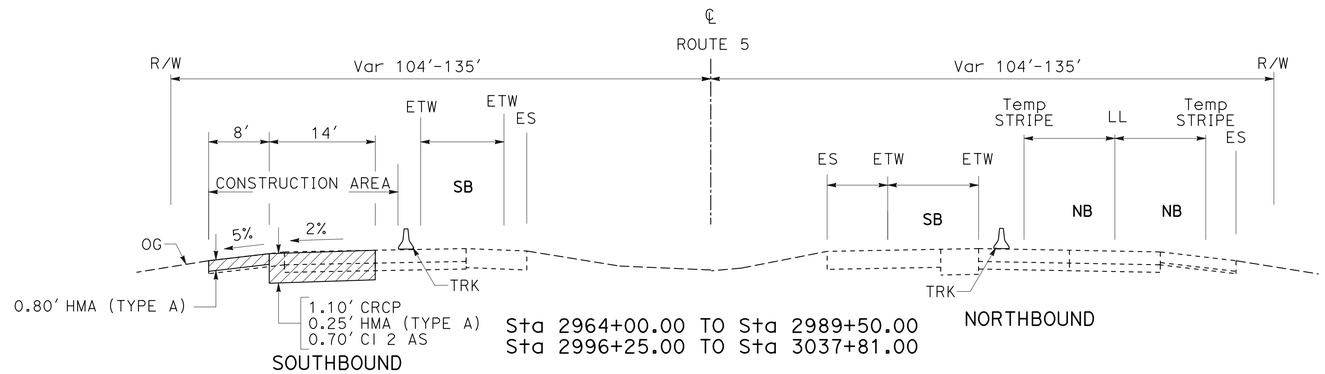

Sta 2964+00.00 TO Sta 2989+50.00
Sta 2996+25.00 TO Sta 3037+81.00

SECTION H-H

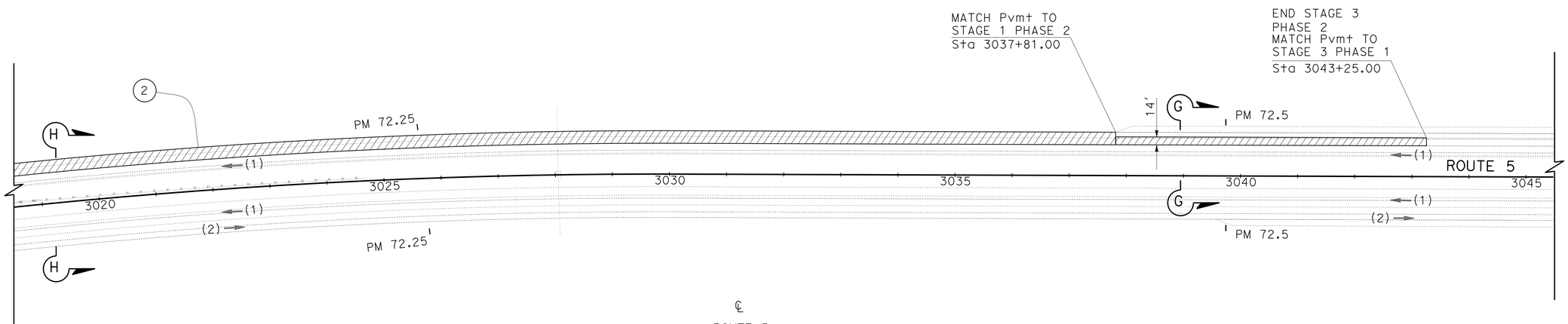

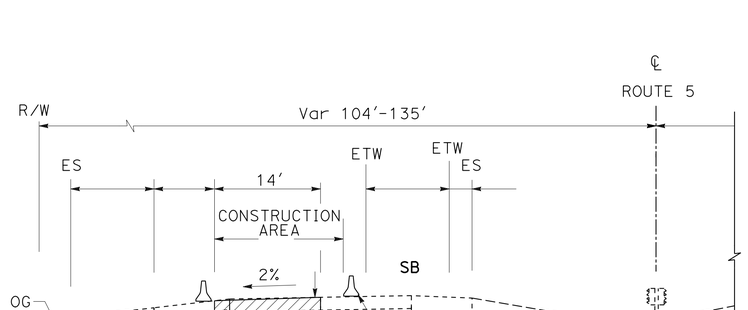

Sta 3037+81.00 TO Sta 3043+25.00

SECTION G-G

STAGE CONSTRUCTION PLAN
(STAGE 3 PHASE 2)

NO SCALE

SC-14

APPROVED FOR STAGE CONSTRUCTION WORK ONLY

STATE OF CALIFORNIA - DEPARTMENT OF TRANSPORTATION
Caltrans
DESIGN

FUNCTIONAL SUPERVISOR: DAVID SANGHA

CALCULATED-DESIGNED BY: CARMELITA BELLE
CHECKED BY: MAHMOOD SULTAN

REVISED BY
DATE REVISED

LAST REVISION 06-06-14
DATE PLOTTED => 24-JUL-2014
TIME PLOTTED => 10:03

Dist	COUNTY	ROUTE	POST MILES TOTAL PROJECT	SHEET No.	TOTAL SHEETS
06	Ker	5	62.5/73.1	39	213

REGISTERED CIVIL ENGINEER 06-10-14 DATE

6-16-14
PLANS APPROVAL DATE

REGISTERED PROFESSIONAL ENGINEER MAHMOOD A SULTAN No. 76344 Exp. 12-31-14 CIVIL STATE OF CALIFORNIA

THE STATE OF CALIFORNIA OR ITS OFFICERS OR AGENTS SHALL NOT BE RESPONSIBLE FOR THE ACCURACY OR COMPLETENESS OF SCANNED COPIES OF THIS PLAN SHEET.

CONSTRUCTION - STAGE 4

REMOVE TEMPORARY CROSSOVER #2 & #5, BEHIND Temp RAILING (TYPE K) AND PLACE MGS. IF NO LONGER NEEDED CROSSOVERS, TAKE IT OUT TO REDUCE ANY DRAINAGE CONCERNS. FOR TRAFFIC HANDLING , SEE LANE CLOSURE CHARTS. CONSTRUCT NB LANE #2 BEHIND Temp RAILING (TYPE K) PER TRAFFIC HANDLING (STAGE 4 PHASE ?) , SEE TH-PLANS.

PHASE 1

(1) CONSTRUCT NORTHBOUND LANE #2 AT ROUTE 46/5 SEPARATION OFF-RAMP AREA USING Temp RAILING (TYPE K).

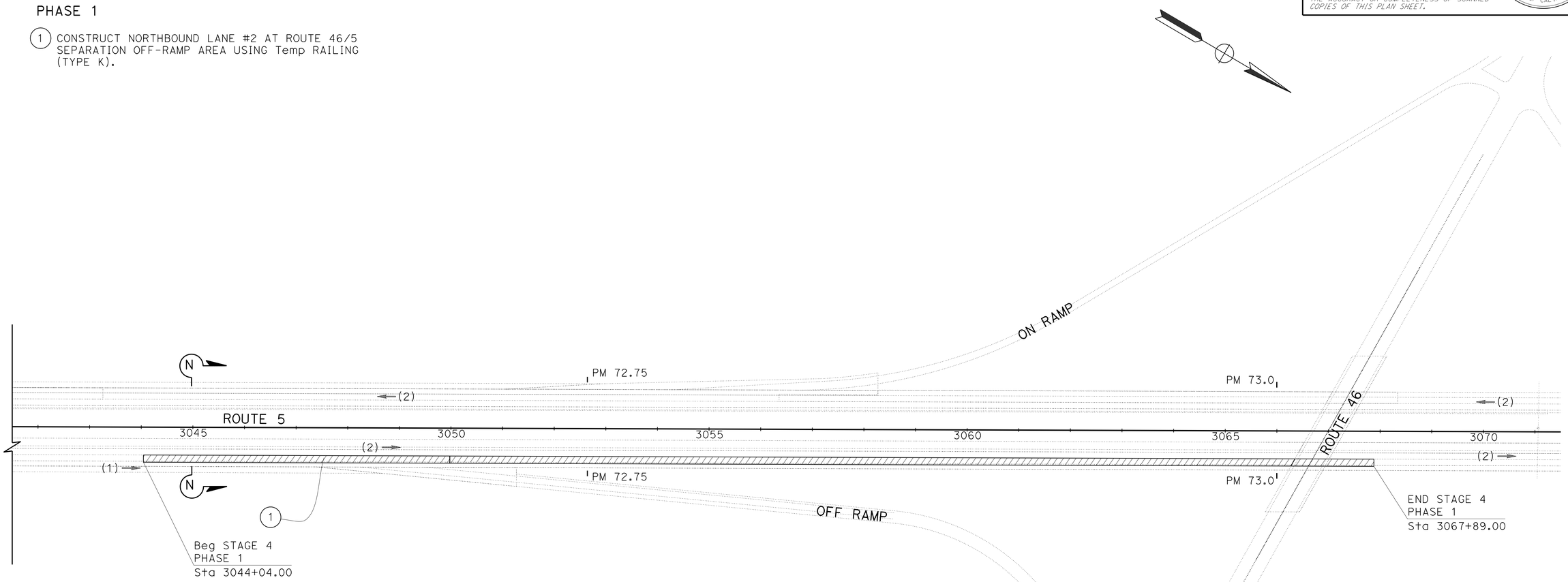

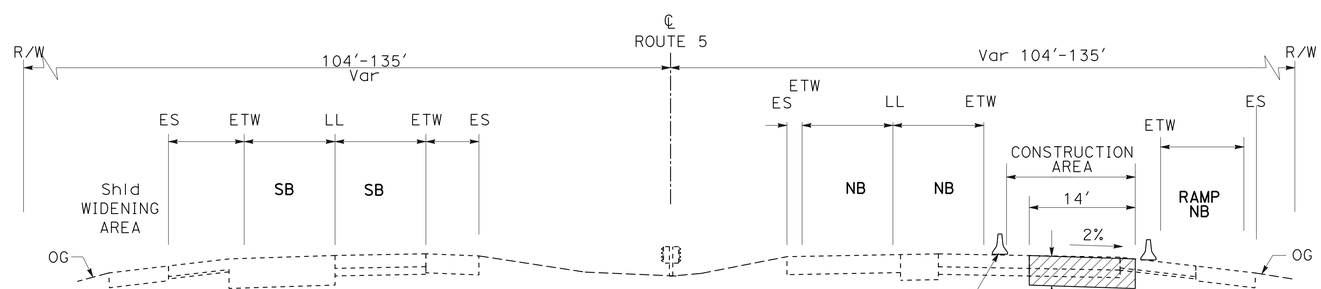

SOUTHBOUND NORTHBOUND

Sta 3044+04.00 TO Sta 3067+89.00

SECTION N-N

APPROVED FOR STAGE CONSTRUCTION WORK ONLY

STAGE CONSTRUCTION PLAN
(STAGE 4 PHASE 1)

NO SCALE

SC-15

STATE OF CALIFORNIA - DEPARTMENT OF TRANSPORTATION
Caltrans®
DESIGN

FUNCTIONAL SUPERVISOR: DAVID SANGHA
CALCULATED-DESIGNED BY: CARMELITA BELLE
CHECKED BY: MAHMOOD SULTAN
REVISED BY
DATE REVISED

LAST REVISION 06-06-14
DATE PLOTTED => 24-JUL-2014
TIME PLOTTED => 10:03

Dist	COUNTY	ROUTE	POST MILES TOTAL PROJECT	SHEET No.	TOTAL SHEETS
06	Ker	5	62.5/73.1	40	213

REGISTERED CIVIL ENGINEER DATE 06-10-14

PLANS APPROVAL DATE 6-16-14

REGISTERED PROFESSIONAL ENGINEER MAHMOOD A SULTAN No. 76344 Exp. 12-31-14 CIVIL STATE OF CALIFORNIA

THE STATE OF CALIFORNIA OR ITS OFFICERS OR AGENTS SHALL NOT BE RESPONSIBLE FOR THE ACCURACY OR COMPLETENESS OF SCANNED COPIES OF THIS PLAN SHEET.

CONSTRUCTION - STAGE 4

CONSTRUCT NB LANE #2 BEHIND Temp RAILING (TYPE K)
PER TRAFFIC HANDLING (STAGE 4 PHASE 3) , SEE TH-PLANS.

PHASE 2

(2) CONSTRUCT NORTHBOUND LANE #2.

(3) REMOVE GUARDRAIL,
PLACE MGS AND CONCRETE BARRIER (TRANSITION)

(4) AFTER CONSTRUCTION OF NB LANE #2, IF NO LONGER NEEDED CROSSOVER, REMOVE TEMPORARY CROSSOVER No. 4 BEHIND Temp RAILING (TYPE K) TO REDUCE ANY DRAINAGE CONCERNS, AND PLACE DTBB. FOR TRAFFIC HANDLING, SEE LANE CLOSURE CHARTS.

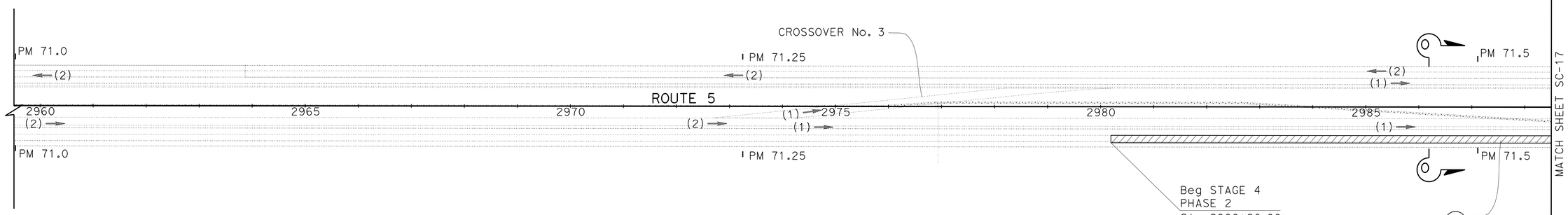

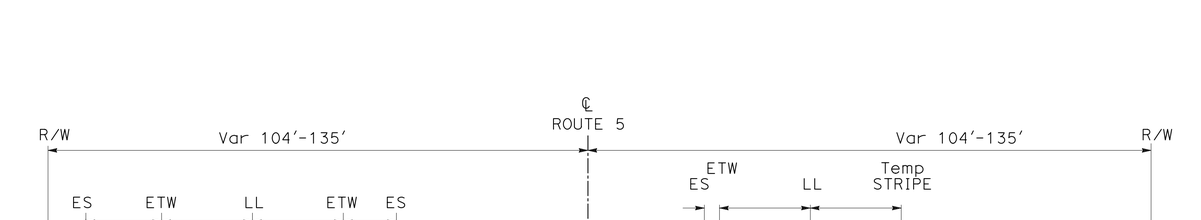

Sta 2980+20.00 TO Sta 2990+30.00
Sta 2998+02.00 TO Sta 3044+04.00
SECTION O-O

STAGE CONSTRUCTION PLAN
(STAGE 4 PHASE 2)

NO SCALE

SC-16

APPROVED FOR STAGE CONSTRUCTION WORK ONLY

STATE OF CALIFORNIA - DEPARTMENT OF TRANSPORTATION
DESIGN
Caltrans
FUNCTIONAL SUPERVISOR: DAVID SANGHA
CALCULATED-DESIGNED BY: CARMELITA BELLE
CHECKED BY: MAHMOOD SULTAN
REVISED BY
DATE REVISED

LAST REVISION 06-06-14 | DATE PLOTTED => 24-JUL-2014 | TIME PLOTTED => 10:03

Dist	COUNTY	ROUTE	POST MILES TOTAL PROJECT	SHEET No.	TOTAL SHEETS
06	Ker	5	62.5/73.1	41	213

REGISTERED CIVIL ENGINEER 06-10-14 DATE

6-16-14
PLANS APPROVAL DATE

REGISTERED PROFESSIONAL ENGINEER MAHMOOD A SULTAN No. 76344 Exp. 12-31-14 CIVIL STATE OF CALIFORNIA

THE STATE OF CALIFORNIA OR ITS OFFICERS OR AGENTS SHALL NOT BE RESPONSIBLE FOR THE ACCURACY OR COMPLETENESS OF SCANNED COPIES OF THIS PLAN SHEET.

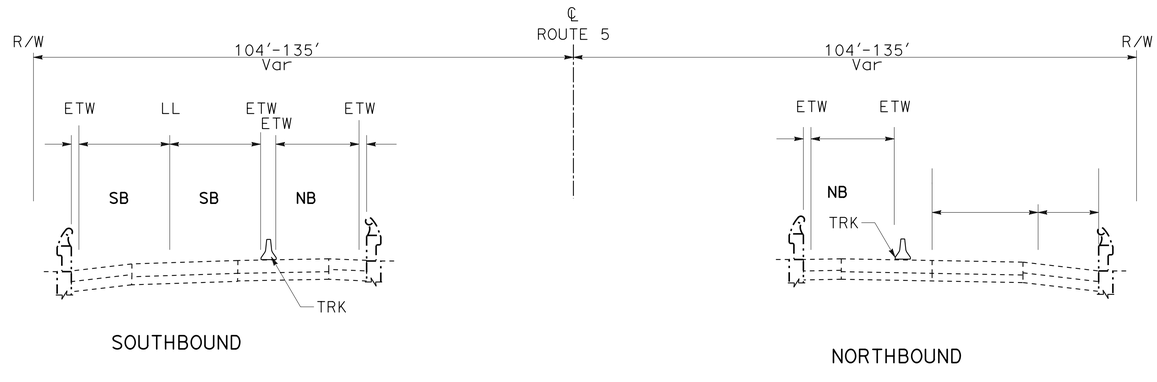

SECTION Q-Q

KERN RIVER FLOOD CONTROL Rd UC (Br 50-0314)
KERN RIVER FLOOD CANAL UC (Br 50-0315)

BRIDGES

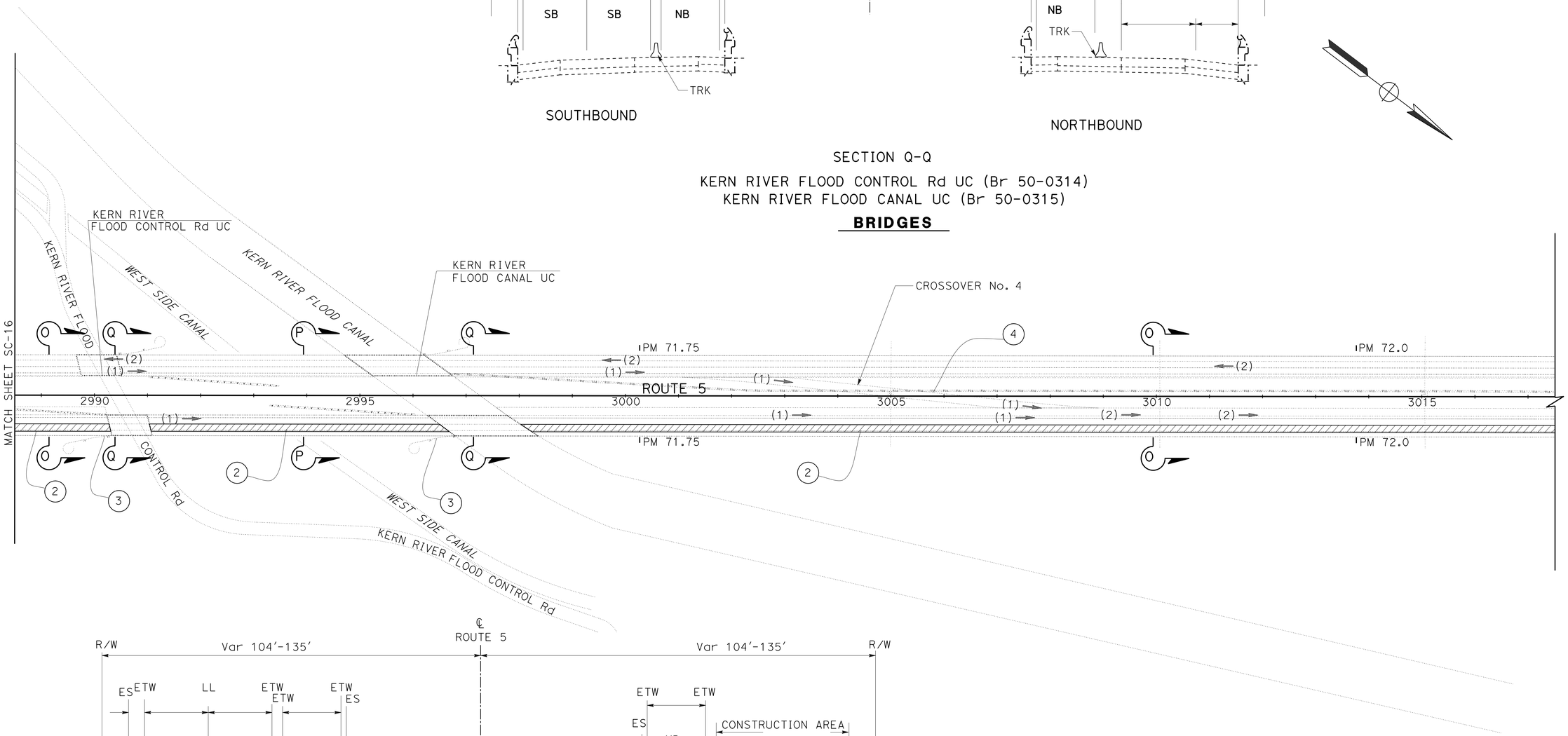

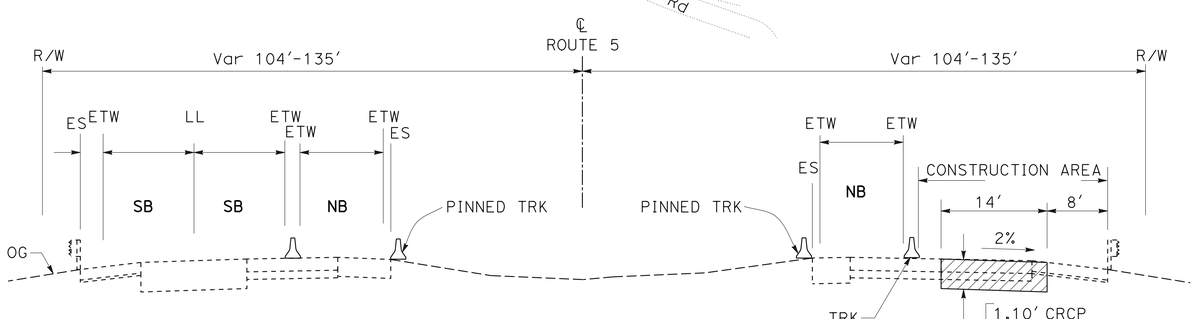

Sta 2991+04.00 TO Sta 2996+69.00
SECTION P-P

BETWEEN BRIDGES

APPROVED FOR STAGE CONSTRUCTION WORK ONLY

STAGE CONSTRUCTION PLAN
(STAGE 4 PHASE 2)

NO SCALE

SC-17

STATE OF CALIFORNIA - DEPARTMENT OF TRANSPORTATION
DESIGN

FUNCTIONAL SUPERVISOR: DAVID SANGHA
CALCULATED-DESIGNED BY: MAHMOOD SULTAN
CHECKED BY: CARMELITA BELLE
REVISED BY
DATE REVISED

LAST REVISION 06-06-14 | DATE PLOTTED => 24-JUL-2014 | TIME PLOTTED => 10:03

Dist	COUNTY	ROUTE	POST MILES TOTAL PROJECT	SHEET No.	TOTAL SHEETS
06	Ker	5	62.5/73.1	42	213

REGISTERED CIVIL ENGINEER 06-10-14 DATE

6-16-14
PLANS APPROVAL DATE

REGISTERED PROFESSIONAL ENGINEER
MAHMOOD A SULTAN
No. 76344
Exp. 12-31-14
CIVIL
STATE OF CALIFORNIA

THE STATE OF CALIFORNIA OR ITS OFFICERS OR AGENTS SHALL NOT BE RESPONSIBLE FOR THE ACCURACY OR COMPLETENESS OF SCANNED COPIES OF THIS PLAN SHEET.

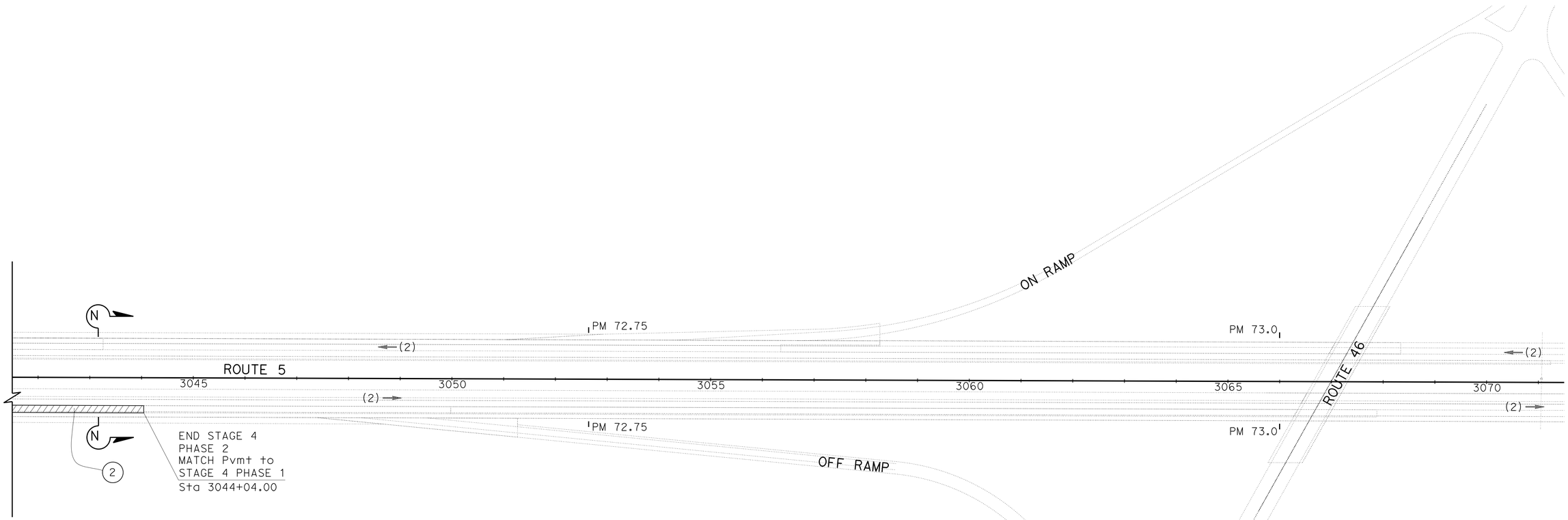

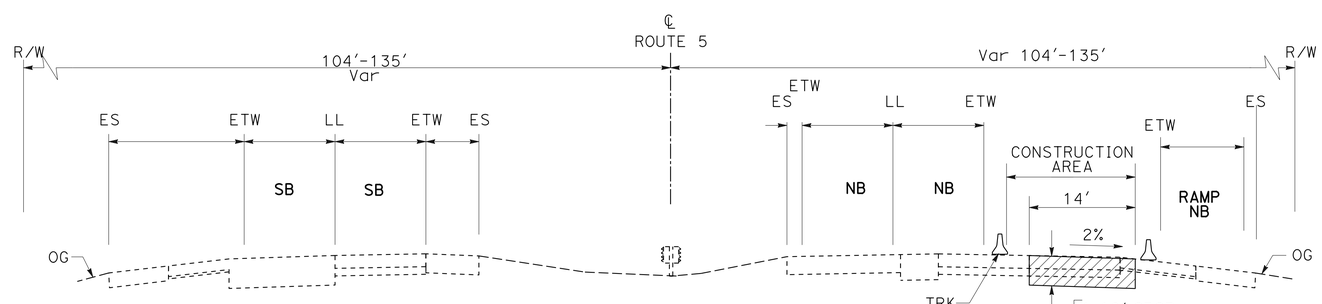

SOUTHBOUND

NORTHBOUND

SECTION N-N

APPROVED FOR STAGE CONSTRUCTION WORK ONLY

STAGE CONSTRUCTION PLAN
(STAGE 4 PHASE 2)

NO SCALE

SC-18

STATE OF CALIFORNIA - DEPARTMENT OF TRANSPORTATION
DESIGN

FUNCTIONAL SUPERVISOR: DAVID SANGHA

CALCULATED-DESIGNED BY: CARMELITA BELLE
CHECKED BY: MAHMOOD SULTAN

REVISED BY
DATE REVISED

LAST REVISION 06-06-14
DATE PLOTTED => 24-JUL-2014
TIME PLOTTED => 10:03

Dist	COUNTY	ROUTE	POST MILES TOTAL PROJECT	SHEET No.	TOTAL SHEETS
06	Ker	5	62.5/73.1	43	213

REGISTERED CIVIL ENGINEER 06-10-14 DATE

6-16-14
PLANS APPROVAL DATE

REGISTERED PROFESSIONAL ENGINEER MAHMOOD A SULTAN No. 76344 Exp. 12-31-14 CIVIL STATE OF CALIFORNIA

THE STATE OF CALIFORNIA OR ITS OFFICERS OR AGENTS SHALL NOT BE RESPONSIBLE FOR THE ACCURACY OR COMPLETENESS OF SCANNED COPIES OF THIS PLAN SHEET.

CONSTRUCTION - STAGE 5

(1) ON NORTHBOUND DIRECTION CONSTRUCT INSIDE MEDIAN DETOUR LANE AND CROSSOVER No. 1, BEHIND Temp RAILING (TYPE K) PER TRAFFIC HANDLING (STAGE 2), SEE TH-PLANS.

NOTES:
* SEE SUPERELEVATION DIAGRAM
** SEE DRAINAGE PLAN SHEET

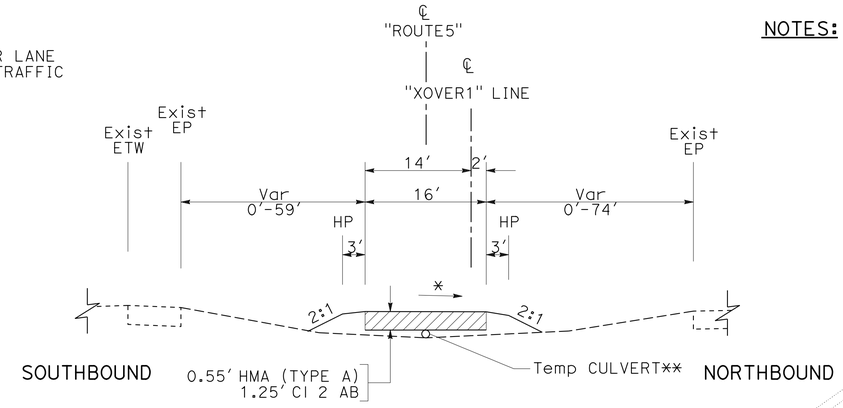

Sta 2500+50.00 TO Sta 2510+30.00 "XOVER1" LINE

SECTION D-D

CROSSOVER

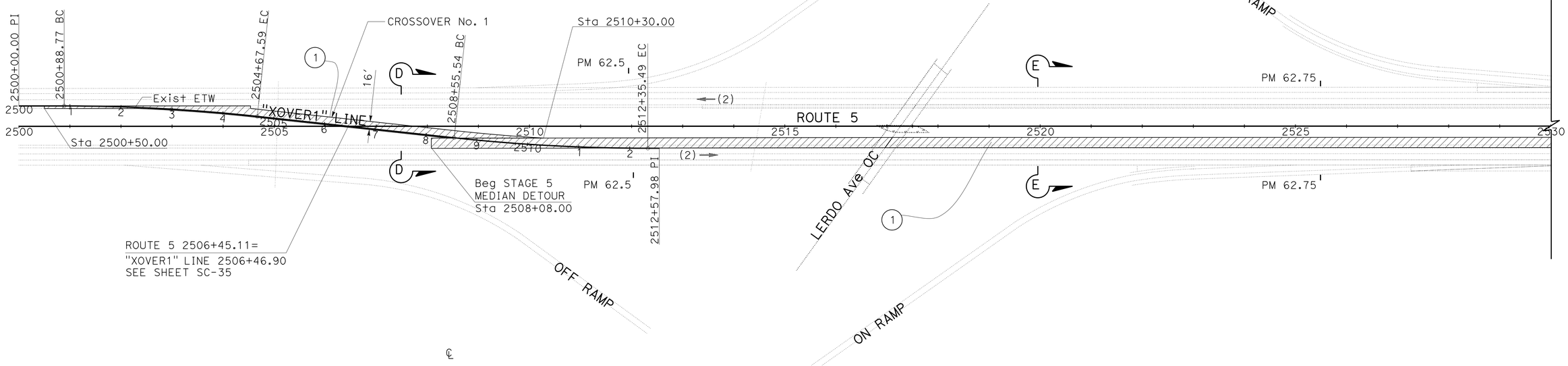

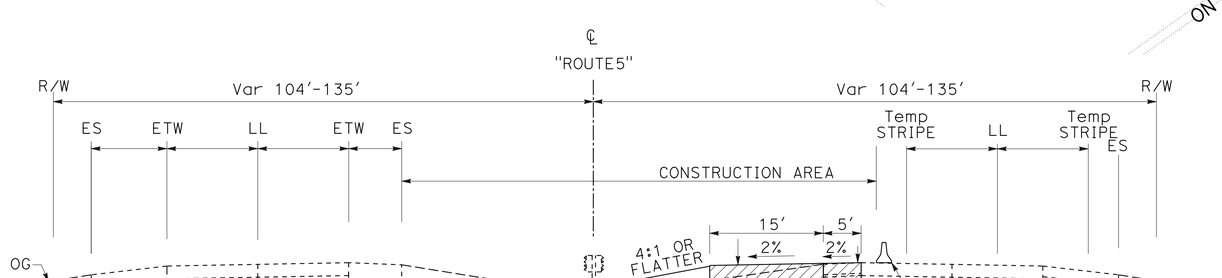

Sta 2508+08.00 TO Sta 2960+00.00

SECTION E-E
TYPICAL

APPROVED FOR STAGE CONSTRUCTION WORK ONLY

STAGE CONSTRUCTION PLAN
(STAGE 5)

NO SCALE

SC-19

STATE OF CALIFORNIA - DEPARTMENT OF TRANSPORTATION
DESIGN
Caltrans

FUNCTIONAL SUPERVISOR: DAVID SANGHA
CALCULATED-DESIGNED BY: MAHMOOD SULTAN
CHECKED BY: CARMELITA BELLE
REVISED BY
DATE REVISED

LAST REVISION 06-06-14
DATE PLOTTED => 24-JUL-2014
TIME PLOTTED => 10:03

Dist	COUNTY	ROUTE	POST MILES TOTAL PROJECT	SHEET No.	TOTAL SHEETS
06	Ker	5	62.5/73.1	44	213

REGISTERED CIVIL ENGINEER 06-10-14 DATE

6-16-14
PLANS APPROVAL DATE

REGISTERED PROFESSIONAL ENGINEER
MAHMOOD A SULTAN
No. 76344
Exp. 12-31-14
CIVIL
STATE OF CALIFORNIA

THE STATE OF CALIFORNIA OR ITS OFFICERS OR AGENTS SHALL NOT BE RESPONSIBLE FOR THE ACCURACY OR COMPLETENESS OF SCANNED COPIES OF THIS PLAN SHEET.

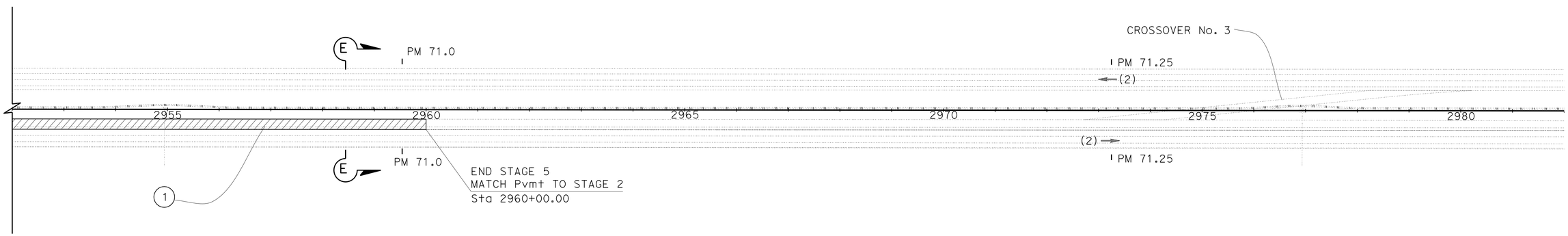

STAGE CONSTRUCTION PLAN
(STAGE 5)

NO SCALE

SC-20

APPROVED FOR STAGE CONSTRUCTION WORK ONLY

STATE OF CALIFORNIA - DEPARTMENT OF TRANSPORTATION
Caltrans
DESIGN

FUNCTIONAL SUPERVISOR: DAVID SANGHA
CALCULATED-DESIGNED BY: MAHMOOD SULTAN
CHECKED BY
REVISED BY
DATE REVISED

CARMELITA BELLE

LAST REVISION 06-06-14
DATE PLOTTED => 24-JUL-2014
TIME PLOTTED => 10:04

Dist	COUNTY	ROUTE	POST MILES TOTAL PROJECT	SHEET No.	TOTAL SHEETS
06	Ker	5	62.5/73.1	45	213

REGISTERED CIVIL ENGINEER 06-10-14 DATE

6-16-14
PLANS APPROVAL DATE

REGISTERED PROFESSIONAL ENGINEER MAHMOOD A SULTAN No. 76344 Exp. 12-31-14 CIVIL STATE OF CALIFORNIA

THE STATE OF CALIFORNIA OR ITS OFFICERS OR AGENTS SHALL NOT BE RESPONSIBLE FOR THE ACCURACY OR COMPLETENESS OF SCANNED COPIES OF THIS PLAN SHEET.

CONSTRUCTION - STAGE 6

CONSTRUCT SOUTHBOUND LANE #2 AND OUTSIDE Shld BEHIND Temp RAILING (TYPE K) PER TRAFFIC HANDLING (STAGE 3 PHASE 2), SEE TH-PLANS).

PHASE 1

(1) CONSTRUCT SOUTHBOUND LANE #2 AND HMA SHOULDER AT LERDO HIGHWAY OFF-RAMP. SEE RAMP CLOSURE CHARTS AND DETOUR PLANS.

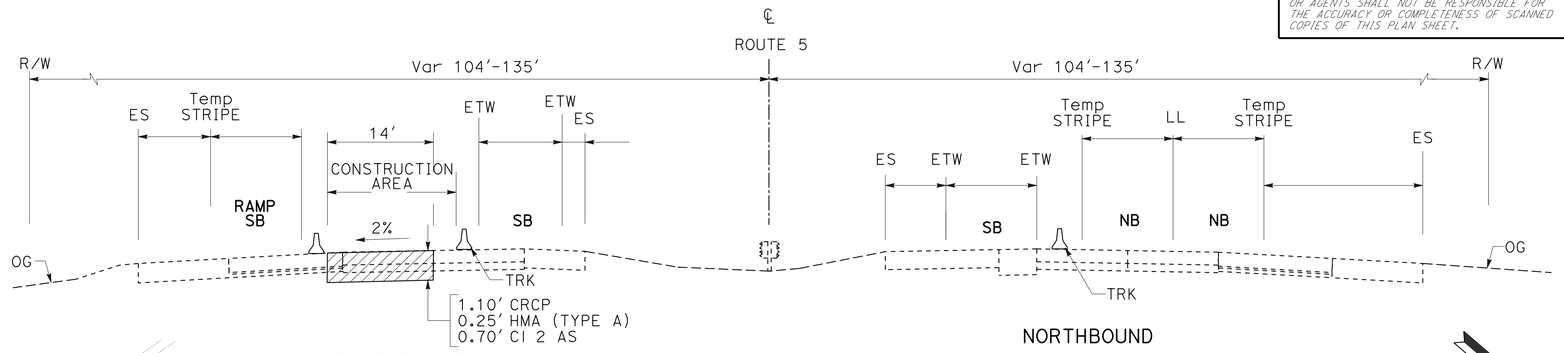

Sta 2528+56.00 TO Sta 2535+98.00

SECTION T-T

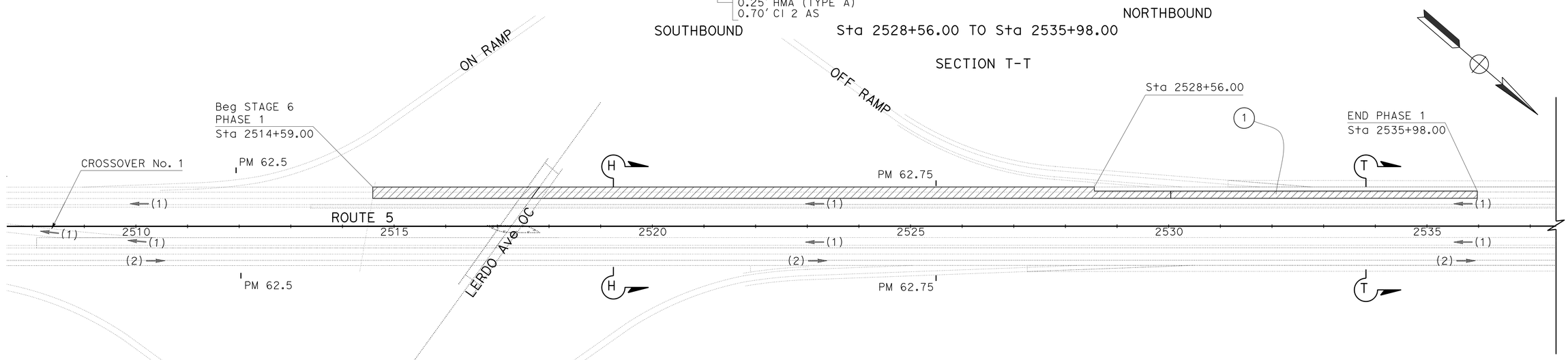

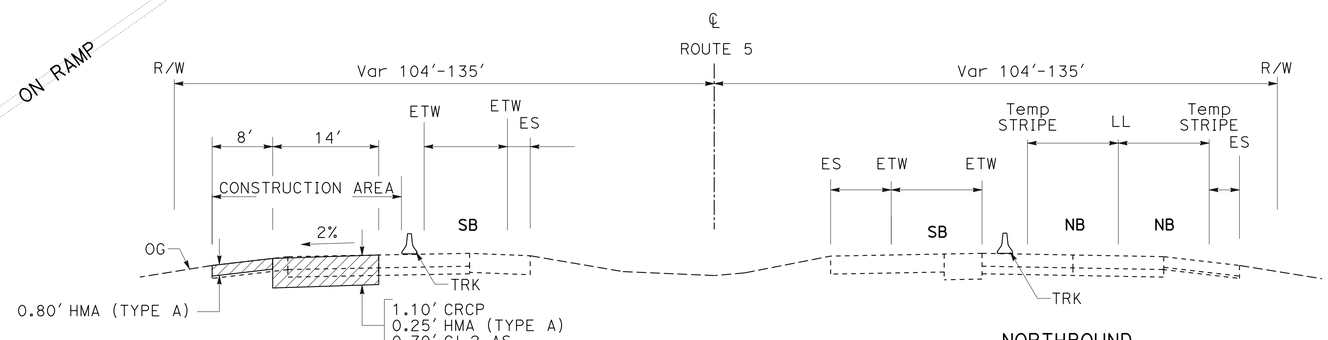

Sta 2514+59.00 TO Sta 2528+56.00

SECTION H-H

STAGE CONSTRUCTION PLAN
(STAGE 6 PHASE 1)

NO SCALE

SC-21

APPROVED FOR STAGE CONSTRUCTION WORK ONLY

STATE OF CALIFORNIA - DEPARTMENT OF TRANSPORTATION
Caltrans®
DESIGN

FUNCTIONAL SUPERVISOR: DAVID SANGHA
CALCULATED-DESIGNED BY: MAHMOOD SULTAN
CHECKED BY: CARMELITA BELLE
REVISED BY
DATE REVISED

LAST REVISION 06-06-14
DATE PLOTTED => 24-JUL-2014
TIME PLOTTED => 10:04

Dist	COUNTY	ROUTE	POST MILES TOTAL PROJECT	SHEET No.	TOTAL SHEETS
06	Ker	5	62.5/73.1	46	213

REGISTERED CIVIL ENGINEER 06-10-14 DATE

6-16-14
PLANS APPROVAL DATE

REGISTERED PROFESSIONAL ENGINEER MAHMOOD A SULTAN No. 76344 Exp. 12-31-14 CIVIL STATE OF CALIFORNIA

THE STATE OF CALIFORNIA OR ITS OFFICERS OR AGENTS SHALL NOT BE RESPONSIBLE FOR THE ACCURACY OR COMPLETENESS OF SCANNED COPIES OF THIS PLAN SHEET.

CONSTRUCTION - STAGE 6

CONSTRUCT SOUTHBOUND LANE #2 AND OUTSIDE SHOULDER BEHIND Temp RAILING (TYPE K) PER TRAFFIC HANDLING (STAGE 3 PHASE 1), SEE TH-PLANS.

PHASE 2

(2) CONSTRUCT SOUTHBOUND LANE #2 AND OUTSIDE SHOULDER. REMOVE AND PLACE DIKES. SEE Q-SHEETS.

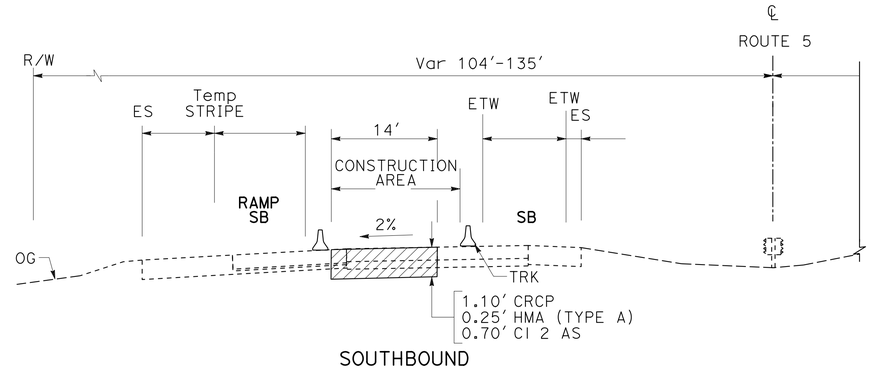

SOUTHBOUND

Sta 2535+98.00 TO Sta 2540+27.00

SECTION T-T

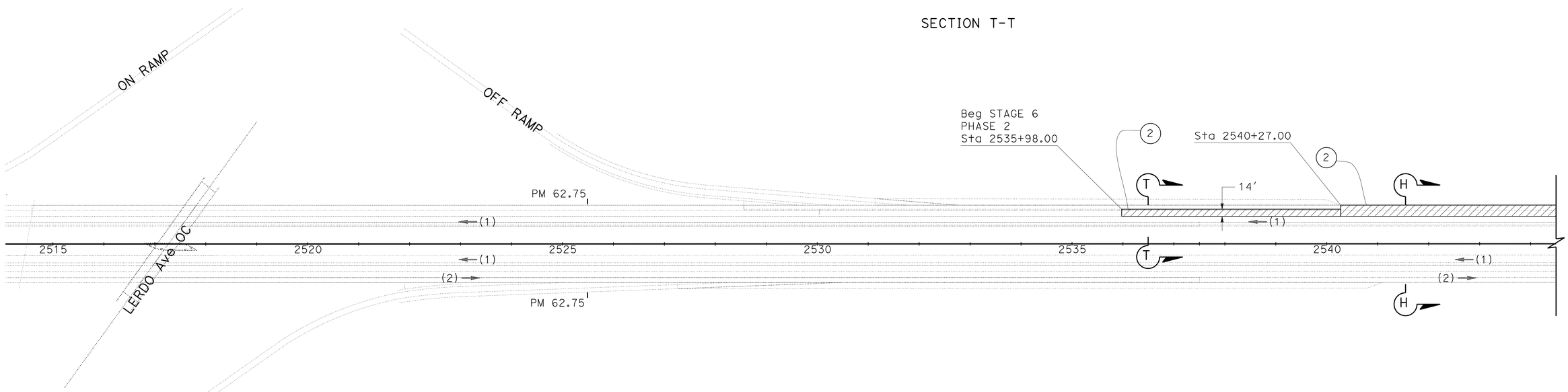

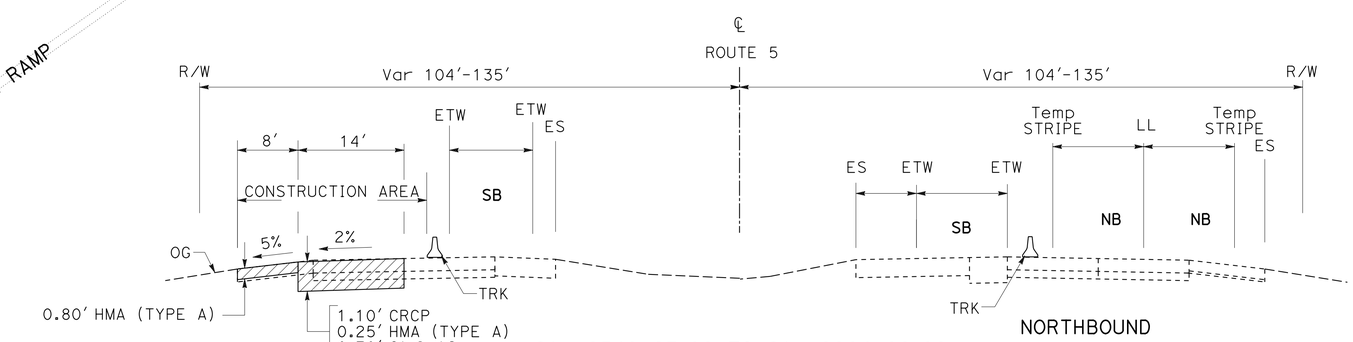

SOUTHBOUND

Sta 2540+27.00 TO Sta 2964+00.00

NORTHBOUND

SECTION H-H

STAGE CONSTRUCTION PLAN
(STAGE 6 PHASE 2)

NO SCALE

SC-22

APPROVED FOR STAGE CONSTRUCTION WORK ONLY

STATE OF CALIFORNIA - DEPARTMENT OF TRANSPORTATION
Caltrans®
DESIGN

FUNCTIONAL SUPERVISOR: DAVID SANGHA
CALCULATED-DESIGNED BY: MAHMOOD SULTAN
CHECKED BY: CARMELITA BELLE
REVISED BY
DATE REVISED

LAST REVISION: DATE PLOTTED => 24-JUL-2014 TIME PLOTTED => 10:04
06-06-14

Dist	COUNTY	ROUTE	POST MILES TOTAL PROJECT	SHEET No.	TOTAL SHEETS
06	Ker	5	62.5/73.1	47	213

REGISTERED CIVIL ENGINEER 06-10-14 DATE

6-16-14
PLANS APPROVAL DATE

REGISTERED PROFESSIONAL ENGINEER
MAHMOOD A SULTAN
No. 76344
Exp. 12-31-14
CIVIL
STATE OF CALIFORNIA

THE STATE OF CALIFORNIA OR ITS OFFICERS OR AGENTS SHALL NOT BE RESPONSIBLE FOR THE ACCURACY OR COMPLETENESS OF SCANNED COPIES OF THIS PLAN SHEET.

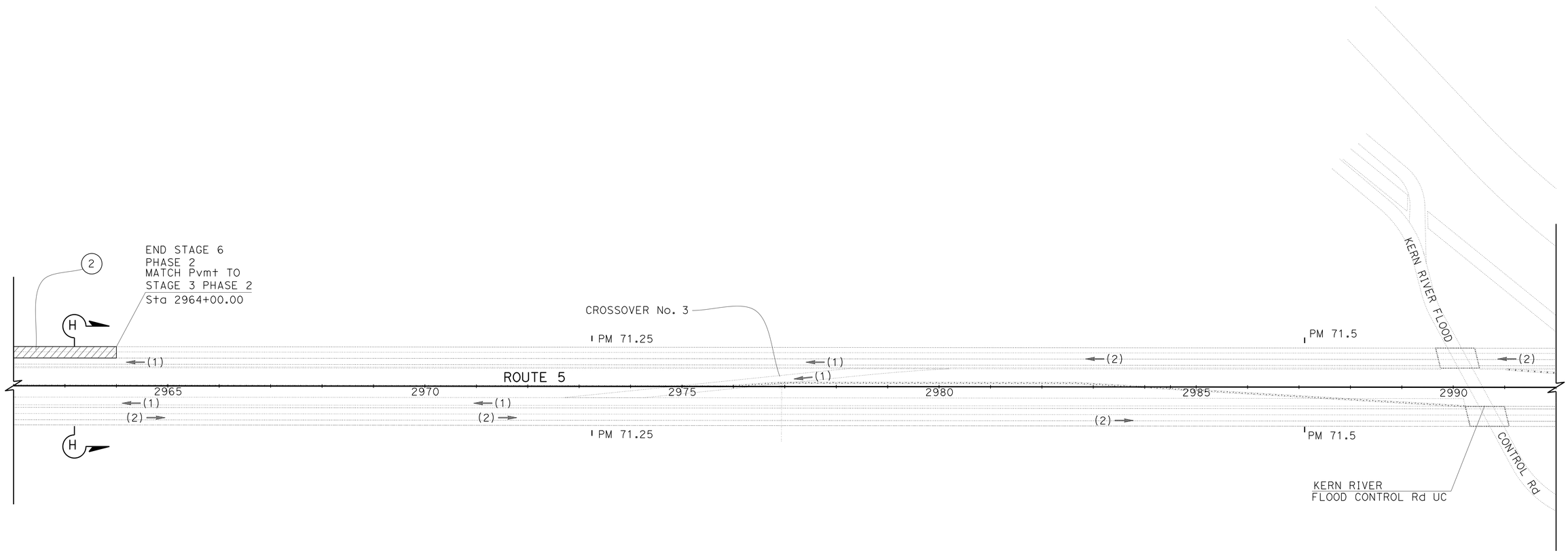

STAGE CONSTRUCTION PLAN
(STAGE 6 PHASE 2)

NO SCALE

SC-23

APPROVED FOR STAGE CONSTRUCTION WORK ONLY

STATE OF CALIFORNIA - DEPARTMENT OF TRANSPORTATION
DESIGN

FUNCTIONAL SUPERVISOR: DAVID SANGHA

CALCULATED-DESIGNED BY: CARMELITA BELLE
CHECKED BY: MAHMOOD SULTAN

REVISED BY
DATE REVISED

LAST REVISION 06-06-14
DATE PLOTTED => 24-JUL-2014
TIME PLOTTED => 10:04

Dist	COUNTY	ROUTE	POST MILES TOTAL PROJECT	SHEET No.	TOTAL SHEETS
06	Ker	5	62.5/73.1	48	213

REGISTERED CIVIL ENGINEER 06-10-14 DATE

6-16-14
PLANS APPROVAL DATE

REGISTERED PROFESSIONAL ENGINEER MAHMOOD A SULTAN No. 76344 Exp. 12-31-14 CIVIL STATE OF CALIFORNIA

THE STATE OF CALIFORNIA OR ITS OFFICERS OR AGENTS SHALL NOT BE RESPONSIBLE FOR THE ACCURACY OR COMPLETENESS OF SCANNED COPIES OF THIS PLAN SHEET.

CONSTRUCTION - STAGE 7

CONSTRUCT NORTHBOUND LANE #2 BEHIND Temp RAILING (TYPE K) PER TRAFFIC HANDLING (STAGE 4 PHASE 1), SEE TH-PLANS.

PHASE 1

(1) CONSTRUCT NORTHBOUND LANE #2.

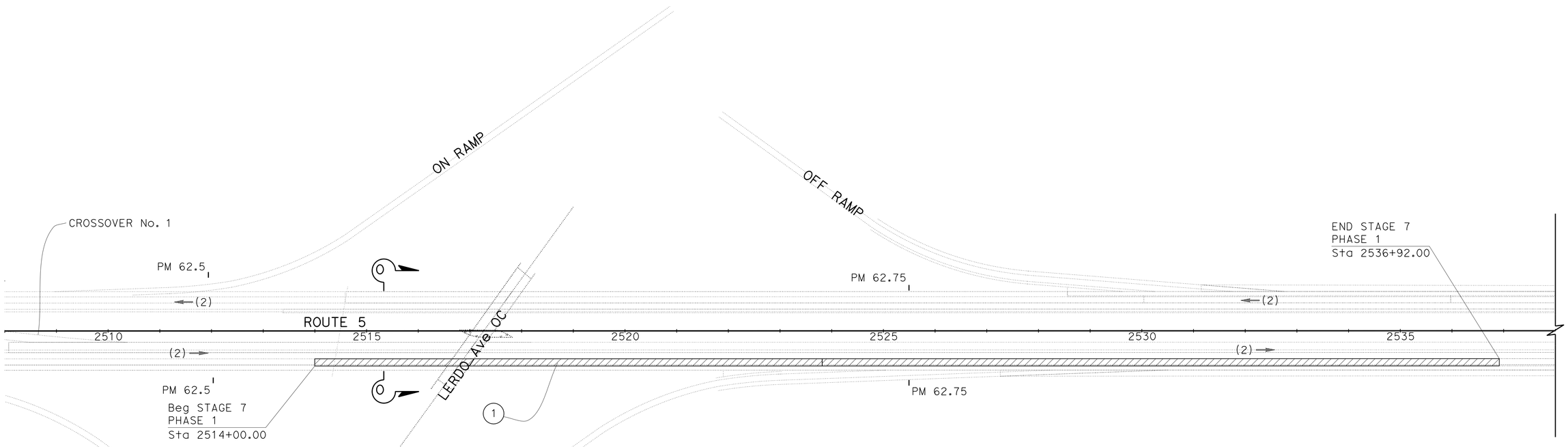

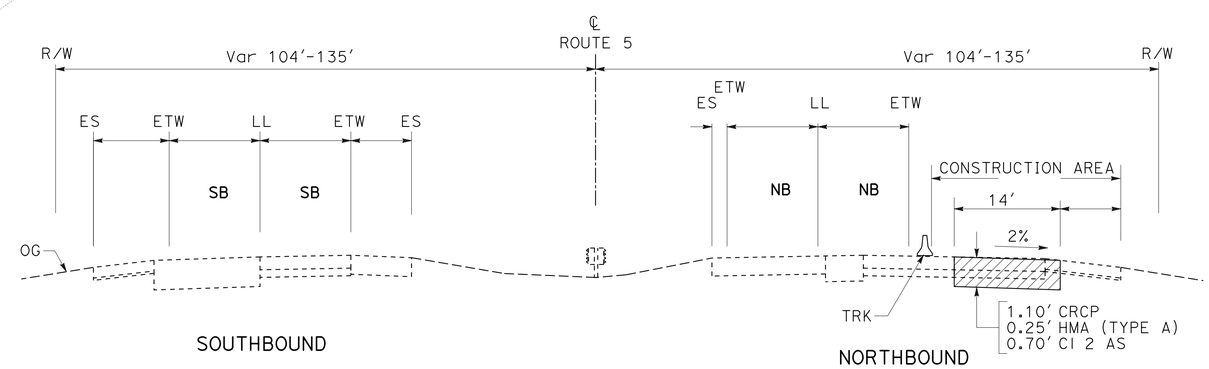

Sta 2514+00.00 TO Sta 2536+92.00

SECTION O-O

STAGE CONSTRUCTION PLAN
(STAGE 7 PHASE 1)

NO SCALE

SC-24

APPROVED FOR STAGE CONSTRUCTION WORK ONLY

STATE OF CALIFORNIA - DEPARTMENT OF TRANSPORTATION
Caltrans
DESIGN

FUNCTIONAL SUPERVISOR: DAVID SANGHA
CALCULATED-DESIGNED BY: MAHMOOD SULTAN
CHECKED BY
REVISED BY
DATE REVISED
CARMELITA BELLE

LAST REVISION 06-06-14
DATE PLOTTED => 24-JUL-2014
TIME PLOTTED => 10:04

Dist	COUNTY	ROUTE	POST MILES TOTAL PROJECT	SHEET No.	TOTAL SHEETS
06	Ker	5	62.5/73.1	49	213

REGISTERED CIVIL ENGINEER 06-10-14 DATE

6-16-14
PLANS APPROVAL DATE

REGISTERED PROFESSIONAL ENGINEER
MAHMOOD A SULTAN
No. 76344
Exp. 12-31-14
CIVIL
STATE OF CALIFORNIA

THE STATE OF CALIFORNIA OR ITS OFFICERS OR AGENTS SHALL NOT BE RESPONSIBLE FOR THE ACCURACY OR COMPLETENESS OF SCANNED COPIES OF THIS PLAN SHEET.

CONSTRUCTION - STAGE 7

CONSTRUCT NORTHBOUND LANE #2 BEHIND Temp RAILING (TYPE K).
PER TRAFFIC HANDLING (STAGE 4 PHASE 1), SEE TH-PLANS.

PHASE 2

(2) CONSTRUCT NORTHBOUND LANE #2.

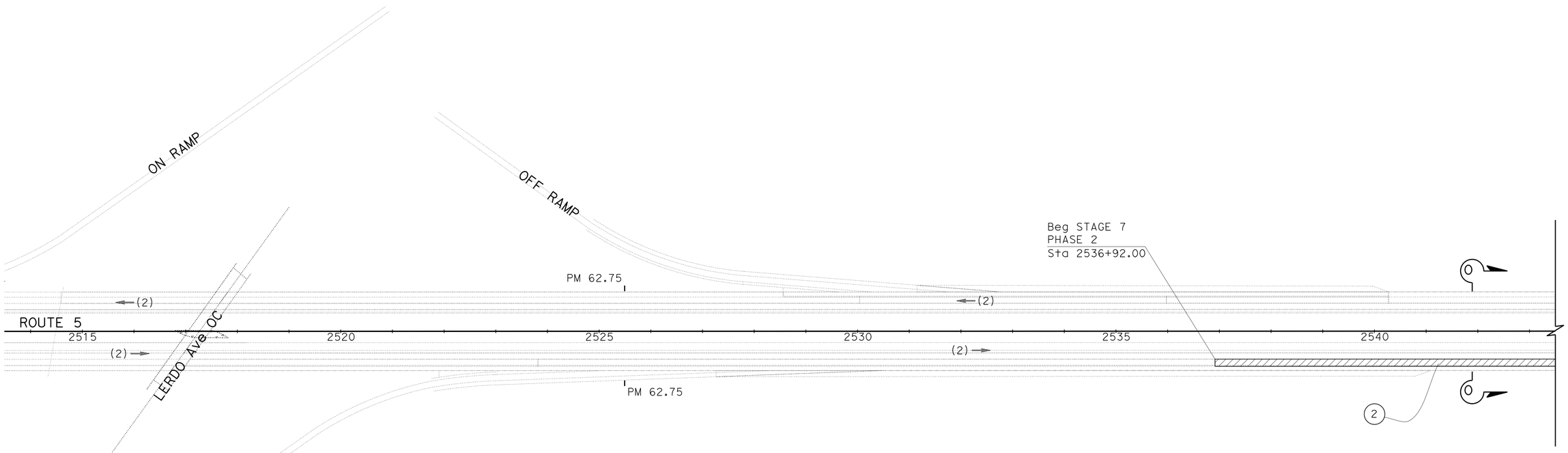

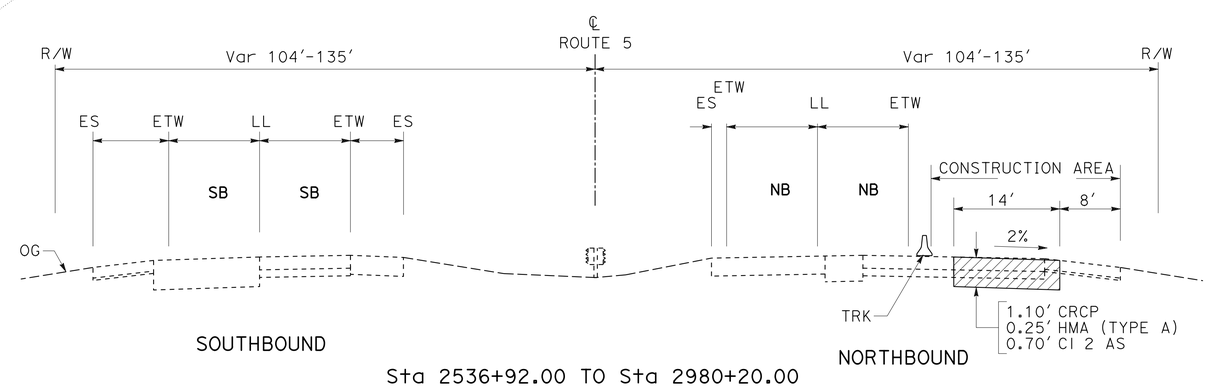

Sta 2536+92.00 TO Sta 2980+20.00

SECTION O-O

STAGE CONSTRUCTION PLAN
(STAGE 7 PHASE 2)

NO SCALE

SC-25

APPROVED FOR STAGE CONSTRUCTION WORK ONLY

STATE OF CALIFORNIA - DEPARTMENT OF TRANSPORTATION
DESIGN

FUNCTIONAL SUPERVISOR: DAVID SANGHA
CALCULATED-DESIGNED BY: CARMELITA BELLE
CHECKED BY: MAHMOOD SULTAN
REVISED BY
DATE REVISED

LAST REVISION 06-06-14
DATE PLOTTED => 24-JUL-2014
TIME PLOTTED => 10:04

Dist	COUNTY	ROUTE	POST MILES TOTAL PROJECT	SHEET No.	TOTAL SHEETS
06	Ker	5	62.5/73.1	50	213

REGISTERED CIVIL ENGINEER 06-10-14 DATE

6-16-14
PLANS APPROVAL DATE

REGISTERED PROFESSIONAL ENGINEER
MAHMOOD A SULTAN
No. 76344
Exp. 12-31-14
CIVIL
STATE OF CALIFORNIA

THE STATE OF CALIFORNIA OR ITS OFFICERS OR AGENTS SHALL NOT BE RESPONSIBLE FOR THE ACCURACY OR COMPLETENESS OF SCANNED COPIES OF THIS PLAN SHEET.

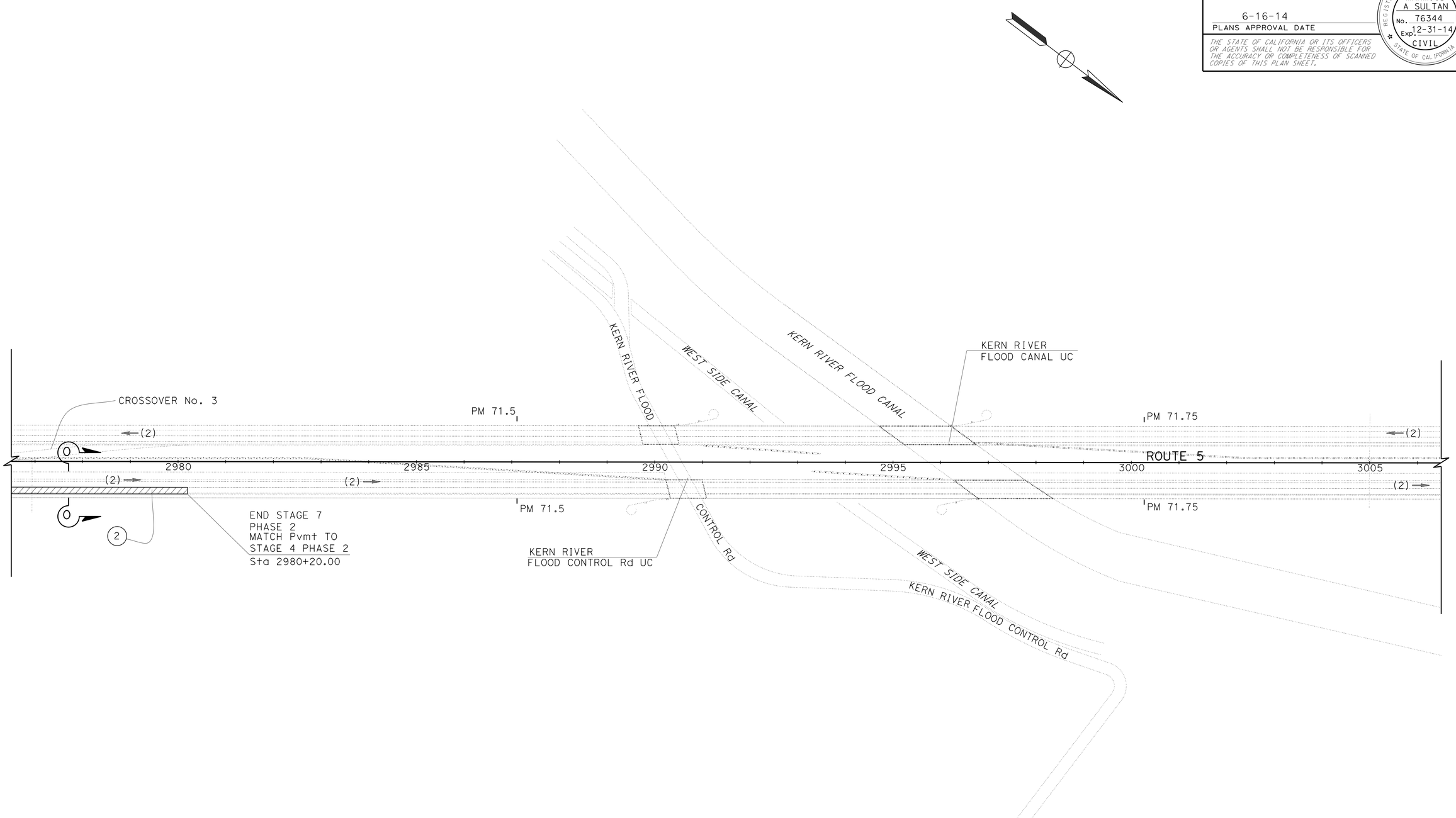

STAGE CONSTRUCTION PLAN
(STAGE 7 PHASE 2)

NO SCALE

SC-26

APPROVED FOR STAGE CONSTRUCTION WORK ONLY

STATE OF CALIFORNIA - DEPARTMENT OF TRANSPORTATION
DESIGN

FUNCTIONAL SUPERVISOR: DAVID SANGHA

CALCULATED-DESIGNED BY: CARMELITA BELLE
CHECKED BY: MAHMOOD SULTAN

REVISED BY
DATE REVISED

LAST REVISION 06-06-14
DATE PLOTTED => 24-JUL-2014
TIME PLOTTED => 10:04

Dist	COUNTY	ROUTE	POST MILES TOTAL PROJECT	SHEET No.	TOTAL SHEETS
06	Ker	5	62.5/73.1	51	213

REGISTERED CIVIL ENGINEER 06-10-14 DATE

6-16-14
PLANS APPROVAL DATE

REGISTERED PROFESSIONAL ENGINEER MAHMOOD A SULTAN No. 76344 Exp. 12-31-14 CIVIL STATE OF CALIFORNIA

THE STATE OF CALIFORNIA OR ITS OFFICERS OR AGENTS SHALL NOT BE RESPONSIBLE FOR THE ACCURACY OR COMPLETENESS OF SCANNED COPIES OF THIS PLAN SHEET.

CONSTRUCTION - STAGE 8

REMOVE ALL TEMPORARY STRUCTURES BEHIND TEMPORARY RAILING (TYPE K). FOR TRAFFIC HANDLING, SEE LANE CLOSURE CHARTS.

1. REMOVE TEMPORARY CROSSOVERS UP TO EDGE OF SHOULDER AND PLACE DOUBLE THRIE BEAM BARRIER.
2. OBLITERATE SURFACING 10' OF THE 15' TEMPORARY ALONG NORTHBOUND MEDIAN FROM LERDO HIGHWAY TO ROUTE 46. INSTALL NORTHBOUND AND SOUTHBOUND RUMBLE STRIPS FOR BOTH INSIDE AND OUTSIDE SHOULDER.
3. REMOVE DETOUR LANE AND PLACE DOUBLE THRIE BEAM BARRIER.

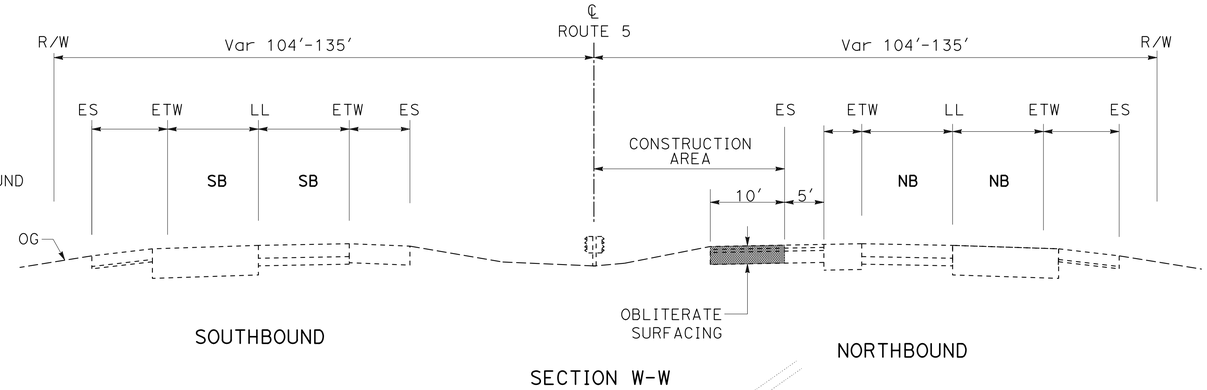

SECTION W-W

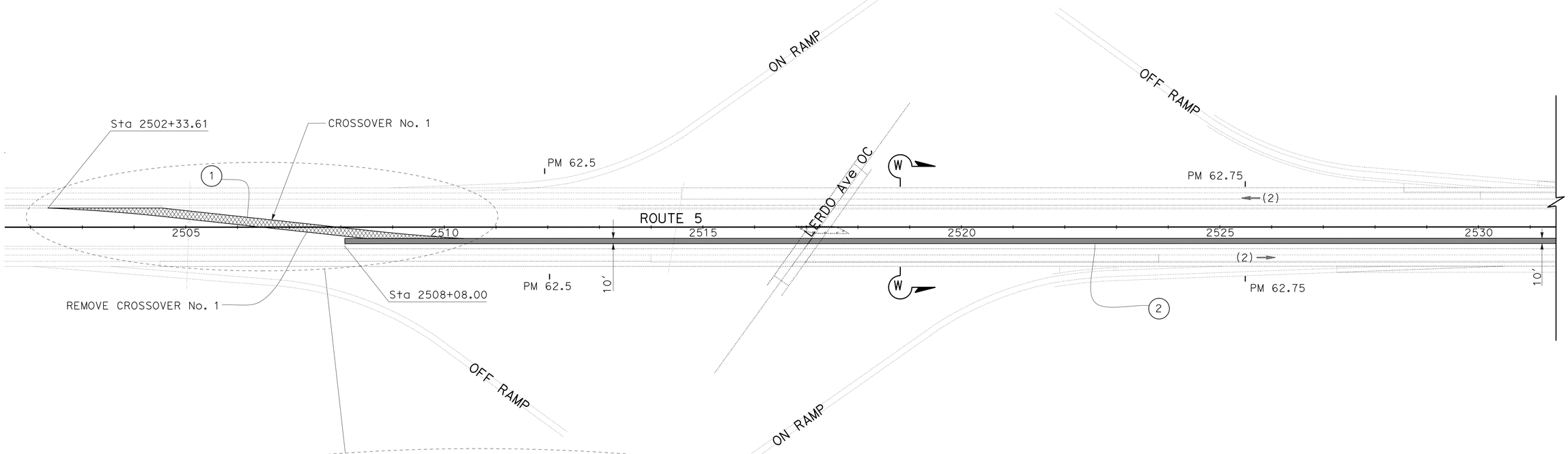

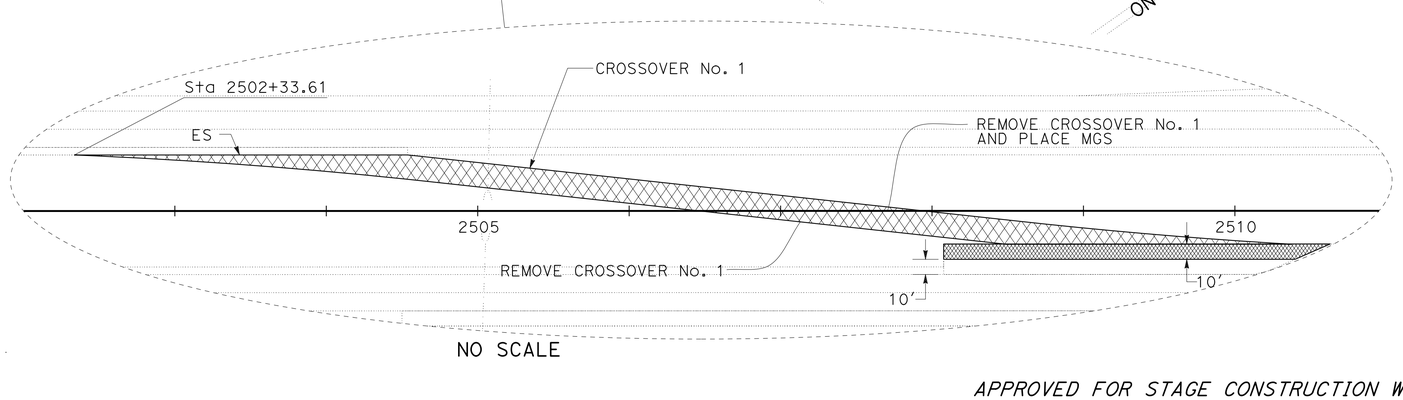

NO SCALE

STAGE CONSTRUCTION PLAN
(STAGE 8)

NO SCALE

SC-27

APPROVED FOR STAGE CONSTRUCTION WORK ONLY

STATE OF CALIFORNIA - DEPARTMENT OF TRANSPORTATION
DESIGN

FUNCTIONAL SUPERVISOR: DAVID SANGHA
CALCULATED-DESIGNED BY: CARMELITA BELLE
CHECKED BY: MAHMOOD SULTAN
REVISED BY
DATE REVISED

LAST REVISION 06-06-14
DATE PLOTTED => 24-JUL-2014
TIME PLOTTED => 10:04

Dist	COUNTY	ROUTE	POST MILES TOTAL PROJECT	SHEET No.	TOTAL SHEETS
06	Ker	5	62.5/73.1	52	213

REGISTERED CIVIL ENGINEER 06-10-14 DATE

6-16-14
PLANS APPROVAL DATE

REGISTERED PROFESSIONAL ENGINEER
MAHMOOD A SULTAN
No. 76344
Exp. 12-31-14
CIVIL
STATE OF CALIFORNIA

THE STATE OF CALIFORNIA OR ITS OFFICERS OR AGENTS SHALL NOT BE RESPONSIBLE FOR THE ACCURACY OR COMPLETENESS OF SCANNED COPIES OF THIS PLAN SHEET.

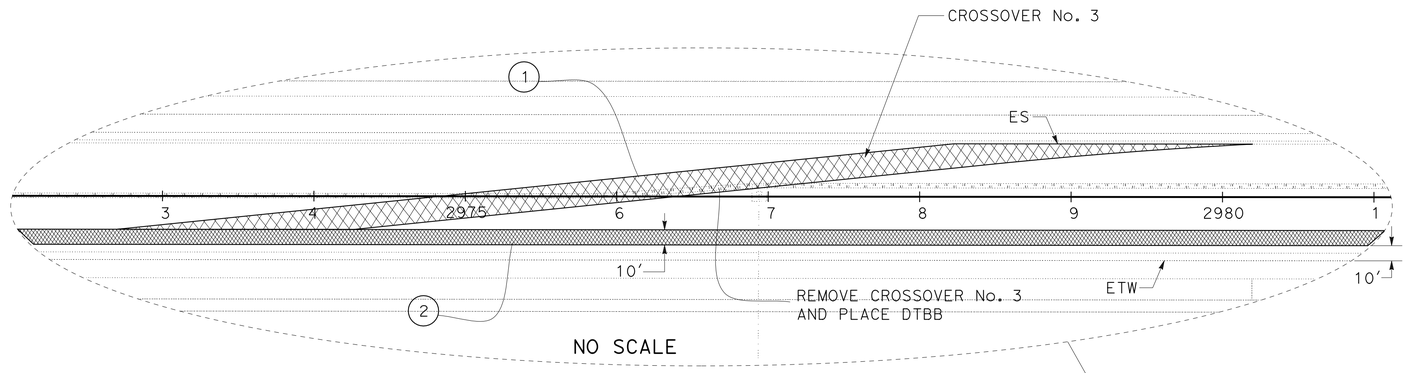

NO SCALE

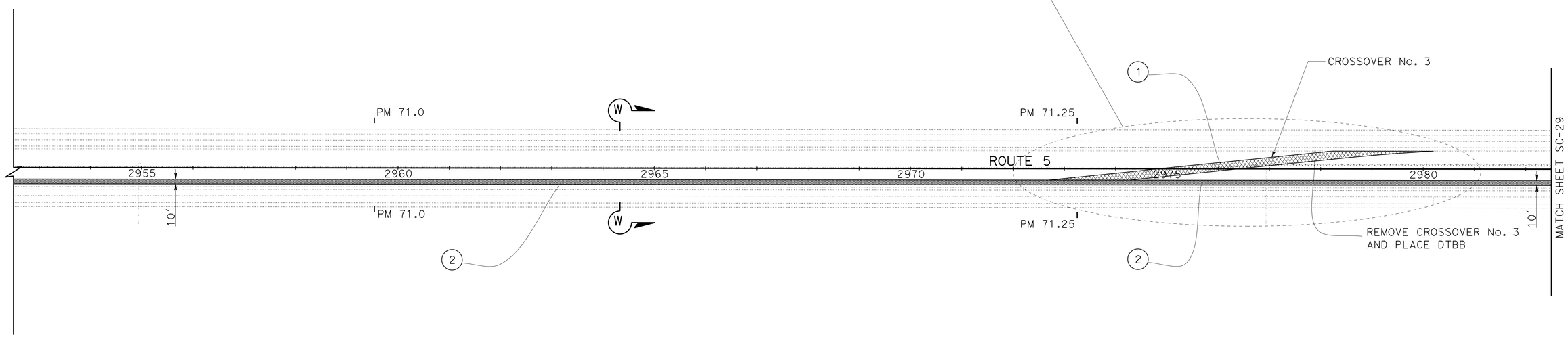

STAGE CONSTRUCTION PLAN
(STAGE 8)

NO SCALE

SC-28

APPROVED FOR STAGE CONSTRUCTION WORK ONLY

REVISED BY	DATE REVISED

CALCULATED-DESIGNED BY: CARMELITA BELLE
CHECKED BY: MAHMOOD SULTAN
FUNCTIONAL SUPERVISOR: DAVID SANGHA

STATE OF CALIFORNIA - DEPARTMENT OF TRANSPORTATION
Caltrans
DESIGN

LAST REVISION 06-06-14 | DATE PLOTTED => 24-JUL-2014 | TIME PLOTTED => 10:04

Dist	COUNTY	ROUTE	POST MILES TOTAL PROJECT	SHEET No.	TOTAL SHEETS
06	Ker	5	62.5/73.1	53	213

REGISTERED CIVIL ENGINEER 06-10-14 DATE

6-16-14
PLANS APPROVAL DATE

REGISTERED PROFESSIONAL ENGINEER
MAHMOOD A SULTAN
No. 76344
Exp. 12-31-14
CIVIL
STATE OF CALIFORNIA

THE STATE OF CALIFORNIA OR ITS OFFICERS OR AGENTS SHALL NOT BE RESPONSIBLE FOR THE ACCURACY OR COMPLETENESS OF SCANNED COPIES OF THIS PLAN SHEET.

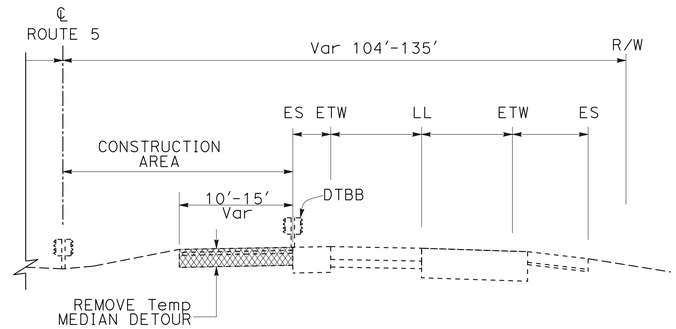

NORTHBOUND

SECTION X-X

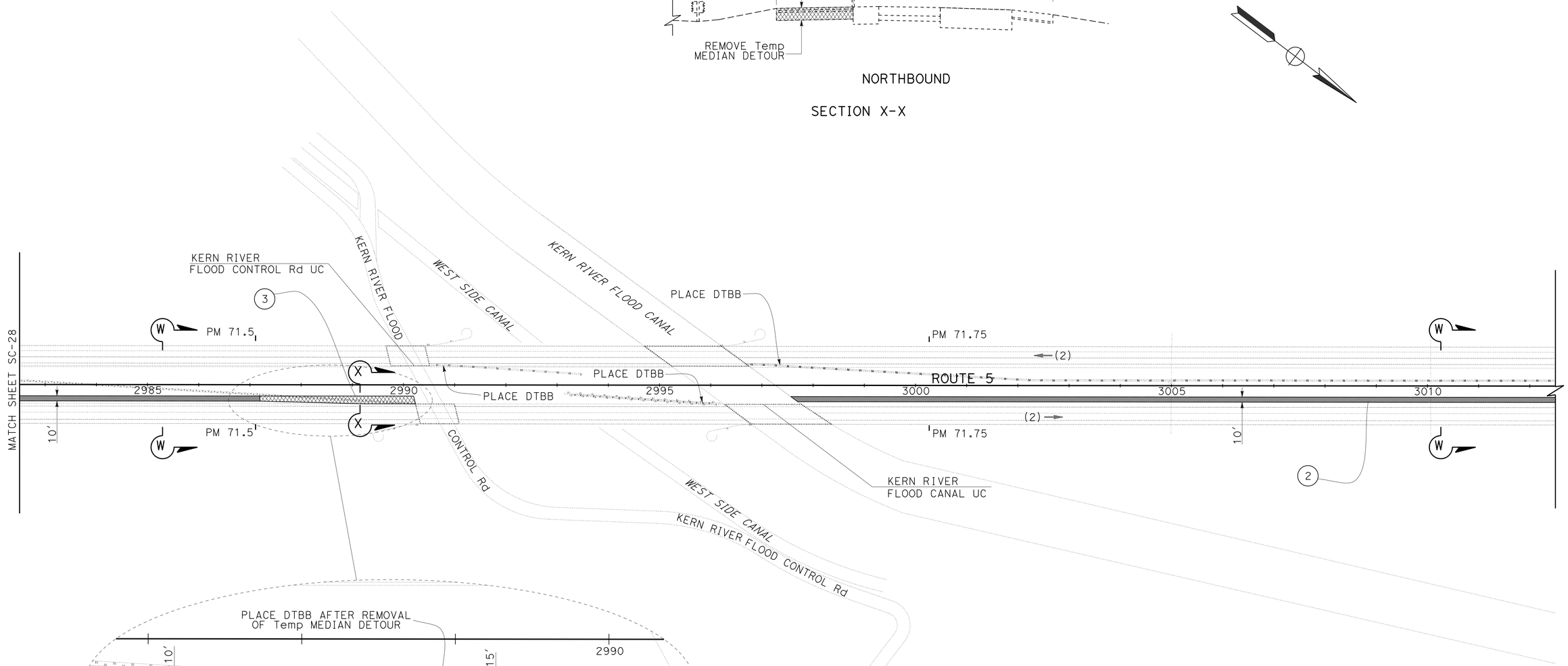

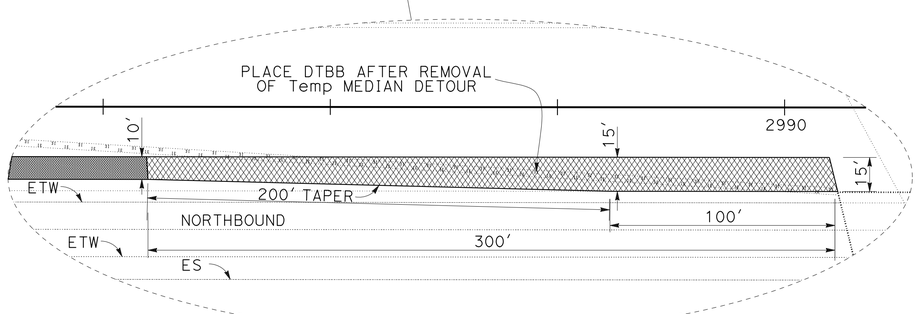

NO SCALE

STAGE CONSTRUCTION PLAN
(STAGE 8)

NO SCALE

SC-29

APPROVED FOR STAGE CONSTRUCTION WORK ONLY

STATE OF CALIFORNIA - DEPARTMENT OF TRANSPORTATION
Caltrans
DESIGN

FUNCTIONAL SUPERVISOR: DAVID SANGHA
CALCULATED-DESIGNED BY: CARMELITA BELLE
CHECKED BY: MAHMOOD SULTAN
REVISED BY
DATE REVISED

LAST REVISION 06-06-14
DATE PLOTTED => 24-JUL-2014
TIME PLOTTED => 10:04

Dist	COUNTY	ROUTE	POST MILES TOTAL PROJECT	SHEET No.	TOTAL SHEETS
06	Ker	5	62.5/73.1	54	213

M Sultan 06-10-14
REGISTERED CIVIL ENGINEER DATE

6-16-14
PLANS APPROVAL DATE

REGISTERED PROFESSIONAL ENGINEER
MAHMOOD A SULTAN
No. 76344
Exp. 12-31-14
CIVIL
STATE OF CALIFORNIA

THE STATE OF CALIFORNIA OR ITS OFFICERS OR AGENTS SHALL NOT BE RESPONSIBLE FOR THE ACCURACY OR COMPLETENESS OF SCANNED COPIES OF THIS PLAN SHEET.

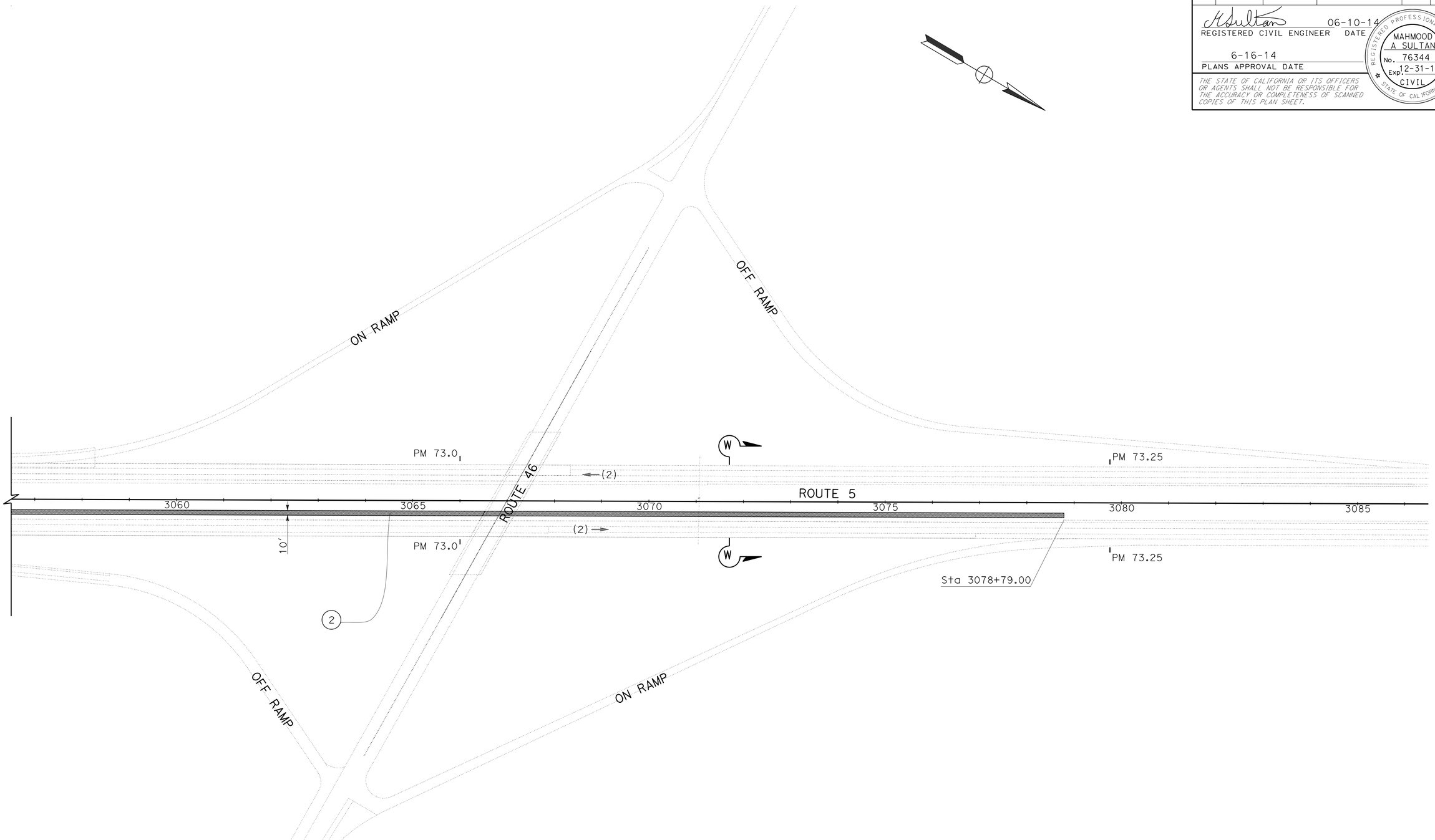

STAGE CONSTRUCTION PLAN
(STAGE 8)

NO SCALE

SC-30

APPROVED FOR STAGE CONSTRUCTION WORK ONLY

STATE OF CALIFORNIA - DEPARTMENT OF TRANSPORTATION
Caltrans
DESIGN

FUNCTIONAL SUPERVISOR: DAVID SANGHA
CALCULATED-DESIGNED BY: MAHMOOD SULTAN
CHECKED BY:
REVISED BY:
DATE REVISED:
CARMELITA BELLE

LAST REVISION 06-06-14
DATE PLOTTED => 24-JUL-2014
TIME PLOTTED => 10:04

Dist	COUNTY	ROUTE	POST MILES TOTAL PROJECT	SHEET No.	TOTAL SHEETS
06	Ker	5	62.5/73.1	55	213

REGISTERED CIVIL ENGINEER 06-10-14 DATE

6-16-14
PLANS APPROVAL DATE

REGISTERED PROFESSIONAL ENGINEER MAHMOOD A SULTAN No. 76344 Exp. 12-31-14 CIVIL STATE OF CALIFORNIA

THE STATE OF CALIFORNIA OR ITS OFFICERS OR AGENTS SHALL NOT BE RESPONSIBLE FOR THE ACCURACY OR COMPLETENESS OF SCANNED COPIES OF THIS PLAN SHEET.

NOTES:

1. EXISTING UTILITY FACILITIES ARE NOT SHOWN ON THESE PLANS.
2. FOR ROUTE 5 STRUCTUAL SECTION REFER TO TYPICAL CROSS SECTIONS SHEETS.

LEGEND:

0.55' HMA (TYPE A)
1.25' CI 2 AB

0.50' HMA (TYPE A)

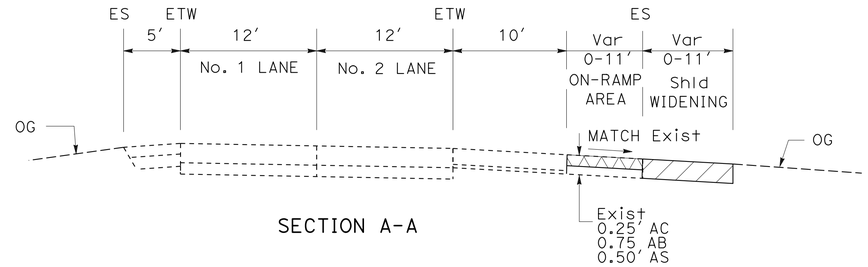

SECTION A-A

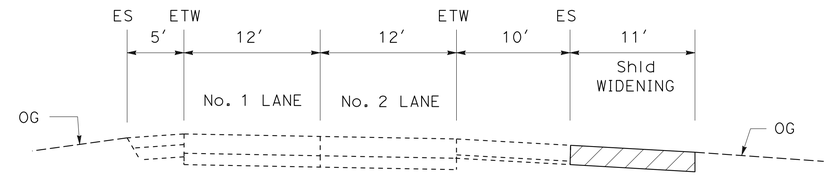

SECTION B-B

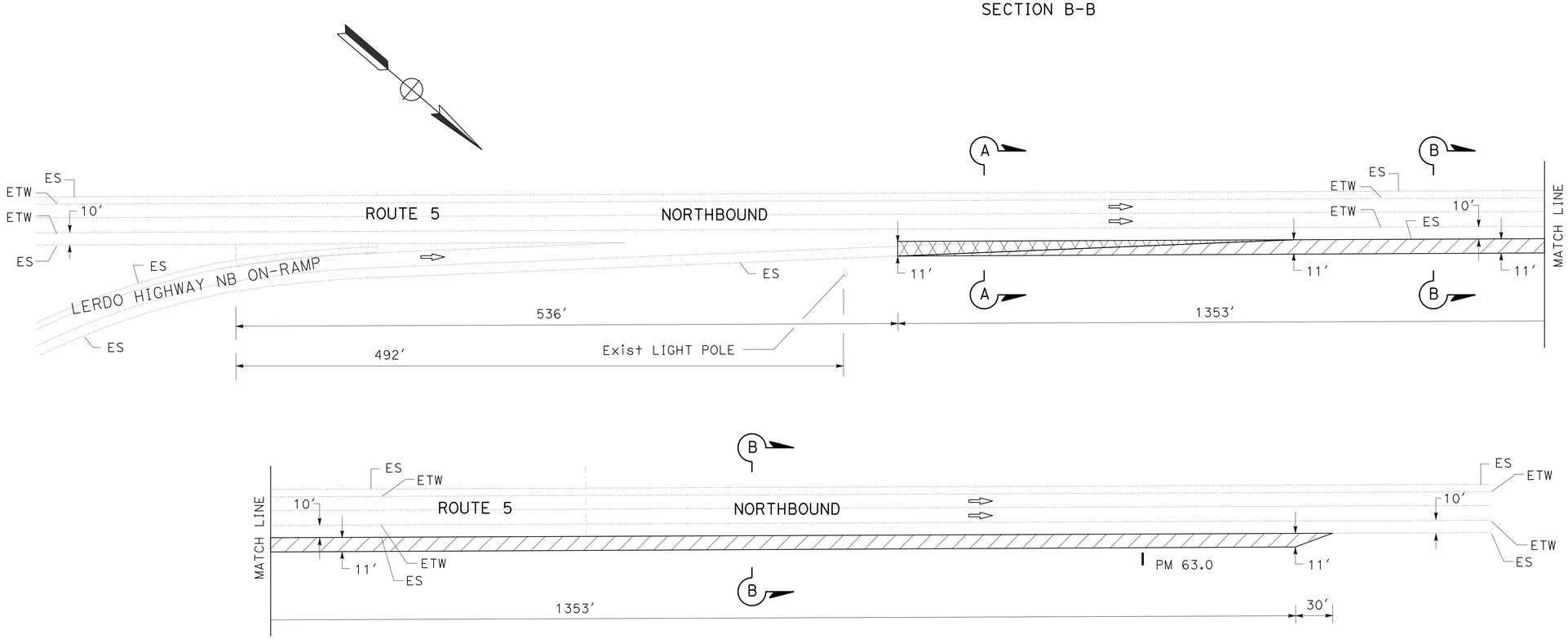

NORTHBOUND ON-RAMP FROM LERDO HWY (PM 62.709)
SHOULDER WIDENING
STAGE 1 PHASE 2

STAGE CONSTRUCTION DETAILS
(STAGE 1 PHASE 2)

SC-31

NO SCALE

APPROVED FOR STAGE CONSTRUCTION WORK ONLY

STATE OF CALIFORNIA - DEPARTMENT OF TRANSPORTATION
Caltrans
DESIGN

FUNCTIONAL SUPERVISOR: DAVID SANGHA
CALCULATED-DESIGNED BY: CARMELITA BELLE
CHECKED BY: MAHMOOD SULTAN
REVISED BY
DATE REVISED

LAST REVISION 05-22-14
DATE PLOTTED => 24-JUL-2014
TIME PLOTTED => 10:04

Dist	COUNTY	ROUTE	POST MILES TOTAL PROJECT	SHEET No.	TOTAL SHEETS
06	Ker	5	62.5/73.1	56	213

REGISTERED CIVIL ENGINEER 06-10-14 DATE

6-16-14
PLANS APPROVAL DATE

REGISTERED PROFESSIONAL ENGINEER MAHMOOD A SULTAN No. 76344 Exp. 12-31-14 CIVIL STATE OF CALIFORNIA

THE STATE OF CALIFORNIA OR ITS OFFICERS OR AGENTS SHALL NOT BE RESPONSIBLE FOR THE ACCURACY OR COMPLETENESS OF SCANNED COPIES OF THIS PLAN SHEET.

NOTES:

1. EXISTING UTILITY FACILITIES ARE NOT SHOWN ON THESE PLANS.
2. FOR ROUTE 5 STRUCTUAL SECTION REFER TO TYPICAL CROSS SECTIONS SHEETS.

LEGEND:

0.55′ HMA (TYPE A)
1.25′ CI 2 AB

0.50′ HMA (TYPE A)

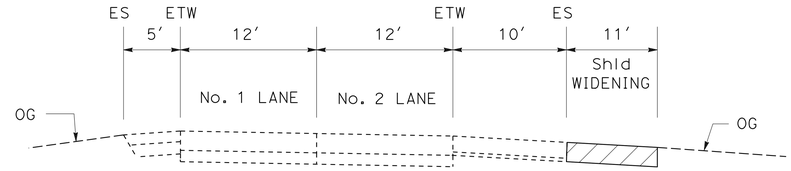

SECTION C-C

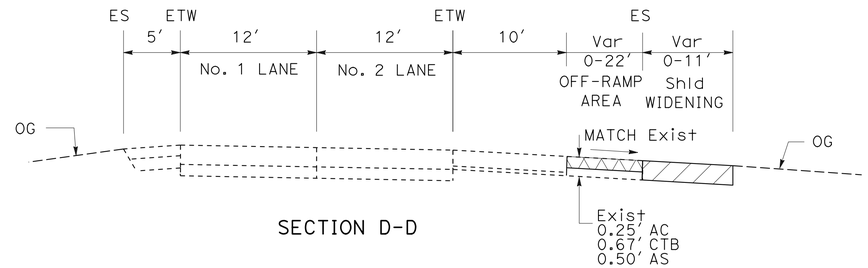

SECTION D-D

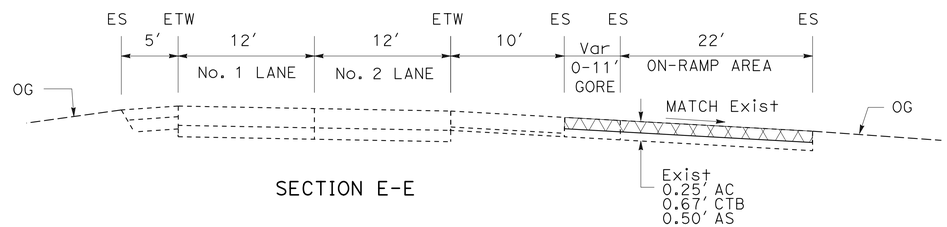

SECTION E-E

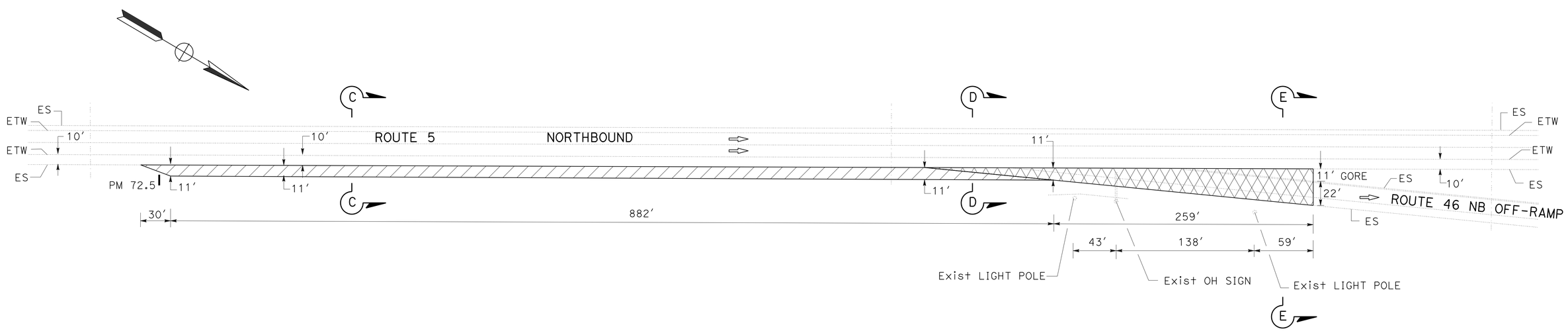

NORTHBOUND OFF-RAMP TO ROUTE 46 (PM 72.713)
SHOULDER WIDENING/RAMP
STAGE 1 PASE 2

STAGE CONSTRUCTION DETAILS
(STAGE 1 PHASE 2)

SC-32

NO SCALE

APPROVED FOR STAGE CONSTRUCTION WORK ONLY

STATE OF CALIFORNIA - DEPARTMENT OF TRANSPORTATION
DESIGN
Caltrans

FUNCTIONAL SUPERVISOR: DAVID SANGHA
CALCULATED-DESIGNED BY: MAHMOOD SULTAN
CHECKED BY
REVISED BY
DATE REVISED
CARMELITA BELLE

LAST REVISION 04-24-14
DATE PLOTTED => 24-JUL-2014
TIME PLOTTED => 10:04

Dist	COUNTY	ROUTE	POST MILES TOTAL PROJECT	SHEET No.	TOTAL SHEETS
06	Ker	5	62.5/73.1	57	213

REGISTERED CIVIL ENGINEER 06-10-14 DATE

6-16-14
PLANS APPROVAL DATE

REGISTERED PROFESSIONAL ENGINEER MAHMOOD A SULTAN No. 76344 Exp. 12-31-14 CIVIL STATE OF CALIFORNIA

THE STATE OF CALIFORNIA OR ITS OFFICERS OR AGENTS SHALL NOT BE RESPONSIBLE FOR THE ACCURACY OR COMPLETENESS OF SCANNED COPIES OF THIS PLAN SHEET.

NOTES:

1. EXISTING UTILITY FACILITIES ARE NOT SHOWN ON THESE PLANS.
2. FOR ROUTE 5 STRUCTUAL SECTION REFER TO TYPICAL CROSS SECTIONS SHEETS.

LEGEND:

- 0.80′ HMA (TYPE A)
- 0.55′ HMA (TYPE A) 1.25′ CI 2 AB
- 0.50′ HMA (TYPE A)

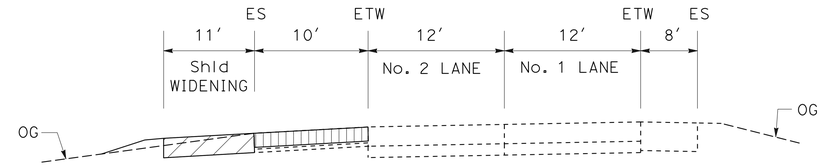

SECTION F-F

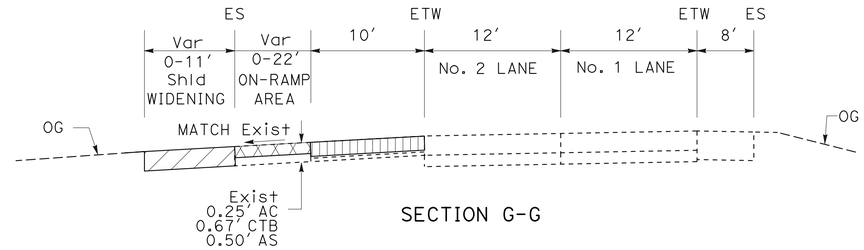

SECTION G-G

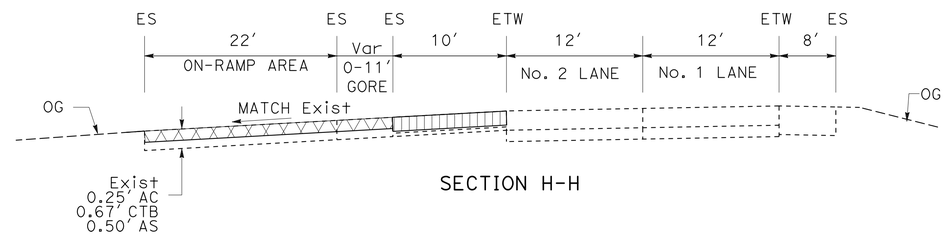

SECTION H-H

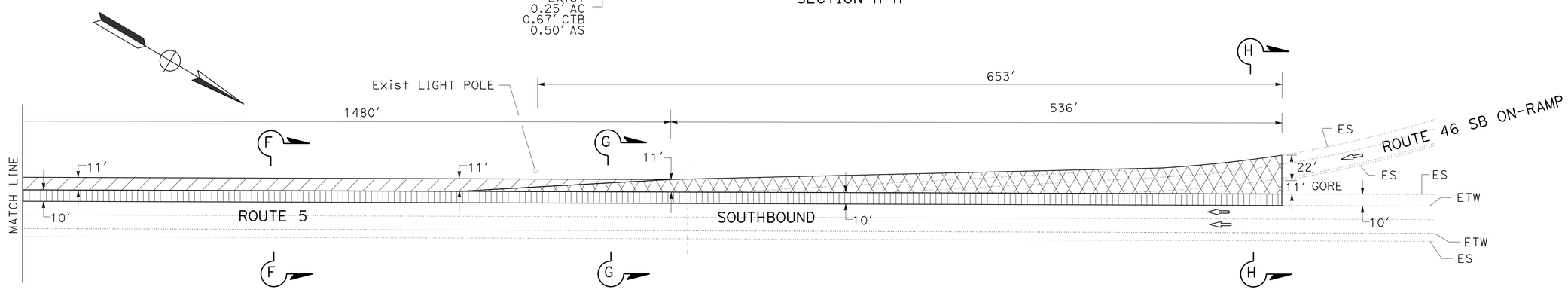

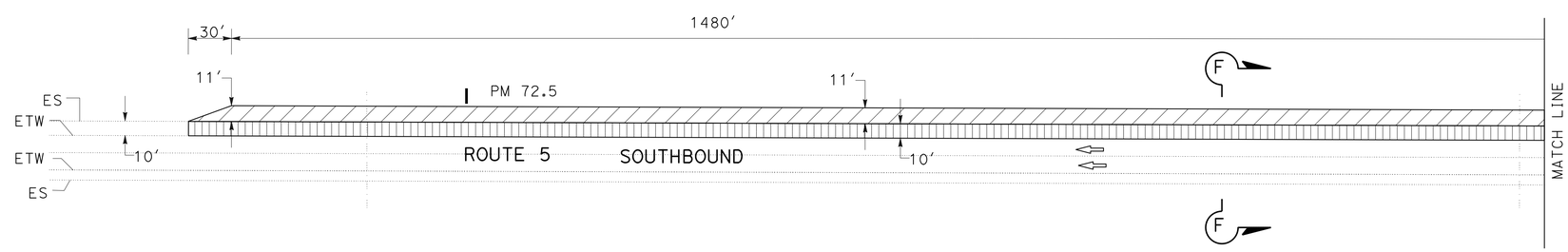

SOUTHBOUND ON-RAMP FROM ROUTE 46 (PM 72.837)
SHOULER WIDENING/RAMP
STAGE 1 PHASE 2

STAGE CONSTRUCTION DETAILS
(STAGE 1 PHASE 2)

NO SCALE

SC-33

APPROVED FOR STAGE CONSTRUCTION WORK ONLY

STATE OF CALIFORNIA - DEPARTMENT OF TRANSPORTATION
Caltrans
DESIGN

FUNCTIONAL SUPERVISOR: DAVID SANGHA
CALCULATED-DESIGNED BY: MAHMOOD SULTAN
CHECKED BY
REVISED BY
DATE REVISED
CARMELITA BELLE

LAST REVISION 04-24-14
DATE PLOTTED => 24-JUL-2014
TIME PLOTTED => 10:04

Dist	COUNTY	ROUTE	POST MILES TOTAL PROJECT	SHEET No.	TOTAL SHEETS
06	Ker	5	62.5/73.1	58	213

REGISTERED CIVIL ENGINEER 06-10-14 DATE

6-16-14
PLANS APPROVAL DATE

REGISTERED PROFESSIONAL ENGINEER MAHMOOD A SULTAN No. 76344 Exp. 12-31-14 CIVIL STATE OF CALIFORNIA

THE STATE OF CALIFORNIA OR ITS OFFICERS OR AGENTS SHALL NOT BE RESPONSIBLE FOR THE ACCURACY OR COMPLETENESS OF SCANNED COPIES OF THIS PLAN SHEET.

NOTES:

1. EXISTING UTILITY FACILITIES ARE NOT SHOWN ON THESE PLANS.
2. FOR ROUTE 5 STRUCTUAL SECTION REFER TO TYPICAL CROSS SECTIONS SHEETS.

LEGEND:

- 0.80' HMA (TYPE A)
- 0.55' HMA (TYPE A) 1.25' Cl 2 AB
- 0.50' HMA (TYPE A)

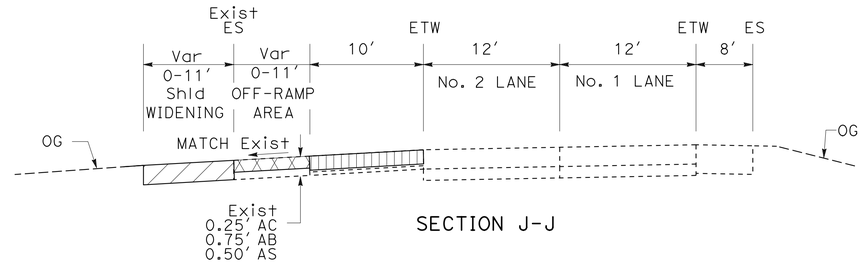

SECTION J-J

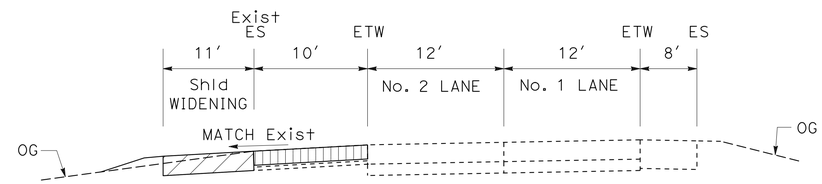

SECTION K-K

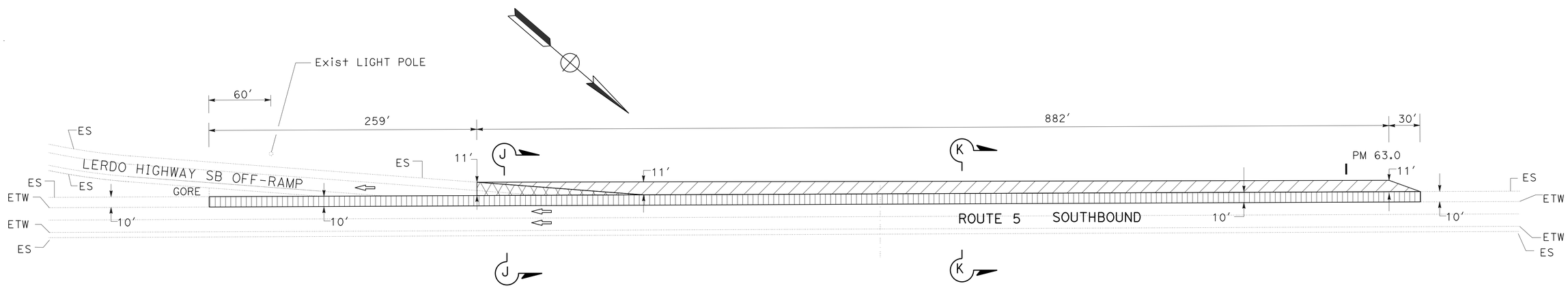

SOUTHBOUND OFF-RAMP TO LERDO HWY (PM 62.825)
SHOULDER WIDENING
STAGE 1 PHASE 2

STAGE CONSTRUCTION DETAILS
(STAGE 1 PHASE 2)

SC-34

NO SCALE

APPROVED FOR STAGE CONSTRUCTION WORK ONLY

STATE OF CALIFORNIA - DEPARTMENT OF TRANSPORTATION
DESIGN

FUNCTIONAL SUPERVISOR: DAVID SANGHA
CALCULATED-DESIGNED BY: MAHMOOD SULTAN
CHECKED BY: CARMELITA BELLE
REVISED BY
DATE REVISED

LAST REVISION 04-24-14
DATE PLOTTED => 24-JUL-2014
TIME PLOTTED => 10:04

Dist	COUNTY	ROUTE	POST MILES TOTAL PROJECT	SHEET No.	TOTAL SHEETS
06	Ker	5	62.5/73.1	59	213

REGISTERED CIVIL ENGINEER 06-10-14 DATE

6-16-14
PLANS APPROVAL DATE

REGISTERED PROFESSIONAL ENGINEER MAHMOOD A SULTAN No. 76344 Exp. 12-31-14 CIVIL STATE OF CALIFORNIA

THE STATE OF CALIFORNIA OR ITS OFFICERS OR AGENTS SHALL NOT BE RESPONSIBLE FOR THE ACCURACY OR COMPLETENESS OF SCANNED COPIES OF THIS PLAN SHEET.

CURVE DATA

No. ⊕	R	Δ	T	L
1	3500′	06°12′05″	189.60′	378.82′
2	3500′	06°13′05″	190.16′	379.95′

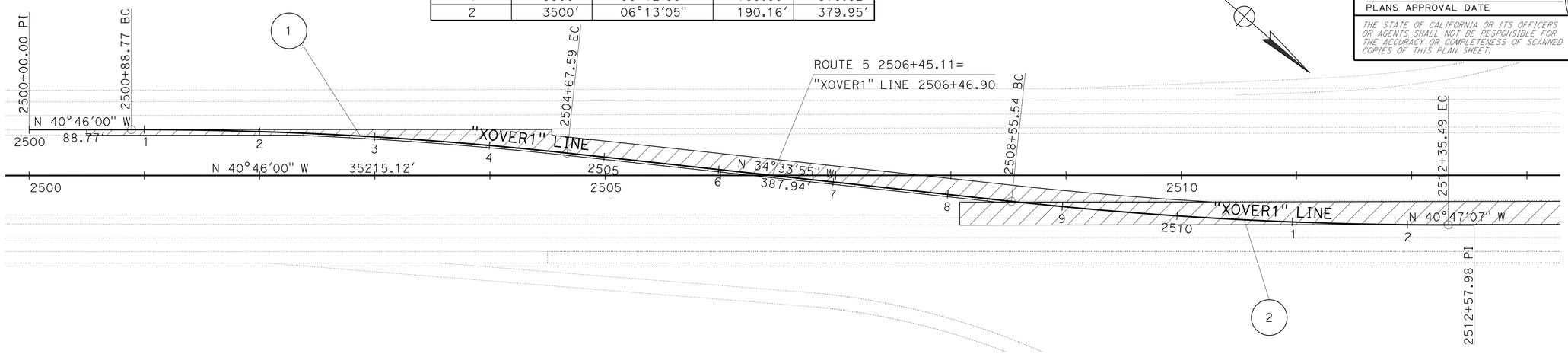

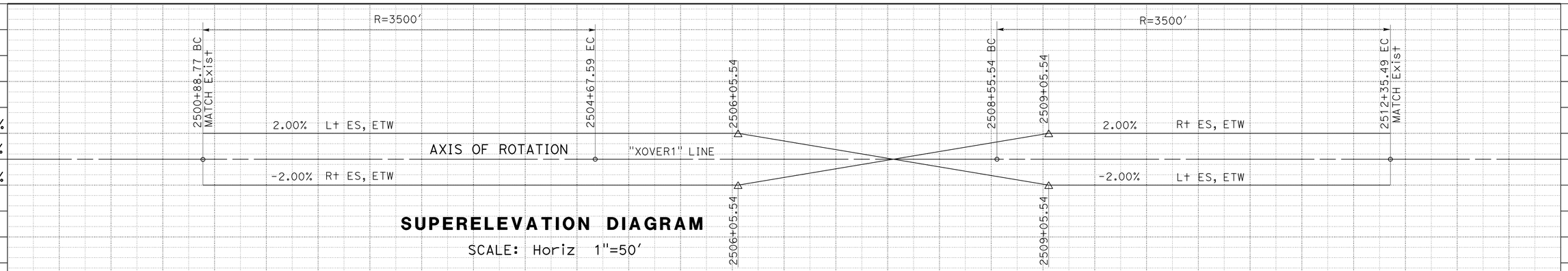

SUPERELEVATION DIAGRAM

SCALE: Horiz 1″=50′

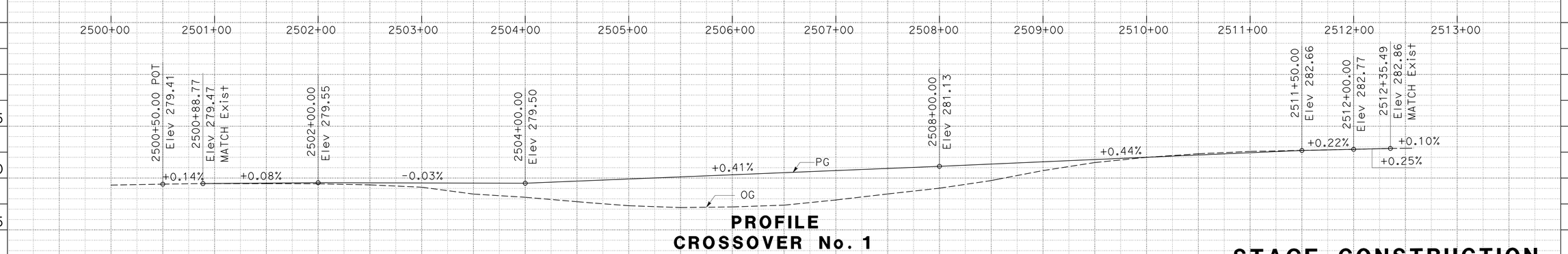

PROFILE
CROSSOVER No. 1

"XOVER1"

SCALE: Horiz 1″=50′
Vert 1″=5′

STAGE CONSTRUCTION
(PROFILE AND SUPERELEVATION DIAGRAM)

SC-35

STATION		2500+00	2501+00	2502+00	2503+00	2504+00	2505+00	2506+00	2507+00	2508+00	2509+00	2510+00	2511+00	2512+00	2513+00	TOTAL
CY	Exc							527								527
	Emb							867								867

REVISED BY | DATE REVISED
CARMELITA BELLE | HARJINDER DHILLON
CALCULATED-DESIGNED BY | CHECKED BY
FUNCTIONAL SUPERVISOR: DAVID SANGHA

STATE OF CALIFORNIA - DEPARTMENT OF TRANSPORTATION
Caltrans
DESIGN

LAST REVISION 06-09-14 | DATE PLOTTED => 24-JUL-2014 | TIME PLOTTED => 10:04

Dist	COUNTY	ROUTE	POST MILES TOTAL PROJECT	SHEET No.	TOTAL SHEETS
06	Ker	5	62.5/73.1	60	213

REGISTERED CIVIL ENGINEER 06-10-14 DATE

6-16-14
PLANS APPROVAL DATE

REGISTERED PROFESSIONAL ENGINEER MAHMOOD A SULTAN No. 76344 Exp. 12-31-14 CIVIL STATE OF CALIFORNIA

THE STATE OF CALIFORNIA OR ITS OFFICERS OR AGENTS SHALL NOT BE RESPONSIBLE FOR THE ACCURACY OR COMPLETENESS OF SCANNED COPIES OF THIS PLAN SHEET.

CURVE DATA

No. ⊕	R	Δ	T	L
3	3500′	06°11′32″	189.32′	378.26′
4	3500′	06°11′32″	189.32′	378.27′

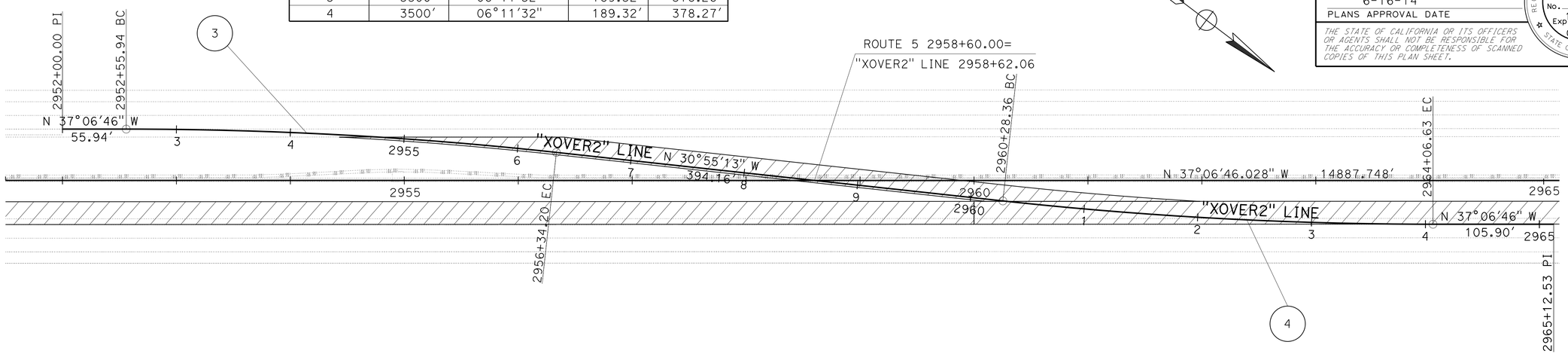

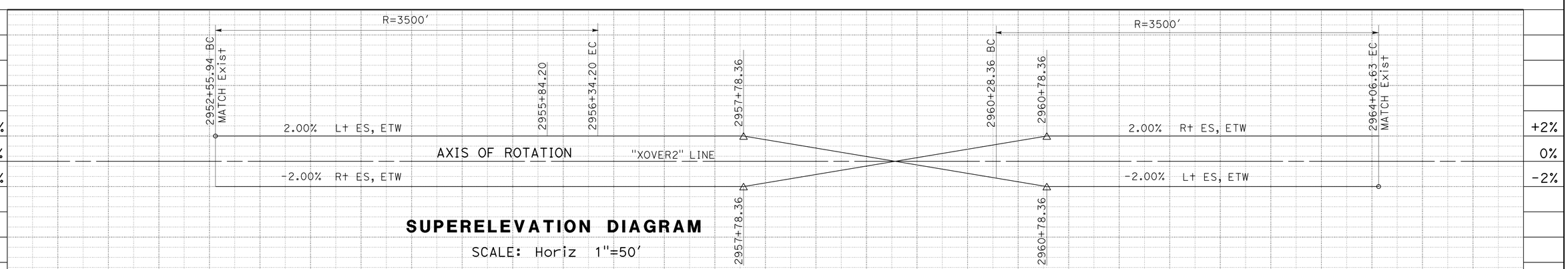

SUPERELEVATION DIAGRAM

SCALE: Horiz 1″=50′

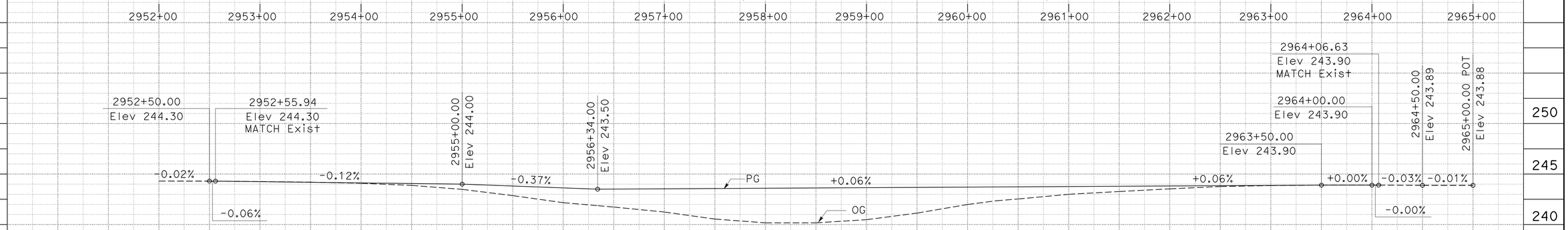

PROFILE
CROSSOVER No. 2

"XOVER2"

SCALE: Horiz 1″=50′
Vert 1″=5′

STAGE CONSTRUCTION
(PROFILE AND SUPERELEVATION DIAGRAM)

SC-36

STATION		2952+00	2953+00	2954+00	2955+00	2956+00	2957+00	2958+00	2959+00	2960+00	2961+00	2962+00	2963+00	2964+00	2965+00	TOTAL
CY	Exc							782								782
	Emb							267								267

STATE OF CALIFORNIA - DEPARTMENT OF TRANSPORTATION
Caltrans
DESIGN

FUNCTIONAL SUPERVISOR: DAVID SANGHA
CALCULATED-DESIGNED BY: CARMELITA BELLE
CHECKED BY: HARJINDER DHILLON
REVISED BY
DATE REVISED

LAST REVISION 06-09-14
DATE PLOTTED => 24-JUL-2014
TIME PLOTTED => 10:04

Dist	COUNTY	ROUTE	POST MILES TOTAL PROJECT	SHEET No.	TOTAL SHEETS
06	Ker	5	62.5/73.1	61	213

REGISTERED CIVIL ENGINEER 06-10-14 DATE

6-16-14
PLANS APPROVAL DATE

REGISTERED PROFESSIONAL ENGINEER MAHMOOD A SULTAN No. 76344 Exp. 12-31-14 CIVIL STATE OF CALIFORNIA

THE STATE OF CALIFORNIA OR ITS OFFICERS OR AGENTS SHALL NOT BE RESPONSIBLE FOR THE ACCURACY OR COMPLETENESS OF SCANNED COPIES OF THIS PLAN SHEET.

CURVE DATA

No. ⊕	R	Δ	T	L
5	3500′	05°53′36″	180.16′	360.01′
6	3500′	05°53′36″	180.16′	360.00′

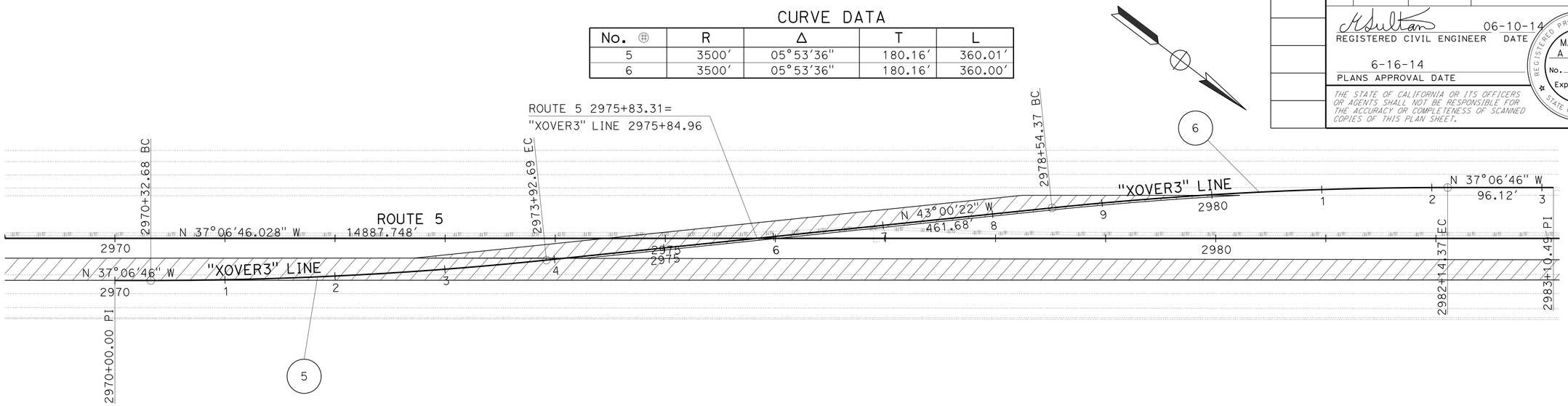

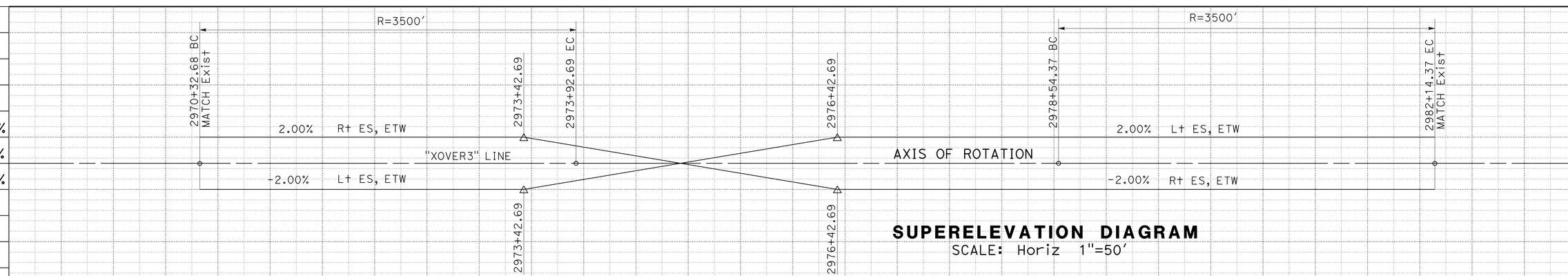

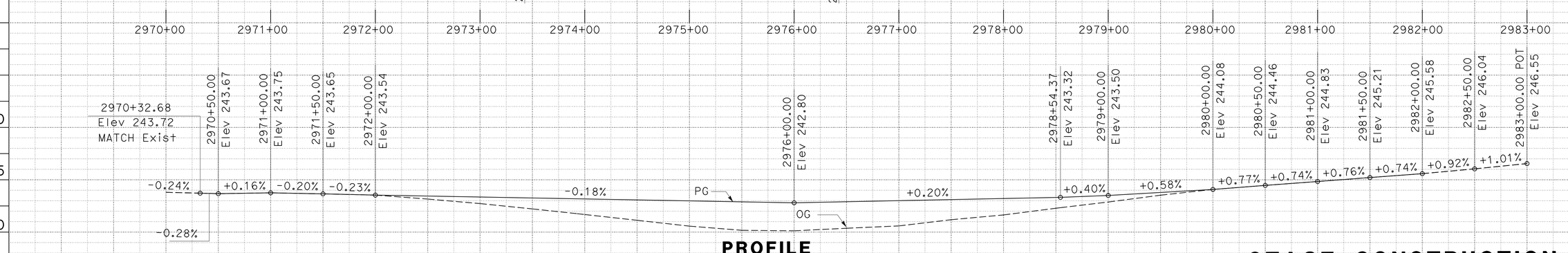

PROFILE
CROSSOVER No. 3
"XOVER3"

SCALE: Horiz 1"=50′
Vert 1"=5′

STAGE CONSTRUCTION
(PROFILE AND SUPERELEVATION DIAGRAM)

SC-37

STATION	2970+00	2971+00	2972+00	2973+00	2974+00	2975+00	2976+00	2977+00	2978+00	2979+00	2980+00	2981+00	2982+00	2983+00	TOTAL
CY Exc							304								304
CY Emb							623								623

STATE OF CALIFORNIA - DEPARTMENT OF TRANSPORTATION
Caltrans
DESIGN

FUNCTIONAL SUPERVISOR: DAVID SANGHA
CALCULATED-DESIGNED BY: CARMELITA BELLE
CHECKED BY: HARJINDER DHILLON
REVISED BY
DATE REVISED

LAST REVISION 06-09-14
DATE PLOTTED => 24-JUL-2014
TIME PLOTTED => 10:04

Dist	COUNTY	ROUTE	POST MILES TOTAL PROJECT	SHEET No.	TOTAL SHEETS
06	Ker	5	62.5/73.1	62	213

REGISTERED CIVIL ENGINEER 06-10-14 DATE

6-16-14
PLANS APPROVAL DATE

REGISTERED PROFESSIONAL ENGINEER MAHMOOD A SULTAN No. 76344 Exp. 12-31-14 CIVIL STATE OF CALIFORNIA

THE STATE OF CALIFORNIA OR ITS OFFICERS OR AGENTS SHALL NOT BE RESPONSIBLE FOR THE ACCURACY OR COMPLETENESS OF SCANNED COPIES OF THIS PLAN SHEET.

CURVE DATA

No. ⊕	R	Δ	T	L
7	3500′	05°53′35″	180.15′	359.99′
8	3500′	05°53′37″	180.16′	360.01′

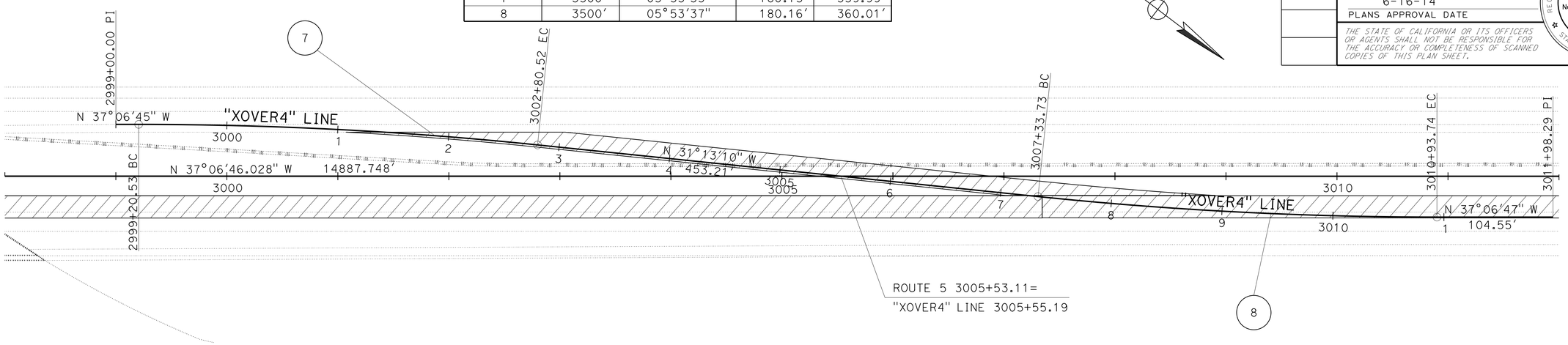

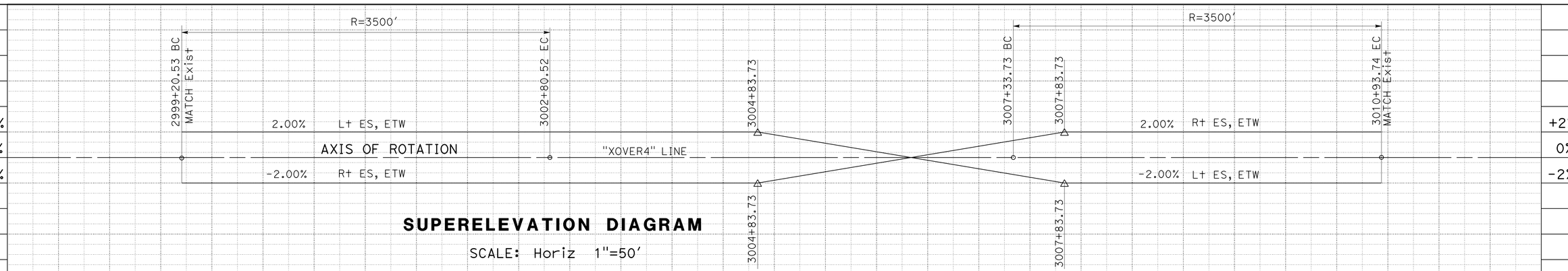

SUPERELEVATION DIAGRAM

SCALE: Horiz 1"=50′

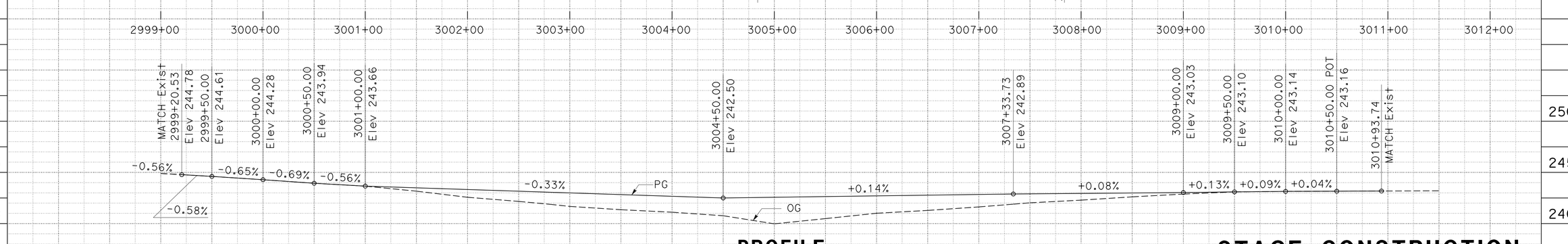

PROFILE
CROSSOVER No. 4
"XOVER4"

SCALE: Horiz 1"=50′
Vert 1"=1′

STAGE CONSTRUCTION
(PROFILE AND SUPERELEVATION DIAGRAM)

SC-38

STATION		2999+00	3000+00	3001+00	3002+00	3003+00	3004+00	3005+00	3006+00	3007+00	3008+00	3009+00	3010+00	3011+00	3012+00	TOTAL
CY	Exc							385								385
	Emb							450								450

STATE OF CALIFORNIA - DEPARTMENT OF TRANSPORTATION
Caltrans
DESIGN

FUNCTIONAL SUPERVISOR: DAVID SANGHA
CALCULATED-DESIGNED BY: CARMELITA BELLE
CHECKED BY: HARJINDER DHILLON
REVISED BY
DATE REVISED

LAST REVISION 06-09-14
DATE PLOTTED => 24-JUL-2014
TIME PLOTTED => 10:04

Dist	COUNTY	ROUTE	POST MILES TOTAL PROJECT	SHEET No.	TOTAL SHEETS
06	Ker	5	62.5/73.1	63	213

REGISTERED CIVIL ENGINEER 06-10-14 DATE

6-16-14
PLANS APPROVAL DATE

REGISTERED PROFESSIONAL ENGINEER MAHMOOD A SULTAN No. 76344 Exp. 12-31-14 CIVIL STATE OF CALIFORNIA

THE STATE OF CALIFORNIA OR ITS OFFICERS OR AGENTS SHALL NOT BE RESPONSIBLE FOR THE ACCURACY OR COMPLETENESS OF SCANNED COPIES OF THIS PLAN SHEET.

CURVE DATA

No. ⊕	R	Δ	T	L
9	3500′	06°11′33"	189.32′	378.28′
10	3500′	06°11′33"	189.32′	378.27′

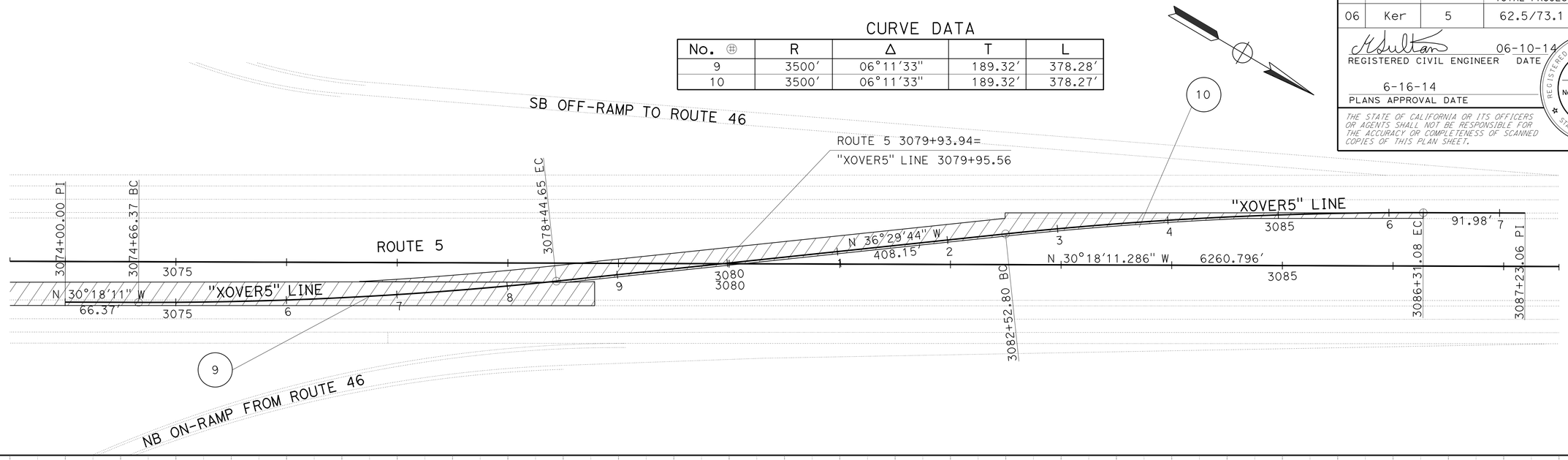

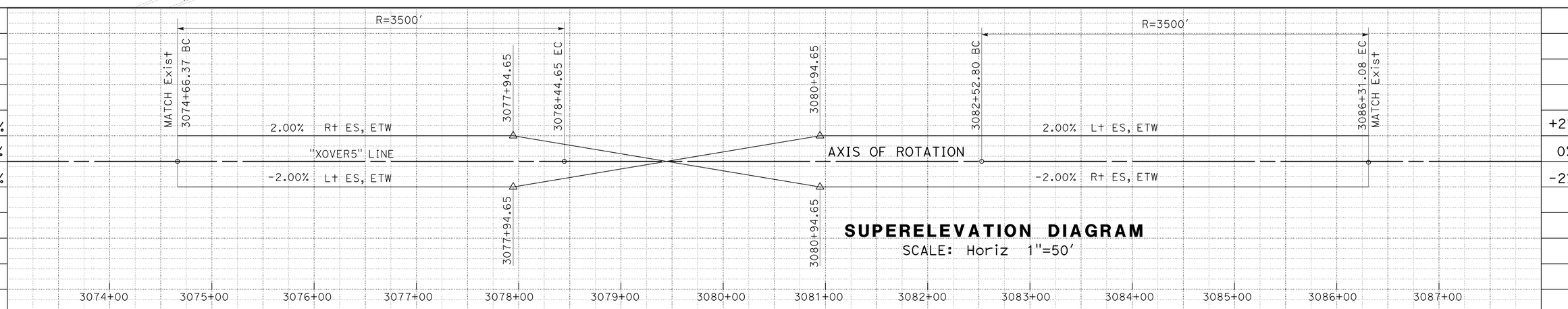

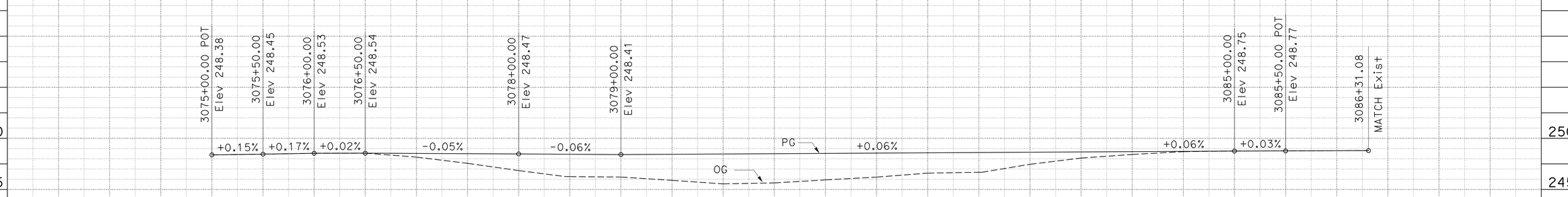

PROFILE
CROSSOVER No. 5
"XOVER5"

SCALE: Horiz 1"=50′
Vert 1"=5′

STAGE CONSTRUCTION
(PROFILE AND SUPERELEVATION DIAGRAM)

SC-39

STATION		3074+00	3075+00	3076+00	3077+00	3078+00	3079+00	3080+00	3081+00	3082+00	3083+00	3084+00	3085+00	3086+00	3087+00	TOTAL
CY	Exc							206								206
	Emb							615								615

STATE OF CALIFORNIA - DEPARTMENT OF TRANSPORTATION
Caltrans® DESIGN

FUNCTIONAL SUPERVISOR: DAVID SANGHA
CALCULATED-DESIGNED BY: CARMELITA BELLE
CHECKED BY: HARJINDER DHILLON
REVISED BY
DATE REVISED

LAST REVISION 06-09-14
DATE PLOTTED => 24-JUL-2014
TIME PLOTTED => 10:04

Dist	COUNTY	ROUTE	POST MILES TOTAL PROJECT	SHEET No.	TOTAL SHEETS
06	Ker	5	62.5/73.1	64	213

REGISTERED CIVIL ENGINEER 05-15-14 DATE

6-16-14
PLANS APPROVAL DATE

REGISTERED PROFESSIONAL ENGINEER ANDREY CHEVYCHALOV No. 68378 Exp. 9-30-15 CIVIL STATE OF CALIFORNIA

THE STATE OF CALIFORNIA OR ITS OFFICERS OR AGENTS SHALL NOT BE RESPONSIBLE FOR THE ACCURACY OR COMPLETENESS OF SCANNED COPIES OF THIS PLAN SHEET.

LEGEND:

- CHANNELIZERS (SURFACE MOUNTED)
- Temp RAILING (TYPE K)
- Temp CRASH CUSHION ARRAY
- CONSTRUCTION AREA
- LIMITS OF DESIGNATED TRAFFIC STRIPING DETAIL
- LL LANE LINE
- PORTABLE CHANGEABLE MESSAGE SIGN (PCMS) FLASHING ARROW SIGN (FAS)

NOTES:

1. TYPE-K TEMPORARY RAILING MUST BE STAKED PER 2010 Std. PLANS AND AS DIRECTED BY THE ENGINEER
2. CALIFORNIA CODES ARE DESIGNATED BY (CA). OTHERWISE, FEDERAL (MUTCD) CODES ARE SHOWN
3. FOR ADDITIONAL CONSTRUCTION AREA SIGNS REFER TO CONSTRUCTION AREA SIGNS
4. COVER ALL CONFLICTING SIGNS AND REMOVE ALL CONFLICTING PAVEMENT DELINEATION
5. EXACT LOCATIONS OF CONSTRUCTION AREA SIGNS TO BE DETERMINED BY THE ENGINEER
6. ANY TYPE-K TEMPORARY RAILING THAT REMAINS IN PLACE FROM THE PREVIOUS STAGE MUST BE REPAINTED PRIOR TO BEGINNIG OF THE NEXT STAGE

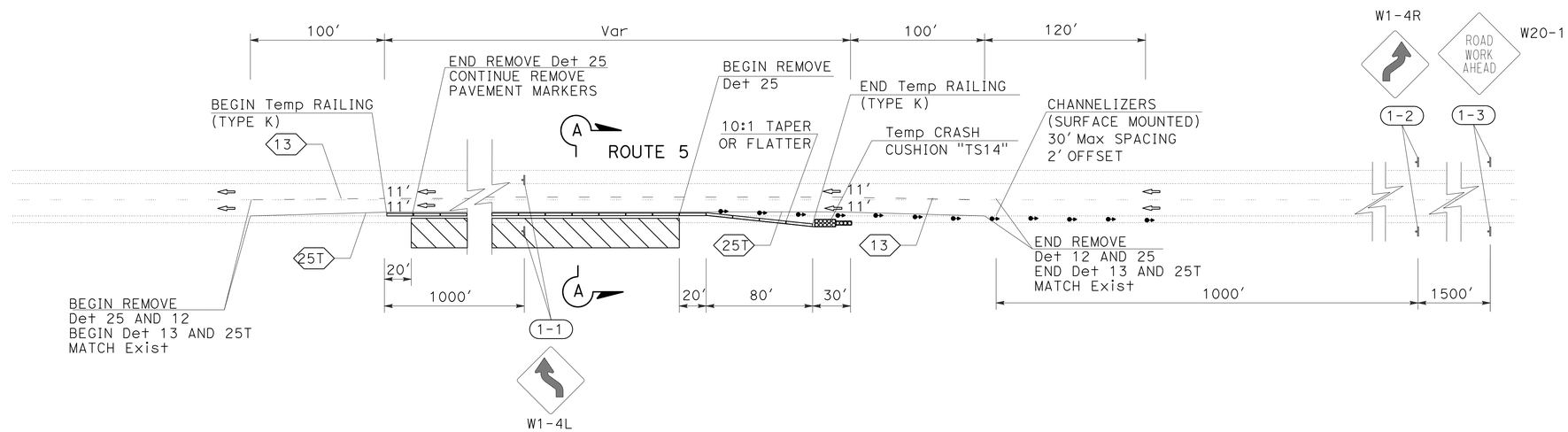

TYPICAL INSIDE SHOULDER CLOSURE WITH TEMPORARY TRAFFIC BARRIER

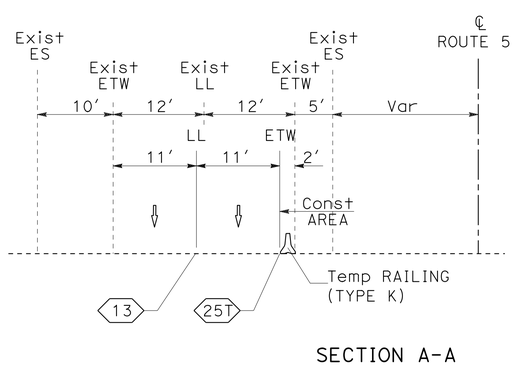

SECTION A-A
NO SCALE

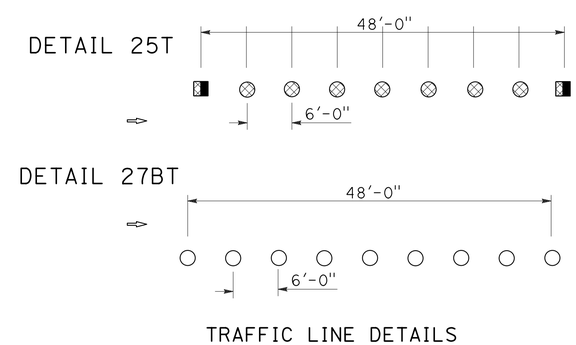

TRAFFIC LINE DETAILS

APPROVED FOR TRAFFIC HANDLING WORK ONLY

TRAFFIC HANDLING PLAN
(STAGE 1)

SCALE:1"=50′

TH-1

REVISED BY	DATE REVISED

CALCULATED-DESIGNED BY	CHECKED BY
VANIK POGOSYAN	ANDREY CHEVYCHALOV

FUNCTIONAL SUPERVISOR: MOHAMMED QATAMI

STATE OF CALIFORNIA - DEPARTMENT OF TRANSPORTATION
Caltrans
TRAFFIC DESIGN

LAST REVISION 05-15-14 | DATE PLOTTED => 24-JUL-2014 | TIME PLOTTED => 10:04

Dist	COUNTY	ROUTE	POST MILES TOTAL PROJECT	SHEET No.	TOTAL SHEETS
06	Ker	5	62.5/73.1	65	213

REGISTERED CIVIL ENGINEER 06-06-14 DATE

6-16-14
PLANS APPROVAL DATE

REGISTERED PROFESSIONAL ENGINEER ANDREY CHEVYCHALOV No. 68378 Exp. 9-30-15 CIVIL STATE OF CALIFORNIA

THE STATE OF CALIFORNIA OR ITS OFFICERS OR AGENTS SHALL NOT BE RESPONSIBLE FOR THE ACCURACY OR COMPLETENESS OF SCANNED COPIES OF THIS PLAN SHEET.

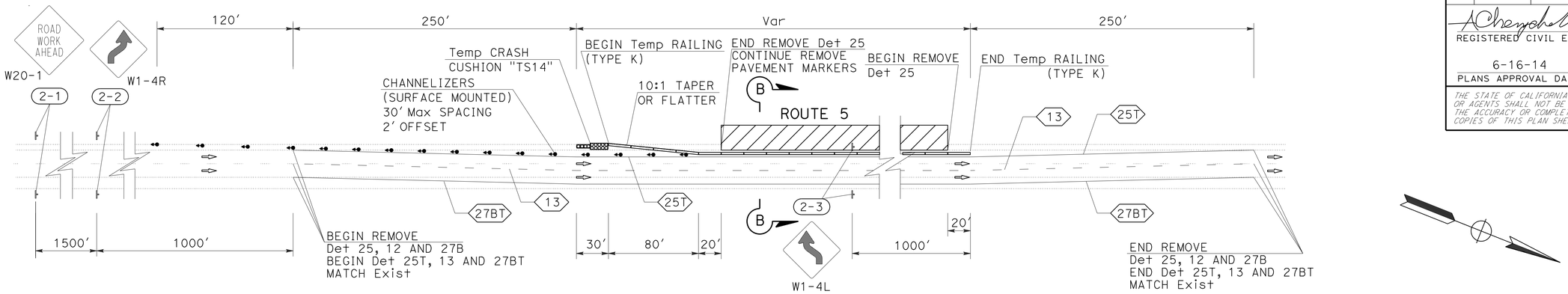

TYPICAL INSIDE SHOULDER CLOSURE WITH TEMPORARY TRAFFIC BARRIER

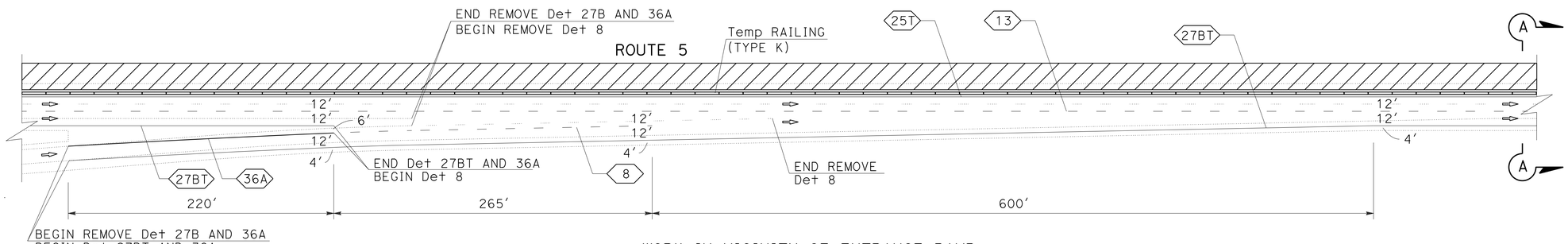

WORK IN VICINITY OF ENTRANCE RAMP

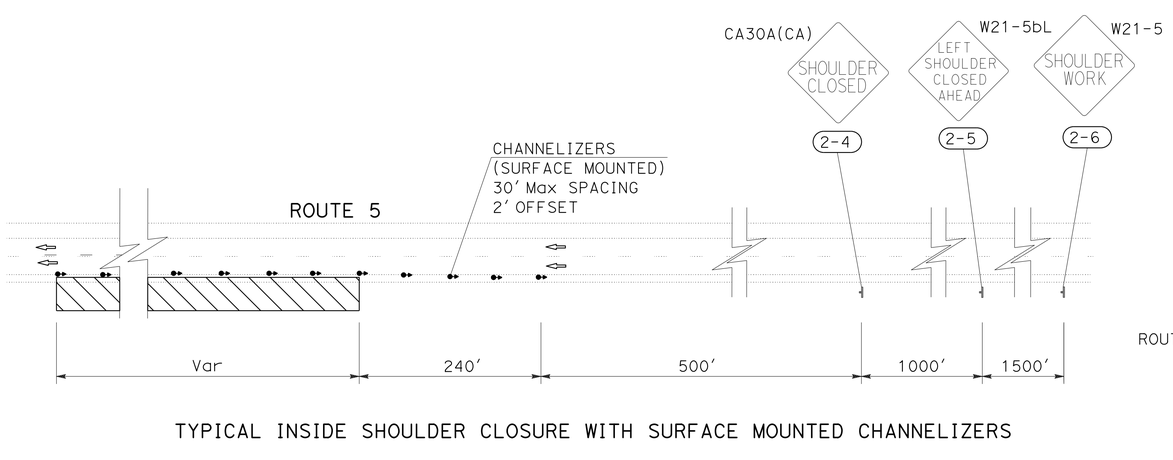

TYPICAL INSIDE SHOULDER CLOSURE WITH SURFACE MOUNTED CHANNELIZERS

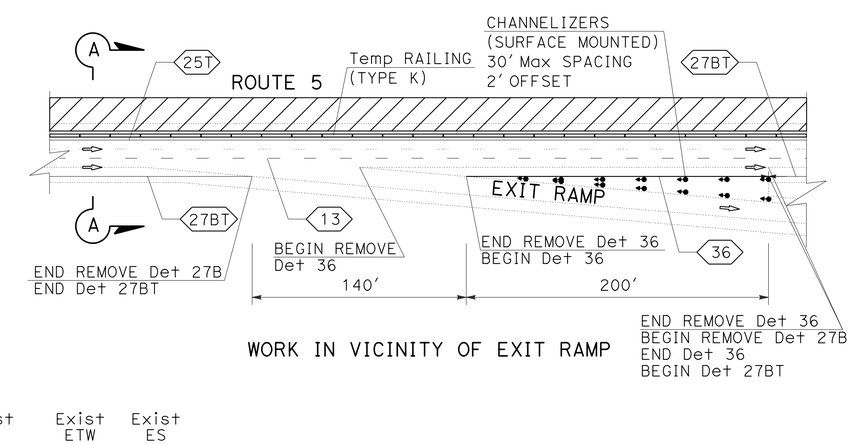

WORK IN VICINITY OF EXIT RAMP

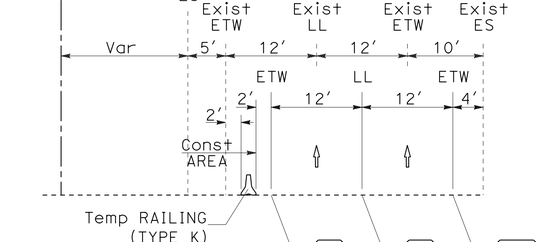

SECTION B-B
NO SCALE

APPROVED FOR TRAFFIC HANDLING WORK ONLY

TRAFFIC HANDLING PLAN
(STAGE 2 AND 5)

SCALE:1"=50′

TH-2

STATE OF CALIFORNIA - DEPARTMENT OF TRANSPORTATION
Caltrans® **TRAFFIC DESIGN**

FUNCTIONAL SUPERVISOR: MOHAMMED QATAMI
CALCULATED-DESIGNED BY: VANIK POGOSYAN
CHECKED BY: ANDREY CHEVYCHALOV
REVISED BY / DATE REVISED

LAST REVISION 06-06-14 | DATE PLOTTED => 24-JUL-2014 | TIME PLOTTED => 10:04

Dist	COUNTY	ROUTE	POST MILES TOTAL PROJECT	SHEET No.	TOTAL SHEETS
06	Ker	5	62.5/73.1	66	213

REGISTERED CIVIL ENGINEER 06-06-14 DATE

6-16-14
PLANS APPROVAL DATE

REGISTERED PROFESSIONAL ENGINEER
ANDREY CHEVYCHALOV
No. 68378
Exp. 9-30-15
CIVIL
STATE OF CALIFORNIA

THE STATE OF CALIFORNIA OR ITS OFFICERS OR AGENTS SHALL NOT BE RESPONSIBLE FOR THE ACCURACY OR COMPLETENESS OF SCANNED COPIES OF THIS PLAN SHEET.

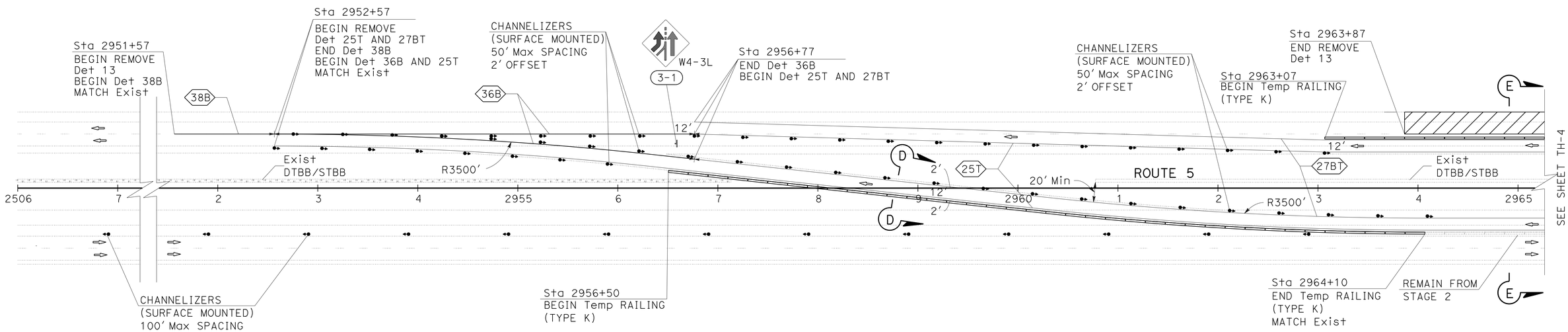

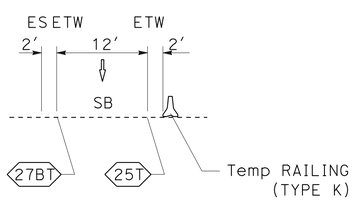

SECTION D-D
NO SCALE

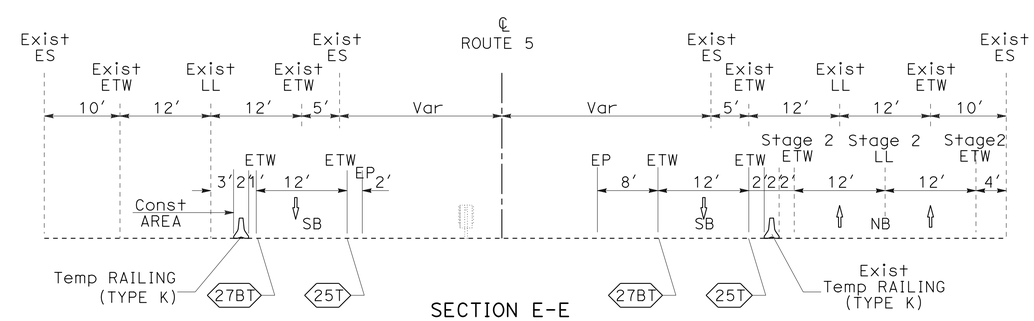

SECTION E-E
NO SCALE

TRAFFIC HANDLING PLAN
(STAGE 3)

APPROVED FOR TRAFFIC HANDLING WORK ONLY

SCALE:1"=50'

TH-3

STATE OF CALIFORNIA - DEPARTMENT OF TRANSPORTATION
Caltrans®
TRAFFIC DESIGN

FUNCTIONAL SUPERVISOR: MOHAMMED QATAMI
CALCULATED-DESIGNED BY: VANIK POGOSYAN
CHECKED BY: ANDREY CHEVYCHALOV
REVISED BY
DATE REVISED

LAST REVISION 06-06-14
DATE PLOTTED => 24-JUL-2014
TIME PLOTTED => 10:04

Dist	COUNTY	ROUTE	POST MILES TOTAL PROJECT	SHEET No.	TOTAL SHEETS
06	Ker	5	62.5/73.1	67	213

REGISTERED CIVIL ENGINEER 06-06-14 DATE

6-16-14
PLANS APPROVAL DATE

REGISTERED PROFESSIONAL ENGINEER
ANDREY CHEVYCHALOV
No. 68378
Exp. 9-30-15
CIVIL
STATE OF CALIFORNIA

THE STATE OF CALIFORNIA OR ITS OFFICERS OR AGENTS SHALL NOT BE RESPONSIBLE FOR THE ACCURACY OR COMPLETENESS OF SCANNED COPIES OF THIS PLAN SHEET.

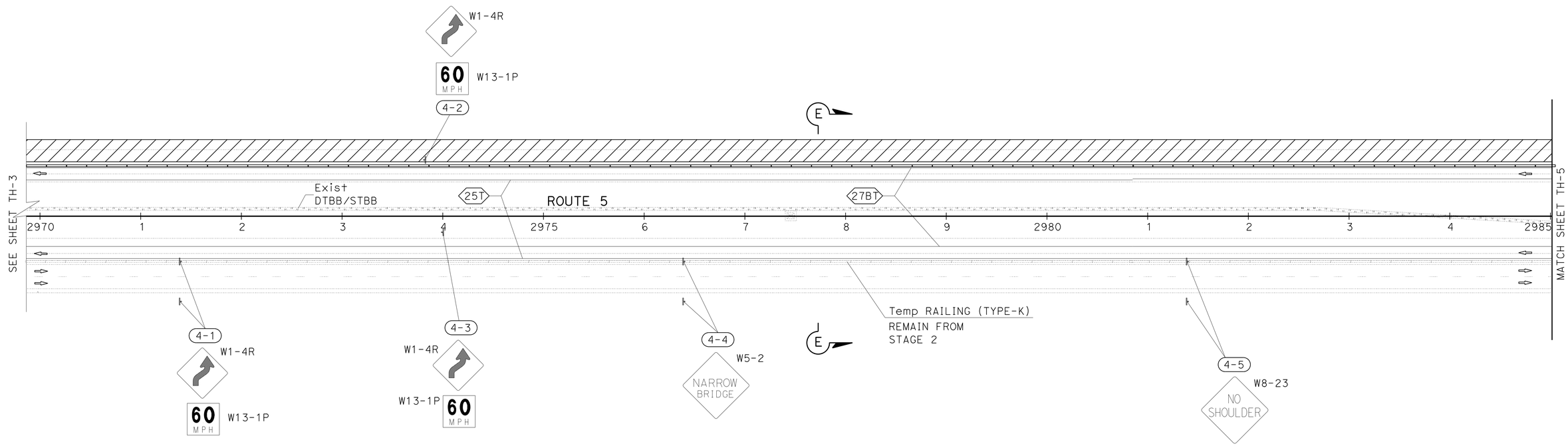

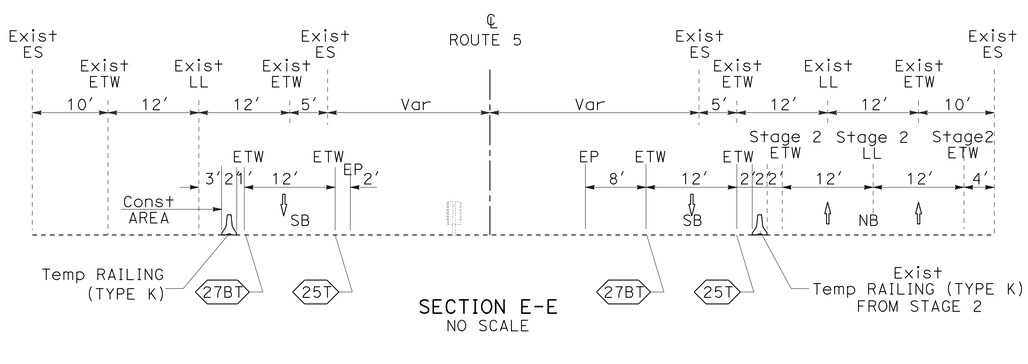

SECTION E-E
NO SCALE

TRAFFIC HANDLING PLAN
(STAGE 3)

APPROVED FOR TRAFFIC HANDLING WORK ONLY

SCALE:1"=50′

TH-4

STATE OF CALIFORNIA - DEPARTMENT OF TRANSPORTATION
Caltrans
TRAFFIC DESIGN

FUNCTIONAL SUPERVISOR: MOHAMMED QATAMI
CALCULATED-DESIGNED BY: VANIK POGOSYAN
CHECKED BY: ANDREY CHEVYCHALOV
REVISED BY
DATE REVISED

LAST REVISION 06-06-14
DATE PLOTTED => 24-JUL-2014
TIME PLOTTED => 10:04

Dist	COUNTY	ROUTE	POST MILES TOTAL PROJECT	SHEET No.	TOTAL SHEETS
06	Ker	5	62.5/73.1	68	213

REGISTERED CIVIL ENGINEER 06-06-14 DATE

6-16-14
PLANS APPROVAL DATE

REGISTERED PROFESSIONAL ENGINEER
ANDREY CHEVYCHALOV
No. 68378
Exp. 9-30-15
CIVIL
STATE OF CALIFORNIA

THE STATE OF CALIFORNIA OR ITS OFFICERS OR AGENTS SHALL NOT BE RESPONSIBLE FOR THE ACCURACY OR COMPLETENESS OF SCANNED COPIES OF THIS PLAN SHEET.

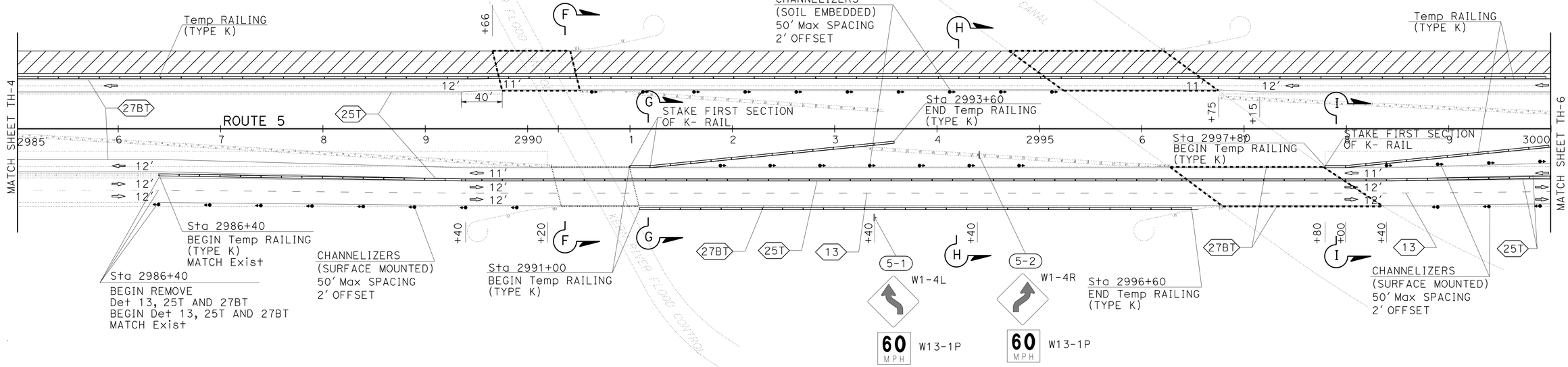

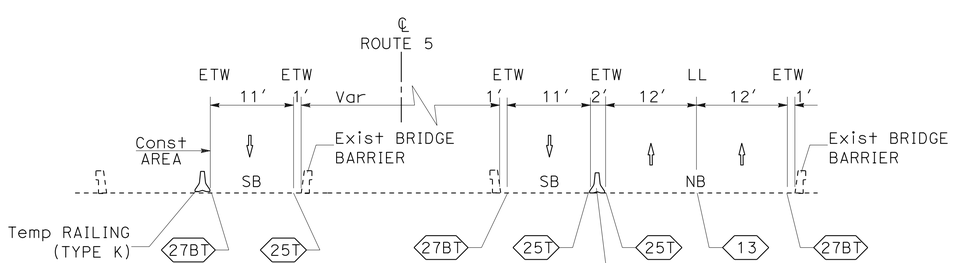

SECTION F-F
NO SCALE

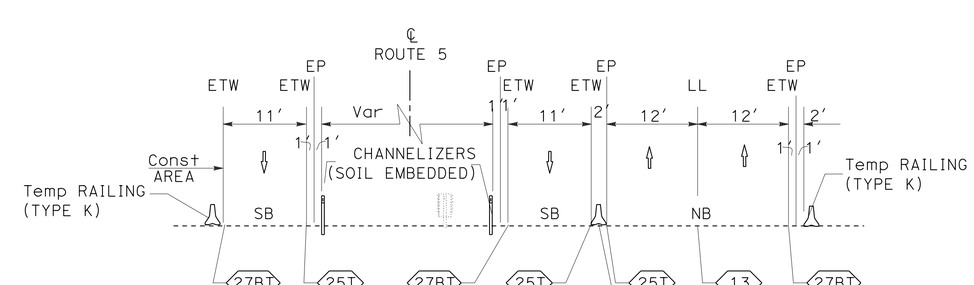

SECTION I-I
NO SCALE

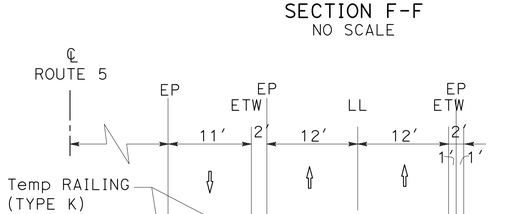

SECTION G-G
NO SCALE

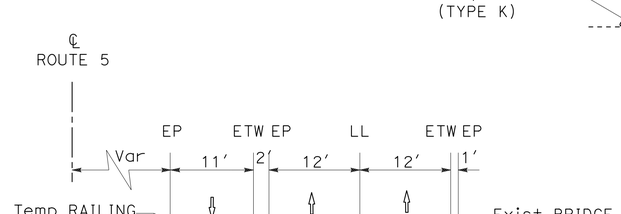

SECTION H-H
NO SCALE

APPROVED FOR TRAFFIC HANDLING WORK ONLY

TRAFFIC HANDLING PLAN
(STAGE 3)

SCALE:1"=50'

TH-5

STATE OF CALIFORNIA - DEPARTMENT OF TRANSPORTATION
Caltrans
TRAFFIC DESIGN

FUNCTIONAL SUPERVISOR: MOHAMMED QATAMI
CALCULATED-DESIGNED BY: VANIK POGOSYAN
CHECKED BY: ANDREY CHEVYCHALOV
REVISED BY
DATE REVISED

LAST REVISION DATE PLOTTED => 24-JUL-2014
TIME PLOTTED => 10:04
06-06-14

Dist	COUNTY	ROUTE	POST MILES TOTAL PROJECT	SHEET No.	TOTAL SHEETS
06	Ker	5	62.5/73.1	69	213

REGISTERED CIVIL ENGINEER 06-06-14 DATE

6-16-14
PLANS APPROVAL DATE

ANDREY CHEVYCHALOV No. 68378 Exp. 9-30-15 CIVIL
REGISTERED PROFESSIONAL ENGINEER
STATE OF CALIFORNIA

THE STATE OF CALIFORNIA OR ITS OFFICERS OR AGENTS SHALL NOT BE RESPONSIBLE FOR THE ACCURACY OR COMPLETENESS OF SCANNED COPIES OF THIS PLAN SHEET.

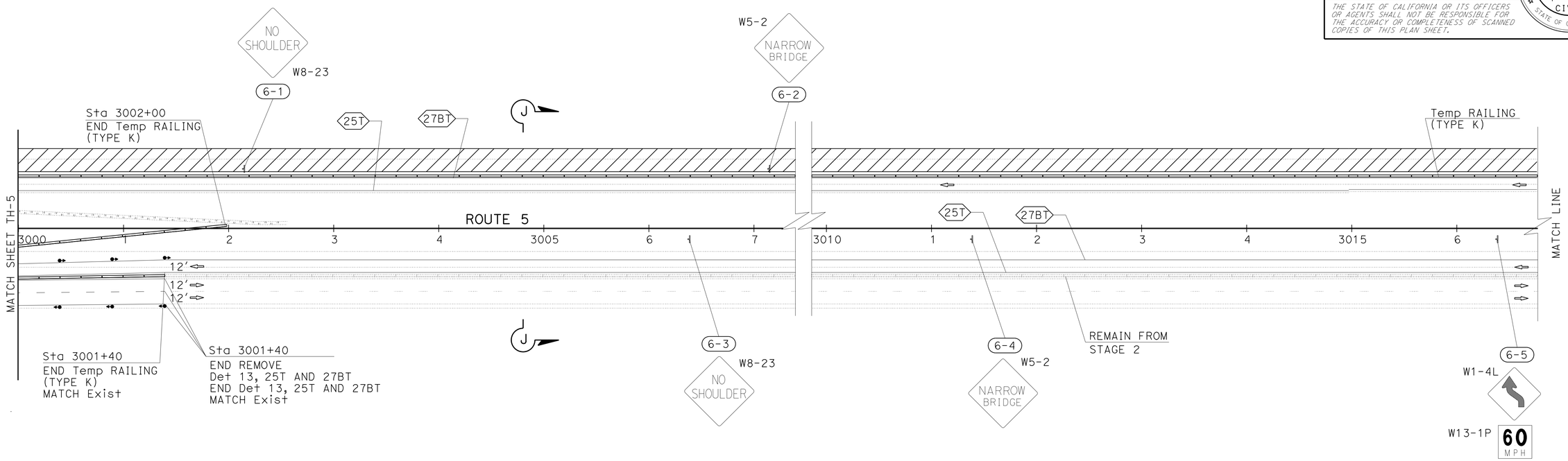

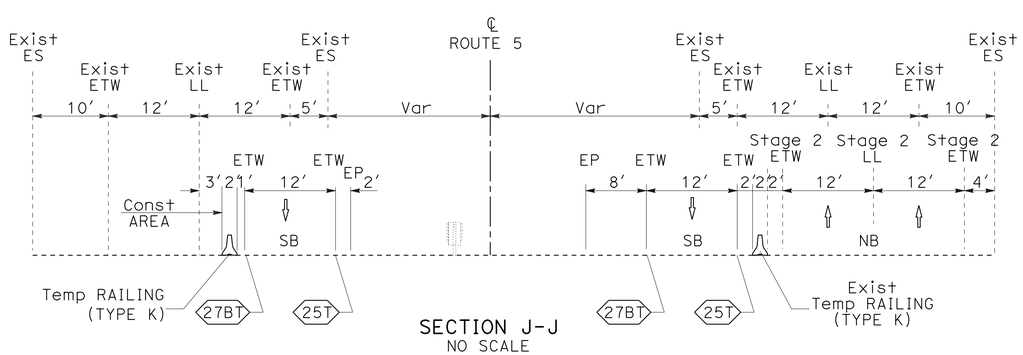

SECTION J-J
NO SCALE

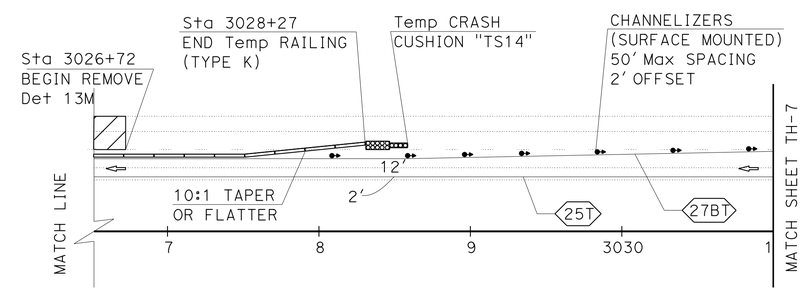

TRAFFIC HANDLING PLAN
(STAGE 3)

APPROVED FOR TRAFFIC HANDLING WORK ONLY

SCALE:1"=50'

TH-6

STATE OF CALIFORNIA - DEPARTMENT OF TRANSPORTATION
Caltrans
TRAFFIC DESIGN

FUNCTIONAL SUPERVISOR: MOHAMMED QATAMI
CALCULATED-DESIGNED BY: VANIK POGOSYAN
CHECKED BY: ANDREY CHEVYCHALOV
REVISED BY
DATE REVISED

LAST REVISION 06-06-14
DATE PLOTTED => 24-JUL-2014
TIME PLOTTED => 10:04

Dist	COUNTY	ROUTE	POST MILES TOTAL PROJECT	SHEET No.	TOTAL SHEETS
06	Ker	5	62.5/73.1	70	213

REGISTERED CIVIL ENGINEER 06-06-14 DATE

6-16-14
PLANS APPROVAL DATE

REGISTERED PROFESSIONAL ENGINEER ANDREY CHEVYCHALOV No. 68378 Exp. 9-30-15 CIVIL STATE OF CALIFORNIA

THE STATE OF CALIFORNIA OR ITS OFFICERS OR AGENTS SHALL NOT BE RESPONSIBLE FOR THE ACCURACY OR COMPLETENESS OF SCANNED COPIES OF THIS PLAN SHEET.

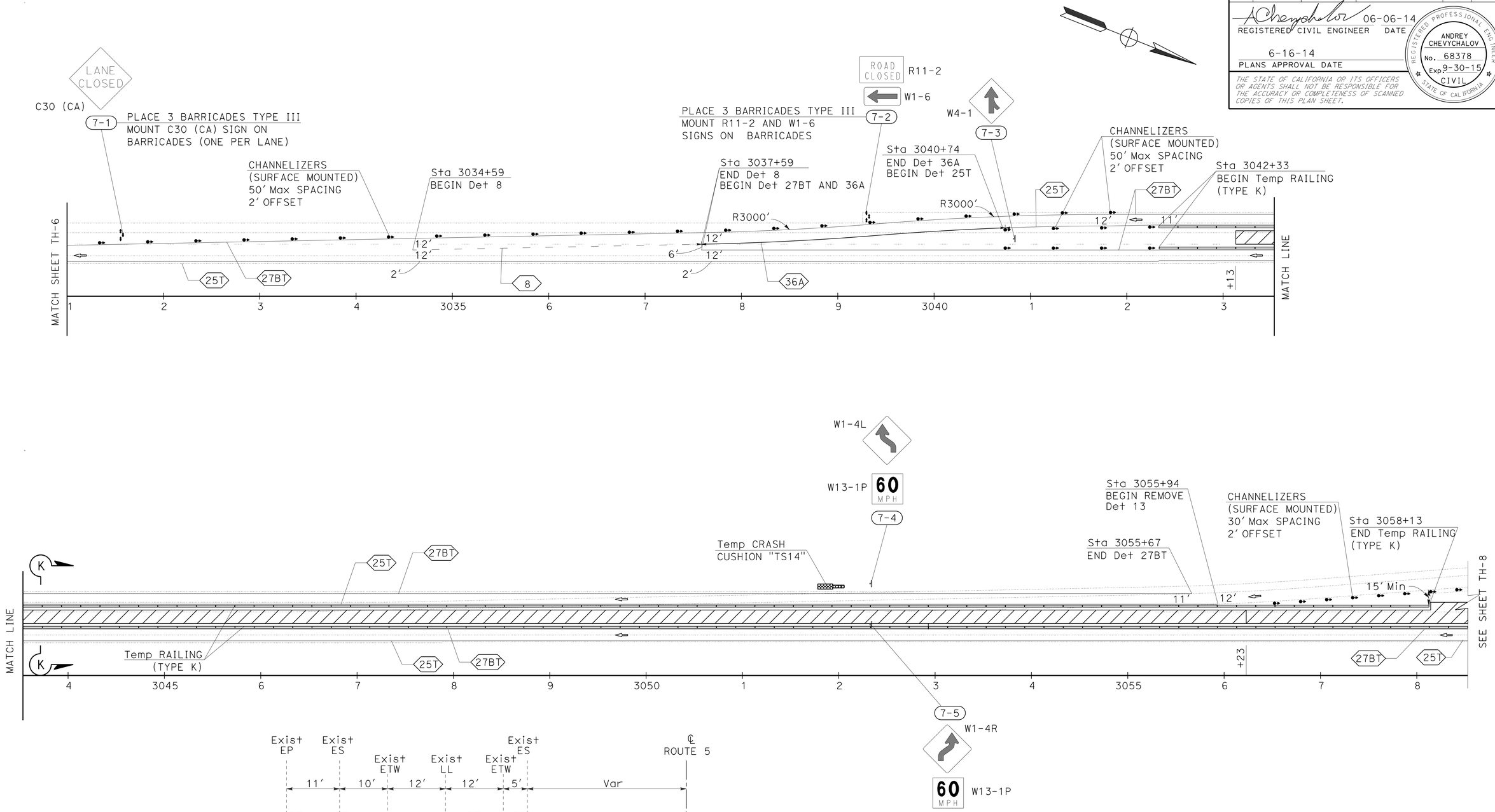

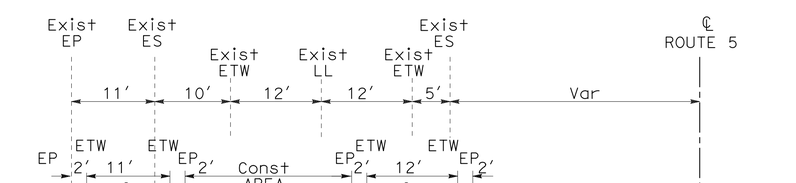

SECTION K-K
NO SCALE

APPROVED FOR TRAFFIC HANDLING WORK ONLY

TRAFFIC HANDLING PLAN
(STAGE 3)

SCALE:1"=50'

TH-7

STATE OF CALIFORNIA - DEPARTMENT OF TRANSPORTATION
Caltrans
TRAFFIC DESIGN

FUNCTIONAL SUPERVISOR: MOHAMMED QATAMI
CALCULATED-DESIGNED BY: VANIK POGOSYAN
CHECKED BY: ANDREY CHEVYCHALOV
REVISED BY
DATE REVISED

LAST REVISION 05-15-14
DATE PLOTTED => 24-JUL-2014
TIME PLOTTED => 10:04

Dist	COUNTY	ROUTE	POST MILES TOTAL PROJECT	SHEET No.	TOTAL SHEETS
06	Ker	5	62.5/73.1	71	213

REGISTERED CIVIL ENGINEER 06-06-14 DATE

6-16-14
PLANS APPROVAL DATE

REGISTERED PROFESSIONAL ENGINEER ANDREY CHEVYCHALOV No. 68378 Exp. 9-30-15 CIVIL STATE OF CALIFORNIA

THE STATE OF CALIFORNIA OR ITS OFFICERS OR AGENTS SHALL NOT BE RESPONSIBLE FOR THE ACCURACY OR COMPLETENESS OF SCANNED COPIES OF THIS PLAN SHEET.

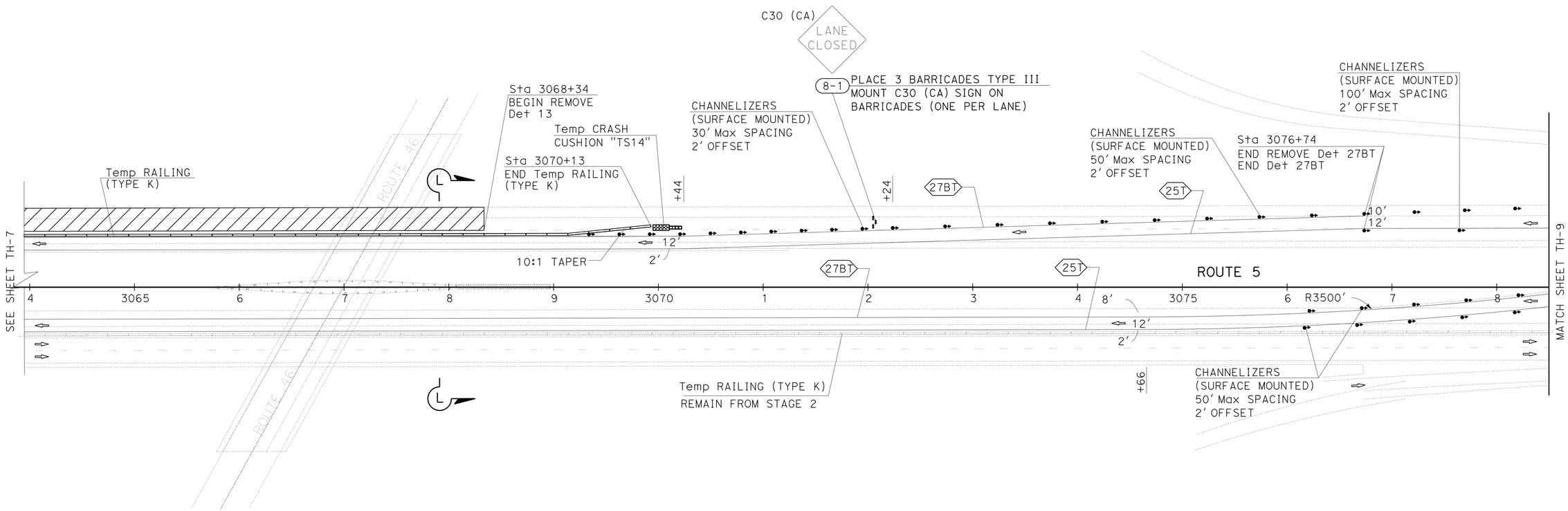

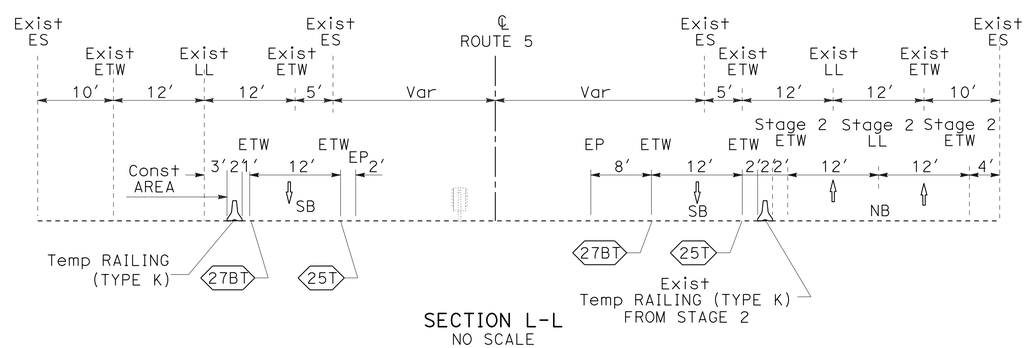

SECTION L-L
NO SCALE

TRAFFIC HANDLING PLAN
(STAGE 3)

APPROVED FOR TRAFFIC HANDLING WORK ONLY

SCALE:1"=50'

TH-8

STATE OF CALIFORNIA - DEPARTMENT OF TRANSPORTATION
Caltrans®
TRAFFIC DESIGN

FUNCTIONAL SUPERVISOR: MOHAMMED QATAMI
CALCULATED-DESIGNED BY: VANIK POGOSYAN
CHECKED BY: ANDREY CHEVYCHALOV
REVISED BY
DATE REVISED

LAST REVISION 06-06-14
DATE PLOTTED => 24-JUL-2014
TIME PLOTTED => 10:04

Dist	COUNTY	ROUTE	POST MILES TOTAL PROJECT	SHEET No.	TOTAL SHEETS
06	Ker	5	62.5/73.1	72	213

REGISTERED CIVIL ENGINEER 06-06-14 DATE

6-16-14
PLANS APPROVAL DATE

REGISTERED PROFESSIONAL ENGINEER ANDREY CHEVYCHALOV No. 68378 Exp. 9-30-15 CIVIL STATE OF CALIFORNIA

THE STATE OF CALIFORNIA OR ITS OFFICERS OR AGENTS SHALL NOT BE RESPONSIBLE FOR THE ACCURACY OR COMPLETENESS OF SCANNED COPIES OF THIS PLAN SHEET.

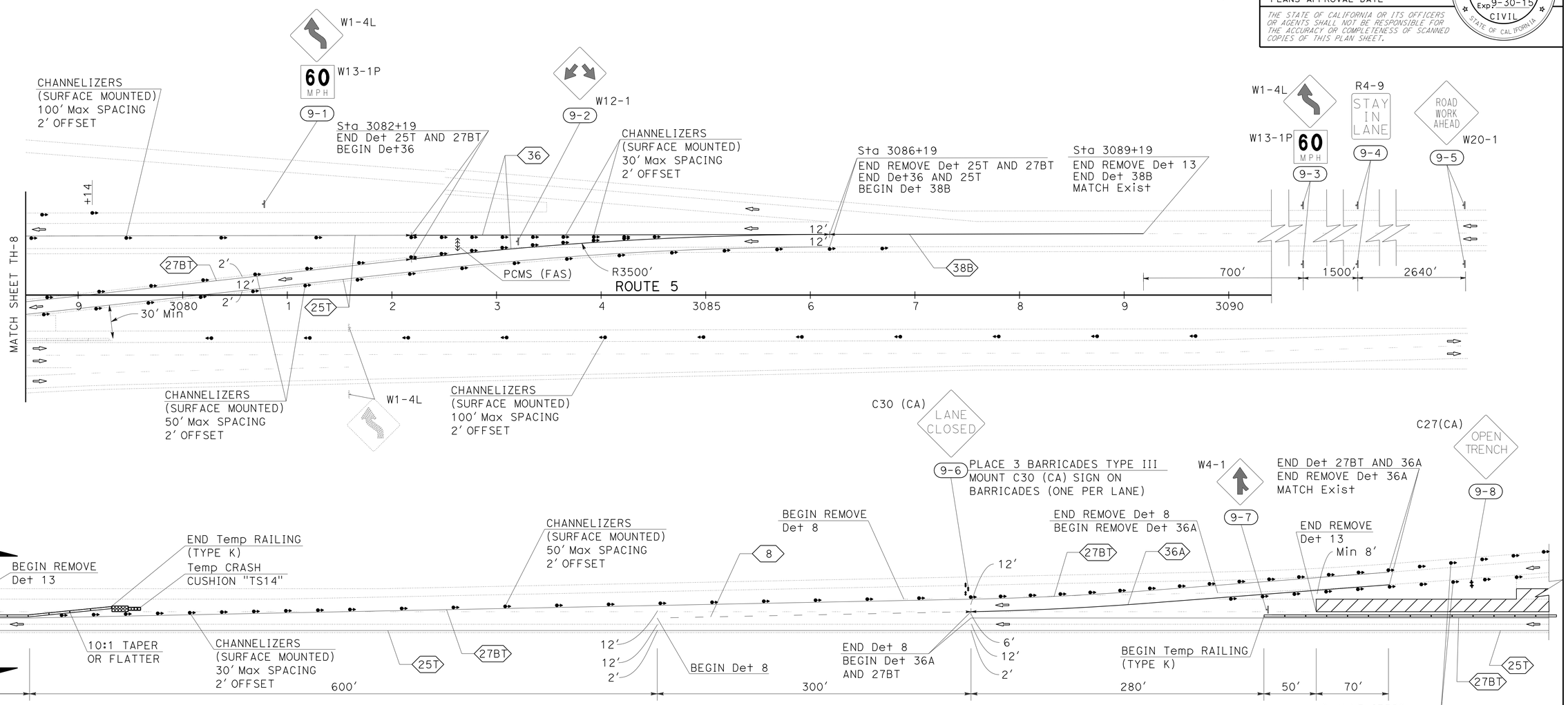

WORK IN VICINITY OF ENTRANCE RAMP

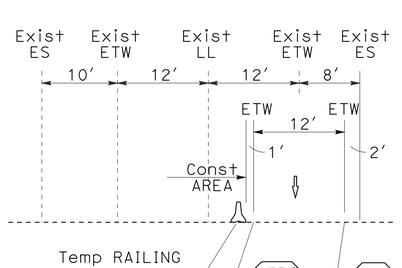

SECTION M-M
NO SCALE

APPROVED FOR TRAFFIC HANDLING WORK ONLY

TRAFFIC HANDLING PLAN
(STAGE 3)

SCALE:1"=50'

TH-9

STATE OF CALIFORNIA - DEPARTMENT OF TRANSPORTATION
Caltrans
TRAFFIC DESIGN

FUNCTIONAL SUPERVISOR: MOHAMMED QATAMI
CALCULATED-DESIGNED BY: VANIK POGOSYAN
CHECKED BY: ANDREY CHEVYCHALOV
REVISED BY / DATE REVISED

LAST REVISION 06-06-14
DATE PLOTTED => 24-JUL-2014
TIME PLOTTED => 10:04

Dist	COUNTY	ROUTE	POST MILES TOTAL PROJECT	SHEET No.	TOTAL SHEETS
06	Ker	5	62.5/73.1	73	213

REGISTERED CIVIL ENGINEER 06-06-14 DATE

6-16-14
PLANS APPROVAL DATE

REGISTERED PROFESSIONAL ENGINEER
ANDREY CHEVYCHALOV
No. 68378
Exp. 9-30-15
CIVIL
STATE OF CALIFORNIA

THE STATE OF CALIFORNIA OR ITS OFFICERS OR AGENTS SHALL NOT BE RESPONSIBLE FOR THE ACCURACY OR COMPLETENESS OF SCANNED COPIES OF THIS PLAN SHEET.

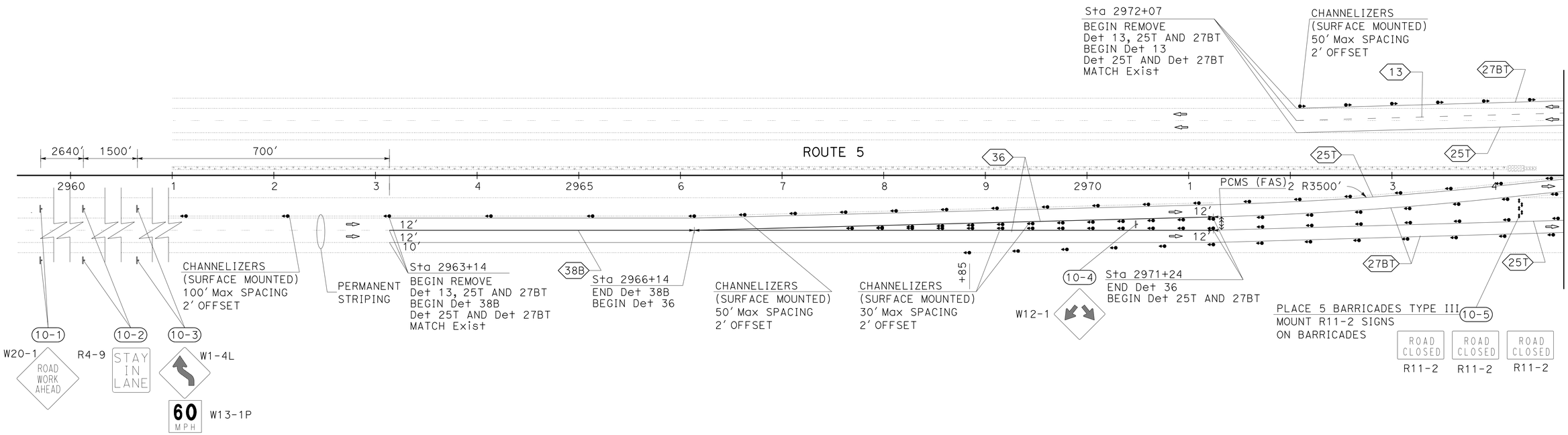

APPROVED FOR TRAFFIC HANDLING WORK ONLY

TRAFFIC HANDLING PLAN
(STAGE 4)

SCALE:1"=50'

TH-10

STATE OF CALIFORNIA - DEPARTMENT OF TRANSPORTATION
Caltrans®
TRAFFIC DESIGN

FUNCTIONAL SUPERVISOR: MOHAMMED QATAMI

CALCULATED-DESIGNED BY: VANIK POGOSYAN
CHECKED BY: ANDREY CHEVYCHALOV

REVISED BY
DATE REVISED

LAST REVISION 06-06-14
DATE PLOTTED => 24-JUL-2014
TIME PLOTTED => 10:04

Dist	COUNTY	ROUTE	POST MILES TOTAL PROJECT	SHEET No.	TOTAL SHEETS
06	Ker	5	62.5/73.1	74	213

REGISTERED CIVIL ENGINEER 06-06-14 DATE

6-16-14
PLANS APPROVAL DATE

REGISTERED PROFESSIONAL ENGINEER
ANDREY CHEVYCHALOV
No. 68378
Exp. 9-30-15
CIVIL
STATE OF CALIFORNIA

THE STATE OF CALIFORNIA OR ITS OFFICERS OR AGENTS SHALL NOT BE RESPONSIBLE FOR THE ACCURACY OR COMPLETENESS OF SCANNED COPIES OF THIS PLAN SHEET.

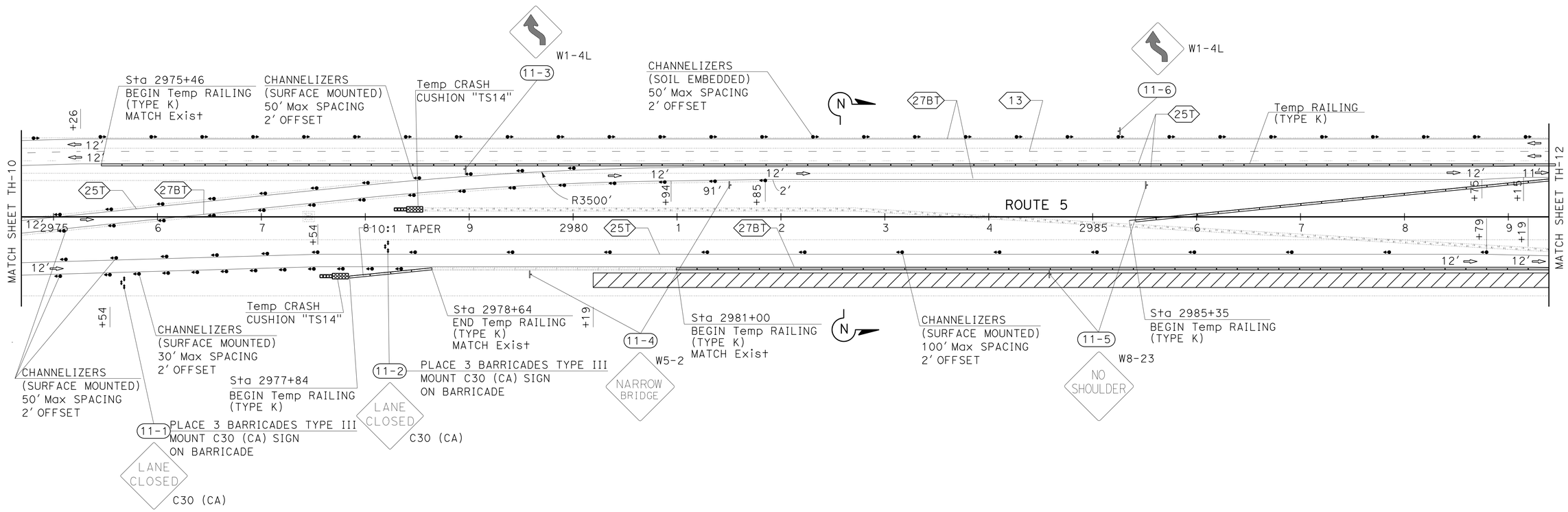

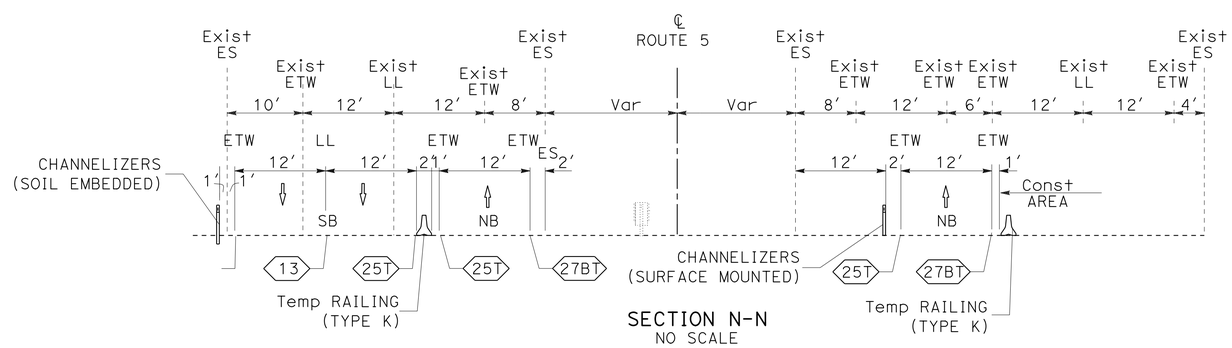

SECTION N-N
NO SCALE

TRAFFIC HANDLING PLAN
(STAGE 4)

APPROVED FOR TRAFFIC HANDLING WORK ONLY

SCALE:1"=50'

TH-11

STATE OF CALIFORNIA - DEPARTMENT OF TRANSPORTATION
Caltrans
TRAFFIC DESIGN

FUNCTIONAL SUPERVISOR: MOHAMMED QATAMI
CALCULATED-DESIGNED BY: VANIK POGOSYAN
CHECKED BY: ANDREY CHEVYCHALOV
REVISED BY
DATE REVISED

LAST REVISION 06-06-14
DATE PLOTTED => 24-JUL-2014
TIME PLOTTED => 10:04

Dist	COUNTY	ROUTE	POST MILES TOTAL PROJECT	SHEET No.	TOTAL SHEETS
06	Ker	5	62.5/73.1	75	213

REGISTERED CIVIL ENGINEER 06-06-14 DATE

6-16-14
PLANS APPROVAL DATE

REGISTERED PROFESSIONAL ENGINEER ANDREY CHEVYCHALOV No. 68378 Exp. 9-30-15 CIVIL STATE OF CALIFORNIA

THE STATE OF CALIFORNIA OR ITS OFFICERS OR AGENTS SHALL NOT BE RESPONSIBLE FOR THE ACCURACY OR COMPLETENESS OF SCANNED COPIES OF THIS PLAN SHEET.

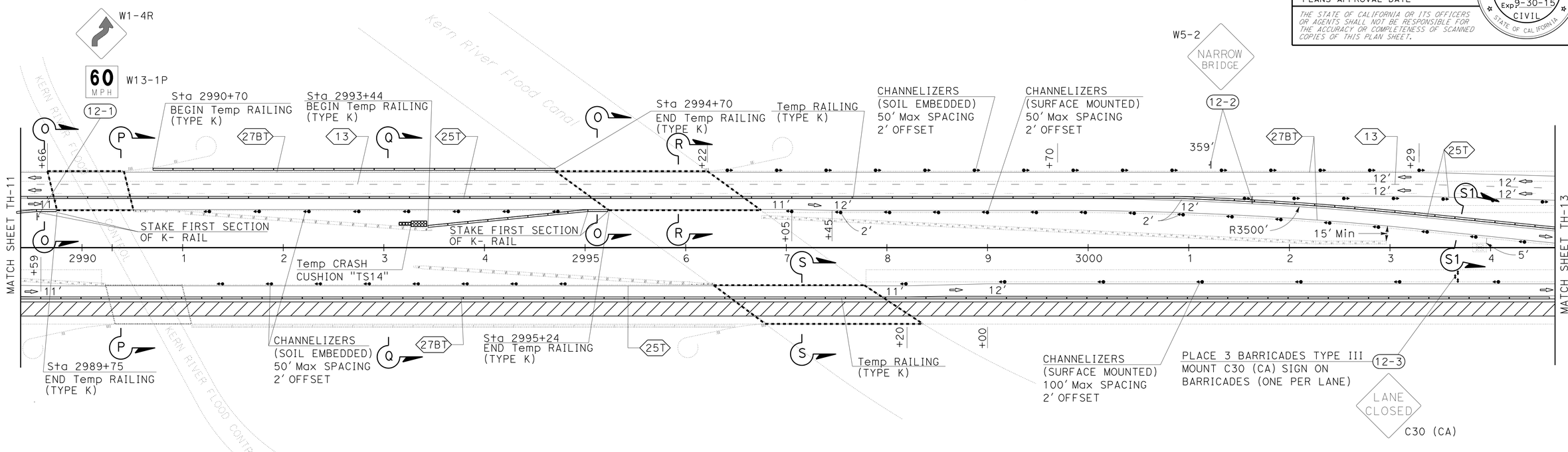

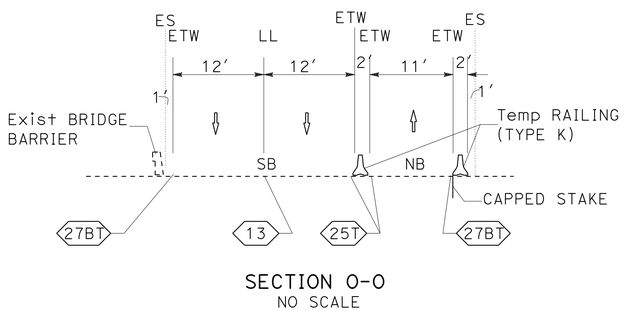

SECTION O-O
NO SCALE

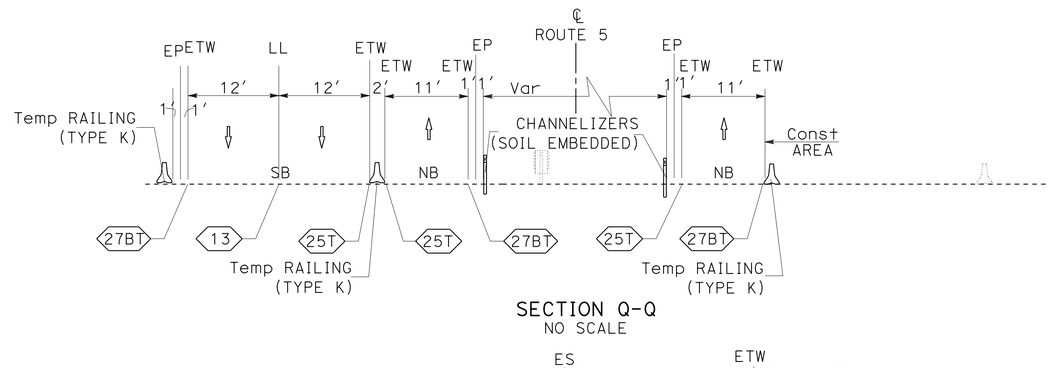

SECTION Q-Q
NO SCALE

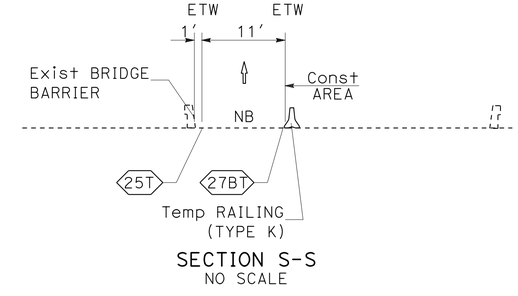

SECTION S-S
NO SCALE

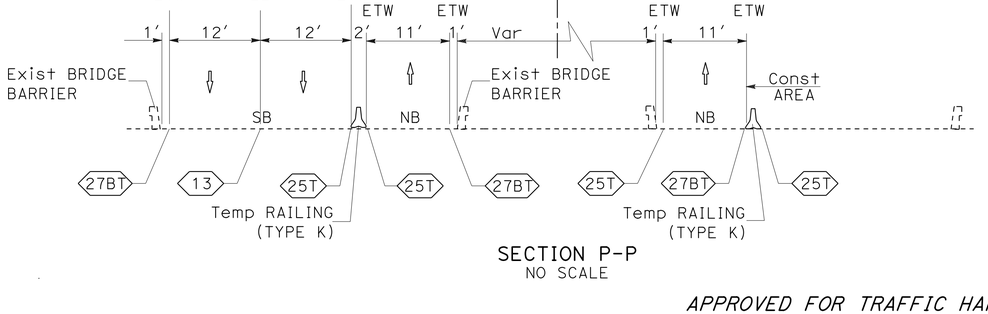

SECTION P-P
NO SCALE

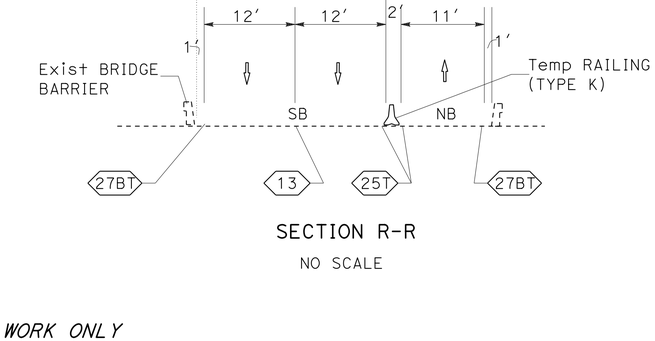

SECTION R-R
NO SCALE

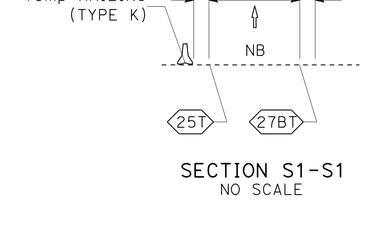

SECTION S1-S1
NO SCALE

APPROVED FOR TRAFFIC HANDLING WORK ONLY

TRAFFIC HANDLING PLAN
(STAGE 4)

SCALE:1"=50'

TH-12

REVISED BY	DATE REVISED

CALCULATED-DESIGNED BY	CHECKED BY
VANIK POGOSYAN	ANDREY CHEVYCHALOV

FUNCTIONAL SUPERVISOR: MOHAMMED QATAMI

STATE OF CALIFORNIA - DEPARTMENT OF TRANSPORTATION
Caltrans® TRAFFIC DESIGN

LAST REVISION 06-06-14 | DATE PLOTTED => 24-JUL-2014 | TIME PLOTTED => 10:04

Dist	COUNTY	ROUTE	POST MILES TOTAL PROJECT	SHEET No.	TOTAL SHEETS
06	Ker	5	62.5/73.1	76	213

REGISTERED CIVIL ENGINEER 06-06-14 DATE

6-16-14
PLANS APPROVAL DATE

REGISTERED PROFESSIONAL ENGINEER ANDREY CHEVYCHALOV No. 68378 Exp. 9-30-15 CIVIL STATE OF CALIFORNIA

THE STATE OF CALIFORNIA OR ITS OFFICERS OR AGENTS SHALL NOT BE RESPONSIBLE FOR THE ACCURACY OR COMPLETENESS OF SCANNED COPIES OF THIS PLAN SHEET.

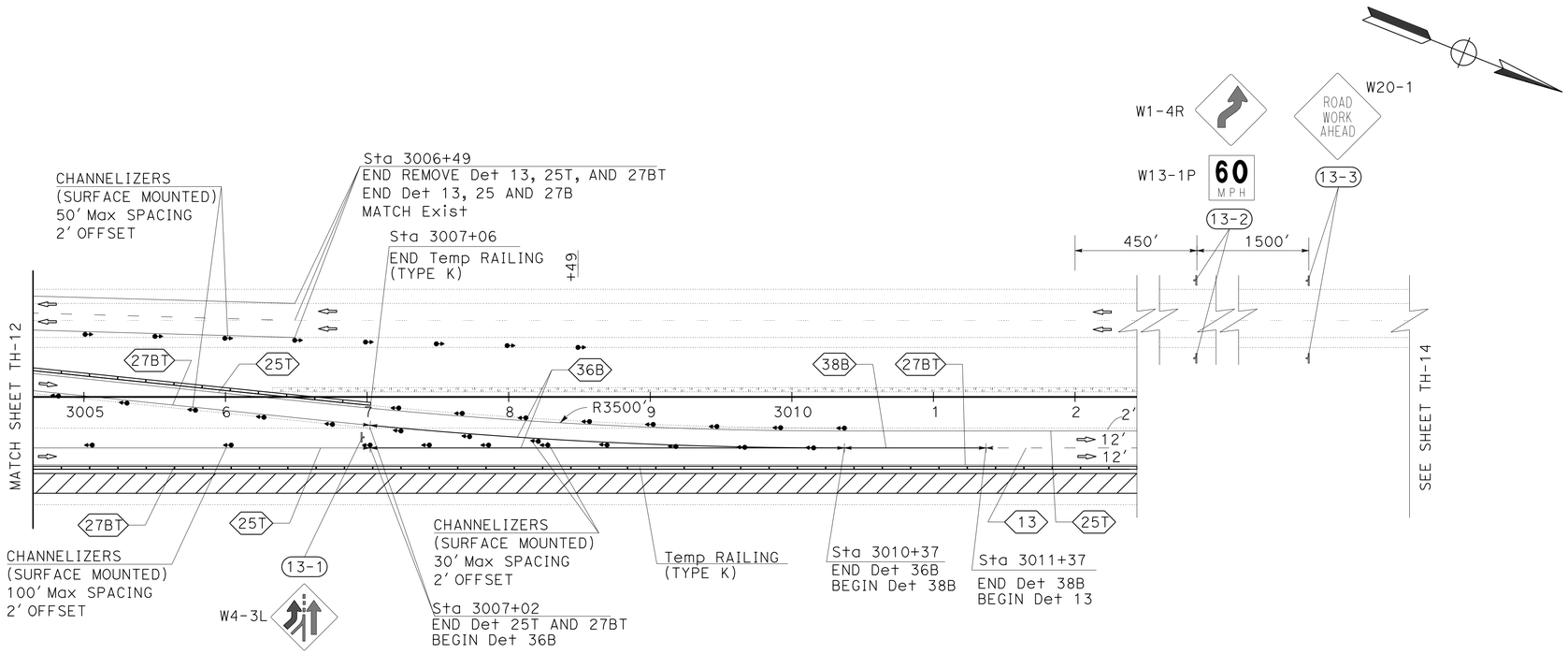

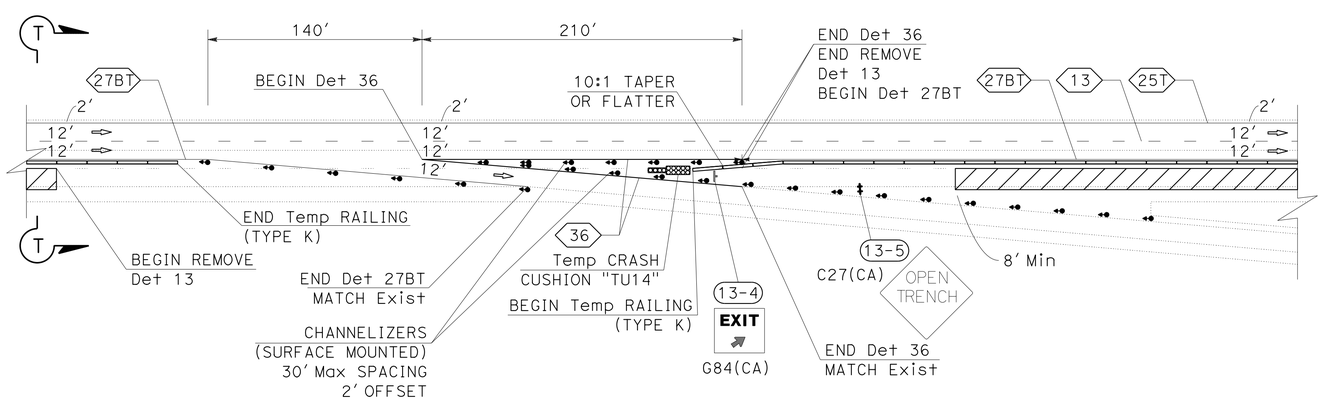

WORK IN VICINITY OF EXIT RAMP

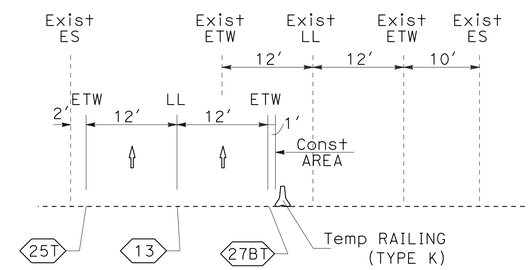

SECTION T-T
NO SCALE

TRAFFIC HANDLING PLAN
(STAGE 4)

APPROVED FOR TRAFFIC HANDLING WORK ONLY

SCALE:1"=50′

TH-13

STATE OF CALIFORNIA - DEPARTMENT OF TRANSPORTATION
Caltrans
TRAFFIC DESIGN

FUNCTIONAL SUPERVISOR: MOHAMMED QATAMI
CALCULATED-DESIGNED BY: VANIK POGOSYAN
CHECKED BY: ANDREY CHEVYCHALOV
REVISED BY
DATE REVISED

LAST REVISION 06-06-14
DATE PLOTTED => 24-JUL-2014
TIME PLOTTED => 10:04

Dist	COUNTY	ROUTE	POST MILES TOTAL PROJECT	SHEET No.	TOTAL SHEETS
06	Ker	5	62.5/73.1	77	213

REGISTERED CIVIL ENGINEER 06-06-14 DATE

6-16-14
PLANS APPROVAL DATE

REGISTERED PROFESSIONAL ENGINEER ANDREY CHEVYCHALOV No. 68378 Exp. 9-30-15 CIVIL STATE OF CALIFORNIA

THE STATE OF CALIFORNIA OR ITS OFFICERS OR AGENTS SHALL NOT BE RESPONSIBLE FOR THE ACCURACY OR COMPLETENESS OF SCANNED COPIES OF THIS PLAN SHEET.

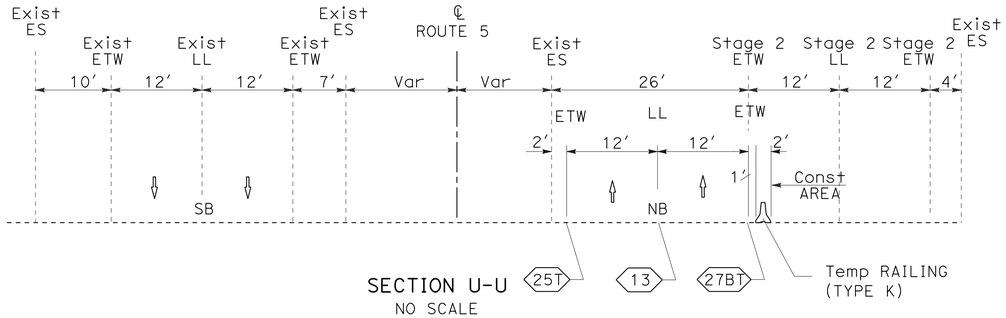

SECTION U-U
NO SCALE

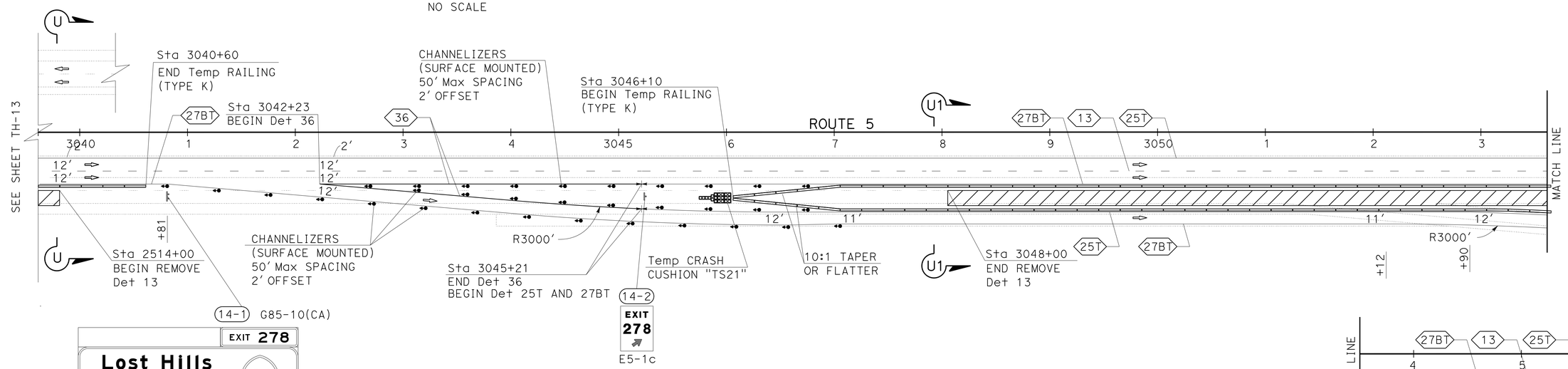

No border, None on Orange;
3.0" Radius, 1.5" Border, Black on Orange;
[EXIT] E; [278] E;
9.0" Radius, 1.5" Border, Black on Orange;
[Lost Hills] E Mod; [Paso Robles] E Mod; Arrow 13.33UC-1L - 20.3" 45°;

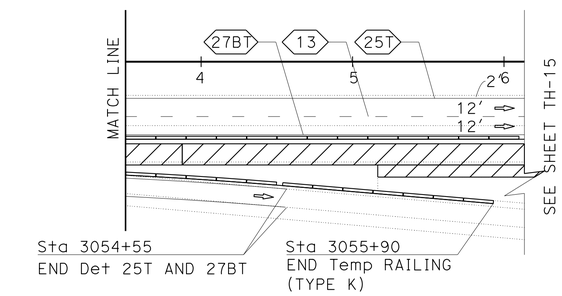

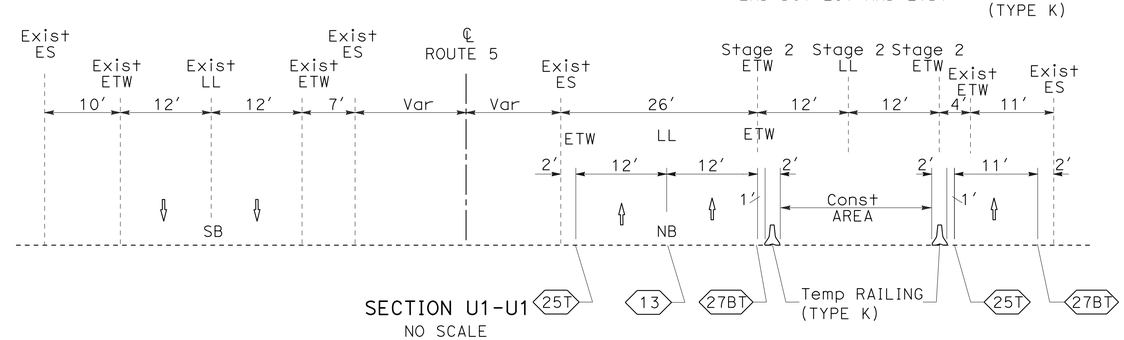

SECTION U1-U1
NO SCALE

APPROVED FOR TRAFFIC HANDLING WORK ONLY

TRAFFIC HANDLING PLAN
(STAGE 4)

SCALE:1"=50′

TH-14

STATE OF CALIFORNIA - DEPARTMENT OF TRANSPORTATION
Caltrans® TRAFFIC DESIGN

FUNCTIONAL SUPERVISOR: MOHAMMED QATAMI
CALCULATED-DESIGNED BY: VANIK POGOSYAN
CHECKED BY: ANDREY CHEVYCHALOV
REVISED BY
DATE REVISED

LAST REVISION 06-06-14
DATE PLOTTED => 24-JUL-2014
TIME PLOTTED => 10:04

Dist	COUNTY	ROUTE	POST MILES TOTAL PROJECT	SHEET No.	TOTAL SHEETS
06	Ker	5	62.5/73.1	78	213

REGISTERED CIVIL ENGINEER 06-06-14 DATE

6-16-14
PLANS APPROVAL DATE

REGISTERED PROFESSIONAL ENGINEER
ANDREY CHEVYCHALOV
No. 68378
Exp. 9-30-15
CIVIL
STATE OF CALIFORNIA

THE STATE OF CALIFORNIA OR ITS OFFICERS OR AGENTS SHALL NOT BE RESPONSIBLE FOR THE ACCURACY OR COMPLETENESS OF SCANNED COPIES OF THIS PLAN SHEET.

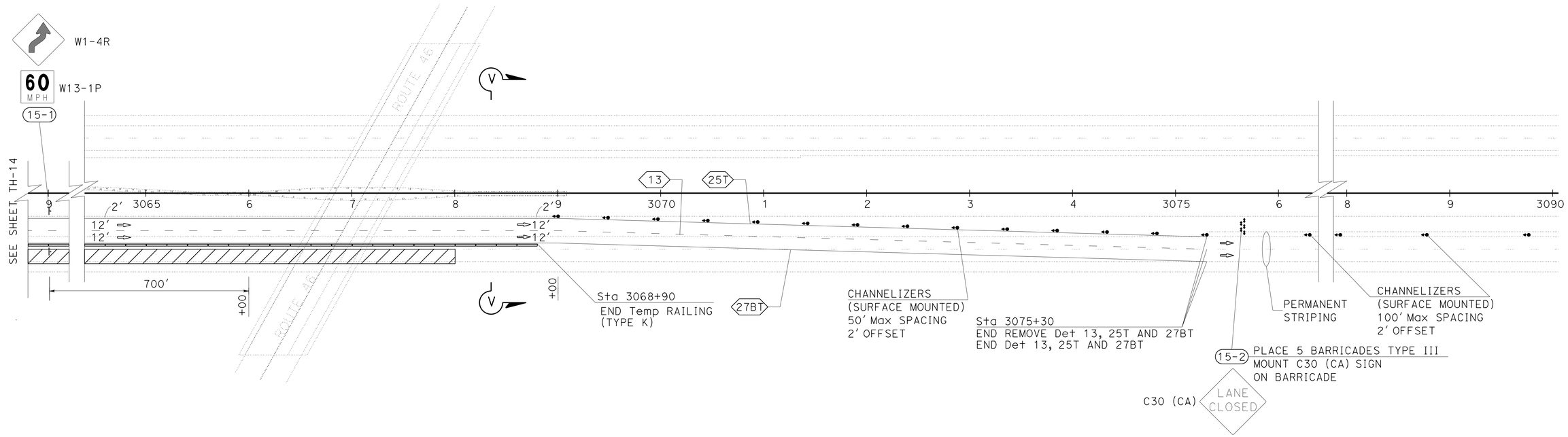

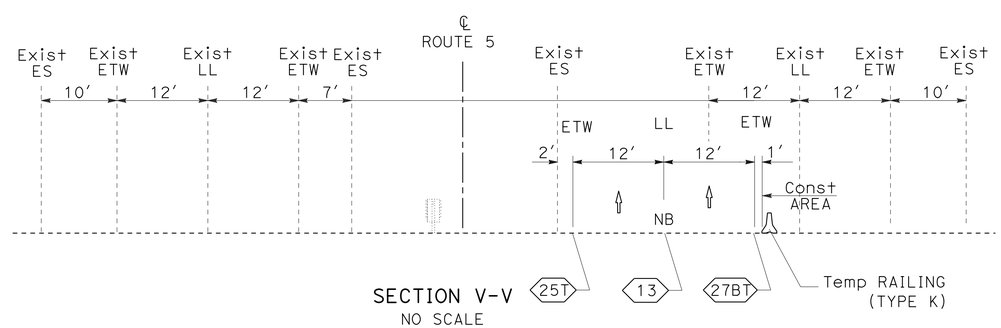

SECTION V-V
NO SCALE

TRAFFIC HANDLING PLAN
(STAGE 4)

APPROVED FOR TRAFFIC HANDLING WORK ONLY

SCALE:1"=50'

TH-15

REVISED BY	DATE REVISED

CALCULATED-DESIGNED BY	CHECKED BY
VANIK POGOSYAN	ANDREY CHEVYCHALOV

FUNCTIONAL SUPERVISOR: MOHAMMED QATAMI

STATE OF CALIFORNIA - DEPARTMENT OF TRANSPORTATION
Caltrans
TRAFFIC DESIGN

LAST REVISION 06-06-14
DATE PLOTTED => 24-JUL-2014
TIME PLOTTED => 10:04

Dist	COUNTY	ROUTE	POST MILES TOTAL PROJECT	SHEET No.	TOTAL SHEETS
06	Ker	5	62.5/73.1	79	213

REGISTERED CIVIL ENGINEER 06-06-14 DATE

6-16-14
PLANS APPROVAL DATE

REGISTERED PROFESSIONAL ENGINEER
ANDREY CHEVYCHALOV
No. 68378
Exp. 9-30-15
CIVIL
STATE OF CALIFORNIA

THE STATE OF CALIFORNIA OR ITS OFFICERS OR AGENTS SHALL NOT BE RESPONSIBLE FOR THE ACCURACY OR COMPLETENESS OF SCANNED COPIES OF THIS PLAN SHEET.

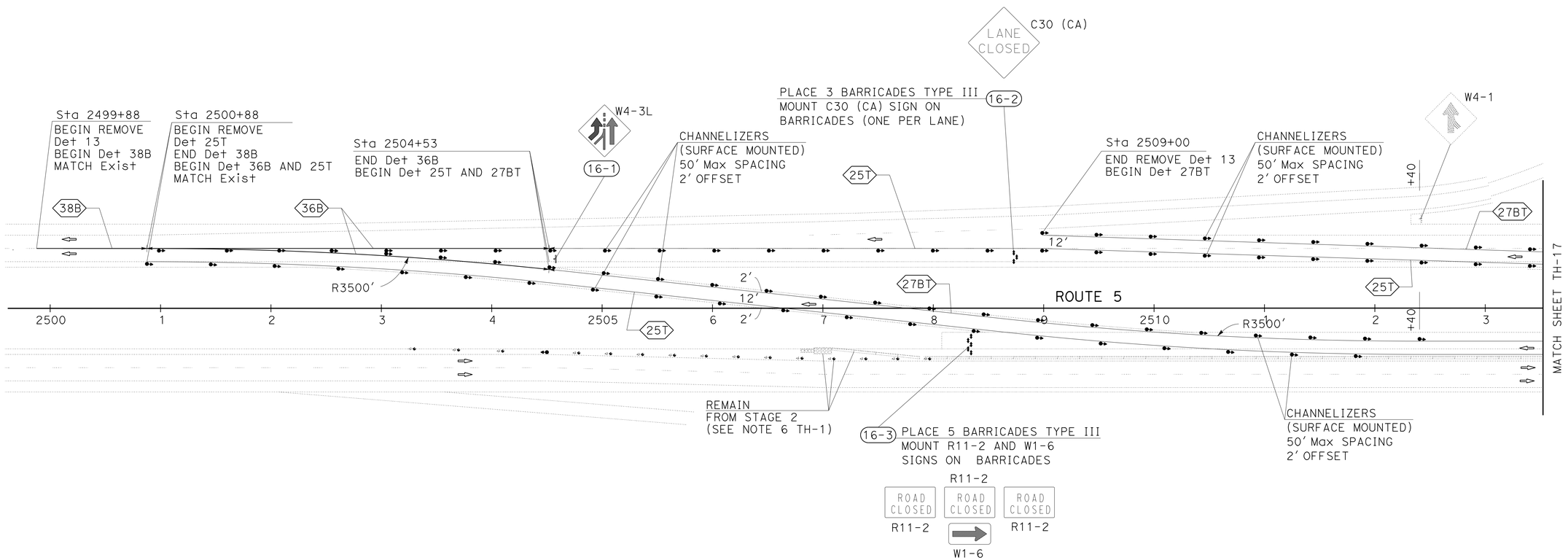

TRAFFIC HANDLING PLAN
(STAGE 6)

APPROVED FOR TRAFFIC HANDLING WORK ONLY

SCALE:1"=50'

TH-16

STATE OF CALIFORNIA - DEPARTMENT OF TRANSPORTATION
Caltrans®
TRAFFIC DESIGN

FUNCTIONAL SUPERVISOR: MOHAMMED QATAMI

CALCULATED-DESIGNED BY: VANIK POGOSYAN
CHECKED BY: ANDREY CHEVYCHALOV

REVISED BY
DATE REVISED

LAST REVISION 06-06-14
DATE PLOTTED => 24-JUL-2014
TIME PLOTTED => 10:04

Dist	COUNTY	ROUTE	POST MILES TOTAL PROJECT	SHEET No.	TOTAL SHEETS
06	Ker	5	62.5/73.1	80	213

REGISTERED CIVIL ENGINEER 06-06-14 DATE

6-16-14
PLANS APPROVAL DATE

REGISTERED PROFESSIONAL ENGINEER
ANDREY CHEVYCHALOV
No. 68378
Exp. 9-30-15
CIVIL
STATE OF CALIFORNIA

THE STATE OF CALIFORNIA OR ITS OFFICERS OR AGENTS SHALL NOT BE RESPONSIBLE FOR THE ACCURACY OR COMPLETENESS OF SCANNED COPIES OF THIS PLAN SHEET.

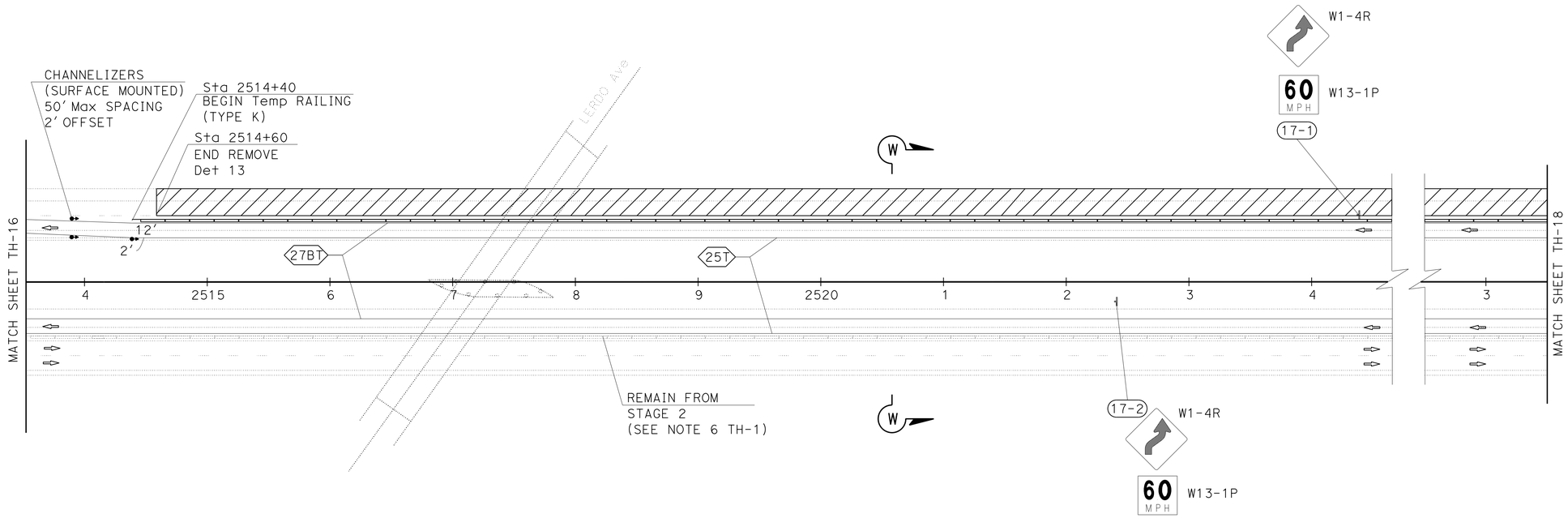

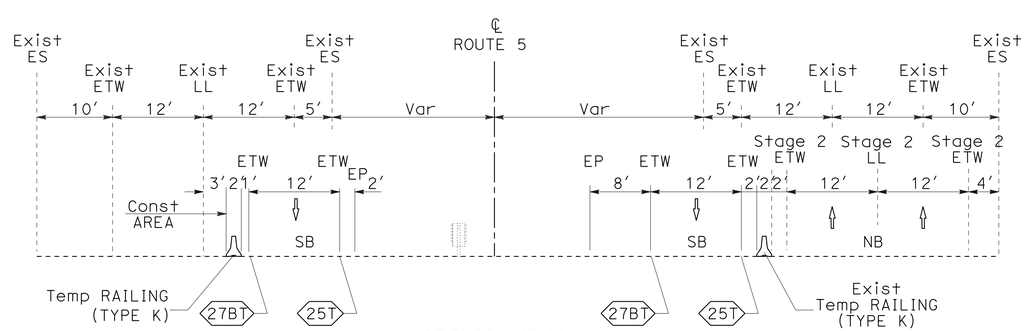

SECTION W-W
NO SCALE

TRAFFIC HANDLING PLAN
(STAGE 6)

SCALE:1"=50'

TH-17

APPROVED FOR TRAFFIC HANDLING WORK ONLY

STATE OF CALIFORNIA - DEPARTMENT OF TRANSPORTATION
Caltrans
TRAFFIC DESIGN

FUNCTIONAL SUPERVISOR: MOHAMMED QATAMI
CALCULATED-DESIGNED BY: VANIK POGOSYAN
CHECKED BY: ANDREY CHEVYCHALOV
REVISED BY
DATE REVISED

LAST REVISION 06-06-14
DATE PLOTTED => 24-JUL-2014
TIME PLOTTED => 10:05

Dist	COUNTY	ROUTE	POST MILES TOTAL PROJECT	SHEET No.	TOTAL SHEETS
06	Ker	5	62.5/73.1	81	213

REGISTERED CIVIL ENGINEER 06-06-14 DATE

6-16-14
PLANS APPROVAL DATE

REGISTERED PROFESSIONAL ENGINEER
ANDREY CHEVYCHALOV
No. 68378
Exp. 9-30-15
CIVIL
STATE OF CALIFORNIA

THE STATE OF CALIFORNIA OR ITS OFFICERS OR AGENTS SHALL NOT BE RESPONSIBLE FOR THE ACCURACY OR COMPLETENESS OF SCANNED COPIES OF THIS PLAN SHEET.

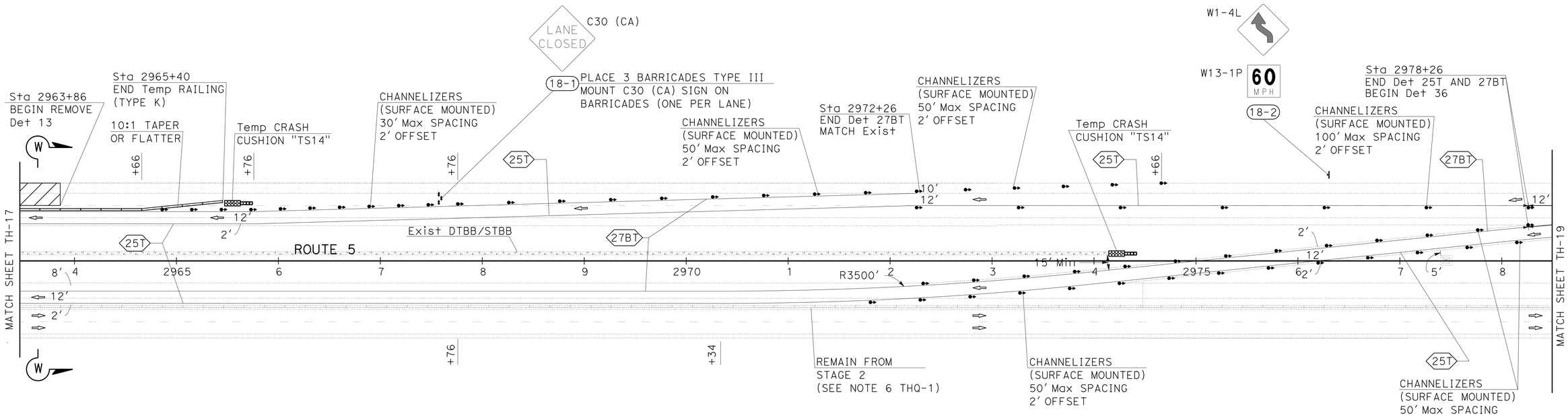

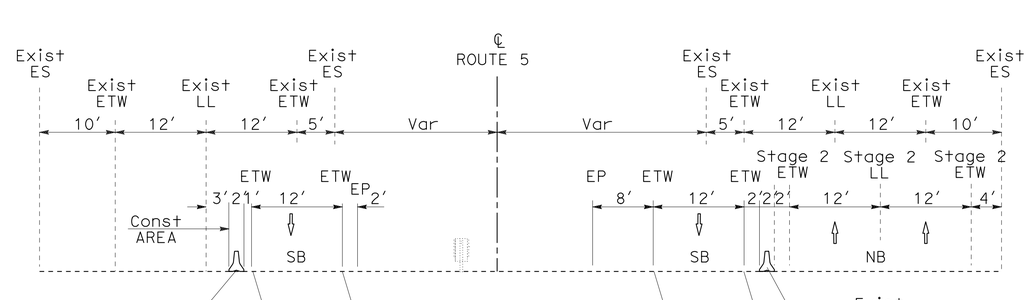

SECTION W-W
NO SCALE

APPROVED FOR TRAFFIC HANDLING WORK ONLY

TRAFFIC HANDLING PLAN
(STAGE 6)

SCALE:1"=50'

TH-18

REVISED BY	DATE REVISED

VANIK POGOSYAN — ANDREY CHEVYCHALOV — CALCULATED-DESIGNED BY — CHECKED BY

FUNCTIONAL SUPERVISOR: MOHAMMED QATAMI

STATE OF CALIFORNIA - DEPARTMENT OF TRANSPORTATION
Caltrans
TRAFFIC DESIGN

LAST REVISION 06-06-14 | DATE PLOTTED => 24-JUL-2014 | TIME PLOTTED => 10:05

Dist	COUNTY	ROUTE	POST MILES TOTAL PROJECT	SHEET No.	TOTAL SHEETS
06	Ker	5	62.5/73.1	82	213

REGISTERED CIVIL ENGINEER 06-06-14 DATE

6-16-14
PLANS APPROVAL DATE

REGISTERED PROFESSIONAL ENGINEER
ANDREY CHEVYCHALOV
No. 68378
Exp. 9-30-15
CIVIL
STATE OF CALIFORNIA

THE STATE OF CALIFORNIA OR ITS OFFICERS OR AGENTS SHALL NOT BE RESPONSIBLE FOR THE ACCURACY OR COMPLETENESS OF SCANNED COPIES OF THIS PLAN SHEET.

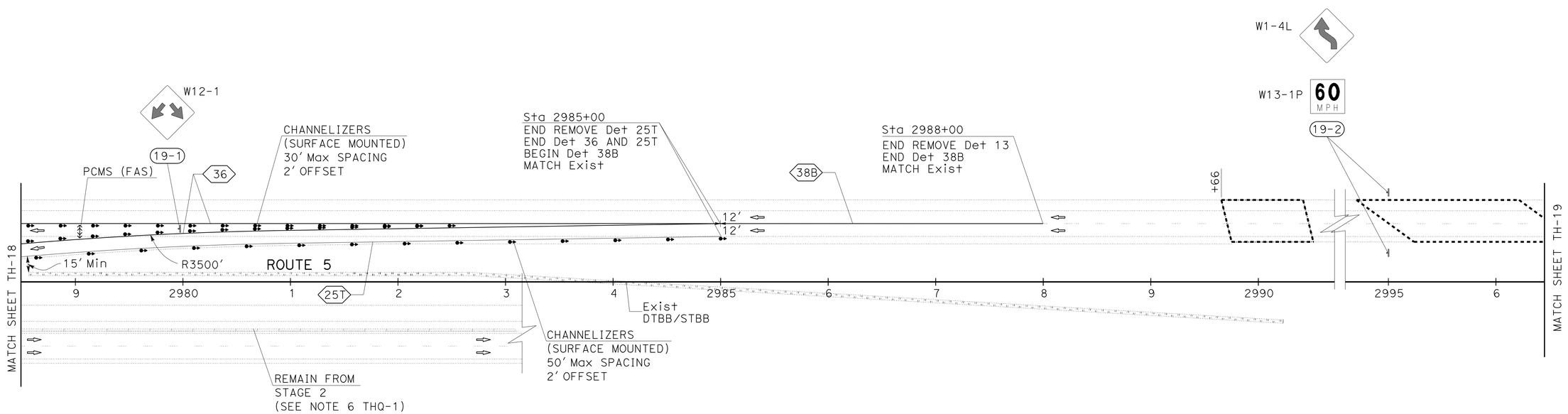

TRAFFIC HANDLING PLAN
(STAGE 6)

APPROVED FOR TRAFFIC HANDLING WORK ONLY

SCALE:1"=50'

TH-19

STATE OF CALIFORNIA - DEPARTMENT OF TRANSPORTATION
Caltrans
TRAFFIC DESIGN

FUNCTIONAL SUPERVISOR: MOHAMMED QATAMI

CALCULATED-DESIGNED BY: VANIK POGOSYAN
CHECKED BY: ANDREY CHEVYCHALOV

REVISED BY
DATE REVISED

LAST REVISION 06-06-14
DATE PLOTTED => 24-JUL-2014
TIME PLOTTED => 10:05

Dist	COUNTY	ROUTE	POST MILES TOTAL PROJECT	SHEET No.	TOTAL SHEETS
06	Ker	5	62.5/73.1	83	213

REGISTERED CIVIL ENGINEER 06-06-14 DATE

6-16-14
PLANS APPROVAL DATE

REGISTERED PROFESSIONAL ENGINEER
ANDREY CHEVYCHALOV
No. 68378
Exp. 9-30-15
CIVIL
STATE OF CALIFORNIA

THE STATE OF CALIFORNIA OR ITS OFFICERS OR AGENTS SHALL NOT BE RESPONSIBLE FOR THE ACCURACY OR COMPLETENESS OF SCANNED COPIES OF THIS PLAN SHEET.

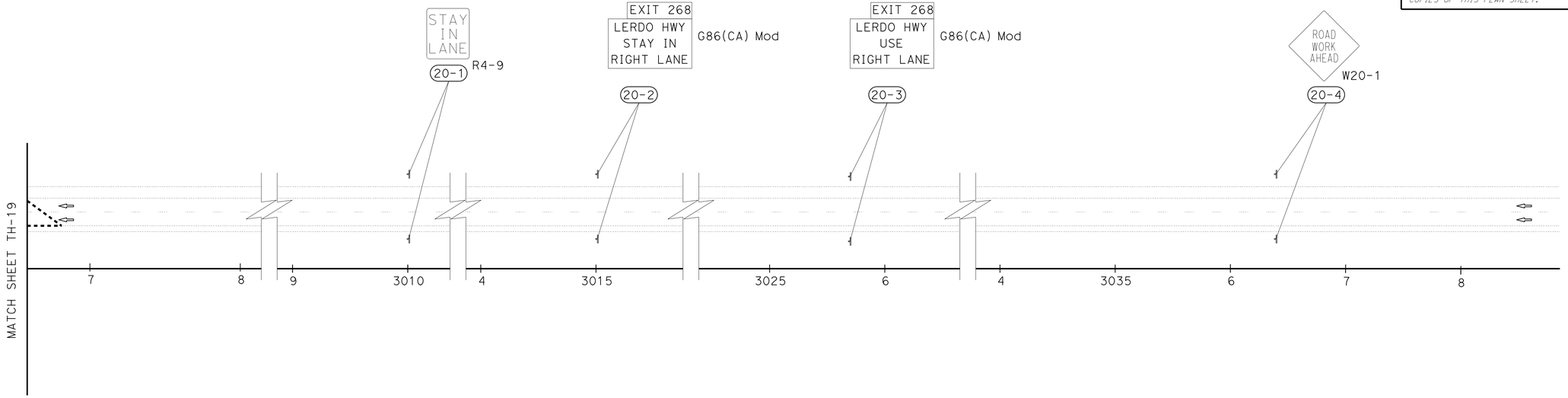

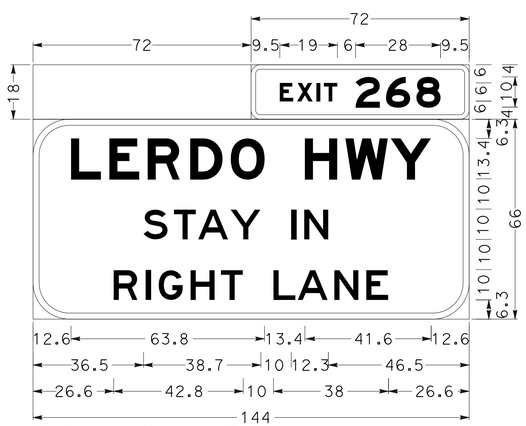

No border, None on Orange;
3.0" Radius, 1.5" Border, Black on Orange;
[EXIT] E Mod; [268] E Mod;
12.0" Radius, 2.0" Border, Black on Orange;
[LERDO HWY] E Mod; [STAY IN] E; [RIGHT LANE] E;

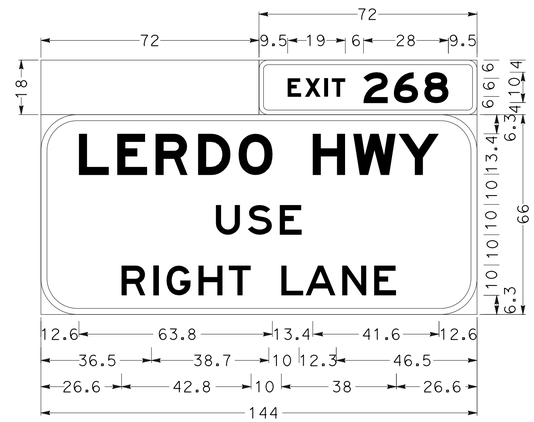

No border, None on Orange;
3.0" Radius, 1.5" Border, Black on Orange;
[EXIT] E Mod; [268] E Mod;
12.0" Radius, 2.0" Border, Black on Orange;
[LERDO HWY] E Mod; [USE] E; [RIGHT LANE] E;

TRAFFIC HANDLING PLAN
(STAGE 6)

APPROVED FOR TRAFFIC HANDLING WORK ONLY

SCALE:1"=50'

TH-20

REVISED BY	DATE REVISED

CALCULATED-DESIGNED BY: VANIK POGOSYAN
CHECKED BY: ANDREY CHEVYCHALOV
FUNCTIONAL SUPERVISOR: MOHAMMED QATAMI

STATE OF CALIFORNIA - DEPARTMENT OF TRANSPORTATION
Caltrans
TRAFFIC DESIGN

LAST REVISION 06-06-14
DATE PLOTTED => 24-JUL-2014
TIME PLOTTED => 10:05

Dist	COUNTY	ROUTE	POST MILES TOTAL PROJECT	SHEET No.	TOTAL SHEETS
06	Ker	5	62.5/73.1	84	213

REGISTERED CIVIL ENGINEER 06-06-14 DATE

6-16-14
PLANS APPROVAL DATE

REGISTERED PROFESSIONAL ENGINEER ANDREY CHEVYCHALOV No. 68378 Exp. 9-30-15 CIVIL STATE OF CALIFORNIA

THE STATE OF CALIFORNIA OR ITS OFFICERS OR AGENTS SHALL NOT BE RESPONSIBLE FOR THE ACCURACY OR COMPLETENESS OF SCANNED COPIES OF THIS PLAN SHEET.

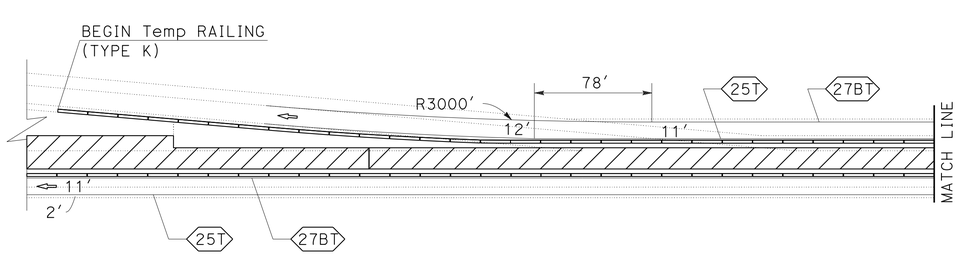

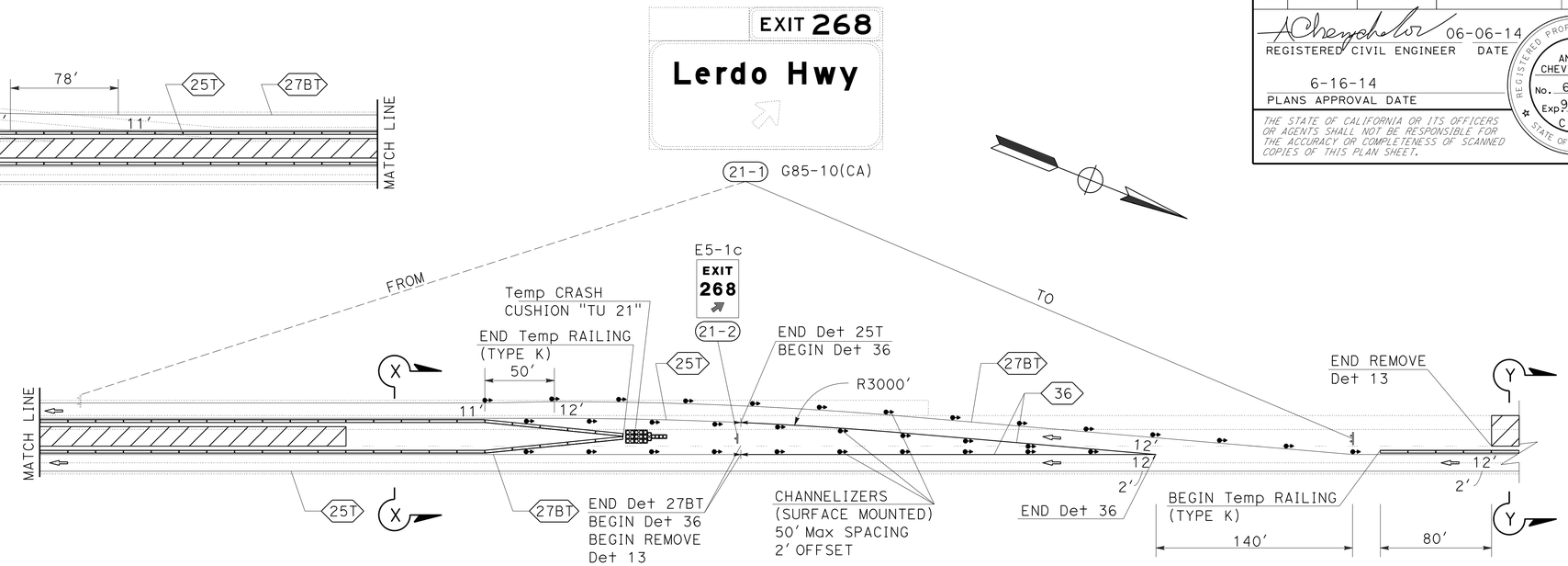

WORK IN VICINITY OF EXIT RAMP

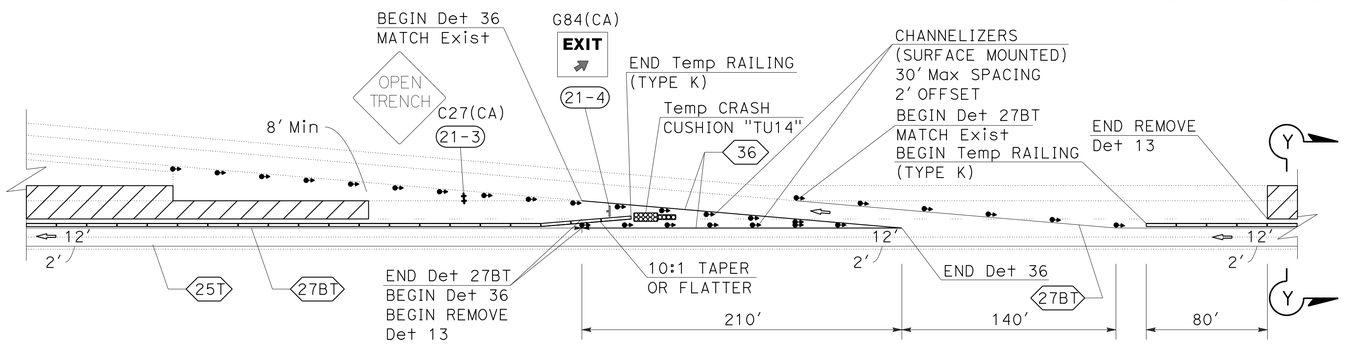

WORK IN VICINITY OF EXIT RAMP

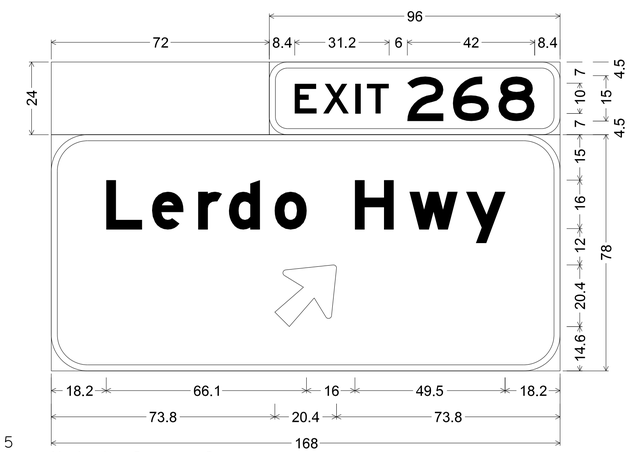

No border, Green on Green;
6.0" Radius, 2.0" Border, White on Green;
[EXIT] E; [268] E;
12.0" Radius, 2.0" Border, White on Green;
[Lerdo Hwy] E Mod; Arrow 16CAP-1L - 25.0" 45°;

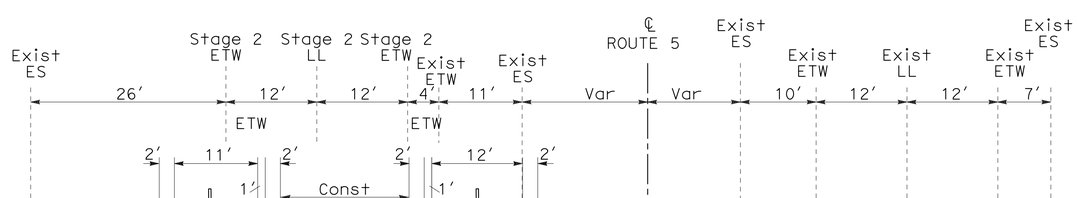

SECTION X-X
NO SCALE

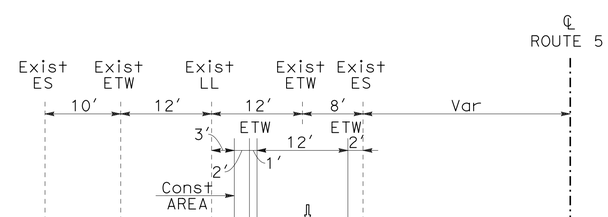

SECTION Y-Y
NO SCALE

APPROVED FOR TRAFFIC HANDLING WORK ONLY

TRAFFIC HANDLING PLAN
(STAGE 6)

SCALE:1"=50'

TH-21

REVISED BY	DATE REVISED

VANIK POGOSYAN — ANDREY CHEVYCHALOV

CALCULATED-DESIGNED BY — CHECKED BY

FUNCTIONAL SUPERVISOR: MOHAMMED QATAMI

STATE OF CALIFORNIA - DEPARTMENT OF TRANSPORTATION — TRAFFIC DESIGN — Caltrans

LAST REVISION 06-06-14 — DATE PLOTTED => 24-JUL-2014 — TIME PLOTTED => 10:05

Dist	COUNTY	ROUTE	POST MILES TOTAL PROJECT	SHEET No.	TOTAL SHEETS
06	Ker	5	62.5/73.1	85	213

REGISTERED CIVIL ENGINEER 06-06-14 DATE

6-16-14
PLANS APPROVAL DATE

REGISTERED PROFESSIONAL ENGINEER
ANDREY CHEVYCHALOV
No. 68378
Exp. 9-30-15
CIVIL
STATE OF CALIFORNIA

THE STATE OF CALIFORNIA OR ITS OFFICERS OR AGENTS SHALL NOT BE RESPONSIBLE FOR THE ACCURACY OR COMPLETENESS OF SCANNED COPIES OF THIS PLAN SHEET.

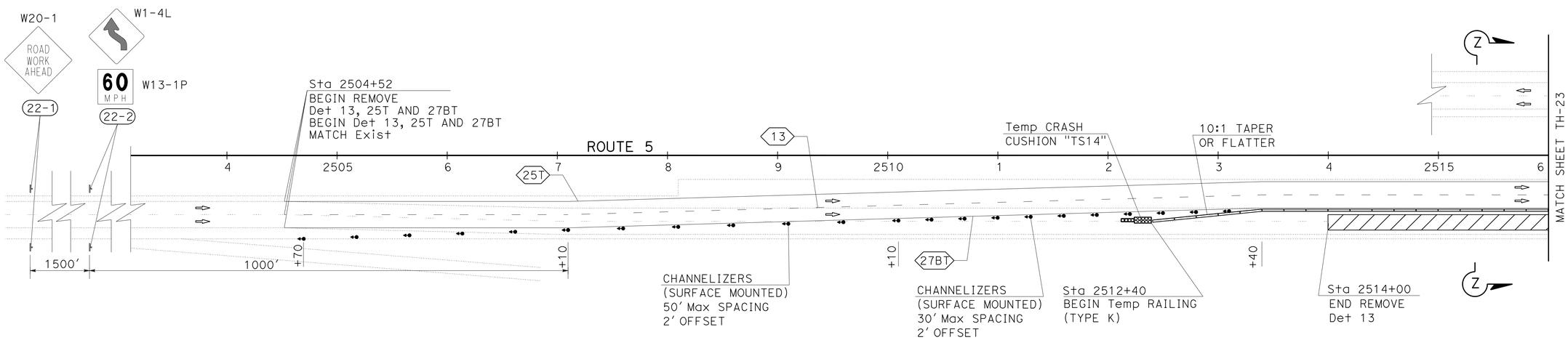

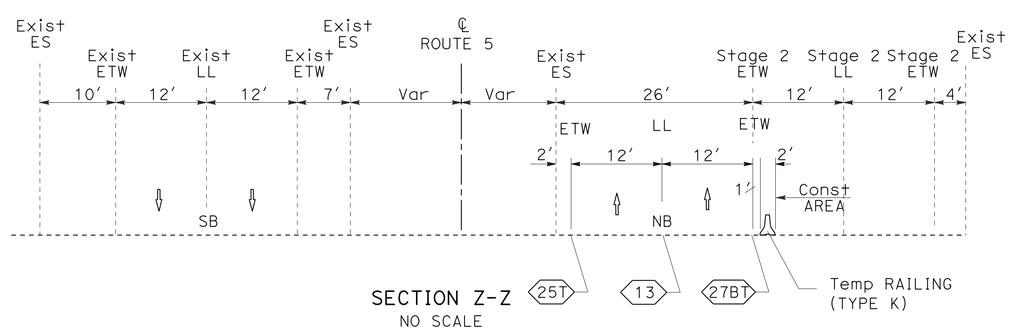

SECTION Z-Z
NO SCALE

APPROVED FOR TRAFFIC HANDLING WORK ONLY

TRAFFIC HANDLING PLAN
(STAGE 7)

SCALE:1"=50'

TH-22

STATE OF CALIFORNIA - DEPARTMENT OF TRANSPORTATION
Caltrans
TRAFFIC DESIGN

FUNCTIONAL SUPERVISOR: MOHAMMED QATAMI

CALCULATED-DESIGNED BY: VANIK POGOSYAN
CHECKED BY: ANDREY CHEVYCHALOV

REVISED BY | DATE REVISED

LAST REVISION 06-06-14
DATE PLOTTED => 24-JUL-2014
TIME PLOTTED => 10:05

Dist	COUNTY	ROUTE	POST MILES TOTAL PROJECT	SHEET No.	TOTAL SHEETS
06	Ker	5	62.5/73.1	86	213

REGISTERED CIVIL ENGINEER 06-06-14 DATE

6-16-14
PLANS APPROVAL DATE

REGISTERED PROFESSIONAL ENGINEER
ANDREY CHEVYCHALOV
No. 68378
Exp. 9-30-15
CIVIL
STATE OF CALIFORNIA

THE STATE OF CALIFORNIA OR ITS OFFICERS OR AGENTS SHALL NOT BE RESPONSIBLE FOR THE ACCURACY OR COMPLETENESS OF SCANNED COPIES OF THIS PLAN SHEET.

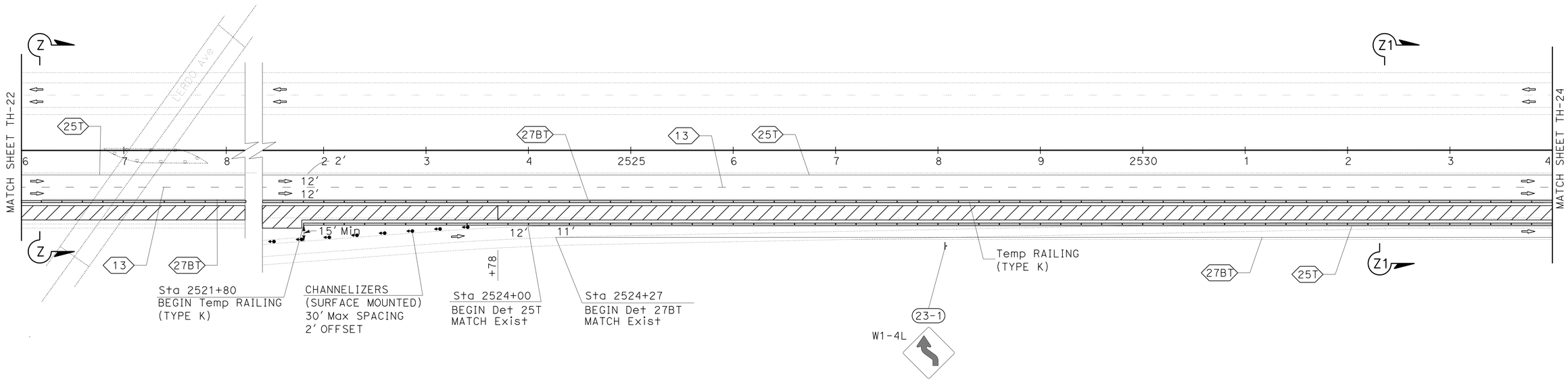

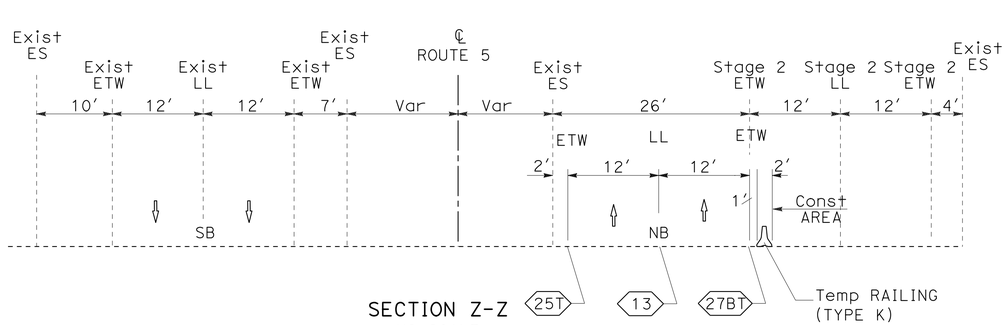

SECTION Z-Z
NO SCALE

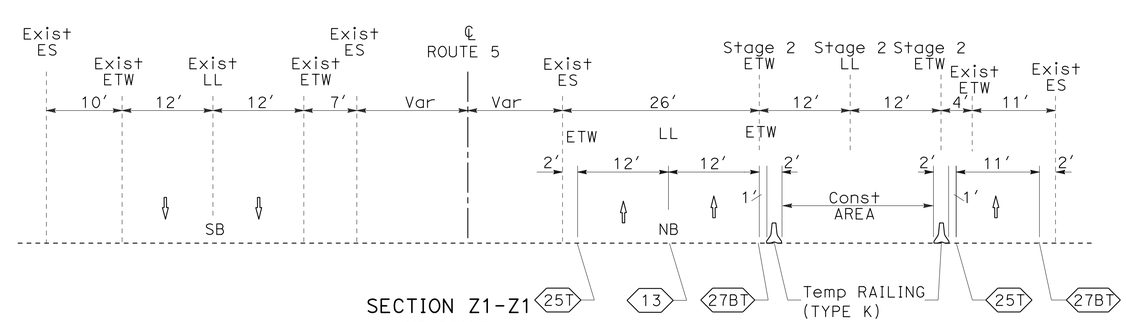

SECTION Z1-Z1
NO SCALE

TRAFFIC HANDLING PLAN
(STAGE 7)

APPROVED FOR TRAFFIC HANDLING WORK ONLY

SCALE:1"=50'

TH-23

STATE OF CALIFORNIA - DEPARTMENT OF TRANSPORTATION
Caltrans
TRAFFIC DESIGN

FUNCTIONAL SUPERVISOR: MOHAMMED QATAMI
CALCULATED-DESIGNED BY: VANIK POGOSYAN
CHECKED BY: ANDREY CHEVYCHALOV
REVISED BY
DATE REVISED

LAST REVISION 06-06-14
DATE PLOTTED => 24-JUL-2014
TIME PLOTTED => 10:05

Dist	COUNTY	ROUTE	POST MILES TOTAL PROJECT	SHEET No.	TOTAL SHEETS
06	Ker	5	62.5/73.1	87	213

REGISTERED CIVIL ENGINEER 06-06-14 DATE

6-16-14
PLANS APPROVAL DATE

REGISTERED PROFESSIONAL ENGINEER
ANDREY CHEVYCHALOV
No. 68378
Exp. 9-30-15
CIVIL
STATE OF CALIFORNIA

THE STATE OF CALIFORNIA OR ITS OFFICERS OR AGENTS SHALL NOT BE RESPONSIBLE FOR THE ACCURACY OR COMPLETENESS OF SCANNED COPIES OF THIS PLAN SHEET.

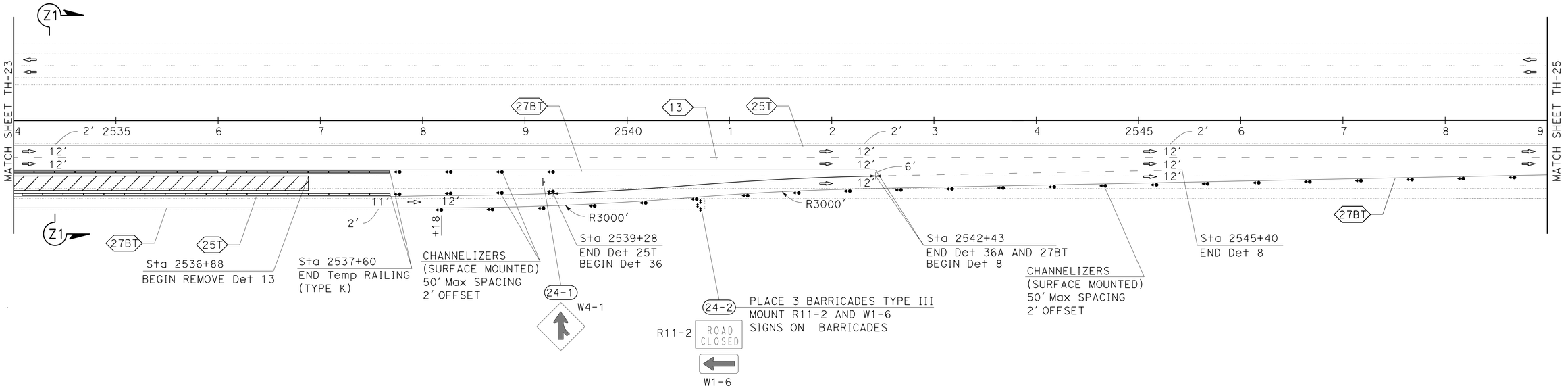

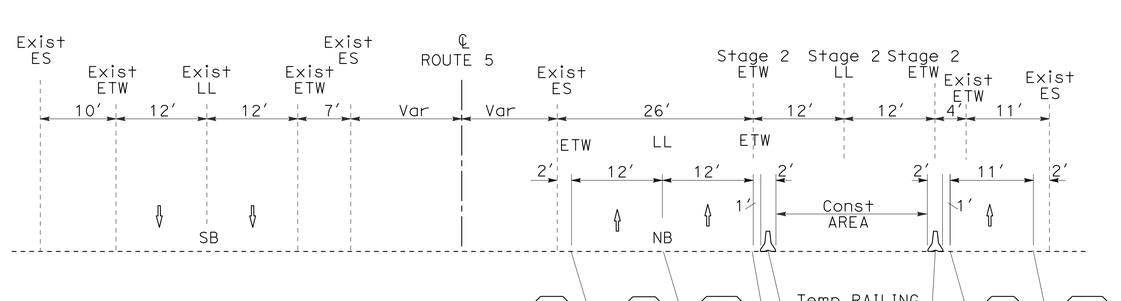

SECTION Z1-Z1
NO SCALE

APPROVED FOR TRAFFIC HANDLING WORK ONLY

TRAFFIC HANDLING PLAN
(STAGE 7)

SCALE:1"=50′

TH-24

STATE OF CALIFORNIA - DEPARTMENT OF TRANSPORTATION
Caltrans
TRAFFIC DESIGN

FUNCTIONAL SUPERVISOR: MOHAMMED QATAMI
CALCULATED-DESIGNED BY: VANIK POGOSYAN
CHECKED BY: ANDREY CHEVYCHALOV
REVISED BY
DATE REVISED

LAST REVISION 06-06-14
DATE PLOTTED => 24-JUL-2014
TIME PLOTTED => 10:05

Dist	COUNTY	ROUTE	POST MILES TOTAL PROJECT	SHEET No.	TOTAL SHEETS
06	Ker	5	62.5/73.1	88	213

REGISTERED CIVIL ENGINEER 06-06-14 DATE

6-16-14
PLANS APPROVAL DATE

REGISTERED PROFESSIONAL ENGINEER
ANDREY CHEVYCHALOV
No. 68378
Exp. 9-30-15
CIVIL
STATE OF CALIFORNIA

THE STATE OF CALIFORNIA OR ITS OFFICERS OR AGENTS SHALL NOT BE RESPONSIBLE FOR THE ACCURACY OR COMPLETENESS OF SCANNED COPIES OF THIS PLAN SHEET.

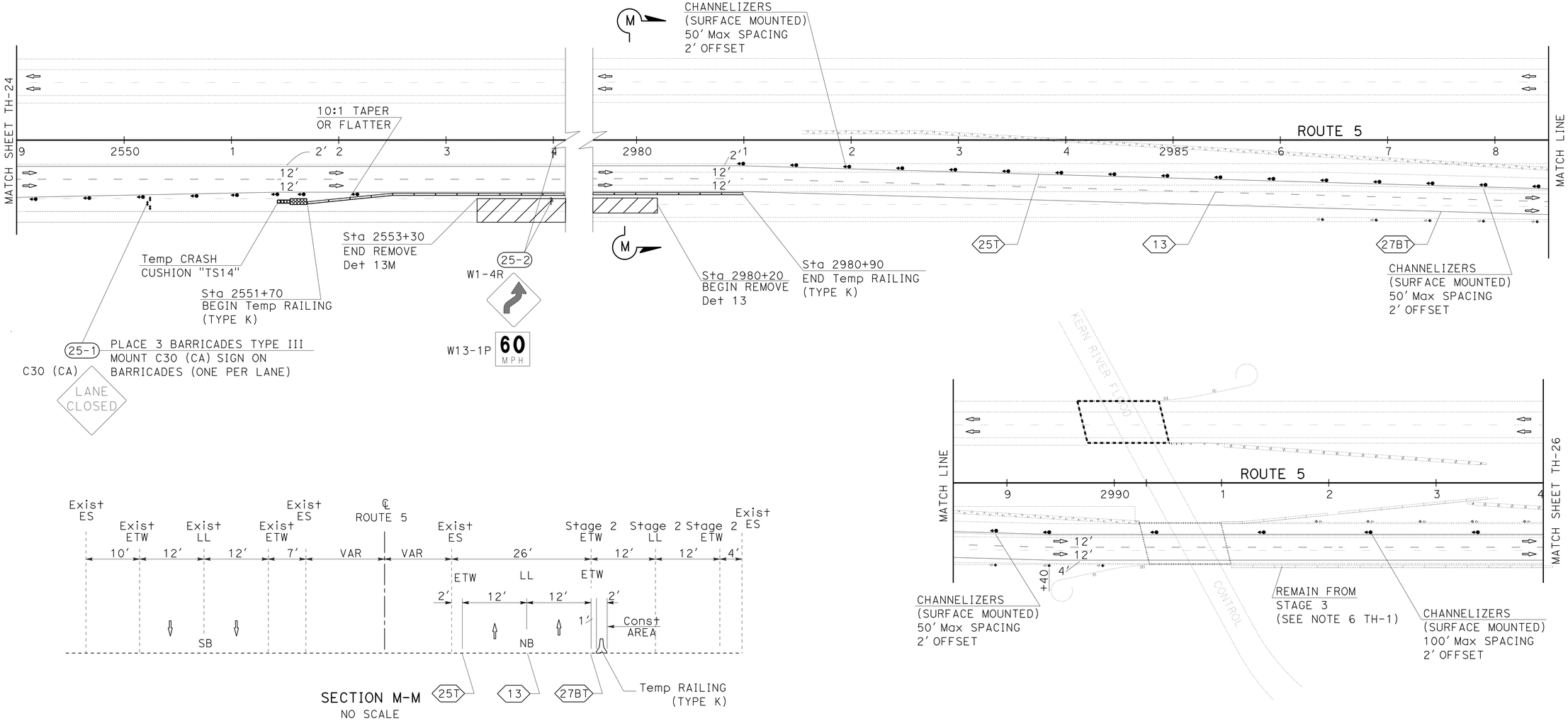

TRAFFIC HANDLING PLAN
(STAGE 7)

SCALE:1"=50'

TH-25

APPROVED FOR TRAFFIC HANDLING WORK ONLY

STATE OF CALIFORNIA - DEPARTMENT OF TRANSPORTATION
Caltrans®
TRAFFIC DESIGN

FUNCTIONAL SUPERVISOR: MOHAMMED QATAMI
CALCULATED-DESIGNED BY: VANIK POGOSYAN
CHECKED BY: ANDREY CHEVYCHALOV
REVISED BY
DATE REVISED

LAST REVISION 06-06-14
DATE PLOTTED => 24-JUL-2014
TIME PLOTTED => 10:05

Dist	COUNTY	ROUTE	POST MILES TOTAL PROJECT	SHEET No.	TOTAL SHEETS
06	Ker	5	62.5/73.1	89	213

REGISTERED CIVIL ENGINEER 06-06-14 DATE

6-16-14
PLANS APPROVAL DATE

REGISTERED PROFESSIONAL ENGINEER
ANDREY CHEVYCHALOV
No. 68378
Exp. 9-30-15
CIVIL
STATE OF CALIFORNIA

THE STATE OF CALIFORNIA OR ITS OFFICERS OR AGENTS SHALL NOT BE RESPONSIBLE FOR THE ACCURACY OR COMPLETENESS OF SCANNED COPIES OF THIS PLAN SHEET.

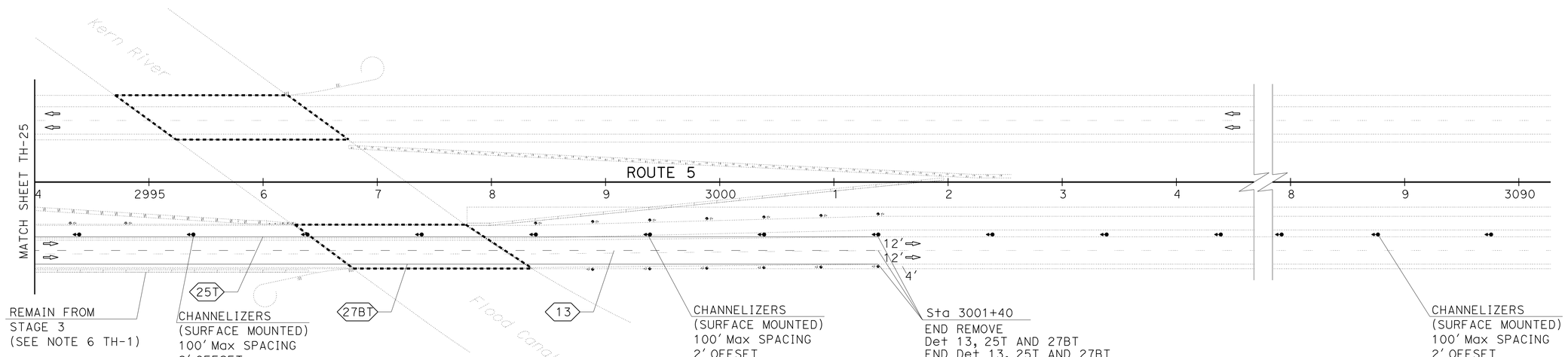

TRAFFIC HANDLING PLAN
(STAGE 7)

APPROVED FOR TRAFFIC HANDLING WORK ONLY

SCALE:1"=50'

TH-26

STATE OF CALIFORNIA - DEPARTMENT OF TRANSPORTATION
Caltrans
TRAFFIC DESIGN

FUNCTIONAL SUPERVISOR: MOHAMMED QATAMI

CALCULATED-DESIGNED BY: VANIK POGOSYAN
CHECKED BY: ANDREY CHEVYCHALOV

REVISED BY
DATE REVISED

LAST REVISION 06-06-14
DATE PLOTTED => 24-JUL-2014
TIME PLOTTED => 10:05

Dist	COUNTY	ROUTE	POST MILES TOTAL PROJECT	SHEET No.	TOTAL SHEETS
06	Ker	5	62.5/73.1	90	213

REGISTERED CIVIL ENGINEER 06-06-14 DATE

6-16-14
PLANS APPROVAL DATE

REGISTERED PROFESSIONAL ENGINEER
ANDREY CHEVYCHALOV
No. 68378
Exp 9-30-15
CIVIL
STATE OF CALIFORNIA

THE STATE OF CALIFORNIA OR ITS OFFICERS OR AGENTS SHALL NOT BE RESPONSIBLE FOR THE ACCURACY OR COMPLETENESS OF SCANNED COPIES OF THIS PLAN SHEET.

NOTES:

1. FOR ADDITIONAL CONSTRUCTION AREA SIGNS, REFER TO CS AND DE PLANS

STATIONARY MOUNTED CONSTRUCTION AREA SIGNS

LOCATION		SIGN No.	SIGN CODE	SIGN MESSAGE	PANEL SIZE	No. OF POST AND SIZE	No. OF SIGNS
STAGE 1	THD-1	1-1	W1-4L	REVERSE CURVE LEFT	48" x 48"	1 - 6" x 6"	2
		1-2	W1-4R	REVERSE CURVE RIGHT	48" x 48"	1 - 6" x 6"	2
		1-3	W20-1	ROAD WORK AHEAD	48" x 48"	1 - 6" x 6"	2
STAGE 2 AND 5	THD-2	2-1	W20-1	ROAD WORK AHEAD	48" x 48"	1 - 6" x 6"	2
		2-2	W1-4R	REVERSE CURVE RIGHT	48" x 48"	1 - 6" x 6"	2
		2-3	W1-4L	REVERSE CURVE LEFT	48" x 48"	1 - 6" x 6"	2
		2-4	CA30A(CA)	SHOULDER CLOSED	48" x 48"	1 - 6" x 6"	1
		2-5	W21-5bL	LEFT SHOULDER CLOSED AHEAD	48" x 48"	1 - 6" x 6"	1
		2-6	W21-5	SHOULDER WORK	48" x 48"	1 - 6" x 6"	1
STAGE 3	THD-3	3-1	W4-3L	ADDED LANE LEFT	48" x 48"	1 - 6" x 6"	1
	THD-4	4-1	W1-4R	REVERSE CURVE RIGHT	48" x 48"	1 - 6" x 6"	2
			W13-1P	ADVISORY SPEED PLAQUE	30" x 30"		2
		4-2	W1-4R	REVERSE CURVE RIGHT	48" x 48"	1 - 6" x 6"	1
			W13-1P	ADVISORY SPEED PLAQUE	30" x 30"		1
		4-3	W1-4R	REVERSE CURVE RIGHT	48" x 48"	1 - 6" x 6"	1
			W13-1P	ADVISORY SPEED PLAQUE	30" x 30"		1
		4-4	W5-2	NARROW BRIDGE	48" x 48"	1 - 6" x 6"	2
		4-5	W8-23	NO SHOULDER	48" x 48"	1 - 6" x 6"	2
	THD-5	5-1	W1-4L	REVERSE CURVE LEFT	48" x 48"	1 - 6" x 6"	1
			W13-1P	ADVISORY SPEED PLAQUE	30" x 30"		1
		5-2	W1-4R	REVERSE CURVE RIGHT	48" x 48"	1 - 6" x 6"	1
			W13-1P	ADVISORY SPEED PLAQUE	30" x 30"		1
	THD-6	6-1	W8-23	NO SHOULDER	48" x 48"	1 - 6" x 6"	1
		6-2	W5-2	NARROW BRIDGE	48" x 48"	1 - 6" x 6"	1
		6-3	W8-23	NO SHOULDER	48" x 48"	1 - 6" x 6"	1
		6-4	W5-2	NARROW BRIDGE	48" x 48"	1 - 6" x 6"	1
		6-5	W1-4L	REVERSE CURVE LEFT	48" x 48"	1 - 6" x 6"	1
			W13-1P	ADVISORY SPEED PLAQUE	30" x 30"		1
	THD-7	7-1	C30(CA)	LANE CLOSED	48" x 48"	1 - 6" x 6"	3
		7-2	R11-2	ROAD CLOSED	48" x 30"	MOUNT ON BARRICADE	3
			W1-6	ONE-DIRECTION LARGE ARROW	30" x 30"		1
		7-3	W4-1	MERGE	48" x 48"	1 - 6" x 6"	1
		7-4	W1-4L	REVERSE CURVE LEFT	48" x 48"	1 - 6" x 6"	1
			W13-1P	ADVISORY SPEED PLAQUE	30" X 30"		1
		7-5	W1-4R	REVERSE CURVE RIGHT	48" x 48"	1 - 6" x 6"	1
			W13-1P	ADVISORY SPEED PLAQUE	30" x 30"		1
	THD-8	8-1	C30(CA)	LANE CLOSED	48" x 48"	MOUNT ON BARRICADE	3
	THD-9	9-1	W1-4L	REVERSE CURVE LEFT	48" x 48"	1 - 6" x 6"	1
			W13-1P	ADVISORY SPEED PLAQUE	30" x 30"		1
		9-2	W12-1	DOUBLE ARROW	48" x 48"	1 - 6" x 6"	1
		9-3	W1-4L	REVERSE CURVE LEFT	48" x 48"	1 - 6" x 6"	2
			W13-1P	ADVISORY SPEED PLAQUE	30" x 30"		2
		9-4	R4-9	STAY IN LANE	36" x 48"	1 - 6" x 6"	2
		9-5	W20-1	ROAD WORK AHEAD	48" x 48"	1 - 6" x 6"	2
		9-6	C30(CA)	LANE CLOSED	48" x 48"	MOUNT ON BARRICADE	3
		9-7	W4-1	MERGE	48" x 48"	1 - 6" x 6"	1
		9-8	C27(CA)	OPEN TRENCH	48" x 48"	MOUNT ON BARRICADE	1
STAGE 4	THD-10	10-1	W20-1	ROAD WORK AHEAD	48" x 48"	1 - 6" x 6"	2
		10-2	R4-9	STAY IN LANE	48" x 48"	1 - 6" x 6"	2
		10-3	W1-4L	REVERSE CURVE LEFT	48" x 48"	1 - 6" x 6"	2
			W13-1P	ADVISORY SPEED PLAQUE	30" X 30"		2
		10-4	W12-1	DOUBLE ARROW	48" x 48"	1 - 6" x 6"	1
		10-5	R11-2	ROAD CLOSED	48" x 30"	MOUNT ON BARRICADE	3
	THD-11	11-1	C30(CA)	LANE CLOSED	48" x 48"	MOUNT ON BARRICADE	3
		11-2	C30(CA)	LANE CLOSED	48" x 48"	MOUNT ON BARRICADE	3
		11-3	W1-4L	REVERSE CURVE LEFT	48" x 48"	1 - 6" x 6"	2
		11-4	W5-2	NARROW BRIDGE	48" x 48"	1 - 6" x 6"	2
		11-5	W8-23	NO SHOULDER	48" x 48"	1 - 6" x 6"	2
		11-6	W1-4L	REVERSE CURVE LEFT	48" x 48"	1 - 6" x 6"	1

STATIONARY MOUNTED CONSTRUCTION AREA SIGNS

LOCATION		SIGN No.	SIGN CODE	SIGN MESSAGE	PANEL SIZE	No. OF POST AND SIZE	No. OF SIGNS
STAGE 4	THD-12	12-1	W1-4R	REVERSE CURVE RIGHT	48" x 48"	1 - 6" x 6"	1
			W13-1P	ADVISORY SPEED PLAQUE	30" X 30"		1
		12-2	W5-2	NARROW BRIDGE	48" x 48"	1 - 6" x 6"	2
		12-3	C30(CA)	LANE CLOSED	48" x 48"	MOUNT ON BARRICADE	3
	THD-13	13-1	W4-3L	ADDED LANE LEFT	48" x 48"	1 - 6" x 6"	1
		13-2	W1-4R	REVERSE CURVE RIGHT	48" x 48"	1 - 6" x 6"	2
			W13-1P	ADVISORY SPEED PLAQUE	30" X 30"		2
		13-3	W20-1	ROAD WORK AHEAD	48" x 48"	1 - 6" x 6"	2
		13-4	G84(CA)	EXIT DIRECTION	48" x 48"	1 - 6" x 6"	1
		13-5	C27(CA)	OPEN TRENCH	48" x 48"	MOUNT ON BARRICADE	1
	THD-14	14-1	G85-10(CA)	AS SHOWN ON PLAN	204" x 92"	2 - TYPE M	1
		14-2	E5-1c	NARROW EXIT GORE	90" x 60"	2 - 6" x 6"	1
	THD-15	15-1	W1-4R	REVERSE CURVE RIGHT	48" x 30"	1 - 6" x 6"	2
			W13-1P	ADVISORY SPEED PLAQUE	30" X 30"		2
		15-2	C30(CA)	LANE CLOSED	48" x 48"	MOUNT ON BARRICADE	3
STAGE 6	THD-16	16-1	W4-3L	ADDED LANE LEFT	48" x 48"	1 - 6" x 6"	1
		16-2	C30(CA)	LANE CLOSED	48" x 48"	1 - 6" x 6"	3
		16-3	R11-2	ROAD CLOSED	48" x 30"	MOUNT ON BARRICADE	3
			W1-6	ONE-DIRECTION LARGE ARROW	30" x 30"		1
	THD-17	17-1	W1-4R	REVERSE CURVE RIGHT	48" x 48"	1 - 6" x 6"	1
			W13-1P	ADVISORY SPEED PLAQUE	30" x 30"		1
		17-2	W1-4R	REVERSE CURVE RIGHT	48" x 48"	1 - 6" x 6"	1
			W13-1P	ADVISORY SPEED PLAQUE	30" x 30"		1
	THD-18	18-1	C30(CA)	LANE CLOSED	48" x 48"	MOUNT ON BARRICADE	3
		18-2	W1-4L	REVERSE CURVE LEFT	48" x 48"	1 - 6" x 6"	2
			W13-1P	ADVISORY SPEED PLAQUE	30" x 30"		2
	THD-19	19-1	W12-1	DOUBLE ARROW	48" x 48"	1 - 6" x 6"	1
		19-2	W1-4L	REVERSE CURVE LEFT	48" x 48"	1 - 6" x 6"	2
			W13-1P	ADVISORY SPEED PLAQUE	30" x 30"		2
	THD-20	20-1	R4-9	STAY IN LANE	36" x 48"	1 - 6" x 6"	2
		20-2	G86(CA)Mod	AS SHOWN ON PLAN	144" x 84"	2 - TYPE M	1
		20-3	G86(CA)Mod	AS SHOWN ON PLAN	144" x 84"	2 - TYPE M	1
		20-4	W20-1	ROAD WORK AHEAD	48" x 48"	1 - 6" x 6"	2
	THD-21	21-1	G85-10(CA)	AS SHOWN ON PLAN	168" x 102'	2 - TYPE M	1
		21-2	E5-1c	NARROW EXIT GORE	90" x 60"	2 - 6" x 6"	1
		21-3	C27(CA)	OPEN TRENCH	48" x 48"	MOUNT ON BARRICADE	1
		21-4	G84(CA)	EXIT DIRECTION	48" x 48"	1 - 6" x 6"	1
STAGE 7	THD-22	22-1	W20-1	ROAD WORK AHEAD	48" x 48"	1 - 6" x 6"	1
		22-2	W1-4L	REVERSE CURVE LEFT	48" x 48"	1 - 6" x 6"	1
			W13-1P	ADVISORY SPEED PLAQUE	30" x 30"		1
	THD-23	23-1	W1-4R	REVERSE CURVE RIGHT	48" x 48"	1 - 6" x 6"	1
	THD-24	24-1	W4-1	MERGE	48" x 48"	1 - 6" x 6"	1
		24-2	R11-2	ROAD CLOSED	48" x 30"	MOUNT ON BARRICADE	3
			W1-6	ONE-DIRECTION LARGE ARROW	30" x 30"		1
	THD-25	25-1	C30(CA)	LANE CLOSED	48" x 48"	MOUNT ON BARRICADE	3
		25-2	W1-4R	REVERSE CURVE RIGHT	48" x 48"	1 - 6" x 6"	1
			W13-1P	ADVISORY SPEED PLAQUE	30" x 30"		1

APPROVED FOR TRAFFIC HANDLING WORK ONLY

TRAFFIC HANDLING QUANTITIES

THQ-1

STATE OF CALIFORNIA - DEPARTMENT OF TRANSPORTATION
Caltrans® TRAFFIC DESIGN

FUNCTIONAL SUPERVISOR: MOHAMMED QATAMI
CALCULATED-DESIGNED BY: VANIK POGOSYAN
CHECKED BY: ANDREY CHEVYCHALOV
REVISED BY / DATE REVISED

LAST REVISION 06-06-14 | DATE PLOTTED => 24-JUL-2014 | TIME PLOTTED => 10:05

Dist	COUNTY	ROUTE	POST MILES TOTAL PROJECT	SHEET No.	TOTAL SHEETS
06	Ker	5	62.5/73.1	91	213

REGISTERED CIVIL ENGINEER 06-06-14 DATE

6-16-14
PLANS APPROVAL DATE

REGISTERED PROFESSIONAL ENGINEER ANDREY CHEVYCHALOV No. 68378 Exp. 9-30-15 CIVIL STATE OF CALIFORNIA

THE STATE OF CALIFORNIA OR ITS OFFICERS OR AGENTS SHALL NOT BE RESPONSIBLE FOR THE ACCURACY OR COMPLETENESS OF SCANNED COPIES OF THIS PLAN SHEET.

SIGN QUANTITIES

LOCATION	SIGN CODE	SIGN MESSAGE	No. OF POST AND SIZE	PANEL SIZE	BACKGROUND		LEGEND		PREMIUM GRAFFITI FILM	FURNISH SINGLE SHEET ALUMINUM SIGN (0.080"-UNFRAMED)	FURNISH SINGLE SHEET ALUMINUM SIGN (0.080"-FRAMED)	ROADSIDE SIGN - ONE POST	INSTALL ROADSIDE SIGN (LAMINATED WOOD BOX POST)	RELOCATE ROADSIDE SIGN - TWO POST	REMOVE ROADSIDE SIGN
					SHEETING COLOR	RETROREFLECTIVITY ASTM TYPE	SHEETING COLOR	RETROREFLECTIVITY ASTM TYPE							
			EACH-INCHES	INCHES						SQFT	SQFT	EA	EA	EA	EA
ROUTE 5 SB AT LERDO Ave	R4-3	SLOWER TRAFFIC KEEP RIGHT	1 - 6 x 6	48 x 48	WHITE	III	BLACK	III	X	16		1			1
ROUTE 5 SB AT ROUTE 46	R11-1	KEEP OFF MEDIAN	1 - 6 x 6	48 x 48	WHITE	III	BLACK	III	X	16		3			3
ROUTE 5 NB AT ROUTE 46	R11-1	KEEP OFF MEDIAN	1 - 6 x 6	48 x 48	WHITE	III	BLACK	III	X	16		3			3
ROUTE 5 SB AT LERDO Ave	G85-10(CA)	AS SHOWN ON PLAN TH-21	2 - TYPE M (L 22' - R 23')	168 x 102	GREEN	VII	WHITE	VII	X		119		1	1	
								TOTAL		48	119	7	1	1	7

CHANNELIZER (SURFACE MOUNTED)

LOCATION		EA
STAGE 1	TH-1	24
STAGE 2 AND 5	TH-2	1626
STAGE 3	TH-3	508
	TH-5	32
	TH-6	13
	TH-7	38
	TH-8	35
	TH-9	109
STAGE 4	TH-10	81
	TH-11	8
	TH-12	59
	TH-13	63
	TH-14	33
	TH-15	29
STAGE 6	TH-16	79
	TH-17	3
	TH-18	59
	TH-19	41
	TH-21	61
STAGE 7	TH-22	22
	TH-23	8
	TH-24	30
	TH-25	30
	TH-26	96
	TOTAL	3087

TEMPORARY RAILING (TYPE K)

LOCATION		STA BEGIN	STA END	LENGTH (LF)
STAGE 1	TH-1	2513+20	3072+20	55,900
STAGE 2 AND 5	TH-2	2504+50	3077+90	57,340
STAGE 3	TH-3	2956+50	2964+10	760
	TH-3/TH-6	2963+07	3028+27	6,520
	TH-5	2991+00	2993+60	260
		2991+00	2996+60	560
	TH-5/TH-6	2986+40	3001+40	1,500
		2997+80	3002+00	420
	TH-7	3042+33	3058+13	1,580
	TH-7/TH-8	3042+33	3070+13	2,780
STAGE 4	TH-11	2977+84	2978+64	80
	TH-11/TH-12	2985+35	2989+75	440
	TH-11/TH-13	2975+46	3007+06	3,160
	TH-11/TH-14	2981+00	3040+60	5,960
	TH-12	2990+70	2994+70	400
	TH-12	2993+44	2995+24	180
	TH-14	3046+10	3055+90	980
		3046+10	3068+90	2,280
STAGE 6	TH-17/TH-18	2514+40	2965+40	45,100
STAGE 7	TH-22/TH-24	2512+40	2537+60	2,520
	TH-23/TH-24	2521+80	2537+60	1,580
	TH-25	2551+70	2980+90	42,920
TOTAL				233,220

TEMPORARY CRASH CUSHION MODULE

LOCATION		EA
STAGE 1	TH-1	28
STAGE 2 AND 5	TH-2	28
STAGE 3	TH-6	14
	TH-7	14
	TH-8	14
	TH-9	14
STAGE 4	TH-11	28
	TH-12	14
	TH-13	14
	TH-14	21
STAGE 6	TH-18	28
	TH-21	35
STAGE 7	TH-22	14
	TH-25	14
	TOTAL	280

TYPE III BARRICADE

LOCATION		EA
STAGE 3	TH-7	6
	TH-8	3
	TH-9	3
STAGE 4	TH-10	5
	TH-11	6
	TH-12	3
	TH-15	5
STAGE 6	TH-16	8
	TH-18	3
STAGE 7	TH-24	3
	TH-25	3
	TOTAL	48

APPROVED FOR TRAFFIC HANDLING WORK ONLY

TRAFFIC HANDLING QUANTITIES

THQ-2

REVISED BY | DATE REVISED
VANIK POGOSYAN | ANDREY CHEVYCHALOV
CALCULATED-DESIGNED BY | CHECKED BY
FUNCTIONAL SUPERVISOR: MOHAMMED QATAMI

STATE OF CALIFORNIA - DEPARTMENT OF TRANSPORTATION
Caltrans® TRAFFIC DESIGN

LAST REVISION 06-06-14 | DATE PLOTTED => 24-JUL-2014 TIME PLOTTED => 10:05

Dist	COUNTY	ROUTE	POST MILES TOTAL PROJECT	SHEET No.	TOTAL SHEETS
06	Ker	5	62.5/73.1	92	213

REGISTERED CIVIL ENGINEER 06-06-14 DATE

6-16-14
PLANS APPROVAL DATE

REGISTERED PROFESSIONAL ENGINEER ANDREY CHEVYCHALOV No. 68378 Exp. 9-30-15 CIVIL STATE OF CALIFORNIA

THE STATE OF CALIFORNIA OR ITS OFFICERS OR AGENTS SHALL NOT BE RESPONSIBLE FOR THE ACCURACY OR COMPLETENESS OF SCANNED COPIES OF THIS PLAN SHEET.

TEMPORARY PAVEMENT DELINEATION

STAGE	SHEET	LOCATION	DIRECTION	DETAIL	INSTALL/REMOVE	PAVEMENT MARKER NON-REFLECTIVE TYPE A WHITE	PAVEMENT MARKER NON-REFLECTIVE TYPE AY YELLOW	PAVEMENT MARKER RETROREFLECTIVE TYPE G CLEAR (ONE-WAY)	PAVEMENT MARKER RETROREFLECTIVE TYPE H YELLOW (ONE-WAY)	PAINT TRAFFIC STRIPE (2-COAT) WHITE 8"	PAINT TRAFFIC STRIPE (2-COAT) 4" (BROKEN 6'-1')	REMOVE PAVEMENT MARKER	REMOVE THERMO-PLASTIC TRAFFIC STRIPE	REMOVE YELLOW THERMO-PLASTIC TRAFFIC STRIPE (HAZARDOUS WASTE)
						EA	EA	EA	EA	LF	LF	EA	LF	LF
STAGE 1	TH-1	2499+88 to 2501+08	SB	25	R							4		120
		3086+89 to 3089+19	SB	25	R							6		230
		2499+88 to 3089+19	SB	12	R							1,229	14,733	
				13	I	4,912		1229						
				25T	I		8,583		1229					
STAGE 2 AND 5	TH-2	2513+39 to 2517+19	NB	25	R							15		380
		3068+54 to 3071+24	NB	25	R							15		270
		2504+50 to 3076+92	NB	12	R							1,194	14,311	
				27B	R								57,242	
				13	I	4,772		1194						
				25T	I		8,346		1194					
				27BT	I	9,540								
				36A	I			10		220				
				8	I						265			
STAGE 3	TH-3	2951+57 to 2963+87	SB	13	R							131		
		2951+57 to 2952+57	SB	38B	I			12		100				
		2952+57 to 2956+77		36B	I			17		390				
	TH-3/TH-7	2956+77 to 3055+67	SB	27BT	I	1,648								
	TH-3/TH-8	2952+57 to 3076+74	SB	27BT	R							2,070		
		2956+77 to 3076+74	NB	27BT	I	2,000								
	TH-3/TH-9	2952+57 to 3082+19	NB	25T	I		1,890		270					
		2952+57 to 3086+19	NB	27BT	R							2,227		
		2956+77 to 3082+19	SB	25T	I		1,830		260					
		2952+57 to 3086+19	SB	25T	R							2,227		
	TH-5/TH-6	2986+40 to 3001+40	NB	13	R							158		
				25T	R							250		
				27B	R							250		
				13	I	126		32						
				25T	I		219		32					
				27BT	I	250								
	TH-7	3034+59 to 3037+59	SB	8	I						300			
		3037+59 to 3040+74	SB	36A	I			15		315				
	TH-7/TH-8	3037+59 to 3076+74	SB	27BT	I	653								
	TH-8/TH-9	3068+34 to 3089+19	SB	13	R							218		
	TH-9	3082+19 to 3086+19	SB	36	I			36		800				
		3086+19 to 3089+19	SB	38B	I			28		300				
		ENTRANCE RAMP	SB	8	I						300			
				36A	I			18		400				
STAGE 4	TH-10	2963+14 to 2966+14	NB	38B	I			28		300				
		2966+14 to 2971+24	NB	36	I			46		1020				
	TH-10/TH-13	2971+24 to 3007+02	NB	25T	I		521		75					
				27BT	I	596								
		2963+14 to 3007+02	NB	25T	I		640		91					
		2972+07 to 3006+49	SB	13	R							361		
				25T	R							574		
				27BT	R							574		
				13	I	73		288						
				25T	I		501		73					
				27BT	I	574								
SHEET SUBTOTAL						25,144	22,530	2953	3224	3845	865	11,503	86,286	1000

APPROVED FOR TRAFFIC HANDLING WORK ONLY

TRAFFIC HANDLING QUANTITIES
THQ-3

STATE OF CALIFORNIA - DEPARTMENT OF TRANSPORTATION
Caltrans® TRAFFIC DESIGN

FUNCTIONAL SUPERVISOR: MOHAMMED QATAMI
CALCULATED-DESIGNED BY: ANDREY CHEVYCHALOV
CHECKED BY
REVISED BY
DATE REVISED
VANIK POGOSYAN

LAST REVISION 06-06-14 | DATE PLOTTED => 24-JUL-2014 | TIME PLOTTED => 10:05

Dist	COUNTY	ROUTE	POST MILES TOTAL PROJECT	SHEET No.	TOTAL SHEETS
06	Ker	5	62.5/73.1	93	213

REGISTERED CIVIL ENGINEER DATE 06-06-14

PLANS APPROVAL DATE 6-16-14

REGISTERED PROFESSIONAL ENGINEER ANDREY CHEVYCHALOV No. 68378 Exp. 9-30-15 CIVIL STATE OF CALIFORNIA

THE STATE OF CALIFORNIA OR ITS OFFICERS OR AGENTS SHALL NOT BE RESPONSIBLE FOR THE ACCURACY OR COMPLETENESS OF SCANNED COPIES OF THIS PLAN SHEET.

TEMPORARY PAVEMENT DELINEATION

STAGE	SHEET	LOCATION	DIRECTION	DETAIL	INSTALL/REMOVE	PAVEMENT MARKER NON-REFLECTIVE TYPE A WHITE	PAVEMENT MARKER NON-REFLECTIVE TYPE AY YELLOW	PAVEMENT MARKER RETROREFLECTIVE TYPE G CLEAR (ONE-WAY)	PAVEMENT MARKER RETROREFLECTIVE TYPE H YELLOW (ONE-WAY)	PAINT TRAFFIC STRIPE (2-COAT) WHITE 8"	PAINT TRAFFIC STRIPE (2-COAT) 4" (BROKEN 6'-1')	REMOVE PAVEMENT MARKER	REMOVE THERMO-PLASTIC TRAFFIC STRIPE	REMOVE YELLOW THERMO-PLASTIC TRAFFIC STRIPE (HAZARDOUS WASTE)
						EA	EA	EA	EA	LF	LF	EA	LF	LF
STAGE 4	TH-10/TH-15	2963+14 to 3075+30	NB	13	R							953		
				25T	R							1,524		
				27BT	R	1,869								
				25T	I		1,634		235					
				27BT	I	1,869								
	TH-13	3007+02 to 3010+37	NB	36B	I			15		135				
		3010+37 to 3011+37	NB	38B	I			12		100				
		EXIT RAMP	NB	36	I			20		420				
	TH-13/TH-15	3011+37 to 3075+30	NB	13	I		534		134					
STAGE 6	TH-14	3042+23 to 3045+21	NB	36	I			28		596				
		3045+21 to 3054+55	NB	25T	I		137		19					
	TH-14/TH-15	3045+21 to 3075+30	NB	27BT	R							156		
	TH-16	2499+88 to 2500+88	SB	38B	I			12		100				
		2500+88 to 2504+53	SB	36B	I			16		365				
	TH-16/TH-17	2499+88 to 2514+60	SB	13	R							156		
	TH-16/TH-19	2500+88 to 2985+00	SB	25T	R							8,068		
		2500+88 to 2985+00	SB	25T	I		7,058		1,010					
	TH-16/TH-18	2504+53 to 2978+26	SB	25T	I		6,908		988					
		2504+53 to 2978+26	NB	27BT	I	7,896								
		2509+00 to 2972+26	SB	27BT	I	7,721								
	TH-18/TH-19	2963+86 to 2988+00	SB	13	R							253		
		2978+26 to 2985+00	SB	36	I			60		1348				
	TH-19	2985+00 to 2988+00	SB	38B	I			28		300				
	TH-21	EXIT RAMP	SB	36	I			20		410				
STAGE 7	TH-22	2504+52 to 2514+00	NB	13	R							101		
	TH-22/TH-24	2504+52 to 2542+43	NB	27BT	I	3,791								
	TH-22/TH-26	2504+52 to 3001+40	NB	25T	R							8,281		
				27BT	R							8,281		
				13	I	4,142		1,036						
				25T	I		7,245		1,036					
	TH-23/TH-26	2524+27 to 3001+40	NB	27BT	I	7,952								
	TH-23/TH-26	2524+27 to 3001+40	NB	25T	I		6,958		954					
	TH-24	2539+28 to 2542+43	NB	36A	I			18		400				
		2542+43 to 2545+40	NB	8	I						297			
	TH-24/TH-26	2536+88 to 3001+40	NB	13	R							253		
SHEET SUBTOTAL						35,240	30,474	1,265	4,376	4174	297	28,026	0	0
THQ-3 SUBTOTAL						25,144	22,530	2,953	3,224	3845	865	11,503	86,286	1000
TOTAL						113,388		11,818*		9181*		39,529	86,286	1000

* QUANTITY INCLUDED IN SHEET PDQ-1

APPROVED FOR TRAFFIC HANDLING WORK ONLY

TRAFFIC HANDLING QUANTITIES

THQ-4

STATE OF CALIFORNIA - DEPARTMENT OF TRANSPORTATION

Caltrans® TRAFFIC DESIGN

FUNCTIONAL SUPERVISOR: MOHAMMED QATAMI

CALCULATED-DESIGNED BY: VANIK POGOSYAN

CHECKED BY: ANDREY CHEVYCHALOV

REVISED BY / DATE REVISED

LAST REVISION 06-06-14 | DATE PLOTTED => 24-JUL-2014 | TIME PLOTTED => 10:05

Dist	COUNTY	ROUTE	POST MILES TOTAL PROJECT	SHEET No.	TOTAL SHEETS
06	Ker	5	62.5/73.1	94	213

REGISTERED CIVIL ENGINEER 06-06-14 DATE

6-16-14
PLANS APPROVAL DATE

REGISTERED PROFESSIONAL ENGINEER ANDREY CHEVYCHALOV No. 68378 Exp. 9-30-15 CIVIL STATE OF CALIFORNIA

THE STATE OF CALIFORNIA OR ITS OFFICERS OR AGENTS SHALL NOT BE RESPONSIBLE FOR THE ACCURACY OR COMPLETENESS OF SCANNED COPIES OF THIS PLAN SHEET.

LEGEND:

- CONSTRUCTION AREA
- (X) ROADSIDE SIGN No.
- × RAMP CLOSURE
- DIRECTION OF DETOUR
- ■ PORTABLE CHANGEABLE MESSAGE SIGN (PCMS)
- "MESSAGE 1 / MESSAGE 2" ALTERNATE MESSAGES ON PCMS

NOTES:

1. FOR ADDITIONAL CONSTRUCTION AREA SIGNS REFER TO CONSTRUCTION AREA SIGNS AND TRAFFIC HANDLING SHEETS
2. COVER ALL CONFLICTING SIGNS
3. EXACT LOCATIONS TO BE DETERMINED BY THE ENGINEER
4. DETOUR SIGNS MAY BE MOUNTED ON BARRICADES FOR SHORT DURATION DETOURS

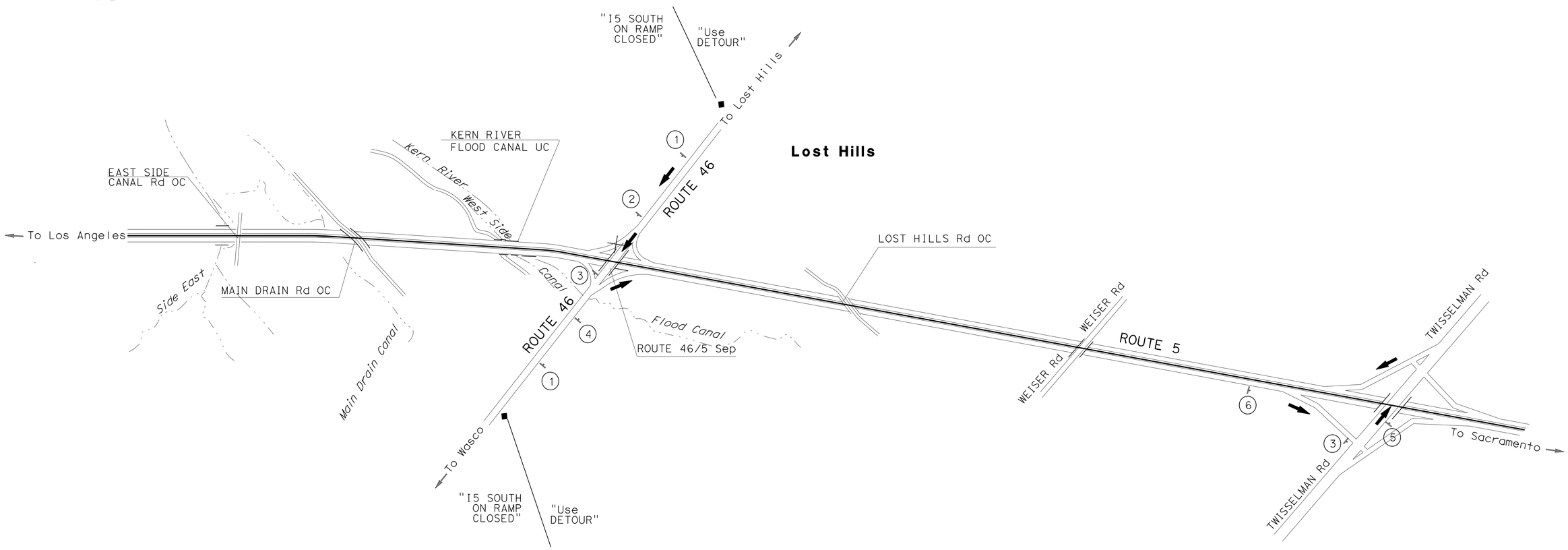

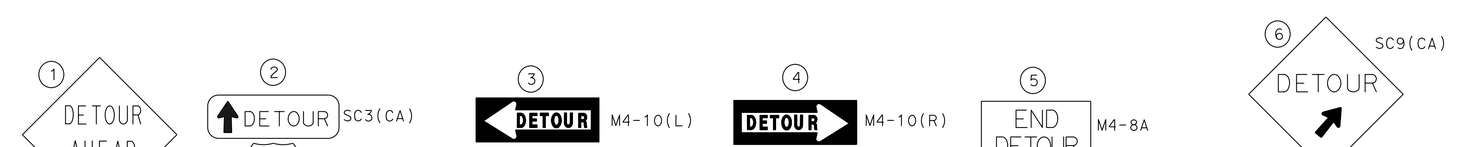

APPROVED FOR DETOUR WORK ONLY

DETOUR PLAN
(FROM EB/WB ROUTE 46 TO TWISSELMAN ROAD TO SB ROUTE 5)

NO SCALE **DE-1**

STATE OF CALIFORNIA - DEPARTMENT OF TRANSPORTATION
Caltrans® TRAFFIC DESIGN

FUNCTIONAL SUPERVISOR: MOHAMMED QATAMI
CALCULATED-DESIGNED BY: VANIK POGOSYAN
CHECKED BY: ANDREY CHEVYCHALOV
REVISED BY / DATE REVISED

LAST REVISION 06-06-14 | DATE PLOTTED => 24-JUL-2014 | TIME PLOTTED => 10:05

Dist	COUNTY	ROUTE	POST MILES TOTAL PROJECT	SHEET No.	TOTAL SHEETS
06	Ker	5	62.5/73.1	95	213

REGISTERED CIVIL ENGINEER 06-06-14 DATE

6-16-14
PLANS APPROVAL DATE

REGISTERED PROFESSIONAL ENGINEER
ANDREY CHEVYCHALOV
No. 68378
Exp. 9-30-15
CIVIL
STATE OF CALIFORNIA

THE STATE OF CALIFORNIA OR ITS OFFICERS OR AGENTS SHALL NOT BE RESPONSIBLE FOR THE ACCURACY OR COMPLETENESS OF SCANNED COPIES OF THIS PLAN SHEET.

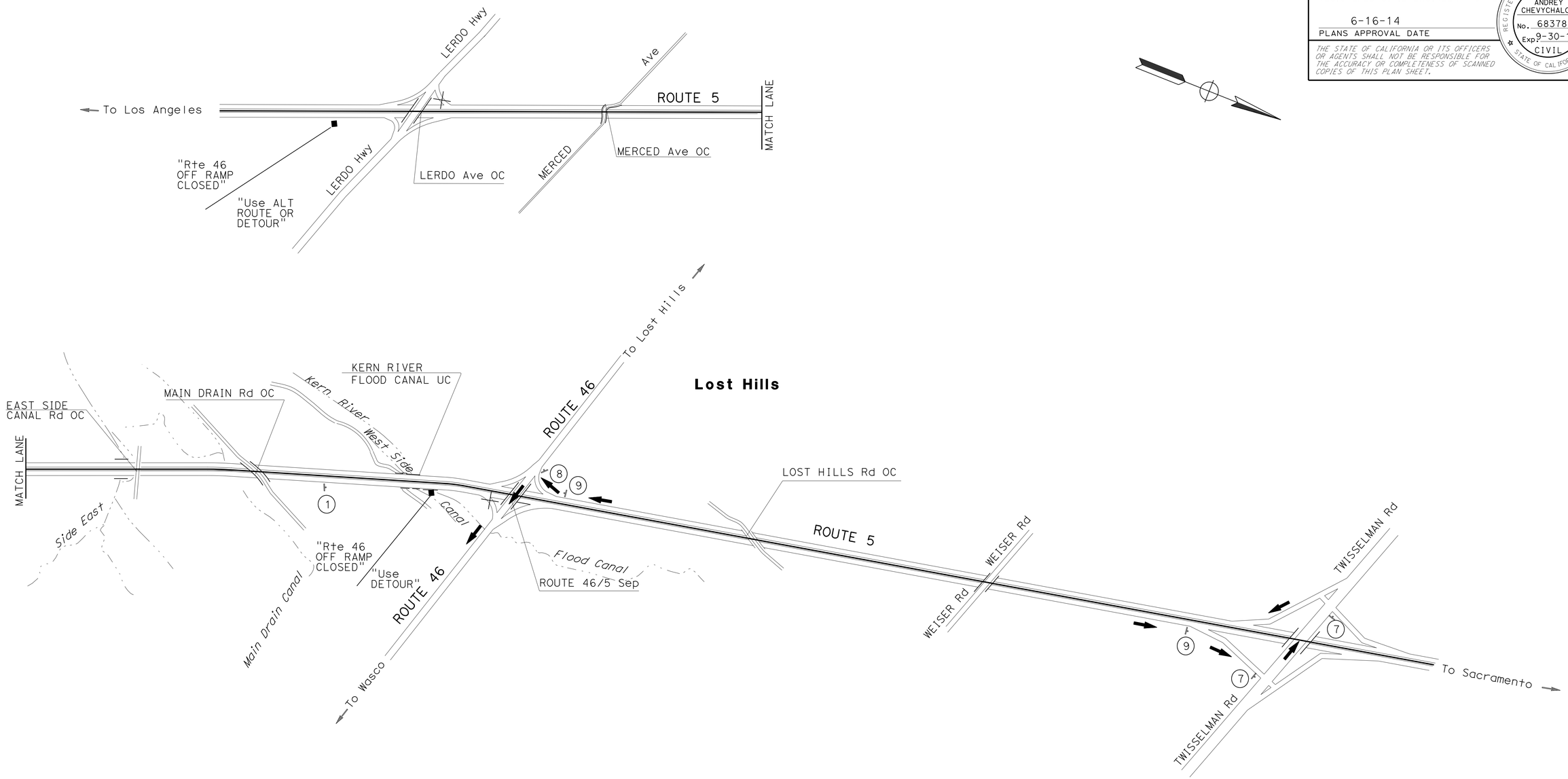

APPROVED FOR DETOUR WORK ONLY

DETOUR PLAN
(FROM NB ROUTE 5 TO TWISSELMAN ROAD TO SB ROUTE 5)

NO SCALE

DE-2

STATE OF CALIFORNIA - DEPARTMENT OF TRANSPORTATION
Caltrans®
TRAFFIC DESIGN

FUNCTIONAL SUPERVISOR: MOHAMMED QATAMI
CALCULATED-DESIGNED BY: VANIK POGOSYAN
CHECKED BY: ANDREY CHEVYCHALOV
REVISED BY
DATE REVISED

LAST REVISION 06-06-14
DATE PLOTTED => 24-JUL-2014
TIME PLOTTED => 10:05

Dist	COUNTY	ROUTE	POST MILES TOTAL PROJECT	SHEET No.	TOTAL SHEETS
06	Ker	5	62.5/73.1	96	213

REGISTERED CIVIL ENGINEER 06-06-14 DATE

6-16-14
PLANS APPROVAL DATE

REGISTERED PROFESSIONAL ENGINEER
ANDREY CHEVYCHALOV
No. 68378
Exp. 9-30-15
CIVIL
STATE OF CALIFORNIA

THE STATE OF CALIFORNIA OR ITS OFFICERS OR AGENTS SHALL NOT BE RESPONSIBLE FOR THE ACCURACY OR COMPLETENESS OF SCANNED COPIES OF THIS PLAN SHEET.

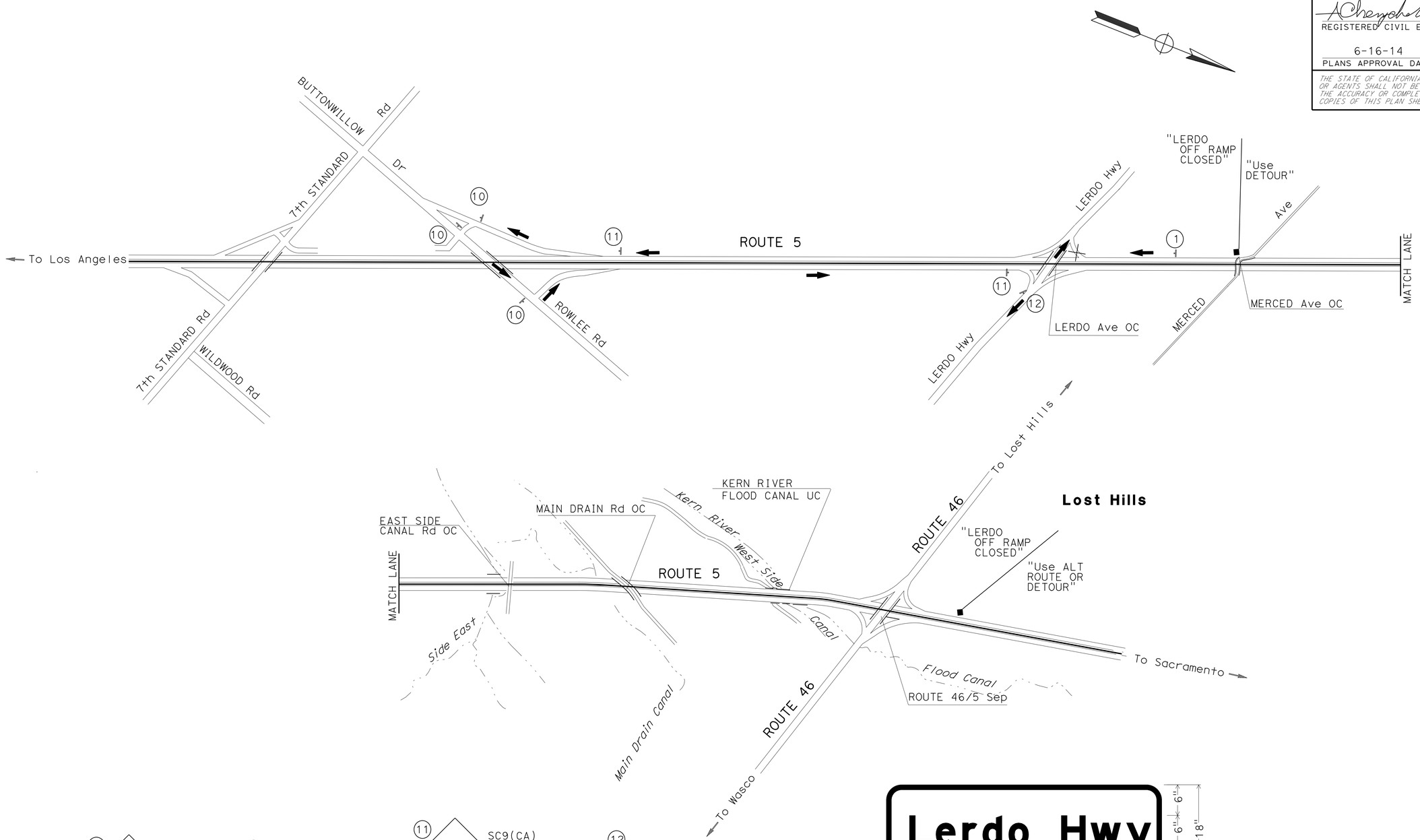

APPROVED FOR DETOUR WORK ONLY

DETOUR PLAN
(FROM SB ROUTE 5 TO 7th STANDARD ROAD SB OFF RAMP TO ROWLEE ROAD ON RAMP TO NB ROUTE 5)

NO SCALE

DE-3

STATE OF CALIFORNIA - DEPARTMENT OF TRANSPORTATION
Caltrans®
TRAFFIC DESIGN

FUNCTIONAL SUPERVISOR: MOHAMMED QATAMI
CALCULATED-DESIGNED BY: VANIK POGOSYAN
CHECKED BY: ANDREY CHEVYCHALOV
REVISED BY
DATE REVISED

LAST REVISION 06-06-14
DATE PLOTTED => 24-JUL-2014
TIME PLOTTED => 10:05

Dist	COUNTY	ROUTE	POST MILES TOTAL PROJECT	SHEET No.	TOTAL SHEETS
06	Ker	5	62.5/73.1	97	213

REGISTERED CIVIL ENGINEER 06-06-14 DATE

6-16-14
PLANS APPROVAL DATE

REGISTERED PROFESSIONAL ENGINEER
ANDREY CHEVYCHALOV
No. 68378
Exp. 9-30-15
CIVIL
STATE OF CALIFORNIA

THE STATE OF CALIFORNIA OR ITS OFFICERS OR AGENTS SHALL NOT BE RESPONSIBLE FOR THE ACCURACY OR COMPLETENESS OF SCANNED COPIES OF THIS PLAN SHEET.

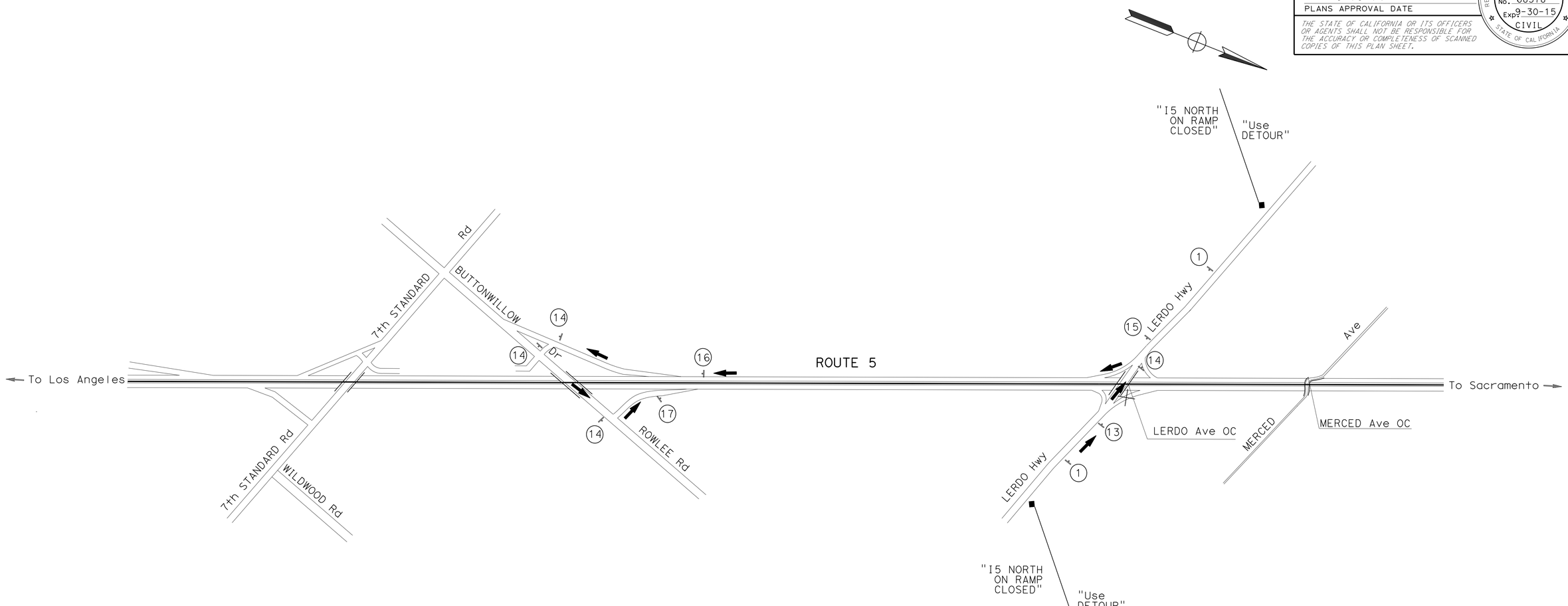

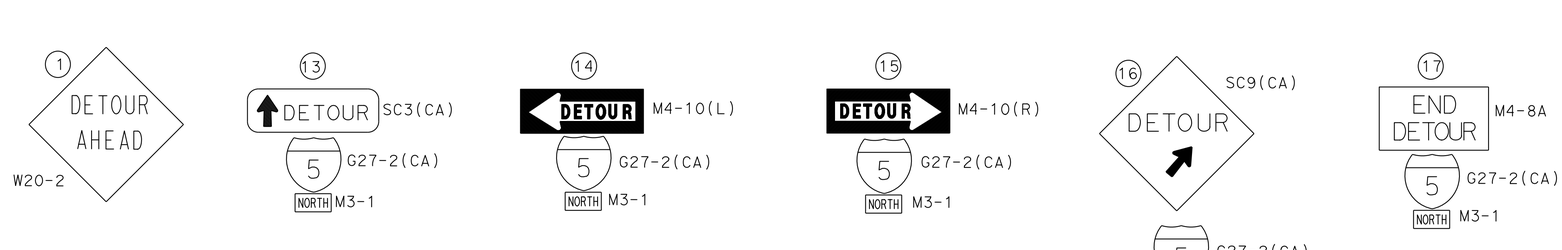

DETOUR PLAN

(FROM EB/WB LERDO HWY TO SB ROUTE 5 7th STANDARD ROAD SB OFF RAMP TO ROWLEE ROAD ON RAMP TO NB ROUTE 5)

NO SCALE

DE-4

APPROVED FOR DETOUR WORK ONLY

STATE OF CALIFORNIA - DEPARTMENT OF TRANSPORTATION
Caltrans
TRAFFIC DESIGN

FUNCTIONAL SUPERVISOR: MOHAMMED QATAMI
CALCULATED-DESIGNED BY: VANIK POGOSYAN
CHECKED BY: ANDREY CHEVYCHALOV
REVISED BY
DATE REVISED

LAST REVISION 06-06-14
DATE PLOTTED => 24-JUL-2014
TIME PLOTTED => 10:05

Dist	COUNTY	ROUTE	POST MILES TOTAL PROJECT	SHEET No.	TOTAL SHEETS
06	Ker	5	62.5/73.1	98	213

REGISTERED CIVIL ENGINEER 06-06-14 DATE

6-16-14
PLANS APPROVAL DATE

REGISTERED PROFESSIONAL ENGINEER
ANDREY CHEVYCHALOV
No. 68378
Exp. 9-30-15
CIVIL
STATE OF CALIFORNIA

THE STATE OF CALIFORNIA OR ITS OFFICERS OR AGENTS SHALL NOT BE RESPONSIBLE FOR THE ACCURACY OR COMPLETENESS OF SCANNED COPIES OF THIS PLAN SHEET.

NOTE:

FOR ADDITIONAL CONSTRUCTION AREA SIGNS, REFER TO CS AND TH PLANS

STATIONARY MOUNTED CONSTRUCTION AREA SIGNS

SIGN No.	SIGN CODE	SIGN MESSAGE	PANEL SIZE	No. OF POST AND SIZE	No. OF SIGNS
1	W20-2	DETOUR AHEAD	48" x 48"	1 - 4" x 6"	6
2	SC3(CA)	DETOUR ARROW	48" x 18"	1 - 4" x 6"	1
	G27-2(CA)	INTERSTATE 5	24" x 24"		
	M3-3	SOUTH	24" x 12"		
3	M4-10(L)	DETOUR ARROW LEFT	48" x 18"	1 - 4" x 6"	2
	G27-2(CA)	INTERSTATE 5	24" x 24"		
	M3-3	SOUTH	24" x 12"		
4	M4-10(R)	DETOUR ARROW RIGHT	48" x 18"	1 - 4" x 6"	1
	G27-2(CA)	INTERSTATE 5	24" x 24"		
	M3-3	SOUTH	24" x 12"		
5	M4-8A	END DETOUR	24" x 18"	1 - 4" x 6"	1
	G27-2(CA)	INTERSTATE 5	24" x 24"		
	M3-3	SOUTH	24" x 12"		
6	SC9(CA)	(FWY) DETOUR WITH ARROW	48" x 48"	1 - 4" x 6"	1
	G27-2(CA)	INTERSTATE 5	24" x 24"		
	M3-3	SOUTH	24" x 12"		
7	M4-10(L)	DETOUR ARROW LEFT	48" x 18"	1 - 4" x 6"	2
	G28-2(CA)	ROUTE 46	24" x 25"		
8	M4-8A	END DETOUR	24" x 18"	1 - 4" x 6"	1
	G28-2(CA)	ROUTE 46	24" x 25"		
9	SC9(CA)	(FWY) DETOUR WITH ARROW	48" x 48"	1 - 4" x 6"	2
	G28-2(CA)	ROUTE 46	24" x 25"		
10	M4-10(L)	DETOUR ARROW LEFT	48" x 18"	1 - 4" x 6"	3
	D3	Lerdo Hwy	54" x 18"		
11	SC9(CA)	(FWY) DETOUR WITH ARROW	48" x 48"	1 - 4" x 6"	2
	D3	Lerdo Hwy	54" x 18"		
12	M4-8A	END DETOUR	24" x 18"	1 - 4" x 6"	1
	D3	Lerdo Hwy	54" x 18"		
13	SC3(CA)	DETOUR ARROW	48" x 18"	1 - 4" x 6"	1
	G27-2(CA)	INTERSTATE 5	24" x 24"		
	M3-1	NORTH	24" x 12"		
14	M4-10(L)	DETOUR ARROW LEFT	48" x 18"	1 - 4" x 6"	4
	G27-2(CA)	INTERSTATE 5	24" x 24"		
	M3-1	NORTH	24" x 12"		
15	M4-10(R)	DETOUR ARROW RIGHT	48" x 18"	1 - 4" x 6"	1
	G27-2(CA)	INTERSTATE 5	24" x 24"		
	M3-1	NORTH	24" x 12"		
16	SC9(CA)	(FWY) DETOUR WITH ARROW	48" x 48"	1 - 4" x 6"	1
	G27-2(CA)	INTERSTATE 5	24" x 24"		
	M3-1	NORTH	24" x 12"		
17	M4-8A	END DETOUR	24" x 18"	1 - 4" x 6"	1
	G27-2(CA)	INTERSTATE 5	24" x 24"		
	M3-1	NORTH	24" x 12"		

DETOUR QUANTITIES

DEQ-1

REVISED BY | DATE REVISED

VANIK POGOSYAN | ANDREY CHEVYCHALOV

CALCULATED-DESIGNED BY | CHECKED BY

FUNCTIONAL SUPERVISOR: MOHAMMED QATAMI

STATE OF CALIFORNIA - DEPARTMENT OF TRANSPORTATION

Caltrans® TRAFFIC DESIGN

LAST REVISION 06-06-14 | DATE PLOTTED => 24-JUL-2014 | TIME PLOTTED => 10:05

Dist	COUNTY	ROUTE	POST MILES TOTAL PROJECT	SHEET No.	TOTAL SHEETS
06	Ker	5	62.5/73.1	99	213

REGISTERED CIVIL ENGINEER 06-06-14 DATE

6-16-14
PLANS APPROVAL DATE

REGISTERED PROFESSIONAL ENGINEER ANDREY CHEVYCHALOV No. 68378 Exp. 9-30-15 CIVIL STATE OF CALIFORNIA

THE STATE OF CALIFORNIA OR ITS OFFICERS OR AGENTS SHALL NOT BE RESPONSIBLE FOR THE ACCURACY OR COMPLETENESS OF SCANNED COPIES OF THIS PLAN SHEET.

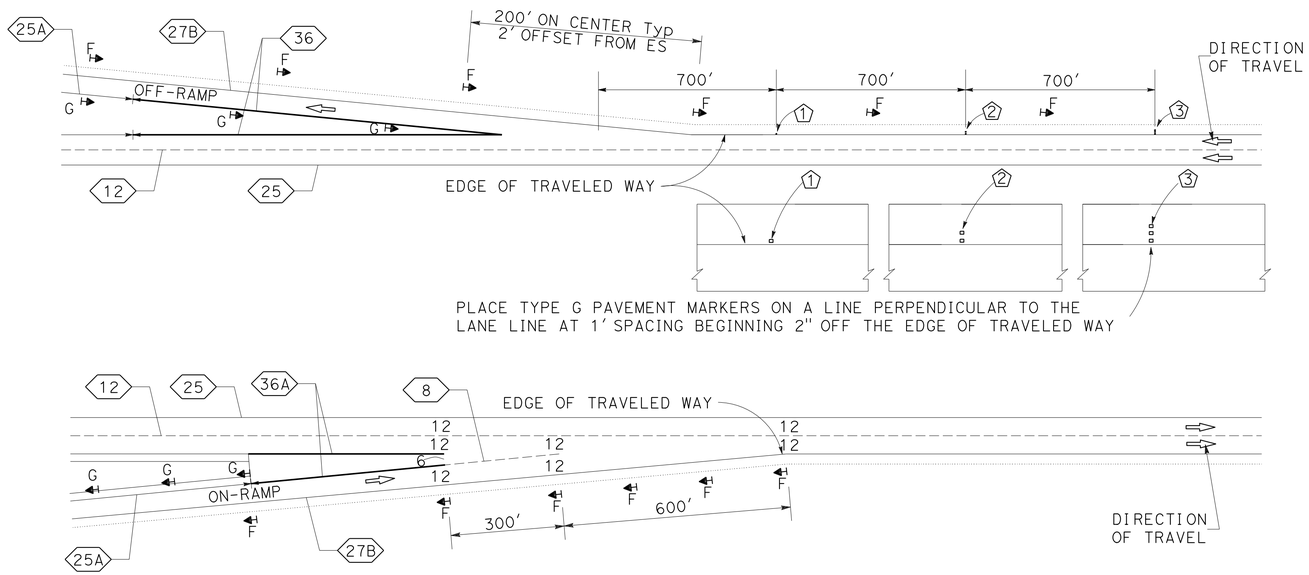

ADVANCE MARKERS AND DELINEATORS DETAIL

(3-2-1 FOG MARKER AND F DELINEATORS)

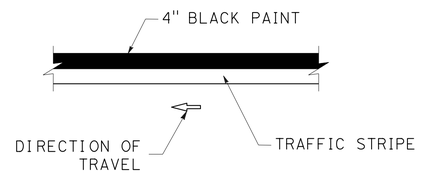

TRAFFIC STRIPE CONTRAST DETAIL

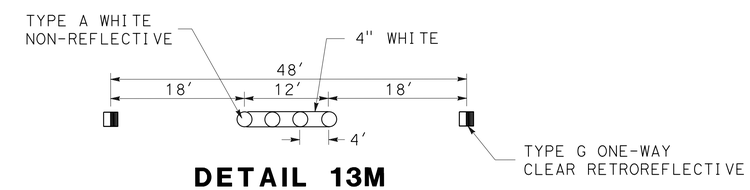

DETAIL 13M

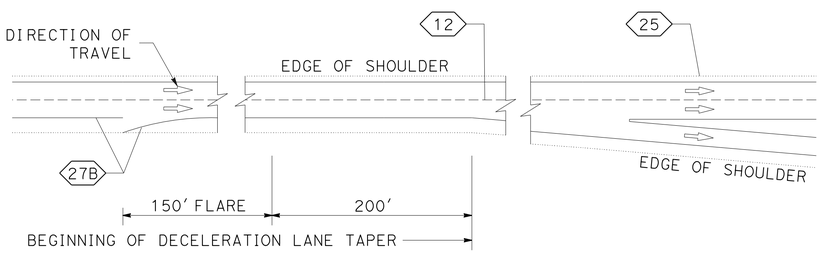

RIGHT EDGELINE FLARE DETAIL

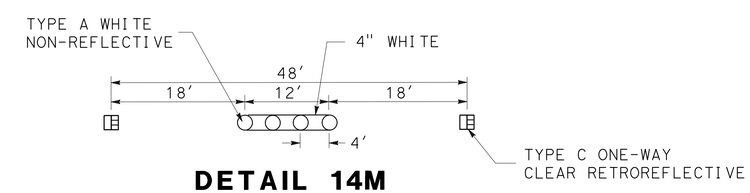

DETAIL 14M

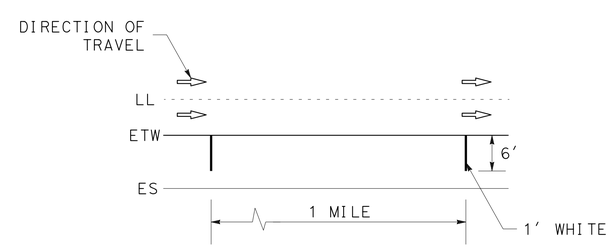

SPEED MEASUREMENT MARKING

PAVEMENT DELINEATION DETAILS

APPROVED FOR PAVEMENT DELINEATION WORK ONLY

NO SCALE

PDD-1

STATE OF CALIFORNIA - DEPARTMENT OF TRANSPORTATION
Caltrans® TRAFFIC DESIGN

FUNCTIONAL SUPERVISOR: MOHAMMED QATAMI
CALCULATED-DESIGNED BY: VANIK POGOSYAN
CHECKED BY: ANDREY CHEVYCHALOV
REVISED BY
DATE REVISED

LAST REVISION 06-06-14
DATE PLOTTED => 24-JUL-2014
TIME PLOTTED => 10:05

Dist	COUNTY	ROUTE	POST MILES TOTAL PROJECT	SHEET No.	TOTAL SHEETS
06	Ker	5	62.5/73.1	100	213

REGISTERED CIVIL ENGINEER 06-06-14 DATE

6-16-14
PLANS APPROVAL DATE

REGISTERED PROFESSIONAL ENGINEER
ANDREY CHEVYCHALOV
No. 68378
Exp. 9-30-15
CIVIL
STATE OF CALIFORNIA

THE STATE OF CALIFORNIA OR ITS OFFICERS OR AGENTS SHALL NOT BE RESPONSIBLE FOR THE ACCURACY OR COMPLETENESS OF SCANNED COPIES OF THIS PLAN SHEET.

PAVEMENT DELINEATION QUANTITIES

LOCATION		DIRECTION	DETAIL No.	PAVEMENT MARKER (RETRO-REFLECTIVE)		THERMOPLASTIC TRAFFIC STRIPE (ENHANCED WET NIGHT VISIBILITY)				PAINT TRAFFIC STRIPE (2-COAT)
				TYPE G Clear (One-Way)	TYPE H Yellow (One-Way)	4" WHITE	4" YELLOW	4" (BROKEN 36-12)	8" WHITE	
	PM TO PM			EA	EA	LF	LF	LF	LF	LF
Route 5	62.50 TO 73.10	S	27B			55,968				55,968
		S	12	1,167				55,968		
		S	25		1,167		55,968			
		S	36	54					1240	
		S	38A						250	
		N	25		1,167		55,968			
		N	12	1,167				55,968		
		N	27B			55,968				55,968
		N	36	28					620	
		N	38A						565	
		S/N	FOG MARKER	12						
SUB TOTAL				2,374	2,334	111,936	111,936	111,936	2675	111,936
PDD-1 TOTAL				4,762		223,872		111,936	2675	111,936*
THQ-4 TOTAL				11,818		0		0	0	9,181
TOTAL				16,580		223,872		111,936	2675	121,117*

* BLACK PAINT TO PROVIDE SUFFICIENT CONTRAST WITH THE MARKINGS ON LIGHT-COLORED PAVEMENT (PCC)

DELINEATOR (CLASS I)

LOCATION	TYPE F	TYPE G
	EA	EA
LERDO Ave ON-RAMP	6	3
LERDO Ave OFF-RAMP	6	3
LOST HILLS ON-RAMP	6	3
LOST HILLS OFF-RAMP	6	3
SUB TOTAL	24	12
TOTAL	36	

APPROVED FOR PAVEMENT DELINEATION WORK ONLY

PAVEMENT DELINEATION QUANTITIES

PDQ-1

REVISED BY	DATE REVISED

CALCULATED-DESIGNED BY	CHECKED BY
VANIK POGOSYAN	ANDREY CHEVYCHALOV

FUNCTIONAL SUPERVISOR: MOHAMMED QATAMI

STATE OF CALIFORNIA - DEPARTMENT OF TRANSPORTATION
Caltrans® TRAFFIC DESIGN

LAST REVISION 06-06-14 | DATE PLOTTED => 24-JUL-2014 | TIME PLOTTED => 10:05

Dist	COUNTY	ROUTE	POST MILES TOTAL PROJECT	SHEET No.	TOTAL SHEETS
06	Ker	5	62.5/73.1	101	213

REGISTERED CIVIL ENGINEER DATE 06-10-14

PLANS APPROVAL DATE 6-16-14

REGISTERED PROFESSIONAL ENGINEER MAHMOOD A SULTAN No. 76344 Exp. 12-31-14 CIVIL STATE OF CALIFORNIA

THE STATE OF CALIFORNIA OR ITS OFFICERS OR AGENTS SHALL NOT BE RESPONSIBLE FOR THE ACCURACY OR COMPLETENESS OF SCANNED COPIES OF THIS PLAN SHEET.

NOTES:

(N) NOT A SEPARATE PAY ITEM, FOR INFORMATION ONLY

ROADWAY QUANTITIES

SHEET No.	STAGE No.-PHASE No.	LOCATION/DESCRIPTION	HMA (TYPE A)	CRCP	CLASS 2 AGGREGATE BASE	CLASS 2 AGGREGATE SUBBASE	TACK COAT	SAFETY EDGE (N)	ROADWAY EXCAVATION	REMOVE CONCRETE PAVEMENT	SHOULDER BACKING	EMBANKMENT (N)	GRIND EXISTING CONCRETE PAVEMENT	OBLITERATE SURFACING	Shld RUMBLE STRIP (HMA GROUND-IN INDENTATIONS)	Shld RUMBLE STRIP (Conc Pvmt GROUND-IN INDENTATIONS)	SPALL REPAIR (POLYESTER CONCRETE)
			TON	CY	CY	CY	TON	TON	CY	CY	TON	CY	SQYD	SQYD	STA	STA	SQYD
SC-2 to SC-4	S1-P1	NB, Rte 5 OUTSIDE Shld, STA 2504+50.00 to 3076+90.00	33,223			1051	23.76	206	16,893		1550						
SC-2 to SC-4	S1-P1	SB, Rte 5 INSIDE Shld, STA 2513+38.00 to 3071+24.00	38,807		18,931	1013	30.87	199	38,686		1511						
SC-5, SC-6 & SC-31	S1-P2	NB, Rte 5 OUTSIDE Shld Widening/Ramp, S/O NB OFF-RAMP to Rte 46, STA 3039+56.00 to 3051+27.00	639		445		0.46		772								
SC-5, SC-6 & SC-32	S1-P2	SB, Rte 5 ON-RAMP from Rte 46 OUTSIDE Shld, STA 3037+81.00 to 3058+27.00	1,185				0.85		606								
SC-5, SC-6 & SC-32	S1-P2	SB, Rte 5 OUTSIDE Shld Widening/Ramp, S/O SB ON-RAMP from Rte 46, STA 3037+81.00 to 3058+27.00	1,017		714		0.74		1,234		56						
SC-7 & SC-33	S1-P2	NB, Rte 5 OUTSIDE Shld Widening, N/O NB ON-RAMP from LERDO HWY , STA 2527+26.00 to 2541+10.00	615		617		0.42		950								
SC-7, SC-34	S1-P2	SB, Rte 5 OFF-RAMP to Lerdo HWY OUTSIDE Shld STA 2528+56 .00 to 2540+27.00	1,100		447		0.79		1,010		32						
SC-8 to SC-10	S2	NB, MEDIAN DETOUR, STA 2960+00.00 to 3078+79.00	11,750		10,446		4.64	44	10,356			6415					
SC-8	S2	Rte 5 MEDIAN CROSSOVER #2, STA 2954+42.89 to 2962+04.32	347		404		0.24		782			267					
SC-8	S2	Rte 5 MEDIAN CROSSOVER #3, STA 2972+70.25 to 2980+19.82	360		419		0.25		304			623					
SC-9	S2	Rte 5 MEDIAN CROSSOVER #4, STA 3001+07.48 to 3008+90.18	365		424		0.25		385			450					
SC-10	S2	Rte 5 MEDIAN CROSSOVER #5, STA 3076+70.81 to 3086+23.00	443		515		0.31		206			615					
SC-11	S3-P1	SB, Rte 5 LANE #2, STA 3043+25.00 to 3068+34.00	647	1457		927	0.50		1,804	911							
SC-11	S3-P1	SB, Rte 5 OUTSIDE Shld STA 3058+27.00 to 3068+34.00	467				0.34		239		27						
		SUBTOTAL Q-1	90,965	1457	33,362	2991	64.42	449	74,227	911	3176	8370	0	0	0	0	0

SUMMARY OF QUANTITIES
Q-1

STATE OF CALIFORNIA - DEPARTMENT OF TRANSPORTATION

Caltrans DESIGN

FUNCTIONAL SUPERVISOR: DAVID SANGHA

CALCULATED-DESIGNED BY: CARMELITA BELLE

CHECKED BY: MAHMOOD SULTAN

REVISED BY

DATE REVISED

LAST REVISION 06-19-14 DATE PLOTTED => 24-JUL-2014 TIME PLOTTED => 10:37

Dist	COUNTY	ROUTE	POST MILES TOTAL PROJECT	SHEET No.	TOTAL SHEETS
06	Ker	5	62.5/73.1	102	213

REGISTERED CIVIL ENGINEER DATE 06-10-14

PLANS APPROVAL DATE 6-16-14

REGISTERED PROFESSIONAL ENGINEER MAHMOOD A SULTAN No. 76344 Exp. 12-31-14 CIVIL STATE OF CALIFORNIA

THE STATE OF CALIFORNIA OR ITS OFFICERS OR AGENTS SHALL NOT BE RESPONSIBLE FOR THE ACCURACY OR COMPLETENESS OF SCANNED COPIES OF THIS PLAN SHEET.

NOTES:

(N) NOT A SEPARATE PAY ITEM, FOR INFORMATION ONLY

ROADWAY QUANTITIES

SHEET No.	STAGE No.-PHASE No.	LOCATION/DESCRIPTION	HMA (TYPE A)	CRCP	CLASS 2 AGGREGATE BASE	CLASS 2 AGGREGATE SUBBASE	TACK COAT	SAFETY EDGE (N)	ROADWAY EXCAVATION	REMOVE CONCRETE PAVEMENT	SHOULDER BACKING	EMBANKMENT (N)	GRIND EXISTING CONCRETE PAVEMENT	OBLITERATE SURFACING	Shld RUMBLE STRIP (HMA GROUND-IN INDENTATIONS)	Shld RUMBLE STRIP (Conc Pvmt GROUND-IN INDENTATIONS)	SPALL REPAIR (POLYESTER CONCRETE)
			TON	CY	CY	CY	TON	TON	CY	CY	TON	CY	SQYD	SQYD	STA	STA	SQYD
SC-12 to SC-14	S3-P2	SB, Rte 5 LANE #2, STA 2964+00.00 to 3043+25.00	1,985	4,469		2,844	1.52		5,535	2,794							
SC-12 to SC-14	S3-P2	SB, Rte 5 OUTSIDE Shld STA 2964+00.00 to 3037+81.00	3,314		0		2.38		1,696		194						
SC-15	S4-P1	NB, Rte 5 LANE #2, STA 3044+04.00 to 3067+89.00	615	1,385		881	0.47		1,714	866							
SC-16 to SC-18	S4-P2	NB, Rte 5 LANE #2, STA 2980+20.00 to 3044+04.00	1,588	3,574		2,275	1.22		4,427	2,235							
SC-19 to SC-20	S5	NB, MEDIAN DETOUR, STA 2508+08.00 to 2960+00.00	46,774		41,818	63	18.83	159	42,059			26,055					
SC-19	S5	Rte 5 MEDIAN CROSSOVER #1, STA 2500+50.00 to 2510+34.84	367		427		0.26		527			867					
SC-21	S6-P1	SB, Rte 5 LANE #2, STA 2514+59.00 to 2535+98.00	552	1,242		790	0.42		1,538	776							
SC-21	S6-P1	SB, Rte 5 OUTSIDE Shld, STA 2514+59.00 to 2528+56.00	647		0		0.47		331		38						
SC-22, SC-23	S6-P2	SB, Rte 5 LANE #2, STA 2535+98.00 to 2964+00.00	11,037	24,849		15,813	8.47		30,773	15,536							
SC-22, SC-23	S6-P2	SB, Rte 5 OUTSIDE Shld, STA 2540+27.00 to 2964+00.00	19,630		0		14.12		10,044		1152						
SC-24	S7-P1	NB, Rte 5 LANE #2, STA 2514+00.00 to 2536+92.00	533	1,199		763	0.41		1,484	750							
SC-25, SC-26	S7-P2	NB, Rte 5 LANE #2, STA 2536+92.00 to 2980+20.00	11,431	25,735		16,377	8.77		31,871	16,089							
SUBTOTAL Q-2			98,473	62,453	42,245	39,806	57.34	159	131,999	39,046	1384	26,922	0	0	0	0	0

REVISED BY | DATE REVISED

CARMELITA BELLE | MAHMOOD SULTAN

CALCULATED-DESIGNED BY | CHECKED BY

FUNCTIONAL SUPERVISOR: DAVID SANGHA

STATE OF CALIFORNIA - DEPARTMENT OF TRANSPORTATION

Caltrans®

DESIGN

SUMMARY OF QUANTITIES
Q-2

LAST REVISION 06-19-14 | DATE PLOTTED => 24-JUL-2014 | TIME PLOTTED => 10:37

Dist	COUNTY	ROUTE	POST MILES TOTAL PROJECT	SHEET No.	TOTAL SHEETS
06	Ker	5	62.5/73.1	103	213

REGISTERED CIVIL ENGINEER 06-10-14 DATE

PLANS APPROVAL DATE 6-16-14

REGISTERED PROFESSIONAL ENGINEER MAHMOOD A SULTAN No. 76344 Exp. 12-31-14 CIVIL STATE OF CALIFORNIA

THE STATE OF CALIFORNIA OR ITS OFFICERS OR AGENTS SHALL NOT BE RESPONSIBLE FOR THE ACCURACY OR COMPLETENESS OF SCANNED COPIES OF THIS PLAN SHEET.

NOTES:

(N) NOT A SEPARATE PAY ITEM, FOR INFORMATION ONLY

ROADWAY QUANTITIES

SHEET No.	STAGE No.-PHASE No.	LOCATION/DESCRIPTION	HMA (TYPE A)	CRCP	CLASS 2 AGGREGATE BASE	CLASS 2 AGGREGATE SUBBASE	TACK COAT	SAFETY EDGE (N)	ROADWAY EXCAVATION	REMOVE CONCRETE PAVEMENT	SHOULDER BACKING	EMBANKMENT (N)	GRIND EXISTING CONCRETE PAVEMENT	OBLITERATE SURFACING	Shld RUMBLE STRIP (HMA GROUND-IN INDENTATIONS)	Shld RUMBLE STRIP (Conc Pvmt GROUND-IN INDENTATIONS)	SPALL REPAIR (POLYESTER CONCRETE)
			TON	CY	CY	CY	TON	TON	CY	CY	TON	CY	SQYD	SQYD	STA	STA	SQYD
SC-27 to SC-30	S8	NB, Rte 5 OBLITERATE 10 FEET MEDIAN DETOUR, STA 2508+08.00 to 2990+23.43												53,573			
SC-29, SC-30	S8	NB, Rte 5 OBLITERATE 10 FEET MEDIAN DETOUR, STA 2997+56.44 to 3078+79.00												9,025			
SC-29	S8	REMOVE MEDIAN CROSSOVER #1, STA 2500+50.00 to 2510+34.84							1,615								
SC-30	S8	REMOVE MEDIAN CROSSOVER #2, STA 2954+42.89 to 2962+04.32							918								
SC-31	S9	REMOVE MEDIAN CROSSOVER #3, STA 2972+70.25 to 2980+19.82							1,287								
SC-32	S10	REMOVE MEDIAN CROSSOVER #4, STA 3001+07.48 to 3008+90.18							1,130								
SC-33	S11	REMOVE MEDIAN CROSSOVER #5, STA 3076+70.81 to 3086+23.00							1,444								
		NB & SB, Rte 5 INSIDE Shld RUMBLE STRIPS, STA 2504+50.00 to STA 3076+91.69													1,145		
		NB & SB, Rte 5 OUTSIDE Shld RUMBLE STRIPS, STA 2504+50.00 to STA 3076+91.69														1,145	
		NB & SB, #1 LANE, STA 2504+50.00 to STA 3076+91.70											152,645				318
		SUBTOTAL Q-4 (HMA DIKE)	285														
		SUBTOTAL Q-3	0	0	0	0	0.00	0	6,394	0	0	0	152,645	62,598	1145	1145	318
		SUBTOTAL Q-2	98,473	62,453	42,245	39,806	57.34	159	131,999	39,046	1384	26,922	0	0	0	0	0
		SUBTOTAL Q-1	90,965	1,457	33,362	2,991	64.42	449	74,227	911	3176	8,370	0	0	0	0	0
		TOTAL	189,723	63,910	75,607	42,797	121.76	608	212,620	39,957	4560	35,292	152,645	62,598	1145	1145	318

REVISED BY | DATE REVISED

CALCULATED-DESIGNED BY: CARMELITA BELLE | CHECKED BY: MAHMOOD SULTAN

FUNCTIONAL SUPERVISOR: DAVID SANGHA

STATE OF CALIFORNIA - DEPARTMENT OF TRANSPORTATION

Caltrans® DESIGN

SUMMARY OF QUANTITIES
Q-3

LAST REVISION 06-19-14 | DATE PLOTTED => 24-JUL-2014 | TIME PLOTTED => 10:37

Dist	COUNTY	ROUTE	POST MILES TOTAL PROJECT	SHEET No.	TOTAL SHEETS
06	Ker	5	62.5/73.1	104	213

REGISTERED CIVIL ENGINEER 06-10-14 DATE

6-16-14
PLANS APPROVAL DATE

REGISTERED PROFESSIONAL ENGINEER MAHMOOD A SULTAN No. 76344 Exp. 12-31-14 CIVIL STATE OF CALIFORNIA

THE STATE OF CALIFORNIA OR ITS OFFICERS OR AGENTS SHALL NOT BE RESPONSIBLE FOR THE ACCURACY OR COMPLETENESS OF SCANNED COPIES OF THIS PLAN SHEET.

HMA DIKE

DIRECTION	LOCATION	POST MILE	PLACE HMA DIKE (TYPE F)	PLACE HMA DIKE (TYPE C)	PLACE HMA DIKE (TYPE E)	** HMA (TYPE A)
			LF	LF	LF	TON
NORTHBOUND	ROUTE 5	62.50/62.70			1040	27.38
	ROUTE 5	70.47/70.48			74	1.95
	ROUTE 5	71.29/71.55	75	50	1269	34.79
	ROUTE 5	71.57/71.66	75	50	334	10.18
	ROUTE 5	71.71/71.80			517	13.61
	ROUTE 5	72.72/73.10			1914	50.39
SOUTHBOUND	ROUTE 5	62.51/62.93			2218	58.39
	ROUTE 5	71.30/71.55	75	50	1184	32.56
	ROUTE 5	71.57/71.63	75	100	168	6.19
	ROUTE 5	71.67/71.81			708	18.64
	ROUTE 5	72.85/73.10	62.5	50	1142	31.27
		TOTAL	362.5	300	10,568	285.34

** REFER TO ROADWAY QUANTITIES TABLE FOR ADDITIONAL HMA (TYPE A) QUANTITIES.

REMOVE ASPHALT CONCRETE DIKE

LOCATION	POST MILE	NB Rt Shld	POST MILE	SB Rt Shld
		LF		LF
ROUTE 5	62.50/62.70	1040	62.51/62.93	2218
ROUTE 5	70.47/70.48	74	71.30/71.55	1309
ROUTE 5	71.29/71.55	1394	71.57/71.63	343
ROUTE 5	71.57/71.66	459	71.67/71.81	708
ROUTE 5	71.71/71.80	517	72.85/73.10	1254
ROUTE 5	72.72/73.10	1914		
	NB SUBTOTAL	5398	SB SUBTOTAL	5832
TOTAL	11,231			

SUMMARY OF QUANTITIES
Q-4

STATE OF CALIFORNIA - DEPARTMENT OF TRANSPORTATION
Caltrans DESIGN

FUNCTIONAL SUPERVISOR: DAVID SANGHA
CALCULATED-DESIGNED BY: MAHMOOD SULTAN
CHECKED BY: CARMELITA BELLE
REVISED BY
DATE REVISED

LAST REVISION 06-16-14 | DATE PLOTTED => 24-JUL-2014 | TIME PLOTTED => 10:37

Dist	COUNTY	ROUTE	POST MILES TOTAL PROJECT	SHEET No.	TOTAL SHEETS
06	Ker	5	62.5/73.1	105	213

REGISTERED CIVIL ENGINEER 06-10-14 DATE

6-16-14
PLANS APPROVAL DATE

REGISTERED PROFESSIONAL ENGINEER MAHMOOD A SULTAN No. 76344 Exp. 12-31-14 CIVIL STATE OF CALIFORNIA

THE STATE OF CALIFORNIA OR ITS OFFICERS OR AGENTS SHALL NOT BE RESPONSIBLE FOR THE ACCURACY OR COMPLETENESS OF SCANNED COPIES OF THIS PLAN SHEET.

CONCRETE PANEL REPLACEMENT

DIRECTION	LOCATION	LIMITS	LENGHT	WIDTH	INDIVIDUAL SLAB REPLACEMENT (RSC) TYPE I	(N) REMOVE CONCRETE PAVEMENT	DRILL AND BOND(DOWEL BAR)
		PM	LF	LF	CY	CY	EA
ROUTE 5 NORTHBOUND	LANE #1	65.52	21	12	7.5	7.5	24
		65.55	81	12	28.8	28.8	24
		65.60	18	12	6.4	6.4	24
		65.61	30	12	10.7	10.7	24
		65.63	30	12	10.7	10.7	24
		65.64	18	12	6.4	6.4	24
		65.65	30	12	10.7	10.7	24
		65.70	60	12	21.3	21.3	24
		66.22	63	12	22.4	22.4	24
		66.30	75	12	26.7	26.7	24
		66.36	87	12	30.9	30.9	24
		66.38	24	12	8.5	8.5	24
		66.70	215	12	76.4	76.4	24
		66.79	46	12	16.2	16.2	24
		66.85	125	12	44.4	44.4	24
		68.15	19	12	6.8	6.8	24
		69.39	38	12	13.5	13.5	24
		69.60	38	12	13.5	13.5	24
		69.61	19	12	6.8	6.8	24
		69.66	99	12	35.2	35.2	24
		69.72	40	12	14.0	14.0	24
		69.73	63	12	22.4	22.4	24
		69.75	37	12	13.2	13.2	24
		69.78	37	12	13.2	13.2	24
		66.85	37	12	13.2	13.2	24
		66.90	37	12	13.2	13.2	24
		66.94	19	12	6.8	6.8	24
		70.05	37	12	13.2	13.2	24
		70.10	37	12	13.2	13.2	24
		70.15	37	12	13.2	13.2	24
		70.75	19	12	6.8	6.8	24
		70.95	47	12	16.7	16.7	24
		71.30	163	12	57.8	57.8	24
		71.36	33	12	11.7	11.7	24
		71.38	25	12	8.9	8.9	24
		71.42	32	12	11.4	11.4	24
		71.43	25	12	8.9	8.9	24
		71.44	19	12	6.8	6.8	24
		71.45	26	12	9.2	9.2	24
		71.48	59	12	21.0	21.0	24
		71.60	113	12	40.1	40.1	24
		71.66	99	12	35.1	35.1	24
		71.81	111	12	39.6	39.6	24
		71.82	50	12	17.8	17.8	24
		71.83	19	12	6.8	6.8	24
		71.85	19	12	6.8	6.8	24
		71.86	38	12	13.5	13.5	24
		71.89	19	12	6.8	6.8	24
		72.90	18	12	6.4	6.4	24
		72.91	63	12	22.4	22.4	24
		72.93	26	12	9.2	9.2	24
		72.95	30	12	10.7	10.7	24
SUBTOTAL					913.2		1248

NOTE:

THE LENGTH OF PANELS AND PAVEMENT QUANTITY APPROXIMATE ONLY, EXACT LENGTH AND QUANTITY TO BE DETERMINED IN THE FIELD.

(N) NOT A SEPARATE PAY ITEM, FOR INFORMATION ONLY.

CONCRETE PANEL REPLACEMENT

DIRECTION	LOCATION	LIMITS	LENGHT	WIDTH	INDIVIDUAL SLAB REPLACEMENT (RSC) TYPE I	(N) REMOVE CONCRETE PAVEMENT	DRILL AND BOND(DOWEL BAR)
		PM	LF	LF	CY	CY	EA
ROUTE 5 SOUTHBOUND	LANE #1	70.51	18	12	6.4	6.4	24
		70.50	18	12	6.4	6.4	24
		70.48	36	12	12.8	12.8	24
		70.44	19	12	6.8	6.8	24
		70.40	13	12	4.6	4.6	24
		70.30	95	12	33.8	33.8	24
		70.24	26	12	9.3	9.3	24
		70.23	13	12	4.6	4.6	24
		70.22	12	12	4.3	4.3	24
		70.21	12	12	4.3	4.3	24
		70.15	51	12	18.1	18.1	24
		70.14	13	12	4.6	4.6	24
		70.13	19	12	6.8	6.8	24
		70.12	19	12	6.8	6.8	24
		70.10	18	12	6.4	6.4	24
		70.00	84	12	29.7	29.7	24
		69.99	12	12	4.3	4.3	24
		69.97	12	12	4.3	4.3	24
		69.96	18	12	6.4	6.4	24
		69.93	19	12	6.8	6.8	24
		69.92	12	12	4.3	4.3	24
		69.91	18	12	6.4	6.4	24
		69.90	37	12	13.2	13.2	24
		69.80	12	12	4.3	4.3	24
		69.60	66	12	23.5	23.5	24
		67.70	12	12	4.3	4.3	24
		67.64	32	12	11.4	11.4	24
		67.58	17	12	6.4	6.4	24
		67.54	22	12	7.8	7.8	24
		67.50	13	12	4.6	4.6	24
		67.48	13	12	4.6	4.6	24
		67.47	13	12	4.6	4.6	24
		67.46	14	12	5.0	5.0	24
		67.45	19	12	6.8	6.8	24
		67.40	18	12	6.4	6.4	24
		62.60	18	12	6.4	6.4	24
SUBTOTAL					306.8		864
TOTAL					1220.0		2112

SUMMARY OF QUANTITIES
Q-5

STATE OF CALIFORNIA - DEPARTMENT OF TRANSPORTATION
Caltrans DESIGN

FUNCTIONAL SUPERVISOR: DAVID SANGHA
CALCULATED-DESIGNED BY: CARMELITA BELLE
CHECKED BY: MAHMOOD SULTAN
REVISED BY
DATE REVISED

LAST REVISION 06-11-14
DATE PLOTTED => 24-JUL-2014
TIME PLOTTED => 10:37

Dist	COUNTY	ROUTE	POST MILES TOTAL PROJECT	SHEET No.	TOTAL SHEETS
06	Ker	5	62.5/73.1	106	213

REGISTERED CIVIL ENGINEER 06-10-14 DATE

6-16-14
PLANS APPROVAL DATE

REGISTERED PROFESSIONAL ENGINEER MAHMOOD A SULTAN No. 76344 Exp. 12-31-14 CIVIL STATE OF CALIFORNIA

THE STATE OF CALIFORNIA OR ITS OFFICERS OR AGENTS SHALL NOT BE RESPONSIBLE FOR THE ACCURACY OR COMPLETENESS OF SCANNED COPIES OF THIS PLAN SHEET.

TEMPORARY WATER POLLUTION CONTROL

LOCATION/DESCRIPTION	DIRECTION	SIDE	Temp FIBER ROLL	Temp DRAINAGE INLET PROTECTION	Temp SOIL BINDER
			LF	EA	SQYD
PM 71.66/ KERN RIVER FLOOD CANAL (Br 50-0315R)			460		
PM 71.64/ KERN RIVER FLOOD CANAL (Br 50-0315L)			460		
PM 68.629				1	
PM 69.16				1	
PM 70.21				1	
PM 70.36				1	
PM 70.87				1	
PM 71.306				1	
PM 71.837				1	
PM 72.029				1	
PM 72.267				1	
PM 72.455				1	
PM 72.737				1	
PM 73.057				1	
PM 62.5 TO PM 73.1/ INSIDE Shld	SB				64965
PM 62.5 TO PM 73.1/ INSIDE Shld	NB				64965
CROSSOVER #1		Lt, Rt			2049
CROSSOVER #2		Lt, Rt			1834
CROSSOVER #3		Lt, Rt			1967
CROSSOVER #4		Lt, Rt			1967
CROSSOVER #5		Lt, Rt			2007
TOTAL			920	12	139754

SURVEY MONUMENTS

SHEET No.	PM	SURVEY MONUMENT (TYPE A)
		EA
NOT SHOWN ON PLANS	62.28	1
	62.66	1
	63.08	1
	63.42	1
	63.8	1
	64.17	1
	64.56	1
	64.92	1
	65.31	1
	65.69	1
	66.07	1
	66.44	1
	66.82	1
	67.19	1
	67.58	1
	67.95	1
	68.34	1
	68.73	1
	68.95	1
	69.26	1
	69.46	1
	69.86	1
	70.25	1
	70.61	1
	71.01	1
	71.37	1
	71.74	1
	72.03	1
	72.37	1
	72.51	1
	73.44	1
	73.65	1
	TOTAL	32

SUMMARY OF QUANTITIES
Q-6

STATE OF CALIFORNIA - DEPARTMENT OF TRANSPORTATION
Caltrans DESIGN
FUNCTIONAL SUPERVISOR DAVID SANGHA
CALCULATED-DESIGNED BY CARMELITA BELLE
CHECKED BY MAHMOOD SULTAN
REVISED BY
DATE REVISED

LAST REVISION 06-10-14
DATE PLOTTED => 24-JUL-2014
TIME PLOTTED => 10:37

Dist	COUNTY	ROUTE	POST MILES TOTAL PROJECT	SHEET No.	TOTAL SHEETS
06	Ker	5	62.5/73.1	107	213

REGISTERED CIVIL ENGINEER 06-10-14 DATE

6-16-14
PLANS APPROVAL DATE

REGISTERED PROFESSIONAL ENGINEER MAHMOOD A SULTAN No. 76344 Exp. 12-31-14 CIVIL STATE OF CALIFORNIA

THE STATE OF CALIFORNIA OR ITS OFFICERS OR AGENTS SHALL NOT BE RESPONSIBLE FOR THE ACCURACY OR COMPLETENESS OF SCANNED COPIES OF THIS PLAN SHEET.

LEGEND:

S# STAGE NUMBER
S#P# STAGE NUMBER AND PHASE NUMBER

ABBREVIATIONS:

HMA-SP (TYPE A) - HOT MIX ASPHALT, SUPERPAVE (TYPE A)
AFTS - ALTERNATIVE FLARED TERMINAL SYSTEM
AILTS - ALTERNATIVE IN-LINE TERMINAL SYSTEM

NOTES:

(N) NOT A SEPARATE PAY ITEM, FOR INFORMATION ONLY
* REFER TO ROADWAY QUANTITIES TABLES FOR ADDITIONAL HMA (TYPE A)
** REFER TO TRAFFIC HANDLING QUANTITIES FOR ADDITIONAL TEMPORARY RAILING (TYPE K) QUANTITIES
*** REFER TO TRAFFIC HANDLING QUANTITIES FOR ADDITIONAL TREATED WOOD WASTE QUANTITIES

MIDWEST GUARDRAIL SYSTEM

STAGE-PHASE	LOCATION	DESCRIPTION/COMMENTS	DIRECTION	SIDE	LAYOUT TYPE	OBJECT MARKER (TYPE L)	OBJECT MARKER (TYPE P)	MIDWEST GUARDRAIL SYSTEM (STEEL POST)	DOUBLE MIDWEST GUARDRAIL SYSTEM (STEEL POST)	ALTERNATIVE FLARED TERMINAL SYSTEM	ALTERNATIVE IN-LINE TERMINAL SYSTEM	ALTERNATIVE CRASH CUSHION	END ANCHOR ASSEMBLY (TYPE SFT)	TRANSITION RAILING (TYPE WB-31)	REMOVE GUARDRAIL	TREATED WOOD WASTE ***	REMOVE TERMINAL SYSTEM (N)	REMOVE END (N) ANCHOR ASSEMBLY	REMOVE TRANSITION RAILING (N)	HMA (TYPE A) *	CONCRETE BARRIER (TRANSITION)	PLACE HMA (MISC AREA)	TEMPORARY RAILING (TYPE K) **	REMOVE SINGLE THRIE BEAM BARRIER	REMOVE DOUBLE THRIE BEAM BARRIER	SINGLE THRIE BEAM BARRIER (STEEL POST)	DOUBLE THRIE BEAM BARRIER (STEEL POST)	WEED CONTROL MAT (RUBBER)
						EA	EA	LF	LF	EA	EA	EA	EA	EA	LF	LB	EA	EA	EA	TON	LF	SQYD	LF	LF	LF	LF	LF	SQYD
8	PM 62.60	LERDO Ave OC (Br 50-310), MEDIAN			14A			150	50			2	2		200	2038	2	2										89
8	PM 70.49	CMS BOARD AND WEATHER STATION	NB	R†	16B	1		187.5		1			1		75	828	1	1										140
8	PM 71.55	KERN RIVER FLOOD CONTROL UC (Br 50-314R)	NB	R†	12A		1	25			1			1	50	764	1		1	1.3	0.65		60					53
8	PM 71.66	KERN RIVER FLOOD CANAL (Br 50-315R)	NB	R†	12A		1	25			1			1	62.5	892	1		1	1.9	0.65	1.50	60					53
8	PM 72.68	EXIT 278 OVER HEAD SIGN	NB	R†	16B	1		62.5		1			1		100	1083	1	1										84
8	PM 73.02	Jct 46/5 Sep (Br 50-316)	NB	R†	12B	1		25		1				1	62.5	892	1		1		0.65		60					67
8	PM 65.2	CMS BOARD	SB	R†	16B	1		100		1			1		75	892	1	1										101
8	PM 71.56	KERN RIVER FLOOD CONTROL UC (Br 50-314L)	SB	R†	12A		1	25			1			1	50	764	1		1	1.3	0.65		60					53
8	PM 71.64	KERN RIVER FLOOD CANAL (Br 50-315L)	SB	R†	12A		1	37.5	37.5		1			1	62.5	892	1		1	2.5	0.65	1.50	60					76
8	PM 73.02	Jct 46/5 Sep (Br 50-316)	SB	R†	12B	1		25		1				1	62.5	892	1		1	1.2	0.65		60					67
2	XOVER2	STAGE Const (STAGE 2 CROSSOVERS #2)																							365			
2	XOVER3	STAGE Const (STAGE 2 CROSSOVERS #3)																							444			
2	XOVER4	STAGE Const (STAGE 2 CROSSOVERS #4)																							367			
8	XOVER2	STAGE Const (STAGE 2 CROSSOVERS #2)																									365	219
8	XOVER3	STAGE Const (STAGE 2 CROSSOVERS #3)																									444	254
8	XOVER4	STAGE Const (STAGE 2 CROSSOVERS #4)																									367	219
2		STAGE Const (STAGE 2 INSIDE SHOULDER WIDENING)	NB	L†																				300				
2		STAGE Const (STAGE 2 INSIDE SHOULDER WIDENING)	SB	L†																				300				
8		STAGE Const (STAGE 2 INSIDE SHOULDER WIDENING)	NB	L†																						300		190
8		STAGE Const (STAGE 2 INSIDE SHOULDER WIDENING)	SB	L†																						300		176
		TOTAL				5	4	662.5	87.5	5	4	2	5	6	800	9937				8.2	3.90	3.00	360	600	1176	600	1176	1840

SUMMARY OF QUANTITIES
Q-7

STATE OF CALIFORNIA - DEPARTMENT OF TRANSPORTATION
Caltrans
DESIGN

FUNCTIONAL SUPERVISOR: DAVID SANGHA
CALCULATED-DESIGNED BY: MAHMOOD SULTAN
CHECKED BY: CARMELITA BELLE
REVISED BY
DATE REVISED

LAST REVISION 05-27-14
DATE PLOTTED => 24-JUL-2014
TIME PLOTTED => 10:37

Dist	COUNTY	ROUTE	POST MILES TOTAL PROJECT	SHEET No.	TOTAL SHEETS
06	Ker	5	62.5/73.1	108	213

LICENSED LANDSCAPE ARCHITECT

6-16-14
PLANS APPROVAL DATE

LICENSED LANDSCAPE ARCHITECT KEVIN GALLO No. 2522 Expiration Date 12/31/15 Renewal Date 06/10/14 Date STATE OF CALIFORNIA

THE STATE OF CALIFORNIA OR ITS OFFICERS OR AGENTS SHALL NOT BE RESPONSIBLE FOR THE ACCURACY OR COMPLETENESS OF SCANNED COPIES OF THIS PLAN SHEET.

EROSION CONTROL QUANTITIES

SHEET	STATION	LOCATION NB	LOCATION SB	HYDROSEED SQFT
EC-1	ROUTE 5 STA 2500+50.00 TO 2505+50.00	X	X	36,994
EC-2	ROUTE 5 STA 2505+50.00 TO 2512+50.00	X	X	45,592
EC-2	ROUTE 5 STA 2512+50.00 TO 2520+50.00	X		1,620
EC-2	ROUTE 5 STA 2513+28.68 TO 2520+50.00		X	7,232
EC-3	ROUTE 5 STA 2520+50.00 TO 2535+50.00	X		14,955
EC-3	ROUTE 5 STA 2527+26.11 TO 2535+50.00	X		8,238
EC-3	ROUTE 5 STA 2520+50.00 TO 2535+50.00		X	14,913
EC-3	ROUTE 5 STA 2531+14.94 TO 2535+50.00		X	4,350
EC-4	ROUTE 5 STA 2535+50.00 TO 2550+50.00	X		15,000
EC-4	ROUTE 5 STA 2535+50.00 TO 2541+12.55	X		5,269
EC-4	ROUTE 5 STA 2535+50.00 TO 2550+50.00		X	15,000
EC-4	ROUTE 5 STA 2535+50.00 TO 2540+30.06		X	4,807
EC-5	ROUTE 5 STA 2550+50.00 TO 2565+50.00	X		15,000
EC-5	ROUTE 5 STA 2550+50.00 TO 2565+50.00		X	15,000
EC-6	ROUTE 5 STA 2565+50.00 TO 2580+50.00	X		15,335
EC-6	ROUTE 5 STA 2565+50.00 TO 2580+50.00		X	14,997
EC-7	ROUTE 5 STA 2580+50.00 TO 2595+50.00	X		15,000
EC-7	ROUTE 5 STA 2580+50.00 TO 2595+50.00		X	14,999
EC-8	ROUTE 5 STA 2595+50.00 TO 2610+50.00	X		15,000
EC-8	ROUTE 5 STA 2595+50.00 TO 2610+50.00		X	14,999
EC-9	ROUTE 5 STA 2610+50.00 TO 2625+50.00	X		15,000
EC-9	ROUTE 5 STA 2610+50.00 TO 2625+50.00		X	14,999
EC-10	ROUTE 5 STA 2625+50.00 TO 2640+50.00	X		15,000
EC-10	ROUTE 5 STA 2625+50.00 TO 2640+50.00		X	15,000
EC-11	ROUTE 5 STA 2640+50.00 TO 2655+50.00	X		15,000
EC-11	ROUTE 5 STA 2640+50.00 TO 2655+50.00		X	15,000
EC-12	ROUTE 5 STA 2655+50.00 TO 2670+50.00	X		15,000
EC-12	ROUTE 5 STA 2655+50.00 TO 2670+50.00		X	14,998
EC-13	ROUTE 5 STA 2670+50.00 TO 2685+50.00	X		15,000
EC-13	ROUTE 5 STA 2670+50.00 TO 2685+50.00		X	14,998
EC-14	ROUTE 5 STA 2685+50.00 TO 2700+50.00	X		15,000
EC-14	ROUTE 5 STA 2685+50.00 TO 2700+50.00		X	14,998
EC-15	ROUTE 5 STA 2700+50.00 TO 2715+50.00	X		15,000
EC-15	ROUTE 5 STA 2700+50.00 TO 2715+50.00		X	14,997
EC-16	ROUTE 5 STA 2715+50.00 TO 2730+50.00	X		15,000
EC-16	ROUTE 5 STA 2715+50.00 TO 2730+50.00		X	14,997
EC-17	ROUTE 5 STA 2730+50.00 TO 2745+50.00	X		15,000
EC-17	ROUTE 5 STA 2730+50.00 TO 2745+50.00		X	15,000
EC-18	ROUTE 5 STA 2745+50.00 TO 2760+50.00	X		15,000
EC-18	ROUTE 5 STA 2745+50.00 TO 2760+50.00		X	14,998
EC-19	ROUTE 5 STA 2760+50.00 TO 2775+50.00	X		15,000
EC-19	ROUTE 5 STA 2760+50.00 TO 2775+50.00		X	14,997
EC-20	ROUTE 5 STA 2775+50.00 TO 2790+50.00	X		15,401
EC-20	ROUTE 5 STA 2775+50.00 TO 2790+50.00		X	14,997
EC-21	ROUTE 5 STA 2790+50.00 TO 2805+50.00	X		15,000
EC-21	ROUTE 5 STA 2790+50.00 TO 2805+50.00		X	14,997
EC-22	ROUTE 5 STA 2805+50.00 TO 2820+50.00	X		15,000
EC-22	ROUTE 5 STA 2805+50.00 TO 2820+50.00		X	14,997
			SUBTOTAL:	714,674

EROSION CONTROL QUANTITIES

SHEET	STATION	LOCATION NB	LOCATION SB	HYDROSEED SQFT
EC-23	ROUTE 5 STA 2820+50.00 TO 2835+50.00	X		15,000
EC-23	ROUTE 5 STA 2820+50.00 TO 2835+50.00		X	14,996
EC-24	ROUTE 5 STA 2835+50.00 TO 2850+50.00	X		15,000
EC-24	ROUTE 5 STA 2835+50.00 TO 2850+50.00		X	14,998
EC-25	ROUTE 5 STA 2850+50.00 TO 2865+50.00	X		14,991
EC-25	ROUTE 5 STA 2850+50.00 TO 2865+50.00		X	15,016
EC-26	ROUTE 5 STA 2865+50.00 TO 2880+50.00	X		14,998
EC-26	ROUTE 5 STA 2865+50.00 TO 2880+50.00		X	15,002
EC-27	ROUTE 5 STA 2880+50.00 TO 2895+50.00	X		15,000
EC-27	ROUTE 5 STA 2880+50.00 TO 2895+50.00		X	15,000
EC-28	ROUTE 5 STA 2895+50.00 TO 2910+50.00	X		15,000
EC-28	ROUTE 5 STA 2895+50.00 TO 2910+50.00		X	14,999
EC-29	ROUTE 5 STA 2910+50.00 TO 2925+50.00	X		15,000
EC-29	ROUTE 5 STA 2910+50.00 TO 2925+50.00		X	14,999
EC-30	ROUTE 5 STA 2925+50.00 TO 2940+50.00	X		15,000
EC-30	ROUTE 5 STA 2925+50.00 TO 2940+50.00		X	14,999
EC-31	ROUTE 5 STA 2940+50.00 TO 2955+50.00	X		15,000
EC-31	ROUTE 5 STA 2940+50.00 TO 2955+50.00		X	14,999
EC-32	ROUTE 5 STA 2955+50.00 TO 2970+50.00	X		20,807
EC-32	ROUTE 5 STA 2955+50.00 TO 2970+50.00		X	26,735
EC-33	ROUTE 5 STA 2970+50.00 TO 2985+50.00	X		25,617
EC-33	ROUTE 5 STA 2970+50.00 TO 2985+50.00		X	33,222
EC-34	ROUTE 5 STA 2985+50.00 TO 2990+22.77	X		8,698
EC-34	ROUTE 5 STA 2990+96.62 TO 2996+25.40	X		5,207
EC-34	ROUTE 5 STA 2997+44.25 TO 3000+50.00	X		2,993
EC-34	ROUTE 5 STA 2985+50.00 TO 2989+78.15		X	4,269
EC-34	ROUTE 5 STA 2990+51.78 TO 2995+40.55		X	4,807
EC-34	ROUTE 5 STA 2996+78.01 TO 3000+50.00		X	3,651
EC-35	ROUTE 5 STA 3000+50.00 TO 3015+50.00	X		27,631
EC-35	ROUTE 5 STA 3000+50.00 TO 3015+50.00		X	23,731
EC-36	ROUTE 5 STA 3015+50.00 TO 3030+50.00	X		14,976
EC-36	ROUTE 5 STA 3015+50.00 TO 3030+50.00		X	15,036
EC-37	ROUTE 5 STA 3030+50.00 TO 3045+50.00	X		15,000
EC-37	ROUTE 5 STA 3039+27.27 TO 3045+50.00	X		6,108
EC-37	ROUTE 5 STA 3030+50.00 TO 3045+50.00		X	14,996
EC-37	ROUTE 5 STA 3037+51.88 TO 3045+50.00		X	7,864
EC-38	ROUTE 5 STA 3045+50.00 TO 3060+50.00	X		15,000
EC-38	ROUTE 5 STA 3045+50.00 TO 3051+27.04	X		5,783
EC-38	ROUTE 5 STA 3052+08.38 TO 3060+50.00	X		36,134
EC-38	ROUTE 5 STA 3045+50.00 TO 3060+50.00		X	14,996
EC-38	ROUTE 5 STA 3045+50.00 TO 3058+26.81		X	12,776
EC-38	ROUTE 5 STA 3058+67.54 TO 3060+50.00		X	4,459
EC-39	ROUTE 5 STA 3060+50.00 TO 3071+23.73		X	10,733
EC-39	ROUTE 5 STA 3060+50.00 TO 3070+18.60		X	232,577
EC-40	ROUTE 5 STA 3060+50.00 TO 3075+50.00	X		15,000
EC-40	ROUTE 5 STA 3060+50.00 TO 3066+06.28	X		145,780
EC-41	ROUTE 5 STA 3075+50.00 TO 3086+27.17	X	X	68,830
			SUBTOTAL:	1,093,413
			TOTAL:	1,808,087

SEED MIX

BOTANICAL NAME (COMMON NAME)	PERCENT GERMINATION (MINIMUM)	POUNDS PURE LIVE SEED PER ACRE (SLOPE MEASUREMENT)
ESCHSCHOLZIA CALIFORNICA (CALIFORNIA POPPY)	60	2.00
FESTUCA IDAHOENSIS 'MT. TAM' (BLUE BUNCH GRASS)	40	6.00
LASTHENIA CALIFORNICA (DWARF GOLDFIELDS)	50	0.50
LAYIA PLATYGLOSSA (TIDY TIPS)	65	0.50
LINARIA MAROCCANA (MOROCCAN TOADFLAX)	70	1.00
LOTUS PURSHIANUS (PURSHINGS LOTUS)	40	3.00
LUPINUS BICOLOR (PIGMY-LEAVED LUPINE)	70	3.00
NASELLA CERNUA (DEAWNED) (NODDING STIPA)	40	6.00
POA SECUNDA SECUNDA (PINE BLUEGRASS)	50	3.00

SEED PRODUCED IN CALIFORNIA ONLY.

HYDROSEED

ITEM	MATERIAL DESCRIPTION	MATERIAL TYPE	APPLICATION RATE
HYDROSEED	SEED	MIX	25.00 LB/ACRE
	FIBER	WOOD	1000 LB/ACRE
	TACKIFIER	PSYLLIUM	150 LB/ACRE

APPROVED FOR EROSION CONTROL WORK ONLY

EROSION CONTROL LEGEND AND QUANTITIES
ECL-1

STATE OF CALIFORNIA - DEPARTMENT OF TRANSPORTATION
Caltrans® LANDSCAPE ARCHITECTURE

SENIOR LANDSCAPE ARCHITECT: BRAD COLE
CALCULATED-DESIGNED BY: KEVIN GALLO
CHECKED BY: RAYMOND SEGURA
REVISED BY / DATE REVISED

LAST REVISION 06-10-14 | DATE PLOTTED => 24-JUL-2014 | TIME PLOTTED => 10:05

Dist	COUNTY	ROUTE	POST MILES TOTAL PROJECT	SHEET No.	TOTAL SHEETS
06	Ker	5	62.5/73.1	109	213

LICENSED LANDSCAPE ARCHITECT

6-16-14
PLANS APPROVAL DATE

LICENSED LANDSCAPE ARCHITECT
KEVIN GALLO No. 2555
Expires
12/31/15
Renewal Date
06/10/14
Date
STATE OF CALIFORNIA

THE STATE OF CALIFORNIA OR ITS OFFICERS OR AGENTS SHALL NOT BE RESPONSIBLE FOR THE ACCURACY OR COMPLETENESS OF SCANNED COPIES OF THIS PLAN SHEET.

NOTE:

FOR ACCURATE RIGHT OF WAY DATA, CONTACT RIGHT OF WAY ENGINEERING AT THE DISTRICT OFFICE.

LEGEND:

EROSION CONTROL TYPE 1

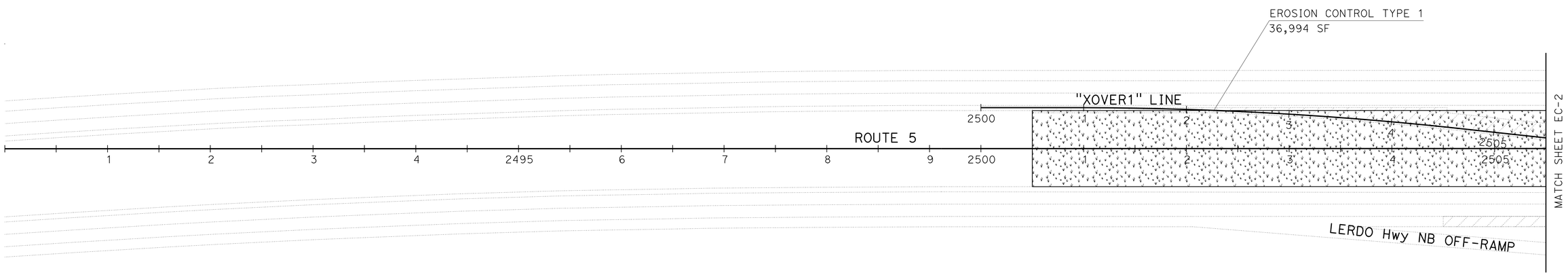

EROSION CONTROL PLAN
(STAGE 1)

NO SCALE

EC-1

APPROVED FOR EROSION CONTROL WORK ONLY

REVISED BY | DATE REVISED

KEVIN GALLO | RAYMOND SEGURA

CALCULATED-DESIGNED BY | CHECKED BY

SENIOR LANDSCAPE ARCHITECT | BRAD COLE

STATE OF CALIFORNIA - DEPARTMENT OF TRANSPORTATION
Caltrans® LANDSCAPE ARCHITECTURE

LAST REVISION OG-10-14 | DATE PLOTTED => 24-JUL-2014 | TIME PLOTTED => 10:05

Dist	COUNTY	ROUTE	POST MILES TOTAL PROJECT	SHEET No.	TOTAL SHEETS
06	Ker	5	62.5/73.1	110	213

LICENSED LANDSCAPE ARCHITECT

6-16-14
PLANS APPROVAL DATE

LICENSED LANDSCAPE ARCHITECT
KEVIN GALLO No. 2556
Expires
12/31/15
Renewal Date
06/10/14
Date
STATE OF CALIFORNIA

THE STATE OF CALIFORNIA OR ITS OFFICERS OR AGENTS SHALL NOT BE RESPONSIBLE FOR THE ACCURACY OR COMPLETENESS OF SCANNED COPIES OF THIS PLAN SHEET.

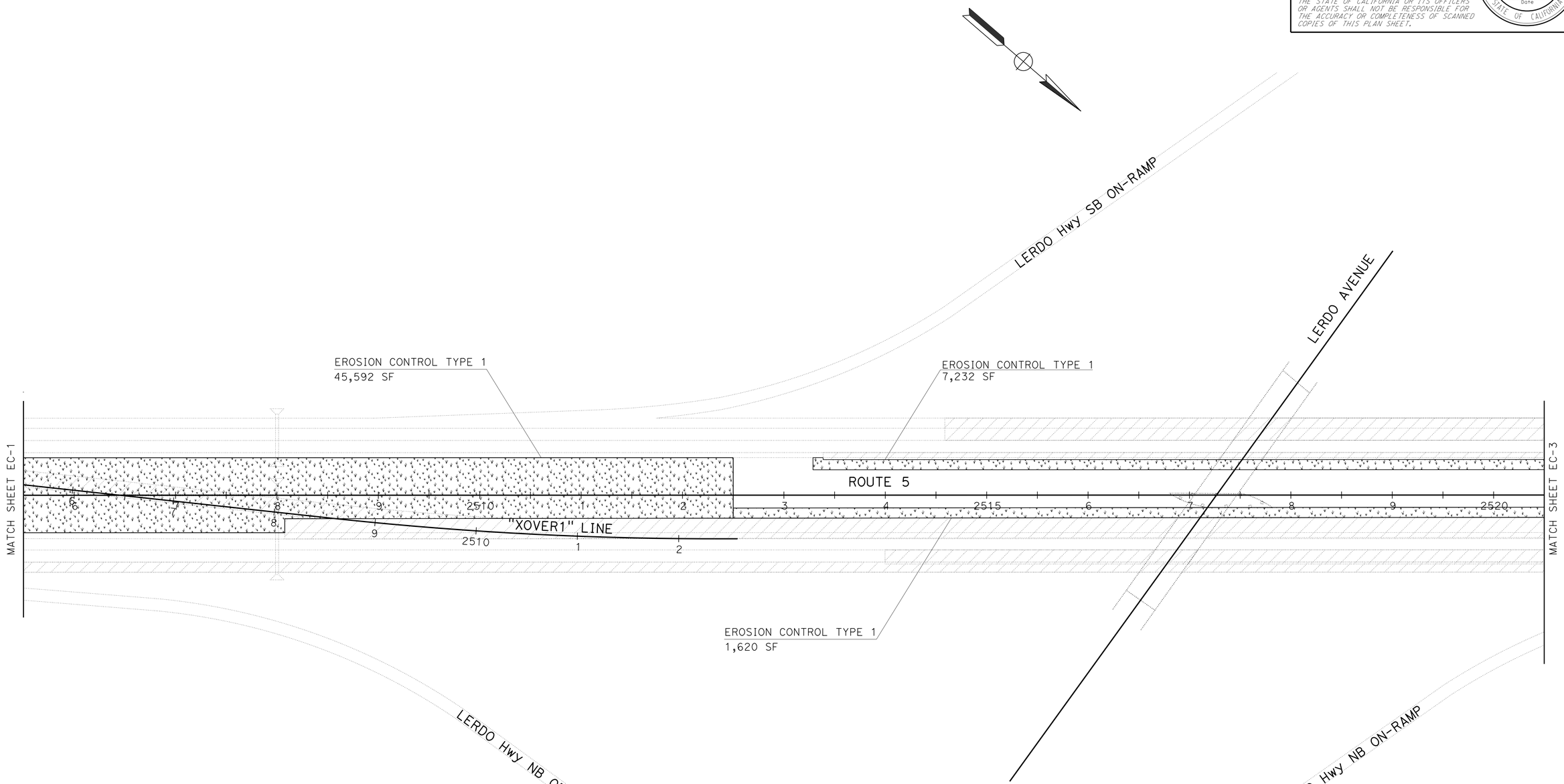

EROSION CONTROL PLAN
(STAGE 1)

NO SCALE

EC-2

APPROVED FOR EROSION CONTROL WORK ONLY

STATE OF CALIFORNIA - DEPARTMENT OF TRANSPORTATION
Caltrans® LANDSCAPE ARCHITECTURE

SENIOR LANDSCAPE ARCHITECT: BRAD COLE
CALCULATED-DESIGNED BY: KEVIN GALLO
CHECKED BY: RAYMOND SEGURA
REVISED BY
DATE REVISED

LAST REVISION 06-10-14
DATE PLOTTED => 24-JUL-2014
TIME PLOTTED => 10:06

Dist	COUNTY	ROUTE	POST MILES TOTAL PROJECT	SHEET No.	TOTAL SHEETS
06	Ker	5	62.5/73.1	111	213

LICENSED LANDSCAPE ARCHITECT

6-16-14
PLANS APPROVAL DATE

LICENSED LANDSCAPE ARCHITECT
KEVIN GALLO No. 2525
Date Signed
12/31/15
Renewal Date
06/10/14
Date
STATE OF CALIFORNIA

THE STATE OF CALIFORNIA OR ITS OFFICERS OR AGENTS SHALL NOT BE RESPONSIBLE FOR THE ACCURACY OR COMPLETENESS OF SCANNED COPIES OF THIS PLAN SHEET.

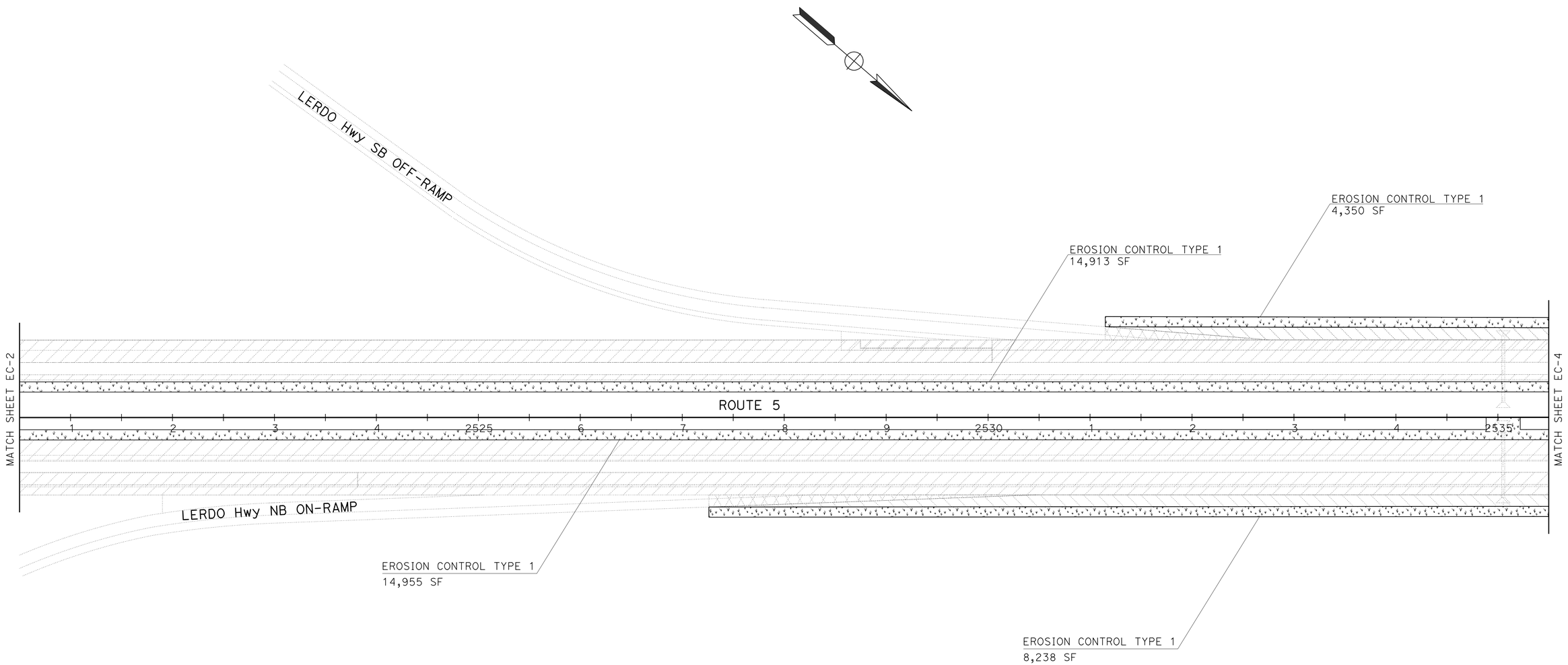

EROSION CONTROL PLAN
(STAGE 1)

NO SCALE

EC-3

APPROVED FOR EROSION CONTROL WORK ONLY

STATE OF CALIFORNIA - DEPARTMENT OF TRANSPORTATION
Caltrans® LANDSCAPE ARCHITECTURE

SENIOR LANDSCAPE ARCHITECT: BRAD COLE
CALCULATED-DESIGNED BY: KEVIN GALLO
CHECKED BY: RAYMOND SEGURA
REVISED BY
DATE REVISED

LAST REVISION 06-10-14
DATE PLOTTED => 24-JUL-2014
TIME PLOTTED => 10:06

Dist	COUNTY	ROUTE	POST MILES TOTAL PROJECT	SHEET No.	TOTAL SHEETS
06	Ker	5	62.5/73.1	112	213

LICENSED LANDSCAPE ARCHITECT

6-16-14
PLANS APPROVAL DATE

LICENSED LANDSCAPE ARCHITECT
KEVIN GALLO No. 2525
Date Signed
12/31/15
Renewal Date
06/10/14
Date
STATE OF CALIFORNIA

THE STATE OF CALIFORNIA OR ITS OFFICERS OR AGENTS SHALL NOT BE RESPONSIBLE FOR THE ACCURACY OR COMPLETENESS OF SCANNED COPIES OF THIS PLAN SHEET.

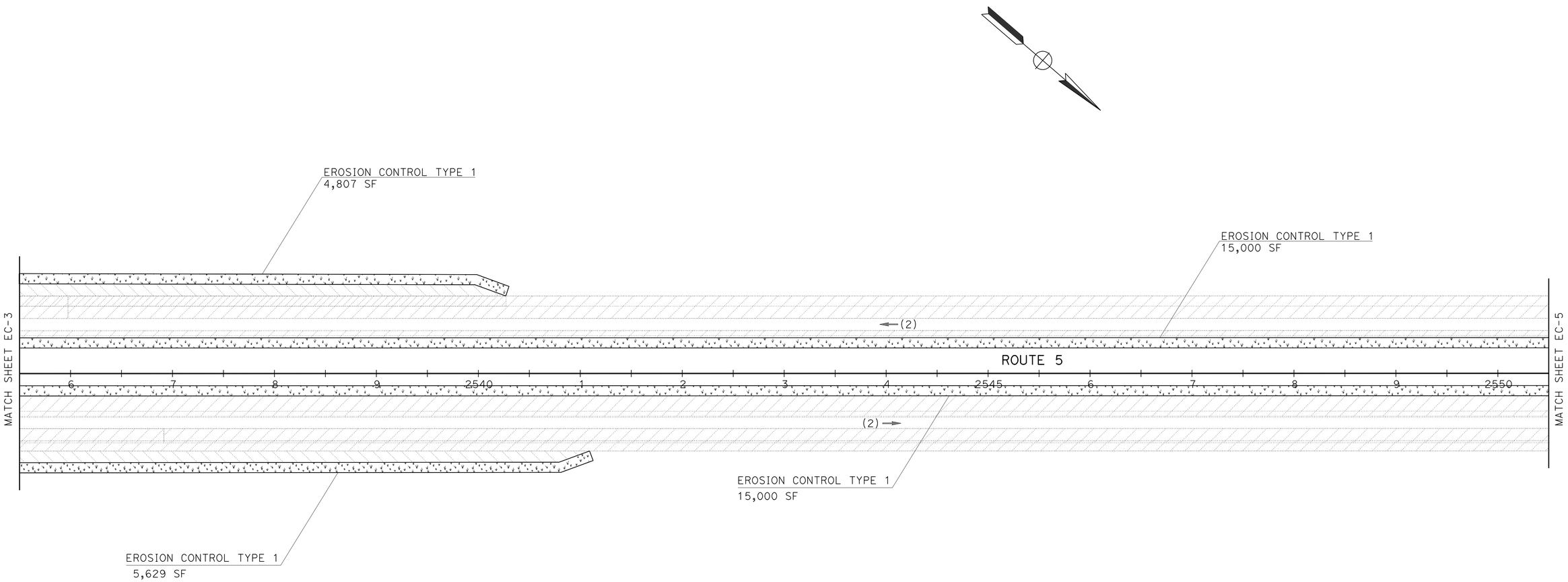

EROSION CONTROL PLAN
(STAGE 1)

NO SCALE

EC-4

APPROVED FOR EROSION CONTROL WORK ONLY

REVISED BY
DATE REVISED

KEVIN GALLO
RAYMOND SEGURA

CALCULATED-DESIGNED BY
CHECKED BY

SENIOR LANDSCAPE ARCHITECT
BRAD COLE

STATE OF CALIFORNIA - DEPARTMENT OF TRANSPORTATION
Caltrans® LANDSCAPE ARCHITECTURE

LAST REVISION 06-10-14
DATE PLOTTED => 24-JUL-2014
TIME PLOTTED => 10:06

Dist	COUNTY	ROUTE	POST MILES TOTAL PROJECT	SHEET No.	TOTAL SHEETS
06	Ker	5	62.5/73.1	113	213

LICENSED LANDSCAPE ARCHITECT

6-16-14
PLANS APPROVAL DATE

LICENSED LANDSCAPE ARCHITECT
KEVIN GALLO No. 2556
Expiration Date
12/31/15
Renewal Date
06/10/14
Date
STATE OF CALIFORNIA

THE STATE OF CALIFORNIA OR ITS OFFICERS OR AGENTS SHALL NOT BE RESPONSIBLE FOR THE ACCURACY OR COMPLETENESS OF SCANNED COPIES OF THIS PLAN SHEET.

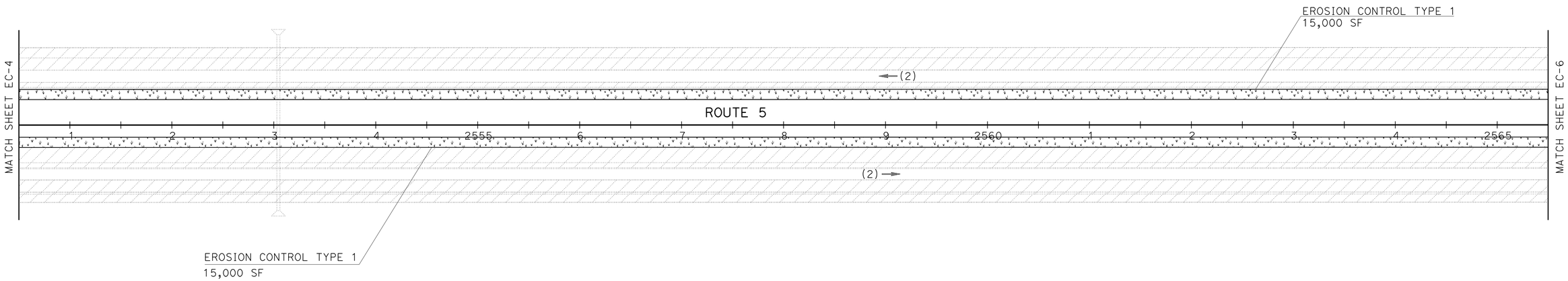

EROSION CONTROL PLAN
(STAGE 1)

NO SCALE

EC-5

APPROVED FOR EROSION CONTROL WORK ONLY

REVISED BY	DATE REVISED

KEVIN GALLO
RAYMOND SEGURA

CALCULATED-DESIGNED BY
CHECKED BY

SENIOR LANDSCAPE ARCHITECT
BRAD COLE

STATE OF CALIFORNIA - DEPARTMENT OF TRANSPORTATION
Caltrans® LANDSCAPE ARCHITECTURE

LAST REVISION 06-10-14
DATE PLOTTED => 24-JUL-2014
TIME PLOTTED => 10:06

Dist	COUNTY	ROUTE	POST MILES TOTAL PROJECT	SHEET No.	TOTAL SHEETS
06	Ker	5	62.5/73.1	114	213

LICENSED LANDSCAPE ARCHITECT

6-16-14
PLANS APPROVAL DATE

LICENSED LANDSCAPE ARCHITECT
KEVIN GALLO No. 2556
Date Signed
12/31/15
Renewal Date
06/10/14
Date
STATE OF CALIFORNIA

THE STATE OF CALIFORNIA OR ITS OFFICERS OR AGENTS SHALL NOT BE RESPONSIBLE FOR THE ACCURACY OR COMPLETENESS OF SCANNED COPIES OF THIS PLAN SHEET.

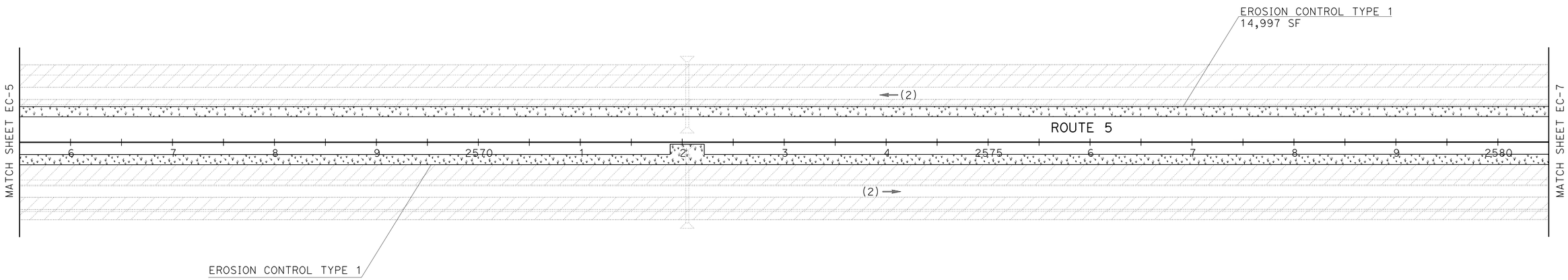

EROSION CONTROL PLAN
(STAGE 1)

NO SCALE

EC-6

APPROVED FOR EROSION CONTROL WORK ONLY

REVISED BY	DATE REVISED

KEVIN GALLO
RAYMOND SEGURA

CALCULATED-DESIGNED BY
CHECKED BY

SENIOR LANDSCAPE ARCHITECT
BRAD COLE

STATE OF CALIFORNIA - DEPARTMENT OF TRANSPORTATION
Caltrans® LANDSCAPE ARCHITECTURE

LAST REVISION 06-10-14
DATE PLOTTED => 24-JUL-2014
TIME PLOTTED => 10:06

Dist	COUNTY	ROUTE	POST MILES TOTAL PROJECT	SHEET No.	TOTAL SHEETS
06	Ker	5	62.5/73.1	115	213

LICENSED LANDSCAPE ARCHITECT

6-16-14
PLANS APPROVAL DATE

LICENSED LANDSCAPE ARCHITECT
KEVIN GALLO No. 2556
Expiration Date
12/31/15
Renewal Date
06/10/14
Date
STATE OF CALIFORNIA

THE STATE OF CALIFORNIA OR ITS OFFICERS OR AGENTS SHALL NOT BE RESPONSIBLE FOR THE ACCURACY OR COMPLETENESS OF SCANNED COPIES OF THIS PLAN SHEET.

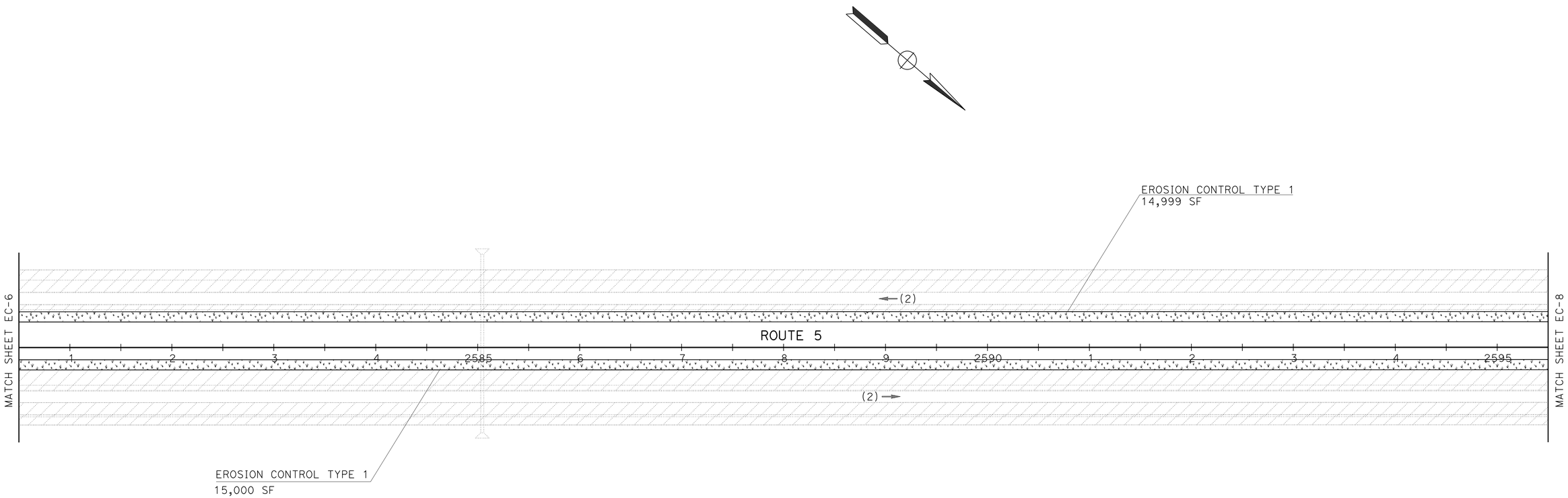

EROSION CONTROL PLAN
(STAGE 1)

NO SCALE

EC-7

APPROVED FOR EROSION CONTROL WORK ONLY

STATE OF CALIFORNIA - DEPARTMENT OF TRANSPORTATION
Caltrans® LANDSCAPE ARCHITECTURE

SENIOR LANDSCAPE ARCHITECT: BRAD COLE

CALCULATED-DESIGNED BY: KEVIN GALLO
CHECKED BY: RAYMOND SEGURA

REVISED BY
DATE REVISED

LAST REVISION OG-10-14
DATE PLOTTED => 24-JUL-2014
TIME PLOTTED => 10:06

Dist	COUNTY	ROUTE	POST MILES TOTAL PROJECT	SHEET No.	TOTAL SHEETS
06	Ker	5	62.5/73.1	116	213

LICENSED LANDSCAPE ARCHITECT

6-16-14
PLANS APPROVAL DATE

LICENSED LANDSCAPE ARCHITECT
KEVIN GALLO No. 2525
12/31/15
Renewal Date
06/10/14
Date
STATE OF CALIFORNIA

THE STATE OF CALIFORNIA OR ITS OFFICERS OR AGENTS SHALL NOT BE RESPONSIBLE FOR THE ACCURACY OR COMPLETENESS OF SCANNED COPIES OF THIS PLAN SHEET.

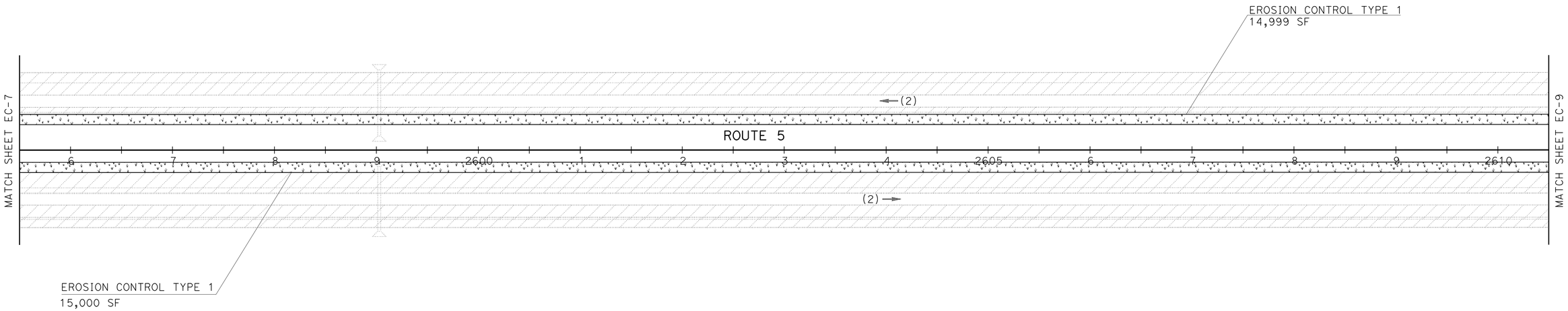

EROSION CONTROL PLAN
(STAGE 1)

NO SCALE

EC-8

APPROVED FOR EROSION CONTROL WORK ONLY

REVISED BY	
DATE REVISED	
KEVIN GALLO	CALCULATED-DESIGNED BY
RAYMOND SEGURA	CHECKED BY
SENIOR LANDSCAPE ARCHITECT	
BRAD COLE	

STATE OF CALIFORNIA - DEPARTMENT OF TRANSPORTATION
Caltrans® LANDSCAPE ARCHITECTURE

LAST REVISION 06-10-14
DATE PLOTTED => 24-JUL-2014
TIME PLOTTED => 10:06

Dist	COUNTY	ROUTE	POST MILES TOTAL PROJECT	SHEET No.	TOTAL SHEETS
06	Ker	5	62.5/73.1	117	213

LICENSED LANDSCAPE ARCHITECT

6-16-14
PLANS APPROVAL DATE

LICENSED LANDSCAPE ARCHITECT
KEVIN GALLO No. 2556
Expiration Date 12/31/15
Renewal Date
06/10/14
Date
STATE OF CALIFORNIA

THE STATE OF CALIFORNIA OR ITS OFFICERS OR AGENTS SHALL NOT BE RESPONSIBLE FOR THE ACCURACY OR COMPLETENESS OF SCANNED COPIES OF THIS PLAN SHEET.

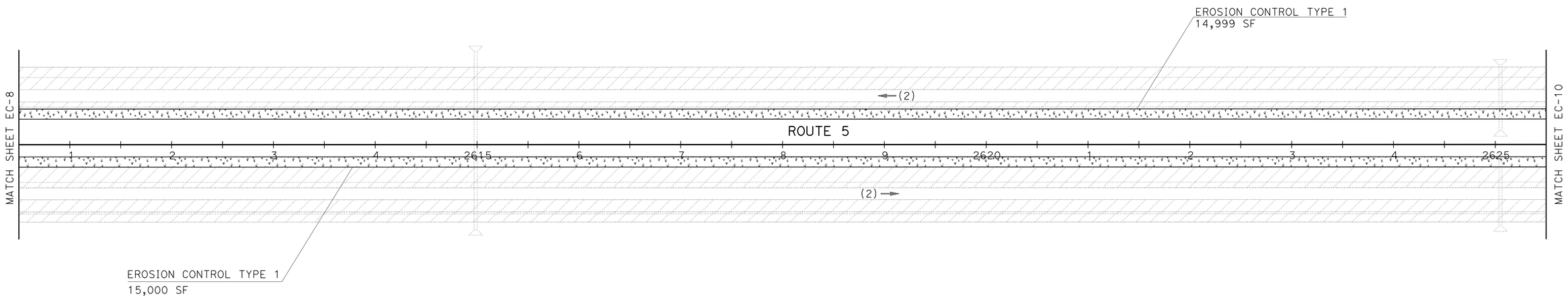

EROSION CONTROL PLAN
(STAGE 1)

NO SCALE

EC-9

APPROVED FOR EROSION CONTROL WORK ONLY

REVISED BY | DATE REVISED

KEVIN GALLO | RAYMOND SEGURA

CALCULATED-DESIGNED BY | CHECKED BY

SENIOR LANDSCAPE ARCHITECT | BRAD COLE

STATE OF CALIFORNIA - DEPARTMENT OF TRANSPORTATION
Caltrans® LANDSCAPE ARCHITECTURE

LAST REVISION 06-10-14 | DATE PLOTTED => 24-JUL-2014 | TIME PLOTTED => 10:06

Dist	COUNTY	ROUTE	POST MILES TOTAL PROJECT	SHEET No.	TOTAL SHEETS
06	Ker	5	62.5/73.1	118	213

LICENSED LANDSCAPE ARCHITECT

6-16-14
PLANS APPROVAL DATE

LICENSED LANDSCAPE ARCHITECT
KEVIN GALLO No. 2556
Expiration Date
12/31/15
Renewal Date
06/10/14
Date
STATE OF CALIFORNIA

THE STATE OF CALIFORNIA OR ITS OFFICERS OR AGENTS SHALL NOT BE RESPONSIBLE FOR THE ACCURACY OR COMPLETENESS OF SCANNED COPIES OF THIS PLAN SHEET.

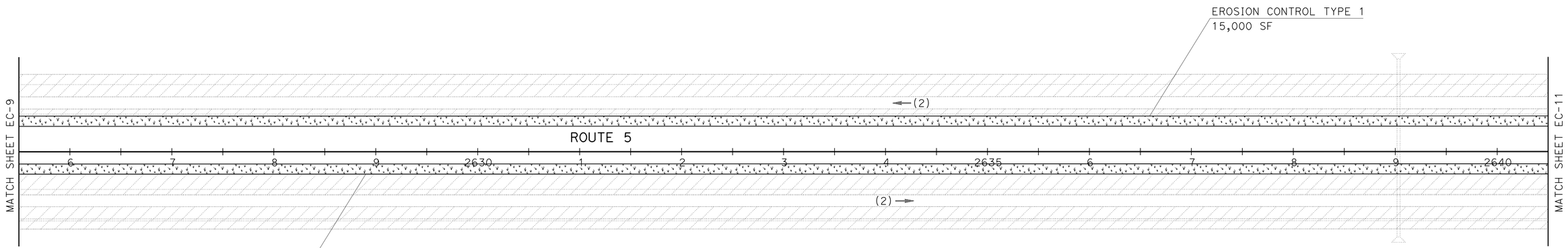

EROSION CONTROL PLAN
(STAGE 1)

NO SCALE

EC-10

REVISED BY | DATE REVISED

KEVIN GALLO | RAYMOND SEGURA

CALCULATED-DESIGNED BY | CHECKED BY

SENIOR LANDSCAPE ARCHITECT: BRAD COLE

STATE OF CALIFORNIA - DEPARTMENT OF TRANSPORTATION
Caltrans® LANDSCAPE ARCHITECTURE

LAST REVISION 06-10-14 | DATE PLOTTED => 24-JUL-2014 | TIME PLOTTED => 10:06

Dist	COUNTY	ROUTE	POST MILES TOTAL PROJECT	SHEET No.	TOTAL SHEETS
06	Ker	5	62.5/73.1	119	213

LICENSED LANDSCAPE ARCHITECT

6-16-14
PLANS APPROVAL DATE

LICENSED LANDSCAPE ARCHITECT
KEVIN GALLO No. 2556
Expiration Date 12/31/15
Renewal Date 06/10/14
Date
STATE OF CALIFORNIA

THE STATE OF CALIFORNIA OR ITS OFFICERS OR AGENTS SHALL NOT BE RESPONSIBLE FOR THE ACCURACY OR COMPLETENESS OF SCANNED COPIES OF THIS PLAN SHEET.

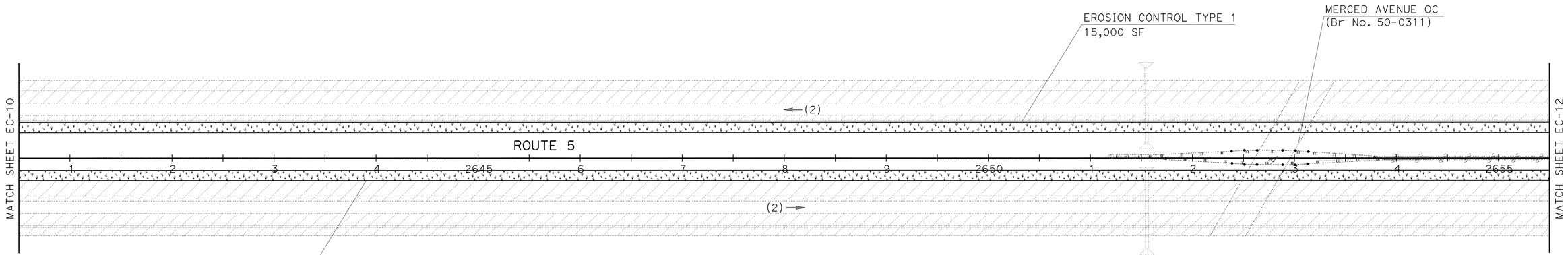

EROSION CONTROL PLAN
(STAGE 1)

NO SCALE

EC-11

REVISED BY | DATE REVISED

KEVIN GALLO | RAYMOND SEGURA

CALCULATED-DESIGNED BY | CHECKED BY

SENIOR LANDSCAPE ARCHITECT

BRAD COLE

STATE OF CALIFORNIA - DEPARTMENT OF TRANSPORTATION

Caltrans® LANDSCAPE ARCHITECTURE

LAST REVISION 06-10-14 | DATE PLOTTED => 24-JUL-2014 | TIME PLOTTED => 10:06

Dist	COUNTY	ROUTE	POST MILES TOTAL PROJECT	SHEET No.	TOTAL SHEETS
06	Ker	5	62.5/73.1	120	213

LICENSED LANDSCAPE ARCHITECT

6-16-14
PLANS APPROVAL DATE

LICENSED LANDSCAPE ARCHITECT
KEVIN GALLO No. 2556
Date Signed
12/31/15
Renewal Date
06/10/14
Date
STATE OF CALIFORNIA

THE STATE OF CALIFORNIA OR ITS OFFICERS OR AGENTS SHALL NOT BE RESPONSIBLE FOR THE ACCURACY OR COMPLETENESS OF SCANNED COPIES OF THIS PLAN SHEET.

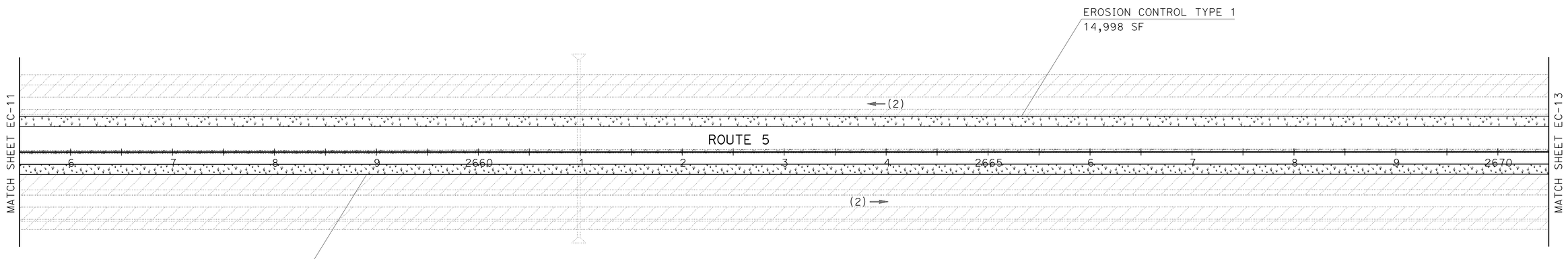

EROSION CONTROL PLAN
(STAGE 1)

NO SCALE

EC-12

REVISED BY
DATE REVISED

KEVIN GALLO
RAYMOND SEGURA

CALCULATED-DESIGNED BY
CHECKED BY

SENIOR LANDSCAPE ARCHITECT
BRAD COLE

STATE OF CALIFORNIA - DEPARTMENT OF TRANSPORTATION
Caltrans® LANDSCAPE ARCHITECTURE

LAST REVISION 06-10-14
DATE PLOTTED => 24-JUL-2014
TIME PLOTTED => 10:06

Dist	COUNTY	ROUTE	POST MILES TOTAL PROJECT	SHEET No.	TOTAL SHEETS
06	Ker	5	62.5/73.1	121	213

LICENSED LANDSCAPE ARCHITECT

6-16-14
PLANS APPROVAL DATE

LICENSED LANDSCAPE ARCHITECT
KEVIN GALLO No. 2525
Date Signed
12/31/15
Renewal Date
06/10/14
Date
STATE OF CALIFORNIA

THE STATE OF CALIFORNIA OR ITS OFFICERS OR AGENTS SHALL NOT BE RESPONSIBLE FOR THE ACCURACY OR COMPLETENESS OF SCANNED COPIES OF THIS PLAN SHEET.

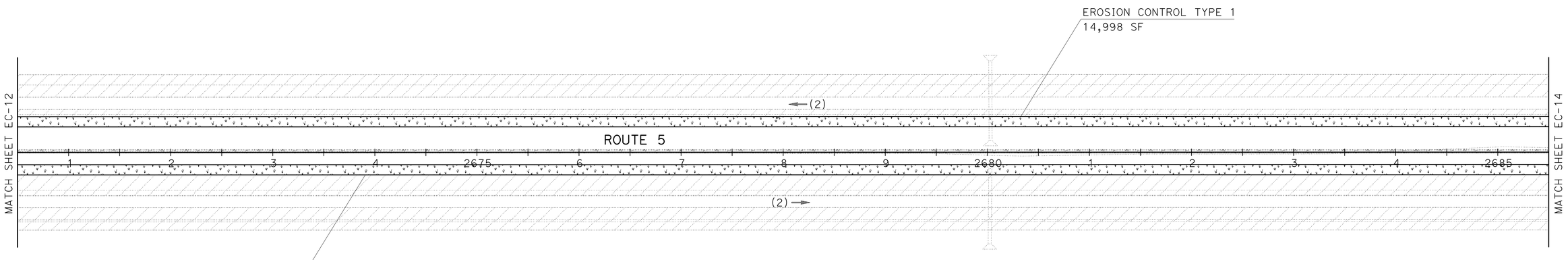

EROSION CONTROL PLAN
(STAGE 1)

NO SCALE

EC-13

REVISED BY
DATE REVISED

KEVIN GALLO
RAYMOND SEGURA

CALCULATED-DESIGNED BY
CHECKED BY

SENIOR LANDSCAPE ARCHITECT
BRAD COLE

STATE OF CALIFORNIA - DEPARTMENT OF TRANSPORTATION
Caltrans® LANDSCAPE ARCHITECTURE

LAST REVISION 06-10-14
DATE PLOTTED => 24-JUL-2014
TIME PLOTTED => 10:06

Dist	COUNTY	ROUTE	POST MILES TOTAL PROJECT	SHEET No.	TOTAL SHEETS
06	Ker	5	62.5/73.1	122	213

LICENSED LANDSCAPE ARCHITECT

6-16-14
PLANS APPROVAL DATE

LICENSED LANDSCAPE ARCHITECT
KEVIN GALLO No. 2556
Expiration Date
12/31/15
Renewal Date
06/10/14
Date
STATE OF CALIFORNIA

THE STATE OF CALIFORNIA OR ITS OFFICERS OR AGENTS SHALL NOT BE RESPONSIBLE FOR THE ACCURACY OR COMPLETENESS OF SCANNED COPIES OF THIS PLAN SHEET.

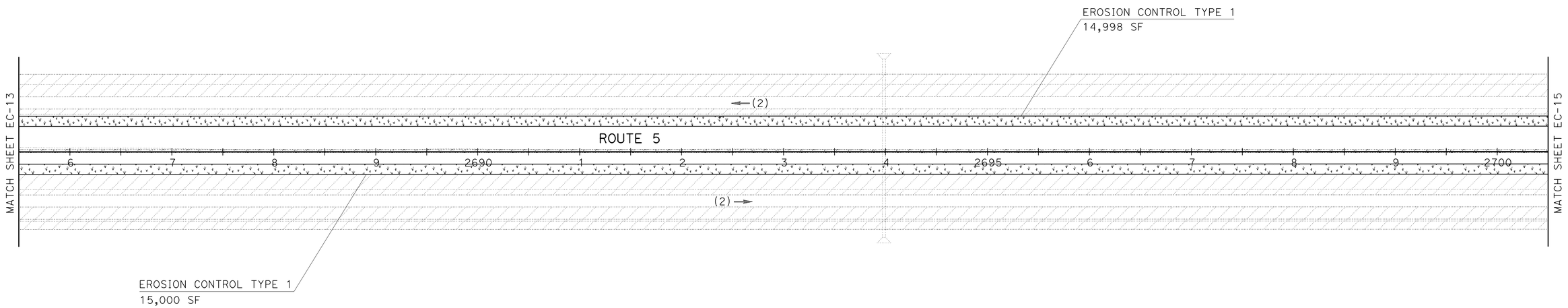

EROSION CONTROL PLAN
(STAGE 1)

NO SCALE

EC-14

REVISED BY
DATE REVISED

KEVIN GALLO
RAYMOND SEGURA

CALCULATED-DESIGNED BY
CHECKED BY

SENIOR LANDSCAPE ARCHITECT
BRAD COLE

STATE OF CALIFORNIA - DEPARTMENT OF TRANSPORTATION
Caltrans® LANDSCAPE ARCHITECTURE

LAST REVISION 06-10-14
DATE PLOTTED => 24-JUL-2014
TIME PLOTTED => 10:06

Dist	COUNTY	ROUTE	POST MILES TOTAL PROJECT	SHEET No.	TOTAL SHEETS
06	Ker	5	62.5/73.1	123	213

LICENSED LANDSCAPE ARCHITECT

6-16-14
PLANS APPROVAL DATE

LICENSED LANDSCAPE ARCHITECT
KEVIN GALLO No. 2556
Expiration Date
12/31/15
Renewal Date
06/10/14
Date
STATE OF CALIFORNIA

THE STATE OF CALIFORNIA OR ITS OFFICERS OR AGENTS SHALL NOT BE RESPONSIBLE FOR THE ACCURACY OR COMPLETENESS OF SCANNED COPIES OF THIS PLAN SHEET.

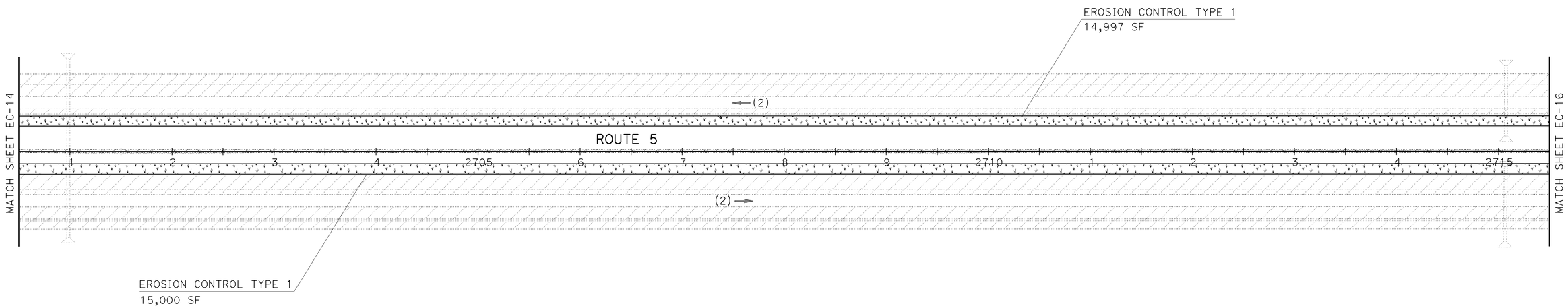

EROSION CONTROL PLAN
(STAGE 1)

NO SCALE

EC-15

REVISED BY | DATE REVISED

KEVIN GALLO
RAYMOND SEGURA

CALCULATED-DESIGNED BY
CHECKED BY

SENIOR LANDSCAPE ARCHITECT
BRAD COLE

STATE OF CALIFORNIA - DEPARTMENT OF TRANSPORTATION
Caltrans® LANDSCAPE ARCHITECTURE

LAST REVISION 06-10-14 | DATE PLOTTED => 24-JUL-2014 | TIME PLOTTED => 10:06

Dist	COUNTY	ROUTE	POST MILES TOTAL PROJECT	SHEET No.	TOTAL SHEETS
06	Ker	5	62.5/73.1	124	213

LICENSED LANDSCAPE ARCHITECT

6-16-14
PLANS APPROVAL DATE

LICENSED LANDSCAPE ARCHITECT
KEVIN GALLO No. 2556
Expiration Date
12/31/15
Renewal Date
06/10/14
Date
STATE OF CALIFORNIA

THE STATE OF CALIFORNIA OR ITS OFFICERS OR AGENTS SHALL NOT BE RESPONSIBLE FOR THE ACCURACY OR COMPLETENESS OF SCANNED COPIES OF THIS PLAN SHEET.

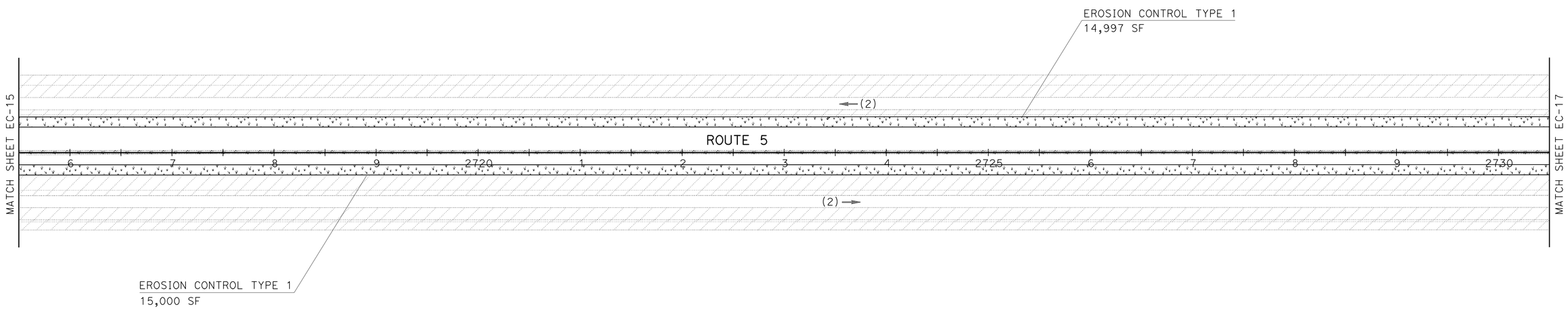

EROSION CONTROL PLAN
(STAGE 1)

NO SCALE

EC-16

REVISED BY | DATE REVISED

KEVIN GALLO | RAYMOND SEGURA

CALCULATED-DESIGNED BY | CHECKED BY

SENIOR LANDSCAPE ARCHITECT

BRAD COLE

STATE OF CALIFORNIA - DEPARTMENT OF TRANSPORTATION

Caltrans® LANDSCAPE ARCHITECTURE

LAST REVISION 06-10-14 | DATE PLOTTED => 24-JUL-2014 | TIME PLOTTED => 10:06

Dist	COUNTY	ROUTE	POST MILES TOTAL PROJECT	SHEET No.	TOTAL SHEETS
06	Ker	5	62.5/73.1	125	213

LICENSED LANDSCAPE ARCHITECT

6-16-14
PLANS APPROVAL DATE

LICENSED LANDSCAPE ARCHITECT
KEVIN GALLO No. 2556
Expiration Date
12/31/15
Renewal Date
06/10/14
Date
STATE OF CALIFORNIA

THE STATE OF CALIFORNIA OR ITS OFFICERS OR AGENTS SHALL NOT BE RESPONSIBLE FOR THE ACCURACY OR COMPLETENESS OF SCANNED COPIES OF THIS PLAN SHEET.

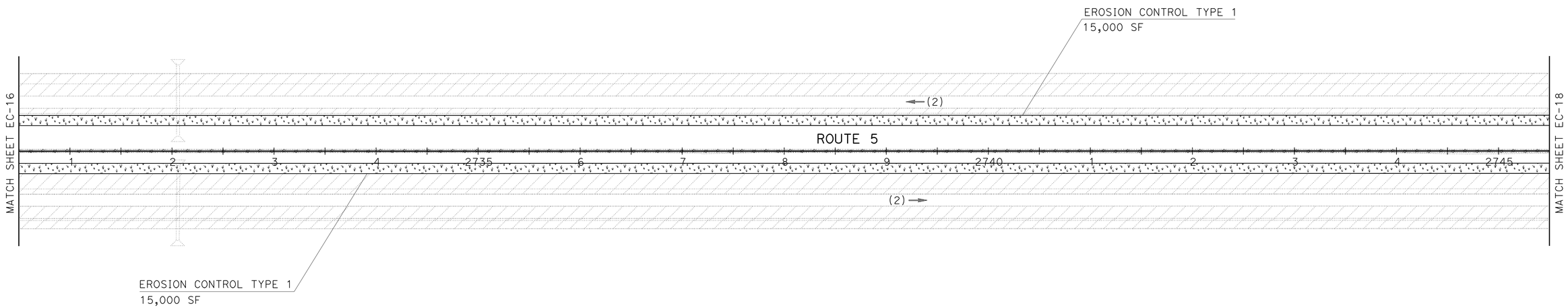

EROSION CONTROL PLAN
(STAGE 1)

NO SCALE

EC-17

REVISED BY | DATE REVISED

KEVIN GALLO | RAYMOND SEGURA

CALCULATED-DESIGNED BY | CHECKED BY

SENIOR LANDSCAPE ARCHITECT

BRAD COLE

STATE OF CALIFORNIA - DEPARTMENT OF TRANSPORTATION

Caltrans® LANDSCAPE ARCHITECTURE

LAST REVISION 06-10-14 | DATE PLOTTED => 24-JUL-2014 | TIME PLOTTED => 10:06

Dist	COUNTY	ROUTE	POST MILES TOTAL PROJECT	SHEET No.	TOTAL SHEETS
06	Ker	5	62.5/73.1	126	213

LICENSED LANDSCAPE ARCHITECT

6-16-14
PLANS APPROVAL DATE

LICENSED LANDSCAPE ARCHITECT
KEVIN GALLO No. 2556
Expiration Date 12/31/15
Renewal Date 06/10/14
Date
STATE OF CALIFORNIA

THE STATE OF CALIFORNIA OR ITS OFFICERS OR AGENTS SHALL NOT BE RESPONSIBLE FOR THE ACCURACY OR COMPLETENESS OF SCANNED COPIES OF THIS PLAN SHEET.

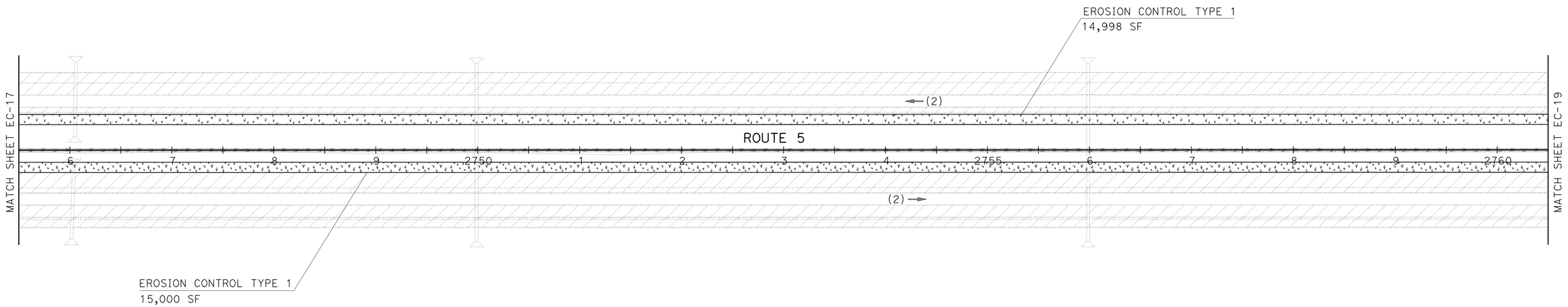

EROSION CONTROL PLAN
(STAGE 1)

NO SCALE

EC-18

REVISED BY	DATE REVISED

CALCULATED-DESIGNED BY: KEVIN GALLO
CHECKED BY: RAYMOND SEGURA

SENIOR LANDSCAPE ARCHITECT: BRAD COLE

STATE OF CALIFORNIA - DEPARTMENT OF TRANSPORTATION
Caltrans® LANDSCAPE ARCHITECTURE

LAST REVISION 06-10-14 | DATE PLOTTED => 24-JUL-2014 | TIME PLOTTED => 10:06

Dist	COUNTY	ROUTE	POST MILES TOTAL PROJECT	SHEET No.	TOTAL SHEETS
06	Ker	5	62.5/73.1	127	213

LICENSED LANDSCAPE ARCHITECT

6-16-14
PLANS APPROVAL DATE

LICENSED LANDSCAPE ARCHITECT
KEVIN GALLO No. 2556
Expiration Date
12/31/15
Renewal Date
06/10/14
Date
STATE OF CALIFORNIA

THE STATE OF CALIFORNIA OR ITS OFFICERS OR AGENTS SHALL NOT BE RESPONSIBLE FOR THE ACCURACY OR COMPLETENESS OF SCANNED COPIES OF THIS PLAN SHEET.

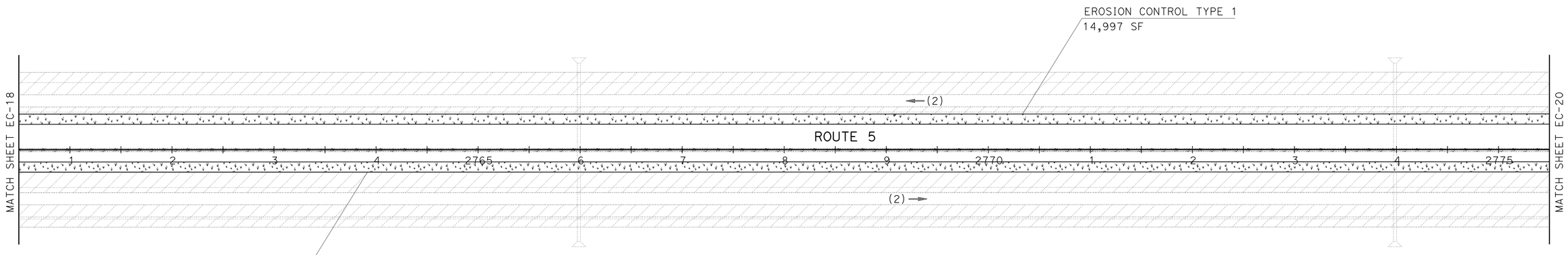

EROSION CONTROL PLAN
(STAGE 1)

NO SCALE

EC-19

REVISED BY	DATE REVISED

CALCULATED-DESIGNED BY	KEVIN GALLO
CHECKED BY	RAYMOND SEGURA
SENIOR LANDSCAPE ARCHITECT	BRAD COLE

STATE OF CALIFORNIA - DEPARTMENT OF TRANSPORTATION
Caltrans® LANDSCAPE ARCHITECTURE

LAST REVISION 06-10-14 | DATE PLOTTED => 24-JUL-2014 | TIME PLOTTED => 10:06

Dist	COUNTY	ROUTE	POST MILES TOTAL PROJECT	SHEET No.	TOTAL SHEETS
06	Ker	5	62.5/73.1	128	213

LICENSED LANDSCAPE ARCHITECT

6-16-14
PLANS APPROVAL DATE

LICENSED LANDSCAPE ARCHITECT
KEVIN GALLO No. 2556
Expiration Date
12/31/15
Renewal Date
06/10/14
Date
STATE OF CALIFORNIA

THE STATE OF CALIFORNIA OR ITS OFFICERS OR AGENTS SHALL NOT BE RESPONSIBLE FOR THE ACCURACY OR COMPLETENESS OF SCANNED COPIES OF THIS PLAN SHEET.

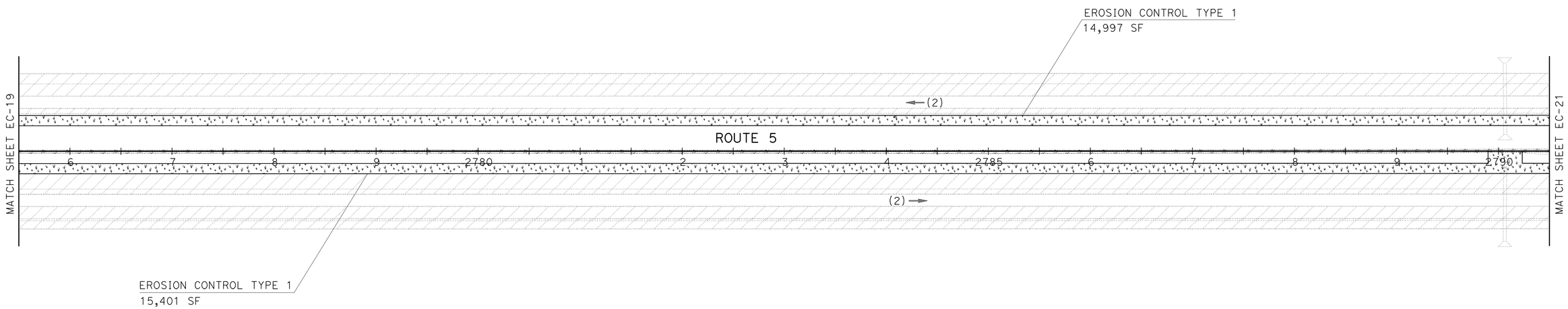

EROSION CONTROL PLAN
(STAGE 1)

NO SCALE

EC-20

REVISED BY | DATE REVISED

KEVIN GALLO | RAYMOND SEGURA

CALCULATED-DESIGNED BY | CHECKED BY

SENIOR LANDSCAPE ARCHITECT | BRAD COLE

STATE OF CALIFORNIA - DEPARTMENT OF TRANSPORTATION
Caltrans® LANDSCAPE ARCHITECTURE

LAST REVISION 06-10-14 | DATE PLOTTED => 24-JUL-2014 | TIME PLOTTED => 10:06

Dist	COUNTY	ROUTE	POST MILES TOTAL PROJECT	SHEET No.	TOTAL SHEETS
06	Ker	5	62.5/73.1	129	213

LICENSED LANDSCAPE ARCHITECT

6-16-14
PLANS APPROVAL DATE

LICENSED LANDSCAPE ARCHITECT
KEVIN GALLO No. 2556
Expiration Date 12/31/15
Renewal Date 06/10/14
Date
STATE OF CALIFORNIA

THE STATE OF CALIFORNIA OR ITS OFFICERS OR AGENTS SHALL NOT BE RESPONSIBLE FOR THE ACCURACY OR COMPLETENESS OF SCANNED COPIES OF THIS PLAN SHEET.

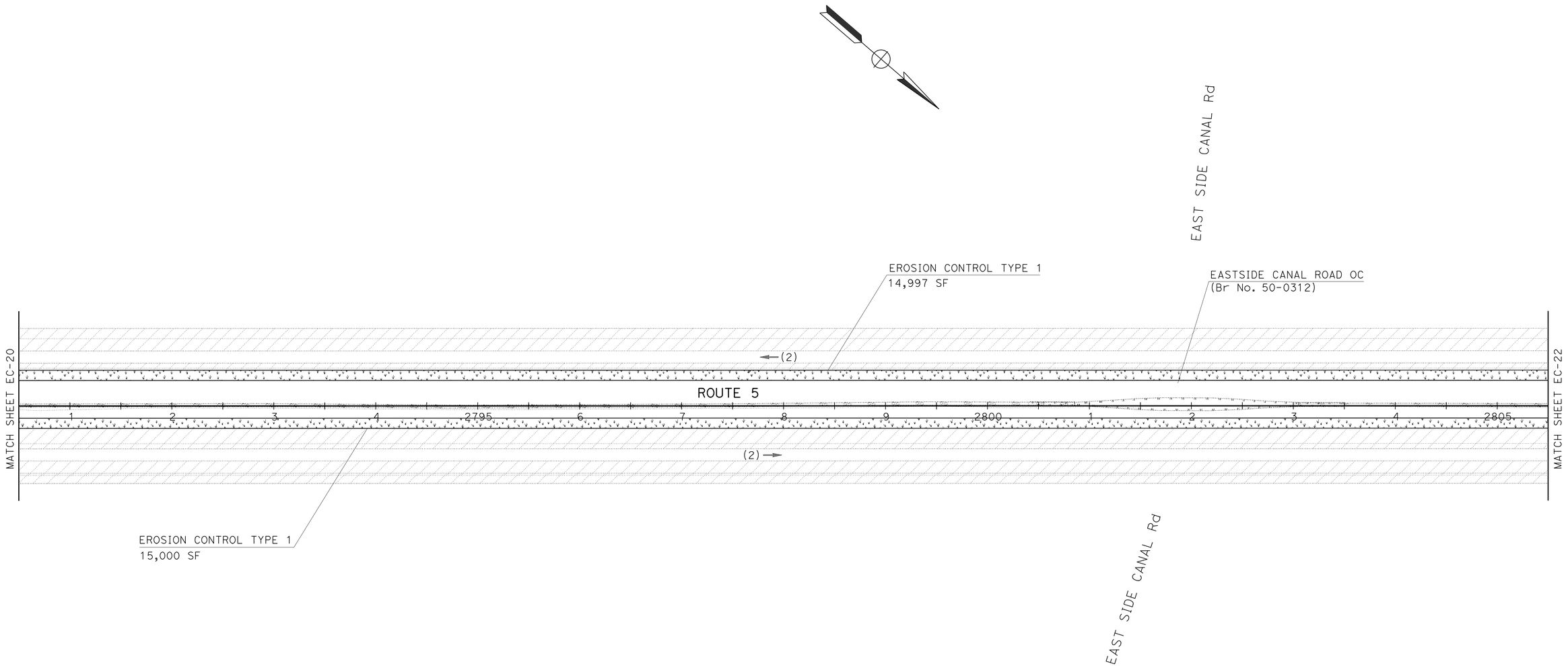

EROSION CONTROL PLAN
(STAGE 1)

NO SCALE

EC-21

REVISED BY	DATE REVISED

KEVIN GALLO
RAYMOND SEGURA

CALCULATED-DESIGNED BY
CHECKED BY

SENIOR LANDSCAPE ARCHITECT
BRAD COLE

STATE OF CALIFORNIA - DEPARTMENT OF TRANSPORTATION
Caltrans® LANDSCAPE ARCHITECTURE

LAST REVISION 06-10-14
DATE PLOTTED => 24-JUL-2014
TIME PLOTTED => 10:06

Dist	COUNTY	ROUTE	POST MILES TOTAL PROJECT	SHEET No.	TOTAL SHEETS
06	Ker	5	62.5/73.1	130	213

LICENSED LANDSCAPE ARCHITECT

6-16-14
PLANS APPROVAL DATE

LICENSED LANDSCAPE ARCHITECT
KEVIN GALLO No. 2556
Expiration Date
12/31/15
Renewal Date
06/10/14
Date
STATE OF CALIFORNIA

THE STATE OF CALIFORNIA OR ITS OFFICERS OR AGENTS SHALL NOT BE RESPONSIBLE FOR THE ACCURACY OR COMPLETENESS OF SCANNED COPIES OF THIS PLAN SHEET.

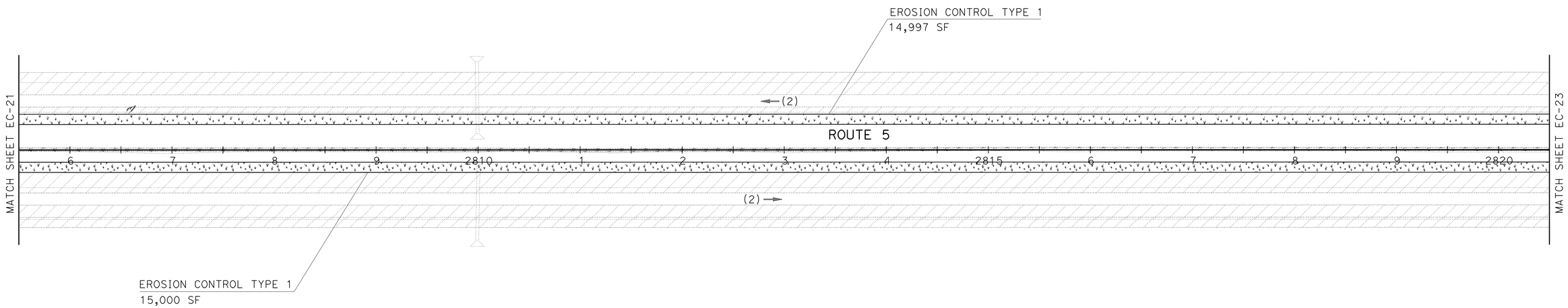

EROSION CONTROL PLAN
(STAGE 1)

NO SCALE

EC-22

REVISED BY	DATE REVISED

CALCULATED-DESIGNED BY: KEVIN GALLO
CHECKED BY: RAYMOND SEGURA
SENIOR LANDSCAPE ARCHITECT: BRAD COLE

STATE OF CALIFORNIA - DEPARTMENT OF TRANSPORTATION
Caltrans® LANDSCAPE ARCHITECTURE

LAST REVISION 06-10-14
DATE PLOTTED => 24-JUL-2014
TIME PLOTTED => 10:06

Dist	COUNTY	ROUTE	POST MILES TOTAL PROJECT	SHEET No.	TOTAL SHEETS
06	Ker	5	62.5/73.1	131	213

LICENSED LANDSCAPE ARCHITECT

6-16-14
PLANS APPROVAL DATE

LICENSED LANDSCAPE ARCHITECT
KEVIN GALLO No. 2556
Expiration Date
12/31/15
Renewal Date
06/10/14
Date
STATE OF CALIFORNIA

THE STATE OF CALIFORNIA OR ITS OFFICERS OR AGENTS SHALL NOT BE RESPONSIBLE FOR THE ACCURACY OR COMPLETENESS OF SCANNED COPIES OF THIS PLAN SHEET.

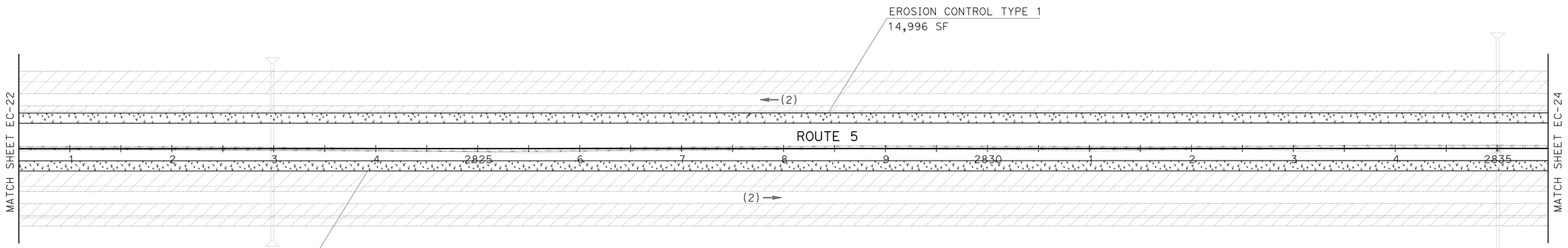

EROSION CONTROL PLAN
(STAGE 1)

NO SCALE

EC-23

REVISED BY | DATE REVISED

KEVIN GALLO
RAYMOND SEGURA

CALCULATED-DESIGNED BY
CHECKED BY

SENIOR LANDSCAPE ARCHITECT
BRAD COLE

STATE OF CALIFORNIA - DEPARTMENT OF TRANSPORTATION
Caltrans® LANDSCAPE ARCHITECTURE

LAST REVISION 06-10-14 | DATE PLOTTED => 24-JUL-2014 | TIME PLOTTED => 10:06

Dist	COUNTY	ROUTE	POST MILES TOTAL PROJECT	SHEET No.	TOTAL SHEETS
06	Ker	5	62.5/73.1	132	213

LICENSED LANDSCAPE ARCHITECT

6-16-14
PLANS APPROVAL DATE

LICENSED LANDSCAPE ARCHITECT
KEVIN GALLO No. 2556
Expiration Date
12/31/15
Renewal Date
06/10/14
Date
STATE OF CALIFORNIA

THE STATE OF CALIFORNIA OR ITS OFFICERS OR AGENTS SHALL NOT BE RESPONSIBLE FOR THE ACCURACY OR COMPLETENESS OF SCANNED COPIES OF THIS PLAN SHEET.

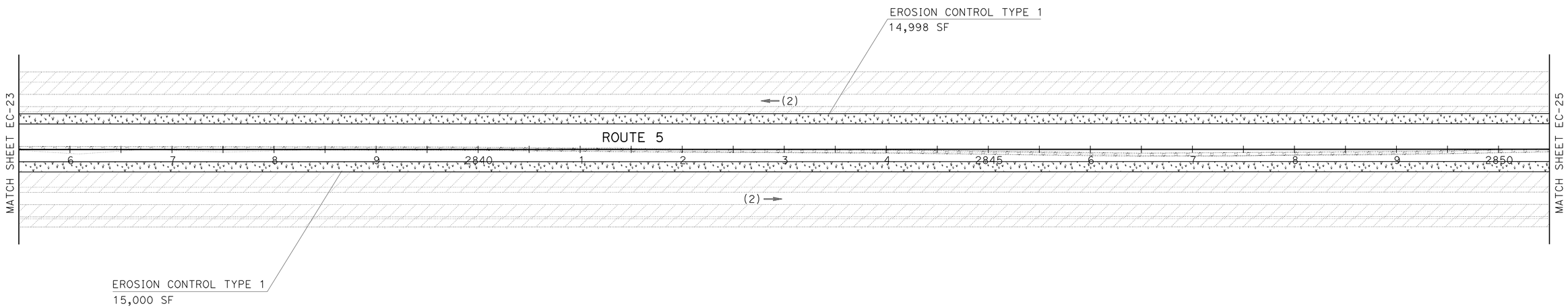

EROSION CONTROL PLAN
(STAGE 1)

NO SCALE

EC-24

REVISED BY | DATE REVISED

KEVIN GALLO
RAYMOND SEGURA

CALCULATED-DESIGNED BY
CHECKED BY

SENIOR LANDSCAPE ARCHITECT
BRAD COLE

STATE OF CALIFORNIA - DEPARTMENT OF TRANSPORTATION
Caltrans® LANDSCAPE ARCHITECTURE

LAST REVISION 06-10-14 | DATE PLOTTED => 24-JUL-2014 | TIME PLOTTED => 10:06

Dist	COUNTY	ROUTE	POST MILES TOTAL PROJECT	SHEET No.	TOTAL SHEETS
06	Ker	5	62.5/73.1	133	213

LICENSED LANDSCAPE ARCHITECT

6-16-14
PLANS APPROVAL DATE

LICENSED LANDSCAPE ARCHITECT
KEVIN GALLO No. 2555
Expiration Date
12/31/15
Renewal Date
06/10/14
Date
STATE OF CALIFORNIA

THE STATE OF CALIFORNIA OR ITS OFFICERS OR AGENTS SHALL NOT BE RESPONSIBLE FOR THE ACCURACY OR COMPLETENESS OF SCANNED COPIES OF THIS PLAN SHEET.

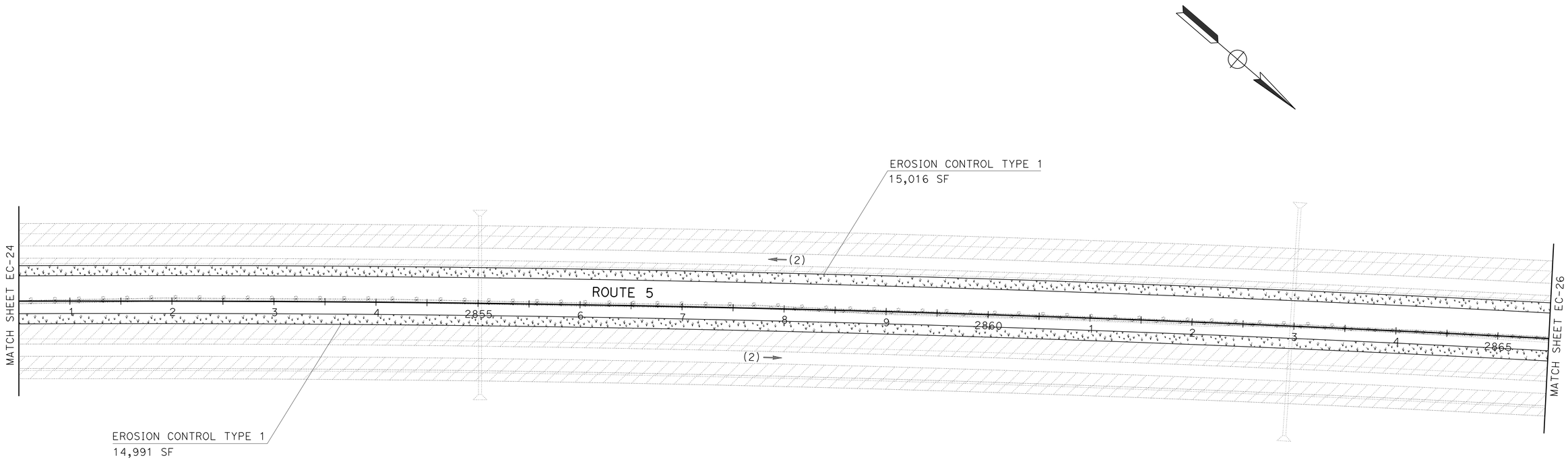

EROSION CONTROL PLAN
(STAGE 1)

NO SCALE

EC-25

REVISED BY	DATE REVISED

CALCULATED-DESIGNED BY: KEVIN GALLO
CHECKED BY: RAYMOND SEGURA

SENIOR LANDSCAPE ARCHITECT: BRAD COLE

STATE OF CALIFORNIA - DEPARTMENT OF TRANSPORTATION
Caltrans® LANDSCAPE ARCHITECTURE

LAST REVISION 06-10-14 | DATE PLOTTED => 24-JUL-2014 | TIME PLOTTED => 10:06

Dist	COUNTY	ROUTE	POST MILES TOTAL PROJECT	SHEET No.	TOTAL SHEETS
06	Ker	5	62.5/73.1	134	213

LICENSED LANDSCAPE ARCHITECT

6-16-14
PLANS APPROVAL DATE

LICENSED LANDSCAPE ARCHITECT
KEVIN GALLO No. 2556
Expiration Date
12/31/15
Renewal Date
06/10/14
Date
STATE OF CALIFORNIA

THE STATE OF CALIFORNIA OR ITS OFFICERS OR AGENTS SHALL NOT BE RESPONSIBLE FOR THE ACCURACY OR COMPLETENESS OF SCANNED COPIES OF THIS PLAN SHEET.

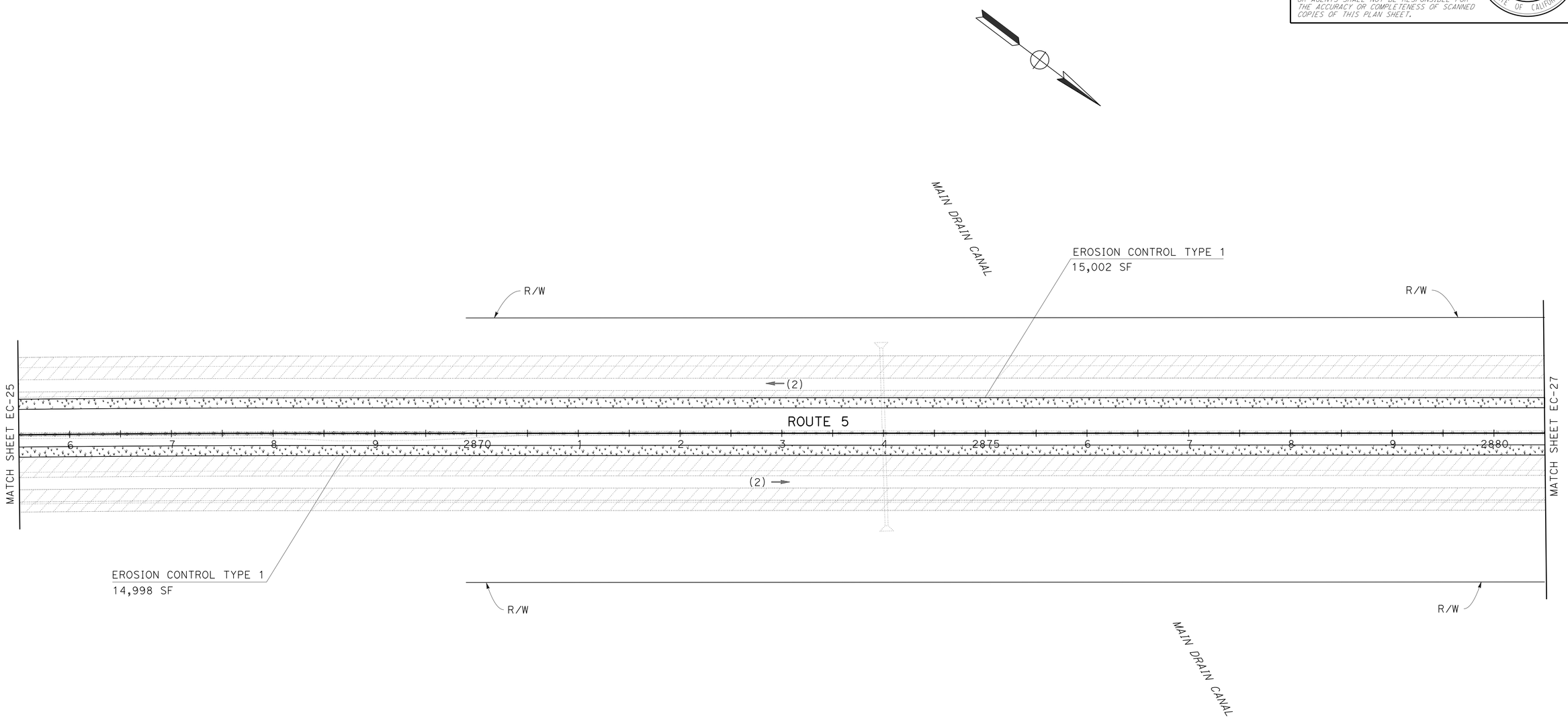

EROSION CONTROL PLAN
(STAGE 1)

NO SCALE

EC-26

REVISED BY | DATE REVISED

KEVIN GALLO | RAYMOND SEGURA

CALCULATED-DESIGNED BY | CHECKED BY

SENIOR LANDSCAPE ARCHITECT | BRAD COLE

STATE OF CALIFORNIA - DEPARTMENT OF TRANSPORTATION
Caltrans® LANDSCAPE ARCHITECTURE

LAST REVISION 06-10-14 | DATE PLOTTED => 24-JUL-2014 | TIME PLOTTED => 10:06

Dist	COUNTY	ROUTE	POST MILES TOTAL PROJECT	SHEET No.	TOTAL SHEETS
06	Ker	5	62.5/73.1	135	213

LICENSED LANDSCAPE ARCHITECT

6-16-14
PLANS APPROVAL DATE

LICENSED LANDSCAPE ARCHITECT
KEVIN GALLO No. 2525
Date Signed
12/31/15
Renewal Date
06/10/14
Date
STATE OF CALIFORNIA

THE STATE OF CALIFORNIA OR ITS OFFICERS OR AGENTS SHALL NOT BE RESPONSIBLE FOR THE ACCURACY OR COMPLETENESS OF SCANNED COPIES OF THIS PLAN SHEET.

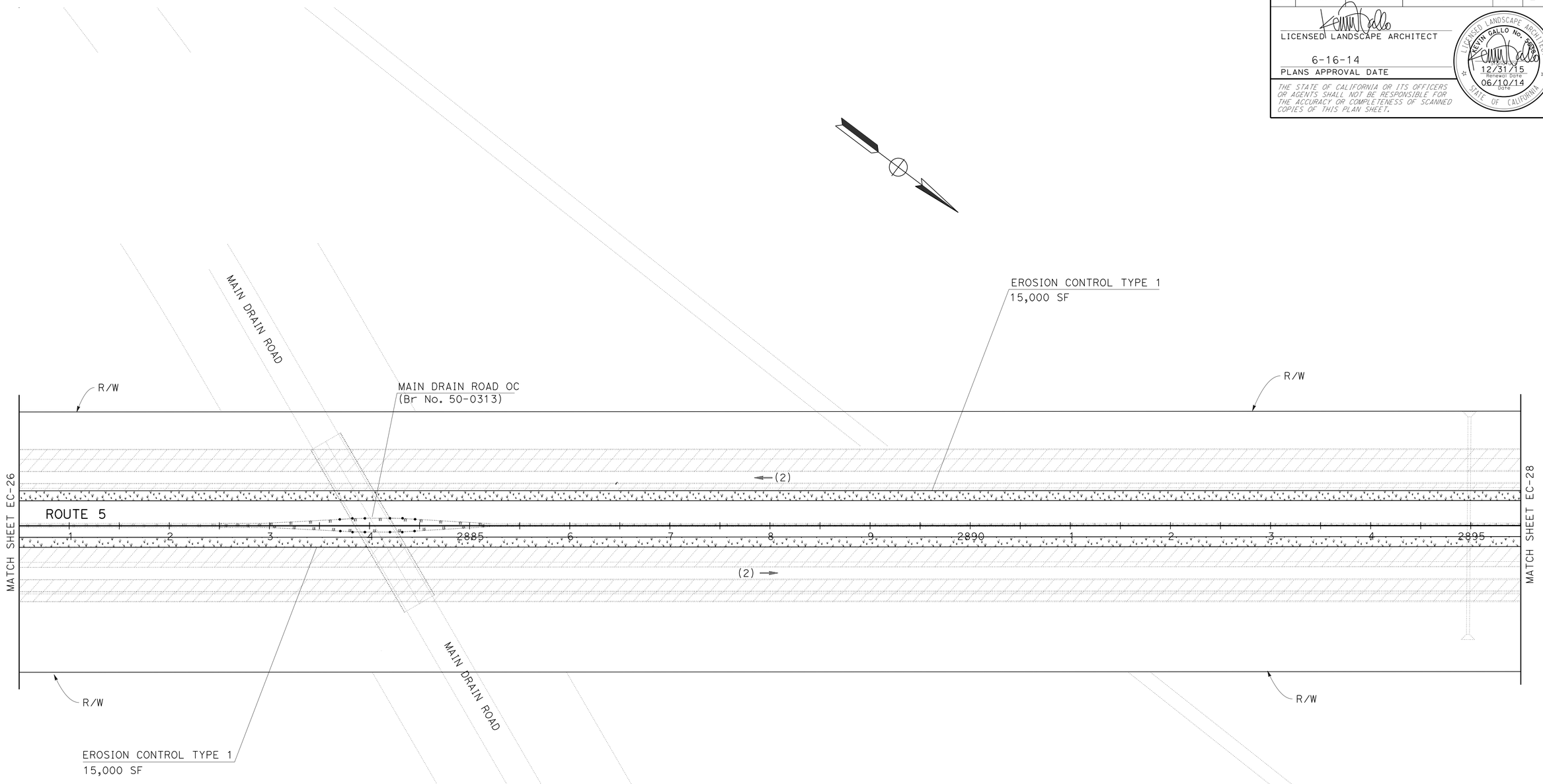

EROSION CONTROL PLAN
(STAGE 1)

NO SCALE

EC-27

STATE OF CALIFORNIA - DEPARTMENT OF TRANSPORTATION
Caltrans® LANDSCAPE ARCHITECTURE

SENIOR LANDSCAPE ARCHITECT: BRAD COLE
CALCULATED-DESIGNED BY: KEVIN GALLO
CHECKED BY: RAYMOND SEGURA
REVISED BY
DATE REVISED

LAST REVISION 06-10-14
DATE PLOTTED => 24-JUL-2014
TIME PLOTTED => 10:06

Dist	COUNTY	ROUTE	POST MILES TOTAL PROJECT	SHEET No.	TOTAL SHEETS
06	Ker	5	62.5/73.1	136	213

LICENSED LANDSCAPE ARCHITECT

6-16-14
PLANS APPROVAL DATE

LICENSED LANDSCAPE ARCHITECT
KEVIN GALLO No. 2556
Expiration Date 12/31/15
Renewal Date
06/10/14
Date
STATE OF CALIFORNIA

THE STATE OF CALIFORNIA OR ITS OFFICERS OR AGENTS SHALL NOT BE RESPONSIBLE FOR THE ACCURACY OR COMPLETENESS OF SCANNED COPIES OF THIS PLAN SHEET.

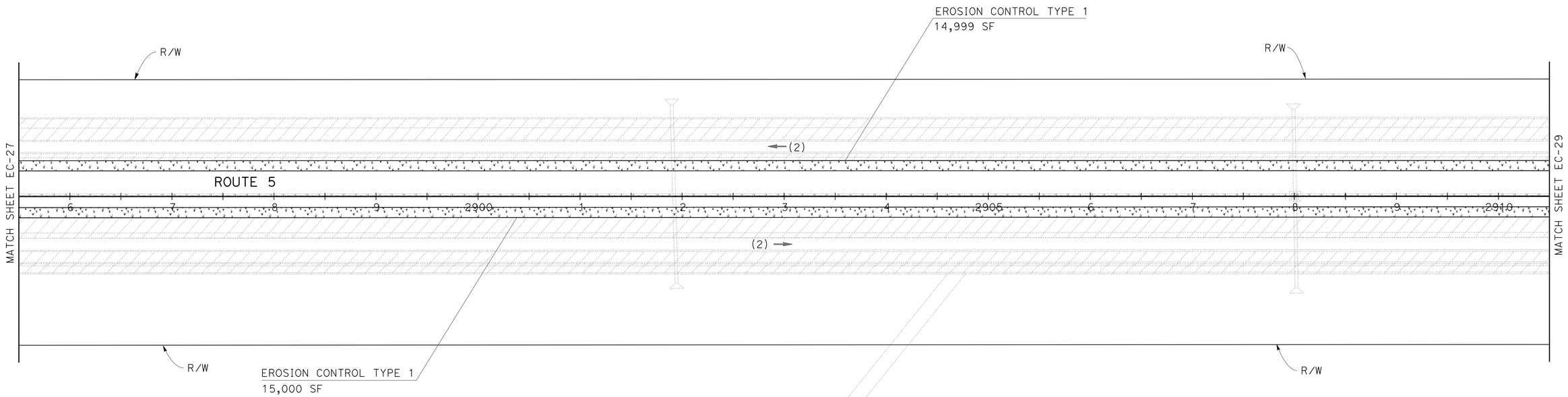

EROSION CONTROL PLAN
(STAGE 1)

NO SCALE

EC-28

REVISED BY | DATE REVISED

KEVIN GALLO | RAYMOND SEGURA

CALCULATED-DESIGNED BY | CHECKED BY

SENIOR LANDSCAPE ARCHITECT | BRAD COLE

STATE OF CALIFORNIA - DEPARTMENT OF TRANSPORTATION
Caltrans® LANDSCAPE ARCHITECTURE

LAST REVISION 06-10-14 | DATE PLOTTED => 24-JUL-2014 | TIME PLOTTED => 10:06

Dist	COUNTY	ROUTE	POST MILES TOTAL PROJECT	SHEET No.	TOTAL SHEETS
06	Ker	5	62.5/73.1	137	213

LICENSED LANDSCAPE ARCHITECT

6-16-14
PLANS APPROVAL DATE

LICENSED LANDSCAPE ARCHITECT
KEVIN GALLO No. 2556
Expiration Date 12/31/15
Renewal Date 06/10/14
Date
STATE OF CALIFORNIA

THE STATE OF CALIFORNIA OR ITS OFFICERS OR AGENTS SHALL NOT BE RESPONSIBLE FOR THE ACCURACY OR COMPLETENESS OF SCANNED COPIES OF THIS PLAN SHEET.

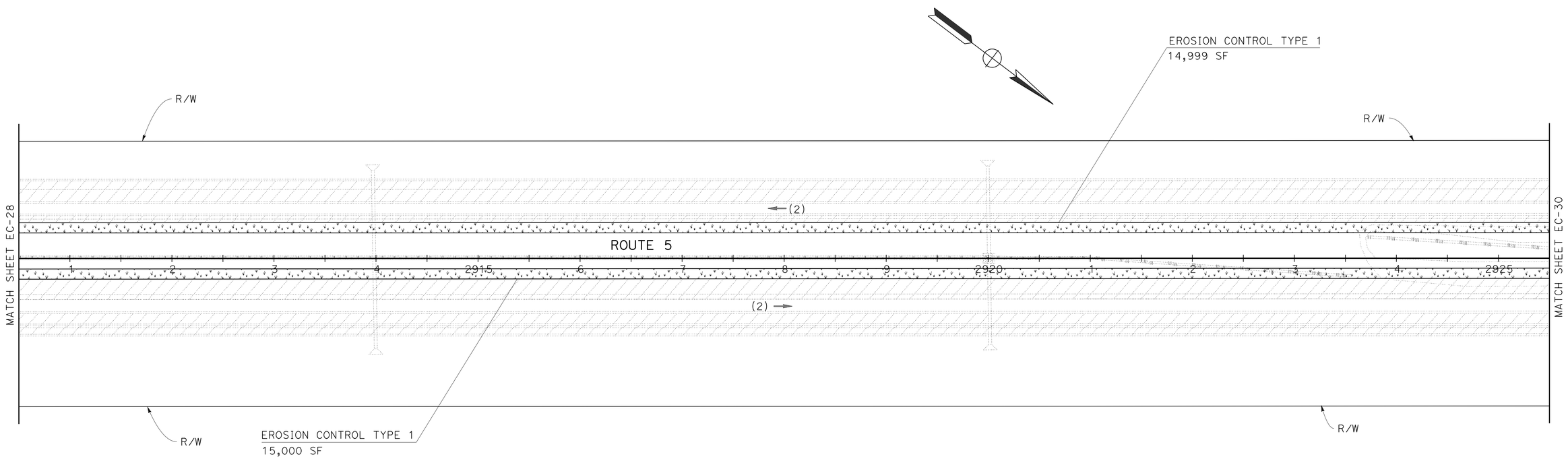

EROSION CONTROL PLAN
(STAGE 1)

NO SCALE

EC-29

REVISED BY | DATE REVISED

KEVIN GALLO | RAYMOND SEGURA

CALCULATED-DESIGNED BY | CHECKED BY

SENIOR LANDSCAPE ARCHITECT | BRAD COLE

STATE OF CALIFORNIA - DEPARTMENT OF TRANSPORTATION
Caltrans® LANDSCAPE ARCHITECTURE

LAST REVISION 06-10-14 | DATE PLOTTED => 24-JUL-2014 | TIME PLOTTED => 10:06

Dist	COUNTY	ROUTE	POST MILES TOTAL PROJECT	SHEET No.	TOTAL SHEETS
06	Ker	5	62.5/73.1	138	213

LICENSED LANDSCAPE ARCHITECT

6-16-14
PLANS APPROVAL DATE

LICENSED LANDSCAPE ARCHITECT
KEVIN GALLO No. 2935
Date Signed
12/31/15
Renewal Date
06/10/14
Date
STATE OF CALIFORNIA

THE STATE OF CALIFORNIA OR ITS OFFICERS OR AGENTS SHALL NOT BE RESPONSIBLE FOR THE ACCURACY OR COMPLETENESS OF SCANNED COPIES OF THIS PLAN SHEET.

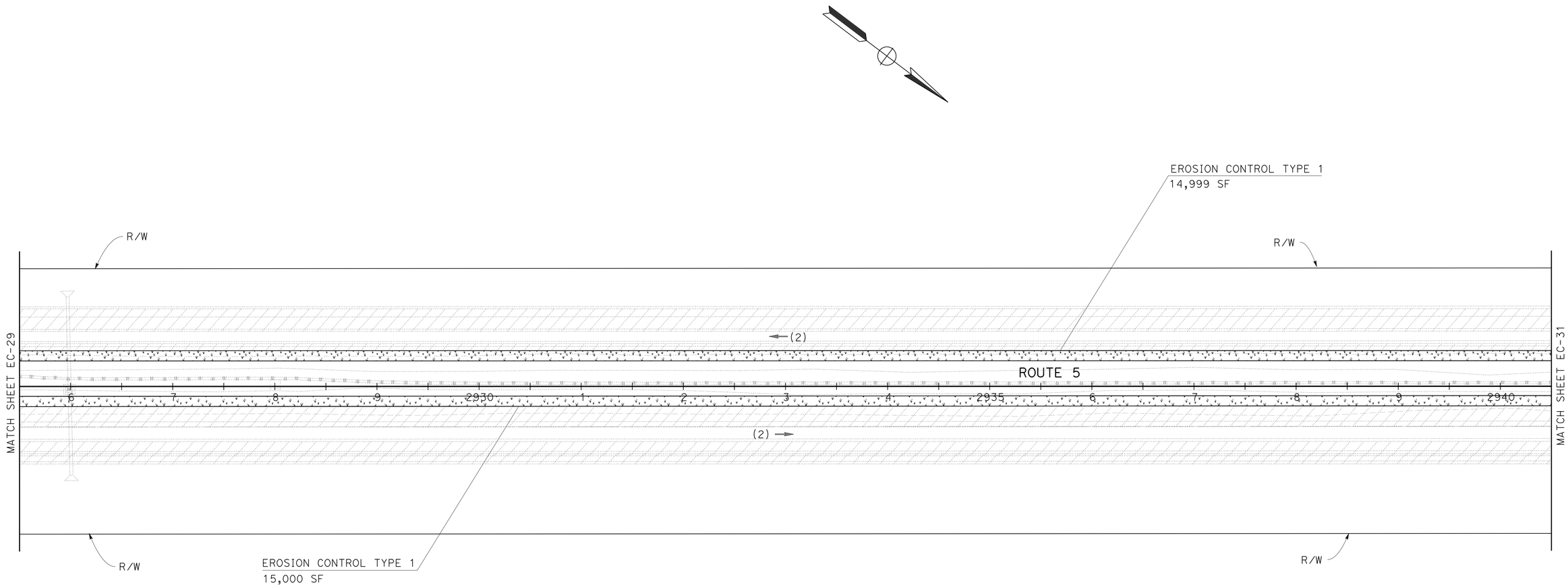

EROSION CONTROL PLAN
(STAGE 1)

NO SCALE

EC-30

STATE OF CALIFORNIA - DEPARTMENT OF TRANSPORTATION
Caltrans® LANDSCAPE ARCHITECTURE

SENIOR LANDSCAPE ARCHITECT: BRAD COLE
CALCULATED-DESIGNED BY: KEVIN GALLO
CHECKED BY: RAYMOND SEGURA
REVISED BY
DATE REVISED

LAST REVISION 06-10-14
DATE PLOTTED => 24-JUL-2014
TIME PLOTTED => 10:06

Dist	COUNTY	ROUTE	POST MILES TOTAL PROJECT	SHEET No.	TOTAL SHEETS
06	Ker	5	62.5/73.1	139	213

LICENSED LANDSCAPE ARCHITECT

6-16-14
PLANS APPROVAL DATE

LICENSED LANDSCAPE ARCHITECT
KEVIN GALLO No. 2556
Expiration Date 12/31/15
Renewal Date 06/10/14
Date
STATE OF CALIFORNIA

THE STATE OF CALIFORNIA OR ITS OFFICERS OR AGENTS SHALL NOT BE RESPONSIBLE FOR THE ACCURACY OR COMPLETENESS OF SCANNED COPIES OF THIS PLAN SHEET.

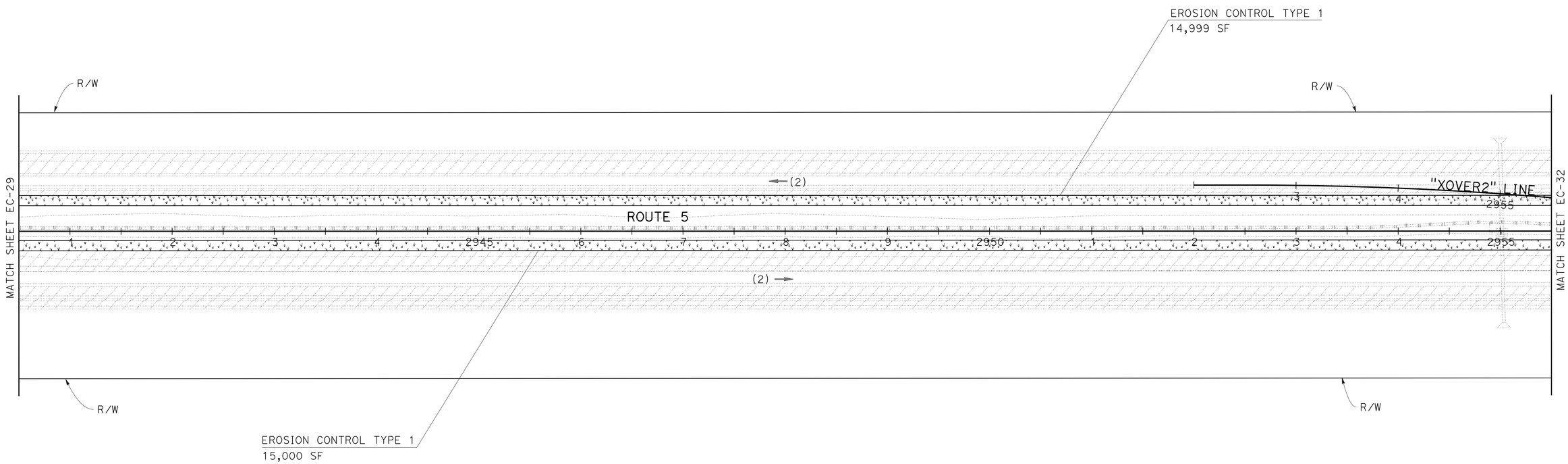

EROSION CONTROL PLAN
(STAGE 1)

NO SCALE

EC-31

REVISED BY | DATE REVISED

KEVIN GALLO | RAYMOND SEGURA

CALCULATED-DESIGNED BY | CHECKED BY

SENIOR LANDSCAPE ARCHITECT | BRAD COLE

STATE OF CALIFORNIA - DEPARTMENT OF TRANSPORTATION
Caltrans® LANDSCAPE ARCHITECTURE

LAST REVISION 06-10-14 | DATE PLOTTED => 24-JUL-2014 | TIME PLOTTED => 10:06

Dist	COUNTY	ROUTE	POST MILES TOTAL PROJECT	SHEET No.	TOTAL SHEETS
06	Ker	5	62.5/73.1	140	213

LICENSED LANDSCAPE ARCHITECT

6-16-14
PLANS APPROVAL DATE

LICENSED LANDSCAPE ARCHITECT
KEVIN GALLO No. 2556
Expires 12/31/15
Renewal Date
06/10/14
Date
STATE OF CALIFORNIA

THE STATE OF CALIFORNIA OR ITS OFFICERS OR AGENTS SHALL NOT BE RESPONSIBLE FOR THE ACCURACY OR COMPLETENESS OF SCANNED COPIES OF THIS PLAN SHEET.

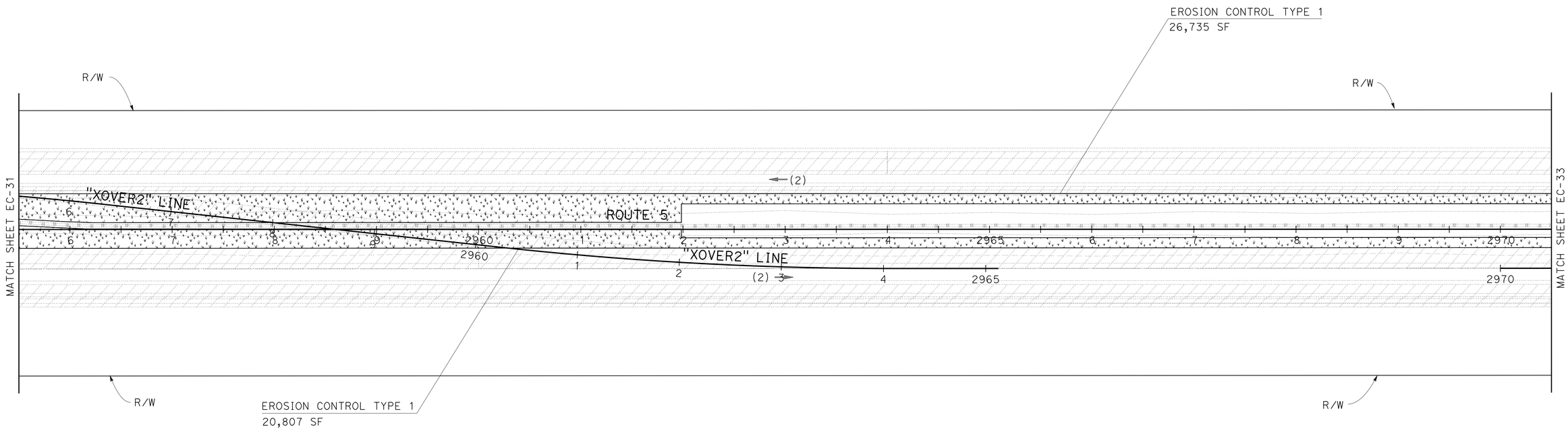

EROSION CONTROL PLAN
(STAGE 1)

NO SCALE

EC-32

REVISED BY	DATE REVISED
KEVIN GALLO	
RAYMOND SEGURA	

CALCULATED-DESIGNED BY
CHECKED BY

SENIOR LANDSCAPE ARCHITECT
BRAD COLE

STATE OF CALIFORNIA - DEPARTMENT OF TRANSPORTATION
Caltrans® LANDSCAPE ARCHITECTURE

LAST REVISION 06-10-14
DATE PLOTTED => 24-JUL-2014
TIME PLOTTED => 10:06

Dist	COUNTY	ROUTE	POST MILES TOTAL PROJECT	SHEET No.	TOTAL SHEETS
06	Ker	5	62.5/73.1	141	213

LICENSED LANDSCAPE ARCHITECT

6-16-14
PLANS APPROVAL DATE

LICENSED LANDSCAPE ARCHITECT
KEVIN GALLO No. 2982
Date Signed
12/31/15
Renewal Date
06/10/14
Date
STATE OF CALIFORNIA

THE STATE OF CALIFORNIA OR ITS OFFICERS OR AGENTS SHALL NOT BE RESPONSIBLE FOR THE ACCURACY OR COMPLETENESS OF SCANNED COPIES OF THIS PLAN SHEET.

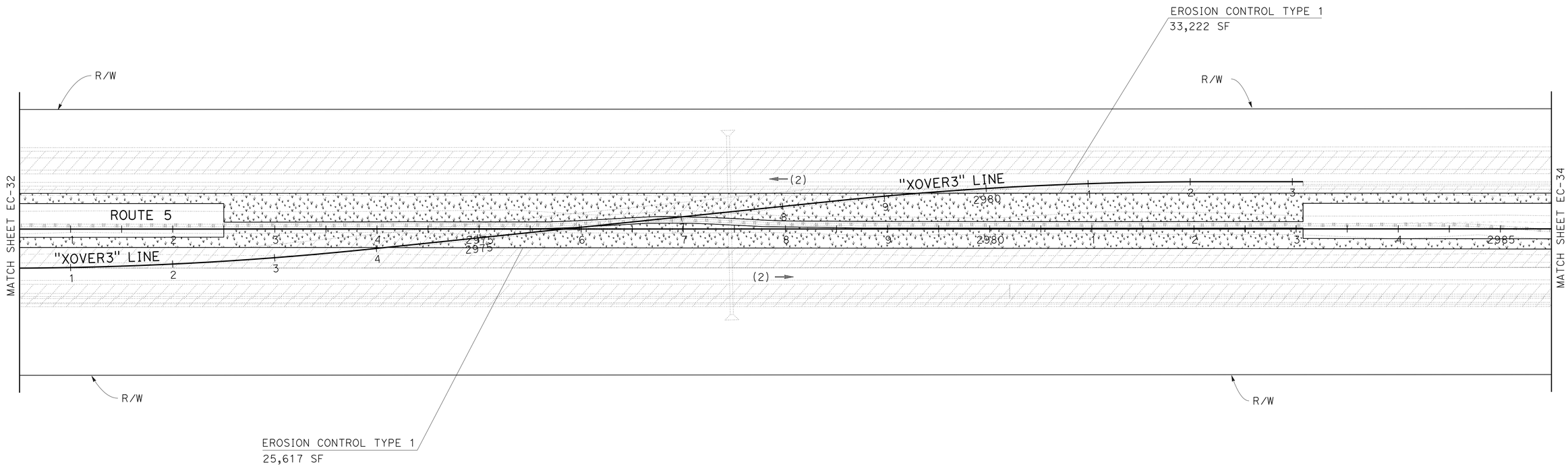

EROSION CONTROL PLAN
(STAGE 1)

NO SCALE

EC-33

REVISED BY	DATE REVISED

CALCULATED-DESIGNED BY: KEVIN GALLO
CHECKED BY: RAYMOND SEGURA
SENIOR LANDSCAPE ARCHITECT: BRAD COLE

STATE OF CALIFORNIA - DEPARTMENT OF TRANSPORTATION
Caltrans® LANDSCAPE ARCHITECTURE

LAST REVISION 06-10-14
DATE PLOTTED => 24-JUL-2014
TIME PLOTTED => 10:06

Dist	COUNTY	ROUTE	POST MILES TOTAL PROJECT	SHEET No.	TOTAL SHEETS
06	Ker	5	62.5/73.1	142	213

LICENSED LANDSCAPE ARCHITECT

6-16-14
PLANS APPROVAL DATE

LICENSED LANDSCAPE ARCHITECT
KEVIN GALLO No. 2556
Expiration Date 12/31/15
Renewal Date 06/10/14
Date
STATE OF CALIFORNIA

THE STATE OF CALIFORNIA OR ITS OFFICERS OR AGENTS SHALL NOT BE RESPONSIBLE FOR THE ACCURACY OR COMPLETENESS OF SCANNED COPIES OF THIS PLAN SHEET.

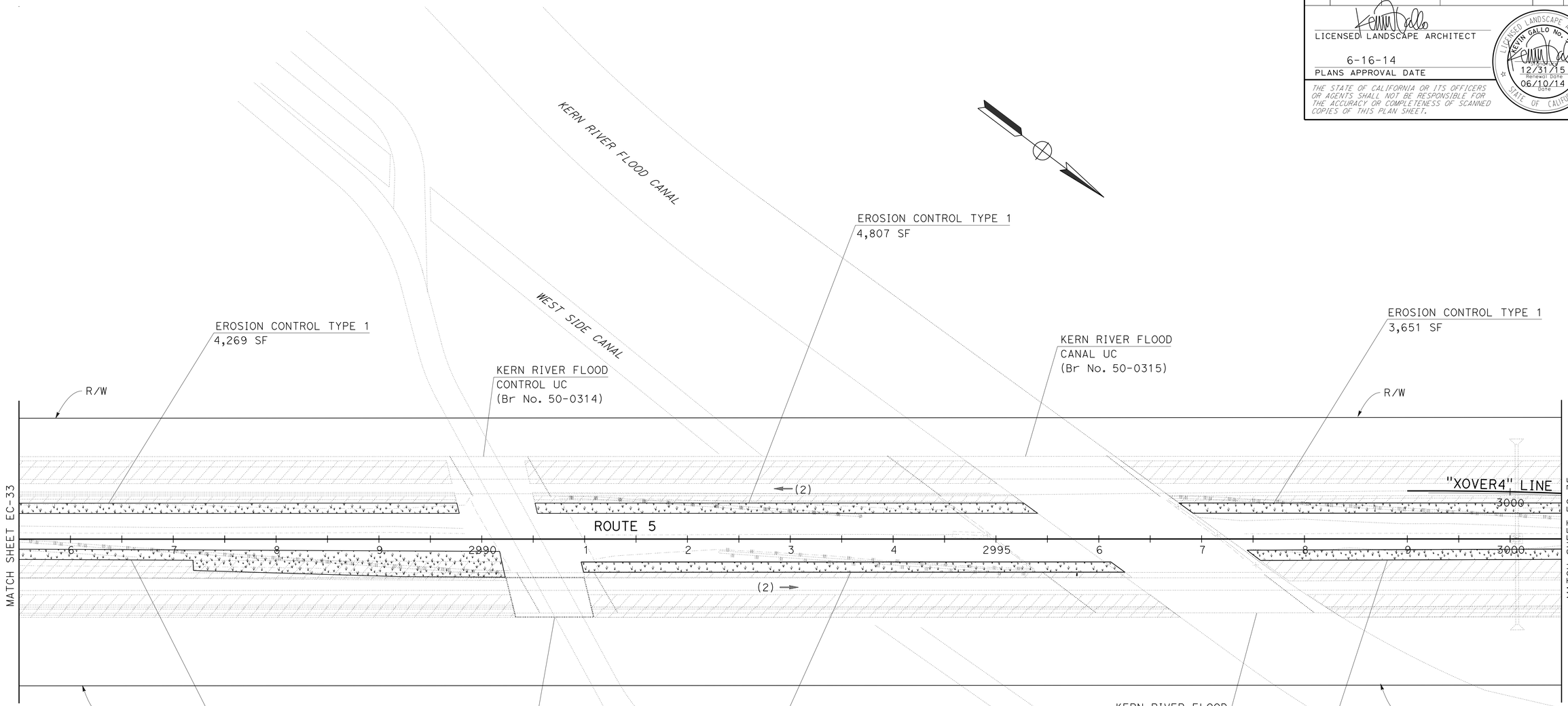

EROSION CONTROL PLAN
(STAGE 1)

NO SCALE

EC-34

REVISED BY	DATE REVISED
KEVIN GALLO	
RAYMOND SEGURA	

CALCULATED-DESIGNED BY
CHECKED BY

SENIOR LANDSCAPE ARCHITECT
BRAD COLE

STATE OF CALIFORNIA - DEPARTMENT OF TRANSPORTATION
Caltrans® LANDSCAPE ARCHITECTURE

LAST REVISION OG-10-14
DATE PLOTTED => 24-JUL-2014
TIME PLOTTED => 10:06

Dist	COUNTY	ROUTE	POST MILES TOTAL PROJECT	SHEET No.	TOTAL SHEETS
06	Ker	5	62.5/73.1	143	213

LICENSED LANDSCAPE ARCHITECT

6-16-14
PLANS APPROVAL DATE

LICENSED LANDSCAPE ARCHITECT
KEVIN GALLO No. 2525
Date Signed 12/31/15
Renewal Date
06/10/14
Date
STATE OF CALIFORNIA

THE STATE OF CALIFORNIA OR ITS OFFICERS OR AGENTS SHALL NOT BE RESPONSIBLE FOR THE ACCURACY OR COMPLETENESS OF SCANNED COPIES OF THIS PLAN SHEET.

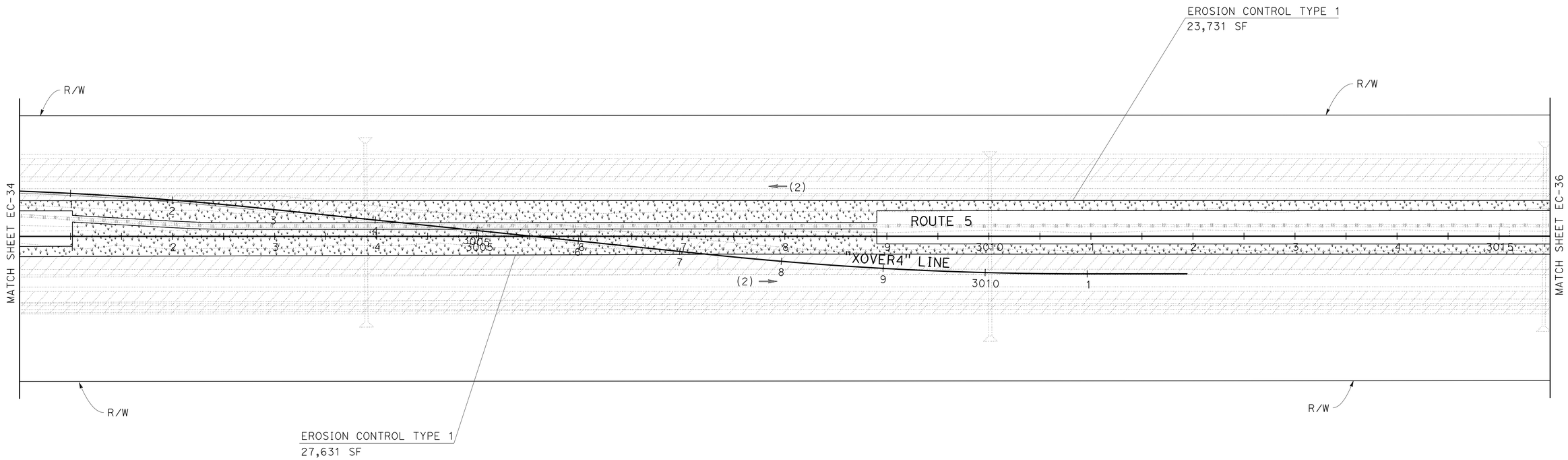

EROSION CONTROL PLAN
(STAGE 1)

NO SCALE

EC-35

REVISED BY	DATE REVISED

CALCULATED-DESIGNED BY: KEVIN GALLO
CHECKED BY: RAYMOND SEGURA
SENIOR LANDSCAPE ARCHITECT: BRAD COLE

STATE OF CALIFORNIA - DEPARTMENT OF TRANSPORTATION
Caltrans® LANDSCAPE ARCHITECTURE

LAST REVISION 06-10-14
DATE PLOTTED => 24-JUL-2014
TIME PLOTTED => 10:06

Dist	COUNTY	ROUTE	POST MILES TOTAL PROJECT	SHEET No.	TOTAL SHEETS
06	Ker	5	62.5/73.1	144	213

LICENSED LANDSCAPE ARCHITECT

6-16-14
PLANS APPROVAL DATE

LICENSED LANDSCAPE ARCHITECT
KEVIN GALLO No. 2556
Expiration Date
12/31/15
Renewal Date
06/10/14
Date
STATE OF CALIFORNIA

THE STATE OF CALIFORNIA OR ITS OFFICERS OR AGENTS SHALL NOT BE RESPONSIBLE FOR THE ACCURACY OR COMPLETENESS OF SCANNED COPIES OF THIS PLAN SHEET.

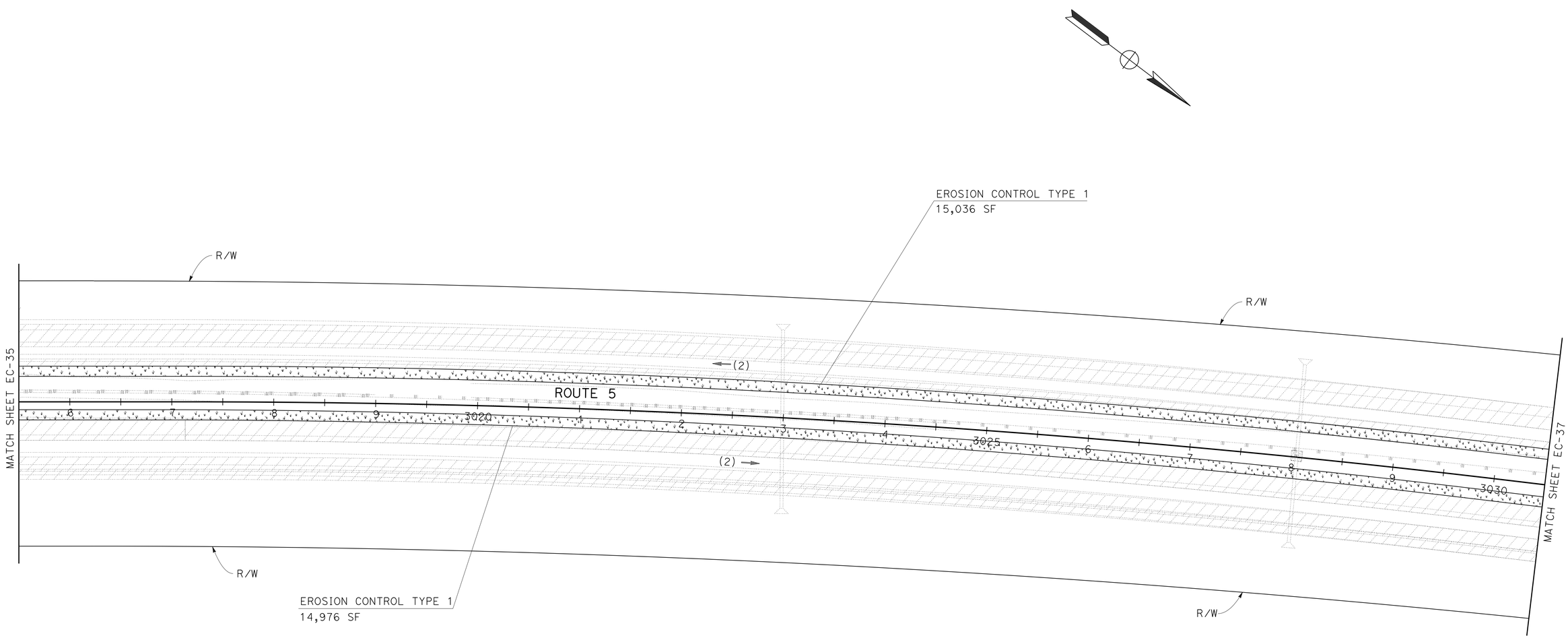

EROSION CONTROL PLAN
(STAGE 1)

NO SCALE

EC-36

REVISED BY | DATE REVISED

KEVIN GALLO
RAYMOND SEGURA

CALCULATED-DESIGNED BY
CHECKED BY

SENIOR LANDSCAPE ARCHITECT
BRAD COLE

STATE OF CALIFORNIA - DEPARTMENT OF TRANSPORTATION
Caltrans® LANDSCAPE ARCHITECTURE

LAST REVISION 06-10-14 | DATE PLOTTED => 24-JUL-2014 | TIME PLOTTED => 10:06

Dist	COUNTY	ROUTE	POST MILES TOTAL PROJECT	SHEET No.	TOTAL SHEETS
06	Ker	5	62.5/73.1	145	213

LICENSED LANDSCAPE ARCHITECT

6-16-14
PLANS APPROVAL DATE

LICENSED LANDSCAPE ARCHITECT
KEVIN GALLO No. 2556
Expiration Date 12/31/15
Renewal Date
06/10/14
Date
STATE OF CALIFORNIA

THE STATE OF CALIFORNIA OR ITS OFFICERS OR AGENTS SHALL NOT BE RESPONSIBLE FOR THE ACCURACY OR COMPLETENESS OF SCANNED COPIES OF THIS PLAN SHEET.

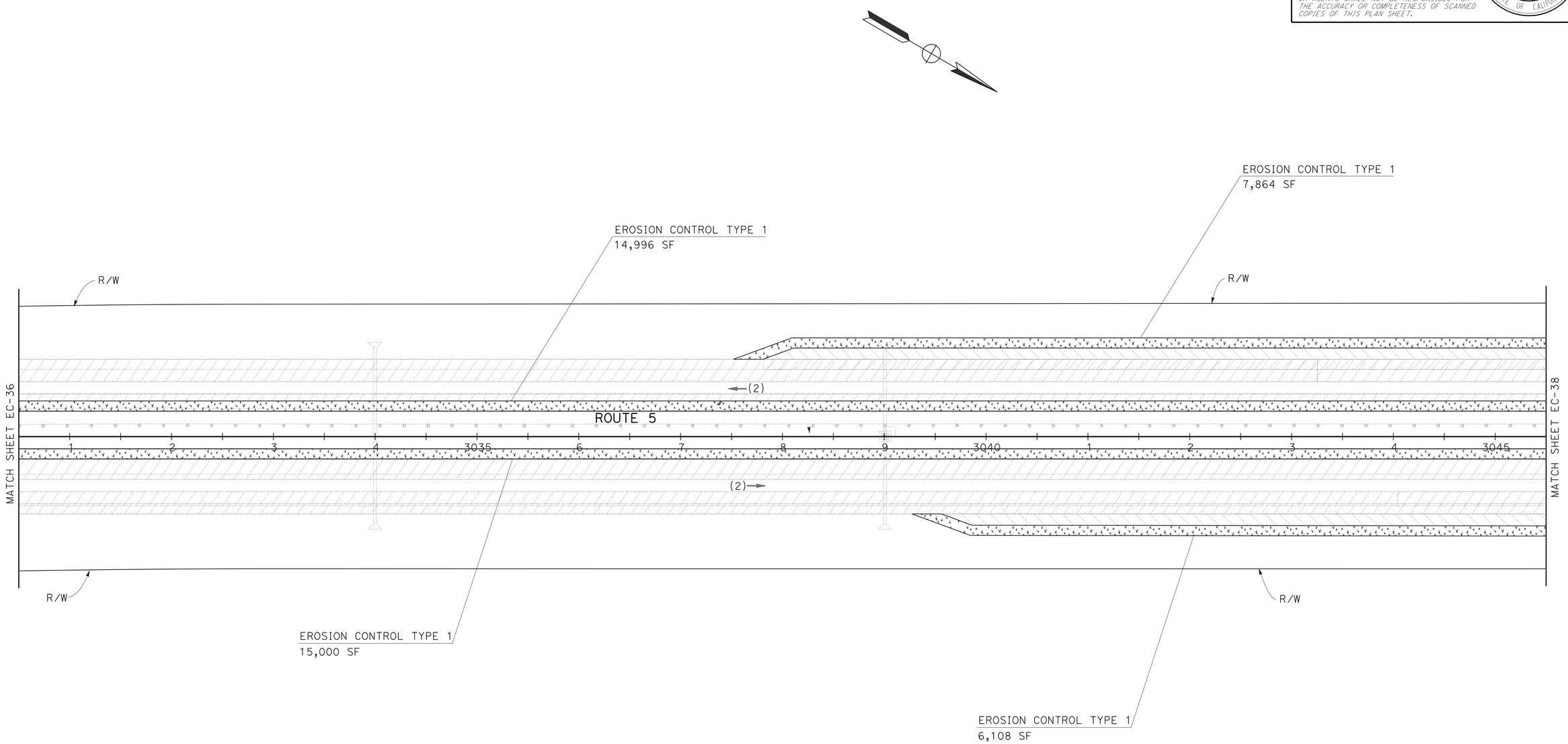

EROSION CONTROL PLAN
(STAGE 1)

NO SCALE

EC-37

REVISED BY | DATE REVISED

KEVIN GALLO | RAYMOND SEGURA

CALCULATED-DESIGNED BY | CHECKED BY

SENIOR LANDSCAPE ARCHITECT: BRAD COLE

STATE OF CALIFORNIA - DEPARTMENT OF TRANSPORTATION
Caltrans® LANDSCAPE ARCHITECTURE

LAST REVISION 06-10-14 | DATE PLOTTED => 24-JUL-2014 | TIME PLOTTED => 10:06

Dist	COUNTY	ROUTE	POST MILES TOTAL PROJECT	SHEET No.	TOTAL SHEETS
06	Ker	5	62.5/73.1	146	213

LICENSED LANDSCAPE ARCHITECT

6-16-14
PLANS APPROVAL DATE

LICENSED LANDSCAPE ARCHITECT
KEVIN GALLO No. 2556
Expiration Date 12/31/15
Renewal Date 06/10/14
Date
STATE OF CALIFORNIA

THE STATE OF CALIFORNIA OR ITS OFFICERS OR AGENTS SHALL NOT BE RESPONSIBLE FOR THE ACCURACY OR COMPLETENESS OF SCANNED COPIES OF THIS PLAN SHEET.

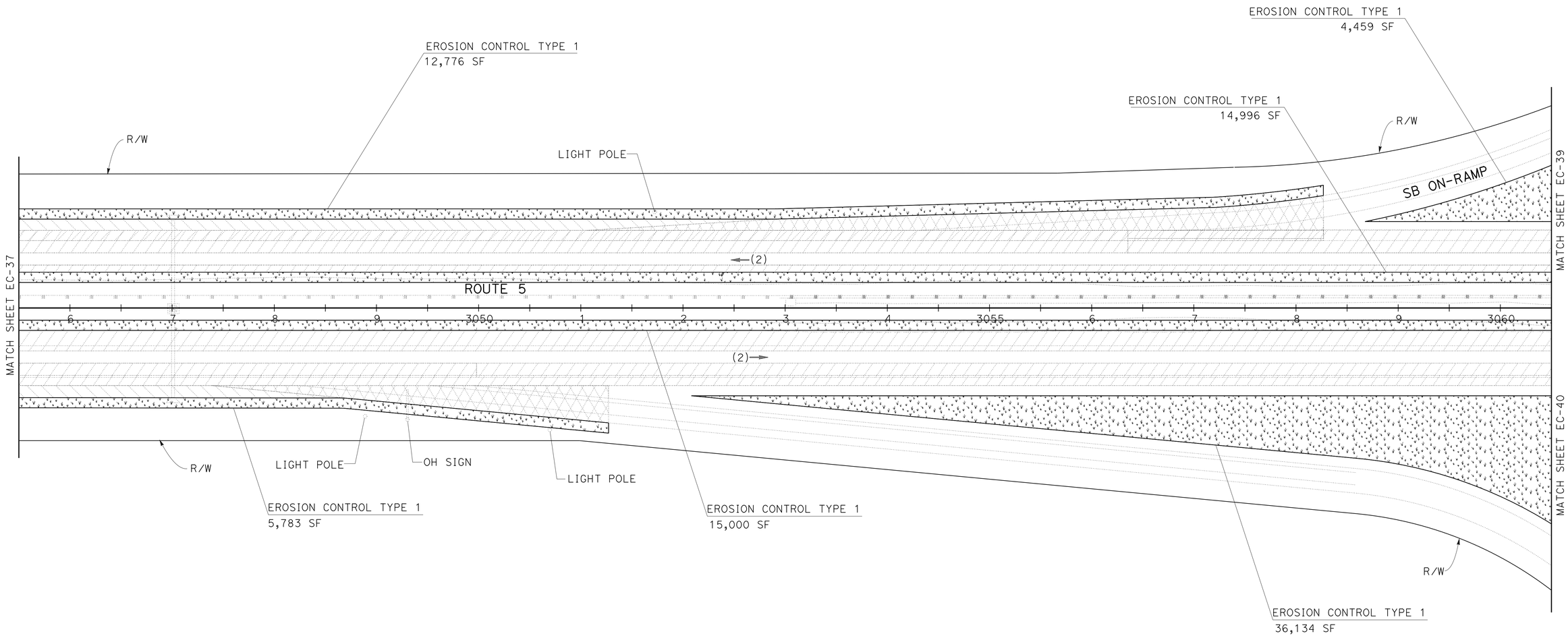

EROSION CONTROL PLAN
(STAGE 1)

NO SCALE

EC-38

STATE OF CALIFORNIA - DEPARTMENT OF TRANSPORTATION
Caltrans® LANDSCAPE ARCHITECTURE

SENIOR LANDSCAPE ARCHITECT: BRAD COLE
CALCULATED-DESIGNED BY: KEVIN GALLO
CHECKED BY: RAYMOND SEGURA
REVISED BY
DATE REVISED

LAST REVISION 06-10-14
DATE PLOTTED => 24-JUL-2014
TIME PLOTTED => 10:06

Dist	COUNTY	ROUTE	POST MILES TOTAL PROJECT	SHEET No.	TOTAL SHEETS
06	Ker	5	62.5/73.1	147	213

LICENSED LANDSCAPE ARCHITECT

6-16-14
PLANS APPROVAL DATE

LICENSED LANDSCAPE ARCHITECT
KEVIN GALLO No. 2556
Expires 12/31/15
Renewal Date
06/10/14
Date
STATE OF CALIFORNIA

THE STATE OF CALIFORNIA OR ITS OFFICERS OR AGENTS SHALL NOT BE RESPONSIBLE FOR THE ACCURACY OR COMPLETENESS OF SCANNED COPIES OF THIS PLAN SHEET.

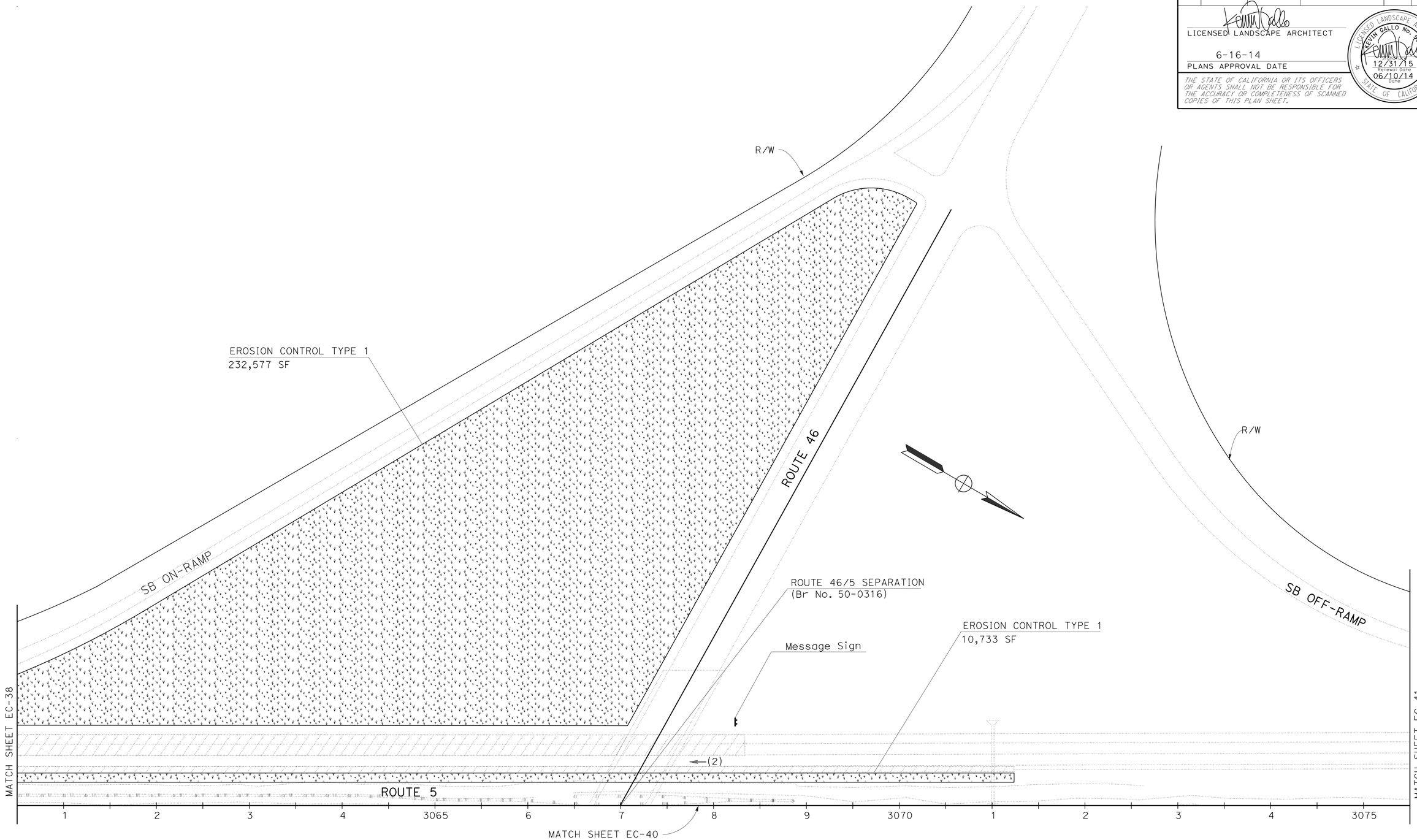

EROSION CONTROL PLAN
(STAGE 1)

NO SCALE

EC-39

REVISED BY | DATE REVISED
KEVIN GALLO | RAYMOND SEGURA
CALCULATED-DESIGNED BY | CHECKED BY
SENIOR LANDSCAPE ARCHITECT | BRAD COLE

STATE OF CALIFORNIA - DEPARTMENT OF TRANSPORTATION
Caltrans® LANDSCAPE ARCHITECTURE

LAST REVISION 06-10-14 | DATE PLOTTED => 24-JUL-2014 | TIME PLOTTED => 10:06

Dist	COUNTY	ROUTE	POST MILES TOTAL PROJECT	SHEET No.	TOTAL SHEETS
06	Ker	5	62.5/73.1	148	213

LICENSED LANDSCAPE ARCHITECT

6-16-14
PLANS APPROVAL DATE

LICENSED LANDSCAPE ARCHITECT
KEVIN GALLO No. 2556
Expiration Date 12/31/15
Renewal Date 06/10/14
Date
STATE OF CALIFORNIA

THE STATE OF CALIFORNIA OR ITS OFFICERS OR AGENTS SHALL NOT BE RESPONSIBLE FOR THE ACCURACY OR COMPLETENESS OF SCANNED COPIES OF THIS PLAN SHEET.

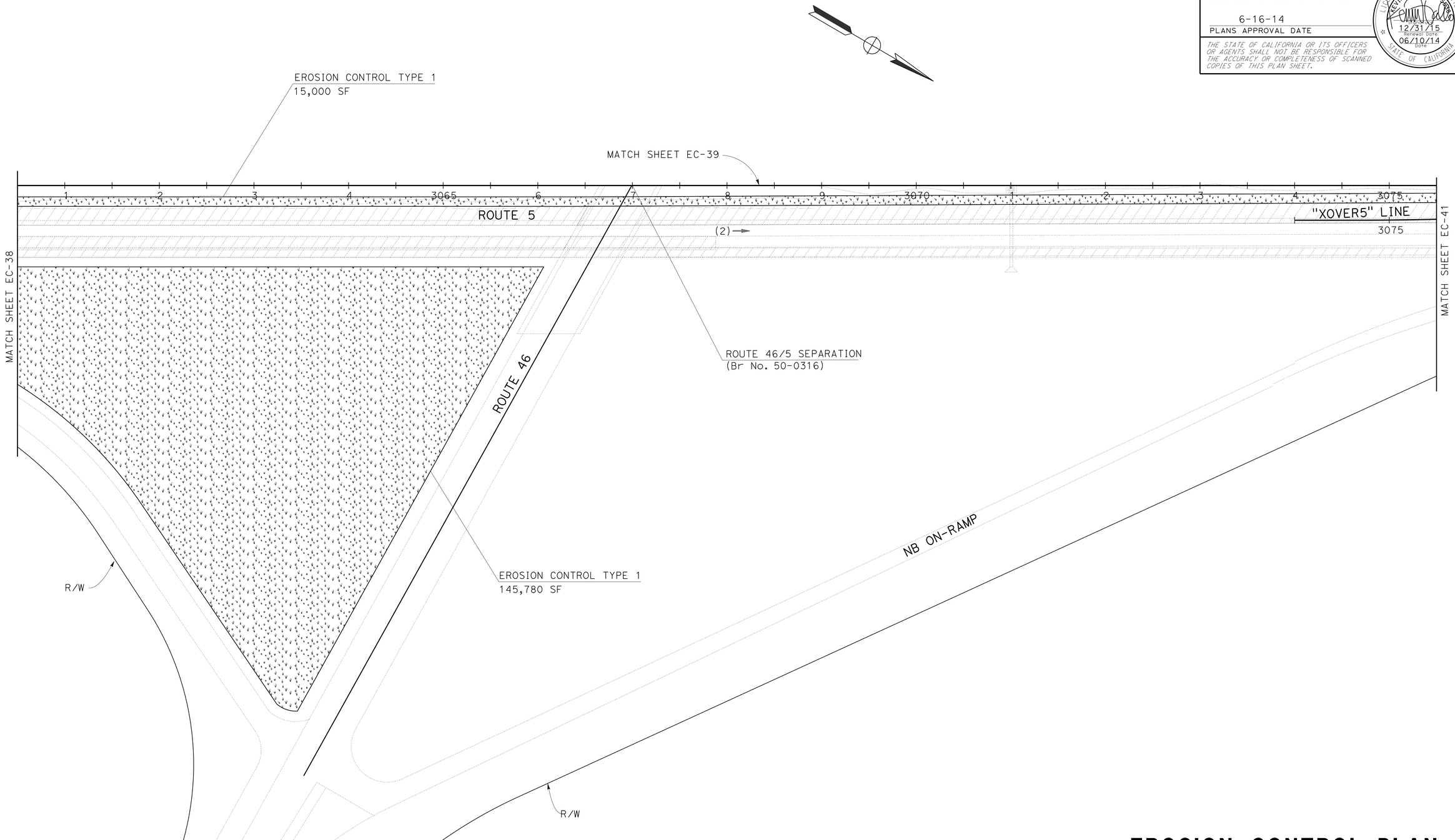

EROSION CONTROL PLAN
(STAGE 1)

NO SCALE

EC-40

REVISED BY	DATE REVISED

KEVIN GALLO — CALCULATED-DESIGNED BY
RAYMOND SEGURA — CHECKED BY
BRAD COLE — SENIOR LANDSCAPE ARCHITECT

STATE OF CALIFORNIA - DEPARTMENT OF TRANSPORTATION
Caltrans® LANDSCAPE ARCHITECTURE

LAST REVISION 06-10-14
DATE PLOTTED => 24-JUL-2014
TIME PLOTTED => 10:06

Dist	COUNTY	ROUTE	POST MILES TOTAL PROJECT	SHEET No.	TOTAL SHEETS
06	Ker	5	62.5/73.1	149	213

LICENSED LANDSCAPE ARCHITECT

6-16-14
PLANS APPROVAL DATE

LICENSED LANDSCAPE ARCHITECT
KEVIN GALLO No. 2556
Expiration Date 12/31/15
Renewal Date 06/10/14
Date
STATE OF CALIFORNIA

THE STATE OF CALIFORNIA OR ITS OFFICERS OR AGENTS SHALL NOT BE RESPONSIBLE FOR THE ACCURACY OR COMPLETENESS OF SCANNED COPIES OF THIS PLAN SHEET.

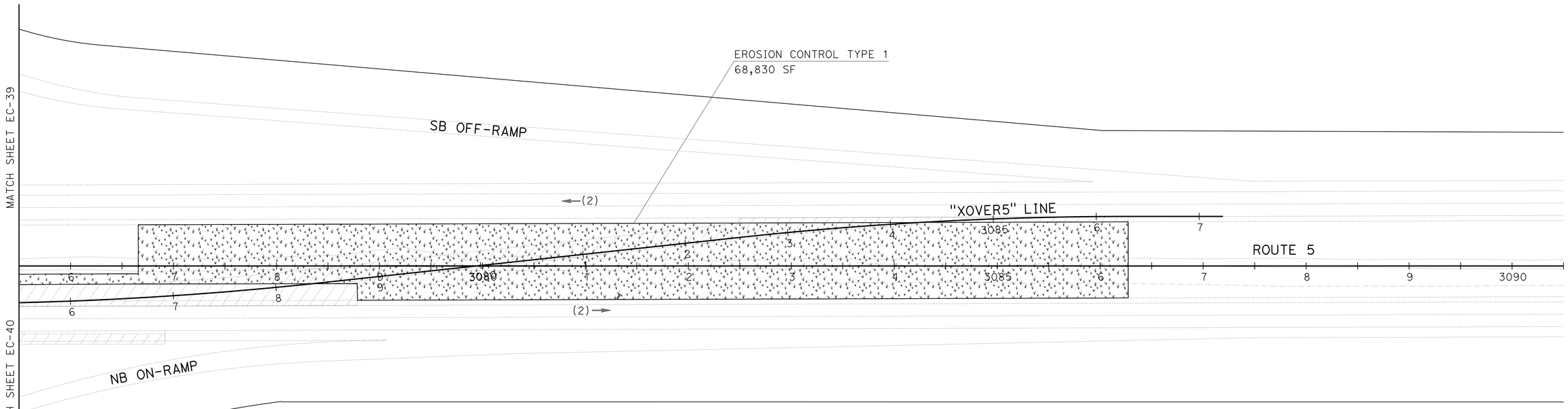

EROSION CONTROL PLAN
(STAGE 1)

NO SCALE

EC-41

REVISED BY | DATE REVISED

KEVIN GALLO | RAYMOND SEGURA

CALCULATED-DESIGNED BY | CHECKED BY

SENIOR LANDSCAPE ARCHITECT | BRAD COLE

STATE OF CALIFORNIA - DEPARTMENT OF TRANSPORTATION

Caltrans® LANDSCAPE ARCHITECTURE

LAST REVISION 06-10-14 | DATE PLOTTED => 24-JUL-2014 | TIME PLOTTED => 10:06

Dist	COUNTY	ROUTE	POST MILES TOTAL PROJECT	SHEET No.	TOTAL SHEETS
06	Ker	5	62.5/73.1	150	213

REGISTERED ELECTRICAL ENGINEER 6-16-14 DATE

6-16-14
PLANS APPROVAL DATE

REGISTERED PROFESSIONAL ENGINEER HASHIM KHALID No. 18054 Exp. 6/30/15 ELECTRICAL STATE OF CALIFORNIA

THE STATE OF CALIFORNIA OR ITS OFFICERS OR AGENTS SHALL NOT BE RESPONSIBLE FOR THE ACCURACY OR COMPLETENESS OF SCANNED COPIES OF THIS PLAN SHEET.

LEGEND: (FOR SHEETS E-1 THROUGH E-4)

1 120/240 V, 1ø, 3-WIRE, TYPE III-BF SERVICE EQUIPMENT ENCLOSURE WITH THE FOLLOWING CIRCUIT BREAKERS:

Ctid No. 06500050062520L

AMPERES	VOLTS	POLES	NAMEPLATE	METER	PHOTOELECTRIC CONTROL TYPE
100	240	2	MAIN BREAKER	YES	——
30	240	2	HIGHWAY LIGHTING N	YES	V
30	240	2	HIGHWAY LIGHTING S	YES	V
15	120	1	HIGHWAY LIGHTING CONTROL	YES	——
30	240	2	STREET LIGHTING E	YES	V
30	240	2	STREET LIGHTING W	YES	V
15	120	1	STREET LIGHTING CONTROL	YES	——
30	240	2	SPARE	YES	——
20	120	1	SPARE	YES	——

2 RC Exist TYPE J SERVICE. COORDINATE REMOVAL WITH PG&E.

3 PG&E APPROVED PULL BOX.

4 RS Exist 200 W HPS Lum. INSTALL 165 W LED Lum.

NOTES:

1. ALL PULL BOXES MUST BE No. 5(T)(E) UNLESS OTHERWISE NOTED.
2. FOR ACCURATE RIGHT OF WAY DATA, CONTACT RIGHT OF WAY ENGINEERING AT THE DISTRICT OFFICE.

ABBREVATION

PG&E PACIFIC GAS AND ELECTRIC COMPANY

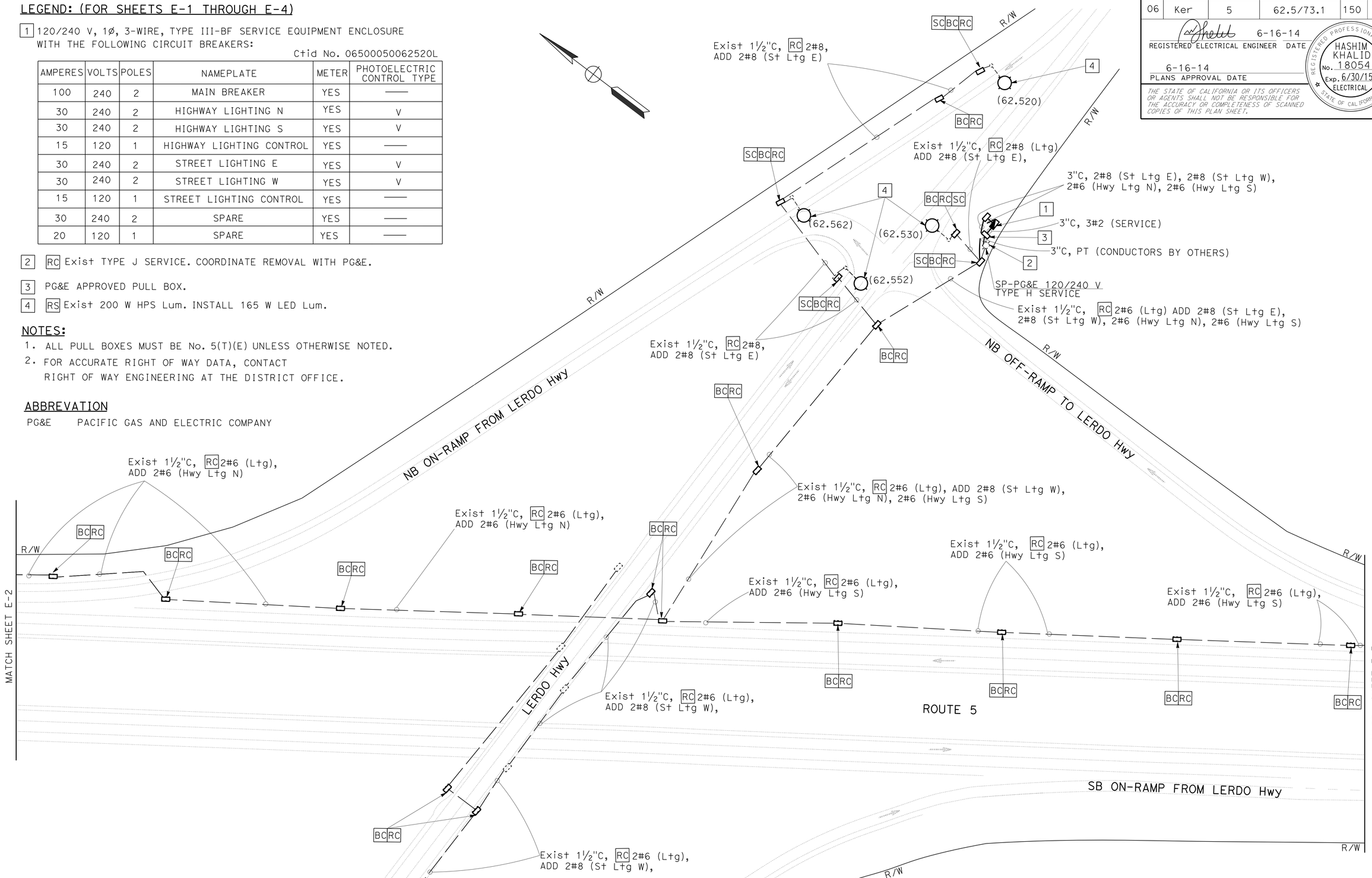

APPROVED FOR ELECTRICAL WORK ONLY

SCALE: 1" = 50'

MODIFY LIGHTING
E-1

STATE OF CALIFORNIA - DEPARTMENT OF TRANSPORTATION
Caltrans ELECTRICAL DESIGN

FUNCTIONAL SUPERVISOR: ALI BAKHDOUD
CALCULATED-DESIGNED BY: GURVINDERJIT S. BAINS
CHECKED BY: HASHIM M. KHALID
REVISED BY / DATE REVISED

LAST REVISION 06-16-14
DATE PLOTTED => 25-JUN-2014
TIME PLOTTED => 21:40

Dist	COUNTY	ROUTE	POST MILES TOTAL PROJECT	SHEET No.	TOTAL SHEETS
06	Ker	5	62.5/73.1	151	213

REGISTERED ELECTRICAL ENGINEER 6-16-14 DATE

6-16-14
PLANS APPROVAL DATE

REGISTERED PROFESSIONAL ENGINEER HASHIM KHALID No. 18054 Exp. 6/30/15 ELECTRICAL STATE OF CALIFORNIA

THE STATE OF CALIFORNIA OR ITS OFFICERS OR AGENTS SHALL NOT BE RESPONSIBLE FOR THE ACCURACY OR COMPLETENESS OF SCANNED COPIES OF THIS PLAN SHEET.

NOTES:

1. ALL PULL BOXES MUST BE No. 5(T)(E) UNLESS OTHERWISE NOTED.
2. FOR ACCURATE RIGHT OF WAY DATA, CONTACT RIGHT OF WAY ENGINEERING AT THE DISTRICT OFFICE.
3. FOR LEGEND SEE SHEET E-1.

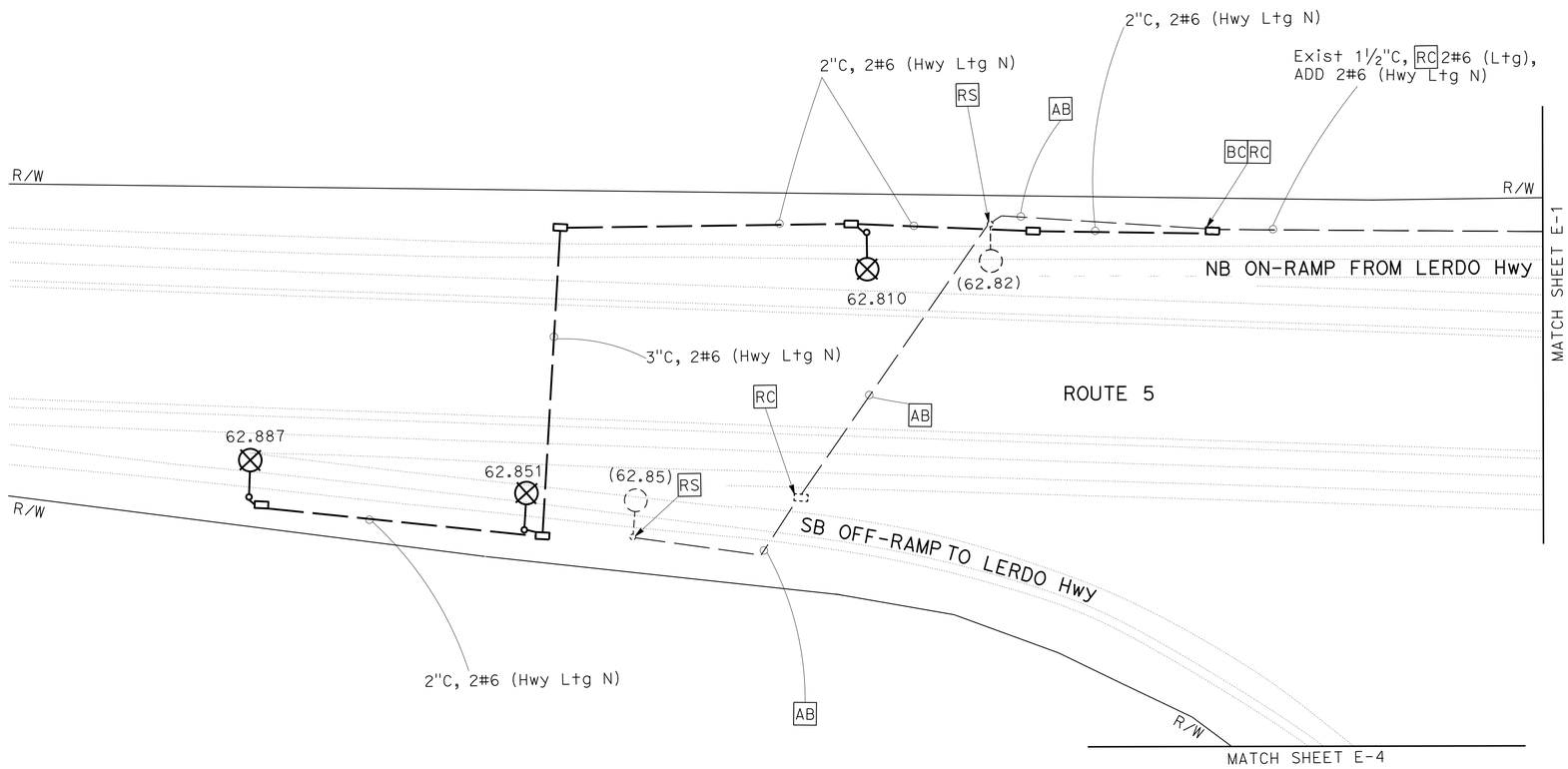

APPROVED FOR ELECTRICAL WORK ONLY

SCALE: 1" = 50'

MODIFY LIGHTING
E-2

STATE OF CALIFORNIA - DEPARTMENT OF TRANSPORTATION
Caltrans
ELECTRICAL DESIGN

FUNCTIONAL SUPERVISOR: ALI BAKHDOUD
CALCULATED-DESIGNED BY: GURVINDERJIT S. BAINS
CHECKED BY: HASHIM M. KHALID
REVISED BY
DATE REVISED

LAST REVISION 06-16-14
DATE PLOTTED => 25-JUN-2014
TIME PLOTTED => 21:40

Dist	COUNTY	ROUTE	POST MILES TOTAL PROJECT	SHEET No.	TOTAL SHEETS
06	Ker	5	62.5/73.1	152	213

REGISTERED ELECTRICAL ENGINEER 6-16-14 DATE

6-16-14
PLANS APPROVAL DATE

REGISTERED PROFESSIONAL ENGINEER HASHIM KHALID No. 18054 Exp. 6/30/15 ELECTRICAL STATE OF CALIFORNIA

THE STATE OF CALIFORNIA OR ITS OFFICERS OR AGENTS SHALL NOT BE RESPONSIBLE FOR THE ACCURACY OR COMPLETENESS OF SCANNED COPIES OF THIS PLAN SHEET.

NOTES:

1. ALL PULL BOXES MUST BE No. 5(T)(E) UNLESS OTHERWISE NOTED.
2. FOR ACCURATE RIGHT OF WAY DATA, CONTACT RIGHT OF WAY ENGINEERING AT THE DISTRICT OFFICE.
3. FOR LEGEND SEE SHEET E-1.

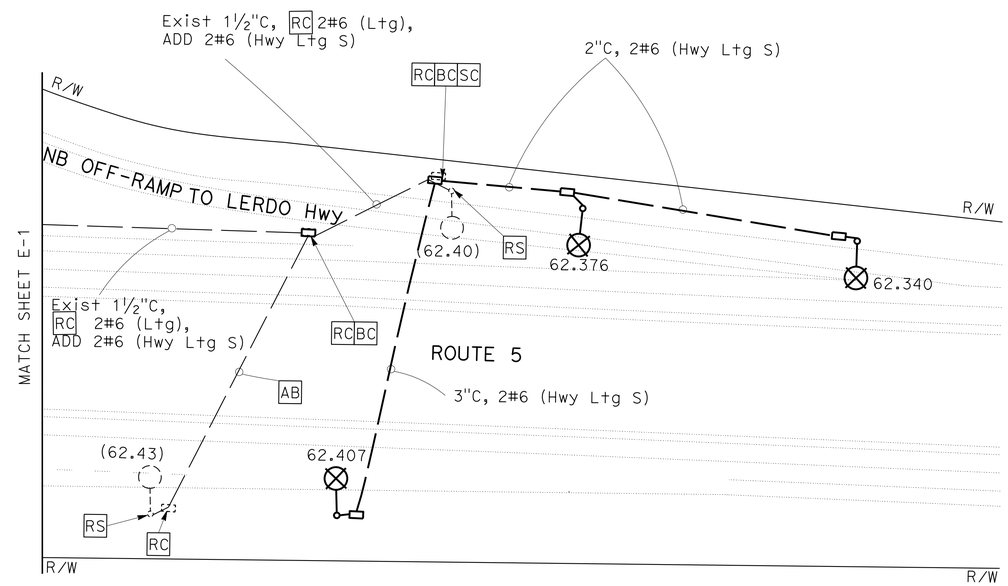

APPROVED FOR ELECTRICAL WORK ONLY

SCALE: 1" = 50'

MODIFY LIGHTING
E-3

STATE OF CALIFORNIA - DEPARTMENT OF TRANSPORTATION
Caltrans® ELECTRICAL DESIGN

FUNCTIONAL SUPERVISOR: ALI BAKHDOUD
CALCULATED-DESIGNED BY: GURVINDERJIT S. BAINS
CHECKED BY: HASHIM M. KHALID
REVISED BY
DATE REVISED

LAST REVISION 06-16-14
DATE PLOTTED => 25-JUN-2014
TIME PLOTTED => 21:40

Dist	COUNTY	ROUTE	POST MILES TOTAL PROJECT	SHEET No.	TOTAL SHEETS
06	Ker	5	62.5/73.1	153	213

REGISTERED ELECTRICAL ENGINEER 6-16-14 DATE

6-16-14
PLANS APPROVAL DATE

REGISTERED PROFESSIONAL ENGINEER HASHIM KHALID No. 18054 Exp. 6/30/15 ELECTRICAL STATE OF CALIFORNIA

THE STATE OF CALIFORNIA OR ITS OFFICERS OR AGENTS SHALL NOT BE RESPONSIBLE FOR THE ACCURACY OR COMPLETENESS OF SCANNED COPIES OF THIS PLAN SHEET.

NOTES:

1. ALL PULL BOXES MUST BE No. 5(T)(E) UNLESS OTHERWISE NOTED.
2. FOR ACCURATE RIGHT OF WAY DATA, CONTACT RIGHT OF WAY ENGINEERING AT THE DISTRICT OFFICE.
3. FOR LEGEND SEE SHEET E-1.

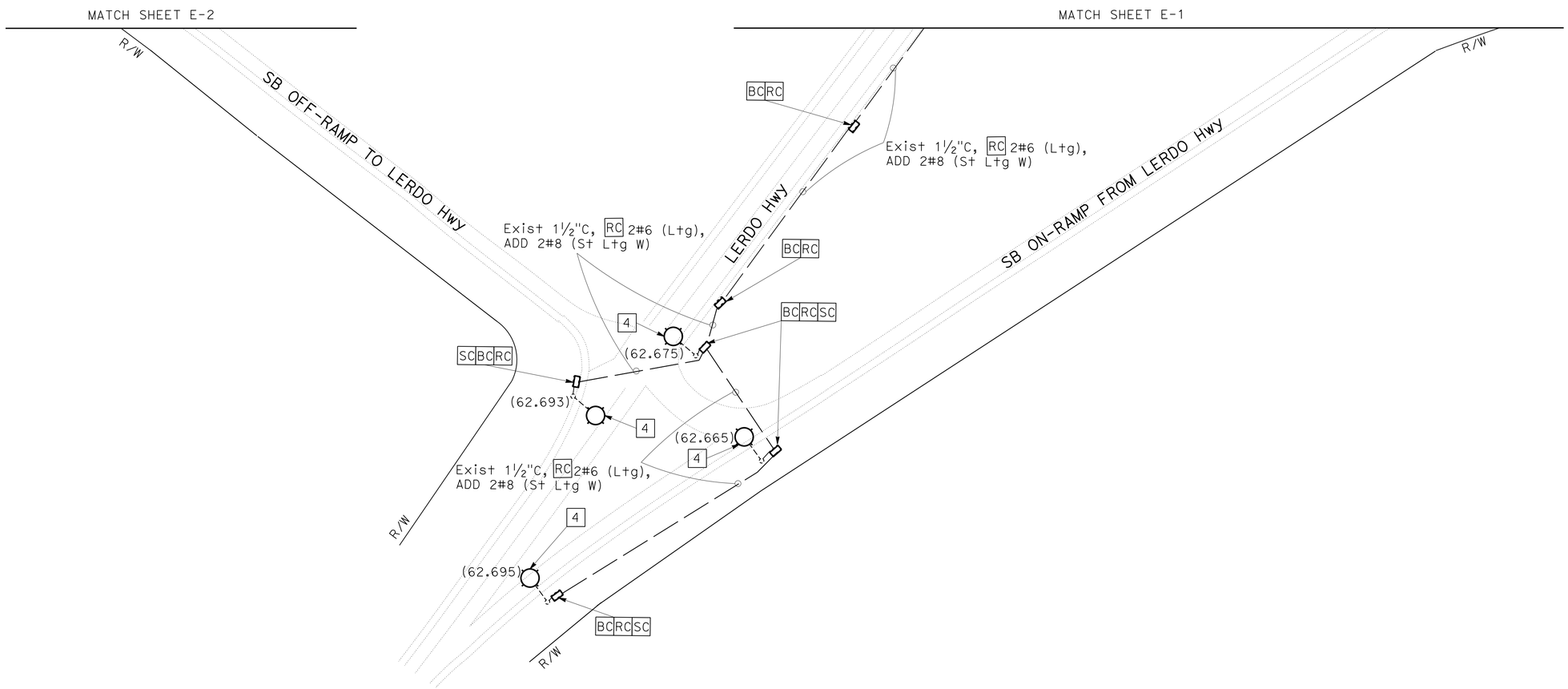

APPROVED FOR ELECTRICAL WORK ONLY

SCALE: 1" = 50'

MODIFY LIGHTING
E-4

STATE OF CALIFORNIA - DEPARTMENT OF TRANSPORTATION
Caltrans® ELECTRICAL DESIGN

FUNCTIONAL SUPERVISOR: ALI BAKHDOUD
CALCULATED-DESIGNED BY: GURVINDERJIT S. BAINS
CHECKED BY: HASHIM M. KHALID
REVISED BY
DATE REVISED

LAST REVISION 06-16-14
DATE PLOTTED => 25-JUN-2014
TIME PLOTTED => 21:40

Dist	COUNTY	ROUTE	POST MILES TOTAL PROJECT	SHEET No.	TOTAL SHEETS
06	Ker	5	62.5/73.1	154	213

REGISTERED ELECTRICAL ENGINEER 6-16-14 DATE

6-16-14
PLANS APPROVAL DATE

REGISTERED PROFESSIONAL ENGINEER HASHIM KHALID No. 18054 Exp. 6/30/15 ELECTRICAL STATE OF CALIFORNIA

THE STATE OF CALIFORNIA OR ITS OFFICERS OR AGENTS SHALL NOT BE RESPONSIBLE FOR THE ACCURACY OR COMPLETENESS OF SCANNED COPIES OF THIS PLAN SHEET.

LEGEND:(FOR THIS SHEET ONLY)

1 120/240V, 1Ø, 3-WIRE, TYPE III-CF SERVICE EQUIPMENT ENCLOSURE WITH FOLOWING CIRCUIT BREAKERS:

Ctid No. 06500460052400T

AMPERES	VOLTS	POLES	NAME PLATE	METER	PHOTO ELECTRIC CONTROL
100	240	2	MAIN BREAKER	YES	——
60	120	1	TRAFFIC SIGNAL	YES	——
40	120	1	HAR	YES	——
15	120	1	EMS	YES	——
20	120	1	FLASHING BEACON	YES	——
40	120	1	TRAFFIC MONITORING STATION	YES	——
20	120	1	SPARE	YES	——
——	——	6	SPACE	YES	——

Ctid No. 06500460052400L

AMPERES	VOLTS	POLES	NAME PLATE	METER	PHOTO ELECTRIC CONTROL
100	240	2	MAIN BREAKER	YES	——
30	240	2	HIGHWAY LIGHTING N	YES	V
30	240	2	HIGHWAY LIGHTING S	YES	V
20	240	2	SIGN LIGHTING	YES	LC3
15	120	1	HIGHWAY LIGHTING CONTROL	YES	——
20	240	2	SPARE	YES	——
——	——	6	SPACE	YES	——

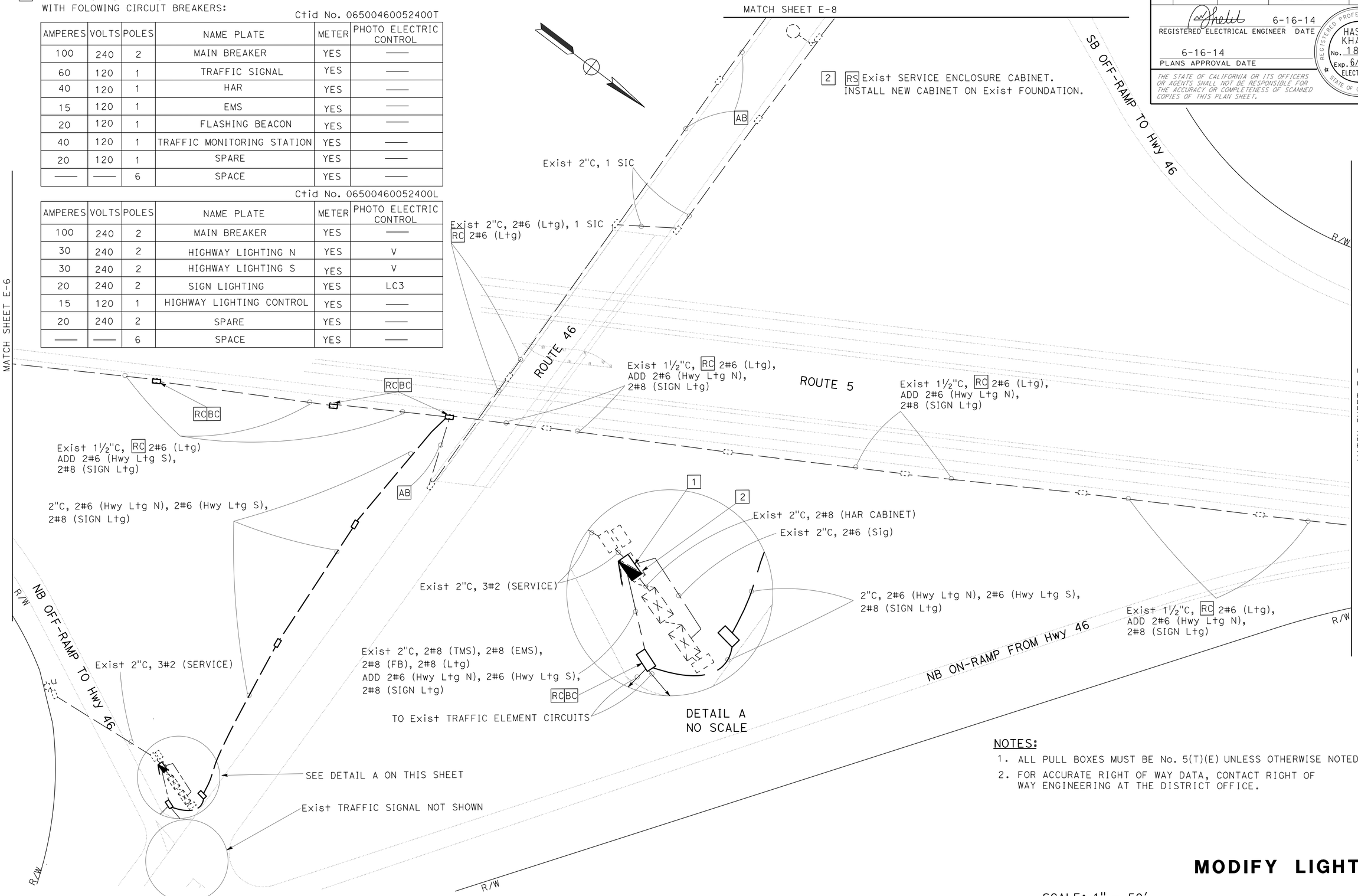

NOTES:

1. ALL PULL BOXES MUST BE No. 5(T)(E) UNLESS OTHERWISE NOTED.
2. FOR ACCURATE RIGHT OF WAY DATA, CONTACT RIGHT OF WAY ENGINEERING AT THE DISTRICT OFFICE.

MODIFY LIGHTING
E-5

SCALE: 1" = 50'

APPROVED FOR ELECTRICAL WORK ONLY

STATE OF CALIFORNIA - DEPARTMENT OF TRANSPORTATION
Caltrans ELECTRICAL DESIGN

FUNCTIONAL SUPERVISOR: ALI BAKHDOUD
CALCULATED-DESIGNED BY: GURVINDERJIT S. BAINS
CHECKED BY: HASHIM M. KHALID
REVISED BY / DATE REVISED

LAST REVISION 06-16-14
DATE PLOTTED => 25-JUN-2014
TIME PLOTTED => 21:40

Dist	COUNTY	ROUTE	POST MILES TOTAL PROJECT	SHEET No.	TOTAL SHEETS
06	Ker	5	62.5/73.1	155	213

REGISTERED ELECTRICAL ENGINEER 6-16-14 DATE

6-16-14
PLANS APPROVAL DATE

REGISTERED PROFESSIONAL ENGINEER HASHIM KHALID No. 18054 Exp. 6/30/15 ELECTRICAL STATE OF CALIFORNIA

THE STATE OF CALIFORNIA OR ITS OFFICERS OR AGENTS SHALL NOT BE RESPONSIBLE FOR THE ACCURACY OR COMPLETENESS OF SCANNED COPIES OF THIS PLAN SHEET.

LEGEND: (FOR THIS SHEET ONLY)

1 RC Exist TYPE SC1 CONTROL. INSTALL LC3 CONTROL.

2 RC 480/120 V STEP DOWN TRANSFORMER.

NOTES:

1. ALL PULL BOXES MUST BE No. 5(T)(E) UNLESS OTHERWISE NOTED.
2. FOR ACCURATE RIGHT OF WAY DATA, CONTACT RIGHT OF WAY ENGINEERING AT THE DISTRICT OFFICE.

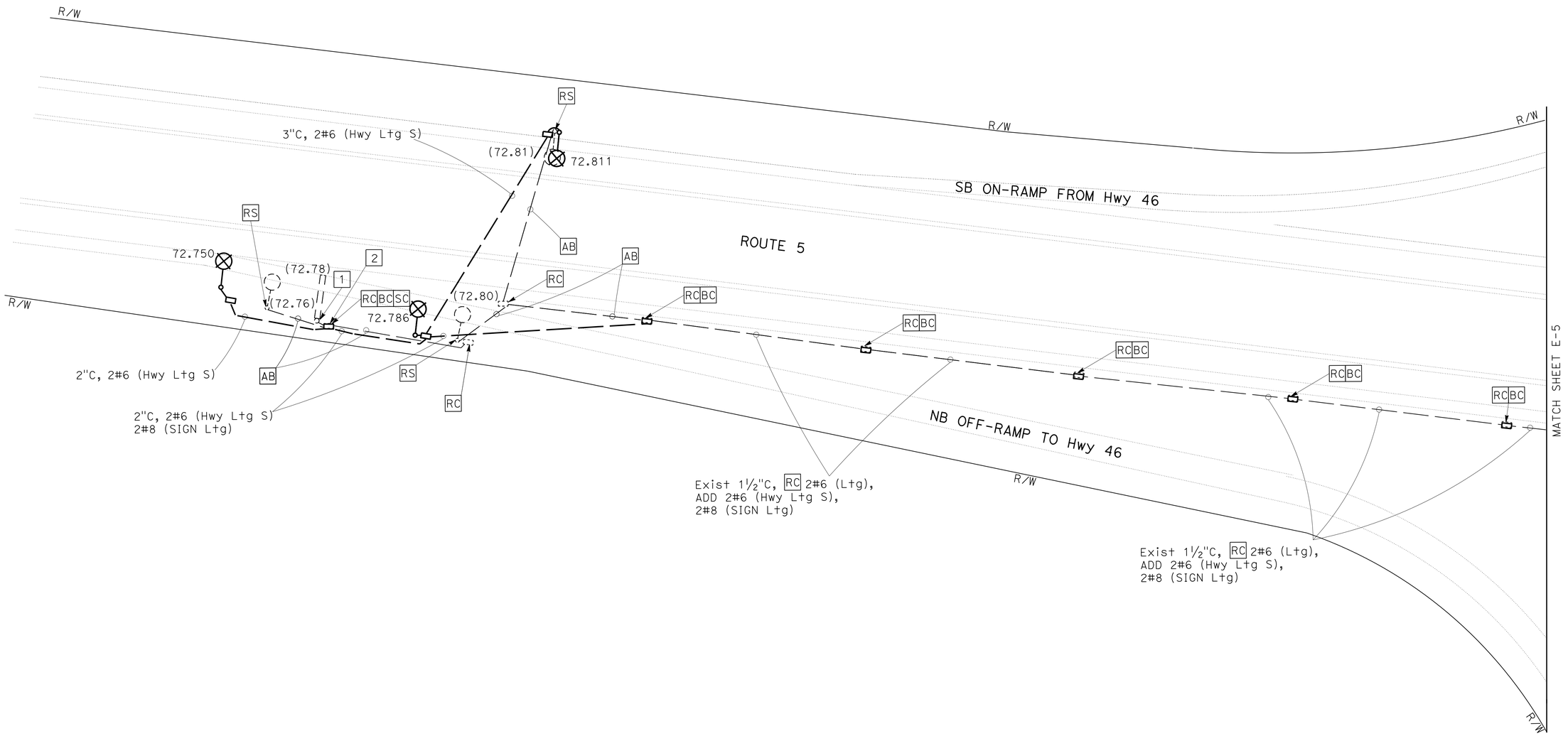

MODIFY LIGHTING
E-6

APPROVED FOR ELECTRICAL WORK ONLY

SCALE: 1" = 50'

STATE OF CALIFORNIA - DEPARTMENT OF TRANSPORTATION
Caltrans ELECTRICAL DESIGN

FUNCTIONAL SUPERVISOR: ALI BAKHDOUD
CALCULATED-DESIGNED BY: GURVINDERJIT S. BAINS
CHECKED BY: HASHIM M. KHALID
REVISED BY / DATE REVISED

LAST REVISION 06-16-14
DATE PLOTTED => 25-JUN-2014
TIME PLOTTED => 21:40

Dist	COUNTY	ROUTE	POST MILES TOTAL PROJECT	SHEET No.	TOTAL SHEETS
06	Ker	5	62.5/73.1	156	213

REGISTERED ELECTRICAL ENGINEER 6-16-14 DATE

6-16-14
PLANS APPROVAL DATE

REGISTERED PROFESSIONAL ENGINEER HASHIM KHALID No. 18054 Exp. 6/30/15 ELECTRICAL STATE OF CALIFORNIA

THE STATE OF CALIFORNIA OR ITS OFFICERS OR AGENTS SHALL NOT BE RESPONSIBLE FOR THE ACCURACY OR COMPLETENESS OF SCANNED COPIES OF THIS PLAN SHEET.

LEGEND: (FOR THIS SHEET ONLY)

1 RC Exist TYPE SC1 CONTROL. INSTALL LC3 CONTROL.

2 RC 480/120 V STEP DOWN TRANSFORMER.

NOTES:

1. ALL PULL BOXES MUST BE No. 5(T)(E) UNLESS OTHERWISE NOTED.
2. FOR ACCURATE RIGHT OF WAY DATA, CONTACT RIGHT OF WAY ENGINEERING AT THE DISTRICT OFFICE.

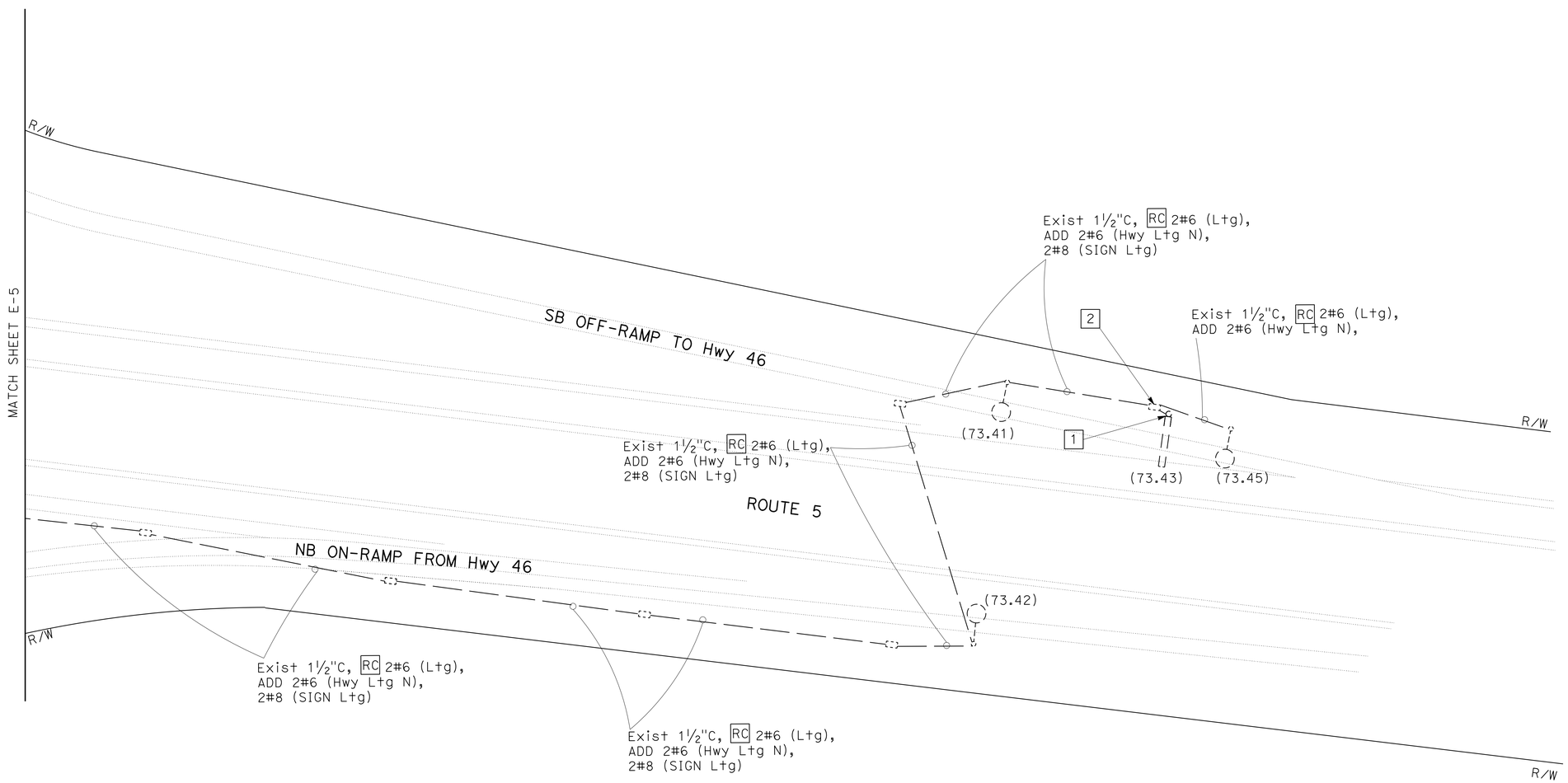

MODIFY LIGHTING
E-7

SCALE: 1" = 50'

APPROVED FOR ELECTRICAL WORK ONLY

STATE OF CALIFORNIA - DEPARTMENT OF TRANSPORTATION
Caltrans® ELECTRICAL DESIGN

FUNCTIONAL SUPERVISOR: ALI BAKHDOUD
CALCULATED-DESIGNED BY: GURVINDERJIT S. BAINS
CHECKED BY: HASHIM M. KHALID
REVISED BY
DATE REVISED

LAST REVISION 06-16-14
DATE PLOTTED => 25-JUN-2014
TIME PLOTTED => 21:40

Dist	COUNTY	ROUTE	POST MILES TOTAL PROJECT	SHEET No.	TOTAL SHEETS
06	Ker	5	62.5/73.1	157	213

REGISTERED ELECTRICAL ENGINEER 6-16-14 DATE

6-16-14
PLANS APPROVAL DATE

REGISTERED PROFESSIONAL ENGINEER HASHIM KHALID No. 18054 Exp. 6/30/15 ELECTRICAL STATE OF CALIFORNIA

THE STATE OF CALIFORNIA OR ITS OFFICERS OR AGENTS SHALL NOT BE RESPONSIBLE FOR THE ACCURACY OR COMPLETENESS OF SCANNED COPIES OF THIS PLAN SHEET.

LEGEND: (FOR THIS SHEET ONLY)

1 Exist 480/240 V, 3ø, 3-WIRE, TYPE III-BF SERVICE EQUIPMENT ENCLOSURE WITH THE FOLLOWING CIRCUIT BREAKERS:

Ctid No. 06500050073190L

AMPERES	VOLTS	POLES	NAMEPLATE	METER	PHOTOELECTRIC CONTROL TYPE
100	480	3	MAIN BREAKER	YES	——
40	480	2	HIGHWAY LIGHTING	YES	V
20	120	2	STEP DOWN TRANSFORMER	YES	——
15	240	1	LIGTHING CONTROL	YES	——
——	——	2	SPACE	——	——

2 Exist 120/240 V, 1ø, 3-WIRE, TYPE III-CF SUB PANEL ENCLOSURE WITH THE FOLLOWING CIRCUIT BREAKERS:

AMPERES	VOLTS	POLES	NAMEPLATE	METER	PHOTOELECTRIC CONTROL TYPE
100	240	2	MAIN BREAKER	YES	——
60	120	1	SIGNAL	YES	——
20	240	2	SPARE	YES	——
20	240	2	SPARE	YES	——
——	——	3	SPACE	——	——

AMPERES	VOLTS	POLES	NAMEPLATE	METER	PHOTOELECTRIC CONTROL TYPE
100	240	2	MAIN BREAKER	YES	——
40	240	2	HIGHWAY LIGHTING	YES	——
40	240	2	FUTURE STREET LIGHTING	YES	——
40	240	2	SPARE	YES	——
40	240	2	SPARE	YES	——
40	240	2	SPARE	YES	——

3 RS Exist 200 W HPS Lum. INSTALL 165 W LED Lum.

NOTES:

1. ALL PULL BOXES MUST BE No. 5(T)(E) UNLESS OTHERWISE NOTED.
2. FOR ACCURATE RIGHT OF WAY DATA, CONTACT RIGHT OF WAY ENGINEERING AT THE DISTRICT OFFICE.

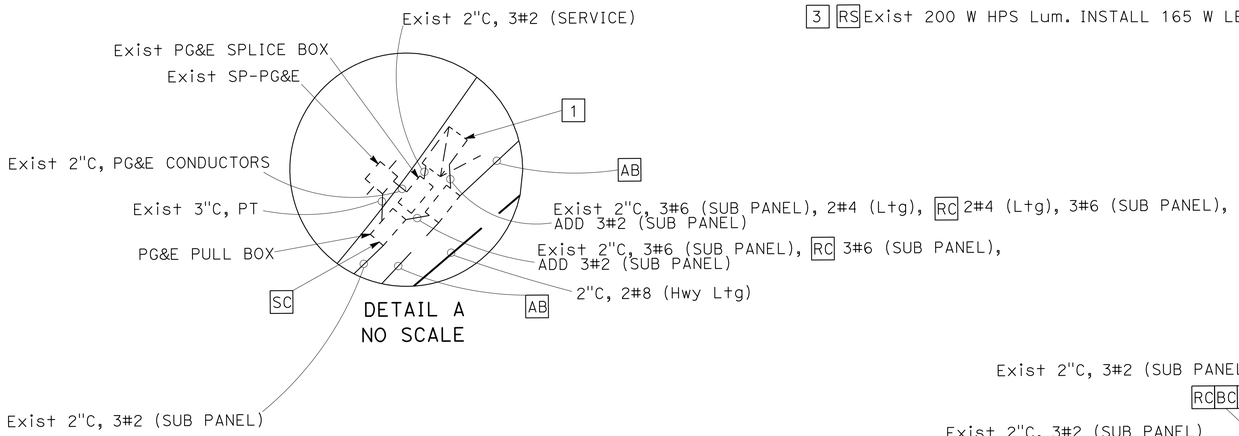

DETAIL A
NO SCALE

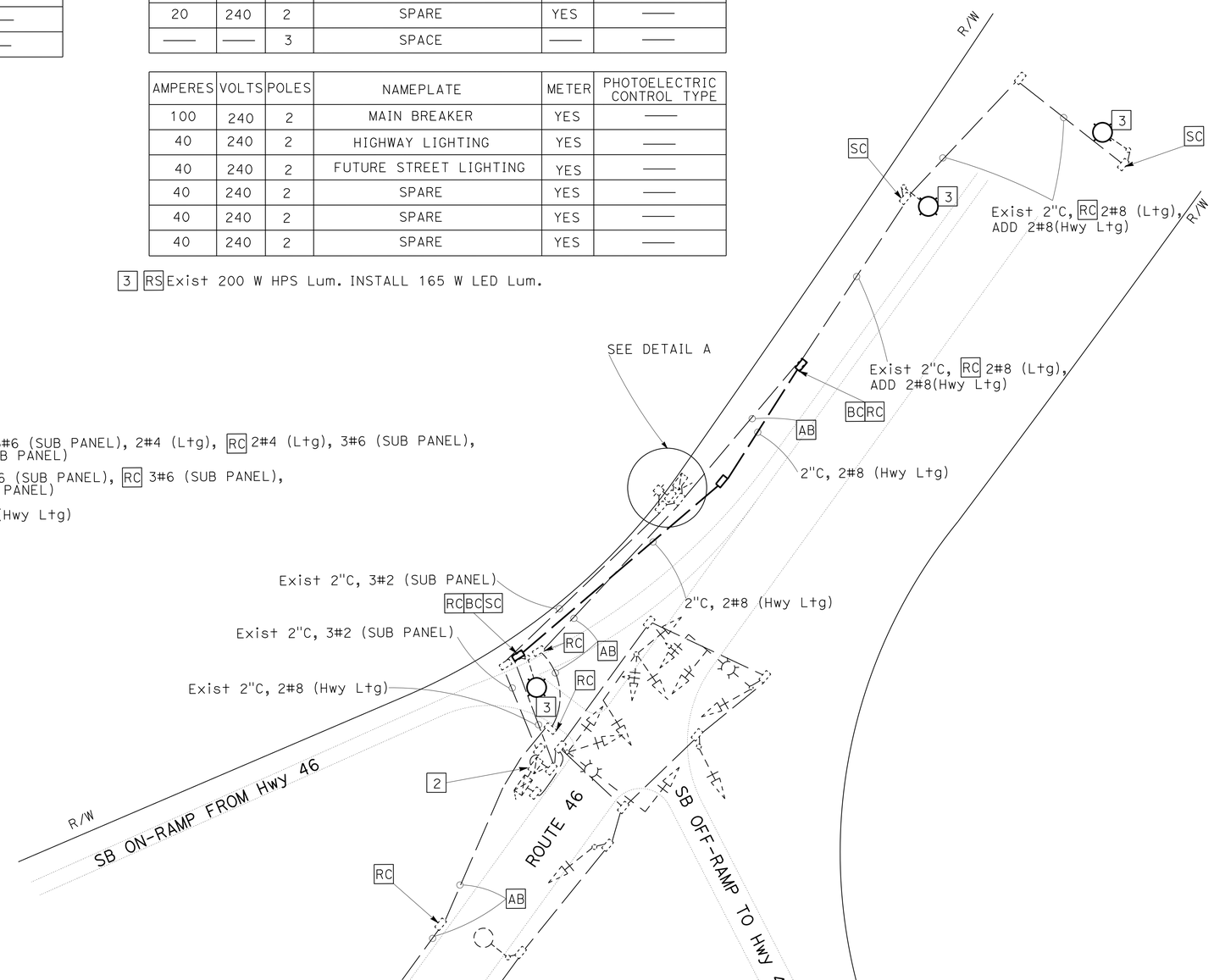

APPROVED FOR ELECTRICAL WORK ONLY

SCALE: 1" = 50'

MODIFY LIGHTING
E-8

STATE OF CALIFORNIA - DEPARTMENT OF TRANSPORTATION
Caltrans® ELECTRICAL DESIGN

FUNCTIONAL SUPERVISOR: ALI BAKHDOUD
CALCULATED-DESIGNED BY: GURVINDERJIT S. BAINS
CHECKED BY: HASHIM M. KHALID
REVISED BY / DATE REVISED

LAST REVISION 06-16-14
DATE PLOTTED => 25-JUN-2014
TIME PLOTTED => 21:40

Dist	COUNTY	ROUTE	POST MILES TOTAL PROJECT	SHEET No.	TOTAL SHEETS
06	Ker	5	62.5/73.1	158	213

REGISTERED ELECTRICAL ENGINEER 6-16-14 DATE

6-16-14
PLANS APPROVAL DATE

REGISTERED PROFESSIONAL ENGINEER HASHIM KHALID No. 18054 Exp. 6/30/15 ELECTRICAL STATE OF CALIFORNIA

THE STATE OF CALIFORNIA OR ITS OFFICERS OR AGENTS SHALL NOT BE RESPONSIBLE FOR THE ACCURACY OR COMPLETENESS OF SCANNED COPIES OF THIS PLAN SHEET.

LEGEND: (FOR THIS SHEET ONLY)

1 RS Exist MODEL 500 XENON CMS, INSTALL DEPARTMENT FURNISHED LED MODEL 500 CMS.

2 Exist 120/240 V, 1ø, 3-WIRE, TYPE III-AF SERVICE EQUIPMENT ENCLOSURE WITH THE FOLLOWING CIRCUIT BREAKERS:

AMPERES	VOLTS	POLES	NAMEPLATE	METER	PHOTOELECTRIC CONTROL TYPE
200	240	2	MAIN BREAKER	YES	——
80	120	4	CHANGEABLE MESSAGE SIGN	YES	——
40	120	2	334-C CABINET	YES	——
——	——	1	SPACE	——	——

3 Exist 120/240 V, 1ø, 3-WIRE, TYPE III-BF SERVICE EQUIPMENT ENCLOSURE WITH THE FOLLOWING CIRCUIT BREAKERS:

AMPERES	VOLTS	POLES	NAMEPLATE	METER	PHOTOELECTRIC CONTROL TYPE
100	240	2	MAIN BREAKER	YES	——
80	120	4	CHANGEABLE MESSAGE SIGN	YES	——
40	120	2	334 CABINET	YES	——
15	120	1	SCAN SYSTEM	YES	——
15	120	1	TDC	YES	——
15	120	1	VIS SENSOR	YES	——
30	120	1	CCTV	YES	——

NOTES:

1. ALL PULL BOXES MUST BE No. 5(T)(E) UNLESS OTHERWISE NOTED.
2. FOR ACCURATE RIGHT OF WAY DATA, CONTACT RIGHT OF WAY ENGINEERING AT THE DISTRICT OFFICE.

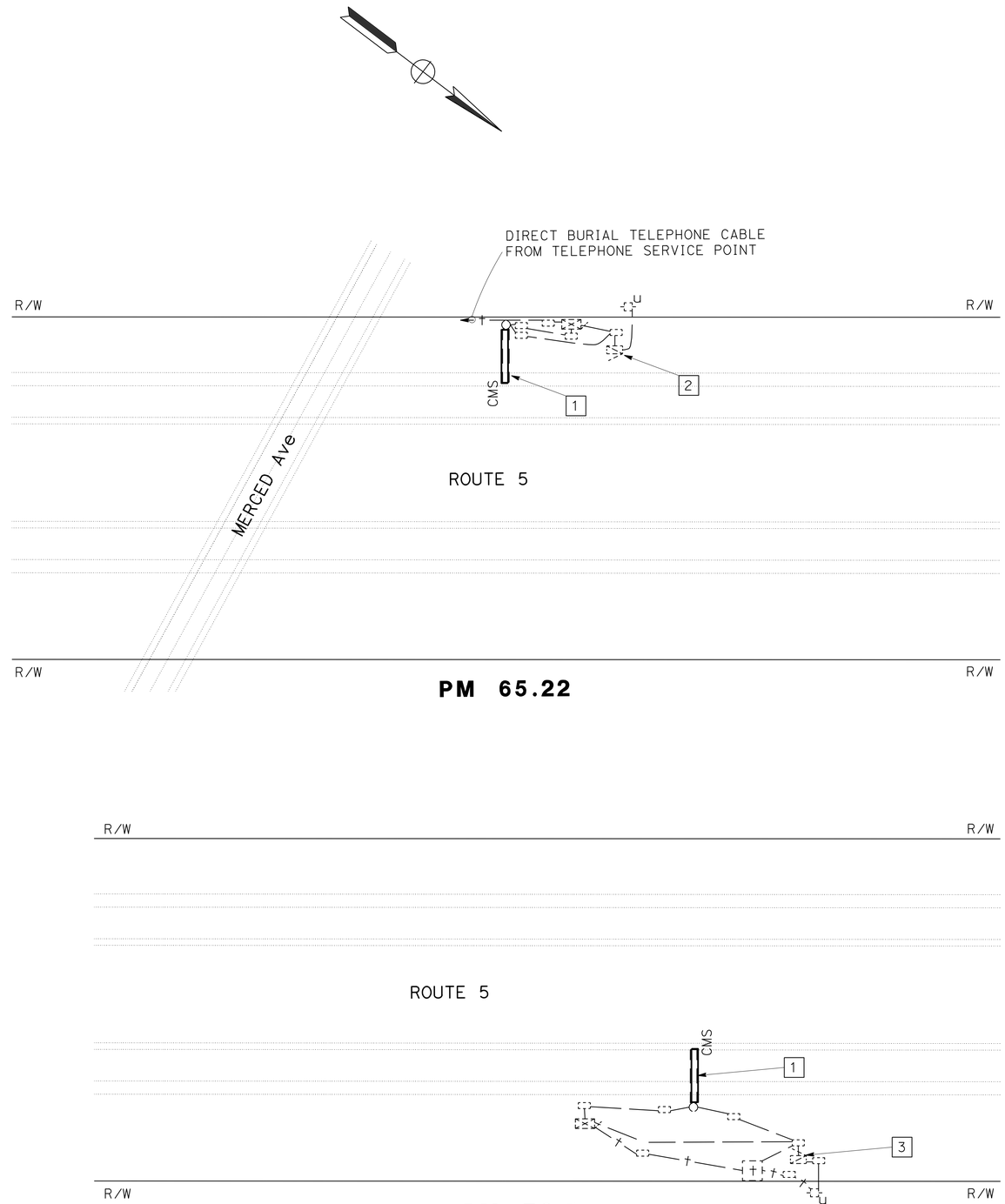

MODIFY CHANGEABLE MESSAGE SIGN

SCALE: 1" = 50'

E-9

APPROVED FOR ELECTRICAL WORK ONLY

STATE OF CALIFORNIA - DEPARTMENT OF TRANSPORTATION
Caltrans ELECTRICAL DESIGN

FUNCTIONAL SUPERVISOR: ALI BAKHDOUD
CALCULATED-DESIGNED BY: GURVINDERJIT S. BAINS
CHECKED BY: HASHIM M. KHALID
REVISED BY / DATE REVISED

LAST REVISION 06-16-14 DATE PLOTTED => 25-JUN-2014 TIME PLOTTED => 21:40

Dist	COUNTY	ROUTE	POST MILES TOTAL PROJECT	SHEET No.	TOTAL SHEETS
06	Ker	5	62.5/73.1	159	213

REGISTERED ELECTRICAL ENGINEER DATE 6-16-14

PLANS APPROVAL DATE 6-16-14

REGISTERED PROFESSIONAL ENGINEER HASHIM KHALID No. 18054 Exp. 6/30/15 ELECTRICAL STATE OF CALIFORNIA

THE STATE OF CALIFORNIA OR ITS OFFICERS OR AGENTS SHALL NOT BE RESPONSIBLE FOR THE ACCURACY OR COMPLETENESS OF SCANNED COPIES OF THIS PLAN SHEET.

NOTE:

ITEMS SHOWN IN THE TABLE ARE NOT A SEPARATE PAY ITEM, FOR INFORMATION ONLY.

MODIFY LIGHTING

SHEET No.	No. 2 CONDUCTOR	No. 6 CONDUCTOR	No. 8 CONDUCTOR	No. 8 CONDUCTOR (G)	2"C, TYPE 1	2"C, TYPE 3	3"C, TYPE 1	3"C, TYPE 3	PG&E APPROVED PB	No. 5 (T)(E) PB	TYPE 30 ELECTROLIER	TYPE 30 ELECTROLIER CIDH PILE	LED Lum 165 W	TYPE III-BF CABINET AND FOUNDATION	TYPE III-CF CABINET	LC3 CONTROL
	LF								EA							
E-1	100	5500	3300	3100			10	35	1	21			4	1		
E-2		2400		1200	30	650		200		6	3	3				
E-3		1550		775	30	275		225		5	3	3				
E-4			1600	800						6			4			
E-5		5200	3200	2100		525				7					1	
E-6		2950	2400	1475	30	400		220		9	3	3				1
E-7		2500	2400	1250												1
E-8			1600	850		310				3			3			

REVISED BY | DATE REVISED

GURVINDERJIT S. BAINS | HASHIM M. KHALID

CALCULATED-DESIGNED BY | CHECKED BY

FUNCTIONAL SUPERVISOR

ALI BAKHDOUD

STATE OF CALIFORNIA - DEPARTMENT OF TRANSPORTATION

Caltrans

ELECTRICAL DESIGN

ELECTRICAL QUANTITIES
E-10

LAST REVISION 06-16-14 | DATE PLOTTED => 25-JUN-2014 TIME PLOTTED => 21:40

M

Maint	MAINTENANCE
Max	MAXIMUM
MB	METAL BEAM
MBB	METAL BEAM BARRIER
MBGR	METAL BEAM GUARD RAILING
Med	MEDIAN
MGS	MIDWEST GUARDRAIL SYSTEM
MH	MANHOLE
Min	MINIMUM
Misc	MISCELLANEOUS
Misc I & S	MISCELLANEOUS IRON AND STEEL
Mkr	MARKER
Mod	MODIFIED,
	MODIFY
Mon	MONUMENT
MP	METAL PLATE
MPGR	METAL PLATE GUARD RAILING
MR	MOVEMENT RATING
MSE	MECHANICALLY STABILIZED EMBANKMENT
Mt	MOUNTAIN, MOUNT
Mtl	MATERIAL
MVP	MAINTENANCE VEHICLE PULLOUT

N

N	NORTH
NB	NORTHBOUND
No.	NUMBER (MUST HAVE PERIOD)
Nos.	NUMBERS (MUST HAVE PERIOD)
NPS	NOMINAL PIPE SIZE
NS	NEAR SIDE
NSP	NEW STANDARD PLAN
NTS	NOT TO SCALE

O

Oblr	OBLITERATE
OC	OVERCROSSING
OD	OUTSIDE DIAMETER
OF	OUTSIDE FACE
OG	ORIGINAL GROUND
OGAC	OPEN GRADED ASPHALT CONCRETE
OGFC	OPEN GRADED FRICTION COURSE
OH	OVERHEAD
OHWM	ORDINARY HIGH WATER MARK
O-O	OUT TO OUT
Opp	OPPOSITE
OSD	OVERSIDE DRAIN

P

P	PAGE
PAP	PERFORATED ALUMINUM PIPE
PB	PULL BOX
PC	POINT OF CURVATURE,
	PRECAST
PCC	POINT OF COMPOUND CURVE,
	PORTLAND CEMENT CONCRETE
PCMS	PORTABLE CHANGEABLE MESSAGE SIGN
PCP	PERFORATED CONCRETE PIPE,
	PRESTRESSED CONCRETE PIPE
PCVC	POINT OF COMPOUND VERTICAL CURVE
PEC	PERMIT TO ENTER AND CONSTRUCT
Ped	PEDESTRIAN
Ped OC	PEDESTRIAN OVERCROSSING
Ped UC	PEDESTRIAN UNDERCROSSING
Perm Mtl	PERMEABLE MATERIAL

P continued

PG	PROFILE GRADE
PI	POINT OF INTERSECTION
PJP	PARTIAL JOINT PENETRATION
Pkwy	PARKWAY
ℙ,PL	PLATE
P/L	PROPERTY LINE
PM	POST MILE,
	TIME FROM NOON TO MIDNIGHT
PN	PAVING NOTCH
POC	POINT OF HORIZONTAL CURVE
POT	POINT OF TANGENT
POVC	POINT OF VERTICAL CURVE
PP	PIPE PILE,
	PLASTIC PIPE,
	POWER POLE
PPL	PREFORMED PERMEABLE LINER
PPP	PERFORATED PLASTIC PIPE
PRC	POINT OF REVERSE CURVE
PRF	PAVEMENT REINFORCING FABRIC
PRVC	POINT OF REVERSE VERTICAL CURVE
PS&E	PLANS, SPECIFICATIONS AND ESTIMATES
PS, P/S	PRESTRESSED
PSP	PERFORATED STEEL PIPE
PT	POINT OF TANGENCY
PVC	POLYVINYL CHLORIDE
Pvmt	PAVEMENT

Q

Qty	QUANTITY

R

R	RADIUS
R & D	REMOVE AND DISPOSE
R & S	REMOVE AND SALVAGE
R/C	RATE OF CHANGE
RCA	REINFORCED CONCRETE ARCH
RCB	REINFORCED CONCRETE BOX
RCP	REINFORCED CONCRETE PIPE
RCPA	REINFORCED CONCRETE PIPE ARCH
Rd	ROAD
Reinf	REINFORCED,
	REINFORCEMENT,
	REINFORCING
Rel	RELOCATE
Repl	REPLACEMENT
Ret	RETAINING
Rev	REVISED, REVISION
Rdwy	ROADWAY
RHMA	RUBBERIZED HOT MIX ASPHALT
Riv	RIVER
RM	ROAD-MIXED
RP	RADIUS POINT,
	REFERENCE POINT
RR	RAILROAD
RSP	ROCK SLOPE PROTECTION,
	REVISED STANDARD PLAN
Rt	RIGHT
Rte	ROUTE
RW	REDWOOD,
	RETAINING WALL
R/W	RIGHT OF WAY
Rwy	RAILWAY

S

S	SOUTH,
	SUPPLEMENT
SAE	STRUCTURE APPROACH EMBANKMENT
Salv	SALVAGE
SAPP	STRUCTURAL ALUMINUM PLATE PIPE
SB	SOUTHBOUND
SC	SAND CUSHION
SCSP	SLOTTED CORRUGATED STEEL PIPE
SD	STORM DRAIN
Sec	SECOND,
	SECTION
Sep	SEPARATION
SG	SUBGRADE
Shld	SHOULDER
Sht	SHEET
Sim	SIMILAR
℄	STATION LINE
SM	SELECTED MATERIAL
Spec	SPECIAL,
	SPECIFICATIONS
SPP	SLOTTED PLASTIC PIPE
SS	SLOPE STAKE
SSBM	STRAP AND SADDLE BRACKET METHOD
SSD	STRUCTURAL SECTION DRAIN
SSPA	STRUCTURAL STEEL PLATE ARCH
SSPP	STRUCTURAL STEEL PLATE PIPE
SSPPA	STRUCTURAL STEEL PLATE PIPE ARCH
SSRP	STEEL SPIRAL RIB PIPE
St	STREET
Sta	STATION
STBB	SINGLE THRIE BEAM BARRIER
Std	STANDARD
Str	STRUCTURE
Surf	SURFACING
SW	SIDEWALK,
	SOUND WALL
Swr	SEWER
Sym	SYMMETRICAL
S4S	SURFACE 4 SIDES

T

T	SEMI-TANGENT
Tan	TANGENT
TBB	THRIE BEAM BARRIER
Tbr	TIMBER
TC	TOP OF CURB
TCB	TRAFFIC CONTROL BOX
TCE	TEMPORARY CONSTRUCTION EASEMENT
Tel	TELEPHONE
Temp	TEMPORARY
TG	TOP OF GRADE
Tot	TOTAL
TP	TELEPHONE POLE
TPB	TREATED PERMEABLE BASE
TPM	TREATED PERMEABLE MATERIAL
Trans	TRANSITION

T continued

TS	TRANSVERSE,
	TRAFFIC SIGNAL,
	TUBULAR STEEL
Typ	TYPICAL

U

UC	UNDERCROSSING
UD	UNDERDRAIN
UG	UNDERGROUND
UON	UNLESS OTHERWISE NOTED
UP	UNDERPASS

V

V	VALVE,
	DESIGN SPEED
Var	VARIABLE,
	VARIES
VC	VERTICAL CURVE
VCP	VITRIFIED CLAY PIPE
Vert	VERTICAL
Via	VIADUCT
Vol	VOLUME

W

W	WEST,
	WIDTH
WB	WESTBOUND
WH	WEEP HOLE
WM	WIRE MESH
WS	WATER SURFACE
WSP	WELDED STEEL PIPE
Wt	WEIGHT
WV	WATER VALVE
WW	WINGWALL
WWLOL	WINGWALL LAYOUT LINE

X

X Sec	CROSS SECTION
Xing	CROSSING

Y

Yr	YEAR
Yrs	YEARS

Dist	COUNTY	ROUTE	POST MILES TOTAL PROJECT	SHEET No.	TOTAL SHEETS
06	Ker	5	62.5/73.1	160	213

Grace M. Tsushima
REGISTERED CIVIL ENGINEER

July 19, 2013
PLANS APPROVAL DATE

REGISTERED PROFESSIONAL ENGINEER
Grace M. Tsushima
No. C49814
Exp. 9-30-14
CIVIL
STATE OF CALIFORNIA

THE STATE OF CALIFORNIA OR ITS OFFICERS OR AGENTS SHALL NOT BE RESPONSIBLE FOR THE ACCURACY OR COMPLETENESS OF SCANNED COPIES OF THIS PLAN SHEET.

TO ACCOMPANY PLANS DATED 6-16-14

UNIT OF MEASUREMENT SYMBOLS:

Some of the symbols used in the project plan quantity tables and in the Bid Item List are:

TABLE A

SYMBOL USED	DEFINITIONS
ACRE	ACRE
CF	CUBIC FOOT
CY	CUBIC YARD
EA	EACH
GAL	GALLON
LB	POUND
LF	LINEAR FOOT
SQFT	SQUARE FOOT
SQYD	SQUARE YARD
STA	100 FEET
TAB	TABLET
TON	2,000 POUNDS

Some of the symbols used in the plans other than in the project plan quantity tables are:

TABLE B

SYMBOL USED	DEFINITIONS
ksi	KIPS PER SQUARE INCH
ksf	KIPS PER SQUARE FOOT
psi	POUNDS PER SQUARE INCH
psf	POUNDS PER SQUARE FOOT
lb/ft^3, pcf	POUNDS PER CUBIC FOOT
tsf	TONS PER SQUARE FOOT
mph, MPH *	MILES PER HOUR
ø	NOMINAL DIAMETER
oz	OUNCE
lb	POUND
kip	1,000 POUNDS
cal	CALORIE
ft	FOOT OR FEET
gal	GALLON

* For use on a sign panel only

STATE OF CALIFORNIA
DEPARTMENT OF TRANSPORTATION

ABBREVIATIONS (SHEET 2 OF 2)

NO SCALE

RSP A10B DATED JULY 19, 2013 SUPERSEDES STANDARD PLAN A10B DATED MAY 20, 2011 - PAGE 2 OF THE STANDARD PLANS BOOK DATED 2010.

REVISED STANDARD PLAN RSP A10B

2010 REVISED STANDARD PLAN RSP A10B

6-7-13

Dist	COUNTY	ROUTE	POST MILES TOTAL PROJECT	SHEET No.	TOTAL SHEETS
06	Ker	5	62.5/73.1	161	213

REGISTERED CIVIL ENGINEER

July 19, 2013
PLANS APPROVAL DATE

REGISTERED PROFESSIONAL ENGINEER Roberta L. McLaughlin No. C40375 Exp. 3-31-15 CIVIL STATE OF CALIFORNIA

THE STATE OF CALIFORNIA OR ITS OFFICERS OR AGENTS SHALL NOT BE RESPONSIBLE FOR THE ACCURACY OR COMPLETENESS OF SCANNED COPIES OF THIS PLAN SHEET.

TO ACCOMPANY PLANS DATED 6-16-14

EXIT RAMP NEUTRAL AREA (GORE) TREATMENT

DETAIL 36

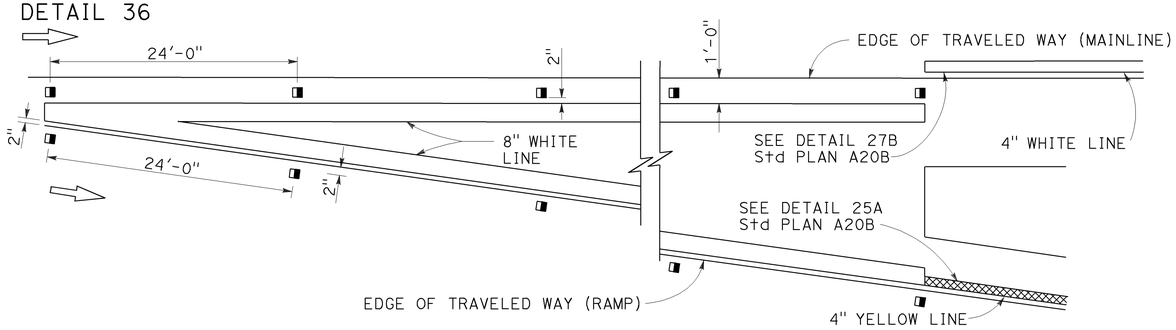

ENTRANCE RAMP NEUTRAL AREA (MERGE) TREATMENT

DETAIL 36A

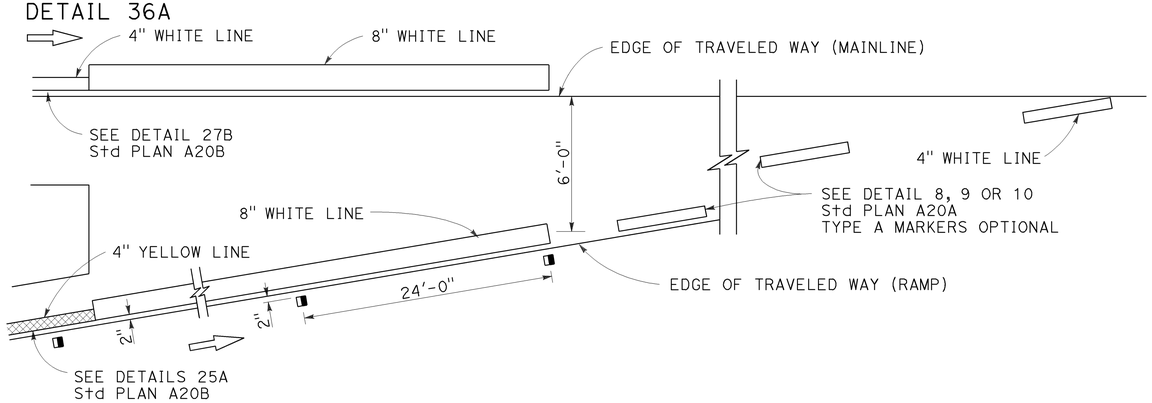

ENTRANCE RAMP NEUTRAL AREA (ACCELERATION LANE) TREATMENT

DETAIL 36B

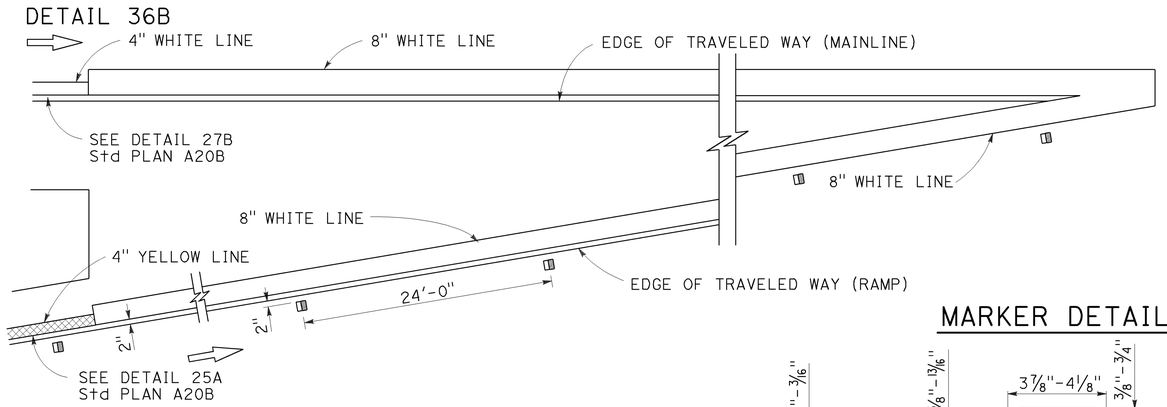

LANE DROP AT EXIT RAMPS

DETAIL 37

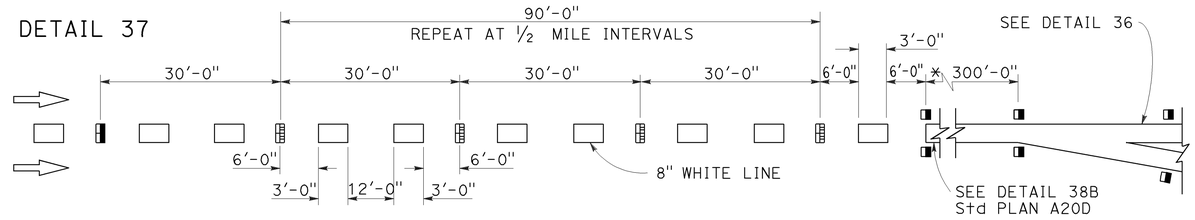

DETAIL 37A

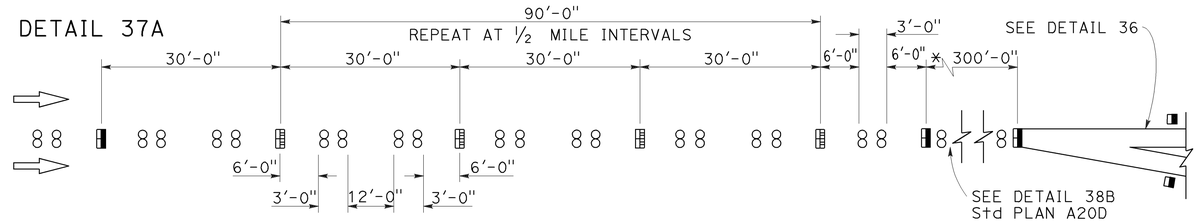

* The solid channelizing line shown may be omitted on short auxiliary lanes where weaving length is critical.

LANE DROP AT INTERSECTIONS

DETAIL 37B

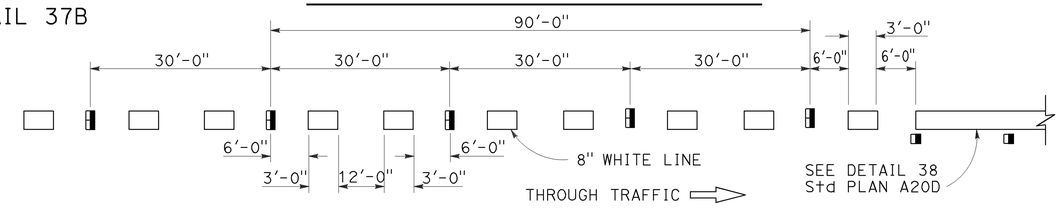

DETAIL 37C

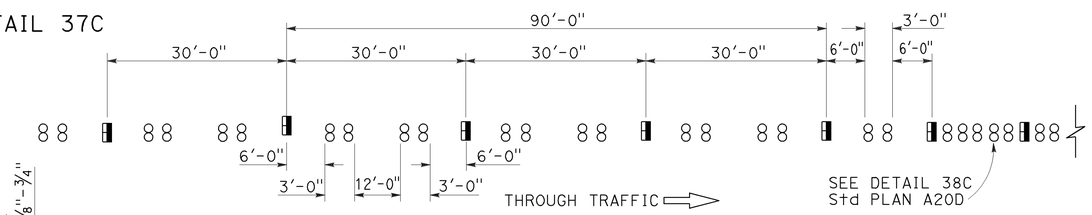

MARKER DETAILS

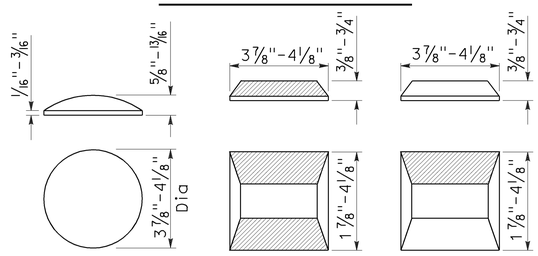

RETROREFLECTIVE FACE

LEGEND:

MARKERS

- TYPE A WHITE NON-REFLECTIVE
- TYPE C RED-CLEAR RETROREFLECTIVE
- TYPE G ONE-WAY CLEAR RETROREFLECTIVE

STATE OF CALIFORNIA
DEPARTMENT OF TRANSPORTATION

PAVEMENT MARKERS AND TRAFFIC LINE TYPICAL DETAILS

NO SCALE

RSP A20C DATED JULY 19, 2013 SUPERSEDES STANDARD PLAN A20C DATED MAY 20, 2011 - PAGE 11 OF THE STANDARD PLANS BOOK DATED 2010.

REVISED STANDARD PLAN RSP A20C

2010 REVISED STANDARD PLAN RSP A20C

4-29-13

Dist	COUNTY	ROUTE	POST MILES TOTAL PROJECT	SHEET No.	TOTAL SHEETS
06	Ker	5	62.5/73.1	162	213

Randell D. Hiatt
REGISTERED CIVIL ENGINEER

July 19, 2013
PLANS APPROVAL DATE

REGISTERED PROFESSIONAL ENGINEER
Randell D. Hiatt
No. C50200
Exp. 6-30-15
CIVIL
STATE OF CALIFORNIA

THE STATE OF CALIFORNIA OR ITS OFFICERS OR AGENTS SHALL NOT BE RESPONSIBLE FOR THE ACCURACY OR COMPLETENESS OF SCANNED COPIES OF THIS PLAN SHEET.

TO ACCOMPANY PLANS DATED 6-16-14

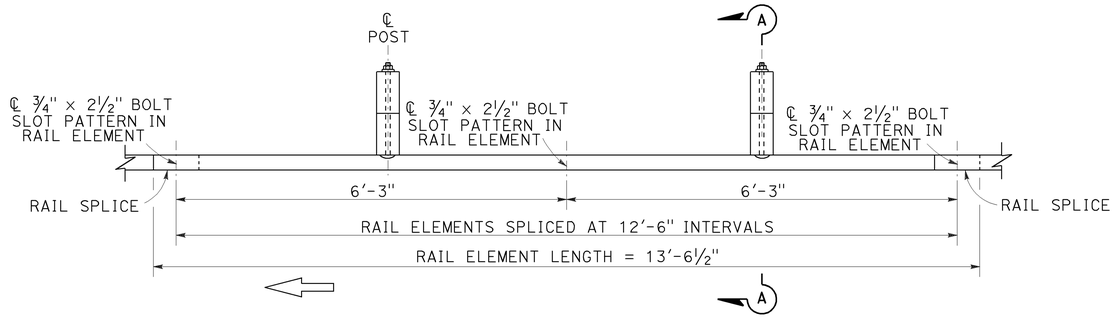

PLAN

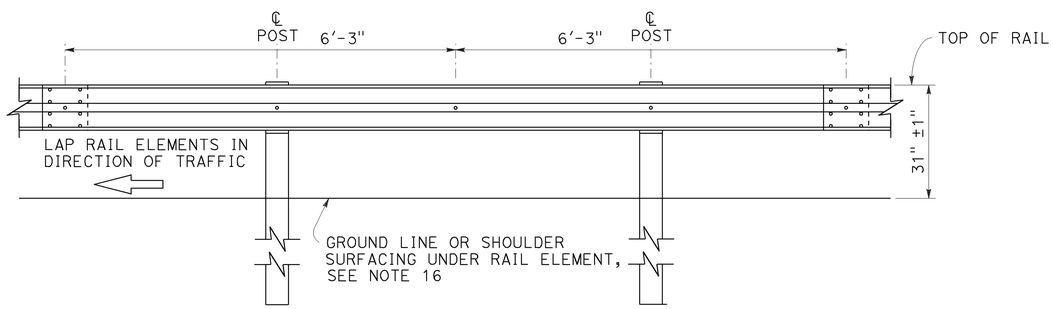

ELEVATION

MIDWEST GUARDRAIL SYSTEM WITH WOOD POST AND BLOCKS

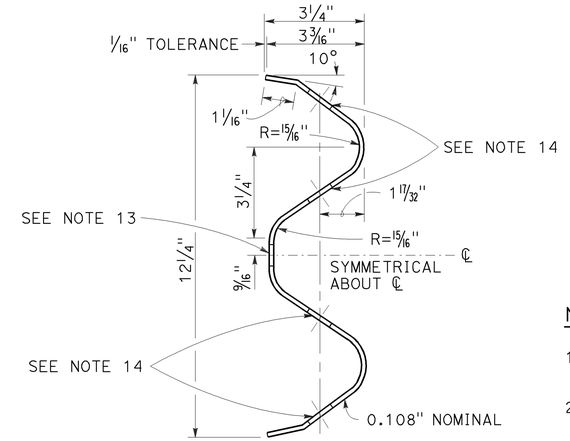

SECTION THRU RAIL ELEMENT

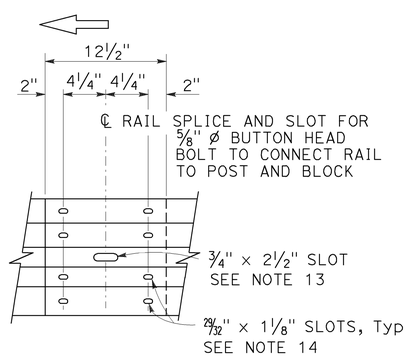

ELEVATION

RAIL ELEMENT SPLICE DETAIL

a) Connect the over lapped end of the rail elements with 5/8" Ø × 1 3/8" button head oval shoulder splice bolts inserted into the 29/32" × 1 1/8" slots and bolted together with 5/8" Ø recessed hex nuts. Recess of hex nut points toward rail element. A total of 8 bolts and nuts are to be used at each rail splice connection.

b) The ends of the rail elements are to be overlapped in the direction of traffic (see details).

c) Where end cap is to be attached to the end of a rail element, a total of 4 of the above described splice bolts and nuts are to be used.

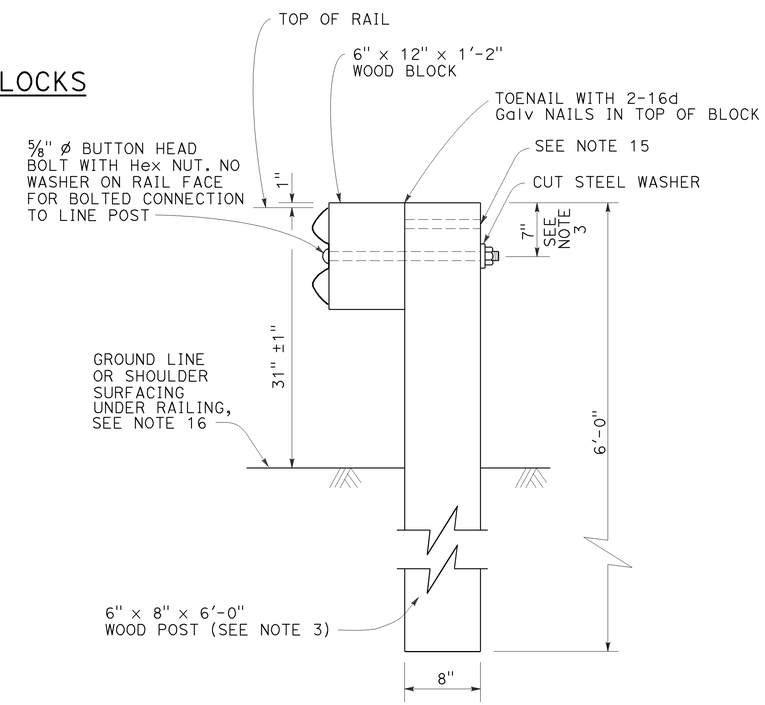

SECTION A-A

TYPICAL WOOD LINE POST INSTALLATION

See Note 4

NOTES:

1. For details of steel post installations, see Revised Standard Plan RSP A77L2.
2. For details of standard hardware used to construct MGS, see Revised Standard Plan RSP A77M1.
3. For details of wood posts and wood blocks used to construct MGS, see Revised Standard Plan RSP A77N1.
4. For additional installation details, see Revised Standard Plan RSP A77N3.
5. MGS post spacing to be 6'-3" center to center, except as otherwise noted.
6. For MGS typical layouts, see the A77P, A77Q and A77R Series of Standard Plans.
7. If railing is connected to terminal system end treatment, use 31" height terminal system end treatment.
8. For MGS end anchor details, see Revised Standard Plans RSP A77S1 and RSP A77T2.
9. For details of MGS transition to bridge railing, see Revised Standard Plan RSP A77U4.
10. For additional details of MSG connection to bridge railing, see Revised Standard Plans RSP A77U1, RSP A77U2 and RSP A77V1.
11. For MGS connection details to abutments and walls, see Revised Standard Plan RSP A77U3.
12. For typical MGS delineation and dike positioning details, see Revised Standard Plan RSP A77N4.
13. Slotted hole for bolted connection of rail element to block and post. See "Section Thru Rail Element".
14. Slotted holes for splice bolts to overlap ends of rail element. See "Section Thru Rail Element".
15. Additional hole in uppermost portion of line post is for potential future adjustments of railing height. See Revised Standard Plan RSP A77N1.
16. Install posts in soil.

STATE OF CALIFORNIA
DEPARTMENT OF TRANSPORTATION

MIDWEST GUARDRAIL SYSTEM STANDARD RAILING SECTION (WOOD POST WITH WOOD BLOCK)

NO SCALE

RSP A77L1 DATED JULY 19, 2013 SUPPLEMENTS STANDARD PLANS BOOK DATED 2010.

REVISED STANDARD PLAN RSP A77L1

2010 REVISED STANDARD PLAN RSP A77L1

7-3-13

Dist	COUNTY	ROUTE	POST MILES TOTAL PROJECT	SHEET No.	TOTAL SHEETS
06	Ker	5	62.5/73.1	163	213

Randell D. Hiatt
REGISTERED CIVIL ENGINEER

July 19, 2013
PLANS APPROVAL DATE

REGISTERED PROFESSIONAL ENGINEER
Randell D. Hiatt
No. C50200
Exp. 6-30-15
CIVIL
STATE OF CALIFORNIA

THE STATE OF CALIFORNIA OR ITS OFFICERS OR AGENTS SHALL NOT BE RESPONSIBLE FOR THE ACCURACY OR COMPLETENESS OF SCANNED COPIES OF THIS PLAN SHEET.

TO ACCOMPANY PLANS DATED 6-16-14

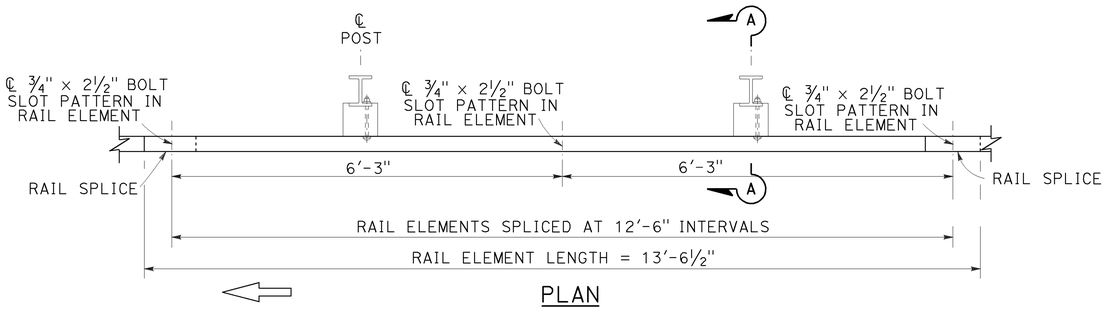

PLAN

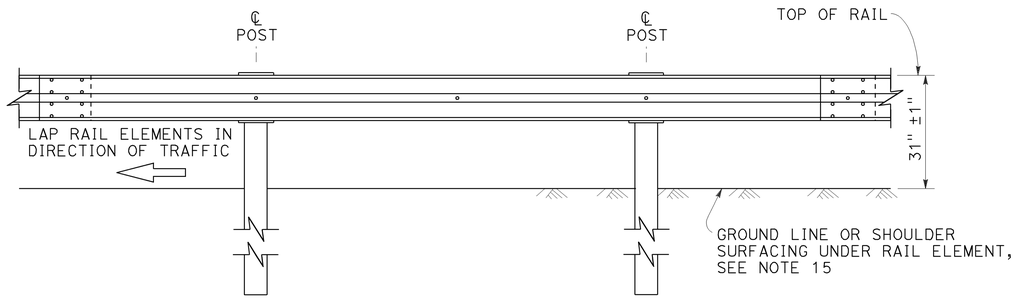

ELEVATION

MIDWEST GUARDRAIL SYSTEM WITH STEEL POSTS AND NOTCHED WOOD OR NOTCHED RECYCLED PLASTIC BLOCKS

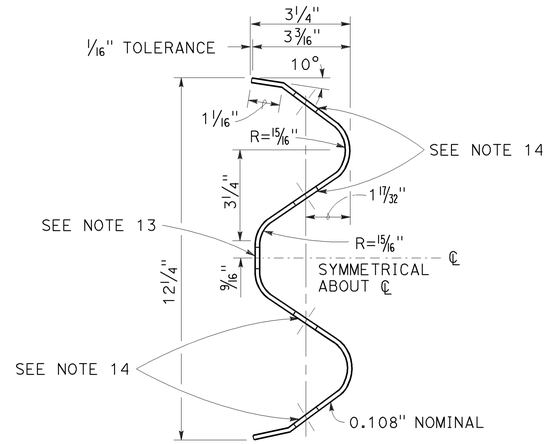

SECTION THRU RAIL ELEMENT

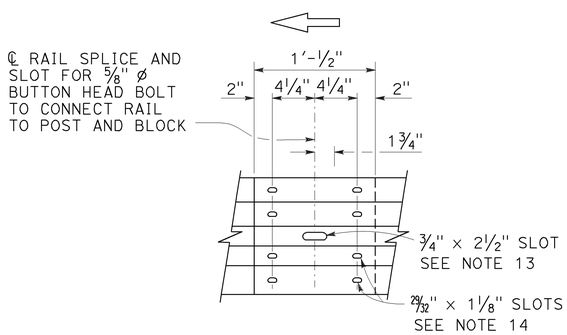

ELEVATION

RAIL ELEMENT SPLICE DETAIL

a) Connect the over lapped end of the rail elements with ⅝" ø × 1⅜" button head oval shoulder splice bolts inserted into the 29⁄₃₂" × 1⅛" slots and bolted together with ⅝" ø recessed hex nuts. Recess of hex nut points toward rail element. A total of 8 bolts and nuts are to be used at each rail splice connection.

b) The ends of the rail elements are to be overlapped in the direction of traffic (see details).

c) Where end cap is to be attached to the end of a rail element, a total of 4 of the above described splice bolts and nuts are to be used.

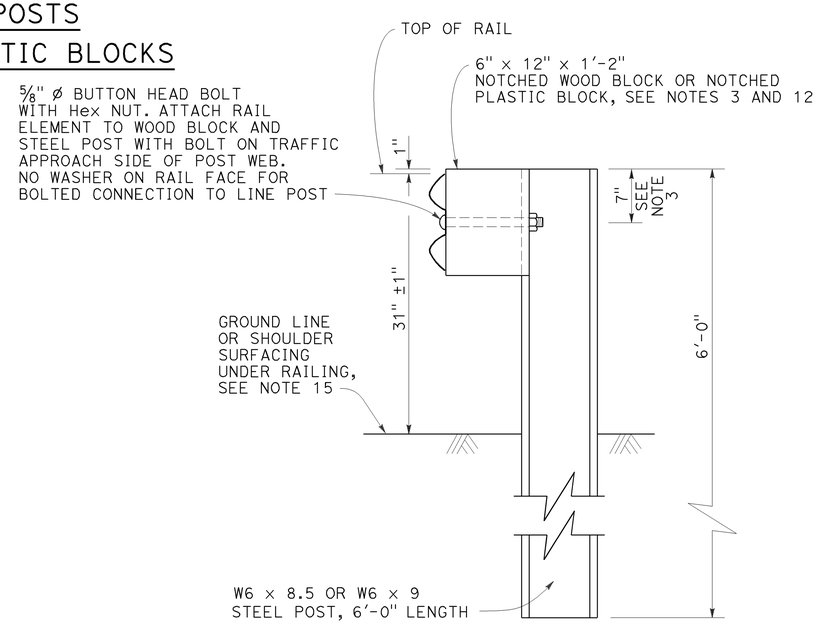

SECTION A-A

TYPICAL STEEL LINE POST INSTALLATION

See Note 4

NOTES:

1. For details of wood post installations, see Revised Standard Plan RSP A77L1.
2. For details of standard hardware used to construct MGS, see Revised Standard Plan RSP A77M1.
3. For details of steel posts and notched wood blocks used to construct MGS, see Revised Standard Plan RSP A77N2.
4. For additional installation details, see Revised Standard Plan RSP A77N3.
5. MGS post spacing to be 6'-3" center to center, except as otherwise noted.
6. For MGS typical layouts, see the A77P, A77Q and A77R Series of Standard Plans.
7. If railing is connected to terminal system end treatment, use 31" height terminal system end treatment.
8. For MGS end anchor details, see Revised Standard Plans RSP A77S1 and RSP A77T2.
9. For details of MGS transition to bridge railing, see Revised Standard Plan RSP A77U4.
10. For additional details of MGS connection to bridge railings, see Revised Standard Plans RSP A77U1, RSP A77U2 and RSP A77V1.
11. For dike positioning and MGS delineation details, see Revised Standard Plan RSP A77N4.
12. Notched face of block faces steel post.
13. Slotted hole for bolted connection of rail element to block and post. See "Section Thru Rail Element".
14. Slotted holes for splice bolts to overlap ends of rail element. See "Section Thru Rail Element".
15. Install posts in soil.

STATE OF CALIFORNIA
DEPARTMENT OF TRANSPORTATION

MIDWEST GUARDRAIL SYSTEM STANDARD RAILING SECTION (STEEL POST WITH NOTCHED WOOD OR NOTCHED RECYCLED PLASTIC BLOCK)

NO SCALE

RSP A77L2 DATED JULY 19, 2013 SUPPLEMENTS THE STANDARD PLANS BOOK DATED 2010.

REVISED STANDARD PLAN RSP A77L2

2010 REVISED STANDARD PLAN RSP A77L2

7-3-13

Dist	COUNTY	ROUTE	POST MILES TOTAL PROJECT	SHEET No.	TOTAL SHEETS
06	Ker	5	62.5/73.1	164	213

Randell D. Hiatt
REGISTERED CIVIL ENGINEER

July 19, 2013
PLANS APPROVAL DATE

REGISTERED PROFESSIONAL ENGINEER
Randell D. Hiatt
No. C50200
Exp. 6-30-15
CIVIL
STATE OF CALIFORNIA

THE STATE OF CALIFORNIA OR ITS OFFICERS OR AGENTS SHALL NOT BE RESPONSIBLE FOR THE ACCURACY OR COMPLETENESS OF SCANNED COPIES OF THIS PLAN SHEET.

TO ACCOMPANY PLANS DATED 6-16-14

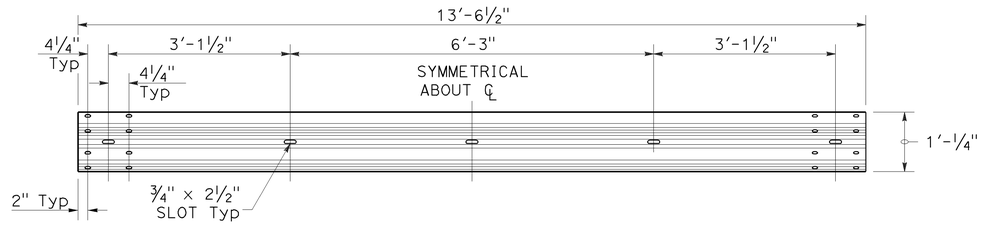

TYPICAL RAIL ELEMENT

NOTE:

1. Slotted holes for splice bolts to overlap ends of rail element.

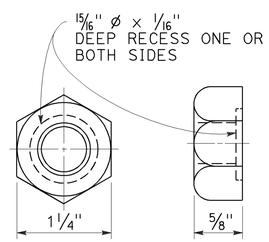

⅝" ø RECESS NUT

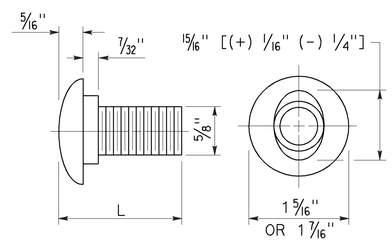

⅝" ø BUTTON HEAD BOLT

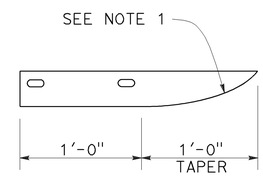

PLAN

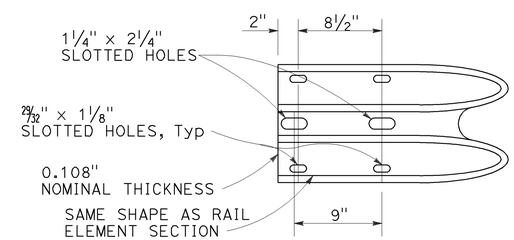

ELEVATION

END CAP
(TYPE A)

BUTTON HEAD BOLT

L	THREAD LENGTH
1⅜"	FULL THREAD LENGTH
2"	FULL THREAD LENGTH
10"	4" Min THREAD LENGTH
18"	4" Min THREAD LENGTH
20"	4" Min THREAD LENGTH
22"	4" Min THREAD LENGTH
26"	4" Min THREAD LENGTH
36"	4" Min THREAD LENGTH
** 2¾"	2" Min THREAD LENGTH
** 19"	4" Min THREAD LENGTH

** For nested rail applications.

STATE OF CALIFORNIA
DEPARTMENT OF TRANSPORTATION

MIDWEST GUARDRAIL SYSTEM STANDARD HARDWARE

NO SCALE

RSP A77M1 DATED JULY 19, 2013 SUPPLEMENTS THE STANDARD PLANS BOOK DATED 2010.

REVISED STANDARD PLAN RSP A77M1

2010 REVISED STANDARD PLAN RSP A77M1

7-3-13

Dist	COUNTY	ROUTE	POST MILES TOTAL PROJECT	SHEET No.	TOTAL SHEETS
06	Ker	5	62.5/73.1	165	213

Randell D. Hiatt
REGISTERED CIVIL ENGINEER

November 15, 2013
PLANS APPROVAL DATE

REGISTERED PROFESSIONAL ENGINEER
Randell D. Hiatt
No. C50200
Exp. 6-30-15
CIVIL
STATE OF CALIFORNIA

THE STATE OF CALIFORNIA OR ITS OFFICERS OR AGENTS SHALL NOT BE RESPONSIBLE FOR THE ACCURACY OR COMPLETENESS OF SCANNED COPIES OF THIS PLAN SHEET.

TO ACCOMPANY PLANS DATED 6-16-14

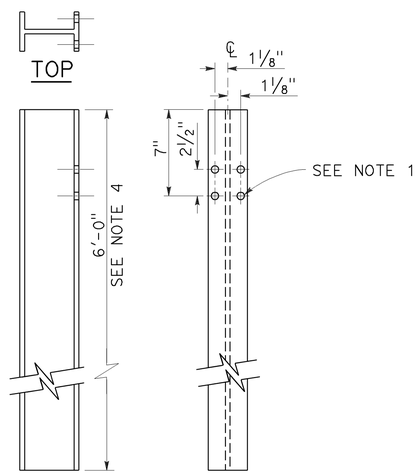

W6 x 9 OR W6 x 8.5
STEEL POST
See Note 4

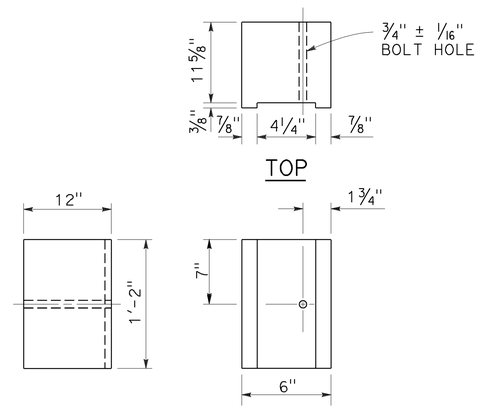

6" x 12"
NOTCHED WOOD BLOCK
See Notes 2 and 3

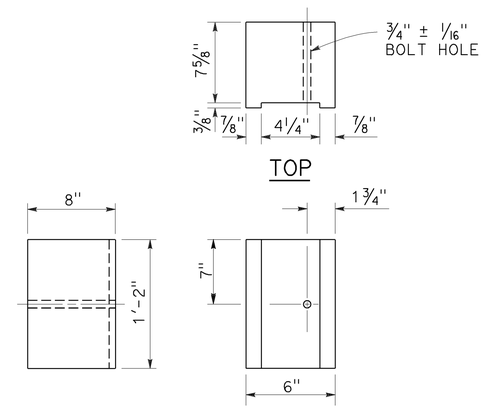

6" x 8"
NOTCHED WOOD BLOCK
Only for use with metal beam guard railing. See Note 5

NOTES:

1. All holes in steel post shall be 13/16" Dia maximum.
2. Dimensions shown for wood block are nominal.
3. Notched face of block faces steel post.
4. 6'-0" length posts to be used for typical roadway installation. See Revised Standard Plan RSP A77N3.
5. See Revised Standard Plan RSP A77L3 for use of 6" x 8" and 8" x 8" notched wood blocks.
6. This post and 8" x 12" block combination to be used for line post sections of MGS on narrow roadways and where strengthened line post sections of MGS are warranted to shield fixed objects.

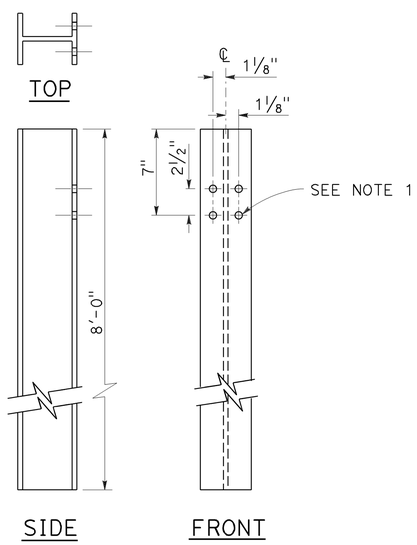

W6 x 15
STEEL POST
See Note 6

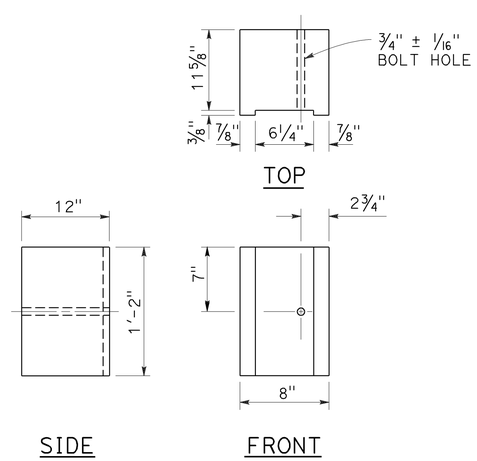

8" x 12"
NOTCHED WOOD BLOCK
See Notes 2 and 3

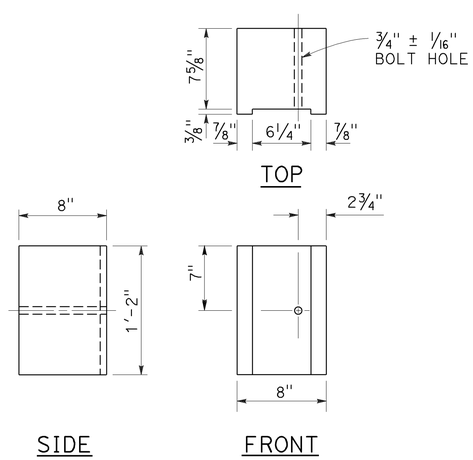

8" x 8"
NOTCHED WOOD BLOCK
Only for use with metal beam guard railing. See Note 5

STATE OF CALIFORNIA
DEPARTMENT OF TRANSPORTATION

MIDWEST GUARDRAIL SYSTEM STEEL POST AND NOTCHED WOOD BLOCK DETAILS

NO SCALE

RSP A77N2 DATED NOVEMBER 15, 2013 SUPERSEDES RSP A77N2
DATED JULY 19, 2013 THAT SUPPLEMENTS THE STANDARD PLANS BOOK DATED 2010.

REVISED STANDARD PLAN RSP A77N2

2010 REVISED STANDARD PLAN RSP A77N2

10-29-13

Dist	COUNTY	ROUTE	POST MILES TOTAL PROJECT	SHEET No.	TOTAL SHEETS
06	Ker	5	62.5/73.1	166	213

Randell D. Hiatt
REGISTERED CIVIL ENGINEER

November 15, 2013
PLANS APPROVAL DATE

REGISTERED PROFESSIONAL ENGINEER
Randell D. Hiatt
No. C50200
Exp. 6-30-15
CIVIL
STATE OF CALIFORNIA

THE STATE OF CALIFORNIA OR ITS OFFICERS OR AGENTS SHALL NOT BE RESPONSIBLE FOR THE ACCURACY OR COMPLETENESS OF SCANNED COPIES OF THIS PLAN SHEET.

TO ACCOMPANY PLANS DATED 6-16-14

2010 REVISED STANDARD PLAN RSP A77N3

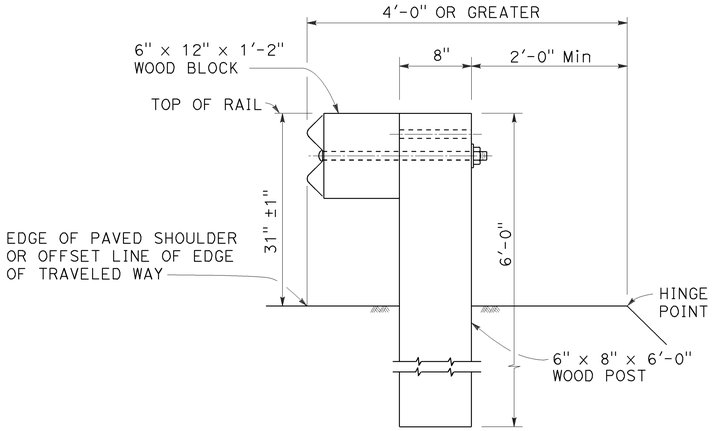

DETAIL A

TYPICAL ROADWAY INSTALLATION

See Note 1

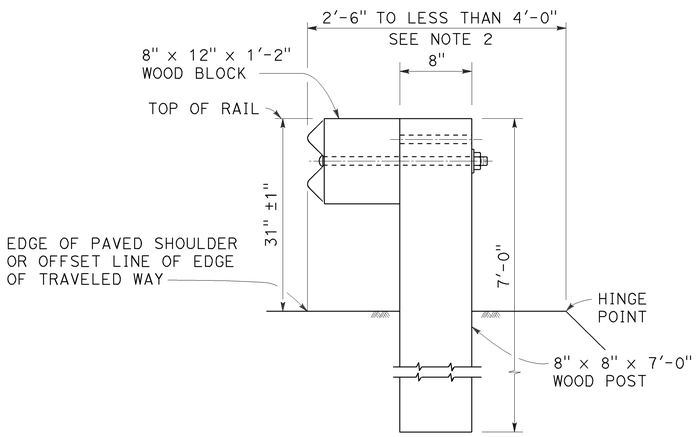

DETAIL B

NARROW ROADWAY INSTALLATION

See Note 1

POST EMBEDMENT

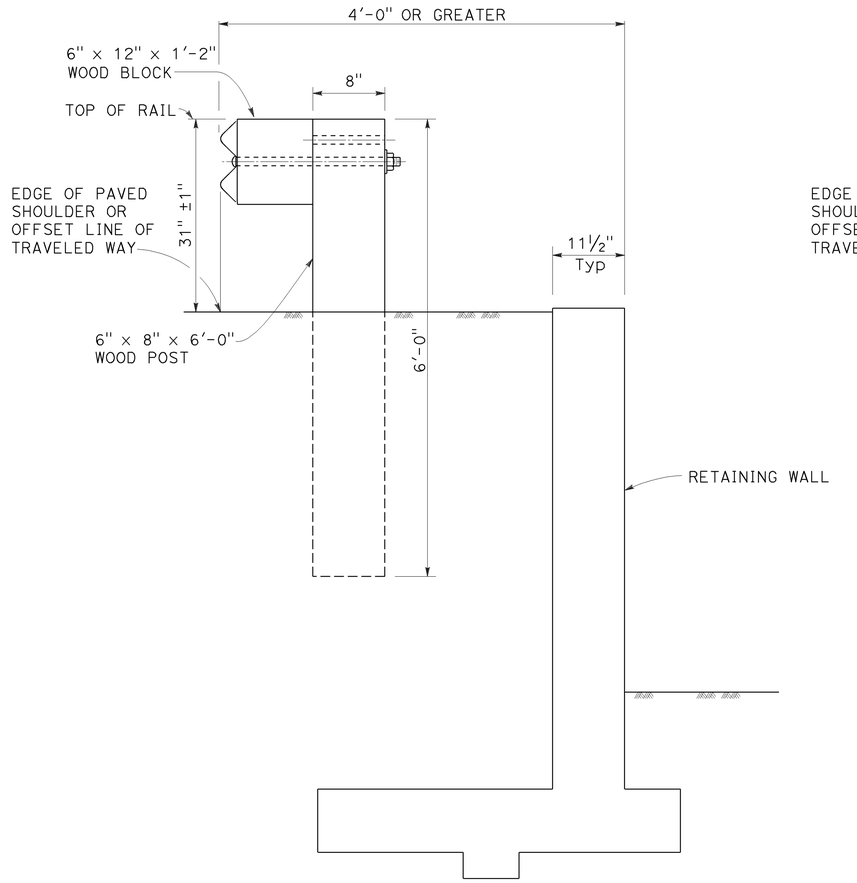

DETAIL C

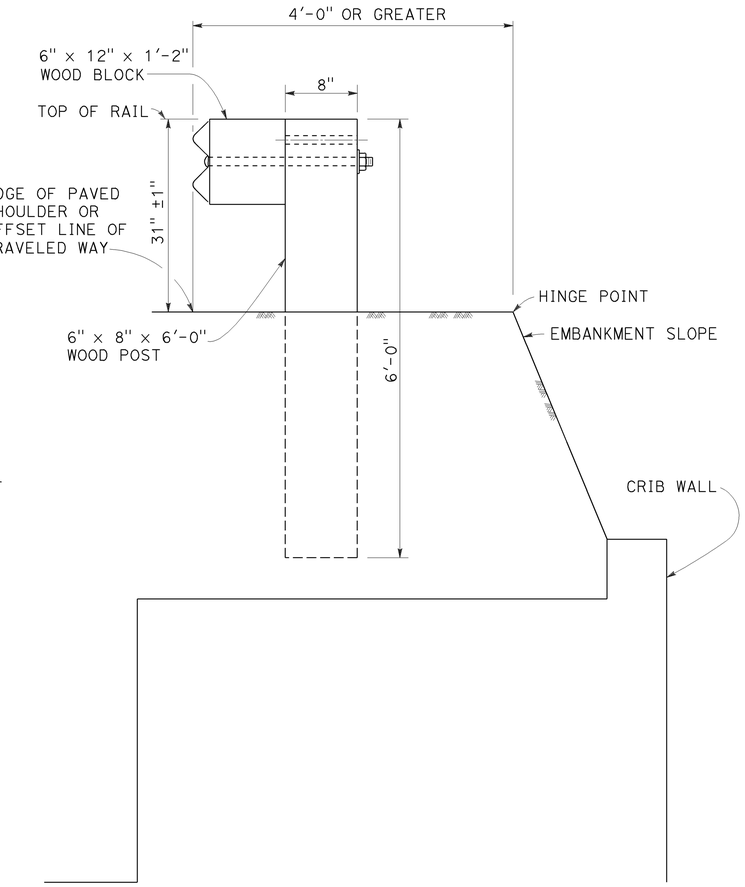

DETAIL D

INSTALLATION AT EARTH RETAINING WALLS

NOTES:

1. These installation details also applicable to steel line post installations. For Detail A, C, and D, where steel line post installations are constructed, W6 x 8.5 or W6 x 9 steel post, 6'-0" in length, with 6" x 12" x 1'-2" notched wood blocks or notched recycled plastic blocks are to be used in place of the size of wood post and wood block shown. For Detail B, where steel line post installations are constructed, W6 x 15 steel post, 8'-0" in length, with 8" x 12" x 1'-2" notched wood blocks or notched recycled plastic blocks are to be used in place of the size of wood post and wood block shown. For additional installation details, see Revised Standard Plan RSP A77L1 and RSP A77L2.
2. Where the distance between the face of the rail and the hinge point is less than 2'-6", see the Project Plans for special details.
3. For dike positioning with MGS installations, see Revised Standard Plan RSP A77N4.

STATE OF CALIFORNIA
DEPARTMENT OF TRANSPORTATION

MIDWEST GUARDRAIL SYSTEM TYPICAL LINE POST EMBEDMENT AND HINGE POINT OFFSET DETAILS

NO SCALE

RSP A77N3 DATED NOVEMBER 15, 2013 SUPERSEDES RSP A77N3
DATED JULY 19, 2013 THAT SUPPLEMENTS THE STANDARD PLANS BOOK DATED 2010.

REVISED STANDARD PLAN RSP A77N3

10-29-13

Dist	COUNTY	ROUTE	POST MILES TOTAL PROJECT	SHEET No.	TOTAL SHEETS
06	Ker	5	62.5/73.1	167	213

Randell D. Hiatt
REGISTERED CIVIL ENGINEER

July 19, 2013
PLANS APPROVAL DATE

REGISTERED PROFESSIONAL ENGINEER
Randell D. Hiatt
No. C50200
Exp. 6-30-15
CIVIL
STATE OF CALIFORNIA

THE STATE OF CALIFORNIA OR ITS OFFICERS OR AGENTS SHALL NOT BE RESPONSIBLE FOR THE ACCURACY OR COMPLETENESS OF SCANNED COPIES OF THIS PLAN SHEET.

TO ACCOMPANY PLANS DATED 6-16-14

NOTES:

1. When necessary to place dike more than 7" in front of face of MGS, only Type C dike may be used. For dike details, see Revised Standard Plan RSP A87B.
2. For standard railing post embedment, see Revised Standard Plan RSP A77N3.
3. MGS delineation to be used where shown on the Project Plans.
4. When dike or curb is placed under MGS, the maximum height of the dike or curb shall be 6". Mountable dike should not be used. For dike and curb details, see Revised Standard Plans RSP A87A and RSP A87B.
5. For details of typical distance between the face of rail and hinge point, see Revised Standard Plan RSP A77N3.
6. For steel line posts, use 1/4 - 20 self-tapping screws in 0.22" diameter holes or 1/4" bolts in 9/32" diameter holes.

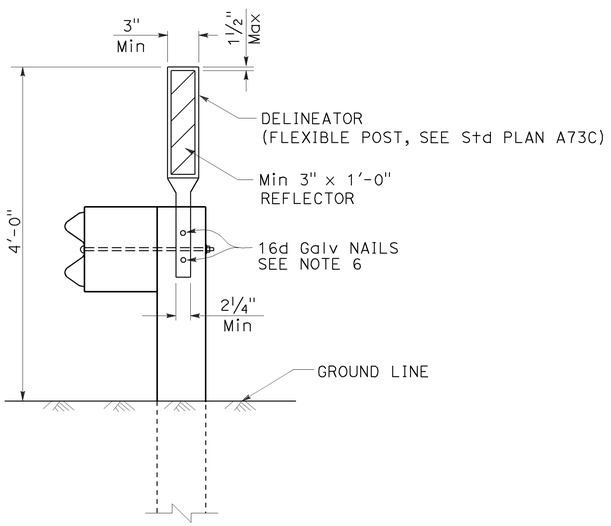

MGS DELINEATION
See Note 3

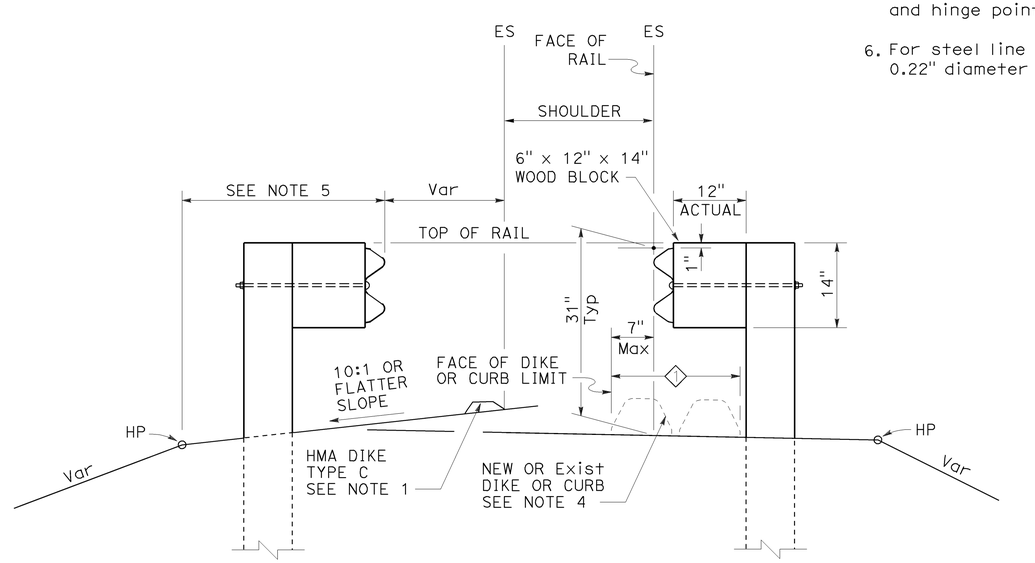

DIKE POSITIONING
See Note 1

1 PERMISSIBLE DIKE OR CURB PLACEMENT AREA

STATE OF CALIFORNIA
DEPARTMENT OF TRANSPORTATION

MIDWEST GUARDRAIL SYSTEM TYPICAL RAILING DELINEATION AND DIKE POSITIONING DETAILS

NO SCALE

RSP A77N4 DATED JULY 19, 2013 SUPPLEMENTS THE STANDARD PLANS BOOK DATED 2010.

REVISED STANDARD PLAN RSP A77N4

2010 REVISED STANDARD PLAN RSP A77N4

7-10-13

Dist	COUNTY	ROUTE	POST MILES TOTAL PROJECT	SHEET No.	TOTAL SHEETS
06	Ker	5	62.5/73.1	168	213

Randell D. Hiatt
REGISTERED CIVIL ENGINEER

July 19, 2013
PLANS APPROVAL DATE

REGISTERED PROFESSIONAL ENGINEER
Randell D. Hiatt
No. C50200
Exp. 6-30-15
CIVIL
STATE OF CALIFORNIA

THE STATE OF CALIFORNIA OR ITS OFFICERS OR AGENTS SHALL NOT BE RESPONSIBLE FOR THE ACCURACY OR COMPLETENESS OF SCANNED COPIES OF THIS PLAN SHEET.

TO ACCOMPANY PLANS DATED 6-16-14

2010 REVISED STANDARD PLAN RSP A77Q1

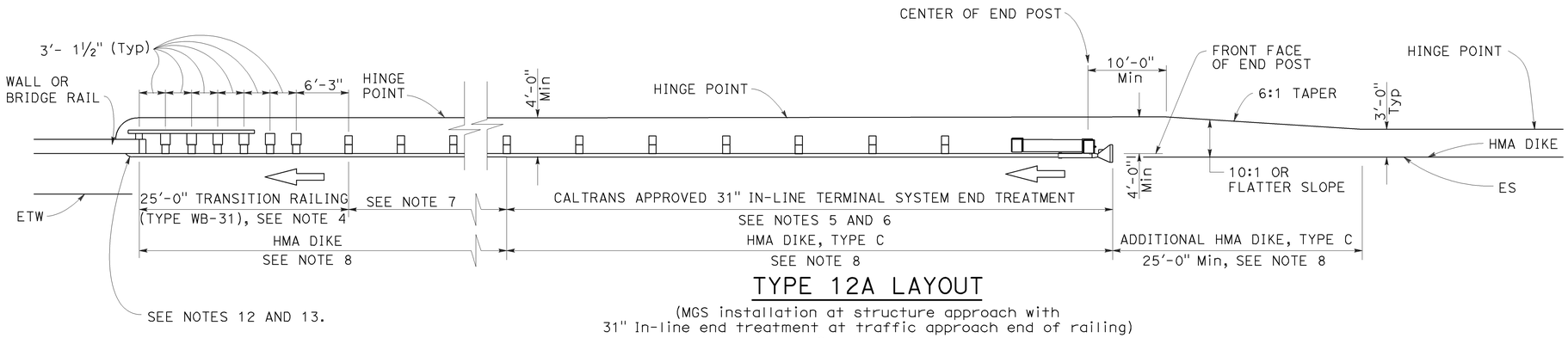

TYPE 12A LAYOUT

(MGS installation at structure approach with
31" In-line end treatment at traffic approach end of railing)
See Notes 9

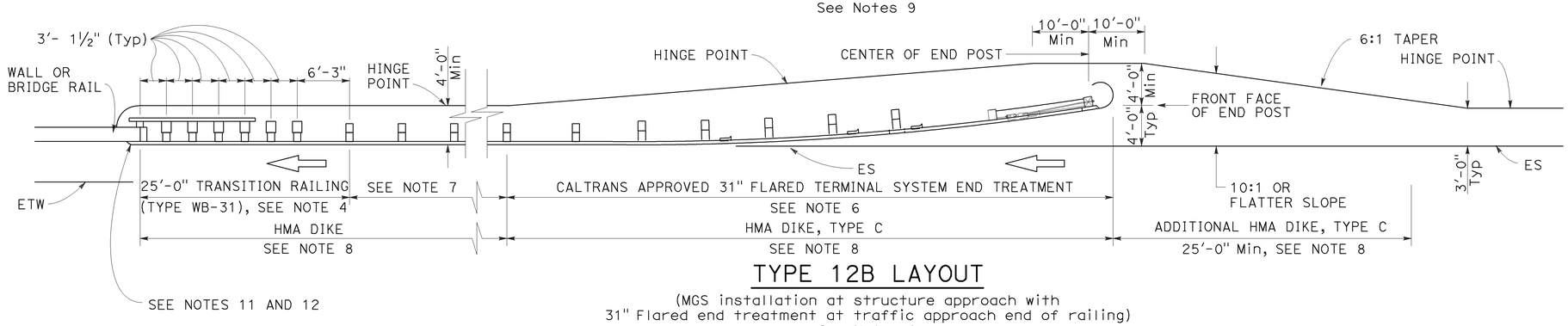

TYPE 12B LAYOUT

(MGS installation at structure approach with
31" Flared end treatment at traffic approach end of railing)
See Notes 9

NOTES:

1. Line post, blocks and hardware to be used are shown on Revised Standard Plans RSP A77L1, RSP A77L2, RSP A77M1, RSP A77N1 and RSP A77N2.
2. MGS post spacing to be 6'-3" center to center, except as otherwise noted.
3. Except as noted, line posts are 6" x 8" x 6'-0" wood with 6" x 12" x 1'-2" wood blocks. W6 x 8.5 or W6 x 9 steel posts, 6'-0" in length, with 6" x 12" x 1'-2" notched wood blocks or plastic blocks may be used for 6" x 8" x 6'-0" wood posts with 6" x 12" x 1'-2" wood blocks where applicable and when specified.
4. For Transition Railing (Type WB-31) details for Types 12A and 12B Layouts, see Revised Standard Plan RSP A77U4.
5. 31" in-line terminal system end treatments are used where site conditions will not accommodate a 31" flared end treatment.
6. The type 31" of terminal system end treatment to be used will be shown on the Project Plans.
7. Dependent on site conditions (embankment height, side slopes, or other fixed objects), it may be advisable to construct additional guard railing (a length equal to multiples of 12'-6" with 6'-3" post spacing) between the transition railing and end treatment. A 12.5 degree angle of departure can be drawn on the Project Plans from the edge of traveled way through the outer most point of the fixed object to determine the additional length of railing needed.
8. Where placement of dike is required with guard railing installations, see Revised Standard Plan RSP A77N4 for dike positioning details.
9. Type 12A or Type 12B Layouts are typically used:
   a. To the right of approaching traffic, at the end of a structure, on two-lane conventional highway where the roadbed width across the structure is less than 40 feet.
   b. To the left of approaching traffic, at the end of a structure, on two-lane conventional highway where the roadbed width across the structure is less than 40 feet.
   c. To the right of approaching traffic at the end of each structure on multilane freeways or expressways with separate adjacent or parallel bridges.
   d. To the right of approaching traffic at the end of the structure on multilane freeways or expressways with decked median on the bridge.
10. See Revised Standard Plan RSP A77Q3 for typical layout used left of approaching traffic at the ends of each structure on multilane freeways or expressways with separate adjacent or parallel bridges.
11. For additional details of typical connections to bridge rail, see Connection Detail AA on Revised Standard Plans RSP A77U1 and RSP A77U2 and Connection Detail FF on Revised Standard Plans RSP A77V1 and RSP A77V2.
12. For additional details of a typical connection to walls or abutments, see Revised Standard Plan RSP A77U3.

STATE OF CALIFORNIA
DEPARTMENT OF TRANSPORTATION

MIDWEST GUARDRAIL SYSTEM TYPICAL LAYOUTS FOR STRUCTURE APPROACH

NO SCALE

RSP A77Q1 DATED JULY 19, 2013 SUPPLEMENTS THE STANDARD PLANS BOOK DATED 2010.

REVISED STANDARD PLAN RSP A77Q1

Dist	COUNTY	ROUTE	POST MILES TOTAL PROJECT	SHEET No.	TOTAL SHEETS
06	Ker	5	62.5/73.1	169	213

Randell D. Hiatt
REGISTERED CIVIL ENGINEER

July 19, 2013
PLANS APPROVAL DATE

REGISTERED PROFESSIONAL ENGINEER
Randell D. Hiatt
No. C50200
Exp. 6-30-15
CIVIL
STATE OF CALIFORNIA

THE STATE OF CALIFORNIA OR ITS OFFICERS OR AGENTS SHALL NOT BE RESPONSIBLE FOR THE ACCURACY OR COMPLETENESS OF SCANNED COPIES OF THIS PLAN SHEET.

TO ACCOMPANY PLANS DATED 6-16-14

2010 REVISED STANDARD PLAN RSP A77R1

NOTES:

1. Line post, blocks and hardware to be used are shown on Revised Standard Plans RSP A77L1, RSP A77L2, RSP A77M1, RSP A77N1, and RSP A77N2.
2. MGS post spacing to be 6′-3″ center to center, except as otherwise noted.
3. Except as noted, line posts are 6″ x 8″ x 6′-0″ wood with 6″ x 12″ x 1′-2″ wood blocks. W6 x 8.5 or W6 x 9 steel posts, 6′-0″ in length, with 6″ x 12″ x 1′-2″ notched wood blocks or notched recycled plastic blocks may be used for 6″ x 8″ x 6′-0″ wood line posts with 6″ x 12″ x 1′-2″ wood blocks where applicable and when specified.
4. A 4′-0″ minimum clearance is required between the face of the railing and the face of a fixed object located directly behind MGS sections with post spacing of 6′-3″. Construct MGS as shown in the detail "Strengthened Midwest Guardrail System Sections for Fixed Object" on this plan, where the clearance between the face of the railing and the face of a fixed object is less than 4′-0″, but not less than 3′-0″. Where the clearance is less than 3′-0″, a concrete wall or barrier should be constructed to shield the fixed object(s).
5. For End Anchor Assembly (Type SFT) details, see Revised Standard Plan RSP A77S1.
6. For details of Rail Tensioning Assembly, see Revised Standard Plan RSP A77S2.
7. The type of crash cushion to be used will be shown on the Project Plans.
8. Type 14A layout is typically used on multilane freeways or expressways to shield fixed objects where a median type barrier is not constructed between the separated roadbeds.
9. For typical flare offsets for 25′-0″ length parabola with maximum offset of 1′-0″, see Revised Standard Plan RSP A77P1.
10. The 15:1 or flatter flare is measured off of the edge of traveled way.
11. W6 x 15 steel post, 8′-0″ in length, with 8″ x 12″ x 1′-2″ notched wood block or notched recycled plastic block may be used in place of the 10″ x 10″ x 8′-0″ wood post with 8″ x 12″ x 1′-2″ wood block shown in the detail "Strengthened Midwest Guardrail System Sections for Fixed Object".

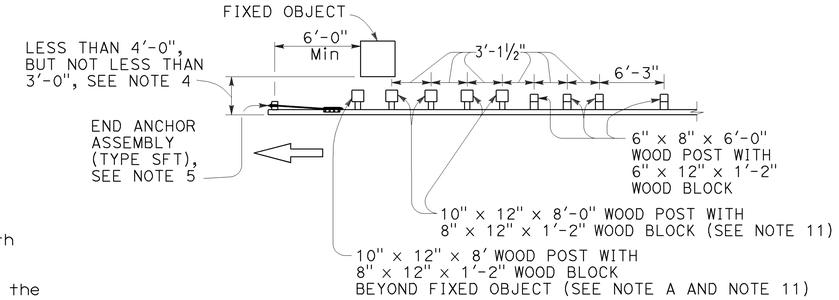

NOTE A: For a series of fixed objects (bridge columns, overhead sign supports, etc.) additional 10″ x 10″ x 8′-0″ wood post with 8″ x 12″ x 1′-2″ wood blocks at 3′-1½″ center to center spacing are to be used between fixed objects.

STRENGTHENED MIDWEST GUARDRAIL SYSTEM SECTIONS FOR FIXED OBJECT

Use strengthened MGS sections with Type 14A layout where minimum clearance between the face of the railing and fixed object(s) is less than 4′-0″, but not less than 3′-0″, See Note 4.

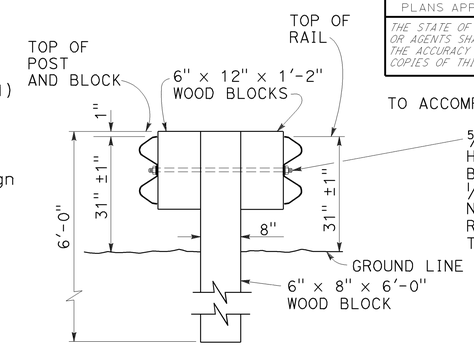

SECTION A-A
TYPICAL DOUBLE MIDWEST GUARDRAIL SYSTEM

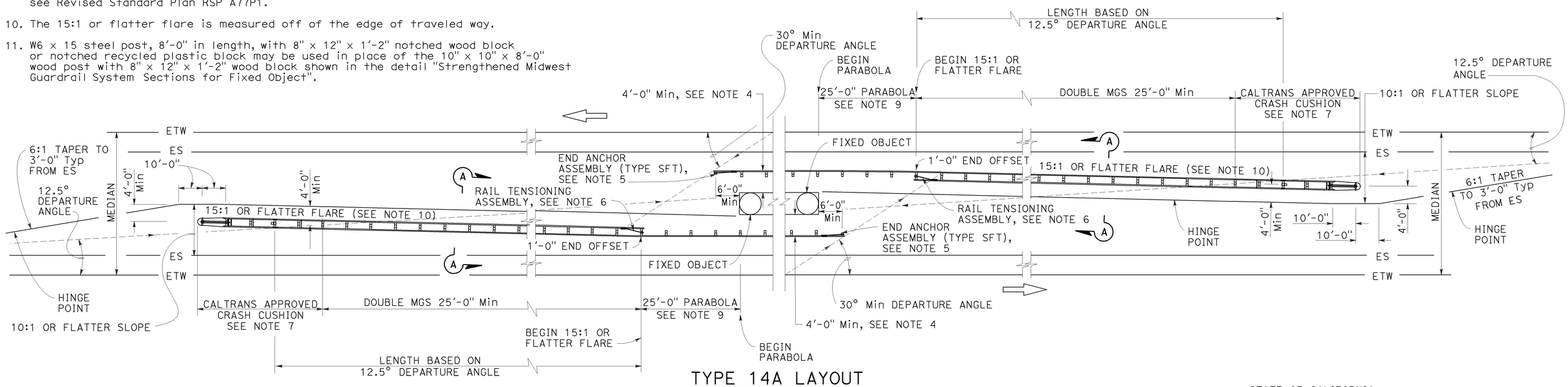

TYPE 14A LAYOUT

See Note 8

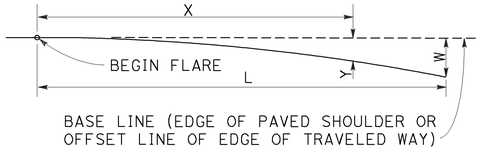

$$Y = \frac{WX^2}{L^2}$$

Y = OFFSET FROM BASE LINE
W = MAXIMUM OFFSET
X = DISTANCE ALONG BASE LINE
L = LENGTH OF FLARE

PARABOLIC FLARE OFFSETS

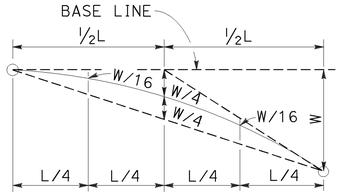

TYPICAL PARABOLIC LAYOUT

STATE OF CALIFORNIA
DEPARTMENT OF TRANSPORTATION

MIDWEST GUARDRAIL SYSTEM TYPICAL LAYOUTS FOR FIXED OBJECTS BETWEEN SEPARATE ROADBEDS (TWO-WAY TRAFFIC)

NO SCALE

RSP A77R1 DATED JULY 19, 2013 SUPPLEMENTS THE STANDARD PLANS BOOK DATED 2010.

REVISED STANDARD PLAN RSP A77R1

7-16-13

Dist	COUNTY	ROUTE	POST MILES TOTAL PROJECT	SHEET No.	TOTAL SHEETS
06	Ker	5	62.5/73.1	170	213

Randell D. Hiatt
REGISTERED CIVIL ENGINEER

July 19, 2013
PLANS APPROVAL DATE

REGISTERED PROFESSIONAL ENGINEER
Randell D. Hiatt
No. C50200
Exp. 6-30-15
CIVIL
STATE OF CALIFORNIA

THE STATE OF CALIFORNIA OR ITS OFFICERS OR AGENTS SHALL NOT BE RESPONSIBLE FOR THE ACCURACY OR COMPLETENESS OF SCANNED COPIES OF THIS PLAN SHEET.

TO ACCOMPANY PLANS DATED 6-16-14

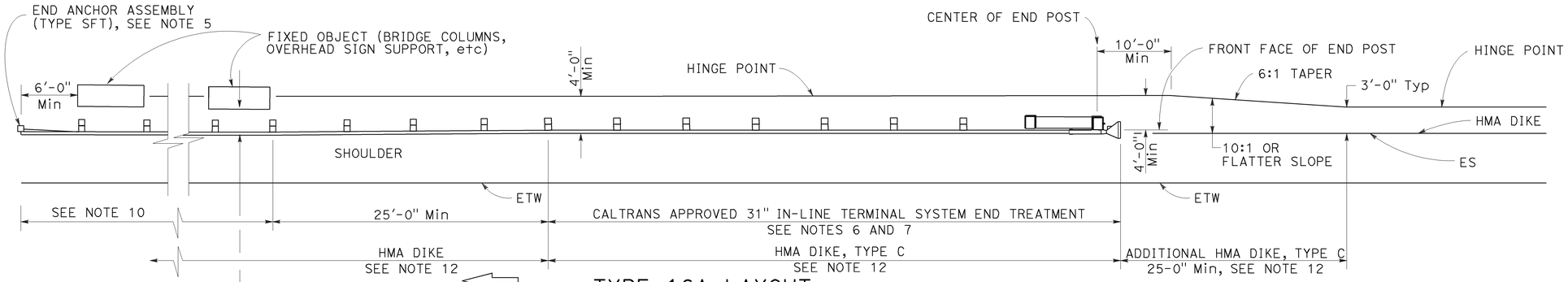

TYPE 16A LAYOUT

(MGS installation at roadside fixed object or objects with 31" in-line end treatment at traffic approach end of railing)
See Notes 11 and 12

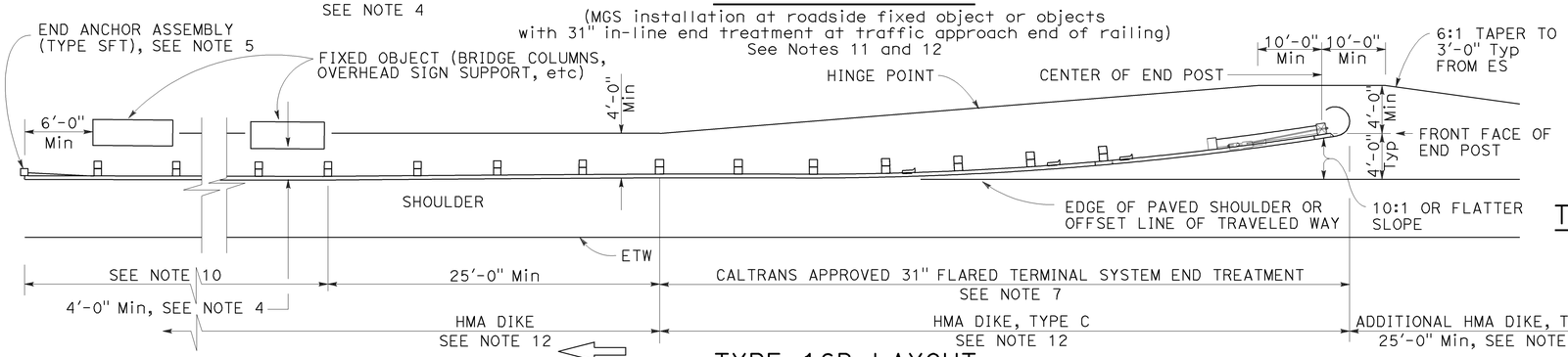

TYPE 16B LAYOUT

(MGS installation at roadside fixed object or objects with 31' flared end treatment at traffic approach end of railing)
See Notes 11 and 12

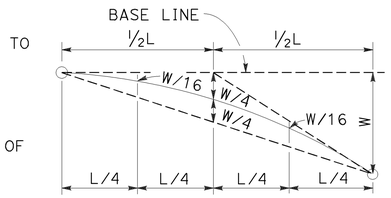

TYPIC AL PARABOLIC LAYOUT

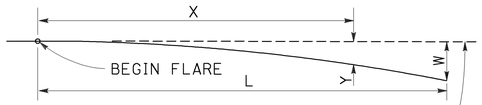

BASE LINE (EDGE OF PAVED SHOULDER OR OFFSET LINE OF EDGE OF TRAVELED WAY)

$$Y = \frac{WX^2}{L^2}$$

Y = OFFSET FROM BASE LINE
W = MAXIMUM OFFSET
X = DISTANCE ALONG BASE LINE
L = LENGTH OF FLARE

PARABOLIC FLARE OFFSETS

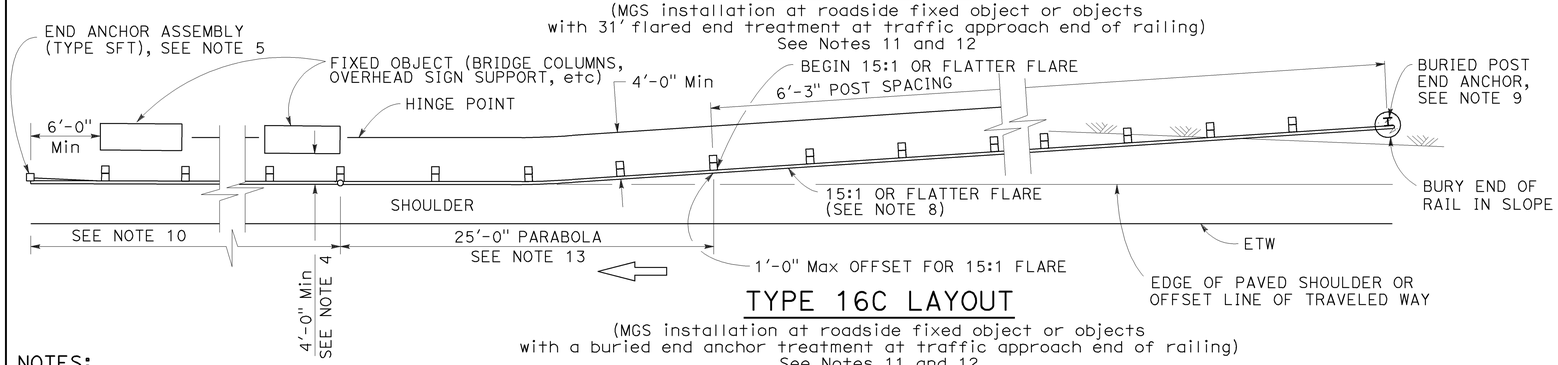

TYPE 16C LAYOUT

(MGS installation at roadside fixed object or objects with a buried end anchor treatment at traffic approach end of railing)
See Notes 11 and 12

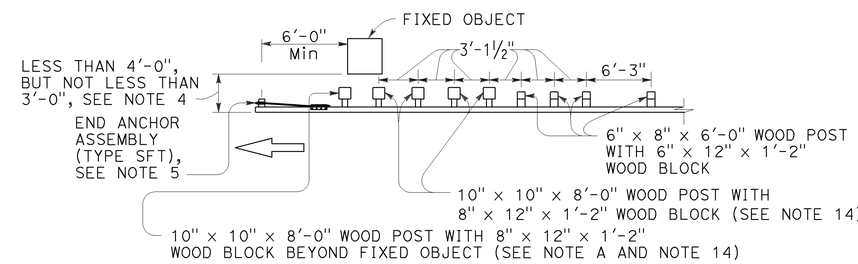

NOTE A: For a series of fixed objects (bridge columns, overhead sign supports, etc.) additional 10" x 10" x 8'-0" wood post with 8" x 12" x 1'-2" wood blocks at 3'-1½" center to center spacing are to be used between fixed objects.

STRENGTHENED MIDWEST GUARDRAIL SYSTEM SECTIONS FOR FIXED OBJECT

Use strengthened MGS sections with Types 16A, 16B or 16C layouts where minimum clearance between the face of the railing and fixed object(s) is less than 4'-0", but not less than 3'-0". See Note 4

NOTES:

1. Line post, blocks and hardware to be used are shown on Revised Standard Plans RSP A77L1, RSP A77L2, RSP A77M1, RSP A77N1 and RSP A77N2.
2. MGS post spacing to be 6'-3" center to center, except as otherwise noted.
3. Except as noted, line posts are 6" x 8" x 6'-0" wood with 6" x 12" x 1'-2" wood blocks. W6 x 8.5 or W6 x 9 steel posts, 6'-0" in length, with 6" x 12" x 1'-2" notched wood blocks or notched recycled plastic blocks may be used for 6" x 8" x 6'-0" wood line posts with 6" x 12" x 1'-2" wood blocks where applicable and when specified.
4. A 4'-0" minimum clearance is required between the face of the railing and the face of a fixed object located directly behind MGS sections with post spacing of 6'-3". Construct MGS as shown in the detail "Strengthened Midwest Guardrail System Sections for Fixed Object" on this plan, where the clearance between the face of the railing and the face of a fixed object is less than 4'-0", but not less than 3'-0". Where the clearance is less than 3'-0", a concrete wall or barrier should be constructed to shield the fixed object(s).
5. For End Anchor Assembly (Type SFT) details, see Revised Standard Plan RSP A77S1.
6. 31" in-line terminal system end treatments are used where site conditions will not accommodate a 31" flared end treatment.
7. The type of 31" terminal system to be used will be shown on the Project Plans.
8. The 15:1 or flatter flare used with Type 16C Layout is based on the edge of the paved shoulder or offset line of edge of the traveled way. The length of MGS within the 15:1 or flatter flare is based on site conditions and should be a length equal to multiples of 12'-6".
9. For details of the Buried Post End Anchor used with Type 16C Layout, see Revised Standard Plan RSP A77T2.
10. As site conditions dictate, construct additional MGS to shield fixed object(s). Additional MGS length equal to multiples of 12'-6". Post spacing at 6'-3" except as specified in Note 4.
11. Layout Types 16A, 16B or 16C are typically used where MGS is recommended to shield roadside fixed object(s) and a crashworthy 31" end treatment is required for only one direction of traffic.
12. Where placement of dike is required with MGS, see Revised Standard Plan RSP A77N4 for dike positioning details.
13. For typical flare offsets for 25'-0" length parabola with maximum offset of 1'-0", see Revised Standard Plan RSP A77P1.
14. W6 x 15 steel post, 8'-0" in length, with 8" x 12" x 1'-2" notched wood block or notched recycled plastic blocks may be used in place of the 10" x 10" x 8'-0" wood post with 8" x 12" x 1'-2" wood block shown in the detail "Strengthened Midwest Guardrail System Sections for Fixed Object".

STATE OF CALIFORNIA
DEPARTMENT OF TRANSPORTATION

MIDWEST GUARDRAIL SYSTEM TYPICAL LAYOUTS FOR ROADSIDE FIXED OBJECTS

NO SCALE

RSP A77R3 DATED JULY 19, 2013 SUPPLEMENTS THE STANDARD PLANS BOOK DATED 2010.

REVISED STANDARD PLAN RSP A77R3

2010 REVISED STANDARD PLAN RSP A77R3

6-20-13

Dist	COUNTY	ROUTE	POST MILES TOTAL PROJECT	SHEET No.	TOTAL SHEETS
06	Ker	5	62.5/73.1	171	213

Randell D. Hiatt
REGISTERED CIVIL ENGINEER

November 15, 2013
PLANS APPROVAL DATE

REGISTERED PROFESSIONAL ENGINEER
Randell D. Hiatt
No. C50200
Exp. 6-30-15
CIVIL
STATE OF CALIFORNIA

THE STATE OF CALIFORNIA OR ITS OFFICERS OR AGENTS SHALL NOT BE RESPONSIBLE FOR THE ACCURACY OR COMPLETENESS OF SCANNED COPIES OF THIS PLAN SHEET.

TO ACCOMPANY PLANS DATED 6-16-14

2010 REVISED STANDARD PLAN RSP A77S1

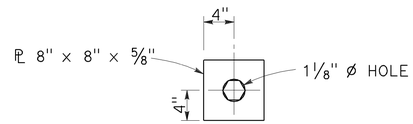

DETAIL "A"
CABLE CONNECTION
END PLATE

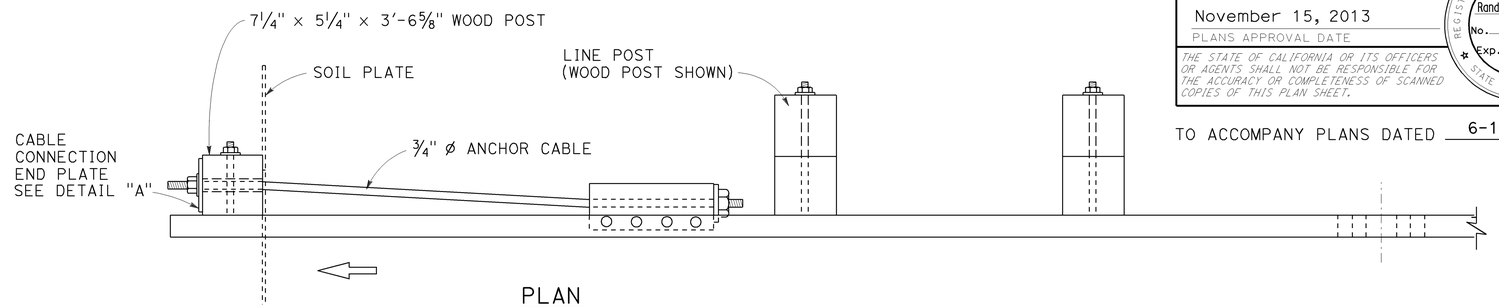

PLAN

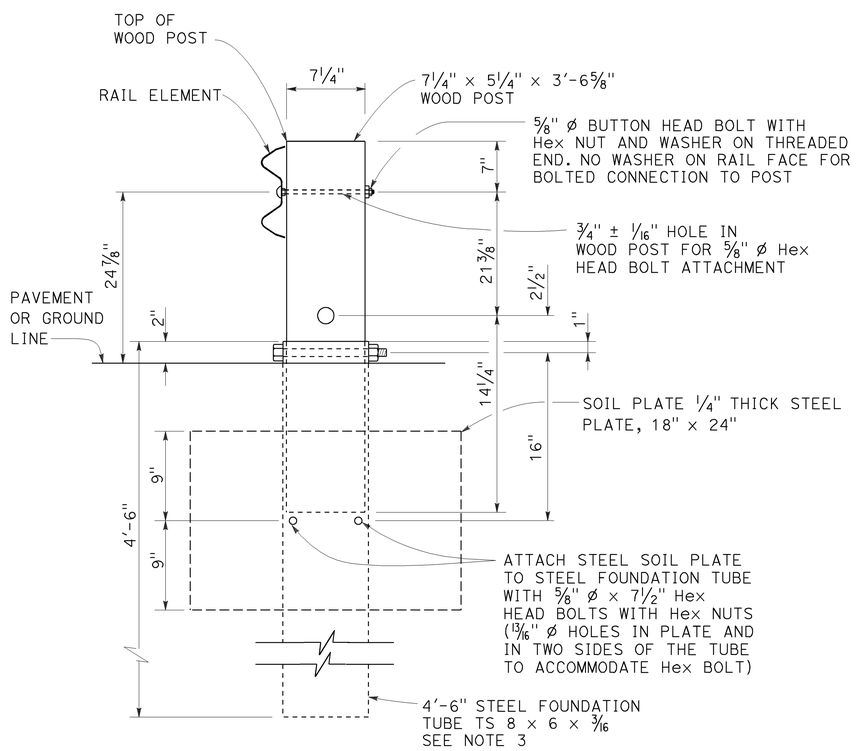

SECTION A-A

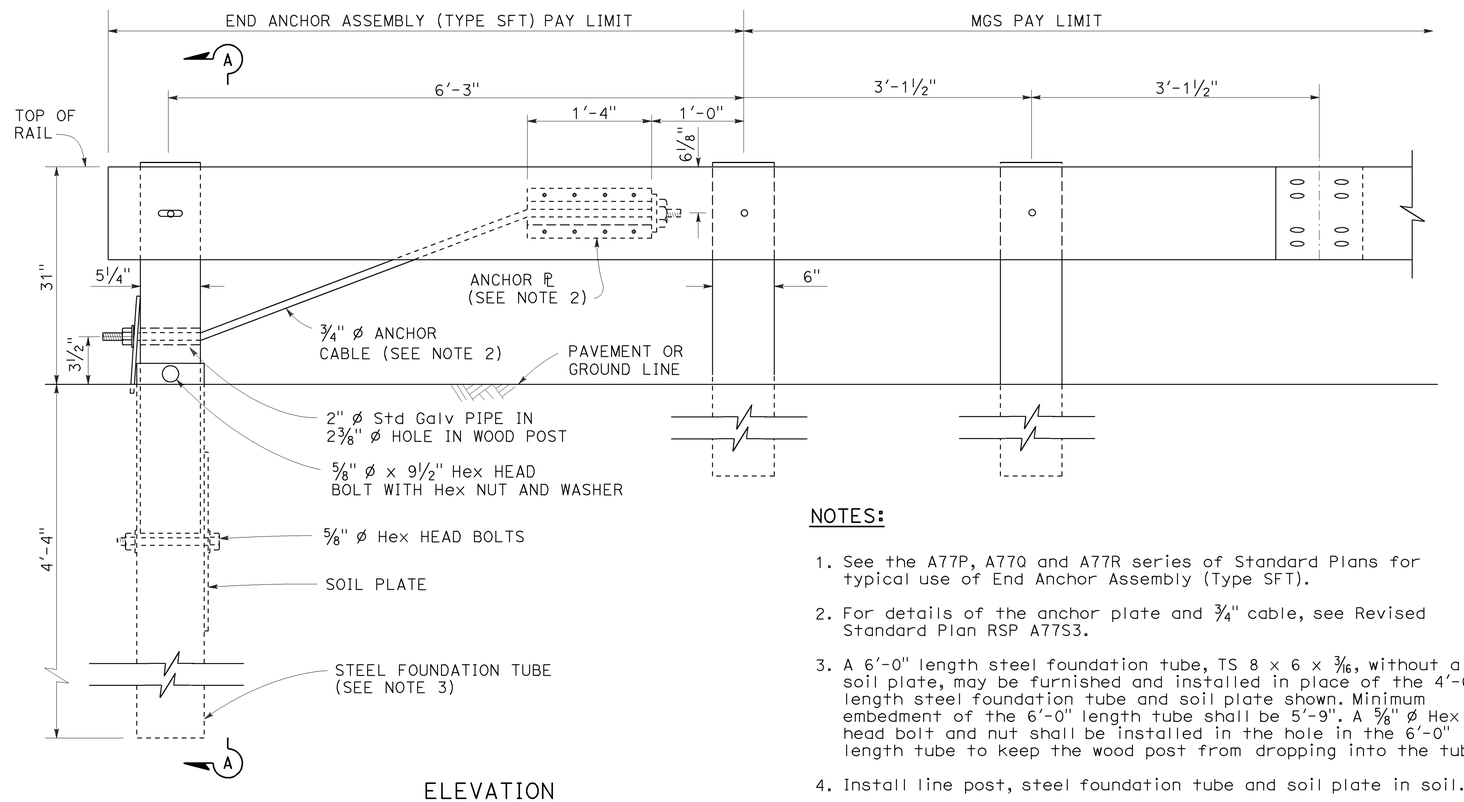

ELEVATION

END ANCHOR
ASSEMBLY (TYPE SFT)
See Note 1

NOTES:

1. See the A77P, A77Q and A77R series of Standard Plans for typical use of End Anchor Assembly (Type SFT).
2. For details of the anchor plate and 3/4" cable, see Revised Standard Plan RSP A77S3.
3. A 6'-0" length steel foundation tube, TS 8 x 6 x 3/16, without a soil plate, may be furnished and installed in place of the 4'-6" length steel foundation tube and soil plate shown. Minimum embedment of the 6'-0" length tube shall be 5'-9". A 5/8" ø Hex head bolt and nut shall be installed in the hole in the 6'-0" length tube to keep the wood post from dropping into the tube.
4. Install line post, steel foundation tube and soil plate in soil.

STATE OF CALIFORNIA
DEPARTMENT OF TRANSPORTATION

MIDWEST GUARDRAIL SYSTEM END ANCHOR ASSEMBLY (TYPE SFT)

NO SCALE

RSP A77S1 DATED NOVEMBER 15, 2013 SUPERSEDES RSP A77S1
DATED JULY 19, 2013 THAT SUPPLEMENTS THE STANDARD PLANS BOOK DATED 2010.

REVISED STANDARD PLAN RSP A77S1

10-4-13

Dist	COUNTY	ROUTE	POST MILES TOTAL PROJECT	SHEET No.	TOTAL SHEETS
06	Ker	5	62.5/73.1	172	213

Randell D. Hiatt
REGISTERED CIVIL ENGINEER

July 19, 2013
PLANS APPROVAL DATE

REGISTERED PROFESSIONAL ENGINEER
Randell D. Hiatt
No. C50200
Exp. 6-30-15
CIVIL
STATE OF CALIFORNIA

THE STATE OF CALIFORNIA OR ITS OFFICERS OR AGENTS SHALL NOT BE RESPONSIBLE FOR THE ACCURACY OR COMPLETENESS OF SCANNED COPIES OF THIS PLAN SHEET.

TO ACCOMPANY PLANS DATED 6-16-14

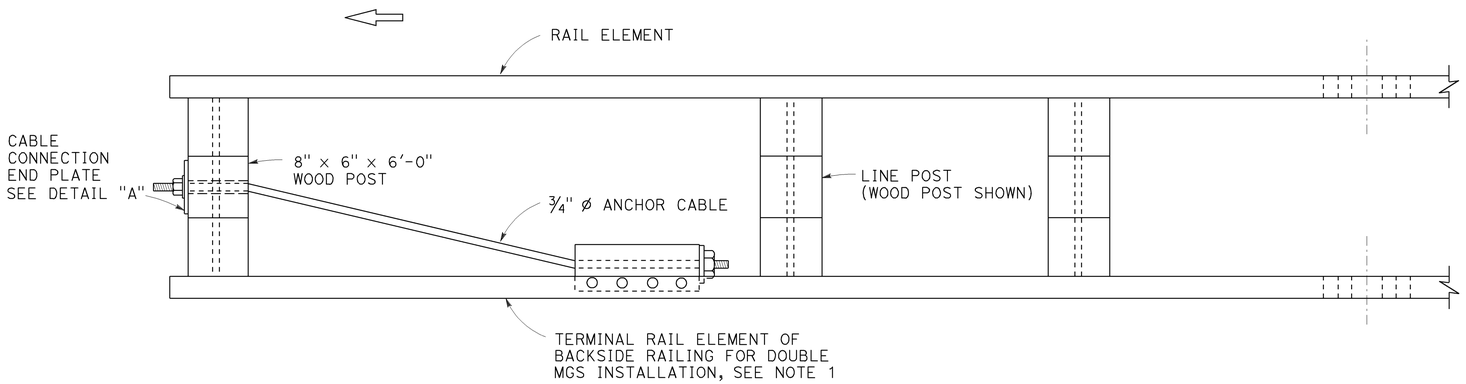

PLAN

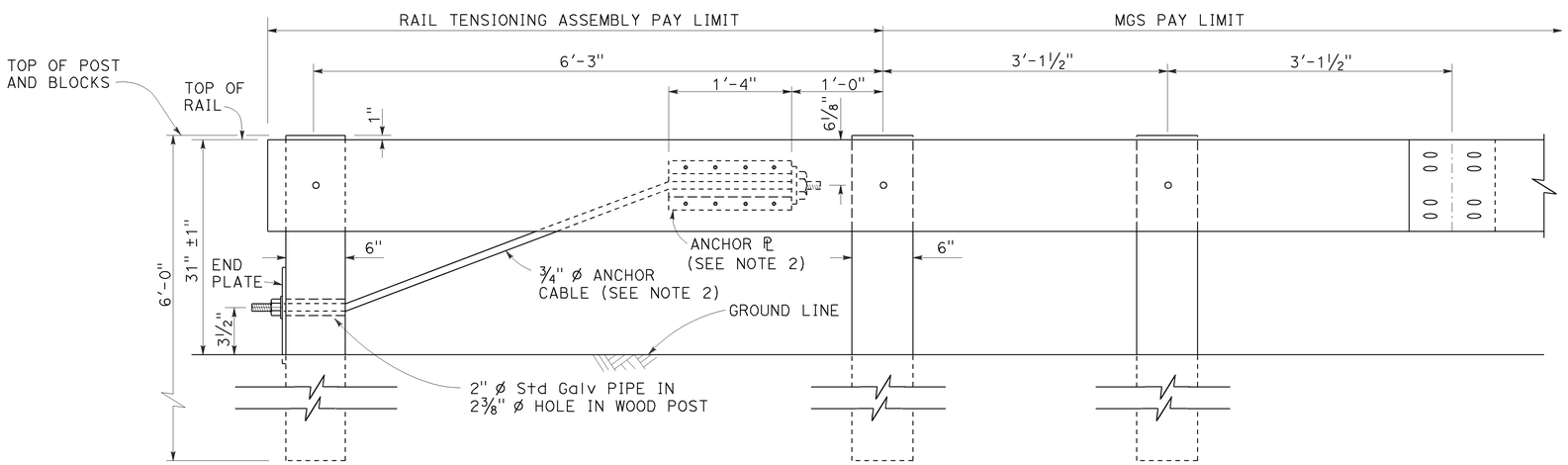

ELEVATION
RAIL TENSIONING ASSEMBLY
See Note 1

NOTES:

1. See Revised Standard Plans RSP A77Q3 and RSP A77R1 for typical use of rail tensioning assembly.
2. For details of the anchor plate and ¾" cable, see Revised Standard Plan RSP A77S3.

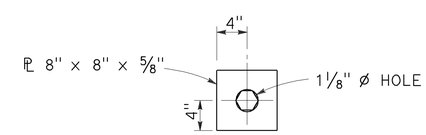

DETAIL "A"
CABLE CONNECTION END PLATE

STATE OF CALIFORNIA
DEPARTMENT OF TRANSPORTATION

MIDWEST GUARDRAIL SYSTEM
RAIL TENSIONING ASSEMBLY

NO SCALE

RSP A77S2 DATED JULY 19, 2013 SUPPLEMENTS THE STANDARD PLANS BOOK DATED 2010.

REVISED STANDARD PLAN RSP A77S2

2010 REVISED STANDARD PLAN RSP A77S2

7-3-13

Dist	COUNTY	ROUTE	POST MILES TOTAL PROJECT	SHEET No.	TOTAL SHEETS
06	Ker	5	62.5/73.1	173	213

Randell D. Hiatt
REGISTERED CIVIL ENGINEER

November 15, 2013
PLANS APPROVAL DATE

REGISTERED PROFESSIONAL ENGINEER
Randell D. Hiatt
No. C50200
Exp. 6-30-15
CIVIL
STATE OF CALIFORNIA

THE STATE OF CALIFORNIA OR ITS OFFICERS OR AGENTS SHALL NOT BE RESPONSIBLE FOR THE ACCURACY OR COMPLETENESS OF SCANNED COPIES OF THIS PLAN SHEET.

TO ACCOMPANY PLANS DATED 6-16-14

NOTE:

See Revised Standard Plans RSP A77S1, RSP A77S2 and RSP A77T1 for typical use of anchor cable and anchor plate.

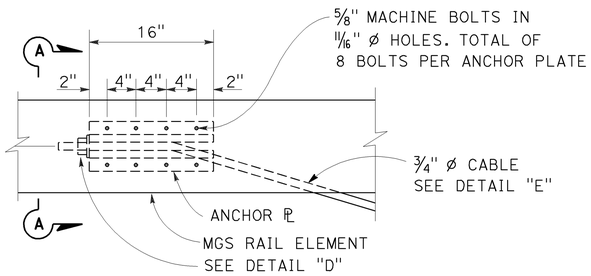

ANCHOR PLATE DETAIL

(MGS shown, TBB similar)

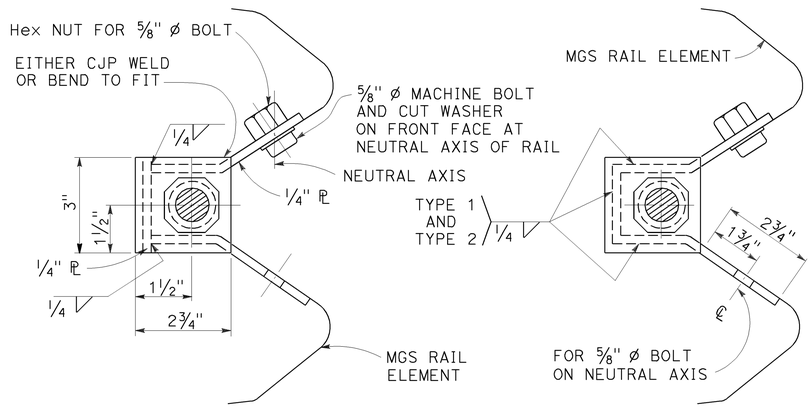

NOTE:

Dimensioning applies to both types.

SECTION A-A
(ALTERNATIVE TYPE 1)

SECTION A-A
(ALTERNATIVE TYPE 2)

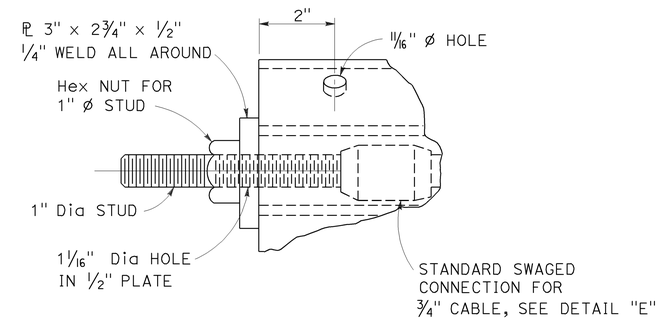

DETAIL "D"

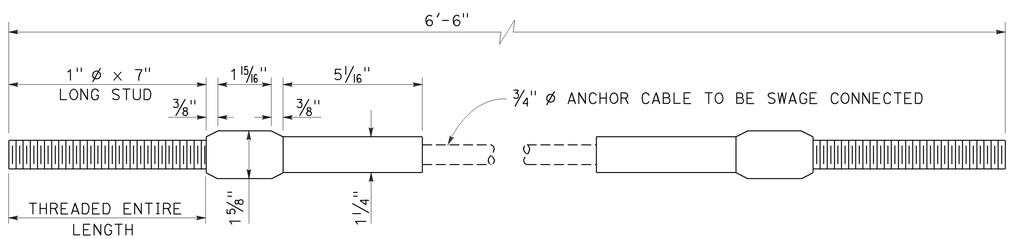

ANCHOR CABLE WITH SWAGED FITTING AND STUD

DETAIL "E"

STATE OF CALIFORNIA
DEPARTMENT OF TRANSPORTATION

METAL RAILING ANCHOR CABLE AND ANCHOR PLATE DETAILS

NO SCALE

RSP A77S3 DATED NOVEMBER 15, 2013 SUPERSEDES RSP A77S3 DATED JULY 19, 2013 THAT SUPPLEMENTS THE STANDARD PLANS BOOK DATED 2010.

REVISED STANDARD PLAN RSP A77S3

2010 REVISED STANDARD PLAN RSP A77S3

10-4-13

Dist	COUNTY	ROUTE	POST MILES TOTAL PROJECT	SHEET No.	TOTAL SHEETS
06	Ker	5	62.5/73.1	174	213

Randell D. Hiatt
REGISTERED CIVIL ENGINEER

July 19, 2013
PLANS APPROVAL DATE

REGISTERED PROFESSIONAL ENGINEER
Randell D. Hiatt
No. C50200
Exp. 6-30-15
CIVIL
STATE OF CALIFORNIA

THE STATE OF CALIFORNIA OR ITS OFFICERS OR AGENTS SHALL NOT BE RESPONSIBLE FOR THE ACCURACY OR COMPLETENESS OF SCANNED COPIES OF THIS PLAN SHEET.

TO ACCOMPANY PLANS DATED 6-16-14

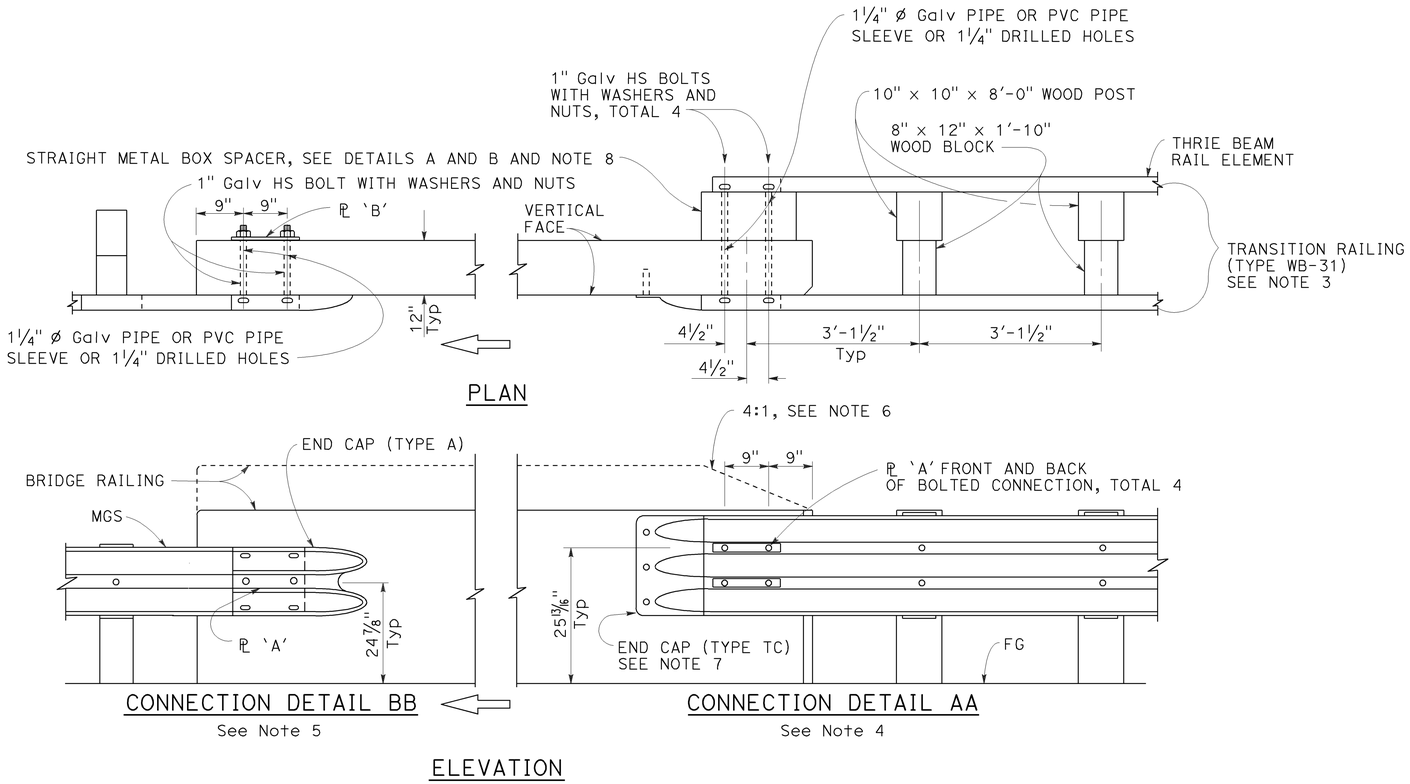

MIDWEST GUARDRAIL SYSTEM CONNECTION TO BRIDGE RAILING WITHOUT SIDEWALK

NOTES:

1. See Revised Standard Plan RSP A77U2 for additional connection details to bridges without sidewalks.
2. Additional details of posts, blocks and hardware are shown on Revised Standard Plans RSP A77M1, RSP A77N1 and RSP A77N2.
3. For additional details of Transition Railing (Type WB-31), see Revised Standard Plan RSP A77U4. Transition Railing (Type WB-31) transitions the 12 gauge MGS railing section to a heavier gage nested thrie beam railing section which is connected to the concrete bridge railing.
4. For typical use of Connection Detail AA, see Layout Types 12A and 12B on Revised Standard Plan RSP A77Q1, Layout Types 12C and 12D on Revised Standard Plan RSP A77Q2, and Layout Type 12E on Revised Standard Plan RSP A77Q3.
5. For typical use of Connection Detail BB, see Layout Type 12D (structure departure railing connection) on Revised Standard Plan RSP A77Q2 and Layout Type 12DD on Revised Standard Plan RSP A77Q5.
6. Where the height of the bridge railing exceeds the height of the thrie beam railing by more than 1" at Connection Detail AA, taper the top of the end of the bridge railing at 4:1 to match the top elevation of the thrie beam rail.
7. For details of End Cap (Type TC), see Revised Standard Plan RSP A77U4.
8. See Revised Standard Plan RSP A77U4 for additional details regarding depth dimension for straight metal box spacer.

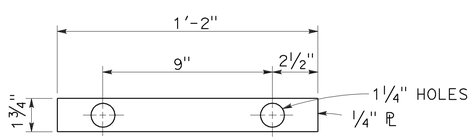

PLATE 'A'

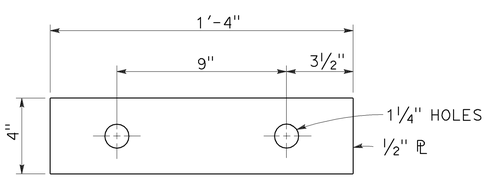

PLATE 'B'
(For backside of connection BB)

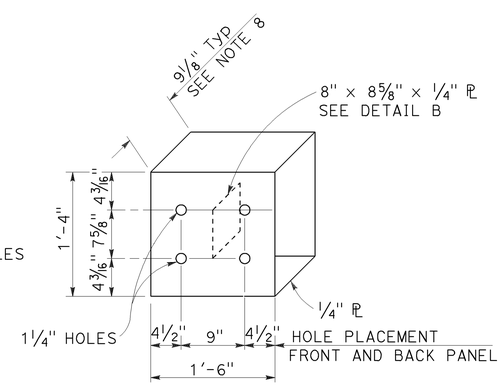

DETAIL A

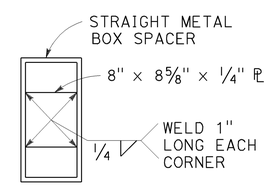

DETAIL B

STRAIGHT METAL BOX SPACER

STATE OF CALIFORNIA
DEPARTMENT OF TRANSPORTATION

MIDWEST GUARDRAIL SYSTEM CONNECTIONS TO BRIDGE RAILINGS WITHOUT SIDEWALKS DETAILS No. 1

NO SCALE

RSP A77U1 DATED JULY 19, 2013 SUPPLEMENTS THE STANDARD PLANS BOOK DATED 2010.

REVISED STANDARD PLAN RSP A77U1

2010 REVISED STANDARD PLAN RSP A77U1

7-8-13

Dist	COUNTY	ROUTE	POST MILES TOTAL PROJECT	SHEET No.	TOTAL SHEETS
06	Ker	5	62.5/73.1	175	213

Randell D. Hiatt
REGISTERED CIVIL ENGINEER

July 19, 2013
PLANS APPROVAL DATE

REGISTERED PROFESSIONAL ENGINEER
Randell D. Hiatt
No. C50200
Exp. 6-30-15
CIVIL
STATE OF CALIFORNIA

THE STATE OF CALIFORNIA OR ITS OFFICERS OR AGENTS SHALL NOT BE RESPONSIBLE FOR THE ACCURACY OR COMPLETENESS OF SCANNED COPIES OF THIS PLAN SHEET.

TO ACCOMPANY PLANS DATED 6-16-14

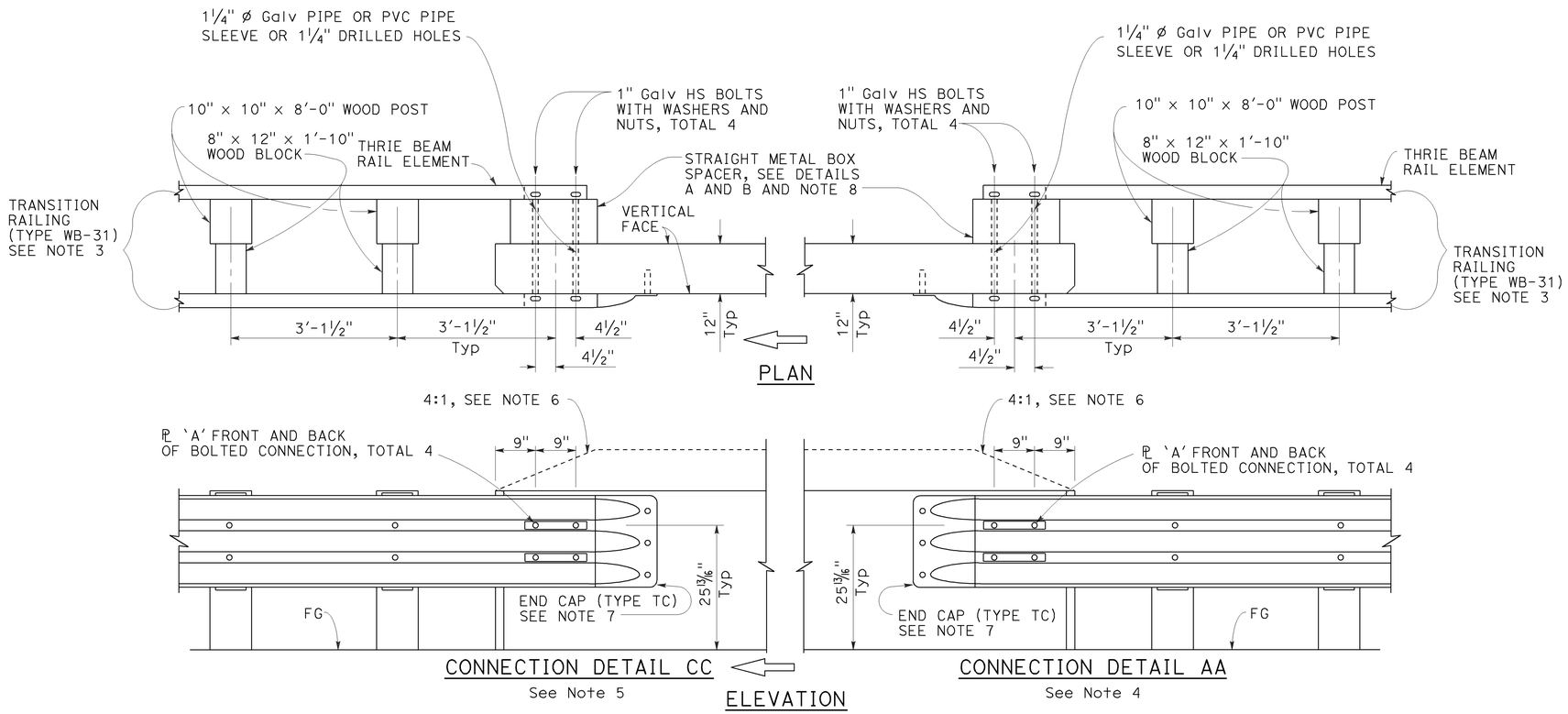

MIDWEST GUARDRAIL SYSTEM CONNECTION TO BRIDGE RAILING WITHOUT SIDEWALK

NOTES:

1. See Revised Standard Plan RSP A77U1 for additional connection details to bridges without sidewalks.
2. Additional details of posts, blocks and hardware are shown on Revised Standard Plans RSP A77M1, RSP A77N1 and RSP A77N2.
3. For additional details of Transition Railing (Type WB-31), see Revised Standard Plan RSP A77U4. Transition Railing (Type WB-31) transitions the 12 gauge MGS railing section to a heavier gage nested thrie beam railing section which is connected to the concrete bridge railing.
4. For typical use of Connection Detail AA, see Layout Types 12A and 12B on Revised Standard Plan RSP A77Q1, Layout Types 12C and 12D on Revised Standard Plan RSP A77Q2, and Layout Type 12E on Revised Standard Plan RSP A77Q3.
5. For typical use of Connection Detail CC, see Layout Types 12AA and 12BB on Revised Standard Plan RSP A77Q4 and Layout Type 12CC on Revised Standard Plan RSP A77Q5.
6. Where the height of the bridge railing exceeds the height of the thrie beam railing by more than 1" at Connection Detail AA and connection Detail CC, taper the top of the end of the bridge railing at 4:1 to match the top elevation of the thrie beam railing.
7. For details of End Cap (Type TC), see Revised Standard Plan RSP A77U4.
8. See Revised Standard Plan RSP A77U4 for additional details regarding depth dimension for straight metal box spacer.

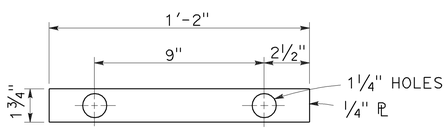

PLATE 'A'

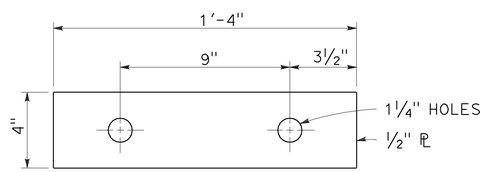

PLATE 'B'
(For backside of connection BB)

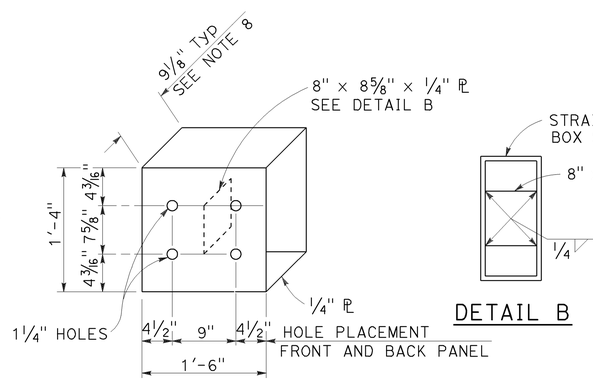

DETAIL A

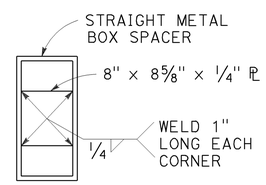

DETAIL B

STRAIGHT METAL BOX SPACER

STATE OF CALIFORNIA
DEPARTMENT OF TRANSPORTATION

MIDWEST GUARDRAIL SYSTEM CONNECTIONS TO BRIDGE RAILINGS WITHOUT SIDEWALKS DETAILS No. 2

NO SCALE

RSP A77U2 DATED JULY 19, 2013 SUPPLEMENTS THE STANDARD PLANS BOOK DATED 2010.

REVISED STANDARD PLAN RSP A77U2

2010 REVISED STANDARD PLAN RSP A77U2

6-20-13

Dist	COUNTY	ROUTE	POST MILES TOTAL PROJECT	SHEET No.	TOTAL SHEETS
06	Ker	5	62.5/73.1	176	213

Randell D. Hiatt
REGISTERED CIVIL ENGINEER

November 15, 2013
PLANS APPROVAL DATE

REGISTERED PROFESSIONAL ENGINEER
Randell D. Hiatt
No. C50200
Exp. 6-30-15
CIVIL
STATE OF CALIFORNIA

THE STATE OF CALIFORNIA OR ITS OFFICERS OR AGENTS SHALL NOT BE RESPONSIBLE FOR THE ACCURACY OR COMPLETENESS OF SCANNED COPIES OF THIS PLAN SHEET.

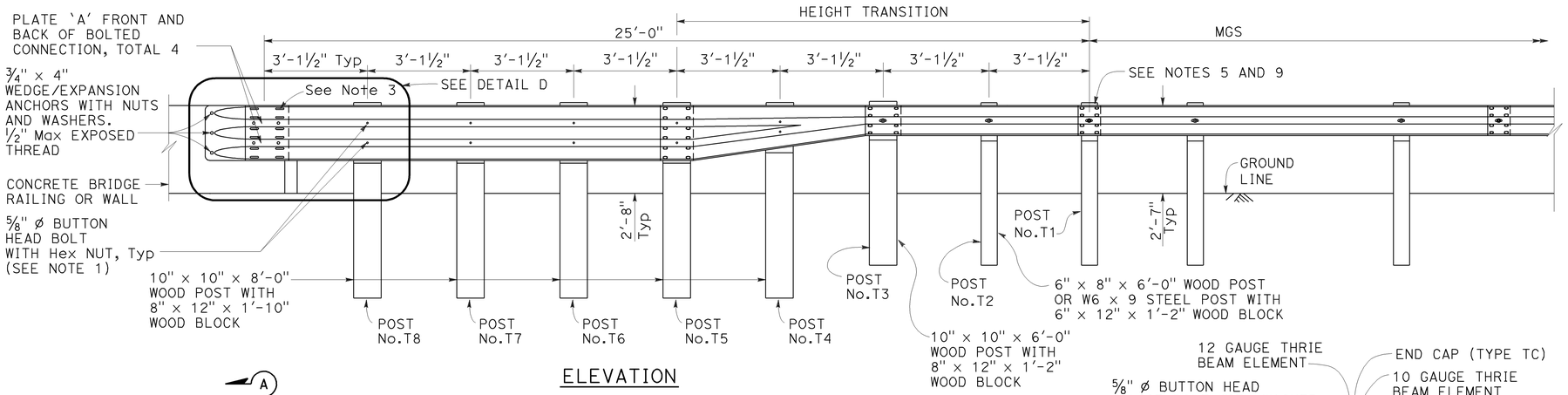

ELEVATION

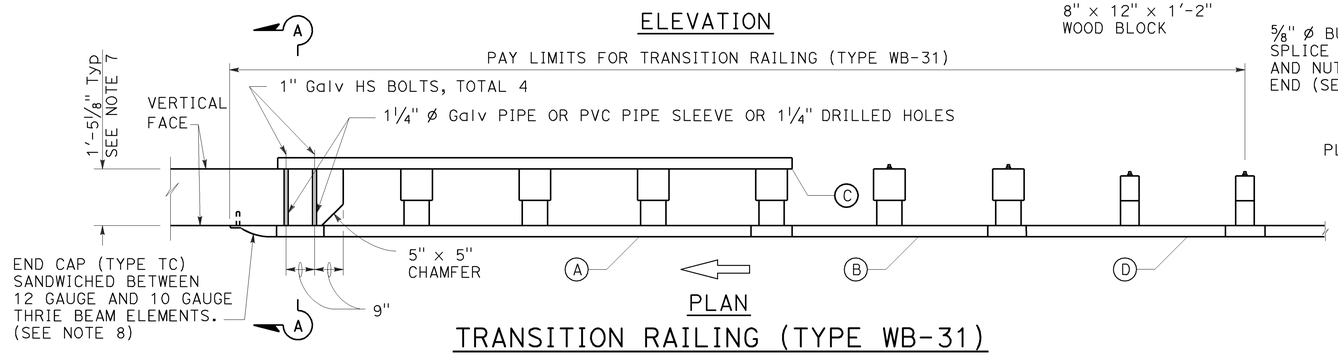

PLAN

TRANSITION RAILING (TYPE WB-31)

(No Blockout Attachment)

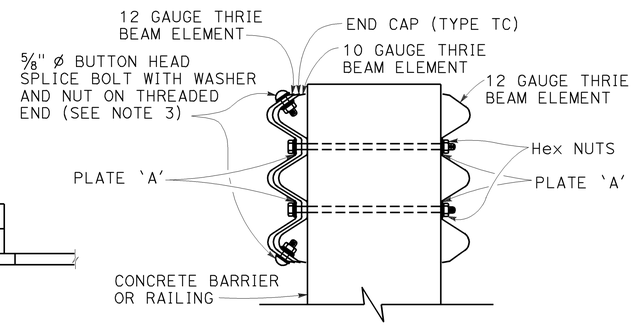

SECTION A-A

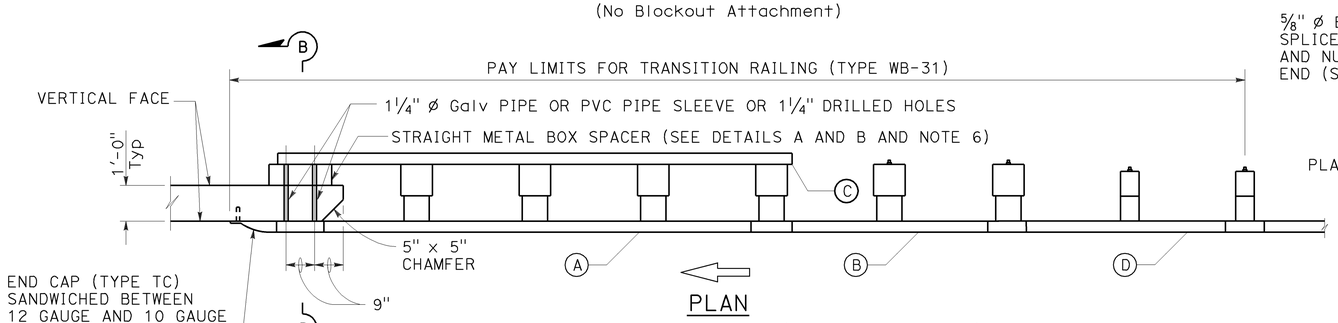

PLAN

TRANSITION RAILING (TYPE WB-31)

(Blockout Attachment)

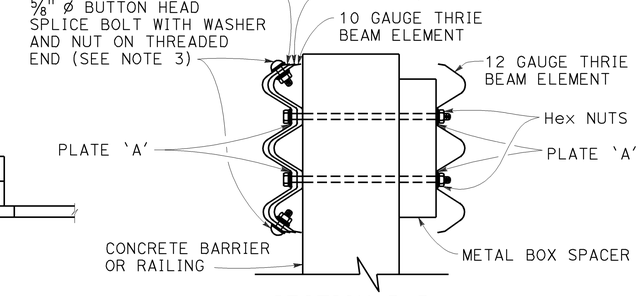

SECTION B-B

NOTES:

TO ACCOMPANY PLANS DATED 6-16-14

1. Use 5/8" ø Button head bolts and hex nuts for connections to posts. No washer on rail face for bolted connections to post.
2. The nested rail elements, end cap, and 'W' beam to thrie beam element may be spliced together prior to bolting the elements to the wood post and concrete barrier or railing.
3. Exterior splice bolt holes for rail element splices at Post No. T5 and the connection to the concrete barrier or railing shall be the standard 29/32" x 1 1/8" slot size. Interior splice bolt holes at these locations may be increased up to 1 1/4" ø. Only the top 4 and the bottom 4 splice bolts with washers and nuts are required for rail splices at Post No. T5 and the connection to the concrete barrier or railing.
4. The top elevation of Posts No. T2 through No. T7 shall not project more than 1" above the top elevation of the rail element.
5. Typically, the railing connected to Transition Railing (Type WB-31) will be either standard railing section of MGS with height transition ratio of 150:1 or a Caltrans approved 31" end treatment attached to Post No. T1.
6. The depth of the metal box spacer varies from the 9 1/8" to 1 1/2" and is dependent on the width of the concrete railing or wall. The combined dimension for the depth of the metal box spacer plus the width of railing or wall is typically 21 1/8". Where the space between the backside of the concrete railing or wall and the rear thrie beam element is less than 1 1/2", metal plates similar to Plate 'A' are to be used as spacers.
7. Where the width of the concrete railing or wall is greater than 17 1/8", wood blocks are to be used to fill the space created between the backside of Posts No. T5 through No. T8 and the rear thrie beam element. These wood blocks shall be 8" in width and 1'-2" in length. The dimension between the front thrie beam element and the rear thrie beam element is to match the width of the concrete railing or wall.
8. End cap may be installed over 12 gauge and 10 gauge thrie beam elements where transition railing is installed on the departure end of bridge railing.
9. Conform standard railing section height to 31" at Post No. T1 using height transition ratio of 150:1.

LEGEND:

(A) NESTED THRIE BEAM ELEMENTS (ONE 12 GAUGE ELEMENT NESTED OVER ONE 10 GAUGE ELEMENT).

(B) ONE ASYMMETRICAL 10 GAUGE "W" BEAM TO THRIE BEAM ELEMENT.

(C) ONE 12 GAUGE THRIE BEAM ELEMENT.

(D) ONE 10 GAUGE "W" BEAM RAIL ELEMENT (7'-3 1/2" LENGTH)

10 GAUGE = 0.138" THICK
12 GAUGE = 0.108" THICK

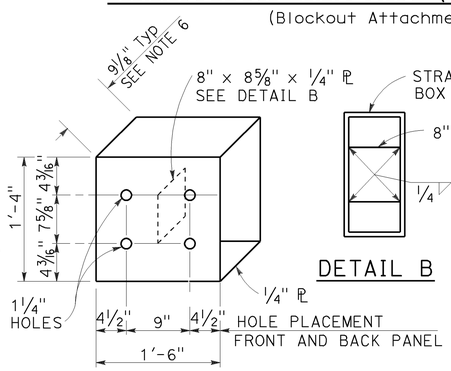

DETAIL A

STRAIGHT METAL BOX SPACER

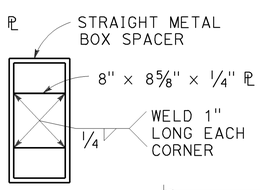

DETAIL B

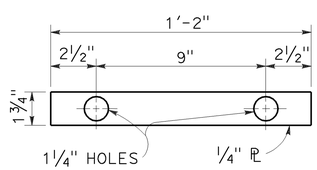

DETAIL C

PLATE 'A'

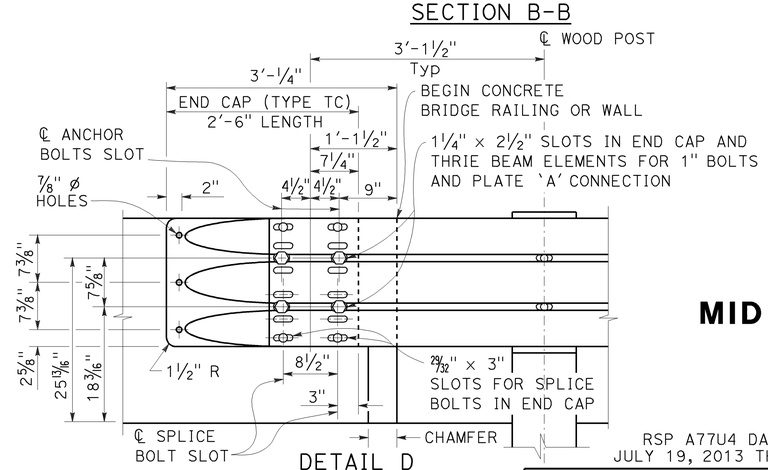

DETAIL D

STATE OF CALIFORNIA
DEPARTMENT OF TRANSPORTATION

MIDWEST GUARDRAIL SYSTEM TRANSITION RAILING (TYPE WB-31)

NO SCALE

RSP A77U4 DATED NOVEMBER 15, 2013 SUPERSEDES RSP A77U4 DATED JULY 19, 2013 THAT SUPPLEMENTS THE STANDARD PLANS BOOK DATED 2010.

REVISED STANDARD PLAN RSP A77U4

2010 REVISED STANDARD PLAN RSP A77U4

10-4-13

Dist	COUNTY	ROUTE	POST MILES TOTAL PROJECT	SHEET No.	TOTAL SHEETS
06	Ker	5	62.5/73.1	177	213

Randell D. Hiatt
REGISTERED CIVIL ENGINEER

July 19, 2013
PLANS APPROVAL DATE

REGISTERED PROFESSIONAL ENGINEER
Randell D. Hiatt
No. C50200
Exp. 6-30-15
CIVIL
STATE OF CALIFORNIA

THE STATE OF CALIFORNIA OR ITS OFFICERS OR AGENTS SHALL NOT BE RESPONSIBLE FOR THE ACCURACY OR COMPLETENESS OF SCANNED COPIES OF THIS PLAN SHEET.

TO ACCOMPANY PLANS DATED 6-16-14

NOTES:

1. Refer to Revised Standard Plans RSP A77L1 and RSP A77L2 for component details for MGS not shown on this plan.
2. All posts for any standard barrier run shall be of the same type: Wood or Steel.
3. Install posts in soil.

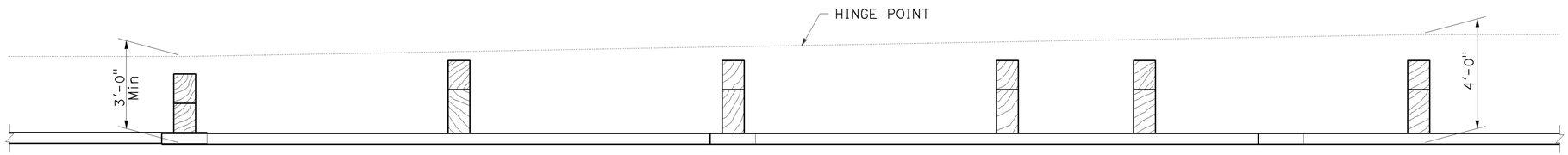

PLAN

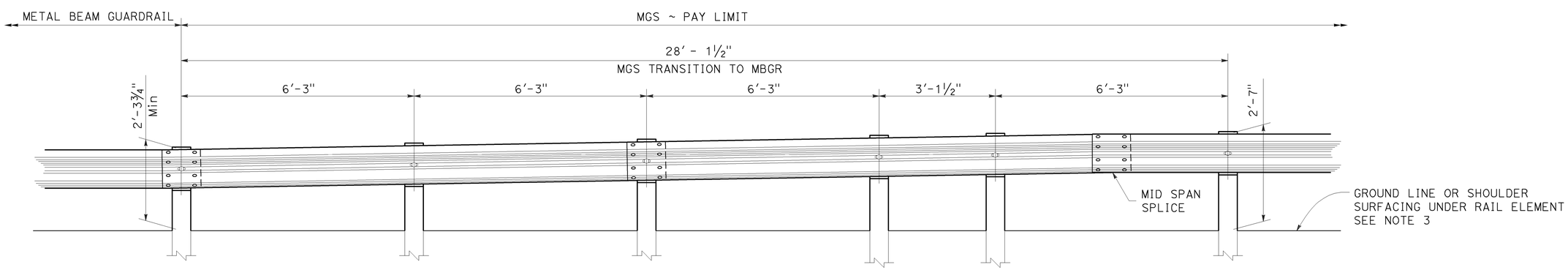

ELEVATION

STATE OF CALIFORNIA
DEPARTMENT OF TRANSPORTATION

MIDWEST GUARDRAIL SYSTEM TRANSITION TO METAL BEAM GUARDRAIL

NO SCALE

RSP A77U5 DATED JULY 19, 2013 SUPPLEMENTS THE STANDARD PLANS BOOK DATED 2010.

REVISED STANDARD PLAN RSP A77U5

2010 REVISED STANDARD PLAN RSP A77U5

6-20-13

Dist	COUNTY	ROUTE	POST MILES TOTAL PROJECT	SHEET No.	TOTAL SHEETS
06	Ker	5	62.5/73.1	178	213

Randell D. Hiatt
REGISTERED CIVIL ENGINEER

July 19, 2013
PLANS APPROVAL DATE

REGISTERED PROFESSIONAL ENGINEER
Randell D. Hiatt
No. C50200
Exp. 6-30-15
CIVIL
STATE OF CALIFORNIA

THE STATE OF CALIFORNIA OR ITS OFFICERS OR AGENTS SHALL NOT BE RESPONSIBLE FOR THE ACCURACY OR COMPLETENESS OF SCANNED COPIES OF THIS PLAN SHEET.

TO ACCOMPANY PLANS DATED 6-16-14

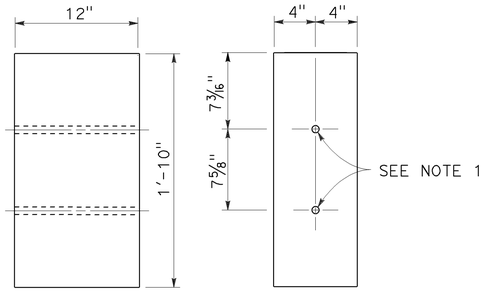

SIDE FRONT

8" x 12"
WOOD BLOCK

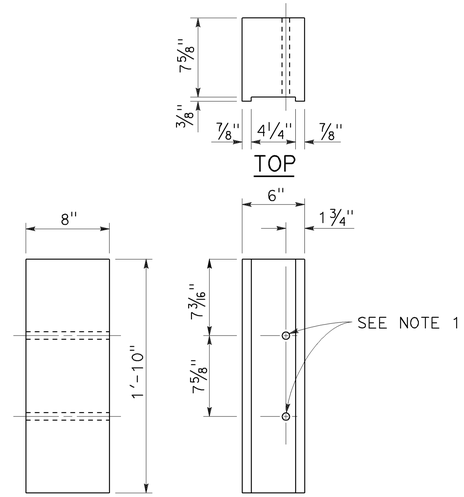

SIDE FRONT

6" x 8"
NOTCHED WOOD BLOCK
See Notes 3 and 5

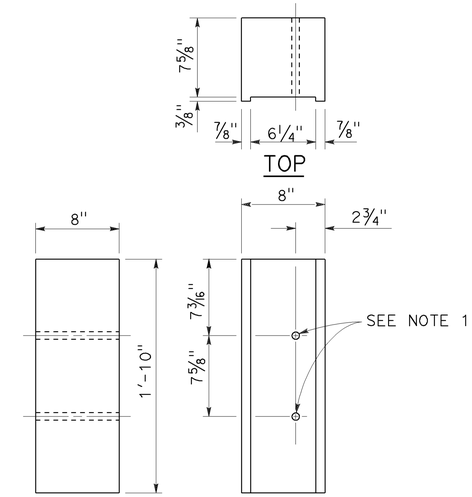

SIDE FRONT

8" x 8"
NOTCHED WOOD BLOCK
See Notes 4 and 5

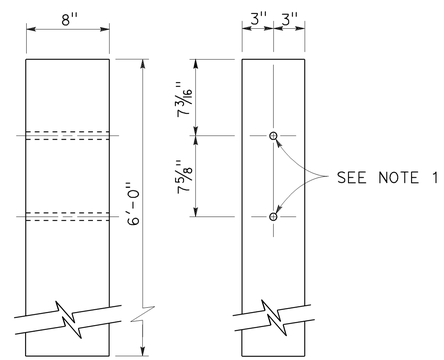

SIDE FRONT

6" x 8"
WOOD POST

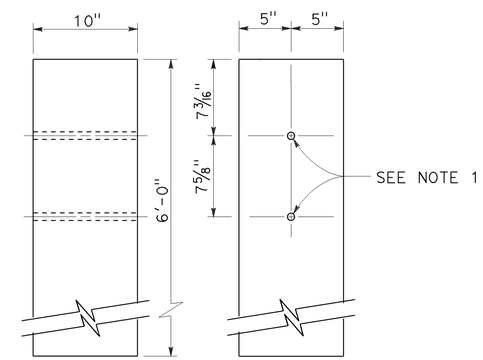

SIDE FRONT

10" x 10"
WOOD POST

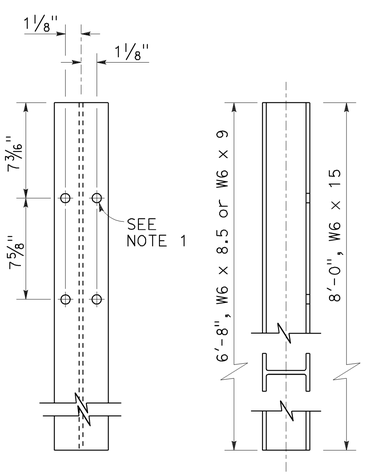

FRONT SIDE

STEEL POST
W6 x 9 or W6 x 8.5 and W6 x 15

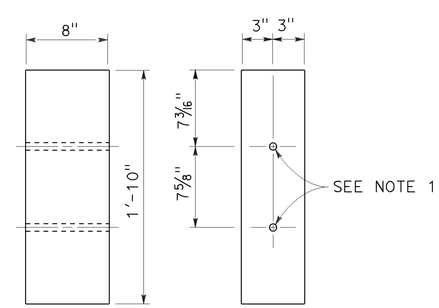

SIDE FRONT

6" x 8"
WOOD BLOCK

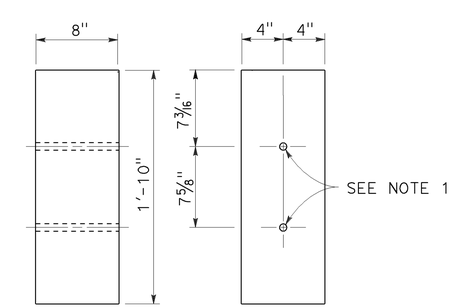

SIDE FRONT

8" x 8"
WOOD BLOCK

NOTES:

1. All holes in steel post to be 13/16" Dia maximum. Holes in wood posts and wood blocks to be 3/4" Dia ±1/16".
2. Dimensions shown for wood post are nominal.
3. For use with W6 x 8.5 or W6 x 9 steel post.
4. For use with W6 x 15 steel post.
5. Notched face of block faces steel post.

STATE OF CALIFORNIA
DEPARTMENT OF TRANSPORTATION

THRIE BEAM BARRIER POST AND BLOCK DETAILS

NO SCALE

RSP A78C2 DATED JULY 19, 2013 SUPERSEDES STANDARD PLAN A78C2 DATED MAY 20, 2011 - PAGE 92 OF THE STANDARD PLANS BOOK DATED 2010.

REVISED STANDARD PLAN RSP A78C2

2010 REVISED STANDARD PLAN RSP A78C2

7-3-13

Dist	COUNTY	ROUTE	POST MILES TOTAL PROJECT	SHEET No.	TOTAL SHEETS
06	Ker	5	62.5/73.1	179	213

Randell D. Hiatt
REGISTERED CIVIL ENGINEER

July 19, 2013
PLANS APPROVAL DATE

REGISTERED PROFESSIONAL ENGINEER
Randell D. Hiatt
No. C50200
Exp. 6-30-15
CIVIL
STATE OF CALIFORNIA

THE STATE OF CALIFORNIA OR ITS OFFICERS OR AGENTS SHALL NOT BE RESPONSIBLE FOR THE ACCURACY OR COMPLETENESS OF SCANNED COPIES OF THIS PLAN SHEET.

TO ACCOMPANY PLANS DATED 6-16-14

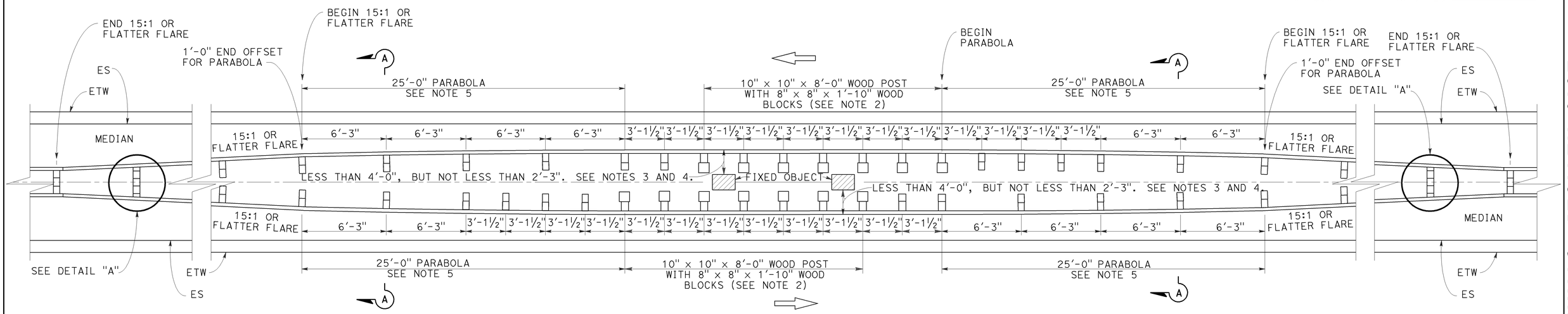

PLAN

THRIE BEAM BARRIER AT FIXED OBJECTS

(Wood post and block shown)
See Notes 1, 2 and 3.

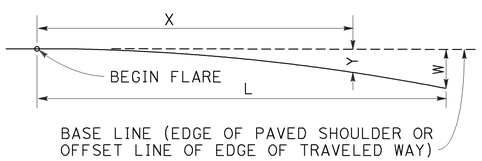

$$Y = \frac{WX^2}{L^2}$$

Y = OFFSET FROM BASE LINE
W = MAXIMUM OFFSET
X = DISTANCE ALONG BASE LINE
L = LENGTH OF FLARE

PARABOLIC FLARE OFFSETS

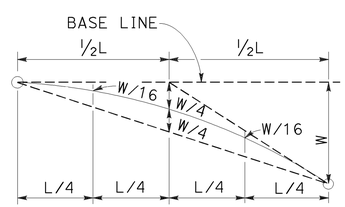

TYPICAL PARABOLIC LAYOUT

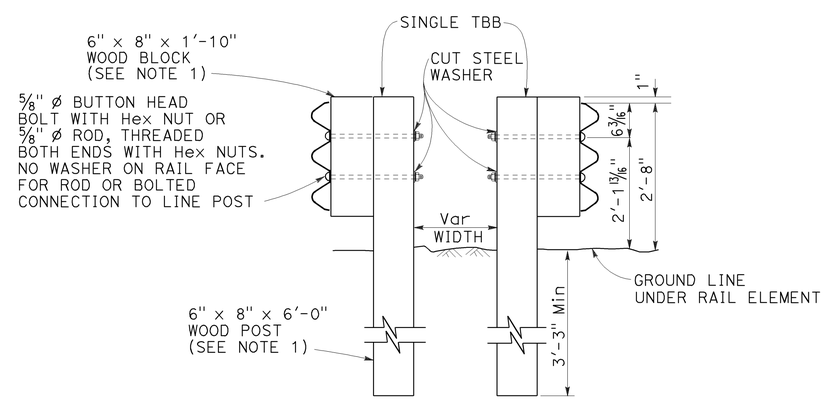

SECTION A-A

Wood post with wood block shown
See Note 1

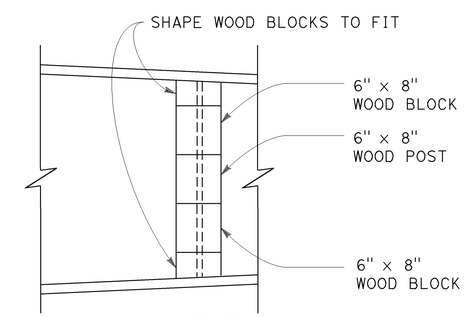

DETAIL "A"

NOTES:

1. Where applicable and when specified, (W6 x 8.5 or W6 x 9) x 6'-8" steel post with 6" x 8" x 1'-10" notched wood blocks or notched recycled plastic blocks may be used for 6" x 8" x 6'-0" wood post with 6" x 8" x 1'-10" wood block.
2. Where applicable and when specified, (W6 x 15) x 8'-0" steel post with 8" x 8" x 1'-10" notched wood blocks or notched recycled plastic blocks may be used for the 10" x 10" x 8'-0" wood post with 8" x 8" x 1'-10" wood blocks shown at 3'-1½" center to center spacing.
3. Where a minimum clearance of 4'-0" or more can be obtained between the face of the thrie beam rail and the face of the fixed object(s), the following substitutions may be made:
   a) 6" x 8" x 6'-0" wood posts with 6" x 8" x 1'-10" wood blocks for the 10" x 10" x 8'-0" wood post with 8" x 8" x 1'-10" wood blocks shown.
   b) 6'-3" post spacing for the 3'-1½" spacing shown.
4. Where the clearance between the face of the railing and the face of a fixed object is less than 2'-3", a concrete barrier should be constructed to shield the fixed object(s).
5. For typical flare offsets for 25'-0" length parabola with maximum offset of 1'-0", see Revised Standard Plan RSP A77P1.

STATE OF CALIFORNIA
DEPARTMENT OF TRANSPORTATION

THRIE BEAM BARRIER AT FIXED OBJECTS IN MEDIAN

NO SCALE

RSP A78D1 DATED JULY 19, 2013 SUPERSEDES STANDARD PLAN A78D1
DATED MAY 20, 2011 - PAGE 97 OF THE STANDARD PLANS BOOK DATED 2010.

REVISED STANDARD PLAN RSP A78D1

2010 REVISED STANDARD PLAN RSP A78D1

7-18-13

Dist	COUNTY	ROUTE	POST MILES TOTAL PROJECT	SHEET No.	TOTAL SHEETS
06	Ker	5	62.5/73.1	180	213

Randell D. Hiatt
REGISTERED CIVIL ENGINEER

July 19, 2013
PLANS APPROVAL DATE

REGISTERED PROFESSIONAL ENGINEER
Randell D. Hiatt
No. C50200
Exp. 6-30-15
CIVIL
STATE OF CALIFORNIA

THE STATE OF CALIFORNIA OR ITS OFFICERS OR AGENTS SHALL NOT BE RESPONSIBLE FOR THE ACCURACY OR COMPLETENESS OF SCANNED COPIES OF THIS PLAN SHEET.

TO ACCOMPANY PLANS DATED 6-16-14

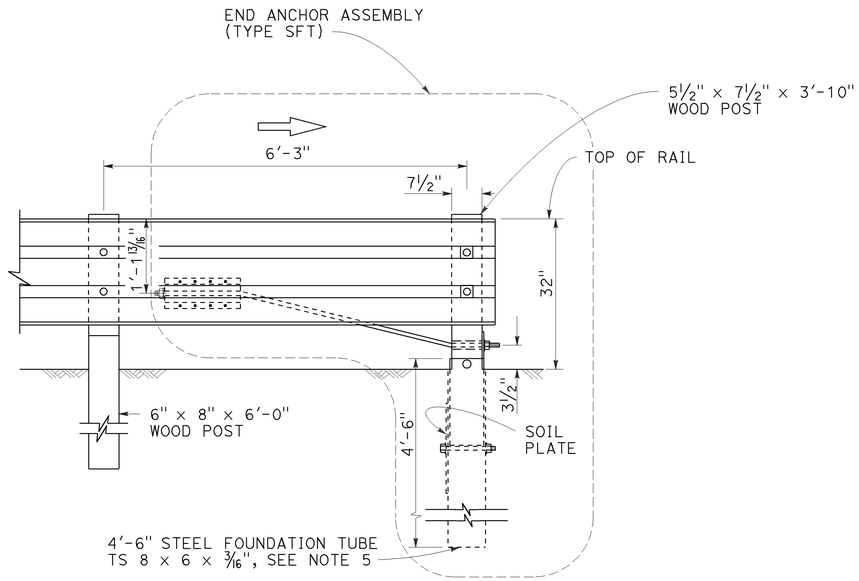

END ANCHOR FOR TRAFFIC DEPARTURE END OF SINGLE THRIE BEAM BARRIER

(For one-way roadways)
See Note 1

NOTES:

1. For additional details of End Anchor Assembly (Type SFT), see Revised Standard Plan RSP A77S1.
2. The "W" beam to thrie beam section is only required where the terminal system connection to the thrie beam barrier is a "W" beam rail.
3. In-line Terminal System End Treatments are used where site conditions will not accommodate a flared end treatment. The type of terminal system to be used will be shown on the Project Plans. Do not use a Caltrans approved 31" end treatment.
4. A Caltrans approved crash cushion should be used in place of a terminal system end treatment where the backside of the railing would be exposed to traffic.
5. A 6'-0" length steel foundation tube, TS 8 x 6 x 3/16, without a soil plate, may be furnished and installed in place of the 4'-6" length steel foundation tube and soil plate shown. Minimum embedment of the 6'-0" length tube shall be 5'-9". A 5/8" Ø hex head bolt and nut shall be installed in the hole in the 6'-0" length tube to keep the wood postfrom dropping into the tube.

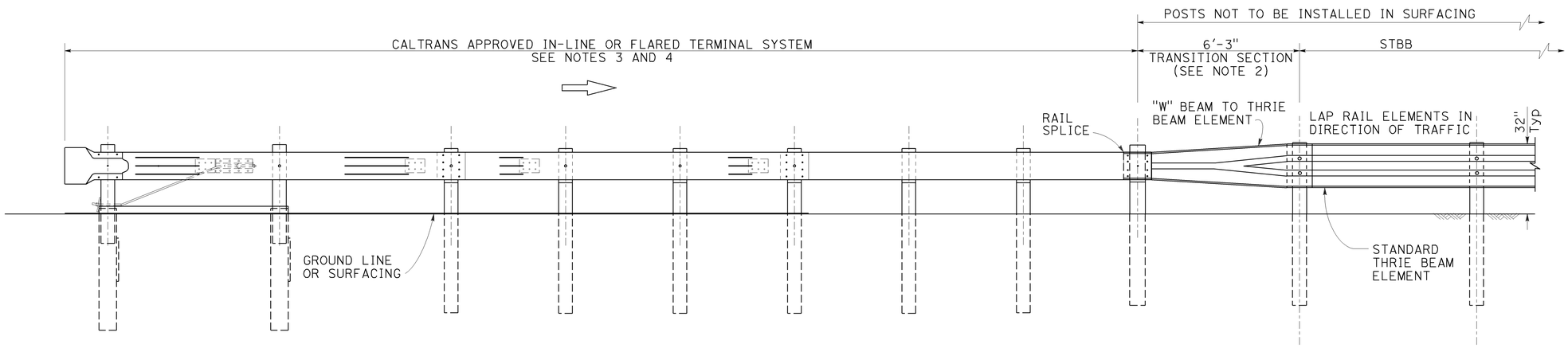

ELEVATION

END TREATMENT FOR TRAFFIC APPROACH END OF SINGLE THRIE BEAM BARRIER

STATE OF CALIFORNIA
DEPARTMENT OF TRANSPORTATION

SINGLE THRIE BEAM BARRIER END ANCHOR ASSEMBLY AND TERMINAL SYSTEM END TREATMENT

NO SCALE

RSP A78E1 DATED JULY 19, 2013 SUPERSEDES STANDARD PLAN A78E1
DATED MAY 20, 2011 - PAGE 99 OF THE STANDARD PLANS BOOK DATED 2010.

REVISED STANDARD PLAN RSP A78E1

2010 REVISED STANDARD PLAN RSP A78E1

7-16-13

Dist	COUNTY	ROUTE	POST MILES TOTAL PROJECT	SHEET No.	TOTAL SHEETS
06	Ker	5	62.5/73.1	181	213

Randell D. Hiatt
REGISTERED CIVIL ENGINEER

July 19, 2013
PLANS APPROVAL DATE

REGISTERED PROFESSIONAL ENGINEER
Randell D. Hiatt
No. C50200
Exp. 6-30-15
CIVIL
STATE OF CALIFORNIA

THE STATE OF CALIFORNIA OR ITS OFFICERS OR AGENTS SHALL NOT BE RESPONSIBLE FOR THE ACCURACY OR COMPLETENESS OF SCANNED COPIES OF THIS PLAN SHEET.

TO ACCOMPANY PLANS DATED 6-16-14

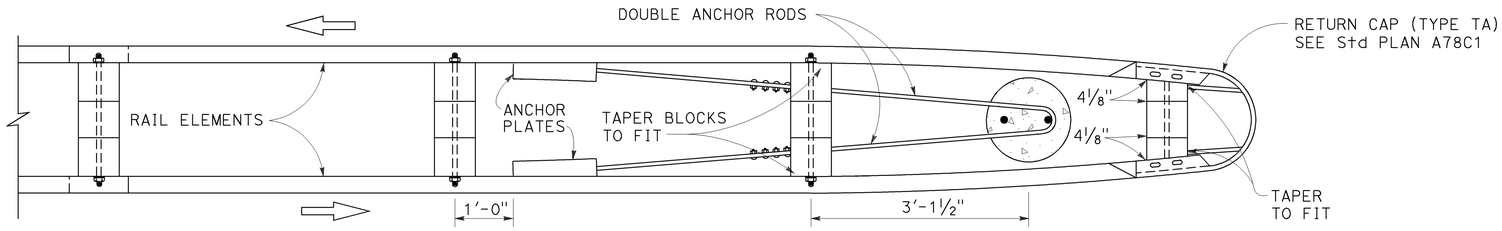

PLAN

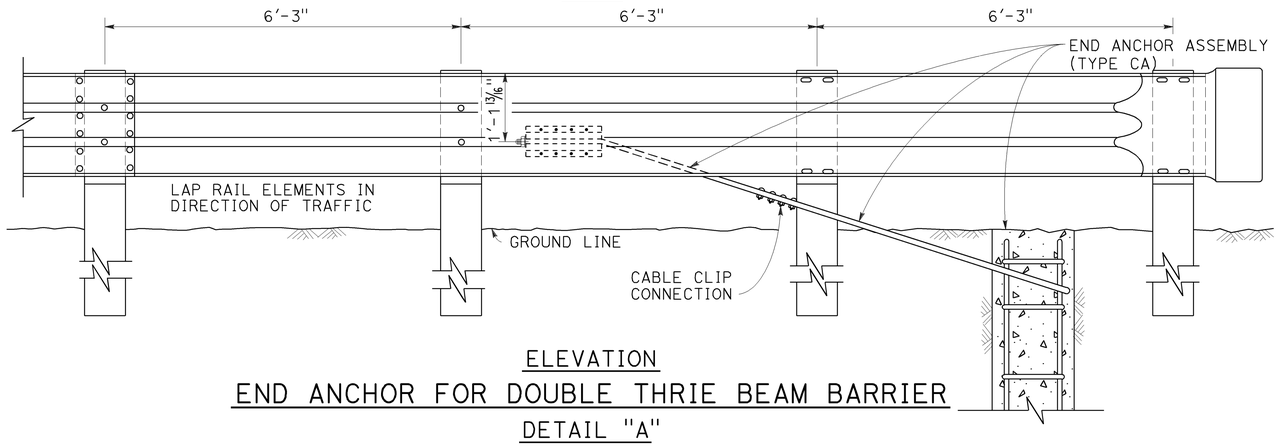

ELEVATION

END ANCHOR FOR DOUBLE THRIE BEAM BARRIER

DETAIL "A"

NOTES:

1. For End Anchor Assembly (Type CA) details, see Revised Standard Plan RSP A77T1.
2. The typical passageway opening for motorcycles is 6'-0" to 8'-0". Generally, motorcycle passageways are not used where median width is less than 22'-0". The typical passageway opening for motor vehicles is 12'-0" to 16'-0". Generally, motor vehicle passageways are not used where median width is 32'-0" or less. See Project Plans for width of passageway opening.
3. Barrier end offsets from edge of traveled way vary depending on type of highway facility involved. End offsets other than 10'-0" will be shown on the Project Plans.
4. For typical flare offsets for 25'-0" length parabola with maximum offset of 1'-0", see Revised Standard Plan RSP A77P1.

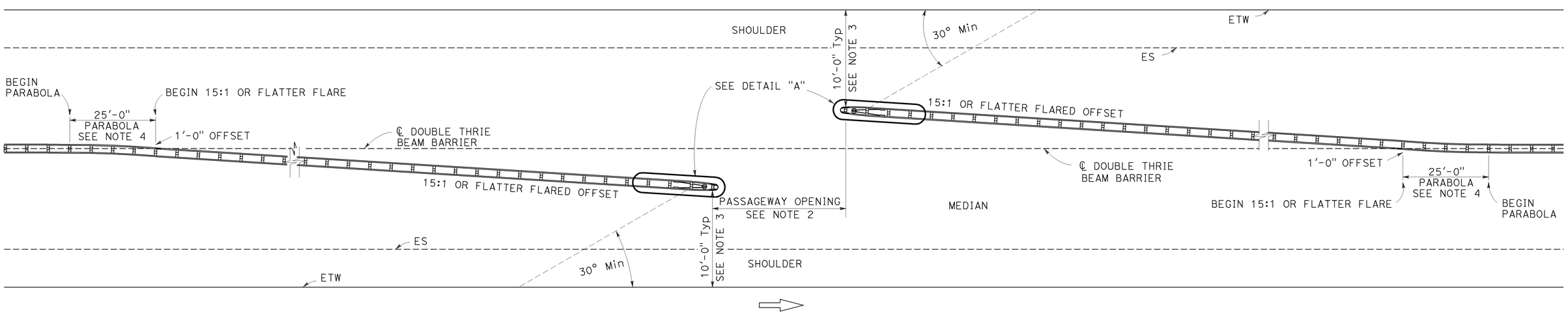

PLAN

EMERGENCY PASSAGEWAY IN THRIE BEAM BARRIER

STATE OF CALIFORNIA
DEPARTMENT OF TRANSPORTATION

DOUBLE THRIE BEAM BARRIER EMERGENCY PASSAGEWAY AND END ANCHOR ASSEMBLY DETAILS

NO SCALE

RSP A78E2 DATED JULY 19, 2013 SUPERSEDES STANDARD PLAN A78E2
DATED MAY 20, 2011 - PAGE 100 OF THE STANDARD PLANS BOOK DATED 2010.

REVISED STANDARD PLAN RSP A78E2

2010 REVISED STANDARD PLAN RSP A78E2

6-27-13

Dist	COUNTY	ROUTE	POST MILES TOTAL PROJECT	SHEET No.	TOTAL SHEETS
06	Ker	5	62.5/73.1	182	213

Randell D. Hiatt
REGISTERED CIVIL ENGINEER

July 19, 2013
PLANS APPROVAL DATE

REGISTERED PROFESSIONAL ENGINEER
Randell D. Hiatt
No. C50200
Exp. 6-30-15
CIVIL
STATE OF CALIFORNIA

THE STATE OF CALIFORNIA OR ITS OFFICERS OR AGENTS SHALL NOT BE RESPONSIBLE FOR THE ACCURACY OR COMPLETENESS OF SCANNED COPIES OF THIS PLAN SHEET.

TO ACCOMPANY PLANS DATED 6-16-14

NOTES:

1. Line post, blocks and hardware to be used are shown on Standard Plans A78A, A78B and A78C1 and Revised Standard Plan RSP A78C2.
2. Post spacing to be 6'-3" center to center, except as otherwise noted.
3. Except as noted, line posts are 6" x 8" x 6'-0" wood with 6" x 8" x 1'-10" wood blocks. (W6 x 8.5 or W6 x 9) steel posts, 6'-8" in length, with 6" x 8" x 1'-10" notched wood blocks or notched recycled plastic blocks may be used for 6" x 8" x 6'-0" wood posts with 6" x 8" x 1'-10" wood blocks where applicable and when specified.
4. For Transition Railing (Type DTB) details, see Standard Plan A78K.
5. The 15:1 or flatter flare is measured off of the edge of traveled way.

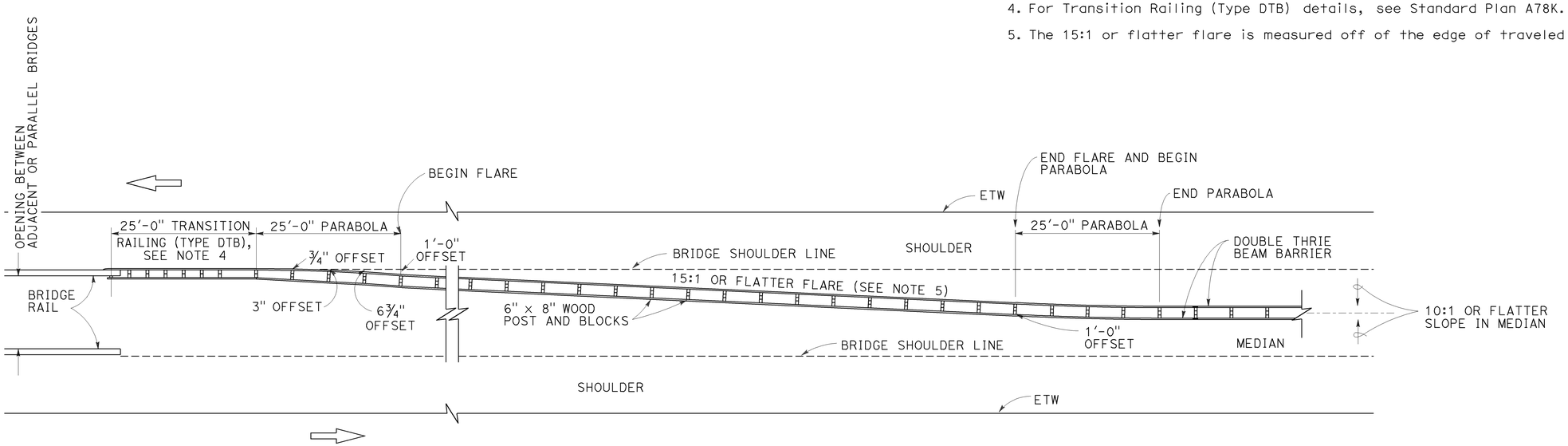

TYPE 25A CONNECTION LAYOUT

STATE OF CALIFORNIA
DEPARTMENT OF TRANSPORTATION

THRIE BEAM BARRIER TYPICAL LAYOUT FOR CONNECTION TO BRIDGE RAILING

NO SCALE

RSP A78H DATED JULY 19, 2013 SUPERSEDES STANDARD PLAN A78H DATED MAY 20, 2011 - PAGE 105 OF THE STANDARD PLANS BOOK DATED 2010.

REVISED STANDARD PLAN RSP A78H

2010 REVISED STANDARD PLAN RSP A78H

6-12-13

Dist	COUNTY	ROUTE	POST MILES TOTAL PROJECT	SHEET No.	TOTAL SHEETS
06	Ker	5	62.5/73.1	183	213

REGISTERED CIVIL ENGINEER

July 19, 2013
PLANS APPROVAL DATE

REGISTERED PROFESSIONAL ENGINEER
Michael Janzen
No. 44788
Exp. 03-31-14
CIVIL
STATE OF CALIFORNIA

THE STATE OF CALIFORNIA OR ITS OFFICERS OR AGENTS SHALL NOT BE RESPONSIBLE FOR THE ACCURACY OR COMPLETENESS OF SCANNED COPIES OF THIS PLAN SHEET.

TO ACCOMPANY PLANS DATED 6-16-14

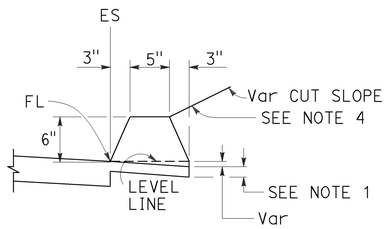

TYPE A
See Note 3

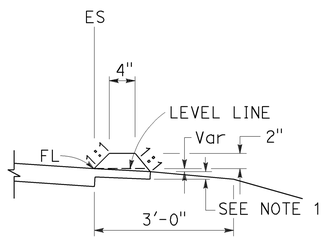

TYPE C

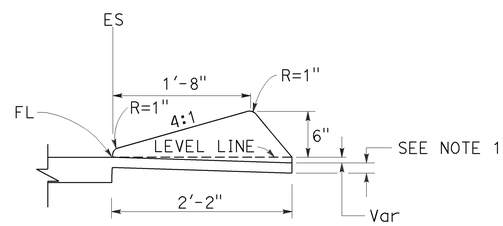

TYPE D

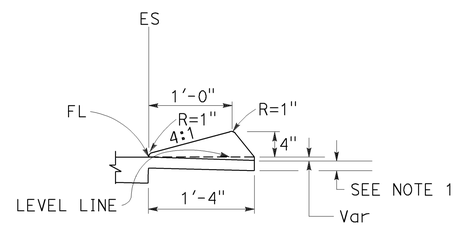

TYPE E

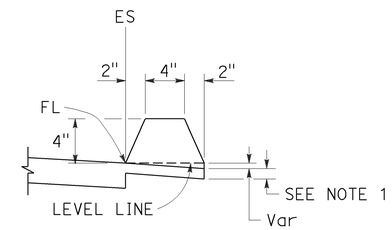

TYPE F
See Note 5

DIKES

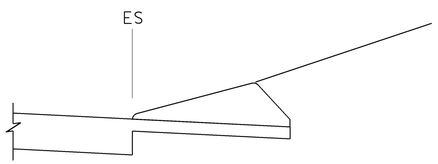

CASE C-1
Cut Slope

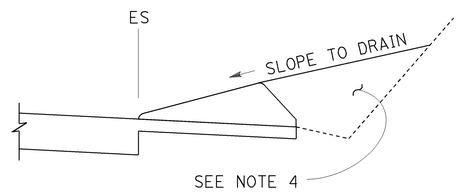

CASE C-2
Cut Slope

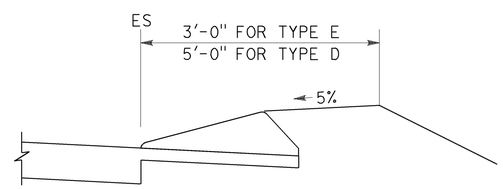

CASE F

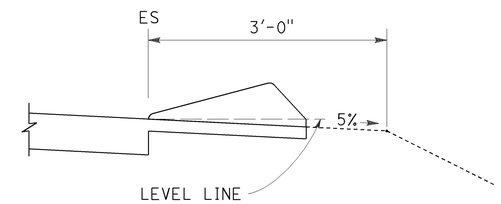

CASE R
See Note 2

TYPE D AND E BACKFILL DETAILS

NOTES:

1. For HMA shoulders only, extend top layer of HMA placed on the shoulder under dike with no joint at the ES. For projects with OGFC shoulders, do not extend OGFC under dike. See project plans for modified dike detail.
2. Case R applies to retrofit only projects where restrictive conditions do not provide enough width for Case F backfill.
3. Type A dike only to be used where restrictive slope conditions do not provide enough width to use Type D or Type E dike.
4. Fill and compact with excavated material to top of dike.
5. Use Type F dike, where dike is required with guard railing installations. See Revised Standard Plan RSP A77N4 for dike positioning details.

DIKE QUANTITIES

TYPE	CUBIC YARDS PER LINEAR FOOT
A	0.0135
C	0.0038
D	0.0293
E	0.0130
F	0.0066

Quantities based on 5% cross slope.

STATE OF CALIFORNIA
DEPARTMENT OF TRANSPORTATION

HOT MIX ASPHALT DIKES

NO SCALE

RSP A87B DATED JULY 19, 2013 SUPERSEDES STANDARD PLAN A87B DATED MAY 20, 2011 - PAGE 120 OF THE STANDARD PLANS BOOK DATED 2010.

REVISED STANDARD PLAN RSP A87B

2010 REVISED STANDARD PLAN RSP A87B

6-27-13

Dist	COUNTY	ROUTE	POST MILES TOTAL PROJECT	SHEET No.	TOTAL SHEETS
06	Ker	5	62.5/73.1	184	213

William K. Farnbach
REGISTERED CIVIL ENGINEER

July 19, 2013
PLANS APPROVAL DATE

REGISTERED PROFESSIONAL ENGINEER
William K. Farnbach
No. C49042
Exp. 9-30-14
CIVIL
STATE OF CALIFORNIA

THE STATE OF CALIFORNIA OR ITS OFFICERS OR AGENTS SHALL NOT BE RESPONSIBLE FOR THE ACCURACY OR COMPLETENESS OF SCANNED COPIES OF THIS PLAN SHEET.

TO ACCOMPANY PLANS DATED 6-16-14

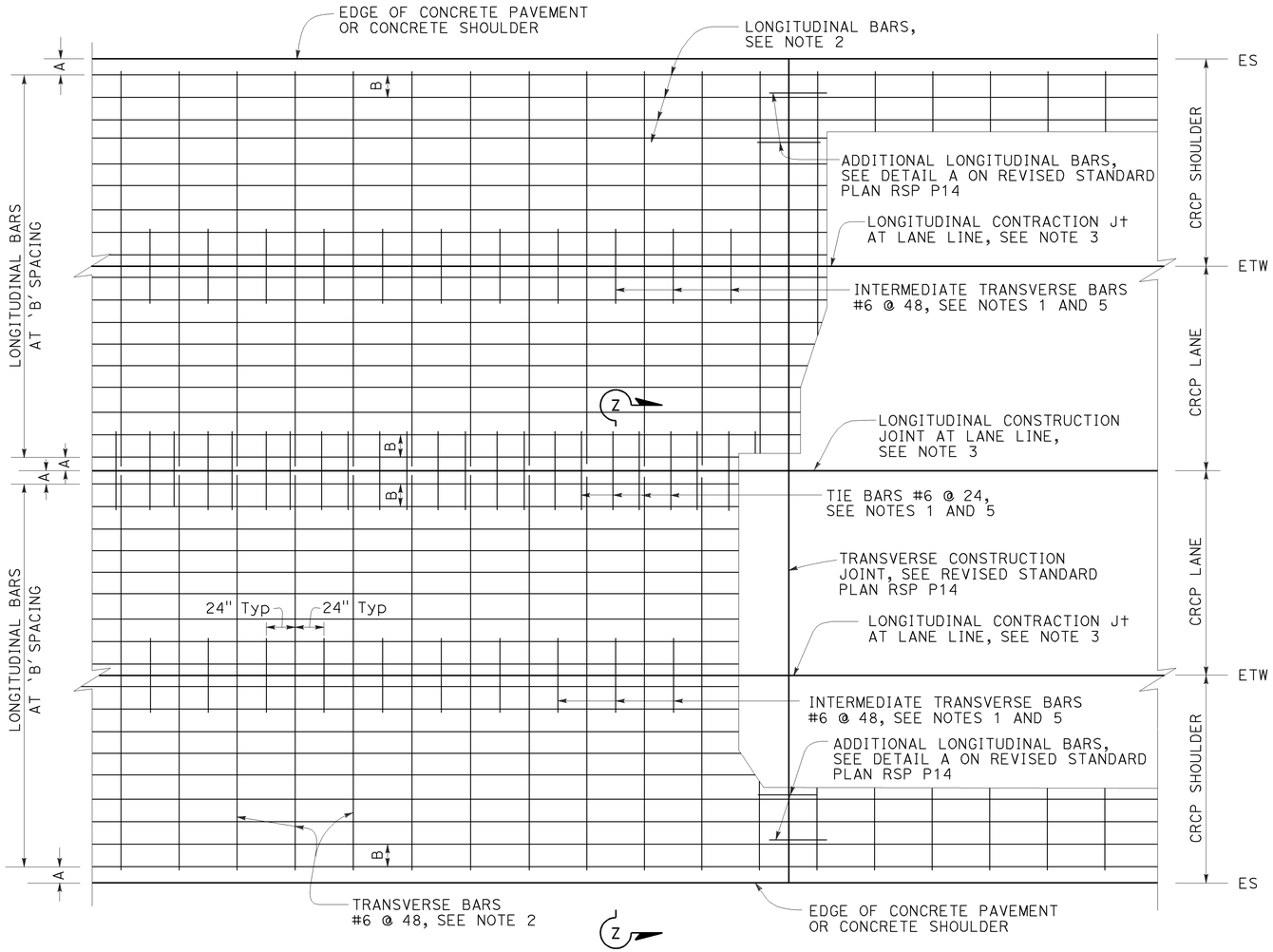

PLAN

See Note 4

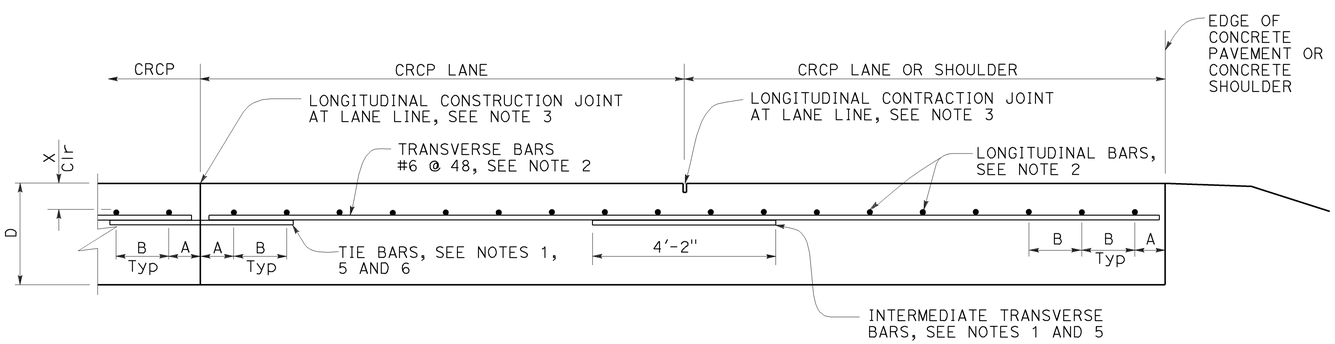

SECTION Z-Z

TABLE No. 1 LONGITUDINAL BAR REINFORCEMENT					
SLAB THICKNESS AND BAR SIZE		FIRST SPACING AT EDGE OR JOINT	REGULAR BARS	ADDITIONAL BARS AT TRANSVERSE CONSTRUCTION JOINT	Clr
D	BAR SIZE	SPACING A	SPACING B	SPACING 2 × B	X
.75′	#6	3" TO 4"	8.0"	16"	4"
.80′	#6	3" TO 4"	7.5"	15"	4"
.85′	#6	3" TO 4"	7.0"	14"	4"
.90′	#6	3" TO 4"	6.5"	13"	4"
.95′	#6	3" TO 4"	6.25"	12.5"	4"
1.00′	#6	3" TO 4"	6.0"	12"	5"
1.05′	#6	3" TO 4"	5.75"	11.5"	5"
1.10′	#6	3" TO 4"	5.5"	11"	5.5"

NOTES:

1. Place transverse tie bars and intermediate transvese bars parallel to and in the same plane as transverse bars.
2. The length of lap splices for bar reinforcement must be at least 25".
3. For longitudinal contraction and construction joint details, see Revised Standard Plan RSP P16.
4. For curved lane layout see Revised Standard Plan RSP P16.
5. For tie bar and intermediate transverse bar details see Revised Standard Plan RSP P16.

STATE OF CALIFORNIA
DEPARTMENT OF TRANSPORTATION

CONTINUOUSLY REINFORCED CONCRETE PAVEMENT

NO SCALE

RSP P4 DATED JULY 19, 2013 SUPERSEDES RSP P4 DATED APRIL 20, 2012 AND STANDARD PLAN P4 DATED MAY 20, 2011 - PAGE 128 OF THE STANDARD PLANS BOOK DATED 2010.

REVISED STANDARD PLAN RSP P4

2010 REVISED STANDARD PLAN RSP P4

5-31-13

Dist	COUNTY	ROUTE	POST MILES TOTAL PROJECT	SHEET No.	TOTAL SHEETS
06	Ker	5	62.5/73.1	185	213

William K. Farnbach
REGISTERED CIVIL ENGINEER

July 19, 2013
PLANS APPROVAL DATE

REGISTERED PROFESSIONAL ENGINEER
William K. Farnbach
No. C49042
Exp. 9-30-14
CIVIL
STATE OF CALIFORNIA

THE STATE OF CALIFORNIA OR ITS OFFICERS OR AGENTS SHALL NOT BE RESPONSIBLE FOR THE ACCURACY OR COMPLETENESS OF SCANNED COPIES OF THIS PLAN SHEET.

TO ACCOMPANY PLANS DATED 6-16-14

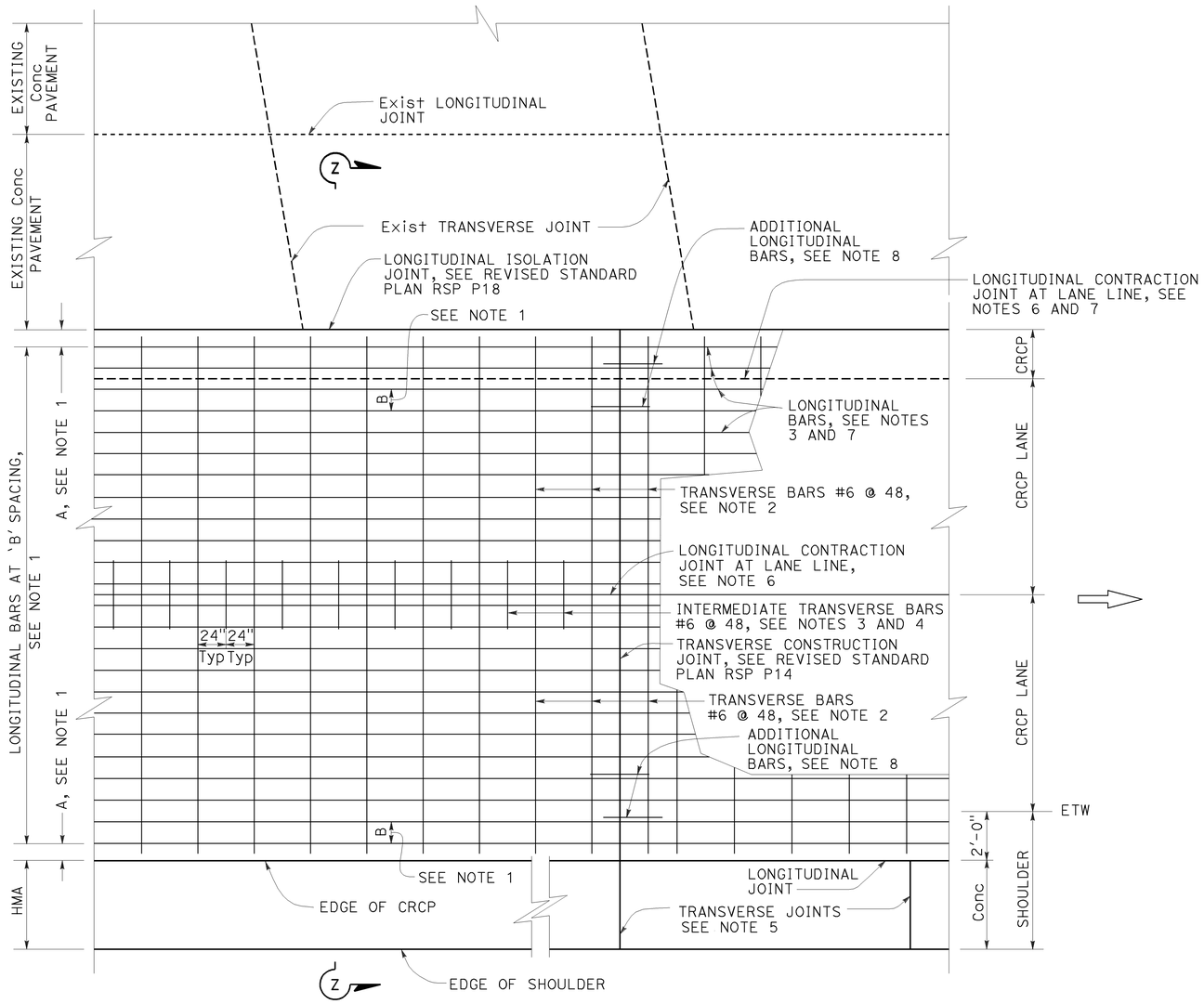

PLAN
See Note 9

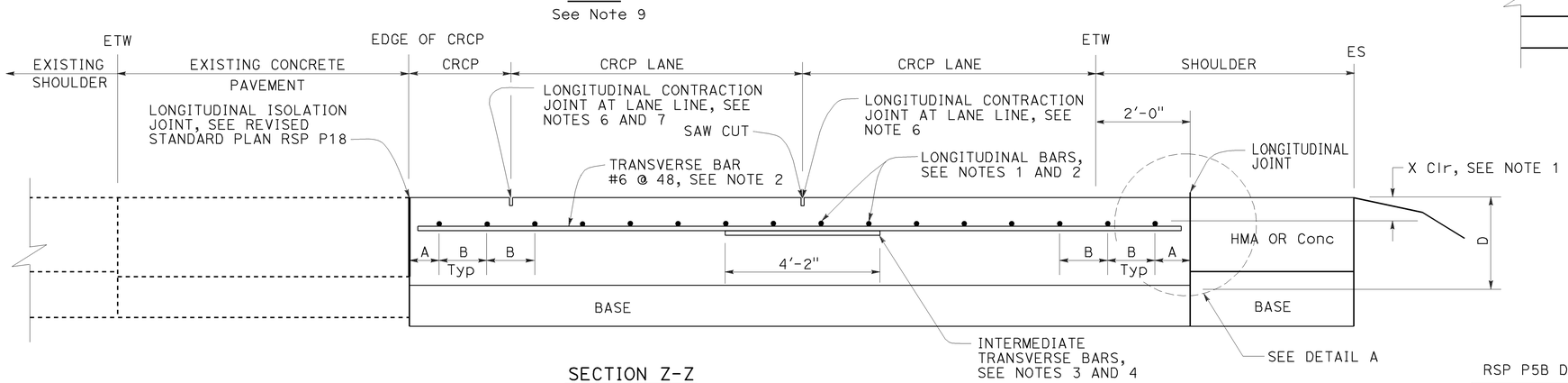

SECTION Z-Z

NOTES:

1. For longitudinal bar size, spacing and clearances, see Revised Standard Plan RSP P4.
2. The length of lap splices for bar reinforcement must be at least 25".
3. For tie bar and intermediate transverse bar details, see Revised Standard Plan RSP P16.
4. Place Intermediate transverse bars parallel to and in the same plane as transverse bars.
5. Construct transverse joints at right angle to the longitudinal joints in adjacent CRCP. Space joints at no less than 10′ intervals and no more than 14′ intervals. Match location of JPCP transverse joint with CRCP transverse construction joint, expansion joint or wide flange beam. Omit dowel bars.
6. For longitudinal contraction and construction joint details, see Revised Standard Plan RSP P16.
7. Do not construct longitudinal contraction joint when edge of new CRCP is less than 3′-3" from lane line.
8. For additional longitudinal bars detail, see Detail A on Revised Standard Plan RSP P14.
9. For longitudinal construction joint plan layout not shown, see Revised Standard Plan RSP P4. For tie bar details at longitudinal construction joint, see Revised Standard Plan RSP P16.
10. For limits of rumble strips, see Project Plans.

ABBREVIATION:

D = Thickness of CRCP

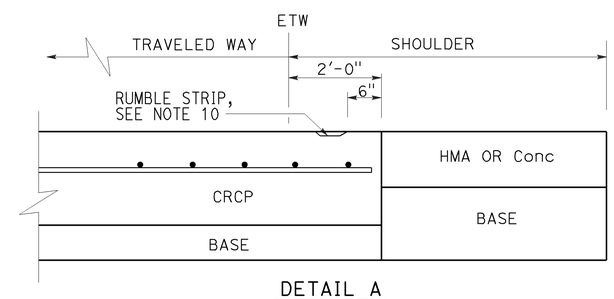

DETAIL A

STATE OF CALIFORNIA
DEPARTMENT OF TRANSPORTATION

CONTINUOUSLY REINFORCED CONCRETE PAVEMENT (WIDENED LANE) LANE AND SHOULDER ADDITION OR REPLACEMENT

NO SCALE

RSP P5B DATED JULY 19, 2013 SUPPLEMENTS THE STANDARD PLANS BOOK DATED 2010.

REVISED STANDARD PLAN RSP P5B

2010 REVISED STANDARD PLAN RSP P5B

5-31-13

Dist	COUNTY	ROUTE	POST MILES TOTAL PROJECT	SHEET No.	TOTAL SHEETS
06	Ker	5	62.5/73.1	186	213

William K. Farnbach
REGISTERED CIVIL ENGINEER

July 19, 2013
PLANS APPROVAL DATE

REGISTERED PROFESSIONAL ENGINEER
William K. Farnbach
No. C49042
Exp. 9-30-14
CIVIL
STATE OF CALIFORNIA

THE STATE OF CALIFORNIA OR ITS OFFICERS OR AGENTS SHALL NOT BE RESPONSIBLE FOR THE ACCURACY OR COMPLETENESS OF SCANNED COPIES OF THIS PLAN SHEET.

TO ACCOMPANY PLANS DATED 6-16-14

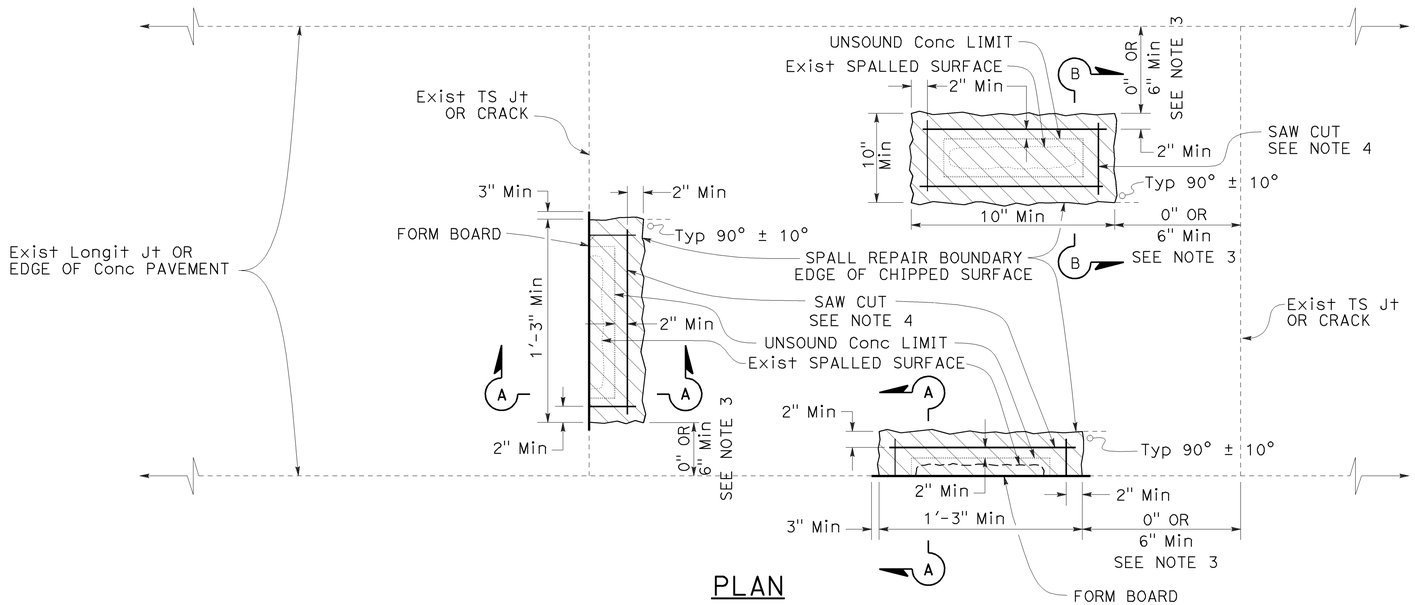

PLAN

LEGEND

SPALL REPAIR

NOTES:

1. See Project Plans for spall repair locations.
2. Combine spall repair areas closer than 2' apart.
3. If the spall repair area is less than 6" from a joint, extend the repair to the joint.
4. Cut at least 2" beyond the rectangular limits of unsound concrete determined by the Engineer. Determine the saw cut depth using the following table:

Conc MATERIAL	SAW CUT DEPTH	
	Min	Max
FAST-SETTING	2"	3½"
POLYESTER	1½"	3½"

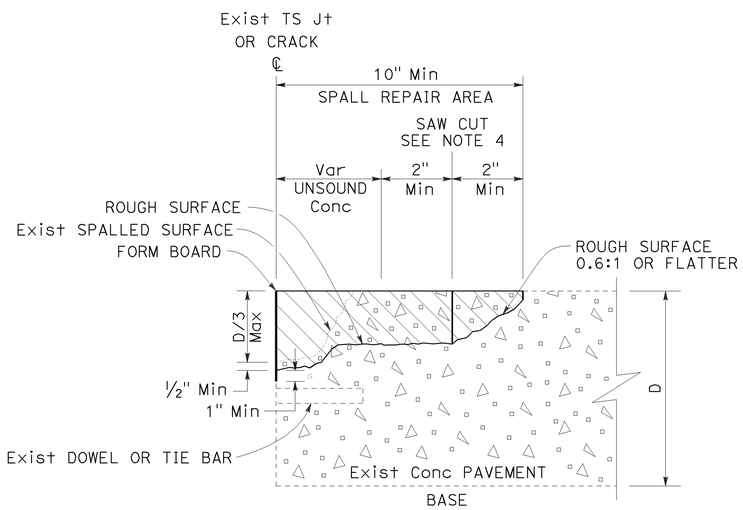

SECTION A-A

JOINT, CRACK, OR EDGE OF CONCRETE PAVEMENT REPAIR

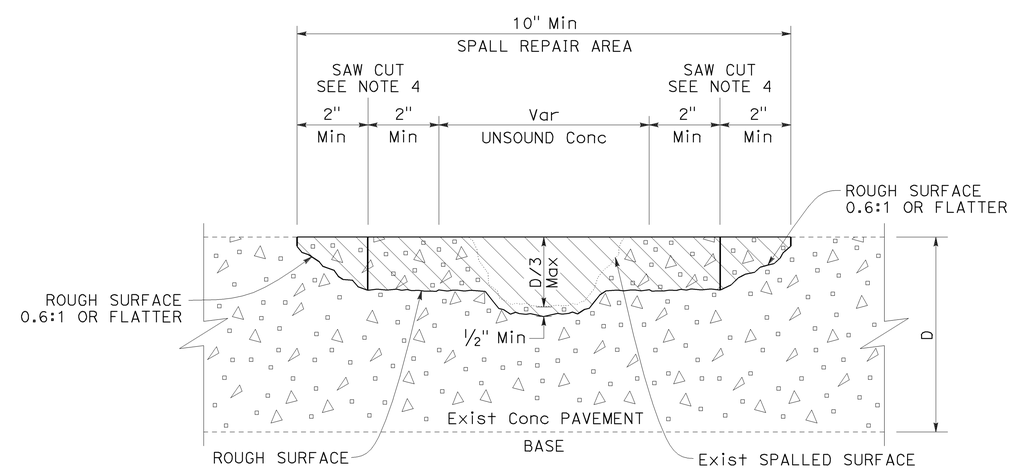

SECTION B-B

MISCELLANEOUS SPALL REPAIR

STATE OF CALIFORNIA
DEPARTMENT OF TRANSPORTATION

SPALL REPAIR

NO SCALE

RSP P6 DATED JULY 19, 2013 SUPPLEMENTS THE STANDARD PLANS BOOK DATED 2010.

REVISED STANDARD PLAN RSP P6

2010 REVISED STANDARD PLAN RSP P6

5-31-13

Dist	COUNTY	ROUTE	POST MILES TOTAL PROJECT	SHEET No.	TOTAL SHEETS
06	Ker	5	62.5/73.1	187	213

William K. Farnbach
REGISTERED CIVIL ENGINEER

July 19, 2013
PLANS APPROVAL DATE

REGISTERED PROFESSIONAL ENGINEER
William K. Farnbach
No. C49042
Exp. 9-30-14
CIVIL
STATE OF CALIFORNIA

THE STATE OF CALIFORNIA OR ITS OFFICERS OR AGENTS SHALL NOT BE RESPONSIBLE FOR THE ACCURACY OR COMPLETENESS OF SCANNED COPIES OF THIS PLAN SHEET.

TO ACCOMPANY PLANS DATED 6-16-14

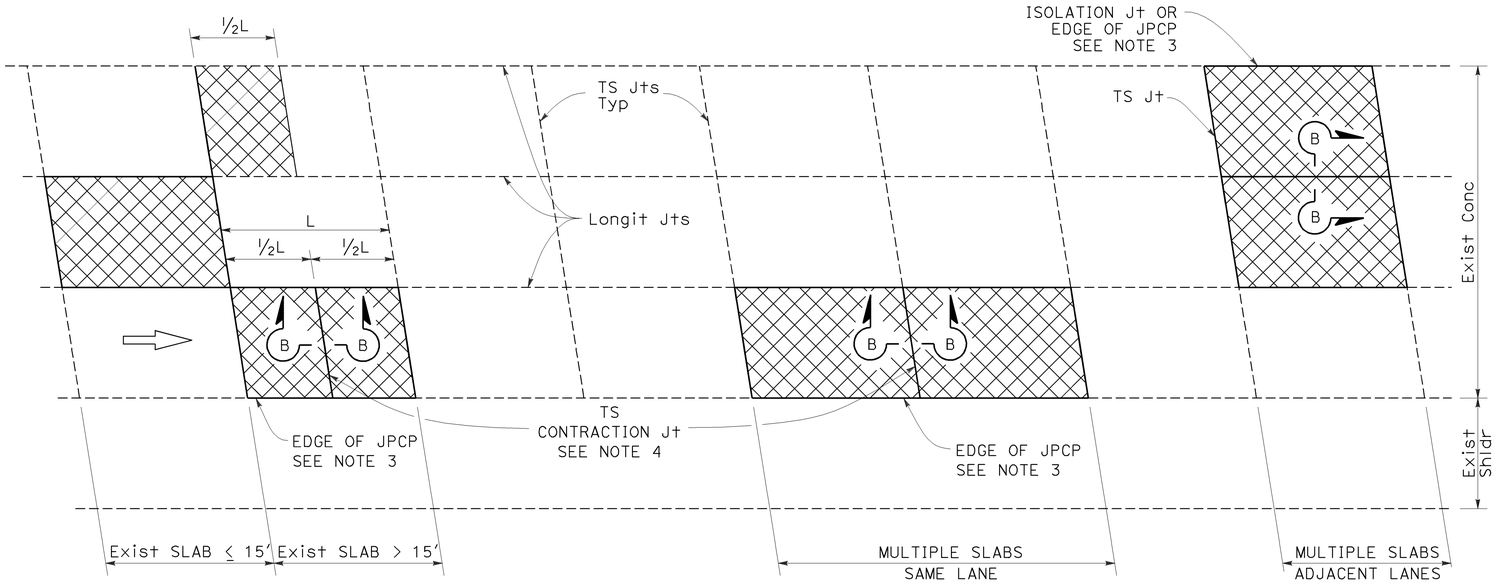

PLAN

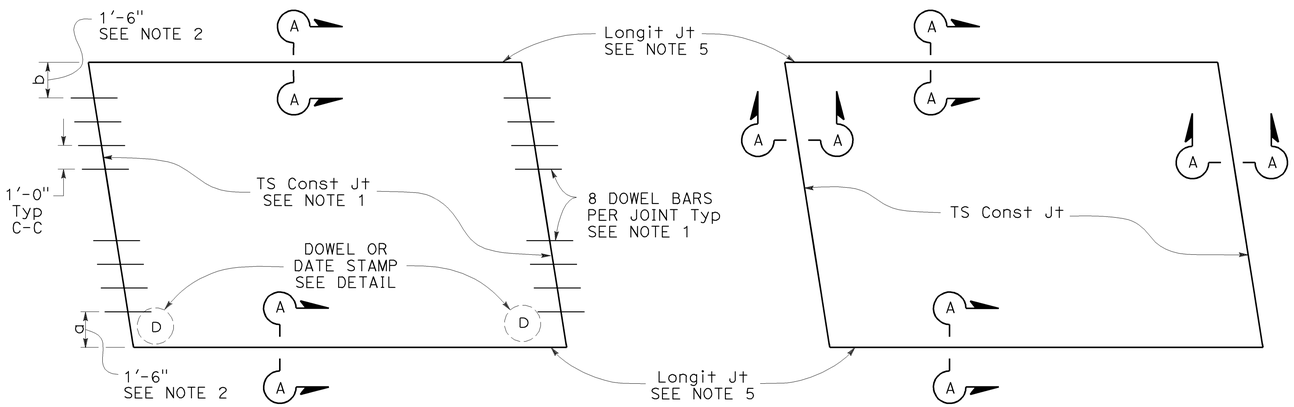

TYPE I
See Design Note 1

TYPE II
See Design Note 2

SLAB LAYOUT

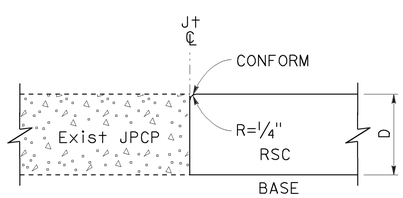

SECTION A-A

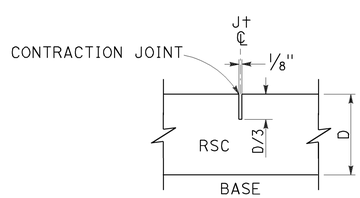

SECTION B-B

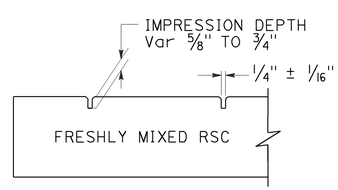

SECTION C-C

LEGEND:

RSC RAPID STRENGTH CONCRETE

INDIVIDUAL SLAB REPLACEMENT WITH RSC

NOTES:

1. For details not shown, see Revised Standard Plan RSP P10.
2. Where the existing outside shoulder is asphalt concrete pavement, "a" = 1'-0" and "b" = 2'-0".
3. Use side forms where edge of RSC pavement is adjacent to asphalt concrete.
4. Transverse contraction joint to match skew of existing joint. Omit dowel bars.
5. Do not place tie bars at longitudinal joints.

DESIGN NOTES:

1. For concrete slab repair with at least 5 years design life.
2. For short term repairs < 5 yrs design life or for slab replacements with cracking and seating.

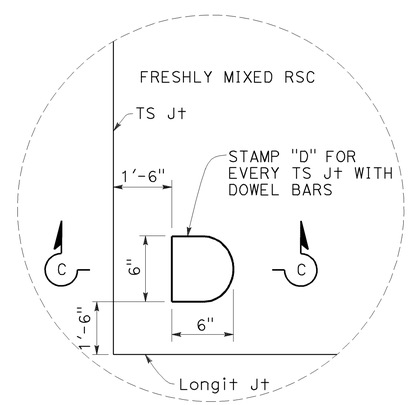

DOWEL STAMP DETAIL

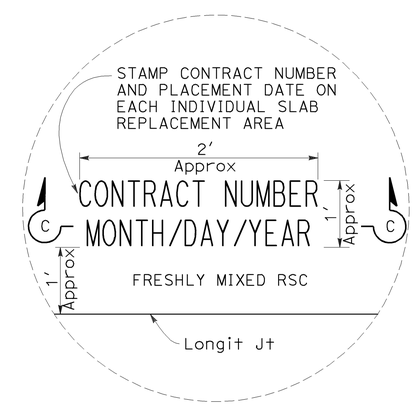

DATE STAMP DETAIL

STATE OF CALIFORNIA
DEPARTMENT OF TRANSPORTATION

INDIVIDUAL SLAB REPLACEMENT WITH RAPID STRENGTH CONCRETE

NO SCALE

RSP P8 DATED JULY 19, 2013 SUPERSEDES RSP P8 DATED APRIL 20, 2012 AND STANDARD PLAN P8 DATED MAY 20, 2011 - PAGE 130 OF THE STANDARD PLANS BOOK DATED 2010.

REVISED STANDARD PLAN RSP P8

2010 REVISED STANDARD PLAN RSP P8

5-31-13

Dist	COUNTY	ROUTE	POST MILES TOTAL PROJECT	SHEET No.	TOTAL SHEETS
06	Ker	5	62.5/73.1	188	213

William K. Farnbach
REGISTERED CIVIL ENGINEER

July 19, 2013
PLANS APPROVAL DATE

REGISTERED PROFESSIONAL ENGINEER William K. Farnbach No. C49042 Exp. 9-30-14 CIVIL STATE OF CALIFORNIA

THE STATE OF CALIFORNIA OR ITS OFFICERS OR AGENTS SHALL NOT BE RESPONSIBLE FOR THE ACCURACY OR COMPLETENESS OF SCANNED COPIES OF THIS PLAN SHEET.

TO ACCOMPANY PLANS DATED 6-16-14

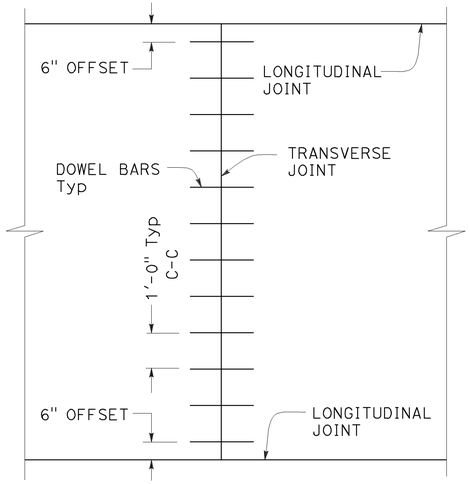

TRANSVERSE JOINT DOWEL BAR LAYOUT

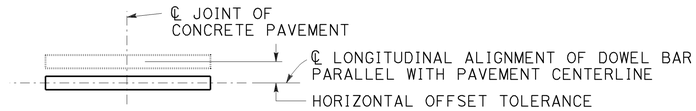

PLAN

HORIZONTAL OFFSET TOLERANCE

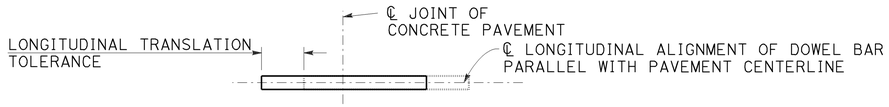

PLAN

LONGITUDINAL TRANSLATION TOLERANCE

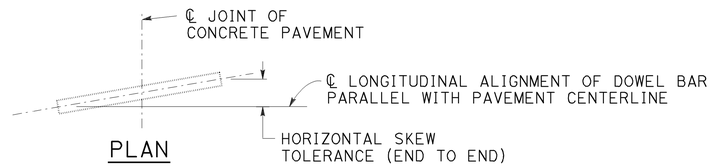

PLAN

HORIZONTAL SKEW TOLERANCE

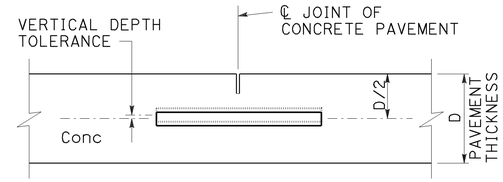

ELEVATION

VERTICAL DEPTH TOLERANCE

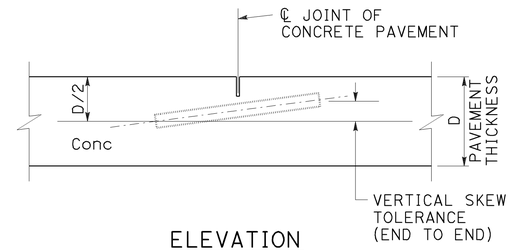

ELEVATION

VERTICAL SKEW TOLERANCE

NOTES:

1. See Revised Standard Plan RSP P1 for typical dowel bar placement and locations.
2. Where fresh concrete pavement is placed against new concrete or existing concrete pavement, rounding the corner of the existing concrete pavement is not required.
3. May also use ¾" Dia dowel bars 2'-4" ± ¼" in length. Center the length of dowel bars at the centerline of longitudinal joint.

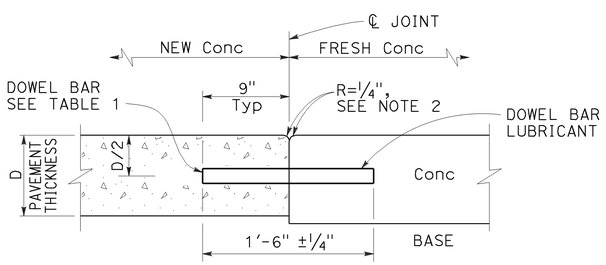

TRANSVERSE CONSTRUCTION JOINT DETAIL

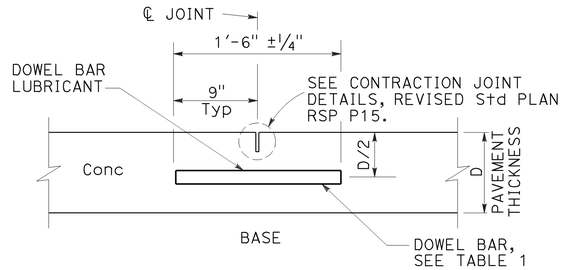

TRANSVERSE CONTRACTION JOINT

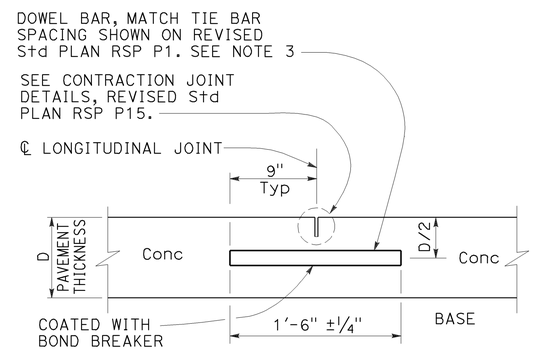

LONGITUDINAL CONTRACTION JOINT WITH DOWEL BARS

See Revised Std Plan RSP P18

TABLE 1

DOWEL BAR DIAMETER TABLE			
PAVEMENT THICKNESS	0.65'	> 0.65' - 0.85'	> 0.85'
MINIMUM DOWEL * BAR DIAMETER	1"	1¼"	1½"

* The drilled hole diameter must be ⅛" to 3/16" larger than the bar diameter.

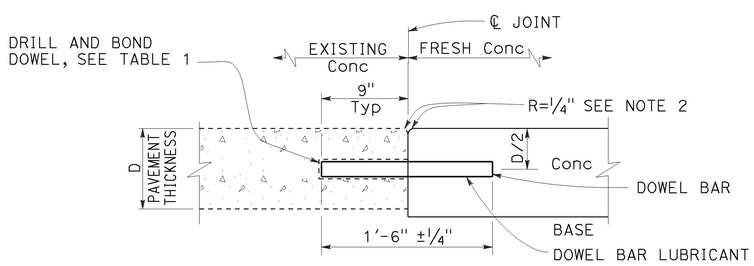

TRANSVERSE CONSTRUCTION JOINT FOR EXISTING CONCRETE PAVEMENT

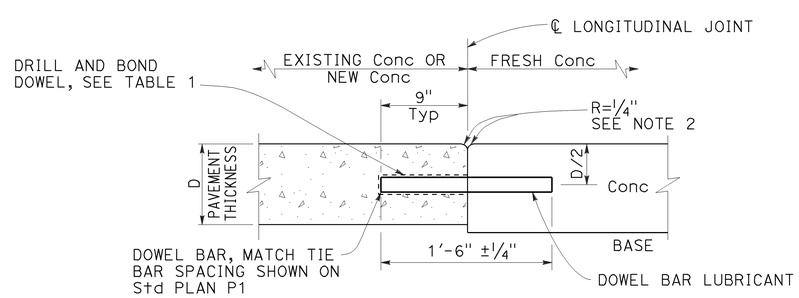

LONGITUDINAL CONSTRUCTION JOINT WITH DOWEL BARS

See Revised Std Plan RSP P18

STATE OF CALIFORNIA
DEPARTMENT OF TRANSPORTATION

CONCRETE PAVEMENT DOWEL BAR DETAILS

NO SCALE

RSP P10 DATED JULY 19, 2013 SUPERSEDES RSP P10 DATED APRIL 20, 2012 AND STANDARD PLAN P10 DATED MAY 20, 2011 - PAGE 131 OF THE STANDARD PLANS BOOK DATED 2010.

REVISED STANDARD PLAN RSP P10

2010 REVISED STANDARD PLAN RSP P10

5-31-13

Dist	COUNTY	ROUTE	POST MILES TOTAL PROJECT	SHEET No.	TOTAL SHEETS
06	Ker	5	62.5/73.1	189	213

William K. Farnbach
REGISTERED CIVIL ENGINEER

July 19, 2013
PLANS APPROVAL DATE

REGISTERED PROFESSIONAL ENGINEER
William K. Farnbach
No. C49042
Exp. 9-30-14
CIVIL
STATE OF CALIFORNIA

THE STATE OF CALIFORNIA OR ITS OFFICERS OR AGENTS SHALL NOT BE RESPONSIBLE FOR THE ACCURACY OR COMPLETENESS OF SCANNED COPIES OF THIS PLAN SHEET.

TO ACCOMPANY PLANS DATED 6-16-14

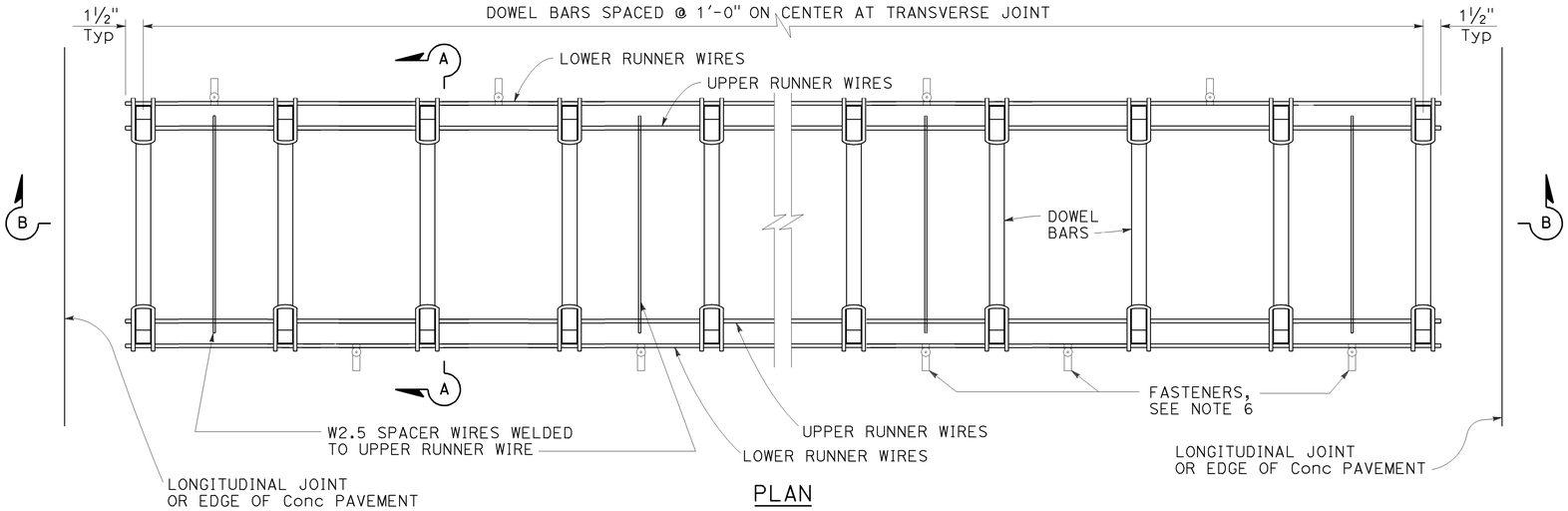

PLAN

DOWEL BAR BASKET (TRANSVERSE JOINT)

See Note 1

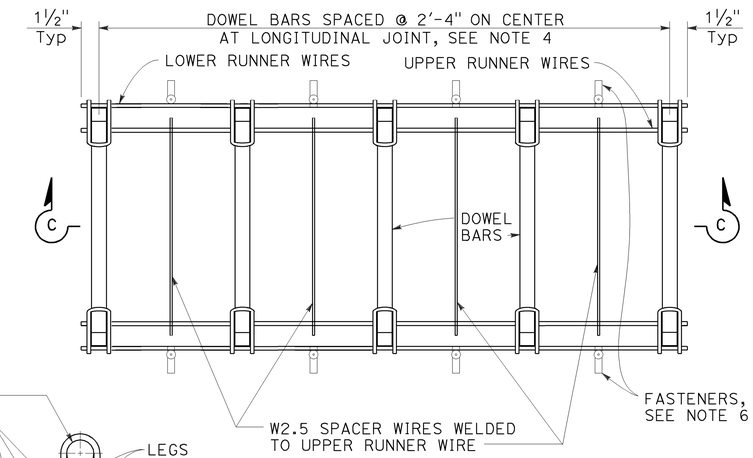

PLAN

DOWEL BAR BASKET (LONGITUDINAL JOINT)

See Note 1

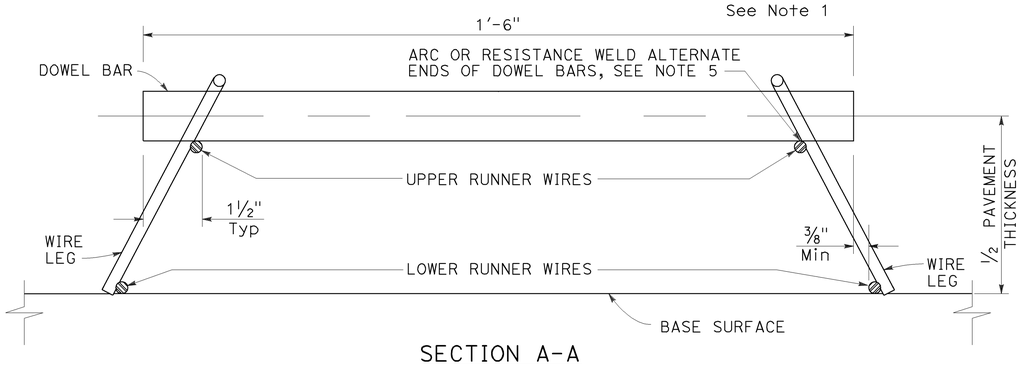

SECTION A-A

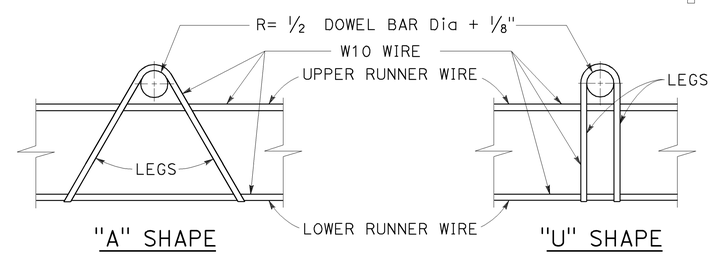

ASSEMBLY FRAME DETAILS

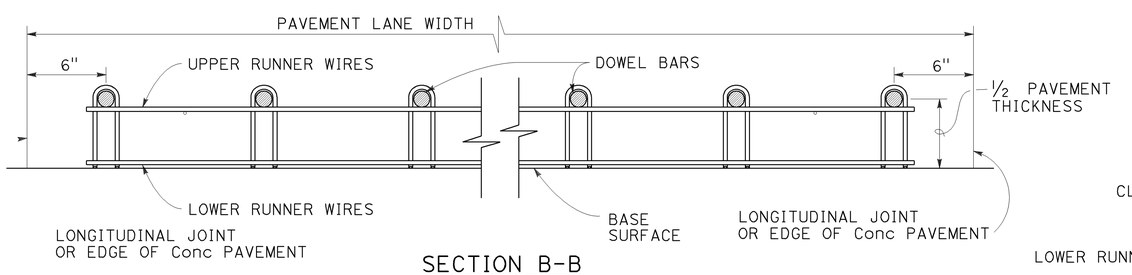

SECTION B-B

See Note 1

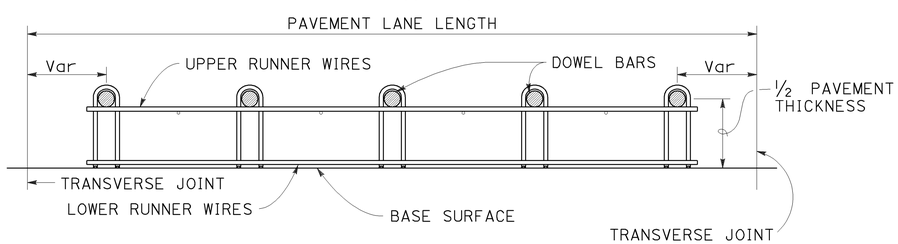

SECTION C-C

See Notes 1 and 4

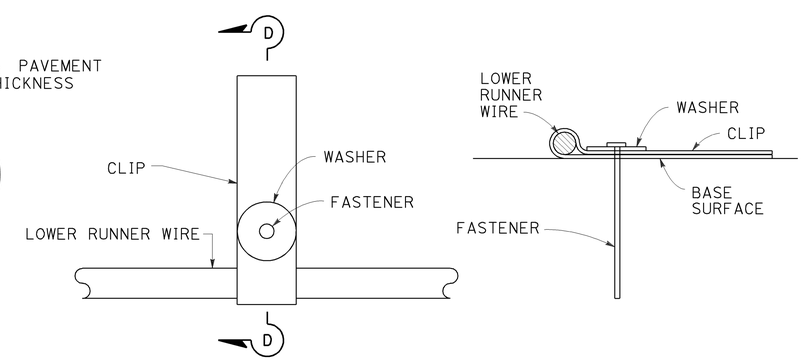

PLAN

SECTION D-D

FASTENER DETAIL

See Note 6

NOTES:

1. "U" frame shape assembly shown. Use either "U" frame shape or "A" frame shape.
2. Wire sizes shown are the minimum required.
3. All wire intersections must be resistance welded.
4. Use tie bar spacing for longitudinal dowel bar locations. See Revised Standard Plans RSP P1, RSP P2, RSP P3A, and RSP P3B for tie bar requirements.
5. Weld may be at the top or bottom of the dowel bar.
6. Use anchor pins where soil or granular base is used. See Revised Standard Plan RSP P17 for Anchor Pin Detail.

STATE OF CALIFORNIA
DEPARTMENT OF TRANSPORTATION

CONCRETE PAVEMENT DOWEL BAR BASKET DETAILS

NO SCALE

RSP P12 DATED JULY 19, 2013 SUPERSEDES STANDARD PLAN P12
DATED MAY 20, 2011 - PAGE 132 OF THE STANDARD PLANS BOOK DATED 2010.

REVISED STANDARD PLAN RSP P12

2010 REVISED STANDARD PLAN RSP P12

5-31-13

Dist	COUNTY	ROUTE	POST MILES TOTAL PROJECT	SHEET No.	TOTAL SHEETS
06	Ker	5	62.5/73.1	190	213

William K. Farnbach
REGISTERED CIVIL ENGINEER

July 19, 2013
PLANS APPROVAL DATE

REGISTERED PROFESSIONAL ENGINEER
William K. Farnbach
No. C49042
Exp. 9-30-14
CIVIL
STATE OF CALIFORNIA

THE STATE OF CALIFORNIA OR ITS OFFICERS OR AGENTS SHALL NOT BE RESPONSIBLE FOR THE ACCURACY OR COMPLETENESS OF SCANNED COPIES OF THIS PLAN SHEET.

TO ACCOMPANY PLANS DATED 6-16-14

NOTES:

1. For longitudinal bar size, spacing and clearances, see Table 1 on Revised Standard Plan RSP P4.
2. The length of lap splices for bar reinforcement must be at least 25".
3. For tie bars in longitudinal construction joint, see Revised Standard Plan RSP P16.
4. Place additional longitudinal bars parallel to and in the same plane as the longitudinal bars.
5. Place additional longitudinal bars symmetrically about longitudinal construction joint.

ABBREVIATION

D = Thickness of CRCP

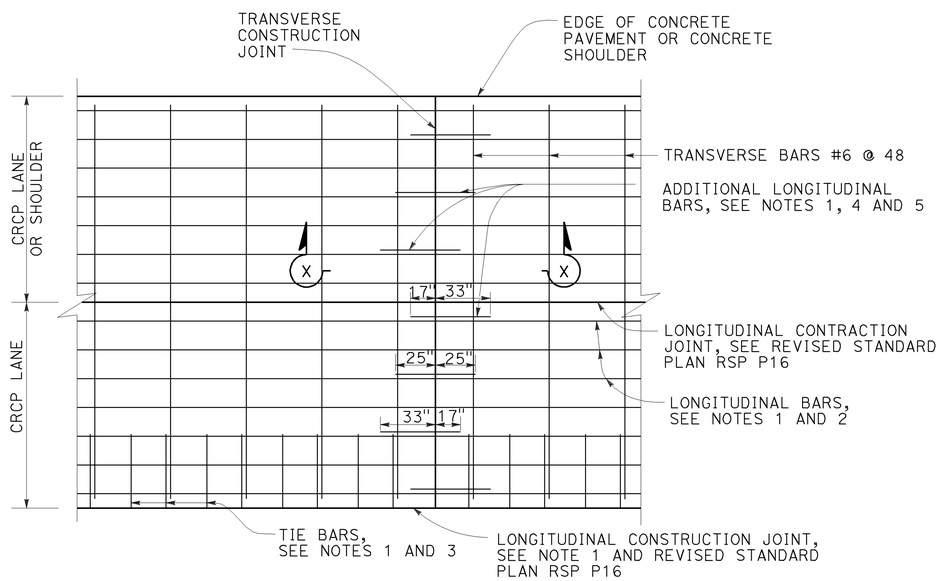

DETAIL A

Additional longitudinal bars at transverse construction joint

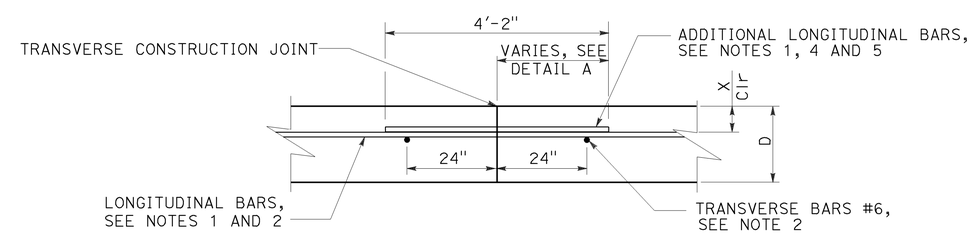

SECTION X-X

TRANSVERSE CONSTRUCTION JOINT

STATE OF CALIFORNIA
DEPARTMENT OF TRANSPORTATION

CONTINUOUSLY REINFORCED CONCRETE PAVEMENT TRANSVERSE CONSTRUCTION JOINT

NO SCALE

RSP P14 DATED JULY 19, 2013 SUPPLEMENTS THE STANDARD PLANS BOOK DATED 2010.

REVISED STANDARD PLAN RSP P14

2010 REVISED STANDARD PLAN RSP P14

5-31-13

Dist	COUNTY	ROUTE	POST MILES TOTAL PROJECT	SHEET No.	TOTAL SHEETS
06	Ker	5	62.5/73.1	191	213

William K. Farnbach
REGISTERED CIVIL ENGINEER

July 19, 2013
PLANS APPROVAL DATE

REGISTERED PROFESSIONAL ENGINEER William K. Farnbach No. C49042 Exp. 9-30-14 CIVIL STATE OF CALIFORNIA

THE STATE OF CALIFORNIA OR ITS OFFICERS OR AGENTS SHALL NOT BE RESPONSIBLE FOR THE ACCURACY OR COMPLETENESS OF SCANNED COPIES OF THIS PLAN SHEET.

TO ACCOMPANY PLANS DATED 6-16-14

2010 REVISED STANDARD PLAN RSP P16

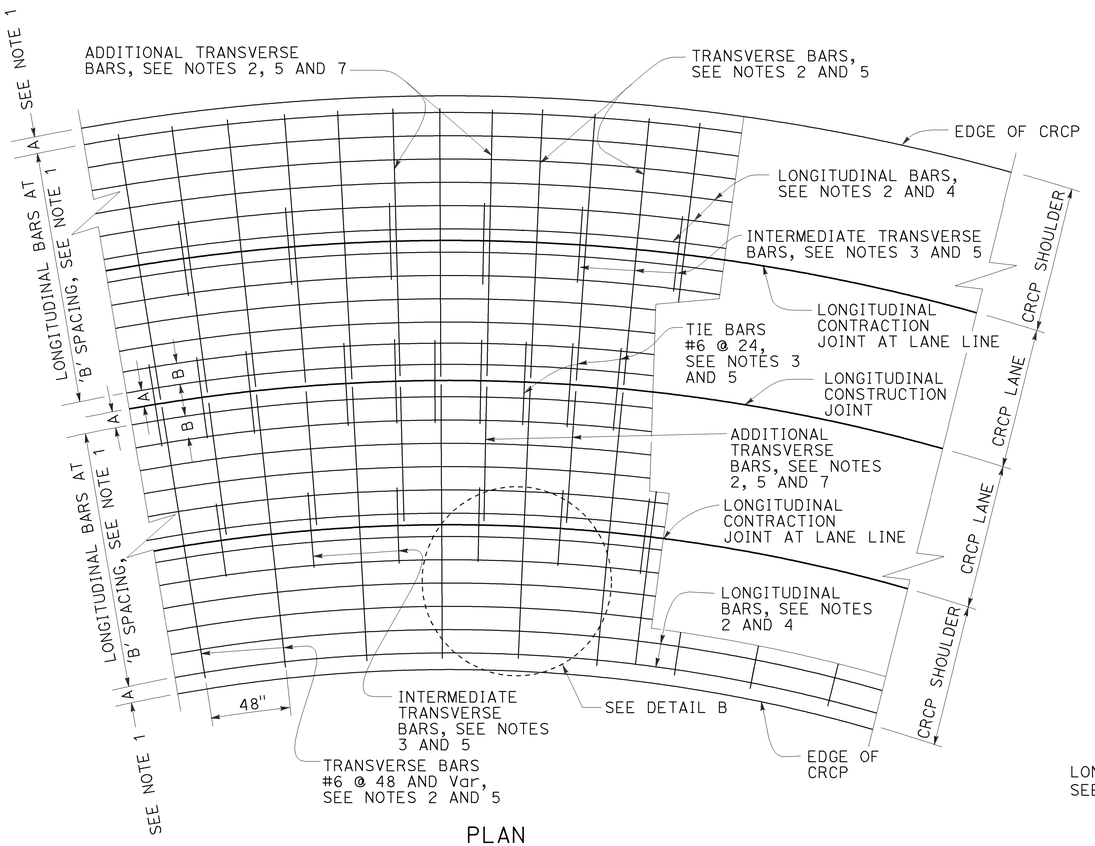

PLAN

CURVED LANES

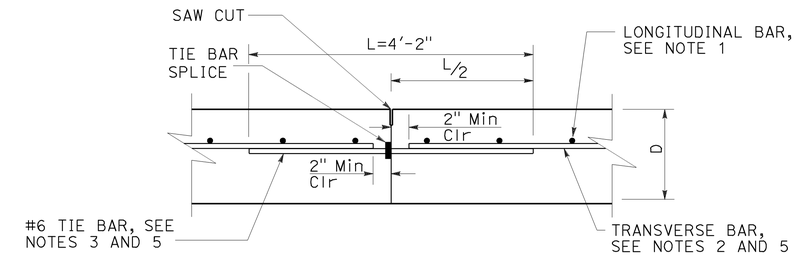

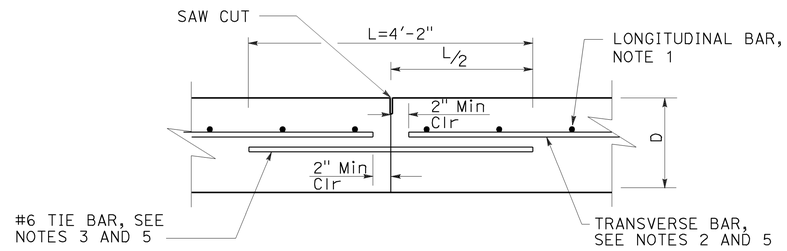

ALTERNATE

LONGITUDINAL CONSTRUCTION JOINT

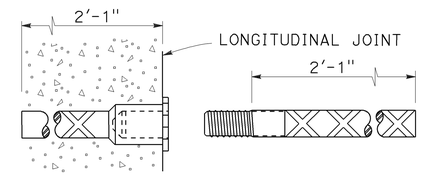

TIE BAR SPLICE COUPLER DETAIL

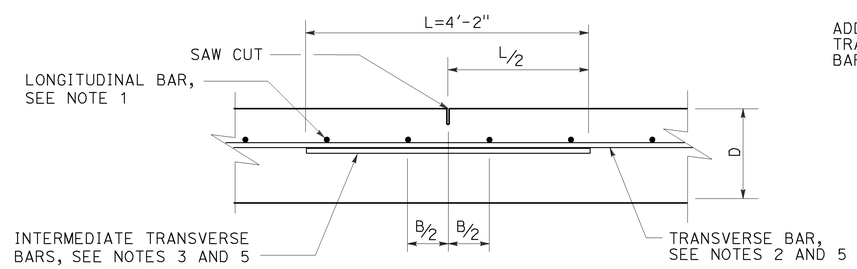

LONGITUDINAL CONTRACTION JOINT

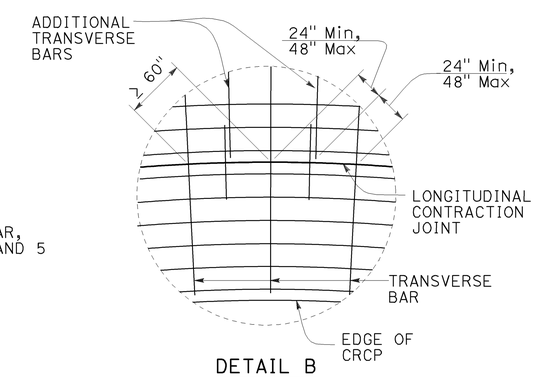

DETAIL B

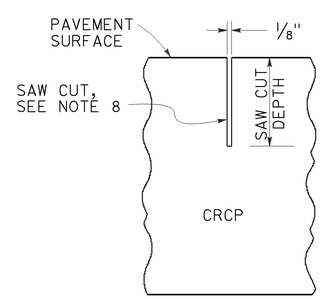

CONTRACTION JOINT SAW CUT DETAIL

NOTES:

1. For longitudinal bar spacing and clearances, see Table 1 on Revised Standard Plan RSP P4.
2. The length of lap splices for bar reinforcement must be at least 25".
3. Place tie bars and intermediate transverse bars parallel to and in the same plane as the transverse bars.
4. Place longitudinal bars parallel to roadway curvature.
5. Place transverse bars, additional transverse bars, tie bars and intermediate transverse bars perpendicular to the pavement curvature.
6. For additional longitudinal bars detail, see Detail A on Revised Standard Plans RSP P14.
7. Place additional transverse bars where required, see Detail B.
8. The bottom of the saw cut must be at least 0.5" clear of any dowel bar, tie bar and bar reinforcement.

ABBREVIATION:

D = Thickness of CRCP

STATE OF CALIFORNIA
DEPARTMENT OF TRANSPORTATION

CONTINUOUSLY REINFORCED CONCRETE PAVEMENT TIE BARS AND JOINT DETAILS

NO SCALE

RSP P16 DATED JULY 19, 2013 SUPPLEMENTS THE STANDARD PLANS BOOK DATED 2010.

REVISED STANDARD PLAN RSP P16

5-31-13

Dist	COUNTY	ROUTE	POST MILES TOTAL PROJECT	SHEET No.	TOTAL SHEETS
06	Ker	5	62.5/73.1	192	213

William K. Farnbach
REGISTERED CIVIL ENGINEER

July 19, 2013
PLANS APPROVAL DATE

REGISTERED PROFESSIONAL ENGINEER
William K. Farnbach
No. C49042
Exp. 9-30-14
CIVIL
STATE OF CALIFORNIA

THE STATE OF CALIFORNIA OR ITS OFFICERS OR AGENTS SHALL NOT BE RESPONSIBLE FOR THE ACCURACY OR COMPLETENESS OF SCANNED COPIES OF THIS PLAN SHEET.

TO ACCOMPANY PLANS DATED 6-16-14

2010 REVISED STANDARD PLAN RSP P18

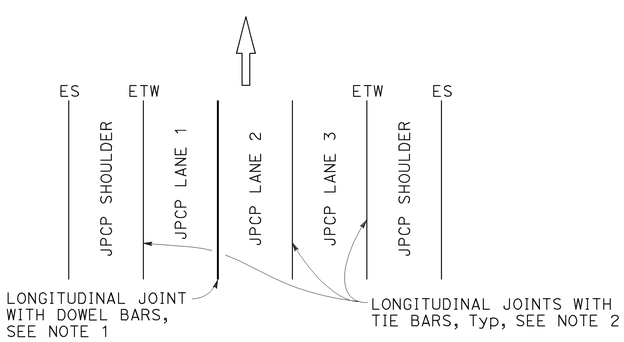

3 LANES WITH CONCRETE SHOULDERS
PLAN

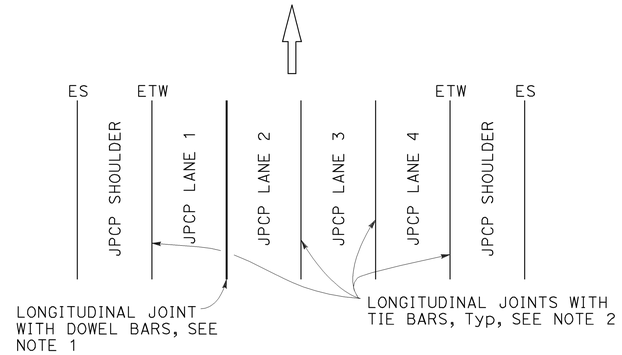

4 LANES WITH CONCRETE SHOULDERS
PLAN

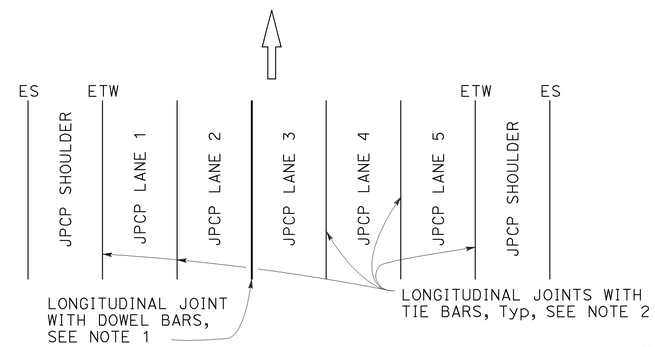

5 LANES WITH CONCRETE SHOULDERS
PLAN

NOTES:

1. See Revised Standard Plan RSP P10 for longitudinal joint with dowel bars.
2. See Revised Standard Plan RSP P15 for longitudinal joint with tie bars.
3. S= Reservoir depth.
   S= 7/8" ± 1/16" for asphalt rubber seals
   S= 9/16" ± 1/16" for silicone seals
   Preformed compression seals must be 13/16" wide and S= 1 11/16" ± 1/16"

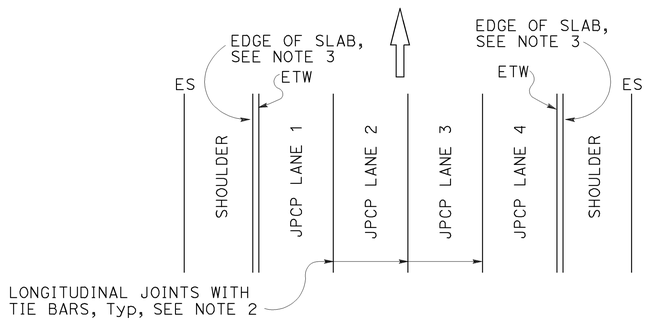

4 LANES OR LESS WITH AC SHOULDERS
PLAN

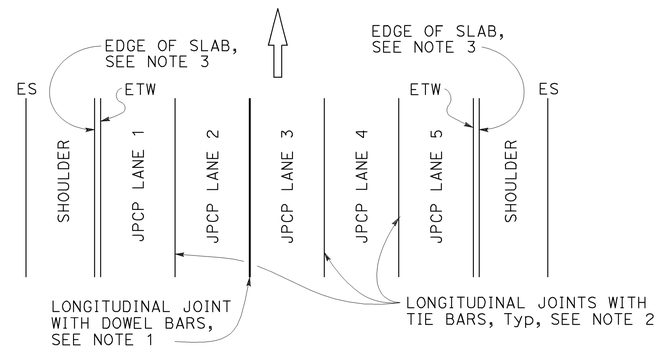

5 LANES WITH AC SHOULDERS
PLAN

NEW CONSTRUCTION
Location of Longitudinal Joints For JPCP

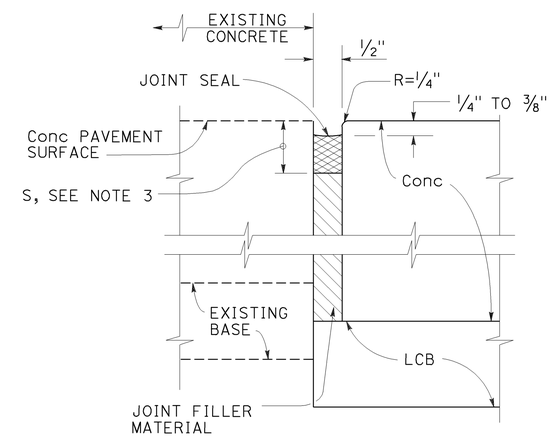

DETAIL "A"
ISOLATION JOINT

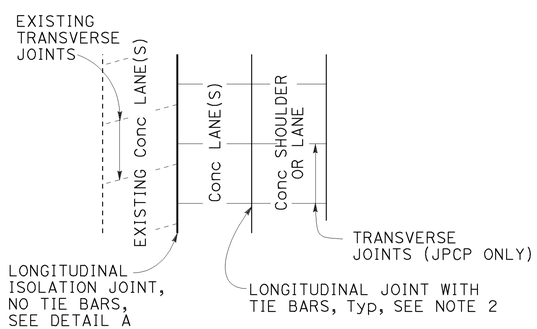

CASE 1
PLAN
Transverse Joints do not align between new and existing.

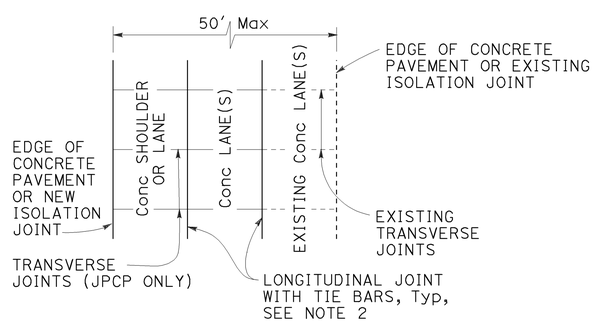

CASE 2
PLAN
Transverse Joints align between new and existing. (For JPCP only)

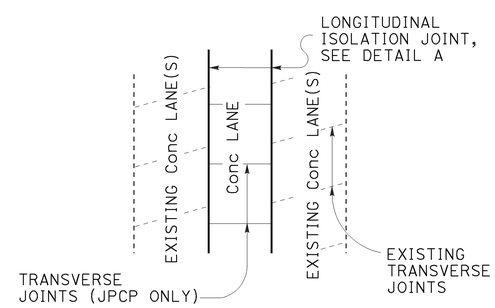

CASE 3 (INTERIOR LANE REPLACEMENT)
PLAN
Transverse Joints do not align between new and existing.

LANE/SHOULDER ADDITION OR RECONSTRUCTION
For JPCP and CRCP

STATE OF CALIFORNIA
DEPARTMENT OF TRANSPORTATION

CONCRETE PAVEMENT LANE SCHEMATICS AND ISOLATION JOINT DETAIL

NO SCALE

RSP P18 DATED JULY 19, 2013 SUPERSEDES RSP P18 DATED APRIL 20, 2012 AND STANDARD PLAN P18 DATED MAY 20, 2011 - PAGE 135 OF THE STANDARD PLANS BOOK DATED 2010.

REVISED STANDARD PLAN RSP P18

5-31-13

Dist	COUNTY	ROUTE	POST MILES TOTAL PROJECT	SHEET No.	TOTAL SHEETS
06	Ker	5	62.5/73.1	193	213

William K. Farnbach
REGISTERED CIVIL ENGINEER

July 19, 2013
PLANS APPROVAL DATE

REGISTERED PROFESSIONAL ENGINEER
William K. Farnbach
No. C49042
Exp. 9-30-14
CIVIL
STATE OF CALIFORNIA

THE STATE OF CALIFORNIA OR ITS OFFICERS OR AGENTS SHALL NOT BE RESPONSIBLE FOR THE ACCURACY OR COMPLETENESS OF SCANNED COPIES OF THIS PLAN SHEET.

TO ACCOMPANY PLANS DATED 6-16-14

2010 REVISED STANDARD PLAN RSP P20

NOTES:

1. Details do not apply to isolation joints and longitudinal construction joints.
2. Tie bars, dowel bars, and bar reinforcement are not shown.
3. Depths are measured from the final concrete pavement surface elevation after any grinding.

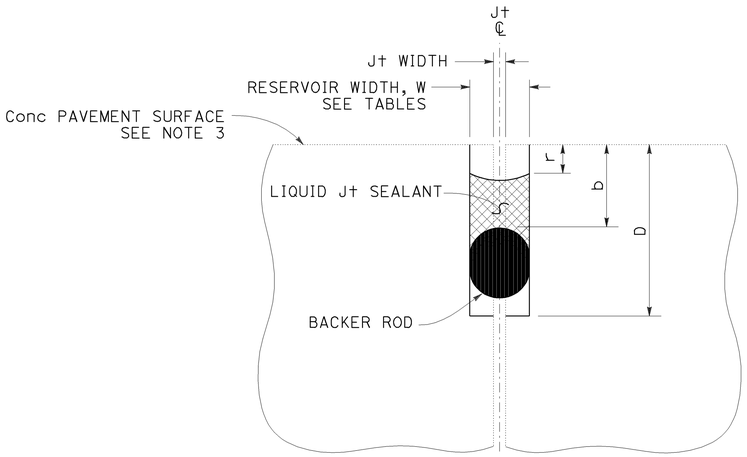

LIQUID JOINT SEALANT

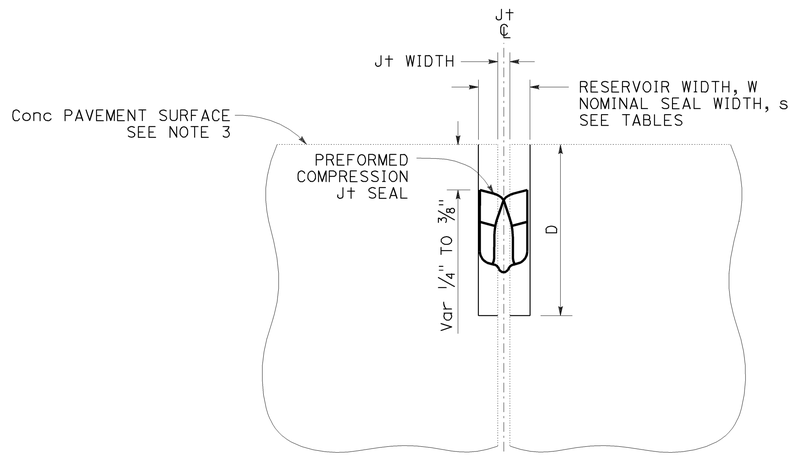

PREFORMED COMPRESSION JOINT SEAL

Const SEASON	Min RESERVOIR WIDTH * W ± 1/16"
WINTER	1/4"
SPRING	3/8"
SUMMER	3/8"
FALL	3/8"

* Minimum reservoir width for replace joint seal = existing joint width + 1/8"

RESERVOIR WIDTH W ±1/16"	LIQUID JOINT SEALANT DIMENSIONS					
	BACKER ROD NOMINAL Dia *	DEPTHS (ASPHALT RUBBER) **		DEPTHS (SILICONE)		
		RESERVOIR D ± 1/4"	BACKER ROD b ± 1/16"	RESERVOIR D ± 1/4"	BACKER ROD b ± 1/16"	RECESS r ± 1/16"
1/4"	3/8"	1 3/4"	7/8"	1 3/8"	1/2"	1/4"
3/8"	1/2"	1 7/8"	7/8"	1 1/2"	1/2"	1/4"
1/2"	3/4"	2"	7/8"	1 3/4"	9/16"	5/16"
5/8"	7/8"	2 1/4"	1"	2"	5/8"	5/16"
3/4"	1"	2 3/4"	1 1/8"	2 1/4"	3/4"	3/8"
7/8"	1 1/4"	3"	1 1/4"	2 1/2"	13/16"	3/8"
1"	1 1/2"	3 1/4"	1 3/8"	2 5/8"	7/8"	3/8"
1 1/8"	1 1/2"	3 1/2"	1 1/2"	2 13/16"	1"	1/2"

* Larger diameter backer rods may be substituted according to manufacturer recommendations if reservoir depth is increased equivalently.

** Asphalt rubber sealant recess depth "r" varies from 1/4" to 3/8"

RESERVOIR WIDTH W ±1/16"	PREFORMED COMPRESSION JOINT SEAL DIMENSIONS	
	NOMINAL SEAL WIDTH s	RESERVOIR DEPTH D ± 1/4"
1/4"	7/16"	1 1/4"
3/8"	11/16"	1 7/16"
1/2"	13/16"	1 11/16"
5/8"	1"	1 7/8"
3/4"	1 1/4"	2 1/8"
7/8"	1 5/8"	2 5/8"
1"	1 5/8"	2 5/8"
1 1/8"	2"	2 7/8"

STATE OF CALIFORNIA
DEPARTMENT OF TRANSPORTATION

JOINT SEALS

NO SCALE

RSP P20 DATED JULY 19, 2013 SUPERSEDES STANDARD PLAN P20
DATED MAY 20, 2011 - PAGE 136 OF THE STANDARD PLANS BOOK DATED 2010.

REVISED STANDARD PLAN RSP P20

Dist	COUNTY	ROUTE	POST MILES TOTAL PROJECT	SHEET No.	TOTAL SHEETS
06	Ker	5	62.5/73.1	194	213

REGISTERED CIVIL ENGINEER

July 19, 2013
PLANS APPROVAL DATE

REGISTERED PROFESSIONAL ENGINEER William K. Farnbach No. C49042 Exp. 9-30-14 CIVIL STATE OF CALIFORNIA

THE STATE OF CALIFORNIA OR ITS OFFICERS OR AGENTS SHALL NOT BE RESPONSIBLE FOR THE ACCURACY OR COMPLETENESS OF SCANNED COPIES OF THIS PLAN SHEET.

TO ACCOMPANY PLANS DATED 6-16-14

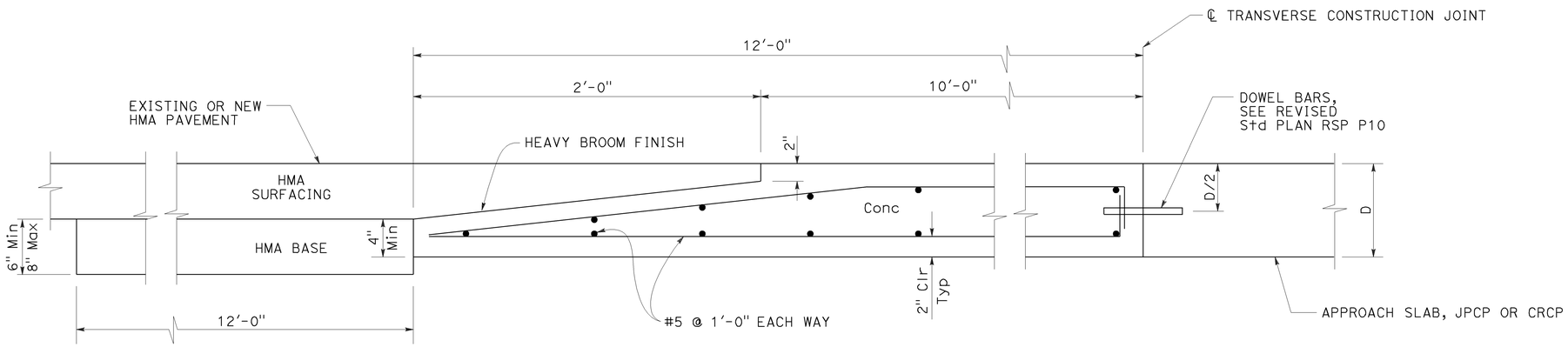

ELEVATION

CONCRETE PAVEMENT TRANSITION PANEL

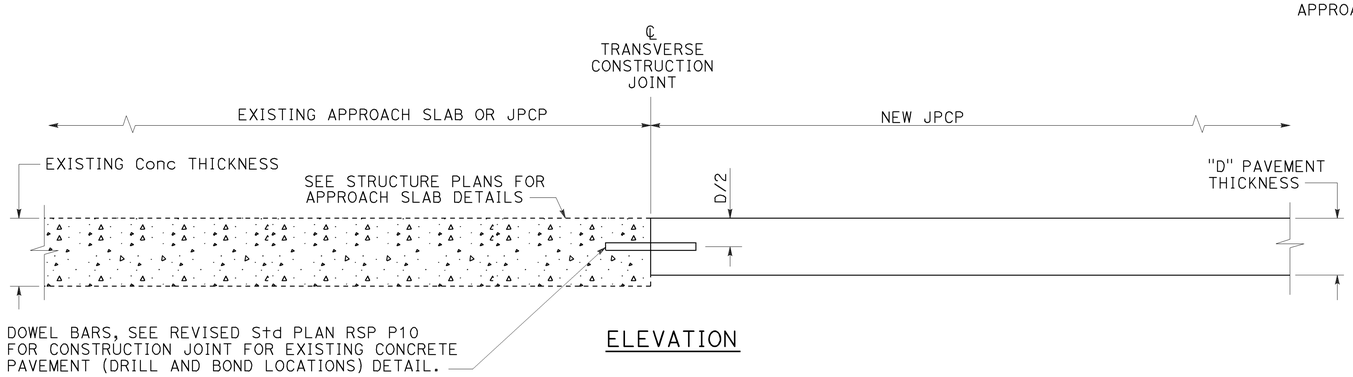

ELEVATION

TERMINAL JOINT TYPE 1

For Exist JPCP or Approach Slab

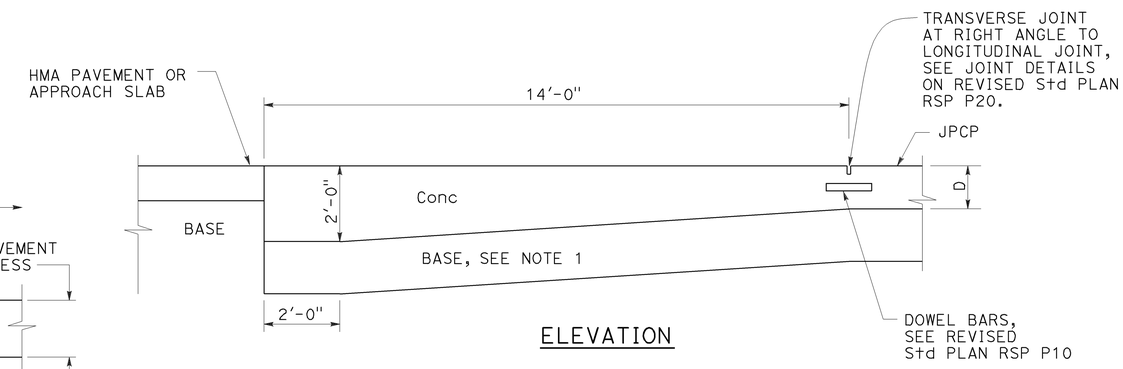

ELEVATION

PAVEMENT END ANCHOR

For HMA Pvmt or Approach Slab

NOTE:

1. Maintain same base thickness as JPCP.

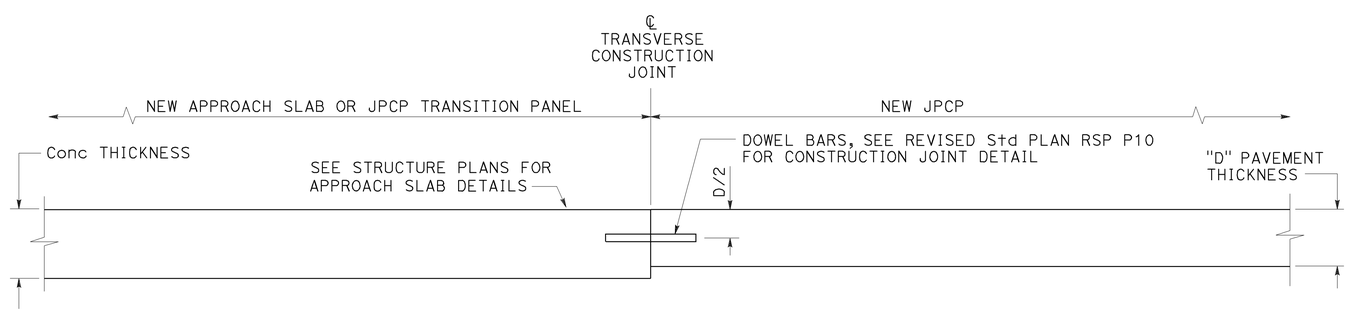

ELEVATION

TERMINAL JOINT TYPE 2

For JPCP Transition Panel or Approach Slab

STATE OF CALIFORNIA
DEPARTMENT OF TRANSPORTATION

CONCRETE PAVEMENT-END PANEL PAVEMENT TRANSITIONS

NO SCALE

RSP P30 DATED JULY 19, 2013 SUPERSEDES RSP P30 DATED APRIL 20, 2012 AND STANDARD PLAN P30 DATED MAY 20, 2011 - PAGE 137 OF THE STANDARD PLANS BOOK DATED 2010.

REVISED STANDARD PLAN RSP P30

2010 REVISED STANDARD PLAN RSP P30

3-26-13

Dist	COUNTY	ROUTE	POST MILES TOTAL PROJECT	SHEET No.	TOTAL SHEETS
06	Ker	5	62.5/73.1	195	213

REGISTERED CIVIL ENGINEER

July 19, 2013
PLANS APPROVAL DATE

REGISTERED PROFESSIONAL ENGINEER William K. Farnbach No. C49042 Exp. 9-30-14 CIVIL STATE OF CALIFORNIA

THE STATE OF CALIFORNIA OR ITS OFFICERS OR AGENTS SHALL NOT BE RESPONSIBLE FOR THE ACCURACY OR COMPLETENESS OF SCANNED COPIES OF THIS PLAN SHEET.

TO ACCOMPANY PLANS DATED 6-16-14

NOTES:

1. For the locations of wide flange beam terminal, pavement anchors and expansion joints, see Projects Plans.
2. See Revised Standard Plans RSP P31B and RSP P32A.

ABBREVIATIONS

D = Thickness of CRCP
A = Depth of HMA as shown on Project Plans
U = Thickness of Base

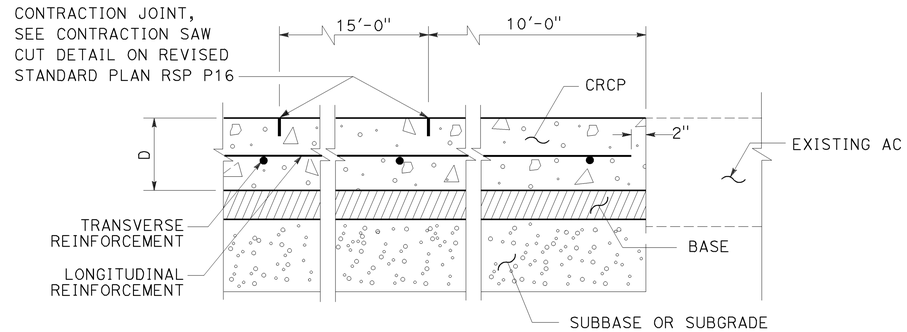

TERMINAL JOINT TYPE A

(For Existing AC)

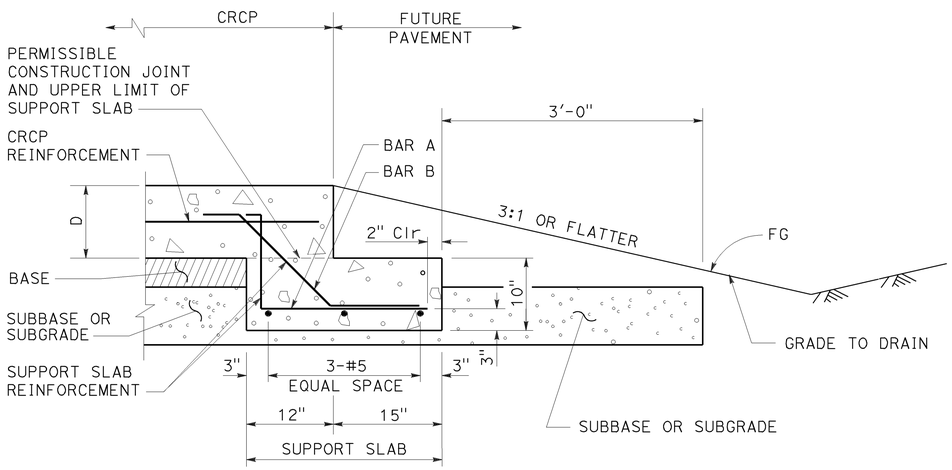

TERMINAL JOINT TYPE B

(For Future Pavement)

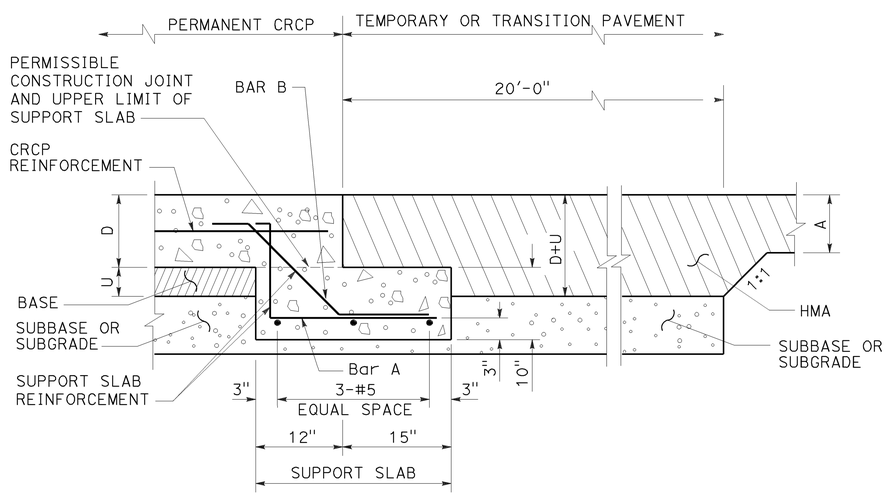

TERMINAL JOINT TYPE C

(For Temporary HMA Pavement)

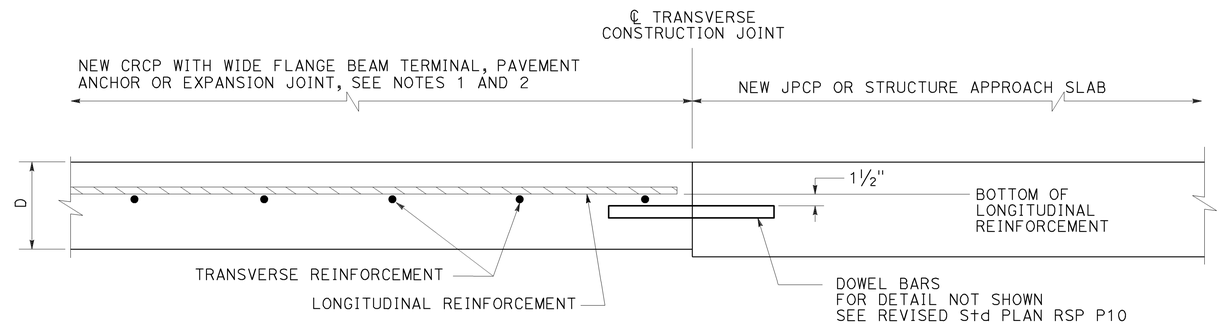

TERMINAL JOINT TYPE E

(For New JPCP or Structure Appproach Slabs)

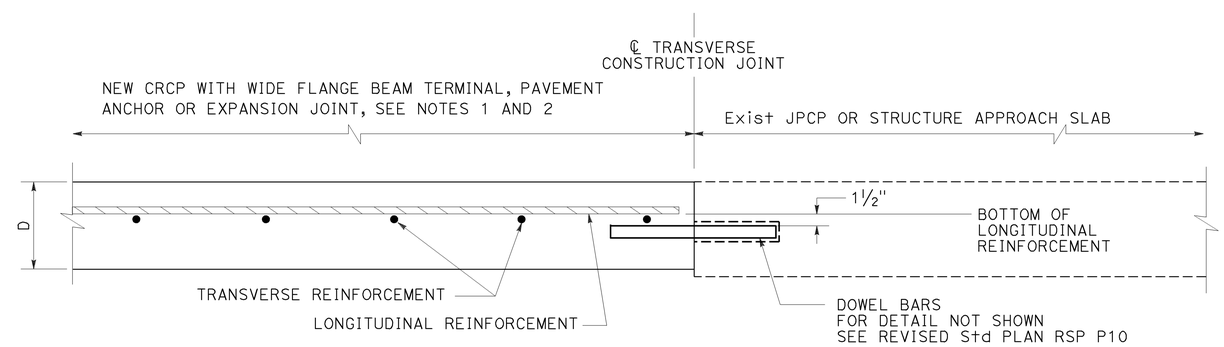

TERMINAL JOINT TYPE D

(For Existing JPCP or Structure Appproach Slabs)

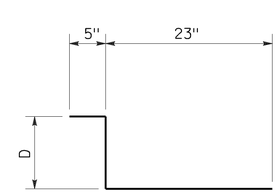

BAR "A" (#5)
AT 12" C-C

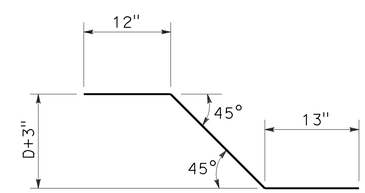

BAR "B" (#5)
AT 12" C-C

STATE OF CALIFORNIA
DEPARTMENT OF TRANSPORTATION

CONTINUOUSLY REINFORCED CONCRETE PAVEMENT TERMINAL JOINT DETAILS

NO SCALE

RSP P31A DATED JULY 19, 2013 SUPERSEDES STANDARD PLAN P31A DATED MAY 20, 2011 - PAGE 138 OF THE STANDARD PLANS BOOK DATED 2010.

REVISED STANDARD PLAN RSP P31A

2010 REVISED STANDARD PLAN RSP P31A

5-31-13

Dist	COUNTY	ROUTE	POST MILES TOTAL PROJECT	SHEET No.	TOTAL SHEETS
06	Ker	5	62.5/73.1	196	213

Florante E. Bautista
REGISTERED CIVIL ENGINEER

April 20, 2012
PLANS APPROVAL DATE

REGISTERED PROFESSIONAL ENGINEER
Florante E. Bautista
No. C54859
Exp. 6-30-12
CIVIL
STATE OF CALIFORNIA

THE STATE OF CALIFORNIA OR ITS OFFICERS OR AGENTS SHALL NOT BE RESPONSIBLE FOR THE ACCURACY OR COMPLETENESS OF SCANNED COPIES OF THIS PLAN SHEET.

TO ACCOMPANY PLANS DATED 6-16-14

2010 REVISED STANDARD PLAN RSP P32A

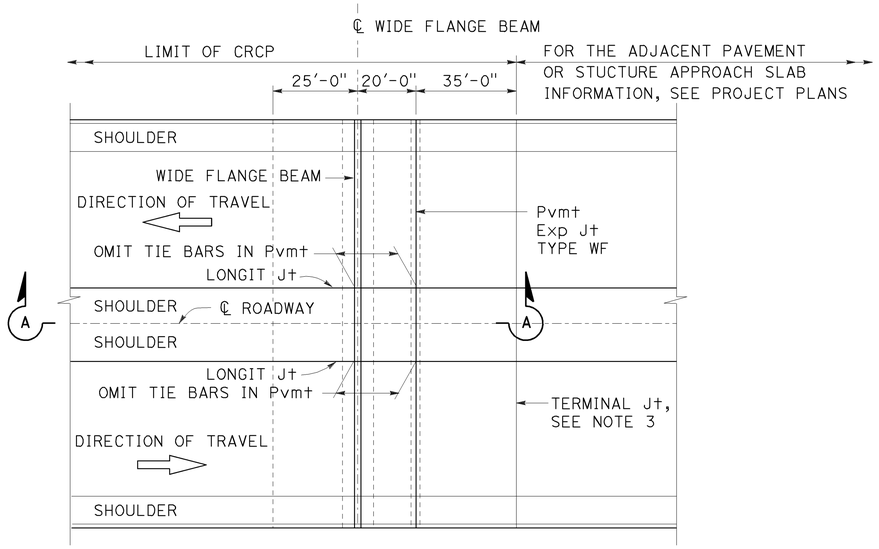

PLAN

NOTES:

1. For additional details on reinforcement member quantities of the wide flange beam terminal and Pavement Expansion Joint Type WF, see Revised Standard Plan RSP P32B.
2. For reinforcement (A), (B), and (C) Details, see Revised Standard Plan RSP P32B.
3. For the Pavement Terminal Joint Details, see Standard Plan P31A. For Pavement Terminal Joint Type, see Project Plans.
4. See Revised Standard Plan RSP P4 for "x".
5. D = Thickness of CRCP
6. See Standard Plan B6-21 for "a".

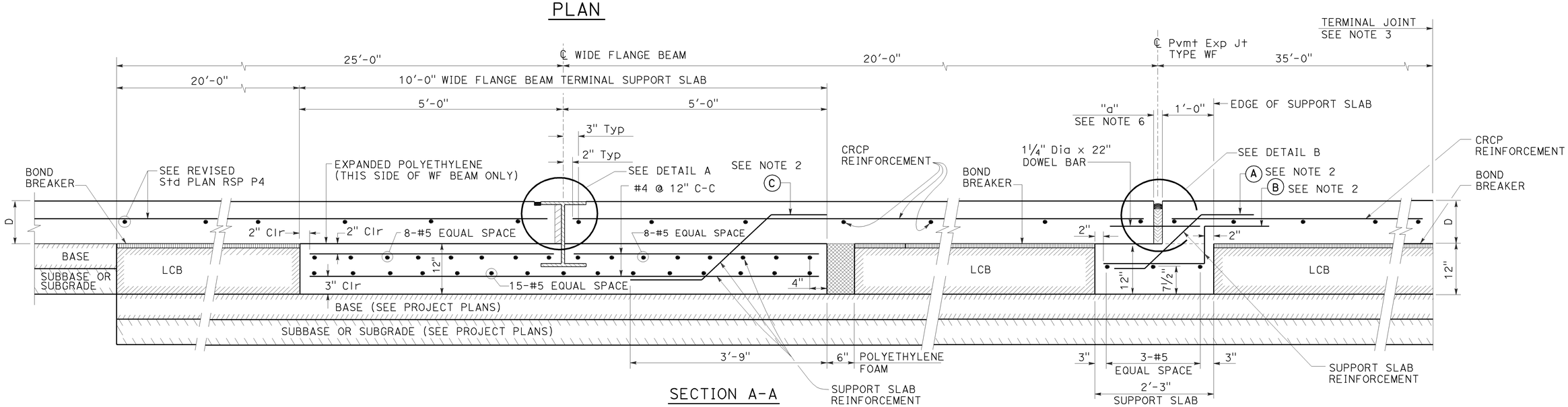

SECTION A-A

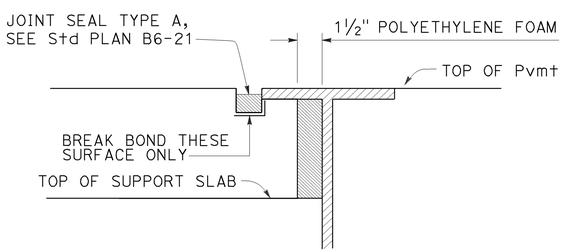

DETAIL A

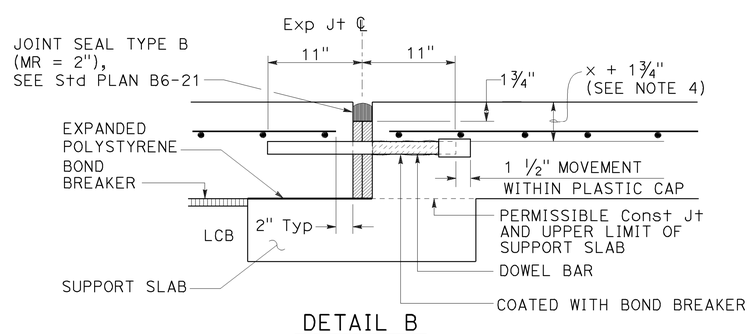

DETAIL B

For layout, tolerances, and other details not shown see Revised Std Plan RSP P10.

STATE OF CALIFORNIA
DEPARTMENT OF TRANSPORTATION

CONTINOUSLY REINFORCED CONCRETE PAVEMENT - WIDE FLANGE BEAM TERMINALS

NO SCALE

RSP P32A DATED APRIL 20, 2012 SUPERSEDES STANDARD PLAN P32A DATED MAY 20, 2011 - PAGE 140 OF THE STANDARD PLANS BOOK DATED 2010.

REVISED STANDARD PLAN RSP P32A

2-22-12

Dist	COUNTY	ROUTE	POST MILES TOTAL PROJECT	SHEET No.	TOTAL SHEETS
06	Ker	5	62.5/73.1	197	213

REGISTERED CIVIL ENGINEER

July 19, 2013
PLANS APPROVAL DATE

REGISTERED PROFESSIONAL ENGINEER — William K. Farnbach — No. C49042 — Exp. 9-30-14 — CIVIL — STATE OF CALIFORNIA

THE STATE OF CALIFORNIA OR ITS OFFICERS OR AGENTS SHALL NOT BE RESPONSIBLE FOR THE ACCURACY OR COMPLETENESS OF SCANNED COPIES OF THIS PLAN SHEET.

TO ACCOMPANY PLANS DATED 6-16-14

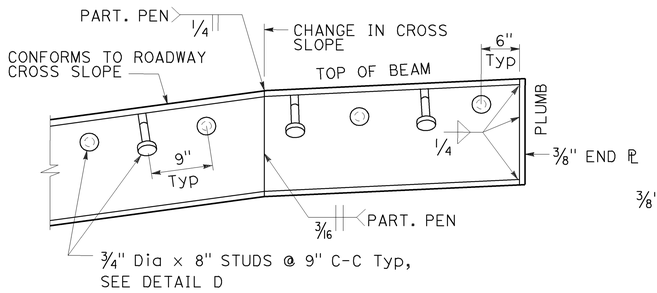

WIDE FLANGE DETAIL

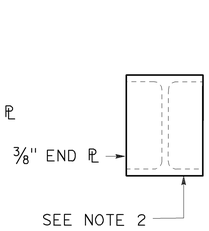

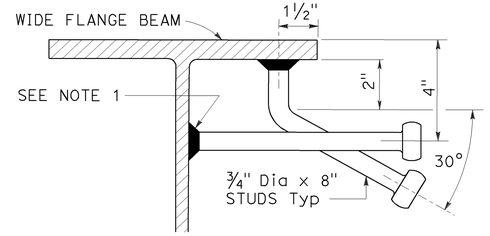

DETAIL D

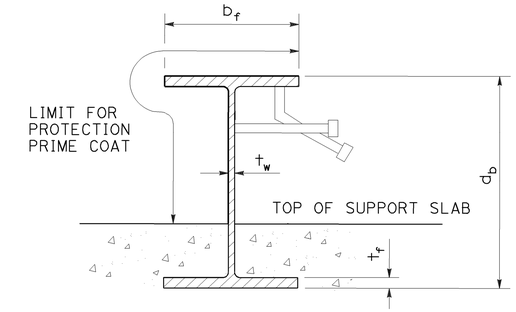

WIDE FLANGE PAINTING DETAIL

See "TABLE OF BEAM SIZES"

LEGEND:

b_f - FLANGE WIDTH
t_f - FLANGE THICKNESS
t_w - WEB THICKNESS
d_b - BEAM DEPTH
D1, D2 - PAVEMENT THICKNESSES

NOTES:

1. Studs must be electric arc end welded with complete fusion. Any stud dislodged in shipping or that can be dislodged by hammer must be replaced.
2. Weld 3/8" plate to each end of wide flange beam at pavement edges only. End plate covers the entire wide flange beam.
3. Extend polyethylene foam to the sides and edges of the front part of the plate.

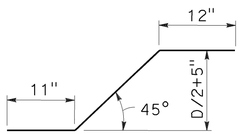

Ⓐ #5 @ 12"

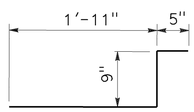

Ⓑ #5 @ 12"

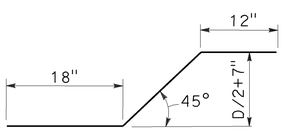

Ⓒ #4 @ 12"

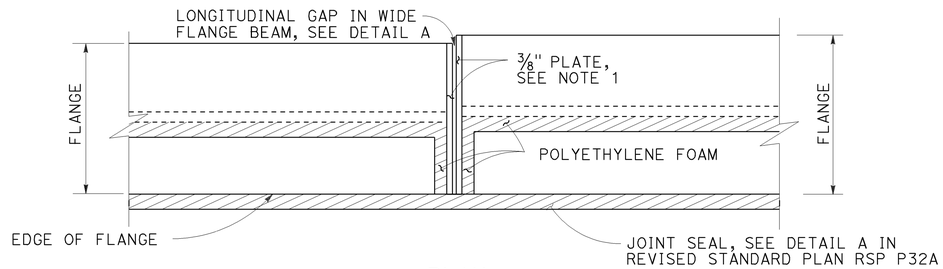

PLAN

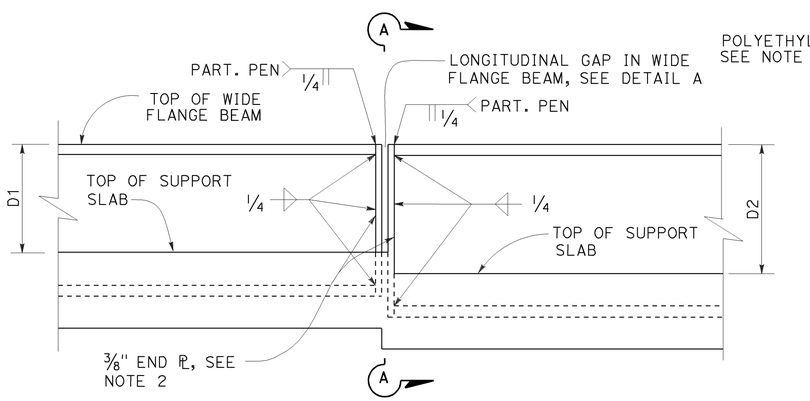

ELEVATION

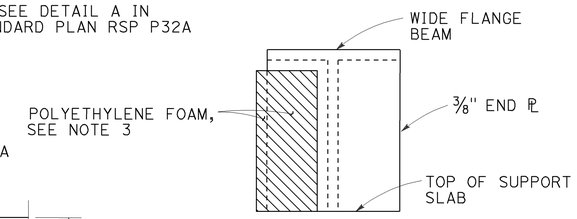

SECTION A-A

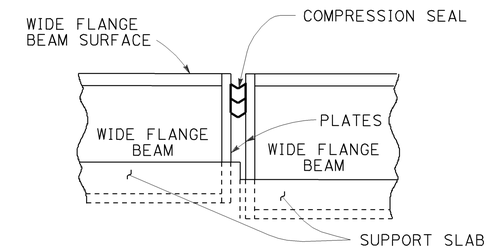

DETAIL A

TABLE OF BEAM SIZES					
PAVEMENT THICKNESS	WIDE FLANGE BEAM DESIGNATION	d_b	b_f	t_f	t_w
.75'	W14 x 43	13.70"	8.00"	0.53"	0.31"
.80'	W14 x 68	14.04"	10.04"	0.72"	0.42"
.85'	W16 x 89	16.75"	10.37"	0.88"	0.53"
.90'	W16 x 89	16.75"	10.37"	0.88"	0.53"
.95'	W18 x 97	18.59"	11.15"	0.87"	0.54"
1.00'	W18 x 97	18.59"	11.15"	0.87"	0.54"
1.05'	W18 x 97	18.59"	11.15"	0.87"	0.54"
1.10'	W18 x 97	18.59"	11.15"	0.87"	0.54"

CONCRETE AND STEEL QUANTITIES									
	ITEM	PAVEMENT THICKNESS							
		.75'	.80'	.85'	.90'	.95'	1.00'	1.05'	1.10'
WIDE FLANGE BEAM TERMINAL SLAB	CONCRETE	4.8 CY	4.8 CY	4.8 CY	4.8 CY	4.8 CY	4.8 CY	4.8 CY	4.8 CY
	REINFORCING STEEL	552.0 LBS	552.2 LBS	552.4 LBS	552.6 LBS	552.8 LBS	553.0 LBS	553.1 LBS	553.3 LBS
Exp JOINT TYPE WIDE FLANGE SUPPORT SLAB	CONCRETE	1.1 CY	1.1 CY	1.1 CY	1.1 CY	1.1 CY	1.1 CY	1.1 CY	1.1 CY
	REINFORCING STEEL	99.9 LBS	99.9 LBS	100.2 LBS	100.5 LBS	100.8 LBS	101.1 LBS	101.1 LBS	101.6 LBS
	STEEL BEAM (WEIGHT OF WIDE FLANGE BEAM AND STUDS)	43.0 LBS/LF +2 PLATES @ 14.9 LBS EA	69.51 LBS/LF +2 PLATES @ 14.9 LBS EA	90.51 LBS/LF +2 PLATES @ 18.5 LBS EA	90.51 LBS/LF +2 PLATES @ 18.5 LBS EA	98.51 LBS/LF +2 PLATES @ 22.0 LBS EA	98.51 LBS/LF +2 PLATES @ 22.0 LBS EA	98.51 LBS/LF +2 PLATES @ 22.0 LBS EA	98.51 LBS/LF +2 PLATES @ 22.0 LBS EA

STATE OF CALIFORNIA
DEPARTMENT OF TRANSPORTATION

CONTINOUSLY REINFORCED CONCRETE PAVEMENT WIDE FLANGE BEAM TERMINALS

NO SCALE

RSP P32B DATED JULY 19, 2013 SUPERSEDES RSP P32B DATED APRIL 20, 2012 AND STANDARD PLAN P32B DATED MAY 20, 2011 - PAGE 141 OF THE STANDARD PLANS BOOK DATED 2010.

REVISED STANDARD PLAN RSP P32B

2010 REVISED STANDARD PLAN RSP P32B

5-31-13

DIST	COUNTY	ROUTE	POST MILES TOTAL PROJECT	SHEET No.	TOTAL SHEETS
06	Ker	5	62.5/73.1	198	213

REGISTERED CIVIL ENGINEER

November 15, 2013
PLANS APPROVAL DATE

REGISTERED PROFESSIONAL ENGINEER
Cornelis M. Hakim
No. C55610
Exp. 12-31-14
CIVIL
STATE OF CALIFORNIA

THE STATE OF CALIFORNIA OR ITS OFFICERS OR AGENTS SHALL NOT BE RESPONSIBLE FOR THE ACCURACY OR COMPLETENESS OF SCANNED COPIES OF THIS PLAN SHEET.

TO ACCOMPANY PLANS DATED 6-16-14

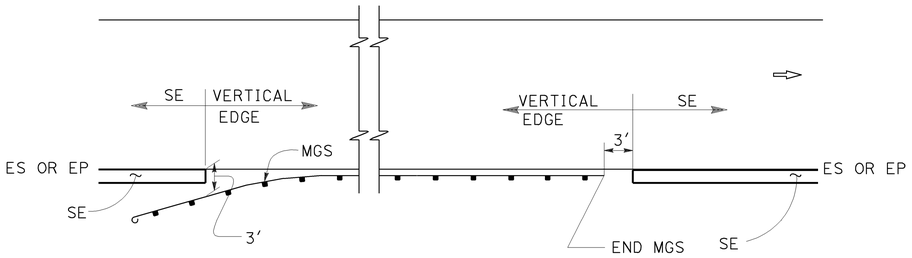

MGS

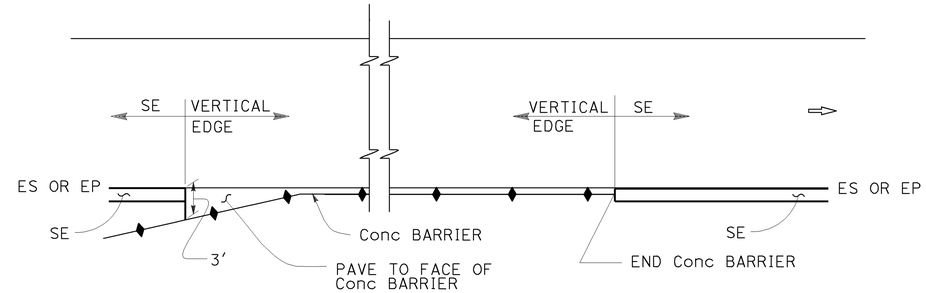

CONCRETE BARRIER

ABBREVIATIONS:

SE SAFETY EDGE

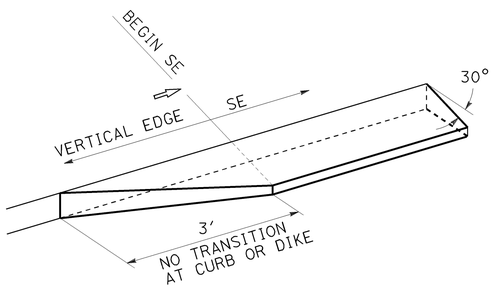

TRANSITION DETAIL FOR CONCRETE ONLY

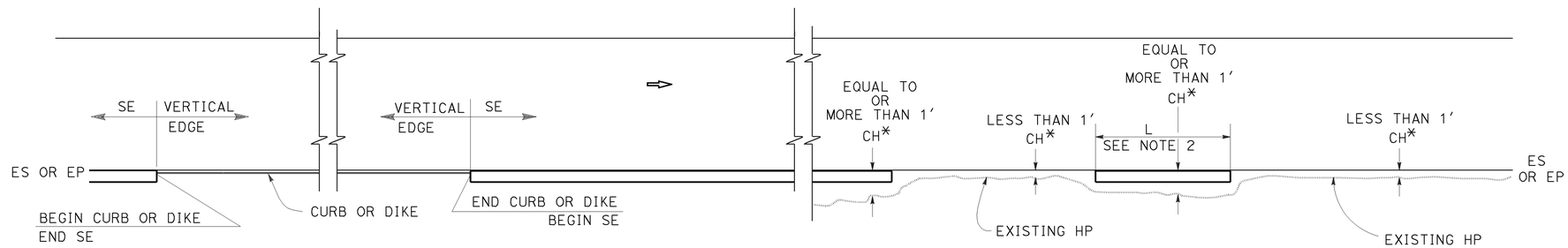

CURB OR DIKE

NARROW SIDE SLOPE

* CH = Distance from ES or EP to existing HP.

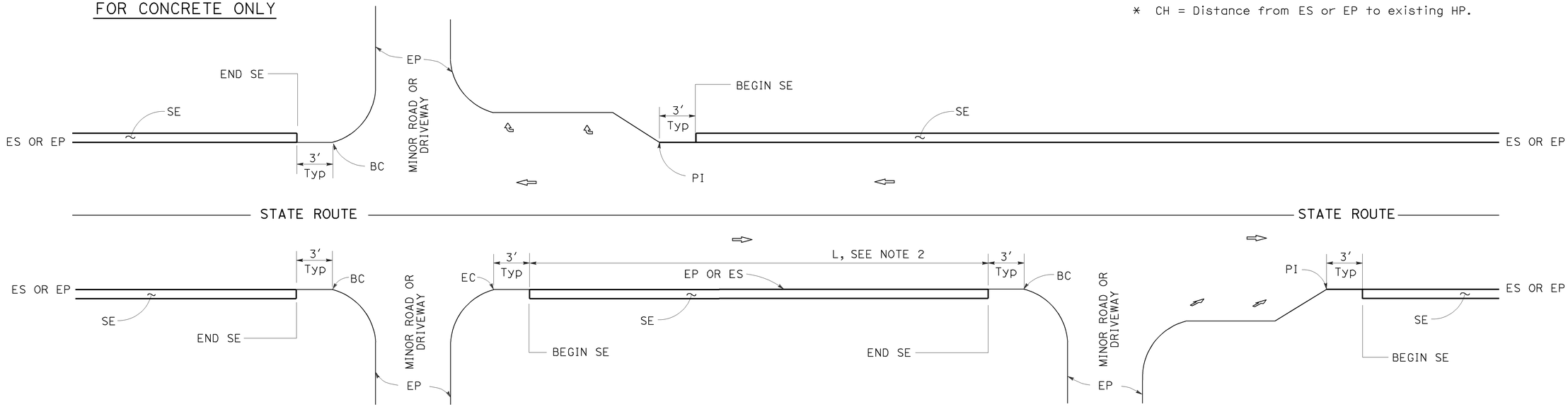

INTERSECTION

MINOR ROADWAY OR DRIVEWAY

DRIVEWAY AND INTERSECTION

STATE OF CALIFORNIA
DEPARTMENT OF TRANSPORTATION

PAVEMENT EDGE TREATMENTS

NO SCALE

RSP P74 DATED NOVEMBER 15, 2013 SUPERSEDES RSP P74 DATED JANUARY 20, 2012 THAT SUPPLEMENTS THE STANDARD PLANS BOOK DATED 2010.

NOTES:

1. For details not shown, see Revised Standard Plans RSP P75 and RSP P76.
2. Safety edge is optional when L is less than 30′.

REVISED STANDARD PLAN RSP P74

2010 REVISED STANDARD PLAN RSP P74

10-11-13

DIST	COUNTY	ROUTE	POST MILES TOTAL PROJECT	SHEET No.	TOTAL SHEETS
06	Ker	5	62.5/73.1	199	213

REGISTERED CIVIL ENGINEER

November 15, 2013
PLANS APPROVAL DATE

REGISTERED PROFESSIONAL ENGINEER Cornelis M. Hakim No. C55610 Exp. 12-31-14 CIVIL STATE OF CALIFORNIA

THE STATE OF CALIFORNIA OR ITS OFFICERS OR AGENTS SHALL NOT BE RESPONSIBLE FOR THE ACCURACY OR COMPLETENESS OF SCANNED COPIES OF THIS PLAN SHEET.

TO ACCOMPANY PLANS DATED 6-16-14

LEGEND:

- HMA PAVEMENT
- HMA OR CONCRETE PAVEMENT
- CONCRETE PAVEMENT

ABBREVIATIONS:

SE SAFETY EDGE
TT TOTAL THICKNESS OF SE
HW HINGE WIDTH, DISTANCE FROM ES OR EP TO HP

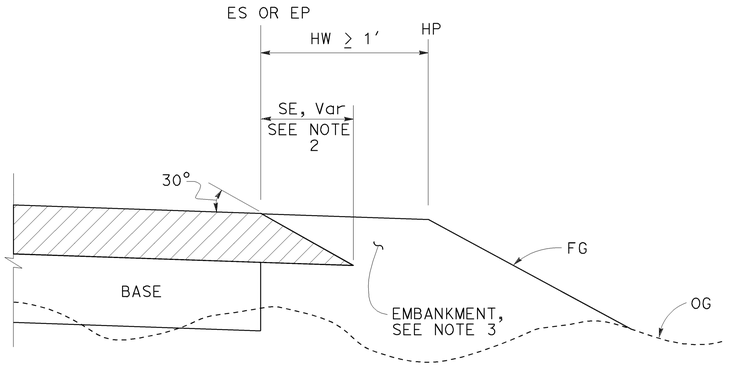

CASE K
Safety Edge - Fill Section, HW ≥ 1′

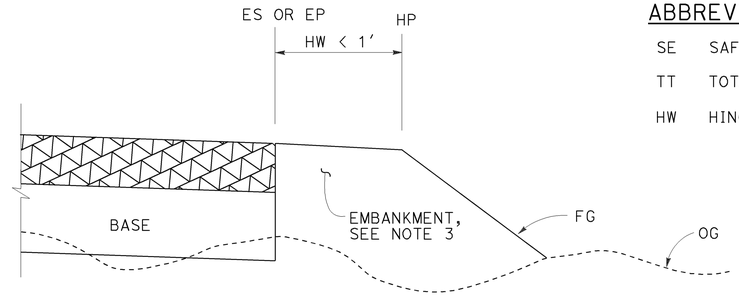

CASE L
Vertical Edge - Fill Section, HW < 1′

FILL SECTION

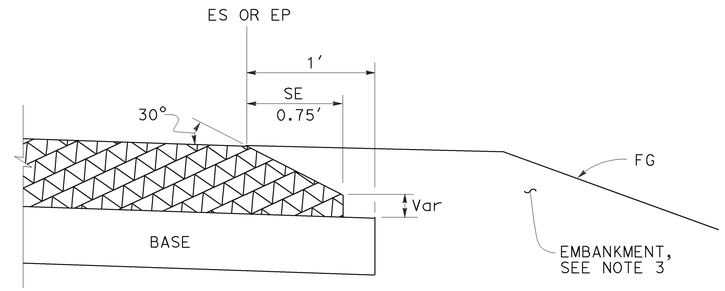

DETAIL "B"
For HMA pavement thickness more than 0.43′ or concrete pavement

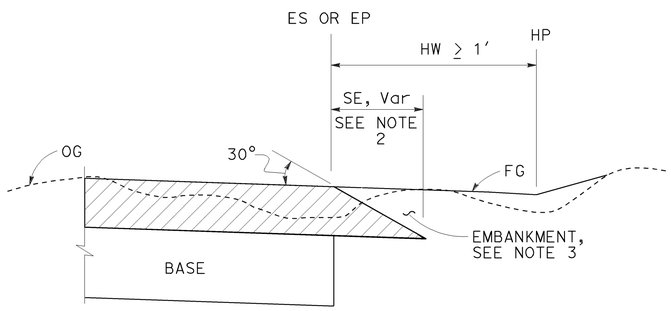

CASE M
Safety Edge - Cut Section, HW ≥ 1′

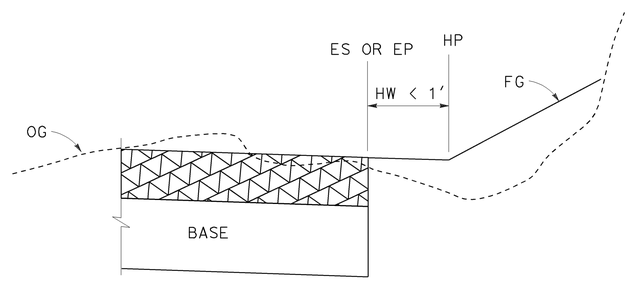

CASE N
Vertical Edge - Cut Section, HW < 1′

CUT SECTION

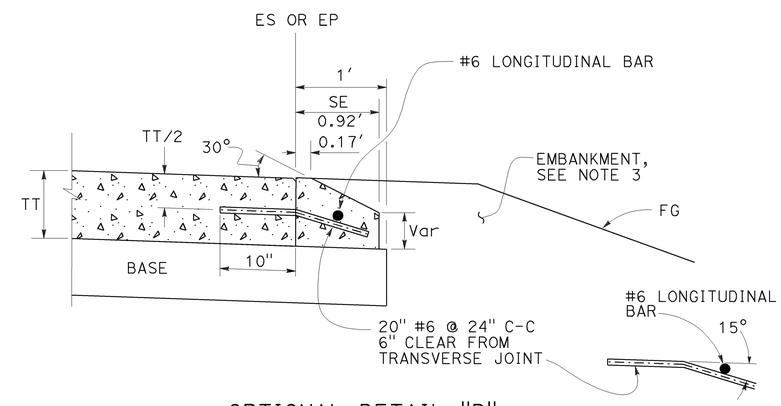

OPTIONAL DETAIL "B"
For concrete pavement
See Note 4

NOTES:

1. For limits of safety edge and vertical edge treatments, see Revised Standard Plan RSP P74
2. Details shown for HMA pavement thickness less than 0.43′. See Detail "B" for HMA pavement thickness more than 0.43′ or concrete pavement.
3. For locations and limits of embankment see project plans.
4. Safety edge transverse joint must match pavement transverse joint. End of #6 longitudinal bar must be 2" ±½" clear from transverse joint.
5. Safety edge is not needed in the area of MGS, barrier, right turn lane and acceleration lane. See Revised Standard Plan RSP P74.

STATE OF CALIFORNIA
DEPARTMENT OF TRANSPORTATION

PAVEMENT EDGE TREATMENTS-NEW CONSTRUCTION

NO SCALE

RSP P76 DATED NOVEMBER 15, 2013 SUPERSEDES RSP P76 DATED JANUARY 20, 2012 THAT SUPPLEMENTS THE STANDARD PLANS BOOK DATED 2010.

REVISED STANDARD PLAN RSP P76

2010 REVISED STANDARD PLAN RSP P76

10-4-13

Dist	COUNTY	ROUTE	POST MILES TOTAL PROJECT	SHEET No.	TOTAL SHEETS
06	Ker	5	62.5/73.1	200	213

REGISTERED CIVIL ENGINEER

July 19, 2013
PLANS APPROVAL DATE

REGISTERED PROFESSIONAL ENGINEER
Gurinderpal Bhullar
No. C48815
Exp. 9-30-14
CIVIL
STATE OF CALIFORNIA

THE STATE OF CALIFORNIA OR ITS OFFICERS OR AGENTS SHALL NOT BE RESPONSIBLE FOR THE ACCURACY OR COMPLETENESS OF SCANNED COPIES OF THIS PLAN SHEET.

TO ACCOMPANY PLANS DATED 6-16-14

2010 REVISED STANDARD PLAN RSP T9

TABLE 1

TAPER LENGTH CRITERIA AND CHANNELIZING DEVICE SPACING

SPEED (S)	MINIMUM TAPER LENGTH * FOR WIDTH OF OFFSET 12 FEET (W)				MAXIMUM CHANNELIZING DEVICE SPACING		
					X	Y	Z **
	TANGENT 2L	MERGING L	SHIFTING L/2	SHOULDER L/3	TAPER	TANGENT	CONFLICT
mph	ft	ft	ft	ft	ft	ft	ft
20	160	80	40	27	20	40	10
25	250	125	63	42	25	50	12
30	360	180	90	60	30	60	15
35	490	245	123	82	35	70	17
40	640	320	160	107	40	80	20
45	1080	540	270	180	45	90	22
50	1200	600	300	200	50	100	25
55	1320	660	330	220	55	110	27
60	1440	720	360	240	60	120	30
65	1560	780	390	260	65	130	32
70	1680	840	420	280	70	140	35

* - For other offsets, use the following merging taper length formula for L:
For speed of 40 mph or less, $L = WS^2/60$
For speed of 45 mph or more, $L = WS$

Where: L = Taper length in feet
W = Width of offset in feet
S = Posted speed limit, off-peak 85th-percentile speed prior to work starting, or the anticipated operating speed in mph

** - Use for taper and tangent sections where there are no pavement markings or where there is a conflict between existing pavement markings and channelizers (CA).

TABLE 2

LONGITUDINAL BUFFER SPACE AND FLAGGER STATION SPACING

SPEED *	Min D **	DOWNGRADE Min D ***		
		-3%	-6%	-9%
mph	ft	ft	ft	ft
20	115	116	120	126
25	155	158	165	173
30	200	205	215	227
35	250	257	271	287
40	305	315	333	354
45	360	378	400	427
50	425	446	474	507
55	495	520	553	593
60	570	598	638	686
65	645	682	728	785
70	730	771	825	891

* - Speed is posted speed limit, off-peak 85th-percentile speed prior to work starting, or the anticipated operating speed in mph

** - Longitudinal buffer space or flagger station spacing

*** - Use on sustained downgrade steeper than -3 percent and longer than 1 mile.

TABLE 3

ADVANCE WARNING SIGN SPACING

ROAD TYPE	DISTANCE BETWEEN SIGNS *		
	A	B	C
	ft	ft	ft
URBAN - 25 mph OR LESS	100	100	100
URBAN - MORE THAN 25 mph TO 40 mph	250	250	250
URBAN - MORE THAN 40 mph	350	350	350
RURAL	500	500	500
EXPRESSWAY / FREEWAY	1000	1500	2640

* - The distances are approximate, are intended for guidance purposes only, and should be applied with engineering judgment. These distances should be adjusted by the Engineer for field conditions, if necessary, by increasing or decreasing the recommmended distances.

STATE OF CALIFORNIA
DEPARTMENT OF TRANSPORTATION

TRAFFIC CONTROL SYSTEM TABLES FOR LANE AND RAMP CLOSURES

NO SCALE

RSP T9 DATED JULY 19, 2013 SUPERSEDES RSP T9 DATED APRIL 19, 2013 THAT SUPPLEMENTS THE STANDARD PLANS BOOK DATED 2010.

REVISED STANDARD PLAN RSP T9

4-30-13

Dist	COUNTY	ROUTE	POST MILES TOTAL PROJECT	SHEET No.	TOTAL SHEETS
06	Ker	5	62.5/73.1	201	213

REGISTERED CIVIL ENGINEER

April 19, 2013
PLANS APPROVAL DATE

REGISTERED PROFESSIONAL ENGINEER Gurinderpal Bhullar No. C48815 Exp. 9-30-14 CIVIL STATE OF CALIFORNIA

THE STATE OF CALIFORNIA OR ITS OFFICERS OR AGENTS SHALL NOT BE RESPONSIBLE FOR THE ACCURACY OR COMPLETENESS OF SCANNED COPIES OF THIS PLAN SHEET.

TO ACCOMPANY PLANS DATED 6-16-14

NOTES:

See Revised Standard Plan RSP T9 for tables.

Use cone spacing X for taper segment, Y for tangent segment or Z for conflict situations, as approriate, per Table 1, unless X, Y, or Z cone spacing is shown on this sheet.

Unless otherwise specified in the special provisions, all temporary warning signs shall have black legend on fluorescent orange background.

California codes are designated by (CA). Otherwise, Federal (MUTCD) codes are shown.

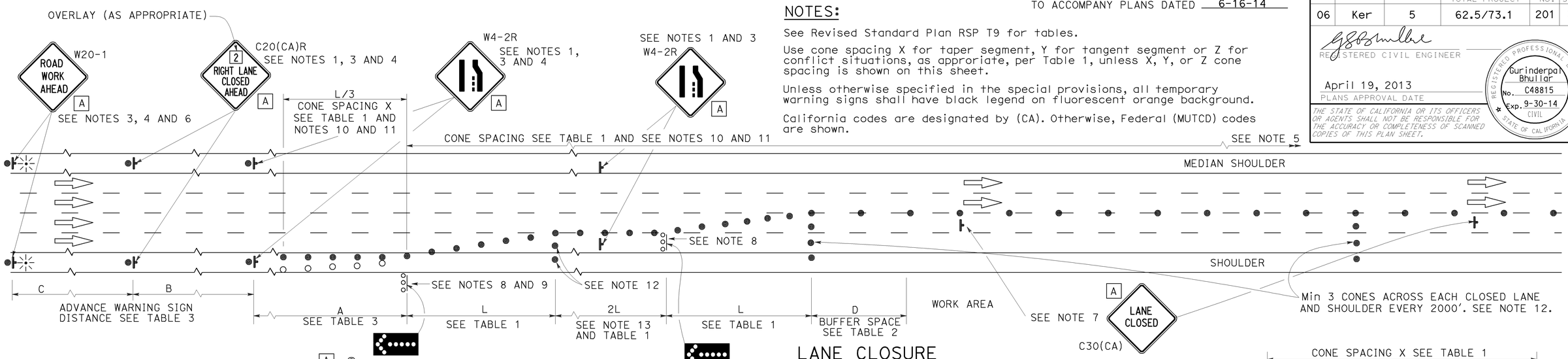

LANE CLOSURE

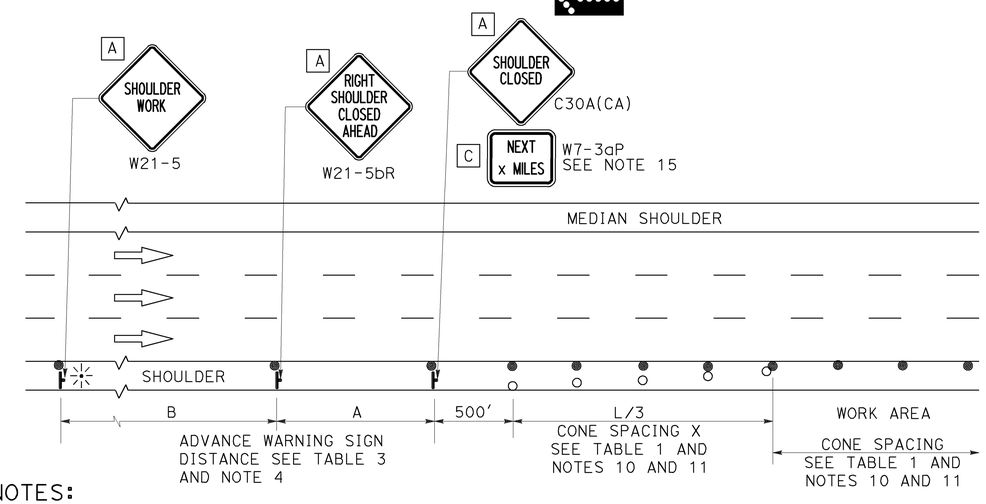

SHOULDER CLOSURE

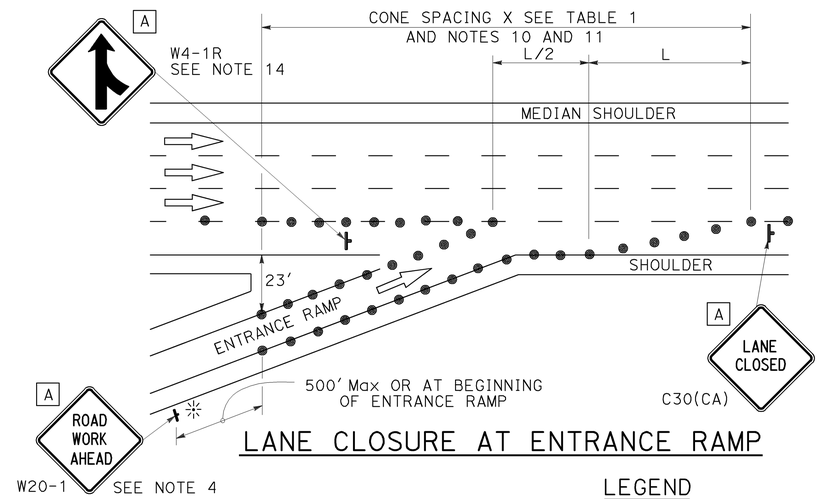

LANE CLOSURE AT ENTRANCE RAMP

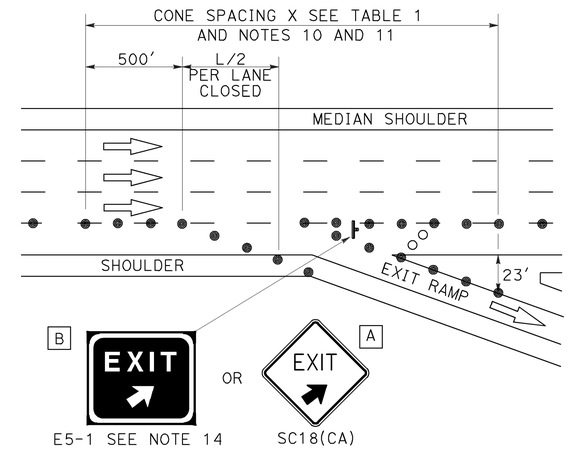

LANE CLOSURE AT EXIT RAMP

NOTES:

1. Median lane closures shall conform to the details as shown except that C20(CA)L and W4-2L signs shall be used.
2. At least one person shall be assigned to provide full time maintenance of traffic control devices for lane closures.
3. Duplicate sign installations are not required:
   a) On opposite shoulder if at least one-half of the available lanes remain open to traffic.
   b) In the median if the width of the median shoulder is less than 8' and the outside lanes are to be closed.
4. Each advance warning sign on each side of the roadway shall be equipped with at least two flags for daytime closure. Each flag shall be at least 16" x 16" in size and shall be orange or fluorescent red-orange in color. Flashing beacons shall be placed at the locations indicated for lane closure during hours of darkness.
5. A G20-2 "END ROAD WORK" sign, with minimum size of 48" x 24" as appropriate, shall be placed at the end of the lane closure unless the end of work area is obvious or ends within a larger project's limits.
6. If the W20-1 sign would follow within 2000' of a stationary W20-1 or G20-1 "ROAD WORK NEXT _____ MILES", use a C20(CA) sign for the first advance warning sign.
7. Place a C30(CA) sign every 2000' throughout length of lane closure.
8. One flashing arrow sign for each lane closed. The flashing arrow signs shall be Type I.
9. A minimum 1500' of sight distance shall be provided where possible for vehicles approaching the first flashing arrow sign. Lane closures shall not begin at top of crest vertical curve or on a horizontal curve.
10. All cones used for lane closures during the hours of darkness shall be fitted with retroreflective bands (or sleeves) as specified in the specifications.
11. Portable delineators, placed at one-half the spacing indicated for traffic cones may be used instead of cones for daytime closures only.
12. Unless otherwise specified in the special provisions, a minimum of 3 cones shall be placed transversely across each closed lane and shoulder at each location where a taper across a traffic lane ends and every 2000' as shown on the "Lane Closure" detail. Two Type II barricades may be used instead of the 3 cones. The transverse alignment of the cones or barricades on the closed shoulder may be shifted from the transverse alignment to provide access to the work.
13. Unless otherwise specified in the special provisions, the 2L tangent shown along lane lines shall be used between the L tapers required for each closed traffic lane.
14. Unless otherwise specified in the special provisions, the E5-1 or SC18(CA) and W4-1 signs shall be used as shown.
15. A W7-3aP "NEXT____ MILES" plaque must be used if theshoulder closure extends beyond the distance that can be perceived by road users.

LEGEND

- TRAFFIC CONE
- TRAFFIC CONE (OPTIONAL TAPER)
- TEMPORARY TRAFFIC CONTROL SIGN
- FLASHING ARROW SIGN (FAS)
- FAS SUPPORT OR TRAILER
- PORTABLE FLASHING BEACON

SIGN PANEL SIZE (Min)

A	48" x 48"
B	72" x 60"
C	36" x 30"

STATE OF CALIFORNIA
DEPARTMENT OF TRANSPORTATION

TRAFFIC CONTROL SYSTEM FOR LANE CLOSURE ON FREEWAYS AND EXPRESSWAYS

NO SCALE

RSP T10 DATED APRIL 19, 2013 SUPERSEDES STANDARD PLAN T10 DATED MAY 20, 2011 - PAGE 237 OF THE STANDARD PLANS BOOK DATED 2010.

REVISED STANDARD PLAN RSP T10

2010 REVISED STANDARD PLAN RSP T10

12-18-12

TO ACCOMPANY PLANS DATED 6-16-14

Dist	COUNTY	ROUTE	POST MILES TOTAL PROJECT	SHEET No.	TOTAL SHEETS
06	Ker	5	62.5/73.1	202	213

REGISTERED CIVIL ENGINEER

April 19, 2013
PLANS APPROVAL DATE

REGISTERED PROFESSIONAL ENGINEER Gurinderpal Bhullar No. C48815 Exp. 9-30-14 CIVIL STATE OF CALIFORNIA

THE STATE OF CALIFORNIA OR ITS OFFICERS OR AGENTS SHALL NOT BE RESPONSIBLE FOR THE ACCURACY OR COMPLETENESS OF SCANNED COPIES OF THIS PLAN SHEET.

NOTES: See Revised Standard Plan RSP T9 for tables.

Use cone spacing X for taper segment, Y for tangent segment or Z for conflict situations, as approriate, per Table 1, unless X, Y, or Z cone spacing is shown on this sheet.

Unless otherwise specified in the special provisions, all temporary warning signs shall have black legend on fluorescent orange background.

California codes are designated by (CA). Otherwise, Federal (MUTCD) codes are shown.

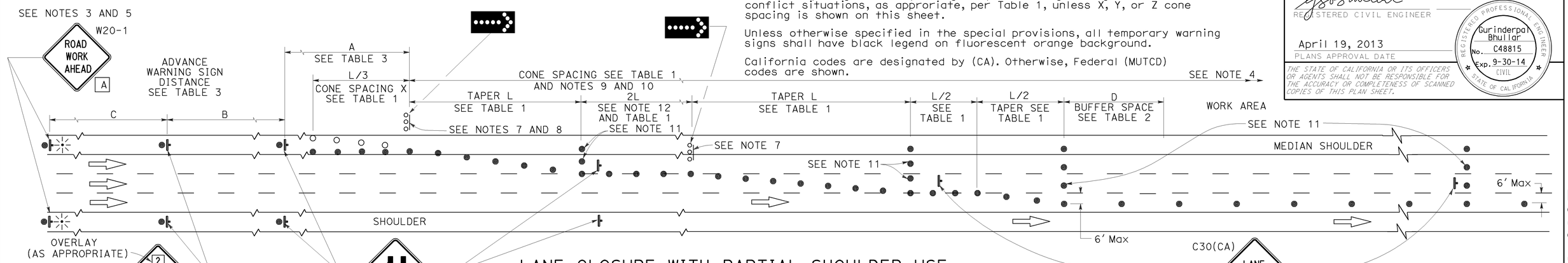

LANE CLOSURE WITH PARTIAL SHOULDER USE

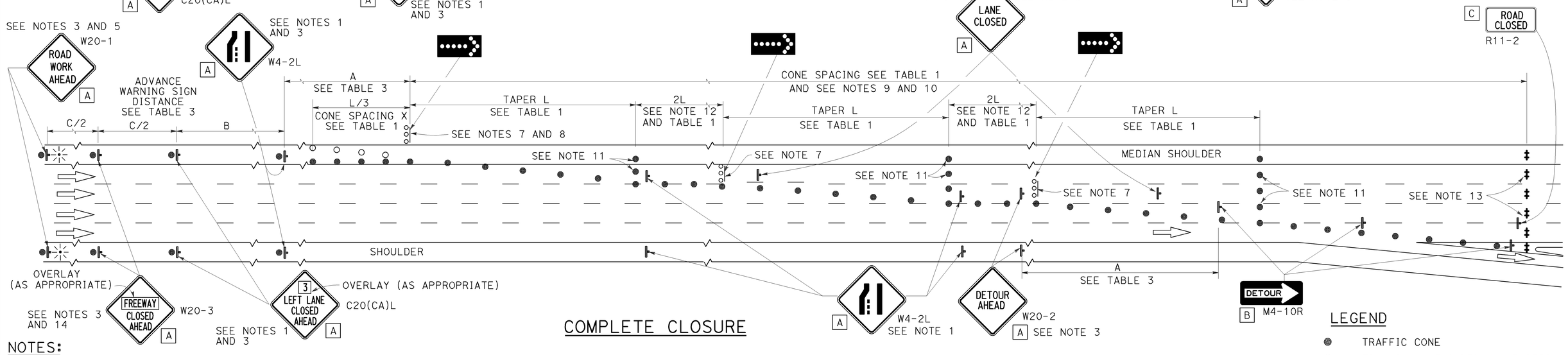

COMPLETE CLOSURE

NOTES:

1. Lane closures on the right side using partial median shoulder as a traffic lane shall conform to the details as shown except that C20(CA)R and W4-2R signs shall be used.
2. At least one person shall be assigned to provide full time maintenance of traffic control devices for lane closures.
3. Each advance warning sign on each side of the roadway shall be equipped with at least two flags for daytime closure. Each flag shall be at least 16" X 16" in size and shall be orange or fluorescent red-orange in color. Flashing beacons shall be placed at the locations indicated for lane closure during hours of darkness.
4. A G20-2 "END ROAD WORK" sign, with minimum size of 48" x 24" as appropriate, shall be placed at the end of the lane closure unless the end of work area is obvious or ends within a larger project's limits.
5. If the W20-1 sign would follow within 2000' of a stationary W20-1 or G20-1 "ROAD WORK NEXT ___ MILES", use a C20(CA) sign for the first advance warning sign.
6. Place a C30(CA) sign every 2000' throughout length of lane closure.
7. One flashing arrow sign for each lane closed. The flashing arrow signs shall be Type I.
8. A minimum 1500' of sight distance shall be provided where possible for vehicles approaching the first flashing arrow sign. Lane closures shall not begin at the top of crest vertical curve or on a horizontal curve.
9. All cones used for lane closures during the hours of darkness shall be fitted with retroreflective bands (or sleeves) as specified in the specifications.
10. Portable delineators, placed at one-half the spacing indicated for traffic cones, may be used instead of cones for daytime closures only.
11. Unless otherwise specified in the special provisions, a minimum of 3 cones shall be placed transversely across each closed lane and shoulder at each location where a taper across a traffic lane ends and every 2000' as shown on the "Lane Closure With Partial Shoulder Use" detail. Two Type II barricades may be used instead of the 3 cones. The transverse alignment of the cones or barricades on the closed shoulder may be shifted from the transverse alignment to provide access to the work.
12. Unless otherwise specified in the special provisions, the 2L tangent shown along lane lines shall be used between the L tapers required for each closed traffic lane.
13. A minimum of Two Type II or III barricades shall be placed across each closed lane and shoulder at the location shown and every 2000' within the complete closure area. Within the complete closure area, the transverse alignment of the barricades on the closed shoulder may be shifted from the transverse alignment to provide access to the work.
14. When specified in the special provisions, a W20-2 "DETOUR AHEAD" sign is to be used in place of the W20-3 "FREEWAY CLOSED AHEAD" sign.

SIGN PANEL SIZE (Min)

A	48" x 48"
B	48" x 18"
C	48" x 30"

LEGEND

- TRAFFIC CONE
- TRAFFIC CONE (OPTIONAL TAPER)
- TEMPORARY TRAFFIC CONTROL SIGN
- FLASHING ARROW SIGN (FAS)
- FAS SUPPORT OR TRAILER
- PORTABLE FLASHING BEACON

STATE OF CALIFORNIA
DEPARTMENT OF TRANSPORTATION

TRAFFIC CONTROL SYSTEM FOR LANE CLOSURES ON FREEWAYS AND EXPRESSWAYS

NO SCALE

RSP T10A DATED APRIL 19, 2013 SUPERSEDES STANDARD PLAN T10A DATED MAY 20, 2011 - PAGE 238 OF THE STANDARD PLANS BOOK DATED 2010.

REVISED STANDARD PLAN RSP T10A

2010 REVISED STANDARD PLAN RSP T10A

12-18-12

Dist	COUNTY	ROUTE	POST MILES TOTAL PROJECT	SHEET No.	TOTAL SHEETS
06	Ker	5	62.5/73.1	203	213

REGISTERED CIVIL ENGINEER

April 19, 2013
PLANS APPROVAL DATE

REGISTERED PROFESSIONAL ENGINEER Gurinderpal Bhullar No. C48815 Exp. 9-30-14 CIVIL STATE OF CALIFORNIA

THE STATE OF CALIFORNIA OR ITS OFFICERS OR AGENTS SHALL NOT BE RESPONSIBLE FOR THE ACCURACY OR COMPLETENESS OF SCANNED COPIES OF THIS PLAN SHEET.

TO ACCOMPANY PLANS DATED 6-16-14

TYPICAL RAMP CLOSURES

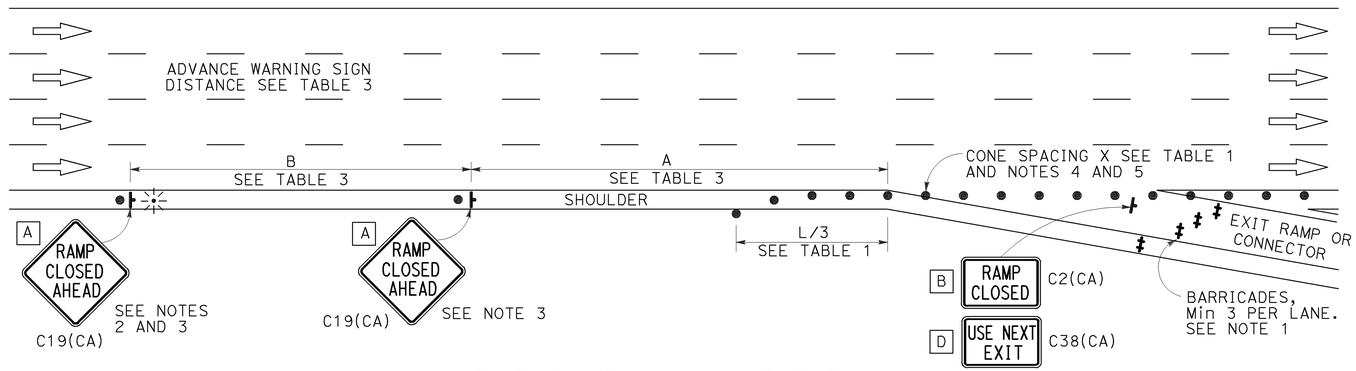

EXIT RAMP OR CONNECTOR

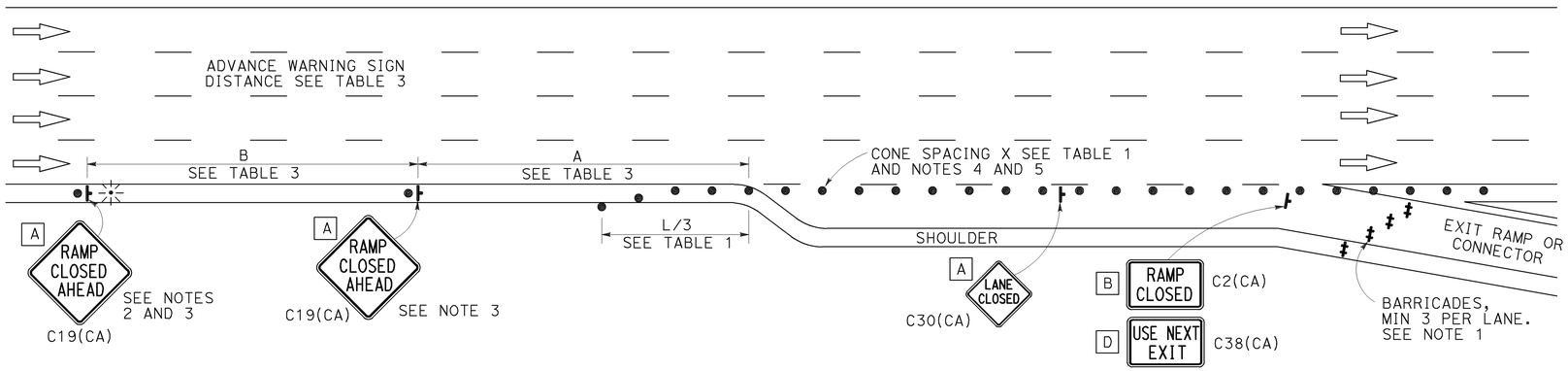

EXIT RAMP OR CONNECTOR WITH ADDITIONAL LANE

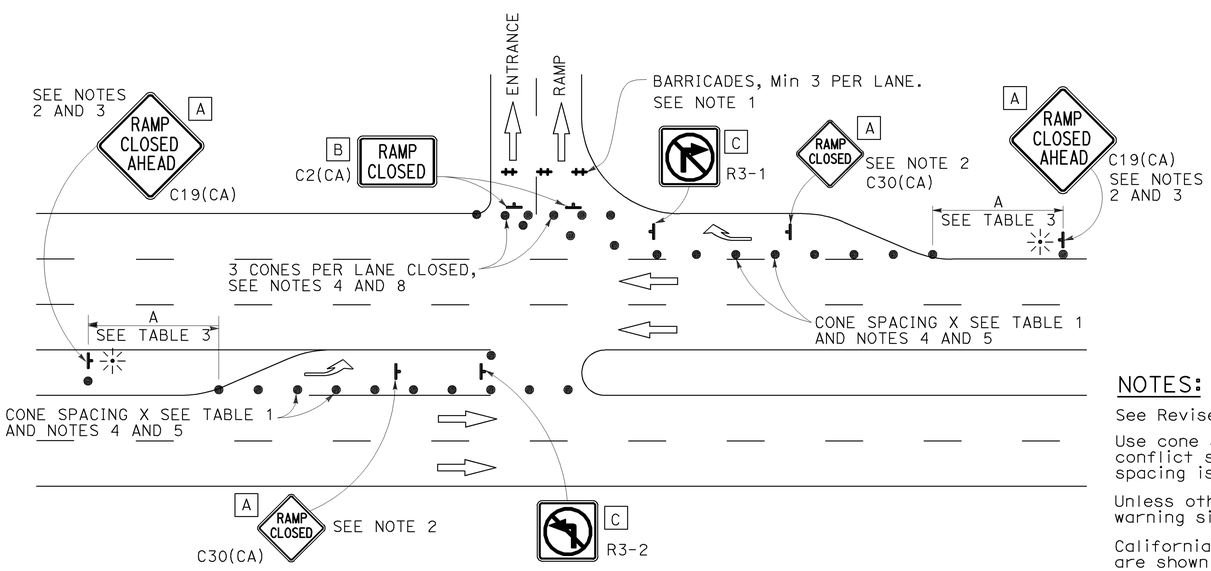

ENTRANCE RAMP WITH TURNING POCKETS

SIGN PANEL SIZE (Min)

- A 48" × 48"
- B 48" × 30"
- C 36" × 36"
- D 48" × 36"

LEGEND

- TRAFFIC CONE
- TEMPORARY TRAFFIC CONTROL SIGN
- BARRICADES
- PORTABLE FLASHING BEACON

NOTES:

1. Barricades shall be Type I, II, or III for closures lasting one week or less and Type III for closures lasting longer than one week.
2. In addition to placing the C19(CA) "RAMP CLOSED AHEAD" and C30(CA) "RAMP CLOSED" signs, black on orange overlay plates with the word "CLOSED" may be mounted, as directed by the Engineer, on all guide signs that refer to the closed ramp. The letter size on the overlay shall be the same as the guide sign.
3. Each advance C19(CA) "RAMP CLOSED AHEAD" sign shall be equipped with at least two flags for daytime closure. Each flag shall be at least 16" x 16" in size and shall be orange or fluorescent red-orange in color. A flashing beacon shall be placed on top of the first C19(CA) sign during hours of darkness.
4. All cones used for ramp closures during the hours of darkness shall be fitted with retroreflective bands (or sleeves) as specified in the specifications.
5. Portable delineators, placed at one-half the spacing indicated for traffic cones, may be used instead of cones for daytime ramp closures only.
6. At least one person shall be assigned to provide full time maintenance of traffic control devices, unless otherwise directed by the Engineer.
7. The existing "EXIT" signs shall be covered during ramp closures.
8. A minimum of 3 cones shall be placed transversely across each closed lane and shoulder.

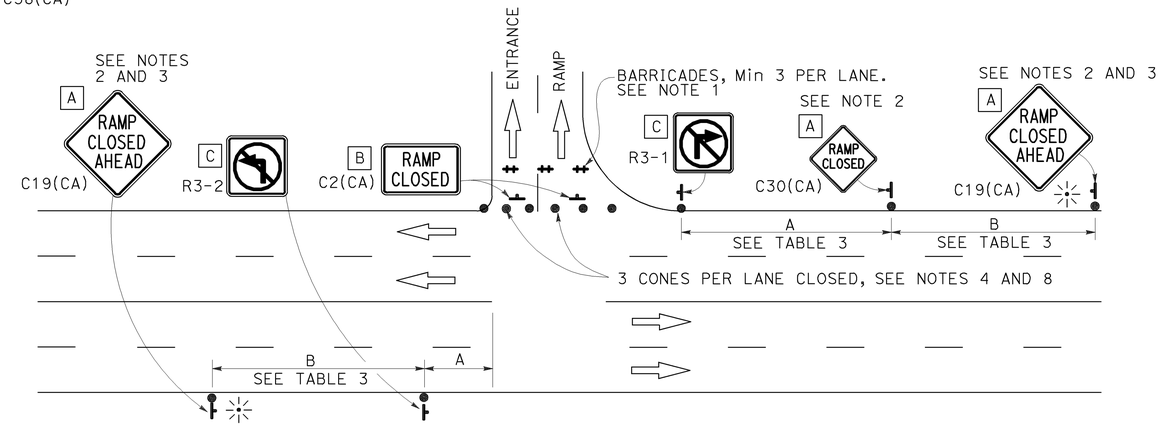

ENTRANCE RAMP WITHOUT TURNING POCKETS

NOTES:

See Revised Standard Plan RSP T9 for tables.

Use cone spacing X for taper segment, Y for tangent segment or Z for conflict situations, as approriate, per Table 1, unless X, Y, or Z cone spacing is shown on this sheet.

Unless otherwise specified in the special provisions, all temporary warning signs shall have black legend on fluorescent orange background.

California codes are designated by (CA). Otherwise, Federal (MUTCD) codes are shown.

STATE OF CALIFORNIA
DEPARTMENT OF TRANSPORTATION

TRAFFIC CONTROL SYSTEM FOR RAMP CLOSURE

NO SCALE

RSP T14 DATED APRIL 19, 2013 SUPERSEDES STANDARD PLAN T14
DATED MAY 20, 2011 - PAGE 242 OF THE STANDARD PLANS BOOK DATED 2010.

REVISED STANDARD PLAN RSP T14

2010 REVISED STANDARD PLAN RSP T14

12-18-12

Dist	COUNTY	ROUTE	POST MILES TOTAL PROJECT	SHEET No.	TOTAL SHEETS
06	Ker	5	62.5/73.1	204	213

REGISTERED CIVIL ENGINEER

April 19, 2013
PLANS APPROVAL DATE

REGISTERED PROFESSIONAL ENGINEER Gurinderpal Bhullar No. C48815 Exp. 9-30-14 CIVIL STATE OF CALIFORNIA

THE STATE OF CALIFORNIA OR ITS OFFICERS OR AGENTS SHALL NOT BE RESPONSIBLE FOR THE ACCURACY OR COMPLETENESS OF SCANNED COPIES OF THIS PLAN SHEET.

TO ACCOMPANY PLANS DATED 6-16-14

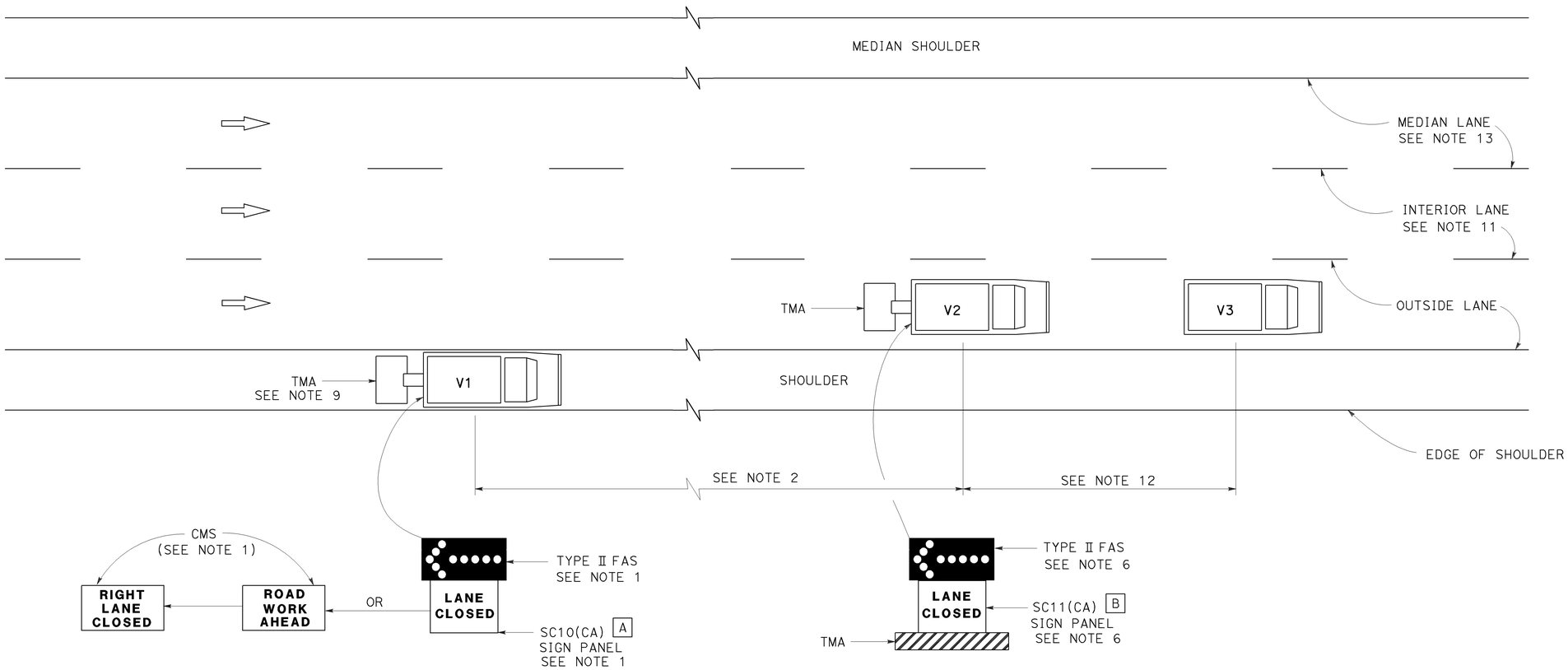

MOVING LANE CLOSURE ON MEDIAN LANE OR OUTSIDE LANE OF MULTILANE HIGHWAYS

SIGN PANEL SIZE (Min)

A 66" x 36"

B 54" x 42"

LEGEND

V1	SIGN VEHICLE
V2	SHADOW VEHICLE
V3	WORK/APPLICATION VEHICLE
	FLASHING ARROW SIGN (FAS)
CMS	CHANGEABLE MESSAGE SIGN
TMA	TRUCK-MOUNTED ATTENUATOR

NOTES:

1. Either a changeable message sign or a SC10(CA) sign panel and a Type II flashing arrow sign shall be mounted on the rear of sign vehicle V1. The changeable message sign shall be sequenced to show the "ROAD WORK AHEAD" message first, followed by the "RIGHT LANE CLOSED" message. For median lane closure, the flashing arrow symbol shall be reversed with the arrowhead on the right and the changeable message sign shall show "LEFT LANE CLOSED".
2. If traffic queues develop, sign vehicle V1 should be positioned upstream from the end of queue. Sign vehicle V1 shall be positioned where highly visible when shoulders are not available.
3. A minimum sight distance of 1500′ should be provided in advance of sign vehicle V1.
4. Sign vehicle V1 should remain at the beginning of horizontal or vertical curves until the other vehicles (V2 and V3) are far enough beyond the curve to resume the minimum sight distance of 1500′.
5. Vehicle-mounted sign panels shall have Type III or above retroreflective sheeting, black on white, or black on fluorescent orange, with 6" minimum series D letters per Caltrans sign specifications.
6. Shadow vehicle V2 shall be equipped with a truck-mounted attenuator. The sign panel shown and a Type II flashing arrow sign shall be mounted on the rear of shadow vehicle V2. For median lane closure the flashing arrow sign symbol shall be displayed with the arrowhead on the right.
7. All vehicles used for lane closures shall be equipped with two-way radios, and the vehicle operators shall maintain communication during the work or application operation.
8. All vehicles shall be equipped with flashing or rotating amber lights.
9. If sign vehicle V1 encroaches into the traffic lane due to insufficient shoulder width, sign vehicle V1 shall be equipped with a truck-mounted attenuator. Sign vehicle V1 shall stay as close to the edge of shoulder as practicable.
10. Where workers would be on foot in the work area, a stationary type lane closure (Revised Standard Plan T10, T11, etc., as applicable) shall be used instead of this plan.
11. For moving lane closure on interior lane of multilane highways, use Revised Standard Plan T16.
12. The spacing between work vehicle(s) and the shadow vehicles, and between each shadow vehicle should be minimized to deter road users from driving in between.
13. When the work/application vehicle V3 occupies the median lane, sign vehicle V1 should drive in the median shoulder and indicate left lane closed ahead.

STATE OF CALIFORNIA
DEPARTMENT OF TRANSPORTATION

TRAFFIC CONTROL SYSTEM FOR MOVING LANE CLOSURE ON MULTILANE HIGHWAYS

NO SCALE

RSP T15 DATED APRIL 19, 2013 SUPERSEDES STANDARD PLAN T15
DATED MAY 20, 2011 - PAGE 243 OF THE STANDARD PLANS BOOK DATED 2010.

REVISED STANDARD PLAN RSP T15

2010 REVISED STANDARD PLAN RSP T15

12-18-12

Dist	COUNTY	ROUTE	POST MILES TOTAL PROJECT	SHEET No.	TOTAL SHEETS
06	Ker	5	62.5/73.1	205	213

Theresa Gabriel
REGISTERED ELECTRICAL ENGINEER

July 19, 2013
PLANS APPROVAL DATE

REGISTERED PROFESSIONAL ENGINEER Theresa Aziz Gabriel No. E15129 Exp. 6-30-14 ELECTRICAL STATE OF CALIFORNIA

THE STATE OF CALIFORNIA OR ITS OFFICERS OR AGENTS SHALL NOT BE RESPONSIBLE FOR THE ACCURACY OR COMPLETENESS OF SCANNED COPIES OF THIS PLAN SHEET.

TO ACCOMPANY PLANS DATED 6-16-14

LEGEND:

AB	ABANDON. IF APPLIED TO CONDUIT, REMOVE CONDUCTORS
BC	INSTALL PULL BOX IN EXISTING CONDUIT RUN
BP	PEDESTRIAN BARRICADE, TYPE AS INDICATED ON PLAN
CB	INSTALL CONDUIT INTO EXISTING PULL BOX
CC	CONNECT NEW AND EXISTING CONDUIT. REMOVE EXISTING CONDUCTORS AND INSTALL CONDUCTORS AS INDICATED
CF	CONDUIT TO REMAIN FOR FUTURE USE. REMOVE CONDUCTORS. INSTALL PULL TAPE
DH	DETECTOR HANDHOLE
FA	FOUNDATION TO BE ABANDONED
IS	INSTALL SIGN ON SIGNAL MAST ARM
NS	NO SLIP BASE ON STANDARD
PEC	PHOTOELECTRIC CONTROL
PEU	PHOTOELECTRIC UNIT
RC	EQUIPMENT OR MATERIAL TO BE REMOVED AND BECOME THE PROPERTY OF THE CONTRACTOR
RE	REMOVE ELECTROLIER, FUSES AND BALLAST. TAPE ENDS OF CONDUCTORS
RL	RELOCATE EQUIPMENT
RR	REMOVE AND REUSE EQUIPMENT
RS	REMOVE AND SALVAGE EQUIPMENT
SC	SPLICE NEW TO EXISTING CONDUCTORS
SD	SERVICE DISCONNECT
TSP	TELEPHONE SERVICE POINT

ABBREVIATIONS

APS	ACCESSIBLE PEDESTRIAN SIGNAL
BBS	BATTERY BACKUP SYSTEM
BC	BOLT CIRCLE
BPB	BICYCLE PUSH BUTTON
C	CONDUIT
CB	CIRCUIT BREAKER
CCTV	CLOSED CIRCUIT TELEVISION
Ckt	CIRCUIT
CMS	CHANGEABLE MESSAGE SIGN
Ctid	CALTRANS IDENTIFICATION
Comm	COMMUNICATION
DLC	LOOP DETECTOR LEAD-IN CABLE
EMS	EXTINGUISHABLE MESSAGE SIGN
EVUC	EMERGENCY VEHICLE UNIT CABLE
EVUD	EMERGENCY VEHICLE UNIT DETECTOR
FB	FLASHING BEACON
FBCA	FLASHING BEACON CONTROL ASSEMBLY
FBS	FLASHING BEACON WITH SLIP BASE
FO	FIBER OPTIC
G	EQUIPMENT GROUNDING CONDUCTOR
GB	GROUND BUS
GFCI	GROUND FAULT CIRCUIT INTERRUPTER
HAR	HIGHWAY ADVISORY RADIO
Hex	HEXAGONAL
HPS	HIGH PRESSURE SODIUM
IISNS	INTERNALLY ILLUMINATED STREET NAME SIGN
ISL	INDUCTION SIGN LIGHTING
LED	LIGHT EMITTING DIODE
LMA	LUMINAIRE MAST ARM
LPS	LOW PRESSURE SODIUM
Ltg	LIGHTING
Lum	LUMINAIRE
M	METERED
MAT	MAST ARM MOUNTING TOP ATTACHMENT
MAS	MAST ARM MOUNTING SIDE ATTACHMENT
M/M	MULTIPLE TO MULTIPLE TRANSFORMER
Mtg	MOUNTING
MV	MERCURY VAPOR LIGHTING FIXTURE
MVDS	MICROWAVE VEHICLE DETECTION SYSTEM
N	NEUTRAL (GROUNDED CONDUCTOR)
NB	NEUTRAL BUS
NC	NORMALLY CLOSE
NO	NORMALLY OPEN
P	CIRCUIT BREAKER'S POLE
PB	PULL BOX
PBA	PUSH BUTTON ASSEMBLY
PEC	PHOTOELECTRIC CONTROL
Ped	PEDESTRIAN
PEU	PHOTOELECTRIC UNIT
PT	CONDUIT WITH PULL TAPE
RE	RELOCATED EQUIPMENT
RM	RAMP METERING
RWIS	ROADSIDE WEATHER INFORMATION SYSTEM
SB	SLIP BASE
SIC	SIGNAL INTERCONNECT CABLE
Sig	SIGNAL
SMA	SIGNAL MAST ARM
SNS	STREET NAME SIGN
SP	SERVICE POINT
TDC	TELEPHONE DEMARCATION CABINET
TMS	TRAFFIC MONITORING STATION
TOS	TRAFFIC OPERATIONS SYSTEM
Veh	VEHICLE
VIVDS	VIDEO IMAGE VEHICLE DETECTION SYSTEM
WIM	WEIGH-IN-MOTION
Xfmr	TRANSFORMER

SOFFIT AND WALL MOUNTED LUMINAIRES

PENDANT, 70 W HPS UNLESS OTHERWISE SPECIFIED

FLUSH, 70 W HPS UNLESS OTHERWISE SPECIFIED

WALL SURFACE, 70 W HPS UNLESS OTHERWISE SPECIFIED

EXISTING SOFFIT OR WALL LUMINAIRE TO REMAIN UNMODIFIED

EXISTING SOFFIT OR WALL LUMINAIRE TO BE MODIFIED AS SPECIFIED

NOTE:

Arrow indicates "street side" of luminaire.

MISCELLANEOUS ELECTROLIERS

NEW	EXISTING	
		LUMINAIRE ON WOOD POLE
		NON-STANDARD ELECTROLIER (SEE PROJECT NOTES OR PROJECT PLANS)
		CITY ELECTROLIER
		ELECTROLIER FOUNDATION (FUTURE INSTALLATION)

NOTES:

1. HPS luminaires shall be 310 W HPS when installed on Type 21, 21D, 30, 31 and 32 Standards, unless otherwise specified. HPS luminaires shall be 200 W when installed on other type standards or poles, unless otherwise specified.
2. LED luminaires shall be 235 W when installed on Type 21, 21D, 30, 31 and 32 Standards, unless otherwise specified. LED luminaires shall be 165 W when installed on other type standards or poles, unless otherwise specified.
3. Luminaires shall be the cutoff type, ANSI Type III medium cutoff lighting distribution, unless otherwise specified.

STANDARD ELECTROLIER

NEW	EXISTING	STANDARD TYPE
		15
		15D
		15 STRUCTURE
		15D STRUCTURE
		21
		21D
		21 STRUCTURE
		21D STRUCTURE
		30
		31
		32

COMMONLY USED SYMBOLS FOR UNITED STATES CUSTOMARY UNITS OF MEASUREMENT:

SYMBOL USED	DEFINITIONS
Ω	OHMS
min	MINUTE
s	SECOND
bps	BITS PER SECOND
Bps	BYTES PER SECOND
A	AMPERE
V	VOLT
V(dc)	VOLT (DIRECT CURRENT)
V(ac)	VOLT (ALTERNATING CURRENT)
FC	FOOT - CANDLE
W	WATTS
VA	VOLT-AMPERE
M	MEGA
k	KILO
m	MILLI
μ	MICRO
P	PICO
Hz	HERTZ

STATE OF CALIFORNIA
DEPARTMENT OF TRANSPORTATION

ELECTRICAL SYSTEMS (LEGEND AND ABBREVIATIONS)

NO SCALE

RSP ES-1A DATED JULY 19, 2013 SUPERSEDES STANDARD PLAN ES-1A DATED MAY 20, 2011 - PAGE 425 OF THE STANDARD PLANS BOOK DATED 2010.

REVISED STANDARD PLAN RSP ES-1A

2010 REVISED STANDARD PLAN RSP ES-1A

7-15-13

Dist	COUNTY	ROUTE	POST MILES TOTAL PROJECT	SHEET No.	TOTAL SHEETS
06	Ker	5	62.5/73.1	206	213

Theresa Gabriel
REGISTERED ELECTRICAL ENGINEER

July 19, 2013
PLANS APPROVAL DATE

REGISTERED PROFESSIONAL ENGINEER Theresa Aziz Gabriel No. E15129 Exp. 6-30-14 ELECTRICAL STATE OF CALIFORNIA

THE STATE OF CALIFORNIA OR ITS OFFICERS OR AGENTS SHALL NOT BE RESPONSIBLE FOR THE ACCURACY OR COMPLETENESS OF SCANNED COPIES OF THIS PLAN SHEET.

TO ACCOMPANY PLANS DATED 6-16-14

CONDUIT

NEW	EXISTING	
		LIGHTING CONDUIT, UNLESS OTHERWISE INDICATED OR NOTED
		TRAFFIC SIGNAL CONDUIT
C	c	COMMUNICATION CONDUIT
T	t	TELEPHONE CONDUIT
F	f	FIRE ALARM CONDUIT
FO	fo	FIBER OPTIC CONDUIT
		CONDUIT TERMINATION
R	r	CONDUIT RISER ATTACHED TO THE STRUCTURE OR SERVICE POLE

SERVICE EQUIPMENT

NEW	EXISTING	
OH	oh	OVERHEAD LINES
U	U	WOOD POLE, "U" INDICATES UTILITY OWNED
		POLE GUY WITH ANCHOR
		UTILITY TRANSFORMER - GROUND MOUNTED
III	III	SERVICE EQUIPMENT ENCLOSURE TYPE. DOOR INDICATES FRONT OF ENCLOSURE
T	t	TELEPHONE DEMARCATION CABINET

POLE-MOUNTED SERVICE DESIGNATION

TYPE H SERVICE, 28'-10" — TYPE OF INSTALLATION AND POLE HEIGHT ABOVE GRADE

FLASHING BEACON

NEW	EXISTING	
R	R	FLASHING BEACON (ONE VEHICLE SIGNAL HEAD WITH BACKPLATE AND VISOR) "R" INDICATES RED INDICATION, "Y" INDICATES YELLOW INDICATION
Y Y	Y Y	FLASHING BEACON WITH TYPE 15-FBS STANDARD AND A SIGN.
R R	R R	FLASHING BEACON WITH TYPES 9, 9A OR 9B SIGN UNLESS OTHERWISE SPECIFIED OR INDICATED

SIGNAL EQUIPMENT

NEW	EXISTING	
C	C	PEDESTRIAN SIGNAL HEAD "C" INDICATES COUNTDOWN PEDESTRIAN HEAD
		PUSH BUTTON ASSEMBLY POST
		PEDESTRIAN BARRICADE
		VEHICLE SIGNAL HEAD (WITH BACKPLATE AND 3-SECTIONS: RED, YELLOW AND GREEN)
		VEHICLE SIGNAL HEAD WITH ANGLE VISOR
PV	PV	MODIFICATIONS OF BASIC SYMBOL: "L" INDICATES ALL NON-ARROW SECTIONS LOUVERED "LG" INDICATES LOUVERED GREEN SECTION ONLY "PV" INDICATES ALL 12" SECTIONS PROGRAMMED VISIBILITY "8" INDICATES ALL 8" SECTIONS (ONLY WHEN SPECIFIED)
		VEHICLE SIGNAL HEAD CONSISTING OF RED, YELLOW AND GREEN LEFT ARROW SECTIONS
		VEHICLE SIGNAL HEAD CONSISTING OF RED AND YELLOW SECTIONS WITH AN UP GREEN ARROW SECTION
		VEHICLE SIGNAL HEAD (5 SECTION) CONSISTING OF RED, YELLOW AND GREEN SECTIONS WITH YELLOW AND GREEN RIGHT ARROW SECTIONS
		TYPE 15TS STANDARD WITH VEHICLE SIGNAL HEAD AND LUMINAIRE
		TYPE 21TS STANDARD WITH VEHICLE SIGNAL HEAD AND LUMINAIRE
		STANDARD WITH LUMINAIRE AND SIGNAL MAST ARMS AND ATTACHED VEHICLE SIGNAL HEADS
		TYPE 1 STANDARD WITH ATTACHED VEHICLE SIGNAL HEADS
		STANDARD WITH A SIGNAL MAST ARM, ATTACHED VEHICLE SIGNAL HEADS AND INTERNALLY ILLUMINATED STREET NAME SIGN
		CONTROLLER ASSEMBLY. DOOR INDICATES FRONT OF CABINET

SIGNAL EQUIPMENT Cont

NEW	EXISTING	
		GUARD POST
		TYPE 1 STANDARD WITH RAMP METERING SIGN
		OPTICAL DETECTOR FOR THE EMERGENCY VEHICLE DETECTION SYSTEM

NOTES:

1. All signal sections shall be 12" unless shown otherwise.
2. Signal heads shall be provided with backplates unless shown otherwise.

ILLUMINATED OVERHEAD SIGN

NEW	EXISTING	
		SINGLE POST, SINGLE ILLUMINATED SIGN, BALANCED BUTTERFLY
		SINGLE POST, DOUBLE ILLUMINATED SIGN, BALANCED BUTTERFLY
		SINGLE POST, SINGLE ILLUMINATED SIGN, FULL CANTILEVER
		DOUBLE POST, SINGLE ILLUMINATED SIGN
		SINGLE ILLUMINATED SIGN MOUNTED ON STRUCTURE
		DOUBLE POST, SINGLE ILLUMINATED SIGN WITH ELECTROLIER

STATE OF CALIFORNIA
DEPARTMENT OF TRANSPORTATION

ELECTRICAL SYSTEMS (LEGEND AND ABBREVIATIONS)

NO SCALE

RSP ES-1B DATED JULY 19, 2013 SUPERSEDES STANDARD PLAN ES-1B DATED MAY 20, 2011 - PAGE 426 OF THE STANDARD PLANS BOOK DATED 2010.

REVISED STANDARD PLAN RSP ES-1B

2010 REVISED STANDARD PLAN RSP ES-1B

7-15-13

Dist	COUNTY	ROUTE	POST MILES TOTAL PROJECT	SHEET No.	TOTAL SHEETS
06	Ker	5	62.5/73.1	207	213

Theresa Gabriel
REGISTERED ELECTRICAL ENGINEER

July 19, 2013
PLANS APPROVAL DATE

REGISTERED PROFESSIONAL ENGINEER
Theresa Aziz Gabriel
No. E15129
Exp. 6-30-14
ELECTRICAL
STATE OF CALIFORNIA

THE STATE OF CALIFORNIA OR ITS OFFICERS OR AGENTS SHALL NOT BE RESPONSIBLE FOR THE ACCURACY OR COMPLETENESS OF SCANNED COPIES OF THIS PLAN SHEET.

TO ACCOMPANY PLANS DATED 6-16-14

EQUIPMENT IDENTIFICATION

ILLUMINATED SIGN IDENTIFICATION NUMBER:

SIGN No. 12345

10 ISL SCI 1.0

- SIGN NUMBER - PLACE ON POST OR STRUCTURE
- TRANSFORMER RATING (kVA)
- LIGHTING CONTROL TYPE
- NUMBER AND TYPE OF FIXTURES

DO NOT PLACE ON STANDARD OR STRUCTURE

ELECTROLIER OR EQUIPMENT IDENTIFICATION NUMBER:

12345 - 15'-0"

- MAST ARM LENGTH, IF SHOWN. DO NOT PLACE ON STANDARD OR STRUCTURE
- EQUIPMENT NUMBER - PLACE ON STANDARD OR STRUCTURE. EXISTING EQUIPMENT NUMBERS ARE SHOWN IN PARENTHESIS

CONDUIT AND CONDUCTOR IDENTIFICATION:

1½"C, 2#10, 15#14, 2 DLC, 12P#18

- PAIR
- NUMBER AND SIZE OF CONDUCTORS AND CABLES
- SIZE OF CONDUIT IN INCHES

ø1, ø2, ø2P, etc.	TRAFFIC PHASE IDENTIFICATION FOR SIGNAL FACES, DETECTORS AND PHASE DIAGRAMS
1 2 3	LEGEND NUMBERS
A B C	EQUIPMENT, SIGNAL POLES, INSTALLATION OR ITEMS
1 2 3	CONDUIT RUN NUMBERS

SIGNAL AND LIGHTING STANDARD (TYPICAL DESIGNATION):

19A - 3 - 100

- WIND VELOCITY = 100 mph
- CASE 3 ARM LOADING
- STANDARD TYPE
- STANDARD PLAN SHEET NUMBER
- DETAIL, NUMBER, SECTION, TYPE OR ELEVATION

MISCELLANEOUS EQUIPMENT

NEW	EXISTING	
CMS	cms	CHANGEABLE MESSAGE SIGN
		CLOSED CIRCUIT TELEVISION CAMERA
		HIGHWAY ADVISORY RADIO POLE AND ANTENNA
EMS	ems	EXTINGUISHABLE MESSAGE SIGN
M V	m v	DETECTION DEVICE M = MICROWAVE SENSOR V = VIDEO IMAGE SENSOR

WIRING DIAGRAM LEGEND

- EXTERNAL CONDUCTOR
- CONDUCTOR OR BUS
- TIE POINT
- CONTACTOR COIL
- CONTACTOR, NO CONTACT
- TERMINAL BLOCKS
- CONTACTOR, NC CONTACT
- ENCLOSURE BOND
- GROUNDING ELECTRODE
- CIRCUIT BREAKER
- RECEPTACLE

PULL BOXES

NEW	EXISTING	
		PULL BOX, No. 5 UNLESS OTHERWISE INDICATED OR NOTED
3	9A(21)	PULL BOX, ADDITIONAL DESIGNATIONS OR DESCRIPTIONS

3 No. 3½ PULL BOX
5 No. 5 PULL BOX
6 No. 6 PULL BOX
7 No. 7 (CEILING PULL BOX)
8 No. 8 (PENDANT SOFFIT PULL BOX)
9 No. 9 PULL BOX
9A No. 9A PULL BOX

(C) COMMUNICATIONS PULL BOX
(E) PULL BOX WITH EXTENSION
(S) SPRINKLER CONTROL PULL BOX
(21) ANCHOR BOLTS AND CONDUIT FOR FUTURE INSTALLATION OF TYPE 21 STANDARD
(T) TRAFFIC PULL BOX

VEHICLE DETECTORS

5 J 9 U

- VEHICLE DETECTOR DESIGNATION
- U = UPPER
  L = LOWER
- SLOT NUMBER IN INPUT FILE
- INPUT FILE (I OR J)
- PHASE

NEW	EXISTING	
		TYPE A DETECTOR LOOP. OUTLINE OF SAWCUT SHOWN
		TYPE B DETECTOR LOOP. OUTLINE OF SAWCUT SHOWN
		TYPE C DETECTOR LOOP. OUTLINE OF SAWCUT SHOWN
		TYPE D DETECTOR LOOP. OUTLINE OF SAWCUT SHOWN
		TYPE E DETECTOR LOOP. OUTLINE OF SAWCUT SHOWN
		TYPE Q DETECTOR LOOP. OUTLINE OF SAWCUT SHOWN
		MAGNETIC DETECTOR
DH	dh	DETECTOR HANDHOLE
		MICROWAVE OR VIDEO DETECTION ZONE

STATE OF CALIFORNIA
DEPARTMENT OF TRANSPORTATION

ELECTRICAL SYSTEMS (LEGEND AND ABBREVIATIONS)

NO SCALE

RSP ES-1C DATED JULY 19, 2013 SUPERSEDES STANDARD PLAN ES-1C DATED MAY 20, 2011 - PAGE 427 OF THE STANDARD PLANS BOOK DATED 2010.

REVISED STANDARD PLAN RSP ES-1C

2010 REVISED STANDARD PLAN RSP ES-1C

7-11-13

DIST	COUNTY	ROUTE	POST MILES TOTAL PROJECT	SHEET NO.	TOTAL SHEETS
06	Ker	5	62.5/73.1	208	213

Theresa Gabriel
REGISTERED ELECTRICAL ENGINEER

July 19, 2013
PLANS APPROVAL DATE

REGISTERED PROFESSIONAL ENGINEER
Theresa Aziz Gabriel
No. E15129
Exp. 6-30-14
ELECTRICAL
STATE OF CALIFORNIA

THE STATE OF CALIFORNIA OR ITS OFFICERS OR AGENTS SHALL NOT BE RESPONSIBLE FOR THE ACCURACY OR COMPLETENESS OF SCANNED COPIES OF THIS PLAN SHEET.

TO ACCOMPANY PLANS DATED 6-16-14

2010 REVISED STANDARD PLAN RSP ES-8B

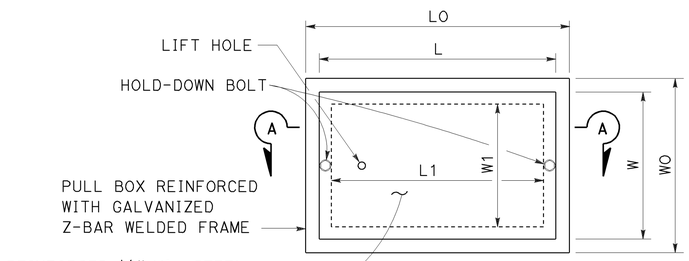

TOP VIEW

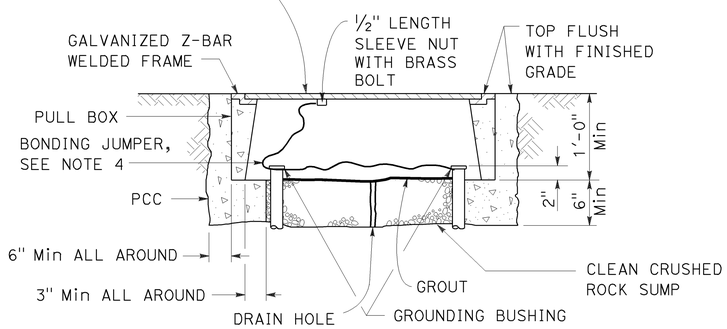

SECTION A-A

No. 3½(T), No. 5(T) AND No. 6(T) TRAFFIC PULL BOX

NOTES:

1. Traffic pull box shall be provided with steel cover and special concrete footing. Steel cover shall have embossed non-skid pattern.
2. Steel reinforcing shall be as regularly used in the standard products of the respective manufacturer.
3. Pull box covers shall be marked as follows: "SERVICE" Service circuits between service point and service disconnect; "SPRINKLER-CONTROL" Sprinkler control circuits, 50 V or less; "CALTRANS" On all pull boxes, except pull boxes marked "SPRINKLER-CONTROL"; and "TELEPHONE" Telephone service.
   - A) No. 3½(T) pull box.
     - 1) "SIGNAL" - Traffic signal circuits with or without lighting or sign lighting circuits.
     - 2) "LIGHTING" - Lighting or sign lighting circuits where voltage is under 600 V.
   - B) No. 5(T) or 6(T) pull box.
     - 1) "TRAFFIC SIGNAL" - Traffic signal circuits with or without lighting or sign lighting circuits.
     - 2) "LIGHTING" - Lighting or sign lighting circuits where voltage is under 600 V.
     - 3) "LIGHTING-HIGH VOLTAGE" - Lighting or sign lighting circuits where voltage is above 600 V.
     - 4) "IRRIGATION" - Circuits to irrigation controller 120 V or more.
     - 5) "RAMP METER" - Ramp meter circuits.
     - 6) "COUNT STATION" - Count or speed monitor circuits.
     - 7) "COMMUNICATION" - Communication circuits.
     - 8) "TOS COMMUNICATIONS" - TOS communications line.
     - 9) "TOS POWER" - TOS power.
     - 10) "TDC POWER" - Telephone demarcation cabinet power.
     - 11) "CCTV" - Closed circuit television circuits.
     - 12) "TMS" - Traffic monitoring station circuits.
     - 13) "CMS" - Changeable message sign circuits.
     - 14) "HAR" - Highway advisory radio circuits.
     - 15) "BOOSTER PUMP" - Booster pump circuit.
4. Bonding jumper for metal covers shall be 3' long, minimum.
5. The nominal dimensions of the opening in which the cover sets shall be the same as the cover dimensions except the length and width dimensions shall be ⅛" greater.
6. Covers and boxes shall be interchangeable with California standard male and female gages. When interchanged with a standard male or female gage, the top surfaces shall be flush within ⅛".

DIMENSION TABLE

PULL BOX	PULL BOX						COVER				
	MINIMUM * THICKNESS	MINIMUM DEPTH BOX AND EXTENSION	WO	LO	L1	W1	L **	W **	R	EDGE THICKNESS	EDGE TAPER
No. 3½(T)	1½"	1'-0"	1'-5"± 1"	1'-8⅞"±	1'-2½"±	10⅝"± 1"	1'-8"±	1'-1¾"±	0"	½"	NONE
No. 5(T)	1¾"	1'-0"	1'-11½"± 1"	2'-5½"±	1'-7"±	1'-1"± 1"	2'-3"±	1'-4"±	0"	½"	NONE
No. 6(T)	2"	1'-0"	2'-6"± 1"	2'-11½"±	1'-11½"±	1'-5"± 1"	2'-9"±	1'-8"±	0"	½"	NONE

* EXCLUDING CONDUIT WEB ** TOP DIMENSION

STATE OF CALIFORNIA
DEPARTMENT OF TRANSPORTATION

ELECTRICAL SYSTEMS (TRAFFIC PULL BOX)

NO SCALE

RSP ES-8B DATED JULY 19, 2013 SUPERSEDES RSP ES-8B DATED JANUARY 20, 2012 THAT SUPPLEMENTS THE STANDARD PLANS BOOK DATED 2010.

REVISED STANDARD PLAN RSP ES-8B

7-15-13

Dist	COUNTY	ROUTE	POST MILES TOTAL PROJECT	SHEET No.	TOTAL SHEETS
06	Ker	5	62.5/73.1	209	213

Theresa Gabriel
REGISTERED ELECTRICAL ENGINEER

July 19, 2013
PLANS APPROVAL DATE

REGISTERED PROFESSIONAL ENGINEER
Theresa Aziz Gabriel
No. E15129
Exp. 6-30-14
ELECTRICAL
STATE OF CALIFORNIA

THE STATE OF CALIFORNIA OR ITS OFFICERS OR AGENTS SHALL NOT BE RESPONSIBLE FOR THE ACCURACY OR COMPLETENESS OF SCANNED COPIES OF THIS PLAN SHEET.

TO ACCOMPANY PLANS DATED 6-16-14

ISOFOOTCANDLE CURVE - MINIMUM

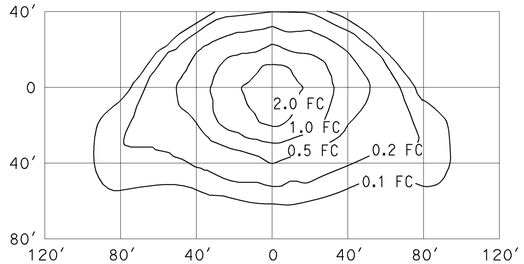

TYPE III MEDIUM CUTOFF

Cutoff Luminaire
34′ Mounting Height
Lamp operated at 22,000 lm
200-W high pressure sodium lamp
ANSI Designation S66

ISOFOOTCANDLE CURVE - MINIMUM

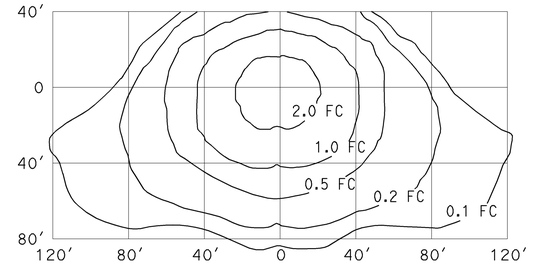

TYPE III MEDIUM CUTOFF

Cutoff Luminaire
40′ Mounting Height
Lamp operated at 37,000 lm
310-W high pressure sodium lamp
ANSI Designation S67

ISOFOOTCANDLE CURVE - MINIMUM

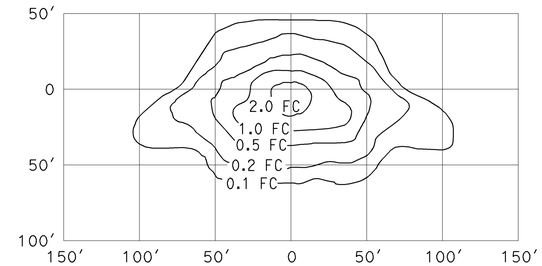

TYPE III MEDIUM CUTOFF

Cutoff Luminaire
30′ Mounting Height
Lamp operated at 16,000 lm
150-W high pressure sodium lamp
ANSI Designation S55

ISOFOOTCANDLE CURVE - MINIMUM

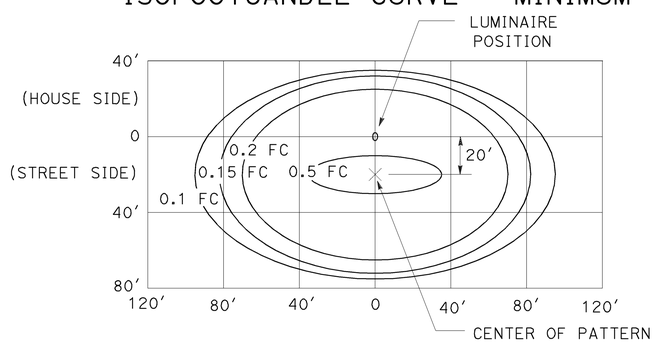

LED LUMINAIRE ROADWAY 1

165-W at 34′ Mounting Height

ISOFOOTCANDLE CURVE - MINIMUM

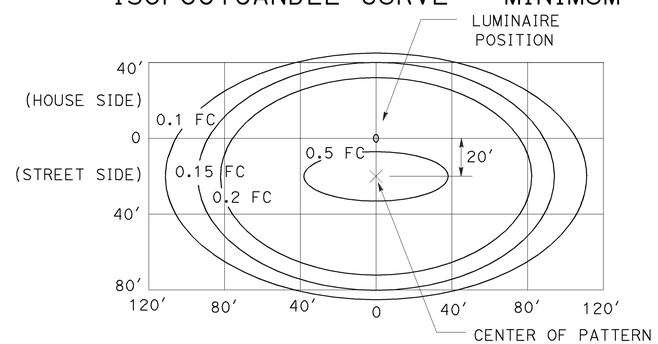

LED LUMINAIRE ROADWAY 2

235-W at 40′ Mounting Height

ISOFOOTCANDLE CURVE - MINIMUM

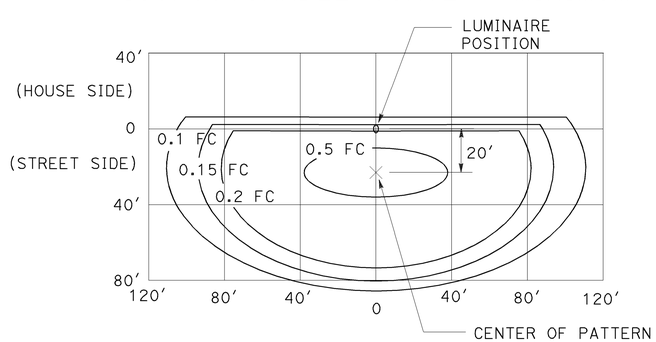

LED LUMINAIRE ROADWAY 3

235-W at 40′ Mounting Height
with back side control

ISOFOOTCANDLE CURVE - MINIMUM

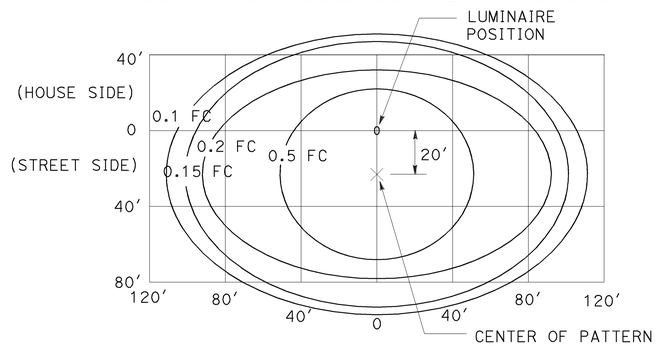

LED LUMINAIRE ROADWAY 4

300-W at 40′ Mounting Height

ISOFOOTCANDLE CURVE - MINIMUM

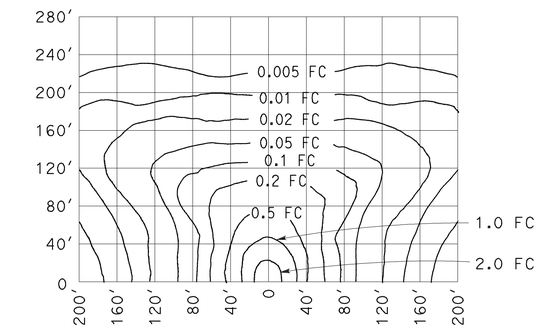

LOW PRESSURE SODIUM LUMINAIRE

40′ Mounting Height
Lamp operated at 33,000 lm
180-W low pressure sodium lamp

STATE OF CALIFORNIA
DEPARTMENT OF TRANSPORTATION

ELECTRICAL SYSTEMS (ISOFOOTCANDLE DIAGRAMS)

NO SCALE

RSP ES-10A DATED JULY 19, 2013 SUPERSEDES RSP ES-10A DATED JULY 20, 2012 THAT SUPPLEMENTS THE STANDARD PLANS BOOK DATED 2010.

REVISED STANDARD PLAN RSP ES-10A

2010 REVISED STANDARD PLAN RSP ES-10A

Dist	COUNTY	ROUTE	POST MILES TOTAL PROJECT	SHEET No.	TOTAL SHEETS
06	Ker	5	62.5/73.1	210	213

REGISTERED CIVIL ENGINEER

July 19, 2013
PLANS APPROVAL DATE

REGISTERED PROFESSIONAL ENGINEER
Stanley P. Johnson
No. C57793
Exp. 3-31-14
CIVIL
STATE OF CALIFORNIA

THE STATE OF CALIFORNIA OR ITS OFFICERS OR AGENTS SHALL NOT BE RESPONSIBLE FOR THE ACCURACY OR COMPLETENESS OF SCANNED COPIES OF THIS PLAN SHEET.

TO ACCOMPANY PLANS DATED 6-16-14

STANDARD TYPE	SETBACK (DIMENSION A)
32	30'-0" (Min)
31	20'-0" (Min)
15, 15D, 15-SB, 21, 21D, 30	ARM LENGTH (Min)

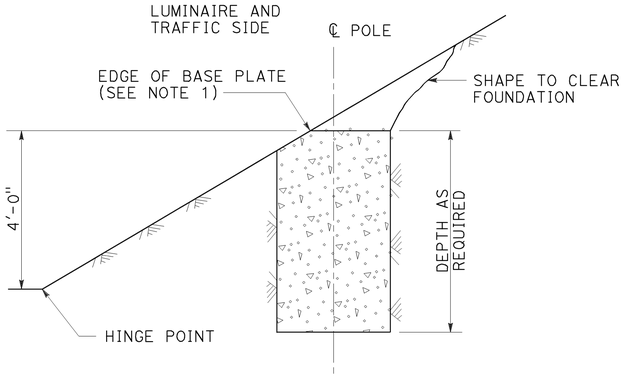

CUT SLOPES
STEEPER THAN 4:1,
LESS THAN 2:1
DETAIL A-1
See Note 2 and 3

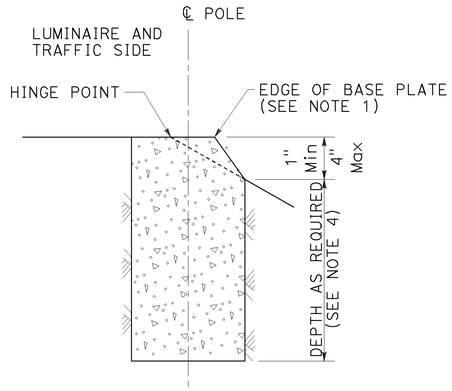

FILL SLOPES
STEEPER THAN 4:1,
LESS THAN 2:1
DETAIL A-2
See Note 2 and 3

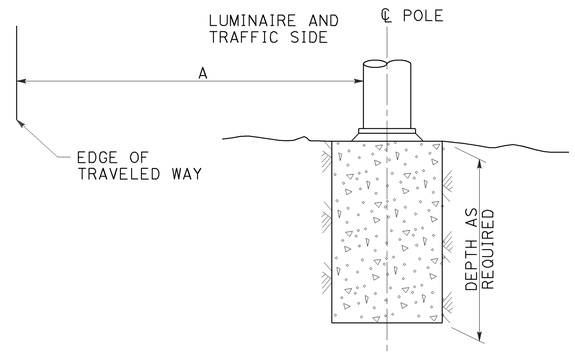

FLAT SECTIONS, CUT OR FILL SLOPES
4:1 OR FLATTER
DETAIL A-3
See Note 2

FOUNDATIONS ADJACENT TO ALL ROADWAYS EXCEPT
IN SIDEWALK, MEDIAN AND ISLAND AREAS
DETAIL A

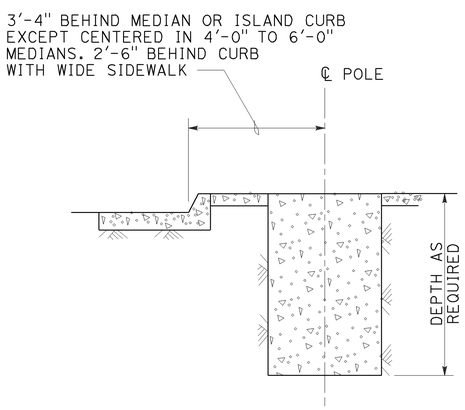

MEDIAN, ISLAND
OR WIDE SIDEWALK
DETAIL B-1
7' Wide and wider

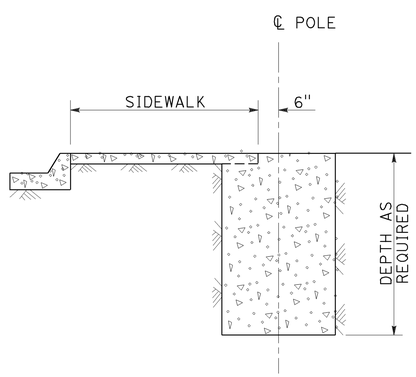

NARROW SIDEWALK
DETAIL B-2
Less than 7' wide

FOUNDATIONS IN SIDEWALK, MEDIAN AND ISLAND AREAS
DETAIL B

NOTES:

1. Where a portion of the foundation is above grade, the top edges shall have a 1" chamfer.
2. Slopes shall be horizontal to vertical ratio (Horizontal : Vertical).
3. Horizontal setbacks on cut and fill slopes steeper than 4:1 shall not exceed the distance shown for flat sections.
4. CIDH embedment depth shall be increased beyond standard depths by the diameter of the CIDH.

STATE OF CALIFORNIA
DEPARTMENT OF TRANSPORTATION

ELECTRICAL SYSTEMS (FOUNDATION INSTALLATIONS)

NO SCALE

RSP ES-11 DATED JULY 19, 2013 SUPERSEDES STANDARD PLAN ES-11
DATED MAY 20, 2011 - PAGE 488 OF THE STANDARD PLANS BOOK DATED 2010.

REVISED STANDARD PLAN RSP ES-11

2010 REVISED STANDARD PLAN RSP ES-11

7-9-13

DIST	COUNTY	ROUTE	POST MILES TOTAL PROJECT	SHEET No.	TOTAL SHEETS
06	Ker	5	62.5/73.1	211	213

REGISTERED CIVIL ENGINEER 05-01-14 DATE

6-16-14
PLANS APPROVAL DATE

REGISTERED PROFESSIONAL ENGINEER Ae Tern No. C79044 Exp. 03-31-16 CIVIL STATE OF CALIFORNIA

The State of California or its officers or agents shall not be responsible for the accuracy or completeness of scanned copies of this plan sheet.

STANDARD PLANS DATED 2010

SHEET No.	TITLE
A10A	ABBREVIATION (SHEET 1 OF 2)
RSP A10B	ABBREVIATION (SHEET 2 OF 2)
B6-21	JOINT SEALS (MAXIMUM MOVEMENT RATING = 2")

STANDARD PLAN SHEET No.
DETAIL No.

INDEX TO PLANS

SHEET No.	TITLE
1	GENERAL PLAN No. 1
2	GENERAL PLAN No. 2
3	STRUCTURE APPROACH TYPE R(30D)

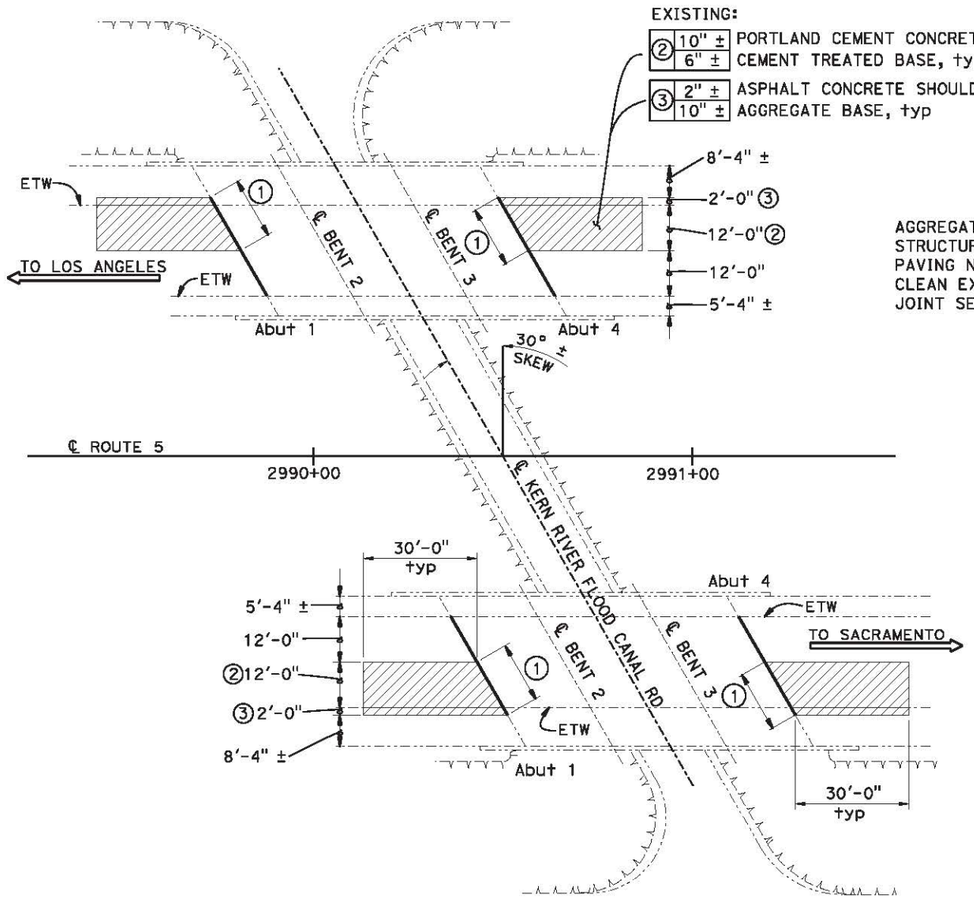

KERN RIVER FLOOD CANAL ROAD UC

BRIDGE No. 50-0314L/R, ROUTE 5, POST MILE 71.56
1" = 20'

QUANTITIES
BRIDGE No. 50-0314L/R

AGGREGATE BASE (APPROACH SLAB)	24 CY
STRUCTURAL CONCRETE, APPROACH SLAB (TYPE R)	71 CY
PAVING NOTCH EXTENSION	49 CF
CLEAN EXPANSION JOINT	55 LF
JOINT SEAL (MR ½")	120 LF

LEGEND

Indicates existing structure

Indicates limits of Structure Approach Type R (30D).

Indicates limits of existing joint seal removal, clean expansion joint, and placement of new joint seal. For details, see"JOINT SEAL TABLE".

Indicates depths of existing roadway materials to be removed.

① Limits of paving notch extension, see "STRUCTURE APPROACH TYPE R (30D)" sheet for details.

JOINT SEAL TABLE

BRIDGE NAME	BRIDGE No.	LOCATION		MINIMUM "MR" INCHES	APPROXIMATE LENGTH (ft)	EXISTING WATERSTOP	DEPTH OF CLEAN EXPANSION JOINT (INCHES)	PAVING NOTCH EXTENSION
KERN RIVER FLOOD CANAL ROAD U.C.	50-0314 L	ABUTMENT 1	BB	½	30.0	NO	12	YES
		ABUTMENT 4	EB	½	30.0	NO	12	YES
KERN RIVER FLOOD CANAL ROAD U.C.	50-0314 R	ABUTMENT 1	BB	½	30.0	NO	12	YES
		ABUTMENT 4	EB	½	30.0	NO	12	YES
KERN RIVER FLOOD CANAL BRIDGE	50-0315 L	ABUTMENT 1	BB	1	43.0	NO	12	YES
		ABUTMENT 9	EB	1	43.0	NO	12	YES
KERN RIVER FLOOD CANAL BRIDGE	50-0315 R	ABUTMENT 1	BB	1	43.0	NO	12	YES
		ABUTMENT 9	EB	1	43.0	NO	12	YES

NOTE:
THE CONTRACTOR SHALL VERIFY ALL CONTROLLING FIELD DIMENSIONS BEFORE ORDERING OR FABRICATING ANY MATERIAL.

Gary Joe
DESIGN ENGINEER

	BY	CHECKED
DESIGN	A. Tern	R. Simmons
DETAILS	L. Wang	R. Simmons
QUANTITIES	A. Tern	R. Simmons

LOAD & RESISTANCE FACTOR DESIGN — LIVE LOADING: HL93 W/"LOW-BOY", PERMIT DESIGN VEHICLE
LAYOUT — BY A. Tern — CHECKED R. Simmons
SPECIFICATIONS — BY T. Kershell — PLANS AND SPECS COMPARED T. Kershell

ORIGINAL SCALE IN INCHES FOR REDUCED PLANS 0 1 2 3

STATE OF CALIFORNIA
DEPARTMENT OF TRANSPORTATION

DIVISION OF ENGINEERING SERVICES
STRUCTURE DESIGN
DESIGN BRANCH 17

BRIDGE NO. 50-0314L/R
POST MILE 71.56

ROUTE 5 APPROACH SLAB REHABILITATION
GENERAL PLAN No. 1

UNIT: 3586
PROJECT NUMBER & PHASE: 06120000911
CONTRACT NO.: 06-0P1401

DISREGARD PRINTS BEARING EARLIER REVISION DATES

REVISION DATES: 02-18-14 04-18-14 04-14-14

SHEET 1 OF 3

STRUCTURES DESIGN GENERAL PLAN SHEET (ENGLISH) (REV.09-01-10)

FILE => 50-0314lr-a-gp.dgn

INSFRNAME => s111222 DATE PLOTTED => 18-APR-2014 TIME PLOTTED => 08:25

DIST	COUNTY	ROUTE	POST MILES TOTAL PROJECT	SHEET No.	TOTAL SHEETS
06	Ker	5	62.5/73.1	212	213

REGISTERED CIVIL ENGINEER — DATE 05-01-14

6-16-14
PLANS APPROVAL DATE

REGISTERED PROFESSIONAL ENGINEER — Ae Tern — No. C79044 — Exp. 03-31-16 — CIVIL — STATE OF CALIFORNIA

The State of California or its officers or agents shall not be responsible for the accuracy or completeness of scanned copies of this plan sheet.

QUANTITIES
BRIDGE No. 50-0315L/R

AGGREGATE BASE (APPROACH SLAB)	27 CY
STRUCTURAL CONCRETE, APPROACH SLAB (TYPE R)	82 CY
PAVING NOTCH EXTENSION	70 CF
CLEAN EXPANSION JOINT	80 LF
JOINT SEAL (MR 1")	173 LF

LEGEND

Indicates existing structure

Indicates limits of Structure Approach Type R (30D).

Indicates limits of existing joint seal removal, clean expansion joint, and placement of new joint seal. For details, see"JOINT SEAL TABLE".

Indicates depths of existing roadway materials to be removed.

(1) Limits of paving notch extension, see "STRUCTURE APPROACH TYPE R (30D)" sheet for details.

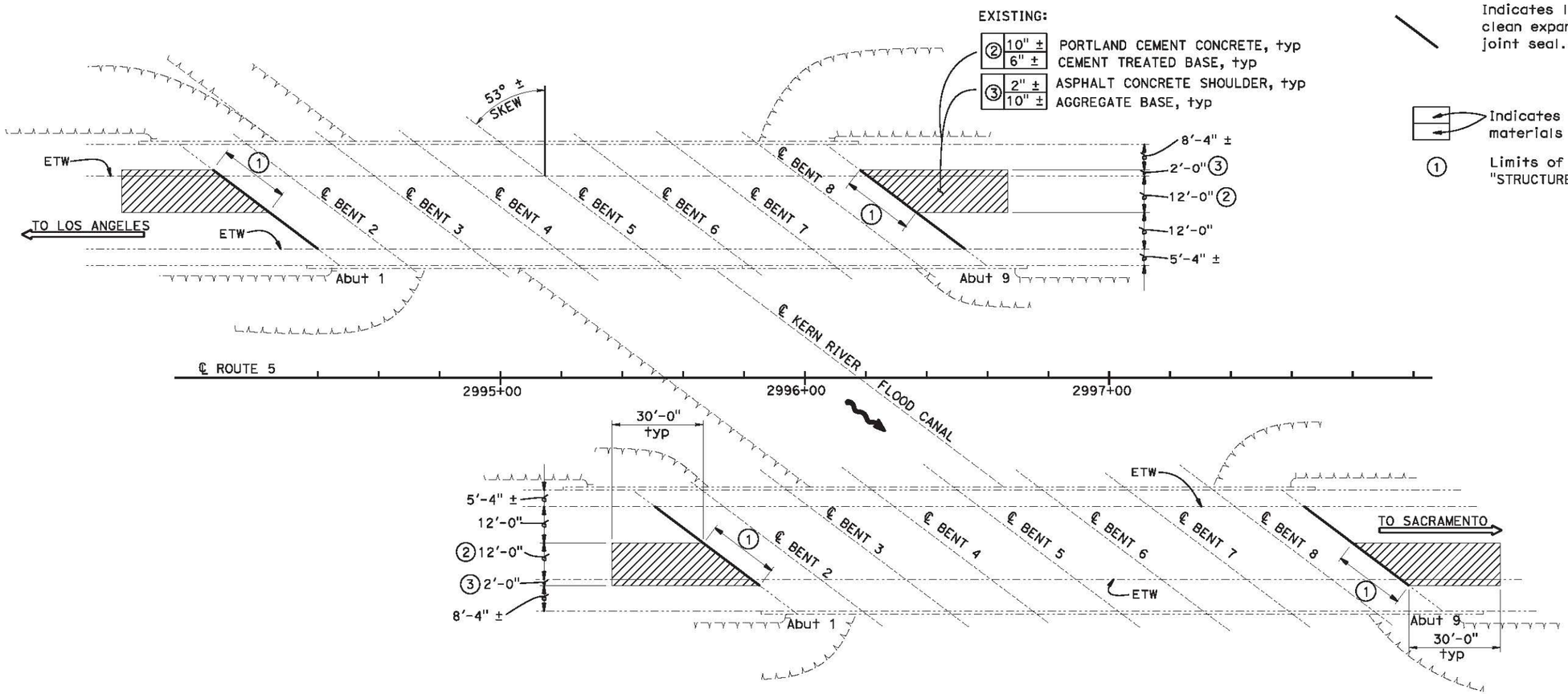

KERN RIVER FLOOD CANAL BRIDGE

BRIDGE No. 50-0315L/R, ROUTE 5, POST MILE 71.64
1" = 20'

NOTE:
THE CONTRACTOR SHALL VERIFY ALL CONTROLLING FIELD DIMENSIONS BEFORE ORDERING OR FABRICATING ANY MATERIAL.

Gary Joe
DESIGN ENGINEER

	BY	CHECKED
DESIGN	A. Tern	R. Simmons
DETAILS	L. Wang	R. Simmons
QUANTITIES	A. Tern	R. Simmons

LOAD & RESISTANCE FACTOR DESIGN — LIVE LOADING: HL93 W/"LOW-BOY"; PERMIT DESIGN VEHICLE

	BY	CHECKED
LAYOUT	A. Tern	R. Simmons
SPECIFICATIONS	T. Kershell	PLANS AND SPECS COMPARED: T. Kershell

ORIGINAL SCALE IN INCHES FOR REDUCED PLANS 0 1 2 3

STATE OF CALIFORNIA
DEPARTMENT OF TRANSPORTATION

DIVISION OF ENGINEERING SERVICES
STRUCTURE DESIGN
DESIGN BRANCH 17

BRIDGE NO. 50-0315L/R
POST MILE 71.64

ROUTE 5 APPROACH SLAB REHABILITATION
GENERAL PLAN No. 2

UNIT: 3586
PROJECT NUMBER & PHASE: 06120000911
CONTRACT NO.: 06-0P1401

DISREGARD PRINTS BEARING EARLIER REVISION DATES

REVISION DATES: 02-14-14 | 04-18-14 | 04-14-14

SHEET 2 OF 3

STRUCTURES DESIGN GENERAL PLAN SHEET (ENGLISH) (REV.09-01-10)

FILE => 50-0315lr-g-gp.dgn

USERNAME => s111292 DATE PLOTTED => 14-APR-2014 TIME PLOTTED => 08:25

DIST	COUNTY	ROUTE	POST MILES TOTAL PROJECT	SHEET No.	TOTAL SHEETS
06	Ker	5	62.5/73.1	213	213

REGISTERED CIVIL ENGINEER — DATE 05-01-14

6-16-14
PLANS APPROVAL DATE

REGISTERED PROFESSIONAL ENGINEER — Ae Tern — No. C79044 — Exp. 03-31-16 — CIVIL — STATE OF CALIFORNIA

The State of California or its officers or agents shall not be responsible for the accuracy or completeness of scanned copies of this plan sheet.

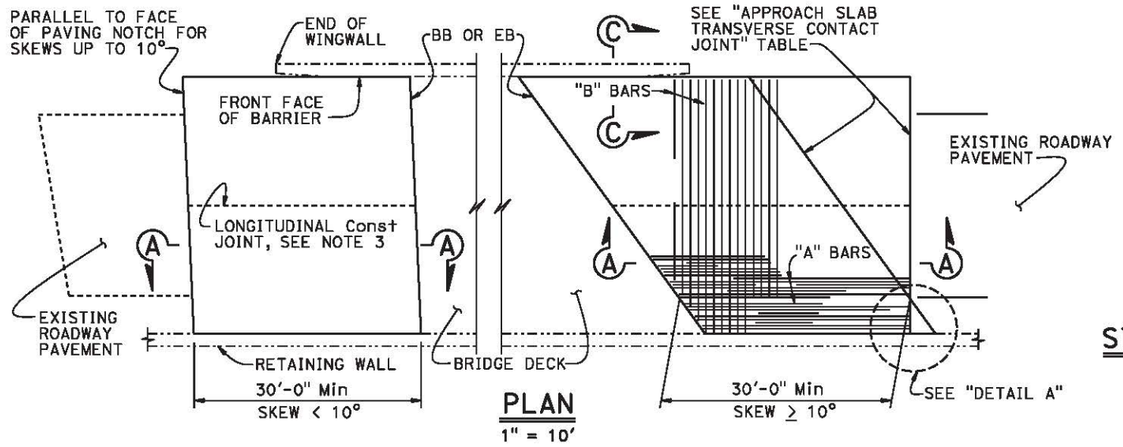

PLAN
1" = 10'

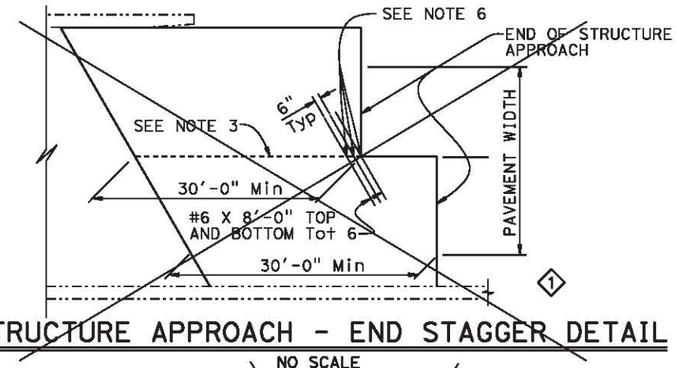

STRUCTURE APPROACH - END STAGGER DETAIL
NO SCALE

APPROACH SLAB TRANSVERSE CONTACT JOINT		
APPROACH SKEW	WITH AC ROADWAY PAVEMENT	WITH PCC ROADWAY PAVEMENT
< 10°	PARALLEL TO FACE OF PN	PARALLEL TO FACE OF PAVING NOTCH
10° - 45°	PARALLEL TO FACE OF PN USE "DETAIL A"	STAGGER LINES 24' TO 36' APART
> 45°	PARALLEL TO FACE OF PN USE "DETAIL A"	STAGGER AT EACH LANE LINE

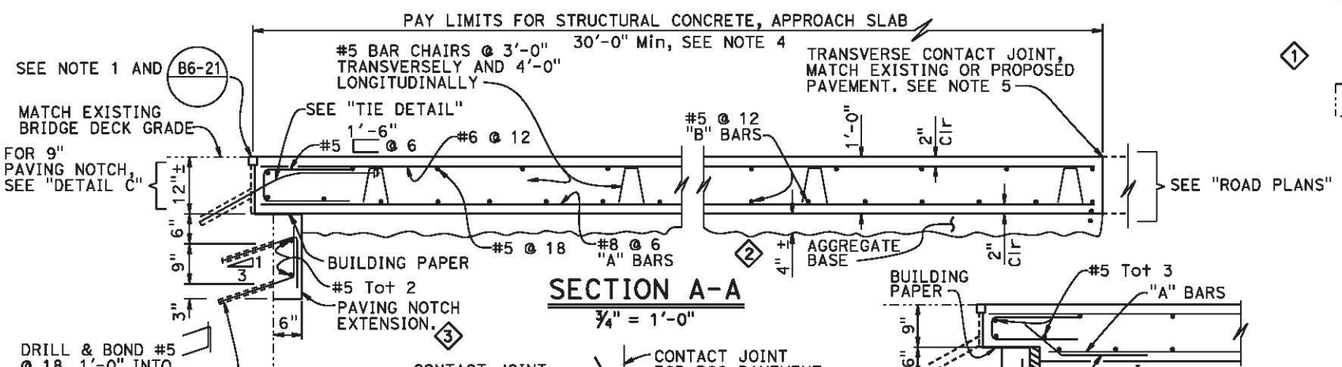

SECTION A-A
¾" = 1'-0"

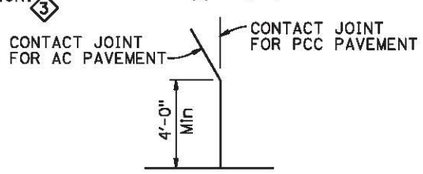

DETAIL A
No Scale

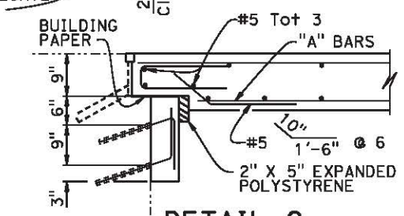

DETAIL C
¾" = 1'-0"

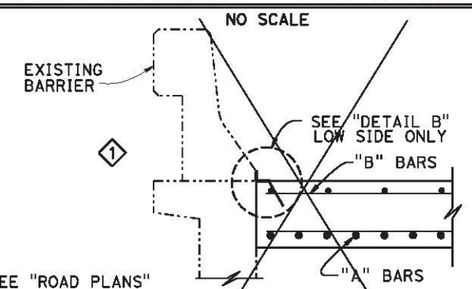

SECTION C-C
¾" = 1'-0"

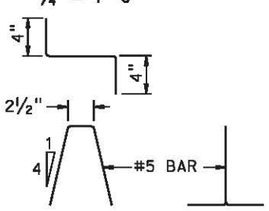

BAR CHAIR DETAIL
1½" = 1'-0"

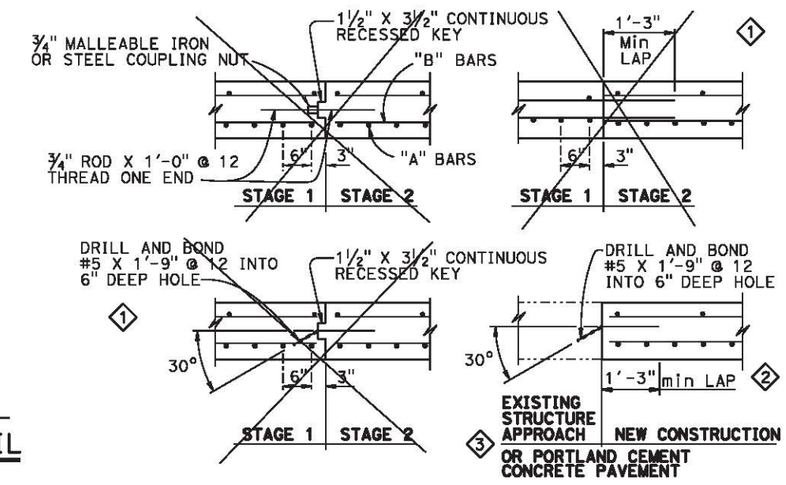

LONGITUDINAL CONSTRUCTION JOINT ALTERNATIVES
¾" = 1'-0"

NOTES:
1. For details not shown or noted, see Structure Plans. Adjust bar reinforcement to clear a sawcut for sealed joint, when required
2. Space to avoid existing main reinforcement
3. Longitudinal construction joints, when permitted by the Engineer, shall be located on lane lines
4. Transverse contact joint shall be a minimum of 5'-0" from an existing or constructed weakened plane joint
5. For transverse contact joint with new PCC paving, refer to ~~Standard Plan P10~~ REVISED STANDARD PLAN P10
6. ~~Couplers are required for stage construction~~
7. ~~End angle or plate at beginning of barrier transition, end of wingwall or end of structure approach as~~ applicable

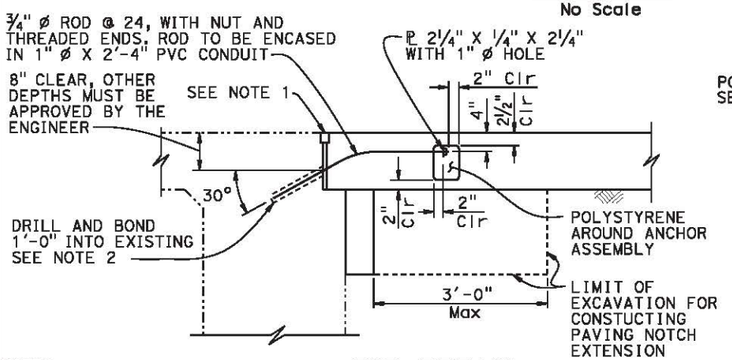

TIE DETAIL
¾" = 1'-0"

NOTE:
THE CONTRACTOR SHALL VERIFY ALL CONTROLLING FIELD DIMENSIONS BEFORE ORDERING OR FABRICATING ANY MATERIAL.

NOTE: For details not shown, see "SECTION A-A"

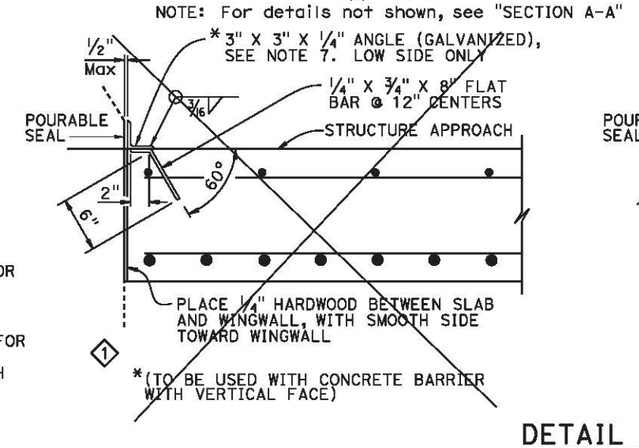

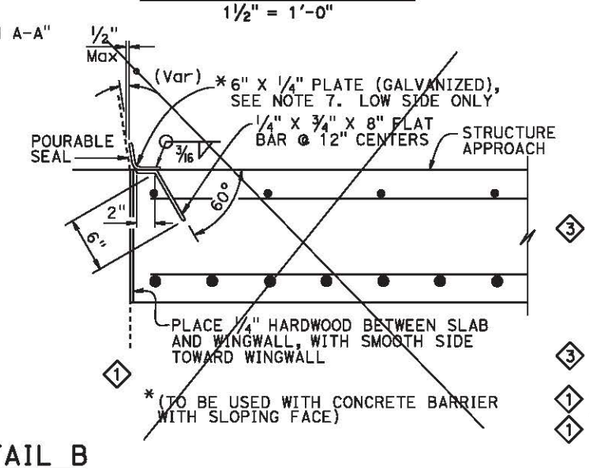

DETAIL B
1½" = 1'-0"

REVISED STANDARD DRAWING
FILE NO. xs3-150
APPROVAL DATE July 2011

1 Does not apply
2 Modified details
3 Revised note

STATE OF CALIFORNIA
DEPARTMENT OF TRANSPORTATION
DIVISION OF ENGINEERING SERVICES

BRIDGE NO. VARIES
POST MILE VARIES

ROUTE 5 APPROACH SLAB REHABILITATION
STRUCTURE APPROACH TYPE R(30D)

DS OSD 2147A (ENGLISH STANDARD DRAWING "XS" BORDER REV. (02-02-11)

ORIGINAL SCALE IN INCHES FOR REDUCED PLANS 0 1 2 3

UNIT: 3586
PROJECT NUMBER & PHASE: 06120000911
CONTRACT NO.: 06-0P1401

DISREGARD PRINTS BEARING EARLIER REVISION DATES

REVISION DATES: 03-06-14 04-09-14

SHEET 3 OF 3

FILE => 50-0315lr-xs3-150-sp.dgn

NSFRNAME => s111222 DATE PLOTTED => 18-APR-2014 TIME PLOTTED => 08:26