Dist	COUNTY	ROUTE	POST MILES TOTAL PROJECT	SHEET No.	TOTAL SHEETS
06	Ker	178	14.3,15.7	1	9

STATE OF CALIFORNIA

DEPARTMENT OF TRANSPORTATION

ACSTP-17D6(004)E

PROJECT PLANS FOR CONSTRUCTION ON

STATE HIGHWAY

IN KERN COUNTY
ABOUT 9 MILES EAST OF BAKERSFIELD
AT 0.6 MILE EAST OF SIDEHILL VIADUCT AND
AT 0.6 MILE EAST OF EDISON POWERHOUSE

TO BE SUPPLEMENTED BY STANDARD PLANS DATED 2010

INDEX OF PLANS

SHEET No.	DESCRIPTION
1	TITLE AND LOCATION MAP
2	TYPICAL CROSS SECTION
3-4	LAYOUTS
5	CONSTRUCTION DETAILS
6	CONSTRUCTION AREA SIGNS
7	PAVEMENT DELINEATION PLAN AND QUANTITIES
8	SUMMARY OF QUANTITIES
9	TRAFFIC CONTROL SYSTEM

THE STANDARD PLANS LIST APPLICABLE TO THIS CONTRACT IS INCLUDED IN THE NOTICE OF BIDDERS AND SPECIAL PROVISIONS BOOK.

LOCATION MAP

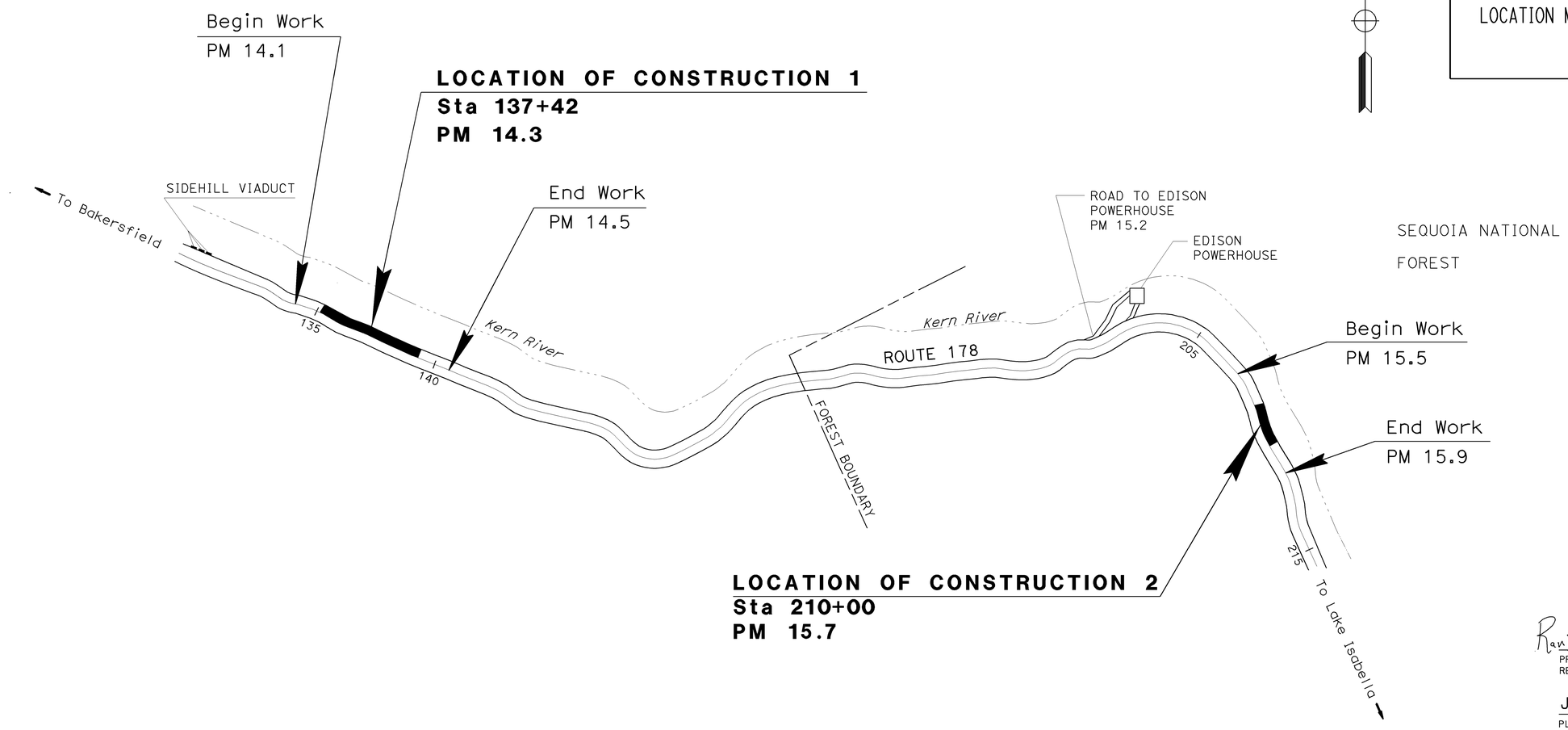

Ranjeev Kumar Ghai 11-15-12
PROJECT ENGINEER DATE
REGISTERED CIVIL ENGINEER

January 28, 2013
PLANS APPROVAL DATE

REGISTERED PROFESSIONAL ENGINEER RANJEEV KUMAR GHAI No. 61338 Exp. 06/30/13 CIVIL STATE OF CALIFORNIA

THE STATE OF CALIFORNIA OR ITS OFFICERS OR AGENTS SHALL NOT BE RESPONSIBLE FOR THE ACCURACY OR COMPLETENESS OF SCANNED COPIES OF THIS PLAN SHEET.

PROJECT MANAGER FRANK MOMEN

DESIGN ENGINEER SHAHIN MANSOUR

THE CONTRACTOR SHALL POSSESS THE CLASS (OR CLASSES) OF LICENSE AS SPECIFIED IN THE "NOTICE TO BIDDERS."

NO SCALE

CONTRACT No.	06-0N3804
PROJECT ID	0600020650

LAST REVISION 01-28-13 DATE PLOTTED => 22-MAY-2013 TIME PLOTTED => 10:33

Dist	COUNTY	ROUTE	POST MILES TOTAL PROJECT	SHEET No.	TOTAL SHEETS
06	Ker	178	14.3,15.7	2	9

Ranjeev Kumar Ghai 11-15-12
REGISTERED CIVIL ENGINEER DATE

1-28-13
PLANS APPROVAL DATE

REGISTERED PROFESSIONAL ENGINEER
RANJEEV KUMAR GHAI
No. 61338
Exp. 06/30/13
CIVIL
STATE OF CALIFORNIA

THE STATE OF CALIFORNIA OR ITS OFFICERS OR AGENTS SHALL NOT BE RESPONSIBLE FOR THE ACCURACY OR COMPLETENESS OF SCANNED COPIES OF THIS PLAN SHEET.

NOTE:

1. FOR ACCURATE RIGHT OF WAY DATA, CONTACT RIGHT OF WAY ENGINEERING AT THE DISTRICT OFFICE.
2. DIMENSIONS OF THE PAVEMENT STUCTURES (STRUCTURAL SECTIONS) ARE SUBJECT TO TOLERANCES SPECIFIED IN THE STANDARD SPECIFICATIONS.
3. STATIONING IS SHOWN FOR CONSTRUCTION PURPOSES ONLY.

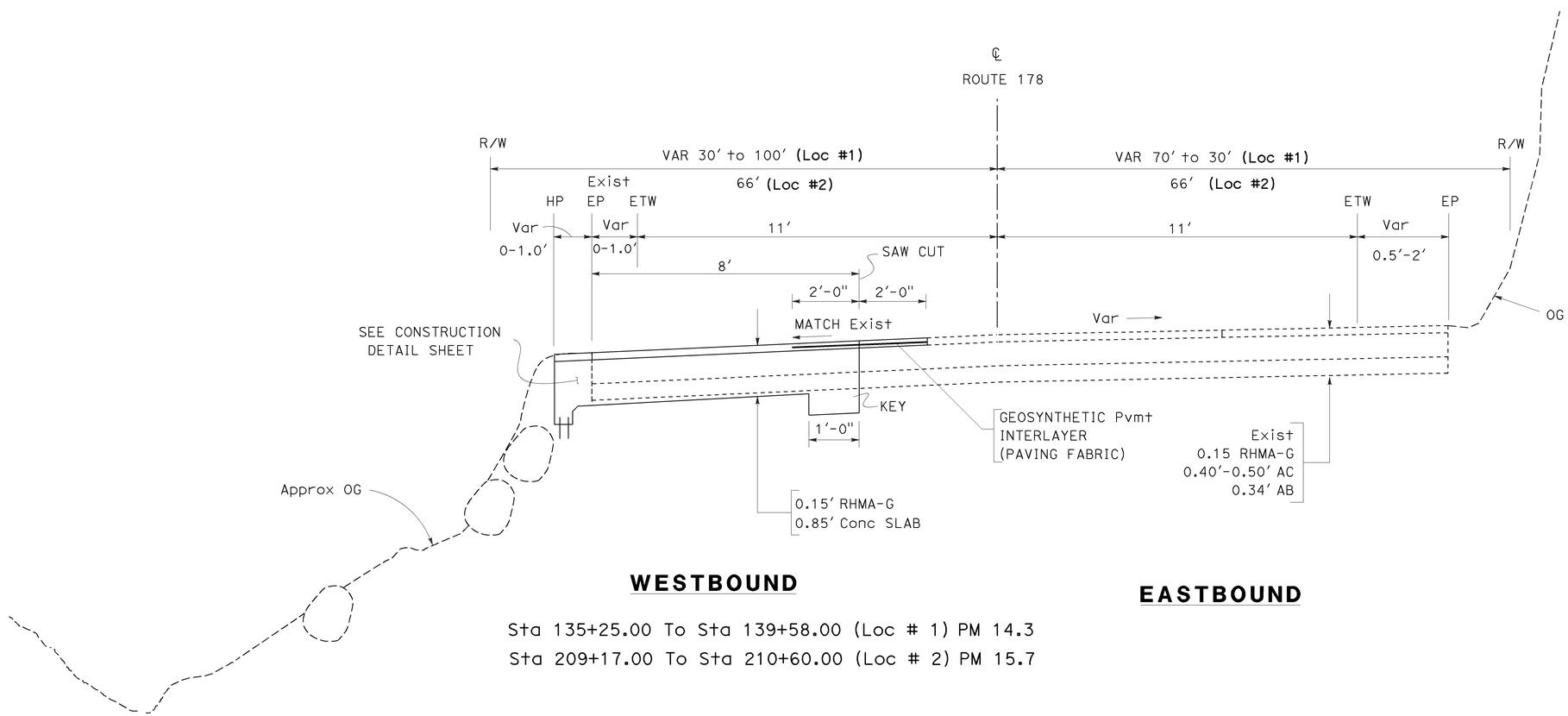

Sta 135+25.00 To Sta 139+58.00 (Loc # 1) PM 14.3
Sta 209+17.00 To Sta 210+60.00 (Loc # 2) PM 15.7

ROUTE 178

TYPICAL CROSS SECTION

NO SCALE

X-1

STATE OF CALIFORNIA - DEPARTMENT OF TRANSPORTATION
Caltrans
DESIGN

FUNCTIONAL SUPERVISOR: SHAHIN MANSOUR
CALCULATED-DESIGNED BY: RANJEEV KUMAR GHAI
CHECKED BY: SHAHIN MANSOUR
REVISED BY: XXX XXX
DATE REVISED: XXX XXX

LAST REVISION 06-01-12
DATE PLOTTED => 22-MAY-2013
TIME PLOTTED => 10:33

Dist	COUNTY	ROUTE	POST MILES TOTAL PROJECT	SHEET No.	TOTAL SHEETS
06	Ker	178	14.3,15.7	3	9

Ranjeev Kumar Ghai 11-15-12
REGISTERED CIVIL ENGINEER DATE

1-28-13
PLANS APPROVAL DATE

REGISTERED PROFESSIONAL ENGINEER
RANJEEV KUMAR GHAI
No. 61338
Exp.06/30/13
CIVIL
STATE OF CALIFORNIA

THE STATE OF CALIFORNIA OR ITS OFFICERS OR AGENTS SHALL NOT BE RESPONSIBLE FOR THE ACCURACY OR COMPLETENESS OF SCANNED COPIES OF THIS PLAN SHEET.

NOTES:

1. FOR ACCURATE RIGHT OF WAY DATA, CONTACT RIGHT OF WAY ENGINEERING AT THE DISTRICT OFFICE.

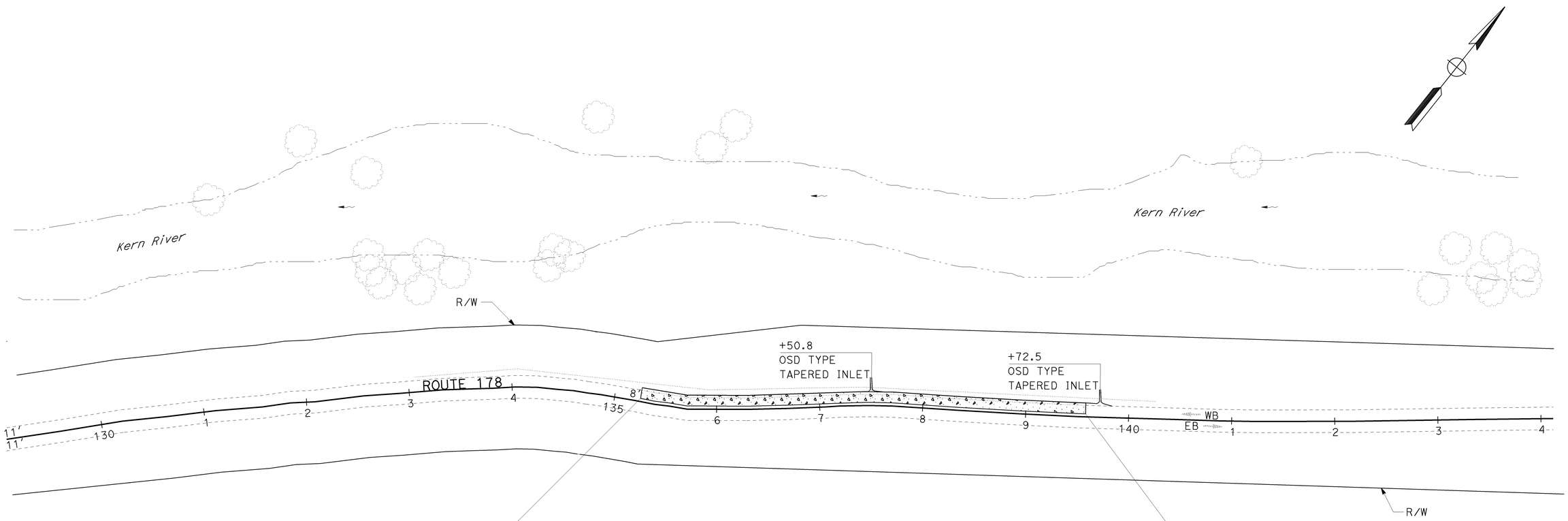

+25.00 Beg REMOVE STRUCTURAL SECTION
Beg SAW CUT
Beg Conc SLAB (RSC)
Beg 0.15' RHMA-G
Beg COLD PLANE AC Pvmt
Beg GEOSYNTHETIC Pvmt INTERLAYER (PAVING FABRIC)

+58.00 End REMOVE STRUCTURAL SECTION
End SAW CUT
End Conc SLAB (RSC)
End 0.15' RHMA-G
End COLD PLANE AC Pvmt
End GEOSYNTHETIC Pvmt INTERLAYER (PAVING FABRIC)

LAYOUT
(LOCATION 1)
L-1

SCALE:1"=50'

STATE OF CALIFORNIA - DEPARTMENT OF TRANSPORTATION
Caltrans
DESIGN

FUNCTIONAL SUPERVISOR: SHAHIN MANSOUR
CALCULATED-DESIGNED BY: RANJEEV KUMAR GHAI
CHECKED BY: SHAHIN MANSOUR
REVISED BY
DATE REVISED

LAST REVISION 01-28-13
DATE PLOTTED => 22-MAY-2013
TIME PLOTTED => 10:33

Dist	COUNTY	ROUTE	POST MILES TOTAL PROJECT	SHEET No.	TOTAL SHEETS
06	Ker	178	14.3,15.7	4	9

Ranjeev Kumar Ghai 11-15-12
REGISTERED CIVIL ENGINEER DATE

1-28-13
PLANS APPROVAL DATE

REGISTERED PROFESSIONAL ENGINEER
RANJEEV KUMAR GHAI
No. 61338
Exp. 06/30/13
CIVIL
STATE OF CALIFORNIA

THE STATE OF CALIFORNIA OR ITS OFFICERS OR AGENTS SHALL NOT BE RESPONSIBLE FOR THE ACCURACY OR COMPLETENESS OF SCANNED COPIES OF THIS PLAN SHEET.

NOTES:

1. FOR ACCURATE RIGHT OF WAY DATA, CONTACT RIGHT OF WAY ENGINEERING AT THE DISTRICT OFFICE.

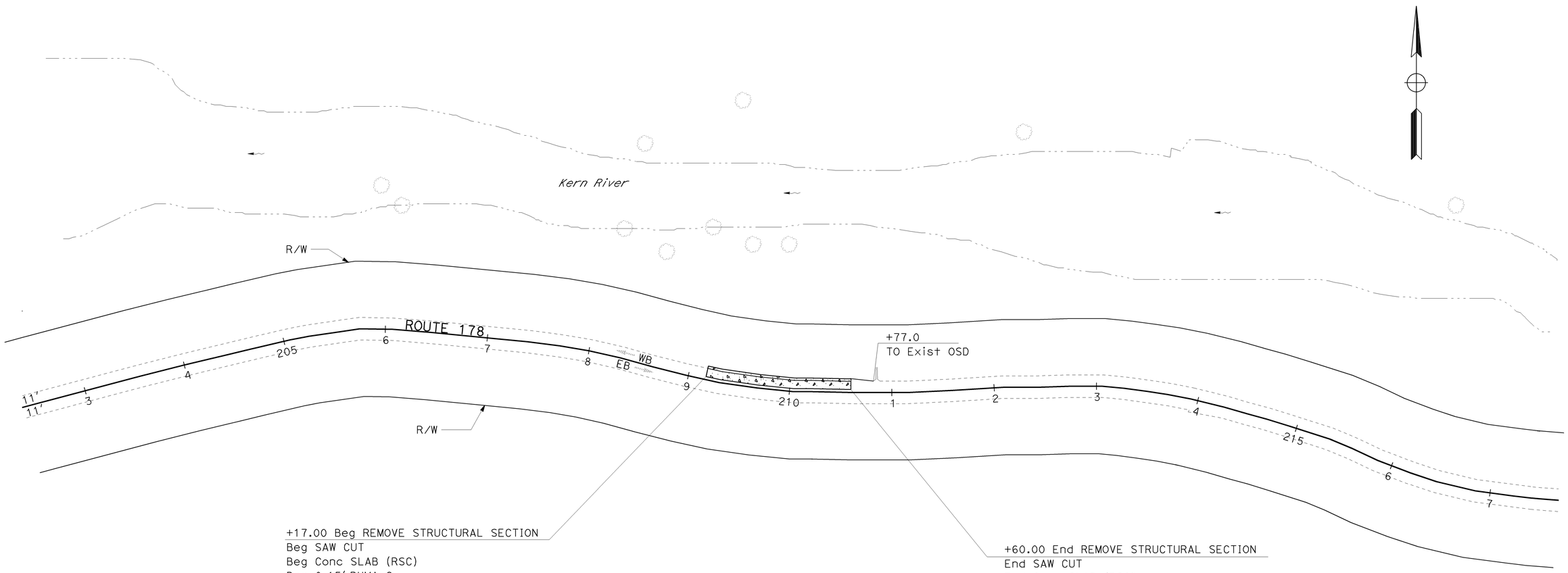

SCALE: 1"= 50'

LAYOUT
(LOCATION 2)
L-2

STATE OF CALIFORNIA - DEPARTMENT OF TRANSPORTATION
Caltrans
DESIGN

FUNCTIONAL SUPERVISOR: SHAHIN MANSOUR
CALCULATED-DESIGNED BY: RANJEEV KUMAR GHAI
CHECKED BY: SHAHIN MANSOUR
REVISED BY
DATE REVISED

LAST REVISION 01-28-13
DATE PLOTTED => 22-MAY-2013
TIME PLOTTED => 10:33

Dist	COUNTY	ROUTE	POST MILES TOTAL PROJECT	SHEET No.	TOTAL SHEETS
06	Ker	178	14.3,15.7	5	9

Ranjeev Kumar Ghai 11-15-12
REGISTERED CIVIL ENGINEER DATE

1-28-13
PLANS APPROVAL DATE

REGISTERED PROFESSIONAL ENGINEER
RANJEEV KUMAR GHAI
No. 61338
Exp. 06/30/13
CIVIL
STATE OF CALIFORNIA

THE STATE OF CALIFORNIA OR ITS OFFICERS OR AGENTS SHALL NOT BE RESPONSIBLE FOR THE ACCURACY OR COMPLETENESS OF SCANNED COPIES OF THIS PLAN SHEET.

NOTES:

1. FOR ACCURATE RIGHT OF WAY DATA, CONTACT RIGHT OF WAY ENGINEERING AT THE DISTRICT OFFICE.
2. WHERE INTACT ROCK MAKES EXCAVATION FOR KEY INFEASIBLE, CONTRACTOR HAVE THE OPTION TO USE KEY ALTERNATIVE DETAIL A.
3. THE CONTRACTOR SHALL VERIFY ALL CONTROLLING FIELD DIMENSIONS BEFORE ORDERING OR FABRICATING ANY MATERIALS
4. REINFORCED CONCRETE: f'_c 4000 psi
   f_y 60 ksi

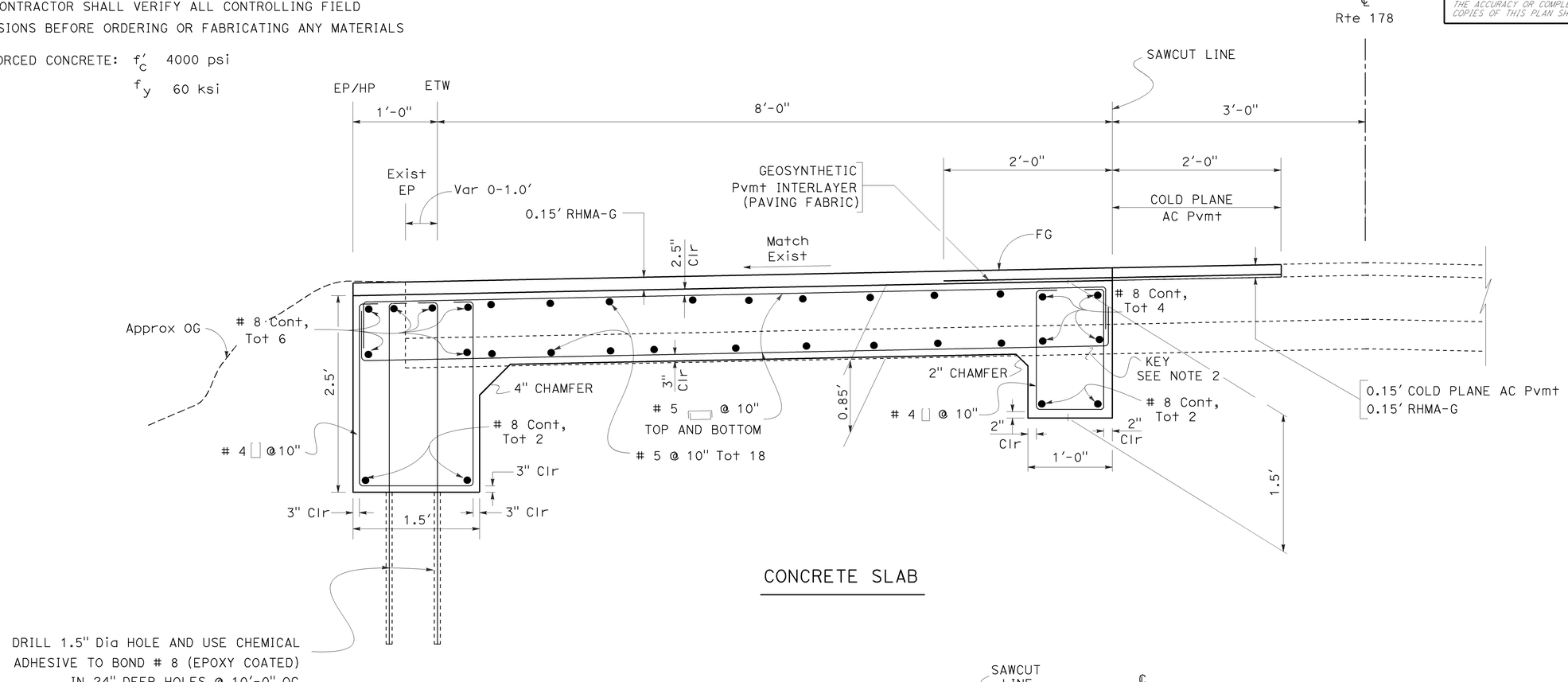

CONCRETE SLAB

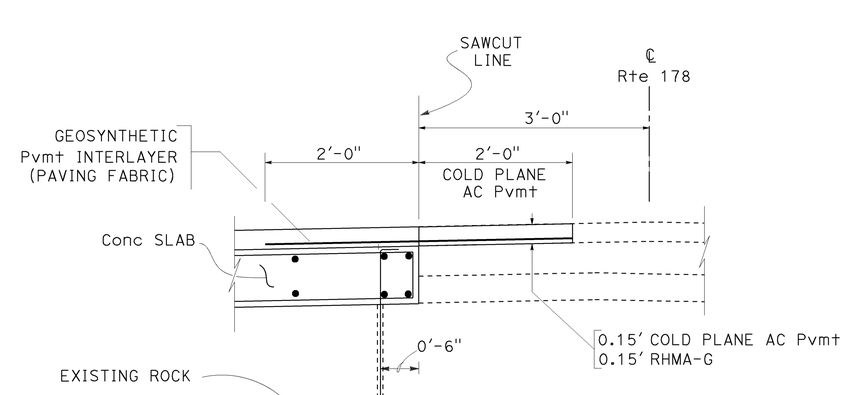

KEY ALTERNATIVE
DETAIL "A"

NO SCALE

CONSTRUCTION DETAILS
C-1

STATE OF CALIFORNIA - DEPARTMENT OF TRANSPORTATION
Caltrans® **DESIGN**
FUNCTIONAL SUPERVISOR: SHAHIN MANSOUR
CALCULATED-DESIGNED BY: RANJEEV KUMAR GHAI
CHECKED BY: SHAHIN MANSOUR
REVISED BY / DATE REVISED

LAST REVISION 01-28-13 | DATE PLOTTED => 22-MAY-2013 | TIME PLOTTED => 10:33

Dist	COUNTY	ROUTE	POST MILES TOTAL PROJECT	SHEET No.	TOTAL SHEETS
06	Ker	178	14.3, 15.7	6	9

REGISTERED CIVIL ENGINEER 11/14/12 DATE

01-28-13
PLANS APPROVAL DATE

REGISTERED PROFESSIONAL ENGINEER
HUE NGUYEN
No. 74484
Exp. 12/31/13
CIVIL
STATE OF CALIFORNIA

THE STATE OF CALIFORNIA OR ITS OFFICERS OR AGENTS SHALL NOT BE RESPONSIBLE FOR THE ACCURACY OR COMPLETENESS OF SCANNED COPIES OF THIS PLAN SHEET.

STATIONARY MOUNTED CONSTRUCTION AREA SIGNS

SIGN	SIGN CODE	SIGN MESSAGE	No. OF SIGNS	PANEL SIZE	No. OF POST AND SIZE
A	W20-1	ROAD WORK AHEAD	4	48" x 48"	1- 6" x 6"
B	G20-2	END ROAD WORK	2	36" x 18"	1- 4" x 4"
C	W20-1(2500')	ROAD WORK 2500 FT	3	48" x 48"	1- 6" x 6"
D	W20-1(1000')	ROAD WORK 1000 FT	4	48" x 48"	1- 6" x 6"

NOTE:
SIGN LOCATIONS SHOWN ARE APPROXIMATE. EXACT LOCATIONS TO BE DETERMINED BY THE ENGINEER.

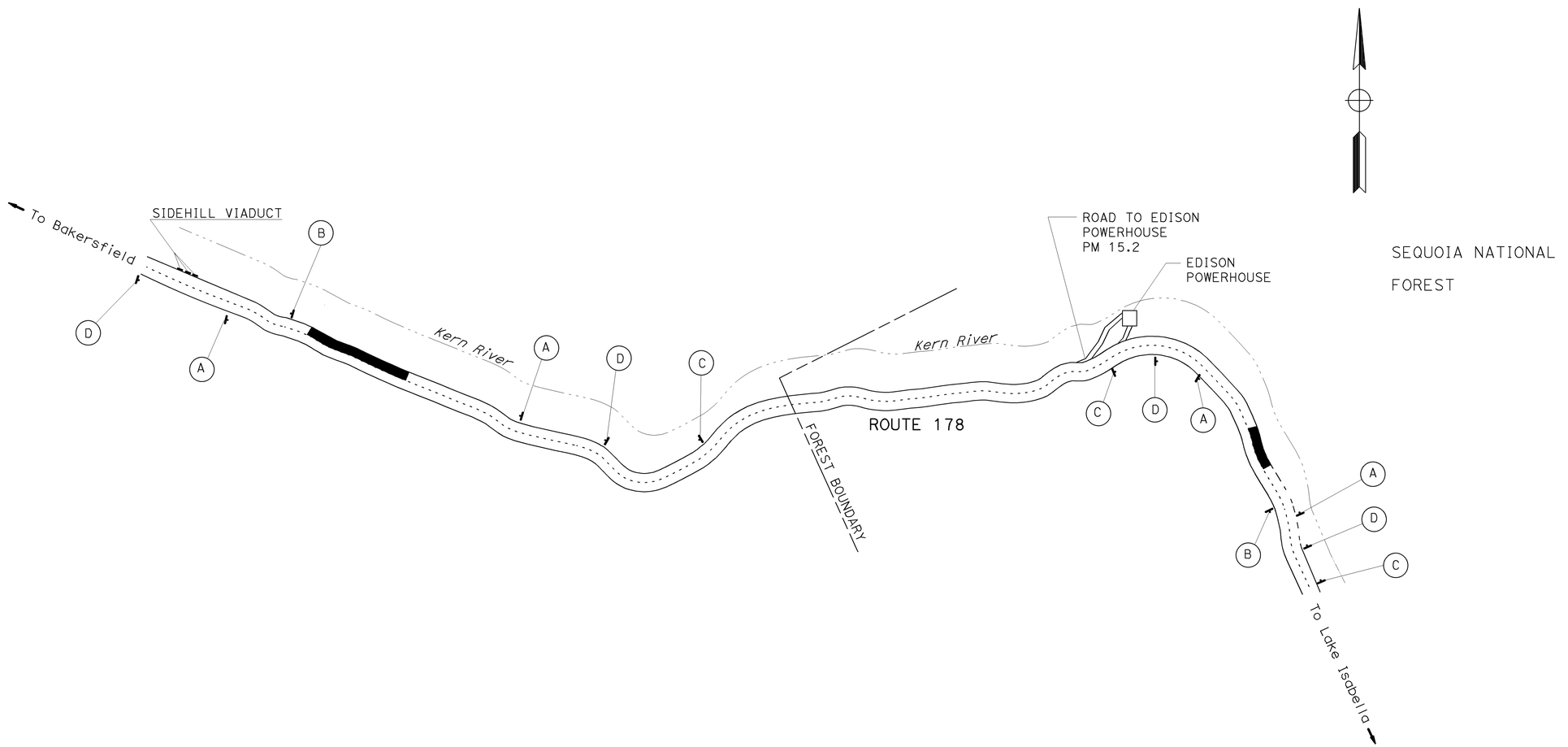

APPROVED FOR CONSTRUCTION AREA SIGN WORK ONLY

CONSTRUCTION AREA SIGNS

NO SCALE

CS-1

STATE OF CALIFORNIA - DEPARTMENT OF TRANSPORTATION
Caltrans
TRAFFIC DESIGN

FUNCTIONAL SUPERVISOR: MOHAMMED QATAMI
CALCULATED-DESIGNED BY: CECILE NGUYEN
CHECKED BY: HUE NGUYEN
REVISED BY
DATE REVISED

LAST REVISION 01-28-13 | DATE PLOTTED => 22-MAY-2013 | TIME PLOTTED => 10:33

Dist	COUNTY	ROUTE	POST MILES TOTAL PROJECT	SHEET No.	TOTAL SHEETS
06	Ker	178	14.3, 15.7	7	9

REGISTERED CIVIL ENGINEER 11/14/12 DATE

01-28-13
PLANS APPROVAL DATE

REGISTERED PROFESSIONAL ENGINEER HUE NGUYEN No. 74484 Exp. 12/31/13 CIVIL STATE OF CALIFORNIA

THE STATE OF CALIFORNIA OR ITS OFFICERS OR AGENTS SHALL NOT BE RESPONSIBLE FOR THE ACCURACY OR COMPLETENESS OF SCANNED COPIES OF THIS PLAN SHEET.

LEGEND

XX THERMOPLASTIC TRAFFIC STRIPE DETAIL No.

NOTES: FOR ACCURATE RIGHT OF WAY DATA, CONTACT RIGHT OF WAY ENGINEERING AT THE DISTRICT OFFICE.

PAVEMENT DELINEATION

STATION	THERMOPLASTIC TRAFFIC STRIPE DETAIL 27B 4" SOLID WHITE LF
135+25 TO 139+60	435
209+17 TO 210+88	171
TOTAL	606

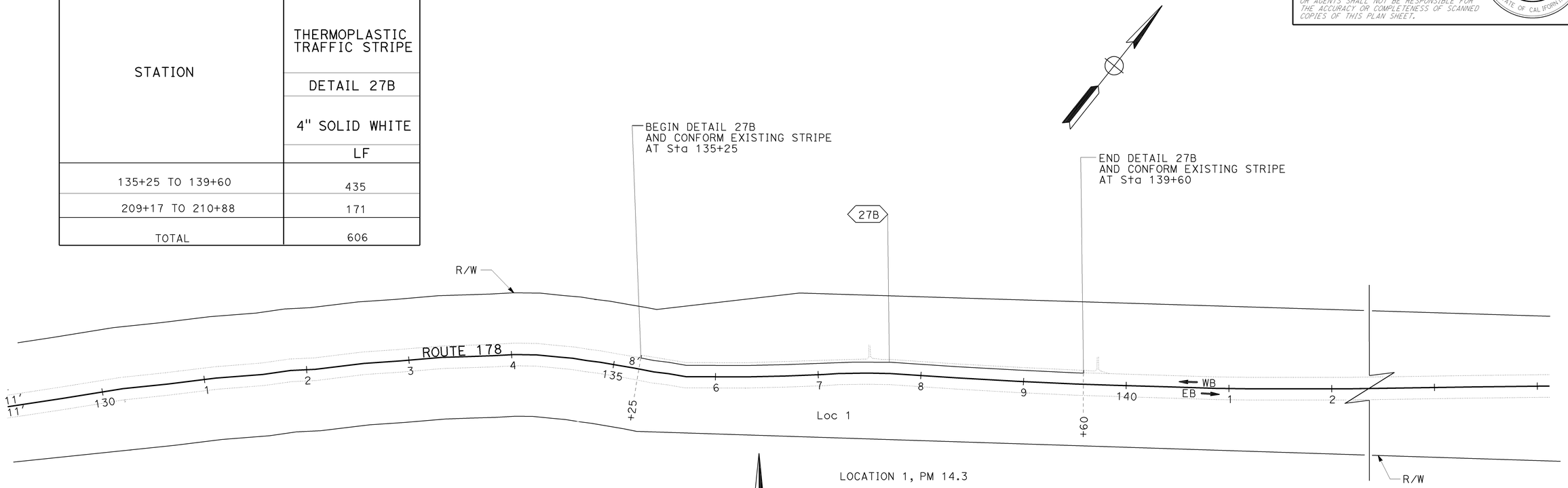

LOCATION 1, PM 14.3

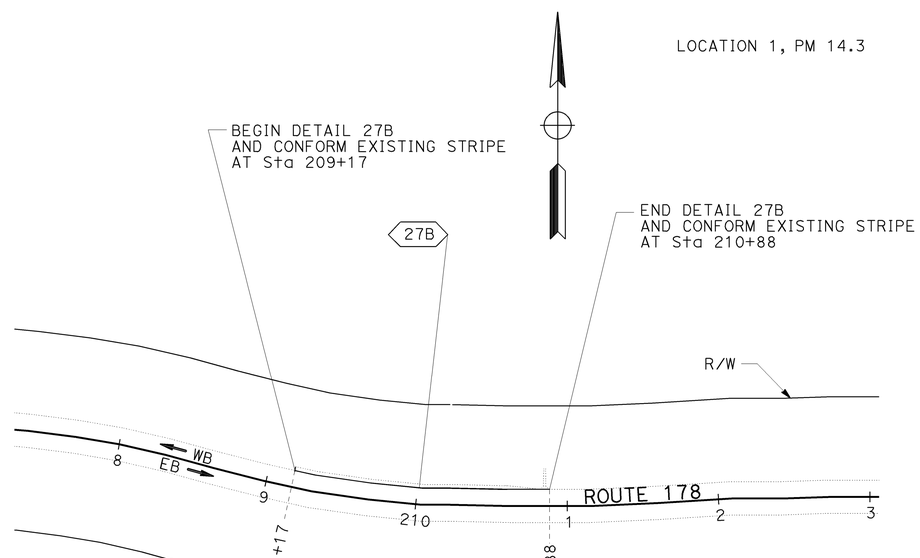

LOCATION 2, PM 15.7

APPROVED FOR PAVEMENT DELINEATION WORK ONLY

SCALE: 1" = 50'

PAVEMENT DELINEATION PLAN AND QUANTITIES

PD-1

STATE OF CALIFORNIA - DEPARTMENT OF TRANSPORTATION
Caltrans
TRAFFIC DESIGN

FUNCTIONAL SUPERVISOR: MOHAMMED QATAMI
CALCULATED-DESIGNED BY: CECILE NGUYEN
CHECKED BY: HUE NGUYEN
REVISED BY
DATE REVISED

LAST REVISION 01-28-13
DATE PLOTTED => 22-MAY-2013
TIME PLOTTED => 10:33

Dist	COUNTY	ROUTE	POST MILES TOTAL PROJECT	SHEET No.	TOTAL SHEETS
06	Ker	178	14.3,15.7	8	9

Ranjeev Kumar Ghai 11-15-12
REGISTERED CIVIL ENGINEER DATE

1-28-13
PLANS APPROVAL DATE

REGISTERED PROFESSIONAL ENGINEER
RANJEEV KUMAR GHAI
No. 61338
Exp. 06/30/13
CIVIL
STATE OF CALIFORNIA

THE STATE OF CALIFORNIA OR ITS OFFICERS OR AGENTS SHALL NOT BE RESPONSIBLE FOR THE ACCURACY OR COMPLETENESS OF SCANNED COPIES OF THIS PLAN SHEET.

ROADWAY QUANTITIES

STATION	RUBERIZED HOT MIX ASPHALT (GAP GRADED)	GEOSYNTHETIC PAVEMENT INTERLAYER (PAVING FABRIC)	STRUCTURAL CONCRETE, CONCRETE SLAB (RSC)	BAR REINFORCING STEEL (N)	SAWCUT (N)	STRUCTURE EXCAVATION	DRILL & BOND DOWEL (N)	COLD PLANE AC PAVEMENT	TACK COAT
	TON	SQYD	CY	LB	LF	CY	LF	SQYD	TON
135+25.00 TO 139+58.00	54	193	176.4	55912	449	195.6	180	96.2	1.5
209+17.00 TO 210+60.00	18	64	58.3	18466	159	64.6	64	31.8	0.5
TOTAL	72	257	234.7			260.2		128.0	2.0

(N) - NOT A SEPARATE PAY ITEM, FOR INFORMATION ONLY

FIBER ROLLS

STATION	LINEAR FEET
135+06.50 TO 139+76.50	470
208+98.50 TO 210+78.50	180
TOTAL	650

WATER POLLUTION CONTROL

STATION	TEMPORARY DRAINAGE INLET PROTECTION EA	TEMPORARY FIBER ROLLS LF
135+25.00, R†	1	
136+83.40, R†	1	
137+89.00, R†	1	
139+47.40, R†	1	
209+17.00, R†	1	
210+75.40, R†	1	
135+06.50 TO 139+76.50		470
208+98.50 TO 210+78.50		180
TOTAL	6	650

SUMMARY OF QUANTITIES

Q-1

STATE OF CALIFORNIA - DEPARTMENT OF TRANSPORTATION
Caltrans®
DESIGN

FUNCTIONAL SUPERVISOR: SHAHIN MANSOUR
CALCULATED-DESIGNED BY: RANJEEV KUMAR GHAI
CHECKED BY: SHAHIN MANSOUR
REVISED BY: XXX XXX
DATE REVISED: XXX XXX

LAST REVISION 01-28-13
DATE PLOTTED => 22-MAY-2013
TIME PLOTTED => 13:29

Dist	COUNTY	ROUTE	POST MILES TOTAL PROJECT	SHEET No.	TOTAL SHEETS
06	Ker	178	14.3,15.7	9	9

REGISTERED CIVIL ENGINEER 12-7-12 DATE

1-28-13
PLANS APPROVAL DATE

REGISTERED PROFESSIONAL ENGINEER Gurinderpal Bhullar No. C48815 Exp. 9-30-14 CIVIL STATE OF CALIFORNIA

THE STATE OF CALIFORNIA OR ITS OFFICERS OR AGENTS SHALL NOT BE RESPONSIBLE FOR THE ACCURACY OR COMPLETENESS OF SCANNED COPIES OF THIS PLAN SHEET.

NOTES:

Unless otherwise specified in the special provisions, all temporary warning signs shall have black legend on orange background.

California code are designated by (CA). Otherwise, Federal (MUTCD) codes are shown.

TYPICAL LANE CLOSURE WITH REVERSIBLE CONTROL

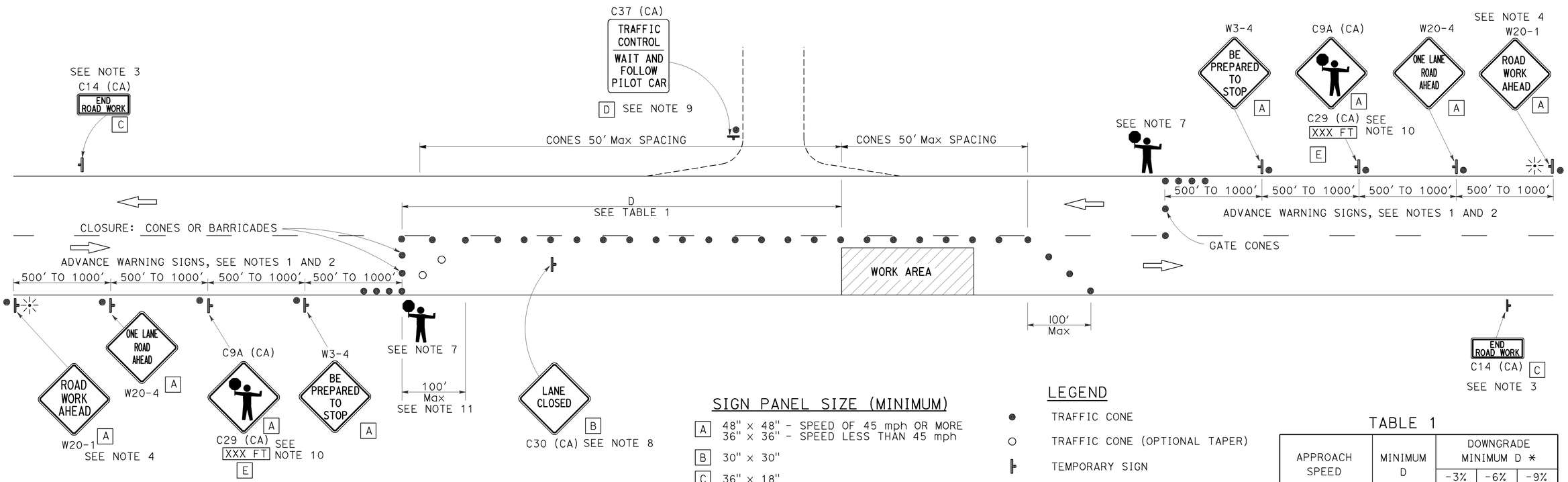

SIGN PANEL SIZE (MINIMUM)

- A: 48" x 48" - SPEED OF 45 mph OR MORE; 36" x 36" - SPEED LESS THAN 45 mph
- B: 30" x 30"
- C: 36" x 18"
- D: 36" x 42"
- E: 36" x 9"

LEGEND

- TRAFFIC CONE
- TRAFFIC CONE (OPTIONAL TAPER)
- TEMPORARY SIGN
- PORTABLE FLASHING BEACON
- FLAGGER

TABLE 1

APPROACH SPEED	MINIMUM D	DOWNGRADE MINIMUM D *		
		-3%	-6%	-9%
mph	ft	ft	ft	ft
25 AND BELOW	155	158	165	173
30	200	205	215	227
35	250	257	271	287
40	305	315	333	354
45	360	378	400	427
50	425	446	474	507
55	495	520	553	593
60	570	598	638	686
65	645	682	728	785

* USE ON SUSTAINED DOWNGRADE STEEPER THAN -3 PERCENT AND LONGER THAN 1 MILE.

NOTES:

1. Where approach speeds are low, advance warning signs may be placed at 300' spacing, and closer in urban areas.
2. Each advance warning sign in each direction of travel shall be equipped with at least two flags for daytime closure. Each flag shall be at least 16" x 16" in size and shall be orange or fluorescent red-orange in color. Flashing beacons shall be placed at the locations indicated for lane closure during hours of darkness.
3. A C14 (CA) "END ROAD WORK" sign, as appropriate, shall be placed at the end of the lane control unless the end of work area is obvious, or ends within a larger project's limits.
4. If the W20-1 sign would follow within 2000' of a stationary W20-1 or C11 (CA) "ROAD WORK NEXT _____MILES", use a W20-4 sign for the first advance warning sign.
5. All cones used for lane closures during the hours of darkness shall be fitted with retroreflective bands (or sleeves) as specified in the specifications.
6. Portable delineators, placed at one-half the spacing indicated for traffic cones, may be used instead of cones for daytime closures only.
7. Additional advance flaggers may be required. Flagger should stand in a conspicuous place, be visible to approaching traffic as well as approaching vehicles after the first vehicle has stopped. During the hours of darkness, the flagging-station and flagger shall be illuminated and clearly visible to approaching traffic. The illumination footprint of the lighting on the ground shall be at least 20' in diameter. Place a minimum of four cones at 50' intervals in advance of flagger station as shown.
8. Place C30 (CA) "LANE CLOSED" sign at 500' to 1000' intervals throughout extended work areas. They are optional if the work area is visible from the flagger station.
9. When a pilot car is used, place a C37 (CA) "TRAFFIC CONTROL-WAIT AND FOLLOW PILOT CAR" sign at all intersections within traffic control area. Signs shall be clean and visible at all times.
10. An optional C29 (CA) sign may be placed below the C9A (CA) sign.
11. Traffic cones or barricades may be placed on the optional taper as shown, barricades shall be Type I, II, or III.

STATE OF CALIFORNIA
DEPARTMENT OF TRANSPORTATION

TRAFFIC CONTROL SYSTEM FOR LANE CLOSURE ON TWO LANE CONVENTIONAL HIGHWAYS

NO SCALE

TCS-1

STATE OF CALIFORNIA - DEPARTMENT OF TRANSPORTATION
Caltrans

FUNCTIONAL SUPERVISOR | CALCULATED-DESIGNED BY | CHECKED BY | REVISED BY | DATE REVISED

LAST REVISION 01-28-13 | DATE PLOTTED => 10-DEC-2012 | TIME PLOTTED => 09:45