INFORMATION HANDOUT

For Contract No. 06-0M8204
At 06-Fre-41&180-Var

Identified by
Project ID 0600020013

MATERIALS INFORMATION

Alternative Temporary Crash Cushion System

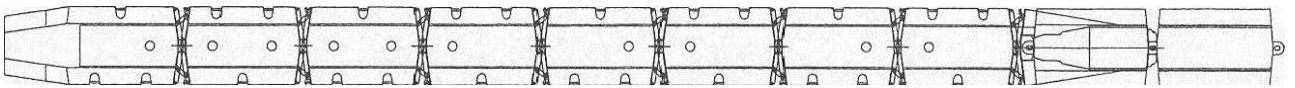

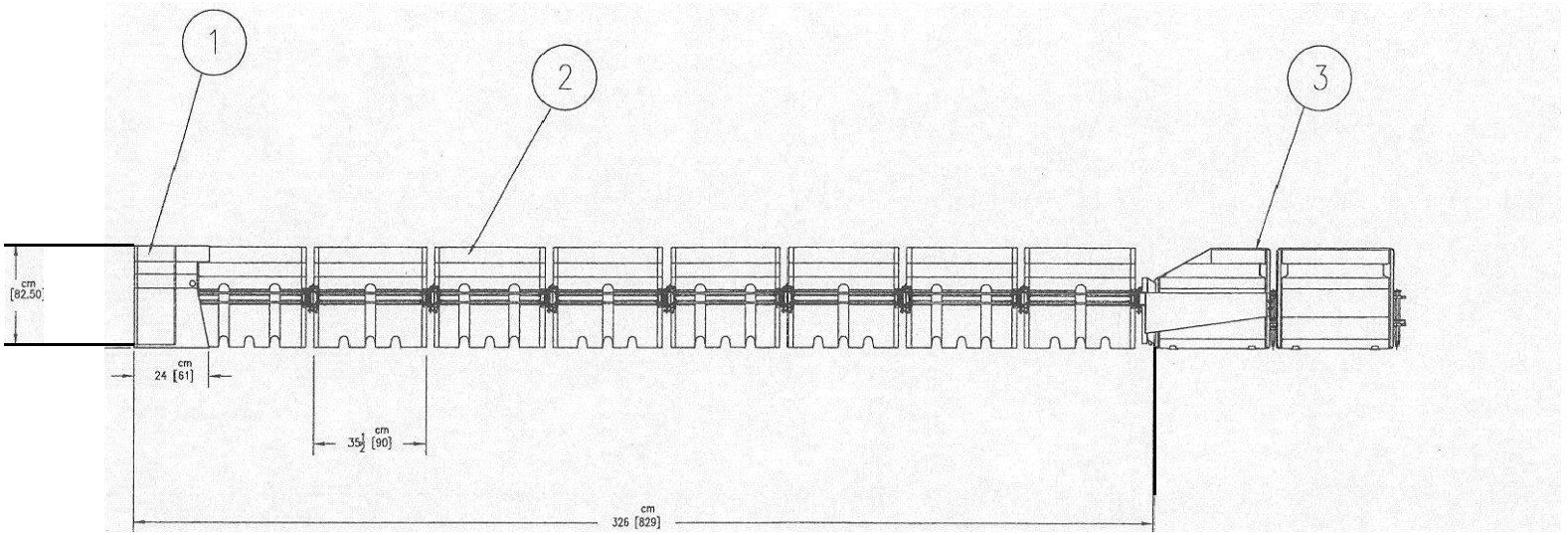

SEE B991205.BOM FOR MATERIAL LIST

NOTE:
THICKNESS OF WELD TO BE EQUAL TO THE THINNER OF 2 PIECES BEING JOINED. WELD TO BE ALL AROUND UNLESS OTHERWISE NOTED.

© 2000 Barrier Systems, Inc.

The information heron is proprietary to Barrier Systems Inc. and shall not be disclosed, duplicated or used otherwise without the express written approval of Barrier Systems Inc.

REV.	CHANGES	DATE	BY	REQ'D	NEXT ASSY.	ITEM
A	ADD TOP VIEW	3/2/00	R.C	1	XXXXXXX	1

SCALE: 1=40

	DATE	INIT.
DRAWN BY	2/8/00	R.R.C.
APPR'D BY		

Standard Tolerance
Angular ± 1/2°
Fractional ± 1/16
Decimal ± .010

TITLE : ASSEMBLY, ABSORB 350 TL3 Q.M.B

MODEL	DRAWING NUMBER	REV
	B991205	A

ENCLOSURE 1 (1 OF 6)

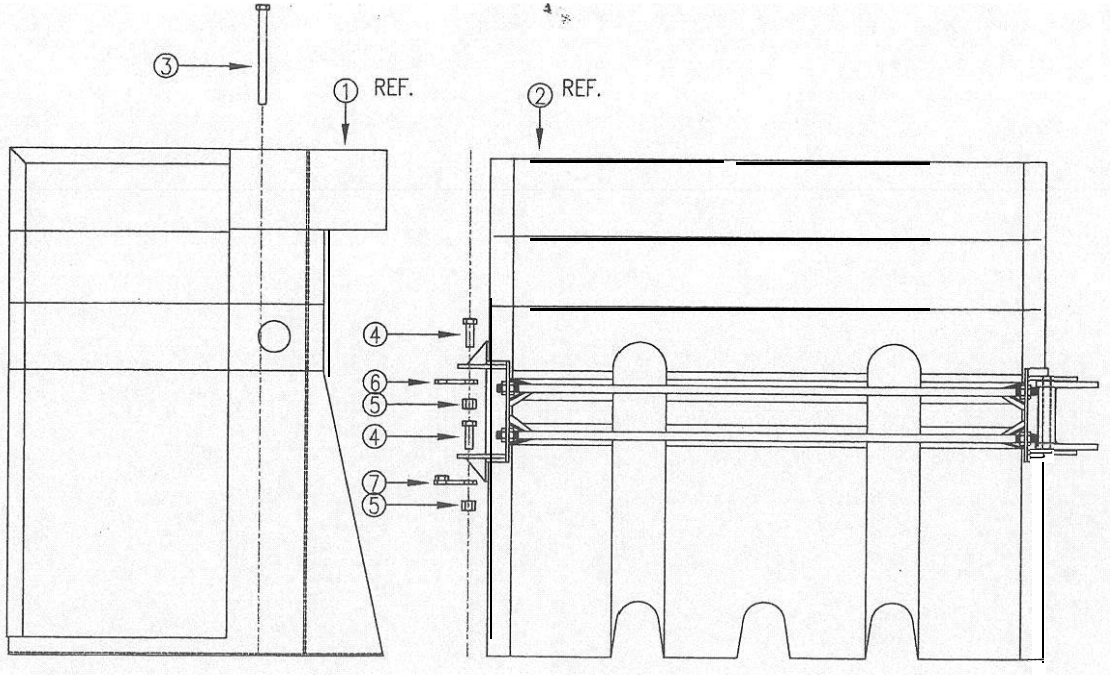

SEE B000421.BOM FOR MATERIAL LIST

NOTE:
THICKNESS OF WELD TO BE EQUAL TO THE THINNER OF 2 PIECES BEING JOINED. WELD TO BE ALL AROUND UNLESS OTHERWISE NOTED.

© 2000 Barrier Systems, Inc.

The information heron is proprietary to Barrier Systems Inc. and shall not be disclosed, duplicated or used otherwise without the express written approval of Barrier Systems Inc.

REV.	CHANGES	DATE	BY	REQ'D	NEXT ASSY.	ITEM
				1	XXXXXXX	1

SCALE: EIGHTH

	DATE	INIT.
DRAWN BY	04/27/00	JES
APPR'D BY		

Standard Tolerance
Angular ± 1/2°
Fractional ± 1/16
Decimal ± .010

TITLE: ABSORB 350 END ASSEMBLY DETAILS

MODEL	DRAWING NUMBER	REV.
	B000421	

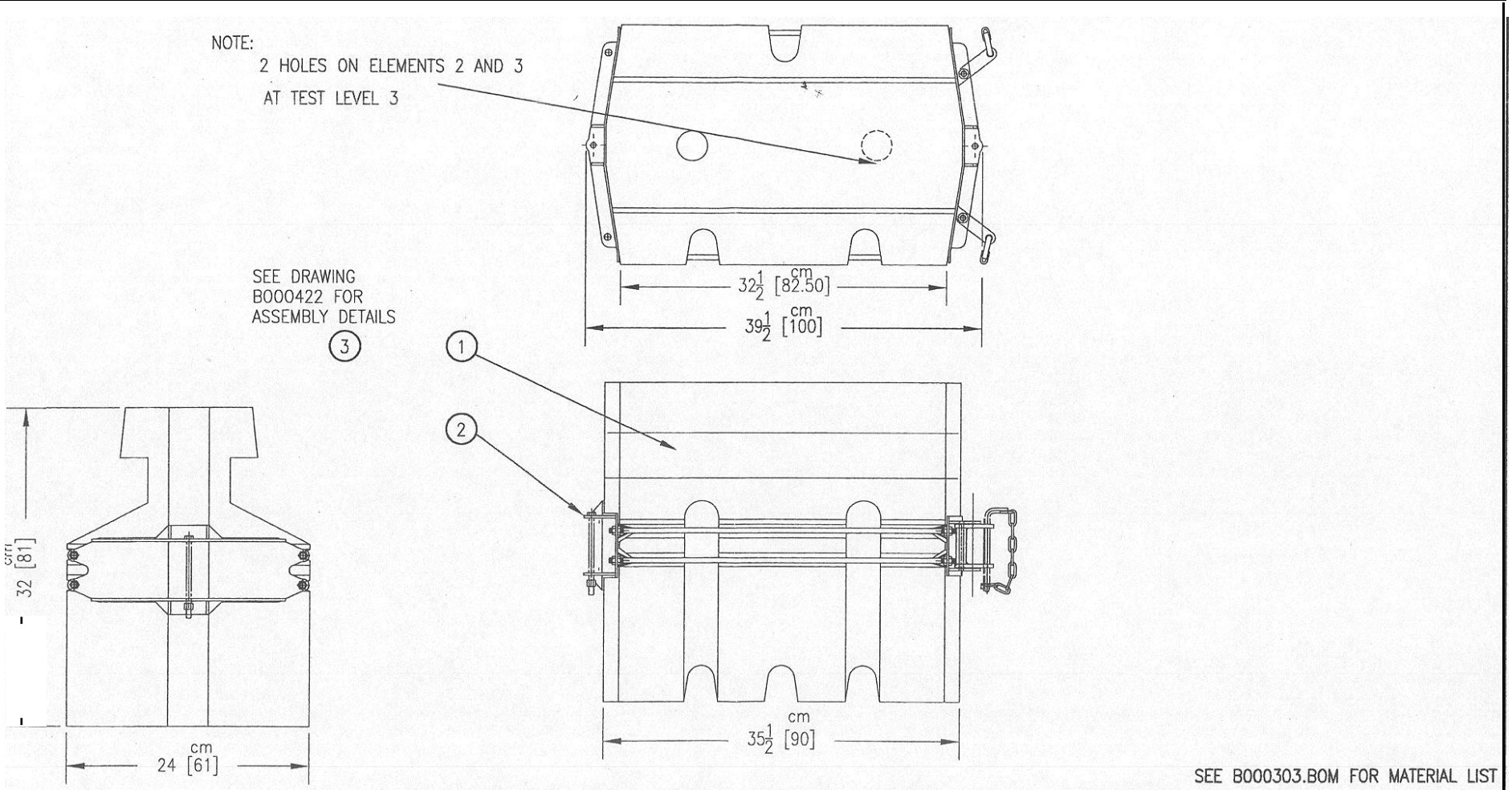

NOTE:
THICKNESS OF WELD TO BE EQUAL TO THE THINNER OF 2 PIECES BEING JOINED. WELD TO BE ALL AROUND UNLESS OTHERWISE NOTED

© 2000 Barrier Systems, Inc.

The information heron is proprietary to Barrier Systems Inc. and shall not be disclosed, duplicated or used otherwise without the express written approval of Barrier Systems Inc

REV.	CHANGES	DATE	BY

REQ'D	NEXT ASSY	ITEM
5	B000310	2
9	B000304	2
4	B000211	2
8	B991205	2

SCALE: 1=10

	DATE	INIT.
DRAWN BY	3/2/00	R.R.C.
APPR'D BY		

Standard Tolerance
Angular ± 1/2°
Fractional ± 1/16
Decimal ± .010

TITLE : ABSORB 350 ELEMENT

MODEL	DRAWING NUMBER	REV.
	B000303	

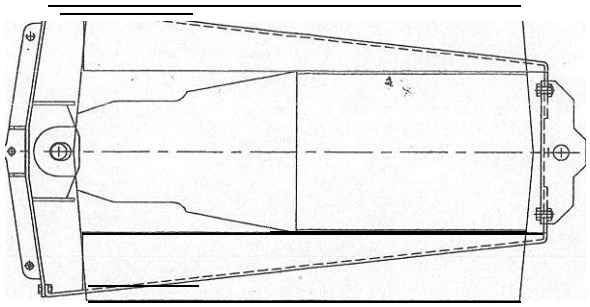

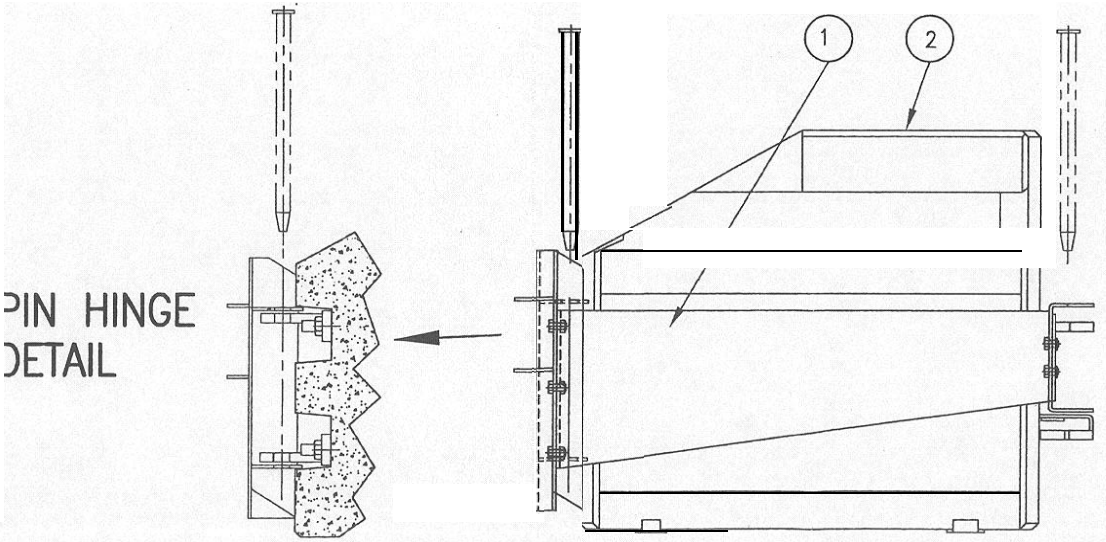

SEE XB000419.BOM FOR MATERIAL LIST

NOTE:
THICKNESS OF WELD TO BE EQUAL TO THE THINNER OF 2 PIECES BEING JOINED. WELD TO BE ALL AROUND UNLESS OTHERWISE NOTED.

© 2000 Barrier Systems, Inc.

The information heron is proprietary to Barrier Systems Inc. and shall not be disclosed, duplicated or used otherwise without the express written approval of Barrier Systems Inc.

REV.	CHANGES	DATE	BY	REQ'D	NEXT ASSY.	ITEM
				1	B991205	3

SCALE: 1=10

	DATE	INIT.
DRAWN BY	4/278/00	DGB
APPR'D BY		

Standard Tolerance
Angular ± 1/2°
Fractional ± 1/16
Decimal ± .010

TITLE : ASSEMBLY
TRANSITION BARRIER
ABSORB 350

MODEL	DRAWING NUMBER	REV.
	B000419	

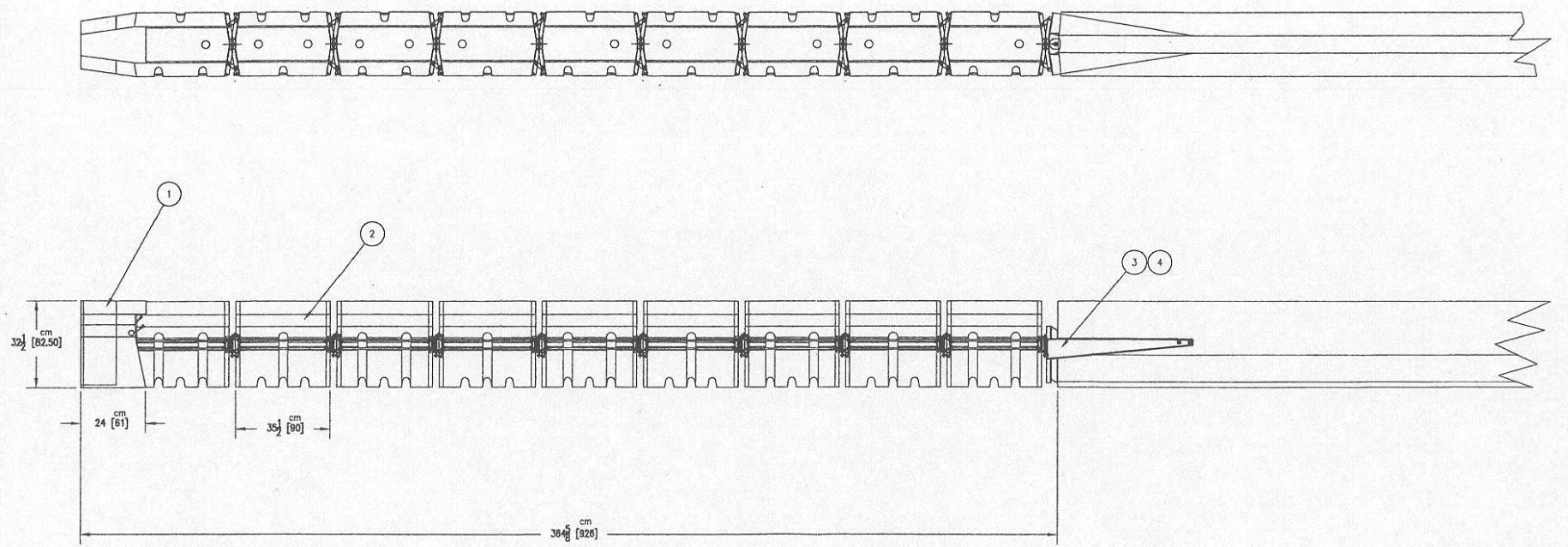

SEE B000304.BOM FOR MATERIAL LIST

NOTE:
THICKNESS OF WELD TO BE EQUAL TO THE THINNER OF 2 PIECES BEING JOINED. WELD TO BE ALL AROUND UNLESS OTHERWISE NOTED.

© 2000 Barrier Systems, Inc.

The information heron is proprietary to Barrier Systems inc. and shall not be disclosed, duplicated or used otherwise without the express written approval of Barrier Systems Inc.

REV.	CHANGES	DATE	BY	REQ'D	NEXT ASSY.	ITEM
				1		1

SCALE: 1=40

	DATE	INIT.
DRAWN BY	3/2/00	R.R.C.
APPR'D BY		

Standard Tolerance
Angular ± 1/2°
Fractional ± 1/16
Decimal ± .010

TITLE : ASSEMBLY, ABSORB 350 TL3 P.C.M.B.

MODEL	DRAWING NUMBER	REV.
	B000304	

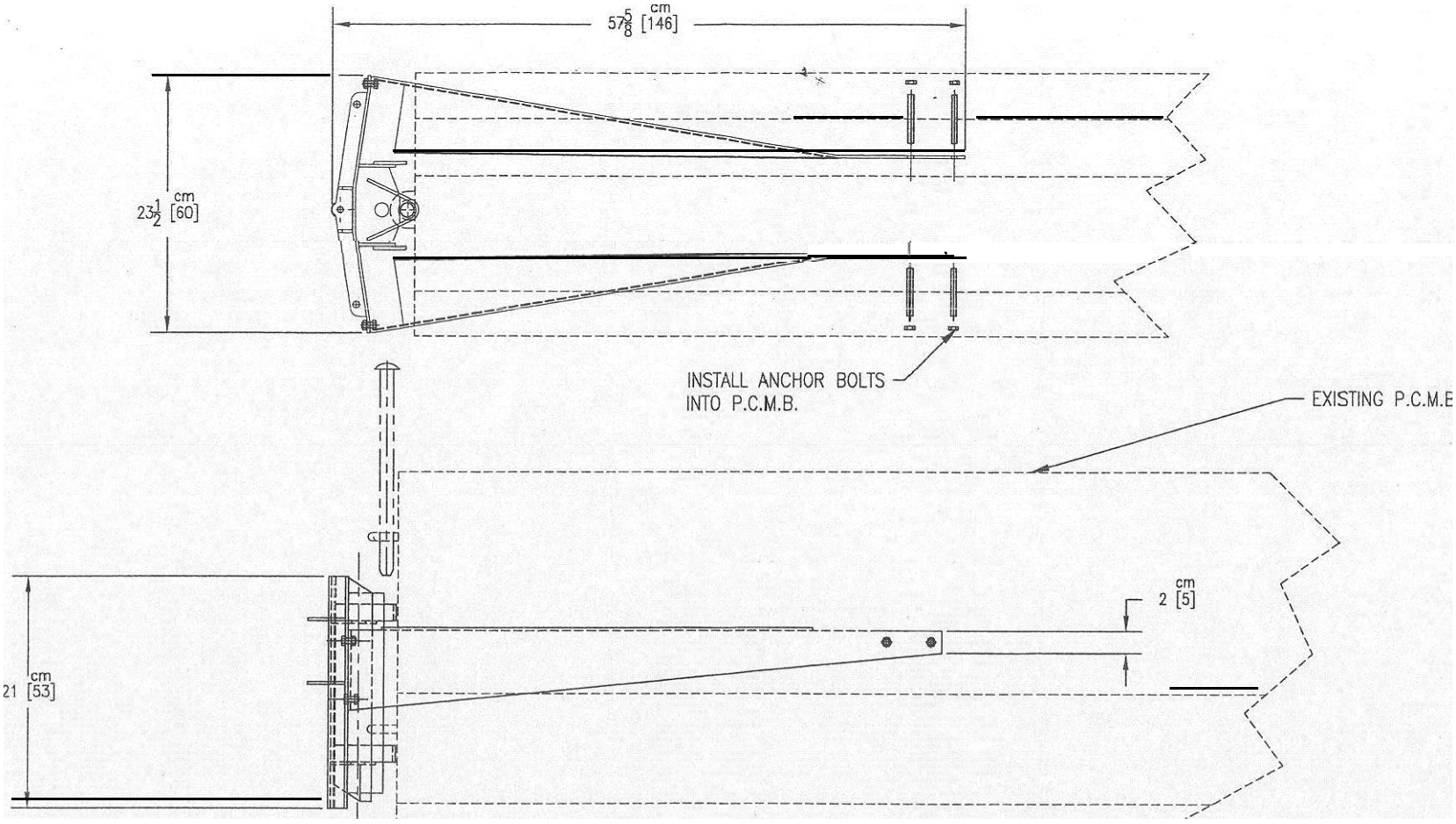

NOTE:
THICKNESS OF WELD TO BE EQUAL TO THE THINNER OF 2 PIECES BEING JOINED. WELD TO BE ALL AROUND UNLESS OTHERWISE NOTED.

© 2000 Barrier Systems, Inc.
The information heron is proprietary to Barrier Systems Inc. and shall not be disclosed, duplicated or used otherwise without the express written approval of Barrier Systems Inc.

REV.	CHANGES	DATE	BY	REQ'D	NEXT ASSY.	ITEM
				1	B000304	

SCALE: 1=10

	DATE	INIT.
DRAWN BY	4/28/00	DGB
APPR'D BY		

Standard Tolerance
Angular ± 1/2°
Fractional ± 1/16
Decimal ± .010

TITLE:
ADAPTER INSTALLATION
ABSORB 350 P.C.M.B.

MODEL	DRAWING NUMBER	REV.
	B000420	

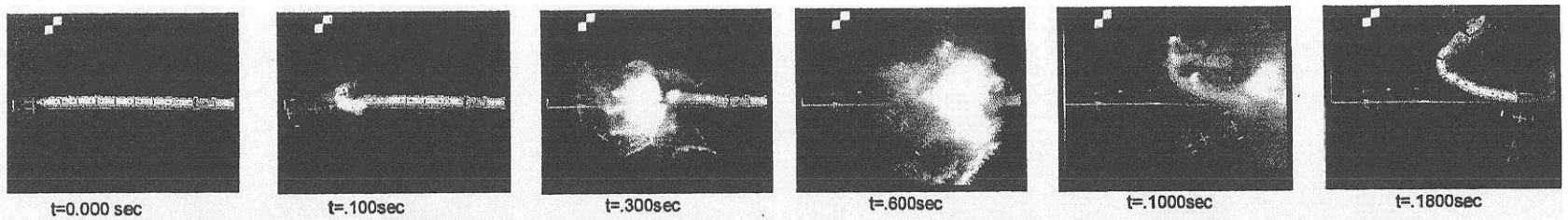

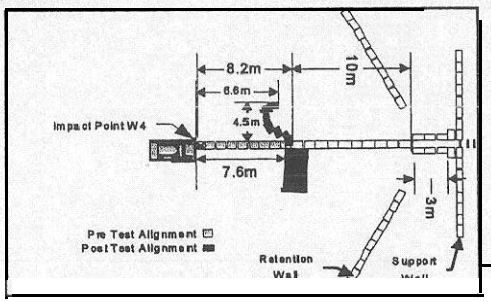

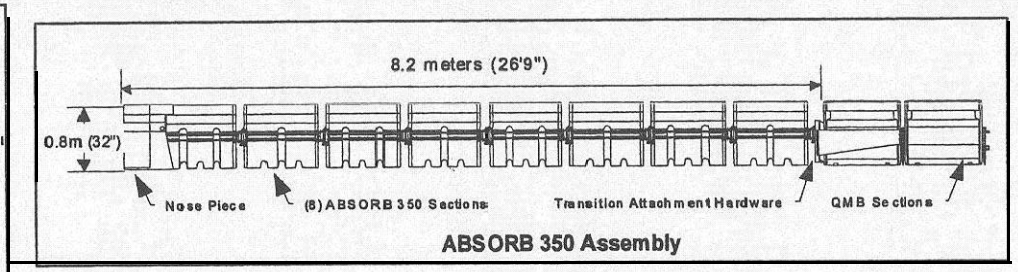

General Information

Test Agency	SAFE TECHNOLOGIES INC.
Test Designation	NCHRP 350 3-40
TestNo	ABSORB 350/Test #AET02
Date	2/4/00

Test Article

Type	Barrier Systems, Inc. ABSORB 350 NonRedieative Crash Cushion
Installation Length	8.2m overall (8 ABSORB sections w/ nose)
Size and/or dimension and material of key elements	Section length 1000mm, height 813mm, width 610mm, mass 48kg empty/315kg Full

Test Vehicle

Type	Production Model
Designation	820C
Model	1991, Ford Festiva
Mass (kg)	
Curb	807
TestIner!M	834
D"mnly(s)	75
Gross static	909

Impact Conditions

speed (km/h)	89.3
Angle(deg)	OatW4
impact Severily (kJ)	317

Exit Conditions

Speed (km/h)	N/A
Angle (deg)	NIA

Occupant risk Values

Impact Velocity (m/s)	
x-direction	10.2
y-direction	4.3
Ridedown Accleration (g's)	
x-direction	-11
y-direction	-3.2
THIV (m/s)	9.7
PHD (g's)	11.3
AS I	1.19

Vehicle Damage

Exterior

VOS	FL-.?
CDC	12FLEN2
Interior	
OCDI	AS0000000

Post-Impact Vehicular behavior (deg -gyro @ c.g)

Maximum Roll Angle	-413	(observed <10)
Maximum Pitch Angle	49.2	(observed <10)
Maximum Yaw Angle	-198	(observed 260)

Figure 6. Summary of Results Test #AET02

ENCLOSURE 2 (1 OF 5)

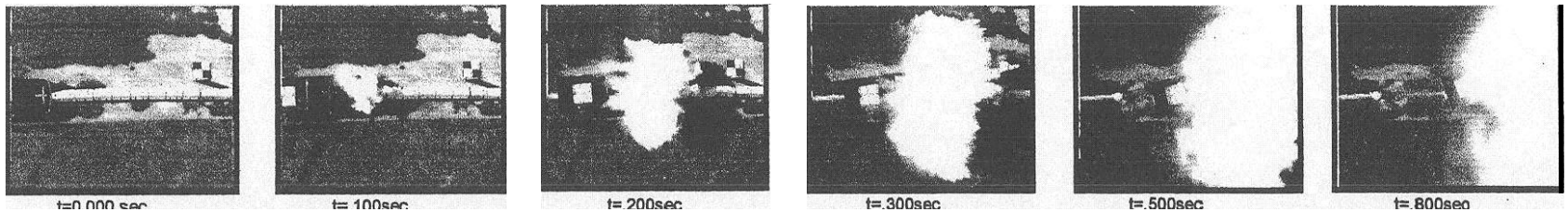

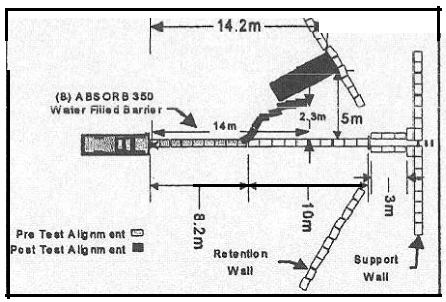

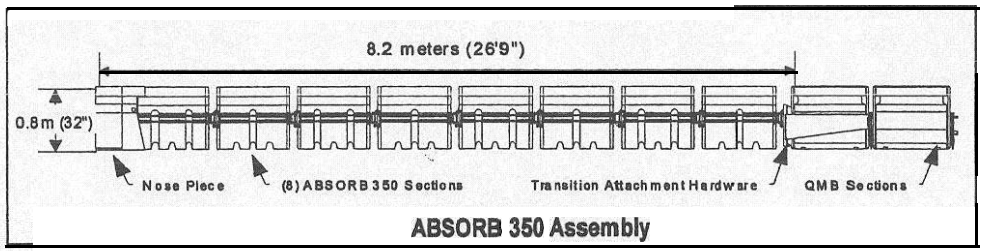

General Information

Test Agency	SAFE TECHNOLOGIES, INC.
Test Designation	NCHRP3503-41
Test No	ABSORB 350 / Test #AET01
Date	2/15/00

Test Article

Type	Barrier Systems, Inc. ABSORB 350 Non-Redirective Crash Cushion
Installation Length	8.2m overall (8 ABSORB sections w / nose)
Size and/or dimension and material of key elements	Section length 1000mm, height 813mm, width 610mm, mass 48kg empty / 315kg Full

Test Vehicle

Type	Production Model
Designation	2000P
Model	1989, Chevrolet Silverado 2500 3/4 Ton Pickup
Mass (kg)	
Curb	1901
Test Inertial	1976
Dummy(s)	n/a
Gross Static	1976

Impact Conditions

Speed (km/h)	99.2
Angle (deg)	0
Impact Severity (kJ)	750

Exit Conditions

Speed (km/h)	7.5
Angle (deg)	27

Occupant risk Values

Impact Velocity (m/s)	
x-direction	9.7
y-direction	0.3
Ridedown Acceleration (g's)	
x-direction	-11.9
y-direction	-4.8
THIV (m/s)	9.7
PHD (g's)	13.6
ASI	0.99

Vehicle Damage

Exterior	
VDS	FC-4
CDC	12FDEW2
Interior	
OCDI	AS0000000

Post-Impact Vehicular behavior (deg - gyro @ c.g.)

Maximum Roll Angle	8.6 (observed <10)
Maximum Pitch Angle	-27.4 (observed < 10)
Maximum Yaw Angle	-31.2 (observed 30)

Figure 1. Summary of Results Test #AET01

ENCLOSURE 2 (2 OF 5)

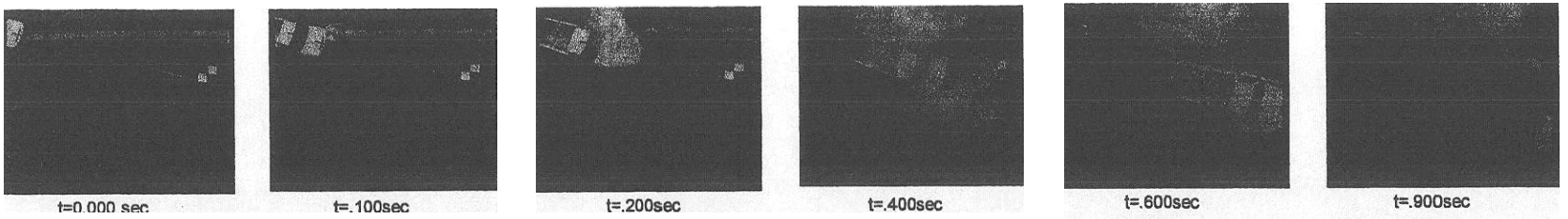

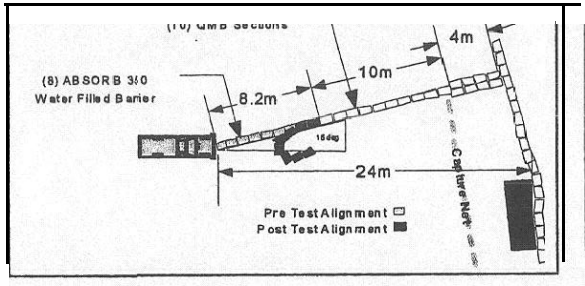

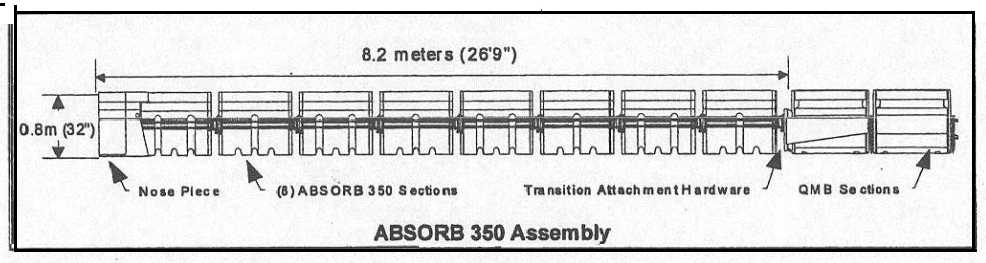

General Information

Test Agency..... SAFE TECHNOLOGIES, INC.
Test Designation..... NCHRP 350 3-43
Test No..... ABSORB 350 / Test #AET03
Date..... 2/17/00

Test Article

Type..... Barrier Systems, Inc.
ABSORB 350 Non-Redirective Crash Cushion
8.2m overall (8 ABSORB sections w / nose)

Size and/or dimension and material
of key elements..... Section length 1000mm, height 813mm,
width 610mm, mass 48kg empty / 315kg Full

Test Vehicle

Type..... Production Model
Designaton..... 2000P
Model..... 1988, Chevrolet Cheyenne 2500
3/4 Ton Pickup

Mass (kg)
Curb..... 1996
Test Inertial..... 1984
Dummy(s)..... n/a
Gross Static..... 1984

Impact Conditions

Speed (km/h)..... 97.2
Angle (deg)..... 15
Impact Severity (kJ)..... 723

Exit Conditions

Speed (km/h)..... 74
Angle (deg)..... 13

Occupnt risk Values

Impact Velocity (m/s)
x-direction..... 7.6
y-direction..... -2.1
Ridedown Acceleration (g's)
x-direction..... -8.3
y-direction..... -6.5
HIV (m/s)..... 7.9
HD (g's)..... 12.3
SI..... 0.85

Vehicl Damage

Exterior
VDS..... FC-4
CDC..... 12FDEW2
Interior

Maximum Roll Angle..... 32.3 (observed <35)
Maximum Pitch Angle..... 11.9 (observed <15)
Maximum Yaw Angle..... -28.7 (observed <20)

Figure 11. Summary of Results Test #AET03

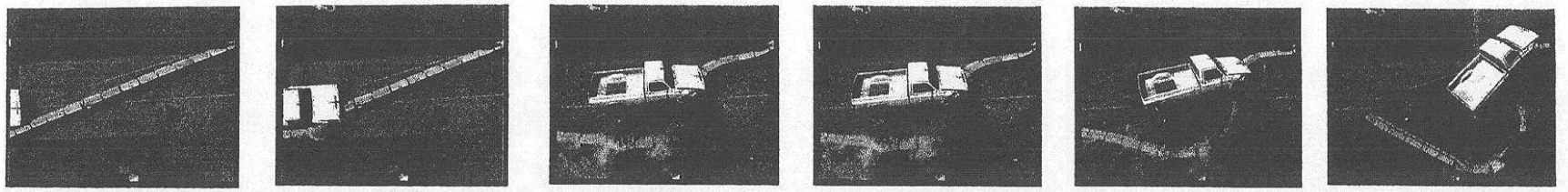

t=0.000 sec | t=.100sec | t=.300sec | t=.500sec | t=.700sec | t=1.4sec

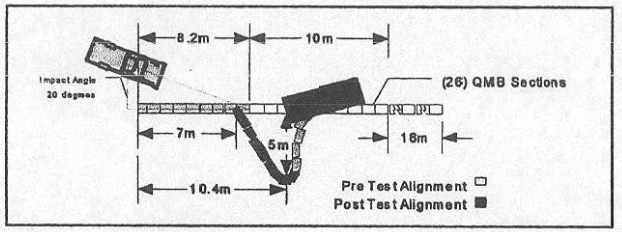

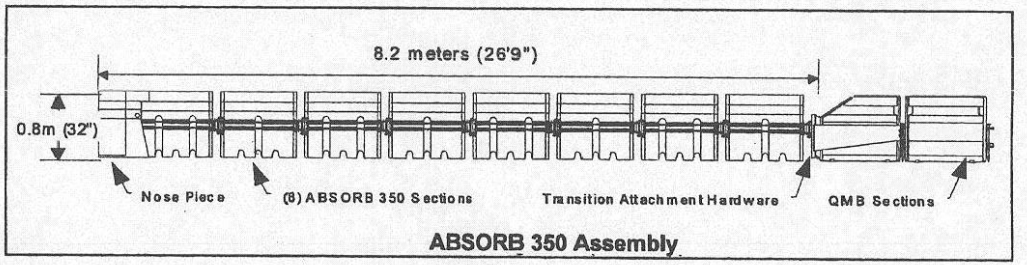

General Information

Test Agency	SAFE TECHNOLOGIES, INC.
Test Designation	NCHRP 350 3-38
Test No.	ABSORB 350 / Test #AET11
Date	4/13/00

Test Article

Type	Barrier Systems, Inc. ABSORB 350 Non-Redirective Crash Cushion
Installation Length	8.2 m overall (8 ABSORB sections w / nose)
Size and/or dimension and material of key elements	Section length 1000mm, height 813mm, width 610mm, mass 48kg empty / 315kg Full

Test Vehicle

Type	Production Model
Designation	2000P
Model	1978, Chevrolet 3/4 Ton Pickup
Mass (kg)	
Curb	2093
Test Inertial	1975
Dummy(s)	n/a
Gross Static	1975

Impact Conditions

Speed (km/h)	97.2
Angle (deg)	20
Impact Severity (kJ)	720

Exit Conditions

Speed (km/h)	0
Angle (deg)	

Occupant risk Values

Impact Velocity (m/s)	
x-direction	8.9
y-direction	0.4
Ridedown Acceleration (g's)	
x-direction	-20.7
y-direction	-8.8
THIV (m/s)	8.8
PHD (g's)	27.8
ASI	0.96

Vehicle Damage

Exterior	
VDS	FC-5
CDC	12FDEW2
Interior	
OCDI	AS0000000

Post-Impact Vehicular behavior (deg - gyro @ c.g.)

Maximum Roll Angle	-53.9
Maximum Pitch Angle	-9.3
Maximum Yaw Angle	-43.9

Figure 6. Summary of Results Test #AET11

ABS RB

RE

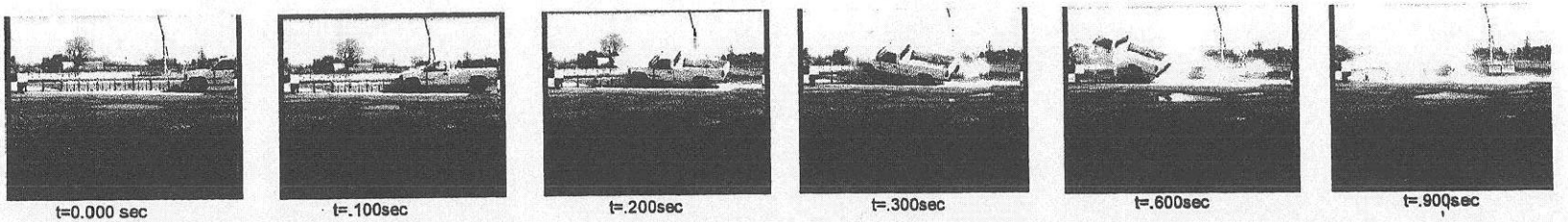

t=0.000 sec | t=.100sec | t=.200sec | t=.300sec | t=.600sec | t=.900sec

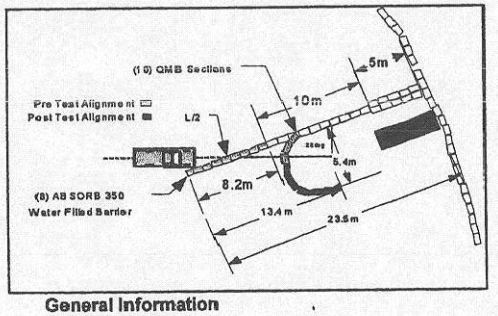

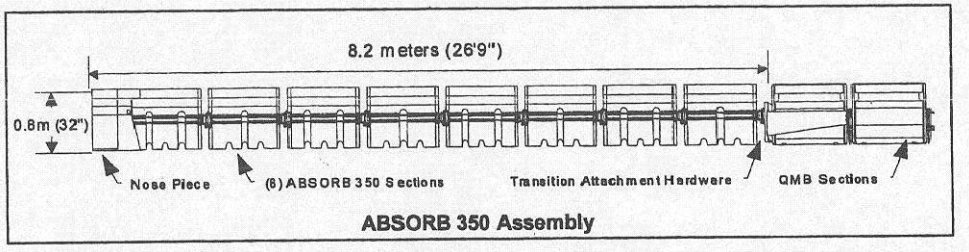

General Information

Test Agency	**SAFE TECHNOLOGIES, INC.**
Test Designation	**NCHRP 350 3-44**
Test No.	**ABSORB 350 / Test #AET04**
Date	2/23/00
Test Article	
Type	Barrier Systems, Inc. ABSORB 350 Non-Redirective Crash Cushion
Installation Length	8.2m overall (8 ABSORB sections w / nose)
Size and/or dimension and material of key elements	Section length 1000mm, height 813mm, width 610mm, mass 48kg empty / 315kg Full
Test Vehicle	
Type	Production Model
Designation	2000P
Model	1988, Chevrolet Cheyenne 2500 3/4 Ton Pickup
Mass (kg)	
Curb	1923
Test Inertial	1930
Dummy(s)	n/a
Gross Static	1930
Impact Conditions	
Speed (km/h)	98.3
Angle (deg)	20
Impact Severity (kJ)	720

Exit Conditions

Speed (km/h)	39
Angle (deg)	15
Occupant risk Values	
Impact Velocity (m/s)	
x-direction	8.1
y-direction	0.8
Ridedown Acceleration (g's)	
x-direction	-14.6
y-direction	-13.6
THIV (m/s)	8.1
PHD (g's)	19
ASI	1.21
Vehicle Damage	
Exterior	
VDS	FD-3
CDC	12FDEW3
Interior	
OCDI	RF0110000
Post-Impact Vehicular behavior (deg - gyro @ c.g.)	
Maximum Roll Angle	51.6
Maximum Pitch Angle	-23.3
Maximum Yaw Angle	-25

Figure 16. Summary of Results Test #AET04

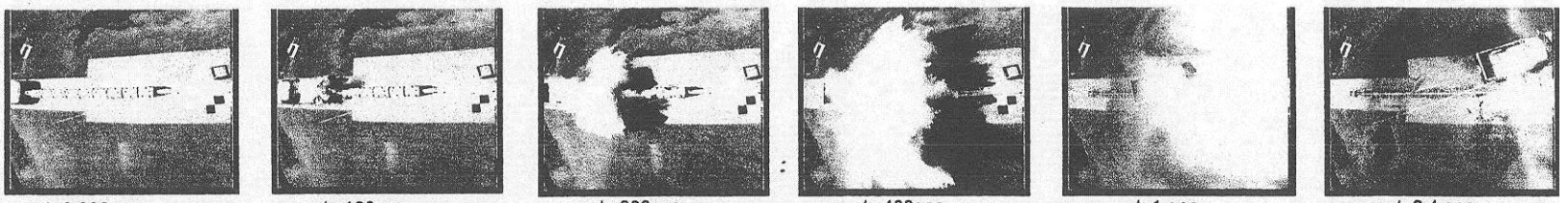

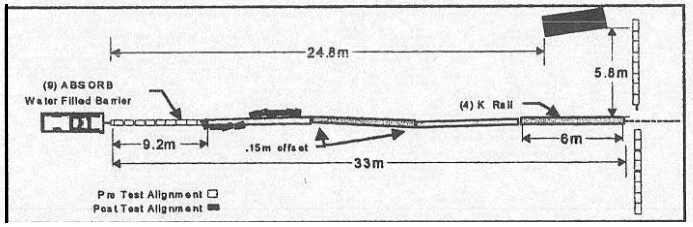

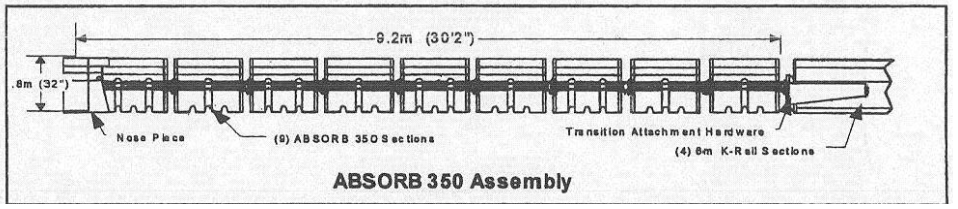

General Information

Test Agency	SAFE TECHNOLOGIES, INC.
Test Designation	NCHRP 350 3-41
Test No	ABSORB 350 / Test #AET06
Date	3/1/00

Test Article

Type	Barrier Systems, Inc. ABSORB 350 Non-Redirective Crash Cushion
Installation Length	9.2m overall (9 ABSORB sections w / nose)
Size and/or dimension and material of key elements	section length 1000mm, height 813mm, width 610mm, mass 48kg empty / 315kg Full

Test Vehicle

Type	Production Model
Designation	2000P
Model	1989, GMC Sierra 3/4 Ton pickup
Mass (kg)	
Curb	1932
Test inertial	1985
Dummy(s)	n/a
Gross static	1985

Impact Conditions

Speed (km/h)	97
Angle (deg)	0
Impact severity (kJ)	720

Exit Conditions

Speed (km/h)	7.9
Angle (deg)	20

occupant risk Values

Impact Velocity (m/s)	
x-direction	10.1
y-direction	-0.3
Ridedown Acceleration (g's)	
x-direction	-14.3
y-direction	5.4
THIV (m/s)	10.1
PHD (g's)	14.4
ASI	0.95

Vehicle Damage

Exterior	
"OS	FC-3
CDC	12FDEW1
Interior	
OCDI	AS0000000

Post-Impact Vehicular behavior (deg. gyro @ c.g.)

Maximum Roll Angle	12.8 (observed <10)
Maximum Pitch Angle	-12.9 (observed <5)
Maximum Yaw Angle	-15.7 (observed 20)

Figure 26. Summary of Results Test #AET06

OSURE

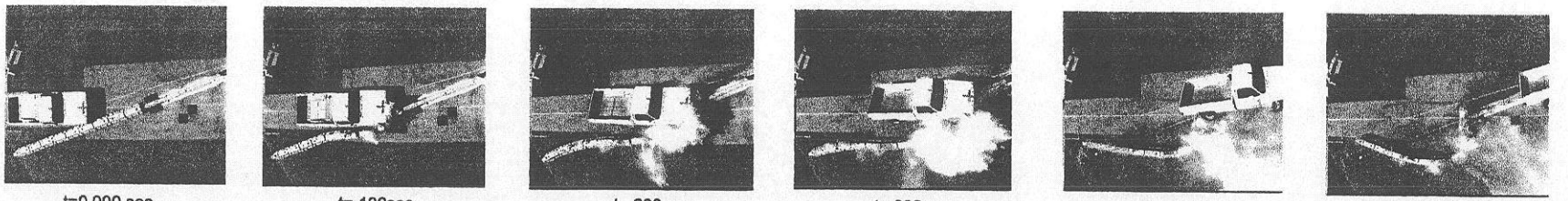

t=0.000 sec | t=.100sec | t=.200sec | t=.300sec | t=.500 sec | t=.800 sec

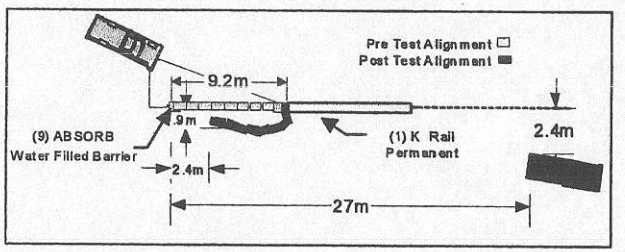

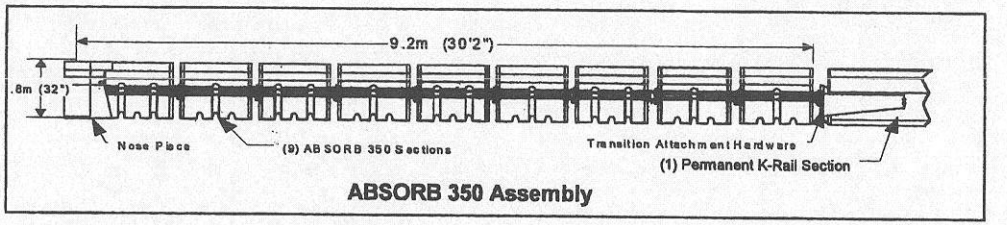

ABSORB 350 Assembly

General Information

Test Agency..... SAFE TECHNOLOGIES, INC.
Test Designation..... NCHRP 350 3-38
Test No..... ABSORB 350 / Test #AET07
Date..... 3/29/00

Test Article

Type..... Barrier Systems, Inc.
ABSORB 350 Non-Redirective Crash Cushion

Installation Length..... 9.2m overall (9 ABSORB sections w / nose)

Size and/or dimension and material
of key elements..... Section length 1000mm, height 813mm, width 610mm, mass 48kg empty / 315kg Full

Test Vehicle

Type..... Production Model
Designation..... 2000P
Model..... 1983, GMC 3/4 Ton Pickup

Mass (kg)
Curb..... 1935
Test Inertial..... 1968
Dummy(s)..... n/a
Gross Static..... 1968

Impact Conditions

Speed (km/h)..... 95.5
Angle (deg)..... 20
Impact Severity (kJ)..... 694

Exit Conditions

Speed (km/h)..... 39.4
Angle (deg)..... 20

Occupant risk Values

Impact Velocity (m/s)
x-direction..... 8
y-direction..... 0.6
Ridedown Acceleration (g's)
x-direction..... -27.8
y-direction..... -7.3
THIV (m/s)..... 8
PHD (g's)..... 32.5
ASI..... 1.13

Vehicle Damage

Exterior
VDS..... FC-4
CDC..... 12FDEW1
Interior
OCDI..... AS0000000

Post-Impact Vehicular behavior (deg - gyro @ c.g.)

Maximum Roll Angle..... -53.3 (observed <)
Maximum Pitch Angle..... 18.1 (observed <)
Maximum Yaw Angle..... -15.3 (observed)

Figure 1. Summary of Results Test #AET07

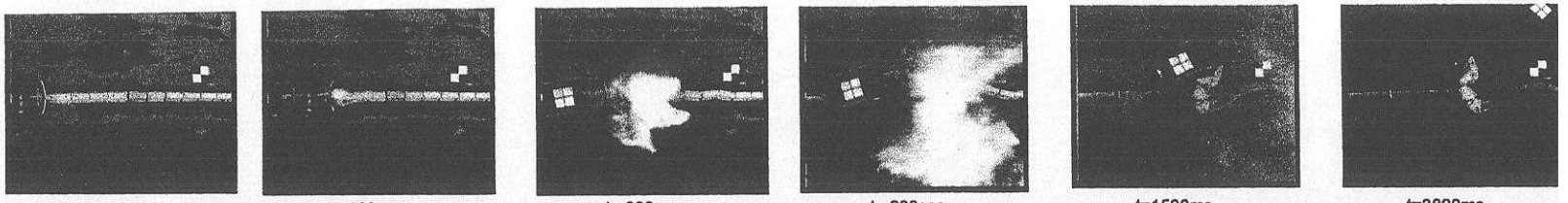

t=0.000 sec | t=.100sec | t=.300sec | t=.600sec | t=1500ms | t=3800ms

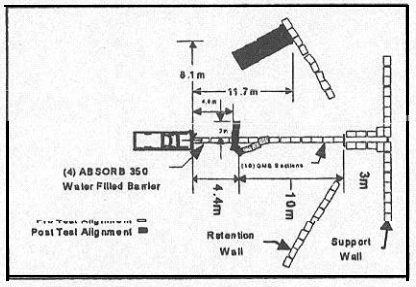

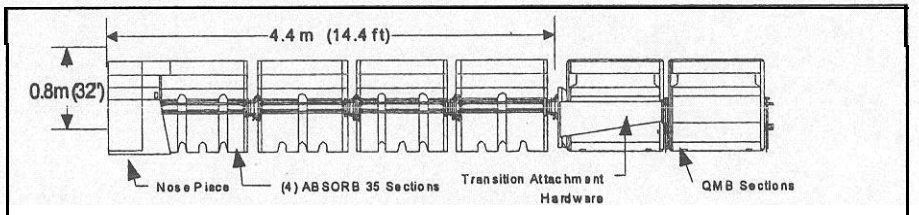

ABSORB 350 Four Element System (70 km/h)

General Information

Test Agency	**SAFE TECHNOLOGIES, INC**
Test Designation	**NCHRP 350 2-41**
Test No.	**ABSORB 350 / Test #AET05**
Date	2/15/00

Test Article

Type	Barrier Systems, Inc. ABSORB 350 Non-Redirective Crash Cushior
Installation Length	4.4 m overall (4 ABSORB sections w / nose)
Size and/or dimension and material of key elements	Section length 1000mm, height 813mm, width 610mm, mass 48kg empty / 315kg Full

Test Vehicle

Type	Production Model
Designation	2000P
Model	1988, Chevrolet 2500 3/4 Ton Pickup
Mass (kg)	
Curb	1950
Test Inertial	1958
Dummy(s)	n/a
Gross Static	1958

Impact Conditions

Speed (km/h)	67.2
Angle (deg)	0
Impact Severity (kJ)	341

Exit Conditions

Speed (km/h)	9.7
Angle (deg)	28

Occupant risk Values

Impact Velocity (m/s)	
x-direction	7.3
y-direction	I
Ridedown Acceleration (g's)	
x-direction	-7.7
y-direction	-3.1
THIV (m/s)	7.4
PHD (g's)	7.8
ASI	0.64

Vehicle Damage

Exterior	
VDS	FC-4
CDC	12FCEN2
Interior	
OCDI.	AS0000000

Post-Impact Vehicular behavior (deg - gyro @ c.g.)

Maximum Roll Angle	8.7 (observed <5)
Maximum Pitch Angle	-0.5 (observed <10)
Maximum Yaw Angle	-50.9 (observed <30)

Figure 21. Summary of Results Test #AET05

ENCLOSURE 4

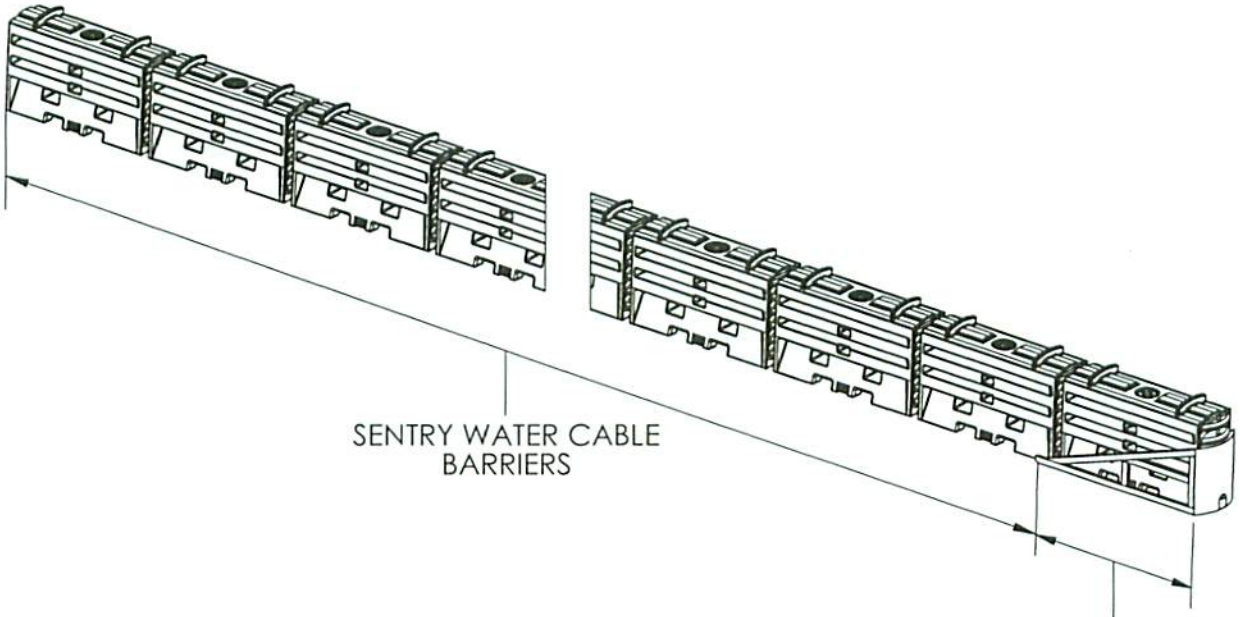

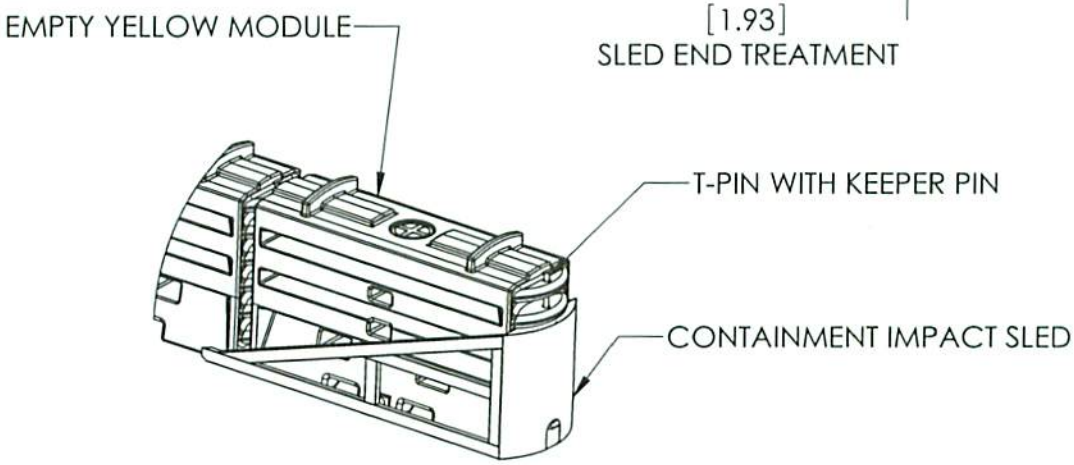

SLED END TREATMENT

TrafFix Devices Inc.

SER##

SHEET NO.	DATE:
1 OF 2	08/27/2010

INTENDED USE

The Sentry Longitudinal Energy Dissipater (SLED) End Treatment is a narrow water filled non-redirective, gating crash cushion designed to shield the Sentry Water Cable Barrier. Like the Sentry Water Cable Barrier the SLED End Treatment does not require foundation anchor bolts to be attached to road surface. The complete end treatment can be installed on firm soil, asphalt, and concrete.

The SLED End Treatment meets NCHRP-350 TL-3, TL-2, and TL-1 crashworthy test criteria as a non-redirective crash cushion. The complete end treatment consists of one yellow empty module and a Containment Impact Sled (CIS).

SLED End Treatment
Length: 75-3/4 in (1.93 m)
Height: 42-11/16 in (1.09 m)
Width: 22-1/2 in (0.57 m)

The SLED End Treatment has been fully tested to the recommended procedures of Report NCHRP-350.

ACCEPTANCE

FHWA Acceptance Letters:

CONTACT INFORMATION

TrafFix Devices, Inc.
Corporate Headquarters
160 Avenida La Pata
San Clemente, CA 92673
www.traffixdevices.com

Phone: +1(949)-361-5663
Fax: +1(949)-361-9205
Email: info@traffixdevices.com

SLED END TREATMENT

SER##	
SHEET NO.	DATE:
2 OF 2	08/27/2010

TrafFix Devices Inc.

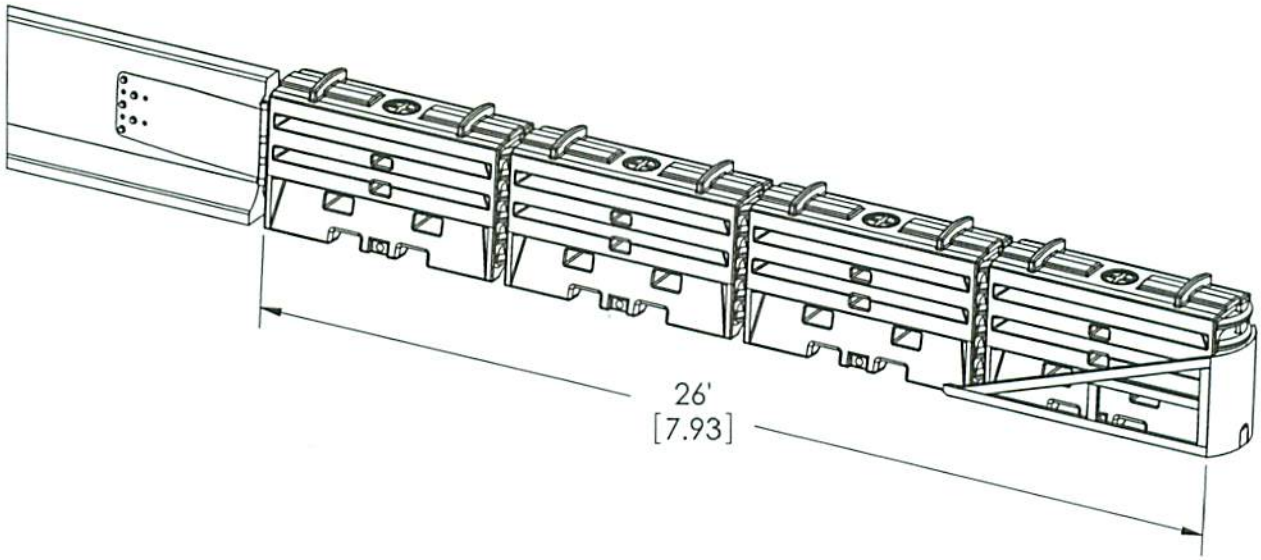

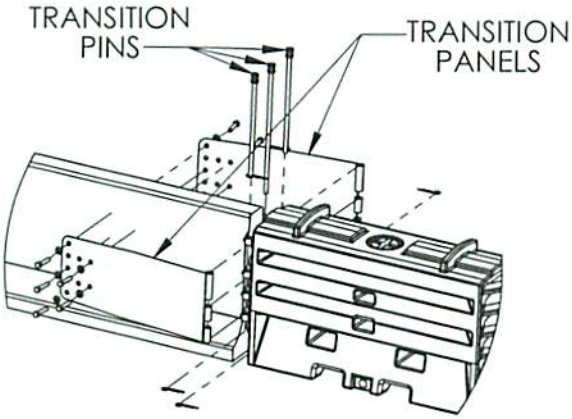

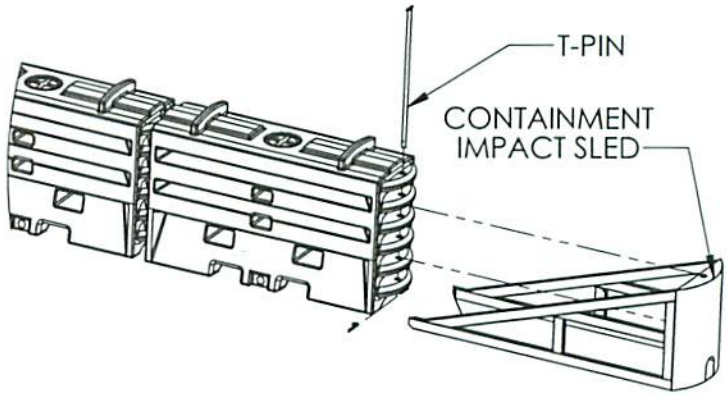

SLED END TREATMENT

TrafFix Devices Inc.

SER##

SHEET NO.	DATE:
1 OF 2	08/27/2010

INTENDED USE

The Sentry Longitudinal Energy Dissipater (SLED) End Treatment is a narrow water-filled non-redirective, gating crash cushion designed to shield the end of all permanent and portable barrier shapes including concrete, steel, and plastic. The SLED End Treatment does not require foundation anchor bolts to be attached to the road surface. The complete crash cushion can be installed on firm soil, asphalt, and concrete.

The SLED End Treatment meets NCHRP-350 TL-3, TL-2, and TL-1 crashworthy test requirements as a non-redirective crash cushion. Four yellow modules make up the complete crash cushion assembly. Front module 1 is left empty and weighs 160 lbs. [75.6 kg]. Modules 2, 3, and 4 are filled and weigh approximately 2000 lbs [907.2 kg]. The Containment Impact Sled is attached to the front of Module 1 and the Transition is attached to the rear of Module 4.

SLED End Treatment
Length: 26 ft (7.93 m) Four (4) Modules
Height: 42-11/16 in (1.09 m)
Width: 22-1/2 in (0.57 m)

The SLED End Treatment has been fully tested to the recommended procedures of NCHRP-350.

ACCEPTANCE

FHWA Acceptance Letters:

CONTACT INFORMATION

TrafFix Devices, Inc.
Corporate Headquarters
160 Avenida La Pata
San Clemente, CA 92673
www.traffixdevices.com

Phone: +1(949)-361-5663
Fax: +1(949)-361-9205
Email: info@traffixdevices.com

SLED END TREATMENT

SER##	
SHEET NO.	DATE:
2 OF 2	08/27/2010

TrafFix Devices Inc.

DATA SHEET 4

SUMMARY OF RESULTS

Test Article:	TrafFix Devices Sentry End Treatment	Project No.:	P30061-01
Test Program:	NCHRP 350 3-40	Test Date:	05/14/10
Test Vehicle:	1995 Geo Metro		

GENERAL INFORMATION		OCCUPANT RISK VALUES	
TEST AGENCY	KARCO Engineering, LLC	FLAIL SPACE VELOCITY (m/sec)	
TEST NO.	3-40	X DIRECTION	10.6
DATE	5/14/2010	Y DIRECTION	0.4
TEST ARTICLE		THIV (Optional)	
TYPE	Crash Cushion	RIDEDOWN ACCELERATION (g's)	
INSTALLATION LENGTH	25.0 m (82.1 ft.)	X DIRECTION	-15.7
SIZE AND/OR DIMENSION OF KEY ELEMENTS	Nominal Mass 79.4 kg (175 lbs)	Y DIRECTION	2.2
SOIL TYPE AND CONDITION	Concrete	PHD (Optional)	
TEST VEHICLE		ASI (Optional)	
TYPE	Production Model	**TEST ARTICLE DEFLECTIONS (m)**	
DESIGNATION	820C	DYNAMIC	
MODEL	1995 Geo Metro	PERMANENT	
MASS (CURB)	807.0 kg (1779 lbs)	**VEHICLE DAMAGE**	
MASS (TEST INERTIAL)	806.5 kg (1778 lbs)	EXTERIOR	
DUMMY MASS	75.0 kg (165 lbs)	VDS	12-FR-5
MASS (GROSS STATIC)	885.5 kg (1952 lbs)	CDC	12FREW2
IMPACT CONDITIONS		INTERIOR	
VELOCITY (km/h)	99.6 km/h (61.9 mi/h)	OCDI	FS0000000
ANGLE (°)	0.1		
IMPACT SEVERITY (kJ)	337.9	**POST-IMPACT VEHICULAR BEHAVIOR**	
EXIT CONDITIONS		MAXIMUM ROLL ANGLE (°)	-7.0
VELOCITY (km/h)		MAXIMUM PITCH ANGLE (°)	-7.4
ANGLE (°)		MAXIMUM YAW ANGLE (°)	-165.3

DATA SHEET 4

SUMMARY OF RESULTS

Test Article:	TrafFix Devices Sentry End Treatment	Project No.:	P30040-01
Test Program:	NCHRP 350 3-41	Test Date:	04/15/10
Test Vehicle:	1998 Chevrolet 2500 Cheyenne		

GENERAL INFORMATION		OCCUPANT RISK VALUES	
TEST AGENCY	KARCO Engineering, LLC	FLAIL SPACE VELOCITY (m/sec)	
TEST NO.	3-41	X DIRECTION	11.1
DATE	4/15/2010	Y DIRECTION	0.1
TEST ARTICLE		THIV (Optional)	
TYPE	Crash Cushion	RIDEDOWN ACCELERATION (g's)	
INSTALLATION LENGTH	25.0 m (82.1 ft.)	X DIRECTION	-11.0
SIZE AND/OR DIMENSION OF KEY ELEMENTS	Nominal Mass 79.4 kg (175 lbs)	Y DIRECTION	-2.7
SOIL TYPE AND CONDITION	Concrete	PHD (Optional)	
TEST VEHICLE		ASI (Optional)	
TYPE	Production Model	**TEST ARTICLE DEFLECTIONS (m)**	
DESIGNATION	2000P	DYNAMIC	
MODEL	1998 Chevrolet 2500 Cheyenne	PERMANENT	
MASS (CURB)	2155 kg (4752 lbs)	**VEHICLE DAMAGE**	
MASS (TEST INERTIAL)	2034 kg (4484 lbs)	EXTERIOR	
DUMMY MASS	N/A	VDS	12-FC-5
MASS (GROSS STATIC)	2034 kg (4484 lbs)	CDC	12FCEN2
IMPACT CONDITIONS		INTERIOR	
VELOCITY (km/h)	102.0 km/h (63.3 mi/h)	OCDI	FS0000000
ANGLE (°)	0.1		
IMPACT SEVERITY (kJ)	815.9	**POST-IMPACT VEHICULAR BEHAVIOR**	
EXIT CONDITIONS		MAXIMUM ROLL ANGLE (°)	-6.0
VELOCITY (km/h)		MAXIMUM PITCH ANGLE (°)	3.4
ANGLE (°)		MAXIMUM YAW ANGLE (°)	-6.6

DATA SHEET 4

SUMMARY OF RESULTS

Test Article:	TrafFix Devices Sentry End Treatment	Project No.:	P30075-01
Test Program:	NCHRP 350 3-43	Test Date:	06/17/10
Test Vehicle:	1998 Chevrolet Silverado 2500		

GENERAL INFORMATION		OCCUPANT RISK VALUES	
TEST AGENCY	KARCO Engineering, LLC	FLAIL SPACE VELOCITY (m/sec)	
TEST NO.	3-43	X DIRECTION	8.0
DATE	6/17/2010	Y DIRECTION	1.9
TEST ARTICLE		THIV (Optional)	
TYPE	Crash Cushion	RIDEDOWN ACCELERATION (g's)	
INSTALLATION LENGTH	25.1 m (82.4 ft.)	X DIRECTION	-4.8
SIZE AND/OR DIMENSION OF KEY ELEMENTS	Nominal Mass 79.4 kg (175 lbs)	Y DIRECTION	3.7
SOIL TYPE AND CONDITION	Concrete	PHD (Optional)	
TEST VEHICLE		ASI (Optional)	
TYPE	Production Model	**TEST ARTICLE DEFLECTIONS (m)**	
DESIGNATION	2000P	DYNAMIC	
MODEL	1998 Chevrolet Silverado 2500	PERMANENT	
MASS (CURB)	2122.5 kg (4679 lbs)	**VEHICLE DAMAGE**	
MASS (TEST INERTIAL)	2044.0 kg (4506 lbs)	EXTERIOR	
DUMMY MASS	N/A	VDS	11-FL-4
MASS (GROSS STATIC)	2044.0 kg (4506 lbs)	CDC	11FLEN2
IMPACT CONDITIONS		INTERIOR	
VELOCITY (km/h)	102.4 km/h (63.6 mi/h)	OCDI	FS0000000
ANGLE (°)	15.5		
IMPACT SEVERITY (kJ)	826.8	**POST-IMPACT VEHICULAR BEHAVIOR**	
EXIT CONDITIONS		MAXIMUM ROLL ANGLE (°)	6.3
VELOCITY (km/h)		MAXIMUM PITCH ANGLE (°)	-2.7
ANGLE (°)	23.0	MAXIMUM YAW ANGLE (°)	-14.3

DATA SHEET 4

SUMMARY OF RESULTS

Test Article:	TrafFix Devices Sentry End Treatment	Project No.:	P30043-01
Test Program:	NCHRP 350 3-41	Test Date:	05/27/10
Test Vehicle:	1994 GMC Sierra 2500		

GENERAL INFORMATION		OCCUPANT RISK VALUES	
TEST AGENCY	KARCO Engineering, LLC	FLAIL SPACE VELOCITY (m/sec)	
TEST NO.	3-41	X DIRECTION	9.2
DATE	5/27/2010	Y DIRECTION	0.1
TEST ARTICLE		THIV (Optional)	
TYPE	Crash Cushion	RIDEDOWN ACCELERATION (g's)	
INSTALLATION LENGTH	20.1 m (65.9 ft.)	X DIRECTION	-9.6
END TREATMENT LENGTH	7.9 m (25.9 ft.)	Y DIRECTION	-3.4
SIZE AND/OR DIMENSION OF KEY ELEMENTS	Nominal Mass 79.4 kg (175 lbs)	PHD (Optional)	
SOIL TYPE AND CONDITION	Concrete	ASI (Optional)	
TEST VEHICLE		**TEST ARTICLE DEFLECTIONS (m)**	
TYPE	Production Model	DYNAMIC	
DESIGNATION	2000P	PERMANENT	
MODEL	1994 GMC Sierra 2500		
MASS (CURB)	2092.5 kg (4614 lbs)	**VEHICLE DAMAGE**	
MASS (TEST INERTIAL)	2016 kg (4445 lbs)	EXTERIOR	
DUMMY MASS	N/A	VDS	12-FC-5
MASS (GROSS STATIC)	2016 kg (4445 lbs)	CDC	12FCEN2
IMPACT CONDITIONS		INTERIOR	
VELOCITY (km/h)	101.5 km/h (63.1 mi/h)	OCDI	FS0000000
ANGLE (°)	0.2		
IMPACT SEVERITY (kJ)	801.9	**POST-IMPACT VEHICULAR BEHAVIOR**	
EXIT CONDITIONS		MAXIMUM ROLL ANGLE (°)	-2.8
VELOCITY (km/h)		MAXIMUM PITCH ANGLE (°)	3.6
ANGLE (°)		MAXIMUM YAW ANGLE (°)	3.6

DATA SHEET 4

SUMMARY OF RESULTS

Test Article:	TrafFix Devices Sentry End Treatment	Project No.:	P30072-01
Test Program:	NCHRP 350 3-41	Test Date:	06/15/10
Test Vehicle:	1992 Chevrolet Silverado 2500		

GENERAL INFORMATION		OCCUPANT RISK VALUES	
TEST AGENCY	KARCO Engineering, LLC	FLAIL SPACE VELOCITY (m/sec)	
TEST NO.	3-41	X DIRECTION	9.7
DATE	6/15/2010	Y DIRECTION	0.3
TEST ARTICLE		THIV (Optional)	
TYPE	Crash Cushion	RIDEDOWN ACCELERATION (g's)	
INSTALLATION LENGTH	20.3 m (66.6 ft.)	X DIRECTION	-12.3
END TREATMENT LENGTH	8.0 m (26.2 ft.)	Y DIRECTION	3.5
SIZE AND/OR DIMENSION OF KEY ELEMENTS	Nominal Mass 79.4 kg (175 lbs)	PHD (Optional)	
SOIL TYPE AND CONDITION	Concrete	ASI (Optional)	
TEST VEHICLE		**TEST ARTICLE DEFLECTIONS (m)**	
TYPE	Production Model	DYNAMIC	
DESIGNATION	2000P	PERMANENT	
MODEL	1992 Chevrolet Silverado 2500		
MASS (CURB)	2130 kg (4696 lbs)	**VEHICLE DAMAGE**	
MASS (TEST INERTIAL)	2013.5 kg (4439 lbs)	EXTERIOR	
DUMMY MASS	N/A	VDS	12-FC-5
MASS (GROSS STATIC)	2013.5 kg (4439 lbs)	CDC	12FCEN2
IMPACT CONDITIONS		INTERIOR	
VELOCITY (km/h)	99.1 km/h (61.5 mi/h)	OCDI	FS0000000
ANGLE (°)	0.1		
IMPACT SEVERITY (kJ)	762.6	**POST-IMPACT VEHICULAR BEHAVIOR**	
EXIT CONDITIONS		MAXIMUM ROLL ANGLE (°)	-5.6
VELOCITY (km/h)		MAXIMUM PITCH ANGLE (°)	-2.6
ANGLE (°)		MAXIMUM YAW ANGLE (°)	-4.1

DATA SHEET 4

SUMMARY OF RESULTS

Test Article:	TrafFix Devices Sentry End Treatment CMB	Project No.:	P30077-01
Test Program:	NCHRP 350 3-44	Test Date:	06/28/10
Test Vehicle:	1996 Chevrolet Cheyenne 2500		

GENERAL INFORMATION		OCCUPANT RISK VALUES	
TEST AGENCY	KARCO Engineering, LLC	FLAIL SPACE VELOCITY (m/sec)	
TEST NO.	3-44	X DIRECTION	9.8
DATE	6/28/2010	Y DIRECTION	2.2
TEST ARTICLE		THIV (Optional)	
TYPE	Crash Cushion	RIDEDOWN ACCELERATION (g's)	
INSTALLATION LENGTH	20.3 m (66.6 ft)	X DIRECTION	-10.6
END TREATMENT LENGTH	8.0 m (26.2 ft)		
SIZE AND/OR DIMENSION OF KEY ELEMENTS	Nominal Mass 66.5 kg (146 lbs)	Y DIRECTION	4.3
SOIL TYPE AND CONDITION	Concrete	PHD (Optional)	
TEST VEHICLE		ASI (Optional)	
TYPE	Production Model	**TEST ARTICLE DEFLECTIONS (m)**	
DESIGNATION	2000P	DYNAMIC	
MODEL	1996 Chevrolet Cheyenne 2500	PERMANENT	
MASS (CURB)	2087.0 kg (4601 lbs)	**VEHICLE DAMAGE**	
MASS (TEST INERTIAL)	2044.5 kg (4507 lbs)	EXTERIOR	
DUMMY MASS	N/A	VDS	1-FR-5
MASS (GROSS STATIC)	2044.5 kg (4507 lbs)	CDC	01FREW2
IMPACT CONDITIONS		INTERIOR	
VELOCITY (km/h)	103.1 km/h (64.1 mi/h)	OCDI	FS0000000
ANGLE (°)	20.1		
IMPACT SEVERITY (kJ)	99.0	**POST-IMPACT VEHICULAR BEHAVIOR**	
EXIT CONDITIONS		MAXIMUM ROLL ANGLE (°)	-35.7
VELOCITY (km/h)		MAXIMUM PITCH ANGLE (°)	-5.2
ANGLE (°)		MAXIMUM YAW ANGLE (°)	-15.2

DATA SHEET 4

SUMMARY OF RESULTS

Test Article:	TrafFix Devices Sentry End Treatment CMB	Project No.:	P30074-01
Test Program:	NCHRP 350 3-44 (Modified)	Test Date:	06/16/10
Test Vehicle:	1990 Chevrolet Silverado		

GENERAL INFORMATION		OCCUPANT RISK VALUES	
TEST AGENCY	KARCO Engineering, LLC	FLAIL SPACE VELOCITY (m/sec)	
TEST NO.	NCHRP 350 3-44 (Modified)	X DIRECTION	8.4
DATE	6/16/2010	Y DIRECTION	2.0
TEST ARTICLE		THIV (Optional)	
TYPE	Crash Cushion	RIDEDOWN ACCELERATION (g's)	
INSTALLATION LENGTH	20.3 m (66.5 ft)	X DIRECTION	-15.6
END TREATMENT LENGTH	8.0 m (26.2 ft)		
SIZE AND/OR DIMENSION OF KEY ELEMENTS	Nominal Mass 71.7 kg (158 lbs)	Y DIRECTION	7.4
SOIL TYPE AND CONDITION	Concrete	PHD (Optional)	
TEST VEHICLE		ASI (Optional)	
TYPE	Production Model	**TEST ARTICLE DEFLECTIONS (m)**	
DESIGNATION	2000P	DYNAMIC	
MODEL	1990 Chevrolet Silverado	PERMANENT	
MASS (CURB)	2020.5 kg (4454 lbs)	**VEHICLE DAMAGE**	
MASS (TEST INERTIAL)	1983.0 kg (4372 lbs)	EXTERIOR	
DUMMY MASS	N/A	VDS	1-FR-5
MASS (GROSS STATIC)	1983.0 kg (4372 lbs)	CDC	01FREW2
IMPACT CONDITIONS		INTERIOR	
VELOCITY (km/h)	96.2 km/h (59.8 mi/h)	OCDI	FS0000000
ANGLE (°)	15.0		
IMPACT SEVERITY (kJ)	47.4	**POST-IMPACT VEHICULAR BEHAVIOR**	
EXIT CONDITIONS		MAXIMUM ROLL ANGLE (°)	-19.3
VELOCITY (km/h)		MAXIMUM PITCH ANGLE (°)	10.7
ANGLE (°)		MAXIMUM YAW ANGLE (°)	4.0

PARTS LIST			
ITEM	STOCK NO.	DESCRIPTION	QTY.
1		ACZ-350 SECTION 2	1
2		ACZ-350 TRANSITION ASSY	1
3		ACZ-350 SECTION 1	1
4		ACZ-350 NOSE ASSY	1

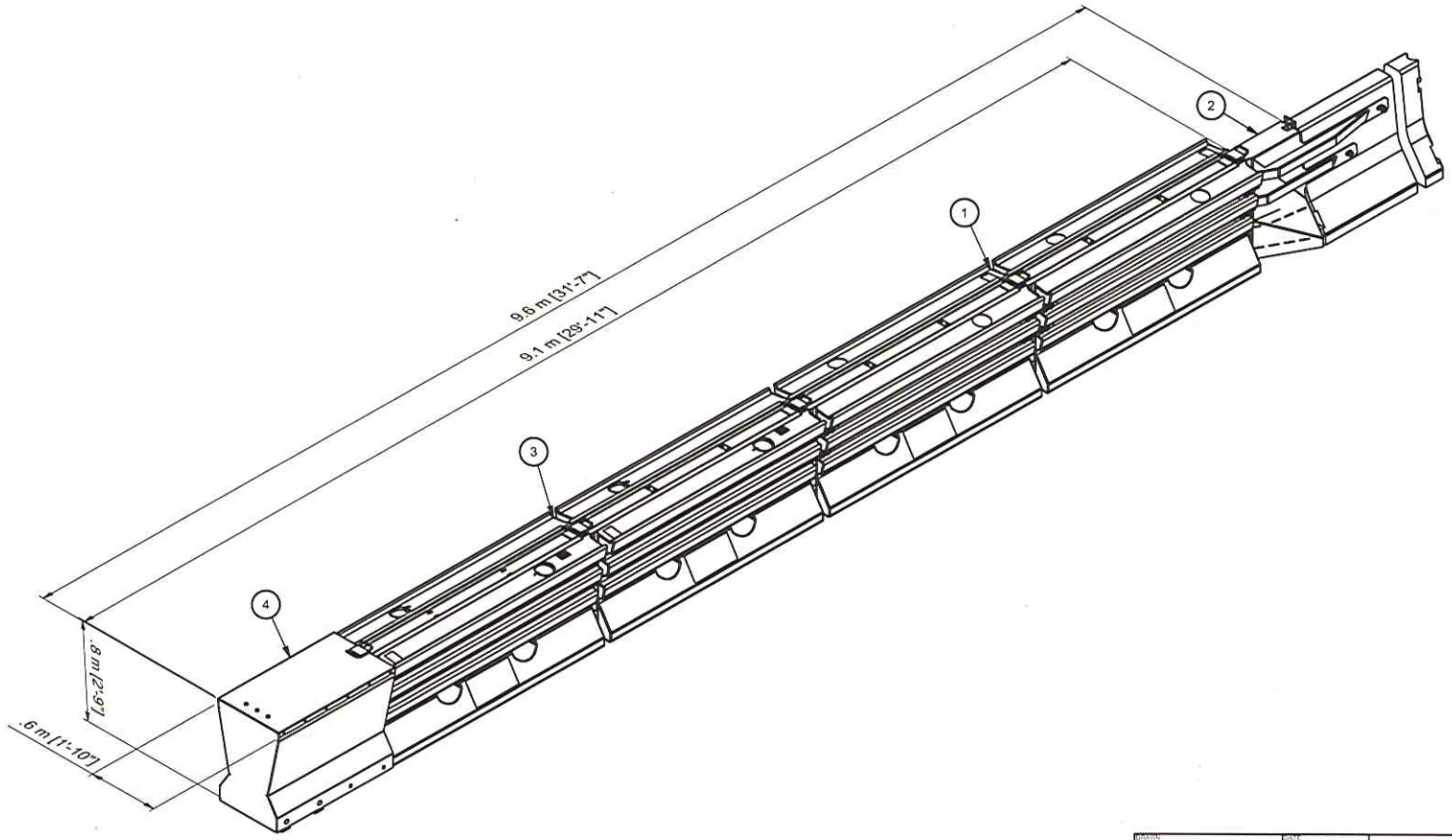

DRAWN aaron.cox	DATE 11/12/2008	ENERGY ABSORPTION SYSTEMS, INC. ENGINEERING AND RESEARCH DEPARTMENT
DESIGNED aaron.cox	DATE	ACZ-350 TL-3 CRASH CUSHION
CHECKED	DATE	
APPROVED	DATE	
Q.C.	DATE	
UNLESS OTHERWISE NOTED ALL DIMENSIONS ARE IN INCHES DIMENSIONS ACCORDING TO ASME Y14.5M-1994 UNLESS OTHERWISE SPECIFIED		DRAWING / SHEET 1 of 1 / REV

Figure 1

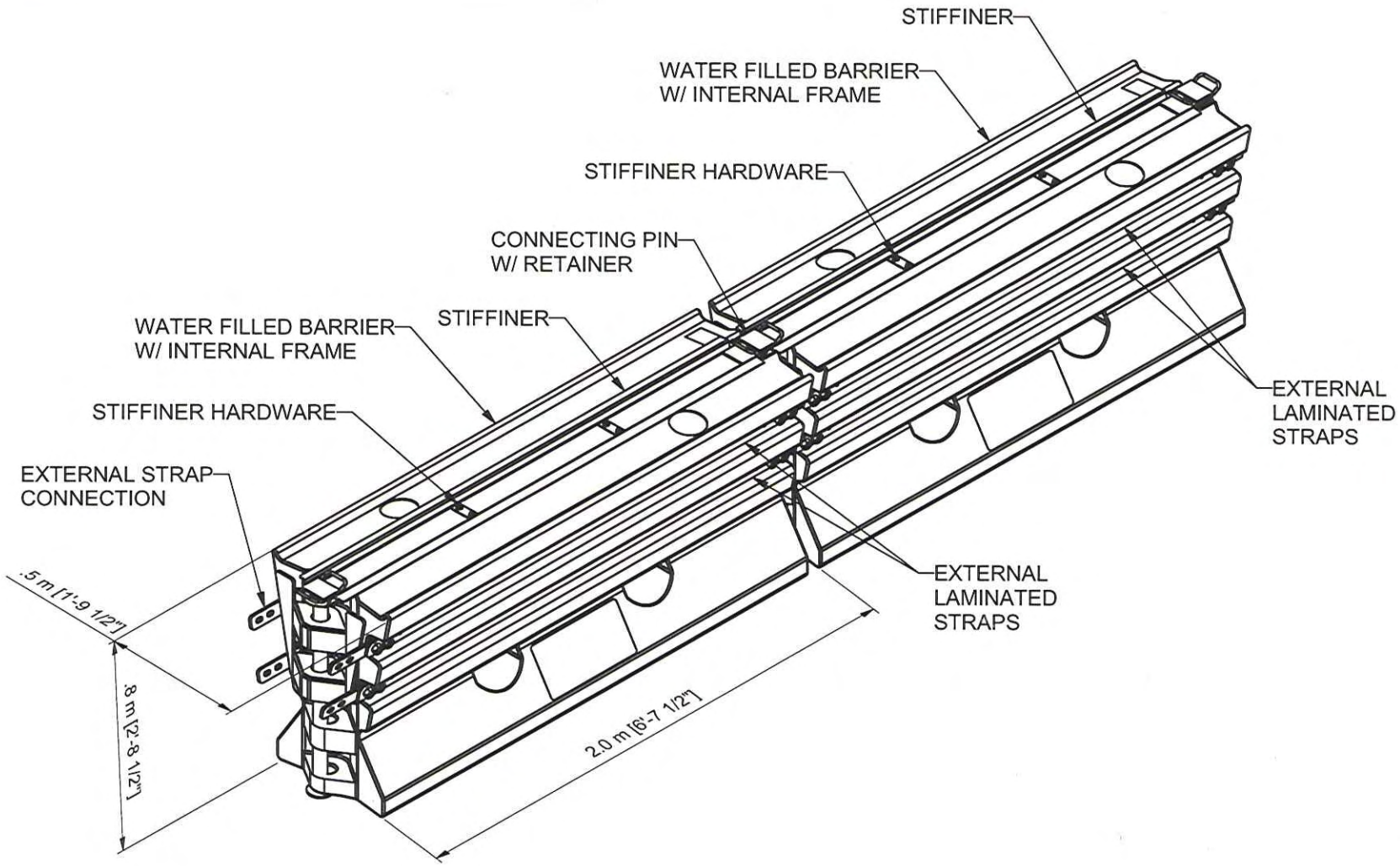

DRAWN: aaron.cox	DATE: 11/13/2008	ENERGY ABSORPTION SYSTEMS, INC. ENGINEERING AND RESEARCH DEPARTMENT
DESIGNED: aaron.cox	DATE:	
CHECKED:	DATE:	ACZ-350 SECTION 2
APPROVED:	DATE:	
Q.C.	DATE:	
UNLESS OTHERWISE NOTED, ALL DIMENSIONS ARE IN INCHES. DIMENSIONS ACCORDING TO ASME Y14.5M-1994 UNLESS OTHERWISE SPECIFIED.	DRAWING:	SHEET: 1 of 1 / REV

Figure 4

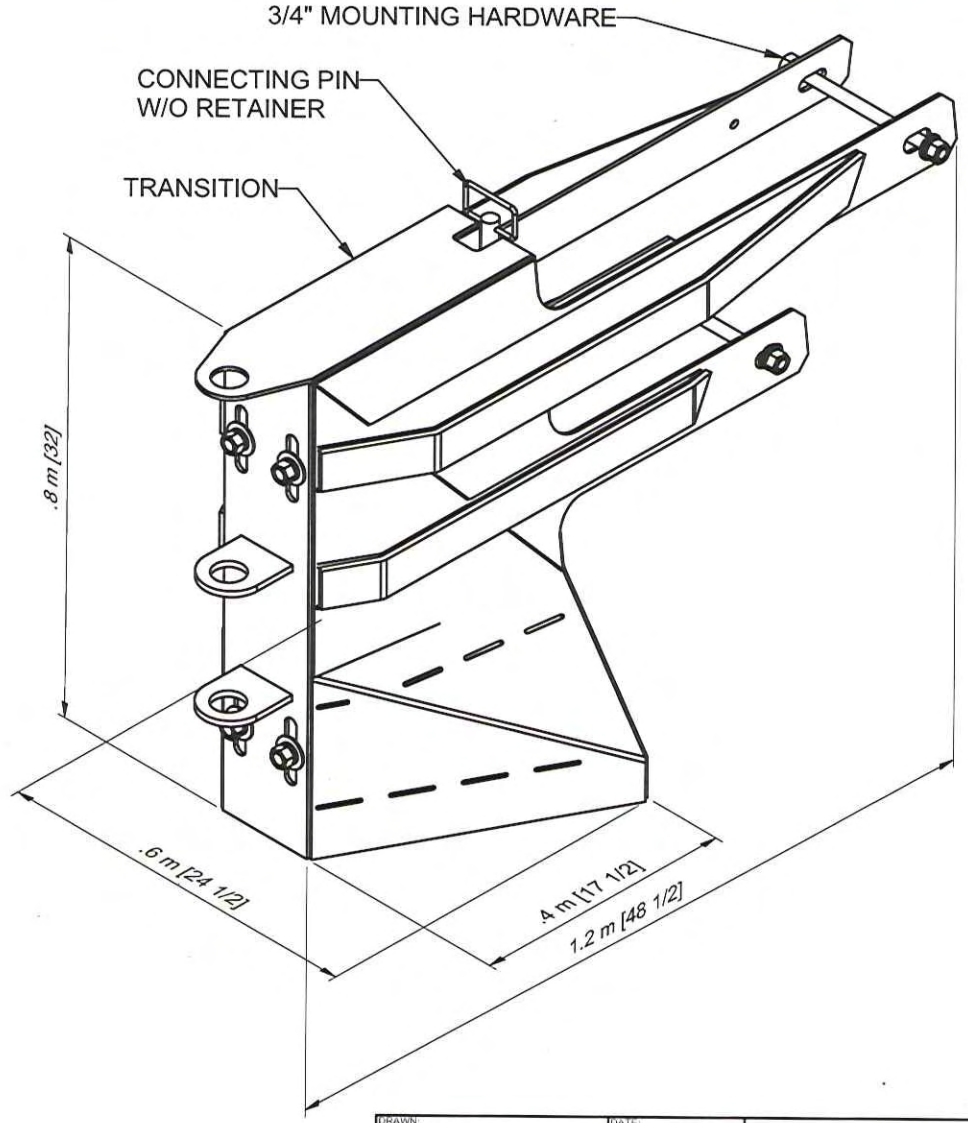

DRAWN: aaron.cox	DATE: 11/13/2008	ENERGY ABSORPTION SYSTEMS, INC. ENGINEERING AND RESEARCH DEPARTMENT
DESIGNED: aaron.cox	DATE:	
CHECKED:	DATE:	ACZ-350 TRANSITION ASSY
APPROVED:	DATE:	
Q.C.	DATE:	
UNLESS OTHERWISE NOTED, ALL DIMENSIONS ARE IN INCHES. DIMENSIONS ACCORDING TO ASME Y14.5M-1994 UNLESS OTHERWISE SPECIFIED.	DRAWING:	SHEET: 1 of 1 / REV

Figure 3

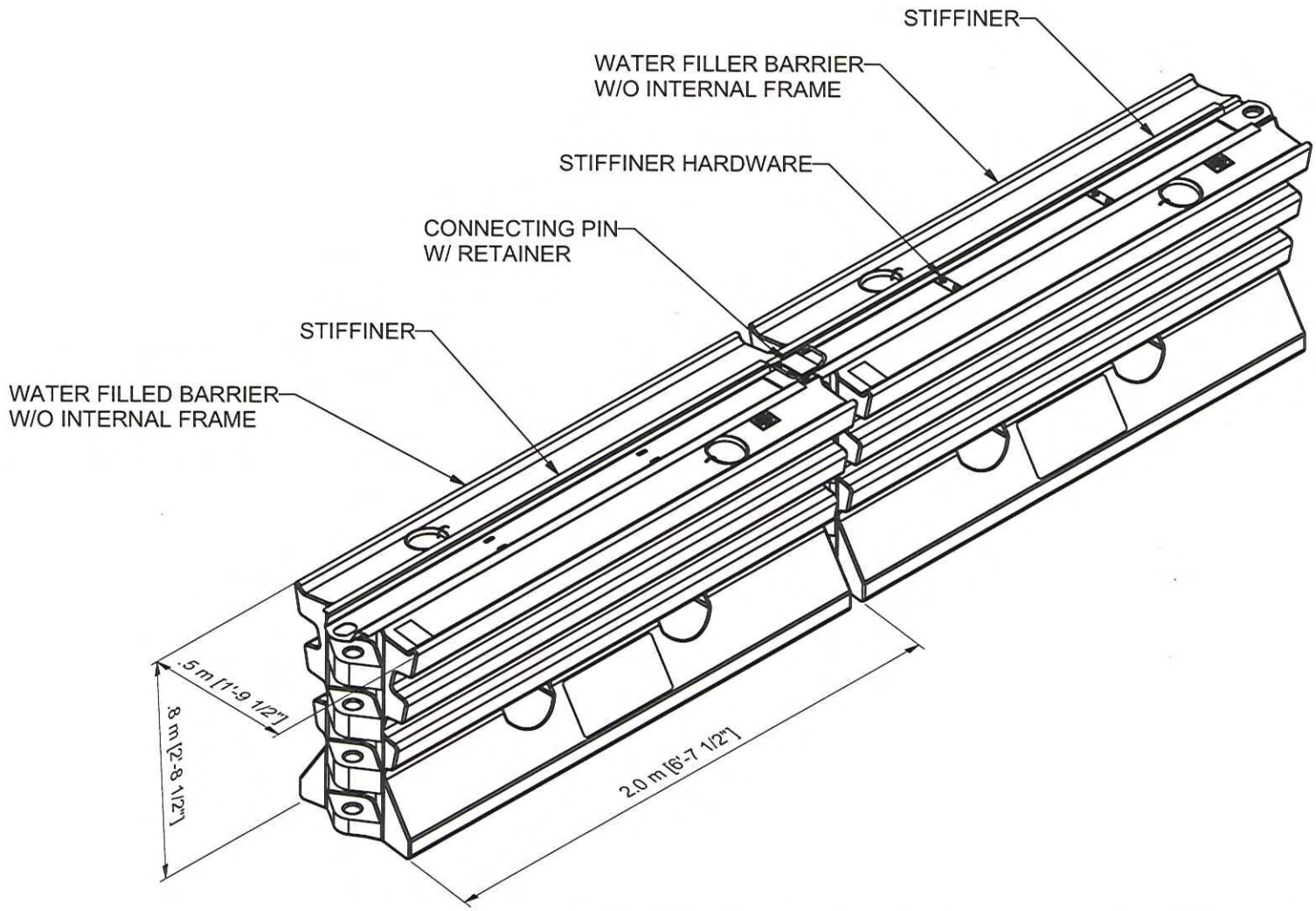

DRAWN: aaron.cox	DATE: 11/12/2008	ENERGY ABSORPTION SYSTEMS, INC. ENGINEERING AND RESEARCH DEPARTMENT
DESIGNED: aaron.cox	DATE:	
CHECKED:	DATE:	ACZ-350 SECTION 1
APPROVED:	DATE:	
Q.C.	DATE:	
UNLESS OTHERWISE NOTED, ALL DIMENSIONS ARE IN INCHES. DIMENSIONS ACCORDING TO ASME Y14.5M-1994 UNLESS OTHERWISE SPECIFIED.		DRAWING: / SHEET: 1 of 1 / REV

Figure 2

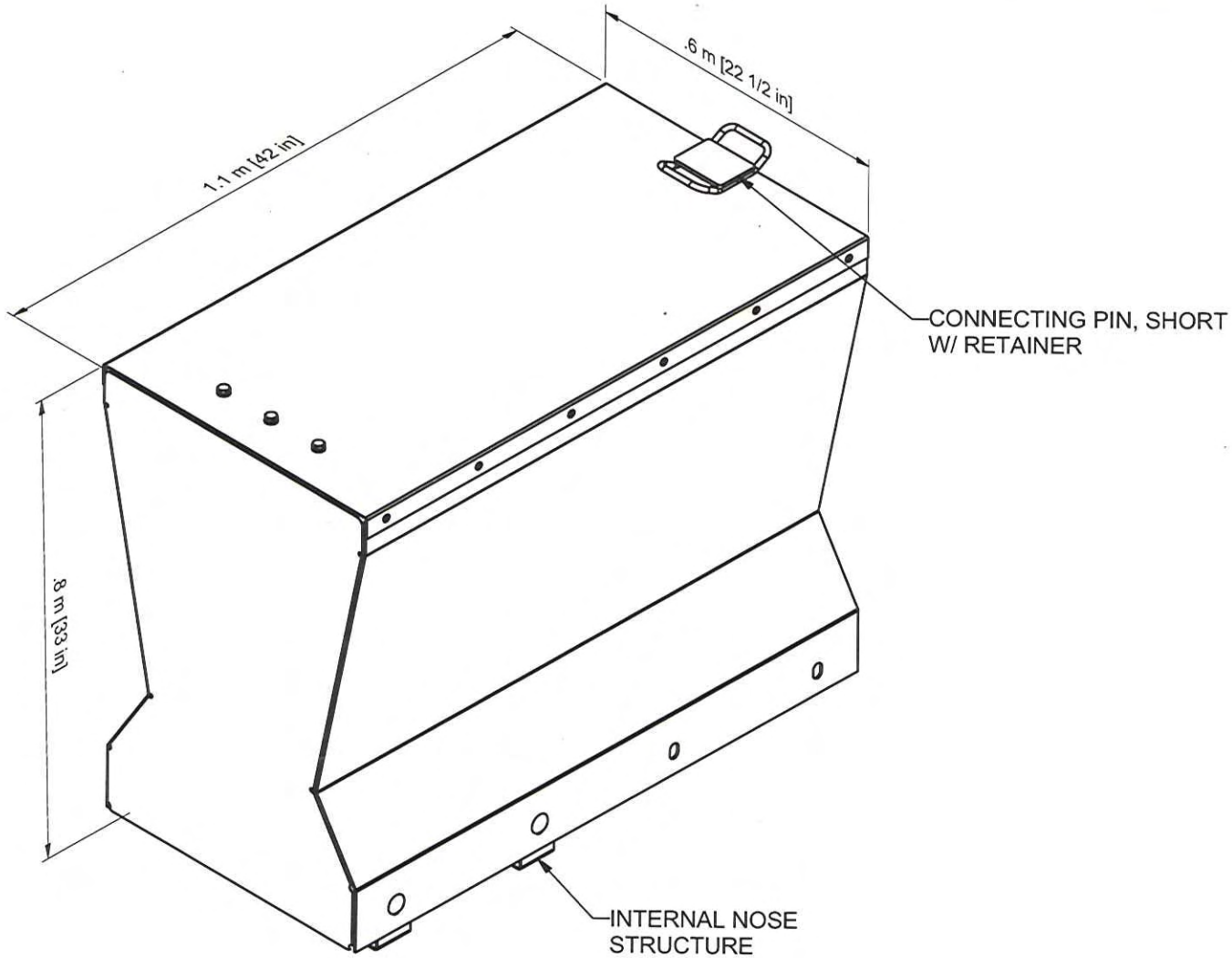

DRAWN: aaron.cox	DATE: 11/12/2008	ENERGY ABSORPTION SYSTEMS, INC. ENGINEERING AND RESEARCH DEPARTMENT
DESIGNED: aaron.cox	DATE:	
CHECKED:	DATE:	ACZ-350 NOSE ASSY
APPROVED:	DATE:	
Q.C.	DATE:	
UNLESS OTHERWISE NOTED, ALL DIMENSIONS ARE IN INCHES. DIMENSIONS ACCORDING TO ASME Y14.5M-1994 UNLESS OTHERWISE SPECIFIED.	DRAWING:	SHEET: 1 of 1 REV

Figure 5

TL-3 (100 km/h = 62.1 mph)

NCHRP 350
TEST MATRIX

TERMINALS & CRASH CUSHIONS

NONREDIRECTIVE GATING

ACZ-350 SYSTEM

= 820C

= 2000P

* F FOR TL-2 & TL-3; G FOR TL-1

PASSED

TEST 3-40
820C/100 km/h/0°
C,D,F*,H,I,(J),K,N

PASSED

TEST 3-41
2000P/100km/h/0°
C,D,F*,H,I,(J),K,N

PASSED

TEST 3-44
2000P/100km/h/20°
C,D,F*,K,N

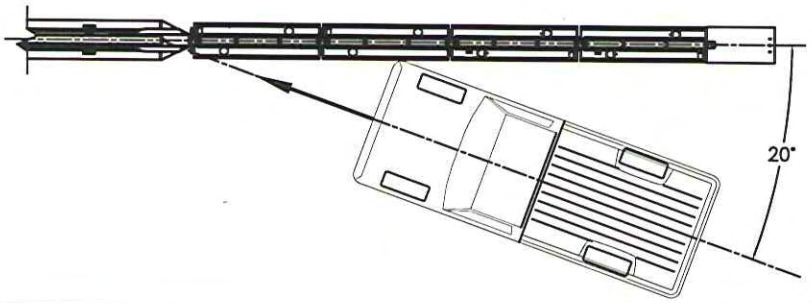

Figure 6

t = 0.000 sec | t = 0.160 sec | t = 0.320 sec | t = 0.480 sec | t = 0.640 sec | t = 0.800 sec

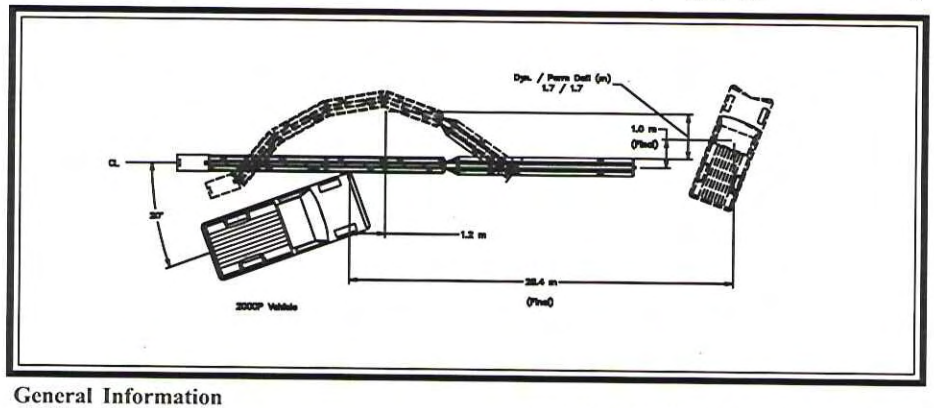

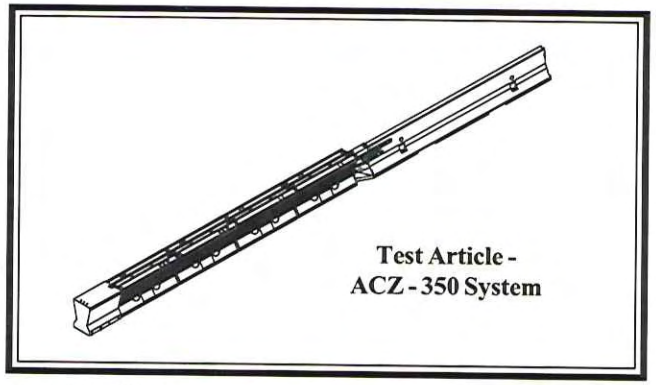

General Information	
Test Agency	E-TECH Testing Services, Inc.
Test Designation	NCHRP 350 Test 3-44 modified
Test No.	01-4317-003
Date	12/4/08
Test Article	
Type	Energy Absorption System
	ACZ - 350 System
Installation Length,	9.0 m - (4) segment total,
	pinned and freestanding
	w/ steel nose
Material and key elements	Polyethylene plastic segments
	(4 water filled), first two w/o frame and
	steel side straps, last two with, 14 ga
	hollow steel nose, transition to (3) 3 m
	freestanding PCMB with last section
	anchored
	Segment Length x Width x Height:
	(2021 mm x 533 mm x 813 mm)
Foundation Type and Condition	Portland Cement Concrete,
	clean and dry, unanchored
Test Vehicle	
Type	Production Model
Designation	2000P
Model	1988 Chevrolet C2500 Pickup
Mass (kg)	
Curb	1907
Test inertial	2000
Dummy	N/A
Gross Static	2000

Impact Conditions	
Speed (km/h)	96.4
Angle (deg)	20
Impact Severity (kJ)	717.0
Exit conditions	
Speed (km/h)	N/A
Angle (deg - veh. c.g.)	N/A
Occupant Risk Values	
Impact Velocity (m/s)	
x-direction	10.5
y-direction	6.9
Ridedown Acceleration (g's)	
x-direction	-18.4
y-direction	-12.0
European Committee for Normalization (CEN) Values	
THIV (km/h)	43.3
PHD (g's)	31.0
ASI	1.8
Post-Impact Vehicular Behavior (deg - rate gyro)	
Maximum Roll Angle	-17.5
Maximum Pitch Angle	24.9
Maximum Yaw Angle	-59.5
Test Article Deflections (m)	
Dynamic	1.7
Permanent	1.7
Vehicle Damage (Primary Impact)	
Exterior	
VDS	FL-4
CDC	11FLEW4
Interior	
VCDI	AS1020000
Maximum Deformation (mm)	195

Figure 11. Summary of Results - ACZ - 350 System Test 01-4317-003

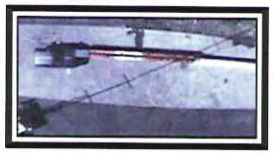
t = 0.0.0 sec

t = 0.129 sec

t = 0.258 sec

t = 0.387 sec

t = 0.516 sec

t = 0.968 sec

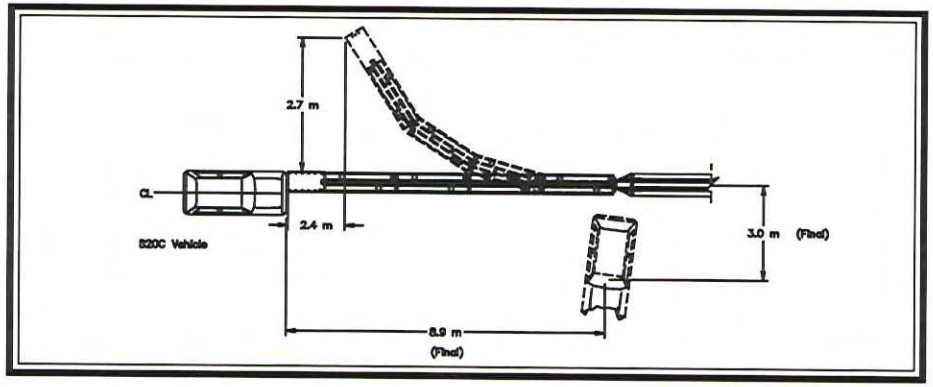

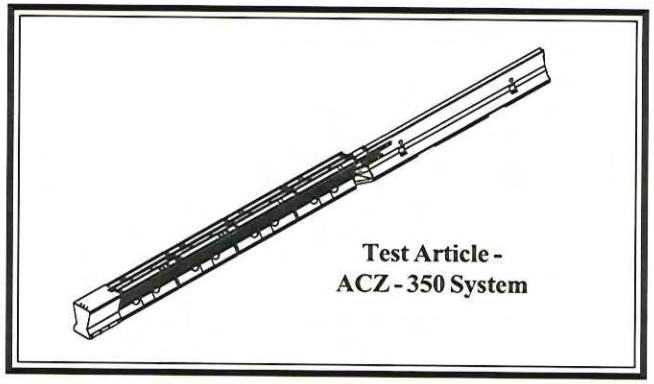

General Information	
Test Agency	E-TECH Testing Services, Inc.
Test Designation	NCHRP 350 Test 3-40
Test No.	01-4317-002
Date	11/6/08
Test Article	
Type	Energy Absorption System
	ACZ - 350 System
Installation Length,	9.0 m - (4) segment total,
	pinned and freestanding
	w/ steel nose
Material and key elements	Polyethylene plastic segments
	(4 water filled), first two w/o frame and
	steel side straps, last two with, 14 ga
	hollow steel nose, transition to (3) 3 m
	freestanding PCMB with last section
	anchored
	Segment Length x Width x Height:
	(2021 mm x 533 mm x 813 mm)
Foundation Type and Condition	Portland Cement Concrete,
	clean and dry, unanchored
Test Vehicle	
Type	Production Model
Designation	820C
Model	1993 Ford Festiva
Mass (kg)	
Curb	821
Test inertial	816
Dummy	75
Gross Static	891

Impact Conditions	
Speed (km/h)	99.0
Angle (deg)	0
Impact Severity (kJ)	308.5
Exit conditions	
Speed (km/h)	N/A
Angle (deg - veh. c.g.)	N/A
Occupant Risk Values	
Impact Velocity (m/s)	
x-direction	11.9
y-direction	-0.6
Ridedown Acceleration (g's)	
x-direction	-12.5
y-direction	-3.6
European Committee for Normalization (CEN) Values	
THIV (km/h)	44.2
PHD (g's)	12.5
ASI	1.1
Post-Impact Vehicular Behavior (deg - rate gyro)	
Maximum Roll Angle	20.1
Maximum Pitch Angle	-43.5
Maximum Yaw Angle	-244.9
Test Article Deflections (m)	
Dynamic	2.7
Permanent	2.7
Vehicle Damage (Primary Impact)	
Exterior	
VDS	FD-4
CDC	12FDEW4
Interior	
VCDI	AS0001000
Maximum Deformation (mm)	21 mm

Figure 1. Summary of Results - ACZ - 350 System Test 01-4317-002

t = 0.000 sec | t = 0.210 sec | t = 0.420 sec | t = 0.630 sec | t = 0.840 sec | t = 1.260 sec

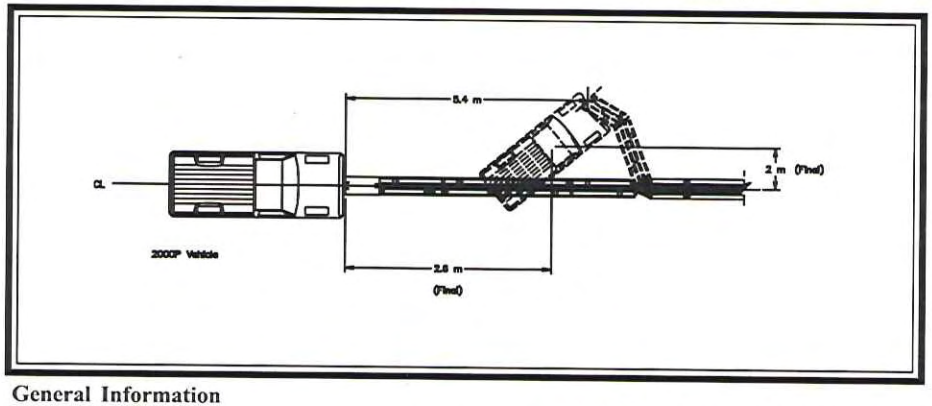

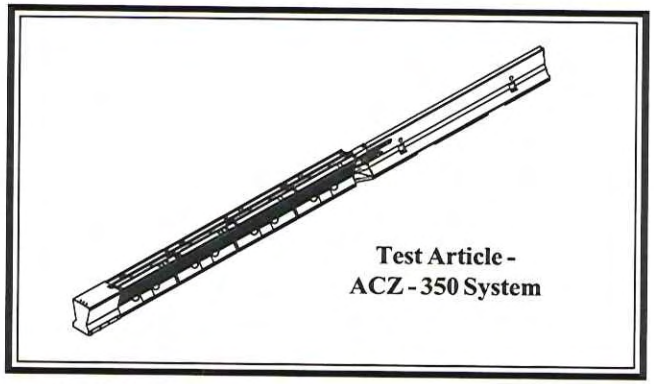

General Information	
Test Agency	E-TECH Testing Services, Inc.
Test Designation	NCHRP 350 Test 3-41
Test No.	01-4317-001
Date	10/30/08
Test Article Type	Energy Absorption System
	ACZ - 350 System
Installation Length,	9.0 m - (4) segment total,
	pinned and freestanding
	w/ steel nose
Material and key elements	Polyethylene plastic segments
	(4 water filled), first two w/o frame and
	steel side straps, last two with, 14 ga
	hollow steel nose, transition to (3) 3 m
	freestanding PCMB with last section
	anchored
	Segment Length x Width x Height:
	(2021 mm x 533 mm x 813 mm)
Foundation Type and Condition	Portland Cement Concrete,
	clean and dry, unanchored
Test Vehicle	
Type	Production Model
Designation	2000P
Model	1988 Chevrolet C2500 Pickup
Mass (kg)	
Curb	1853
Test inertial	1995
Dummy	N/A
Gross Static	1995

Impact Conditions	
Speed (km/h)	98.3
Angle (deg)	0
Impact Severity (kJ)	744.0
Exit conditions	
Speed (km/h)	N/A
Angle (deg - veh. c.g.)	N/A
Occupant Risk Values	
Impact Velocity (m/s)	
x-direction	9.9
y-direction	-0.3
Ridedown Acceleration (g's)	
x-direction	-11.1
y-direction	-5.7
European Committee for Normalization (CEN) Values	
THIV (km/h)	35.6
PHD (g's)	11.2
ASI	0.9
Post-Impact Vehicular Behavior (deg - rate gyro)	
Maximum Roll Angle	-7.6
Maximum Pitch Angle	20.0
Maximum Yaw Angle	-39.2
Test Article Deflections (m)	
Dynamic	5.4
Permanent	5.4
Vehicle Damage (Primary Impact)	
Exterior	
VDS	FD-4
CDC	12FDEW4
Interior	
VCDI	AS0000000
Maximum Deformation (mm)	14

Figure 6. Summary of Results - ACZ - 350 System Test 01-4317-001