FOR CONTRACT NO.: 06-0M8004

INFORMATION HANDOUT

MANUFACTURER'S DRAWINGS AND SPECIFICATIONS

TYPE FLEAT FLARED TERMINAL SYSTEM

TYPE SRT FLARED TERMINAL SYSTEM

TYPE X-TENSION FLARED TERMINAL SYSTEM

TYPE FLEAT-MT CRASH CUSHION SYSTEM

TYPE BRAKEMASTER 350 CRASH CUSHION SYTEM

TYPE CAT-350 CRASH CUSHION SYSTEM

ROUTE: 06-Tul, Mad 65/99-25.2/25.6,23.3/23.8

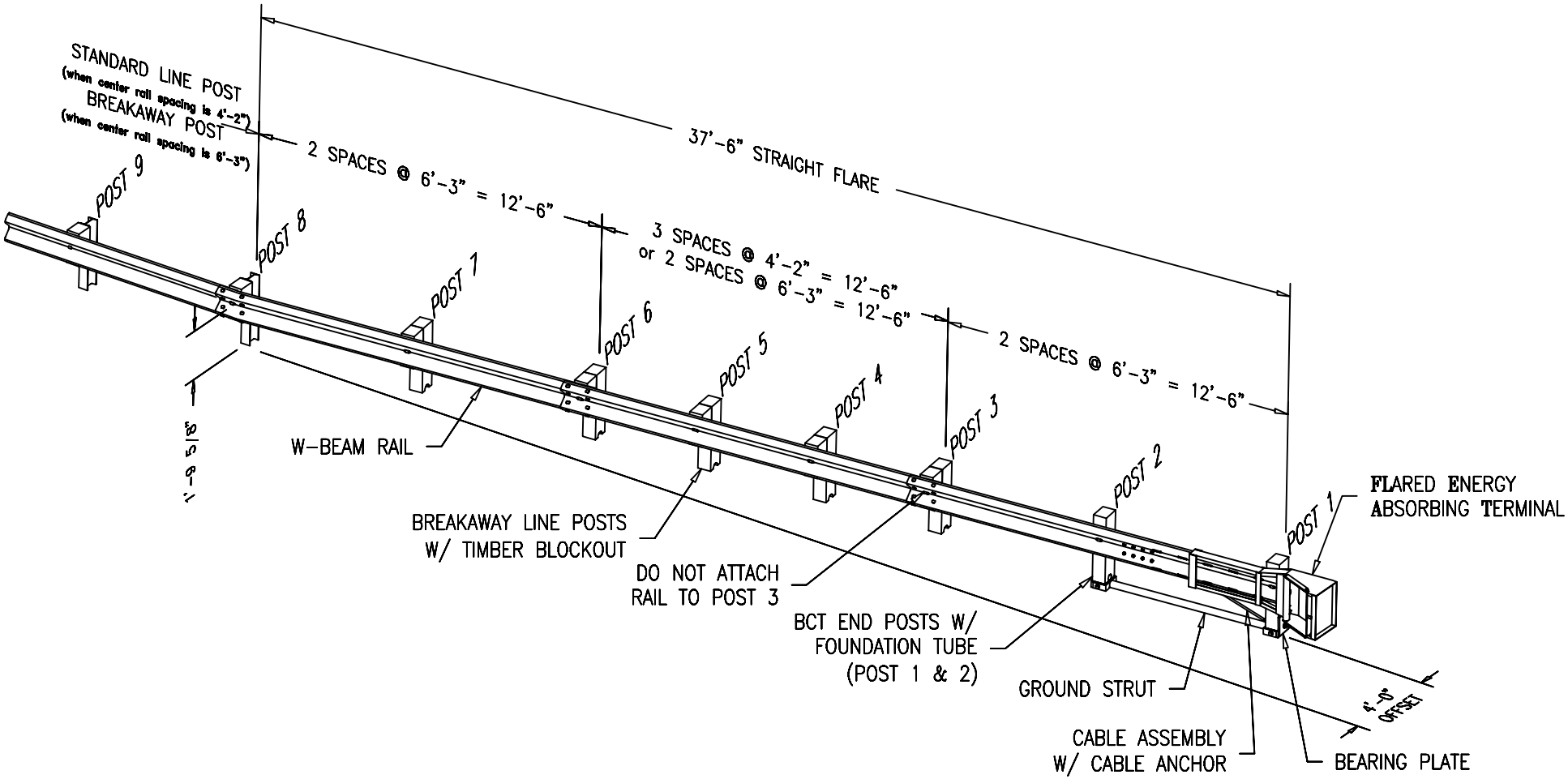

NOTES:

1. OFFSET DIMENSIONS ARE SHOWN TO BLOCKOUTS, EXCEPT FOR POSTS 1 & 2
2. CAN BE INSTALLED AT 2'-6" TO 4'-0" OFFSET.
3. WOOD OR STEEL BREAKAWAY POSTS MAY BE USED FOR THIS SYSTEM.
4. NCHRP 350 TEST LEVEL 3 (37'-6" LONG) SYSTEM IS SHOWN. A REDUCED SPEED TEST LEVEL 2 (25'-0" LONG) SYSTEM IS ALSO AVAILABLE.

FLARED TERMINAL SYSTEM
TYPE FLEAT

POST OFFSET DIMENSION TABLE			
POST No	* SYSTEM END OFFSET		
	3'-0"	3'-6"	4'-0"
1	36"	42"	48"
2	22 1/4"	27 3/4"	33 1/2"
3	11 3/4"	16 1/2"	21 1/4"
4	6 3/4"	10 5/8"	14 3/4"
5	3"	6"	9 1/2"
6	3/4"	2 3/4"	5 3/8"
7	0	3/4"	2 3/8"
8	0	0	5/8"
9	0	0	0

OFFSET NOTE:

THE POST OFFSET DIMENSIONS ARE GIVEN TO THE CENTER OF THE TRAFFIC FACE OF THE BLOCKOUTS., EXCEPT AT THE FIRST TWO POSTS, WHERE THE DIMENSION IS TO THE CENTER OF THE TRAFFIC FACE OF THE POST. OFFSET POINTS ARE TO BE LOCATED BY CHORD MEASUREMENTS AT THE BACK OF THE RAIL EQUAL TO THE NOMINAL POST SPACINGS SHOWN. POSTS ARE TO BE SET APPROXIMATELY RADIAL TO THE RAILING AT EACH POST LOCATION.

1 * REFER TO STATE DEPARTMENT OF TRANSPORTATION SPECIFICATIONS, STANDARD DRAWINGS AND/OR PROPOSAL DOCUMENTS FOR ALLOWABLE SYSTEM END OFFSET.

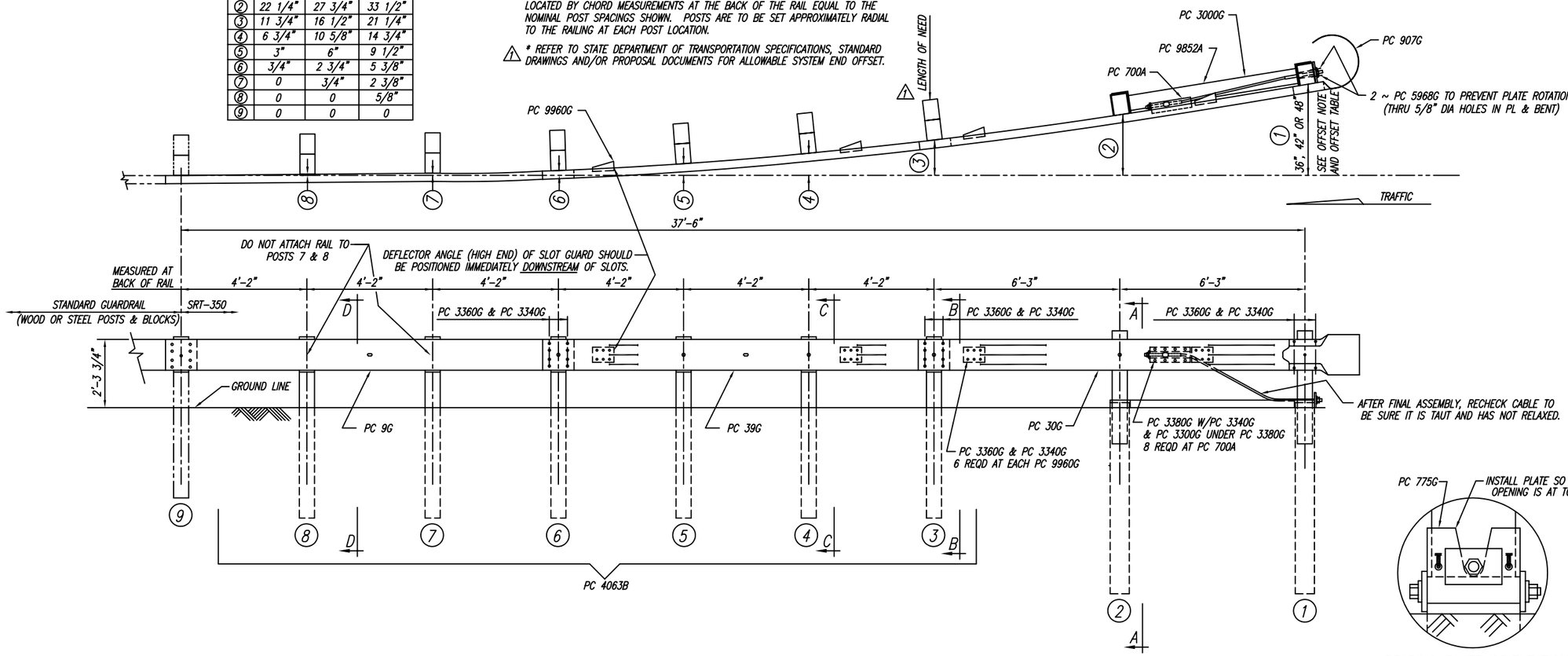

BILL OF MATERIAL		
PC	QTY	DESCRIPTION
9G	1	12/12'6/6'3/S (GUARDRAIL)
30G	1	12/12'6/6'3/S SRT-1 (GUARDRAIL)
39G	1	12/12'6/S SRT-2 (GUARDRAIL)
700A	1	CABLE ANCHOR BRACKET
705G	1	2"ø x 5 1/2" PIPE
742G	2	6'0 TUBE SLEEVE
775G	1	5/8 x 6 x 8 BEARING PLATE
907G	1	12/BUFFER/ROLLED (TERMINAL)
3000G	1	3/4 x 6'6 CABLE
3300G	20	5/8" WASHER
3340G	62	5/8" HEX NUT
3360G	44	5/8"ø x 1 1/4" SPLICE BOLT
3380G	8	5/8"ø x 1 1/2" HEX HD BOLT
3497G	2	5/8"ø x 9 1/2" HEX HD BOLT
3500G	2	5/8"ø x 10" POST BOLT
3580G	6	5/8"ø x 18" POST BOLT
3900G	1	1" WASHER
3910G	2	1" HEX NUT
4063B	6	6'0 POST 6 x 8
4075B	6	14" BLOCK 6 x 8
6058B	2	3' 9 POST 5 1/2 x 7 1/2
5968G	2	16d NAIL SRT
9852A	1	STRUT ASSEMBLY
9960G	4	SLOT GUARD
9961G	1	3/8 x 3 x 4 PLATE WASHER

** GUARDRAIL PANEL PC 30G IS SHOWN PC 34G IS AN ACCEPTABLE ALTERNATE.

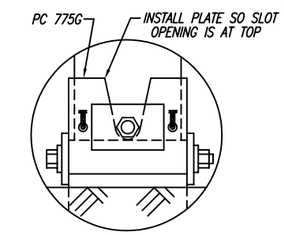

BEARING PLATE ORIENTATION

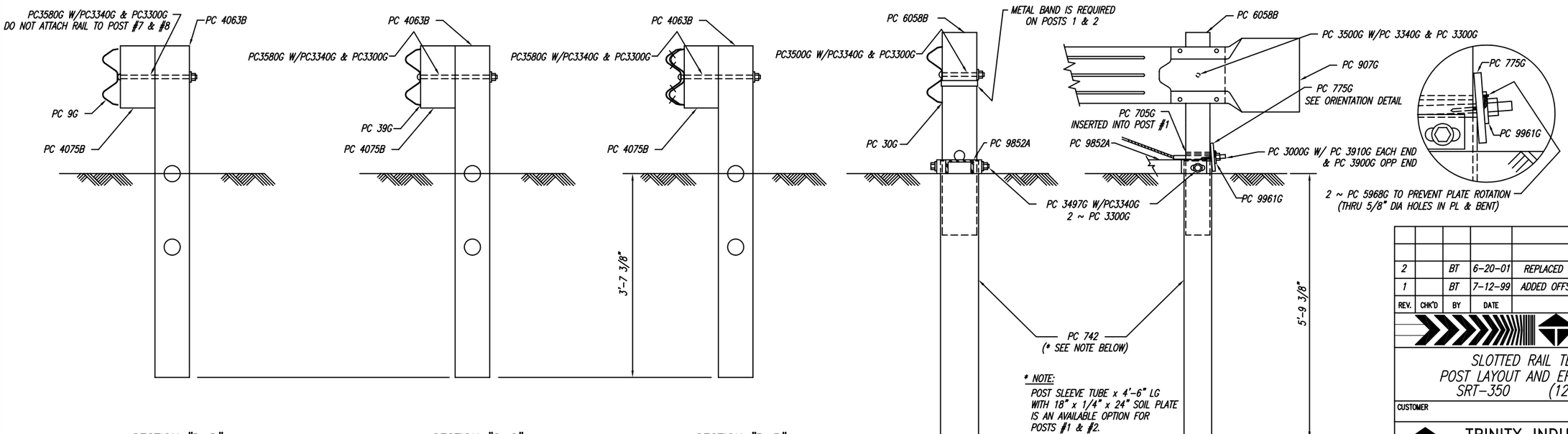

* NOTE:
POST SLEEVE TUBE x 4'-6" LG WITH 18" x 1/4" x 24" SOIL PLATE IS AN AVAILABLE OPTION FOR POSTS #1 & #2.

SECTION "D-D" (@ POST #7 & #8)

SECTION "C-C" (@ POSTS #4, & #5)

SECTION "B-B" (@ POSTS #3 & #6)

SECTION "A-A" (@ POST #2)

ENLARGED VIEW @ POST #1

This drawing and the information shown thereon is the sole property of TRINITY INDUSTRIES, INC. Neither the drawing nor such information is to be used for any purpose other than that for which it was specifically furnished by TRINITY INDUSTRIES, INC., nor is any reproduction authorized without written permission.

REV.	CHK'D	BY	DATE	REMARKS
2		BT	6-20-01	REPLACED PC 34G WITH PC 30G
1		BT	7-12-99	ADDED OFFSET NOTE & LENGTH OF NEED

SRT-350

SLOTTED RAIL TERMINAL
POST LAYOUT AND ERECTION DETAILS
SRT-350 (12.5, 8 POST)

CUSTOMER | P.O. No.

TRINITY INDUSTRIES, INC.
HIGHWAY SAFETY PRODUCTS
2525 STEMMONS FREEWAY, DALLAS TX 75207

DRAWN	B. TAKACH
CHECKED	
APPROVED	
DATE	5-21-99
ENG. FILE #	SS444-01E
SHT.No.	E1 OF 1
DRAWING No.	SS 444
REV.	2

NOTES: UNLESS OTHERWISE SPECIFIED

1. X-TENSION SYSTEM TO BE INSTALLED PER MANUFACTURER INSTRUCTIONS.
2. SYSTEM SHOWN USING STEEL WIDE FLANGE POST (PWE01) WITH TIMBER BLOCKOUTS (ROUTED, PDB01B), POST 2 MUST BE A BREAKAWAY STYLE POST CRIMPED (AS SHOWN) TIMBER CRT POST, OR EQUIVALENT.
3. SYSTEM MAY ALSO USE TIMBER CRT POSTS (PDE09) WITH TIMBER BLOCKOUTS (PDB01A).
4. SYSTEM MAY ALSO USE COMPOSITE OR PLASTIC BLOCKOUTS.

Item	Qty	Part Description	Part#	U/M
1	1.00	GROUND STRUT WELDMENT, X350	B061094	EACH
2	1.00	SOIL ANCHOR WELDMENT, X350	B061104	EACH
3	1.00	BOTTOM POST WELDMENT, X350	B061098	EACH
4	1.00	I-BAEM POST, TOP, X350	B061099	EACH
5	1.00	HEAD UNIT WELDMENT, X350	B061072	EACH
6	3.00	W-Beam Guardrail RWMO4b	4002018	EACH
7	1.00	I-BEAM POST, MIDDLE, X350	B061100	EACH
8	1.00	SLIDER PANEL WELDMENT, W-BEAM, X350	B061088	EACH
9	1.00	SLIDER BRACKET WELDMENT, X350	B061079	EACH
10	1.00	CABLE BRACKET WELDMENT, X350	B061083	EACH
11	2.00	CABLE ASSEMBLY, X350	B061109	EACH
12	1.00	CABLE FRICTION PLATE, HEAD UNI	B061058	EACH
13	1.00	NOSE PIECE, X350	B061105	EACH
14	5.00	W-Beam Timber Blockout PDB1b 8	4002337	EACH
15	4.00	Rivet Nylon Tree Push-In	4002305	EACH
16	8.00	SHEAR BOLT, US, X-TENSION	A070426	EACH
17	20.00	Guardrail Bolt 5/8-11x1 1/4 MG	2001642	EACH
18	1.00	C-Scr HH 5/8-11x1 1/2 Gr5 MGal	2001626	EACH
19	4.00	C-Scr HH M20-2.5x75mm Gr 5.8 M	2001615	EACH
20	1.00	C-Scr HH 3/4-10x8 Gr5 MGal	2001653	EACH
21	2.00	Wshr 5/8 F436 Struct MGal	2001636	EACH
22	2.00	Wshr SAE 3/4 HD MGal	2001630	EACH
23	1.00	Nut HN 3/4-10 HVY Gr2 MGal	2001631	EACH
24	33.00	Guardrail Nut Recessed 5/8-11	4001116	EACH
25	5.00	Bolt CH 5/8-11x10 Gr5 MGal	2001635	EACH
26	4.00	Wide Flange Guardrail Post PWE	4002338	EACH
27	5.00	Wshr 5/8 Rd Galv AASHTO Spec F	4002056	EACH
28	1.00	Nut HN 5/8-11 Gr8 MGal	2001632	EACH

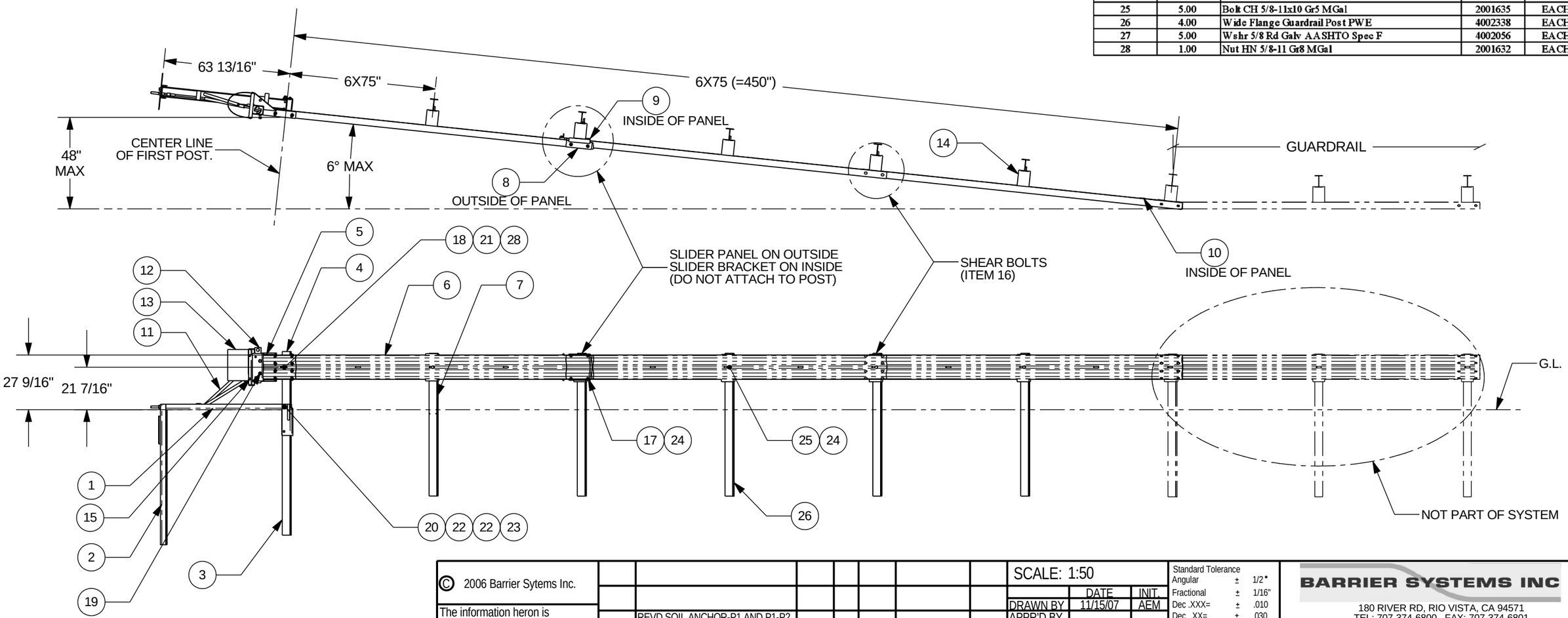

© 2006 Barrier Sytems Inc.

The information heron is proprietary to Barrier Systems Inc. shall not be disclosed, duplicated or used otherwise without the express written approval of Barrier Systems Inc.

REV.	CHANGES	DATE	BY	REQ'D	NEXT ASSY.	ITEM
A	REVD SOIL ANCHOR-P1 AND P1-P2 DIMS, ADDED TOP OF RAIL DIM	9/10/10	JMT			
0	NEW DRAWING	11/15/07	AEM			

SCALE: 1:50

	DATE	INIT.
DRAWN BY	11/15/07	AEM
APPR'D BY		

Standard Tolerance
Angular ± 1/2°
Fractional ± 1/16"
Dec .XXX= ± .010
Dec .XX= ± .030

TITLE:
SYSTEM, X-TENSION GUARDRAIL TERMINAL
1.2M OFFSET

BARRIER SYSTEMS INC
180 RIVER RD, RIO VISTA, CA 94571
TEL: 707-374-6800 FAX: 707-374-6801

SHEET	DRAWING NUMBER	REV
1 OF 1	B071109	A

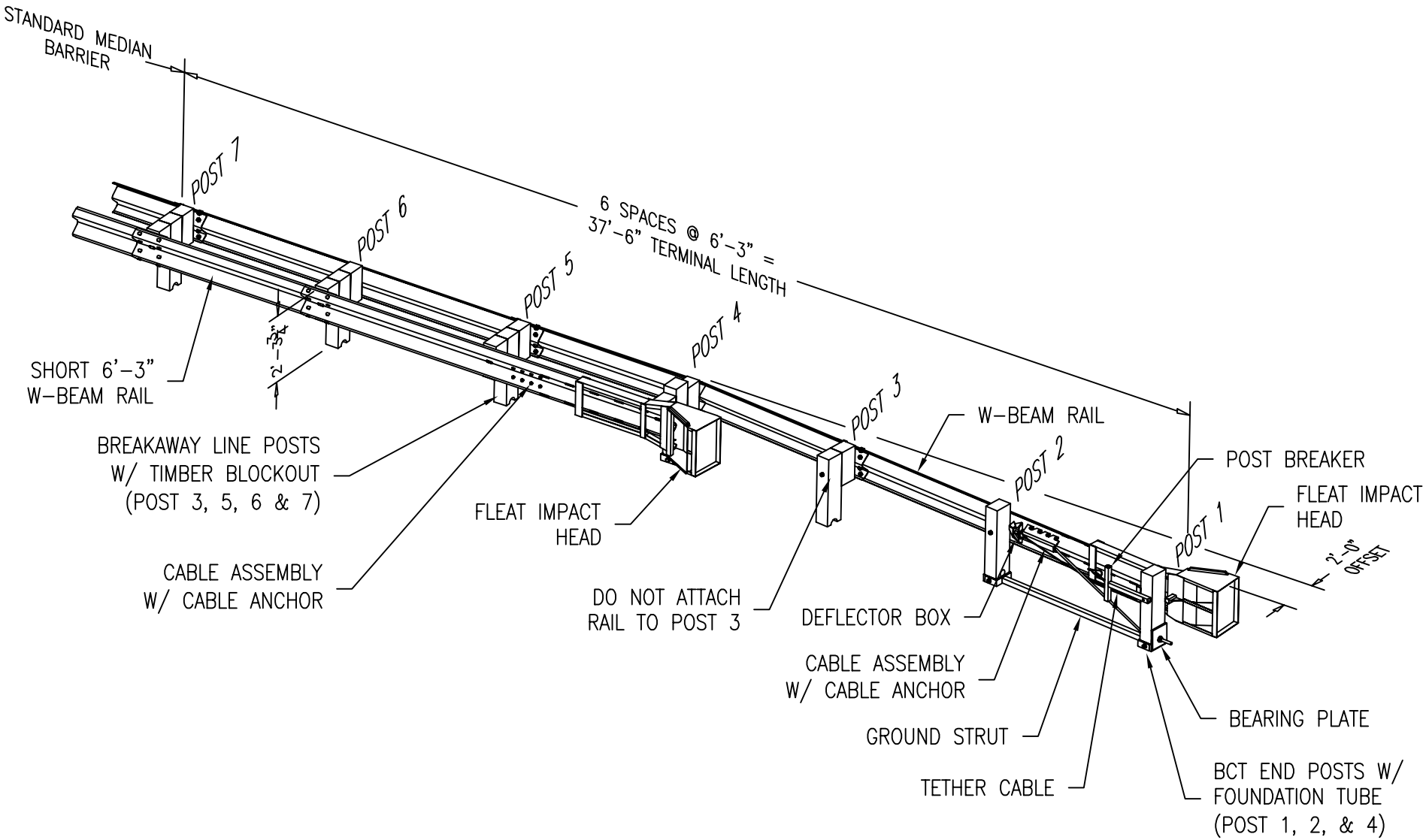

NOTES:

1. OFFSET DIMENSIONS ARE SHOWN TO BLOCKOUTS, EXCEPT FOR POSTS 1 & 2

2. WOOD OR STEEL BREAKAWAY POSTS MAY BE USED FOR THIS SYSTEM.

CRASH CUSHION SYSTEM
TYPE FLEAT-MT

PARTS LIST

ITEM	STOCK NO.	DESCRIPTION	REQ'D
1	9202024–0000	ANCHOR ASSY,FOUNDATION TUBE,6 1/2 FT.	1
2	9204010–0000	BREAKAWAY ASSY	1
3	9206010–0000	BRAKE/TENSION SUPPORT ASSY	1
4	9208010–0000	CABLE/BRAKE ASSY	1
5	9210011–0000	DIAPHRAGM,BRS	3
6	9212010–0000	PANEL/STRAP ASSY	6
7	9214010–0000	TRANSITION STRAP ASSY	2

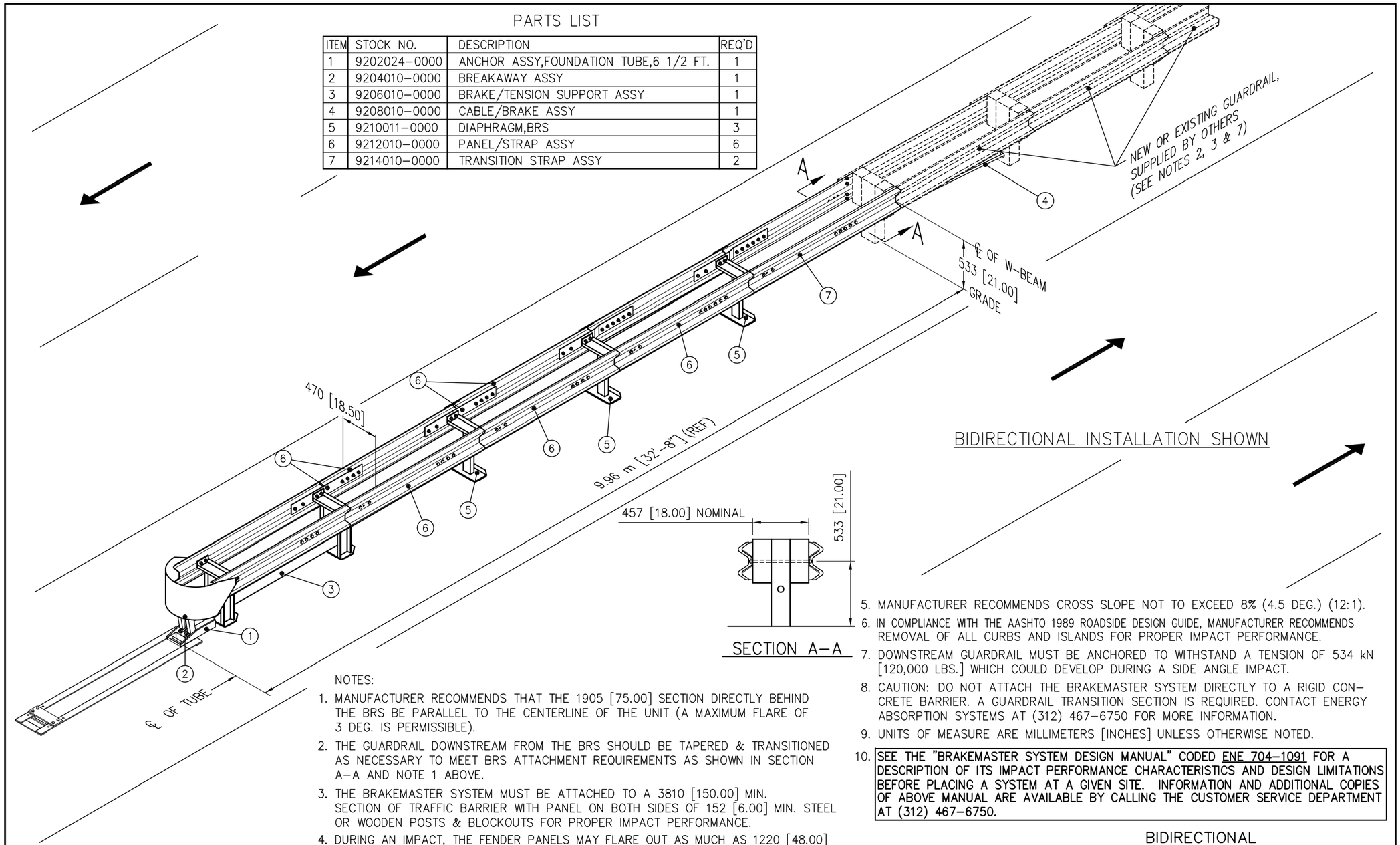

NOTES:

1. MANUFACTURER RECOMMENDS THAT THE 1905 [75.00] SECTION DIRECTLY BEHIND THE BRS BE PARALLEL TO THE CENTERLINE OF THE UNIT (A MAXIMUM FLARE OF 3 DEG. IS PERMISSIBLE).
2. THE GUARDRAIL DOWNSTREAM FROM THE BRS SHOULD BE TAPERED & TRANSITIONED AS NECESSARY TO MEET BRS ATTACHMENT REQUIREMENTS AS SHOWN IN SECTION A–A AND NOTE 1 ABOVE.
3. THE BRAKEMASTER SYSTEM MUST BE ATTACHED TO A 3810 [150.00] MIN. SECTION OF TRAFFIC BARRIER WITH PANEL ON BOTH SIDES OF 152 [6.00] MIN. STEEL OR WOODEN POSTS & BLOCKOUTS FOR PROPER IMPACT PERFORMANCE.
4. DURING AN IMPACT, THE FENDER PANELS MAY FLARE OUT AS MUCH AS 1220 [48.00] ON BOTH SIDES.
5. MANUFACTURER RECOMMENDS CROSS SLOPE NOT TO EXCEED 8% (4.5 DEG.) (12:1).
6. IN COMPLIANCE WITH THE AASHTO 1989 ROADSIDE DESIGN GUIDE, MANUFACTURER RECOMMENDS REMOVAL OF ALL CURBS AND ISLANDS FOR PROPER IMPACT PERFORMANCE.
7. DOWNSTREAM GUARDRAIL MUST BE ANCHORED TO WITHSTAND A TENSION OF 534 kN [120,000 LBS.] WHICH COULD DEVELOP DURING A SIDE ANGLE IMPACT.
8. CAUTION: DO NOT ATTACH THE BRAKEMASTER SYSTEM DIRECTLY TO A RIGID CONCRETE BARRIER. A GUARDRAIL TRANSITION SECTION IS REQUIRED. CONTACT ENERGY ABSORPTION SYSTEMS AT (312) 467–6750 FOR MORE INFORMATION.
9. UNITS OF MEASURE ARE MILLIMETERS [INCHES] UNLESS OTHERWISE NOTED.
10. **SEE THE "BRAKEMASTER SYSTEM DESIGN MANUAL" CODED ENE 704–1091 FOR A DESCRIPTION OF ITS IMPACT PERFORMANCE CHARACTERISTICS AND DESIGN LIMITATIONS BEFORE PLACING A SYSTEM AT A GIVEN SITE. INFORMATION AND ADDITIONAL COPIES OF ABOVE MANUAL ARE AVAILABLE BY CALLING THE CUSTOMER SERVICE DEPARTMENT AT (312) 467–6750.**

BIDIRECTIONAL
MODEL NO. 106106BRS5

Revisions	Date	Rev.	By	Ckd.	App.
ADDED NOTES	1/25/90	A	DLS	SPT	WGK
ADDED NOTES	4/20/90	B	ST	SPT	BDS
ATTACHMENT REF. WAS 92–00–08	11/7/90	C	JF	SPT	BDS
ADDED METRIC & DESIGN MANUAL NOTE	9/20/91	D	DLS	BB	SPT
NEW NOTES	7/13/92	E	TB	ST	SPT
ADDED STEEL OR WOODEN TO NOTE 3	1/7/93	F	JF	ST	SPT
ADDED SHEET 2	1/23/95	G	DLS	BB	SPT
CHGD TO METRIC	4/27/95	H	DLS	BB	SPT
ADDED DESIGN SPEED	8/29/96	I	DLS	SML	SPT
REV'D TO SHOW FOUND. TUBE ANCHOR	2/14/97	J	STT	KM	WGK
REV'S FOUND. TUBE ANCHOR ASSY	3/10/97	K	STT	KM	WGK
ADDED 350 TO TITLE & NOTE 9	6/09/98	L	DDS	KM	SPT

DESIGN SPEED 97 KPH [60 M.P.H.]
AVERAGE G's
EST. FORCE ON BACKUP STRUCTURE _____ KIPS

		Date
Designed		
Drawn	J.B. Welch	9/22/89
Checked	B.D.S.	12/13/89
Approved	W G Krage	3/1/90

NEXT ASSEMBLY

REFERENCES

Project No. _____ Sales Order No. _____
Serial No. _____ Color _____

NOSE SECTION 92–00–14
FRONT SECTION 92–00–15
MIDDLE SECTION 92–00–16
REAR SECTION 92–00–17
ANCHOR ASSY 9202024–0000
ATTACHMENTS 92–03–09

REGISTERED PROFESSIONAL ENGINEER
WILLIAM G. KRAGE
No. M18132
Exp. 9/30/97
MECHANICAL
STATE OF CALIFORNIA

ENERGY ABSORPTION SYSTEMS, INC.
ENGINEERING AND RESEARCH DEPARTMENT

BRAKEMASTER® 350 SYSTEM (BRS)
GENERAL ASSEMBLY

SCALE	SIZE	DWG. NUMBER	SHEET	REV
(1:32) 3/8"=1"–0"	C	92–00–02	1 of 2	L

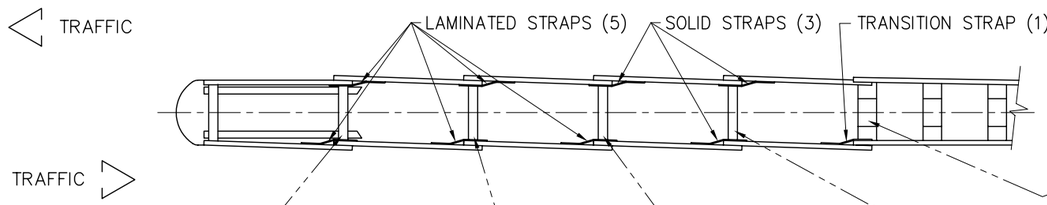

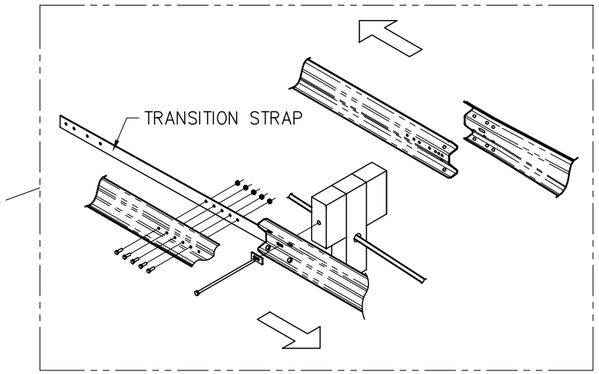

REAR
(SEE 92-00-17)

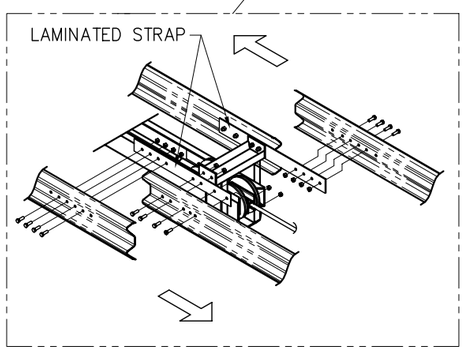

FRONT
(SEE 92-00-15)

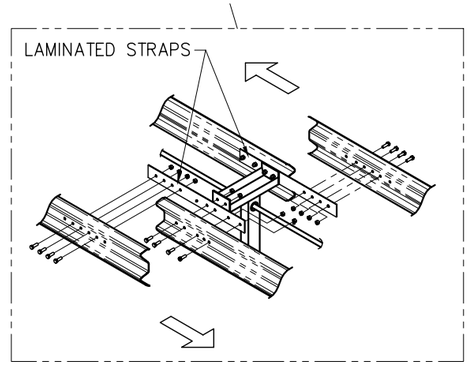

DIAPHRAGM 2
(SEE 92-00-16)

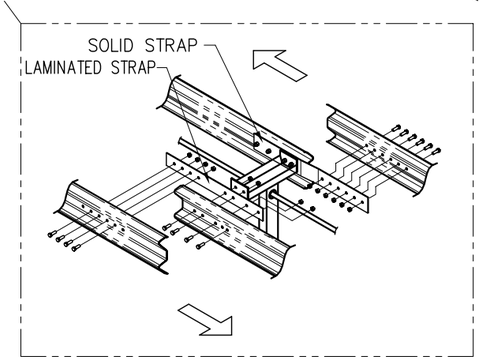

DIAPHRAGM 3
(SEE 92-00-16)

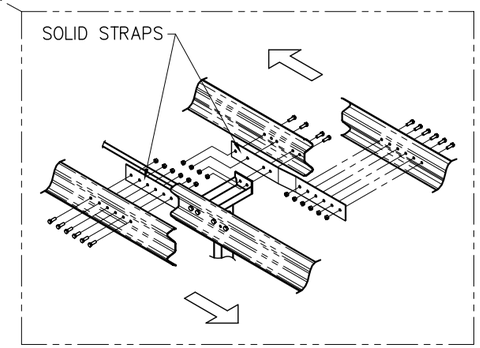

DIAPHRAGM 4
(SEE 92-00-16)

Revisions	Date	Rev.	By	Ckd.	App.
CHG'D TO MATCH SH. 1 REV. LETTER	2/14/97	K	STT	//	//
ADDED 350 TO TITLE	6/09/98	L	DDS	KM	SPT

DESIGN SPEED	M.P.H.
AVERAGE G's	
EST. FORCE ON BACKUP STRUCTURE _____ KIPS	
Designed	Date
Drawn *D L Staus*	01/23/95
Checked *BB*	02/09/95
Approved *SPT*	02/09/95

NEXT ASSEMBLY

REFERENCES

Project No. _____ Sales Order No. _____
Serial No. _____ Color _____

REGISTERED PROFESSIONAL ENGINEER
WILLIAM G. KRAGE
No. M18132
Exp. 9/30/97
MECHANICAL
STATE OF CALIFORNIA

ENERGY ABSORPTION SYSTEMS, INC.
ENGINEERING AND RESEARCH DEPARTMENT

BRAKEMASTER® 350 SYSTEM (BRS)
GENERAL ASSEMBLY
(BIDIRECTIONAL)

SCALE	SIZE	DWG. NUMBER	SHEET	REV
(1:32) 3/8=1'-0"	C	92-00-02	2 of 2	L

PARTS LIST		
ITEM	STOCK NO.	DESCRIPTION
1	9202024–0000	ANCHOR ASSY,FOUNDATION TUBE,6 1/2 FT
2	9204010–0000	BREAKAWAY ASSY

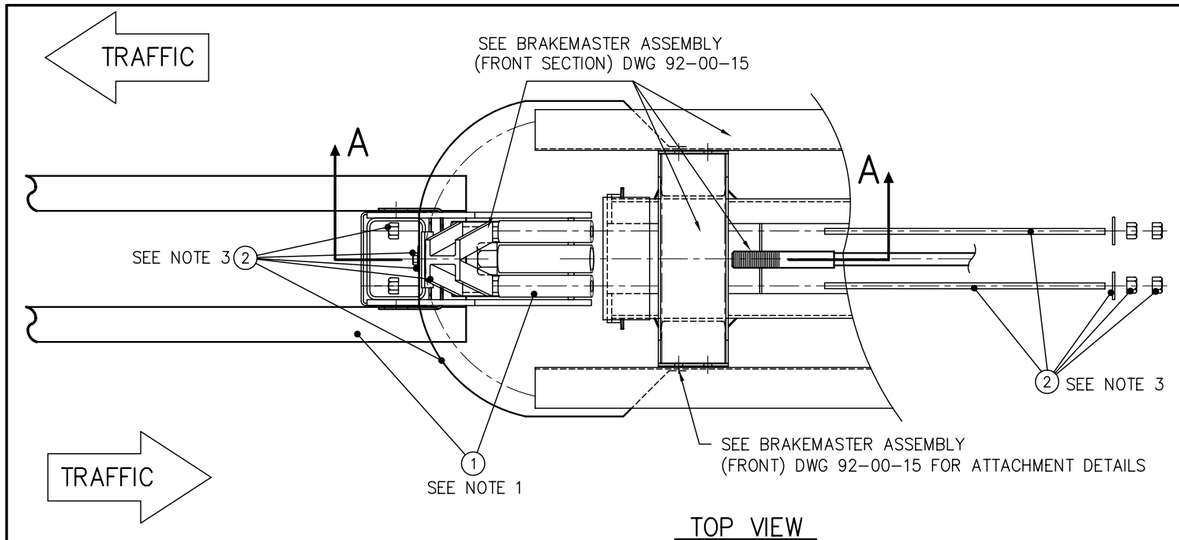

TOP VIEW

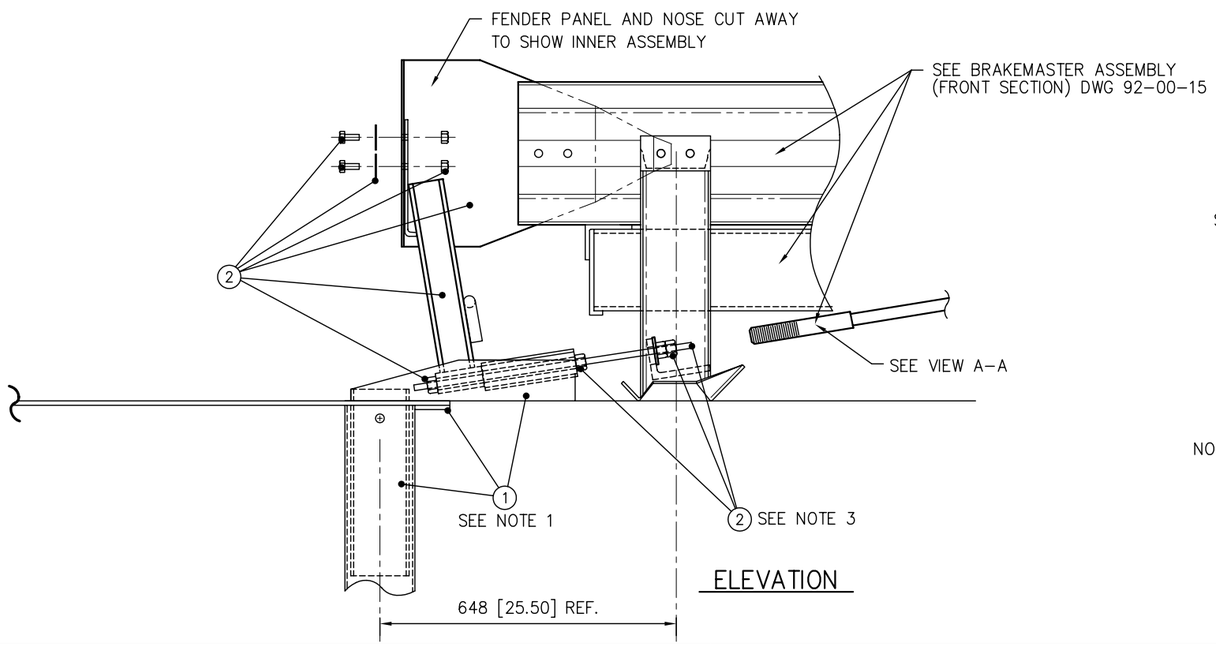

ELEVATION

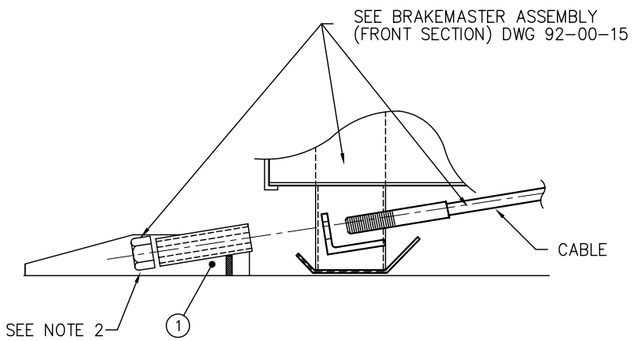

VIEW A–A

NOTES:

1. PLACEMENT OF FOUNDATION TUBE ANCHOR IS CRITICAL.
   REFER TO DETAILED INSTRUCTIONS ON INSTALLATION DRAWING.
2. NUT TO BE HAND TIGHT.
3. TORQUE NUTS TO 136±14 Nm [100±10 FT–LBS]
   OR TIGHTEN NUT 1/4 TURN PAST SNUG.
3. UNITS OF MEASURE ARE MILLIMETERS [INCHES] UNLESS OTHERWISE NOTED.

Revisions	Date	Rev.	By	Ckd.	App.	Q.C.
MOVED NUTS;NOTE 2 WAS TORQUE TO...	8/7/91	A	TB	BB	SPT	
ADDED METRIC	9/20/91	B	DLS	BB	SPT	
ITEM 1 WAS 9202010–0000	2/13/97	C	STT	KM	WGK	
REVISED ANCHOR STRAP	3/11/97	D	STT	KM	WGK	
ADDED 350 TO TITLE & NOTE 3	6/09/98	E	DDS	KM	SPT	STT

		Date
Designed		
Drawn	WELCH, JB	7/12/89
Checked	B.D.S.	11/10/89
Approved	WGK	11/13/89
Q.C.	R.L. Porteous	11/2/89

Tolerances:
a. Angular ±
b. Linear ±
(Unless Otherwise Noted)

Material:

REFERENCES

NEXT ASSEMBLY 92–00–02

REGISTERED PROFESSIONAL ENGINEER
WILLIAM G. KRAGE
No. M18132
Exp. 9/30/97
MECHANICAL
STATE OF CALIFORNIA

ENERGY ABSORPTION SYSTEMS, INC.
ENGINEERING AND RESEARCH DEPARTMENT

BRAKEMASTER® 350 SYSTEM (BRS)
ASSEMBLY
(NOSE SECTION)
BIDIRECTIONAL

SCALE	SIZE	DWG. NUMBER	SHEET	REV
(1:8) 1/8" = 1"	C	92–00–14	1 of 1	E

PARTS LIST		
ITEM	STOCK NO.	DESCRIPTION
1	9212010–0000	PANEL/STRAP ASSY
2	9206010–0000	BRAKE/TENSION SUPPORT ASSY
3	9208010–0000	CABLE/BRAKE ASSY

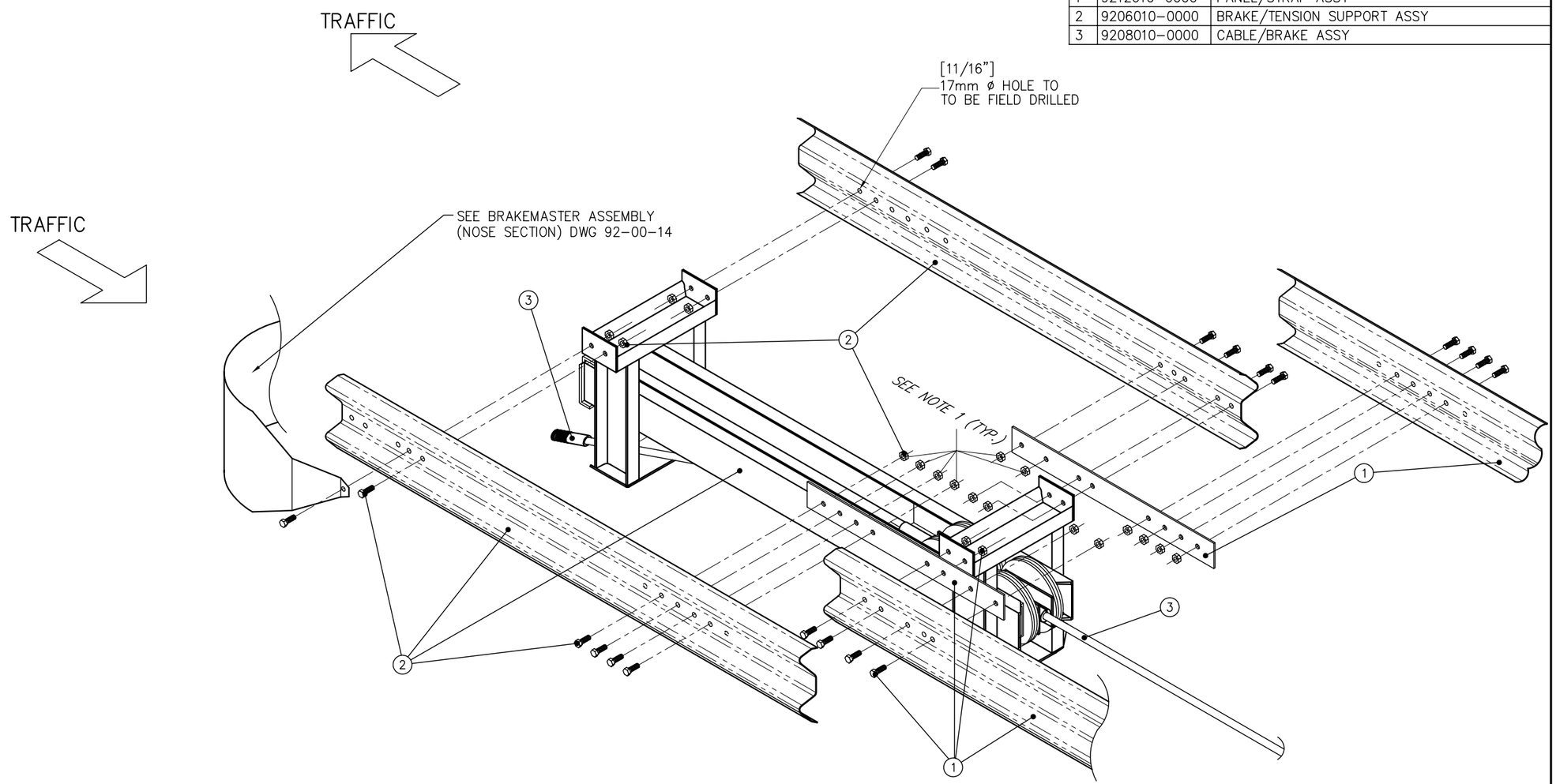

NOTE:
1. TORQUE NUTS TO 136±14 Nm [100±10 FT–LBS]

Revisions	Date	Rev.	By	Ckd.	App.	Q.C.
FIXED HOLE LOC & ADDED METRIC	8/2/90	A	BD	SPT	BDS	
ADDED 350 TO TITLE	6/10/98	B	DDS	KM	SPT	STT

		Date
Designed		
Drawn	TBusse	11/28/89
Checked	B.D.S.	12/13/89
Approved	D Gertz	12/13/89
Q.C.		

Tolerances:
a. Angular ±
b. Linear ±
(Unless Otherwise Noted)

Material:

REFERENCES

NEXT ASSEMBLY 92–00–02

ENERGY ABSORPTION SYSTEMS, INC.
ENGINEERING AND RESEARCH DEPARTMENT

BRAKEMASTER®350 SYSTEM (BRS)
ASSEMBLY
(FRONT SECTION)
BIDIRECTIONAL

SCALE	SIZE	DWG. NUMBER	SHEET	REV
(1:12) 1"= 1'–0"	C	92–00–15	1 of 1	B

PARTS LIST			
ITEM	STOCK NO.	DESCRIPTION	REQ'D
1	9212010-0000	PANEL/STRAP ASSY	
2	9210011-0000	DIAPHRAGM, BRS	
3	9216021-0000	STRAP, LAMINATED	

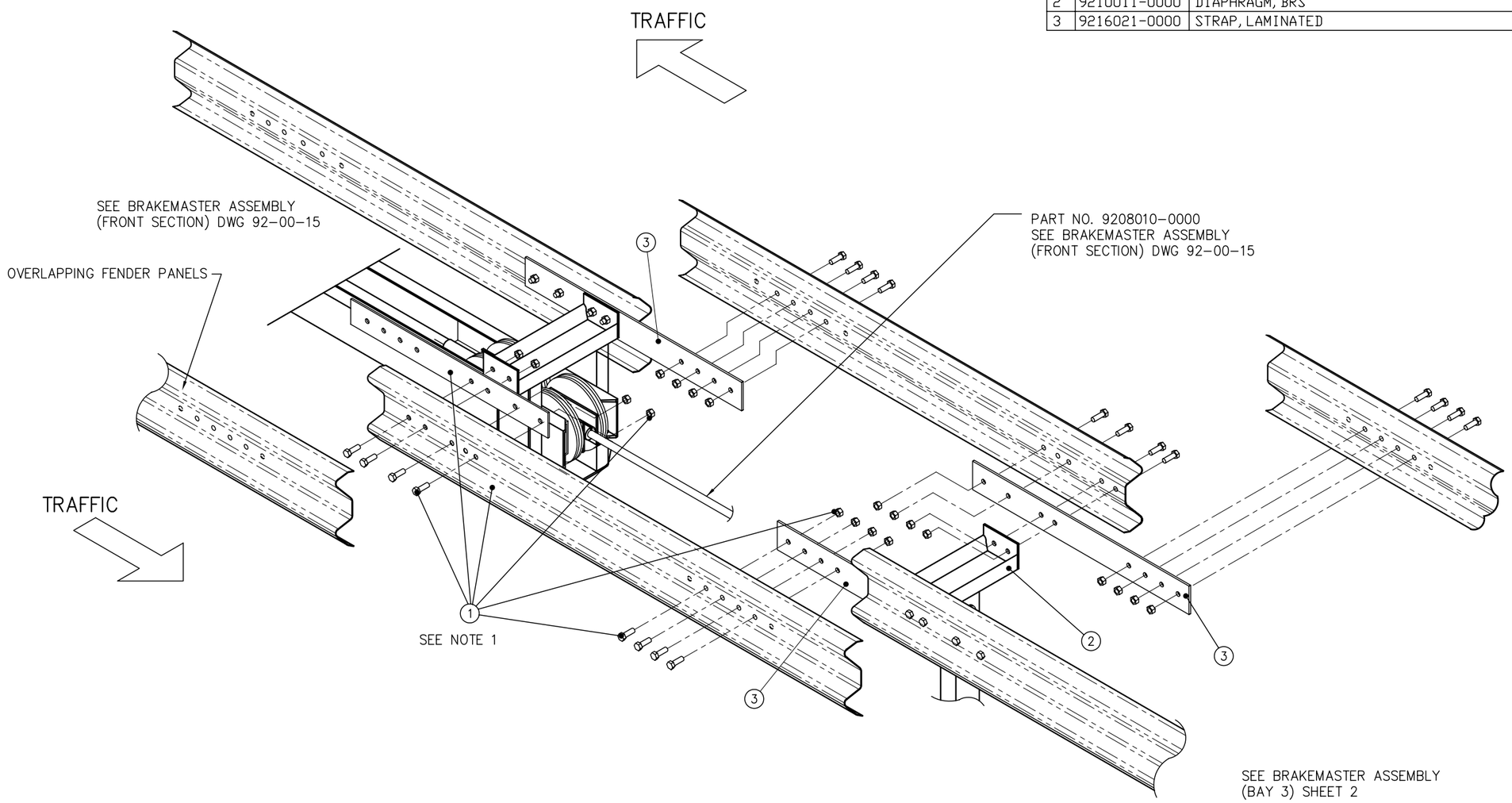

NOTE:
1. TORQUE NUTS TO 136±14 Nm [100±10 FT-LBS]

Revisions	Date	Rev.	By	Ckd.	App.	Q.C.
ADDED ITEM 3 & METRIC	08/02/90	A	BD	SPT	BDS	
#3 WAS 9218011-0000, ADD SHTS 2 & 3	1/27/95	B	DLS	BB	SPT	
ADDED 350 TO TITLE	6/10/98	C	DDS	KM	SPT	STT

		Date
Designed		
Drawn	TBusse	11/28/89
Checked	B.D.S.	12/13/89
Approved	D Gertz	12/14/89
Q.C.		

Tolerances:
a. Angular ±
b. Linear ±
(Unless Otherwise Noted)

Material:

REFERENCES

NEXT ASSEMBLY 92-00-02

ENERGY ABSORPTION SYSTEMS, INC.
ENGINEERING AND RESEARCH DEPARTMENT

BRAKEMASTER® 350 SYSTEM (BRS)
ASSEMBLY (BAY 2)
BIDIRECTIONAL

SCALE	SIZE	DWG. NUMBER	SHEET	REV
(1:12) 1"= 1'-0"	C	92-00-16	1 of 3	C

PARTS LIST			
ITEM	STOCK NO.	DESCRIPTION	REQ'D
1	9212010–0000	PANEL/STRAP ASSY	
2	9210011–0000	DIAPHRAGM,BRS	
3	9218011–0000	STRAP,SOLID W/DECAL	
4	9216021–0000	STRAP,LAMINATED	

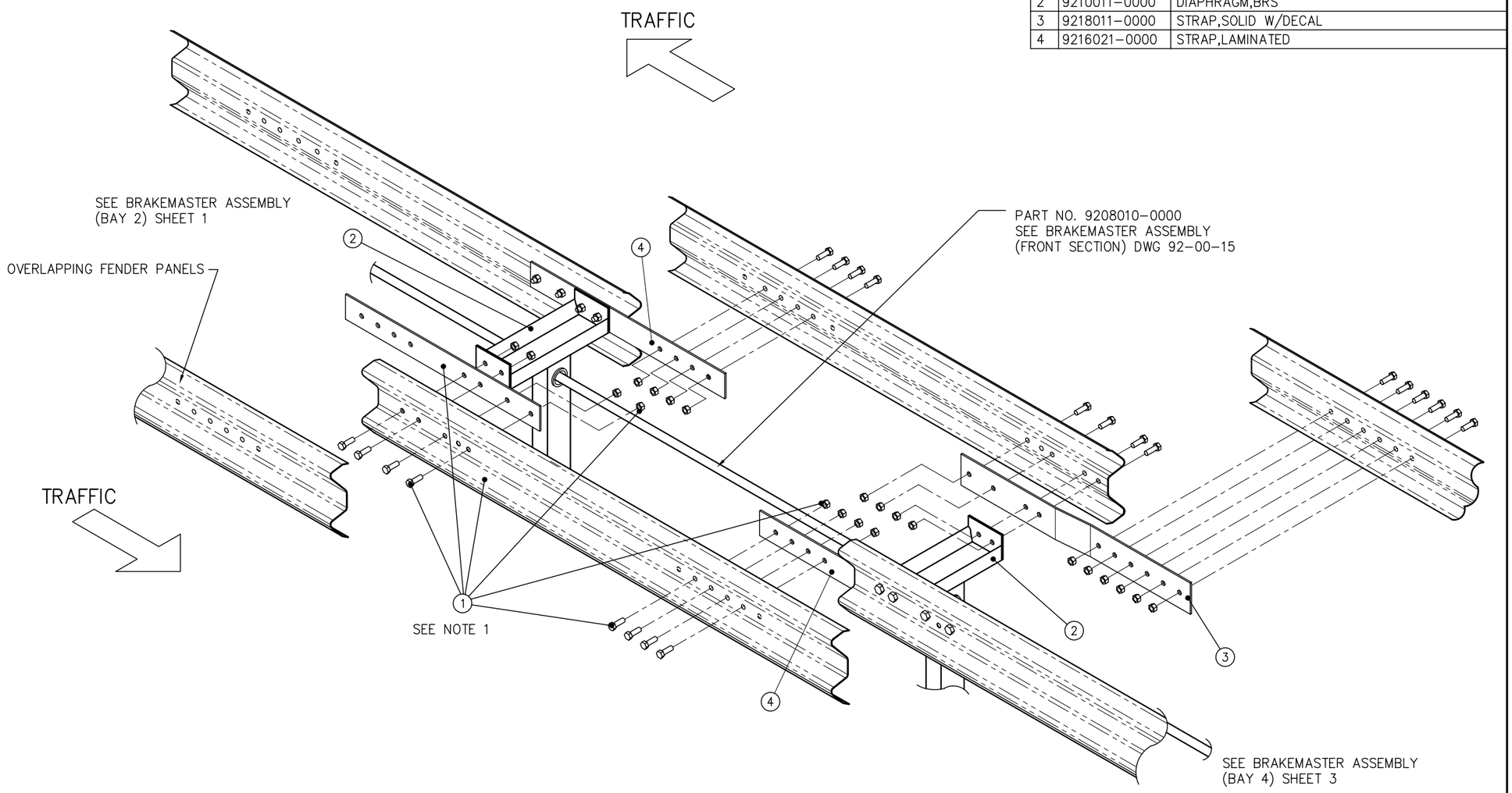

NOTE:
1. TORQUE NUTS TO 136±14 Nm [100±10FT–LBS]

Revisions	Date	Rev.	By	Ckd.	App.	Q.C.
ADDED 350 TO TITLE	6/10/98	C	DDS	KM	SPT	STT

		Date
Designed		
Drawn	D L Staus	01/27/95
Checked	BB	02/01/95
Approved	SPT	02/01/95
Q.C.		

Tolerances:
a. Angular ±
b. Linear ±
(Unless Otherwise Noted)

Material:

REFERENCES

NEXT ASSEMBLY 92–00–02

ENERGY ABSORPTION SYSTEMS, INC.
ENGINEERING AND RESEARCH DEPARTMENT

BRAKEMASTER®350 SYSTEM (BRS)
ASSEMBLY (BAY 3)
BIDIRECTIONAL

SCALE	SIZE	DWG. NUMBER	SHEET	REV
(1:12) 1"= 1'–0"	C	92–00–16	2 of 3	C

PARTS LIST			
ITEM	STOCK NO.	DESCRIPTION	REQ'D
1	9212010–0000	PANEL/STRAP ASSY	
2	9210011–0000	DIAPHRAGM,BRS	
3	9218011–0000	STRAP,SOLID W/DECAL	

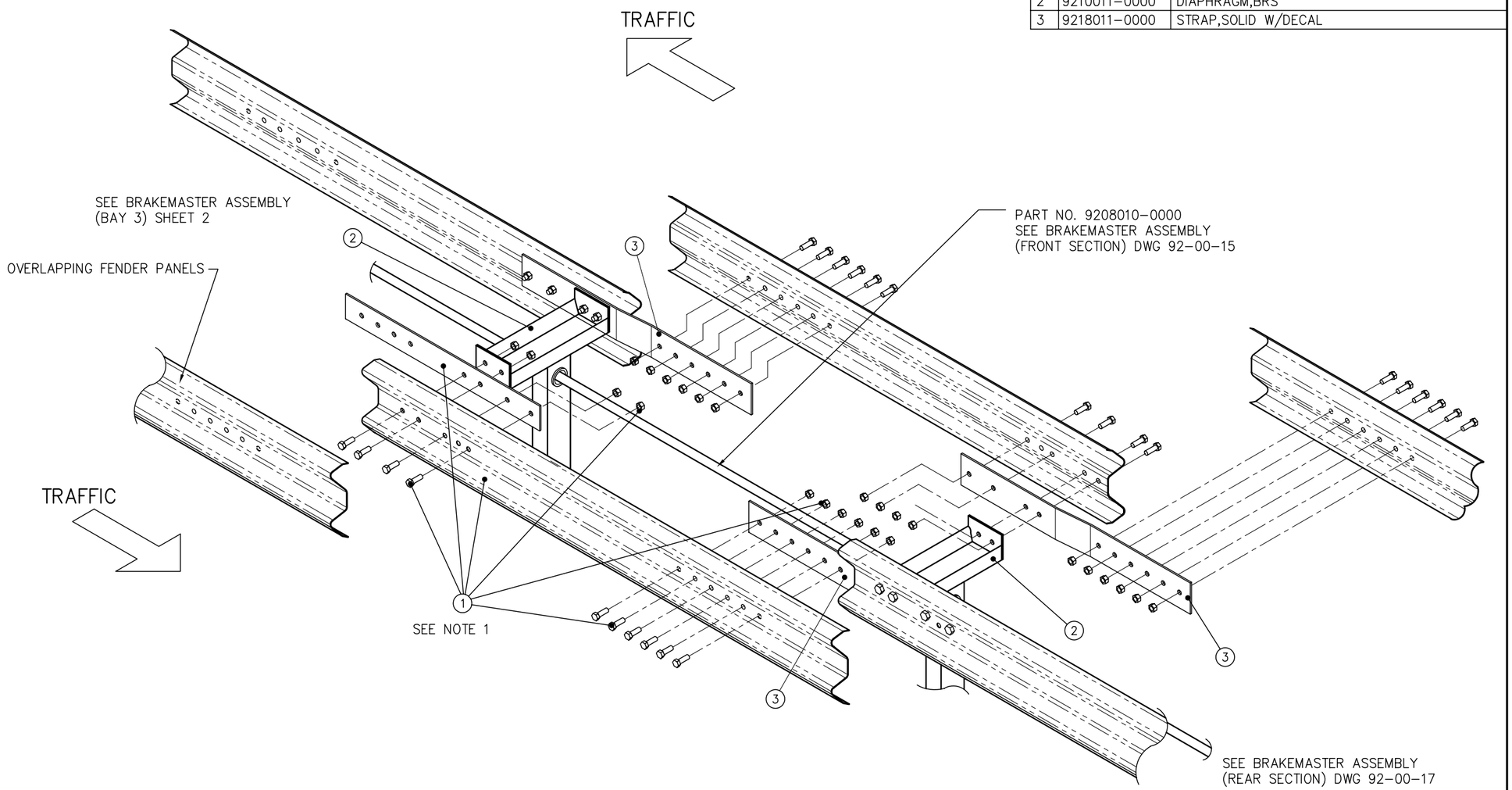

NOTE:

1. TORQUE NUTS TO 136±14 Nm [100±10 FT–LBS]

Revisions	Date	Rev.	By	Ckd.	App.	Q.C.
ADDED 350 TO TITLE	6/10/98	C	DDS	KM	SPT	STT

		Date
Designed		
Drawn	D L Staus	01/27/95
Checked	BB	02/01/95
Approved	SPT	02/01/95
Q.C.		

Tolerances:
a. Angular ±
b. Linear ±
(Unless Otherwise Noted)

Material:

REFERENCES

NEXT ASSEMBLY 92–00–02

ENERGY ABSORPTION SYSTEMS, INC.
ENGINEERING AND RESEARCH DEPARTMENT

BRAKEMASTER®350 SYSTEM (BRS)
ASSEMBLY (BAY 4)
BIDIRECTIONAL

SCALE	SIZE	DWG. NUMBER	SHEET	REV
(1:12) 1"= 1'–0"	C	92–00–16	3 of 3	C

PARTS LIST		
ITEM	STOCK NO.	DESCRIPTION
1	9214010–0000	TRANSITION STRAP ASSY
2	9210011–0000	DIAPHRAGM,BRS
3	————	END OF EXISTING OR NEW GUARDRAIL
4	————	STD GUARDRAIL MOUNTING HARDWARE
5	————	GUARDRAIL POST & BLOCKOUT

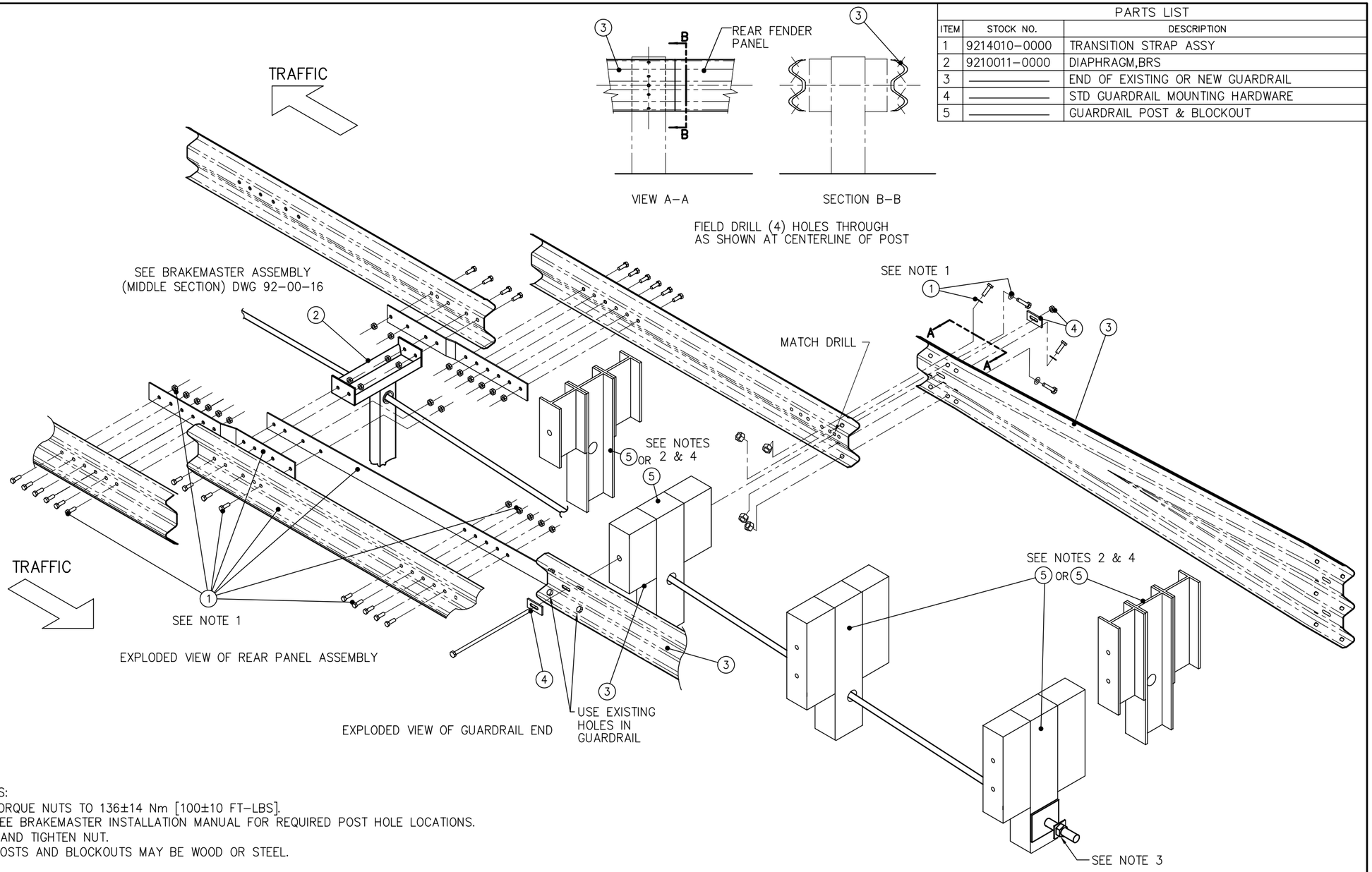

NOTES:
1. TORQUE NUTS TO 136±14 Nm [100±10 FT–LBS].
2. SEE BRAKEMASTER INSTALLATION MANUAL FOR REQUIRED POST HOLE LOCATIONS.
3. HAND TIGHTEN NUT.
4. POSTS AND BLOCKOUTS MAY BE WOOD OR STEEL.

Revisions	Date	Rev.	By	Ckd.	App.	Q.C.
DEL NOTE 2 & REMOVE SLOT	08/02/90	A	BD	SPT	BDS	
NOTE 3 WAS TORQUE NUT TO 150 FT LB	8/7/91	B	TB	BB	SPT	
ADDED STEEL POST & BLOCKOUT & NOTE	12/10/92	C	TB	STT	SPT	
ADDED 350 TO TITLE	6/10/98	D	DDS	KM	SPT	STT

		Date
Designed		
Drawn	TBusse	11/28/89
Checked	B.D.S.	12/13/89
Approved	D Gertz	12/14/89
Q.C.		

Tolerances:
a. Angular ±
b. Linear ±
(Unless Otherwise Noted)

Material:

REFERENCES

NEXT ASSEMBLY 92–00–02

ENERGY ABSORPTION SYSTEMS, INC.
ENGINEERING AND RESEARCH DEPARTMENT

BRAKEMASTER®350 SYSTEM (BRS)
ASSEMBLY
(REAR SECTION)
BIDIRECTIONAL

SCALE	SIZE	DWG. NUMBER	SHEET	REV
(1:16) 3/4"= 1'–0"	C	92–00–17	1 of 1	D

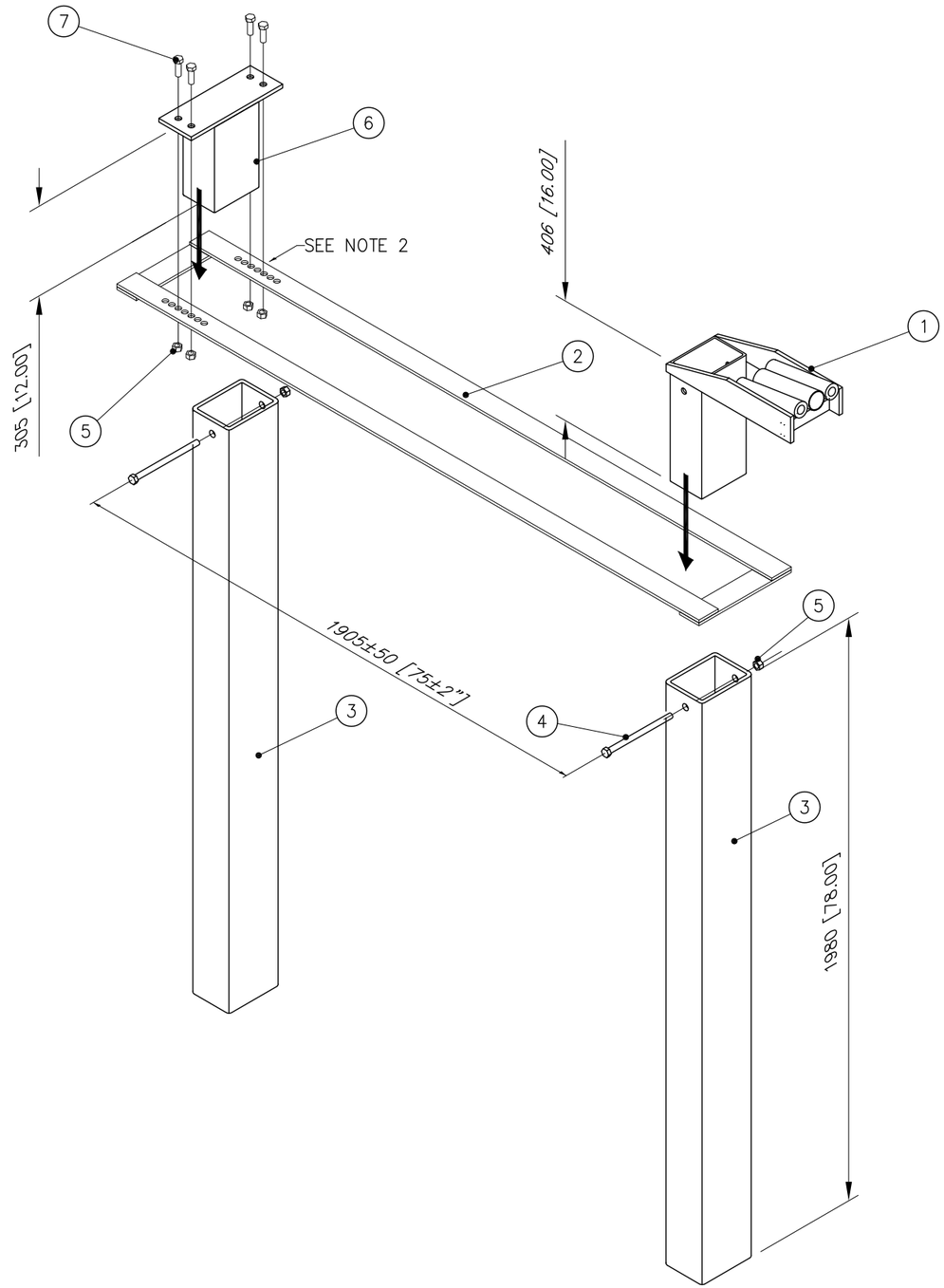

PARTS LIST			
ITEM	STOCK NO.	DESCRIPTION	REQ'D
1	9202025-0000	ANCHOR ADAPTER,BTS TO FOUND. TUBE	1.00
2	9202026-0000	ANCHOR STRAP,BRS	1.00
3	9202028-0000	FOUNDATION TUBE,78,BRS	2.00
4	2701992-0000	BOLT,HX,5/8X10,G5,G	2.00
5	2704191-0000	NUT,HX,5/8,G,RAIL	6.00
6	9202033-0000	ANCHOR PLUG,FOUNDATION TUBE	1.00
7	118570G	BOLT,HX,5/8X2,G5,G	4.00

ASSEMBLY NO. 9202024-0000

NOTES:
1. TIGHTEN NUTS 1/2 TURN BEYOND SNUG.
2. EXTRA HOLES IN ITEM 2 ARE FOR ±50mm [2.00] TOLERANCE.
3. UNITS OF MEASURE ARE IN MILLIMETERS [INCHES] UNLESS OTHERWISE NOTED.

Revisions	Date	Rev.	By	Ckd.	App.
QTY ITEM 5 WAS 2, ADDED ITEM 7	6/12/97	D	KM	KRM	SPT
ADDED 350 TO TITLE & EDITED NOTE 3	6/09/98	E	DDS	KM	SPT
ECO 3371; ITEM 7 WAS 2700501-0000	5/22/12	F	DDW	JME	AJC

REFERENCES

DRAWN: J.TRAGESER	DATE: 12/17/96	
DESIGNED: B. Krage	DATE: 12/13/96	
CHECKED: KRM	DATE: 12/26/96	
APPROVED WGK	DATE: 12/23\96	
CAD FILE: 9202024-0000.dwg		
NEXT ASSEMBLY: 92-00-02 92-00-01		

ENERGY ABSORPTION SYSTEMS, INC.
ENGINEERING AND RESEARCH DEPARTMENT

BRAKEMASTER®350 SYSTEM (BRS)
ANCHOR ASSY,FOUNDATION TUBE,
2M [6'-6"], BRS

SCALE	DWG.	SHEET	REV
1:18	9202024-0000	1 of 1	F

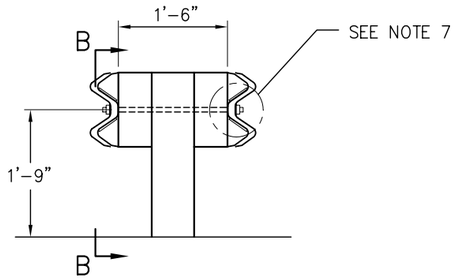

SECTION A-A

SCALE: 3/8"=1'-0"

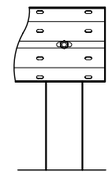

VIEW B-B

(TRANSITION END)
OVERLAPPING BRS PANEL HAS BEEN EXCLUDED FOR CLARITY

SCALE: 3/8"=1'-0"

NOTES:

1. MANUFACTURER RECOMMENDS THAT THE 6'-3" SECTION DIRECTLY BEHIND THE BRS BE PARALLEL TO THE CENTERLINE OF THE UNIT (A MAX. FLARE OF 3° IS PERMISSIBLE).
2. THE GUARDRAIL DOWNSTREAM FROM THE BRS SHOULD BE TAPERED & TRANSITIONED AS NECESSARY TO CREATE BRS ATTACHMENT REQUIREMENTS AS SHOWN IN SECTION A-A AND NOTE 1 ABOVE.
3. MANUFACTURER RECOMMENDS CROSS SLOPE NOT TO EXCEED 8% (5°).
4. MANUFACTURER RECOMMENDS REMOVAL OF CURBS AND ISLANDS UNDER THE BRAKEMASTER TO ENSURE PROPER IMPACT PERFORMANCE.
5. DOWNSTREAM GUARDRAIL MUST BE ANCHORED TO WITHSTAND A TENSION OF 120,000 LBS. WHICH COULD DEVELOP DURING A REDIRECT IMPACT.
6. USE ONLY STANDARD HIGHWAY HARDWARE.
7. SEE BRS INSTALLATION MANUAL FOR PROPER ASSEMBLY. AFTER TIGHTENING NUTS, TRIM OFF EXCESS THREADED ROD.
8. NOTE PROPER OVERLAP OF PANELS FOR DIRECTION OF TRAFFIC.
9. TRIM TRANSITION BLOCKOUTS AS NECESSARY TO ACHIEVE 1'-6" REQUIRED WIDTH AT BRAKEMASTER INTERFACE, SECTION A-A.

THE BRAKEMASTER SYSTEM CAN BE ATTACHED TO FEDERALLY APPROVED OR STATE APPROVED TRANSITION SECTIONS. THE BRAKEMASTER SYSTEM SHALL ATTACH TO THE TRANSITION SECTION AS SHOWN ON THIS DRAWING.

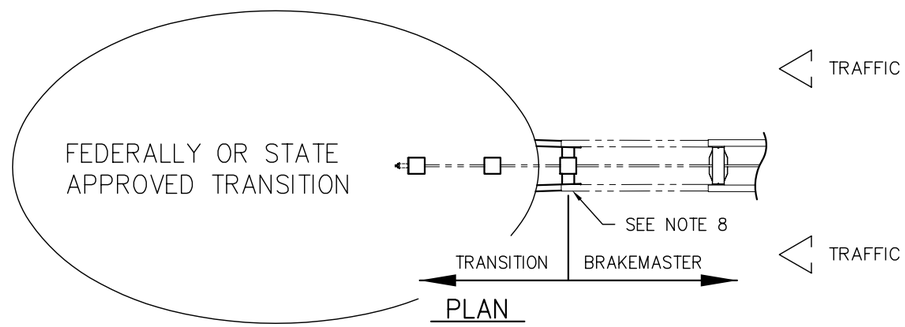

PLAN

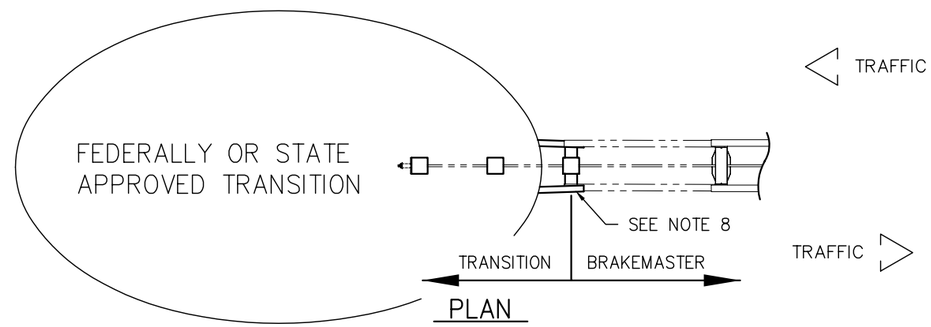

PLAN

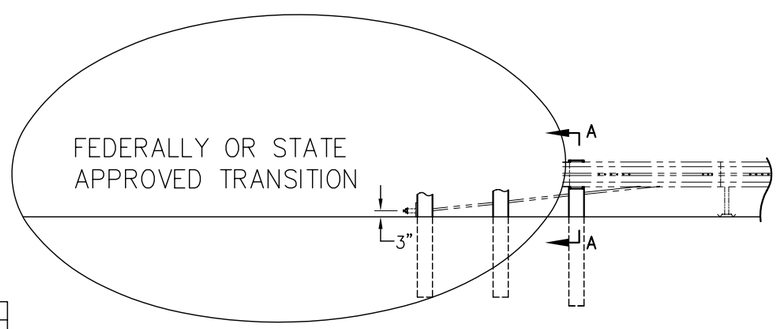

ELEVATION

UNIDIRECTIONAL

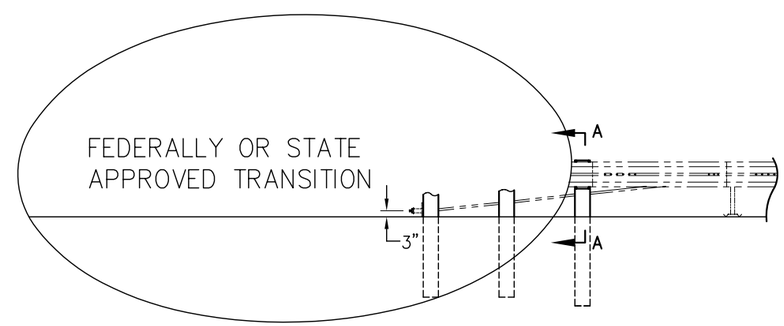

ELEVATION

BIDIRECTIONAL ←

ROUTE TO:	X
Q	
W	
PD	
C	
P	
S	
B	X

Revisions	Date	Rev.	By	Ckd.	App.	Q.C.
ADDED "ELEVATION" TO BIDI. VIEW	8/90	A	ST	SPT	BDS	

Designed		Date
Drawn	S. Trageser	8/3/90
Checked	S.P. Turner	5/7/90
Approved	W G Krage	5/16/90
Q.C.		

Tolerances:
a. Angular ±
b. Linear ±
(Unless Otherwise Noted)

Material:

REFERENCES

NEXT ASSEMBLY _____

ENERGY ABSORPTION SYSTEMS, INC.
ENGINEERING AND RESEARCH DEPARTMENT

BRAKEMASTER SYSTEM (BRS)

ATTACHMENT TO A
TRANSITION SECTION
FOR MEDIAN APPLICATIONS

SCALE	SIZE	DWG. NUMBER	SHEET	REV
1/4"=1'-0"	C	92-03-09		A

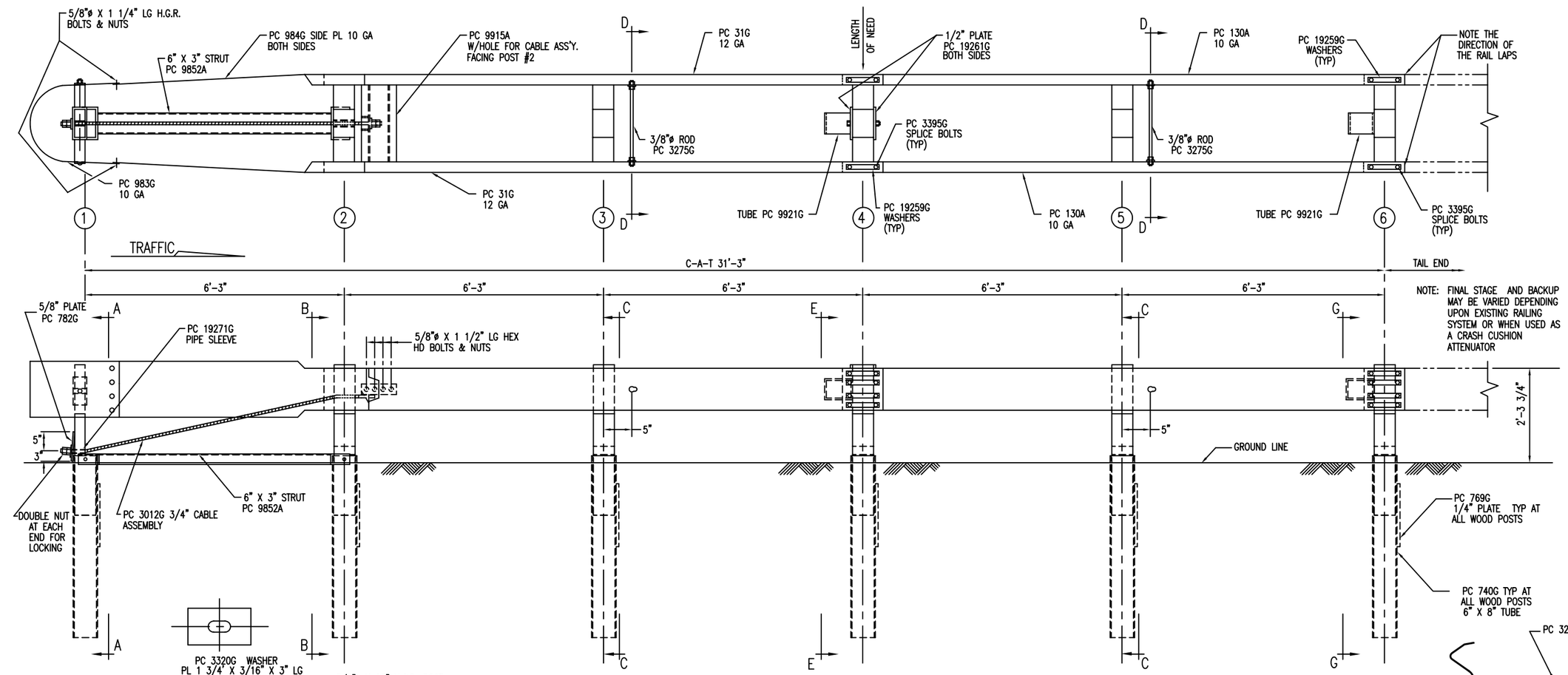

NOTE:
PC 3395G SPLICE BOLTS ARE USED TO ALLOW TELESCOPING ACTION.

C-A-T BILL OF MATERIAL

PRODUCT CODE	QTY	DESCRIPTION
31G	2	12/12'6/0 CAT (GUARDRAIL)
130A	2	10/12'6/5'10:6'8/SP CAT (GUARDRAIL)
705G	1	2" x 5 1/2" PIPE
740G	6	4'6 TUBE SLEEVE
769G	6	1/4 x 18 x 24 SOIL PLATE
782G	1	5/8" x 8" x 8" BEARING PLATE
983G	1	10/NOSE PLATE/CAT/ROLLED
984G	2	10/SIDE PLATE CAT
3012G	1	CABLE 3/4 x 8'0/DBL SWG
3074B	5	WD 3'6 POST #2, 3, 4, 5, 6 CAT
3075B	1	WD 3'6 POST #1 CAT
3100B	2	WD BLOCK 1'2 #1 CAT
3101B	10	WD BLOCK 1'2 #2-6 CAT
3255G	4	3/8" FLAT WASHER
3263G	4	3/8"ø x 2" LAG SCREW
3275G	2	3/8"ø x 24 1/2" RESTRAINT ROD
3300G	20	5/8" FLAT WASHER
3320G	4	3/16" x 1 3/4" x 3" RECT WASHER
3340G	85	5/8" G.R. NUT
3360G	16	5/8"ø x 1 1/4" G.R. BOLT
3380G	8	5/8"ø x 1 1/2" HEX BOLT
3395G	32	5/8"ø x 1 3/4" HEX BOLT CAT
3478G	13	5/8"ø x 7 1/2" HEX BOLT
3497G	6	5/8"ø x 9 1/2" HEX BOLT
3650G	2	5/8"ø x 25" G.R. BOLT
3900G	2	1" FLAT WASHER
3910G	4	1" HEX NUT
4252G	8	3/8" HEX NUT
4258G	4	3/8" LOCK WASHER
4640G	8	5/8"ø x 24" HEX BOLT
9852A	1	CHANNEL STRUT x 6'-6"
9915A	1	SPACER CHANNEL CAT
9916A	1	10/BENT PLATE SLEEVE
9921G	2	6" SLEEVE 6 x 8
19259G	32	3/16" x 2" x 10" PLATE WASHER
19261G	2	1/2 x 3 x 7 POST PLATE
19271G	1	1" x 2 1/2" PIPE SLEEVE CAT

REV.	CHK'D	BY	DATE	REMARKS
6		BT	8-9-00	CHANGED SYSTEM HEIGHT, WAS 2'-3"
5		LH	6-22-00	REPLACED PC 766 WITH PC 769, CHANGED TITLE BLOCK
4		BT	4-10-97	ROTATED BLOCK PC 9921 90° AT POST 4 & 6
3		BT	3-10-97	DELETED PC 3072, 3073, 4470, CHG QTY 3074 & 3478
2		BT	8-12-96	SECTIONS A-A & B-B, CORRECTED PIPE SLEEVE PC No
1		BT	5-1-96	REVISED PC No 31G & 130A

C-A-T

CRASH-CUSHION ATTENUATING TERMINAL PLAN, ELEVATION & SECTIONS FOR USE AS A LONGITUDINAL MEDIAN BARRIER TERMINAL OR CRASH CUSHION ATTENUATOR

TRINITY INDUSTRIES, INC.
HIGHWAY SAFETY PRODUCTS
2525 STEMMONS FREEWAY, DALLAS, TX 75207

DRAWN	BT
CHECKED	EN
SCALE	N.T.S.
DATE	7-15-94
ENG. FILE #	SS245-01E
SHT.No.	E1 OF 1
DRAWING NO.	SS-245
REV.	6

This drawing and the information shown thereon is the sole property of TRINITY INDUSTRIES, INC. Neither the drawing nor such information is to be used for any purpose other than that for which it was specifically furnished by TRINITY INDUSTRIES, INC., nor is any reproduction authorized without written permission.