HSIMG-005-4(189)210E

| Dist | COUNTY | ROUTE | POST MILES TOTAL PROJECT | SHEET No. | TOTAL SHEETS |
|---|---|---|---|---|---|
| 06 | Ker | 5 | 5.2/5.9 | 1 | 49 |

STATE OF CALIFORNIA
# DEPARTMENT OF TRANSPORTATION

## PROJECT PLANS FOR CONSTRUCTION ON
# STATE HIGHWAY
## IN KERN COUNTY
## NEAR FORT TEJON
## FROM 0.2 MILE NORTH TO 0.9 MILE NORTH OF FORT TEJON OVERCROSSING

TO BE SUPPLEMENTED BY STANDARD PLANS DATED MAY 2006

INDEX OF PLANS


| SHEET No. | DESCRIPTION |
|---|---|
| 1 | TITLE AND LOCATION MAP |
| 2 | TYPICAL CROSS SECTIONS |
| 3-4 | LAYOUTS |
| 5-8 | PROFILE DIAGRAMS |
| 9 | CONSTRUCTION DETAILS |
| 10-14 | EROSION CONTROL PLAN, DETAILS AND QUANTITIES |
| 15-18 | DRAINAGE PROFILES AND DETAILS |
| 19 | CONSTRUCTION AREA SIGNS |
| 20-21 | TRAFFIC HANDLING PLANS |
| 22 | SUMMARY OF QUANTITIES |
| 23-27 | HIGHWAY PLANTING |
| 28-49 | REVISED AND NEW STANDARD PLANS |


THE STANDARD PLANS LIST APPLICABLE TO THIS CONTRACT IS INCLUDED IN THE NOTICE TO BIDDERS AND SPECIAL PROVISIONS BOOK.

LOCATION MAP

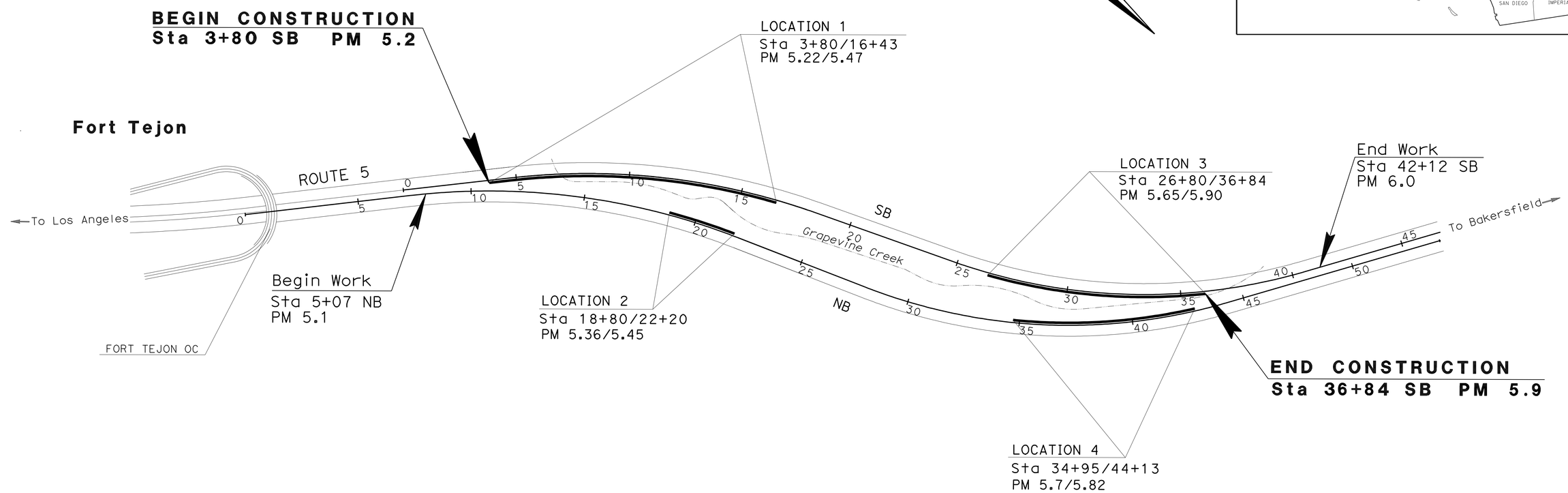


NO SCALE

THE CONTRACTOR SHALL POSSESS THE CLASS (OR CLASSES) OF LICENSE AS SPECIFIED IN THE "NOTICE TO BIDDERS."

PROJECT MANAGER: STEVEN MILTON
DESIGN ENGINEER: GURBHAY BRAR

Udaya Y. Shankar 05-15-11
PROJECT ENGINEER DATE
REGISTERED CIVIL ENGINEER

REGISTERED PROFESSIONAL ENGINEER
UDAYA Y. SHANKAR
No. 71268
Exp. 12/31/11
CIVIL
STATE OF CALIFORNIA

July 25, 2011
PLANS APPROVAL DATE

*THE STATE OF CALIFORNIA OR ITS OFFICERS OR AGENTS SHALL NOT BE RESPONSIBLE FOR THE ACCURACY OR COMPLETENESS OF SCANNED COPIES OF THIS PLAN SHEET.*

| CONTRACT No. | 06-0L1804 |
|---|---|
| PROJECT ID | 0600000292 |

LAST REVISION 06-21-11
DATE PLOTTED => 15-AUG-2011
TIME PLOTTED => 06:43

| Dist | COUNTY | ROUTE | POST MILES TOTAL PROJECT | SHEET No. | TOTAL SHEETS |
|---|---|---|---|---|---|
| 06 | Ker | 5 | 5.2/5.9 | 2 | 49 |

REGISTERED CIVIL ENGINEER 05-15-11 DATE

7-25-11
PLANS APPROVAL DATE

REGISTERED PROFESSIONAL ENGINEER UDAYA Y. SHANKAR No. 71268 Exp. 12/31/11 CIVIL STATE OF CALIFORNIA

*THE STATE OF CALIFORNIA OR ITS OFFICERS OR AGENTS SHALL NOT BE RESPONSIBLE FOR THE ACCURACY OR COMPLETENESS OF SCANNED COPIES OF THIS PLAN SHEET.*

NOTES:

1. DIMENSIONS OF THE PAVEMENT STRUCTURES (STRUCTURAL SECTIONS) ARE SUBJECT TO TOLERANCES SPECIFIED IN THE STANDARD SPECIFICATIONS.
2. EXACT LOCATION AND TYPE OF CONCRETE BARRIER ARE SHOWN ON THE LAYOUT SHEET.

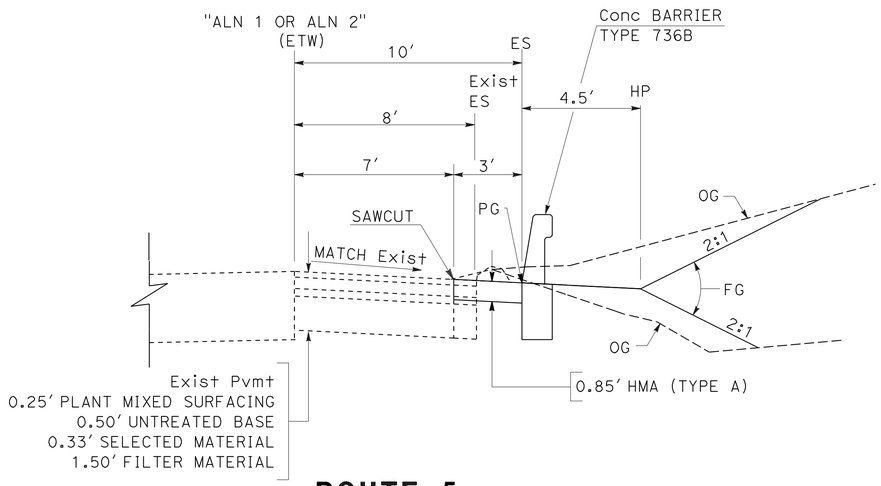


**ROUTE 5**

SB*

SB LOCATION 1 Sta 3+80 TO Sta 9+30 AND Sta 11+30 TO 15+80
SB LOCATION 3 Sta 26+80 TO Sta 34+10 AND Sta 35+00 TO 35+40
NB LOCATION 4 Sta 35+56 TO Sta 36+10 AND Sta 37+30 TO 40+10 AND Sta 41+45 TO 42+80

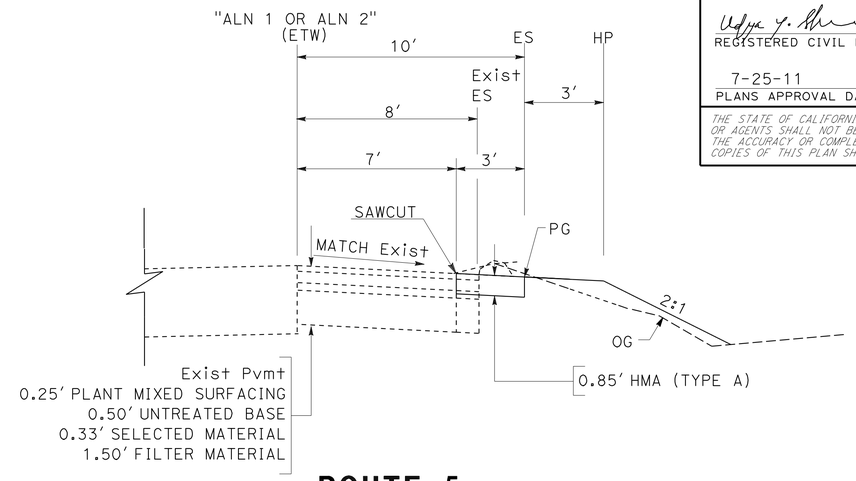


**ROUTE 5**

SB*

SB LOCATION 3 Sta 35+40 TO Sta 35+80
NB LOCATION 4 Sta 42+80 TO Sta 43+05

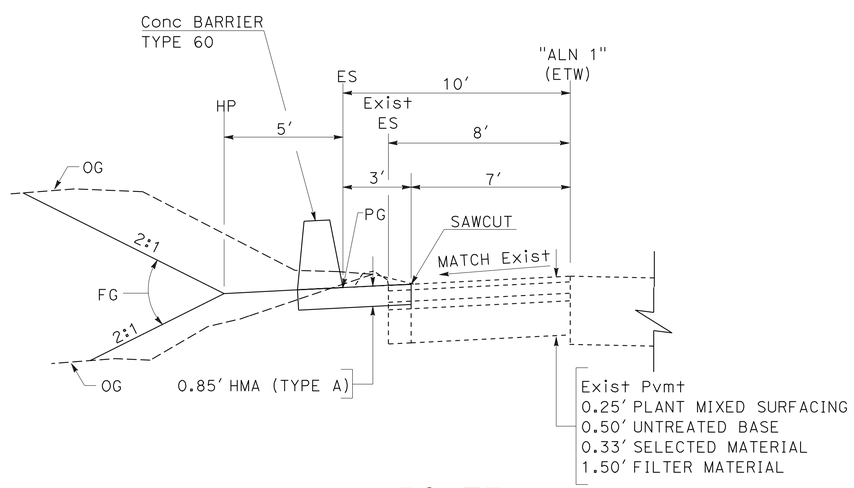


**ROUTE 5**

NB LOCATION 2 Sta 18+80 TO Sta 22+20

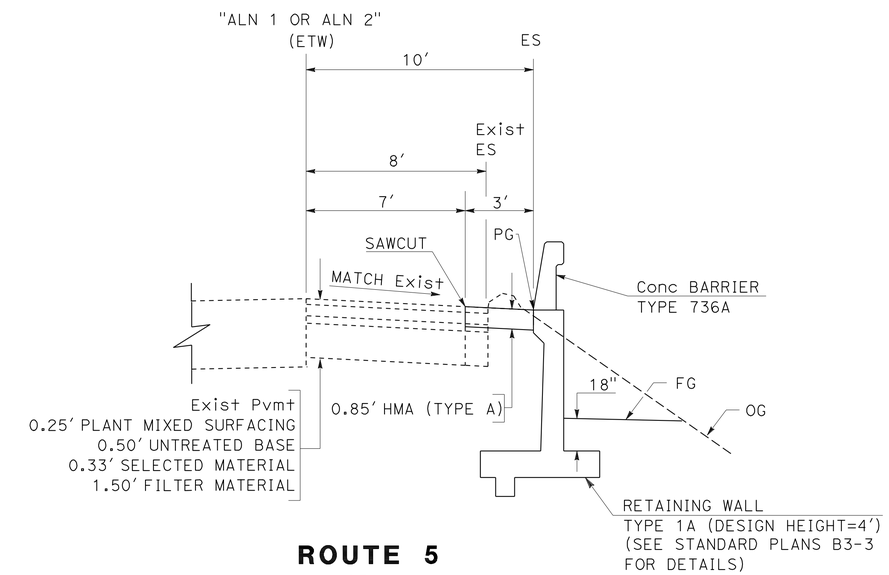


**ROUTE 5**

SB*

SB LOCATION 1 Sta 09+30 TO Sta 11+30
SB LOCATION 3 Sta 34+10 TO Sta 35+00
NB LOCATION 4 Sta 36+10 TO Sta 37+30
NB LOCATION 4 Sta 40+10 TO Sta 41+45

* NB AND SB ARE MIRRORED IMAGE

# TYPICAL CROSS SECTIONS

NO SCALE

**X-1**

STATE OF CALIFORNIA - DEPARTMENT OF TRANSPORTATION
Caltrans® DESIGN

FUNCTIONAL SUPERVISOR: GURBHAY BRAR
CALCULATED-DESIGNED BY: GURDEEP BRAR
CHECKED BY: DAVID VELAZCO
REVISED BY / DATE REVISED

LAST REVISION 06-28-11
DATE PLOTTED => 27-JUL-2011
TIME PLOTTED => 15:28

| Dist | COUNTY | ROUTE | POST MILES TOTAL PROJECT | SHEET No. | TOTAL SHEETS |
|---|---|---|---|---|---|
| 06 | Ker | 5 | 5.2/5.9 | 3 | 49 |

REGISTERED CIVIL ENGINEER 05-15-11 DATE

7-25-11
PLANS APPROVAL DATE

REGISTERED PROFESSIONAL ENGINEER UDAYA Y. SHANKAR No. 71268 Exp. 12/31/11 CIVIL STATE OF CALIFORNIA

*THE STATE OF CALIFORNIA OR ITS OFFICERS OR AGENTS SHALL NOT BE RESPONSIBLE FOR THE ACCURACY OR COMPLETENESS OF SCANNED COPIES OF THIS PLAN SHEET.*

NOTE:

FOR ACCURATE RIGHT OF WAY DATA,
CONTACT RIGHT OF WAY ENGINEERING AT THE DISTRICT OFFICE.

LEGEND:

[1] SHOULDER WIDENING PORTION

CURVE DATA

| No. | R | Δ | T | L |
|---|---|---|---|---|
| 1 | 3000′ | 25°10′25" | 669.85′ | 1318.08′ |
| 2 | 3024′ | 23°20′13" | 624.51′ | 1231.70′ |

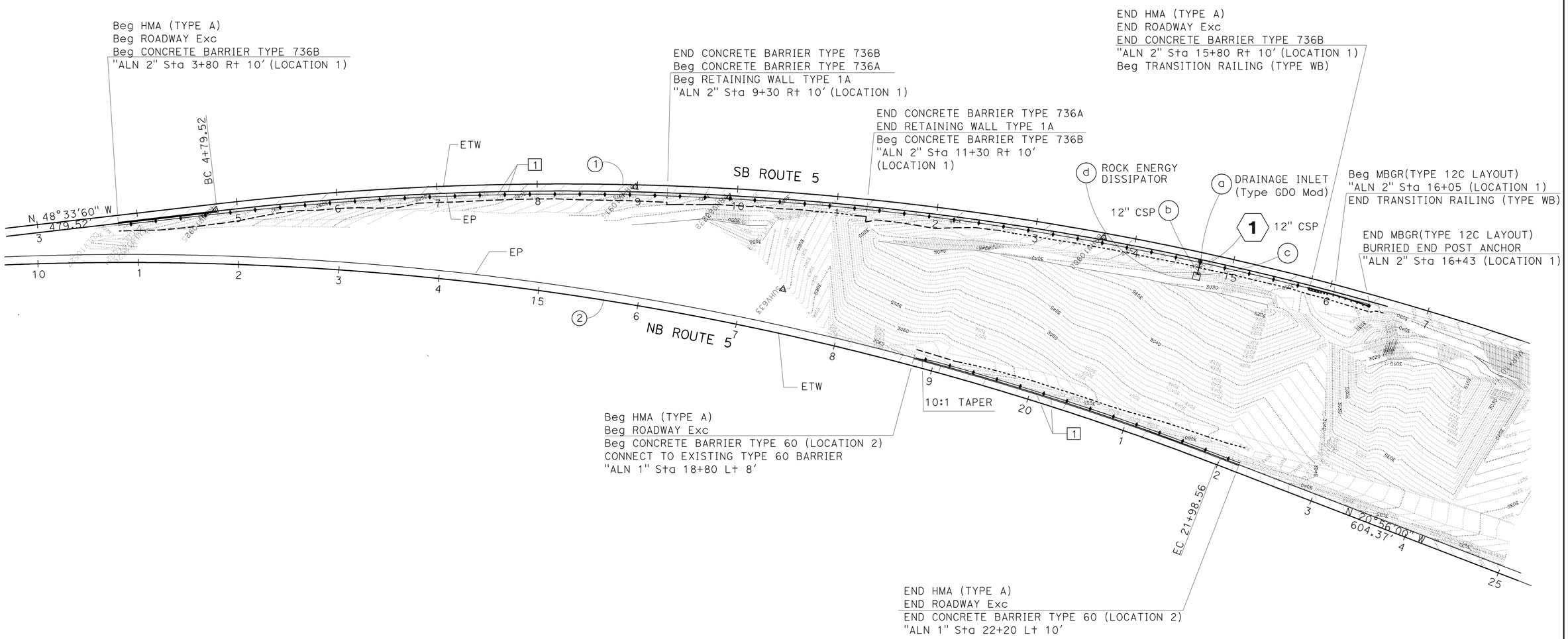


**LAYOUT**

SCALE: 1" = 50′

**L-1**

STATE OF CALIFORNIA - DEPARTMENT OF TRANSPORTATION
Caltrans® **DESIGN**

FUNCTIONAL SUPERVISOR: GURBHAY BRAR

CALCULATED-DESIGNED BY: GURDEEP BRAR
CHECKED BY: DAVID VELAZCO

REVISED BY
DATE REVISED

LAST REVISION 06-28-11
DATE PLOTTED => 27-JUL-2011
TIME PLOTTED => 15:28

| Dist | COUNTY | ROUTE | POST MILES TOTAL PROJECT | SHEET No. | TOTAL SHEETS |
|---|---|---|---|---|---|
| 06 | Ker | 5 | 5.2/5.9 | 4 | 49 |

REGISTERED CIVIL ENGINEER 05-15-11 DATE

PLANS APPROVAL DATE 7-25-11

REGISTERED PROFESSIONAL ENGINEER UDAYA Y. SHANKAR No. 71268 Exp. 12/31/11 CIVIL STATE OF CALIFORNIA

*THE STATE OF CALIFORNIA OR ITS OFFICERS OR AGENTS SHALL NOT BE RESPONSIBLE FOR THE ACCURACY OR COMPLETENESS OF SCANNED COPIES OF THIS PLAN SHEET.*

**NOTE:**

FOR ACCURATE RIGHT OF WAY DATA,
CONTACT RIGHT OF WAY ENGINEERING AT THE DISTRICT OFFICE.

**LEGEND:**

0.85' HOT MIX ASPHALT (TYPE A) (MEDIAN PAVING)

[1] SHOULDER WIDENING PORTION

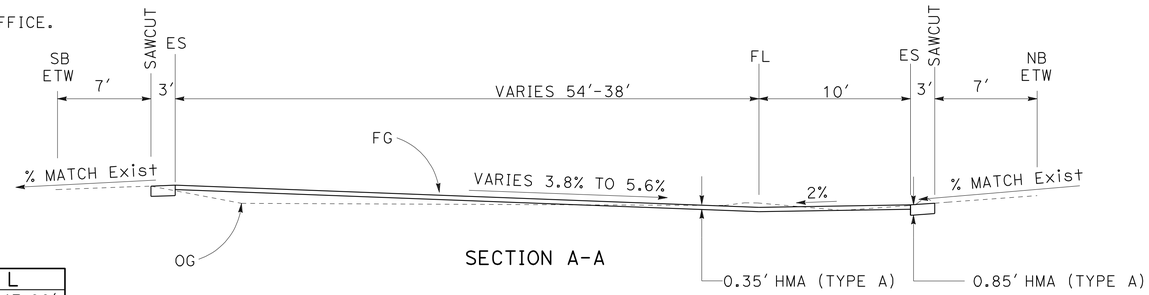


SECTION A-A

SB LOCATION 3 Sta 35+80 TO 36+84
NB LOCATION 4 Sta 43+05 TO 44+13
(MEDIAN PAVING)
NO SCALE

CURVE DATA

| No. | R | Δ | T | L |
|---|---|---|---|---|
| 3 | 2524' | 32°51'14" | 744.14' | 1447.28' |
| 4 | 2476' | 29°32'10" | 652.71' | 1276.39' |

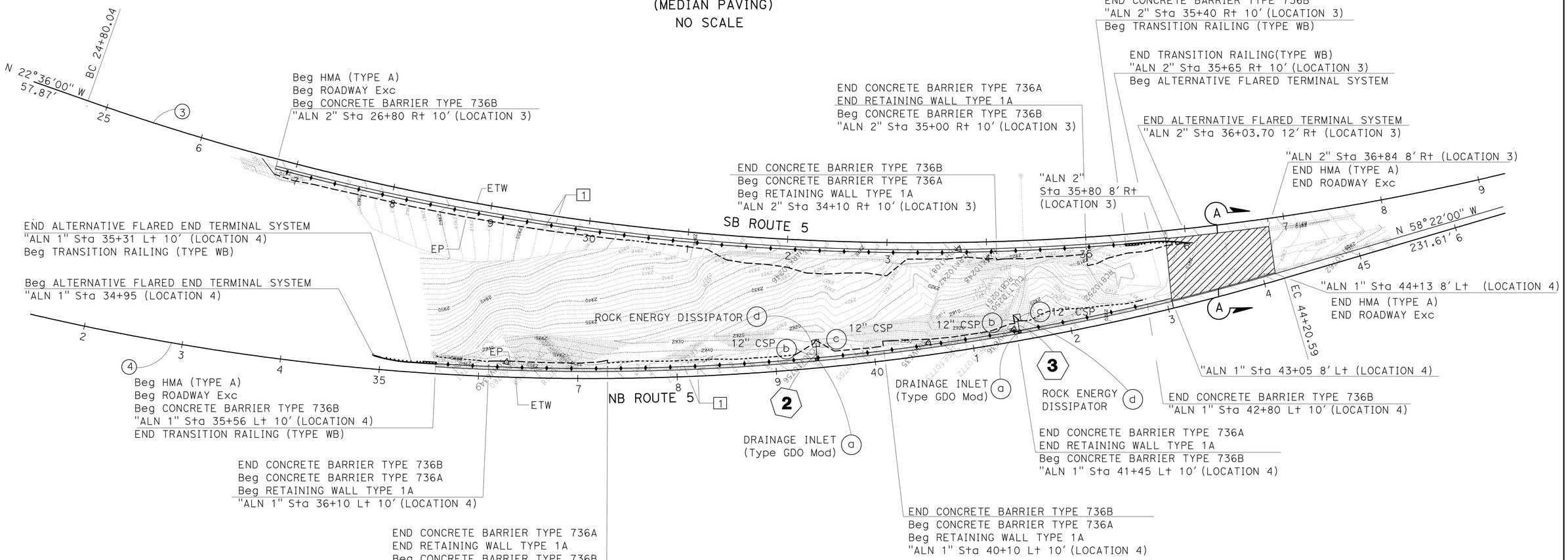


**LAYOUT**

SCALE: 1" = 50'

**L-2**

REVISED BY | DATE REVISED
GURDEEP BRAR | DAVID VELAZCO
CALCULATED-DESIGNED BY | CHECKED BY
FUNCTIONAL SUPERVISOR | GURBHAY BRAR

STATE OF CALIFORNIA - DEPARTMENT OF TRANSPORTATION
Caltrans
DESIGN

LAST REVISION 06-28-11 | DATE PLOTTED => 27-JUL-2011 | TIME PLOTTED => 15:29

| Dist | COUNTY | ROUTE | POST MILES TOTAL PROJECT | SHEET No. | TOTAL SHEETS |
|---|---|---|---|---|---|
| 06 | Ker | 5 | 5.2/5.9 | 5 | 49 |

REGISTERED CIVIL ENGINEER 05-15-11 DATE

7-25-11
PLANS APPROVAL DATE

REGISTERED PROFESSIONAL ENGINEER UDAYA Y. SHANKAR No. 71268 Exp. 12/31/11 CIVIL STATE OF CALIFORNIA

*THE STATE OF CALIFORNIA OR ITS OFFICERS OR AGENTS SHALL NOT BE RESPONSIBLE FOR THE ACCURACY OR COMPLETENESS OF SCANNED COPIES OF THIS PLAN SHEET.*

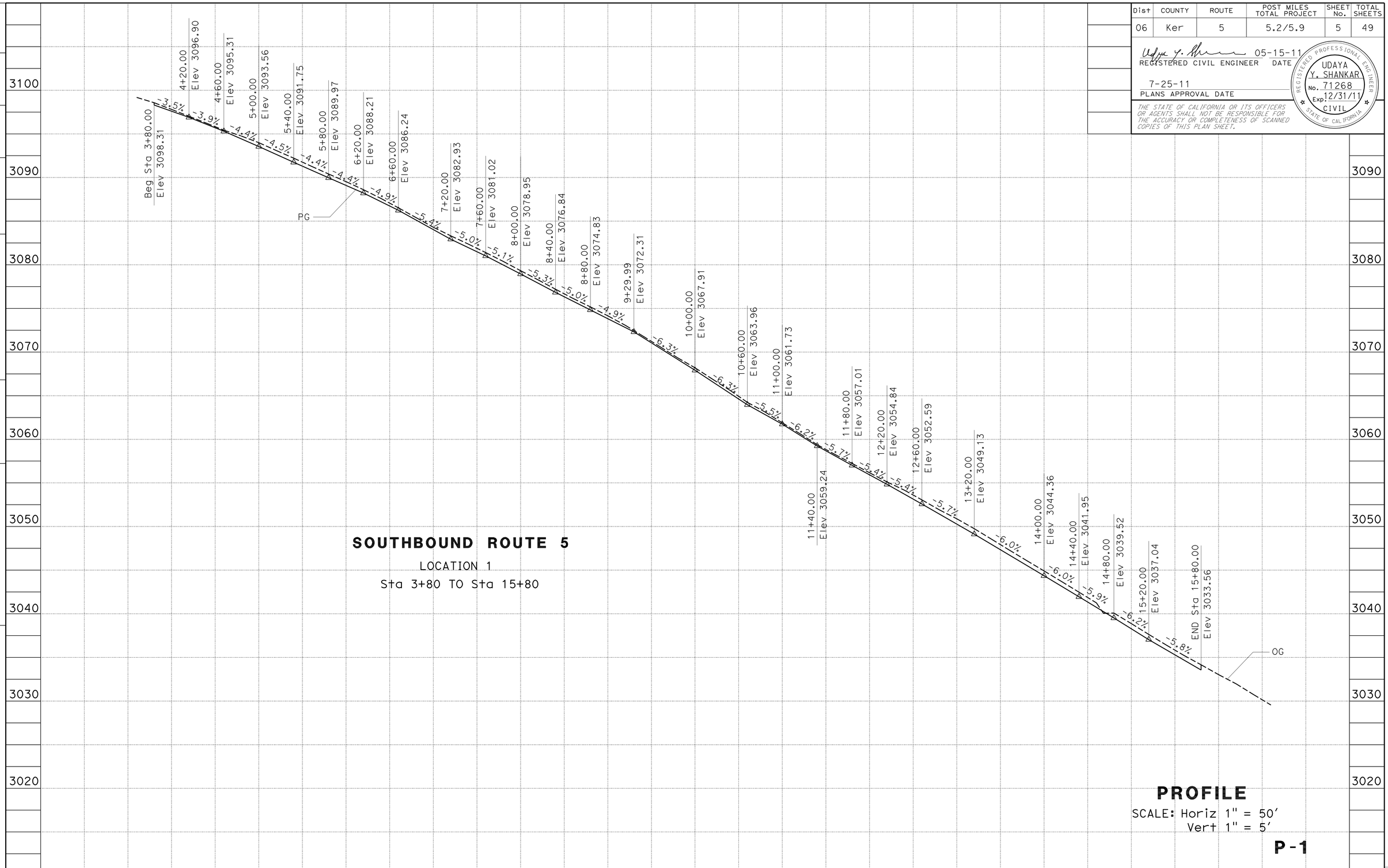


## SOUTHBOUND ROUTE 5

LOCATION 1

Sta 3+80 TO Sta 15+80

## PROFILE

SCALE: Horiz 1" = 50'
Vert 1" = 5'

**P-1**

| STATION | | 3+00 | 4+00 | 5+00 | 6+00 | 7+00 | 8+00 | 9+00 | 10+00 | 11+00 | 12+00 | 13+00 | 14+00 | 15+00 | 16+00 | 17+00 | TOTAL |
|---|---|---|---|---|---|---|---|---|---|---|---|---|---|---|---|---|---|
| CY | Exc | | ← | | | | | | 323 | | | | | | → | | 323 |
| | Emb | | ← | | | | | | 58 | | | | | | → | | 58 |

GURDEEP BRAR — REVISED BY
DAVID VELAZCO — DATE REVISED
CALCULATED-DESIGNED BY
CHECKED BY
FUNCTIONAL SUPERVISOR
GURBHAY BRAR

STATE OF CALIFORNIA - DEPARTMENT OF TRANSPORTATION
Caltrans®
DESIGN

LAST REVISION 06-21-11
DATE PLOTTED => 27-JUL-2011
TIME PLOTTED => 15:29

| Dist | COUNTY | ROUTE | POST MILES TOTAL PROJECT | SHEET No. | TOTAL SHEETS |
|---|---|---|---|---|---|
| 06 | Ker | 5 | 5.2/5.9 | 6 | 49 |

REGISTERED CIVIL ENGINEER DATE 05-15-11

7-25-11
PLANS APPROVAL DATE

REGISTERED PROFESSIONAL ENGINEER
UDAYA Y. SHANKAR
No. 71268
Exp. 12/31/11
CIVIL
STATE OF CALIFORNIA

*THE STATE OF CALIFORNIA OR ITS OFFICERS OR AGENTS SHALL NOT BE RESPONSIBLE FOR THE ACCURACY OR COMPLETENESS OF SCANNED COPIES OF THIS PLAN SHEET.*

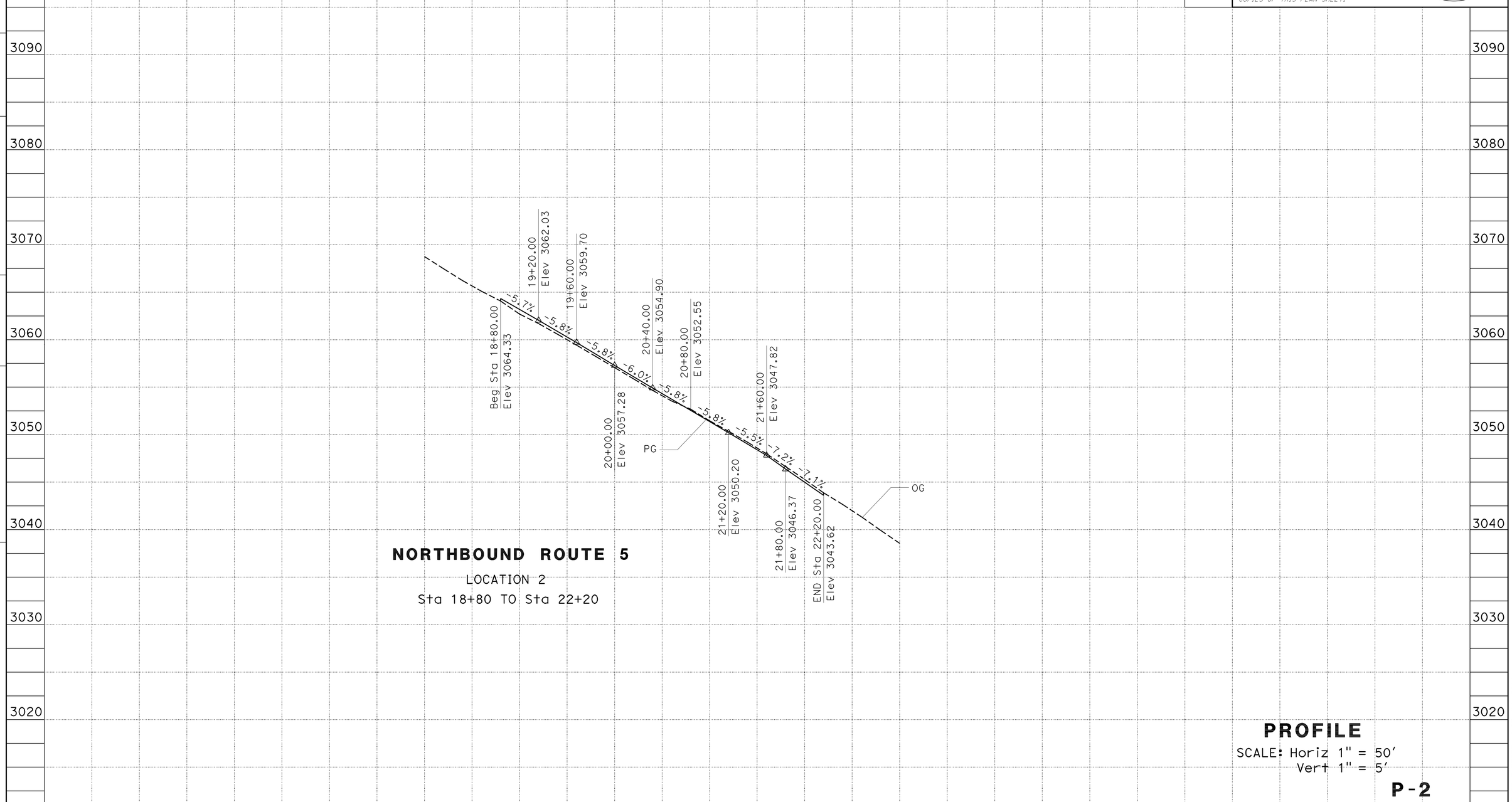


**NORTHBOUND ROUTE 5**

LOCATION 2

Sta 18+80 TO Sta 22+20

**PROFILE**

SCALE: Horiz 1" = 50'
Vert 1" = 5'

**P-2**

| STATION | | 15+00 | 16+00 | 17+00 | 18+00 | 19+00 | 20+00 | 21+00 | 22+00 | 23+00 | 24+00 | 25+00 | 26+00 | 27+00 | 28+00 | TOTAL |
|---|---|---|---|---|---|---|---|---|---|---|---|---|---|---|---|---|
| CY | Exc | | | | | 154 | | | | | | | | | | 154 |
| | Emb | | | | | 4 | | | | | | | | | | 4 |

STATE OF CALIFORNIA - DEPARTMENT OF TRANSPORTATION
Caltrans® DESIGN

FUNCTIONAL SUPERVISOR: GURBHAY BRAR
CALCULATED-DESIGNED BY: GURDEEP BRAR
CHECKED BY: DAVID VELAZCO
REVISED BY
DATE REVISED

LAST REVISION 06-21-11
DATE PLOTTED => 27-JUL-2011
TIME PLOTTED => 15:29

| Dist | COUNTY | ROUTE | POST MILES TOTAL PROJECT | SHEET No. | TOTAL SHEETS |
|---|---|---|---|---|---|
| 06 | Ker | 5 | 5.2/5.9 | 7 | 49 |

REGISTERED CIVIL ENGINEER DATE 05-15-11

PLANS APPROVAL DATE 7-25-11

REGISTERED PROFESSIONAL ENGINEER UDAYA Y. SHANKAR No. 71268 Exp. 12/31/11 CIVIL STATE OF CALIFORNIA

*THE STATE OF CALIFORNIA OR ITS OFFICERS OR AGENTS SHALL NOT BE RESPONSIBLE FOR THE ACCURACY OR COMPLETENESS OF SCANNED COPIES OF THIS PLAN SHEET.*

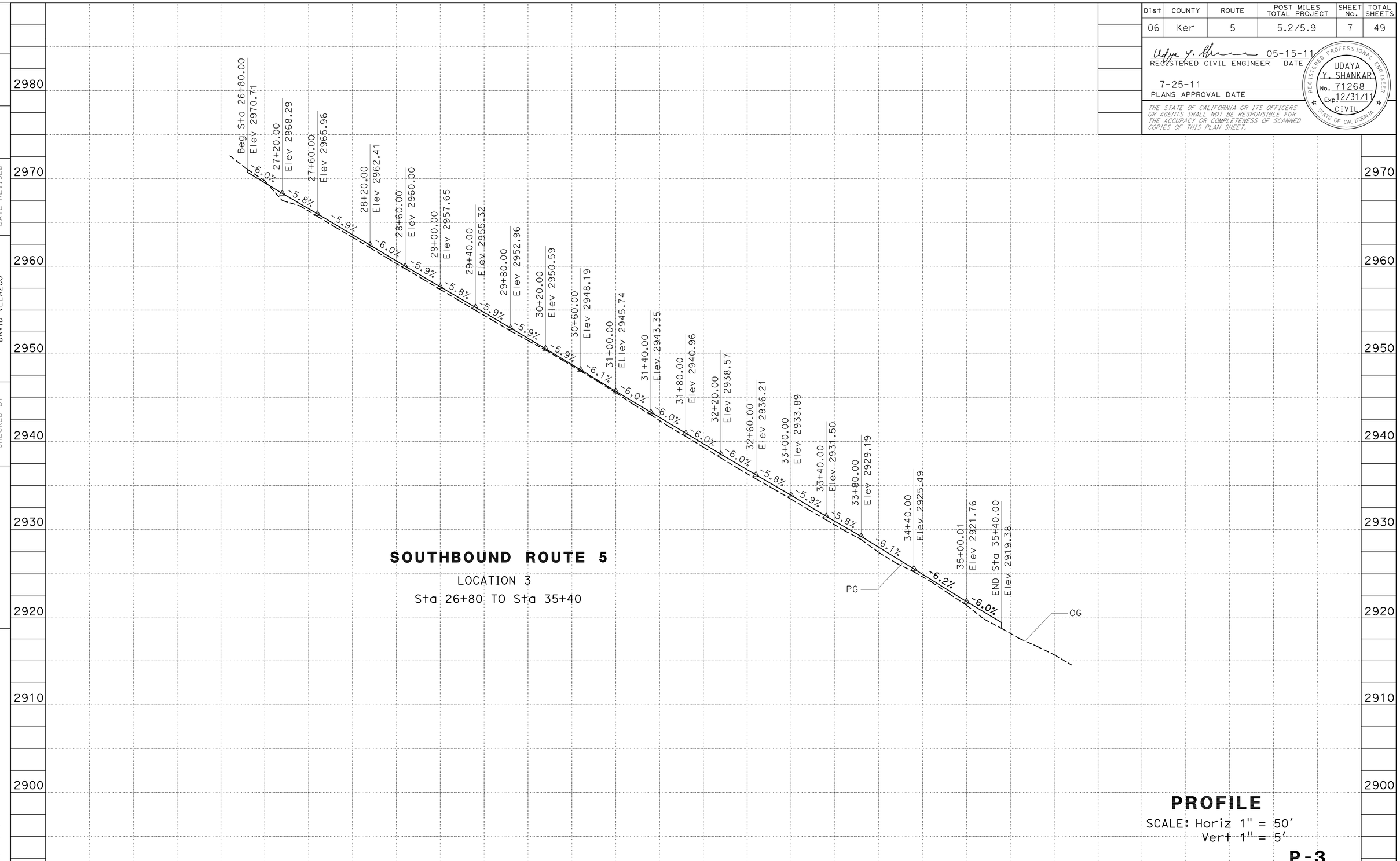


| STATION | | 25+00 | 26+00 | 27+00 | 28+00 | 29+00 | 30+00 | 31+00 | 32+00 | 33+00 | 34+00 | 35+00 | 36+00 | 37+00 | 38+00 | 39+00 | TOTAL |
|---|---|---|---|---|---|---|---|---|---|---|---|---|---|---|---|---|---|
| CY | Exc | | | | | | | 301 | | | | | | | | | 301 |
| | Emb | | | | | | | 161 | | | | | | | | | 161 |

REVISED BY | DATE REVISED

GURDEEP BRAR | DAVID VELAZCO

CALCULATED-DESIGNED BY | CHECKED BY

FUNCTIONAL SUPERVISOR: GURBHAY BRAR

STATE OF CALIFORNIA - DEPARTMENT OF TRANSPORTATION

Caltrans DESIGN

LAST REVISION | DATE PLOTTED => 27-JUL-2011 | TIME PLOTTED => 15:29

06-21-11

BORDER LAST REVISED 7/2/2010 | USERNAME => trstrk | DGN FILE => 600000292fa003.dgn | RELATIVE BORDER SCALE IS IN INCHES 0 1 2 3 | UNIT 1437 | PROJECT NUMBER & PHASE 06000002921

| Dist | COUNTY | ROUTE | POST MILES TOTAL PROJECT | SHEET No. | TOTAL SHEETS |
|---|---|---|---|---|---|
| 06 | Ker | 5 | 5.2/5.9 | 8 | 49 |

REGISTERED CIVIL ENGINEER 05-15-11 DATE

7-25-11
PLANS APPROVAL DATE

REGISTERED PROFESSIONAL ENGINEER UDAYA Y. SHANKAR No. 71268 Exp. 12/31/11 CIVIL STATE OF CALIFORNIA

THE STATE OF CALIFORNIA OR ITS OFFICERS OR AGENTS SHALL NOT BE RESPONSIBLE FOR THE ACCURACY OR COMPLETENESS OF SCANNED COPIES OF THIS PLAN SHEET.

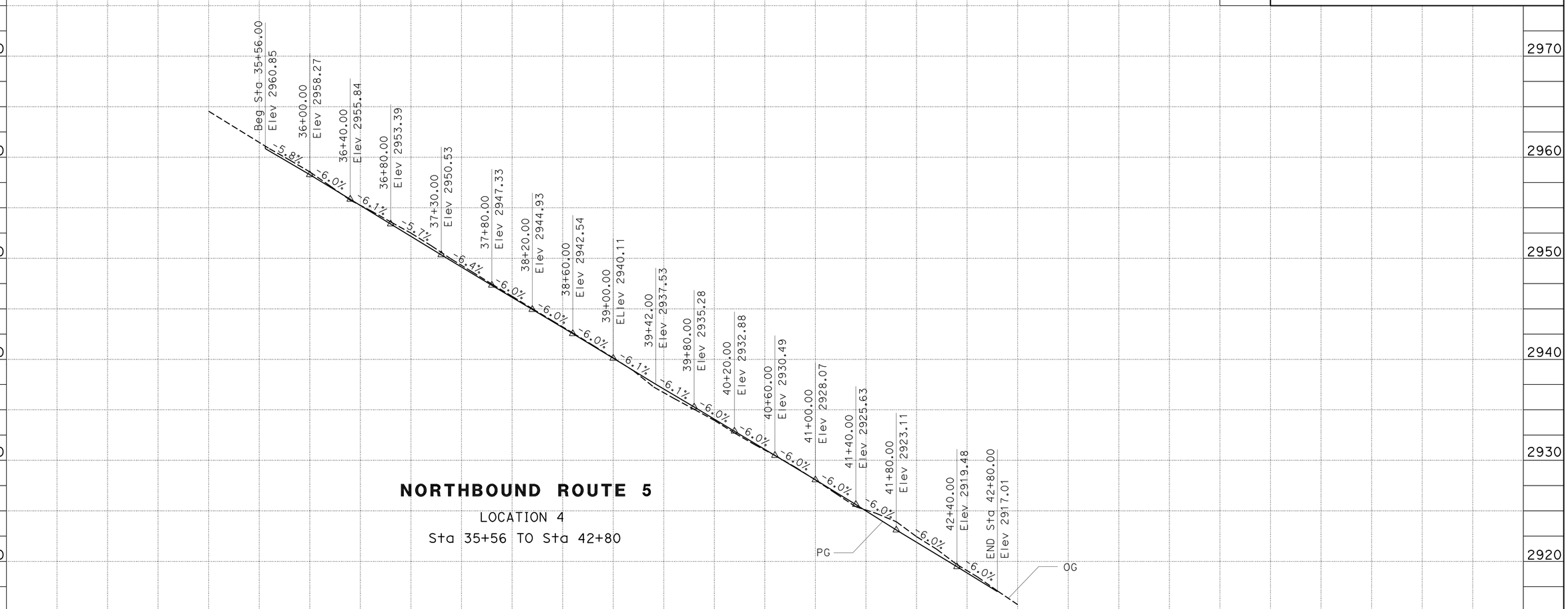


## NORTHBOUND ROUTE 5

LOCATION 4

Sta 35+56 TO Sta 42+80

## PROFILE

SCALE: Horiz 1" = 50'
Vert 1" = 5'

**P-4**

| STATION | | 34+00 | 35+00 | 36+00 | 37+00 | 38+00 | 39+00 | 40+00 | 41+00 | 42+00 | 43+00 | 44+00 | 45+00 | 46+00 | 47+00 | TOTAL |
|---|---|---|---|---|---|---|---|---|---|---|---|---|---|---|---|---|
| CY | Exc | | | ← | | | 231 | | | | → | | | | | 231 |
| | Emb | | | ← | | | 22 | | | | → | | | | | 22 |

STATE OF CALIFORNIA - DEPARTMENT OF TRANSPORTATION
Caltrans® DESIGN

FUNCTIONAL SUPERVISOR: GURBHAY BRAR
CALCULATED-DESIGNED BY: GURDEEP BRAR
CHECKED BY: DAVID VELAZCO
REVISED BY
DATE REVISED

LAST REVISION 06-21-11
DATE PLOTTED => 27-JUL-2011
TIME PLOTTED => 15:29

| Dist | COUNTY | ROUTE | POST MILES TOTAL PROJECT | SHEET No. | TOTAL SHEETS |
|---|---|---|---|---|---|
| 06 | Ker | 5 | 5.2/5.9 | 9 | 49 |

REGISTERED CIVIL ENGINEER 05-15-11 DATE

7-25-11
PLANS APPROVAL DATE

REGISTERED PROFESSIONAL ENGINEER UDAYA Y. SHANKAR No. 71268 Exp. 12/31/11 CIVIL STATE OF CALIFORNIA

*THE STATE OF CALIFORNIA OR ITS OFFICERS OR AGENTS SHALL NOT BE RESPONSIBLE FOR THE ACCURACY OR COMPLETENESS OF SCANNED COPIES OF THIS PLAN SHEET.*

## NOTES:

1. SEE MANUFACTURER PLANS FOR ADDITIONAL DETAILS AND DIMENSIONS NOT SHOWN ON PLANS.
2. SYSTEM TO BE INSTALLED PER MANUFACTURER SPECIFICATIONS.
3. ONLY TIGHTEN THE CABLE ASSEMBLIES USING THE NUTS AT THE CABLE BRACKET (SEE DETAIL D). DO NOT TIGHTEN THE CABLES AT THE FRONT OF THE GROUND ANCHOR.
4. WHEN DRIVING STEEL POST, ENSURE THAT A DRIVING CAP WITH TIMBER OR PLASTIC INSERT IS USED TO PREVENT DAMAGE TO THE GALVANIZING TO THE TOP OF THE STEEL POST.

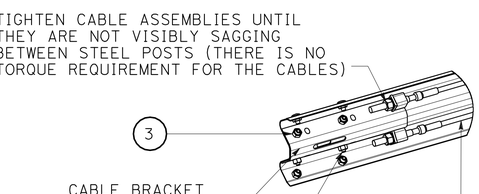


DETAIL D

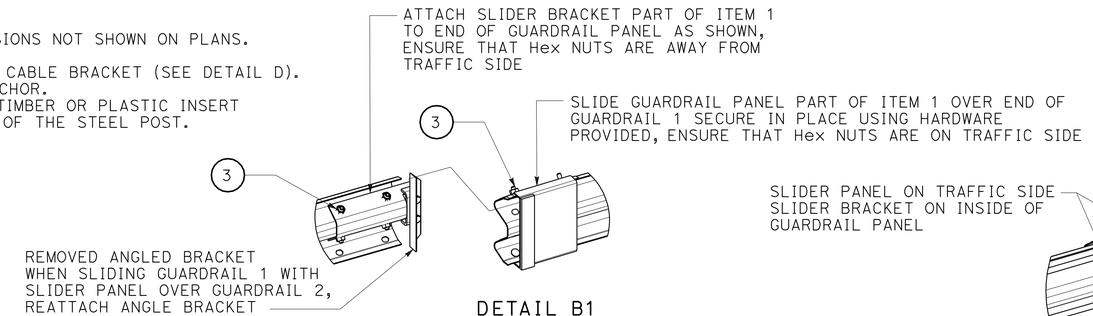


DETAIL B1

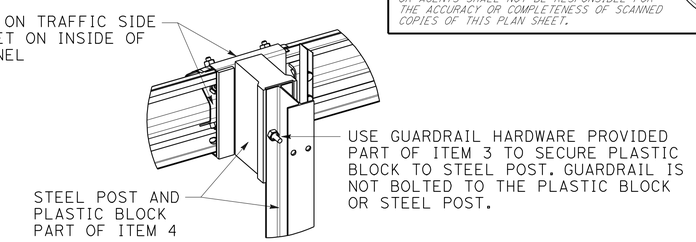


DETAIL B2

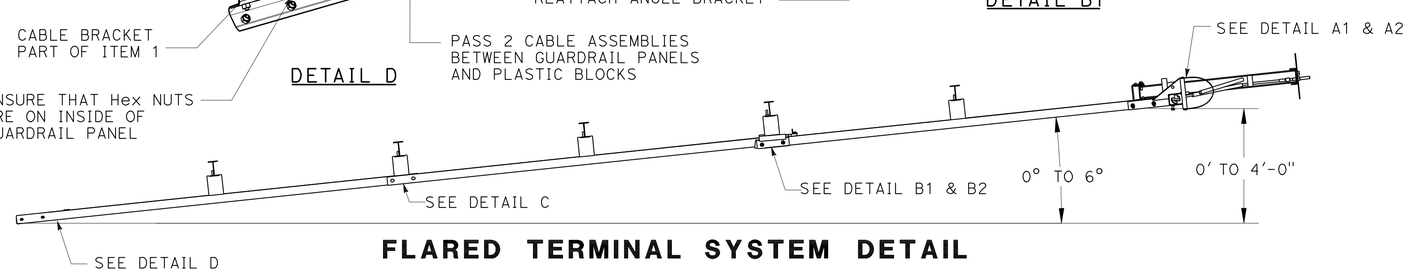


## FLARED TERMINAL SYSTEM DETAIL

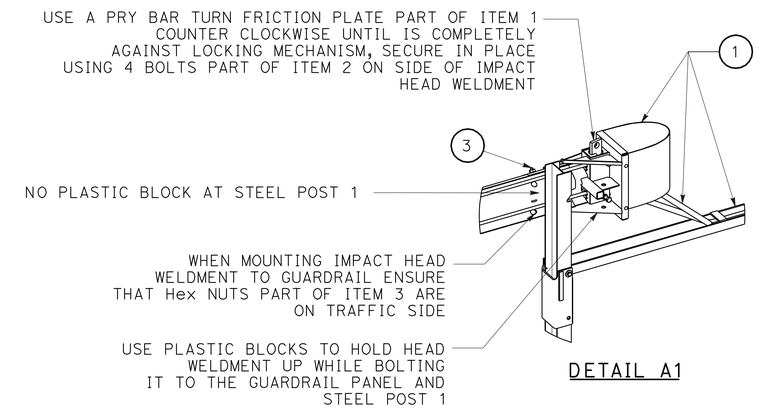


DETAIL A1

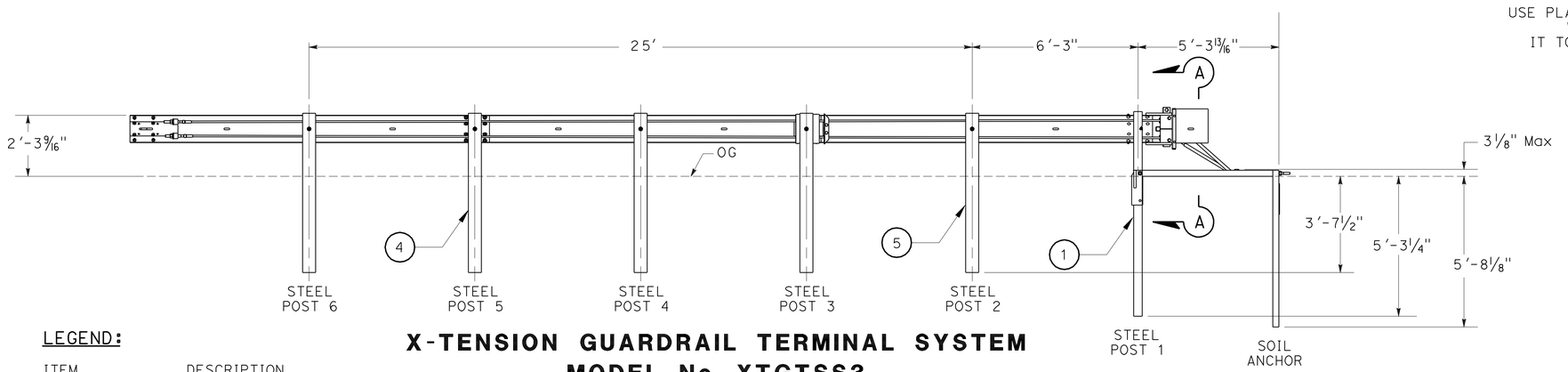


## X-TENSION GUARDRAIL TERMINAL SYSTEM
## MODEL No. XTGTSS3

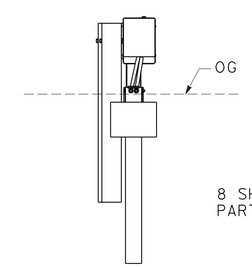


SECTION A-A

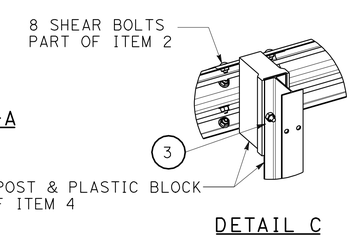


DETAIL C

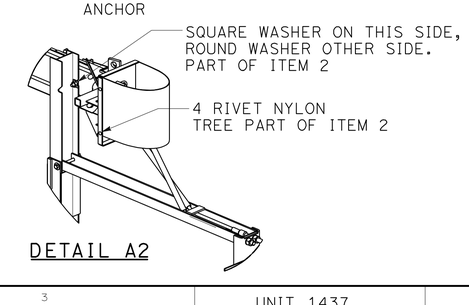


DETAIL A2

## LEGEND:

| ITEM | DESCRIPTION |
|---|---|
| 1 | X-TENSION TERMINAL COMPONENT KIT |
| 2 | X-TENSION HARDWARE KIT |
| 3 | X-TENSION SYSTEM HARDWARE KIT |
| 4 | X-TENSION GUARDRAIL COMPONENT KIT 3 |
| 5 | I-BEAM POST, MIDDLE, X350 |

## CONSTRUCTION DETAILS

NO SCALE

C-1

STATE OF CALIFORNIA - DEPARTMENT OF TRANSPORTATION
Caltrans
DESIGN

FUNCTIONAL SUPERVISOR: GURBHAY BRAR
CALCULATED-DESIGNED BY: GURDEEP BRAR
CHECKED BY: DAVID VELAZCO
REVISED BY
DATE REVISED

LAST REVISION 06-28-11
DATE PLOTTED => 27-JUL-2011
TIME PLOTTED => 16:44

| Dist | COUNTY | ROUTE | POST MILES TOTAL PROJECT | SHEET No. | TOTAL SHEETS |
|---|---|---|---|---|---|
| 06 | Ker | 5 | 5.2/5.9 | 10 | 49 |

LICENSED LANDSCAPE ARCHITECT

7-25-11
PLANS APPROVAL DATE

LICENSED LANDSCAPE ARCHITECT
DAVID R. MARTIN #5039
Expiration Date 03/31/13
Renewal Date 04/21/11
Date
STATE OF CALIFORNIA

*THE STATE OF CALIFORNIA OR ITS OFFICERS OR AGENTS SHALL NOT BE RESPONSIBLE FOR THE ACCURACY OR COMPLETENESS OF SCANNED COPIES OF THIS PLAN SHEET.*

## LEGEND

EROSION CONTROL (POLYMER STABILIZED FIBER MATRIX)

TFESA — TEMPORARY FENCE (TYPE ESA)

FR — FIBER ROLL

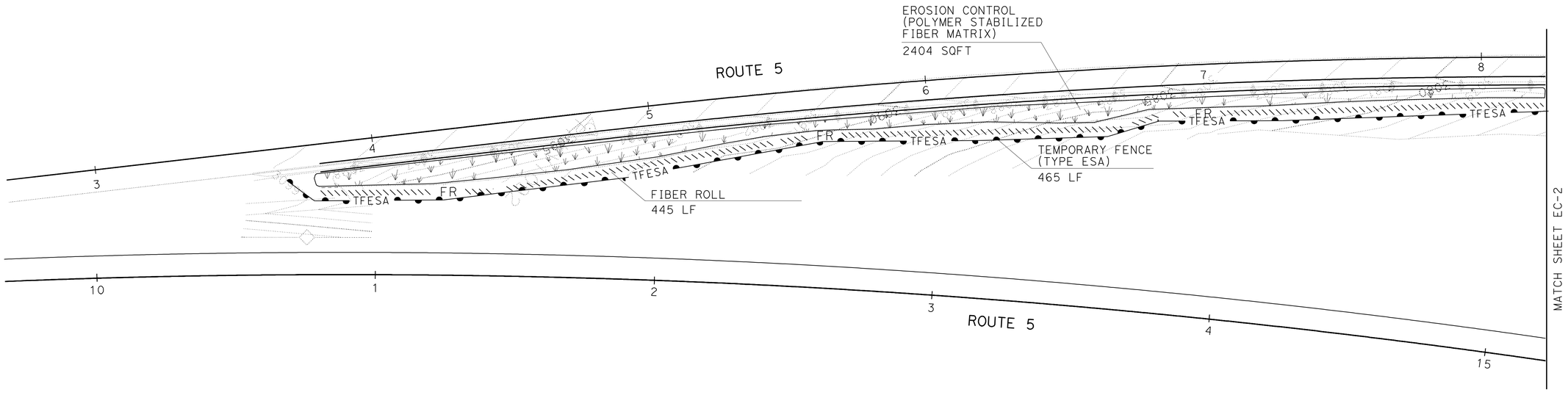


THIS PLAN ACCURATE FOR EROSION CONTROL WORK ONLY

# EROSION CONTROL PLAN

SCALE: 1" = 20'

**EC-1**

STATE OF CALIFORNIA - DEPARTMENT OF TRANSPORTATION
Caltrans® LANDSCAPE ARCHITECTURE

SENIOR LANDSCAPE ARCHITECT: ELBERT COX
CALCULATED-DESIGNED BY: DAVID MARTIN
CHECKED BY: KEVIN GALLO
REVISED BY
DATE REVISED

LAST REVISION 06-28-11
DATE PLOTTED => 27-JUL-2011
TIME PLOTTED => 15:08

| Dist | COUNTY | ROUTE | POST MILES TOTAL PROJECT | SHEET No. | TOTAL SHEETS |
|---|---|---|---|---|---|
| 06 | Ker | 5 | 5.2/5.9 | 11 | 49 |

LICENSED LANDSCAPE ARCHITECT

7-25-11
PLANS APPROVAL DATE

LICENSED LANDSCAPE ARCHITECT
DAVID R. MARTIN #5039
Expiration Date
03/31/13
Renewal Date
04/21/11
Date
STATE OF CALIFORNIA

*THE STATE OF CALIFORNIA OR ITS OFFICERS OR AGENTS SHALL NOT BE RESPONSIBLE FOR THE ACCURACY OR COMPLETENESS OF SCANNED COPIES OF THIS PLAN SHEET.*

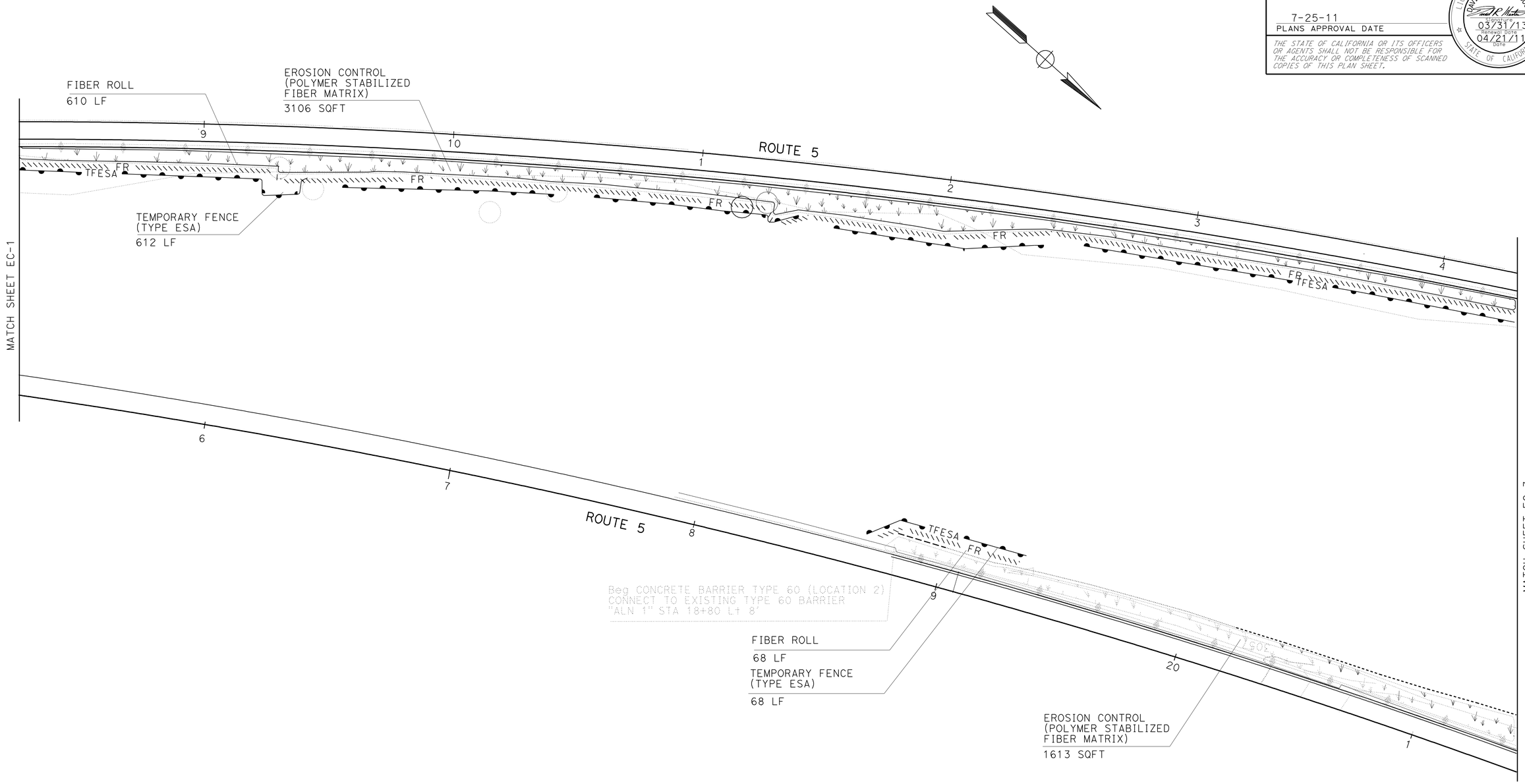


THIS PLAN ACCURATE FOR EROSION CONTROL WORK ONLY

# EROSION CONTROL PLAN

SCALE: 1" = 20'

**EC-2**

| REVISED BY | DATE REVISED |
|---|---|
| DAVID MARTIN | KEVIN GALLO |
| CALCULATED-DESIGNED BY | CHECKED BY |
| SENIOR LANDSCAPE ARCHITECT | ELBERT COX |

STATE OF CALIFORNIA - DEPARTMENT OF TRANSPORTATION
Caltrans® LANDSCAPE ARCHITECTURE

LAST REVISION 06-28-11
DATE PLOTTED => 28-JUL-2011
TIME PLOTTED => 12:03

| Dist | COUNTY | ROUTE | POST MILES TOTAL PROJECT | SHEET No. | TOTAL SHEETS |
|---|---|---|---|---|---|
| 06 | Ker | 5 | 5.2/5.9 | 12 | 49 |

LICENSED LANDSCAPE ARCHITECT

7-25-11
PLANS APPROVAL DATE

LICENSED LANDSCAPE ARCHITECT
DAVID R. MARTIN #5039
Expiration Date 03/31/13
Renewal Date 04/21/11
Date
STATE OF CALIFORNIA

*THE STATE OF CALIFORNIA OR ITS OFFICERS OR AGENTS SHALL NOT BE RESPONSIBLE FOR THE ACCURACY OR COMPLETENESS OF SCANNED COPIES OF THIS PLAN SHEET.*

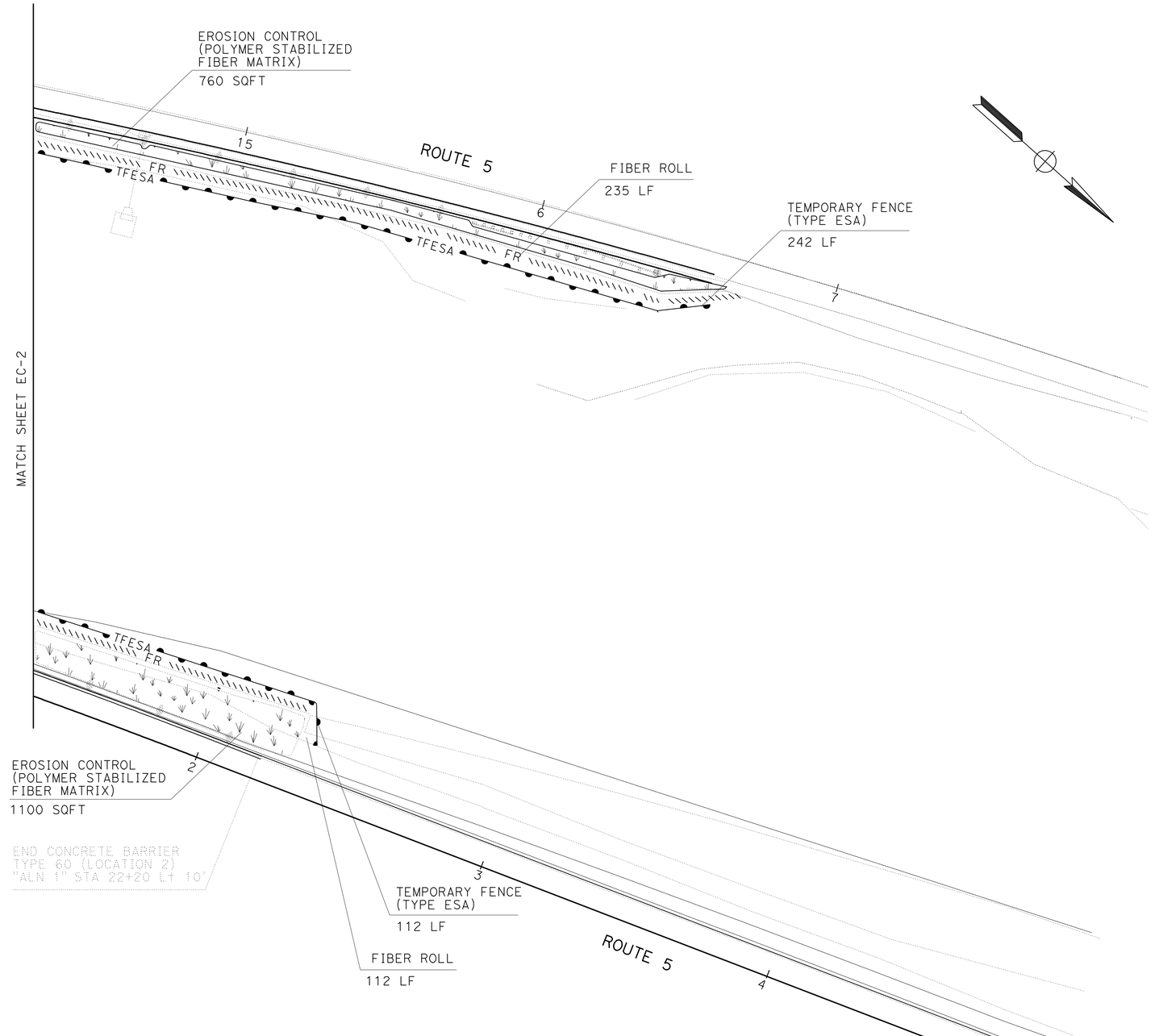


THIS PLAN ACCURATE FOR EROSION CONTROL WORK ONLY

# EROSION CONTROL PLAN

SCALE: 1" = 20'

**EC-3**

STATE OF CALIFORNIA - DEPARTMENT OF TRANSPORTATION
Caltrans® LANDSCAPE ARCHITECTURE

SENIOR LANDSCAPE ARCHITECT: ELBERT COX
CALCULATED-DESIGNED BY: DAVID MARTIN
CHECKED BY: KEVIN GALLO
REVISED BY
DATE REVISED

LAST REVISION 06-28-11
DATE PLOTTED => 28-JUL-2011
TIME PLOTTED => 12:03

| Dist | COUNTY | ROUTE | POST MILES TOTAL PROJECT | SHEET No. | TOTAL SHEETS |
|---|---|---|---|---|---|
| 06 | Ker | 5 | 5.2/5.9 | 13 | 49 |

LICENSED LANDSCAPE ARCHITECT

7-25-11
PLANS APPROVAL DATE

LICENSED LANDSCAPE ARCHITECT
DAVID R. MARTIN #5039
Expiration Date 03/31/13
Renewal Date 04/21/11
Date
STATE OF CALIFORNIA

*THE STATE OF CALIFORNIA OR ITS OFFICERS OR AGENTS SHALL NOT BE RESPONSIBLE FOR THE ACCURACY OR COMPLETENESS OF SCANNED COPIES OF THIS PLAN SHEET.*

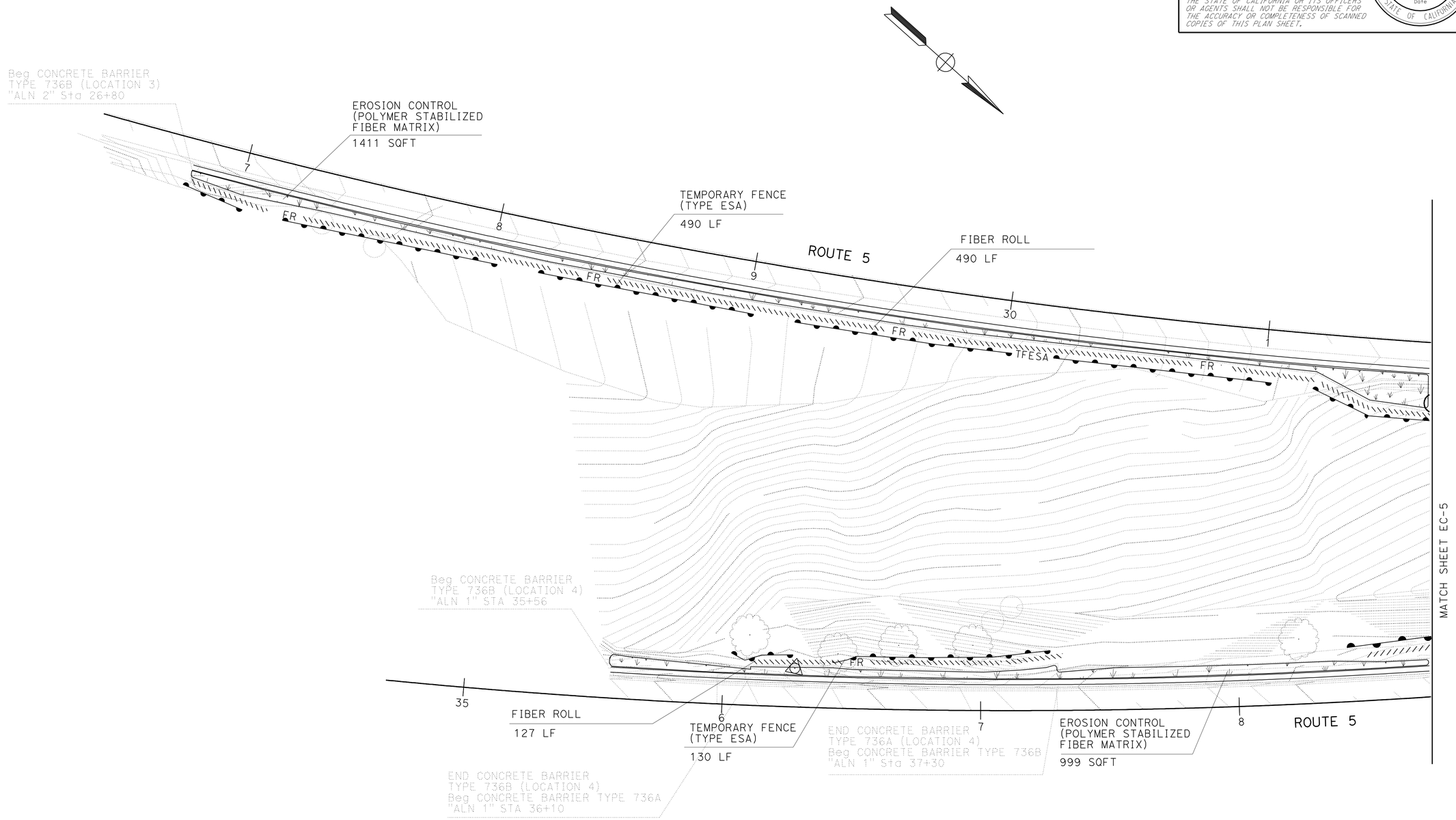


THIS PLAN ACCURATE FOR EROSION CONTROL WORK ONLY

# EROSION CONTROL PLAN

SCALE: 1" = 20'

**EC-4**

STATE OF CALIFORNIA - DEPARTMENT OF TRANSPORTATION
Caltrans® LANDSCAPE ARCHITECTURE

SENIOR LANDSCAPE ARCHITECT: ELBERT COX

CALCULATED-DESIGNED BY: DAVID MARTIN
CHECKED BY: KEVIN GALLO

REVISED BY | DATE REVISED

LAST REVISION 06-28-11
DATE PLOTTED => 28-JUL-2011
TIME PLOTTED => 12:03

| Dist | COUNTY | ROUTE | POST MILES TOTAL PROJECT | SHEET No. | TOTAL SHEETS |
|---|---|---|---|---|---|
| 06 | Ker | 5 | 5.2/5.9 | 14 | 49 |

LICENSED LANDSCAPE ARCHITECT

7-25-11
PLANS APPROVAL DATE

LICENSED LANDSCAPE ARCHITECT
DAVID R. MARTIN #5039
Expiration Date 03/31/13
Renewal Date 04/21/11
Date
STATE OF CALIFORNIA

*THE STATE OF CALIFORNIA OR ITS OFFICERS OR AGENTS SHALL NOT BE RESPONSIBLE FOR THE ACCURACY OR COMPLETENESS OF SCANNED COPIES OF THIS PLAN SHEET.*

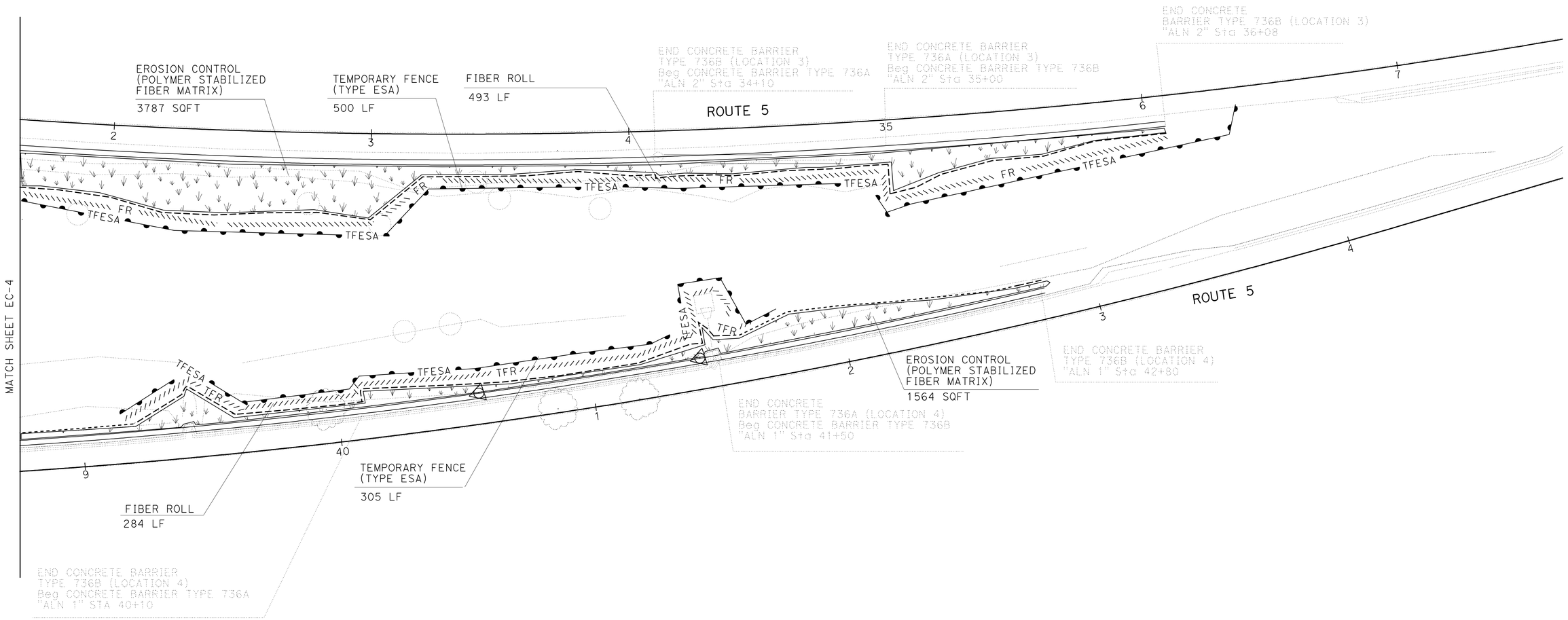


THIS PLAN ACCURATE FOR EROSION CONTROL WORK ONLY

# EROSION CONTROL PLAN

SCALE: 1" = 20'

**EC-5**

DAVID MARTIN — REVISED BY
KEVIN GALLO — DATE REVISED
CALCULATED-DESIGNED BY
CHECKED BY
SENIOR LANDSCAPE ARCHITECT
ELBERT COX

STATE OF CALIFORNIA - DEPARTMENT OF TRANSPORTATION
Caltrans® LANDSCAPE ARCHITECTURE

LAST REVISION 06-28-11
DATE PLOTTED => 27-JUL-2011
TIME PLOTTED => 15:08

| Dist | COUNTY | ROUTE | POST MILES TOTAL PROJECT | SHEET No. | TOTAL SHEETS |
|---|---|---|---|---|---|
| 06 | Ker | 5 | 5.2/5.9 | 15 | 49 |

REGISTERED CIVIL ENGINEER DATE 05-15-11

7-25-11
PLANS APPROVAL DATE

REGISTERED PROFESSIONAL ENGINEER
UDAYA Y. SHANKAR
No. 71268
Exp. 12/31/11
CIVIL
STATE OF CALIFORNIA

*THE STATE OF CALIFORNIA OR ITS OFFICERS OR AGENTS SHALL NOT BE RESPONSIBLE FOR THE ACCURACY OR COMPLETENESS OF SCANNED COPIES OF THIS PLAN SHEET.*

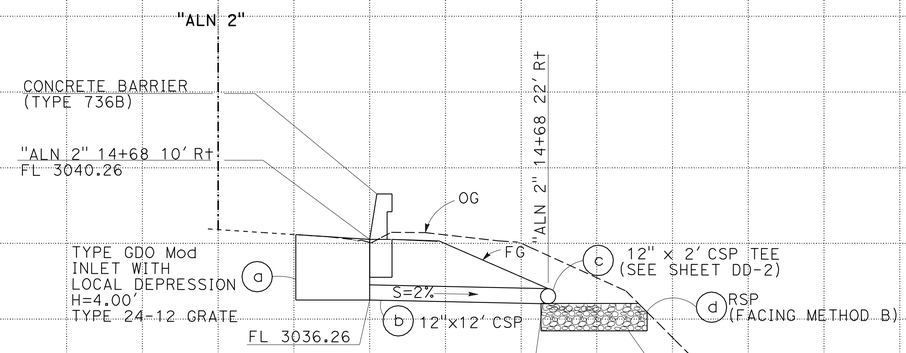


"ALN 2"

**DRAINAGE SYSTEM No. 1**

SCALE: Horiz 1" = 5'
Vert 1" = 5'

# DRAINAGE PROFILES

**DP-1**

STATE OF CALIFORNIA - DEPARTMENT OF TRANSPORTATION
Caltrans
DESIGN

FUNCTIONAL SUPERVISOR: GURBHAY BRAR
CALCULATED-DESIGNED BY: GURDEEP BRAR
CHECKED BY: DAVID VELAZCO
REVISED BY
DATE REVISED

LAST REVISION 06-28-11
DATE PLOTTED => 27-JUL-2011
TIME PLOTTED => 15:29

| Dist | COUNTY | ROUTE | POST MILES TOTAL PROJECT | SHEET No. | TOTAL SHEETS |
|---|---|---|---|---|---|
| 06 | Ker | 5 | 5.2/5.9 | 16 | 49 |

REGISTERED CIVIL ENGINEER 05-15-11 DATE

7-25-11
PLANS APPROVAL DATE

REGISTERED PROFESSIONAL ENGINEER
UDAYA Y. SHANKAR
No. 71268
Exp. 12/31/11
CIVIL
STATE OF CALIFORNIA

*THE STATE OF CALIFORNIA OR ITS OFFICERS OR AGENTS SHALL NOT BE RESPONSIBLE FOR THE ACCURACY OR COMPLETENESS OF SCANNED COPIES OF THIS PLAN SHEET.*

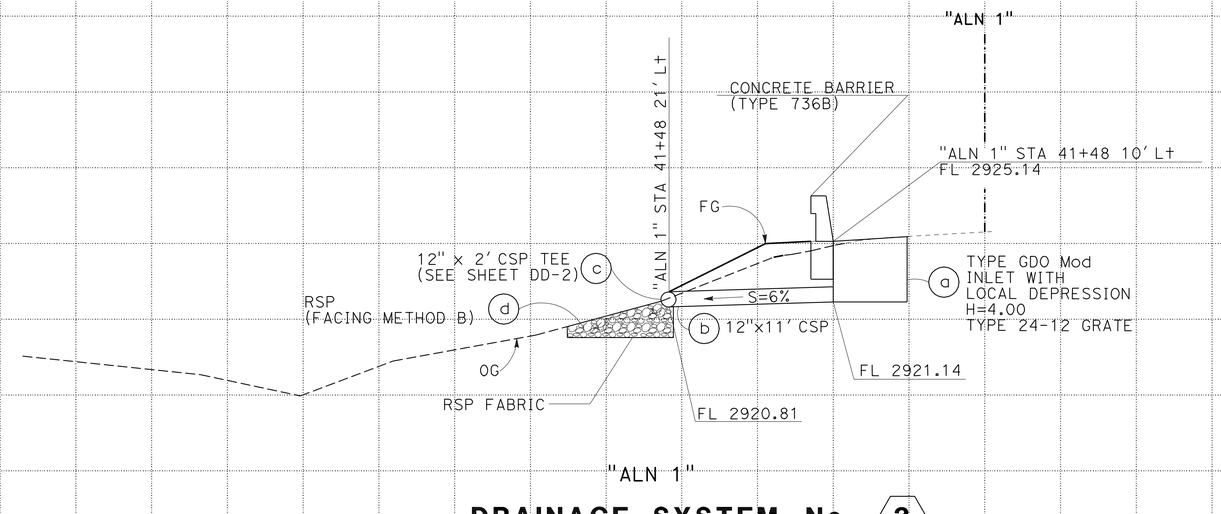


**DRAINAGE SYSTEM No. 3**

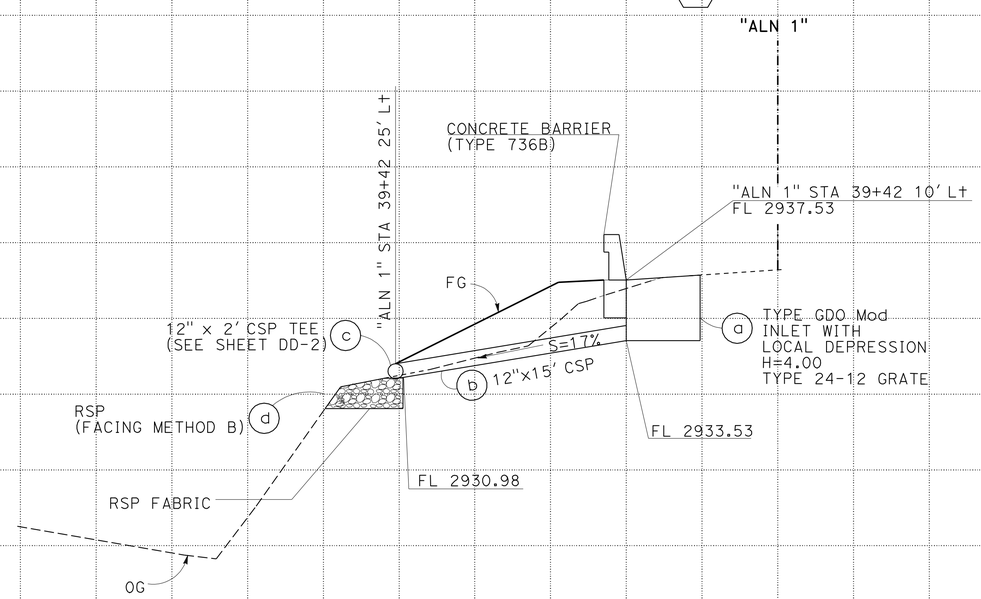


**DRAINAGE SYSTEM No. 2**

SCALE: Horiz 1" = 5'
Vert 1" = 5'

# DRAINAGE PROFILES
# DP-2

STATE OF CALIFORNIA - DEPARTMENT OF TRANSPORTATION
Caltrans
DESIGN

FUNCTIONAL SUPERVISOR: GURBHAY BRAR
CALCULATED-DESIGNED BY: GURDEEP BRAR
CHECKED BY: DAVID VELAZCO
REVISED BY
DATE REVISED

LAST REVISION 06-28-11
DATE PLOTTED => 27-JUL-2011
TIME PLOTTED => 15:29

| Dist | COUNTY | ROUTE | POST MILES TOTAL PROJECT | SHEET No. | TOTAL SHEETS |
|---|---|---|---|---|---|
| 06 | Ker | 5 | 5.2/5.9 | 17 | 49 |

REGISTERED CIVIL ENGINEER 05-15-11 DATE

7-25-11
PLANS APPROVAL DATE

REGISTERED PROFESSIONAL ENGINEER UDAYA Y. SHANKAR No. 71268 Exp. 12/31/11 CIVIL STATE OF CALIFORNIA

*THE STATE OF CALIFORNIA OR ITS OFFICERS OR AGENTS SHALL NOT BE RESPONSIBLE FOR THE ACCURACY OR COMPLETENESS OF SCANNED COPIES OF THIS PLAN SHEET.*

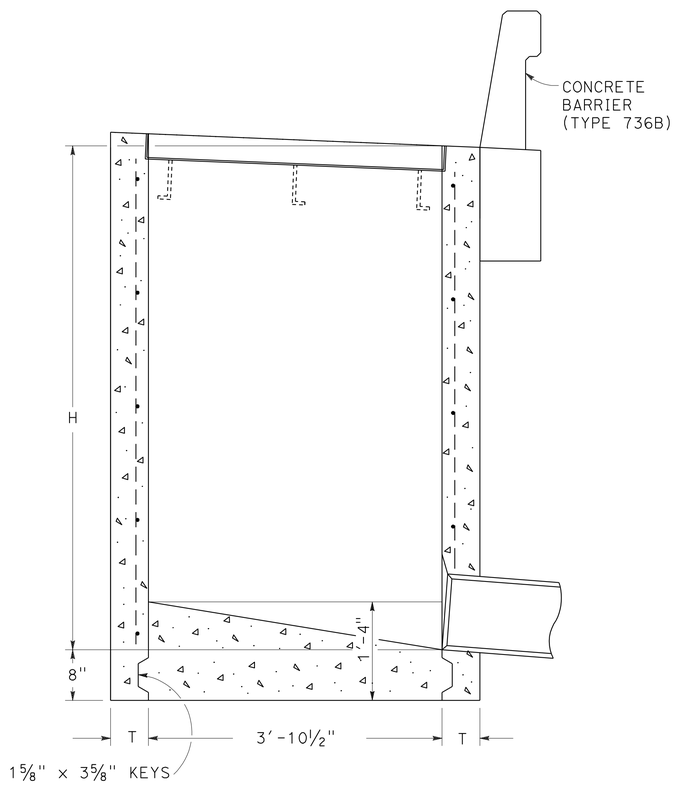


SECTION A-A

**GDO MODIFIED**

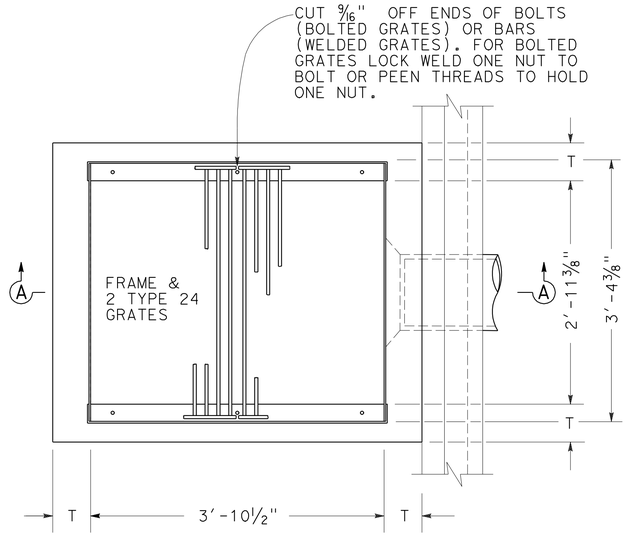


**PLAN**

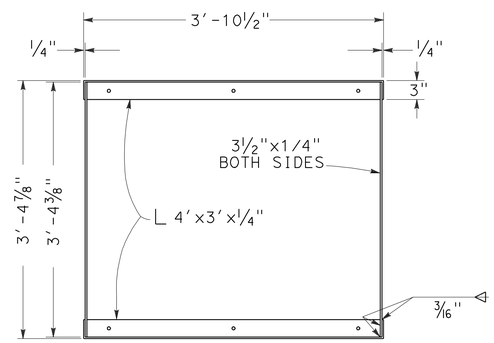


**GRATE FRAME DETAIL**

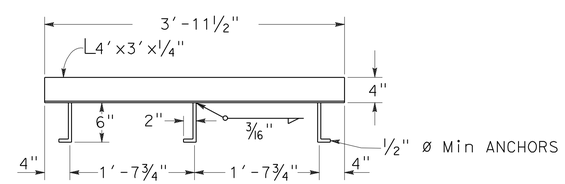


**ANCHOR PLACEMENT DETAIL**

## NOTES

1. 'H' IS THE DIFFERENCE IN ELEVATION BETWEEN THE OUTLET PIPE FLOW LINE AND THE FLOW LINE OF THE GRATES.
2. STEPS - NONE REQUIRED WHEN 'H' IS 2'-6" OR LESS. INSTALL ONE STEP 16"± ABOVE FLOOR WHEN 'H' IS MORE THAN 3'-6" AND LESS THAN 5'-0" WHERE 'H' IS MORE THAN 5'-0" STEPS SHALL BE EVENLY SPACED @ 12"± INTERVALS FROM 16"± ABOVE FLOOR TO WITHIN 12"± OF THE TOP OF THE BOX. PLACE STEPS IN WALL WITHOUT PIPE OPENINGS. SEE STANDARD PLAN D74C FOR STEP DETAIL.
3. REINFORCING STEEL NOT REQUIRED IN WALLS WHEN H=6'OR LESS.
4. REINFORCING STEEL IN WALLS SHALL BE #4 BARS @ 18"± CENTERS PLACED 1½" CLEAR TO INSIDE OF BOX.

| H | T |
|---|---|
| 8'-0" OR LESS | 6" |

# DRAINAGE DETAILS

NO SCALE

**DD-1**

STATE OF CALIFORNIA - DEPARTMENT OF TRANSPORTATION
Caltrans® DESIGN

FUNCTIONAL SUPERVISOR: GURBHAY BRAR
CALCULATED-DESIGNED BY: GURDEEP BRAR
CHECKED BY: DAVID VELAZCO
REVISED BY
DATE REVISED

LAST REVISION 06-28-11
DATE PLOTTED => 27-JUL-2011
TIME PLOTTED => 15:29

| Dist | COUNTY | ROUTE | POST MILES TOTAL PROJECT | SHEET No. | TOTAL SHEETS |
|---|---|---|---|---|---|
| 06 | Ker | 5 | 5.2/5.9 | 18 | 49 |

REGISTERED CIVIL ENGINEER 05-15-11 DATE

7-25-11
PLANS APPROVAL DATE

REGISTERED PROFESSIONAL ENGINEER UDAYA Y. SHANKAR No. 71268 Exp. 12/31/11 CIVIL STATE OF CALIFORNIA

*THE STATE OF CALIFORNIA OR ITS OFFICERS OR AGENTS SHALL NOT BE RESPONSIBLE FOR THE ACCURACY OR COMPLETENESS OF SCANNED COPIES OF THIS PLAN SHEET.*

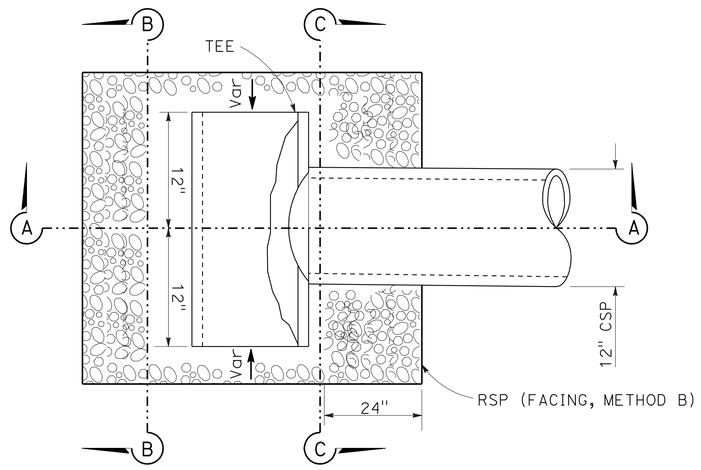


PLAN

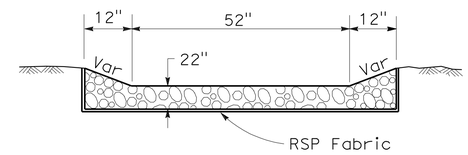


SECTION B-B

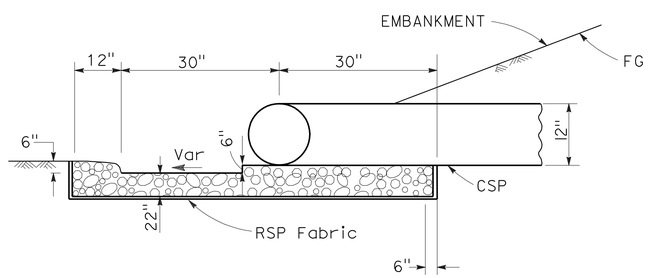


SECTION A-A

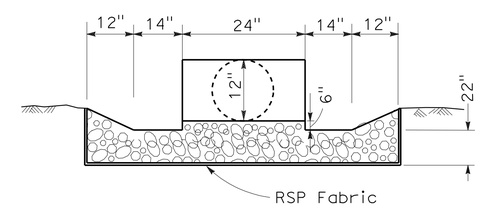


SECTION C-C

# ROCK ENERGY DISSIPATOR AND TEE SECTION

## DRAINAGE DETAILS

NO SCALE

**DD-2**

STATE OF CALIFORNIA - DEPARTMENT OF TRANSPORTATION
Caltrans® DESIGN

FUNCTIONAL SUPERVISOR: GURBHAY BRAR
CALCULATED-DESIGNED BY: GURDEEP BRAR
CHECKED BY: DAVID VELAZCO
REVISED BY
DATE REVISED

LAST REVISION 05-04-11
DATE PLOTTED => 27-JUL-2011
TIME PLOTTED => 15:29

| Dist | COUNTY | ROUTE | POST MILES TOTAL PROJECT | SHEET No. | TOTAL SHEETS |
|---|---|---|---|---|---|
| 06 | Ker | 5 | 5.2/5.9 | 19 | 49 |

REGISTERED CIVIL ENGINEER 05-31-11 DATE

7-25-11
PLANS APPROVAL DATE

REGISTERED PROFESSIONAL ENGINEER FAWZI YAGHMOUR No. C-54750 Exp. 12/31/11 CIVIL STATE OF CALIFORNIA

*THE STATE OF CALIFORNIA OR ITS OFFICERS OR AGENTS SHALL NOT BE RESPONSIBLE FOR THE ACCURACY OR COMPLETENESS OF SCANNED COPIES OF THIS PLAN SHEET.*

# CONSTRUCTION AREA SIGNS
# (STATIONARY MOUNTED)

LEGEND

○ SIGN NUMBER

┣ ONE POST

| SIGN No. | SIGN CODE | PANEL SIZE | SIGN MESSAGE | No. OF POSTS AND SIZE | No. OF SIGNS |
|---|---|---|---|---|---|
| Ⓐ | W20-1 | 36" x 36" | ROAD WORK AHEAD | 1-4" x 6" | 4 |
| Ⓑ | G20-2 | 48" x 24" | END ROAD WORK | 1-4" x 6" | 4 |

NOTES:

1. EXACT LOCATIONS WILL BE DETERMINED BY THE ENGINEER.
2. FOR ADDITIONAL CONSTRUCTION AREA SIGNS, SEE TRAFFIC HANDLING PLANS AND QUANTITIES.

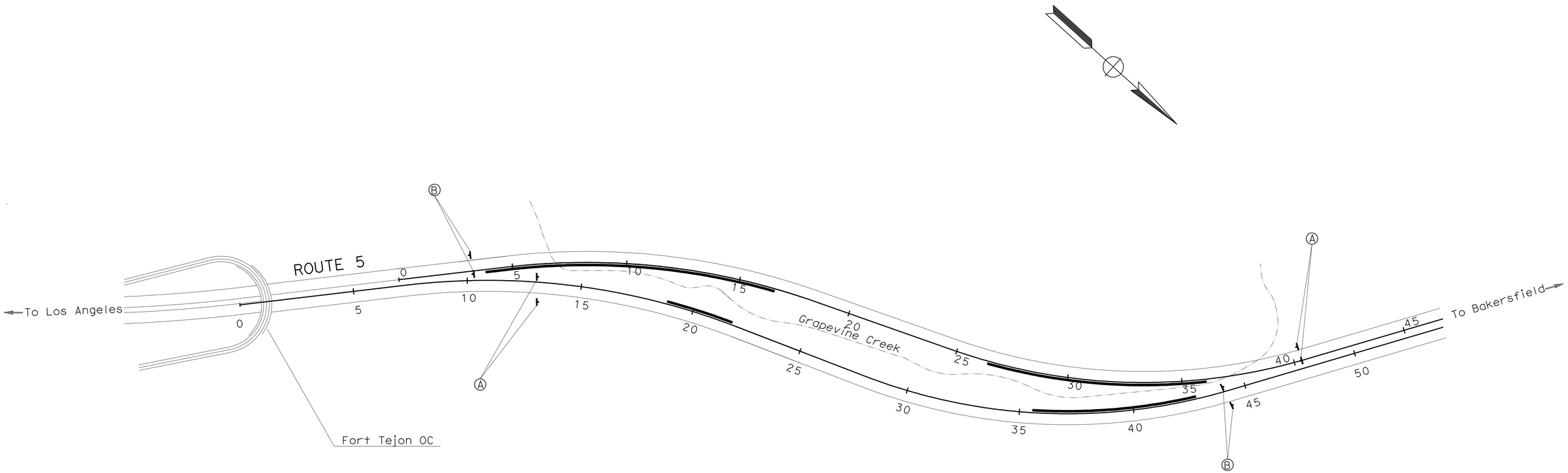


THIS PLAN ACCURATE FOR CONSTRUCTION AREA SIGN WORK ONLY

# CONSTRUCTION AREA SIGNS

NO SCALE

CS-1

REVISED BY | DATE REVISED

GURMIT GILL | FAWZI YAGHMOUR

CALCULATED-DESIGNED BY | CHECKED BY

FUNCTIONAL SUPERVISOR: MOHAMMED QATAMI

STATE OF CALIFORNIA - DEPARTMENT OF TRANSPORTATION

Caltrans®

TRAFFIC DESIGN

LAST REVISION 05-31-11 | DATE PLOTTED => 27-JUL-2011 TIME PLOTTED => 15:29

| Dist | COUNTY | ROUTE | POST MILES TOTAL PROJECT | SHEET No. | TOTAL SHEETS |
|---|---|---|---|---|---|
| 06 | Ker | 5 | 5.2/5.9 | 20 | 49 |

REGISTERED CIVIL ENGINEER — DATE 05-31-11

7-25-11
PLANS APPROVAL DATE

REGISTERED PROFESSIONAL ENGINEER — FAWZI YAGHMOUR — No. C-54750 — Exp. 12/31/11 — CIVIL — STATE OF CALIFORNIA

*THE STATE OF CALIFORNIA OR ITS OFFICERS OR AGENTS SHALL NOT BE RESPONSIBLE FOR THE ACCURACY OR COMPLETENESS OF SCANNED COPIES OF THIS PLAN SHEET.*

## LEGEND

- DIRECTION OF TRAFFIC OR DIRECTION OF DETOUR
- Temp RAILING (TYPE K)
- CHANNELIZER (SURFACE MOUNTED)
- Temp CRASH CUSHION
- XX — Temp TRAFFIC STRIPE DETAIL No.
- CONSTRUCTION AREA SIGN (ONE POST)
- X — CONSTRUCTION AREA SIGNS No.
- XX — EXISTING TRAFFIC STRIPE DETAIL No.
- PAVEMENT MARKING TYPE VI ARROW
- (PCMS) PORTABLE CHANGEABLE MESSAGE SIGN

## NOTES:

1. EXACT LOCATIONS AND POSITION OF ROADSIGN TO BE DETERMINED BY THE ENGINEER.
2. FOR ADDITIONAL LANE CLOSURE REQUIREMENTS REFER TO STANDARD PLANS 2006.
3. REFER TO THE LANE CLOSURE CHARTS OF THE SPECIAL PROVISION FOR ROADWAY CLOSURE REQUIREMENTS.
4. EXACT LOCATIONS OF PCMS IS TO BE DETERMINED BY THE ENGINEER.
5. FOR ADDITIONAL CONSTRUCTION AREA SIGNS REFER TO CS SHEETS.

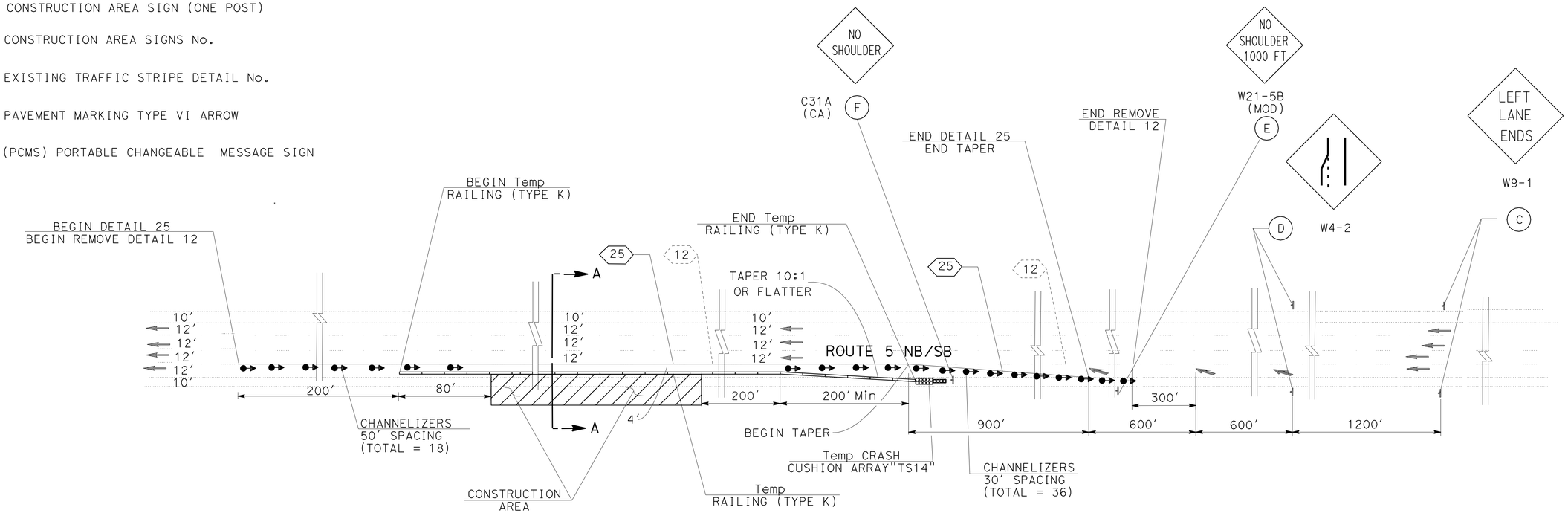


## TYPICAL TRAFFIC CONTROL SYSTEM DETAILS WITH Temp RAILING (TYPE K)

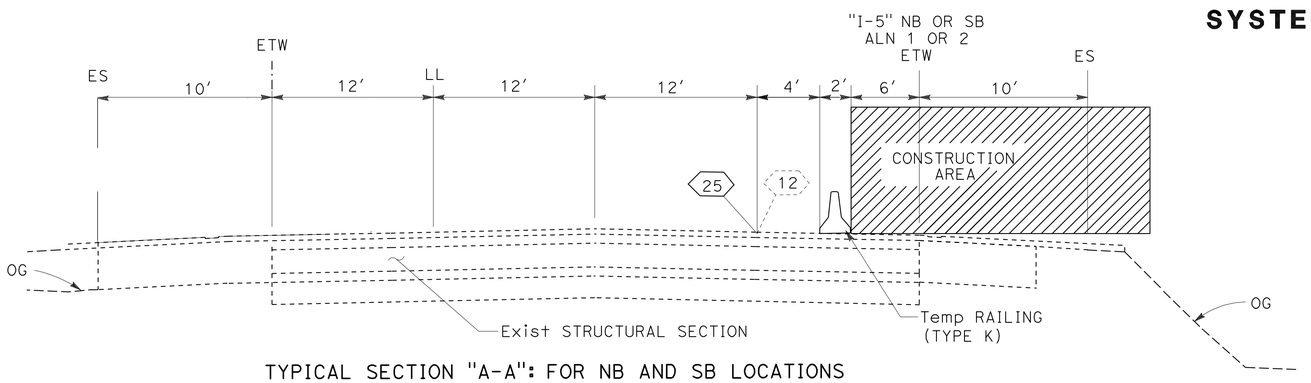


TYPICAL SECTION "A-A": FOR NB AND SB LOCATIONS
NO SCALE

SB LOCATION 1 STA 03+80 TO 16+43
SB LOCATION 3 STA 26+80 TO 36+84
NB LOCATION 2 STA 18+80 TO 22+20
NB LOCATION 4 STA 34+95 TO 44+13

# TRAFFIC HANDLING PLAN

NO SCALE

**TH-1**

THIS PLAN ACCURATE FOR TRAFFIC HANDLING WORK ONLY

STATE OF CALIFORNIA - DEPARTMENT OF TRANSPORTATION
Caltrans® TRAFFIC DESIGN

FUNCTIONAL SUPERVISOR: MOHAMMED QATAMI
CALCULATED-DESIGNED BY: DAVID BLACK
CHECKED BY: FAWZI YAGHMOUR
REVISED BY
DATE REVISED

LAST REVISION 05-27-11
DATE PLOTTED => 27-JUL-2011
TIME PLOTTED => 15:29

| Dist | COUNTY | ROUTE | POST MILES TOTAL PROJECT | SHEET No. | TOTAL SHEETS |
|---|---|---|---|---|---|
| 06 | Ker | 5 | 5.2/5.9 | 21 | 49 |

REGISTERED CIVIL ENGINEER 05-31-11 DATE

7-25-11
PLANS APPROVAL DATE

REGISTERED PROFESSIONAL ENGINEER FAWZI YAGHMOUR No. C-54750 Exp. 12/31/11 CIVIL STATE OF CALIFORNIA

*THE STATE OF CALIFORNIA OR ITS OFFICERS OR AGENTS SHALL NOT BE RESPONSIBLE FOR THE ACCURACY OR COMPLETENESS OF SCANNED COPIES OF THIS PLAN SHEET.*

## CONSTRUCTION AREA SIGNS (TRAFFIC HANDLING)

| SIGN No. | SIGN CODE | SIGN MESSAGE | PANEL SIZE | No. OF POST AND SIZE | No. OF SIGNS |
|---|---|---|---|---|---|
| C | W9-1 | LEFT LANE END | 48" x 48" | 1- 6" x 6" | 8 |
| D | W4-2 | LEFT LANE END (SYMBOL) | 48" x 48" | 1- 6" x 6" | 8 |
| E | W21-5B (Mod) | NO SHOULDER 1000 FT | 48" x 48" | 1- 6" x 6" | 4 |
| F | C31A(CA) | NO SHOULDER | 48" x 48" | 1- 6" x 6" | 4 |

## TRAFFIC HANDLING PAVEMENT DELINEATION QUANTITIES

| LOCATION | DETAIL No. | TEMPORARY PAVEMENT MARKER | TEMPOPRARY TRAFFIC STRIPE (TAPE) | TEMPOPRARY PAVEMENT MARKING (TAPE) |
|---|---|---|---|---|
| | | | 4" (SOLID) | TYPE VI ARROW |
| | | EA | LF | SQFT |
| SB Sta 01+00 To 29+43 | 25 | 60 | 2,843 | 126 |
| SB Sta 24+00 To 49+84 | 25 | 55 | 2,584 | 126 |
| NB Sta 16+00 To 35+20 | 25 | 41 | 1,920 | 126 |
| NB Sta 32+15 To 57+13 | 25 | 53 | 2,498 | 126 |
| TOTAL | | 209 | 9,845 | 504 |

## TRAFFIC HANDLING QUANTITIES

| LOCATION | SHEET | CHANNELIZER (SURFACE MOUNTED) | TEMPORARY CRASH CUSHION MODULE | TEMPORARY RAILING (TYPE K) |
|---|---|---|---|---|
| | | | TYPE 'TS14' | |
| | | EA | EA | LF |
| 1 | TH-1 | 54 | 14 | 1750 |
| 2 | TH-1 | 54 | 14 | 1500 |
| 3 | TH-1 | 54 | 14 | 820 |
| 4 | TH-1 | 54 | 14 | 1400 |
| TOTAL | | 216 | 56 | 5470 |

## PAVEMENT DELINEATION QUANTITIES

| LOCATION | DETAIL No. | PAVEMENT MARKER (RETROREFLECTIVE) | THERMOPLASTIC TRAFFIC STRIPE (SPRAYABLE) | REMOVE THERMOPLASTIC TRAFFIC STRIPE | REMOVE PAVEMENT MARKER |
|---|---|---|---|---|---|
| | | TYPE G | 4" WHITE | 4" WHITE | |
| | | EA | LF | LF | EA |
| SB Sta 01+00 To 32+43 | 12 | 66 | 3,143 | 786 | 66 |
| SB Sta 24+00 To 52+84 | 12 | 61 | 2,884 | 720 | 61 |
| NB Sta 16+00 To 38+20 | 12 | 47 | 2,220 | 555 | 47 |
| NB Sta 32+15 To 60+13 | 12 | 59 | 2,798 | 699 | 59 |
| TOTAL | | 233 | 11,045 | 2,760 | 233 |

# PAVEMENT DELINEATION AND TRAFFIC HANDLING QUANTITIES

THQ-1

STATE OF CALIFORNIA - DEPARTMENT OF TRANSPORTATION
Caltrans® TRAFFIC DESIGN

FUNCTIONAL SUPERVISOR: MOHAMMED QATAMI
CALCULATED-DESIGNED BY: FAWZI YAGHMOUR
CHECKED BY: DAVID BLACK
REVISED BY
DATE REVISED

LAST REVISION 05-31-11
DATE PLOTTED => 27-JUL-2011
TIME PLOTTED => 15:29

| Dist | COUNTY | ROUTE | POST MILES TOTAL PROJECT | SHEET No. | TOTAL SHEETS |
|---|---|---|---|---|---|
| 06 | Ker | 5 | 5.2/5.9 | 22 | 49 |

REGISTERED CIVIL ENGINEER DATE 05-15-11

PLANS APPROVAL DATE 7-25-11

REGISTERED PROFESSIONAL ENGINEER UDAYA Y. SHANKAR No. 71268 Exp. 12/31/11 CIVIL STATE OF CALIFORNIA

*THE STATE OF CALIFORNIA OR ITS OFFICERS OR AGENTS SHALL NOT BE RESPONSIBLE FOR THE ACCURACY OR COMPLETENESS OF SCANNED COPIES OF THIS PLAN SHEET.*

## TEMPORARY DRAINAGE INLET PROTECTION

| LOCATION | SIDE | TEMPORARY DRAINAGE INLET PORTECTION |
|---|---|---|
| STA | | EA |
| "ALN 2" 14+68 | R† | 1 |
| "ALN 1" 39+42 | L† | 1 |
| "ALN 1" 41+48 | L† | 1 |
| TOTAL | | 3 |

## ROADWAY QUANTITIES

| LOCATION | TACK COAT | HOT MIX ASPHALT (TYPE A) | ROADWAY EXCAVATION | EMBANKMENT (N) |
|---|---|---|---|---|
| | TON | TON | CY | CY |
| "ALN 2" SB STA 03+80 TO 15+80 | 0.3 | 231 | 323 | 58 |
| "ALN 2" SB STA 26+80 TO 35+80 | 0.2 | 173 | 154 | 4 |
| "ALN 1" NB STA 18+80 TO 22+20 | 0.2 | 111 | 301 | 161 |
| "ALN 1" NB STA 35+56 TO 43+05 | 0.2 | 143 | 231 | 22 |
| MEDIAN PAVING (SEE L-2 SHEET) | 0.4 | 175 | 142 | |
| TOTAL | 1.3 | 833 | 1151 | |

(N) = NOT A SEPARATE PAY ITEM, FOR INFORMATION ONLY.

## CONCRETE BARRIER

| STATION | LENGTH | | |
|---|---|---|---|
| | TYPE 60 | TYPE 736A | TYPE 736B |
| | LF | LF | LF |
| "ALN-1" NB STA 18+80 TO 22+20 | 340 | | |
| "ALN-1" NB STA 35+56 TO 36+10 | | | 54 |
| "ALN-1" NB STA 36+10 TO 37+30 | | 120 | |
| "ALN-1" NB STA 37+30 TO 40+10 | | | 280 |
| "ALN-1" NB STA 40+10 TO 41+45 | | 135 | |
| "ALN-1" NB STA 41+45 TO 42+80 | | | 135 |
| "ALN-2" SB STA 03+80 TO 09+30 | | | 550 |
| "ALN-2" SB STA 09+30 TO 11+30 | | 200 | |
| "ALN-2" SB STA 11+30 TO 15+80 | | | 450 |
| "ALN-2" SB STA 26+80 TO 34+10 | | | 730 |
| "ALN-2" SB STA 34+10 TO 35+00 | | 90 | |
| "ALN-2" SB STA 35+00 TO 35+40 | | | 40 |
| TOTAL | 340 | 545 | 2239 |

## METAL BEAM GUARD RAILING

| * STATION | ALTERNATIVE FLARED TERMINAL SYSTEM | TRANSITION RAILING (TYPE WB) | BURIED POST ANCHOR (N) | MBGR (STEEL POST) | LAYOUT TYPE |
|---|---|---|---|---|---|
| | EACH | EACH | EACH | LF | EACH |
| "ALN 2" STA 15+80 TO 16+42.5 | | 1 | 1 | 37.5 | 12C |
| "ALN 2" STA 35+40 TO 36+03.70 | 1 | 1 | | | 12B |
| "ALN 1" STA 34+95 TO 35+56 | 1 | 1 | | | 12B |
| | | | | | |
| TOTAL | 2 | 3 | 1 | 37.5 | |

* APPROXIMATE LOCATIONS ONLY, EXACT LOCATIONS TO BE DETERMINED BY THE ENGINEER.

## DRAINAGE QUANTITIES

| ⬡ DRAINAGE SYSTEM No. | ◯ DRAINAGE UNIT | FRAMES & COVERS (N) TYPE 24-12 | MISCELLANEOUS IRON & STEEL | MINOR CONCRETE (MINOR STRUCTURE) | "H" (N) | 12" CORRUGATED STEEL PIPE | RSP RSP FABRIC | RSP (FACING METHOD B) | DESCRIPTION | STATION | DRAINAGE PLAN SHEET No. | ⬡ DRAINAGE SYSTEM No. | ◯ DRAINAGE UNIT |
|---|---|---|---|---|---|---|---|---|---|---|---|---|---|
| | | EA | LB | CY | FT | LF | SQYD | CY | | | | | |
| 1 | a | 2 | 634 | 1.94 | 4.00 | | | | TYPE GDO Mod INLET | "ALN 2" 14+68 10' R† | DP-1 | 1 | a |
| | b | | | | | 12 | | | 12" CSP | | | | b |
| | c | | | | | 2 | | | 12" x 2' CSP TEE SECTION | | | | c |
| | d | | | | | | 15 | 4 | ROCK ENERGY DISSIPATOR | | | | d |
| 2 | a | 2 | 634 | 1.94 | 4.00 | | | | TYPE GDO Mod INLET | "ALN 1" 39+42 10' LT | DP-2 | 2 | a |
| | b | | | | | 15 | | | 12" CSP | | | | b |
| | c | | | | | 2 | | | 12" x 2' CSP TEE SECTION | | | | c |
| | d | | | | | | 15 | 4 | ROCK ENERGY DISSIPATOR | | | | d |
| 3 | a | 2 | 634 | 1.94 | 4.00 | | | | TYPE GDO Mod INLET | "ALN 1" 41+48 10' L† | DP-2 | 3 | a |
| | b | | | | | 11 | | | 12" CSP | | | | b |
| | c | | | | | 2 | | | 12" x 2' CSP TEE SECTION | | | | c |
| | d | | | | | | 15 | 4 | ROCK ENERGY DISSIPATOR | | | | d |
| TOTAL | | | 1902 | 5.82 | | 44 | 45 | 12 | | | | | |

(N) = NOT A SEPARATE PAY ITEM, FOR INFORMATION ONLY.

## RETAINING WALL TYPE 1A

| STATION | STRUCTURE CONCRETE, RETAINING WALL | BAR REINFORCING STEEL (RETAINING WALL) | STRUCTURE EXCAVATION (RETAINING WALL) | STRUCTURE BACKFILL (RETAINING WALL) |
|---|---|---|---|---|
| | CY | LB | CY | CY |
| "ALN 2" STA 09+30 TO 11+30 | 64 | 6,000 | 172 | 89 |
| "ALN 2" STA 34+10 TO 35+00 | 29 | 2,700 | 78 | 40 |
| "ALN 1" STA 36+10 TO 37+30 | 38 | 3,600 | 103 | 54 |
| "ALN 1" STA 40+10 TO 41+45 | 43 | 4,050 | 116 | 60 |
| TOTAL | 174 | 16,350 | 469 | 243 |

# SUMMARY OF QUANTITIES

Q-1

STATE OF CALIFORNIA - DEPARTMENT OF TRANSPORTATION

Caltrans

DESIGN

FUNCTIONAL SUPERVISOR: GURBHAY BRAR

CALCULATED-DESIGNED BY: GURDEEP BRAR

CHECKED BY: DAVID VELAZCO

REVISED BY

DATE REVISED

LAST REVISION 06-28-11

DATE PLOTTED => 27-JUL-2011

TIME PLOTTED => 15:29

| Dist | COUNTY | ROUTE | POST MILES TOTAL PROJECT | SHEET No. | TOTAL SHEETS |
|---|---|---|---|---|---|
| 06 | Ker | 5 | 5.2/5.9 | 23 | 49 |

LICENSED LANDSCAPE ARCHITECT

7-25-11
PLANS APPROVAL DATE

LICENSED LANDSCAPE ARCHITECT — DAVID R. MARTIN #5039 — Expiration Date 03/31/11 — Renewal Date 04/21/11 Date — STATE OF CALIFORNIA

*THE STATE OF CALIFORNIA OR ITS OFFICERS OR AGENTS SHALL NOT BE RESPONSIBLE FOR THE ACCURACY OR COMPLETENESS OF SCANNED COPIES OF THIS PLAN SHEET.*

## ABBREVIATIONS:

AMEND — amendment
B & B — balled and burlapped
Dia — diameter
EA — each
LB — pound
Oz — ounce
Ft — foot/feet
SQFT — square feet
SQYD — square yard
CF — cubic feet
CY — cubic yard
Max — maximum
Min — minimum
NCN — no common name
No. — number
Pkt — packet
PLT ESTB — plant establishment
Pvmt — pavement
R/W — right of way
SF — state furnished
TRVD — traveled

# PLANT LIST AND PLANTING SPECIFICATIONS

| PLANT GROUP | PLANT No. | SYMBOL | BOTANICAL NAME | COMMON NAME | SIZE (5) | QUANTITY EACH | HOLE SIZE (INCH) Dia | HOLE SIZE (INCH) DEPTH | BASIN TYPE | IRON SULFATE | SOIL AMEND | COMMERCIAL FERTILIZER PLANTING | COMMERCIAL FERTILIZER PLT ESTB | BASIN MULCH (CY) | STAKING | PLANTING LIMITS MINIMUM DISTANCE (Ft) FROM TRVD WAY | PVMT | FENCE | WALL | PAVED DITCH | EARTH DITCH | ON CENTER (Ft) | REMARKS |
|---|---|---|---|---|---|---|---|---|---|---|---|---|---|---|---|---|---|---|---|---|---|---|---|
| A | 1 | | CLEMATIS LASIANTHUS | CHAPARRAL CLEMATIS | No. 1 | 23 | (13) | (3) | I | - | - | - | - | 1 CF | - | - | 6 | 6 | 6 | 6 | 8 | (7) | VINE |
| M | 2 | | SALIX GOODDINGII | GOODDING'S BLACK WILLOW | LINER | 83 | (13) | (3) | I | - | - | - | - | 1 CF | - | - | 15 | 15 | 15 | 15 | 15 | (7) | 5" LINER |

## EROSION CONTROL

| POLYMER STABILIZED FIBER MATRIX (PSFM) | | | | |
|---|---|---|---|---|
| LOCATION | AREA (SF) | TACKIFIER (GAL) (N) | FIBER (LB) (N) | SEED (LB-PLS) (N) |
| NORTHBOUND | 5,276 | 0.5 | 120 | 2.7 |
| SOUTHBOUND | 11,468 | 1.5 | 260 | 5.8 |
| TOTAL | 16,744 | | | |

(N) NOT A SEPARATE PAY ITEM.
FOR INFORMATION ONLY

## FIBER ROLL (FR)

| LOCATION | LENGTH (LF) |
|---|---|
| NORTHBOUND | 591 |
| SOUTHBOUND | 2273 |
| TOTAL | 2864 |

## TEMPORARY FENCE (TYPE ESA)

| LOCATION | AREA (LF) |
|---|---|
| NORTHBOUND | 615 |
| SOUTHBOUND | 2309 |
| TOTAL | 2924 |

## MULCH

| LOCATION | CY |
|---|---|
| NORTHBOUND | 1.1 |
| SOUTHBOUND | 2.8 |
| TOTAL | 3.9 |

## APPLICABLE WHEN CIRCLED:

1 - Quantities shown are "per plant" unless shown as SQFT or SQYD application rates
2 - Basin mulch is included with mulch quantities shown on Planting Plan
(3) - Sufficient to receive root ball and amendments if required
4 - See Detail
5 - See Special Provisions
6 - See Standard Specifications
(7) - As shown on plans
8 - Unless otherwise shown on plans
9 - Foliage Protector required
10 - Root Protector required
11 - Root Barrier required
12 - State-Furnished
(13) - Two times the root ball diameter

## NOTE:

Underlined portions of botanical name indicate abbreviations used on Planting Plans.

# PLANT LIST
# PL-1

REVISED BY | DATE REVISED
DAVID MARTIN | KEVIN GALLO
CALCULATED-DESIGNED BY | CHECKED BY
SENIOR LANDSCAPE ARCHITECT: ELBERT COX
STATE OF CALIFORNIA - DEPARTMENT OF TRANSPORTATION
Caltrans LANDSCAPE ARCHITECTURE

LAST REVISION 06-28-11 | DATE PLOTTED => 27-JUL-2011 | TIME PLOTTED => 15:00

| Dist | COUNTY | ROUTE | POST MILES TOTAL PROJECT | SHEET No. | TOTAL SHEETS |
|---|---|---|---|---|---|
| 06 | Ker | 5 | 5.2/5.9 | 24 | 49 |

LICENSED LANDSCAPE ARCHITECT

7-25-11
PLANS APPROVAL DATE

LICENSED LANDSCAPE ARCHITECT
DAVID R. MARTIN #5039
Expiration Date 03/31/13
Renewal Date 04/21/11
Date
STATE OF CALIFORNIA

*THE STATE OF CALIFORNIA OR ITS OFFICERS OR AGENTS SHALL NOT BE RESPONSIBLE FOR THE ACCURACY OR COMPLETENESS OF SCANNED COPIES OF THIS PLAN SHEET.*

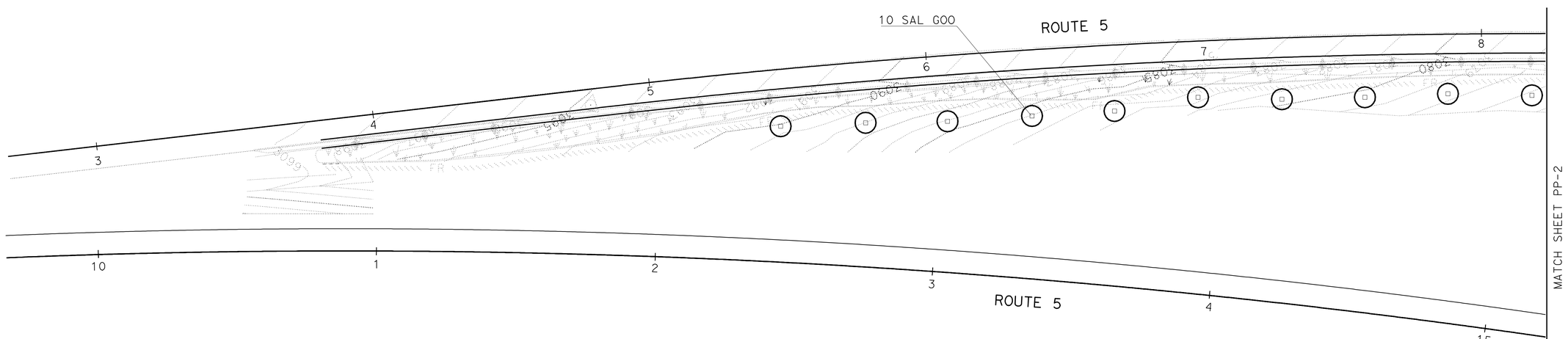


THIS PLAN ACCURATE FOR PLANTING WORK ONLY

# PLANTING PLAN

SCALE: 1" = 20′ **PP-1**

| | |
|---|---|
| REVISED BY | DAVID MARTIN |
| DATE REVISED | KEVIN GALLO |
| CALCULATED-DESIGNED BY | |
| CHECKED BY | |
| SENIOR LANDSCAPE ARCHITECT | ELBERT COX |

STATE OF CALIFORNIA - DEPARTMENT OF TRANSPORTATION
Caltrans® LANDSCAPE ARCHITECTURE

LAST REVISION 06-28-11
DATE PLOTTED => 27-JUL-2011
TIME PLOTTED => 15:00

| Dist | COUNTY | ROUTE | POST MILES TOTAL PROJECT | SHEET No. | TOTAL SHEETS |
|---|---|---|---|---|---|
| 06 | Ker | 5 | 5.2/5.9 | 25 | 49 |

LICENSED LANDSCAPE ARCHITECT

7-25-11
PLANS APPROVAL DATE

LICENSED LANDSCAPE ARCHITECT
DAVID R. MARTIN #5039
Expiration Date 03/31/13
Renewal Date 04/21/11
Date
STATE OF CALIFORNIA

*THE STATE OF CALIFORNIA OR ITS OFFICERS OR AGENTS SHALL NOT BE RESPONSIBLE FOR THE ACCURACY OR COMPLETENESS OF SCANNED COPIES OF THIS PLAN SHEET.*

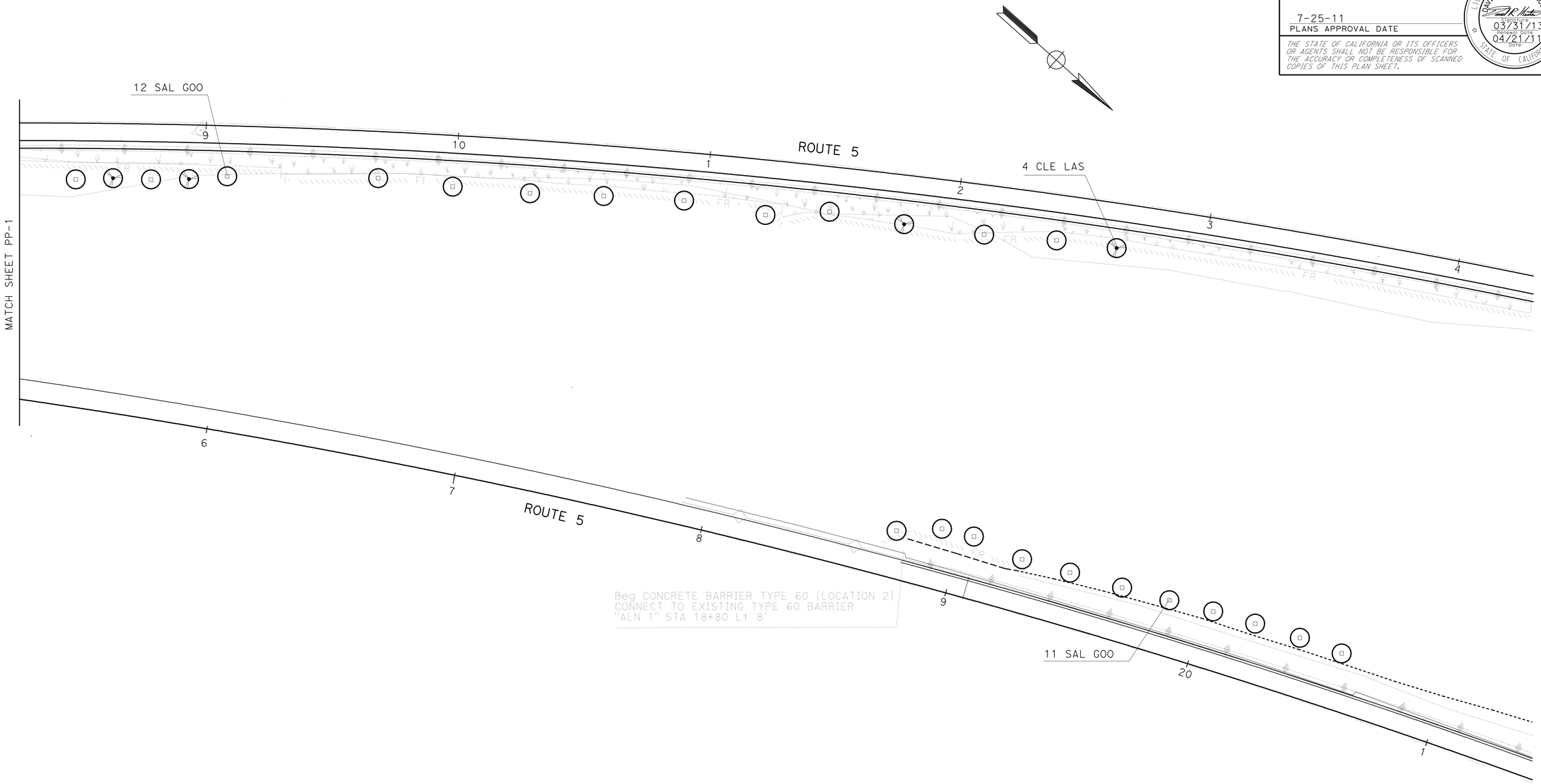


THIS PLAN ACCURATE FOR PLANTING WORK ONLY

# PLANTING PLAN

SCALE: 1" = 20'  **PP-2**

| REVISED BY | DATE REVISED |
|---|---|
| | |

DAVID MARTIN — KEVIN GALLO
CALCULATED-DESIGNED BY — CHECKED BY
SENIOR LANDSCAPE ARCHITECT — ELBERT COX

STATE OF CALIFORNIA - DEPARTMENT OF TRANSPORTATION
Caltrans® LANDSCAPE ARCHITECTURE

LAST REVISION 06-28-11
DATE PLOTTED => 27-JUL-2011
TIME PLOTTED => 15:07

| Dist | COUNTY | ROUTE | POST MILES TOTAL PROJECT | SHEET No. | TOTAL SHEETS |
|---|---|---|---|---|---|
| 06 | Ker | 5 | 5.2/5.9 | 26 | 49 |

LICENSED LANDSCAPE ARCHITECT

7-25-11
PLANS APPROVAL DATE

LICENSED LANDSCAPE ARCHITECT
DAVID R. MARTIN #5039
Expiration Date 03/31/13
Renewal Date 04/21/11
Date
STATE OF CALIFORNIA

*THE STATE OF CALIFORNIA OR ITS OFFICERS OR AGENTS SHALL NOT BE RESPONSIBLE FOR THE ACCURACY OR COMPLETENESS OF SCANNED COPIES OF THIS PLAN SHEET.*

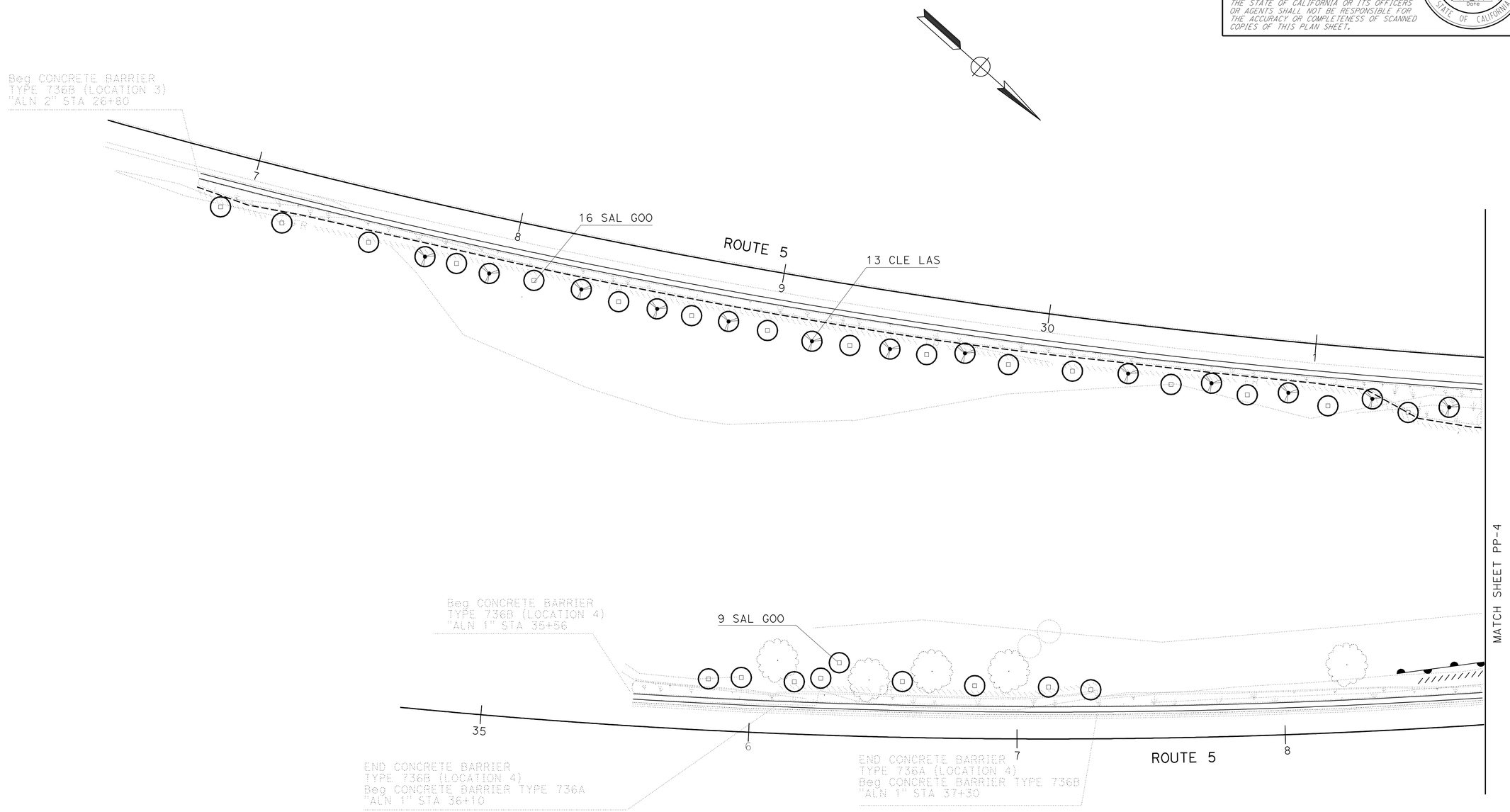


THIS PLAN ACCURATE FOR PLANTING WORK ONLY

# PLANTING PLAN PP-3

SCALE: 1" = 20'

STATE OF CALIFORNIA - DEPARTMENT OF TRANSPORTATION
Caltrans® LANDSCAPE ARCHITECTURE

SENIOR LANDSCAPE ARCHITECT: ELBERT COX

CALCULATED-DESIGNED BY: DAVID MARTIN
CHECKED BY: KEVIN GALLO

REVISED BY | DATE REVISED

LAST REVISION 06-28-11
DATE PLOTTED => 28-JUL-2011
TIME PLOTTED => 12:03

| Dist | COUNTY | ROUTE | POST MILES TOTAL PROJECT | SHEET No. | TOTAL SHEETS |
|---|---|---|---|---|---|
| 06 | Ker | 5 | 5.2/5.9 | 27 | 49 |

LICENSED LANDSCAPE ARCHITECT

7-25-11
PLANS APPROVAL DATE

LICENSED LANDSCAPE ARCHITECT
DAVID R. MARTIN #5039
Expiration Date
03/31/13
Renewal Date
04/21/11
Date
STATE OF CALIFORNIA

*THE STATE OF CALIFORNIA OR ITS OFFICERS OR AGENTS SHALL NOT BE RESPONSIBLE FOR THE ACCURACY OR COMPLETENESS OF SCANNED COPIES OF THIS PLAN SHEET.*

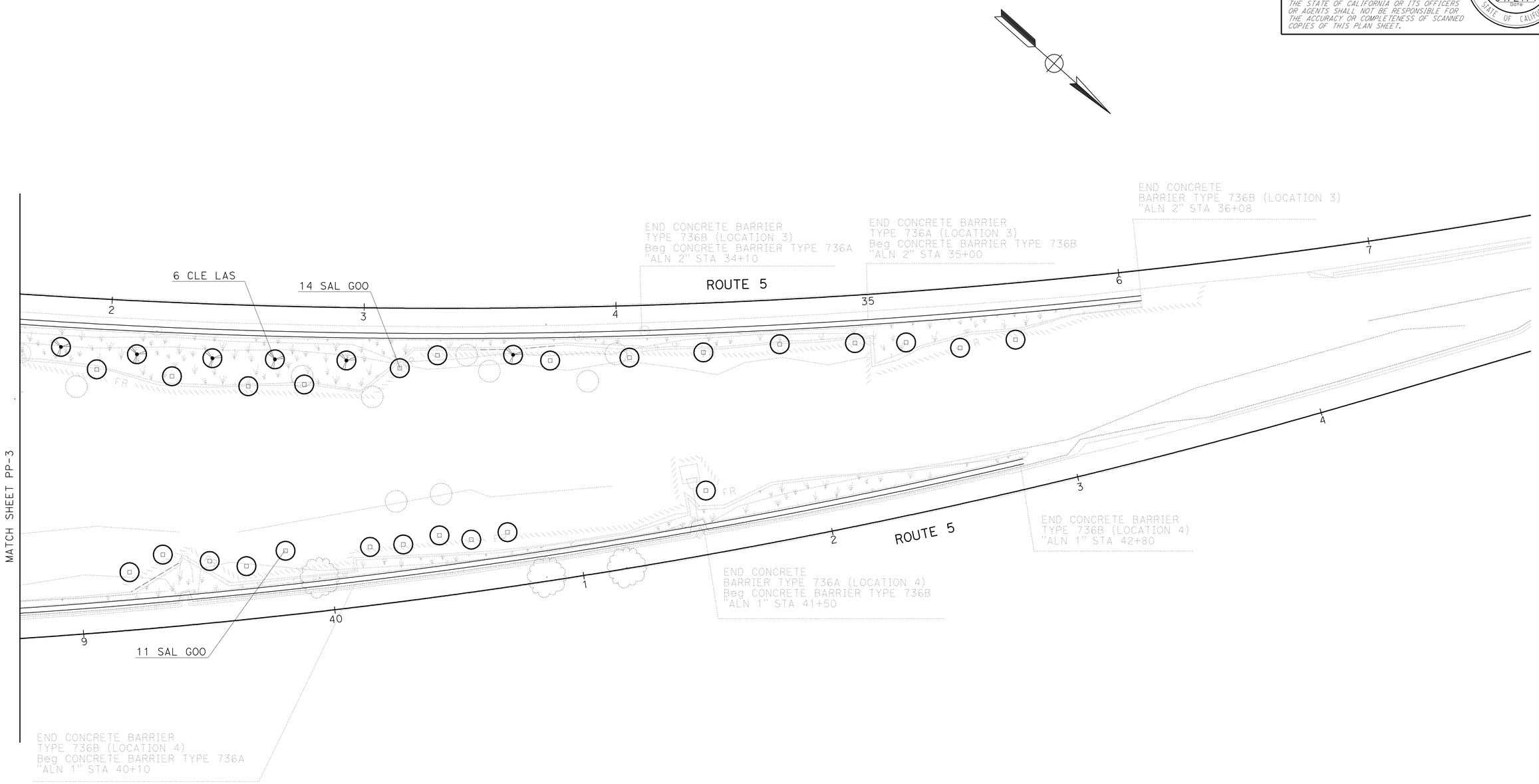


THIS PLAN ACCURATE FOR PLANTING WORK ONLY

# PLANTING PLAN

SCALE: 1" = 20'

**PP-4**

STATE OF CALIFORNIA - DEPARTMENT OF TRANSPORTATION
Caltrans® LANDSCAPE ARCHITECTURE

SENIOR LANDSCAPE ARCHITECT: ELBERT COX

CALCULATED-DESIGNED BY: DAVID MARTIN
CHECKED BY: KEVIN GALLO

REVISED BY
DATE REVISED

LAST REVISION 06-28-11
DATE PLOTTED => 27-JUL-2011
TIME PLOTTED => 15:21

| DIST | COUNTY | ROUTE | POST MILES TOTAL PROJECT | SHEET NO. | TOTAL SHEETS |
|---|---|---|---|---|---|
| 06 | Ker | 5 | 5.2/5.9 | 28 | 49 |

Randell D. Hiatt
REGISTERED CIVIL ENGINEER

June 6, 2008
PLANS APPROVAL DATE

REGISTERED PROFESSIONAL ENGINEER
Randell D. Hiatt
No. C50200
Exp. 6-30-09
CIVIL
STATE OF CALIFORNIA

*The State of California or its officers or agents shall not be responsible for the accuracy or completeness of electronic copies of this plan sheet.*

*To accompany plans dated* 7-25-11

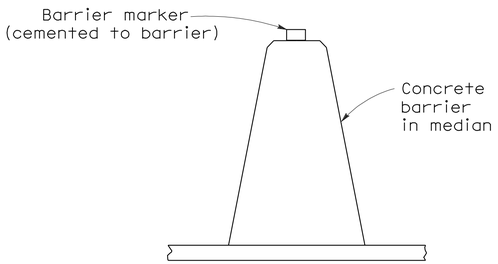


## CONCRETE BARRIER TYPE 60 DELINEATION

See Notes 7 and 8

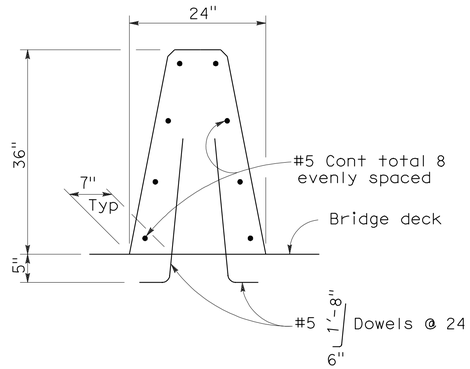


## CONCRETE BARRIER TYPE 60A

Details similar to Type 60 except as noted.

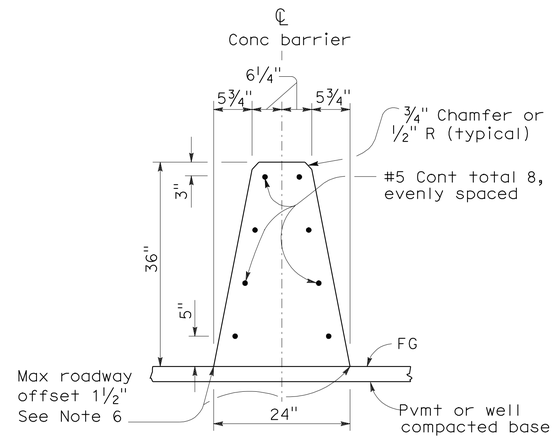


## CONCRETE BARRIER TYPE 60

### NOTES:

1. See Standard Plan A76B for details of Concrete Barrier Type 60 end anchors, connection to structures and transitions to Concrete Barrier Type 50 and Concrete Barrier Type 60S.
2. See Standard Plan A76C for Concrete Barrier Type 60 transitions at bridge column and sign pedestals.
3. Where glare screen is required on Concrete Barrier Type 60, use Concrete Barrier Type 60G.
4. Where the concrete barrier is added to the face of existing concrete structure, match existing weep holes.
5. Expansion joints in concrete barrier shall be located at all deck, pavement and principal wall joints. Expansion joint filler material shall be the same size as joint or ½" minimum.
6. Where roadway offset is greater than 1½", see Concrete Barrier Type 60C.
7. Barrier delineation to be used when required by the Special Provisions.
8. Spacing of barrier markers to match spacing of raised pavement markers on the adjacent median edgeline pavement delineation.
9. Reinforcing stirrup not required for roadway offsets less than 1'-0".
10. For roadway surfaces offset greater than 1½" to 3", no rebars required. For roadway surfaces offset greater than 3" to 8" use two #4 rebars at 3" above the lower roadway surface. For roadway surfaces offset greater than 8" to 12", use two #4 rebars at 3" above the lower roadway surface and two #4 rebars at 8" above the lower roadway surface. For roadway surfaces offset greater than 12" to 36", use two #4 rebars at 3" above the lower roadway surface and two #4 rebars at every 8" increment vertical spacing above the first two #4 rebars.

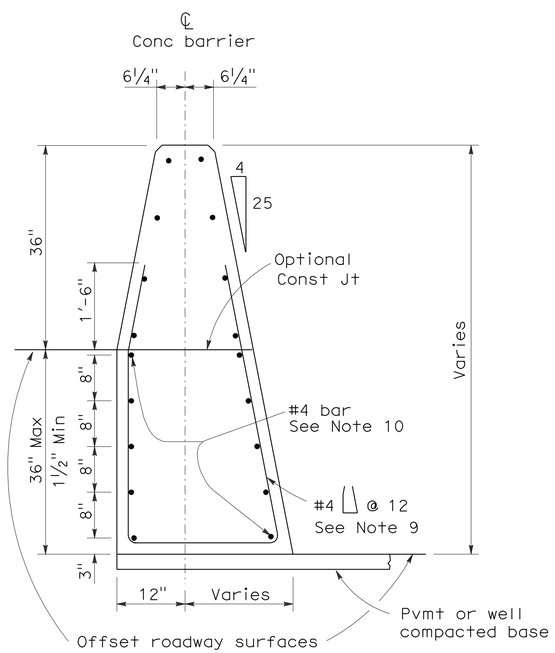


## CONCRETE BARRIER TYPE 60C

Details similar to Type 60 except as noted.
Concrete barrier end anchor when necessary.
36" roadway surfaces offset shown.

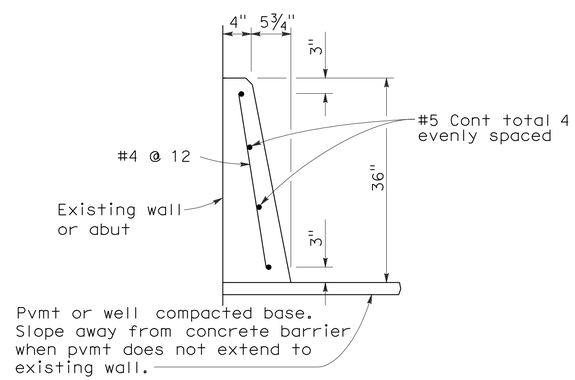


## CONCRETE BARRIER TYPE 60D

STATE OF CALIFORNIA
DEPARTMENT OF TRANSPORTATION

# CONCRETE BARRIER TYPE 60

NO SCALE

RSP A76A DATED JUNE 6, 2008 SUPERSEDES STANDARD PLAN A76A
DATED MAY 1, 2006 - PAGE 29 OF THE STANDARD PLANS BOOK DATED MAY 2006.

**REVISED STANDARD PLAN RSP A76A**

**2006 REVISED STANDARD PLAN RSP A76A**

5-21-08

| Dist | COUNTY | ROUTE | POST MILES TOTAL PROJECT | SHEET No. | TOTAL SHEETS |
|---|---|---|---|---|---|
| 06 | Ker | 5 | 5.2/5.9 | 29 | 49 |

Randell D. Hiatt
REGISTERED CIVIL ENGINEER

May 20, 2011
PLANS APPROVAL DATE

REGISTERED PROFESSIONAL ENGINEER
Randell D. Hiatt
No. C50200
Exp. 6-30-11
CIVIL
STATE OF CALIFORNIA

*The State of California or its officers or agents shall not be responsible for the accuracy or completeness of electronic copies of this plan sheet.*

*To accompany plans dated* 7-25-11

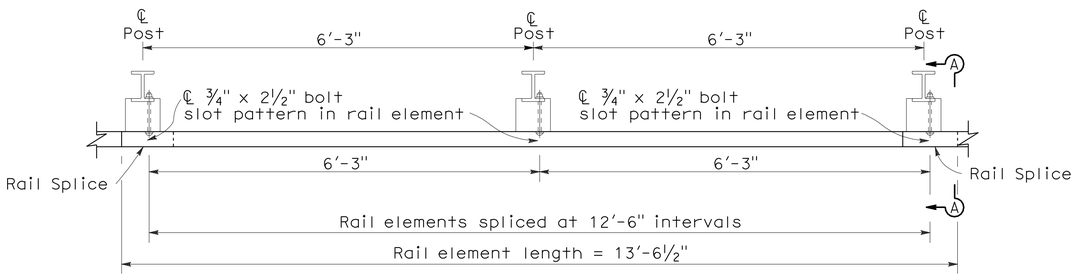


PLAN

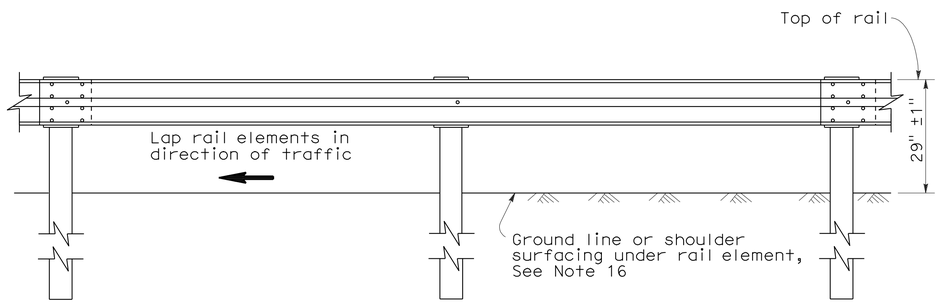


ELEVATION

## METAL BEAM GUARD RAILING WITH STEEL POSTS AND NOTCHED WOOD OR NOTCHED RECYCLED PLASTIC BLOCKS

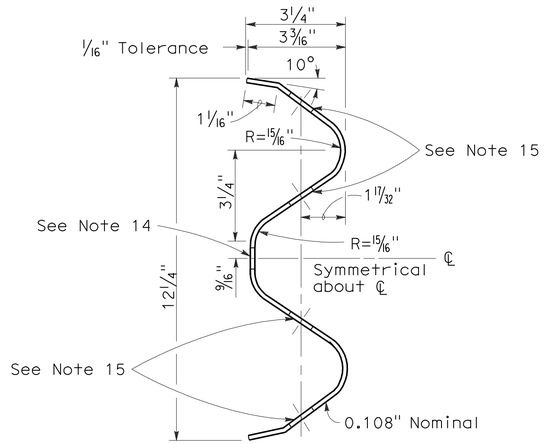


SECTION THRU RAIL ELEMENT

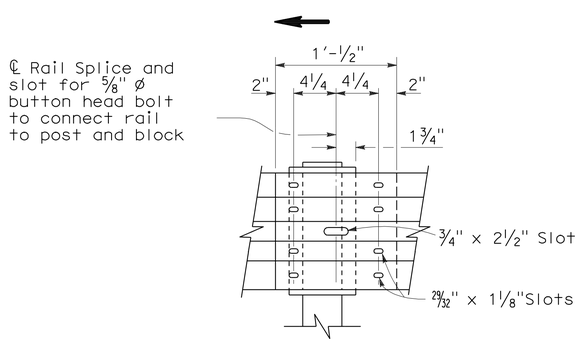


ELEVATION

## RAIL ELEMENT SPLICE DETAIL

a) Connect the over lapped end of the rail elements with ⅝" ø x 1⅜" button head oval shoulder splice bolts inserted into the 29⁄₃₂" x 1⅛" slots and bolted together with ⅝" ø recessed hex nuts. Recess of hex nut points toward rail element. A total of 8 bolts and nuts are to be used at each rail splice connection.

b) The ends of the rail elements are to be overlapped in the direction of traffic (see details).

c) Where end cap is to be attached to the end of a rail element, a total of 4 of the above described splice bolts and nuts are to be used.

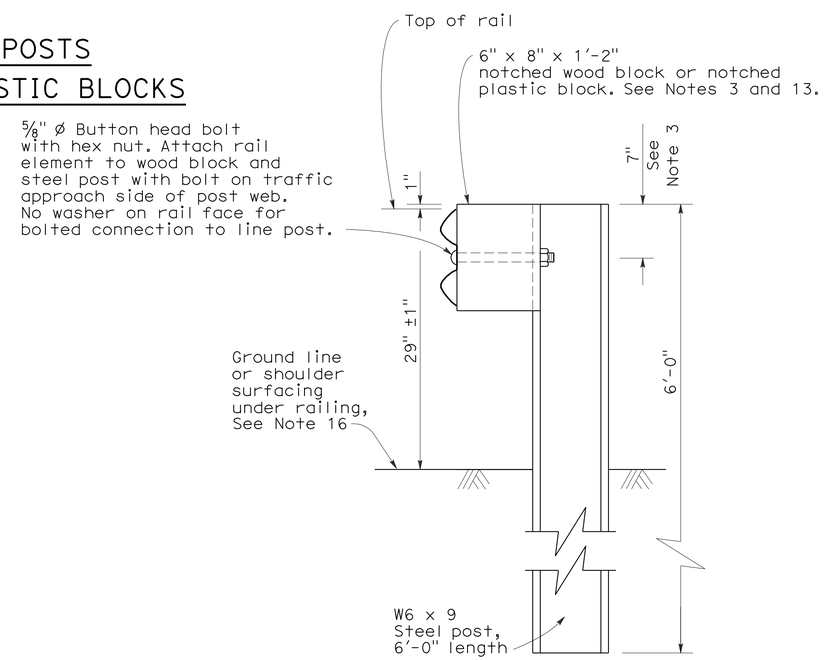


SECTION A-A

## TYPICAL STEEL LINE POST INSTALLATION

See Note 4

## NOTES:

1. For details of wood post installations, see Standard Plan A77A1.
2. For details of standard hardware used to construct guard railing, see Standard Plan A77B1.
3. For details of steel posts and notched wood blocks used to construct guard railing, see Standard Plan A77C2.
4. For additional installation details, see Standard Plan A77C3.
5. Guard railing post spacing to be 6'-3" center to center, except as otherwise noted.
6. For guard railing typical layouts, see the A77E, A77F and A77G Series of Standard Plans.
7. For terminal system end treatment details, see the A77L Series of Standard Plans. To connect railing to terminal system end treatment, transition the top of railing height at a ratio of 120:1 to terminal system end treatment height plus one 12'-6" standard railing section at the transitioned height for a horizontal connection to the end treatment.
8. For guard railing end anchor details, see Standard Plans A77H1 and A77I2.
9. For details of guard railing transition to bridge railing, see Standard Plan A77J4.
10. For additional details of guard railing connection to bridge railings, see Standard Plans A77J1, A77J2 and A77K1.
11. For dike positioning and guard railing delineation details, see Standard Plan A77C4.
12. Direction of adjacent traffic indicated by → .
13. Notched face of block faces steel post.
14. Slotted hole for bolted connection of rail element to block and post. See "Section Thru Rail Element".
15. Slotted holes for splice bolts to overlap ends of rail element. See "Section Thru Rail Element".
16. Install posts in soil.

STATE OF CALIFORNIA
DEPARTMENT OF TRANSPORTATION

# METAL BEAM GUARD RAILING STANDARD RAILING SECTION (STEEL POST WITH NOTCHED WOOD OR NOTCHED RECYCLED PLASTIC BLOCK)

NO SCALE

RSP A77A2 DATED MAY 20, 2011 SUPERSEDES STANDARD PLAN A77A2 DATED MAY 1, 2006 - PAGE 42 OF THE STANDARD PLANS BOOK DATED MAY 2006.

**REVISED STANDARD PLAN RSP A77A2**

**2006 REVISED STANDARD PLAN RSP A77A2**

5-4-11

To accompany plans dated 7-25-11

| Dist | COUNTY | ROUTE | POST MILES TOTAL PROJECT | SHEET No. | TOTAL SHEETS |
|---|---|---|---|---|---|
| 06 | Ker | 5 | 5.2/5.9 | 30 | 49 |

Randell D. Hiatt
REGISTERED CIVIL ENGINEER

May 20, 2011
PLANS APPROVAL DATE

REGISTERED PROFESSIONAL ENGINEER
Randell D. Hiatt
No. C50200
Exp. 6-30-11
CIVIL
STATE OF CALIFORNIA

*The State of California or its officers or agents shall not be responsible for the accuracy or completeness of electronic copies of this plan sheet.*

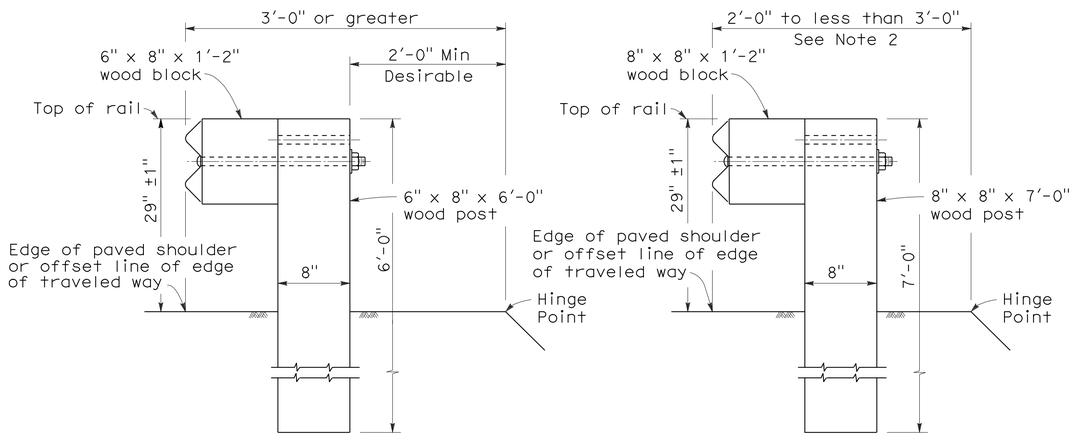


DETAIL A
TYPICAL ROADWAY INSTALLATION
See Note 1

DETAIL B
NARROW ROADWAY INSTALLATION
See Note 1

POST EMBEDMENT

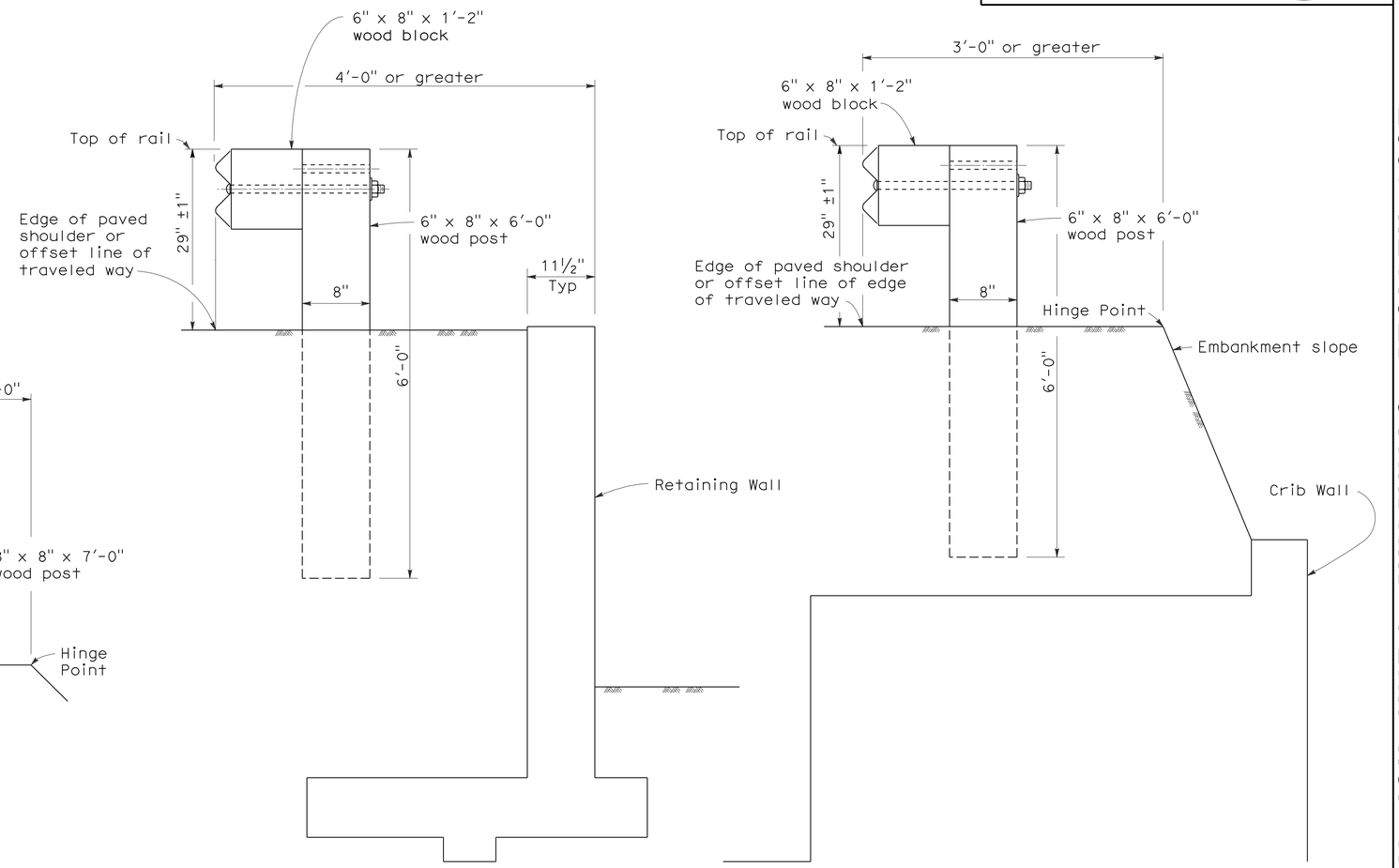


DETAIL C

DETAIL D

INSTALLATION AT EARTH RETAINING WALLS

## NOTES:

1. These installation details also applicable to steel line post installations. For Detail A, C, and D, where steel line post installations are constructed, W6 x 9 steel post, 6'-0" in length, with 6" x 8" x 1'-2" notched wood blocks or notched recycled plastic blocks are to be used in place of the size of wood post and wood block shown. For Detail B, where steel line post installations are constructed, W6 x 9 steel post, 7'-0" in length, with 6" x 8" x 1'-2" notched wood blocks or notched recycled plastic blocks are to be used in place of the size of wood post and wood block shown. For additional installation details, see Standard Plans A77A1 and A77A2.
2. Where the distance between the face of the rail and the hinge point is less than 2'-0", see the Project Plans for special details.
3. For dike positioning with guard railing installations, see Standard Plan A77C4.

STATE OF CALIFORNIA
DEPARTMENT OF TRANSPORTATION

# METAL BEAM GUARD RAILING TYPICAL LINE POST EMBEDMENT AND HINGE POINT OFFSET DETAILS

NO SCALE

RSP A77C3 DATED MAY 20, 2011 SUPERSEDES STANDARD PLAN A77C3
DATED MAY 1, 2006 - PAGE 46 OF THE STANDARD PLANS BOOK DATED MAY 2006.

**REVISED STANDARD PLAN RSP A77C3**

**2006 REVISED STANDARD PLAN RSP A77C3**

3-10-11

| DIST | COUNTY | ROUTE | POST MILES TOTAL PROJECT | SHEET NO. | TOTAL SHEETS |
|---|---|---|---|---|---|
| 06 | Ker | 5 | 5.2/5.9 | 31 | 49 |

Randell D. Hiatt
REGISTERED CIVIL ENGINEER

June 6, 2008
PLANS APPROVAL DATE

REGISTERED PROFESSIONAL ENGINEER
Randell D. Hiatt
No. C50200
Exp. 6-30-09
CIVIL
STATE OF CALIFORNIA

*The State of California or its officers or agents shall not be responsible for the accuracy or completeness of electronic copies of this plan sheet.*

*To accompany plans dated* 7-25-11

**2006 REVISED STANDARD PLAN RSP A77F1**

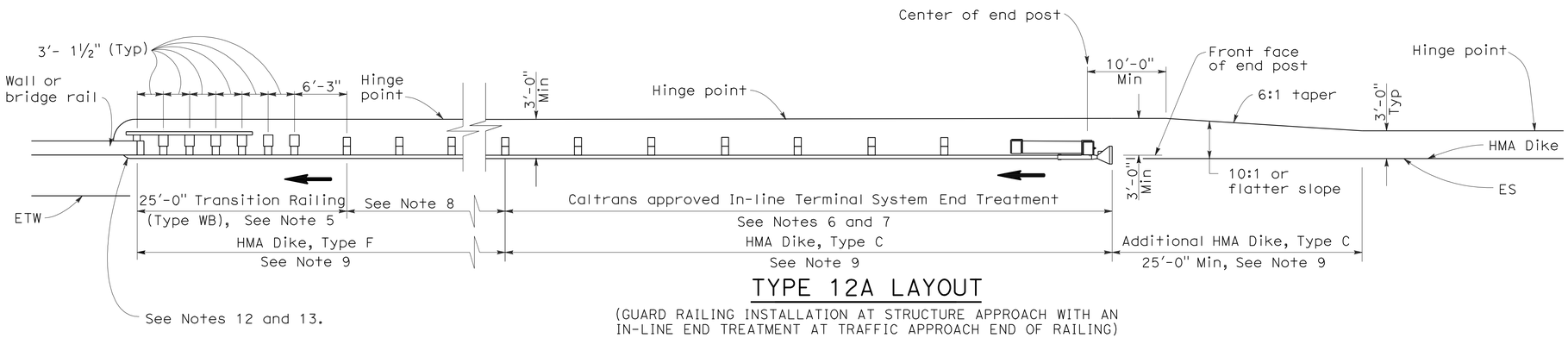


## TYPE 12A LAYOUT

(GUARD RAILING INSTALLATION AT STRUCTURE APPROACH WITH AN IN-LINE END TREATMENT AT TRAFFIC APPROACH END OF RAILING)
See Notes 10

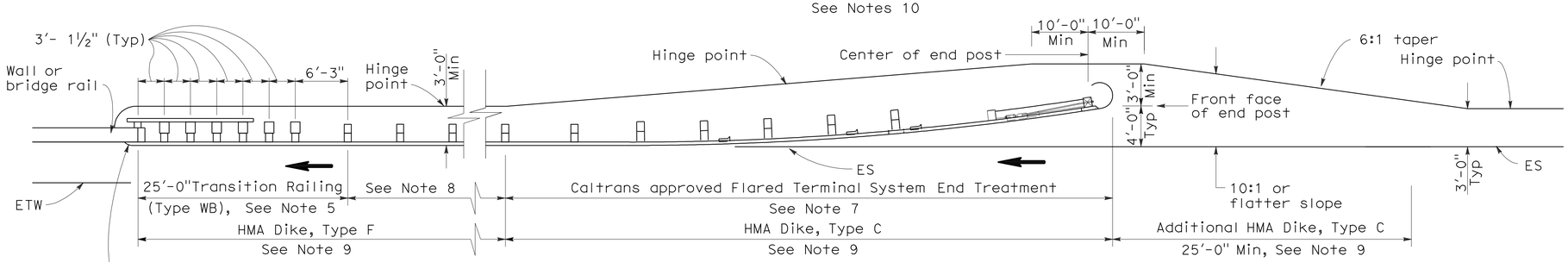


## TYPE 12B LAYOUT

(GUARD RAILING INSTALLATION AT STRUCTURE APPROACH WITH A FLARED END TREATMENT AT TRAFFIC APPROACH END OF RAILING)
See Notes 10

## NOTES:

1. Line post, blocks and hardware to be used are shown on Standard Plans A77A1, A77A2, A77B1, A77C1 and A77C2.
2. Guard rail post spacing to be 6'-3" center to center, except as otherwise noted.
3. Except as noted, line posts are 6" x 8" x 6'-0" wood with 6" x 8" x 1'-2" wood blocks. W6 x 9 steel posts, 6'-0" in length, with 6" x 8" x 1'-2" notched wood blocks or plastic blocks may be used for 6" x 8" x 6'-0" wood posts with 6" x 8" x 1'-2" wood blocks where applicable and when specified.
4. Direction of adjacent traffic indicated by ➡.
5. For Transition Railing (Type WB) details for Types 12A and 12B Layouts, see Standard Plan A77J4.
6. In-line Terminal System End Treatments are used where site conditions will not accommodate a flared end treatment.
7. The type of terminal system end treatment to be used will be shown on the Project Plans.
8. Dependent on site conditions (embankment height, side slopes, or other fixed objects), it may be advisable to construct additional guard railing (a length equal to multiples of 12'-6" with 6'-3" post spacing) between the transition railing and end treatment.
9. Where placement of dike is required with guard railing installations, see Revised Standard Plan RSP A77C4 for dike positioning details.
10. Type 12A or Type 12B Layouts are typically used:
    a. To the right of approaching traffic, at the end of a structure, on two-lane conventional highway where the roadbed width across the structure is less than 40 feet.
    b. To the left of approaching traffic, at the end of a structure, on two-lane conventional highway where the roadbed width across the structure is less than 40 feet.
    c. To the right of approaching traffic at the end of each structure on multilane freeways or expressways with separate adjacent or parallel bridges.
    d. To the right of approaching traffic at the end of the structure on multilane freeways or expressways with decked median on the bridge.
11. See Revised Standard Plan RSP A77F3 for typical layout used left of approaching traffic at the ends of each structure on multilane freeways or expressways with separate adjacent or parallel bridges.
12. For additional details of typical connections to bridge rail, see Connection Detail AA on Revised Standard Plans RSP A77J1 and RSP A77J2 and Connection Detail FF on Standard Plans A77K1 and A77K2.
13. For additional details of a typical connection to walls or abutments, see Standard Plan A77J3.

STATE OF CALIFORNIA
DEPARTMENT OF TRANSPORTATION

# METAL BEAM GUARD RAILING TYPICAL LAYOUTS FOR STRUCTURE APPROACH

NO SCALE

RSP A77F1 DATED JUNE 6, 2008 SUPERSEDES STANDARD PLAN A77F1
DATED MAY 1, 2006 - PAGE 54 OF THE STANDARD PLANS BOOK DATED MAY 2006.

**REVISED STANDARD PLAN RSP A77F1**

12-10-07

| Dist | COUNTY | ROUTE | POST MILES TOTAL PROJECT | SHEET No. | TOTAL SHEETS |
|---|---|---|---|---|---|
| 06 | Ker | 5 | 5.2/5.9 | 32 | 49 |

Randell D. Hiatt
REGISTERED CIVIL ENGINEER

May 20, 2011
PLANS APPROVAL DATE

REGISTERED PROFESSIONAL ENGINEER
Randell D. Hiatt
No. C50200
Exp. 6-30-11
CIVIL
STATE OF CALIFORNIA

*The State of California or its officers or agents shall not be responsible for the accuracy or completeness of electronic copies of this plan sheet.*

*To accompany plans dated* 7-25-11

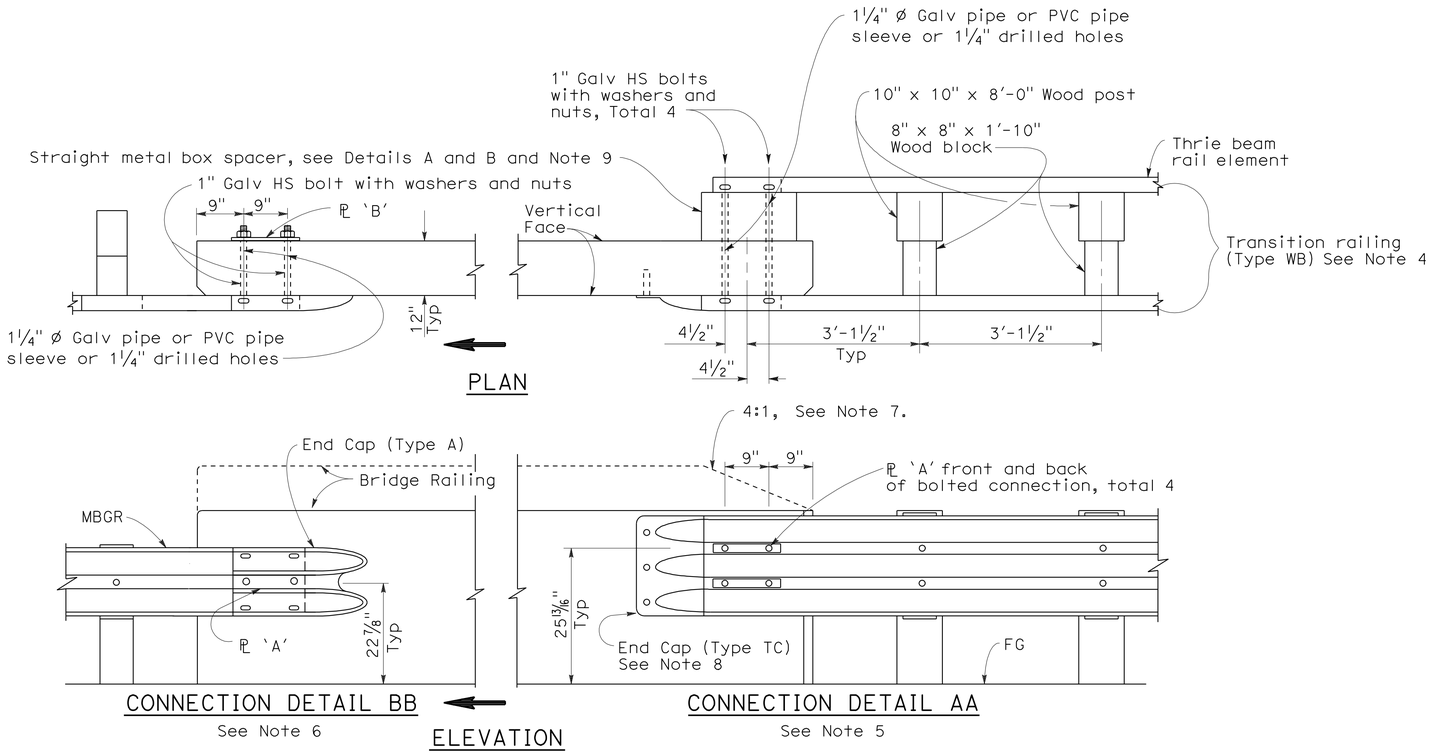


GUARD RAILING CONNECTION TO BRIDGE RAILING WITHOUT SIDEWALK

## NOTES:

1. See Revised Standard Plan RSP A77J2 for additional connection details to bridges without sidewalks.
2. Additional details of posts, blocks and hardware are shown on Standard Plan A77B1, A77C1 and A77C2.
3. Direction of adjacent traffic indicated by ➡.
4. For additional details of Transition Railing (Type WB), see Standard Plan A77J4. Transition Railing (Type WB) transitions the 12 gage w-beam standard railing section of guard railing to a heavier gage nested thrie beam railing section which is connected to the concrete bridge railing.
5. For typical use of Connection Detail AA, see Layout Types 12A and 12B on Revised Standard Plan RSP A77F1, Layout Types 12C and 12D on Standard Plan A77F2, and Layout Type 12E on Revised Standard Plan RSP A77F3.
6. For typical use of Connection Detail BB, see Layout Type 12D (structure departure railing connection) on Standard Plan A77F2 and Layout Type 12DD on Standard Plan A77F5.
7. Where the height of the bridge railing exceeds the height of the thrie beam railing by more than 1" at Connection Detail AA, taper the top of the end of the bridge railing at 4:1 to match the top elevation of the thrie beam rail.
8. For details of End Cap (Type TC), see Standard Plan A77J4.
9. See Standard Plan A77J4 for additional details regarding depth dimension for straight metal box spacer.

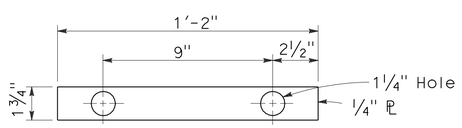


PLATE 'A'

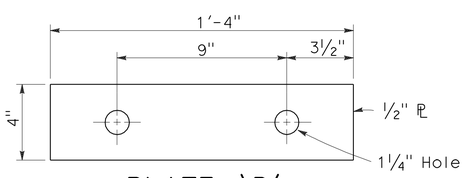


PLATE 'B'
(For backside of connection BB)

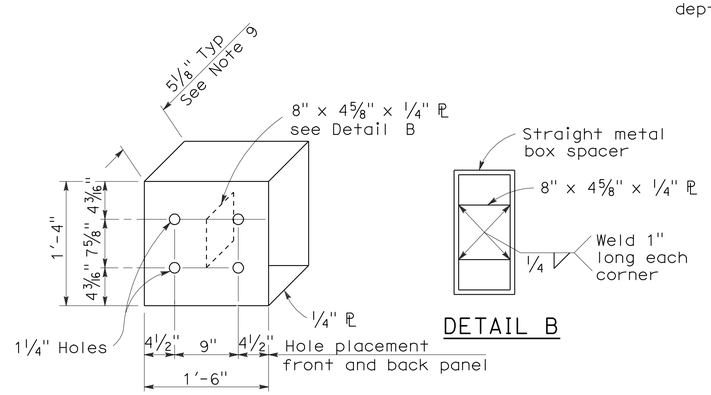


DETAIL A

DETAIL B

STRAIGHT METAL BOX SPACER

STATE OF CALIFORNIA
DEPARTMENT OF TRANSPORTATION

# METAL BEAM GUARD RAILING CONNECTIONS TO BRIDGE RAILINGS WITHOUT SIDEWALKS DETAILS No.1

NO SCALE

RSP A77J1 DATED MAY 20, 2011 SUPERSEDES RSP A77J1 DATED JUNE 6, 2008 AND STANDARD PLAN A77J1 DATED MAY 1, 2006 - PAGE 72 OF THE STANDARD PLANS BOOK DATED MAY 2006.

**REVISED STANDARD PLAN RSP A77J1**

**2006 REVISED STANDARD PLAN RSP A77J1**

3-10-11

| DIST | COUNTY | ROUTE | POST MILES TOTAL PROJECT | SHEET NO. | TOTAL SHEETS |
|---|---|---|---|---|---|
| 06 | Ker | 5 | 5.2/5.9 | 33 | 49 |

Randell D. Hiatt
REGISTERED CIVIL ENGINEER

June 6, 2008
PLANS APPROVAL DATE

REGISTERED PROFESSIONAL ENGINEER
Randell D. Hiatt
No. C50200
Exp. 6-30-09
CIVIL
STATE OF CALIFORNIA

*The State of California or its officers or agents shall not be responsible for the accuracy or completeness of electronic copies of this plan sheet.*

*To accompany plans dated* 7-25-11

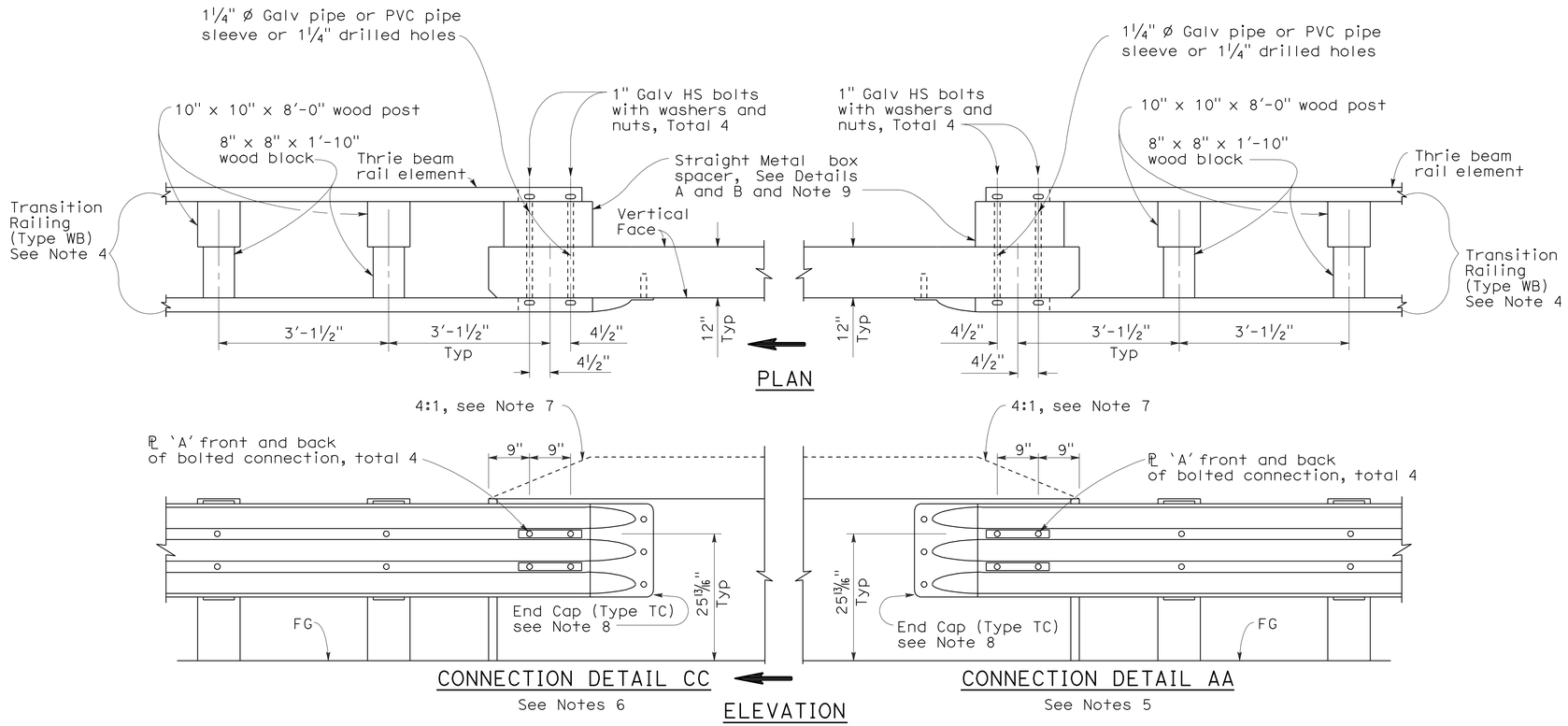


GUARD RAILING CONNECTION TO BRIDGE RAILING WITHOUT SIDEWALK

## NOTES:

1. See Revised Standard Plan RSP A77J1 for additional connection details to bridges without sidewalks.
2. Additional details of posts, blocks and hardware are shown on Standard Plan A77B1, A77C1 and A77C2.
3. Direction of adjacent traffic indicated by ⟹.
4. For additional details of Transition Railing (Type WB), see Standard Plan A77J4. Transition Railing (Type WB) transitions the 12 gage w-beam standard railing section of guard railing to a heavier gage nested thrie beam railing section which is connected to the concrete bridge railing.
5. For typical use of Connection Detail AA, see Layout Types 12A and 12B on Revised Standard Plan RSP A77F1, Layout Types 12C and 12D on Standard Plan A77F2, and Layout Type 12E on Revised Standard Plan RSP A77F3.
6. For typical use of Connection Detail CC, see Layout Types 12AA and 12BB on Standard Plan A77F4 and Layout Type 12CC on Standard Plan A77F5.
7. Where the height of the bridge railing exceeds the height of the thrie beam railing by more than 1" at Connection Detail AA and connection Detail CC, taper the top of the end of the bridge railing at 4:1 to match the top elevation of the thrie beam railing.
8. For details of End Cap (Type TC), see Standard Plans A77J4.
9. See Standard Plans A77J4 for additional details regarding depth dimension for straight metal box spacer.

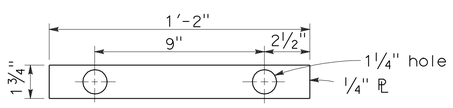


PLATE 'A'

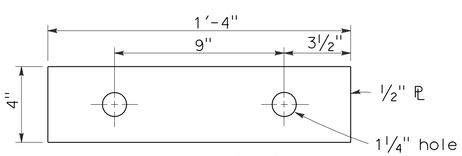


PLATE 'B'
(For backside of connection BB)

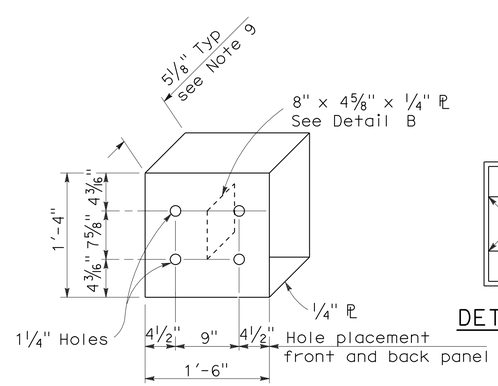


DETAIL A

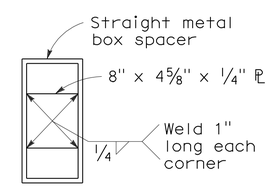


DETAIL B

STRAIGHT METAL BOX SPACER

STATE OF CALIFORNIA
DEPARTMENT OF TRANSPORTATION

# METAL BEAM GUARD RAILING CONNECTIONS TO BRIDGE RAILINGS WITHOUT SIDEWALKS DETAILS No.2

NO SCALE

RSP A77J2 DATED JUNE 6, 2008 SUPERSEDES STANDARD PLAN A77J2 DATED MAY 1, 2006 - PAGE 73 OF THE STANDARD PLANS BOOK DATED MAY 2006.

**REVISED STANDARD PLAN RSP A77J2**

**2006 REVISED STANDARD PLAN RSP A77J2**

12-10-07

| Dist | COUNTY | ROUTE | POST MILES TOTAL PROJECT | SHEET No. | TOTAL SHEETS |
|---|---|---|---|---|---|
| 06 | Ker | 5 | 5.2/5.9 | 34 | 49 |

Randell D. Hiatt
REGISTERED CIVIL ENGINEER

May 20, 2011
PLANS APPROVAL DATE

REGISTERED PROFESSIONAL ENGINEER
Randell D. Hiatt
No. C50200
Exp. 6-30-11
CIVIL
STATE OF CALIFORNIA

*To accompany plans dated* 7-25-11

*The State of California or its officers or agents shall not be responsible for the accuracy or completeness of electronic copies of this plan sheet.*

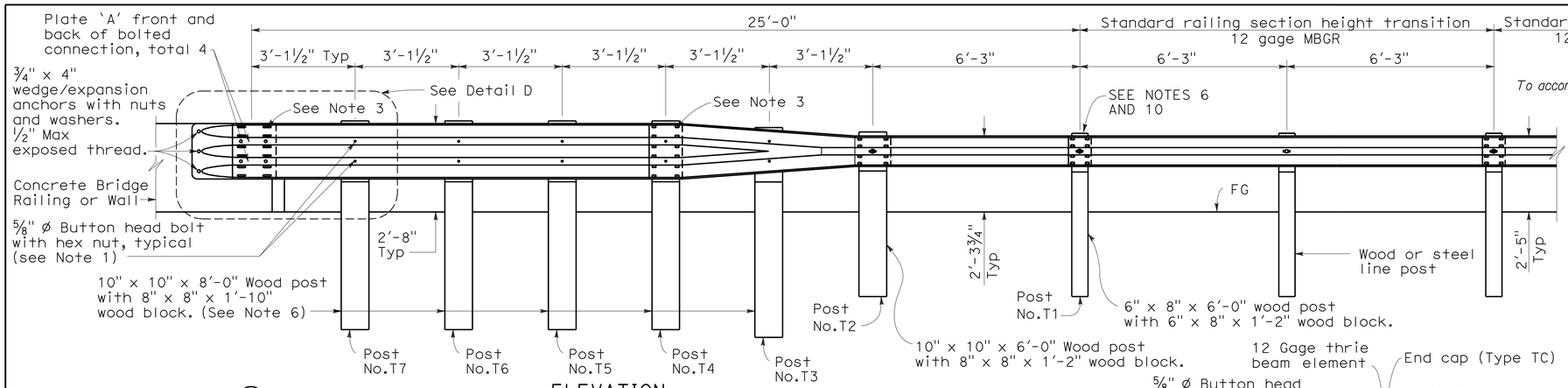


ELEVATION

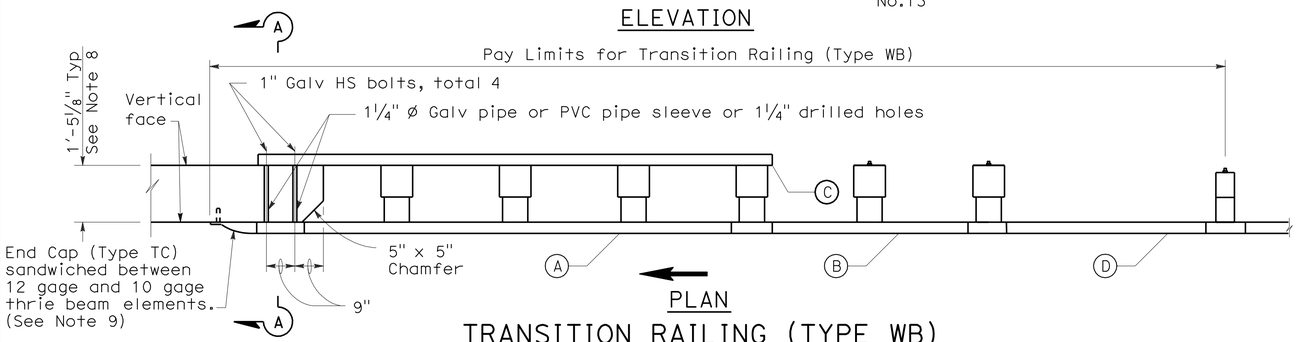


PLAN

TRANSITION RAILING (TYPE WB)

(No Blockout Attachment)

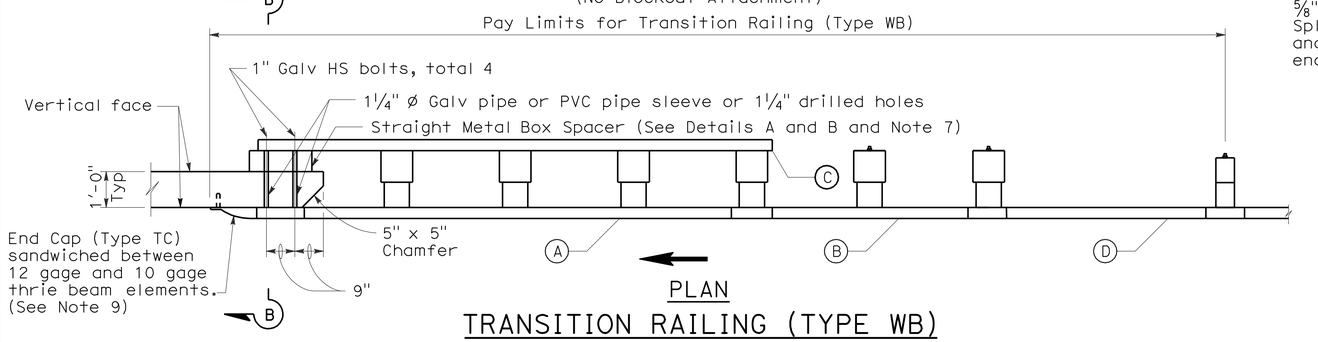


PLAN

TRANSITION RAILING (TYPE WB)

(Blockout Attachment)

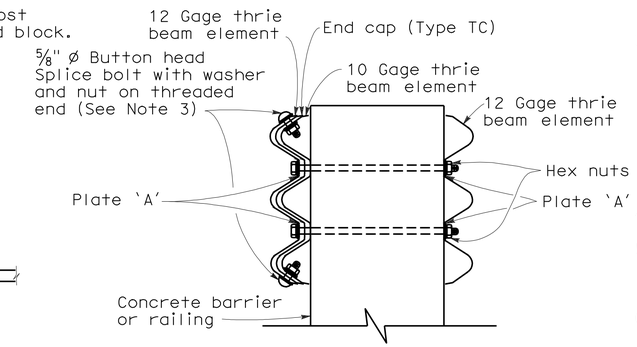


SECTION A-A

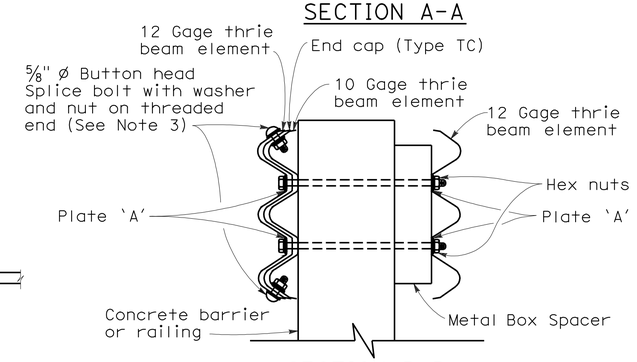


SECTION B-B

## NOTES:

1. Use ⅝" ø Button head bolts and hex nuts for connections to posts. No washer on rail face for bolted connections to post.
2. The nested rail elements, end cap, and 'W' beam to thrie beam element may be spliced together prior to bolting the elements to the wood post and concrete barrier or railing.
3. Exterior splice bolt holes for rail element splices at Post No. T4 and the connection to the concrete barrier or railing shall be the standard 29/32" x 1⅛" slot size. Interior splice bolt holes at these locations may be increased up to 1¼" ø. Only the top 2 and the bottom 2 splice bolts with washers and nuts are required for rail splices at Post No. T4 and the connection to the concrete barrier or railing.
4. Direction of adjacent traffic indicated by ➡.
5. The top elevation of Posts No. T2 through No. T7 shall not project more than 1" above the top elevation of the rail element.
6. Typically, the railing connected to Transition Railing (Type WB) will be either standard railing section of metal beam guard railing with height transition ratio of 120:1 or an approved Caltrans end treatment attached to Post No. T1.
7. The depth of the metal box spacer varies from the 5⅛" to 1½" and is dependent on the width of the concrete railing or wall. The combined dimension for the depth of the metal box spacer plus the width of railing or wall is typically 17⅛". Where the space between the backside of the concrete railing or wall and the rear thrie beam element is less than 1½", metal plates similar to Plate 'A' are to be used as spacers.
8. Where the width of the concrete railing or wall is greater than 17⅛", wood blocks are to be used to fill the space created between the backside of Posts No. T4 through No. T7 and the rear thrie beam element. These wood blocks shall be 8" in width and 1'-2" in length. The dimension between the front thrie beam element and the rear thrie beam element is to match the width of the concrete railing or wall.
9. End cap may be installed over 12 gage and 10 gage thrie beam elements where transition railing is installed on the departure end of bridge railing.
10. Conform standard railing section height to 2'-3¾" at Post No. T1 using height transition ratio of 120:1.

## LEGEND

(A) Nested thrie beam elements (one 12 gage element nested over one 10 gage element).

(B) One 10 gage "W" beam to thrie beam element.

(C) One 12 gage thrie beam element.

(D) One 10 gage "W" beam rail element (7'-3½" length)

10 gage = 0.135" thick

12 gage = 0.108" thick

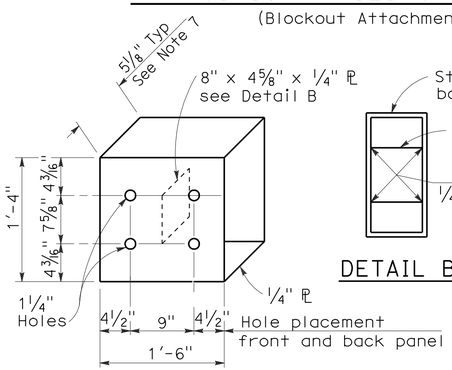


DETAIL A

STRAIGHT METAL BOX SPACER

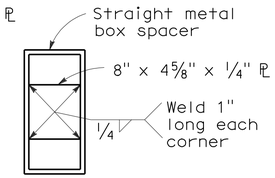


DETAIL B

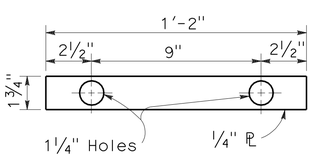


DETAIL C

PLATE 'A'

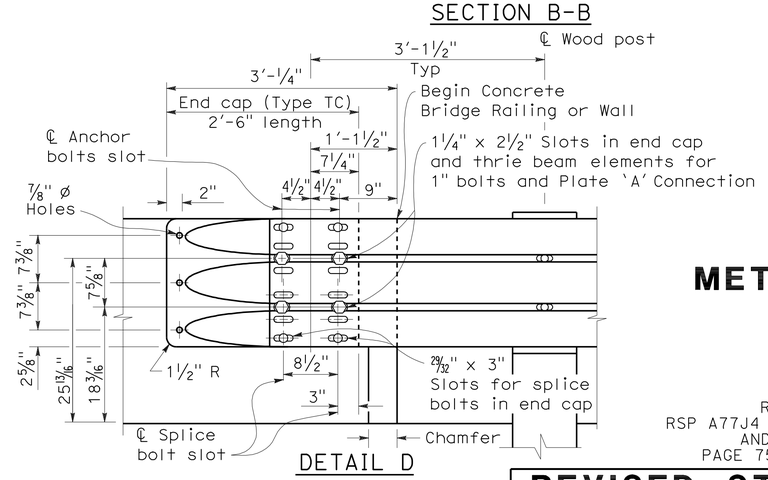


DETAIL D

STATE OF CALIFORNIA
DEPARTMENT OF TRANSPORTATION

# METAL BEAM GUARD RAILING TRANSITION RAILING (TYPE WB)

NO SCALE

RSP A77J4 DATED MAY 20, 2011 SUPERSEDES
RSP A77J4 DATED JUNE 5, 2009, RSP A77J4 DATED JUNE 6, 2008
AND STANDARD PLAN A77J4 DATED MAY 1, 2006 -
PAGE 75 OF THE STANDARD PLANS BOOK DATED MAY 2006.

**REVISED STANDARD PLAN RSP A77J4**

**2006 REVISED STANDARD PLAN RSP A77J4**

5-14-09

| DIST | COUNTY | ROUTE | POST MILES TOTAL PROJECT | SHEET NO. | TOTAL SHEETS |
|---|---|---|---|---|---|
| 06 | Ker | 5 | 5.2/5.9 | 35 | 49 |

REGISTERED CIVIL ENGINEER

June 15, 2007
PLANS APPROVAL DATE

REGISTERED PROFESSIONAL ENGINEER Glenn DeCou No. C34547 Exp. 9-30-07 CIVIL STATE OF CALIFORNIA

*The State of California or its officers or agents shall not be responsible for the accuracy or completeness of electronic copies of this plan sheet.*

*To accompany plans dated* 7-25-11

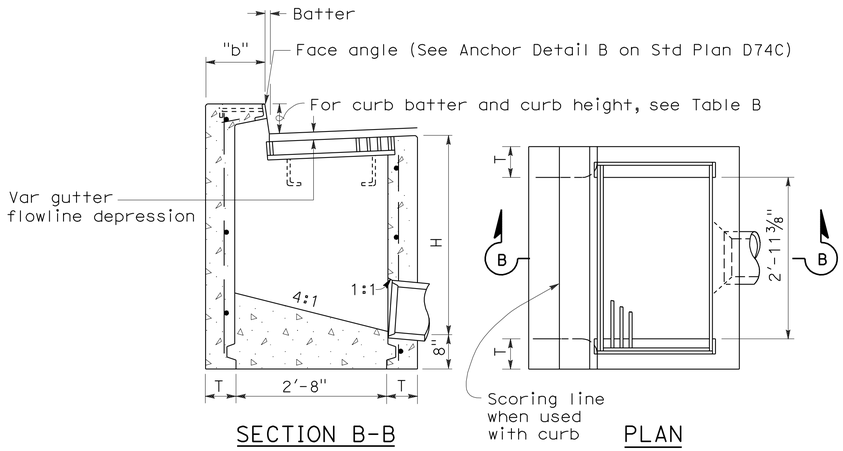


SECTION B-B PLAN

TYPE GO

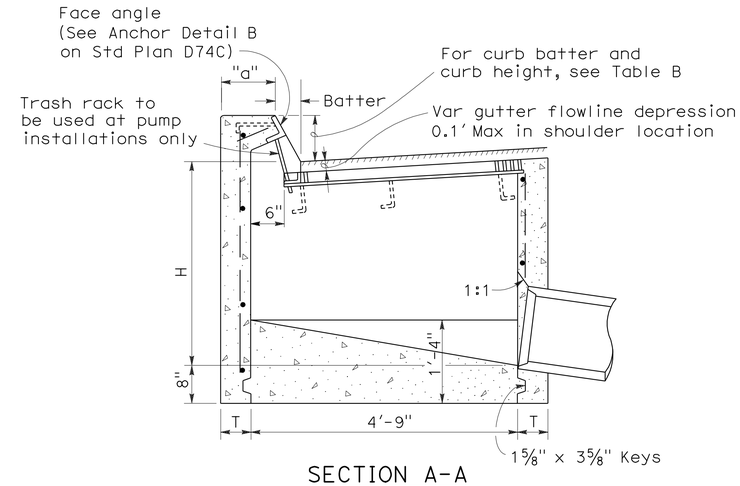


SECTION A-A

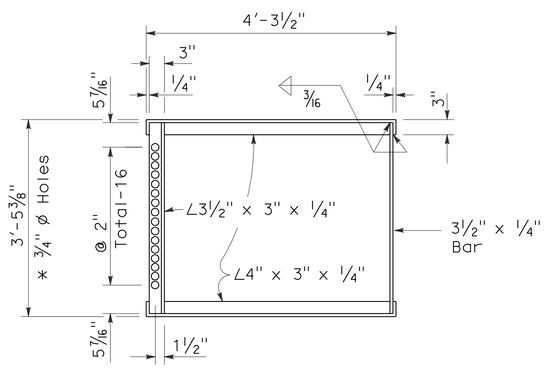


* 3/4" ø Holes required only with trash rack

GRATE FRAME FOR TYPE GDO INLET

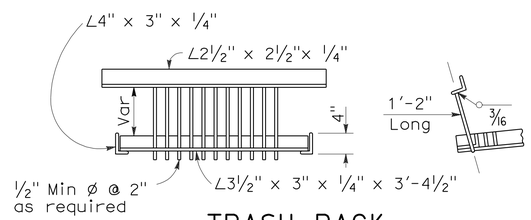


TRASH RACK

(For use with pump installation)

TABLE A

| CONCRETE QUANTITIES | | | | |
|---|---|---|---|---|
| | H=3'-0" TO 8'-0" (T=6") | | H=8'-1" TO 20'-0" (T=8") | |
| TYPE | H=3'-0" (CY) | ADDITIONAL PCC PER FOOT (CY) | H=8'-1" (CY) | ADDITIONAL PCC PER FOOT (CY) |
| GO | 1.24 | 0.245 | 3.39 | 0.346 |
| GDO | 1.62 | 0.322 | 4.36 | 0.446 |

Table based on 8" floor slab, no deduction for pipe openings, and curb type giving highest quantity of concrete. No deductions or adjustments are to be made to these quantities because of pipe openings, different floor alternatives or different curb type.

TABLE B

| CURB TYPE | NORMAL CURB HEIGHT | CURB BATTER | "a" DIMENSION | "b" DIMENSION |
|---|---|---|---|---|
| A1-6 | 6" | 1 1/2" | T+7 1/2" | T+6 1/2" |
| A1-8 | 8" | 2" | T+7" | T+6" |
| B1-6 | 6" | 4" | T+5" | T+4" |
| Type A Dike | 6" | 3" | T+6" | T+5" |

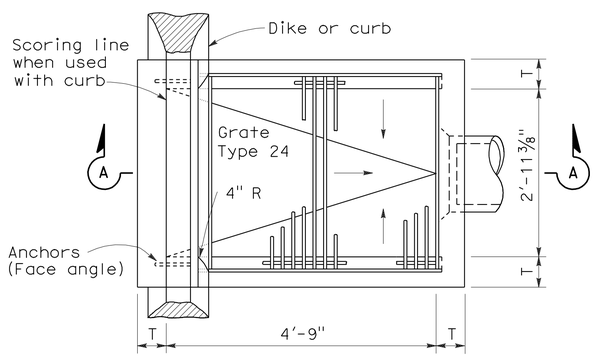


PLAN

TYPE GDO

NOTES:

1. "H" is the difference in elevation between the outlet pipe flow line and the normal gutter grade line undepressed.
2. For "T" wall thickness, see Table A below.
3. Wall reinforcing not required when "H" is 8'-0" or less and the unsupported width or length is 7'-0" or less. Walls exceeding these limits shall be reinforced with #4 @ 18"± centers placed 1 1/2" clear to inside of box unless otherwise shown.
4. Inlet bottom reinforcing not required. See Standard Plan D74C for alternative reinforced bottom.
5. Steps - None required where "H" is less than 2'-6" Where "H" is 2'-6" or more, install steps with lowest rung 1'-0" above the floor and highest rung not more than 6" below top of inlet. The distance between steps shall not exceed 1'-0" and shall be uniform throughout the length of the wall. Place steps in the wall without an opening. Step inserts may be substituted for the bar steps. Step Inserts shall comply with State Industrial Safety requirements. See Standard Plan D74C for step details.
6. When shown on the project plans, place a 3/4" plain round protection bar horizontally across the length of the opening and bend back 4" into the inlet wall on each side.
7. Pipe(s) can be placed in any wall.
8. Curb section shall match adjacent curb.
9. Basin floors shall have wood trowel finish and shall slope toward the outlet pipe as shown.
10. Galvanizing - See Standard Specifications or Special Provisions.
11. See Standard Plan D77A and D77B for grate and frame details and weights of miscellaneous iron and Steel.
12. See Standard Plan D78A for gutter depression details.
13. Full penetration butt welds may be substituted for the fillet welds on all anchors.
14. Standard square, hexagon, round or equivalent headed anchors may be substituted for the right angle hooks on the anchors shown on this plan.
15. Cast-in-place or precast alternative is optional with contractor. See Standard Specifications.
16. Cast-in-place inlets to be formed around all pipes/stubs intersecing the inlet and concrete poured in one continuous operation. Precast inlets shall have mortared pipe connections conforming to details for Type GCP inlets on Standard Plan D75B. See Standard Specifications for mortar composition.

STATE OF CALIFORNIA
DEPARTMENT OF TRANSPORTATION

# DRAINAGE INLETS

NO SCALE

RSP D74B DATED JUNE 15, 2007 SUPERSEDES STANDARD PLAN D74B DATED MAY 1, 2006 - PAGE 150 OF THE STANDARD PLANS BOOK DATED MAY 2006.

**REVISED STANDARD PLAN RSP D74B**

**2006 REVISED STANDARD PLAN RSP D74B**

4-16-07

| DIST | COUNTY | ROUTE | POST MILES TOTAL PROJECT | SHEET NO. | TOTAL SHEETS |
|---|---|---|---|---|---|
| 06 | Ker | 5 | 5.2/5.9 | 36 | 49 |

Raymond Don Tsztoo
REGISTERED CIVIL ENGINEER

January 18, 2008
PLANS APPROVAL DATE

REGISTERED PROFESSIONAL ENGINEER
Raymond Don Tsztoo
No. C37332
Exp. 6-30-08
CIVIL
STATE OF CALIFORNIA

*The State of California or its officers or agents shall not be responsible for the accuracy or completeness of electronic copies of this plan sheet.*

*To accompany plans dated* 7-25-11

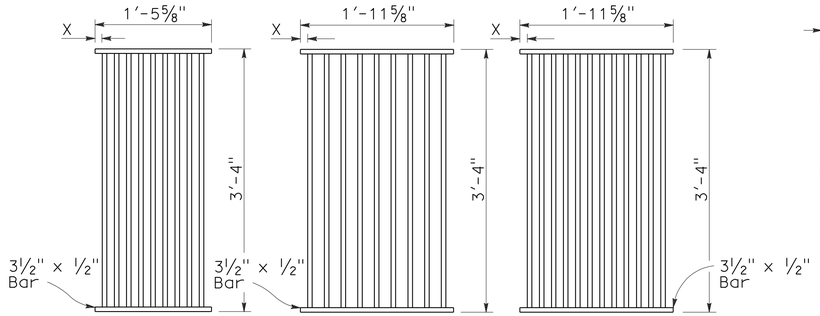


TYPE 18-9

1⅜" Clear spacing. Use within the roadbed on highways where bicycles and pedestrians are excluded.

TYPE 24-9

2" Clear spacing. Use in locations off the roadbed on all types of highways.

TYPE 24-12

1⅜" Clear spacing. Use within the roadbed on highways where bicycles and pedestrians are excluded.

## RECTANGULAR GRATE DETAILS

(See table below)

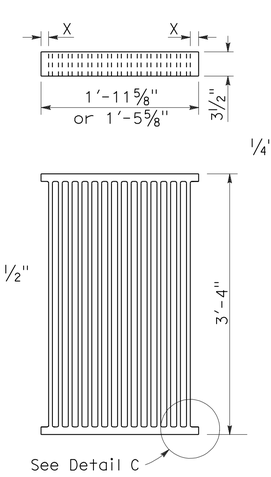


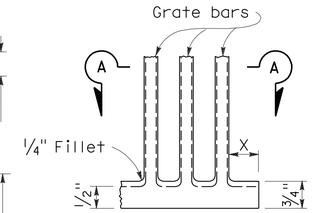


DETAIL C

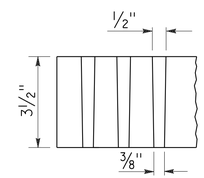


SECTION A-A

## ALTERNATIVE CAST NODULAR IRON GRATE OR CAST STEEL GRATE

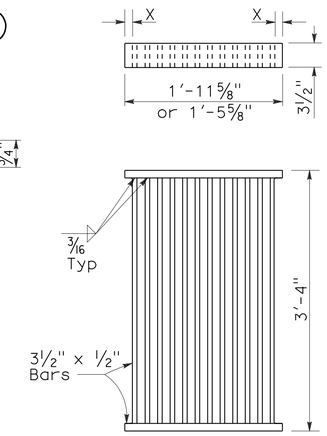


## ALTERNATIVE WELDED GRATE

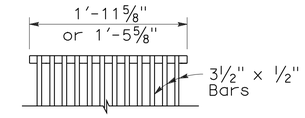


CAST END BLOCK

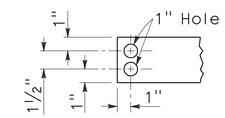


END OF BAR

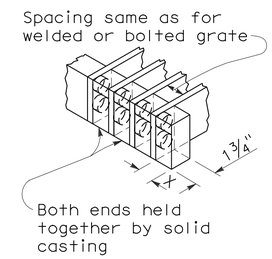


## ALTERNATIVE CAST NODULAR IRON OR CAST STEEL END BLOCK GRATE

## NOTES:

1. Grate type numbers refer to approximate width of grate in inches and number of bars, respectively.
2. Contractor has the option of using cast nodular iron, cast steel, welded, bolted, or cast end block grate.
3. See Special Provisions for requirements pertaining to galvanizing or asphalt dipping of grates and frames.
4. Rounded top of bars optional on all grates.
5. Pipe inlets with a grate shall be placed so that bars parallel direction of principle surface flow.
6. Full penetration butt welds may be substituted for the fillet welds on all anchors.
7. Standard square, hexagon, round or equivalent headed anchors may be substituted for the right angle hooks on the anchors shown on this plan.
8. Grate and frame weights are based on welded grates (weights of face angles, steps, protection bars, etc. are not included).

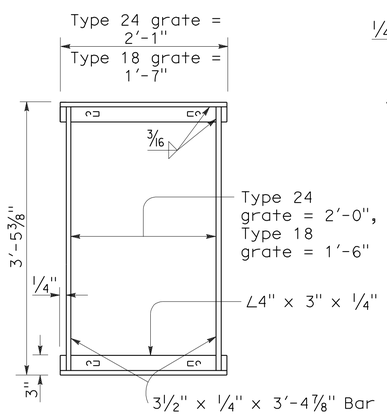


TYPICAL FRAME

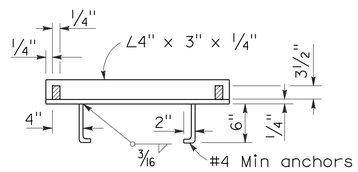


CROSS SECTION

(Thru frame)

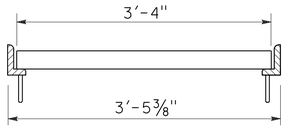


LONGITUDINAL SECTION

(Thru frame and grate)

## RECTANGULAR FRAME DETAILS

(For all rectangular grates)

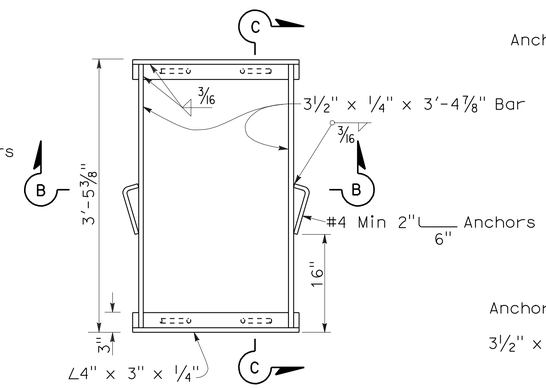


TYPICAL FRAME

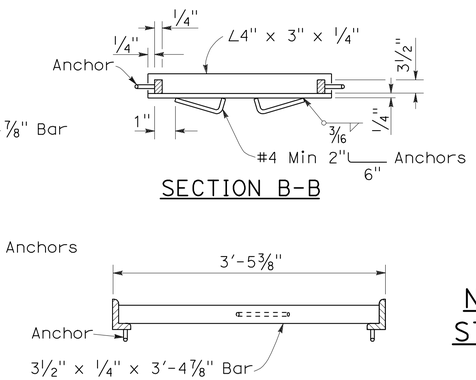


SECTION B-B

SECTION C-C

## ALTERNATIVE ANCHOR FOR RECTANGULAR FRAME

(For details not shown, See Rectangular Frame Details)

| INLET TYPE | GRATE TYPE | No. OF GRATES | WEIGHT LB |
|---|---|---|---|
| GDO | 24-12 | 2 | 634 |
| GOL-7 | 24-12 | 1 | 326 |
| GOL-10 | 24-12 | 1 | 326 |
| GO,G1,G2,G3,G4 (TYPE 24) | 24-9 | 1 | 263 |
| | 24-12 | 1 | 326 |
| G4 (TYPE 18),G5,G6 | 18-9 | 1 | 249 |
| GT1 | 18-9 | 2 | 498 |
| GT2 | 18-9 | 2 | 498 |
| GT3 | 24-12 | 2 | 652 |
| GT4 | 24-12 | 2 | 652 |
| TRASH RACK | | | 22 |

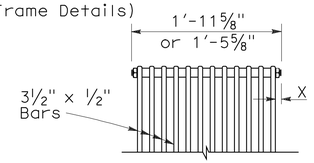


BOLTED END BLOCK

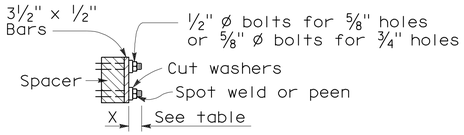


BOLTING DETAIL

## ALTERNATIVE BOLTED GRATE

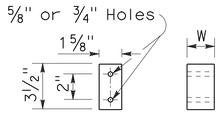


BAR SPACER

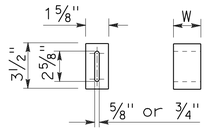


ALTERNATIVE SPACER

W = 1⅜" or 2"

## GRATE BAR SPACING TABLE

| TYPE | No. OF BARS | CLEAR BAR SPACING | X |
|---|---|---|---|
| 18-9 | 9 | 1⅜" | 1 1/16" |
| 24-9 | 9 | 2" | 1 9/16" |
| 24-12 | 12 | 1⅜" | 1¼" |

| INLET TYPE | COVER TYPE | WEIGHT LB |
|---|---|---|
| OS | PLATE | 174 |
| OL-7 | PLATE | 170 |
| OL-10 | PLATE | 170 |
| OL-14 | PLATE | 170 |
| OL-21 | PLATE | 170 |
| OCP | PLATE | 112 |
| OCPI | PLATE | 112 |
| OCPI | REDWOOD | 42 |
| OMP | PLATE | 177 |
| OMPI | PLATE | 177 |

## BASIS FOR MISC IRON & STEEL FINAL PAY WEIGHTS FOR DRAINAGE INLETS

(See General Notes, No 8)

STATE OF CALIFORNIA
DEPARTMENT OF TRANSPORTATION

# GRATE DETAILS

NO SCALE

RSP D77A DATED JANUARY 18, 2008 SUPERSEDES STANDARD PLAN D77A DATED MAY 1, 2006 - PAGE 155 OF THE STANDARD PLANS BOOK DATED MAY 2006.

**REVISED STANDARD PLAN RSP D77A**

**2006 REVISED STANDARD PLAN RSP D77A**

12-14-07

| DIST | COUNTY | ROUTE | POST MILES TOTAL PROJECT | SHEET NO. | TOTAL SHEETS |
|---|---|---|---|---|---|
| 06 | Ker | 5 | 5.2/5.9 | 37 | 49 |

Gregory A. Balzer
LICENSED LANDSCAPE ARCHITECT

June 5, 2009
PLANS APPROVAL DATE

LICENSED LANDSCAPE ARCHITECT
Gregory A. Balzer 2016
Gregory A. Balzer
10-Renewal
2-28-11
(Renewal) Date
5-14-09
Date
STATE OF CALIFORNIA

*The State of California or its officers or agents shall not be responsible for the accuracy or completeness of electronic copies of this plan sheet.*

*To accompany plans dated* 7-25-11

## A

| | |
|---|---|
| AB | aggregate base |
| ABS | acrylonitrile-butadiene-styrene |
| AC | asphalt concrete |
| Adj | adjacent/adjustable |
| AIC | auxiliary irrigation controller |
| Alt | alternative |
| AMEND | amendment |
| ARV | air release valve |
| AUTO | automatic |
| AUX | auxiliary |
| AVB | atmospheric vacuum breaker |

## B

| | |
|---|---|
| B&B | balled and burlapped |
| B/B | brass/bronze |
| B/B/PL | brass/bronze/plastic |
| B/PL | brass/plastic |
| BFM | bonded fiber matrix |
| Bit Ctd | bituminous coated |
| BP | booster pump |
| BPA | backflow preventer assembly |
| BPAE | backflow preventer assembly in enclosure |
| BPE | backflow preventer enclosure |
| BV | ball valve |

## C

| | |
|---|---|
| CAP | corrugated aluminum pipe |
| CARV | combination air release valve |
| CCA | cam coupler assembly |
| CEC | controller enclosure cabinet |
| CHDPE | corrugated high density polyethylene |
| CL | chain link |
| CNC | control and neutral conductors |
| Conc | concrete |
| Cond | conduit |
| CSP | corrugated steel pipe |
| CST | center strip |
| CV | check valve |

## D

| | |
|---|---|
| Dia | diameter |
| DIP | ductile iron pipe |
| DN | diameter nominal |

## E

| | |
|---|---|
| EA | each |
| Elect | electric/electrical |
| Elev | elevation |
| ENCL | enclosure |
| EP | edge of pavement |
| ES | edge of shoulder |
| EST | end strip |
| ESTB | establishment |
| ETW | edge of traveled way |

## F

| | |
|---|---|
| F | full circle |
| F/P | full/part circle |
| FAU | filter assembly unit |
| FCV | flow control valve |
| FERT | fertilizer |
| FG | finished grade |
| FIPT | female iron pipe thread |
| FIS | fertilizer injector system |
| FL | flow line |
| FM | flow monitor |
| FS | flow sensor |
| Ft | foot/feet |
| FV | flush valve |

## G

| | |
|---|---|
| GAL | Gallon(s) |
| Galv | galvanized |
| GARV | garden valve |
| GPH | gallons per hour |
| GPM | gallons per minute |
| GSP | galvanized steel pipe |
| GV | gate valve |

## H

| | |
|---|---|
| H | half circle |
| HB | hose bib |
| HDPE | high density polyethylene |
| HP | horsepower/hinge point |
| HPL | high pressure line |
| Hwy | highway |

## I

| | |
|---|---|
| IC | irrigation controller |
| ICC | irrigation controller(s) in controller enclosure cabinet |
| ID | inside diameter |
| In | inches |
| IFS | irrigation filtration system |
| IPS | iron pipe size |
| IPT | iron pipe thread |
| Irr | irrigation |

## L

| | |
|---|---|
| L | length |
| LF | linear foot |

## M

| | |
|---|---|
| Max | maximum |
| MBGR | metal beam guard railing |
| MCV | manual control valve |
| MIC | master irrigation controller |
| Min | minimum |
| MIPT | male iron pipe thread |
| Misc | miscellaneous |
| Mtl | material |
| MVP | maintenance vehicle pullout |

## N

| | |
|---|---|
| NCN | no common name |
| NL | nozzle line |
| No. | number |
| NPT | national pipe thread |

## O

| | |
|---|---|
| O/C | on center |
| OD | outside diameter |
| Oz | ounce |

## P

| | |
|---|---|
| P | part circle |
| PB | pull box |
| PCC | portland cement concrete |
| PE | polyethylene |
| Pkt | packet |
| PL | plastic |
| PLT | plant/planting |
| PLT ESTB | plant establishment |
| PM | post mile |
| PR | pressure rated |
| PRLV | pressure relief valve |
| PSFM | polymer stabilized fiber matrix |
| PSI | pounds per square inch |
| PRV | pressure reducing valve |
| PVC | polyvinyl chloride |
| Pvmt | pavement |

## Q

| | |
|---|---|
| Q | quarter circle |
| QCV | quick coupling valve |

## R

| | |
|---|---|
| R | radius |
| RCP | reinforced concrete pipe |
| RCV | remote control valve |
| RCVM | remote control valve (master) |
| RCVMF | remote control valve (master) w/ flow meter |
| RCW | recycled/reclaimed water |
| RECP | rolled erosion control product |
| REQ | required |
| R/W | right of way |

## S

| | |
|---|---|
| S | slip |
| SCC | sprinkler control conduit |
| SCH | schedule |
| SF | state-furnished |
| Shld | shoulder |
| SQFT | square foot/feet |
| SQYD | square yard(s) |
| SST | side strip |
| Sta | station |
| Std | standard |
| SW | sidewalk/sound wall |

## T

| | |
|---|---|
| T | third circle/thread |
| TLS | truck loading standpipe |
| TQ | three quarter circle |
| TRM | turf reinforcement mat |
| TRVD | traveled |
| TT | two third circle |
| Typ | typical |

## U

| | |
|---|---|
| UG | underground |

## V

| | |
|---|---|
| VAU | valve assembly unit |

## W

| | |
|---|---|
| W | width |
| W/ | with |
| WM | water meter |
| WS | wye strainer |
| WSP | welded steel pipe |
| WWM | welded wire mesh |

**NOTE:**

FOR ADDITIONAL ABBREVIATIONS, SEE STANDARD PLANS A10A AND A10B.

STATE OF CALIFORNIA
DEPARTMENT OF TRANSPORTATION

# PLANTING AND IRRIGATION ABBREVIATIONS

NO SCALE

RSP H1 DATED JUNE 5, 2009 SUPERSEDES STANDARD PLAN H1
DATED MAY 1, 2006 - PAGE 201 OF THE STANDARD PLANS BOOK DATED MAY 2006.

**REVISED STANDARD PLAN RSP H1**

**2006 REVISED STANDARD PLAN RSP H1**

| DIST | COUNTY | ROUTE | POST MILES TOTAL PROJECT | SHEET NO. | TOTAL SHEETS |
|---|---|---|---|---|---|
| 06 | Ker | 5 | 5.2/5.9 | 38 | 49 |

LICENSED LANDSCAPE ARCHITECT

April 3, 2009
PLANS APPROVAL DATE

LICENSED LANDSCAPE ARCHITECT
Gregory A. Balzer 3598
Signature
02-28-11
Renewal Date
03-04-09
Date
STATE OF CALIFORNIA

*The State of California or its officers or agents shall not be responsible for the accuracy or completeness of electronic copies of this plan sheet.*

*To accompany plans dated* 7-25-11

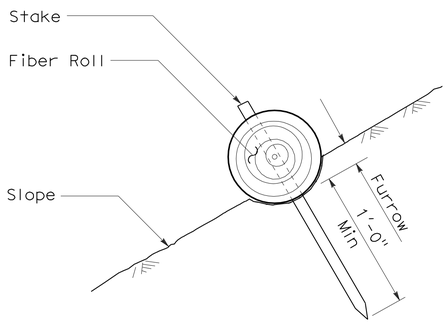


SECTION

FIBER ROLL (TYPE 1)

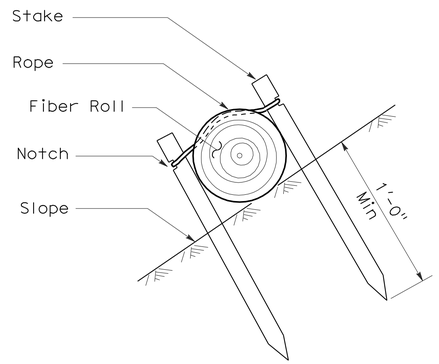


SECTION

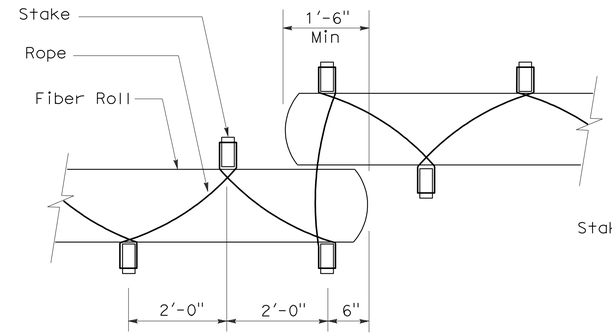


PLAN

FIBER ROLL (TYPE 2)

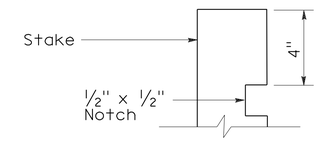


ELEVATION

STAKE NOTCH DETAIL

NOTES:

1. Fiber roll spacing varies depending upon slope inclination.
2. Installations shown in the perspectives are for slope inclination of 10:1 and steeper.

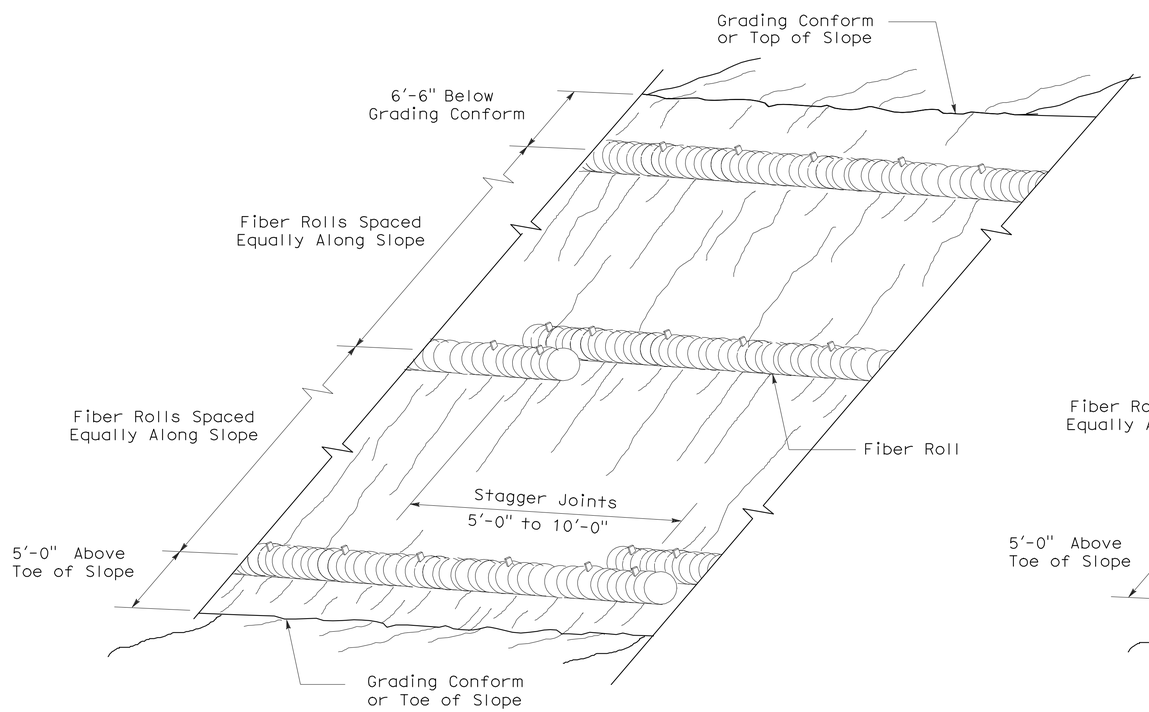


PERSPECTIVE

FIBER ROLL (TYPE 1)

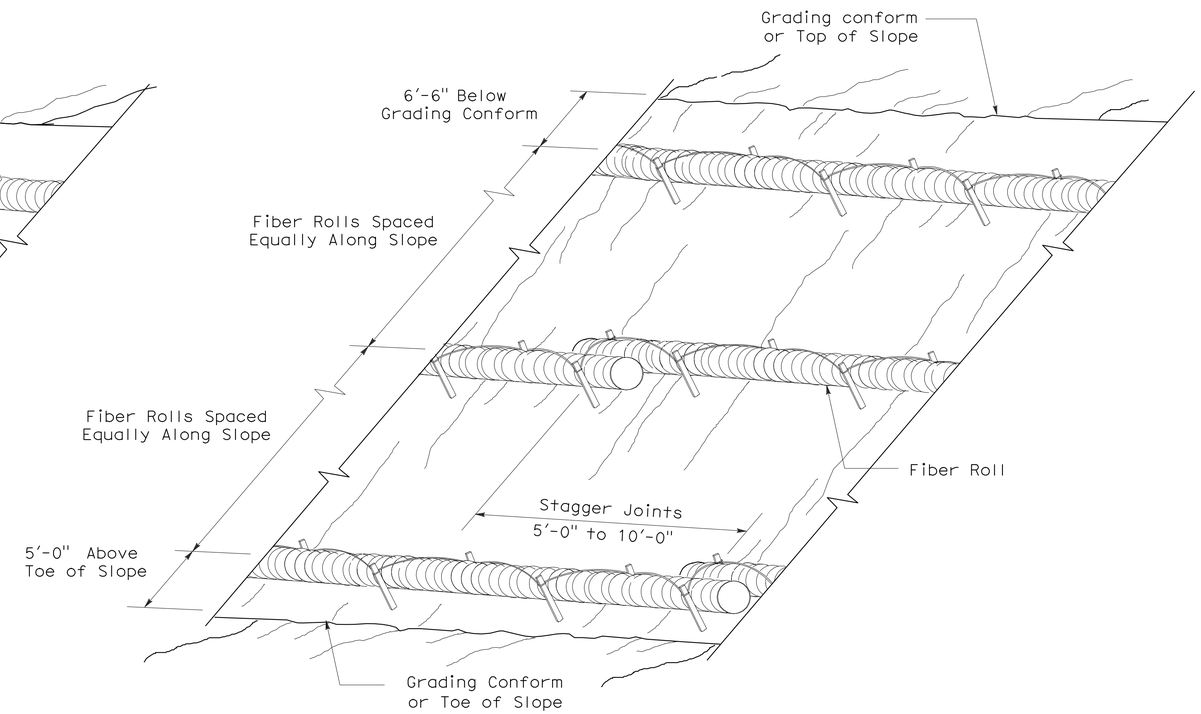


PERSPECTIVE

FIBER ROLL (TYPE 2)

STATE OF CALIFORNIA
DEPARTMENT OF TRANSPORTATION

# EROSION CONTROL DETAILS (FIBER ROLL)

NO SCALE

RNSP H51 DATED APRIL 3, 2009 SUPERSEDES NSP H51 DATED DECEMBER 1, 2006 THAT SUPPLEMENTS THE STANDARD PLANS BOOK DATED MAY 2006.

**REVISED NEW STANDARD PLAN RNSP H51**

**2006 REVISED NEW STANDARD PLAN RNSP H51**

| DIST | COUNTY | ROUTE | POST MILES TOTAL PROJECT | SHEET NO. | TOTAL SHEETS |
|---|---|---|---|---|---|
| 06 | Ker | 5 | 5.2/5.9 | 39 | 49 |

Randell D. Hiatt
REGISTERED CIVIL ENGINEER

June 6, 2008
PLANS APPROVAL DATE

REGISTERED PROFESSIONAL ENGINEER
Randell D. Hiatt
No. C50200
Exp. 6-30-09
CIVIL
STATE OF CALIFORNIA

*The State of California or its officers or agents shall not be responsible for the accuracy or completeness of electronic copies of this plan sheet.*

*To accompany plans dated* 7-25-11

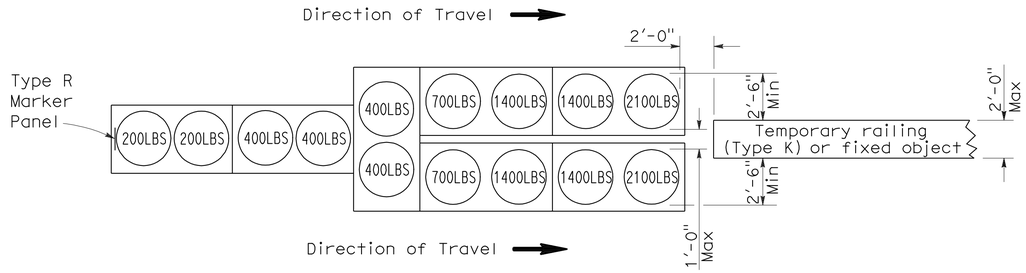


## ARRAY `TU14'

Approach speed 45 mph or more

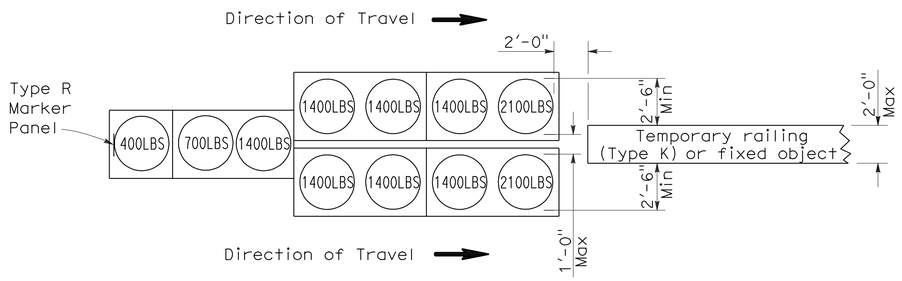


## ARRAY `TU11'

Approach speed less than 45 mph

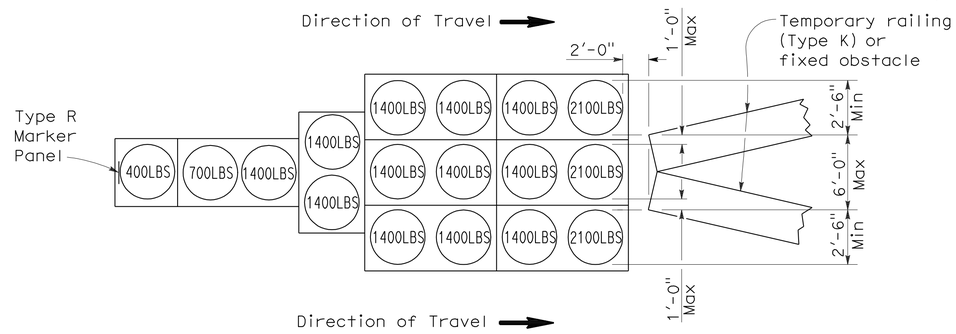


## ARRAY `TU17'

Approach speed less than 45 mph

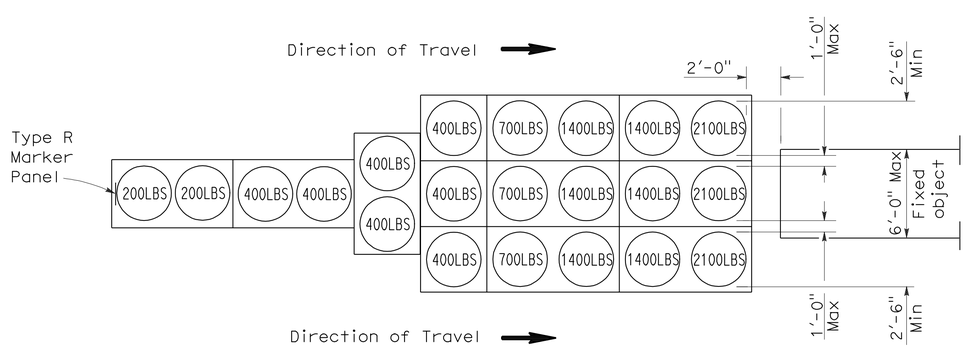


## ARRAY `TU21'

Approach speed 45 mph or more

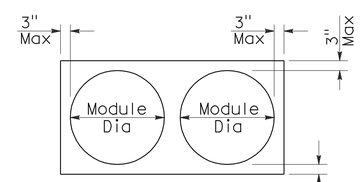


PLAN

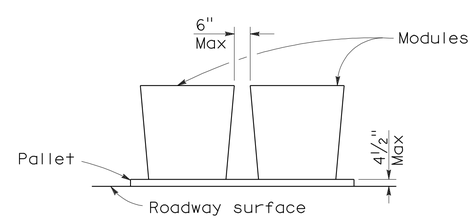


ELEVATION

## CRASH CUSHION PALLET DETAIL

See Note 7

## NOTES:

1. (XXX) Indicates sand filled module location and weight of sand in pounds for each module. Module spacing is based on the greater diameter of the module.
2. All sand weights are nominal.
3. Temporary crash cushion arrays shall not encroach on the traveled way.
4. Place the top of Type R marker panel 1" below the module lid.
5. Refer to Standard Plan A73B for marker details.
6. Approach speeds indicated conform to NCHRP 350 Report criteria.
7. Use of pallets is optional.

STATE OF CALIFORNIA
DEPARTMENT OF TRANSPORTATION

# TEMPORARY CRASH CUSHION, SAND FILLED (UNIDIRECTIONAL)

NO SCALE

RSP T1A DATED JUNE 6, 2008 SUPERSEDES STANDARD PLAN T1A
DATED MAY 1, 2006 - PAGE 211 OF THE STANDARD PLANS BOOK DATED MAY 2006.

**REVISED STANDARD PLAN RSP T1A**

**2006 REVISED STANDARD PLAN RSP T1A**

5-15-08

| DIST | COUNTY | ROUTE | POST MILES TOTAL PROJECT | SHEET NO. | TOTAL SHEETS |
|---|---|---|---|---|---|
| 06 | Ker | 5 | 5.2/5.9 | 40 | 49 |

Randell D. Hiatt
REGISTERED CIVIL ENGINEER

June 6, 2008
PLANS APPROVAL DATE

REGISTERED PROFESSIONAL ENGINEER
Randell D. Hiatt
No. C50200
Exp. 6-30-09
CIVIL
STATE OF CALIFORNIA

*The State of California or its officers or agents shall not be responsible for the accuracy or completeness of electronic copies of this plan sheet.*

*To accompany plans dated* 7-25-11

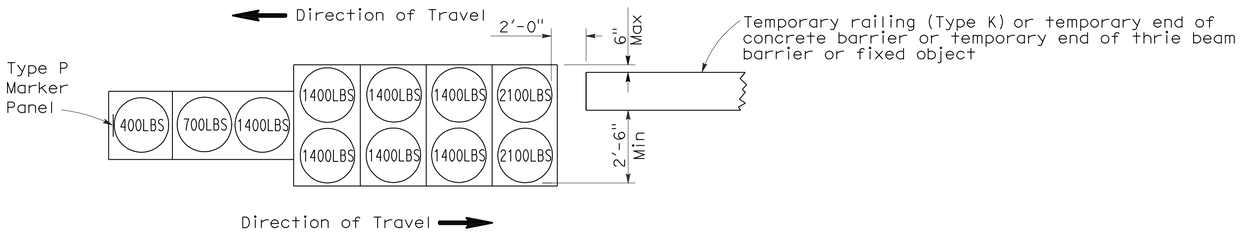


## ARRAY 'TB11'

Approach speed less than 45 mph

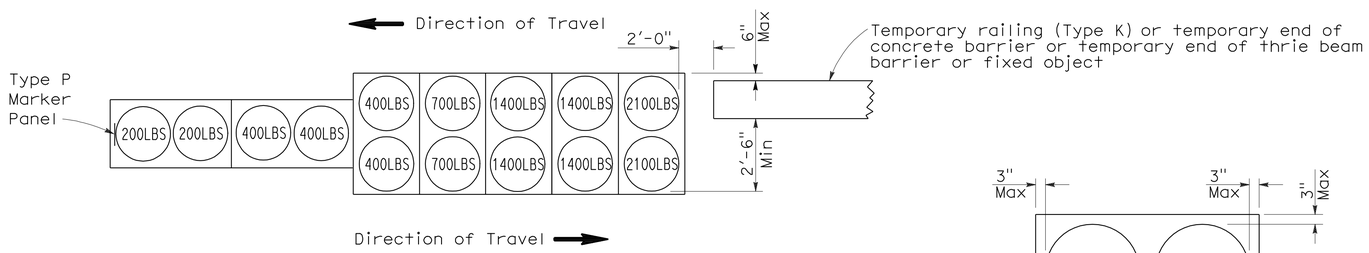


## ARRAY 'TB14'

Approach speed 45 mph or more

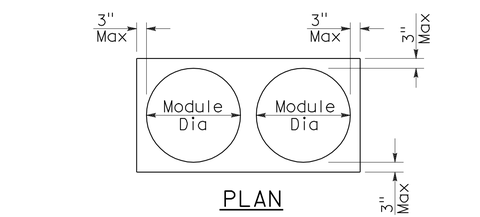


## PLAN

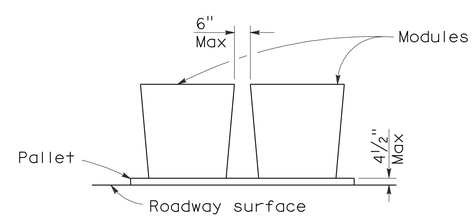


## ELEVATION

## CRASH CUSHION PALLET DETAIL

See Note 7

## NOTES:

1. (XXX) Indicates sand filled module location and weight of sand in pounds for each module. Module spacing is based on the greater diameter of the module.
2. All sand weights are nominal.
3. Temporary crash cushion arrays shall not encroach on the traveled way.
4. Place the Type P marker panel so that the bottom of the panel rests upon the pallet.
5. Refer to Standard Plan A73B for marker details.
6. Approach speeds indicated conform to NCHRP 350 Report criteria.
7. Use of pallets is optional.

STATE OF CALIFORNIA
DEPARTMENT OF TRANSPORTATION

# TEMPORARY CRASH CUSHION, SAND FILLED (BIDIRECTIONAL)

NO SCALE

RSP T1B DATED JUNE 6, 2008 SUPERSEDES STANDARD PLAN T1B
DATED MAY 1, 2006 - PAGE 212 OF THE STANDARD PLANS BOOK DATED MAY 2006.

**REVISED STANDARD PLAN RSP T1B**

**2006 REVISED STANDARD PLAN RSP T1B**

| DIST | COUNTY | ROUTE | POST MILES TOTAL PROJECT | SHEET NO. | TOTAL SHEETS |
|---|---|---|---|---|---|
| 06 | Ker | 5 | 5.2/5.9 | 41 | 49 |

Randell D. Hiatt
REGISTERED CIVIL ENGINEER

June 6, 2008
PLANS APPROVAL DATE

REGISTERED PROFESSIONAL ENGINEER
Randell D. Hiatt
No. C50200
Exp. 6-30-09
CIVIL
STATE OF CALIFORNIA

*The State of California or its officers or agents shall not be responsible for the accuracy or completeness of electronic copies of this plan sheet.*

*To accompany plans dated* 7-25-11

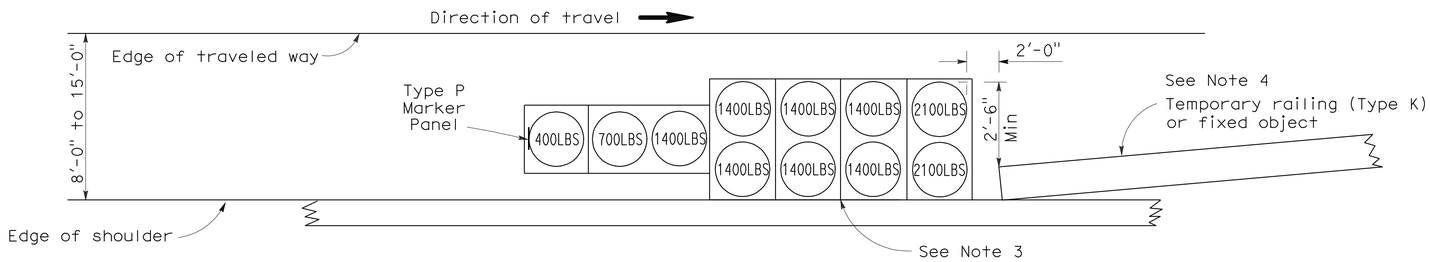


## ARRAY 'TS11'

Approach speed less than 45 mph
See Note 9

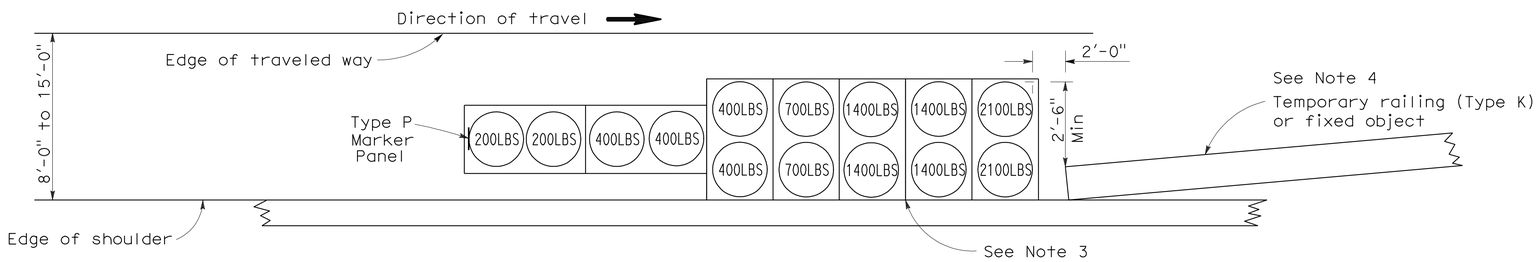


## ARRAY 'TS14'

Approach speed 45 mph or more
See Note 9

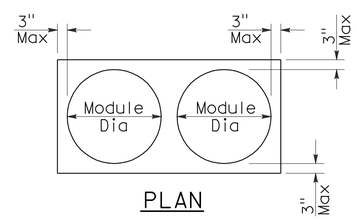


PLAN

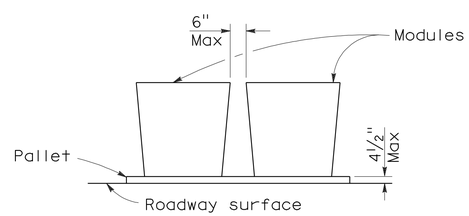


ELEVATION

## CRASH CUSHION PALLET DETAIL

See Note 11

## NOTES:

1. (XXX) Indicates sand filled module location and weight of sand in pounds for each module. Module spacing is based on the greater diameter of the module.
2. All sand weights are nominal.
3. The temporary crash cushion arrays shown on this plan shall be used only in locations where there will be traffic on one side of the temporary crash cushion array.
4. If the fixed object or approach end of the temporary railing is less than 15'-0" from the edge of traveled way, a temporary crash cushion is required in a construction or work zone.
5. Temporary crash cushion arrays shall not encroach on the traveled way.
6. Arrays for median shoulders shall conform to details shown on this plan for outside shoulders.
7. Place the Type P marker panel so that the bottom of the panel rests upon the pallet and faces traffic.
8. Refer to Standard Plan A73B for marker details.
9. For shoulder widths less than 8'-0", appropriate approved crash cushion protection, other than sand filled modules, shall be provided at fixed objects and at approach ends of temporary railing. The specific type of crash cushion shall be as shown on the project plans or as specified in the Special Provisions, or if not shown on the project plans or specified in the Special Provisions, shall be as approved by the Engineer.
10. Approach speeds indicated conform to NCHRP 350 Report criteria.
11. Use of pallets is optional.

STATE OF CALIFORNIA
DEPARTMENT OF TRANSPORTATION

# TEMPORARY CRASH CUSHION, SAND FILLED (SHOULDER INSTALLATIONS)

NO SCALE

RSP T2 DATED JUNE 6, 2008 SUPERSEDES STANDARD PLAN T2
DATED MAY 1, 2006 - PAGE 213 OF THE STANDARD PLANS BOOK DATED MAY 2006.

**REVISED STANDARD PLAN RSP T2**

**2006 REVISED STANDARD PLAN RSP T2**

5-15-08

| Dist | COUNTY | ROUTE | POST MILES TOTAL PROJECT | SHEET No. | TOTAL SHEETS |
|---|---|---|---|---|---|
| 06 | Ker | 5 | 5.2/5.9 | 42 | 49 |

Randell D. Hiatt
REGISTERED CIVIL ENGINEER

May 20, 2011
PLANS APPROVAL DATE

REGISTERED PROFESSIONAL ENGINEER
Randell D. Hiatt
No. C50200
Exp. 6-30-11
CIVIL
STATE OF CALIFORNIA

*The State of California or its officers or agents shall not be responsible for the accuracy or completeness of electronic copies of this plan sheet.*

*To accompany plans dated* 7-25-11

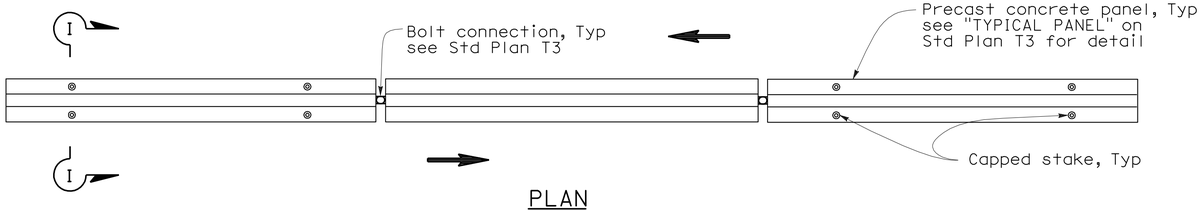


PLAN

RAILING STAKING CONFIGURATION FOR TWO-WAY TRAFFIC

See Note 1

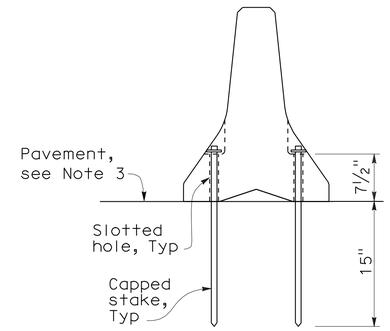


SECTION I-I

NOTES:

1. Where Type K Temporary Railing is placed as a temporary or long term barrier in two-way traffic on highways with less than 24" from the edge of traveled way, use four capped stakes per every other panel with end panels staked.
2. Where Type K Temporary Railing is placed 3" to 24" from the edge of an excavation on highways, use two capped stakes per panel along the traffic side.
3. Staked Type K Temporary Railing must be supported by at least 4" thick concrete, hot mix asphalt or existing asphalt concrete pavement.
4. The minimum yield strength for the washer must be 60,000 psi.
5. Direction of adjacent traffic indicated by ⟹.

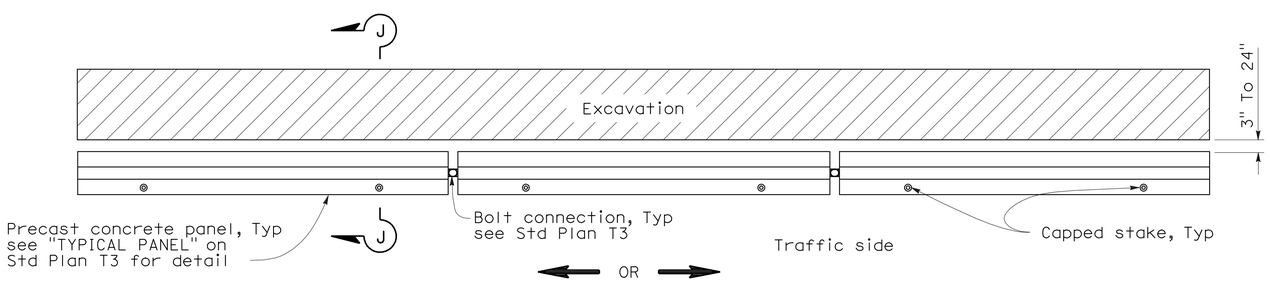


PLAN

RAILING STAKING CONFIGURATION ADJACENT TO AN EXCAVATION

See Note 2

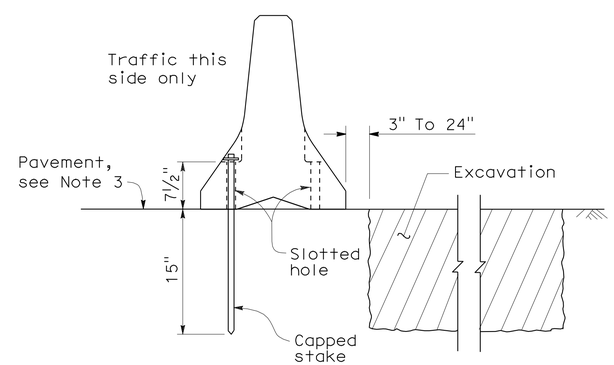


SECTION J-J

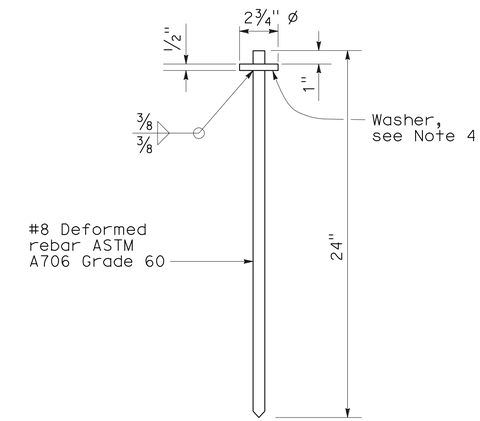


CAPPED STAKE DETAIL

STATE OF CALIFORNIA
DEPARTMENT OF TRANSPORTATION

# TEMPORARY RAILING (TYPE K)

NO SCALE

NSP T3A DATED MAY 20, 2011 SUPPLEMENTS THE STANDARD PLANS BOOK DATED MAY 2006.

**NEW STANDARD PLAN NSP T3A**

2006 NEW STANDARD PLAN NSP T3A

| DIST | COUNTY | ROUTE | POST MILES TOTAL PROJECT | SHEET NO. | TOTAL SHEETS |
|---|---|---|---|---|---|
| 06 | Ker | 5 | 5.2/5.9 | 43 | 49 |

REGISTERED CIVIL ENGINEER

November 17, 2006
PLANS APPROVAL DATE

REGISTERED PROFESSIONAL ENGINEER
Greg W. Edwards
No. C36386
Exp. 6-30-08
CIVIL
STATE OF CALIFORNIA

*The State of California or its officers or agents shall not be responsible for the accuracy or completeness of electronic copies of this plan sheet.*

*To accompany plans dated* 7-25-11

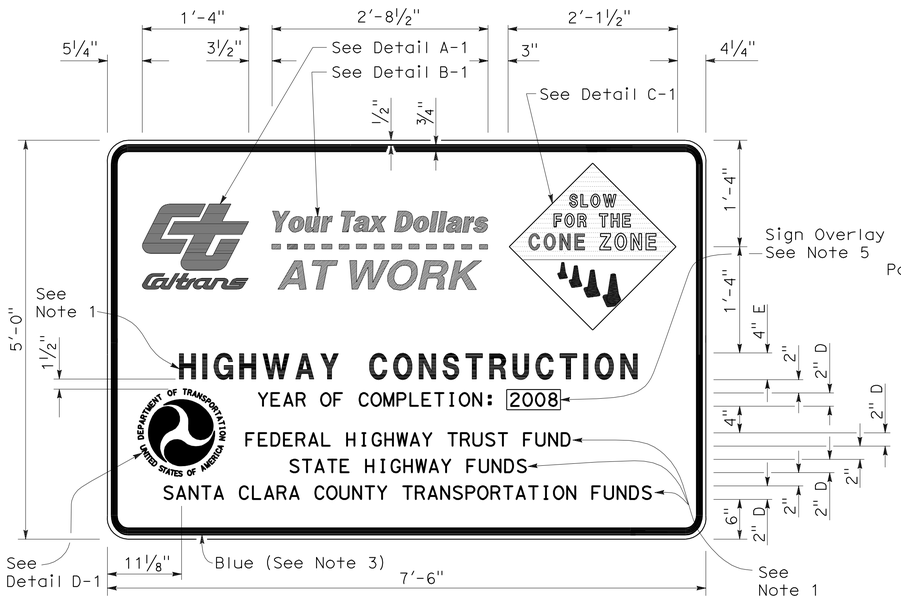


TYPE 1

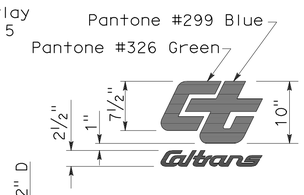


DETAIL A-1

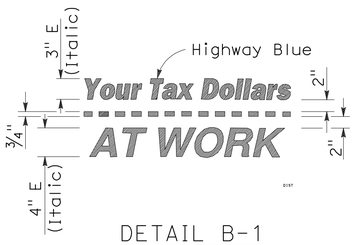


DETAIL B-1
(See Note 3)

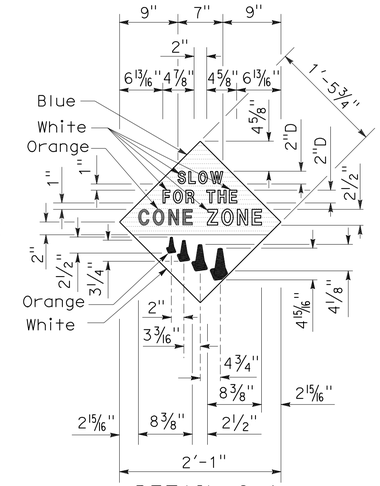


DETAIL C-1
(See Note 4)

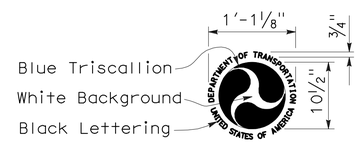


DETAIL D-1
(See Note 6)

## NOTES:

1. The sign messages shown for type of project and fund types are examples only. See the Special Provisions for the applicable type of project and fund type messages to be used.
2. Except as otherwise shown, the legend of sign shall be black on a white background (non-reflective).
3. The border of the signs and details "B-1" and "B-2" shall be blue (non-reflective).
4. The diamond in details "C-1" and "C-2" shall be blue for the background of message, " SLOW FOR THE CONE ZONE", and white background for the orange cones. The color and type of font for the "SLOW FOR THE CONE ZONE" message shall be: "SLOW" white D; "FOR THE" white D; "CONE" orange Arial font; "ZONE" white Arial font.
5. Year of completion of project construction shown on the overlay is an example only. See the Special Provisions.
6. Use when the Project involves Federal Highway Trust Fund.

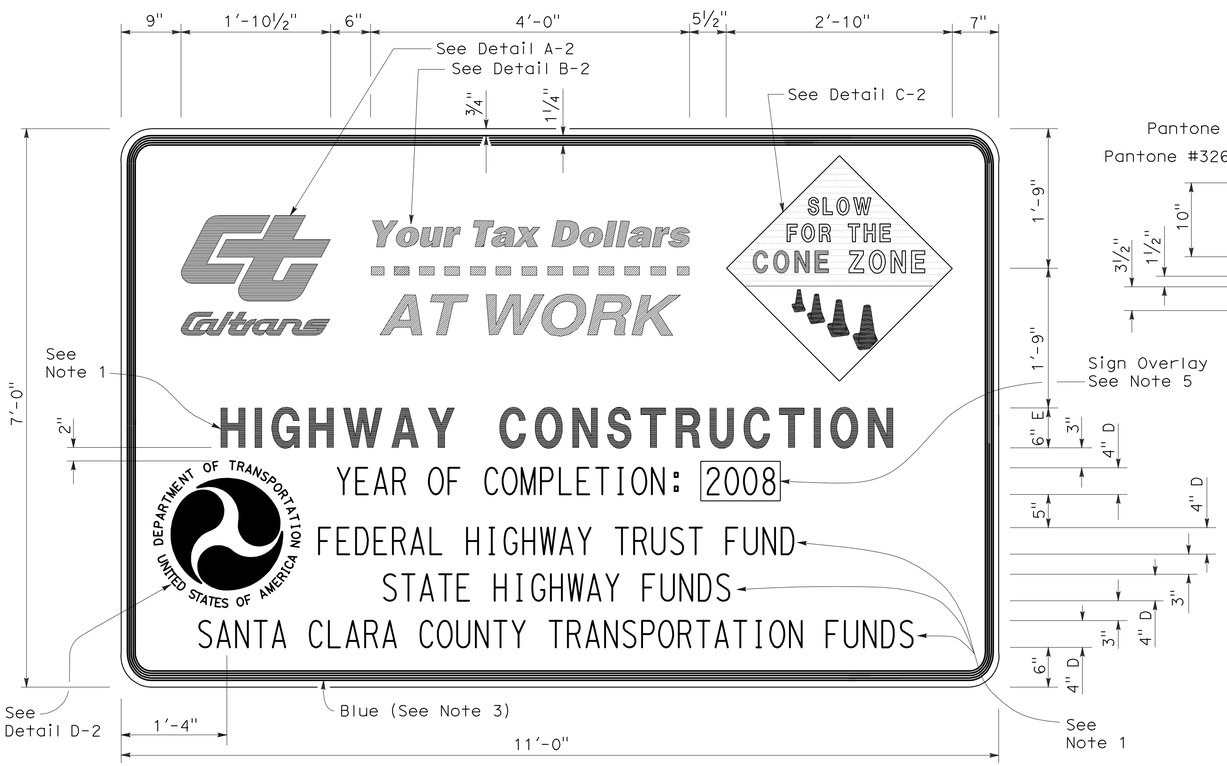


TYPE 2

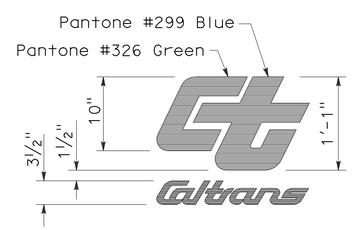


DETAIL A-2

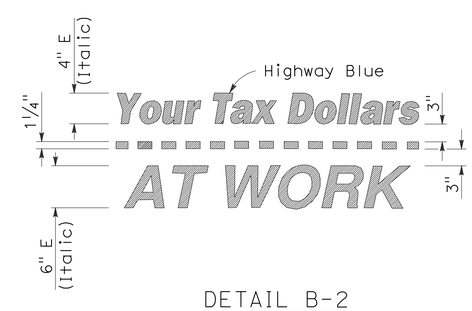


DETAIL B-2
(See Note 3)

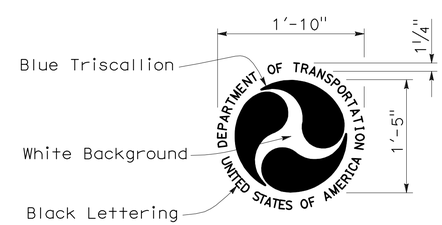


DETAIL D-2
(See Note 6)

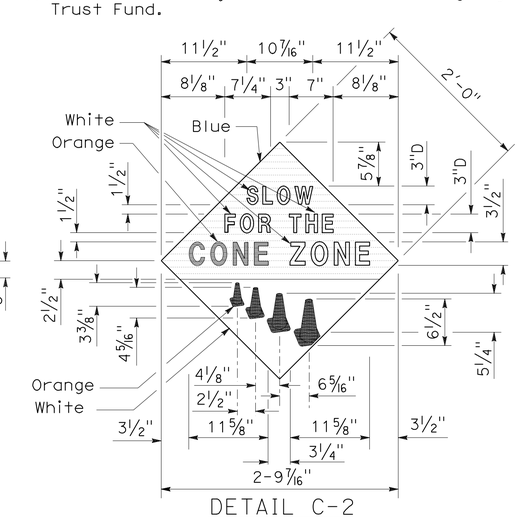


DETAIL C-2
(See Note 4)

STATE OF CALIFORNIA
DEPARTMENT OF TRANSPORTATION

# CONSTRUCTION PROJECT FUNDING IDENTIFICATION SIGNS

NO SCALE

RSP T7 DATED NOVEMBER 17, 2006 SUPERSEDES STANDARD PLAN T7
DATED MAY 1, 2006 - PAGE 217 OF THE STANDARD PLANS BOOK DATED MAY 2006.

**REVISED STANDARD PLAN RSP T7**

**2006 REVISED STANDARD PLAN RSP T7**

9-7-06

| DIST | COUNTY | ROUTE | POST MILES TOTAL PROJECT | SHEET NO. | TOTAL SHEETS |
|---|---|---|---|---|---|
| 06 | Ker | 5 | 5.2/5.9 | 44 | 49 |

LICENSED LANDSCAPE ARCHITECT

April 3, 2009
PLANS APPROVAL DATE

*The State of California or its officers or agents shall not be responsible for the accuracy or completeness of electronic copies of this plan sheet.*

LICENSED LANDSCAPE ARCHITECT — ROBERT B. SCHOTT — 3035 — Signature — 11-30-10 Renewal Date — 2-25-09 Date — STATE OF CALIFORNIA

*To accompany plans dated* 7-25-11

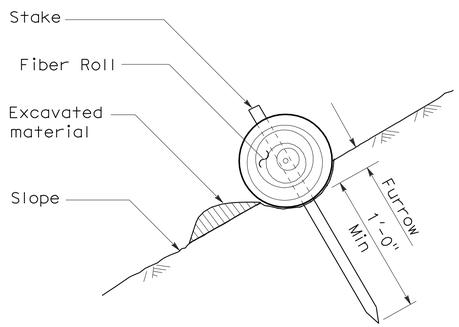


SECTION

TEMPORARY FIBER ROLL (TYPE 1)

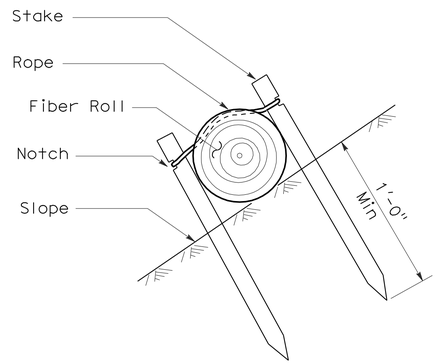


SECTION

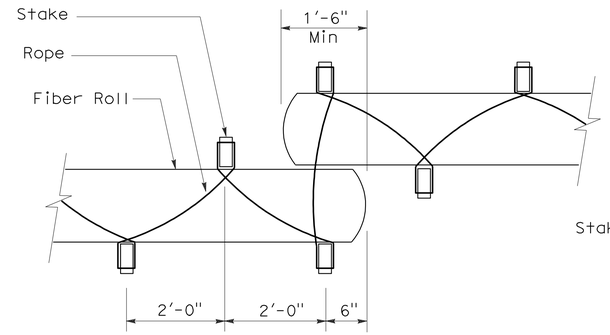


PLAN

TEMPORARY FIBER ROLL (TYPE 2)

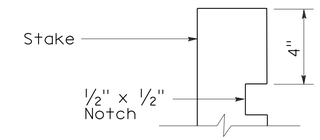


ELEVATION

STAKE NOTCH DETAIL

NOTES:

1. Temporary fiber roll spacing varies depending upon slope inclination.
2. Installations shown in the perspectives are for slope inclination of 10:1 and steeper.

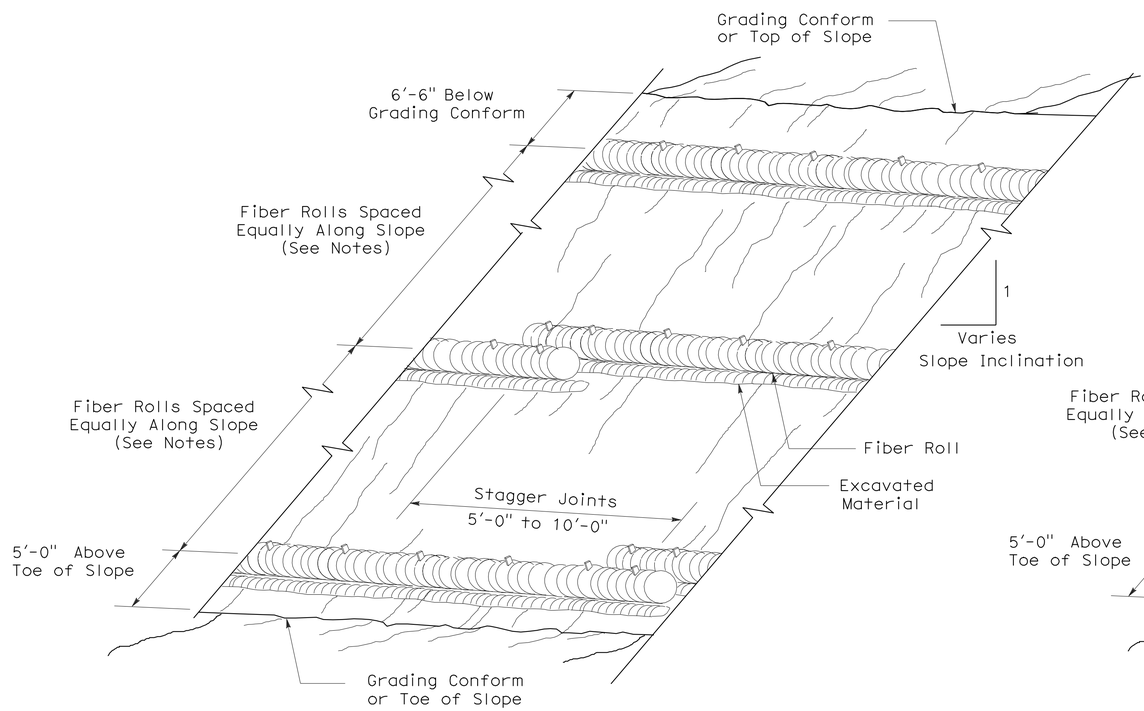


PERSPECTIVE

TEMPORARY FIBER ROLL (TYPE 1)

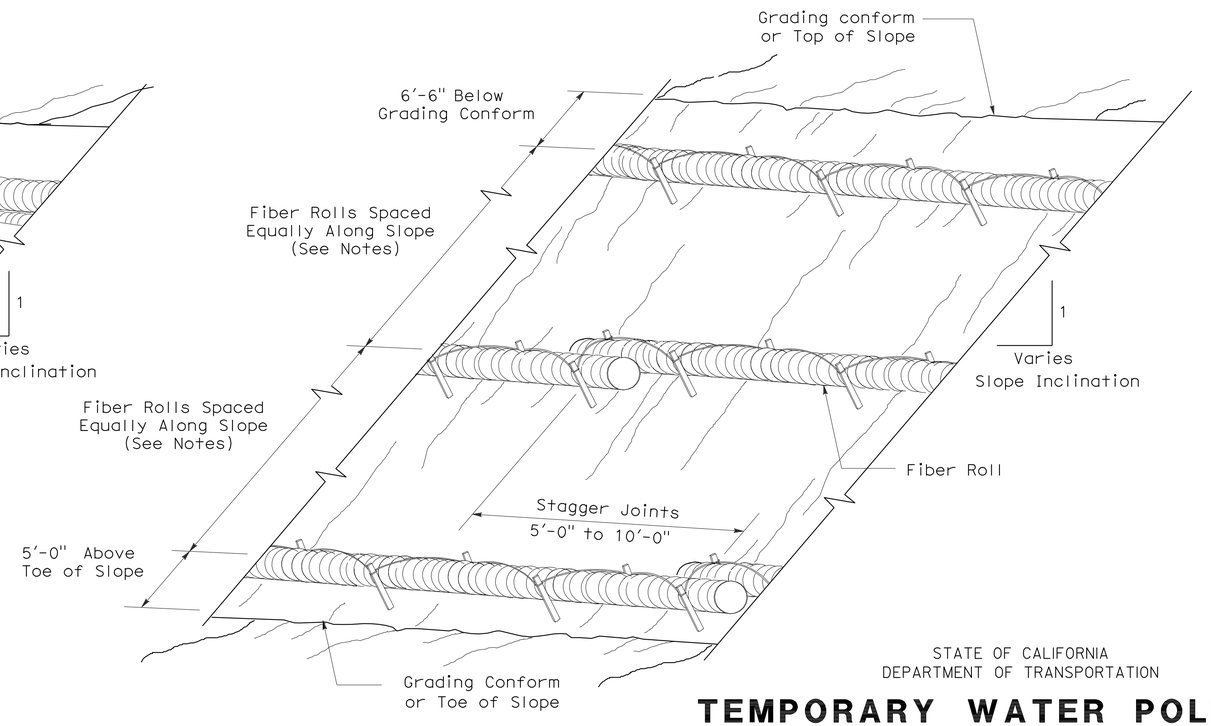


PERSPECTIVE

TEMPORARY FIBER ROLL (TYPE 2)

STATE OF CALIFORNIA
DEPARTMENT OF TRANSPORTATION

# TEMPORARY WATER POLLUTION CONTROL DETAILS (TEMPORARY FIBER ROLL)

NO SCALE

RSP T56 DATED APRIL 3, 2009 SUPERSEDES STANDARD PLAN T56
DATED MAY 1, 2006 - PAGE 232 OF THE STANDARD PLANS BOOK DATED MAY 2006.

**REVISED STANDARD PLAN RSP T56**

**2006 REVISED STANDARD PLAN RSP T56**

2-23-09

| DIST | COUNTY | ROUTE | POST MILES TOTAL PROJECT | SHEET NO. | TOTAL SHEETS |
|---|---|---|---|---|---|
| 06 | Ker | 5 | 5.2/5.9 | 45 | 49 |

Robert B Schott
LICENSED LANDSCAPE ARCHITECT

August 15, 2008
PLANS Approval DATE

LICENSED LANDSCAPE ARCHITECT
Robert B. Schott 3025
Robert B Schott
Signature
11-04-08
Renewal Date
08-11-08
Date
STATE OF CALIFORNIA

*The State of California or its officers or agents shall not be responsible for the accuracy or completeness of electronic copies of this plan sheet.*

*To accompany plans dated* 7-25-11

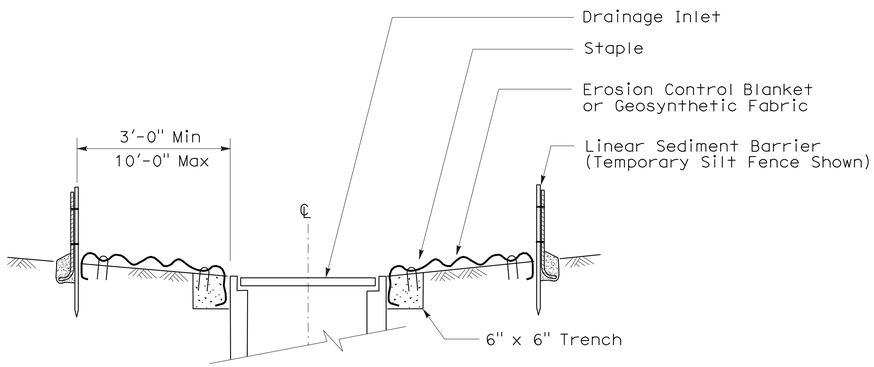


SECTION A-A

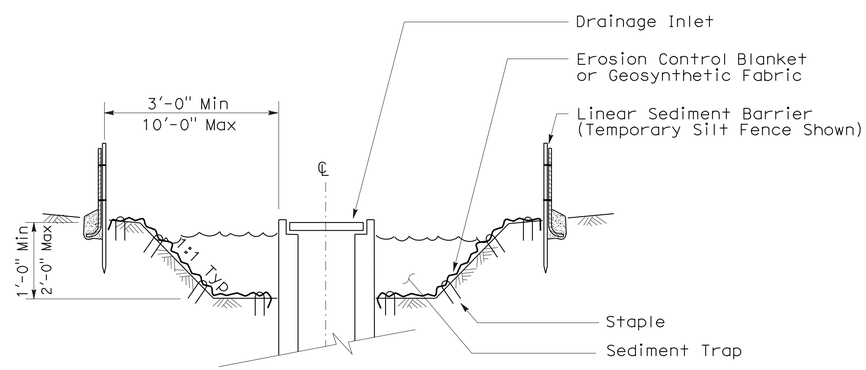


SECTION B-B

## NOTES:

1. See Standard Plan T51 for Temporary Silt Fence.
2. Dimensions may vary to fit field conditions.

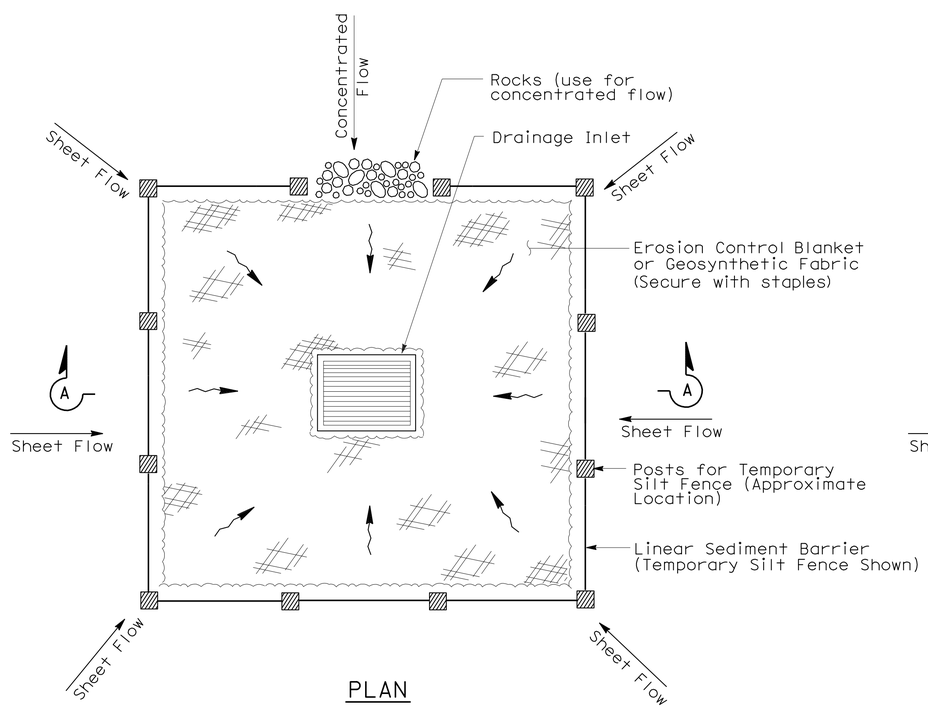


PLAN

TEMPORARY DRAINAGE
INLET PROTECTION (TYPE 1)

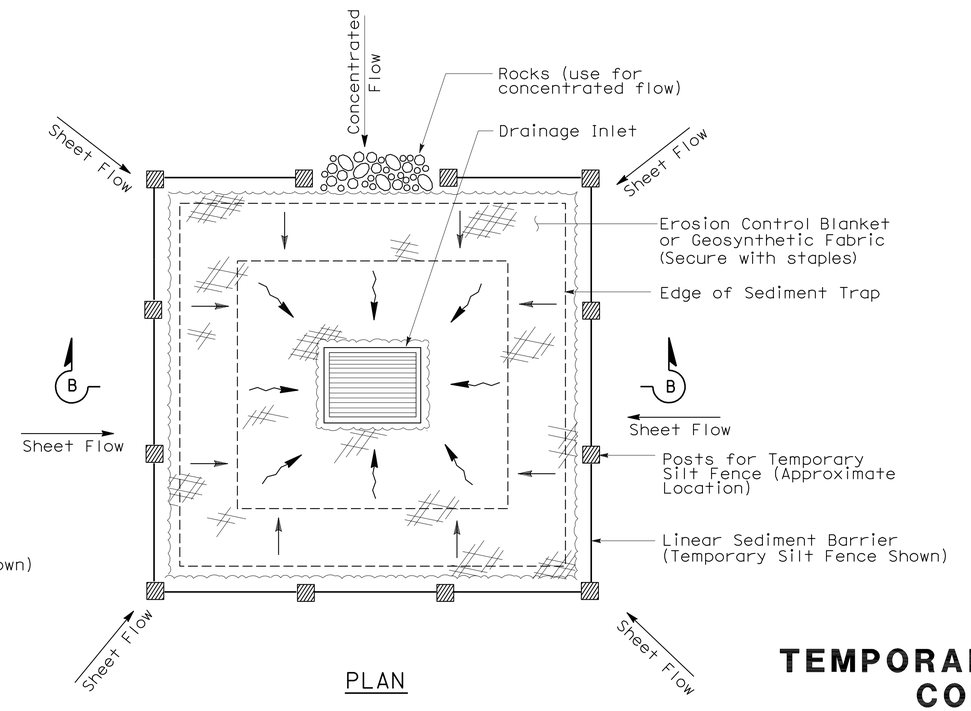


PLAN

TEMPORARY DRAINAGE
INLET PROTECTION (TYPE 2)
(EXCAVATED SEDIMENT TRAP)

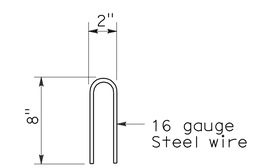


STAPLE DETAIL

STATE OF CALIFORNIA
DEPARTMENT OF TRANSPORTATION

# TEMPORARY WATER POLLUTION CONTROL DETAILS (TEMPORARY DRAINAGE INLET PROTECTION)

NO SCALE

NSP T61 DATED AUGUST 15, 2008 SUPPLEMENTS
THE STANDARD PLANS BOOK DATED MAY 2006.

**NEW STANDARD PLAN NSP T61**

**2006 NEW STANDARD PLAN NSP T61**

7-11-08

| DIST | COUNTY | ROUTE | POST MILES TOTAL PROJECT | SHEET NO. | TOTAL SHEETS |
|---|---|---|---|---|---|
| 06 | Ker | 5 | 5.2/5.9 | 46 | 49 |

LICENSED LANDSCAPE ARCHITECT

August 15, 2008
PLANS APPROVAL DATE

*The State of California or its officers or agents shall not be responsible for the accuracy or completeness of electronic copies of this plan sheet.*

LICENSED LANDSCAPE ARCHITECT Robert B. Schott 3025 Signature 11-04-08 Renewal Date 08-11-08 Date STATE OF CALIFORNIA

*To accompany plans dated* 7-25-11

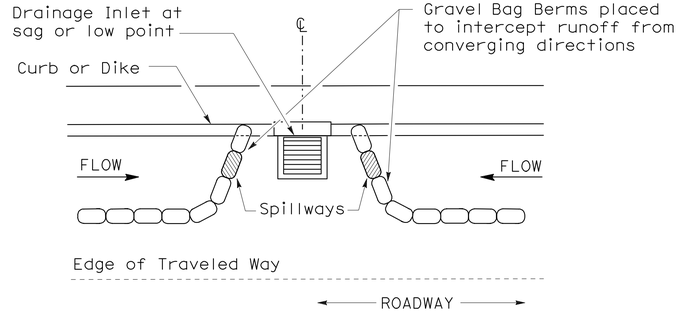


PLAN

## CONFIGURATION FOR SAG POINT INLET (GRAVEL BAG BERM)

## GRAVEL BAG BERM (TYPE 3A) SPACING TABLE

| SLOPE OF ROADWAY (PERCENT) | 1 to 3.9 | 4 to 5.9 | 6 to 7.9 | 8 to 10 | 10+ |
|---|---|---|---|---|---|
| INTERVAL BETWEEN BERM | 100′ | 75′ | 50′ | 25′ | 12′ |

For slope of less than 1%, install barriers only if erosion/sediment is prevalent

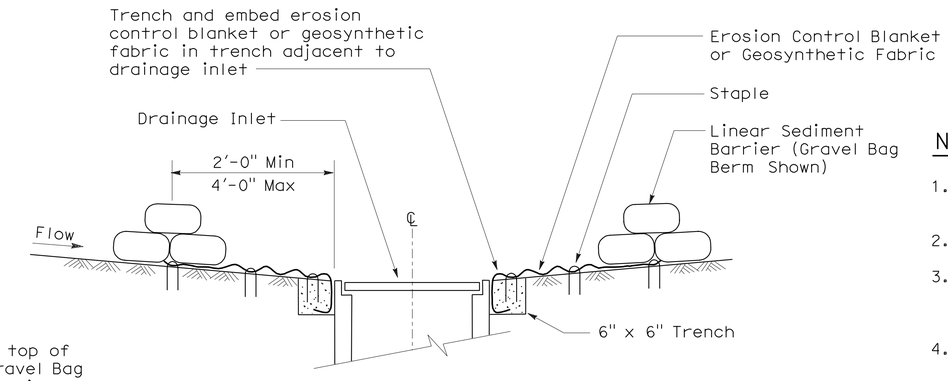


SECTION A-A

## NOTES:

1. Place safety cones adjacent to drainage inlet protection.
2. Dimensions may vary to fit field conditions.
3. Install a minimum of 3 gravel bag berms upstream of each drainage inlet to be protected.
4. Position erosion control blanket or geosynthetic fabric at edge of concrete apron and secure in trench.
5. Erosion control blanket or geosynthetic fabric is not required if the area adjacent to the drainage inlet is vegetated or paved.

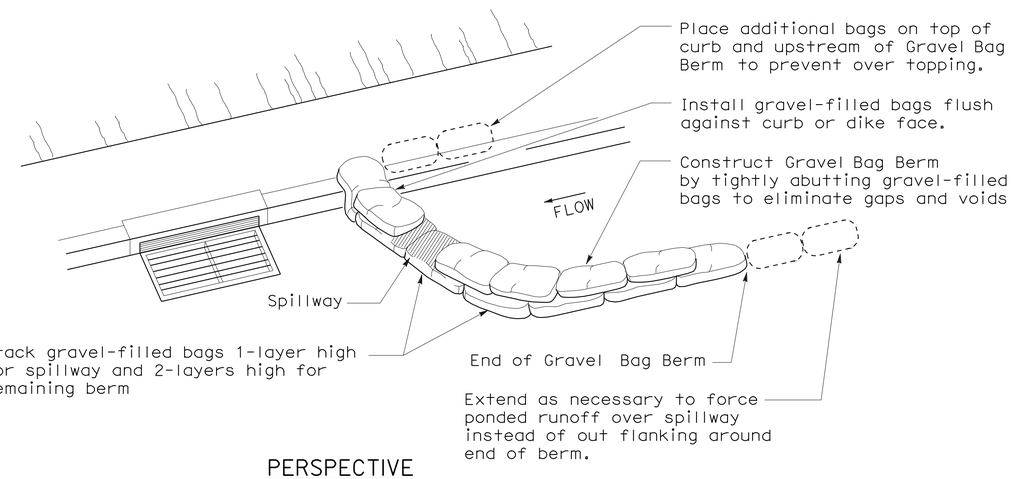


PERSPECTIVE

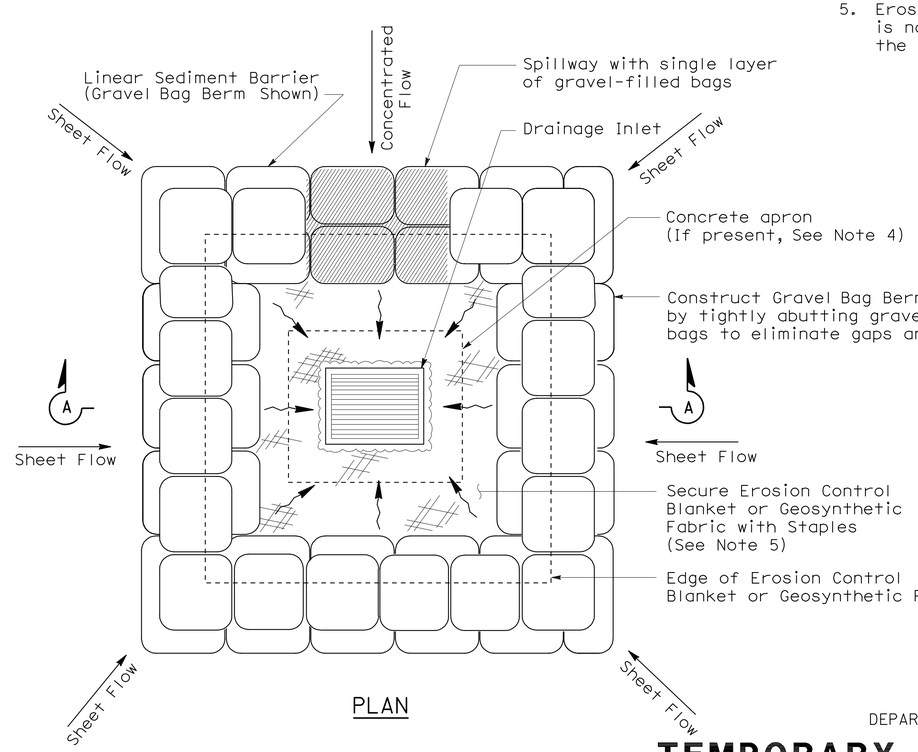


PLAN

## TEMPORARY DRAINAGE INLET PROTECTION (TYPE 3B)

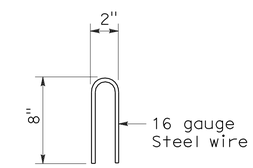


STAPLE DETAIL

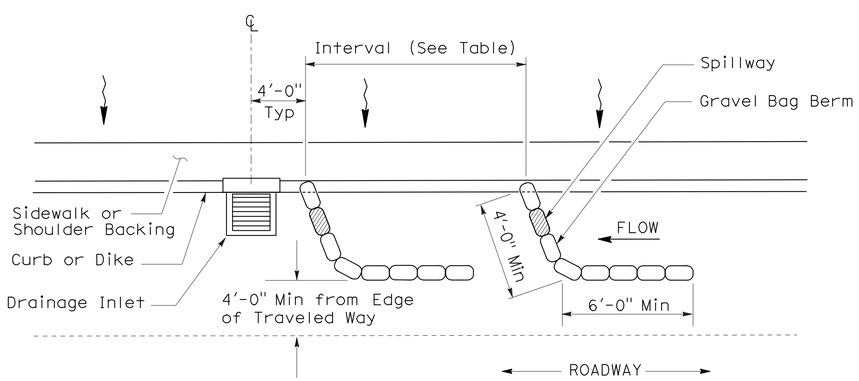


PLAN

## TEMPORARY DRAINAGE INLET PROTECTION (TYPE 3A) (GRAVEL BAG BERM)

STATE OF CALIFORNIA
DEPARTMENT OF TRANSPORTATION

# TEMPORARY WATER POLLUTION CONTROL DETAILS (TEMPORARY DRAINAGE INLET PROTECTION)

NO SCALE

NSP T62 DATED AUGUST 15, 2008 SUPPLEMENTS THE STANDARD PLANS BOOK DATED MAY 2006.

**NEW STANDARD PLAN NSP T62**

**2006 NEW STANDARD PLAN NSP T62**

7-11-08

| DIST | COUNTY | ROUTE | POST MILES TOTAL PROJECT | SHEET NO. | TOTAL SHEETS |
|---|---|---|---|---|---|
| 06 | Ker | 5 | 5.2/5.9 | 47 | 49 |

Robert B Schott
LICENSED LANDSCAPE ARCHITECT

August 15, 2008
PLANS APPROVAL DATE

*The State of California or its officers or agents shall not be responsible for the accuracy or completeness of electronic copies of this plan sheet.*

LICENSED LANDSCAPE ARCHITECT — Robert B. Schott — Signature — 11-04-08 Renewal Date — 08-11-08 Date — STATE OF CALIFORNIA

*To accompany plans dated* 7-25-11

## FLEXIBLE SEDIMENT BARRIER SPACING TABLE

| SLOPE OF ROADWAY (PERCENT) | 0 to 0.9 | 1 to 1.9 | 2 to 2.9 | 3 to 4 | 5+ |
|---|---|---|---|---|---|
| INTERVAL BETWEEN BARRIERS | 50′ | 35′ | 30′ | 25′ | 20′ |
| ANGLE FROM FACE OF CURB | 70° | 70° | 70° | 45° | 45° |
| SUGGESTED BARRIER LENGTH | 6′ | 6′ | 6′ | 6′ | 6′ |

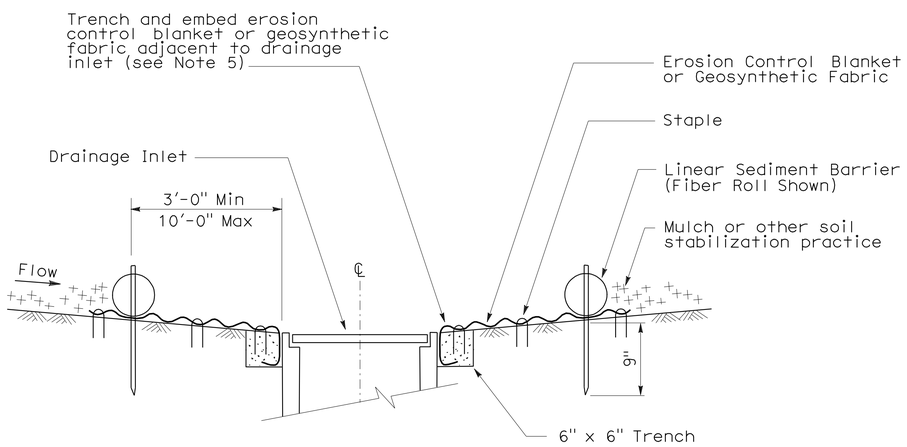


SECTION A-A

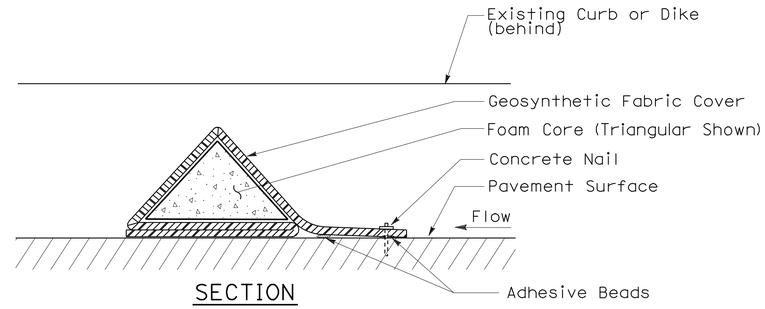


SECTION

## FLEXIBLE SEDIMENT BARRIER DETAIL (FOAM BARRIER SHOWN)

## NOTES:

1. See Standard Plan T51 for Temporary Silt Fence.
2. Dimensions may vary to fit field conditions.
3. Install a minimum of 3 flexible sediment barriers upstream of each drainage inlet to be protected.
4. Position erosion control blanket or geosynthetic fabric at edge of concrete apron and secure in trench.
5. Erosion control blanket or geosynthetic fabric is not required if the area adjacent to the drainage inlet is vegetated.

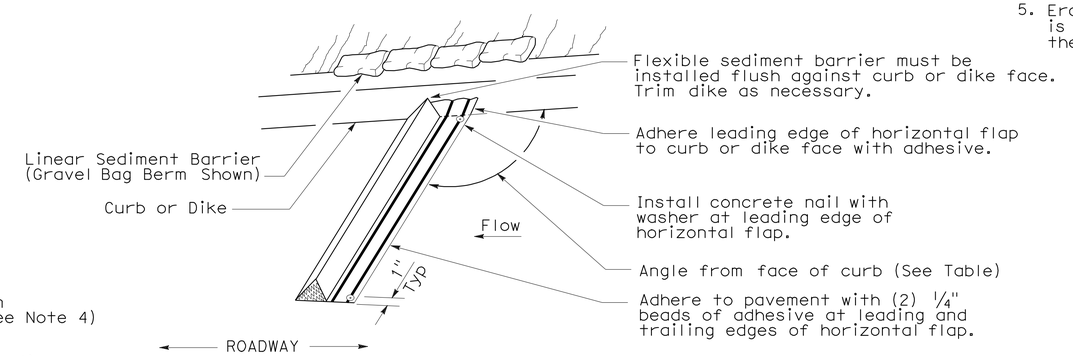


PERSPECTIVE

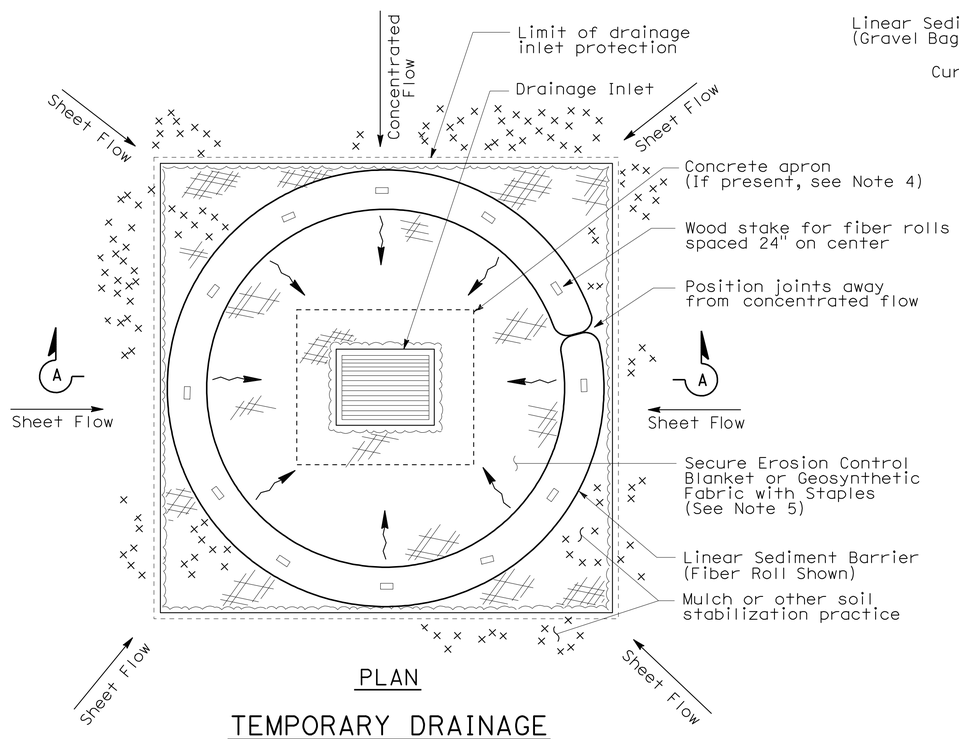


PLAN

## TEMPORARY DRAINAGE INLET PROTECTION (TYPE 4A)

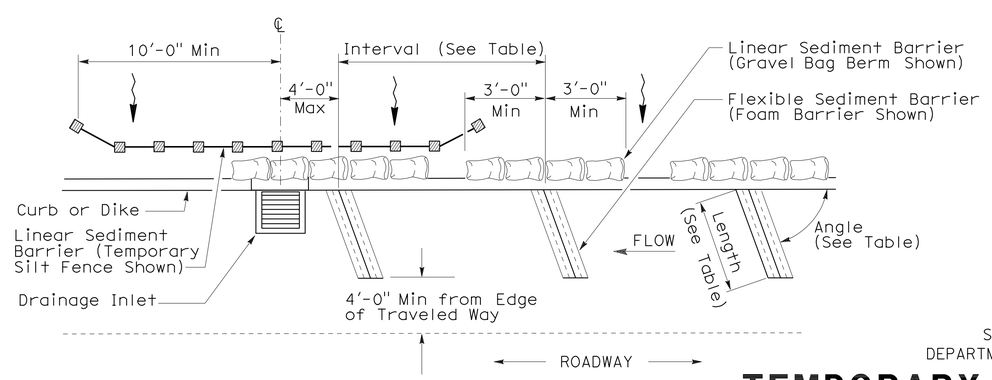


PLAN

## TEMPORARY DRAINAGE INLET PROTECTION (TYPE 4B) FLEXIBLE SEDIMENT BARRIER

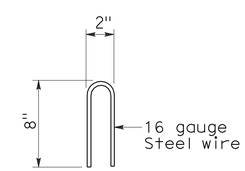


STAPLE DETAIL

STATE OF CALIFORNIA
DEPARTMENT OF TRANSPORTATION

# TEMPORARY WATER POLLUTION CONTROL DETAILS (TEMPORARY DRAINAGE INLET PROTECTION)

NO SCALE

NSP T63 DATED AUGUST 15, 2008 SUPPLEMENTS THE STANDARD PLANS BOOK DATED MAY 2006.

**NEW STANDARD PLAN NSP T63**

**2006 NEW STANDARD PLAN NSP T63**

7-11-08

| DIST | COUNTY | ROUTE | POST MILES TOTAL PROJECT | SHEET NO. | TOTAL SHEETS |
|---|---|---|---|---|---|
| 06 | Ker | 5 | 5.2/5.9 | 48 | 49 |

LICENSED LANDSCAPE ARCHITECT

August 15, 2008
PLANS APPROVAL DATE

LICENSED LANDSCAPE ARCHITECT — ROBERT B. SCHOTT — Signature 11-04-08 Renewal Date — 08-11-08 Date — STATE OF CALIFORNIA

*The State of California or its officers or agents shall not be responsible for the accuracy or completeness of electronic copies of this plan sheet.*

*To accompany plans dated* 7-25-11

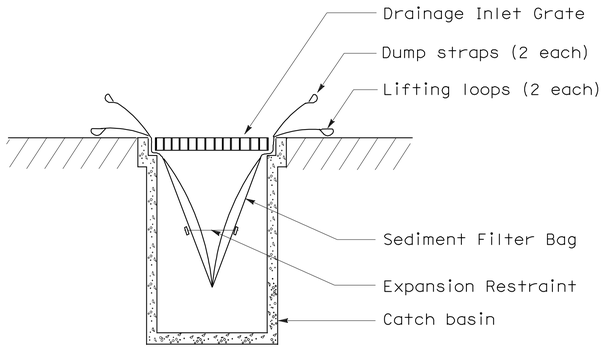


SECTION B-B

## SEDIMENT FILTER BAG DETAIL

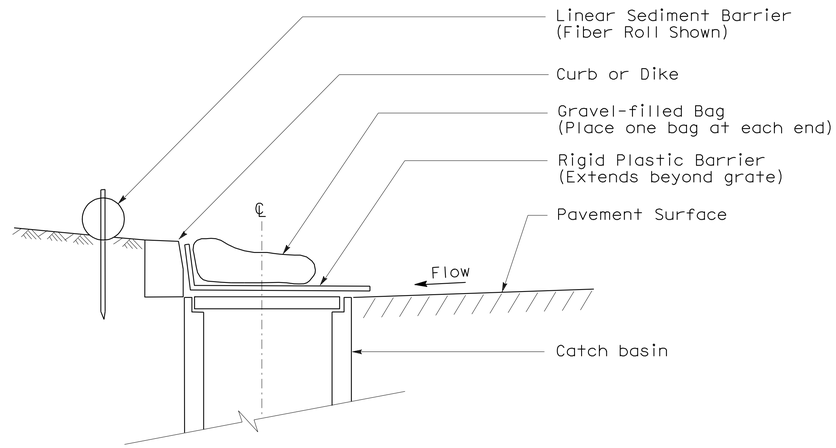


SECTION

## TEMPORARY DRAINAGE INLET PROTECTION (TYPE 6A) (CATCH BASIN WITH GRATE)

## NOTES:

1. See Standard Plan T51 for Temporary Silt Fence.
2. Dimensions may vary to fit field conditions.

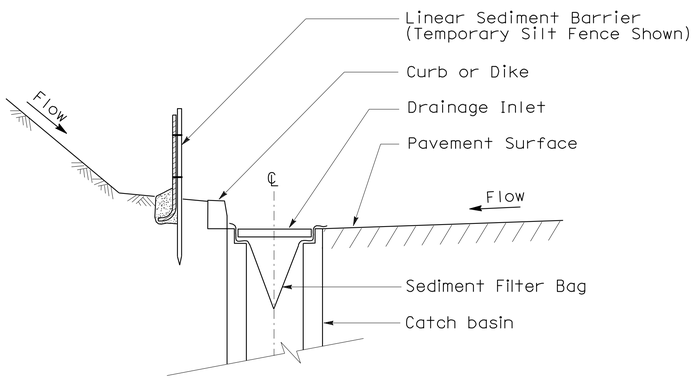


SECTION A-A

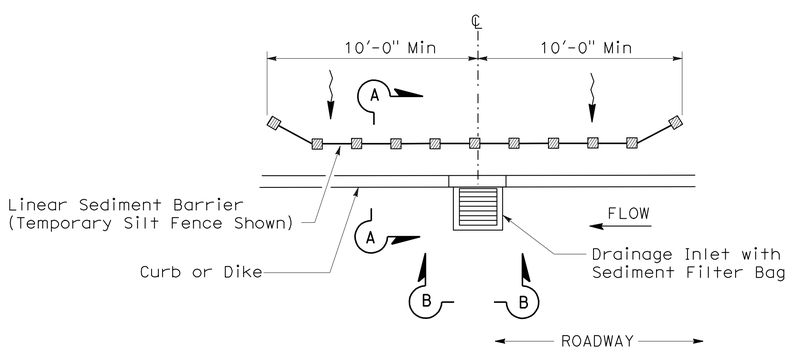


PLAN

## TEMPORARY DRAINAGE INLET PROTECTION (TYPE 5) (SEDIMENT FILTER BAG)

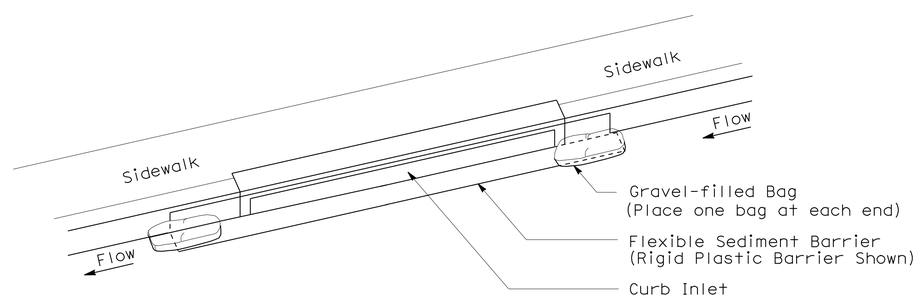


PERSPECTIVE

## TEMPORARY DRAINAGE INLET PROTECTION (TYPE 6B) (CURB INLET WITHOUT GRATE)

STATE OF CALIFORNIA
DEPARTMENT OF TRANSPORTATION

# TEMPORARY WATER POLLUTION CONTROL DETAILS (TEMPORARY DRAINAGE INLET PROTECTION)

NO SCALE

NSP T64 DATED AUGUST 15, 2008 SUPPLEMENTS
THE STANDARD PLANS BOOK DATED MAY 2006.

**NEW STANDARD PLAN NSP T64**

**2006 NEW STANDARD PLAN NSP T64**

7-11-08

| DIST | COUNTY | ROUTE | POST MILES TOTAL PROJECT | SHEET NO. | TOTAL SHEETS |
|---|---|---|---|---|---|
| 06 | Ker | 5 | 5.2/5.9 | 49 | 49 |

LICENSED LANDSCAPE ARCHITECT

April 3, 2009
PLANS APPROVAL DATE

*The State of California or its officers or agents shall not be responsible for the accuracy or completeness of electronic copies of this plan sheet.*

LICENSED LANDSCAPE ARCHITECT — Robert B. Schott — 3035 — Signature — 11-30-10 Renewal Date — 2-25-09 Date — STATE OF CALIFORNIA

*To accompany plans dated* 7-25-11

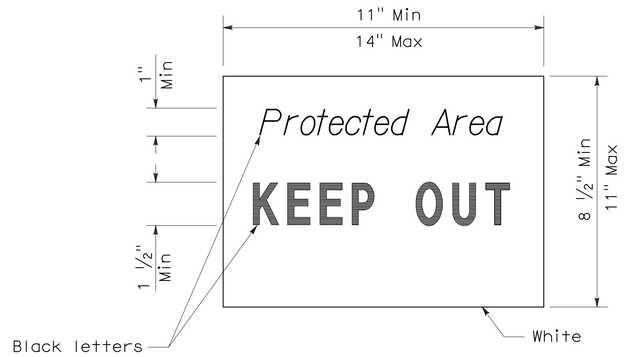


SIGN DETAIL

NOTE:

1. Temporary silt fence and temporary straw bale barrier shown for reference purposes only.

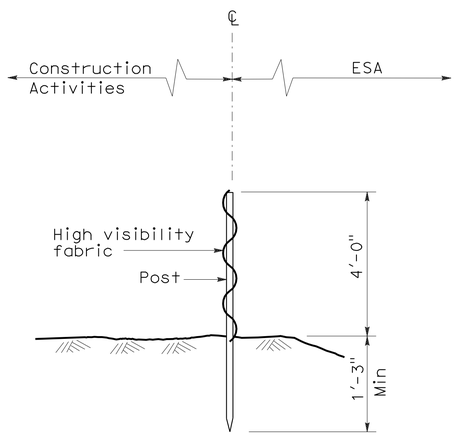


SECTION
TEMPORARY FENCE (TYPE ESA)

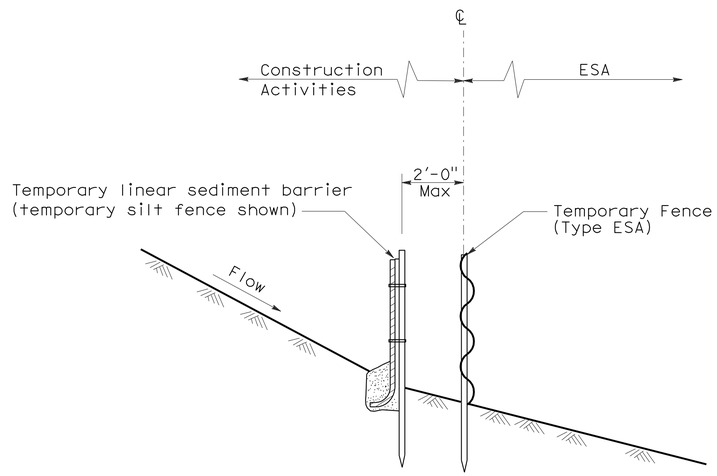


SECTION
PLACEMENT DETAIL
FOR TEMPORARY LINEAR SEDIMENT BARRIER
USED WITH TEMPORARY
FENCE (TYPE ESA)
(See Note 1 )

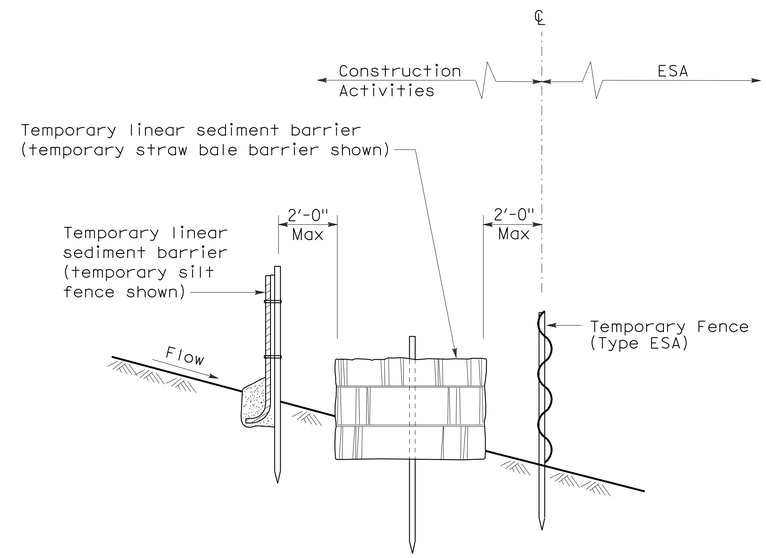


SECTION
PLACEMENT DETAIL
FOR TEMPORARY SILT FENCE
AND TEMPORARY STRAW BALE BARRIER
USED WITH TEMPORARY FENCE (TYPE ESA)
(See Note 1 )

STATE OF CALIFORNIA
DEPARTMENT OF TRANSPORTATION

# TEMPORARY WATER POLLUTION CONTROL DETAILS [TEMPORARY FENCE (TYPE ESA)]

NO SCALE

NSP T65 DATED APRIL 3, 2009 SUPPLEMENTS
THE STANDARD PLANS BOOK DATED MAY 2006.

**NEW STANDARD PLAN NSP T65**

**2006 NEW STANDARD PLAN NSP T65**