INDEX OF PLANS

SHEET No.	DESCRIPTION
1	TITLE AND LOCATION MAP
2-3	TYPICAL CROSS SECTIONS
4-9	CONSTRUCTIONS DETAILS
10	CONSTRUCTION AREA SIGNS
11-14	STAGE CONSTRUCTION
15-18	TRAFFIC HANDLING PLAN
19	TRAFFIC HANDLING PLAN AND DETOUR QUANTITIES
20-23	DETOUR PLANS
24	PAVEMENT DELINEATION PLAN, QUANTITIES AND DETAILS
25-27	SUMMARY OF QUANTITIES
28-38	ELECTRICAL PLANS
39-67	REVISED STANDARD PLANS

THE STANDARD PLANS LIST APPLICABLE TO THIS CONTRACT IS INCLUDED IN THE NOTICE TO BIDDERS AND SPECIAL PROVISIONS BOOK.

STATE OF CALIFORNIA
DEPARTMENT OF TRANSPORTATION

IM-SARRA-005-4(185)241E

Dist	COUNTY	ROUTE	POST MILES TOTAL PROJECT	SHEET No.	TOTAL SHEETS
06	Ker	5	36.1/54.2	1	67

PROJECT PLANS FOR CONSTRUCTION ON
STATE HIGHWAY
IN KERN COUNTY NEAR BAKERSFIELD FROM 0.1 MILE SOUTH OF BUENA VISTA CANAL ROAD OVERCROSSING TO 2.4 MILES SOUTH OF 7TH STANDARD ROAD OVERCROSSING

TO BE SUPPLEMENTED BY STANDARD PLANS DATED MAY 2006

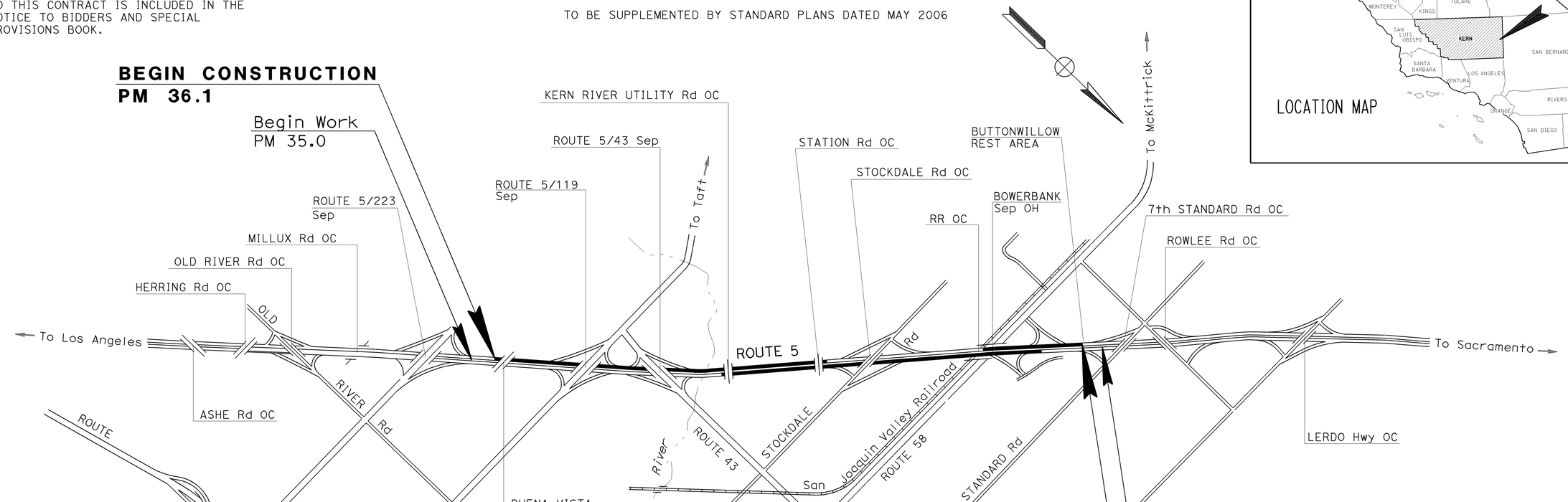

NO SCALE

THE CONTRACTOR SHALL POSSESS THE CLASS (OR CLASSES) OF LICENSE AS SPECIFIED IN THE "NOTICE TO BIDDERS."

PROJECT MANAGER: GARTH FERNANDEZ

DESIGN ENGINEER: RICK HELGESON

Edward S. Wojewoda — 05-17-10
PROJECT ENGINEER — DATE
REGISTERED CIVIL ENGINEER

May 17, 2010
PLANS APPROVAL DATE

REGISTERED PROFESSIONAL ENGINEER — Edward S. Wojewoda — No. 51240 — Exp. 09/30/11 — CIVIL — STATE OF CALIFORNIA

THE STATE OF CALIFORNIA OR ITS OFFICERS OR AGENTS SHALL NOT BE RESPONSIBLE FOR THE ACCURACY OR COMPLETENESS OF SCANNED COPIES OF THIS PLAN SHEET.

CONTRACT No.	06-0K8904
PROJECT ID	0600000274

LAST REVISION 05-17-10
DATE PLOTTED => 19-AUG-2010
TIME PLOTTED => 11:06

Dist	COUNTY	LOCATION CODE	POST MILES TOTAL PROJECT	SHEET No.	TOTAL SHEETS
06	Ker	5	36.1/54.2	2	67

REGISTERED CIVIL ENGINEER — DATE 05-11-10

Edward S. Wojewoda No. 51240 Exp. 09/30/11 CIVIL — REGISTERED PROFESSIONAL ENGINEER — STATE OF CALIFORNIA

05-17-10
PLANS APPROVAL DATE

THE STATE OF CALIFORNIA OR ITS OFFICERS OR AGENTS SHALL NOT BE RESPONSIBLE FOR THE ACCURACY OR COMPLETENESS OF SCANNED COPIES OF THIS PLAN SHEET.

NOTES:

1. DIMENSIONS OF THE PAVEMENT STRUCTURES (STRUCTURAL SECTIONS) ARE SUBJECT TO TOLERANCES SPECIFIED IN THE STANDARD SPECIFICATIONS.
2. SUPERELEVATION AS SHOWN OR AS DIRECTED BY THE ENGINEER.
3. FOR ACCURATE RIGHT OF WAY AND ACCESS DATA, CONTACT RIGHT OF WAY ENGINEERING AT THE DISTRICT OFFICE.
4. FOR LOCATIONS AND QUANTITIES OF HMA DIKE SEE SHEET Q-1
5. FOR LOCATIONS AND QUANTITIES OF REPLACE CONCRETE PANELS SEE SHEET Q-1. FOR DETAILS SEE C-1.
6. INSIDE SHOULDER GROUND IN RUMBLE STRIP TO BE INSTALLED AFTER LANE No. 2 IS OPEN TO TRAFFIC AFTER Temp RAILING (TYPE K) IS REMOVED.

DESIGN DESIGNATION (ROUTE 5)

2010	ADT	=	35,500	D	= 60%
2030	ADT	=	55,500	T	= 12%
	DHV	=	9,500	V	= 70 MPH

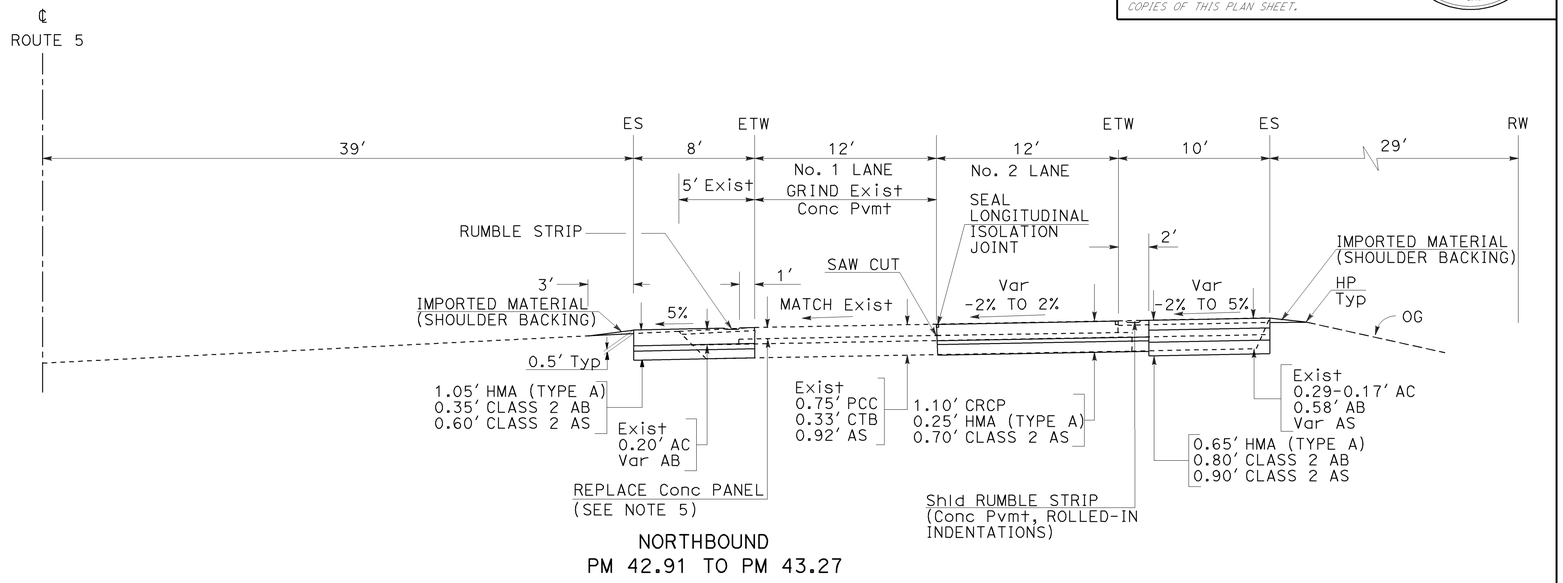

NORTHBOUND
PM 42.91 TO PM 43.27

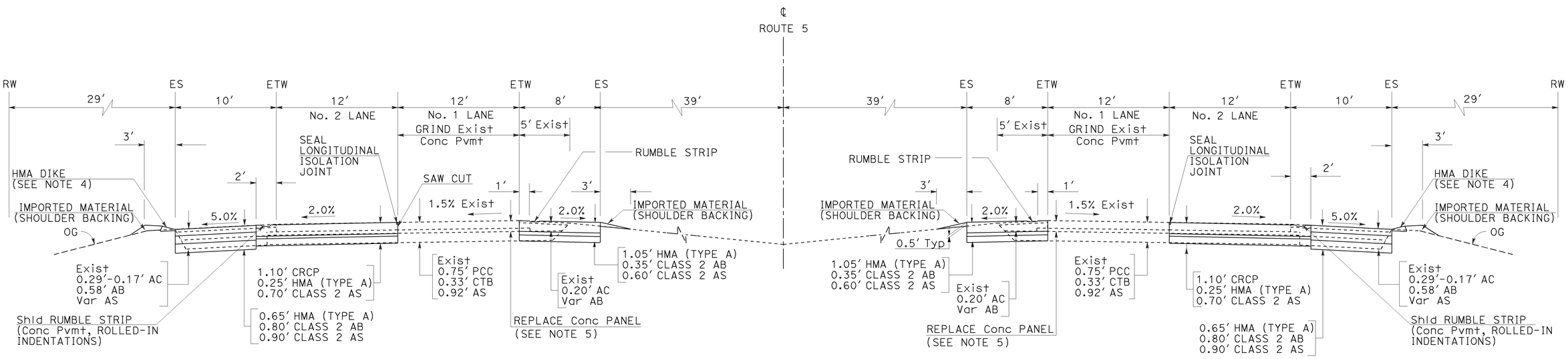

SOUTHBOUND
PM 36.06 TO PM 45.19
PM 52.08 TO PM 54.20

NORTHBOUND
PM 43.27 TO PM 52.80

ROUTE 5

TYPICAL CROSS SECTIONS

NO SCALE

X-1

EXISTING UTILITY FACILITIES HAVE NOT BEEN SHOWN ON THE PLANS

REVISED BY | DATE REVISED
EDWARD WOJEWODA | KEVIN KEISTER
CALCULATED-DESIGNED BY | CHECKED BY
FUNCTIONAL SUPERVISOR: RICK HELGESON
STATE OF CALIFORNIA - DEPARTMENT OF TRANSPORTATION
DESIGN

LAST REVISION 05-11-10 | DATE PLOTTED => 17-AUG-2010 | TIME PLOTTED => 09:05

BORDER LAST REVISED 4/11/2008 | RELATIVE BORDER SCALE IS IN INCHES 0 1 2 3 | USERNAME => s115755 | DGN FILE => 60k890ca001.dgn | CU 06263 | EA 0K8901

NOTE:

1. EXISTING UTILITIES FACILITIES HAVE NOT BEEN SHOWN ON THE PLANS

Dist	COUNTY	LOCATION CODE	POST MILES TOTAL PROJECT	SHEET No.	TOTAL SHEETS
06	Ker	5	36.1/54.2	3	67

05-11-10
REGISTERED CIVIL ENGINEER DATE

Edward S. Wojewoda
No. 51240
Exp. 09/30/11
CIVIL
REGISTERED PROFESSIONAL ENGINEER
STATE OF CALIFORNIA

05-17-10
PLANS APPROVAL DATE

THE STATE OF CALIFORNIA OR ITS OFFICERS OR AGENTS SHALL NOT BE RESPONSIBLE FOR THE ACCURACY OR COMPLETENESS OF SCANNED COPIES OF THIS PLAN SHEET.

UTILITY LOCATION

LOCATION PM	UTILITY	OWNERSHIP	DEPTH FROM OG	CASING	REMARKS
33.38 TO 33.41	4" STEEL PIPE WITH TELEPHONE COAXIAL CABLE	PACIFIC TELEPHONE AND TELEGRAPH Co.			TRANSVERSE CROSSING Rte 5
38.90	6" OIL PIPE	UNION OIL Co. OF CALIFORNIA			TRANSVERSE CROSSING Rte 5
39.61	6⅝" CRUDE OIL PIPELINE (10¾" STEEL CASING)	SHELL OIL COMPANY	48"	10"	TRANSVERSE CROSSING Rte 5
40.14	12", 8" & 6" OIL PIPES AND 8" & 6" WATER PIPES	PACIFIC PIPELINE SYSTEM, LLC	30"	10.25"	TRANSVERSE CROSSING Rte 5
40.84	34" HP GAS LINE (42" STEEL CASING)	ARB, INC		42"	TRANSVERSE CROSSING Rte 5
41.42	2" PLASTIC CONDUIT (FIBER CABLE)	TIME WARNER CABLE			TRANSVERSE CROSSING Rte 5
41.55	5" AND 6" OIL PIPES	UNION OIL Co. OF CALIFORNIA		10" AND 12"	TRANSVERSE CROSSING Rte 5
41.62	12", 8" & 6" OIL PIPES AND 8" & 6" WATER PIPES	PACIFIC PIPELINE SYSTEM, LLC		12¾" AND 16"	TRANSVERSE CROSSING Rte 5
42.79	4" AND 6" GAS (24" STEEL CASING)	EOTT ENERGY OPERATING PARTNERSHIP		24"	TRANSVERSE CROSSING Rte 5
42.94 TO 42.97	4" STELL PIPE WITH TELEPHONE COAXIAL CABLE	PACIFIC TELEPHONE AND TELEGRAPH Co.			TRANSVERSE CROSSING Rte 5
43.03	SERVICE GAS LINE				TRANSVERSE CROSSING Rte 5
43.18	12", 8" & 6" OIL PIPES AND 8" & 6" WATER PIPES	PACIFIC GAS AND ELECTRIC COMPANY			TRANSVERSE CROSSING Rte 5
44.64	5" AND 6" OIL PIPES	UNION OIL Co. OF CALIFORNIA			TRANSVERSE CROSSING Rte 5
45.10 TO 45.14	4" STEEL PIPE WITH TELEPHONE COAXIAL CABLE	PACIFIC TELEPHONE AND TELEGRAPH Co.			TRANSVERSE CROSSING Rte 5
45.13	96" RCP FOR IRRIGATION WATER	KERN COUNTY WATER AGENCY	149"		TRANSVERSE CROSSING Rte 5
45.19	12" OIL PIPE	RIO-BRAVO-ESTERO-STANDARD OIL Co.		18"	TRANSVERSE CROSSING Rte 5
47.43 TO 47.45	4" STEEL PIPE WITH TELEPHONE COAXIAL CABLE	PACIFIC TELEPHONE AND TELEGRAPH Co.			TRANSVERSE CROSSING Rte 5
52.25	UNDERGROUND ELECTRICAL (4" STEEL) CONDUIT	PG&E	36"	4"	TRANSVERSE CROSSING Rte 5
52.34	UNDERGROUND ELECTRICAL (4" STEEL) CONDUIT	PG&E	30"	4"	TRANSVERSE CROSSING Rte 5
52.35 TO 52.39	COMMUNICATION CABLE	CONTINENTAL TELEPHONE COMPONY			TRANSVERSE CROSSING Rte 5
53.20	2" GAS LINE	ROYALE ENERGY, INC	72"	4"	TRANSVERSE CROSSING Rte 5

EXISTING UTILITY FACILITIES HAVE NOT BEEN SHOWN ON THE PLANS

TYPICAL CROSS SECTIONS

X-2

REVISED BY | DATE REVISED
EDWARD WOJEWODA | KEVIN KEISTER
CALCULATED-DESIGNED BY | CHECKED BY
FUNCTIONAL SUPERVISOR: RICK HELGESON
STATE OF CALIFORNIA - DEPARTMENT OF TRANSPORTATION
DESIGN

LAST REVISION | DATE PLOTTED => 17-AUG-2010
05-11-10 | TIME PLOTTED => 09:05

Dist	COUNTY	LOCATION CODE	POST MILES TOTAL PROJECT	SHEET No.	TOTAL SHEETS
06	Ker	5	36.1/54.2	4	67

REGISTERED CIVIL ENGINEER — 05-11-10 DATE

05-17-10
PLANS APPROVAL DATE

REGISTERED PROFESSIONAL ENGINEER — Edward S. Wojewoda — No. 51240 — Exp. 09/30/11 — CIVIL — STATE OF CALIFORNIA

THE STATE OF CALIFORNIA OR ITS OFFICERS OR AGENTS SHALL NOT BE RESPONSIBLE FOR THE ACCURACY OR COMPLETENESS OF SCANNED COPIES OF THIS PLAN SHEET.

NOTES

1. INSIDE SHOULDER RUMBLE STRIP TO BE INSTALLED AFTER LANE No. 2 IS OPEN TO TRAFFIC AFTER K-RAIL IS REMOVED
2. SEE QUANTITY SHEETS FOR LOCATIONS AND QUANTITIES OF REPLACE CONCRETE PAVEMENT PANELS

ABBREVIATIONS

RSC - RAPID STRENGTH CONCRETE

PBM - PERMEABLE BASE MATERIAL

LEGEND

DIRECTION OF TRAFFIC

SHOULDER RUMBLE STRIP (PCC, ROLLED-IN INDENTATIONS)

RUMBLE STRIP

0.75′ REPLACE CONCRETE PAVEMENT

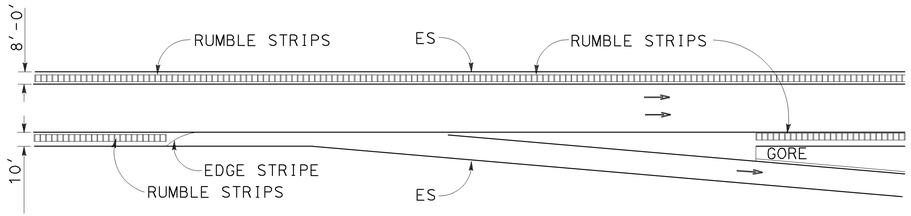

TYPICAL OFF RAMP RUMBLE STRIP

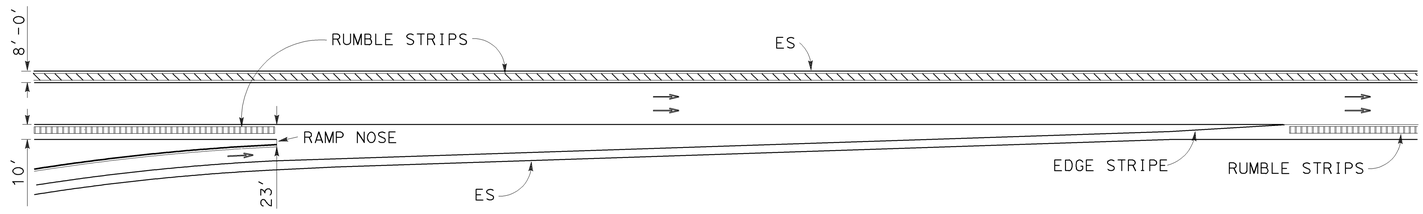

TYPICAL ON RAMP RUMBLE STRIP

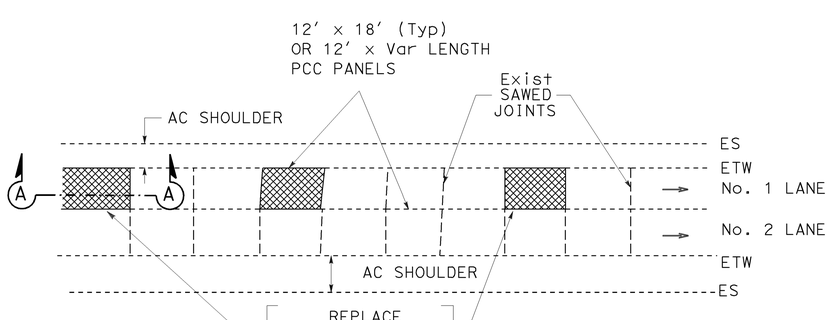

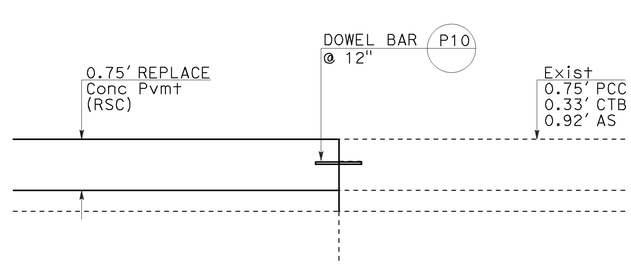

SECTION A-A

TYPICAL REPLACE CONCRETE PAVEMENT (RSC)

(SEE SHEET Q-1 FOR LOCATIONS AND QUANTITIES)

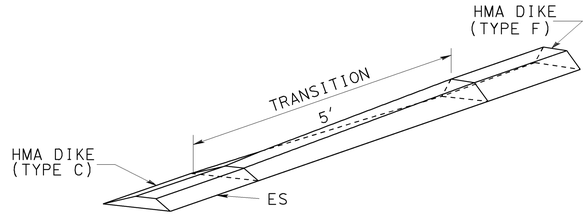

HMA DIKE TRANSITION

EXISTING UTILITY FACILITIES HAVE NOT BEEN SHOWN ON THE PLANS

CONSTRUCTION DETAILS

NO SCALE

C-1

STATE OF CALIFORNIA - DEPARTMENT OF TRANSPORTATION — DESIGN

FUNCTIONAL SUPERVISOR: RICK HELGESON

CALCULATED-DESIGNED BY: EDWARD WOJEWODA

CHECKED BY: KEVIN KEISTER

REVISED BY | DATE REVISED

LAST REVISION | DATE PLOTTED => 17-AUG-2010 | TIME PLOTTED => 09:05 | 05-11-10

BORDER LAST REVISED 4/11/2008

RELATIVE BORDER SCALE IS IN INCHES 0 1 2 3

USERNAME => s115755
DGN FILE => 60k890ga001.dgn

CU 06263

EA 0K8901

Dist	COUNTY	LOCATION CODE	POST MILES TOTAL PROJECT	SHEET No.	TOTAL SHEETS
06	Ker	5	36.1/54.2	5	67

Edward S. Wojewoda 05-11-10
REGISTERED CIVIL ENGINEER DATE

05-17-10
PLANS APPROVAL DATE

REGISTERED PROFESSIONAL ENGINEER — Edward S. Wojewoda — No. 51240 — Exp. 09/30/11 — CIVIL — STATE OF CALIFORNIA

THE STATE OF CALIFORNIA OR ITS OFFICERS OR AGENTS SHALL NOT BE RESPONSIBLE FOR THE ACCURACY OR COMPLETENESS OF SCANNED COPIES OF THIS PLAN SHEET.

LEGEND

DIRECTION OF TRAFFIC

REPLACE SHOULDER HMA

REPLACE CONCRETE PAVEMENT (RCP)

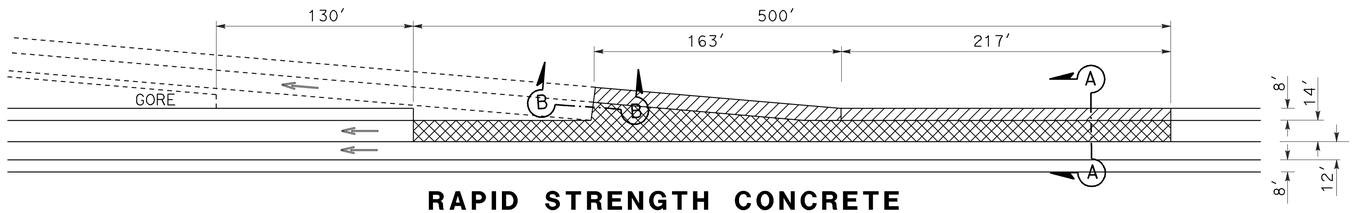

RAPID STRENGTH CONCRETE AT EXIT RAMP

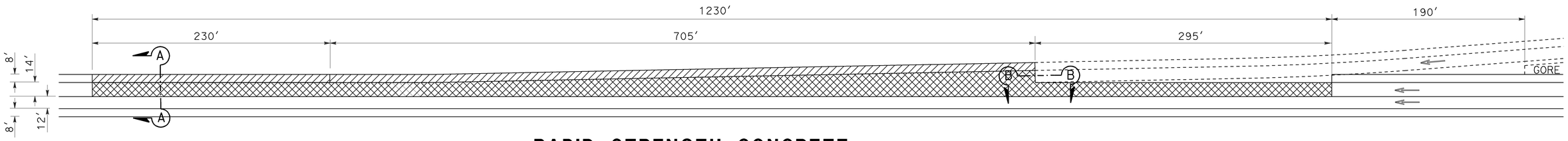

RAPID STRENGTH CONCRETE AT ENTRANCE RAMP

EXISTING RAMP STRUCTURAL SECTIONS

LINE DESIGNATION	TRAVELED WAY PAVEMENT THICKNESS			
	AC	AB	CTB	AS
ROUTE 119 SB EXIT	0.29′	0.83′	–	0.58′
STOCKDALE Rd NB EXIT	0.29′	0.83′	–	0.58′
STOCKDALE Rd NB ENTRANCE	0.25′	0.75′	–	0.50′
ROUTE 58 SB EXIT	0.25′	–	0.67′	0.58′
ROUTE 58 SB ENTRANCE	0.25′	0.75′	–	0.50′
ROUTE 58 NB EXIT	0.25′	–	0.67′	0.58′
ROUTE 58 NB ENTRANCE	0.25′	0.75′	–	0.50′

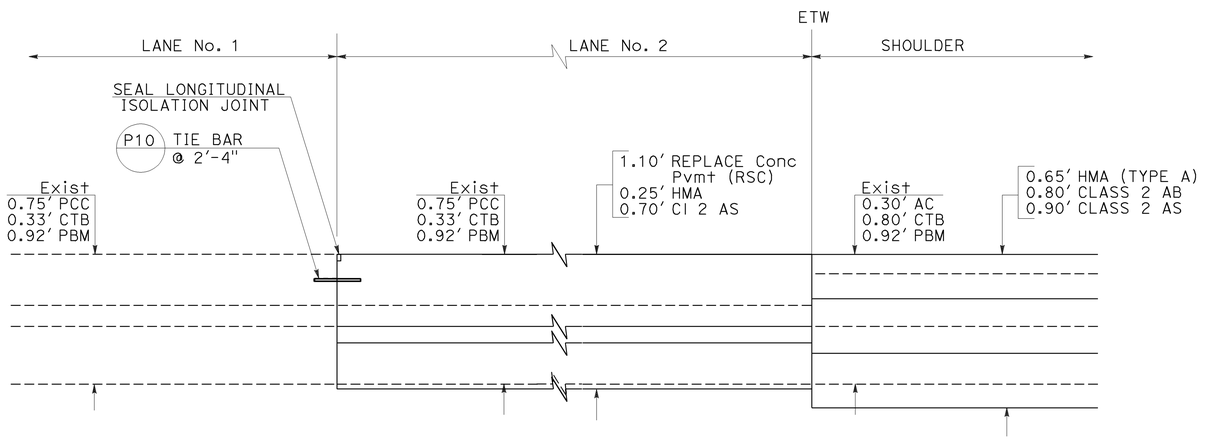

SECTION A-A

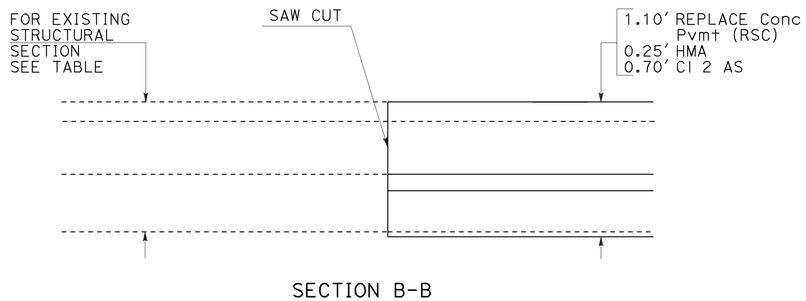

SECTION B-B

CONSTRUCTION DETAILS

NO SCALE

C-2

EXISTING UTILITY FACILITIES HAVE NOT BEEN SHOWN ON THE PLANS

REVISED BY | DATE REVISED
EDWARD WOJEWODA | KEVIN KEISTER
CALCULATED-DESIGNED BY | CHECKED BY
FUNCTIONAL SUPERVISOR: RICK HELGESON
STATE OF CALIFORNIA - DEPARTMENT OF TRANSPORTATION
DESIGN
Caltrans

LAST REVISION | DATE PLOTTED => 17-AUG-2010
05-11-10 | TIME PLOTTED => 09:05

Dist	COUNTY	LOCATION CODE	POST MILES TOTAL PROJECT	SHEET No.	TOTAL SHEETS
06	Ker	5	36.1/54.2	6	67

REGISTERED CIVIL ENGINEER — 05-11-10 DATE

Edward S. Wojewoda No. 51240 Exp. 09/30/11 CIVIL — REGISTERED PROFESSIONAL ENGINEER — STATE OF CALIFORNIA

05-17-10
PLANS APPROVAL DATE

THE STATE OF CALIFORNIA OR ITS OFFICERS OR AGENTS SHALL NOT BE RESPONSIBLE FOR THE ACCURACY OR COMPLETENESS OF SCANNED COPIES OF THIS PLAN SHEET.

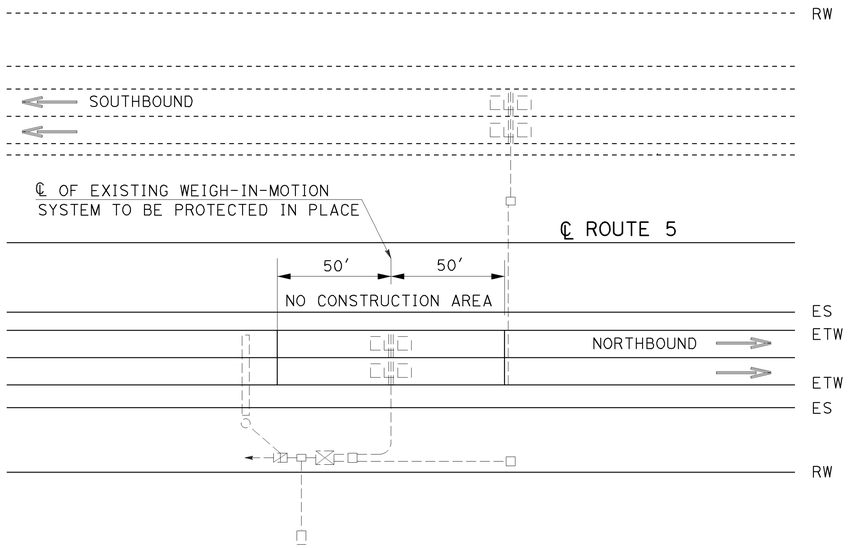

EXISTING HIGH SPEED WEIGH-IN-MOTION SYSTEM
PM 48.7

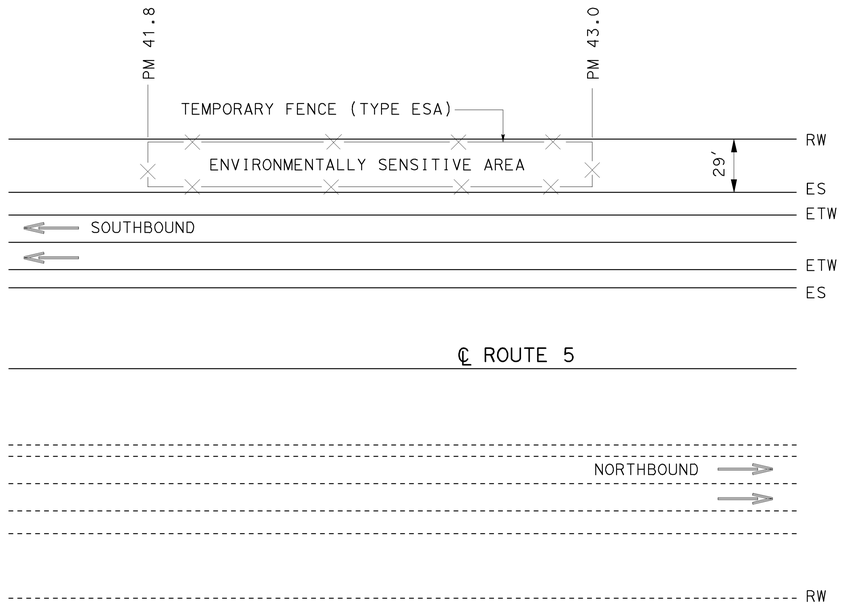

ENVIRONMENTALLY SENSITIVE AREA
PM 41.8 TO PM 43.0 SOUTHBOUND

EXISTING CROSS CULVERT REINFORCED CONCRETE PIPE LOCATION *

LOCATION	PIPE SIZE	LENGTH (N)	LOCATION	PIPE SIZE	LENGTH (N)	LOCATION	PIPE SIZE	LENGTH (N)	LOCATION	PIPE SIZE	LENGTH (N)
PM	INCH	LF	PM	INCH	LF	PM	INCH	LF	PM	INCH	LF
36.20 (Lt & Rt)	24"	168	41.49 (Lt & Rt)	24"	190	46.22 (Lt & Rt)	24"	182	50.60 (Lt & Rt)	24"	192
36.72 (Lt & Rt)	24"	174	41.64 (Lt & Rt)	24"	196	46.56 (Lt & Rt)	24"	184	50.77 (Lt & Rt)	24"	158
37.30 (Lt & Rt)	24"	168	41.98 (Lt & Rt)	30"	854	46.75 (Lt & RT)	24"	182	51.08 (Lt & Rt)	24"	158
38.22 (Lt & Rt)	24"	168	43.23 (Lt & Rt)	24"	198	46.85 (Lt & Rt)	48"	252	51.33 (Lt & Rt)	24"	160
38.75 (Lt & Rt)	24"	174	43.42 (Lt & Rt)	24"	186	47.13 (Lt & Rt)	24"	176	51.57 (Lt & Rt)	24"	162
39.82 (Lt & Rt)	30"	216	43.57 (Lt & Rt)	24"	190	47.41 (Lt & Rt)	24"	320	51.75 (Lt & Rt)	24"	184
39.13 (Lt & Rt)	24"	174	43.80 (Lt & Rt)	24"	200	47.83 (Lt & Rt)	24"	168	52.23 (Lt & Rt)	24"	42
39.24 (Lt & Rt)	24"	168	43.97 (Lt & Rt)	24"	276	47.87 (Lt & Rt)	54"	204	52.40 (Lt & Rt)	24"	214
39.43 (Lt & Rt)	24"	164	44.12 (Lt & Rt)	24"	190	48.10 (Lt & Rt)	24"	158	52.53 (Lt & Rt)	24"	184
39.65 (Lt & Rt)	30"	166	44.31 (Lt & Rt)	24"	200	48.23 (Lt & Rt)	24"	186	52.53 (Lt & Rt)	24"	46
39.80 (Lt & Rt)	24"	162	44.43 (Lt & Rt)	60"	396	48.36 (Lt & Rt)	24"	160	52.74 (Lt & Rt)	24"	182
39.99 (Lt & Rt)	24"	164	44.65 (Lt & Rt)	24"	178	48.71 (LT & RT)	30"	162	52.91 (Lt & Rt)	24"	192
40.14 (Lt & Rt)	24"	162	44.88 (Lt & Rt)	24"	184	48.88 (Lt & Rt)	24"	184	53.02 (Lt & Rt)	24"	186
40.26 (Lt & Rt)	24"	186	45.04 (Lt & Rt)	24"	158	48.97 (Lt & Rt)	24"	164	53.18 (Lt & Rt)	24"	184
40.41 (Lt & Rt)	24"	254	45.19 (Lt & Rt)	54"	372	49.39 (Lt & Rt)	24"	162	53.33 (Lt & Rt)	24"	188
40.62 (Lt & Rt)	24"	188	45.38 (Lt & Rt)	24"	169	49.46 (Lt & Rt)	24"	188	53.55 (Lt & Rt)	24"	160
40.90 (Lt & Rt)	24"	190	45.51 (Lt & Rt)	24"	184	49.71 (Lt & Rt)	30"	160	53.84 (Lt & Rt)	24"	184
41.10 (Lt & Rt)	24"	256	45.79 (Lt & Rt)	24"	160	50.07 (Lt & Rt)	24"	160	54.20 (Lt & Rt)	24"	184
41.23 (Lt & Rt)	24"	228	46.00 (Lt & Rt)	24"	190	50.42 (Lt & Rt)	24"	164			

(N) NOT A SEPARATE PAY ITEM, FOR INFORMATION ONLY

* EXISTING DI LOCATED AT MEDIAN SHALL BE PROTECTED, SEE "TEMPORARY DI PROTECTION" REQUIREMENT

EXISTING UTILITY FACILITIES HAVE NOT BEEN SHOWN ON THE PLANS

NOTES:

1. LOCATION OF DRAINAGE FACILITIES ARE APPROXIMATE AND SHALL BE VERIFIED BY THE CONTRACTOR PRIOR TO CONSTRUCTION
2. ALL EXISTING REINFORCED CONCRETE PIPE SHALL BE PROTECTED IN PLACE UNLESS OTHERWISE NOTED OR AS DIRECTED BY THE ENGINEER
3. FOR ACCURATE RIGHT OF WAY, CONTACT RIGHT OF WAY ENGINEERING AT THE DISTRICT OFFICE.

CONSTRUCTION DETAILS

NO SCALE

C-3

CALCULATED-DESIGNED BY: EDWARD WOJEWODA
CHECKED BY: KEVIN KEISTER
FUNCTIONAL SUPERVISOR: RICK HELGESON
STATE OF CALIFORNIA - DEPARTMENT OF TRANSPORTATION — DESIGN
Caltrans®

REVISED BY | DATE REVISED

LAST REVISION 05-11-10
DATE PLOTTED => 17-AUG-2010
TIME PLOTTED => 09:05

BORDER LAST REVISED 4/11/2008

RELATIVE BORDER SCALE IS IN INCHES 0 1 2 3

USERNAME => s115755
DGN FILE => 60k890ga003.dgn

CU 06263

EA 0K8901

Dist	COUNTY	LOCATION CODE	POST MILES TOTAL PROJECT	SHEET No.	TOTAL SHEETS
06	Ker	5	36.1/54.2	7	67

REGISTERED CIVIL ENGINEER — 05-11-10 DATE

Edward S. Wojewoda No. 51240 Exp. 09/30/11 CIVIL — REGISTERED PROFESSIONAL ENGINEER — STATE OF CALIFORNIA

05-17-10
PLANS APPROVAL DATE

THE STATE OF CALIFORNIA OR ITS OFFICERS OR AGENTS SHALL NOT BE RESPONSIBLE FOR THE ACCURACY OR COMPLETENESS OF SCANNED COPIES OF THIS PLAN SHEET.

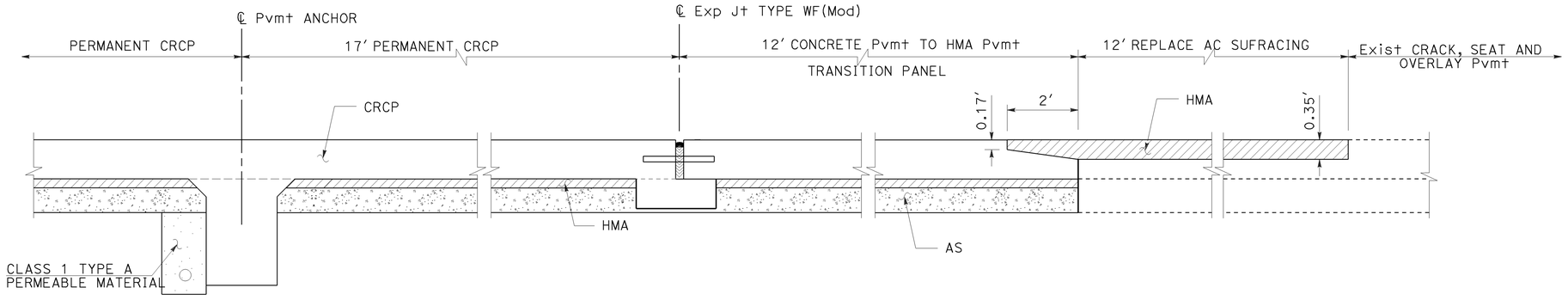

SECTION A-A

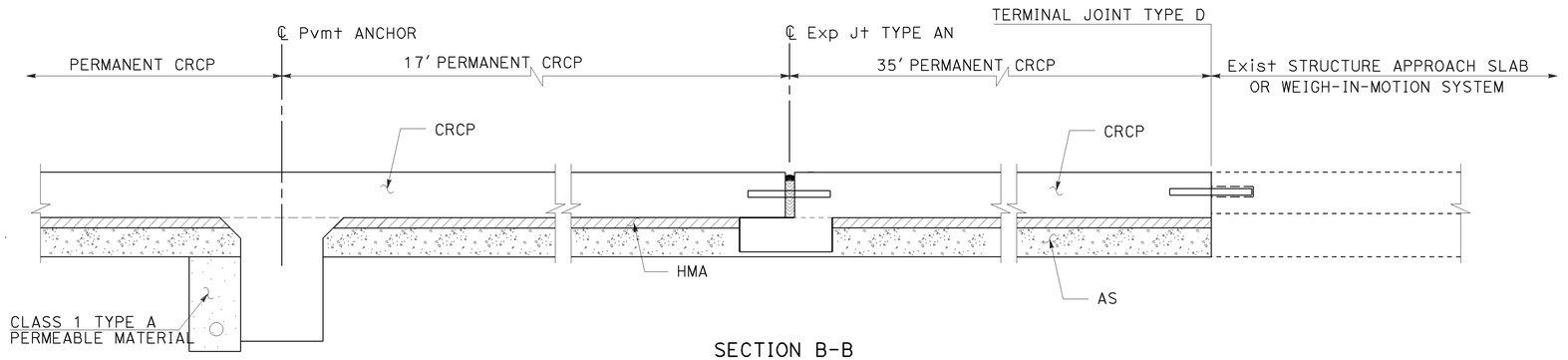

SECTION B-B

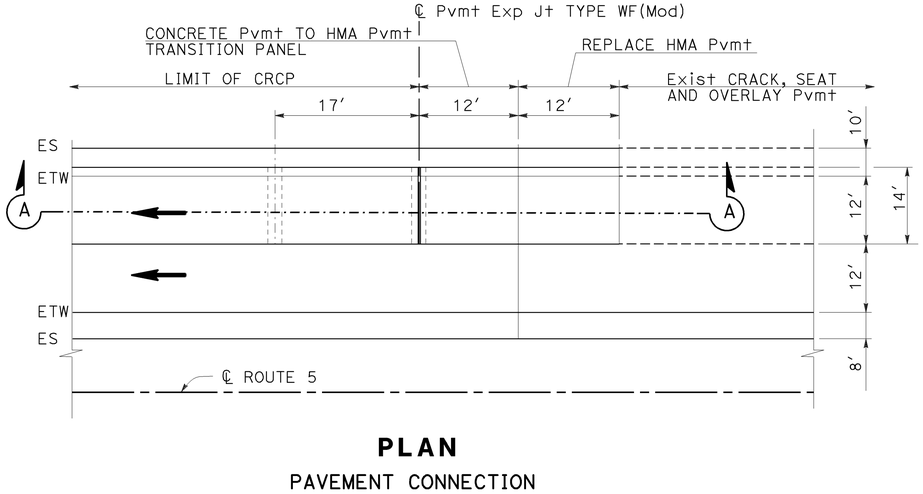

PLAN

PAVEMENT CONNECTION
BETWEEN CRCP AND EXISTING
CRACK, SEAT, AND ASPHALT OVERLAY
PAVEMENTS

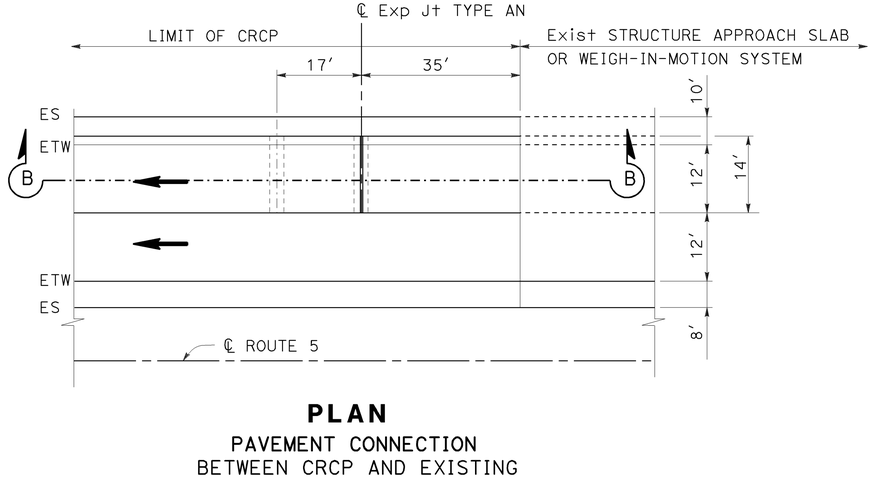

PLAN

PAVEMENT CONNECTION
BETWEEN CRCP AND EXISTING
STRUCTURE APPROACH SLAB
OR WEIGH-IN-MOTION

NOTES

1. FOR DETAILS NOT SHOWN SEE Std PLANS P30, NSP P31A, NSP P31B, NSP P32A, AND NSP P32B.

EXISTING UTILITY FACILITIES HAVE NOT BEEN SHOWN ON THE PLANS

CONSTRUCTION DETAILS

NO SCALE

C-4

REVISED BY | DATE REVISED
EDWARD WOJEWODA | KEVIN KEISTER
CALCULATED-DESIGNED BY | CHECKED BY
FUNCTIONAL SUPERVISOR: RICK HELGESON

STATE OF CALIFORNIA - DEPARTMENT OF TRANSPORTATION
DESIGN

LAST REVISION | DATE PLOTTED => 17-AUG-2010
05-11-10 | TIME PLOTTED => 09:05

BORDER LAST REVISED 4/11/2008

RELATIVE BORDER SCALE IS IN INCHES 0 1 2 3

USERNAME => s115755
DGN FILE => 60k890ga004.dgn

CU 06263

EA 0K8901

Dist	COUNTY	LOCATION CODE	POST MILES TOTAL PROJECT	SHEET No.	TOTAL SHEETS
06	Ker	5	36.1/54.2	8	67

REGISTERED CIVIL ENGINEER — 05-11-10 DATE

05-17-10
PLANS APPROVAL DATE

Edward S. Wojewoda No. 51240 Exp. 09/30/11 CIVIL — REGISTERED PROFESSIONAL ENGINEER — STATE OF CALIFORNIA

THE STATE OF CALIFORNIA OR ITS OFFICERS OR AGENTS SHALL NOT BE RESPONSIBLE FOR THE ACCURACY OR COMPLETENESS OF SCANNED COPIES OF THIS PLAN SHEET.

NOTE: 1. INSTALLATION TO COMPLY WITH MANUFACTURER'S INSTRUCTIONS. FOR ADDITIONAL INFORMATION AND ALL ACCESSORIES FOR SCI-100GM SYSTEM, SEE MANUFACTURER'S DETAILS. TO GET TO THE MANUFACTURE'S WEB SITE, GO TO : HTTP://WWW.WORKAREAPRODUCTION.COM

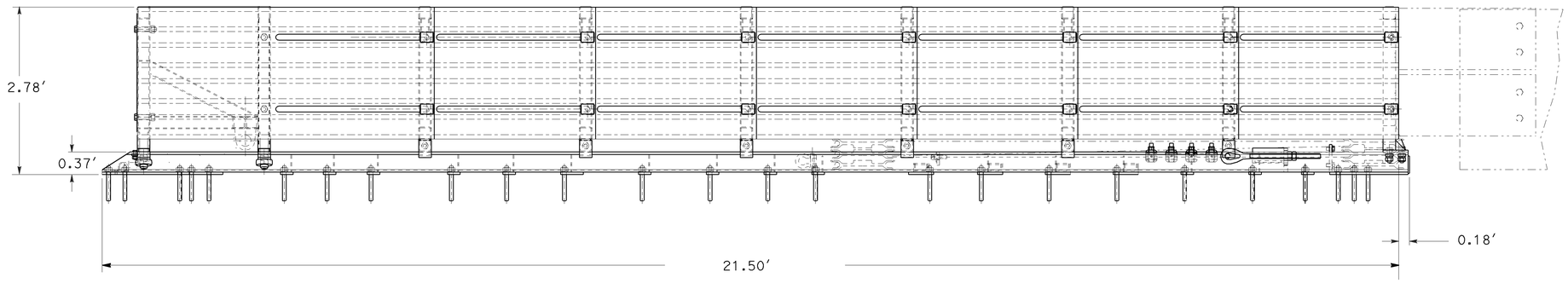

ELEVATION

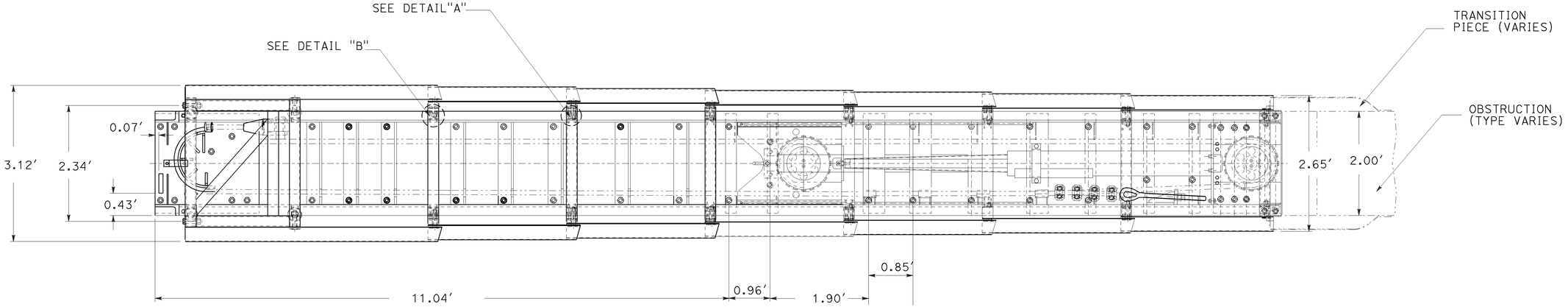

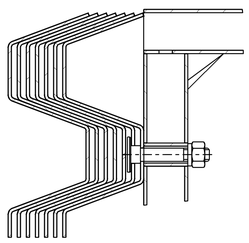

DETAIL "A"

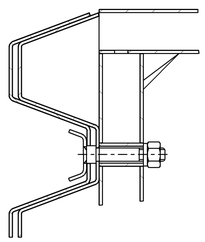

DETAIL "B"

PLAN VIEW

CRASH CUSHION SYSTEM (TYPE SMART) MODEL SCI-100GM

CONSTRUCTION DETAILS

NO SCALE

C-5

EXISTING UTILITY FACILITIES HAVE NOT BEEN SHOWN ON THE PLANS

STATE OF CALIFORNIA - DEPARTMENT OF TRANSPORTATION
DESIGN
Caltrans®

FUNCTIONAL SUPERVISOR: RICK HELGESON

CALCULATED-DESIGNED BY: EDWARD WOJEWODA

CHECKED BY: KEVIN KEISTER

REVISED BY | DATE REVISED

LAST REVISION | DATE PLOTTED => 17-AUG-2010
05-11-10 | TIME PLOTTED => 09:05

BORDER LAST REVISED 4/11/2008

RELATIVE BORDER SCALE IS IN INCHES 0 1 2 3

USERNAME => s115755
DGN FILE => 60k890ga005.dgn

CU 06263

EA 0K8901

Dist	COUNTY	LOCATION CODE	POST MILES TOTAL PROJECT	SHEET No.	TOTAL SHEETS
06	Ker	5	36.1/54.2	9	67

REGISTERED CIVIL ENGINEER — 05-11-10 DATE

Edward S. Wojewoda No. 51240 Exp. 09/30/11 CIVIL — REGISTERED PROFESSIONAL ENGINEER — STATE OF CALIFORNIA

05-17-10
PLANS APPROVAL DATE

THE STATE OF CALIFORNIA OR ITS OFFICERS OR AGENTS SHALL NOT BE RESPONSIBLE FOR THE ACCURACY OR COMPLETENESS OF SCANNED COPIES OF THIS PLAN SHEET.

NOTE:

1. INSTALLATION TO COMPLY WITH MANUFACTURER'S INSTRUCTIONS. FOR ADDITIONAL INFORMATION AND ALL ACCESSORIES FOR TRACC SYSTEM, SEE MANUFACTURER'S DETAILS. TO GET TO THE MANUFACTURE'S WEB SITE, GO TO : HTTP://BARRIERSYSTEMINC.COM/.

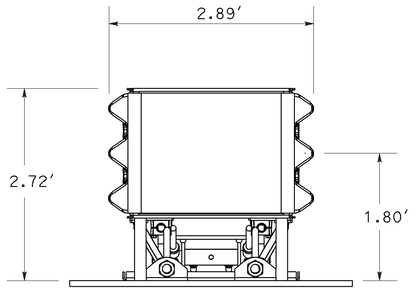

SECTION A-A

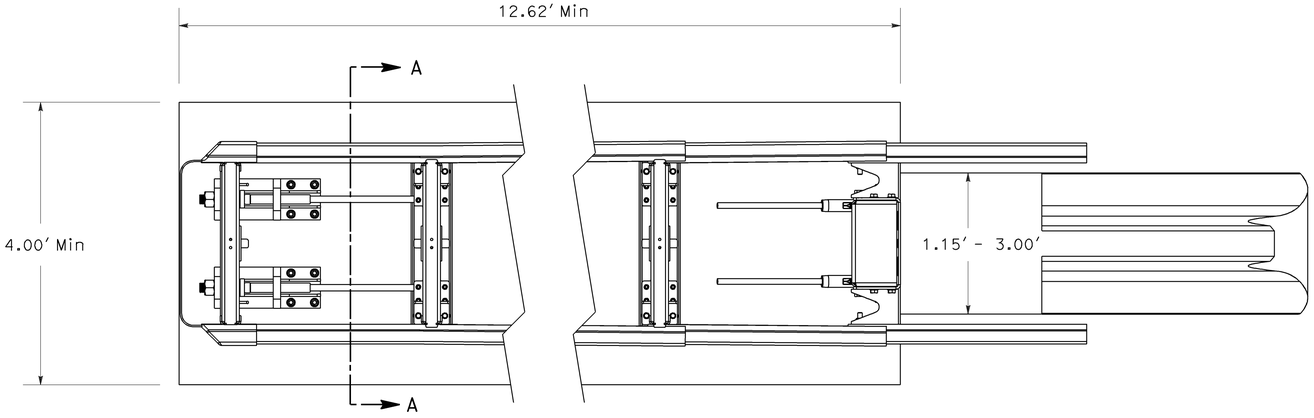

PLAN VIEW

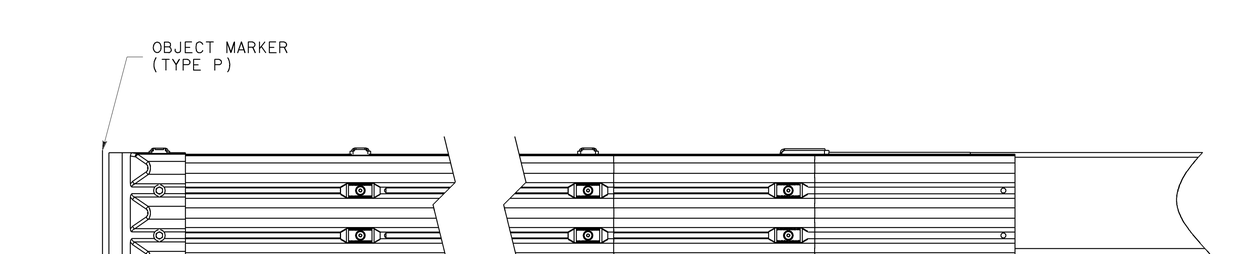

ELEVATION

CRASH CUSHION (TYPE TAU-II) MODEL 30T100 CBC

EXISTING UTILITY FACILITIES HAVE NOT BEEN SHOWN ON THE PLANS

CONSTRUCTION DETAILS

NO SCALE

C-6

REVISED BY | DATE REVISED
EDWARD WOJEWODA | KEVIN KEISTER
CALCULATED-DESIGNED BY | CHECKED BY
FUNCTIONAL SUPERVISOR: RICK HELGESON
STATE OF CALIFORNIA - DEPARTMENT OF TRANSPORTATION
DESIGN
Caltrans

LAST REVISION 05-11-10 | DATE PLOTTED => 17-AUG-2010 | TIME PLOTTED => 09:05

BORDER LAST REVISED 4/11/2008 | RELATIVE BORDER SCALE IS IN INCHES 0 1 2 3 | USERNAME => s115755 | DGN FILE => 60k890ga006.dgn | CU 06263 | EA 0K8901

Dist	COUNTY	ROUTE	POST MILES TOTAL PROJECT	SHEET No.	TOTAL SHEETS
06	Ker	5	36.1/54.2	10	67

REGISTERED CIVIL ENGINEER — 03-29-10 DATE

05-17-10
PLANS APPROVAL DATE

REGISTERED PROFESSIONAL ENGINEER — ANDREY CHEVYCHALOV — No. 68378 — Exp. 9-30-11 — CIVIL — STATE OF CALIFORNIA

THE STATE OF CALIFORNIA OR ITS OFFICERS OR AGENTS SHALL NOT BE RESPONSIBLE FOR THE ACCURACY OR COMPLETENESS OF SCANNED COPIES OF THIS PLAN SHEET.

STATIONARY MOUNTED CONSTRUCTION AREA SIGNS

SIGN No.	SIGN CODE	PANEL SIZE	SIGN MESSAGE	No. OF POSTS	POST SIZE	No. OF SIGNS
A	W20-1	48" x 48"	ROAD WORK AHEAD	1	6" x 6"	6
B	W20-1	36" x 36"	ROAD WORK AHEAD	1	4" x 6"	6
C	G20-2	48" x 24"	END ROAD WORK	1	4" x 6"	2
D	C11(CA)	90" x 48"	ROAD CONSTRUCTION NEXT 20 MILES	2	6" x 6"	1
E	C11(CA)	90" x 48"	ROAD CONSTRUCTION NEXT 10 MILES	2	6" x 6"	1
F	C40(CA)	144" x 60"	TRAFFIC FINES DOUBLED IN CONSTRUCTION ZONES	2	6" x 8"	2

NOTES:
1. LOCATIONS OF CONSTRUCTION AREA SIGNS SHOWN ARE APPROXIMATE EXACT LOCATIONS TO BE DETERMINED BY THE ENGINEER.
2. FOR ADDITIONAL CONSTRUCTION AREA SIGNS, REFER TO TRAFFIC HANDLING PLANS.

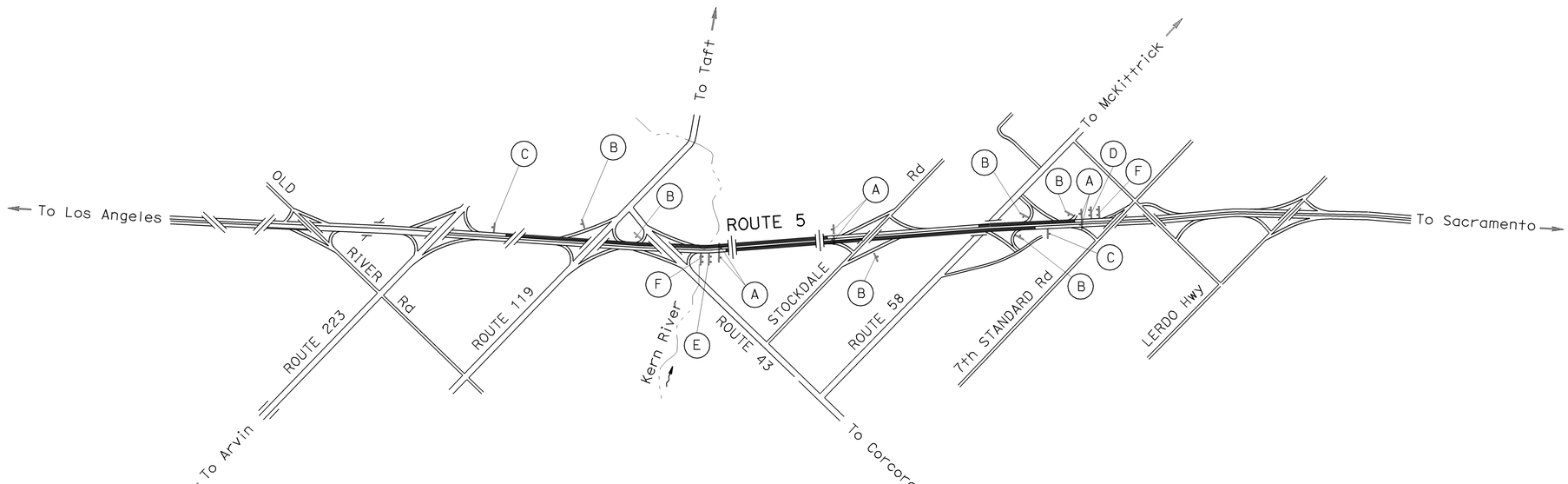

THIS PLAN ACCURATE FOR CONSTRUCTION AREA SIGNS WORK ONLY.

CONSTRUCTION AREA SIGNS

NO SCALE

CS-1

STATE OF CALIFORNIA - DEPARTMENT OF TRANSPORTATION
TRAFFIC DESIGN
FUNCTIONAL SUPERVISOR: MOHAMMED OATAMI
CALCULATED-DESIGNED BY: ANDREY CHEVYCHALOV
CHECKED BY: ANDREY CHEVYCHALOV
REVISED BY
DATE REVISED

LAST REVISION | DATE PLOTTED => 17-AUG-2010 | 03-29-10 | TIME PLOTTED => 09:05

BORDER LAST REVISED 4/11/2008 | RELATIVE BORDER SCALE IS IN INCHES 0 1 2 3 | USERNAME => s115755 | DGN FILE => 60k8901a001.dgn | CU 06386 | EA 0K8901

Dist	COUNTY	ROUTE	POST MILES TOTAL PROJECT	SHEET No.	TOTAL SHEETS
06	Ker	5	36.1/54.2	11	67

REGISTERED CIVIL ENGINEER — 05-11-10 DATE

05-17-10
PLANS APPROVAL DATE

Edward S. Wojewoda No. 51240 Exp 09/30/11 CIVIL — REGISTERED PROFESSIONAL ENGINEER — STATE OF CALIFORNIA

THE STATE OF CALIFORNIA OR ITS OFFICERS OR AGENTS SHALL NOT BE RESPONSIBLE FOR THE ACCURACY OR COMPLETENESS OF SCANNED COPIES OF THIS PLAN SHEET.

NOTES:

STAGE 1

CONSTRUCTION SEQUENCE:

1. UNDER CONE TRAFFIC CONTROL IN LANE No. 1 REPLACE PANELS WITH RAPID STRENGTH CONCRETE (FOR LOCATION SEE SHEET Q-1) AND GRIND PAVEMENT.
2. UNDER CONE TRAFFIC CONTROL CONSTRUCT RAPID STRENGTH CONCRETE FOR EXIT AND ENTRANCE RAMPS AT ROUTE 58 NB AND SB, NB RAMPS STOCKDALE Rd. AND SB ENTRANCE RAMP FROM ROUTE 119 (FOR DETAILS SEE SHEET C-2).

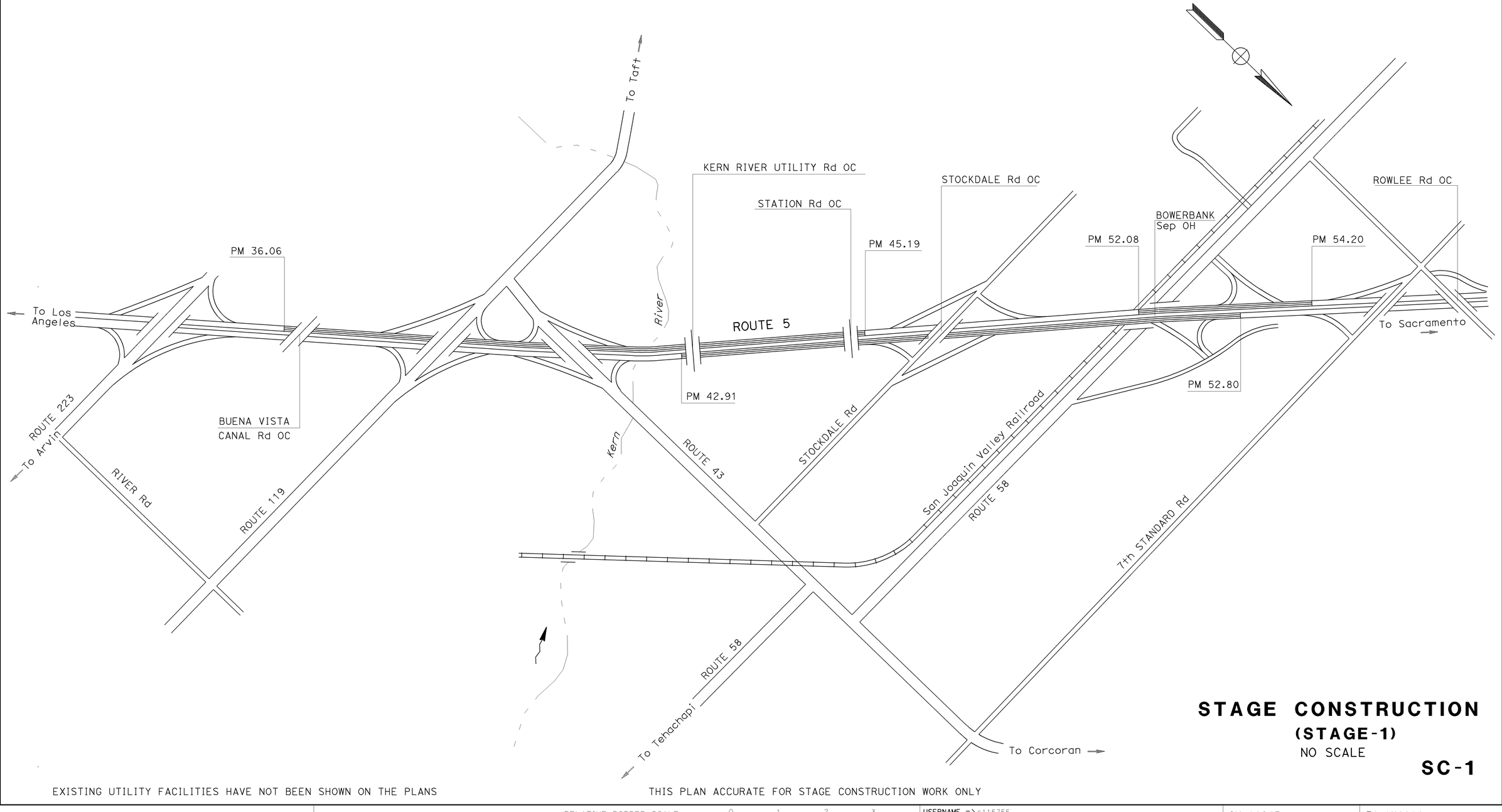

STAGE CONSTRUCTION
(STAGE-1)
NO SCALE

SC-1

EXISTING UTILITY FACILITIES HAVE NOT BEEN SHOWN ON THE PLANS

THIS PLAN ACCURATE FOR STAGE CONSTRUCTION WORK ONLY

REVISED BY | DATE REVISED

CALCULATED-DESIGNED BY: EDWARD WOJEWODA
CHECKED BY: KEVIN KEISTER
FUNCTIONAL SUPERVISOR: RICK HELGESON

STATE OF CALIFORNIA - DEPARTMENT OF TRANSPORTATION
Caltrans® DESIGN

LAST REVISION | DATE PLOTTED => 17-AUG-2010
05-11-10 | TIME PLOTTED => 09:05

BORDER LAST REVISED 4/11/2008

RELATIVE BORDER SCALE IS IN INCHES 0 1 2 3

USERNAME => s115755
DGN FILE => 60k890ma001.dgn

CU 06263

EA 0K8901

Dist	COUNTY	ROUTE	POST MILES TOTAL PROJECT	SHEET No.	TOTAL SHEETS
06	Ker	5	36.1/54.2	12	67

REGISTERED CIVIL ENGINEER — DATE 05-11-10

Edward S. Wojewoda No. 51240 Exp 09/30/11 CIVIL — REGISTERED PROFESSIONAL ENGINEER — STATE OF CALIFORNIA

PLANS APPROVAL DATE 05-17-10

THE STATE OF CALIFORNIA OR ITS OFFICERS OR AGENTS SHALL NOT BE RESPONSIBLE FOR THE ACCURACY OR COMPLETENESS OF SCANNED COPIES OF THIS PLAN SHEET.

NOTES:

STAGE 2

CONSTRUCTION SEQUENCE:

1. UNDER K-RAIL TRAFFIC CONTROL FOR INSIDE SHOULDER, AT ALL 3 LOCATIONS SIMULTANEOUSLY, REMOVE EXISTING 5-FOOT INSIDE SHOULDER AND CONSTRUCT 8-FOOT INSIDE SHOULDER (SEE SHEET TH-1 FOR TYPICAL K-RAIL TRANSITION).
2. TRANSITION K-RAIL FLARE TO SHIFT TRAFFIC TO USE No. 1 LANE AND INSIDE SHOULDER.
3. REMOVE LANE No. 2 AND OUTSIDE SHOULDER (22-FOOT TOTAL) (SEE SHEET TH-2 FOR TYPICAL K-RAIL TRANSITON).
4. CONSTRUCT 14-FOOT CONTINUOUSLY REINFORCED CONCRETE PAVEMENT (CRCP) SECTION (12-FOOT No. 2 LANE PLUS 2 FEET OF OUTSIDE SHOULDER) (SEE TYPICAL CROSS SECTIONS FOR DETAILS).
5. CONSTRUCT REMAINING 8 FEET OUTSIDE SHOULDER WITH HOT MIX ASPHALT (HMA) (SEE CROSS SECTION FOR DETAILS).
   PLACE DIKE WHERE DIRECTED (SEE QUANTITIES Q-1 SHEET), AND REPLACE EXISTING CORRUGATED STEEL PIPE DOWNDRAIN (CSPD) WITH 12-INCH NEW CSPD (SEE QUANTITY SHEETS).

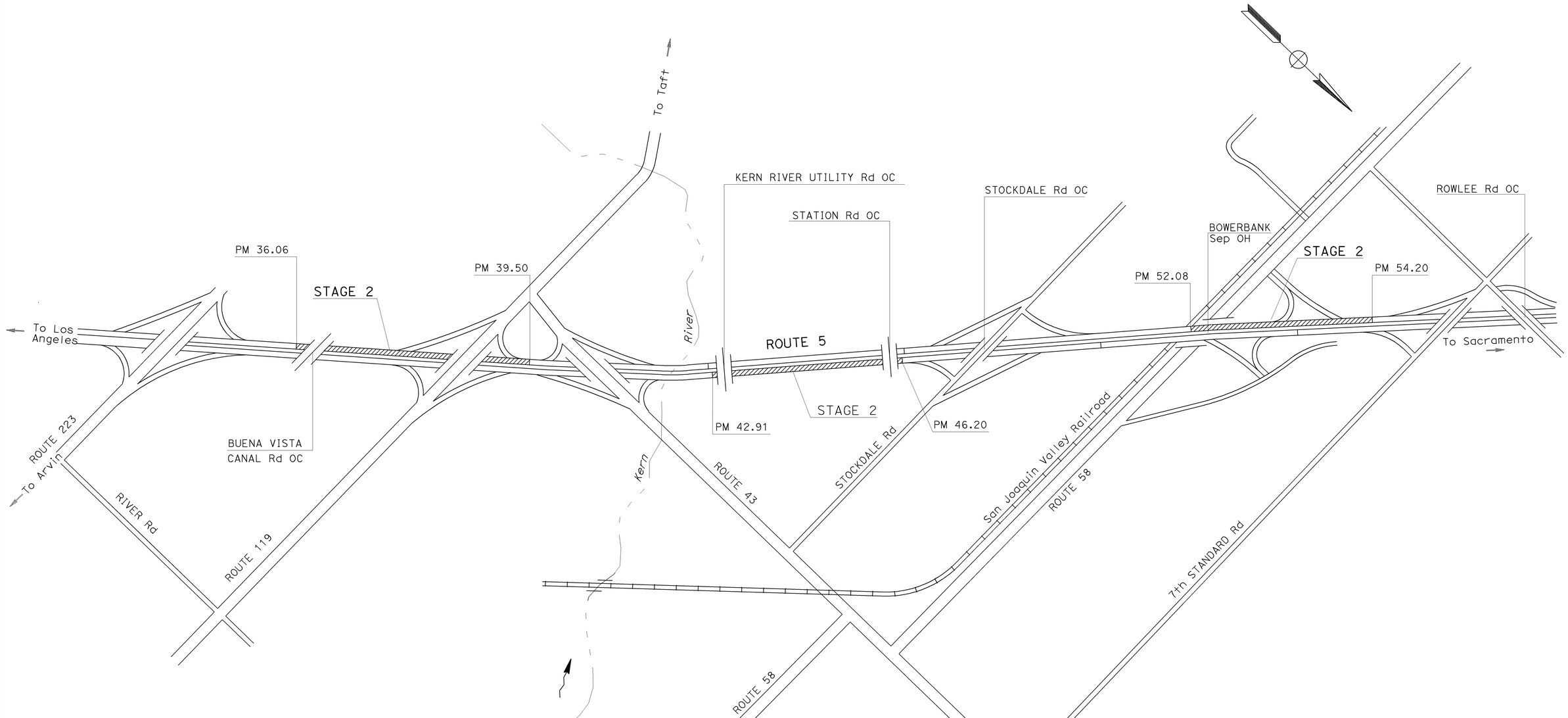

STAGE CONSTRUCTION
(STAGE-2)
NO SCALE

SC-2

EXISTING UTILITY FACILITIES HAVE NOT BEEN SHOWN ON THE PLANS

THIS PLAN ACCURATE FOR STAGE CONSTRUCTION WORK ONLY

STATE OF CALIFORNIA - DEPARTMENT OF TRANSPORTATION
DESIGN
FUNCTIONAL SUPERVISOR: RICK HELGESON
CALCULATED-DESIGNED BY: EDWARD WOJEWODA
CHECKED BY: KEVIN KEISTER
REVISED BY
DATE REVISED

LAST REVISION | DATE PLOTTED => 17-AUG-2010 | TIME PLOTTED => 09:06
05-11-10

BORDER LAST REVISED 4/11/2008

RELATIVE BORDER SCALE IS IN INCHES 0 1 2 3

USERNAME => s115755
DGN FILE => 60k890ma002.dgn

CU 06263

EA 0K8901

Dist	COUNTY	ROUTE	POST MILES TOTAL PROJECT	SHEET No.	TOTAL SHEETS
06	Ker	5	36.1/54.2	13	67

REGISTERED CIVIL ENGINEER — DATE 05-11-10

PLANS APPROVAL DATE 05-17-10

REGISTERED PROFESSIONAL ENGINEER — Edward S. Wojewoda — No. 51240 — Exp 09/30/11 — CIVIL — STATE OF CALIFORNIA

THE STATE OF CALIFORNIA OR ITS OFFICERS OR AGENTS SHALL NOT BE RESPONSIBLE FOR THE ACCURACY OR COMPLETENESS OF SCANNED COPIES OF THIS PLAN SHEET.

NOTES:

STAGE 3 ▨

CONSTRUCTION SEQUENCE:

1. UNDER K-RAIL TRAFFIC CONTROL FOR INSIDE SHOULDER, AT BOTH LOCATIONS SIMULTANEOUSLY, REMOVE EXISTING 5-FOOT INSIDE SHOULDER AND CONSTRUCT 8-FOOT INSIDE SHOULDER (SEE SHEET TH-1 FOR TYPICAL K-RAIL TRANSITION).
2. TRANSITION K-RAIL FLARE TO SHIFT TRAFFIC TO USE No. 1 LANE AND INSIDE SHOULDER.
3. REMOVE LANE No. 2 AND OUTSIDE SHOULDER (22-FOOT TOTAL) (SEE SHEET TH-2 FOR TYPICAL K-RAIL TRANSITON).
4. CONSTRUCT 14-FOOT CONTINUOUSLY REINFORCED CONCRETE PAVEMENT (CRCP) SECTION (12-FOOT No. 2 LANE PLUS 2 FEET OF OUTSIDE SHOULDER) (SEE TYPICAL CROSS SECTIONS FOR DETAILS).
5. CONSTRUCT REMAINING 8 FEET OUTSIDE SHOULDER WITH HOT MIX ASPHALT (HMA) (SEE CROSS SECTION FOR DETAILS).
   PLACE DIKE WHERE DIRECTED (SEE QUANTITIES Q-1 SHEET), AND REPLACE EXISTING CORRUGATED STEEL PIPE DOWNDRAIN (CSPD) WITH 12-INCH NEW CSPD (SEE QUANTITY SHEETS).

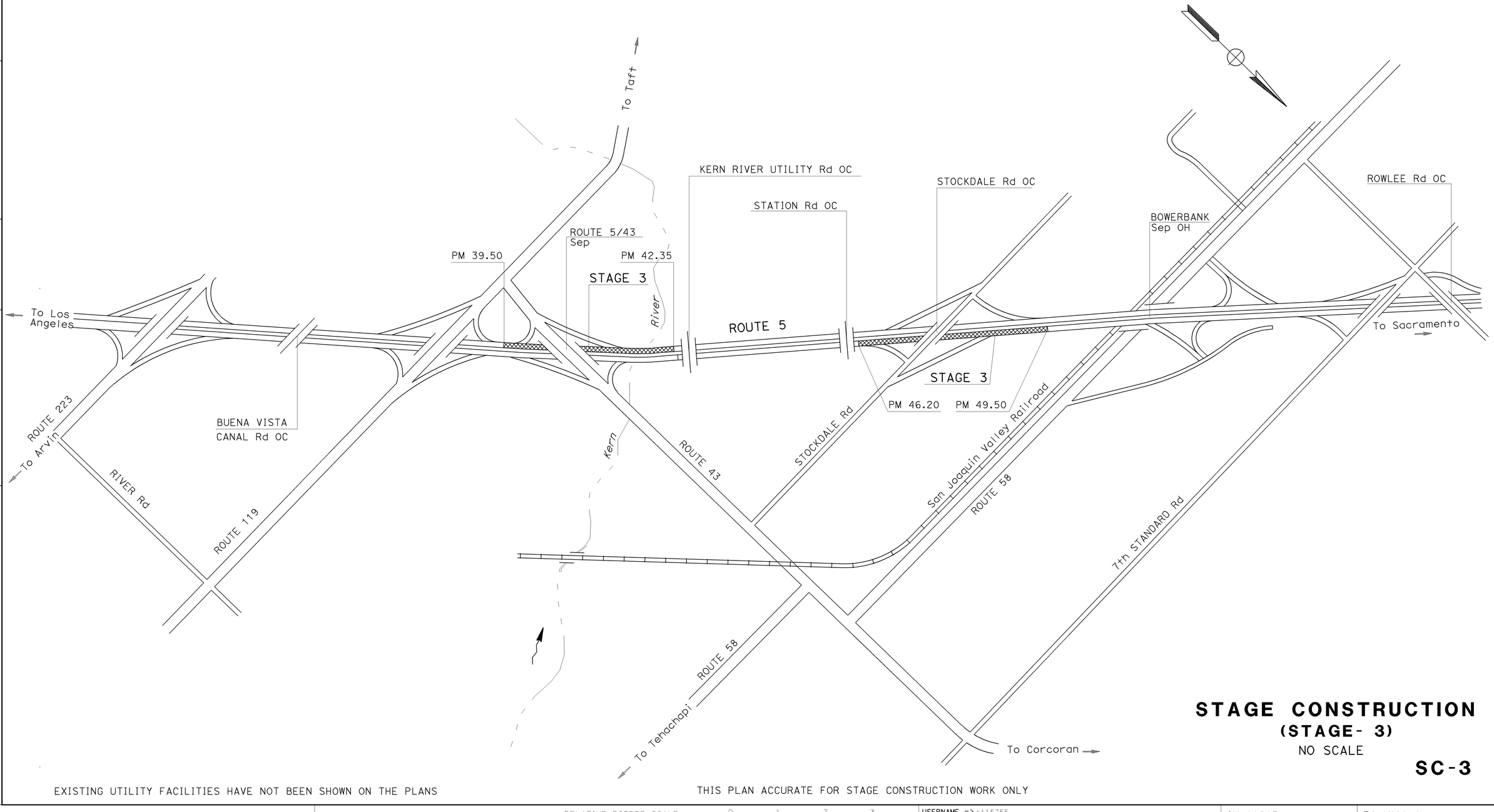

STAGE CONSTRUCTION
(STAGE- 3)
NO SCALE

SC-3

EXISTING UTILITY FACILITIES HAVE NOT BEEN SHOWN ON THE PLANS

THIS PLAN ACCURATE FOR STAGE CONSTRUCTION WORK ONLY

STATE OF CALIFORNIA - DEPARTMENT OF TRANSPORTATION
DESIGN
FUNCTIONAL SUPERVISOR: RICK HELGESON
CALCULATED-DESIGNED BY: EDWARD WOJEWODA
CHECKED BY: KEVIN KEISTER
REVISED BY | DATE REVISED

LAST REVISION | DATE PLOTTED => 17-AUG-2010 | TIME PLOTTED => 09:06
05-11-10

BORDER LAST REVISED 4/11/2008

RELATIVE BORDER SCALE IS IN INCHES 0 1 2 3

USERNAME => s115755
DGN FILE => 60k890ma003.dgn

CU 06263

EA 0K8901

Dist	COUNTY	ROUTE	POST MILES TOTAL PROJECT	SHEET No.	TOTAL SHEETS
06	Ker	5	36.1/54.2	14	67

REGISTERED CIVIL ENGINEER — 05-11-10 DATE

05-17-10
PLANS APPROVAL DATE

REGISTERED PROFESSIONAL ENGINEER — Edward S. Wojewoda — No. 51240 — Exp 09/30/11 — CIVIL — STATE OF CALIFORNIA

THE STATE OF CALIFORNIA OR ITS OFFICERS OR AGENTS SHALL NOT BE RESPONSIBLE FOR THE ACCURACY OR COMPLETENESS OF SCANNED COPIES OF THIS PLAN SHEET.

NOTES:

STAGE 4 ▨

CONSTRUCTION SEQUENCE:

1. UNDER K-RAIL TRAFFIC CONTROL FOR INSIDE SHOULDER, AT BOTH LOCATIONS SIMULTANEOUSLY, REMOVE EXISTING 5-FOOT INSIDE SHOULDER AND CONSTRUCT 8-FOOT INSIDE SHOULDER (SEE SHEET TH-1 FOR TYPICAL K-RAIL TRANSITION).
2. TRANSITION K-RAIL FLARE TO SHIFT TRAFFIC TO USE No. 1 LANE AND INSIDE SHOULDER.
3. REMOVE LANE No. 2 AND OUTSIDE SHOULDER (22-FOOT TOTAL) (SEE SHEET TH-2 FOR TYPICAL K-RAIL TRANSITON).
4. CONSTRUCT 14-FOOT CONTINUOUSLY REINFORCED CONCRETE PAVEMENT (CRCP) SECTION (12-FOOT No. 2 LANE PLUS 2 FEET OF OUTSIDE SHOULDER) (SEE TYPICAL CROSS SECTIONS FOR DETAILS).
5. CONSTRUCT REMAINING 8 FEET OUTSIDE SHOULDER WITH HOT MIX ASPHALT (HMA) (SEE CROSS SECTION FOR DETAILS).
   PLACE DIKE WHERE DIRECTED (SEE QUANTITIES Q-1 SHEET), AND REPLACE EXISTING CORRUGATED STEEL PIPE DOWNDRAIN (CSPD) WITH 12-INCH NEW CSPD (SEE QUANTITY SHEETS).

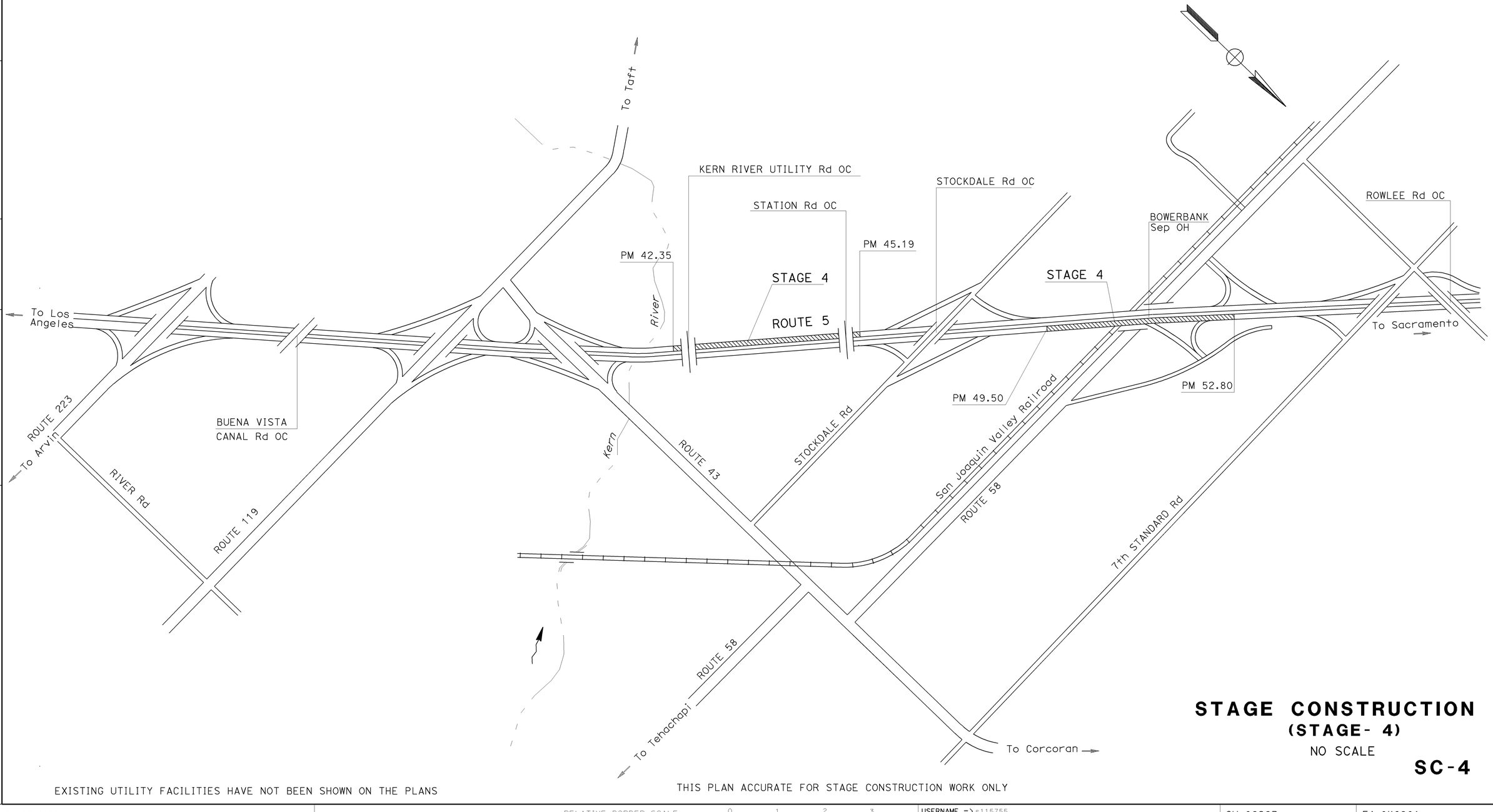

STAGE CONSTRUCTION
(STAGE- 4)

NO SCALE

SC-4

EXISTING UTILITY FACILITIES HAVE NOT BEEN SHOWN ON THE PLANS

THIS PLAN ACCURATE FOR STAGE CONSTRUCTION WORK ONLY

CALCULATED-DESIGNED BY
CHECKED BY

EDWARD WOJEWODA
KEVIN KEISTER

REVISED BY
DATE REVISED

FUNCTIONAL SUPERVISOR
RICK HELGESON

STATE OF CALIFORNIA - DEPARTMENT OF TRANSPORTATION
DESIGN

LAST REVISION | DATE PLOTTED => 17-AUG-2010
05-11-10 | TIME PLOTTED => 09:06

BORDER LAST REVISED 4/11/2008

RELATIVE BORDER SCALE IS IN INCHES 0 1 2 3

USERNAME => s115755
DGN FILE => 60k890ma004.dgn

CU 06263

EA 0K8901

Dist	COUNTY	ROUTE	POST MILES TOTAL PROJECT	SHEET No.	TOTAL SHEETS
06	Ker	5	36.1/54.2	15	67

REGISTERED CIVIL ENGINEER — 03-29-10 DATE

ANDREY CHEVYCHALOV No. 68378 Exp. 9-30-11 CIVIL — REGISTERED PROFESSIONAL ENGINEER — STATE OF CALIFORNIA

05-17-10
PLANS APPROVAL DATE

THE STATE OF CALIFORNIA OR ITS OFFICERS OR AGENTS SHALL NOT BE RESPONSIBLE FOR THE ACCURACY OR COMPLETENESS OF SCANNED COPIES OF THIS PLAN SHEET.

LEGEND

- DIRECTION OF TRAFFIC
- CHANNELIZERS (SURFACE MOUNTED)
- Temp RAILING (TYPE K)
- Temp CRASH CUSHION ARRAY
- CONSTRUCTION AREA
- ROADSIDE SIGN ONE-POST
- ROADSIDE SIGN TWO-POST
- XX — TRAFFIC STRIPE DETAIL No.
- X — ROADSIDE SIGN No.
- PCMS - FLASHING ARROW SIGN (FAS), TYPE I
- BARRICADE TYPE III
- LIMITS OF DESIGNATED TRAFFIC STRIPING DETAIL
- LL — LANE LINE
- PCMS — PORTABLE CHANGEABLE MESSAGE SIGN
- FAS — FLASHING ARROW SIGN

NOTES:

1. FOR ADDITIONAL CONSTRUCTION AREA SIGNS REFER TO CONSTRUCTION AREA SIGNS AND DETOUR SHEETS.
2. COVER ALL CONFLICTING SIGNS AND REMOVE ALL CONFLICTING PAVEMENT DELINEATION.
3. LOCATIONS OF CONSTRUCTION AREA SIGNS SHOWN ARE APPROXIMATE. EXACT LOCATIONS TO BE DETERMINED BY THE ENGINEER.

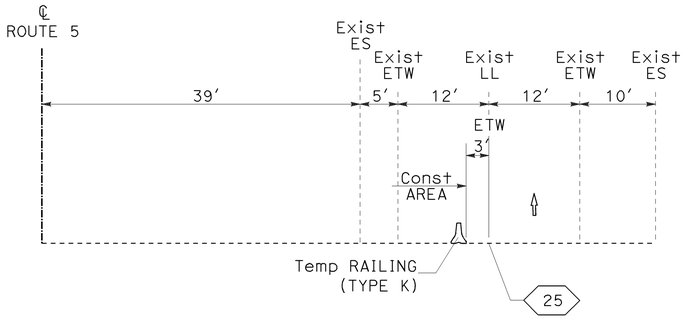

SECTION A-A
NO SCALE

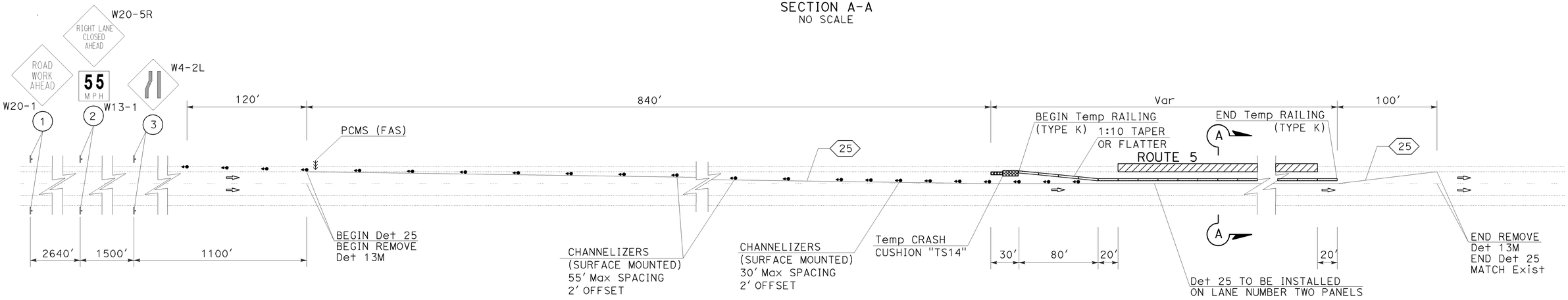

TYPICAL INSIDE LANE CLOSURE WITH TEMPORARY TRAFFIC BARRIER

THIS PLAN ACCURATE FOR TRAFFIC HANDLING ONLY.

TRAFFIC HANDLING PLAN

SCALE:1"=50′

TH-1

CALCULATED-DESIGNED BY
CHECKED BY
REVISED BY
DATE REVISED
ANDREY CHEVYCHALOV
ANDREY CHEVYCHALOV
FUNCTIONAL SUPERVISOR
MOHAMMED OATAMI

STATE OF CALIFORNIA - DEPARTMENT OF TRANSPORTATION
TRAFFIC DESIGN
Caltrans

LAST REVISION DATE PLOTTED => 17-AUG-2010
TIME PLOTTED => 09:06
03-29-10

BORDER LAST REVISED 4/11/2008
RELATIVE BORDER SCALE IS IN INCHES 0 1 2 3
USERNAME => s115755
DGN FILE => 60k890md001.dgn
CU 06386
EA 0K8901

Dist	COUNTY	ROUTE	POST MILES TOTAL PROJECT	SHEET No.	TOTAL SHEETS
06	Ker	5	36.1/54.2	16	67

REGISTERED CIVIL ENGINEER — 03-29-10 DATE

ANDREY CHEVYCHALOV No. 68378 Exp. 9-30-11 CIVIL — REGISTERED PROFESSIONAL ENGINEER — STATE OF CALIFORNIA

05-17-10
PLANS APPROVAL DATE

THE STATE OF CALIFORNIA OR ITS OFFICERS OR AGENTS SHALL NOT BE RESPONSIBLE FOR THE ACCURACY OR COMPLETENESS OF SCANNED COPIES OF THIS PLAN SHEET.

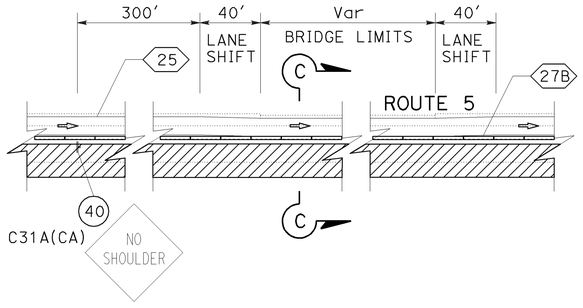

WORK IN VICINITY OF BRIDGE WITH 5FT SHOULDERS

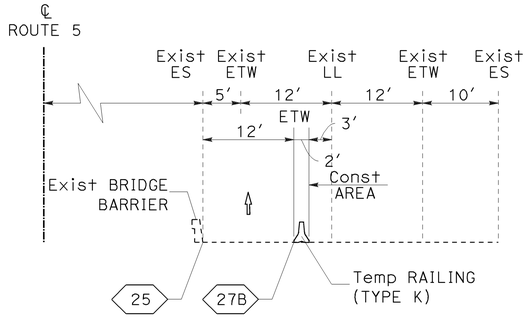

SECTION C-C
NO SCALE

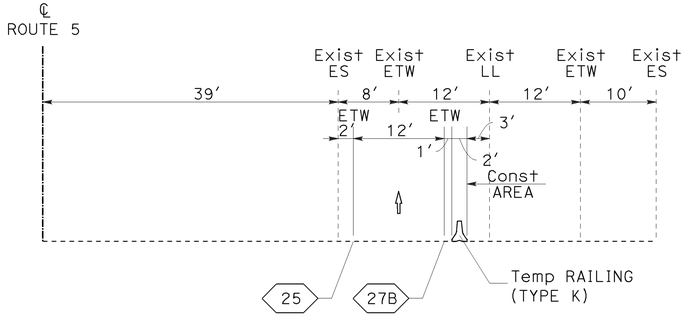

SECTION B-B
NO SCALE

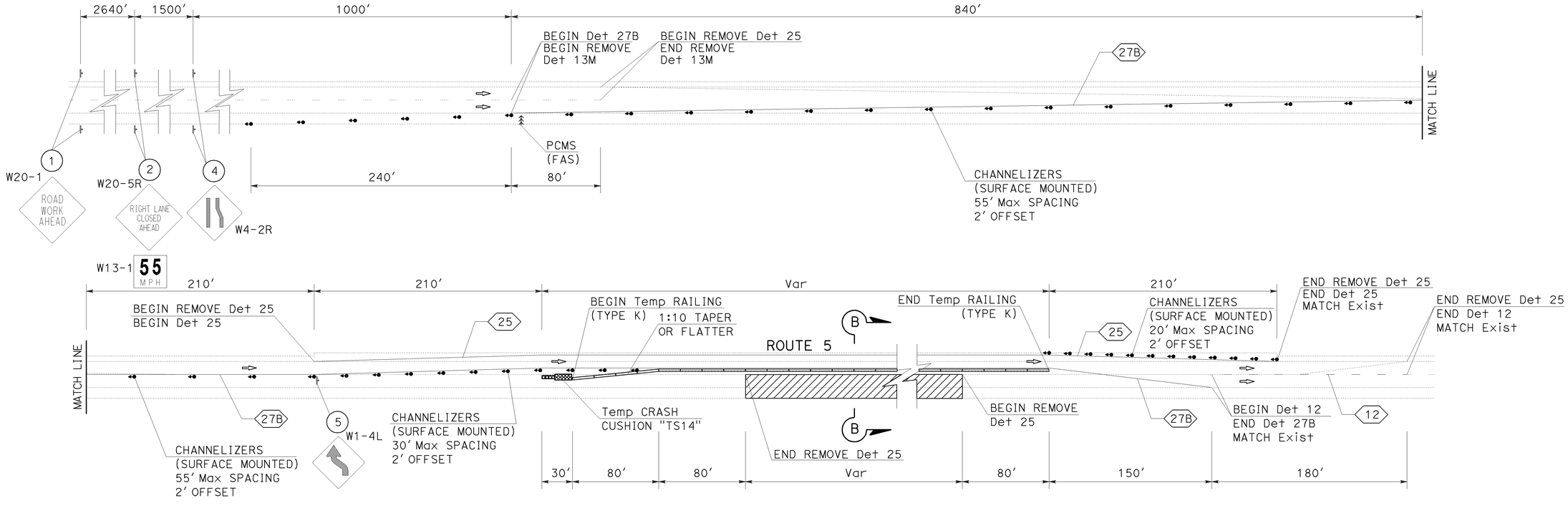

TYPICAL OUTSIDE LANE CLOSURE WITH TEMPORARY TRAFFIC BARRIER

TRAFFIC HANDLING PLAN

THIS PLAN ACCURATE FOR TRAFFIC HANDLING ONLY.

SCALE:1"=50′

TH-2

STATE OF CALIFORNIA - DEPARTMENT OF TRANSPORTATION
TRAFFIC DESIGN
FUNCTIONAL SUPERVISOR: MOHAMMED QATAMI
CALCULATED-DESIGNED BY: ANDREY CHEVYCHALOV
CHECKED BY: ANDREY CHEVYCHALOV
REVISED BY
DATE REVISED

LAST REVISION DATE PLOTTED => 17-AUG-2010
TIME PLOTTED => 09:06
03-29-10

BORDER LAST REVISED 4/11/2008
RELATIVE BORDER SCALE IS IN INCHES 0 1 2 3
USERNAME => s115755
DGN FILE => 60k890md002.dgn
CU 06386
EA 0K8901

Dist	COUNTY	ROUTE	POST MILES TOTAL PROJECT	SHEET No.	TOTAL SHEETS
06	Ker	5	36.1/54.2	17	67

REGISTERED CIVIL ENGINEER — 03-29-10 DATE

ANDREY CHEVYCHALOV No. 68378 Exp. 9-30-11 CIVIL — REGISTERED PROFESSIONAL ENGINEER — STATE OF CALIFORNIA

05-17-10
PLANS APPROVAL DATE

THE STATE OF CALIFORNIA OR ITS OFFICERS OR AGENTS SHALL NOT BE RESPONSIBLE FOR THE ACCURACY OR COMPLETENESS OF SCANNED COPIES OF THIS PLAN SHEET.

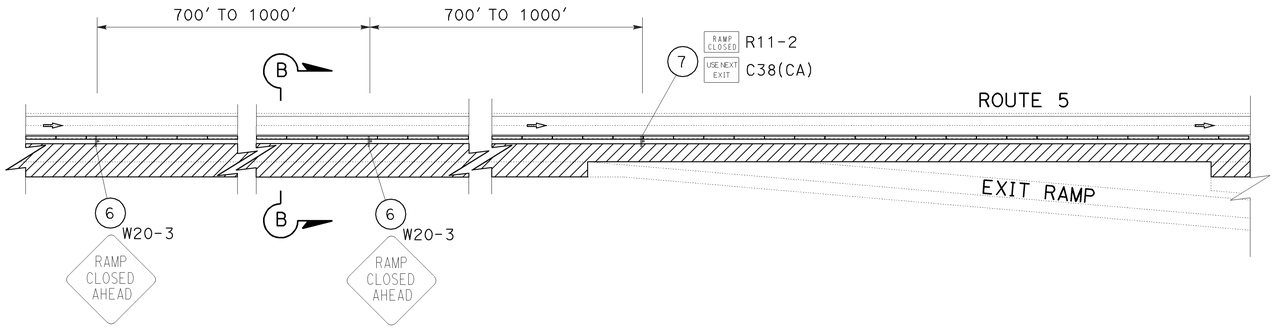

WORK IN VICINITY OF CLOSED EXIT RAMP

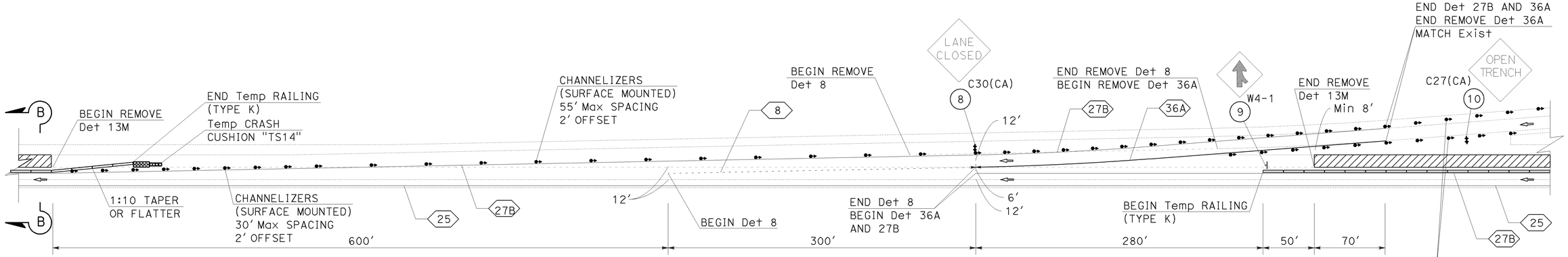

WORK IN VICINITY OF ENTRANCE RAMP

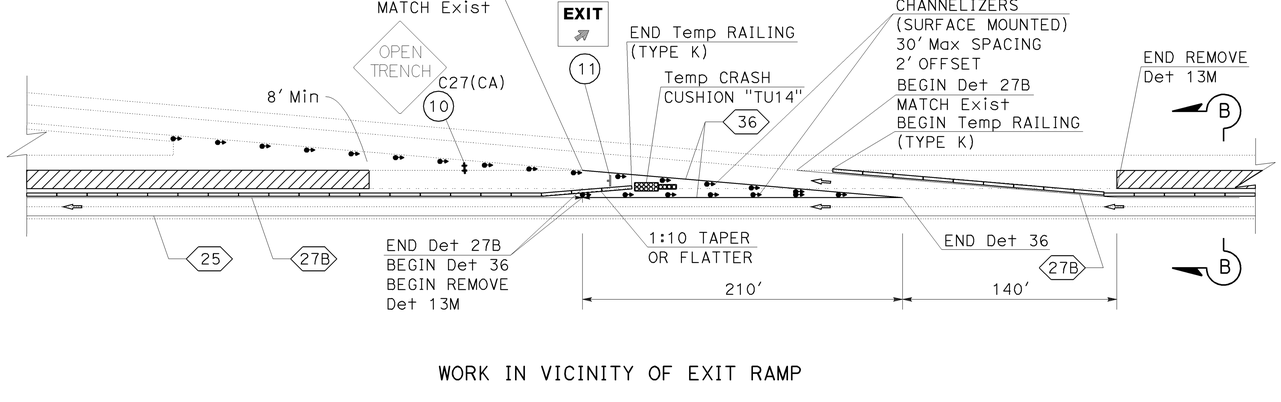

WORK IN VICINITY OF EXIT RAMP

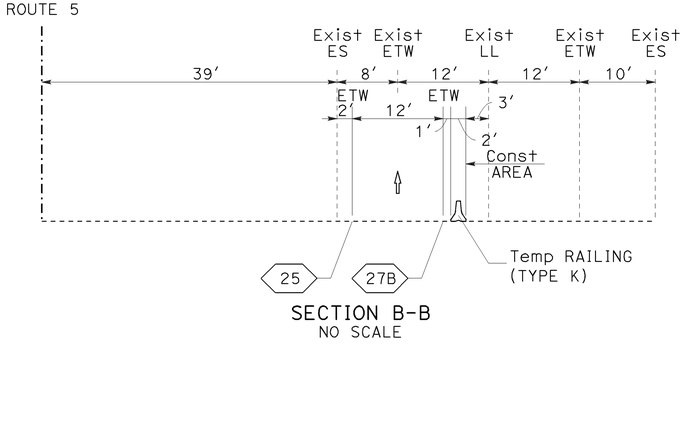

SECTION B-B
NO SCALE

TRAFFIC HANDLING PLAN

SCALE:1"=50'

TH-3

THIS PLAN ACCURATE FOR TRAFFIC HANDLING PLAN ONLY.

STATE OF CALIFORNIA - DEPARTMENT OF TRANSPORTATION
TRAFFIC DESIGN
FUNCTIONAL SUPERVISOR: MOHAMMED QATAMI
CALCULATED-DESIGNED BY: ANDREY CHEVYCHALOV
CHECKED BY: ANDREY CHEVYCHALOV
REVISED BY
DATE REVISED

LAST REVISION | DATE PLOTTED => 17-AUG-2010
TIME PLOTTED => 09:06
03-29-10

BORDER LAST REVISED 4/11/2008
RELATIVE BORDER SCALE IS IN INCHES 0 1 2 3
USERNAME => s115755
DGN FILE => 60k890md003.dgn
CU 06386
EA 0K8901

Dist	COUNTY	ROUTE	POST MILES TOTAL PROJECT	SHEET No.	TOTAL SHEETS
06	Ker	5	36.1/54.2	18	67

REGISTERED CIVIL ENGINEER — 03-29-10 DATE

ANDREY CHEVYCHALOV No. 68378 Exp. 9-30-11 CIVIL — REGISTERED PROFESSIONAL ENGINEER — STATE OF CALIFORNIA

05-17-10
PLANS APPROVAL DATE

THE STATE OF CALIFORNIA OR ITS OFFICERS OR AGENTS SHALL NOT BE RESPONSIBLE FOR THE ACCURACY OR COMPLETENESS OF SCANNED COPIES OF THIS PLAN SHEET.

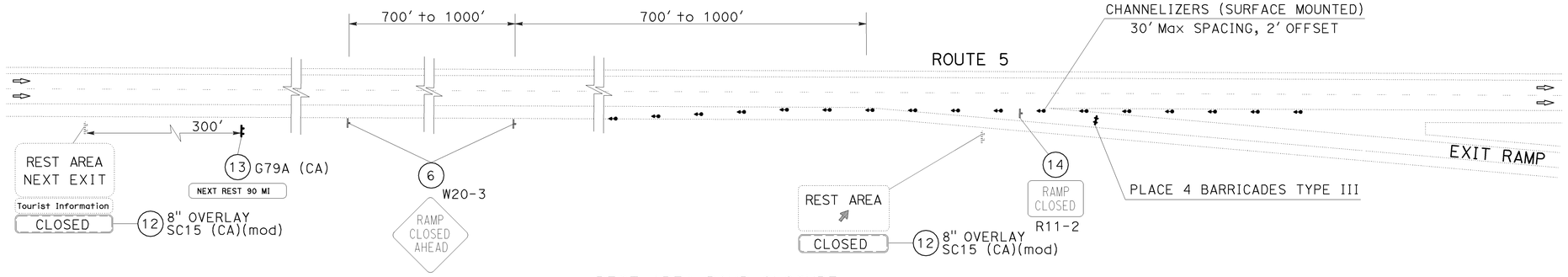

REST AREA RAMP CLOSURE

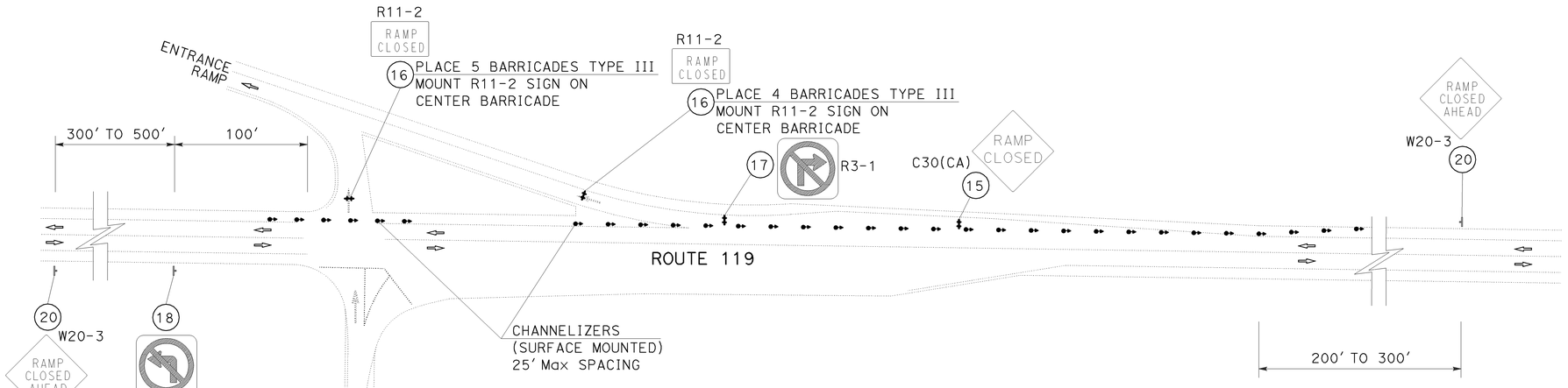

ROUTE 119 TO SB ROUTE 5 ENTRANCE RAMP CLOSURE

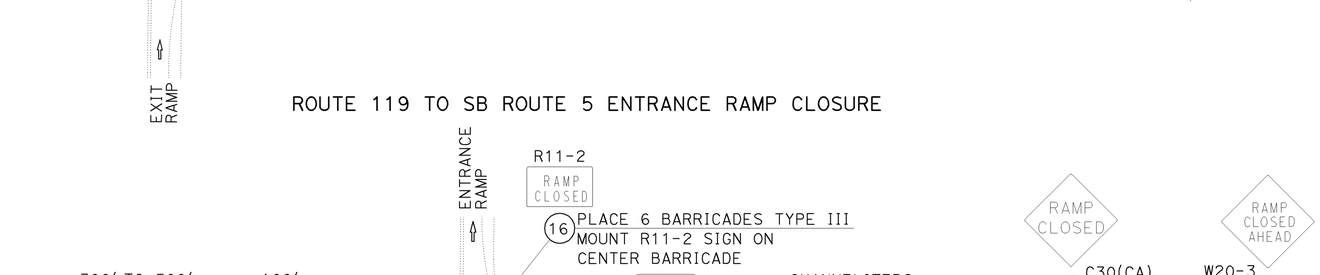

ROUTE 43 TO SB ROUTE 5 ENTRANCE RAMP CLOSURE

THIS PLAN ACCURATE FOR TRAFFIC HANDLING ONLY

TRAFFIC HANDLING PLAN

NO SCALE

TH-4

STATE OF CALIFORNIA - DEPARTMENT OF TRANSPORTATION
Caltrans® TRAFFIC DESIGN
FUNCTIONAL SUPERVISOR: MOHAMMED QATAMI
CALCULATED-DESIGNED BY: ANDREY CHEVYCHALOV
CHECKED BY: ANDREY CHEVYCHALOV
REVISED BY | DATE REVISED

LAST REVISION | DATE PLOTTED => 17-AUG-2010 | TIME PLOTTED => 09:06
03-29-10

BORDER LAST REVISED 4/11/2008

RELATIVE BORDER SCALE IS IN INCHES 0 1 2 3

USERNAME => s115755
DGN FILE => 60k890md004.dgn

CU 06386

EA 0K8901

Dist	COUNTY	ROUTE	POST MILES TOTAL PROJECT	SHEET No.	TOTAL SHEETS
06	Ker	5	36.1/54.2	19	67

REGISTERED CIVIL ENGINEER — 03-29-10 DATE

ANDREY CHEVYCHALOV No. 68378 Exp. 9-30-11 CIVIL — REGISTERED PROFESSIONAL ENGINEER — STATE OF CALIFORNIA

05-17-10
PLANS APPROVAL DATE

THE STATE OF CALIFORNIA OR ITS OFFICERS OR AGENTS SHALL NOT BE RESPONSIBLE FOR THE ACCURACY OR COMPLETENESS OF SCANNED COPIES OF THIS PLAN SHEET.

NOTES:
1. FOR ADDITIONAL CONSTRUCTION AREA SIGNS REFER TO SHEET CS-1.

STATIONARY MOUNTED CONSTRUCTION AREA SIGNS

SIGN (No.)	SIGN CODE	SIGN MESSAGE	PANEL SIZE	No. OF POST AND SIZE	No. OF SIGNS	INSTALL SIGN OVERLAY SQFT
1	W20-1	ROAD WORK AHEAD	48" x 48"	1 - 6" x 6"	14	
2	W20-5R	RIGHT LANE CLOSED AHEAD	48" x 48"	1 - 6" x 6"	14	
	W13-1	55 MPH	24" x 24"			
3	W4-2L	LANE ENDS (SYMBOL)	48" x 48"	1 - 6" x 6"	14	
4	W4-2R	LANE ENDS (SYMBOL)	48" x 48"	1 - 6" x 6"	14	
5	W1-4L	REVERSE CURVE	48" x 48"	1 - 6" x 6"	7	
6	W20-3	RAMP CLOSED AHEAD	48" x 48"	1 - 6" x 6"	4	
7	R11-2	RAMP CLOSED	48" x 30"	1 - 6" x 6"	1	
	C38(CA)	USE NEXT EXIT	48" x 36"			
8	C30(CA)	LANE CLOSED	48" x 48"	ON BARRICADE	3	
9	W4-1	MERGE	48" x 48"	1 - 6" x 6"	3	
10	C27(CA)	OPEN TRENCH	48" x 48"	ON BARRICADE	7	
11	G84(CA)	EXIT WITH ARROW	54" x 48"	1 - 6" x 6"	4	
12	SC15(CA)(mod)	CLOSED	54" x 24"			18
13	G79A(CA)	NEXT REST 90 MI	144" x 24"	2 - 4" x 6"	1	
14	R11-2	RAMP CLOSED	48" x 30"	1 - 4" x 6"	1	
15	C30(CA)	RAMP CLOSED	36" x 36"	ON BARRICADE	1	
16	R11-2	RAMP CLOSED	48" x 30"	ON BARRICADE	3	
17	R3-1	NO RIGHT TURN SYMBOL	30" x 30"	ON BARRICADE	2	
18	R3-2	NO LEFT TURN SYMBOL	30" x 30"	1 - 4" x 4"	2	
19	C30(CA)	RAMP CLOSED	36" x 36"	1 - 4" x 6"	1	
20	W20-3	RAMP CLOSED AHEAD	36" x 36"*	1 - 4" x 6"	4	
21	W20-2	DETOUR AHEAD	36" x 36"*	1 - 4" x 6"	8	
22	SC3(CA)	DETOUR ARROW	48" x 18"	1 - 4" x 6"	5	
	G27-2(CA)	INTERSTATE 5	24" x 24"			
	M3-3	SOUTH	24" x 12"			
23	M4-10(R)	DETOUR ARROW RIGHT	48" x 18"	1 - 4" x 6"	4	
	G27-2(CA)	INTERSTATE 5	24" x 24"			
	M3-3	SOUTH	24" x 12"			
24	M4-10(L)	DETOUR ARROW LEFT	48" x 18"	1 - 4" x 6"	4	
	G27-2(CA)	INTERSTATE 5	24" x 24"			
	M3-3	SOUTH	24" x 12"			
25	M4-8A	END DETOUR	24" x 18"	1 - 4" x 6"	4	
	G27-2(CA)	INTERSTATE 5	24" x 24"			
	M3-3	SOUTH	24" x 12"			
26	SC3(CA)	DETOUR ARROW	48" x 18"	1 - 4" x 6"	3	
	G28-2(CA)	ROUTE 58	24" x 25"			
27	M4-10(R)	DETOUR ARROW RIGHT	48" x 18"	1 - 4" x 6"	2	
	G28-2(CA)	ROUTE 58	24" x 25"			
28	M4-10(L)	DETOUR ARROW LEFT	48" x 18"	1 - 4" x 6"	3	
	G28-2(CA)	ROUTE 58	24" x 25"			
29	M4-8A	END DETOUR	24" x 18"	1 - 4" x 4"	1	
	G28-2(CA)	ROUTE 58	24" x 25"			
30	M4-10(R)	DETOUR ARROW RIGHT	48" x 18"	1 - 4" x 6"	1	
	G28-2(CA)	ROUTE 119	28" x 25"			
31	M4-8A	END DETOUR	24" x 18"	1 - 4" x 4"	1	
	G28-2(CA)	ROUTE 119	28" x 25"			
32	M4-10(R)	DETOUR ARROW RIGHT	48" x 18"	1 - 4" x 6"	2	
	G28-2(CA)	ROUTE 43	24" x 25"			
33	M4-8A	END DETOUR	24" x 18"	1 - 4" x 4"	1	
	G28-2(CA)	ROUTE 43	24" x 25"			
34	M4-10(R)	DETOUR ARROW RIGHT	48" x 18"	1 - 4" x 6"	5	
	G27-2(CA)	INTERSTATE 5	24" x 24"			
	M3-3	NORTH	24" x 12"			
35	SC3(CA)	DETOUR ARROW	48" x 18"	1 - 4" x 6"	3	
	G27-2(CA)	INTERSTATE 5	24" x 24"			
	M3-3	NORTH	24" x 12"			
36	M4-10(L)	DETOUR ARROW LEFT	48" x 18"	1 - 4" x 6"	2	
	G27-2(CA)	INTERSTATE 5	24" x 24"			
	M3-3	NORTH	24" x 12"			
37	M4-8A	END DETOUR	24" x 18"	1 - 4" x 6"	2	
	G27-2(CA)	INTERSTATE 5	24" x 24"			
	M3-3	NORTH	24" x 12"			
38	M4-10(R)	DETOUR ARROW RIGHT	48" x 18"	1 - 4" x 6"	1	
	D3	STOCKDALE	54" x 18"			
39	M4-8A	END DETOUR	24" x 18"	1 - 4" x 6"	1	
	D3	STOCKDALE	54" x 18"			
40	C31A(CA)	NO SHOULDER	48" x 48"	1 - 6" x 6"	2	

* - FOR SPEED LESS THAN 50 MPH, FOR SPEED 50 MPH OR MORE USE 48" x 48"

CHANNELIZER (SURFACE MOUNTED)

DIRECTION	PM BEGIN	PM END	EA
SB	36.06	45.19	253
SB	52.08	54.20	150
NB	42.91	52.80	327
		TOTAL	730

TYPE III BARRICADE

DIRECTION	PM BEGIN	PM END	EA
SB	36.06	45.19	19
SB	52.08	54.20	7
NB	42.91	52.80	6
		TOTAL	32

TEMPORARY CRASH CUSHION MODULE

DIRECTION	PM BEGIN	PM END	EA
SB	36.06	45.19	98
SB	52.08	54.20	56
NB	42.91	52.80	140
		TOTAL	294

TEMPORARY RAILING (TYPE K)

DIRECTION	PM BEGIN	PM END	LENGTH (LF)
SB	36.06	45.19	51,120
SB	52.08	54.20	12,400
NB	42.91	52.80	55,540
		TOTAL	119,060

TEMPORARY PAVEMENT DELINEATION

LOCATION	DIRECTION	DETAIL No.	PAVEMENT MARKER (RETROREFLECTIVE) TYPE G CLEAR (ONE-WAY) EA	PAVEMENT MARKER (RETROREFLECTIVE) TYPE H YELLOW (ONE-WAY) EA	REMOVE PAVEMENT MARKER EA	REMOVE THERMO-PLASTIC TRAFFIC STRIPE LF	TEMPORARY TRAFFIC STRIPE (PAINT) LF	REMOVE PAINTED TRAFFIC STRIPE LF
PM 36.10 TO PM 45.19	SB	25			1,048			
PM 36.10 TO PM 45.19	SB	25		1,117	117		53,546	5,551
PM 36.10 TO PM 45.19	SB	25		1,048	1,048		50,276	50,276
PM 36.10 TO PM 45.19	SB	27B					53,286	53,286
PM 36.10 TO PM 45.19	SB	13M			5,218	12,517		
PM 36.10 TO PM 45.19	SB	12	12		12		540	135
PM 36.10 TO PM 45.19	SB	36	20		20		420	840
PM 52.08 TO PM 54.20	SB	25			249			
PM 52.08 TO PM 54.20	SB	25		271	38		12,974	1,780
PM 52.08 TO PM 54.20	SB	25		249	249		11,884	11,884
PM 52.08 TO PM 54.20	SB	27B					16,674	16,674
PM 52.08 TO PM 54.20	SB	13M			1,361	3,264		
PM 52.08 TO PM 54.20	SB	12	5		5		180	45
PM 52.08 TO PM 54.20	SB	8				88		
PM 52.08 TO PM 54.20	SB	36A			8	330		
PM 52.08 TO PM 54.20	SB	8					300	88
PM 52.08 TO PM 54.20	SB	36A	18		18		400	800
PM 52.08 TO PM 54.20	SB	36	20		20		420	840
PM 42.91 TO PM 52.80	NB	25			1,132			
PM 42.91 TO PM 52.80	NB	25		1,200	112		57,559	5,340
PM 42.91 TO PM 52.80	NB	25		1,132	1,132		54,289	54,289
PM 42.91 TO PM 52.80	NB	27B					57,959	57,959
PM 42.91 TO PM 52.80	NB	13M			5,636	13,520		
PM 42.91 TO PM 52.80	NB	12	12		12		540	135
PM 42.91 TO PM 52.80	NB	8				175		
PM 42.91 TO PM 52.80	NB	36A			15	660		
PM 42.91 TO PM 52.80	NB	8					600	175
PM 42.91 TO PM 52.80	NB	36A	34		34		800	1,600
PM 42.91 TO PM 52.80	NB	36	38		38		840	1,680
TOTAL			159*	5,017*	17,522	30,554	373,487	263,377

* QUANTITIES ARE INCLUDED IN THE PAVEMENT DELINEATION QUANTITIES TABLE, SHEET PDQ-1

TRAFFIC HANDLING PLAN AND DETOUR QUANTITIES

THQ-1

REVISED BY | DATE REVISED
ANDREY CHEVYCHALOV | ANDREY CHEVYCHALOV
CALCULATED-DESIGNED BY | CHECKED BY
FUNCTIONAL SUPERVISOR: MOHAMMED QATAMI
STATE OF CALIFORNIA - DEPARTMENT OF TRANSPORTATION
Caltrans® TRAFFIC DESIGN

LAST REVISION DATE PLOTTED => 18-AUG-2010
TIME PLOTTED => 10:58

Dist	COUNTY	ROUTE	POST MILES TOTAL PROJECT	SHEET No.	TOTAL SHEETS
06	Ker	5	36.1/54.2	20	67

REGISTERED CIVIL ENGINEER — 03-29-10 DATE

ANDREY CHEVYCHALOV No. 68378 Exp. 9-30-11 CIVIL — REGISTERED PROFESSIONAL ENGINEER — STATE OF CALIFORNIA

05-17-10
PLANS APPROVAL DATE

THE STATE OF CALIFORNIA OR ITS OFFICERS OR AGENTS SHALL NOT BE RESPONSIBLE FOR THE ACCURACY OR COMPLETENESS OF SCANNED COPIES OF THIS PLAN SHEET.

LEGEND

- CONSTRUCTION AREA
- ROADSIDE SIGN ONE-POST
- (X) ROADSIDE SIGN No.
- RAMP CLOSURE
- DIRECTION OF DETOUR
- PORTABLE CHANGEABLE MESSAGE SIGN (PCMS)
- "MESSAGE 1 / MESSAGE 2" ALTERNATE MESSAGES ON PCMS

NOTES:

1. FOR ADDITIONAL CONSTRUCTION AREA SIGNS REFER TO CONSTRUCTION AREA SIGNS AND TRAFFIC HANDLING SHEETS.
2. COVER ALL CONFLICTING SIGNS.
3. LOCATIONS OF CONSTRUCTION AREA SIGNS SHOWN ARE APPROXIMATE. EXACT LOCATIONS TO BE DETERMINED BY THE ENGINEER.
4. DETOUR SIGNS MAY BE MOUNTED ON BARRICADES FOR SHORT DURATION DETOURS.

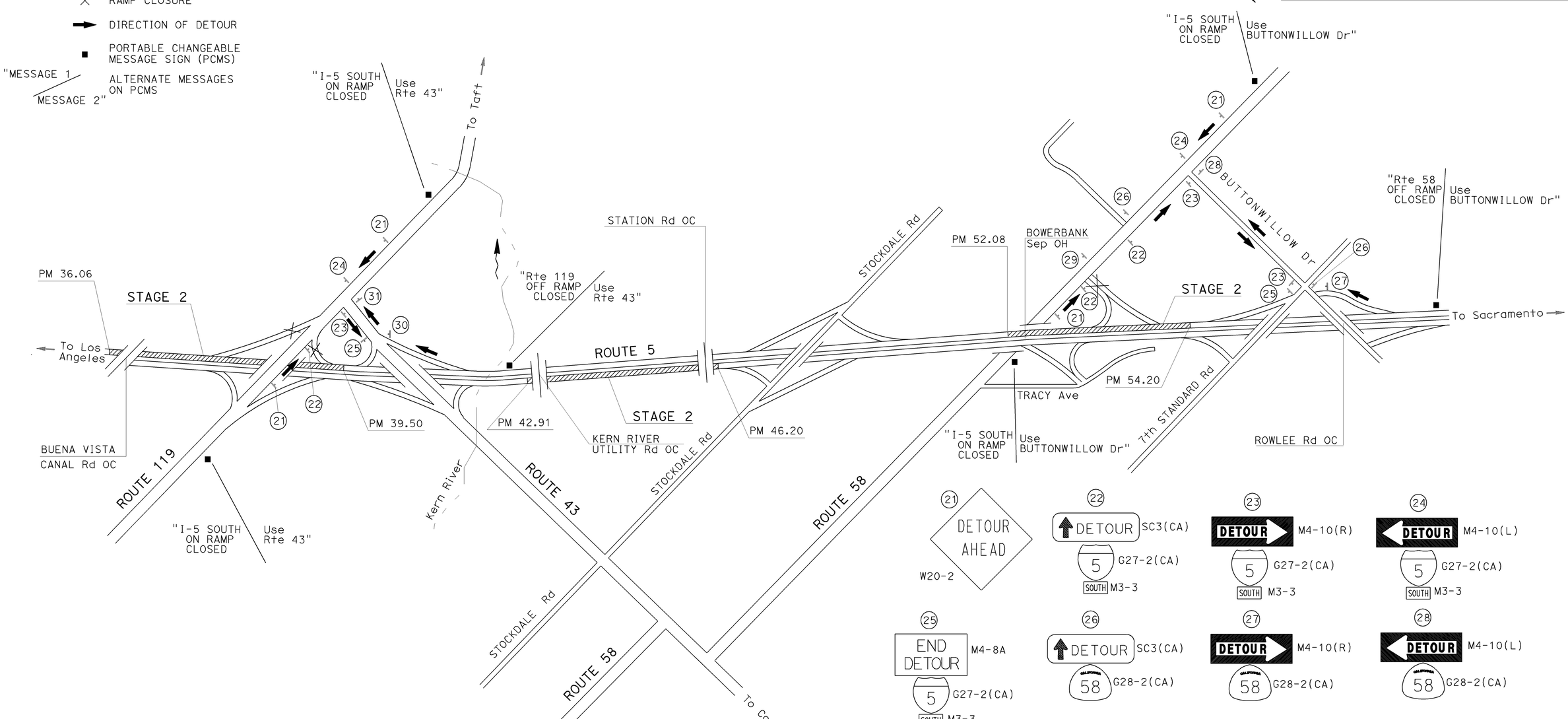

(21) DETOUR AHEAD — W20-2

(22) DETOUR — SC3(CA); 5 — G27-2(CA); SOUTH — M3-3

(23) DETOUR — M4-10(R); 5 — G27-2(CA); SOUTH — M3-3

(24) DETOUR — M4-10(L); 5 — G27-2(CA); SOUTH — M3-3

(25) END DETOUR — M4-8A; 5 — G27-2(CA); SOUTH — M3-3

(26) DETOUR — SC3(CA); 58 — G28-2(CA)

(27) DETOUR — M4-10(R); 58 — G28-2(CA)

(28) DETOUR — M4-10(L); 58 — G28-2(CA)

(29) END DETOUR — M4-8A; 58 — G28-2(CA)

(30) DETOUR — M4-10(R); 119 — G28-2(CA)

(31) END DETOUR — M4-8A; 119 — G28-2(CA)

THIS PLAN ACCURATE FOR DETOUR ONLY.

DETOUR PLAN (STAGE 2)

NO SCALE **DE-1**

STATE OF CALIFORNIA - DEPARTMENT OF TRANSPORTATION
Caltrans® TRAFFIC DESIGN
FUNCTIONAL SUPERVISOR: MOHAMMED OATAMI
CALCULATED-DESIGNED BY: ANDREY CHEVYCHALOV
CHECKED BY: ANDREY CHEVYCHALOV
DATE REVISED / REVISED BY:

LAST REVISION DATE PLOTTED => 17-AUG-2010
TIME PLOTTED => 09:06
03-29-10

BORDER LAST REVISED 4/11/2008

RELATIVE BORDER SCALE IS IN INCHES 0 1 2 3

USERNAME => s115755
DGN FILE => 60k890mg001.dgn

CU 06386

EA 0K8901

Dist	COUNTY	ROUTE	POST MILES TOTAL PROJECT	SHEET No.	TOTAL SHEETS
06	Ker	5	36.1/54.2	21	67

REGISTERED CIVIL ENGINEER — 03-29-10 DATE

ANDREY CHEVYCHALOV No. 68378 Exp. 9-30-11 CIVIL — REGISTERED PROFESSIONAL ENGINEER — STATE OF CALIFORNIA

05-17-10
PLANS APPROVAL DATE

THE STATE OF CALIFORNIA OR ITS OFFICERS OR AGENTS SHALL NOT BE RESPONSIBLE FOR THE ACCURACY OR COMPLETENESS OF SCANNED COPIES OF THIS PLAN SHEET.

(21) DETOUR AHEAD — W20-2

(22) DETOUR SC3(CA) — 5 G27-2(CA) — SOUTH M3-3

(24) DETOUR M4-10(L) — 5 G27-2(CA) — SOUTH M3-3

(25) END DETOUR M4-8A — 5 G27-2(CA) — SOUTH M3-3

(32) DETOUR M4-10(R) — 43 G28-2(CA)

(33) END DETOUR M4-8A — 43 G28-2(CA)

(34) DETOUR M4-10(R) — 5 G27-2(CA) — NORTH M3-1

(35) DETOUR SC3(CA) — 5 G27-2(CA) — NORTH M3-1

(36) DETOUR M4-10(L) — 5 G27-2(CA) — NORTH M3-1

(37) END DETOUR M4-8A — 5 G27-2(CA) — NORTH M3-1

(38) DETOUR M4-10(R) — Stockdale D3

(39) END DETOUR M4-8A — Stockdale D3

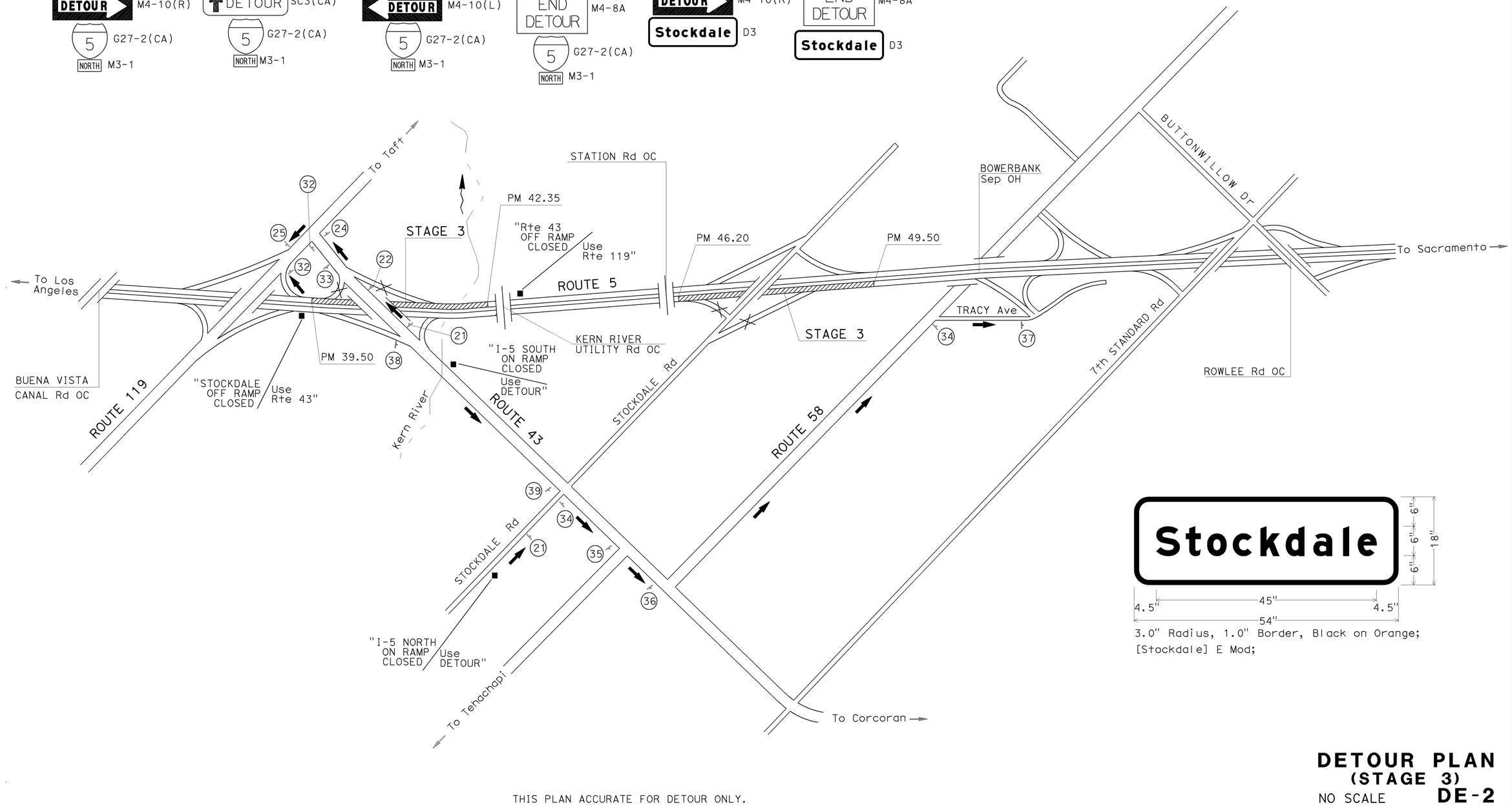

Stockdale

4.5" 45" 4.5" — 54"; 6" 6" 6" — 18"

3.0" Radius, 1.0" Border, Black on Orange;
[Stockdale] E Mod;

THIS PLAN ACCURATE FOR DETOUR ONLY.

DETOUR PLAN (STAGE 3)

NO SCALE **DE-2**

STATE OF CALIFORNIA - DEPARTMENT OF TRANSPORTATION
TRAFFIC DESIGN
FUNCTIONAL SUPERVISOR: MOHAMMED QATAMI
CALCULATED-DESIGNED BY: ANDREY CHEVYCHALOV
CHECKED BY: ANDREY CHEVYCHALOV
REVISED BY
DATE REVISED

LAST REVISION 03-29-10
DATE PLOTTED => 18-AUG-2010
TIME PLOTTED => 08:48

BORDER LAST REVISED 4/11/2008
RELATIVE BORDER SCALE IS IN INCHES 0 1 2 3
USERNAME => s115755
DGN FILE => 60K890mg002.dgn
CU 06386
EA 0K8901

Dist	COUNTY	ROUTE	POST MILES TOTAL PROJECT	SHEET No.	TOTAL SHEETS
06	Ker	5	36.1/54.2	22	67

REGISTERED CIVIL ENGINEER — 03-29-10 DATE

ANDREY CHEVYCHALOV No. 68378 Exp. 9-30-11 CIVIL — REGISTERED PROFESSIONAL ENGINEER — STATE OF CALIFORNIA

05-17-10
PLANS APPROVAL DATE

THE STATE OF CALIFORNIA OR ITS OFFICERS OR AGENTS SHALL NOT BE RESPONSIBLE FOR THE ACCURACY OR COMPLETENESS OF SCANNED COPIES OF THIS PLAN SHEET.

(21) DETOUR AHEAD — W20-2

(26) DETOUR SC3(CA) — 58 G28-2(CA)

(27) DETOUR M4-10(R) — 58 G28-2(CA)

(28) DETOUR M4-10(L) — 58 G28-2(CA)

(34) DETOUR M4-10(R) — 5 G27-2(CA) — NORTH M3-1

(35) DETOUR SC3(CA) — 5 G27-2(CA) — NORTH M3-1

(36) DETOUR M4-10(L) — 5 G27-2(CA) — NORTH M3-1

(37) END DETOUR M4-8A — 5 G27-2(CA) — NORTH M3-1

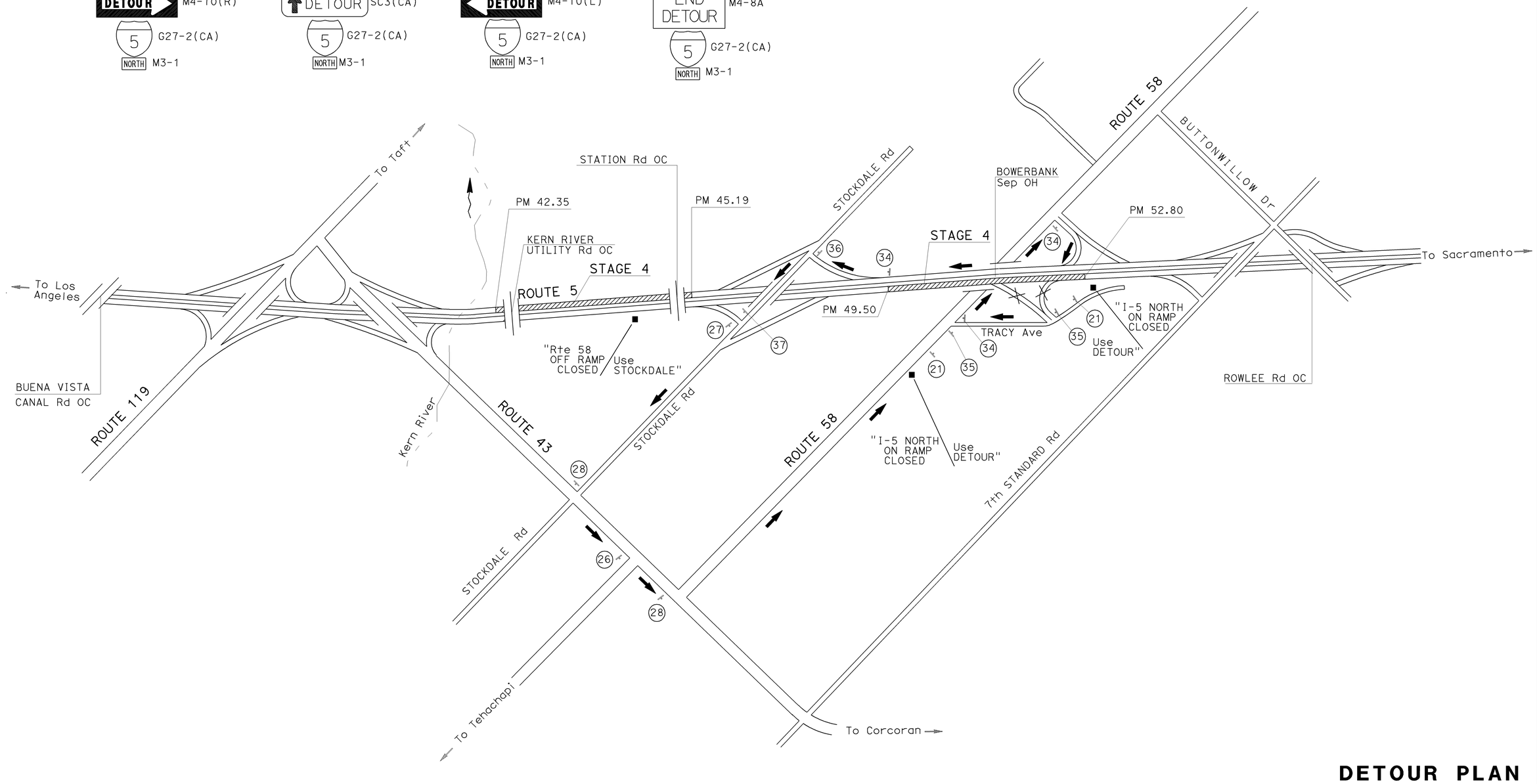

THIS PLAN ACCURATE FOR DETOUR ONLY.

DETOUR PLAN (STAGE 4)

NO SCALE **DE-3**

STATE OF CALIFORNIA - DEPARTMENT OF TRANSPORTATION
TRAFFIC DESIGN
FUNCTIONAL SUPERVISOR: MOHAMMED QATAMI
CALCULATED-DESIGNED BY: ANDREY CHEVYCHALOV
CHECKED BY:
REVISED BY / DATE REVISED:

LAST REVISION DATE PLOTTED => 17-AUG-2010
TIME PLOTTED => 09:06
03-29-10

BORDER LAST REVISED 4/11/2008 | RELATIVE BORDER SCALE IS IN INCHES 0 1 2 3 | USERNAME => s115755 | DGN FILE => 60k890mg003.dgn | CU 06386 | EA 0K8901

Dist	COUNTY	ROUTE	POST MILES TOTAL PROJECT	SHEET No.	TOTAL SHEETS
06	Ker	5	36.1/54.2	23	67

REGISTERED CIVIL ENGINEER — 03-29-10 DATE

05-17-10
PLANS APPROVAL DATE

REGISTERED PROFESSIONAL ENGINEER — ANDREY CHEVYCHALOV No. 68378 Exp. 9-30-11 CIVIL — STATE OF CALIFORNIA

THE STATE OF CALIFORNIA OR ITS OFFICERS OR AGENTS SHALL NOT BE RESPONSIBLE FOR THE ACCURACY OR COMPLETENESS OF SCANNED COPIES OF THIS PLAN SHEET.

REVISED BY	DATE REVISED

CALCULATED-DESIGNED BY: ANDREY CHEVYCHALOV
CHECKED BY: ANDREY CHEVYCHALOV
FUNCTIONAL SUPERVISOR: MOHAMMED QATAMI

STATE OF CALIFORNIA - DEPARTMENT OF TRANSPORTATION
Caltrans®
TRAFFIC DESIGN

(22) DETOUR SC3(CA) — 5 G27-2(CA) — SOUTH M3-3

(23) DETOUR M4-10(R) — 5 G27-2(CA) — SOUTH M3-3

(24) DETOUR M4-10(L) — 5 G27-2(CA) — SOUTH M3-3

(25) END DETOUR M4-8A — 5 G27-2(CA) — SOUTH M3-3

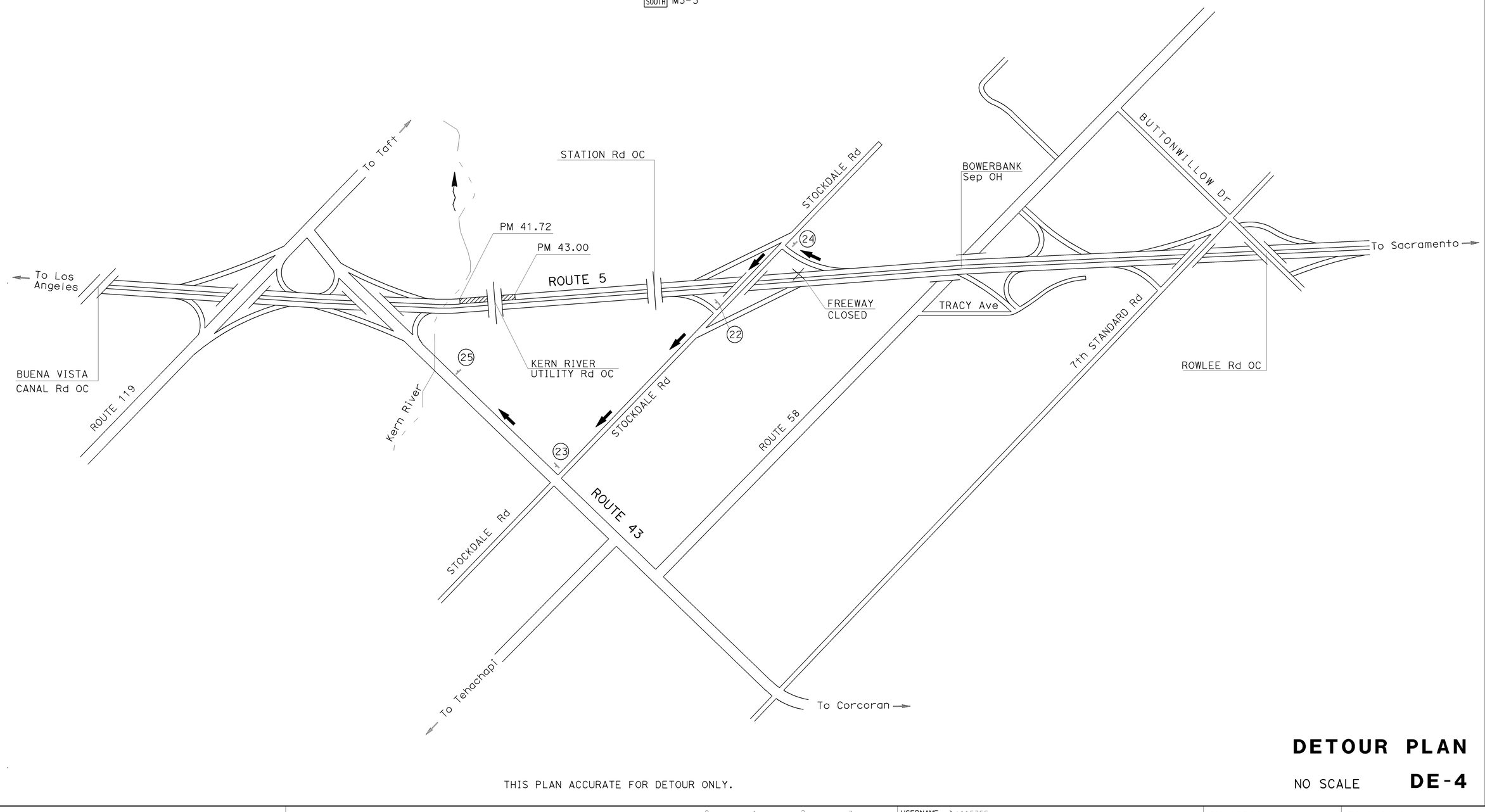

THIS PLAN ACCURATE FOR DETOUR ONLY.

DETOUR PLAN

NO SCALE **DE-4**

LAST REVISION | DATE PLOTTED => 17-AUG-2010 | TIME PLOTTED => 09:06 | 03-29-10

BORDER LAST REVISED 4/11/2008

RELATIVE BORDER SCALE IS IN INCHES 0 1 2 3

USERNAME => s115755
DGN FILE => 60k890mg004.dgn

CU 06386

EA 0K8901

Dist	COUNTY	ROUTE	POST MILES TOTAL PROJECT	SHEET No.	TOTAL SHEETS
06	Ker	5	36.1/54.2	24	67

REGISTERED CIVIL ENGINEER — 03-29-10 DATE

ANDREY CHEVYCHALOV No. 68378 Exp. 9-30-11 CIVIL — REGISTERED PROFESSIONAL ENGINEER — STATE OF CALIFORNIA

05-17-10
PLANS APPROVAL DATE

THE STATE OF CALIFORNIA OR ITS OFFICERS OR AGENTS SHALL NOT BE RESPONSIBLE FOR THE ACCURACY OR COMPLETENESS OF SCANNED COPIES OF THIS PLAN SHEET.

PAVEMENT DELINEATION QUANTITIES

LOCATION	DIRECTION	DETAIL No.	PAVEMENT MARKER				THERMOPLASTIC TRAFFIC STRIPE				PAINT TRAFFIC STRIPE (2-COAT)	THERMOPLASTIC PAVEMENT MARKING	
			NON-REFLECTIVE TYPE A WHITE	RETROREFLECTIVE TYPE C RED-CLEAR	RETROREFLECTIVE TYPE G CLEAR (ONE-WAY)	RETROREFLECTIVE TYPE H YELLOW (ONE-WAY)	4" SOLID	8" SOLID	4" (BROKEN 36-12)	4" (BROKEN 17-7)			
			EA	EA	EA	EA	LF	LF	LF	LF	LF	DESCRIPTION	SQFT
PM 36.06 TO PM 45.19	SB	25				1,044	50,066					9-CHP MARKING	54
PM 36.06 TO PM 45.19	SB	27B					50,646				50,646		
PM 36.06 TO PM 45.19	SB	13M	4,174		1,044				50,066				
PM 36.06 TO PM 45.19	SB	14M	72	24					864				
PM 36.06 TO PM 45.19	SB	8								600			
PM 36.06 TO PM 45.19	SB	36A			25			580					
PM 36.06 TO PM 45.19	SB	36			48			1,080					
PM 52.08 TO PM 54.20	SB	25				273	13,054					3-CHP MARKING	18
PM 52.08 TO PM 54.20	SB	27B					13,344				13,344		
PM 52.08 TO PM 54.20	SB	13M	1,088		273				13,054				
PM 52.08 TO PM 54.20	SB	8								300			
PM 52.08 TO PM 54.20	SB	36A			13			290					
PM 52.08 TO PM 54.20	SB	36			26			540					
PM 52.08 TO PM 54.20	SB	14M	36	12					432				
PM 42.91 TO PM 52.80	NB	25				1,128	54,079					10-CHP MARKING	60
PM 42.91 TO PM 52.80	NB	27B					54,659				54,659		
PM 42.91 TO PM 52.80	NB	13M	4,508		1,128				54,079				
PM 42.91 TO PM 52.80	NB	8								600			
PM 42.91 TO PM 52.80	NB	36A			25			580					
PM 42.91 TO PM 52.80	NB	36			48			1,080					
PM 42.91 TO PM 52.80	NB	14M	72	24					864				
FOG MARKERS					30								
SHEET TOTAL			9,950	60	2,660	2,445	235,848	4,150	119,359	1,500	118,649		132
THQ-1 TOTAL					159	5,017							
TOTAL			9,950		10,341		235,848	4,150	119,359	1,500	118,649*		132

* BLACK PAINT TO PROVIDE SUFFICIENT CONTRAST WITH THE MARKINGS ON LIGHT-COLORED PAVEMENT (PCC)

DELINEATOR (CLASS 1)

DIRECTION	PM BEGIN	PM END	EA
SB	36.06	45.19	32
SB	52.08	54.20	16
NB	42.91	52.80	32
		TOTAL	80

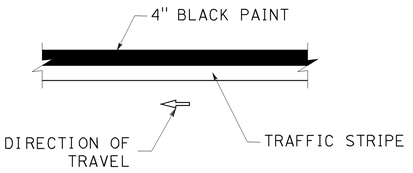

TRAFFIC STRIPE CONTRAST DETAIL

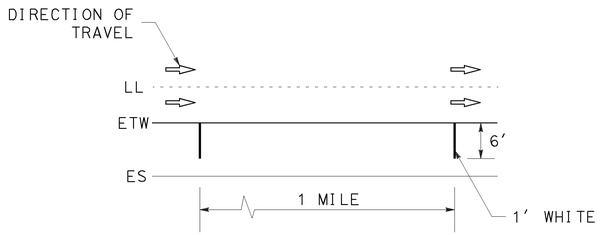

SPEED MEASUREMENT MARKING

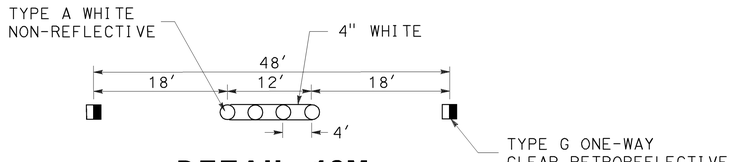

DETAIL 13M

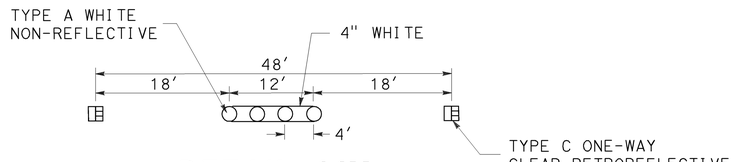

DETAIL 14M

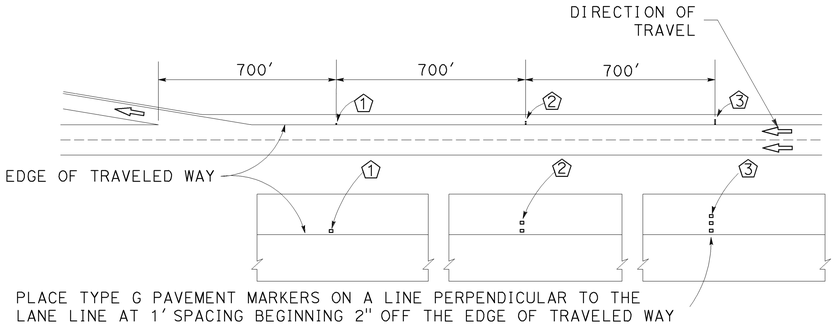

3-2-1 FOG MARKER DETAIL

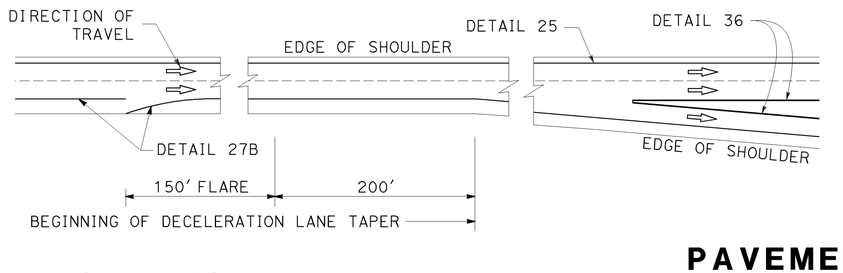

RIGHT EDGELINE FLARE DETAIL

PAVEMENT DELINEATION PLAN, QUANTITIES AND DETAILS

NO SCALE

PDQ-1

STATE OF CALIFORNIA - DEPARTMENT OF TRANSPORTATION
TRAFFIC DESIGN
Caltrans
FUNCTIONAL SUPERVISOR: MOHAMMED QATAMI
CALCULATED-DESIGNED BY: ANDREY CHEVYCHALOV
CHECKED BY:
REVISED BY
DATE REVISED

LAST REVISION DATE PLOTTED => 18-AUG-2010
TIME PLOTTED => 09:40
03-29-10

BORDER LAST REVISED 4/11/2008 | RELATIVE BORDER SCALE IS IN INCHES 0 1 2 3 | USERNAME => s115755 | DGN FILE => 60K890nc001.dgn | CU 06386 | EA 0K8901

Dist	COUNTY	LOCATION CODE	POST MILES TOTAL PROJECT	SHEET No.	TOTAL SHEETS
06	Ker	5	36.1/54.2	25	67

REGISTERED CIVIL ENGINEER — 05-11-10 DATE

05-17-10
PLANS APPROVAL DATE

REGISTERED PROFESSIONAL ENGINEER — Edward S. Wojewoda — No. 51240 — Exp. 09/30/11 — CIVIL — STATE OF CALIFORNIA

THE STATE OF CALIFORNIA OR ITS OFFICERS OR AGENTS SHALL NOT BE RESPONSIBLE FOR THE ACCURACY OR COMPLETENESS OF SCANNED COPIES OF THIS PLAN SHEET.

ROADWAY QUANTITIES

* LOCATION PM TO PM	GRIND EXISTING CONCRETE PAVEMENT	ROADWAY EXCAVATION	CLASS 2 AGGREGATE BASE	CLASS 2 AGGREGATE SUBBASE	CONTINUOUSLY REINFORCED CONCRETE PAVEMENT	HMA (TYPE A)	REPLACE Conc Pvmt (RAPID STRENGTH CONCRETE)	TACK COAT	RUMBLE STRIP	SHOULDER RUMBLE STRIP (CONCRETE PAVEMENT ROLLED-IN INDENTATIONS)	IMPORTED MATERIAL (SHOULDER BACKING)	SEAL LONGITUDINAL ISOLATION JOINT	CRCP EXPANSION JOINT (TYPE WF)	CRCP EXPANSION JOINT (TYPE AN)	CRCP PAVEMENT ANCHOR	REPLACE AC SUFRACING	CRCP TERMINAL JOINT (TYPE D)	CRCP TERMINAL JOINT (TYPE E)	TEMPORARY FENCE (TYPE ESA)	DOWEL BAR DRILL AND BOND
	SQYD	CY	CY	CY	CY	TON	CY	TON	STA	STA	TON	LF	LF	LF	LF	CY	LF	LF	LF	EA
36.06 TO 45.19 SB	64,275	110,352	16,448	38,960	27,210	61,896	2398	35.7	482	482	4,820	96,413	28	56	84	8	28	28	12,730	
42.91 TO 52.80 BN	69,626	119,258	17,815	42,200	27,811	67,037	325	38.7	522	522	5,222	104,438	28	168	196	8	56	112		
52.08 TO 54.20 BS	14,925	26,450	3,836	9,075	5,389	14,474	1199	8.3	112	112	1,120	22,387	28	84	112	8	28	56		
PANEL REPAIR (RSC)							96													
HMA DIKE						287		1.4												
HMA OVERSIDE DRAIN (FROM Q-3)						11														
CRCP (SEE C-SHEETS)																				3100
TOTAL	148,826	256,060	38,099	90,235	60,410	143,705	4018	84.1	1116	1116	11,162	223,238	84	308	392	24	112	196	12,730	3100

PANEL REPAIR

NORTHBOUND				SOUTHBOUND			
* LOCATION PM	LANE No.	LENGTH OF PANEL (N)	REPLACE Conc Pvmt (RAPID STRENGTH CONCRETE)	* LOCATION PM	LANE No.	LENGTH OF PANEL (N)	REPLACE Conc Pvmt (RAPID STRENGTH CONCRETE)
		LF	CY			LF	CY
45.17	1	18	6.0	40.78	1	18	6.0
46.34	1	18	6.0	40.74	1	18	6.0
46.35	1	18	6.0	39.36	1	18	6.0
47.20	1	18	6.0	39.36	1	18	6.0
47.21	1	18	6.0	39.34	1	18	6.0
				37.35	1	18	6.0
				37.35	1	18	6.0
				37.35	1	18	6.0
				37.35	1	18	6.0
				36.09	1	18	6.0
				36.08	1	18	6.0
SUBTOTAL			30.0	SUBTOTAL			66.0
						TOTAL	96.0 **

(N) NOT A SEPARATE PAY ITEM, FOR INFORMATION ONLY.

THE LENGTH OF PANELS AND PAVEMENT QUANTITIES APPROXIMATE ONLY, EXACT TO BE DETERMINED IN THE FIELD.

* APPROXIMATE LOCATIONS ONLY, EXACT LOCATIONS WILL BE DETERMINED BY THE ENGINEER.

HOT MIX ASPHALT DIKE

* LOCATION PM TO PM	PLACE HMA DIKE (TYPE C)	PLACE HMA DIKE (TYPE F)	PLACE HMA DIKE (TYPE E)	REMOVE AC DIKE	** HMA (TYPE A)
	LF	LF	LF	LF	TON
39.00 SB	62.5	75.0		137.5	1.5
41.20 SB			125.0	125.0	3.3
41.34 SB	62.5	75.0		137.5	1.5
42.00 SB	62.5	62.5		125.0	1.3
41.72 - 43.00 SB			6,758.0	6,758.0	177.7
52.08 - 52.13 SB	250.0	125.0		375.0	3.6
52.17 - 52.19 SB			106	106.0	2.8
52.20 - 52.30 SB			528.0	528.0	13.9
53.82 SB	62.5	50.0		112.5	1.1
42.90 - 43.00 NB			528.0	528.0	13.9
51.73 - 52.08 NB			1,848.0	1,848.0	48.6
52.08 - 52.13 NB	250.0	125.0		375.0	3.6
52.20 - 52.30 NB			528.0	528.0	13.9
TOTAL	750.0	512.5	10,421.0	11,684.5	286.7

** QUANTITY INCLUDED IN ROADWAY QUANTITIES TABLE

SUMMARY OF QUANTITIES

Q-1

REVISED BY	DATE REVISED
EDWARD WOJEWODA	
KEVIN KEISTER	

CALCULATED-DESIGNED BY

CHECKED BY

FUNCTIONAL SUPERVISOR: RICK HELGESON

STATE OF CALIFORNIA - DEPARTMENT OF TRANSPORTATION — DESIGN

Caltrans

LAST REVISION — DATE PLOTTED => 17-AUG-2010 — TIME PLOTTED => 09:06 — 05-11-10

BORDER LAST REVISED 4/11/2008

RELATIVE BORDER SCALE IS IN INCHES 0 1 2 3

USERNAME => s115755
DGN FILE => 60k890pa001.dgn

CU 06263

EA 0K8901

Dist	COUNTY	LOCATION CODE	POST MILES TOTAL PROJECT	SHEET No.	TOTAL SHEETS
06	Ker	5	36.1/54.2	26	67

REGISTERED CIVIL ENGINEER — 05-11-10 DATE

Edward S. Wojewoda No. 51240 Exp. 09/30/11 CIVIL — REGISTERED PROFESSIONAL ENGINEER — STATE OF CALIFORNIA

05-17-10
PLANS APPROVAL DATE

THE STATE OF CALIFORNIA OR ITS OFFICERS OR AGENTS SHALL NOT BE RESPONSIBLE FOR THE ACCURACY OR COMPLETENESS OF SCANNED COPIES OF THIS PLAN SHEET.

REMOVE SURVEY MONUMENT

	* LOCATION PM	OFFSET	MONUMENT TYPE	REMOVE MONUMENT
				EA
NORTHBOUND	42.96	74' R†	TYPE A	1
	43.30	74' R†	TYPE A	1
	43.71	74' R†	TYPE A	1
	44.09	74' R†	TYPE A	1
	44.47	74' R†	TYPE A	1
	44.85	74' R†	TYPE A	1
	45.23	74' R†	TYPE A	1
	45.61	74' R†	TYPE A	1
	45.98	74' R†	TYPE A	1
	46.36	74' R†	TYPE A	1
	46.74	74' R†	TYPE A	1
	47.12	74' R†	TYPE A	1
	47.50	74' R†	TYPE A	1
	47.88	74' R†	TYPE A	1
	48.26	74' R†	TYPE A	1
	48.64	74' R†	TYPE A	1
	49.02	74' R†	TYPE A	1
	49.39	74' R†	TYPE A	1
	49.62	74' R†	TYPE A	1
	49.77	74' R†	TYPE A	1
	50.15	74' R†	TYPE A	1
	50.53	74' R†	TYPE A	1
	50.91	74' R†	TYPE A	1
	51.29	74' R†	TYPE A	1
	51.67	74' R†	TYPE A	1
	52.05	74' R†	TYPE A	1
	52.42	74' R†	TYPE A	1
	52.80	74' R†	TYPE A	1
	TOTAL			28

* APPROXIMATE LOCATIONS ONLY, EXACT LOCATIONS TO BE DETERMINED BY ENGINEER.

EROSION CONTROL (HYDROSEED)

STATIONING	EROSION CONTROL	MOVE IN MOVE OUT (EROSION CONTROL)	FIBER (EROSION CONTROL) (N)	PURE LIVE SEED (EROSION CONTROL) (N)	COMMERCIAL FERTILIZER (EROSION CONTROL) (N)	STABILIZING EMULSION (EROSION CONTROL) (N)
	ACRE	EA	LB	LB	LB	LB
SOUTHBOUND PM 36.06 TO PM 45.19	16.60	6	11,620.00	423.30	3,320.00	4,150.00
NORTHBOUND PM 42.91 TO PM 52.80	17.98	6	12,586.00	458.49	3,596.00	4,495.00
SOUTHBOUND PM 52.08 TO PM 54.20	3.85	2	2,695.00	98.18	770	962.50
TOTAL	38.43	14	26,901.00	979.97	7,686.00	9,607.50

(N) - NOT A SEPARATE PAY ITEM, FOR INFORMATION ONLY.

METAL BEAM GUARD RAILING

* LOCATION (PM)	LAYOUT TYPE	MBGR AVAILABLE FOR REUSE (N)	MBGR NEEDED (STEEL POST) (N)	DOUBLE MBGR AVAILABLE FOR REUSE (N)	DOUBLE MBGR NEEDED (STEEL POST) (N)	RECONSTRUCT TERMINAL SYSTEM (TYPE SRT)	END ANCHOR ASSEMBLY (TYPE SFT)	TRANSITION RAILING (TYPE WB)	ALTERNATIVE CRASH CUSHION SYSTEM	RAIL TENSIONING ASSEMBLY
		LF	LF	LF	LF	EA	EA	EA	EA	EA
36.099	14A	162.5	75.0		50.0		2		2	2
38.793	14A	150.0	75.0		50.0		2		2	2
38.793 NB	12B	25.0	25.0			1	1	1		
39.000 SB	16B	37.5	37.5			1	1			
41.193	14A	250.0	175.0		50.0		2		2	2
41.193 SB	16B	62.5	87.5			1	1			
41.193 NB	16B	62.5	87.5			1	1			
41.340 SB	16B	37.5	37.5			1	1			
42.004 SB	12B	50.0	37.5			1	1	1		
42.004	12E	100.0	50.0	300.0	425.0		2	2	2	2
42.004 NB	12B	62.5	37.5			1	1	1		
42.970	14A	200.0	75.0		50.0		2		2	2
43.860 SB	16B	25.0	37.5			1	1			
45.128	14A	187.5	75.0		50.0		2		2	2
47.546	14A	200.0	75.0		50.0		2		2	2
48.640 NB	16B	50.0	150.0			1	1			
52.094 SB	12B	12.5	12.5			1	1	1		
52.094	12E	12.5	50.0	287.5	425.0		2	2	2	2
52.094 NB	12B	25.0	12.5			1	1	1		
52.094 NB		0.0	12.5							
52.440	14A	100.0	75.0		50.0		2		2	2
52.440 SB	16B	12.5	37.5			1	1			
53.820 SB	16B	37.5	37.5			1	1			
TOTAL		1862.5	1375.0	587.5	1200.0	13	31	9	18	18
RECONSTRUCT MBGR (STEEL POST)		1375.0								
RECONSTRUCT DOUBLE MBGR (STEEL POST)				831.0						
DOUBLE MBGR (STEEL POST)				369.0						

* APPROXIMATE LOCATIONS ONLY, EXACT LOCATIONS TO BE DETERMINED BY ENGINEER.
(N) - NOT A SEPARATE PAY ITEM, FOR INFORMATION ONLY.

SUMMARY OF QUANTITIES

Q-2

CALCULATED-DESIGNED BY
CHECKED BY
REVISED BY
DATE REVISED
EDWARD WOJEWODA
KEVIN KEISTER
FUNCTIONAL SUPERVISOR
RICK HELGESON
STATE OF CALIFORNIA - DEPARTMENT OF TRANSPORTATION
DESIGN
Caltrans

LAST REVISION 05-11-10
DATE PLOTTED => 17-AUG-2010
TIME PLOTTED => 09:06

BORDER LAST REVISED 4/11/2008
RELATIVE BORDER SCALE IS IN INCHES 0 1 2 3
USERNAME => s115755
DGN FILE => 60k890pa002.dgn
CU 06263
EA 0K8901

Dist	COUNTY	LOCATION CODE	POST MILES TOTAL PROJECT	SHEET No.	TOTAL SHEETS
06	Ker	5	36.1/54.2	27	67

REGISTERED CIVIL ENGINEER — 05-11-10 DATE

Edward S. Wojewoda No. 51240 Exp. 09/30/11 CIVIL — REGISTERED PROFESSIONAL ENGINEER — STATE OF CALIFORNIA

05-17-10
PLANS APPROVAL DATE

THE STATE OF CALIFORNIA OR ITS OFFICERS OR AGENTS SHALL NOT BE RESPONSIBLE FOR THE ACCURACY OR COMPLETENESS OF SCANNED COPIES OF THIS PLAN SHEET.

NOTE:

1. LOCATION OF DRAINAGE FACILITIES ARE APPROXIMATE AND SHALL BE VERIFIED BY THE CONTRACTOR PRIOR TO CONSTRUCTION

DOWNDRAIN AND OVERSIDE DRAIN QUANTITIES

LOCATION	TYPE	12" ENTRANCE TAPER	12" CSP DOWNDRAIN	PLACE HMA (Misc AREA)	HMA (TYPE A) *	12" ANCHOR ASSEMBLY	REMOVE DOWNDRAIN	12" STEEL FLARED END SECTION	12" DOWNDRAIN SLIP JOINT
PM		EA	LF	SQYD	TON	EA	LF	EA	EA
41.74 Lt (SB)	PIPE	1	20	4.86	0.64	1	20	1	
41.81 Lt (SB)	PIPE	1	20	4.86	0.64	1	20	1	
42.10 Lt (SB)	PIPE	1	20	4.86	0.64	1	20	1	
42.23 Lt (SB)	PIPE	1	16	4.86	0.64	1	16	1	
42.30 Lt (SB)	PIPE	1	20	4.86	0.64	1	20	1	
42.46 Lt (SB)	PIPE	1	20	4.86	0.64	1	20	1	
42.54 Lt (SB)	PIPE	1	22	4.86	0.64	1	22	1	1
42.61 Lt (SB)	PIPE	1	16	4.86	0.64	1	16	1	
42.68 Lt (SB)	PIPE	1	16	4.86	0.64	1	16	1	
42.76 Lt (SB)	PIPE	1	10	4.86	0.64	1	10	1	
42.83 Lt (SB)	PIPE	1	10	4.86	0.64	1	10	1	
52.08 Lt (SB)	PIPE	1	64	4.86	0.64	1	64	1	3
42.92 Rt (NB)	HMA			53.00	0.99				
51.76 Rt (NB)	HMA			53.00	0.99				
52.13 Rt (NB)	HMA			53.00	0.99				
TOTAL		12	274	217.32	10.65	12	274	12	4

* QUANTITY INCLUDED IN ROADWAY QUANTITIES TABLE

STORM WATER BMP

PM	ITEM	UNIT	QUANTITY
41.96 - 42.04	TEMPORARY SILT FENCE	LF	300
See Stages	TEMPORARY CONSTRUCTION ENTRANCE	EA	14
See C-3 Sheet	TEMPORARY DRAINAGE INLET PROTECTION	EA	75

CONCRETE FLARED END SECTION

LOCATION	CONCRETE FES		REMOVE FES	NOTES
PM	24" EA	30" EA	EA	
36.20 (Lt)	1			
36.72 (Lt)		1		
38.22 (Lt)	1		1	
38.75 (Lt)	1		1	Lt SIDE ROUTE 119 ON RAMP
39.13 (Lt)	1		1	
39.46 (Lt)	1		1	ON THE OUTSIDE SHOULDER
39.46 (Lt)	1		1	ON THE INSIDE SHOULDER
40.90 (Lt)	1		1	
41.10 (Lt)	1		1	
41.90 (Lt)	1		1	
43.57 (Lt & Rt)	1		1	
43.80 (Lt)	1		1	
43.97 (Lt)	1			
45.04 (Lt)	1		1	
45.38 (Lt)	1		1	ON THE INSIDE SHOULDER
45.51 (Rt)	1		1	
46.56 (Rt)	1		1	
47.41 (Rt)	1		1	Rt SIDE STOCKDALE Rd ON RAMP
47.83 (Rt)	1		1	
48.71 (Rt)		1	1	ON THE INSIDE SHOULDER
49.00 (Lt)	1		1	
50.42 (Rt)	1		1	
51.33 (Rt)	1		1	ON THE INSIDE SHOULDER
TOTAL	21	2	20	

SUMMARY OF QUANTITIES
Q-3

CALCULATED-DESIGNED BY: EDWARD WOJEWODA
CHECKED BY: KEVIN KEISTER
FUNCTIONAL SUPERVISOR: RICK HELGESON
REVISED BY / DATE REVISED

STATE OF CALIFORNIA - DEPARTMENT OF TRANSPORTATION
DESIGN

LAST REVISION DATE PLOTTED => 18-AUG-2010
05-11-10 TIME PLOTTED => 08:48

BORDER LAST REVISED 4/11/2008

RELATIVE BORDER SCALE IS IN INCHES 0 1 2 3

USERNAME => s115755
DGN FILE => 60k890pa003.dgn

CU 06263

EA 0K8901

Dist	COUNTY	ROUTE	POST MILES TOTAL PROJECT	SHEET No.	TOTAL SHEETS
06	Ker	5	36.1/54.2	28	71

REGISTERED ELECTRICAL ENGINEER — 05-10-10 DATE

PLANS APPROVAL DATE — 05-17-10

REGISTERED PROFESSIONAL ENGINEER — HASHIM KHALID — No. 18054 — Exp. 6/30/11 — ELECTRICAL — STATE OF CALIFORNIA

THE STATE OF CALIFORNIA OR ITS OFFICERS OR AGENTS SHALL NOT BE RESPONSIBLE FOR THE ACCURACY OR COMPLETENESS OF ELECTRONIC COPIES OF THIS PLAN SHEET.

LEGEND: (FOR THIS SHEET ONLY)

1 TO Exist HIGHWAY LIGHTING.

2 TO Exist SERVICE EQUIPMENT ENCLOSURE LOCATED ON NORTHBOUND ROUTE 5, Approx 265′ NORTH OF ELECTROLIER (39.04).

ABBREVIATIONS:

PG&E - PACIFIC GAS AND ELECTRIC COMPANY
WIM - WEIGH-IN-MOTION
AT&T - AMERICAN TELEPHONE AND TELEGRAPH

NOTES:

1. ALL PULL BOXES SHALL BE No. 5 WITH EXTENSION UNLESS OTHERWISE NOTED.
2. RIGHT OF WAY LIMITS ARE INDETERMINATE, AND ARE NOT SHOWN. THE CONTRACTOR MUST CONTACT RIGHT OF WAY ENGINEERING AT THE DISTRICT OFFICE FOR CONDITIONS OF USE PRIOR TO COMMENCING WORK.

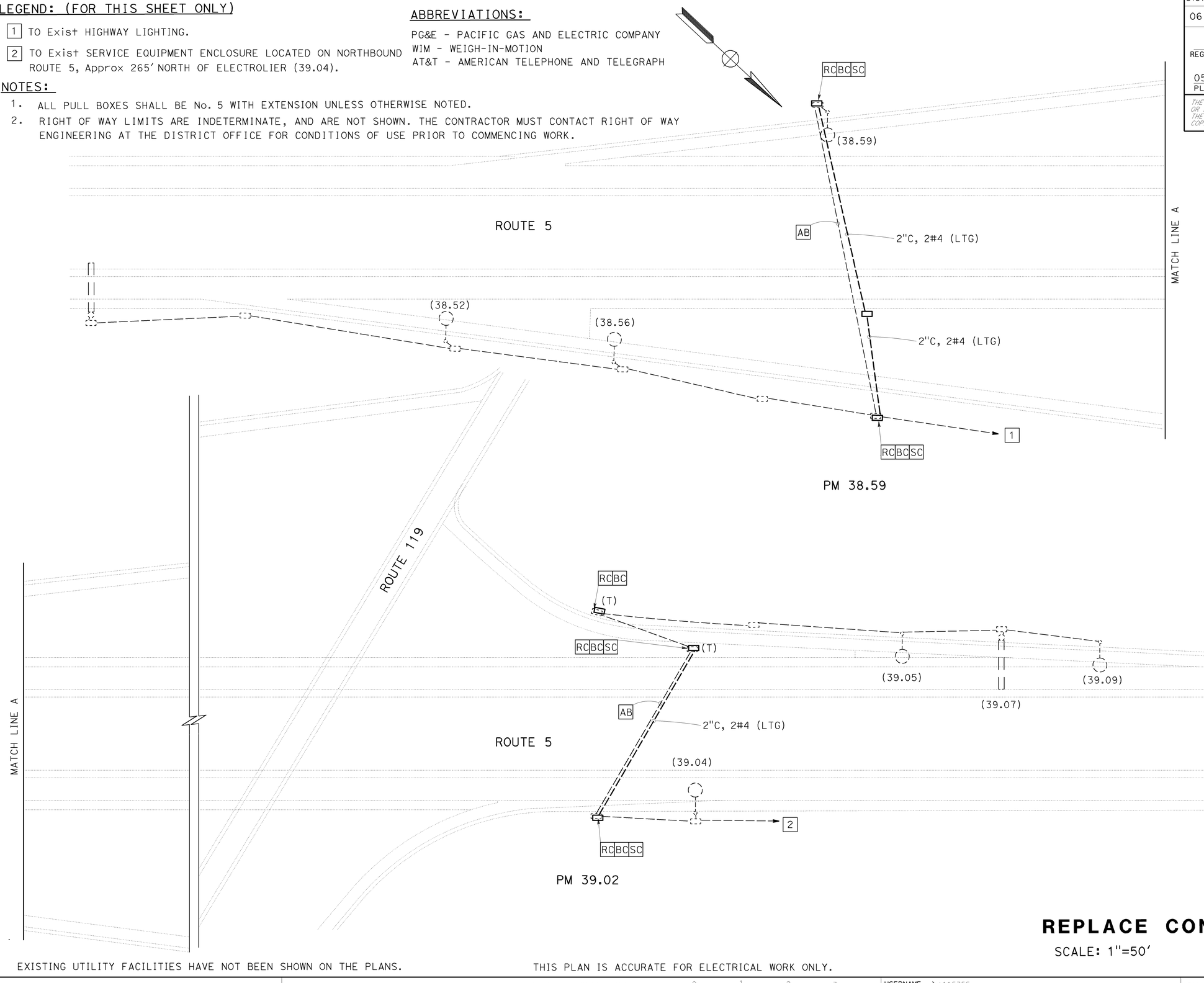

EXISTING UTILITY FACILITIES HAVE NOT BEEN SHOWN ON THE PLANS.

THIS PLAN IS ACCURATE FOR ELECTRICAL WORK ONLY.

REPLACE CONDUIT CROSSINGS

SCALE: 1"=50′

E-1

REVISED BY | DATE REVISED
KARIM ABDOLLAHIAN | HASHIM KHALID
CALCULATED-DESIGNED BY | CHECKED BY
FUNCTIONAL SUPERVISOR: ALI BAKHDOUD

STATE OF CALIFORNIA - DEPARTMENT OF TRANSPORTATION
Caltrans® ELECTRICAL DESIGN

LAST REVISION | DATE PLOTTED => 17-AUG-2010 | TIME PLOTTED => 09:07
05-10-10

BORDER LAST REVISED 4/11/2008 | RELATIVE BORDER SCALE IS IN INCHES 0 1 2 3 | USERNAME => s115755 | DGN FILE => 60k890ua001.dgn | CU 06391 | EA 0K8901

Dist	COUNTY	ROUTE	POST MILES TOTAL PROJECT	SHEET No.	TOTAL SHEETS
06	Ker	5	36.1/54.2	29	71

05-10-10
REGISTERED ELECTRICAL ENGINEER DATE

HASHIM KHALID
No. 18054
Exp. 6/30/11
ELECTRICAL
REGISTERED PROFESSIONAL ENGINEER
STATE OF CALIFORNIA

05-17-10
PLANS APPROVAL DATE

THE STATE OF CALIFORNIA OR ITS OFFICERS OR AGENTS SHALL NOT BE RESPONSIBLE FOR THE ACCURACY OR COMPLETENESS OF ELECTRONIC COPIES OF THIS PLAN SHEET.

LEGEND: (FOR THIS SHEET ONLY)

1 Exist 120/240 V TYPE III-AF SERVICE EQUIPMENT ENCLOSURE WITH 2P, 100 A MAIN CB AND THE FOLLOWING CIRCUITS:

AMPERES	VOLTS	POLES	NAME PLATE	METER	PHOTOELECTRIC CONTROL TYPE
15	120	1	CONTROLS	YES	——
40	120	1	* TRAFFIC MONITORING	YES	——
20	120	1	SPARE	YES	——
40	240	2	SPARE	YES	——

* CHANGE NAME PLATE TO TMS/CCTV.

2 Exist MODEL 170 CONTROLLER ASSEMBLY WITH MODEL 334 CABINET. INSTALL CCTV EQUIPMENT.

3 TYPE CCTV 35 POLE WITH CAMERA ASSEMBLY.

4 AB Exist INDUCTIVE LOOP DETECTORS. INSTALL INDUCTIVE LOOP DETECTORS AS SHOWN ON SHEET E-11 IN DETAILS A AND B.

NOTES:

1. ALL PULL BOXES SHALL BE No. 5 WITH EXTENSION UNLESS OTHERWISE NOTED.
2. RIGHT OF WAY LIMITS ARE INDETERMINATE, AND ARE NOT SHOWN. THE CONTRACTOR MUST CONTACT RIGHT OF WAY ENGINEERING AT THE DISTRICT OFFICE FOR CONDITIONS OF USE PRIOR TO COMMENCING WORK.

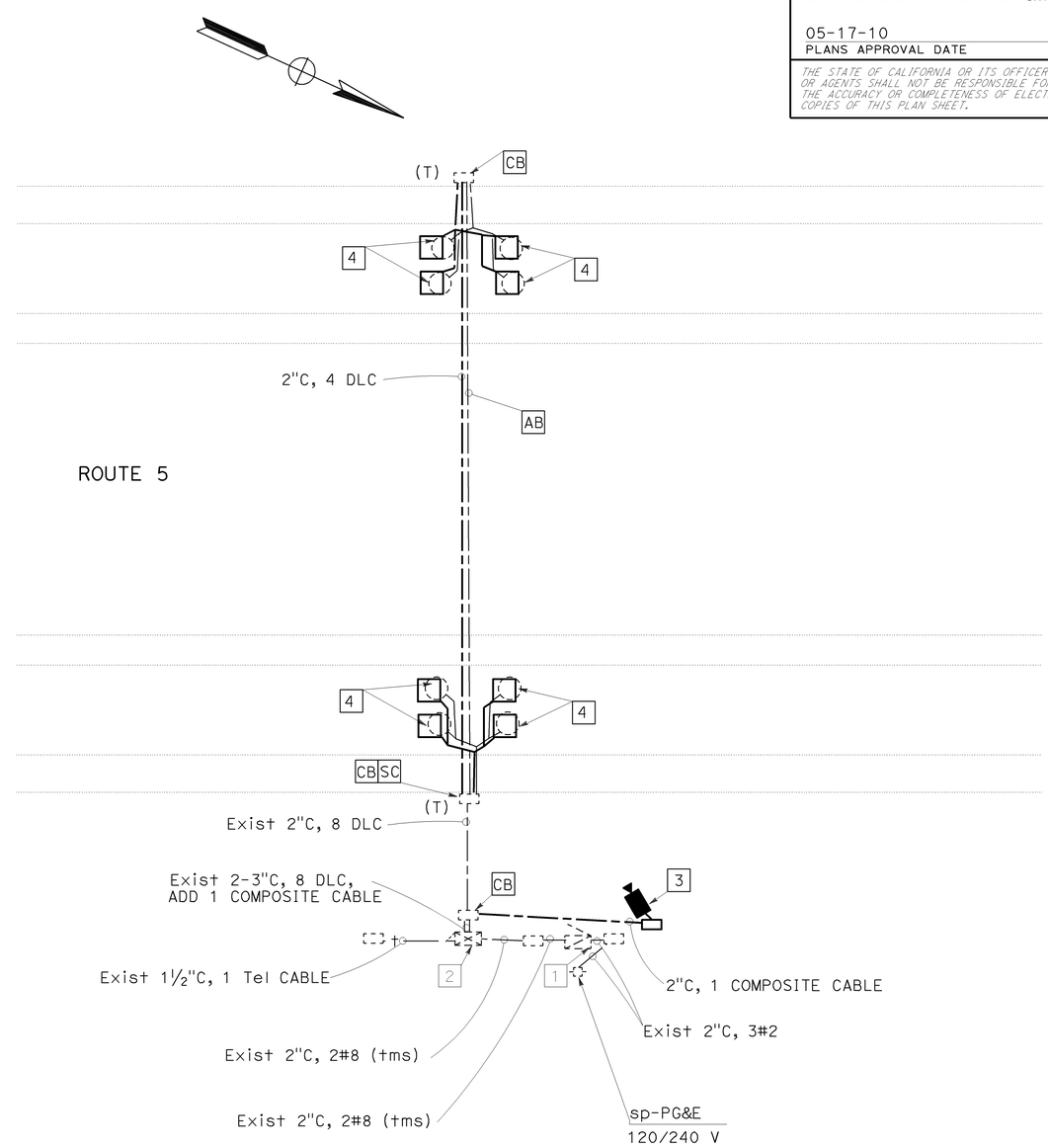

PM 39.10

TRAFFIC MONITORING STATION
CLOSED CIRCUIT TELEVISION SYSTEM

SCALE: 1"=20'

E-2

EXISTING UTILITY FACILITIES HAVE NOT BEEN SHOWN ON THE PLANS.

THIS PLAN IS ACCURATE FOR ELECTRICAL WORK ONLY.

REVISED BY | DATE REVISED
KARIM ABDOLLAHIAN | HASHIM KHALID
CALCULATED-DESIGNED BY | CHECKED BY
FUNCTIONAL SUPERVISOR: ALI BAKHDOUD
STATE OF CALIFORNIA - DEPARTMENT OF TRANSPORTATION
Caltrans® ELECTRICAL DESIGN

LAST REVISION | DATE PLOTTED => 17-AUG-2010
05-10-10 | TIME PLOTTED => 09:07

BORDER LAST REVISED 4/11/2008
RELATIVE BORDER SCALE IS IN INCHES 0 1 2 3
USERNAME => s115755
DGN FILE => 60k890ua002.dgn
CU 06391
EA 0K8901

Dist	COUNTY	ROUTE	POST MILES TOTAL PROJECT	SHEET No.	TOTAL SHEETS
06	Ker	5	36.1/54.2	30	71

REGISTERED ELECTRICAL ENGINEER — 05-10-10

PLANS APPROVAL DATE — 05-17-10

REGISTERED PROFESSIONAL ENGINEER — HASHIM KHALID — No. 18054 — Exp. 6/30/11 — ELECTRICAL — STATE OF CALIFORNIA

THE STATE OF CALIFORNIA OR ITS OFFICERS OR AGENTS SHALL NOT BE RESPONSIBLE FOR THE ACCURACY OR COMPLETENESS OF ELECTRONIC COPIES OF THIS PLAN SHEET.

LEGEND: (FOR THIS SHEET ONLY)

1 TO Exist HIGHWAY LIGHTING.

2 TO Exist SERVICE POINT LOCATED ON NORTHBOUND ROUTE 5, Approx 450' SOUTH OF ELECTROLIER (41.56).

3 STATE-FURNISHED MODEL 2070 CONTROLLER ASSEMBLY FOR TMS WITH WIRELESS MODEM. 730' NORTH OF ROUTE 43 BRIDGE.

4 INSTALL INDUCTIVE LOOP DETECTORS AS SHOWN ON SHEET E-11 IN DETAILS A AND B.

NOTES:

1. ALL PULL BOXES SHALL BE No. 5 WITH EXTENSION UNLESS OTHERWISE NOTED.
2. RIGHT OF WAY LIMITS ARE INDETERMINATE, AND ARE NOT SHOWN. THE CONTRACTOR MUST CONTACT RIGHT OF WAY ENGINEERING AT THE DISTRICT OFFICE FOR CONDITIONS OF USE PRIOR TO COMMENCING WORK.

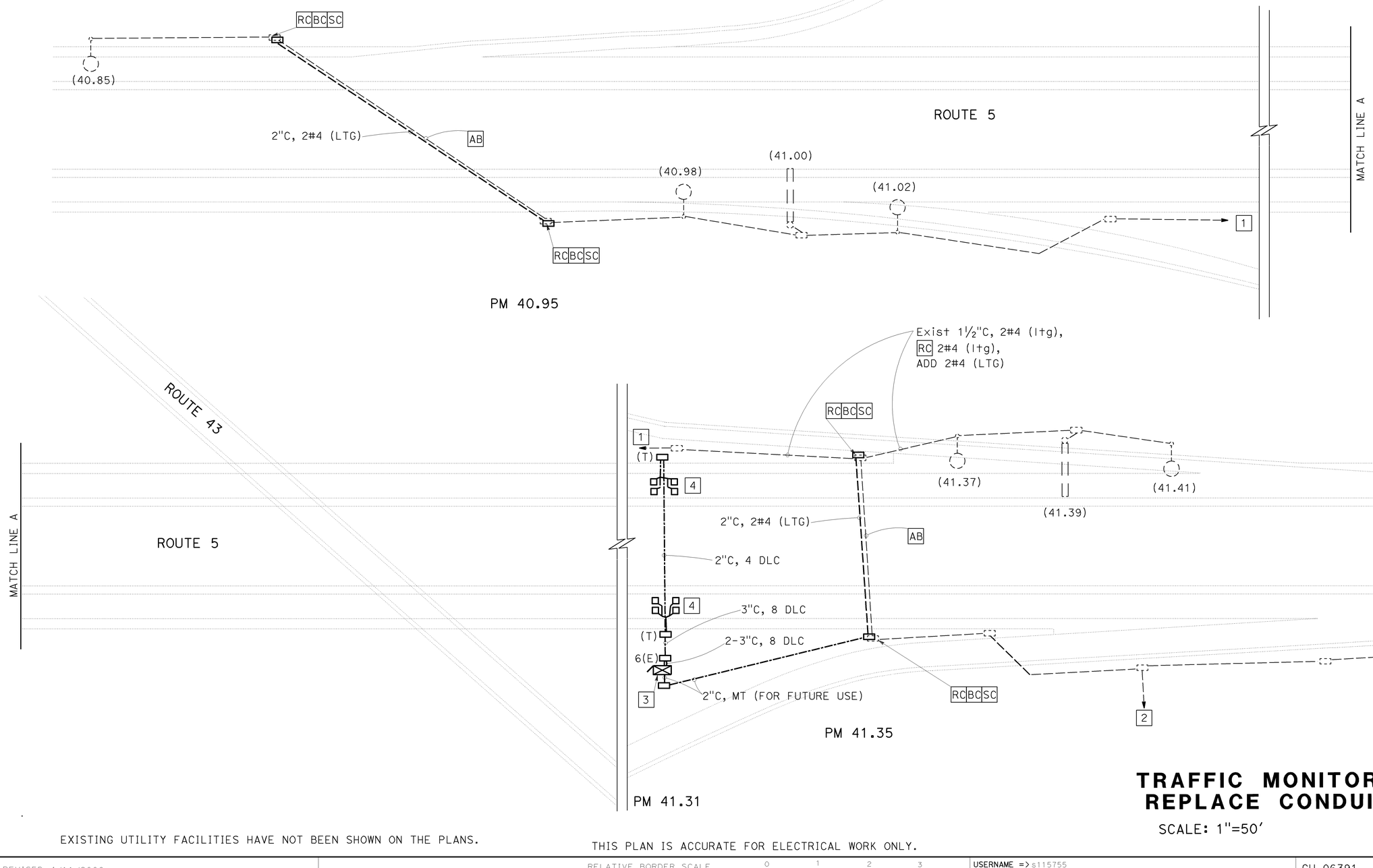

EXISTING UTILITY FACILITIES HAVE NOT BEEN SHOWN ON THE PLANS.

THIS PLAN IS ACCURATE FOR ELECTRICAL WORK ONLY.

TRAFFIC MONITORING STATION REPLACE CONDUIT CROSSINGS

SCALE: 1"=50'

E-3

REVISED BY	DATE REVISED

CALCULATED-DESIGNED BY: KARIM ABDOLLAHIAN
CHECKED BY: HASHIM KHALID
FUNCTIONAL SUPERVISOR: ALI BAKHDOUD

STATE OF CALIFORNIA - DEPARTMENT OF TRANSPORTATION
Caltrans® ELECTRICAL DESIGN

LAST REVISION 05-10-10
DATE PLOTTED => 18-AUG-2010
TIME PLOTTED => 09:23

Dist	COUNTY	ROUTE	POST MILES TOTAL PROJECT	SHEET No.	TOTAL SHEETS
06	Ker	5	36.1/54.2	31	71

05-10-10
REGISTERED ELECTRICAL ENGINEER DATE

HASHIM KHALID
No. 18054
Exp. 6/30/11
ELECTRICAL
REGISTERED PROFESSIONAL ENGINEER
STATE OF CALIFORNIA

05-17-10
PLANS APPROVAL DATE

THE STATE OF CALIFORNIA OR ITS OFFICERS OR AGENTS SHALL NOT BE RESPONSIBLE FOR THE ACCURACY OR COMPLETENESS OF ELECTRONIC COPIES OF THIS PLAN SHEET.

LEGEND: (FOR THIS SHEET ONLY)

1 Exist 120/240 V TYPE III-AF SERVICE EQUIPMENT ENCLOSURE WITH 2P, 200 A MAIN CB AND THE FOLLOWING CIRCUITS:

AMPERES	VOLTS	POLES	NAME PLATE	METER	PHOTOELECTRIC CONTROL TYPE
80	120	1	CHANGEABLE MESSAGE SIGN	YES	——
80	120	1	CHANGEABLE MESSAGE SIGN	YES	——
80	120	1	CHANGEABLE MESSAGE SIGN	YES	——
80	120	1	CHANGEABLE MESSAGE SIGN	YES	——
70	120	1	334-C CABINET	YES	——
30	120	1	*TMS/CCTV	YES	——

* ADD CB AND NAME PLATE.

2 Exist MODEL 170 CONTROLLER ASSEMBLY WITH MODEL 334 CABINET.

3 Exist MODEL 500 CHANGEABLE MESSAGE SIGN.

4 STATE-FURNISHED MODEL 2070 CONTROLLER ASSEMBLY FOR TMS. INSTALL CCTV EQUIPMENT.

5 TYPE CCTV 35 POLE WITH CAMERA ASSEMBLY.

6 AB Exist INDUCTIVE LOOP DETECTORS. INSTALL INDUCTIVE LOOP DETECTORS AS SHOWN ON SHEET E-11 IN DETAILS A AND B.

△ - Exist CONDUIT RUN

NOTES:

1. ALL PULL BOXES SHALL BE No. 5 WITH EXTENSION UNLESS OTHERWISE NOTED.
2. RIGHT OF WAY LIMITS ARE INDETERMINATE, AND ARE NOT SHOWN. THE CONTRACTOR MUST CONTACT RIGHT OF WAY ENGINEERING AT THE DISTRICT OFFICE FOR CONDITIONS OF USE PRIOR TO COMMENCING WORK.

CONDUIT AND CONDUCTOR SCHEDULE

CONDUCTOR DESIGNATION		CONDUIT RUN NUMBER AND SIZE												
CABLE/ AWG	CIRCUIT	1	2	3	4	5	6	7	8	9	10	11	12	13
		3"	3"	2"	2"	3"	3"	3"	2"	2"	2-3"	2"	3"	2"
#4/0	SERVICE	*3												
#8	334-C CABINET		*2	*2										
#2	CMS LAMPS		*4				*4	*4						
#2	LAMPS NEUTRAL		*2				*2	*2						
#8	CMS EQG							*1						
	SF HARNESS #5					*1								
	SF HARNESS #4					*1								
12C-#20	TELEPHONE				*1									
#8	TMS/CCTV CABINET		2						2	2				
COMPOSITE	CAMERA										1	1		
DLC	TMS										8		8	

* EXISTING CONDUCTORS

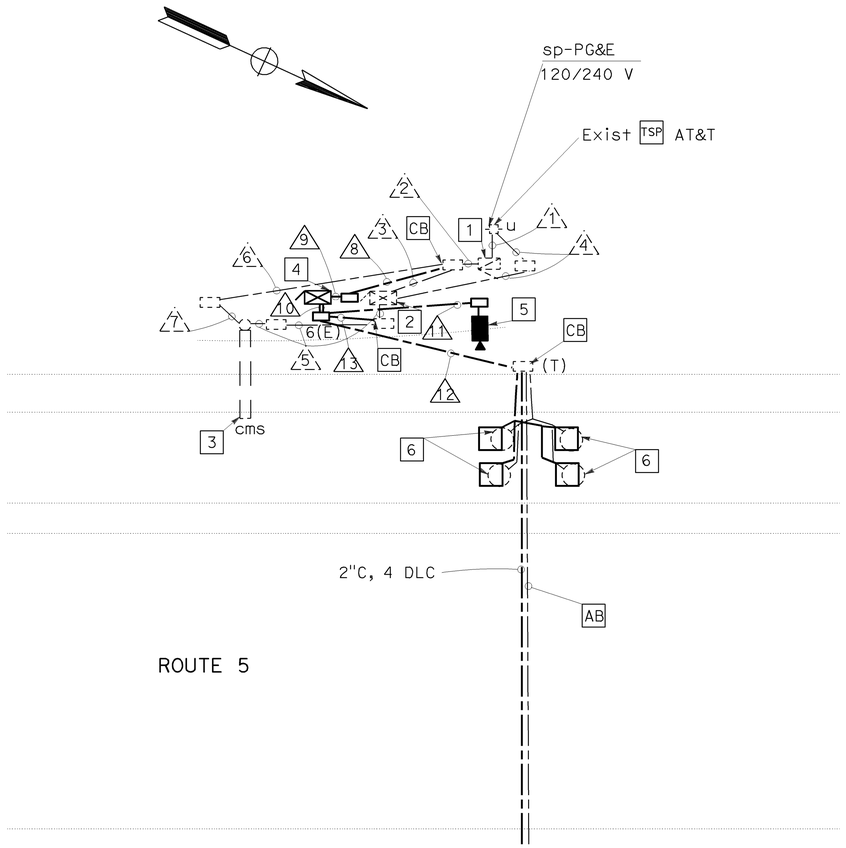

ROUTE 5

PM 43.88

CLOSED CIRCUIT TELEVISION SYSTEM
TRAFFIC MONITORING STATION
E-4

SCALE: 1"=20'

EXISTING UTILITY FACILITIES HAVE NOT BEEN SHOWN ON THE PLANS.

THIS PLAN IS ACCURATE FOR ELECTRICAL WORK ONLY.

REVISED BY | DATE REVISED
KARIM ABDOLLAHIAN | HASHIM KHALID
CALCULATED-DESIGNED BY | CHECKED BY
FUNCTIONAL SUPERVISOR: ALI BAKHDOUD
STATE OF CALIFORNIA - DEPARTMENT OF TRANSPORTATION
ELECTRICAL DESIGN

LAST REVISION | DATE PLOTTED => 17-AUG-2010
05-10-10 | TIME PLOTTED => 09:07

BORDER LAST REVISED 4/11/2008 | RELATIVE BORDER SCALE IS IN INCHES 0 1 2 3 | USERNAME => s115755 DGN FILE => 60K890ua004.dgn | CU 06391 | EA 0K8901

Dist	COUNTY	ROUTE	POST MILES TOTAL PROJECT	SHEET No.	TOTAL SHEETS
06	Ker	5	36.1/54.2	32	71

05-10-10
REGISTERED ELECTRICAL ENGINEER DATE

HASHIM KHALID
No. 18054
Exp. 6/30/11
ELECTRICAL
REGISTERED PROFESSIONAL ENGINEER
STATE OF CALIFORNIA

05-17-10
PLANS APPROVAL DATE

THE STATE OF CALIFORNIA OR ITS OFFICERS OR AGENTS SHALL NOT BE RESPONSIBLE FOR THE ACCURACY OR COMPLETENESS OF ELECTRONIC COPIES OF THIS PLAN SHEET.

LEGEND: (FOR THIS SHEET ONLY)

1 TO Exist HIGHWAY LIGHTING.

NOTES:

1. ALL PULL BOXES SHALL BE No. 5 WITH EXTENSION UNLESS OTHERWISE NOTED.
2. RIGHT OF WAY LIMITS ARE INDETERMINATE, AND ARE NOT SHOWN. THE CONTRACTOR MUST CONTACT RIGHT OF WAY ENGINEERING AT THE DISTRICT OFFICE FOR CONDITIONS OF USE PRIOR TO COMMENCING WORK.

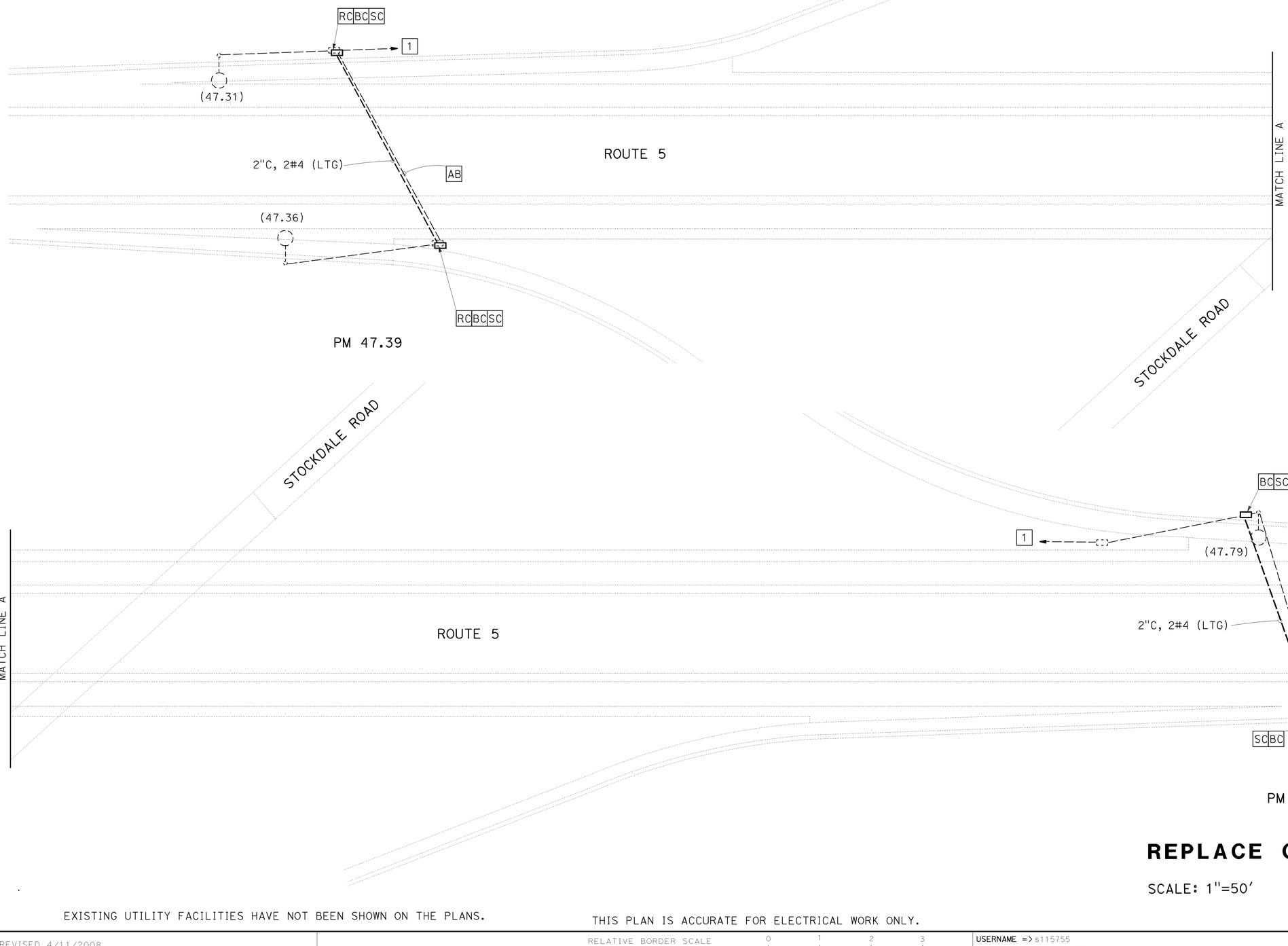

PM 47.39

PM 47.82

REPLACE CONDUIT CROSSINGS
E-5

SCALE: 1"=50'

EXISTING UTILITY FACILITIES HAVE NOT BEEN SHOWN ON THE PLANS.

THIS PLAN IS ACCURATE FOR ELECTRICAL WORK ONLY.

REVISED BY | DATE REVISED

CALCULATED-DESIGNED BY: KARIM ABDOLLAHIAN
CHECKED BY: HASHIM KHALID
FUNCTIONAL SUPERVISOR: ALI BAKHDOUD

STATE OF CALIFORNIA - DEPARTMENT OF TRANSPORTATION
Caltrans® ELECTRICAL DESIGN

LAST REVISION | DATE PLOTTED => 17-AUG-2010
05-10-10 | TIME PLOTTED => 09:07

BORDER LAST REVISED 4/11/2008

RELATIVE BORDER SCALE IS IN INCHES 0 1 2 3

USERNAME => s115755
DGN FILE => 60K890ua005.dgn

CU 06391

EA 0K8901

Dist	COUNTY	ROUTE	POST MILES TOTAL PROJECT	SHEET No.	TOTAL SHEETS
06	Ker	5	36.1/54.2	33	71

05-10-10
REGISTERED ELECTRICAL ENGINEER DATE

05-17-10
PLANS APPROVAL DATE

REGISTERED PROFESSIONAL ENGINEER
HASHIM KHALID
No. 18054
Exp. 6/30/11
ELECTRICAL
STATE OF CALIFORNIA

THE STATE OF CALIFORNIA OR ITS OFFICERS OR AGENTS SHALL NOT BE RESPONSIBLE FOR THE ACCURACY OR COMPLETENESS OF ELECTRONIC COPIES OF THIS PLAN SHEET.

LEGEND: (FOR THIS SHEET ONLY)

[1] Exist 120/240 V TYPE III-BF SERVICE EQUIPMENT ENCLOSURE WITH 2P, 200 A MAIN CB AND THE FOLLOWING CIRCUITS:

AMPERES	VOLTS	POLES	LOAD	METER	PHOTOELECTRIC CONTROL TYPE
200	240	2	MAIN	YES	——
80	120	1	CMS	YES	——
80	120	1	CMS	YES	——
80	120	1	CMS	YES	——
80	120	1	CMS	YES	——
40	120	1	334 CABINET	YES	——
15	120	1	SCAN SYSTEM	YES	——
15	120	1	TDC	YES	——
15	120	1	VIS-SENSOR	YES	——
30	120	1	*TMS/CCTV	YES	——

* ADD CB AND NAME PLATE

[2] Exist MODEL 170 CONTROLLER ASSEMBLY WITH MODEL 334 CABINET.

[3] STATE-FURNISHED MODEL 2070 CONTROLLER ASSEMBLY, INSTALL CCTV EQUIPMENT.

[4] INSTALL SURFACE SENSOR WITH SUBSURFACE PROBE AS SHOWN ON SHEET E-10.

[5] [AB] Exist SENSOR.

[6] [AB] Exist INDUCTIVE LOOP DETECTORS. INSTALL INDUCTIVE LOOP DETECTORS AS SHOWN IN DETAILS A AND B ON SHEET E-11.

[7] TYPE CCTV 35 POLE WITH CAMERA ASSEMBLY.

Exist CONDUIT RUN

Exist SURFACE SENSOR

SURFACE SENSOR WITH SUB-SURFACE PROBE

[RPU] Exist REMOTE PROCESSING UNIT ENCLOSURE

[VIS] Exist VISIBILITY SENSOR UNIT

NOTES:

1. ALL PULL BOXES SHALL BE No. 5 WITH EXTENSION UNLESS OTHERWISE NOTED.
2. RIGHT OF WAY LIMITS ARE INDETERMINATE, AND ARE NOT SHOWN. THE CONTRACTOR MUST CONTACT RIGHT OF WAY ENGINEERING AT THE DISTRICT OFFICE FOR CONDITIONS OF USE PRIOR TO COMMENCING WORK.

CONDUIT AND CONDUCTOR SCHEDULE

CONDUCTOR DESIGNATION		CONDUIT RUN NUMBER AND SIZE																						
CABLE/ AWG	CIRCUIT	1	2	3	4	5	6	7	8	9	10	11	12	13	14	15	16	17	18	19	20	21	22	23	24
		3"	3"	2"	2"	2"	2"	2"	2"	2"	2"	2"	2"	2-3"	2"	2"	2"	2-3"	2"	3"	2"	3"	2"	1"	3"
#8	WEIGH IN MOTION	*2		*2																					
#8	CMS CABINET	*2													*2										
	DLC												**8	**8											
#2	CMS LAMPS	*4	*4																						*4
#2	LAMPS NEUTRAL	*2	*2																						*2
#8	CMS EQG																								*1
	HARNESS #5									*1				*1											
	HARNESS #4									*1				*1											
12C-#20	TELEPHONE										*2 1	*1		**1			1								
#8	TDC	*2			*2				*2																
#8	TMS/CCTV CABINET	2														2									
	DLC																	8		8					
COMPOSITE	CAMERA																	1			1				
#8	VIS	*2			*2	*2		*2																	
	TYPE-V SLI CABLE																						*1		
#8	RPU	*2			*2	*2	*2																		
	SENSOR CABLE																					*1 1		1	

. * EXISTING CONDUCTORS

** [RC]

EXISTING UTILITY FACILITIES HAVE NOT BEEN SHOWN ON THE PLANS.

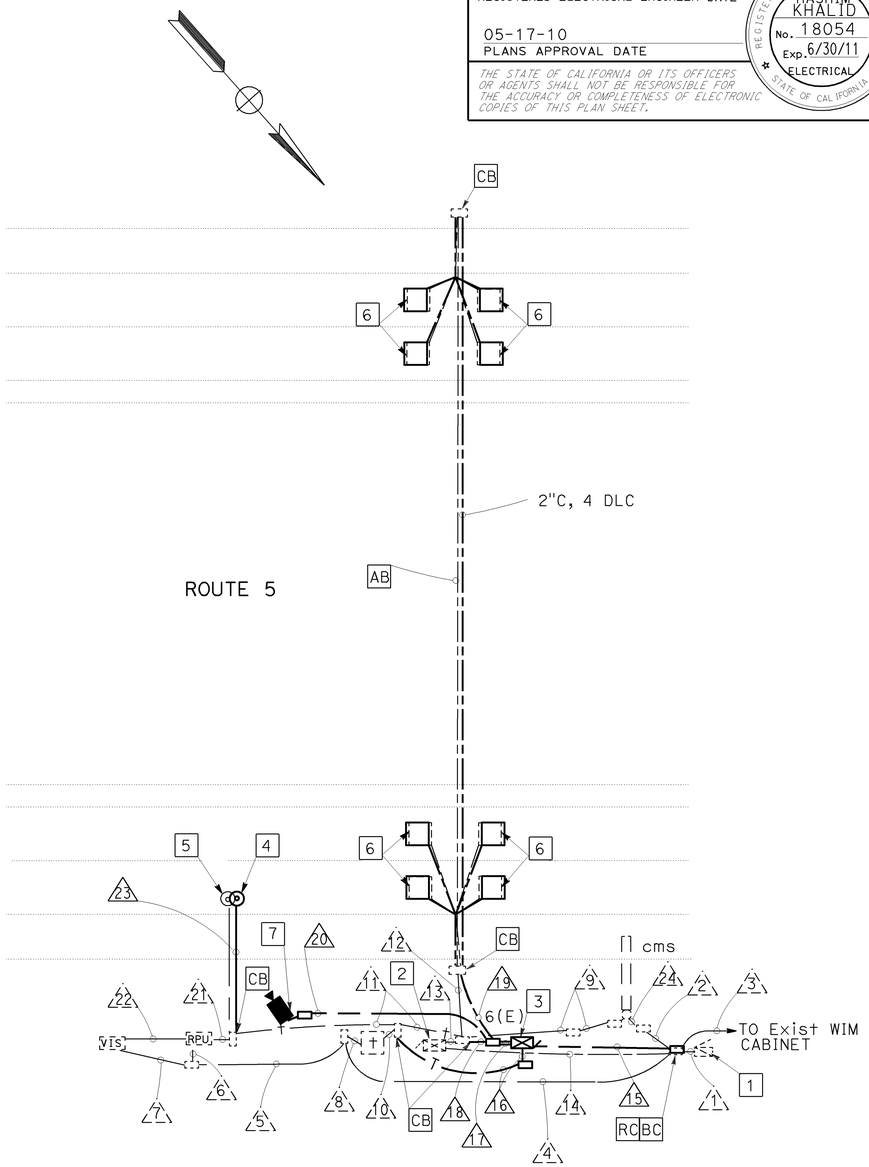

CLOSED CIRCUIT TELEVISION SYSTEM
MODIFY ROADSIDE WEATHER INFORMATION SYSTEM
TRAFFIC MONITORING STATION
E-6

SCALE: 1"=20'

THIS PLAN IS ACCURATE FOR ELECTRICAL WORK ONLY.

KARIM ABDOLLAHIAN — REVISED BY
HASHIM KHALID — DATE REVISED
FUNCTIONAL SUPERVISOR: ALI BAKHDOUD
CALCULATED-DESIGNED BY
CHECKED BY
STATE OF CALIFORNIA - DEPARTMENT OF TRANSPORTATION
ELECTRICAL DESIGN

LAST REVISION DATE PLOTTED => 17-AUG-2010
05-10-10 TIME PLOTTED => 09:07

BORDER LAST REVISED 4/11/2008
RELATIVE BORDER SCALE IS IN INCHES 0 1 2 3
USERNAME => s115755
DGN FILE => 60k890ua006.dgn
CU 06391
EA 0K8901

Dist	COUNTY	ROUTE	POST MILES TOTAL PROJECT	SHEET No.	TOTAL SHEETS
06	Ker	5	36.1/54.2	34	71

REGISTERED ELECTRICAL ENGINEER — 05-10-10 DATE

HASHIM KHALID — No. 18054 — Exp. 6/30/11 — ELECTRICAL — REGISTERED PROFESSIONAL ENGINEER — STATE OF CALIFORNIA

05-17-10
PLANS APPROVAL DATE

THE STATE OF CALIFORNIA OR ITS OFFICERS OR AGENTS SHALL NOT BE RESPONSIBLE FOR THE ACCURACY OR COMPLETENESS OF ELECTRONIC COPIES OF THIS PLAN SHEET.

LEGEND: (FOR THIS SHEET ONLY)

1 TO Exist SERVICE POINT LOCATED AT ROUTE 58 NEXT TO UNDERCROSSING BRIDGE.

2 TO Exist HIGHWAY LIGHTING AND SIGN LIGHTING.

3 TO Exist HIGHWAY LIGHTING.

NOTES:

1. ALL PULL BOXES SHALL BE No. 5 WITH EXTENSION UNLESS OTHERWISE NOTED.
2. RIGHT OF WAY LIMITS ARE INDETERMINATE, AND ARE NOT SHOWN. THE CONTRACTOR MUST CONTACT RIGHT OF WAY ENGINEERING AT THE DISTRICT OFFICE FOR CONDITIONS OF USE PRIOR TO COMMENCING WORK.

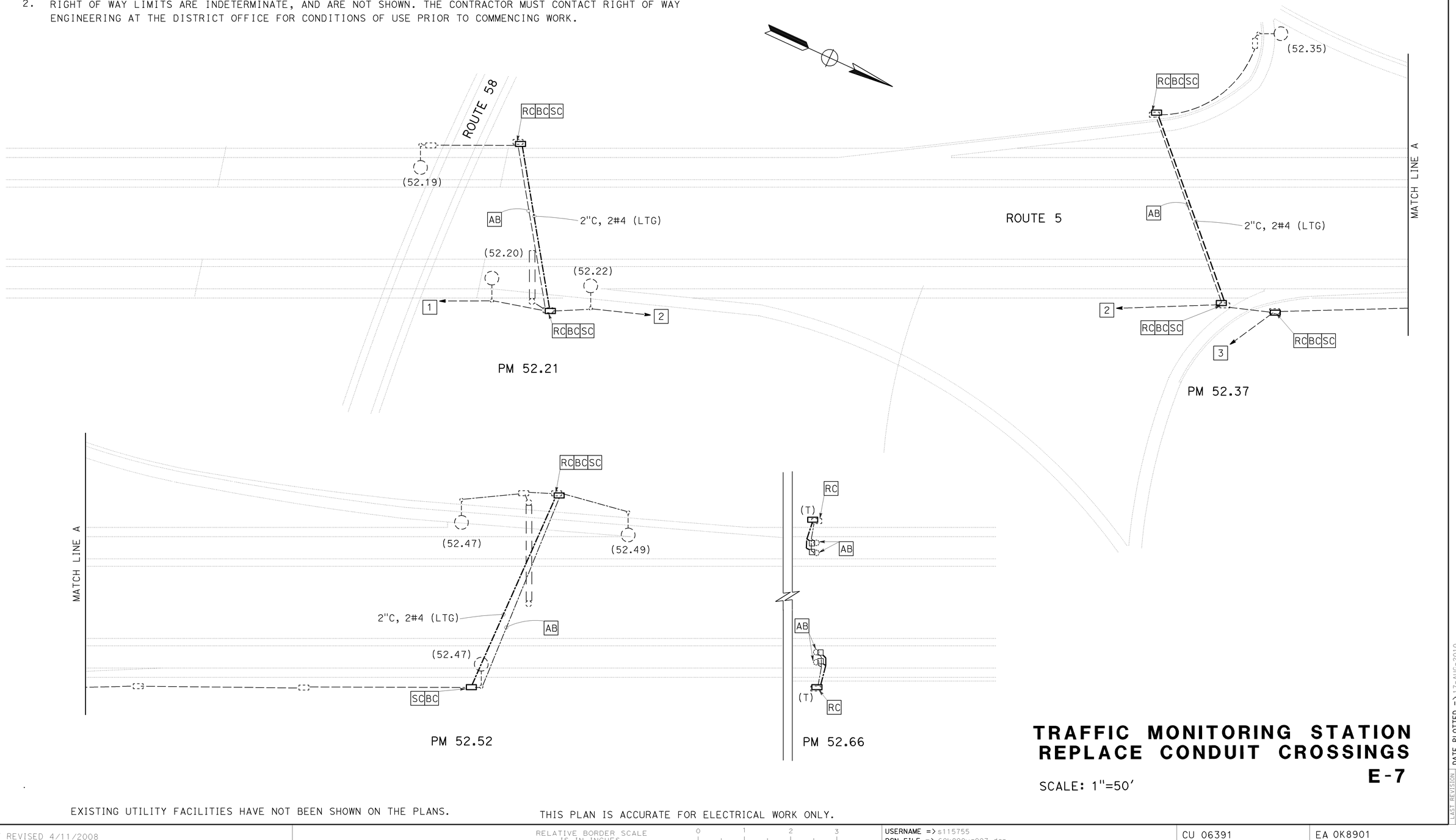

TRAFFIC MONITORING STATION REPLACE CONDUIT CROSSINGS

E-7

SCALE: 1"=50'

EXISTING UTILITY FACILITIES HAVE NOT BEEN SHOWN ON THE PLANS.

THIS PLAN IS ACCURATE FOR ELECTRICAL WORK ONLY.

STATE OF CALIFORNIA - DEPARTMENT OF TRANSPORTATION
ELECTRICAL DESIGN
Caltrans

FUNCTIONAL SUPERVISOR: ALI BAKHDOUD

CALCULATED-DESIGNED BY: KARIM ABDOLLAHIAN
CHECKED BY: HASHIM KHALID

REVISED BY | DATE REVISED

LAST REVISION | DATE PLOTTED => 17-AUG-2010
05-10-10 | TIME PLOTTED => 09:07

BORDER LAST REVISED 4/11/2008

RELATIVE BORDER SCALE IS IN INCHES 0 1 2 3

USERNAME => s115755
DGN FILE => 60k890ua007.dgn

CU 06391

EA 0K8901

Dist	COUNTY	ROUTE	POST MILES TOTAL PROJECT	SHEET No.	TOTAL SHEETS
06	Ker	5	36.1/54.2	35	71

05-10-10
REGISTERED ELECTRICAL ENGINEER DATE

HASHIM KHALID
No. 18054
Exp. 6/30/11
ELECTRICAL
REGISTERED PROFESSIONAL ENGINEER
STATE OF CALIFORNIA

05-17-10
PLANS APPROVAL DATE

THE STATE OF CALIFORNIA OR ITS OFFICERS OR AGENTS SHALL NOT BE RESPONSIBLE FOR THE ACCURACY OR COMPLETENESS OF ELECTRONIC COPIES OF THIS PLAN SHEET.

LEGEND: (FOR THIS SHEET ONLY)

[1] Exist 120/240 V TYPE III-AF SERVICE EQUIPMENT ENCLOSURE WITH 2P, 100 A MAIN CB AND THE FOLLOWING CIRCUITS:

AMPERES	VOLTS	POLES	NAME PLATE	METER	PHOTOELECTRIC CONTROL TYPE
60	240	2	CHANGEABLE MESSAGE SIGN	YES	——
40	120	1	334-C CMS CABINET	YES	——
20	120	1	TELEPHONE DEMARCATION	YES	——
40	120	1	SPARE	YES	——
40	120	1	SPARE	YES	——
40	120	1	SPARE	YES	——
30	120	1	*TMS/CCTV	YES	——

* ADD CB AND NAME PLATE.

[2] Exist MODEL 170 CONTROLLER ASSEMBLY WITH MODEL 334 CABINET.

[3] Exist MODEL 500 CHANGEABLE MESSAGE SIGN.

[4] Exist TELEPHONE DEMARCATION CABINET.

[5] STATE-FURNISHED MODEL 2070 CONTROLLER ASSEMBLY FOR TMS. INSTALL CCTV EQUIPMENT.

[6] TYPE CCTV 35 POLE WITH CAMERA ASSEMBLY.

[7] TO Exist [TSP] LOCATED AT NORTHBOUND REST AREA, Approx 520′ NORTH OF ELECTROLIER (53.80).

[8] TO Exist SERVICE POINT.

[9] INSTALL INDUCTIVE LOOP DETECTORS AS SHOWN IN DETAILS A AND B ON SHEET E-11.

⚠1 - Exist CONDUIT RUN

NOTES:

1. ALL PULL BOXES SHALL BE No. 5 WITH EXTENSION UNLESS OTHERWISE NOTED.
2. RIGHT OF WAY LIMITS ARE INDETERMINATE, AND ARE NOT SHOWN. THE CONTRACTOR MUST CONTACT RIGHT OF WAY ENGINEERING AT THE DISTRICT OFFICE FOR CONDITIONS OF USE PRIOR TO COMMENCING WORK.

CONDUIT AND CONDUCTOR SCHEDULE

CONDUCTOR DESIGNATION		CONDUIT RUN NUMBER AND SIZE															
CABLE/ AWG	CIRCUIT	⚠1	2	3	4	5	6	7	8	9	10	11	12	13	14	15	16
		3"	3"	3"	3"	3"	3"	2"	1"	1"	1½"	1½"	2"	2-3"	2"	3"	2"
#2	SERVICE	*3															
#8	334-C CABINET		*2	*2				*2									
#4	CMS LAMPS		*2	*2	*2	*2											
#4	LAMPS NEUTRAL		*1	*1	*1	*1											
#8	CMS EQG					*1											
	SF HARNESS #5						*1										
	SF HARNESS #4						*1										
12C-#20	TELEPHONE									*1	*1	*1					
#10	TDC		*2						*2								
#8	TMS/CCTV CABINET		2										2				
COMPOSITE	CAMERA													1	1		
DLC	TMS													8		8	

. * EXISTING CONDUCTORS

EXISTING UTILITY FACILITIES HAVE NOT BEEN SHOWN ON THE PLANS.

THIS PLAN IS ACCURATE FOR ELECTRICAL WORK ONLY.

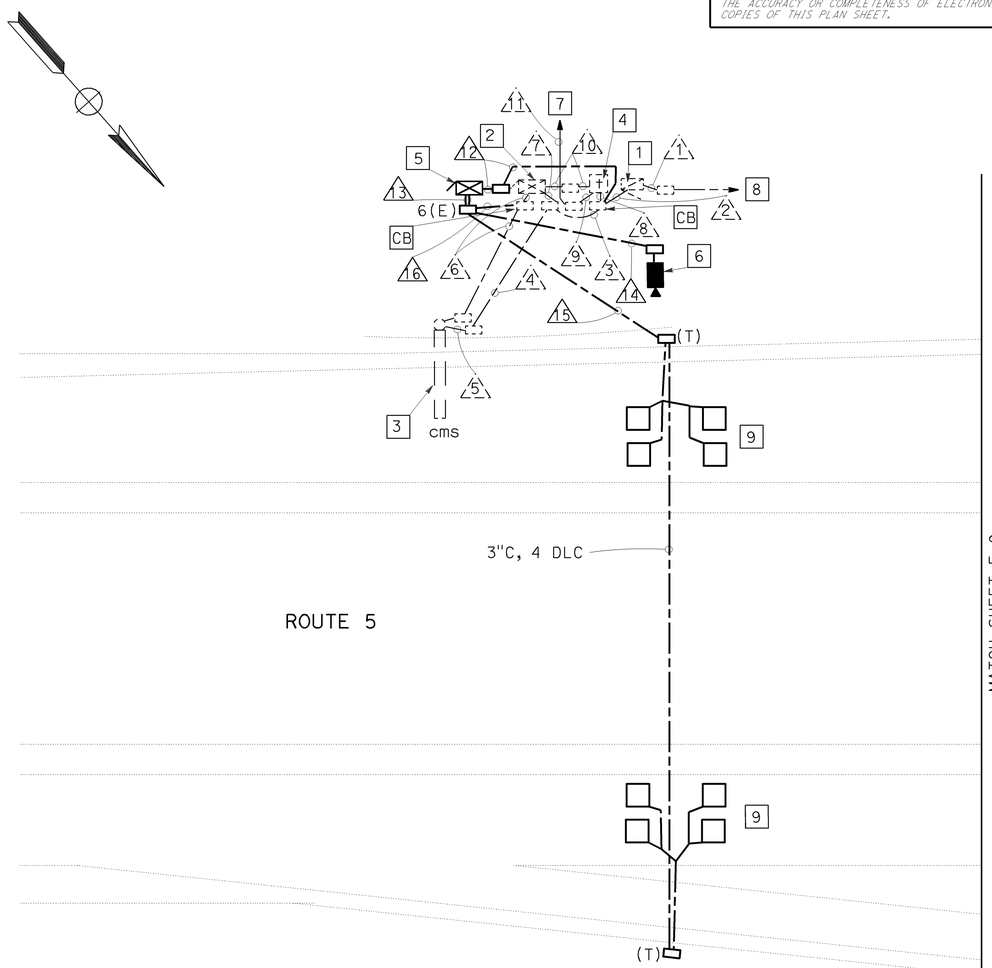

ROUTE 5

PM 53.84

CLOSED CIRCUIT TELEVISION SYSTEM
TRAFFIC MONITORING STATION
E-8

SCALE: 1"=20′

REVISED BY | DATE REVISED
KARIM ABDOLLAHIAN | HASHIM KHALID
CALCULATED-DESIGNED BY | CHECKED BY
FUNCTIONAL SUPERVISOR | ALI BAKHDOUD
STATE OF CALIFORNIA - DEPARTMENT OF TRANSPORTATION
Caltrans® ELECTRICAL DESIGN

LAST REVISION | DATE PLOTTED => 17-AUG-2010
05-10-10 | TIME PLOTTED => 09:07

BORDER LAST REVISED 4/11/2008 | RELATIVE BORDER SCALE IS IN INCHES 0 1 2 3 | USERNAME => s115755 | DGN FILE => 60k890ua008.dgn | CU 06391 | EA 0K8901

Dist	COUNTY	ROUTE	POST MILES TOTAL PROJECT	SHEET No.	TOTAL SHEETS
06	Ker	5	36.1/54.2	36	71

REGISTERED ELECTRICAL ENGINEER — 05-10-10 DATE

HASHIM KHALID — REGISTERED PROFESSIONAL ENGINEER — No. 18054 — Exp. 6/30/11 — ELECTRICAL — STATE OF CALIFORNIA

05-17-10
PLANS APPROVAL DATE

THE STATE OF CALIFORNIA OR ITS OFFICERS OR AGENTS SHALL NOT BE RESPONSIBLE FOR THE ACCURACY OR COMPLETENESS OF ELECTRONIC COPIES OF THIS PLAN SHEET.

LEGEND: (FOR THIS SHEET ONLY)

1 AB CONDUIT, RR Exist Tel CABLE FROM Exist CONDUIT TO NEW CONDUIT.

2 TO cms LOCATED ON SOUTHBOUND ROUTE 5, Approx 150′ SOUTH OF ELECTROLIER (53.70).

NOTES:

1. ALL PULL BOXES SHALL BE No. 5 WITH EXTENSION UNLESS OTHERWISE NOTED.
2. RIGHT OF WAY LIMITS ARE INDETERMINATE, AND ARE NOT SHOWN. THE CONTRACTOR MUST CONTACT RIGHT OF WAY ENGINEERING AT THE DISTRICT OFFICE FOR CONDITIONS OF USE PRIOR TO COMMENCING WORK.

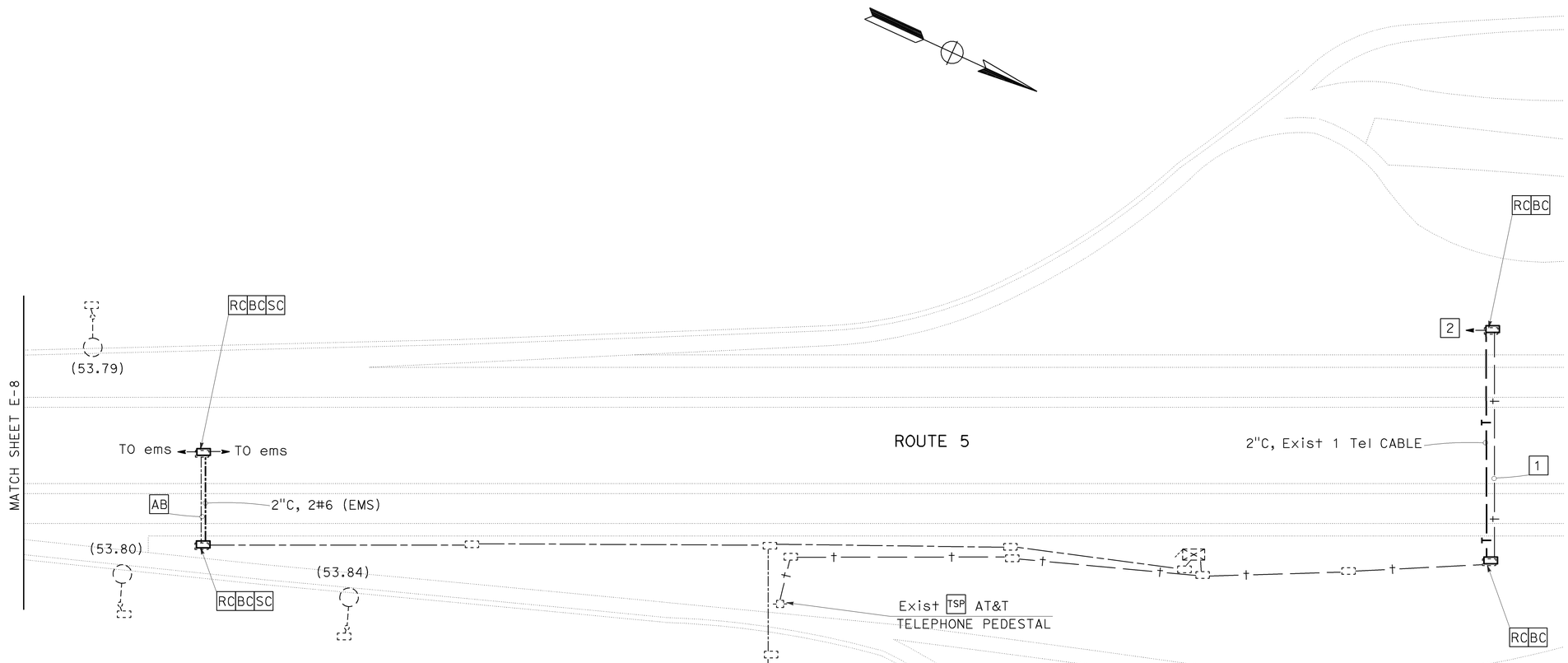

REPLACE CONDUIT CROSSINGS
E-9

SCALE: 1"=50′

EXISTING UTILITY FACILITIES HAVE NOT BEEN SHOWN ON THE PLANS.

THIS PLAN IS ACCURATE FOR ELECTRICAL WORK ONLY.

STATE OF CALIFORNIA - DEPARTMENT OF TRANSPORTATION
ELECTRICAL DESIGN
FUNCTIONAL SUPERVISOR: ALI BAKHDOUD
CALCULATED-DESIGNED BY: KARIM ABDOLLAHIAN
CHECKED BY: HASHIM KHALID
REVISED BY
DATE REVISED

LAST REVISION — DATE PLOTTED => 17-AUG-2010 — TIME PLOTTED => 09:07
05-10-10

BORDER LAST REVISED 4/11/2008
RELATIVE BORDER SCALE IS IN INCHES 0 1 2 3
USERNAME => s115755
DGN FILE => 60k890ua009.dgn
CU 0 591
EA 0K8901

Dist	COUNTY	ROUTE	POST MILES TOTAL PROJECT	SHEET No.	TOTAL SHEETS
06	Ker	5	36.1/54.2	37	71

05-10-10
REGISTERED ELECTRICAL ENGINEER DATE

HASHIM KHALID
No. 18054
Exp. 6/30/11
ELECTRICAL
REGISTERED PROFESSIONAL ENGINEER
STATE OF CALIFORNIA

05-17-10
PLANS APPROVAL DATE

THE STATE OF CALIFORNIA OR ITS OFFICERS OR AGENTS SHALL NOT BE RESPONSIBLE FOR THE ACCURACY OR COMPLETENESS OF ELECTRONIC COPIES OF THIS PLAN SHEET.

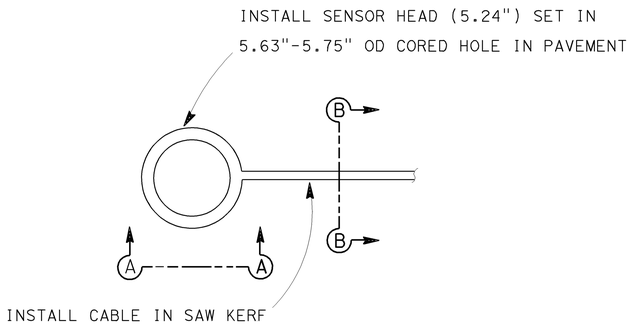

ROAD SURFACE SENSOR HEAD
DETAIL A

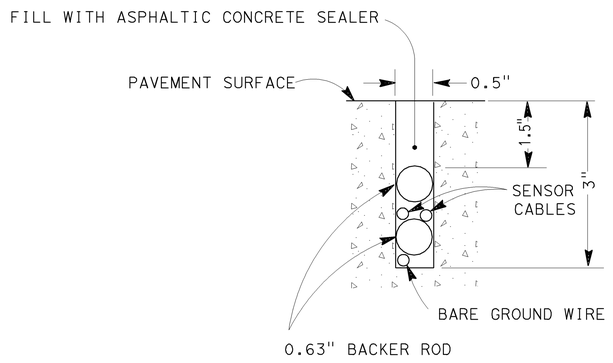

SECTION B-B
(SAW KERF)

SECTION INSTALLATION
IN ROADWAY PAVING

ABBREVIATIONS: (THIS SHEET ONLY)

M/S MANUFACTURER/SUPPLIER
RPU REMOTE PROCESSING UNIT
SLI SENSOR LEAD-IN-CABLE

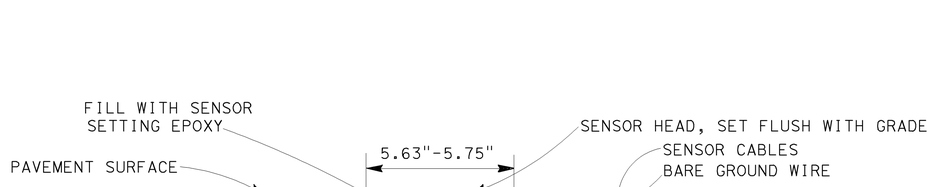

SECTION A-A

SENSOR DESIGNATION

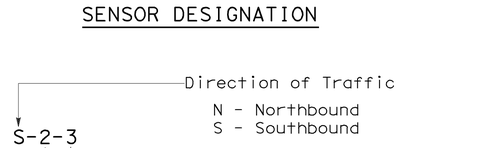

MODIFY ROADSIDE WEATHER INFORMATION SYSTEM
TRAFFIC MONITORING STATION
E-10

NO SCALE

THIS PLAN IS ACCURATE FOR ELECTRICAL WORK ONLY.

STATE OF CALIFORNIA - DEPARTMENT OF TRANSPORTATION
ELECTRICAL DESIGN
FUNCTIONAL SUPERVISOR: ALI BAKHDOUD
CALCULATED-DESIGNED BY: KARIM ABDOLLAHIAN
CHECKED BY: HASHIM KHALID
REVISED BY
DATE REVISED

LAST REVISION 05-10-10
DATE PLOTTED => 17-AUG-2010
TIME PLOTTED => 09:07

BORDER LAST REVISED 4/11/2008
RELATIVE BORDER SCALE IS IN INCHES 0 1 2 3
USERNAME => s115755
DGN FILE => 60K890ua010.dgn
CU 06391
EA 0K8901

Dist	COUNTY	ROUTE	POST MILES TOTAL PROJECT	SHEET No.	TOTAL SHEETS
06	Ker	5	36.1/54.2	38	71

REGISTERED ELECTRICAL ENGINEER — 05-10-10

HASHIM KHALID No. 18054 Exp. 6/30/11 ELECTRICAL — REGISTERED PROFESSIONAL ENGINEER — STATE OF CALIFORNIA

05-17-10
PLANS APPROVAL DATE

THE STATE OF CALIFORNIA OR ITS OFFICERS OR AGENTS SHALL NOT BE RESPONSIBLE FOR THE ACCURACY OR COMPLETENESS OF ELECTRONIC COPIES OF THIS PLAN SHEET.

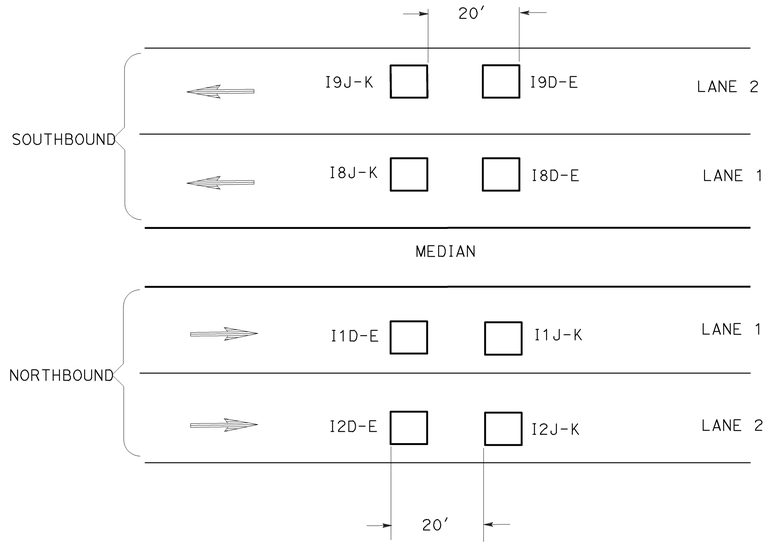

LOWER INPUT PANEL (TB2) TERMINATION

I1D-E
- INPUT PANEL (TB2)
- LANE DESIGNATION
  - 1-NORTHBOUND/EASTBOUND LANE 1
  - 2-NORTHBOUND/EASTBOUND LANE 2
  - 8-SOUTHBOUND/WESTBOUND LANE 1
  - 9-SOUTHBOUND/WESTBOUND LANE 2
- D-E -LEADING
- J-K -TRAILING

INDUCTIVE LOOP DETECTOR SENSOR TERMINATION DETAIL A

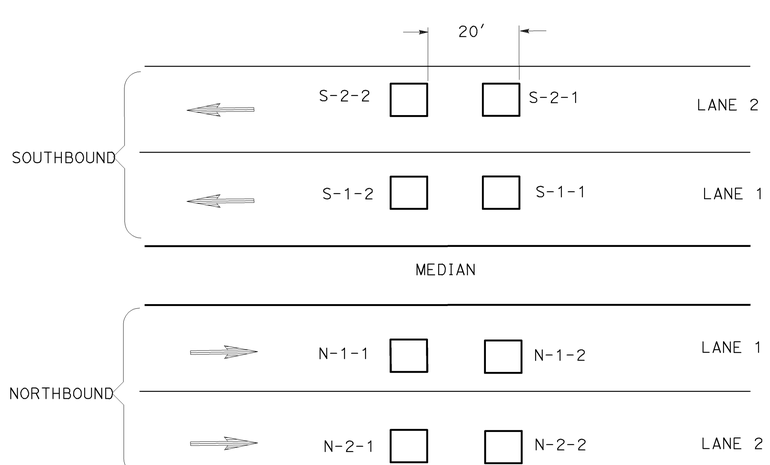

DLC IDENTIFICATION

D-L-N
- DIRECTION OF TRAFFIC
  - N - NORTHBOUND
  - S - SOUTHBOUND
  - E - EASTBOUND
  - W - WESTBOUND
- 1 - ENTERING
- 2 - LEAVING
- LANE NUMBER

INDUCTIVE LOOP DETECTOR SENSOR IDENTIFICATION DETAIL B

TRAFFIC MONITORING STATION E-11

NO SCALE

THIS PLAN IS ACCURATE FOR ELECTRICAL WORK ONLY.

REVISED BY	DATE REVISED

CALCULATED-DESIGNED BY: KARIM ABDOLLAHIAN
CHECKED BY: HASHIM KHALID
FUNCTIONAL SUPERVISOR: ALI BAKHDOUD

STATE OF CALIFORNIA - DEPARTMENT OF TRANSPORTATION
ELECTRICAL DESIGN

LAST REVISION 05-10-10
DATE PLOTTED => 17-AUG-2010
TIME PLOTTED => 09:07

BORDER LAST REVISED 4/11/2008
RELATIVE BORDER SCALE IS IN INCHES 0 1 2 3
USERNAME => s115755
DGN FILE => 60K890ua011.dgn
CU 06391
EA 0K8901

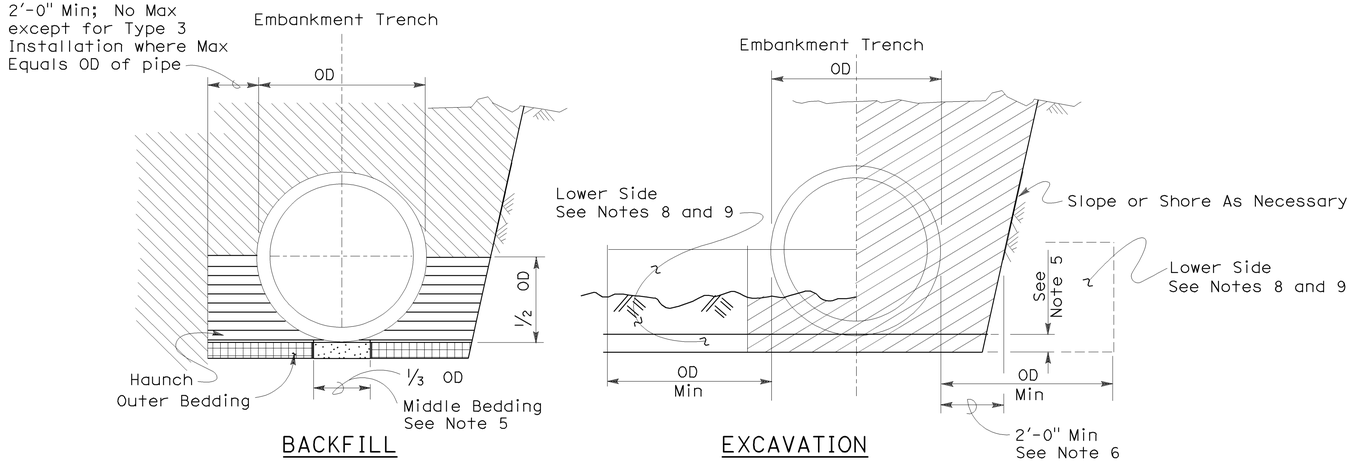

DIST	COUNTY	ROUTE	POST MILES TOTAL PROJECT	SHEET NO.	TOTAL SHEETS
06	Ker	5	36.1/54.2	39	67

Dallas J. Forester
REGISTERED CIVIL ENGINEER

REGISTERED PROFESSIONAL ENGINEER
Dallas Forester
No. C37765
Exp. 12-31-06
CIVIL
STATE OF CALIFORNIA

November 17, 2006
PLANS APPROVAL DATE

The State of California or its officers or agents shall not be responsible for the accuracy or completeness of electronic copies of this plan sheet.

To accompany plans dated 5-17-10

TYPE 1 INSTALLATION:

The haunch and outer bedding shall be compacted to a minimum 90 percent relative compaction. In addition, the minimum sand equivalent in these areas shall be 30 and the maximum percentage passing the 75 μm sieve size shall be 12.

TYPE 2 INSTALLATION:

The haunch and outer bedding shall be compacted to a minimum 90 percent relative compaction. In addition, the minimum sand equivalent in these areas shall be 25.

TYPE 3 INSTALLATION:

The haunch and outer bedding shall be compacted to a minimum 85 percent relative compaction. 90 percent relative compaction will be required where the fill over the pipe is less than 4'-0" or 1/2 OD.

NOTES:

1. Unless otherwise shown on the plans or specified in the special provision, the Contractor shall have the option of selecting the class of RCP and the type of installation to be used, provided the height of cover does not exceed the value shown for the RCP selected.
   Example: 24" RCP culvert with maximum cover of 19'-0" the options are:
   a) Class III or stronger with Installation Type 1.
   b) Class III Special or stronger with Installation Type 2.
   c) Class IV Special or stronger with Installation Type 3.
   Cover is defined as the maximum vertical distance from top of the pipe to finished grade within the length of any given culvert.
2. The class of RCP and Installation Type selected shall be the same throughout the length of any given culvert.
3. The "length of any culvert" is defined as the culvert between:
   a) Successive drainage structure (inlets, junction boxes, headwalls, etc.).
   b) A drainage structure and the inlet or outlet end of the culvert.
   c) The inlet and outlet end of the culvert when there are no intervening drainage structures.
4. Oval and arch shaped RCP shall not be used.
5. 1/25 OD Min, not less than 3".
6. Slurry cement backfill may be substituted for backfill in the outer bedding and haunch areas. If slurry is used the outer and middle beddings shall be omitted. Prior to installation the soil under the middle 1/3 of the outside diameter of the pipe shall be softened by scarifying or other means to a minimum depth of 1/25 OD, but not less than 3". Where slurry cement backfill is used clear distance to trench wall may be reduced as set forth in Section 19-3.062 of the Standard Specifications.
7. Backfill shall be placed full width of excavation except where dimensions are shown for backfill width or thickness. Dimensions shown are minimums.
8. Lower side shall be suitable material as determined by the Engineer. Otherwise it shall be considered unsuitable as set forth in Section 19-2.02 of the Standard Specifications. See Note 9.
9. Where the pipe is placed in a trench, if the trench walls are sloped at 5 vertical to 1 horizontal or steeper for at least 90 percent of the trench height or up to not less than 12" from the grading plane, the firmness of the soil in the lower side need not be considered.
10. Non-reinforced precast concrete pipe sizes 3'-0" or smaller may be placed under installation Types 1, 2 or 3.

INSTALLATION TYPE 1

MINIMUM CLASS AND D-LOAD	COVER	
	108" Dia AND SMALLER	OVER 108" Dia
Class II 1000D	14.9'	12.9'
Class III 1350D	15.0' - 20.9'	13.0' - 18.9'
Class III Special 1700D	21.0' - 26.9'	19.0' - 24.9'
Class IV 2000D	27.0' - 31.9'	25.0' - 29.9'
Class IV Special 2500D	32.0' - 40.9'	30.0' - 38.9'
Class V 3000D	41.0' - 49.9'	39.0' - 46.9'
Class V Special 3600D	50.0' - 59.0'	47.0' - 58.0'

INSTALLATION TYPE 2

MINIMUM CLASS AND D-LOAD	COVER
Class II 1000D	9.9'
Class III 1350D	10.0'- 14.9'
Class III Special 1700D	15.0' - 19.9'
Class IV 2000D	20.0' - 24.9'
Class IV Special 2500D	25.0' - 31.9'
Class V 3000D	32.0' - 38.9'
Class V Special 3600D	39.0' - 47.0'

INSTALLATION TYPE 3

MINIMUM CLASS AND D-LOAD	COVER	
	48" Dia AND SMALLER	OVER 48" Dia
Class II 1000D	7.9'	5.9'
Class III 1350D	8.0' - 10.9'	6.0' - 8.9'
Class III Special 1700D	11.0' - 14.9'	9.0' - 12.9'
Class IV 2000D	15.0' - 17.9'	13.0' - 15.9'
Class IV Special 2500D	18.0' - 21.9'	16.0' - 19.9'
Class V 3000D	22.0' - 26.9'	20.0' - 24.9'
Class V Special 3600D	30.0' - 33.0'	25.0' - 31.0'

STATE OF CALIFORNIA
DEPARTMENT OF TRANSPORTATION

EXCAVATION AND BACKFILL CONCRETE PIPE CULVERTS

NO SCALE

RSP A62DA DATED NOVEMBER 17, 2006 SUPERSEDES STANDARD PLAN A62DA DATED MAY 1, 2006 - PAGE 20 OF THE STANDARD PLANS BOOK DATED MAY 2006.

REVISED STANDARD PLAN RSP A62DA

2006 REVISED STANDARD PLAN RSP A62DA

10-26-06

DIST	COUNTY	ROUTE	POST MILES TOTAL PROJECT	SHEET NO.	TOTAL SHEETS
06	Ker	5	36.1/54.2	40	67

Randell D. Hiatt
REGISTERED CIVIL ENGINEER

June 6, 2008
PLANS APPROVAL DATE

REGISTERED PROFESSIONAL ENGINEER
Randell D. Hiatt
No. C50200
Exp. 6-30-09
CIVIL
STATE OF CALIFORNIA

The State of California or its officers or agents shall not be responsible for the accuracy or completeness of electronic copies of this plan sheet.

To accompany plans dated 5-17-10

NOTES:

1. When necessary to place dike in front of face of guard railing, only Type C dike may be used. For dike details, see Standard Plan A87B.
2. For standard railing post embedment, see Standard Plans A77C3.
3. Guard railing delineation to be used where shown on the Project Plans.
4. When dike or curb is placed under guard railing, the maximum height of the dike or curb shall be 4". Mountable dike should not be used. For dike and curb details, see Revised Standard Plans RSP A87A and Standard Plan A87B.
5. For details of typical distance between the face of rail and hinge point, see Standard Plan A77C3.

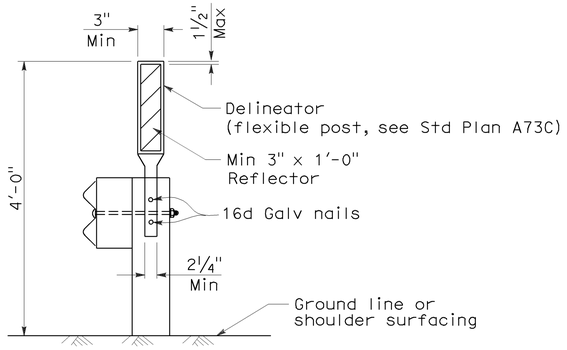

GUARD RAILING DELINEATION
See Note 3

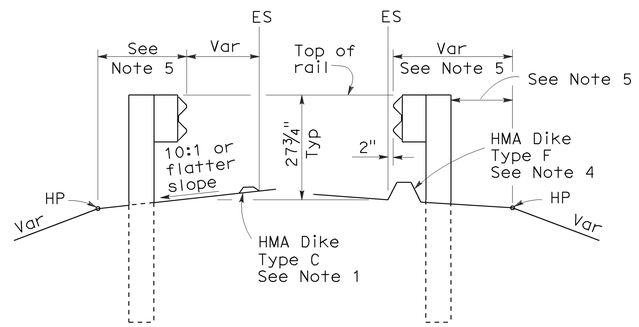

DIKE POSITIONING
See Note 1

STATE OF CALIFORNIA
DEPARTMENT OF TRANSPORTATION

METAL BEAM GUARD RAILING TYPICAL RAILING DELINEATION AND DIKE POSITIONING DETAILS

NO SCALE

RSP A77C4 DATED JUNE 6, 2008 SUPERSEDES STANDARD PLAN A77C4
DATED MAY 1, 2006 - PAGE 47 OF THE STANDARD PLANS BOOK DATED MAY 2006.

REVISED STANDARD PLAN RSP A77C4

2006 REVISED STANDARD PLAN RSP A77C4

12-10-07

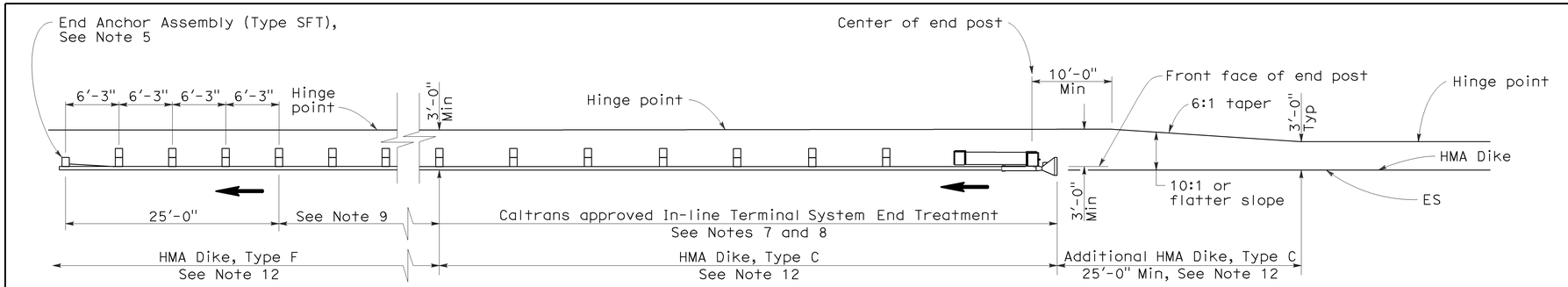

TYPE 11A LAYOUT

(EMBANKMENT GUARD INSTALLATION WITH IN-LINE END TREATMENT AT TRAFFIC APPROACH END OF RAILING)
See Note 6

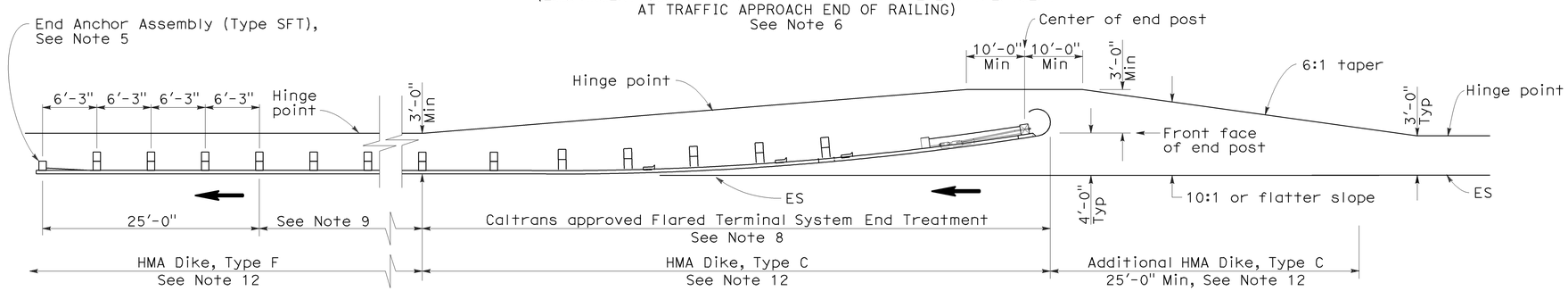

TYPE 11B LAYOUT

(EMBANKMENT GUARD RAILING INSTALLATION WITH FLARED END TREATMENT AT TRAFFIC APPROACH END OF RAILING)
See Note 6

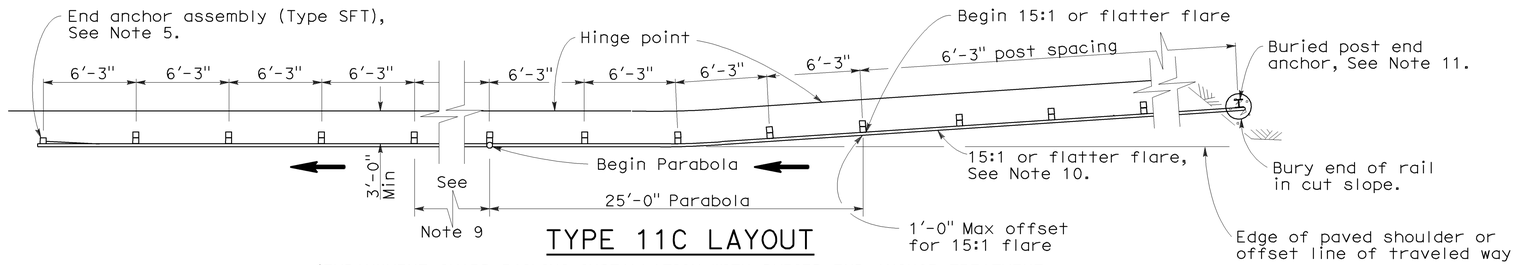

TYPE 11C LAYOUT

(EMBANKMENT GUARD RAILING INSTALLATION WITH BURIED END ANCHOR TREATMENT AT TRAFFIC APPROACH END OF RAILING)
See Notes 6 and 12

NOTES:

1. Line post, blocks and hardware to be used are shown on Standard Plans A77A1, A77A2, A77B1, A77C1, and A77C2.
2. Guard rail post spacing to be 6'-3" center to center, except as otherwise noted.
3. Except as noted, line posts are 6" x 8" x 6'-0" wood with 6" x 8" x 1'-2" wood blocks. W6 x 9 steel posts, 6'-0" in length, with 6" x 8" x 1'-2" notched wood blocks or recycled plastic blocks may be used for 6" x 8" x 6'-0" wood post with 6" x 8" x 1'-2" wood blocks where applicable and when specified.
4. Direction of adjacent traffic indicated by ➞.
5. For End Anchor Assembly (Type SFT) details, see Standard Plan A77H1.
6. Layout Types 11A, 11B or 11C are typically used where guard railing is recommended to shield embankment slopes and a crashworthy end treatment is required for only one direction of traffic.
7. In-line Terminal System End Treatments are used where site conditions will not accommodate a flared end treatment.
8. The type of terminal system end treatment to be used will be shown on the Project Plans.
9. Dependent on site conditions (embankment height and side slope), construction of additional guard railing (length equal to multiples of 12'-6" with 6'-3" post spacing) may be advisable.
10. The 15:1 or flatter flare used with buried end anchors is based on the edge of the paved shoulder or offset line of edge of the traveled way. The length of guard railing within the 15:1 or flatter flare is based on site conditions and should be a length equal to multiples of 12'-6".
11. For details of the buried post end anchor used with Type 11C Layout, see Standard Plan A77I2.
12. Where placement of dike is required with guard railing installations, see Revised Standard Plan RSP A77C4 for dike positioning details.

DIST	COUNTY	ROUTE	POST MILES TOTAL PROJECT	SHEET NO.	TOTAL SHEETS
06	Ker	5	36.1/54.2	41	67

Randell D. Hiatt
REGISTERED CIVIL ENGINEER

June 6, 2008
PLANS APPROVAL DATE

REGISTERED PROFESSIONAL ENGINEER — Randell D. Hiatt — No. C50200 — Exp. 6-30-09 — CIVIL — STATE OF CALIFORNIA

The State of California or its officers or agents shall not be responsible for the accuracy or completeness of electronic copies of this plan sheet.

To accompany plans dated 5-17-10

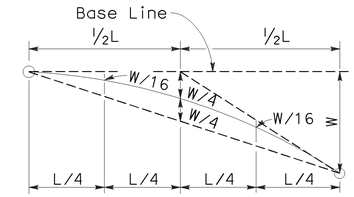

TYPICAL PARABOLIC LAYOUT

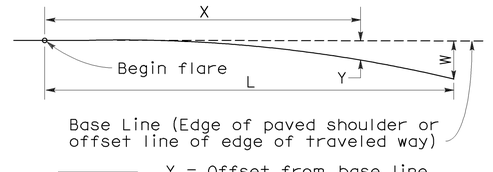

$$Y = \frac{WX^2}{L^2}$$

Y = Offset from base line
W = Maximum offset
X = Distance along base line
L = Length of flare

PARABOLIC FLARE OFFSETS

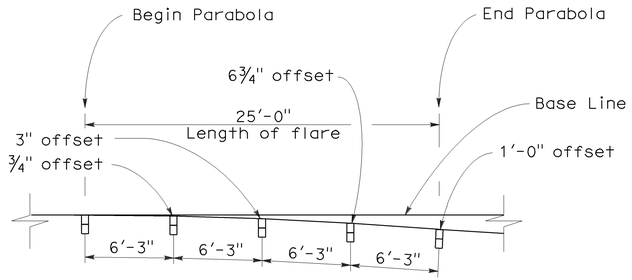

TYPICAL FLARE OFFSETS FOR 1 FOOT MAX END OFFSET

STATE OF CALIFORNIA
DEPARTMENT OF TRANSPORTATION

METAL BEAM GUARD RAILING TYPICAL LAYOUTS FOR EMBANKMENTS

NO SCALE

RSP A77E1 DATED JUNE 6, 2008 SUPERSEDES STANDARD PLAN A77E1
DATED MAY 1, 2006 - PAGE 48 OF THE STANDARD PLANS BOOK DATED MAY 2006.

REVISED STANDARD PLAN RSP A77E1

2006 REVISED STANDARD PLAN RSP A77E1

12-10-07

DIST	COUNTY	ROUTE	POST MILES TOTAL PROJECT	SHEET NO.	TOTAL SHEETS
06	Ker	5	36.1/54.2	42	67

Randell D. Hiatt
REGISTERED CIVIL ENGINEER

June 5, 2009
PLANS APPROVAL DATE

REGISTERED PROFESSIONAL ENGINEER — Randell D. Hiatt — No. C50200 — Exp. 6-30-09 — CIVIL — STATE OF CALIFORNIA

The State of California or its officers or agents shall not be responsible for the accuracy or completeness of electronic copies of this plan sheet.

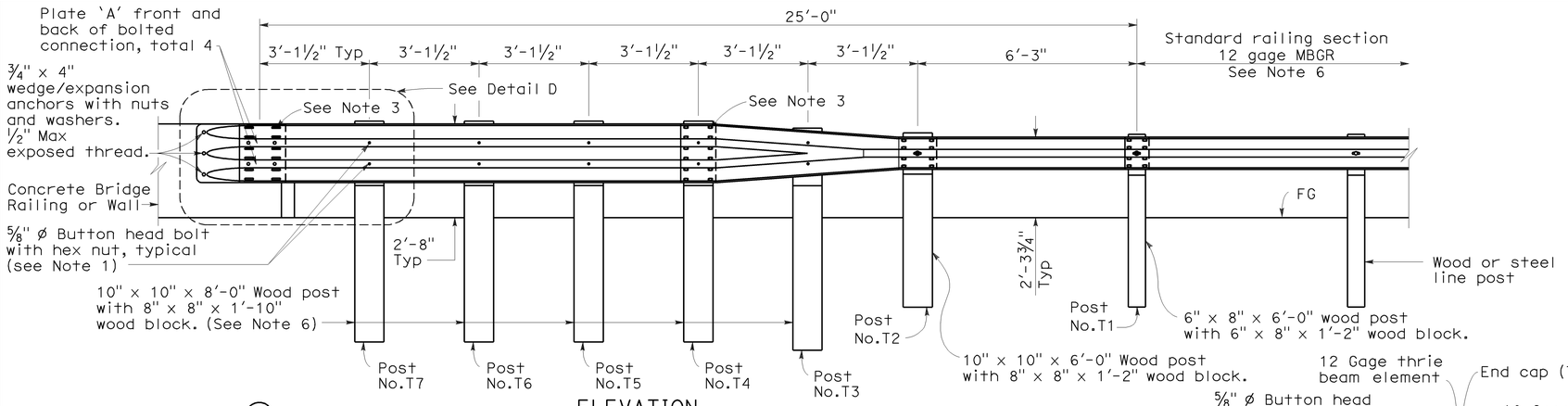

ELEVATION

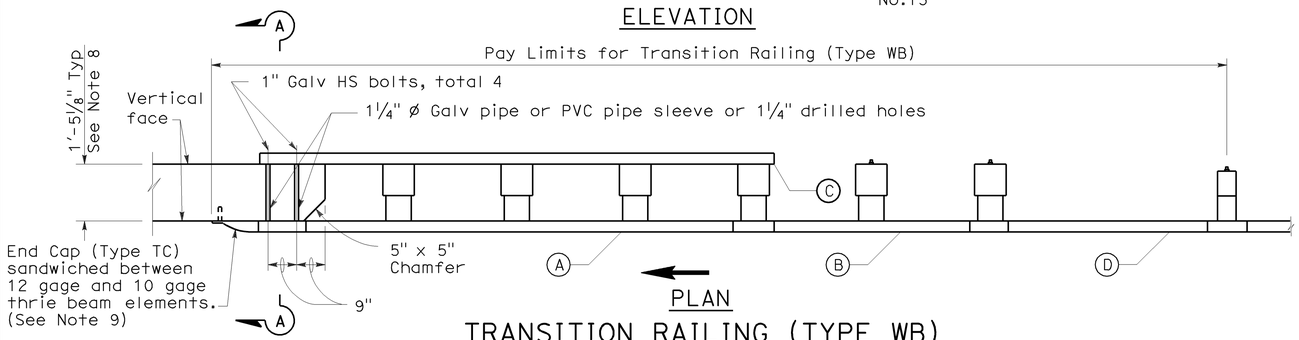

PLAN

TRANSITION RAILING (TYPE WB)

(No Blockout Attachment)

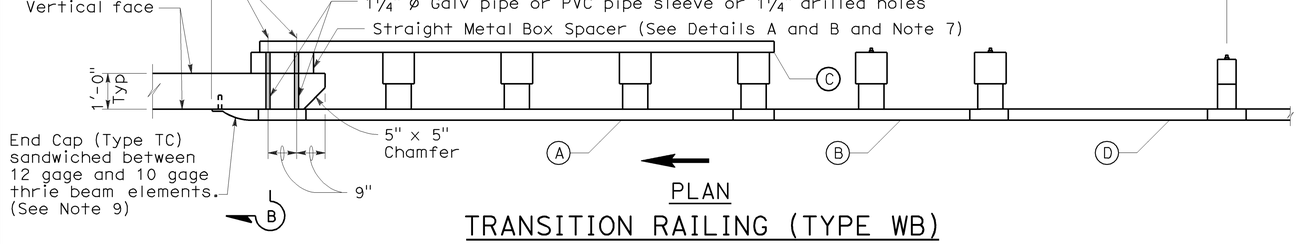

PLAN

TRANSITION RAILING (TYPE WB)

(Blockout Attachment)

LEGEND

- (A) Nested thrie beam elements (one 12 gage element nested over one 10 gage element).
- (B) One 10 gage "W" beam to thrie beam element.
- (C) One 12 gage thrie beam element.
- (D) One 10 gage "W" beam rail element (7'-3½" length)

10 gage = 0.135" thick

12 gage = 0.108" thick

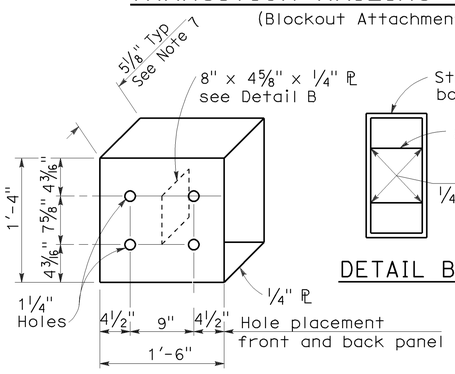

DETAIL A

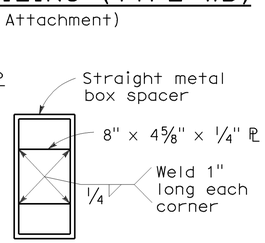

DETAIL B

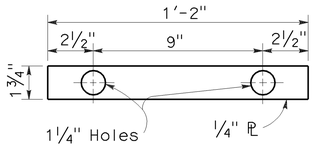

DETAIL C

STRAIGHT METAL BOX SPACER

PLATE 'A'

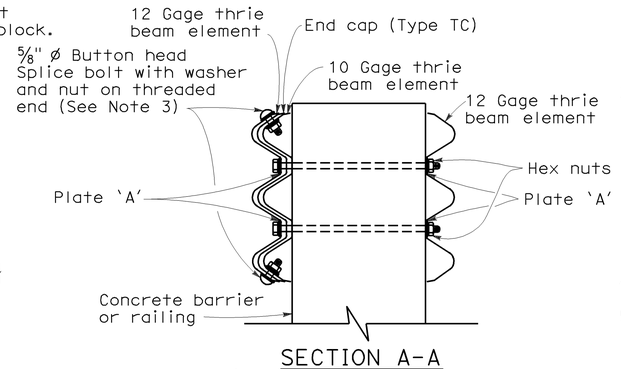

SECTION A-A

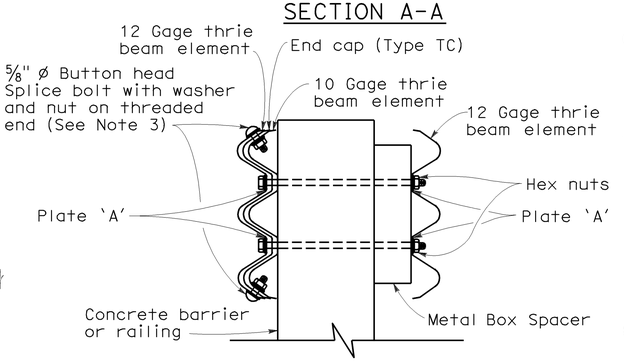

SECTION B-B

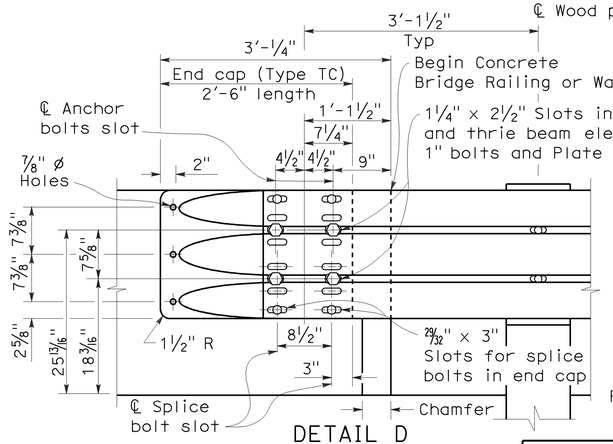

DETAIL D

NOTES:

To accompany plans dated 5-17-10

1. Use 5/8 " ø Button head bolts and hex nuts for connections to posts. No washer on rail face for bolted connections to post.
2. The nested rail elements, end cap, and 'W' beam to thrie beam element may be spliced together prior to bolting the elements to the wood post and concrete barrier or railing.
3. Exterior splice bolt holes for rail element splices at Post No.T4 and the connection to the concrete barrier or railing shall be the standard 29/32 " x 1 1/8 " slot size. Interior splice bolt holes at these locations may be increased up to 1 1/4 " ø. Only the top 2 and the bottom 2 splice bolts with washers and nuts are required for rail splices at Post No.T4 and the connection to the concrete barrier or railing.
4. Direction of adjacent traffic indicated by →.
5. The top elevation of Post Nos.T2 through T7 shall not project more than 1" above the top elevation of the rail element.
6. Typically, the railing connected to Transition Railing (Type WB) will be either standard railing section of metal beam guard railing or an approved Caltrans end treatment attached to Post No.T1.
7. The depth of the metal box spacer varies from the 5 1/8 " to 1 1/2 " and is dependent on the width of the concrete railing or wall. The combined dimension for the depth of the metal box spacer plus the width of railing or wall is typically 17 1/8 ". Where the space between the backside of the concrete railing or wall and the rear thrie beam element is less than 1 1/2 ", metal plates similar to Plate 'A' are to be used as spacers.
8. Where the width of the concrete railing or wall is greater than 17 1/8 ", wood blocks are to be used to fill the space created between the backside of Posts No.4 through No.7 and the rear thrie beam element. These wood blocks shall be 8" in width and 1'-2" in length. The dimension between the front thrie beam element and the rear thrie beam element is to match the width of the concrete railing or wall.
9. End cap may be installed over 12 gage and 10 gage thrie beam elements where transition railing is installed on the departure end of bridge railing.

STATE OF CALIFORNIA
DEPARTMENT OF TRANSPORTATION

METAL BEAM GUARD RAILING TRANSITION RAILING (TYPE WB)

NO SCALE

RSP A77J4 DATED JUNE 5, 2009 SUPERSEDES RSP A77J4 DATED JUNE 6, 2008 AND STANDARD PLAN A77J4 DATED MAY 1, 2006 - PAGE 75 OF THE STANDARD PLANS BOOK DATED MAY 2006.

REVISED STANDARD PLAN RSP A77J4

2006 REVISED STANDARD PLAN RSP A77J4

5-14-09

DIST	COUNTY	ROUTE	POST MILES TOTAL PROJECT	SHEET NO.	TOTAL SHEETS
06	Ker	5	36.1/54.2	43	67

William K. Farnbach
REGISTERED CIVIL ENGINEER

June 5, 2009
PLANS APPROVAL DATE

REGISTERED PROFESSIONAL ENGINEER — William K. Farnbach — No. 49042 — Exp. 09-30-10 — CIVIL — STATE OF CALIFORNIA

The State of California or its officers or agents shall not be responsible for the accuracy or completeness of electronic copies of this plan sheet.

To accompany plans dated 5-17-10

2006 REVISED NEW STANDARD PLAN RNSP P4

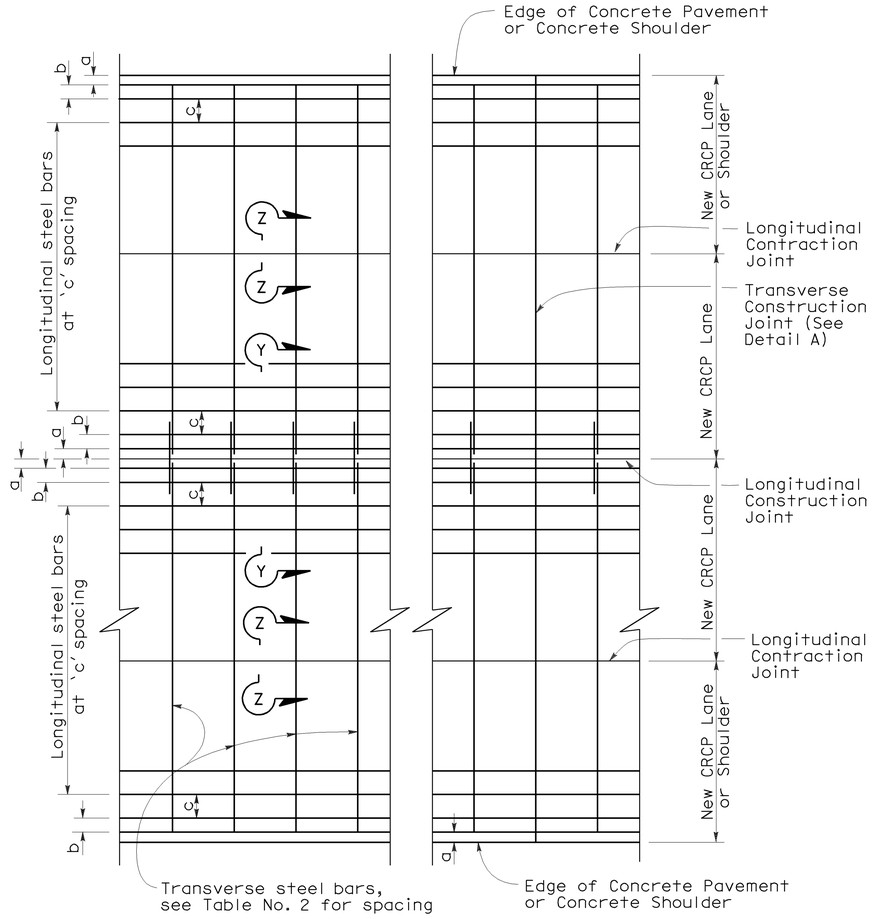

PLAN

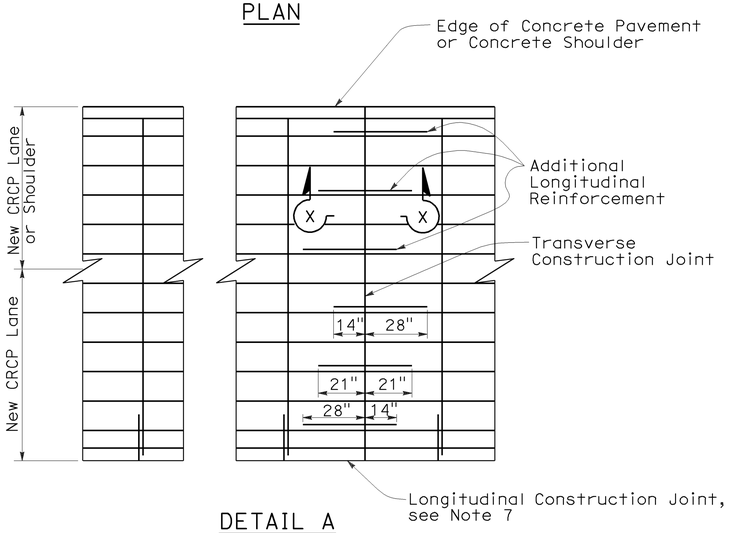

DETAIL A

ADDITIONAL LONGITUDINAL REINFORCEMENT AT TRANSVERSE CONSTRUCTION JOINT

TABLE No. 1 LONGITUDINAL STEEL

Slab Thickness and Bar Size		First Spacing at Edge or Joint	Second Spacing from Edge or Joint	Regular Steel Bars	Additional Reinforcement at Transverse Construction Joint		Clr
D	Bar Size	Spacing a	Spacing b	Spacing c	Spacing 2 x c	Length L	X
.80′	#6	3" TO 4"	3" TO 8"	8"	16"	42"	4"
.85′	#6	3" TO 4"	3" TO 7"	7"	14"	42"	4"
.90′	#6	3" TO 4"	3" TO 6.5"	6.5"	13"	42"	4"
.95′	#6	3" TO 4"	3" TO 6"	6.5"	13"	42"	4"
1.00′	#6	3" TO 4"	3" TO 6"	6"	12"	42"	4.25"
1.05′	#6	3" TO 4"	3" TO 5.5"	6"	12"	42"	4.5"
1.10′	#6	3" TO 4"	3" TO 5.5"	5.5"	11"	42"	4.75"

TABLE No. 2 TRANSVERSE STEEL

Slab Thickness and Bar Size		Pvmt Width (From Edge of Conc Pvmt or Conc Shld to Nearest Edge of Conc Pvmt or Conc Shld)						
		≤ 48′	≤ 60′	≤ 72′	≤ 84′	≤ 96′	≤ 108′	≤ 120′
D	Bar Size	Spacing	Spacing	Spacing	Spacing	Spacing	Spacing	Spacing
.80′	#6	3′	3′	3′	2.5′	2′	2′	1.5′
.85′	#6	3′	3′	2.5′	2.5′	2′	1.5′	1.5′
.90′	#6	3′	2.5′	2.5′	2′	2′	1.5′	1.5′
.95′	#6	3′	2.5′	2′	2′	1.5′	1.5′	1′
1.00′	#6	3′	2.5′	2′	2′	1.5′	1.5′	1′
1.05′	#6	2.5′	2.5′	2′	1.5′	1.5′	1.5′	1′
1.10′	#6	2.5′	2.5′	2′	1.5′	1.5′	1.5′	1′

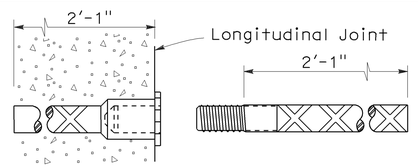

TIE BAR SPLICE DETAIL

(Splice Coupler)

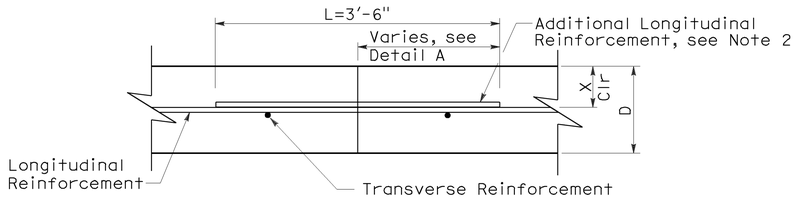

SECTION X-X

TRANSVERSE CONSTRUCTION JOINT

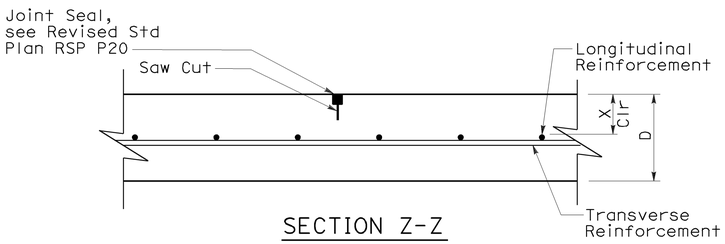

SECTION Z-Z

LONGITUDINAL CONTRACTION JOINT

NOTES:

1. Place tie bar in the same plane as transverse reinforcements.
2. Place additional longitudinal reinforcement in the same horizontal plane as the longitudinal reinforcement without horizontal space.
3. Place tie bar parallel to and within 2" of transverse reinforcement.
4. Joint seals at longitudinal construction joints shall conform to the details shown on Revised Standard Plan RSP P20 for Type C joint.
5. Tie bar spacing shall be equal to transverse bar spacing.
6. Reinforcing bar splices shall be a minimum of 25".
7. Additional longitudinal reinforcement symmetrical about longitudinal construction joint.

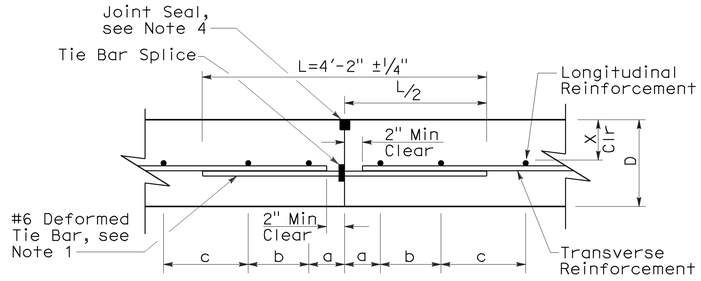

SECTION Y-Y

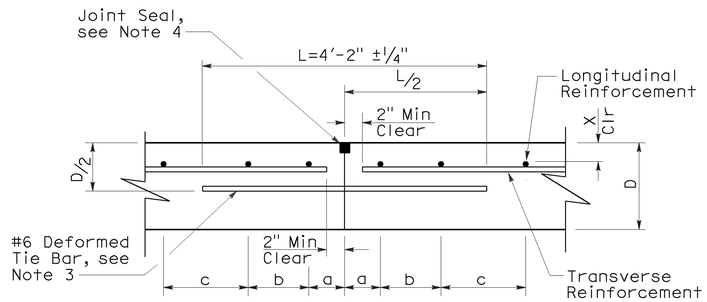

ALTERNATE

LONGITUDINAL CONSTRUCTION JOINT

STATE OF CALIFORNIA
DEPARTMENT OF TRANSPORTATION

CONTINUOUSLY REINFORCED CONCRETE PAVEMENT

NO SCALE

RNSP P4 DATED JUNE 5, 2009 SUPERSEDES NSP P4 DATED MAY 15, 2009 THAT SUPPLEMENTS THE STANDARD PLANS BOOK DATED MAY 2006.

REVISED NEW STANDARD PLAN RNSP P4

5-19-09

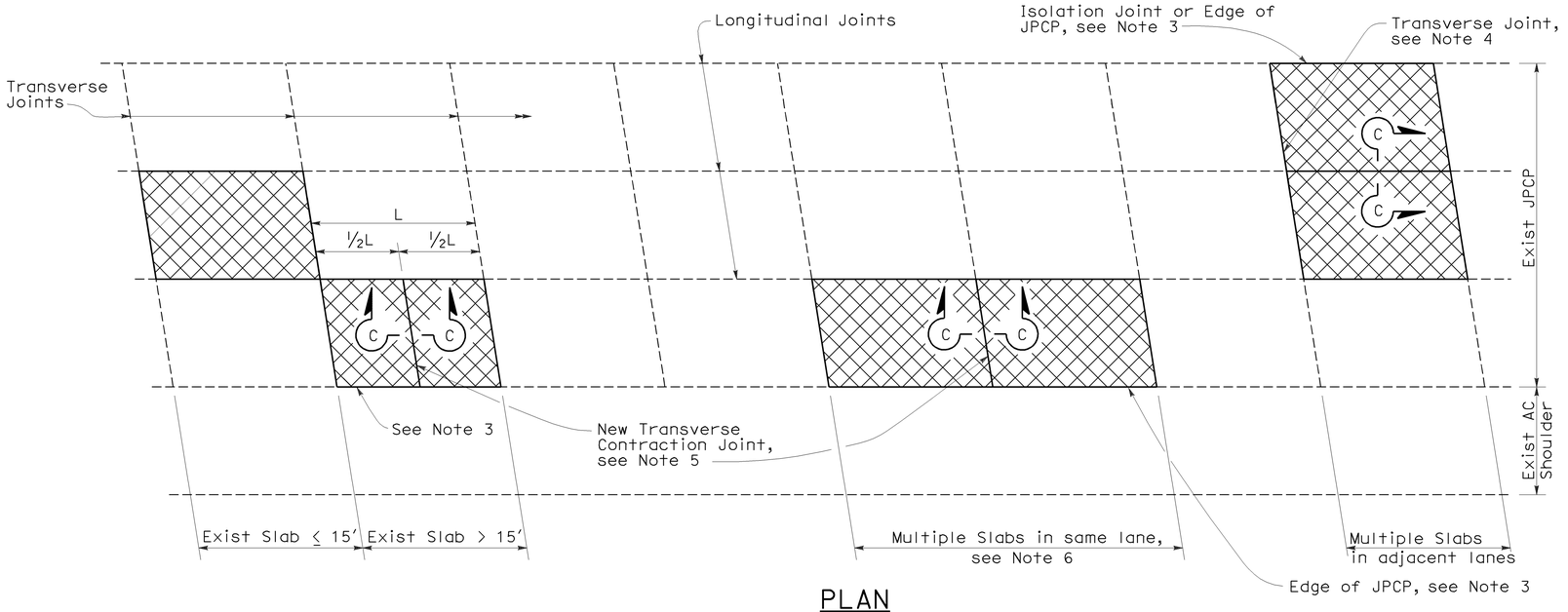

PLAN

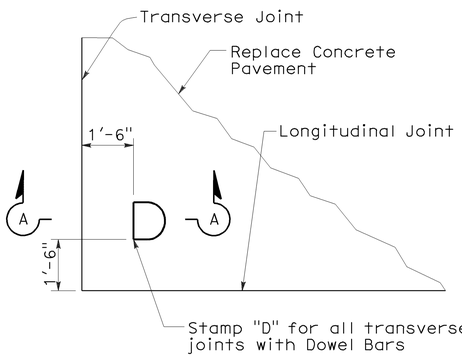

DOWEL STAMP DETAIL

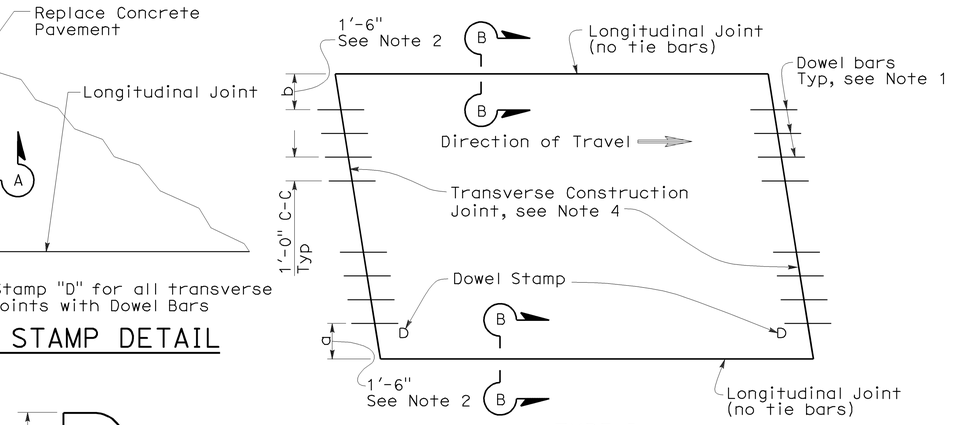

TYPE I

(traffic lane lines match longitudinal joints)

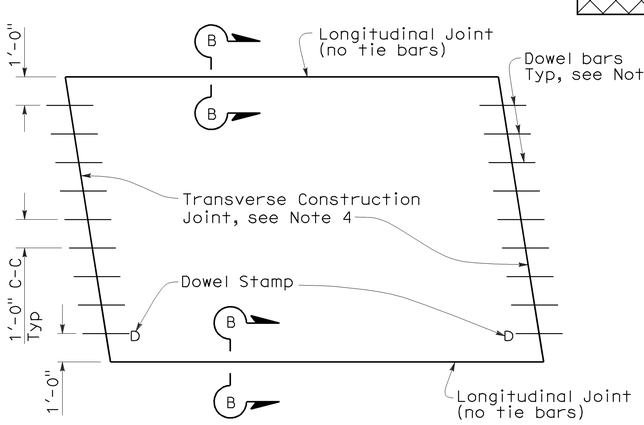

TYPE II

(traffic lane lines do not match longitudinal joints)

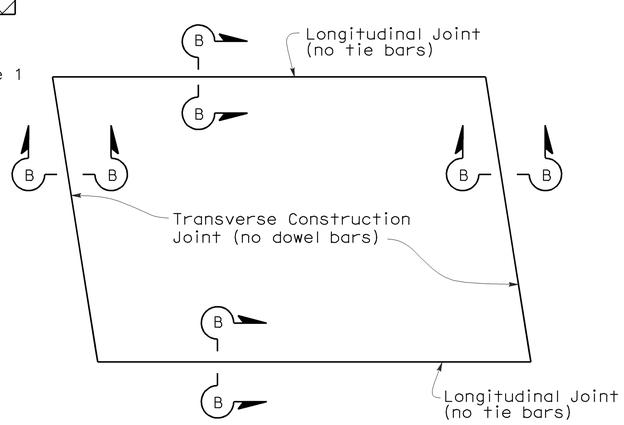

TYPE III

(for short term repairs < 5 yrs design life or for slab replacements with a cracking and seating operation)

SLAB LAYOUT

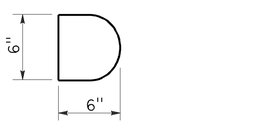

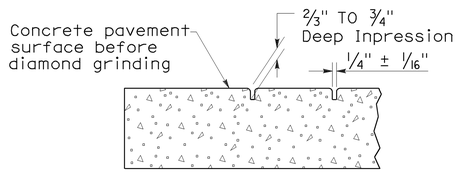

SECTION A-A

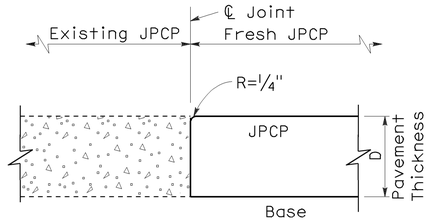

SECTION B-B

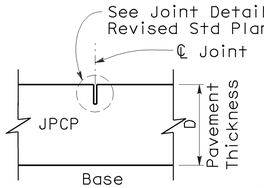

SECTION C-C

DIST	COUNTY	ROUTE	POST MILES TOTAL PROJECT	SHEET NO.	TOTAL SHEETS
06	Ker	5	36.1/54.2	44	67

William K. Farnbach
REGISTERED CIVIL ENGINEER

May 15, 2009
PLANS APPROVAL DATE

REGISTERED PROFESSIONAL ENGINEER — William K. Farnbach No. C49042 Exp. 9-30-10 CIVIL — STATE OF CALIFORNIA

The State of California or its officers or agents shall not be responsible for the accuracy or completeness of electronic copies of this plan sheet.

To accompany plans dated 5-17-10

NOTES:

1. For details not shown, see Revised Standard Plan RSP P10.
2. Where the existing outer shoulder pavement is asphalt concrete pavement, the "a" dimension shall be 1′-0" and the "b" dimension shall be 2′-0".
3. Side forms shall be used where edge of pavement is adjacent to asphalt concrete.
4. For detail, see Transverse Construction Joint for existing concrete pavement detail on Revised Standard Plan RSP P10.
5. Transverse joint to match skew of existing joint. Omit dowel bars.
6. This Standard Plan only applicable when replacing multiple slabs in the same lane is less than 100′.

LEGEND

Replace Concrete Pavement (See Slab Layout Detail)

STATE OF CALIFORNIA
DEPARTMENT OF TRANSPORTATION

JOINTED PLAIN CONCRETE PAVEMENT-INDIVIDUAL SLAB REPLACEMENT

NO SCALE

RSP P8 DATED MAY 15, 2009 SUPERSEDES RSP P8 DATED SEPTEMBER 1, 2006 AND STANDARD PLAN P8 DATED MAY 1, 2006 - PAGE 123 OF THE STANDARD PLANS BOOK DATED MAY 2006.

REVISED STANDARD PLAN RSP P8

2006 REVISED STANDARD PLAN RSP P8

5-8-09

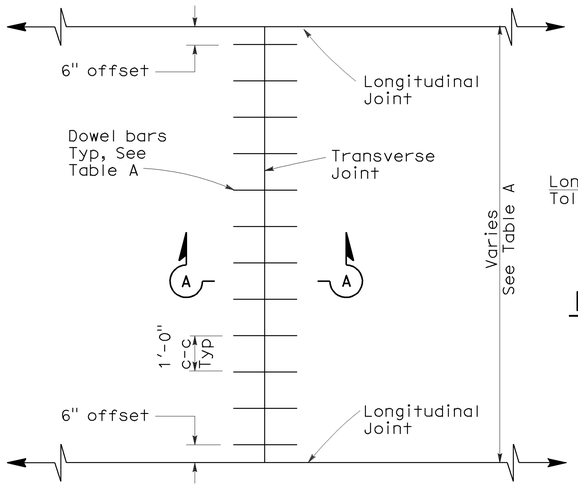

TRANSVERSE JOINT DOWEL BAR LAYOUT

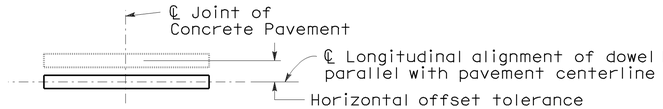

PLAN

HORIZONTAL OFFSET TOLERANCE

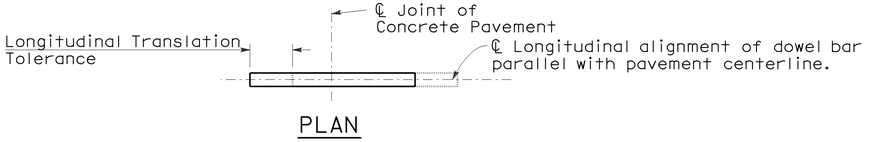

PLAN

LONGITUDINAL TRANSLATION TOLERANCE

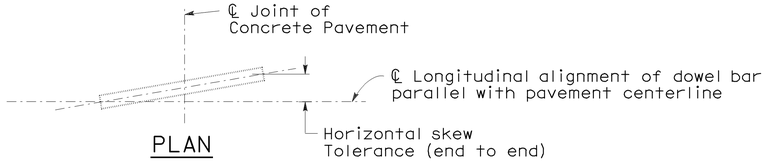

PLAN

HORIZONTAL SKEW TOLERANCE

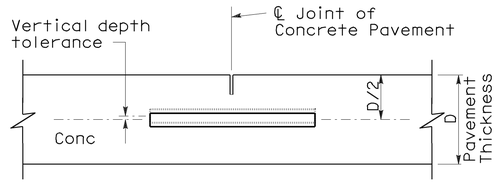

ELEVATION

VERTICAL DEPTH TOLERANCE

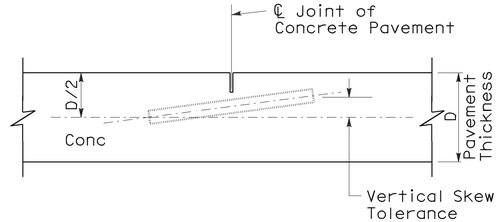

ELEVATION

VERTICAL SKEW TOLERANCE

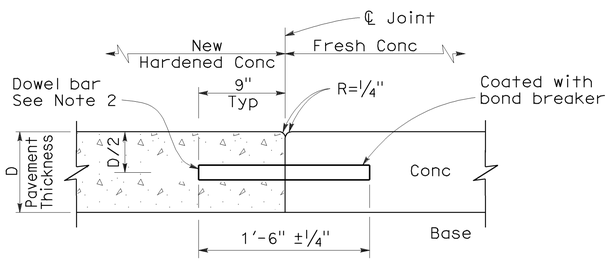

SECTION A-A

TRANSVERSE CONSTRUCTION JOINT DETAIL

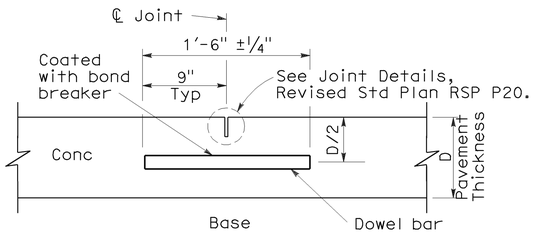

TRANSVERSE CONTRACTION JOINT

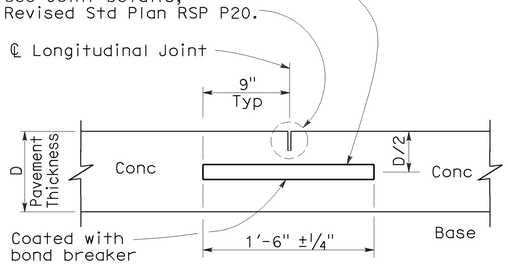

LONGITUDINAL CONTRACTION JOINT WITH DOWEL BARS

(See Revised Std Plan RSP P18)

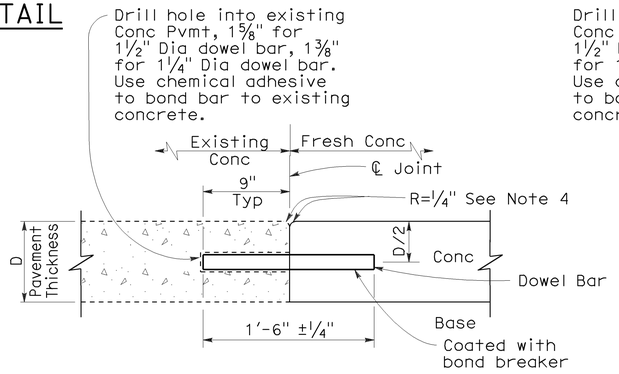

TRANSVERSE CONSTRUCTION JOINT FOR EXISTING CONCRETE PAVEMENT

(Drill and bond locations)

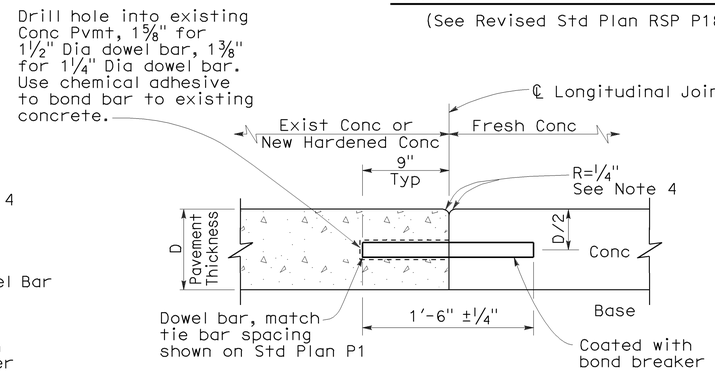

LONGITUDINAL CONSTRUCTION JOINT WITH DOWEL BARS

(See Revised Std Plan RSP P18)

DIST	COUNTY	ROUTE	POST MILES TOTAL PROJECT	SHEET NO.	TOTAL SHEETS
06	Ker	5	36.1/54.2	45	67

William K. Farnbach
REGISTERED CIVIL ENGINEER

May 15, 2009
PLANS APPROVAL DATE

REGISTERED PROFESSIONAL ENGINEER William K. Farnbach No. C49042 Exp. 9-30-10 CIVIL STATE OF CALIFORNIA

The State of California or its officers or agents shall not be responsible for the accuracy or completeness of electronic copies of this plan sheet.

To accompany plans dated 5-17-10

NOTES:

1. See Revised Standard Plan RSP P1 for typical dowel bar placement and locations.
2. 1½" Dia smooth dowel bars are to be used with a pavement thickness, D, equal to or greater than 0.70 feet. For pavement thickness, D, less than 0.70 feet, use 1¼" Dia smooth dowel bars.
3. For widths not shown, see Project Plans.
4. If fresh concrete pavement is placed adjacent to existing concrete pavement, the top corner of the existing concrete pavement does not need to be rounded to the ¼" radius, as shown.

TABLE A (See Note 3)

Dowel Bar Transverse Spacing Table	
Width between Longitudinal Joints	Number of Dowels between Longitudinal Joints
14'-0"	14
13'-0"	13
12'-0"	12
11'-0"	11
10'-0"	10
8'-0"	8
5'-0"	5
4'-0"	4

STATE OF CALIFORNIA
DEPARTMENT OF TRANSPORTATION

CONCRETE PAVEMENT-DOWEL BAR DETAILS

NO SCALE

RSP P10 DATED MAY 15, 2009 SUPERSEDES STANDARD PLAN P10 DATED MAY 1, 2006 - PAGE 124 OF THE STANDARD PLANS BOOK DATED MAY 2006.

REVISED STANDARD PLAN RSP P10

2006 REVISED STANDARD PLAN RSP P10

5-8-09

DIST	COUNTY	ROUTE	POST MILES TOTAL PROJECT	SHEET NO.	TOTAL SHEETS
06	Ker	5	36.1/54.2	46	67

William K. Farnbach
REGISTERED CIVIL ENGINEER

May 15, 2009
PLANS APPROVAL DATE

REGISTERED PROFESSIONAL ENGINEER — William K. Farnbach — No. C49042 — Exp. 9-30-10 CIVIL — STATE OF CALIFORNIA

The State of California or its officers or agents shall not be responsible for the accuracy or completeness of electronic copies of this plan sheet.

To accompany plans dated 5-17-10

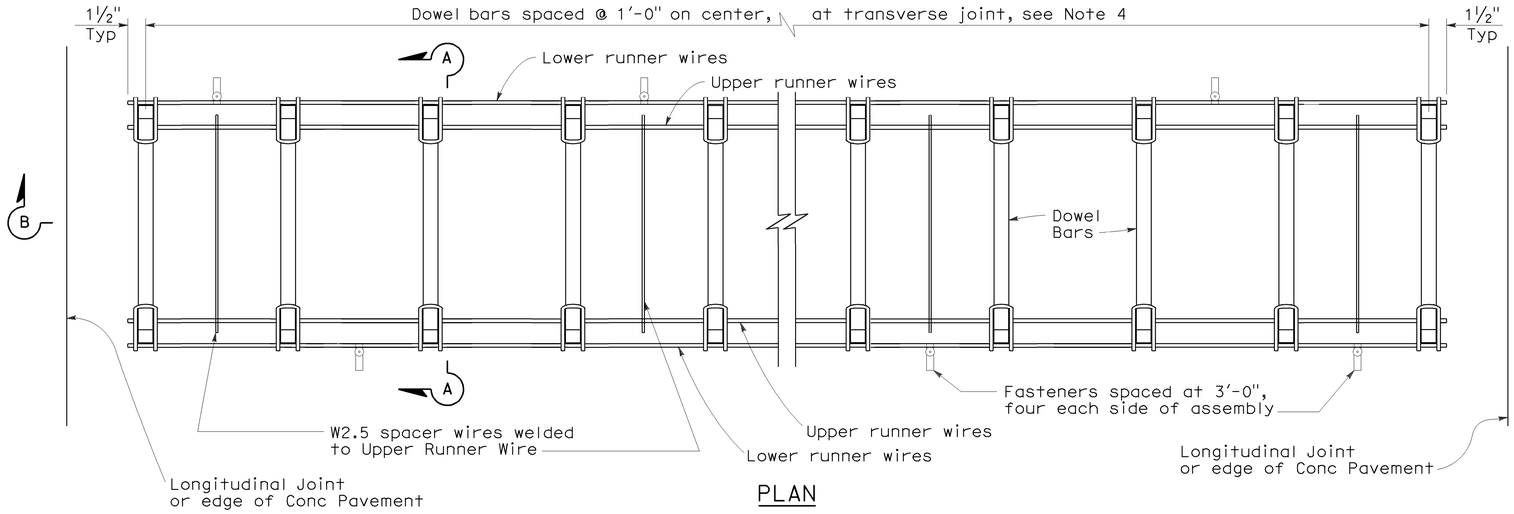

PLAN

DOWEL BAR BASKET (TRANSVERSE JOINT)

See Note 1

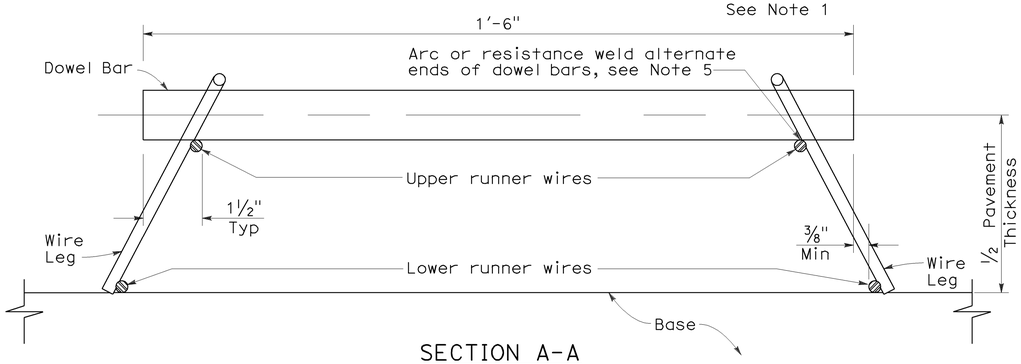

SECTION A-A

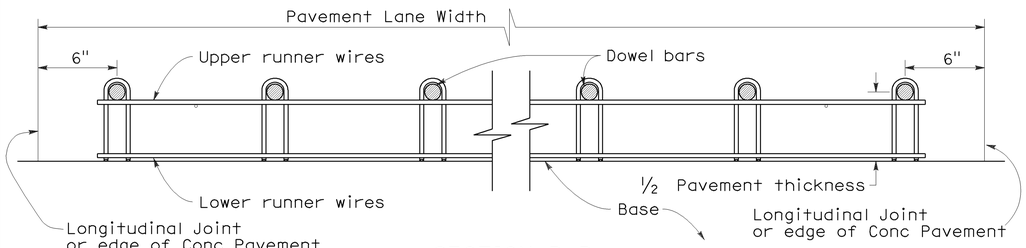

SECTION B-B

See Note 1

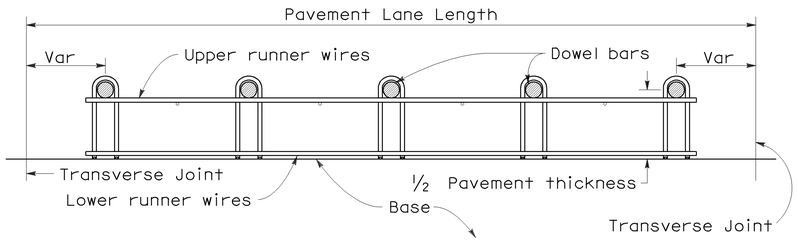

SECTION C-C

See Notes 1 and 4

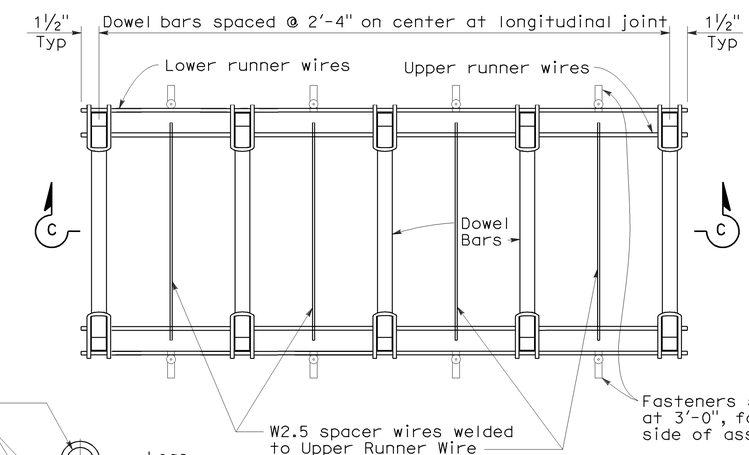

PLAN

DOWEL BAR BASKET (LONGITUDINAL JOINT)

See Note 1

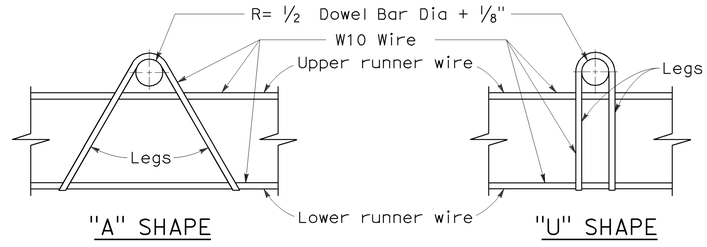

"A" SHAPE "U" SHAPE

ASSEMBLY FRAME DETAILS

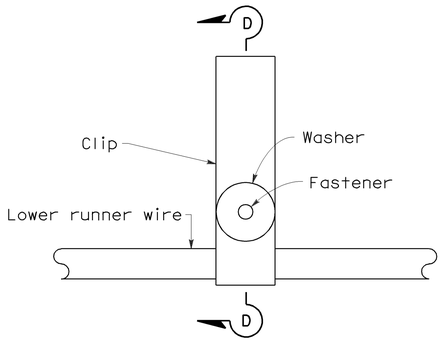

PLAN

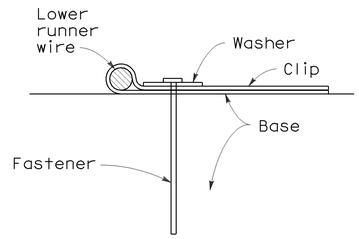

SECTION D-D

FASTENER DETAIL

NOTES:

1. "U" frame shape assembly shown. "U" frame shape or "A" frame shape are acceptable.
2. Wire sizes shown are minimum required.
3. All wire intersections are to be resistance welded.
4. Use tie bar spacing for longitudinal dowel bar locations. See Revised Std Plans RSPs P1, P2, and P3 for tie bar requirements.
5. Weld may be at top or bottom of dowel bar.

STATE OF CALIFORNIA
DEPARTMENT OF TRANSPORTATION

CONCRETE PAVEMENT- DOWEL BAR BASKET DETAILS

NO SCALE

RSP P12 DATED MAY 15, 2009 SUPERSEDES RSP P12 DATED NOVEMBER 17, 2006 AND STANDARD PLAN P12 DATED MAY 1, 2006 - PAGE 125 OF THE STANDARD PLANS BOOK DATED MAY 2006.

REVISED STANDARD PLAN RSP P12

2006 REVISED STANDARD PLAN RSP P12

5-8-09

DIST	COUNTY	ROUTE	POST MILES TOTAL PROJECT	SHEET NO.	TOTAL SHEETS
06	Ker	5	36.1/54.2	47	67

William K. Farnbach
REGISTERED CIVIL ENGINEER

June 5, 2009
PLANS APPROVAL DATE

REGISTERED PROFESSIONAL ENGINEER
William K. Farnbach
No. 49042
Exp. 09-30-10
CIVIL
STATE OF CALIFORNIA

The State of California or its officers or agents shall not be responsible for the accuracy or completeness of electronic copies of this plan sheet.

To accompany plans dated 5-17-10

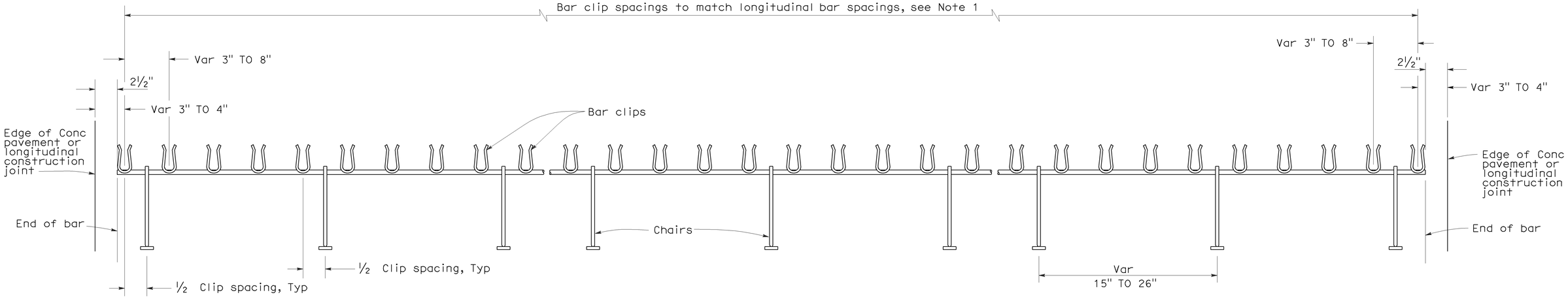

TRANSVERSE BAR ASSEMBLY

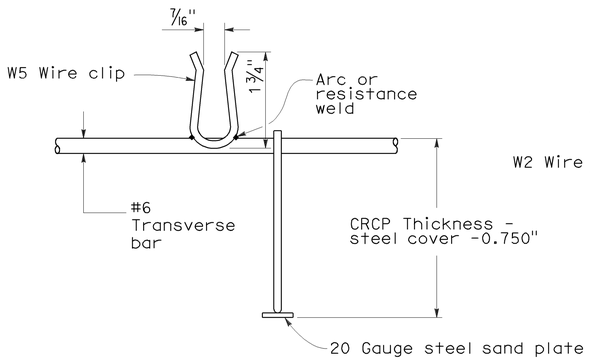

#6 BAR CLIP DETAIL

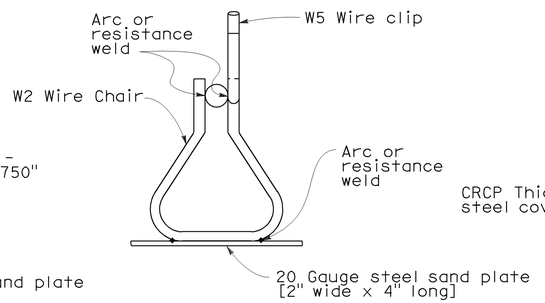

CHAIR DETAIL

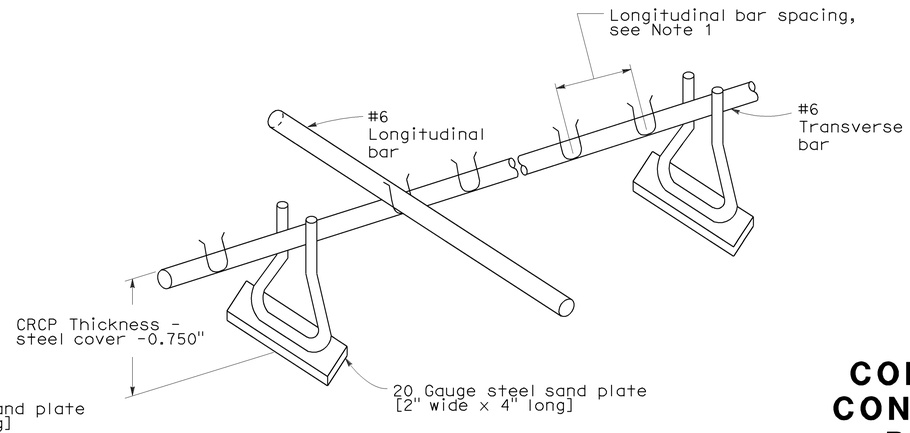

ISOMETRIC VIEW OF CHAIR ASSEMBLY

NOTES:

1. See New Standard Plan NSP P4 for spacing of longitudinal bars.
2. Tensile strength of chair shall be at least 50,000 psi.
3. Wire sizes shown are minimum required.

STATE OF CALIFORNIA
DEPARTMENT OF TRANSPORTATION

CONTINUOUSLY REINFORCED CONCRETE PAVEMENT-SINGLE PIECE TRANSVERSE BAR ASSEMBLY

NO SCALE

NSP P13 DATED JUNE 5, 2009 SUPPLEMENTS THE STANDARD PLANS BOOK DATED MAY 2006.

NEW STANDARD PLAN NSP P13

2006 NEW STANDARD PLAN NSP P13

5-19-09

NOTE:

1. Tie bars, dowel bars, and reinforcement are not shown in joint seal details, see Revised Standard Plans RSP P1, RSP P3, RSP P10, RSP P35, RSP P45, or RSP P46 as applicable.

DIST	COUNTY	ROUTE	POST MILES TOTAL PROJECT	SHEET NO.	TOTAL SHEETS
06	Ker	5	36.1/54.2	48	67

William K. Farnbach
REGISTERED CIVIL ENGINEER

May 15, 2009
PLANS APPROVAL DATE

REGISTERED PROFESSIONAL ENGINEER — William K. Farnbach — No. C49042 — Exp. 9-30-10 CIVIL — STATE OF CALIFORNIA

The State of California or its officers or agents shall not be responsible for the accuracy or completeness of electronic copies of this plan sheet.

To accompany plans dated 5-17-10

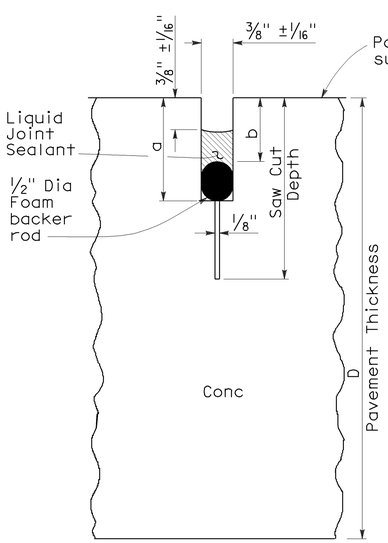

LIQUID SEALANT

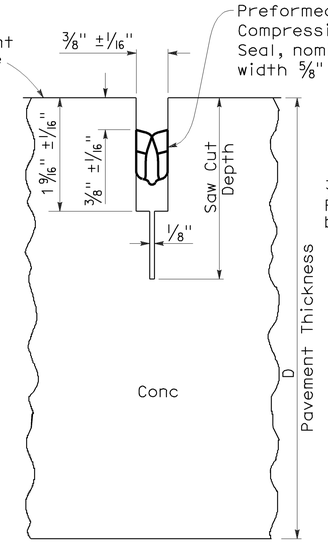

COMPRESSION SEAL

TYPE A1

Transverse Contraction Joints

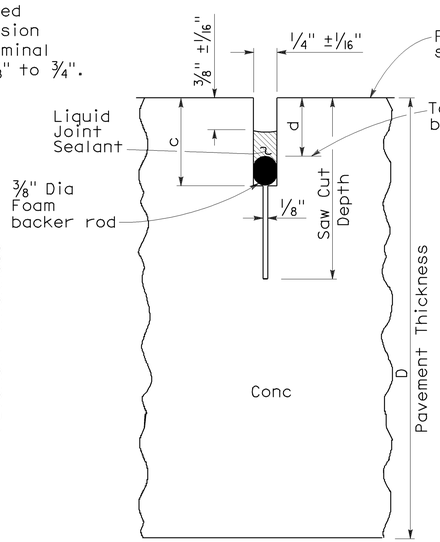

LIQUID SEALANT

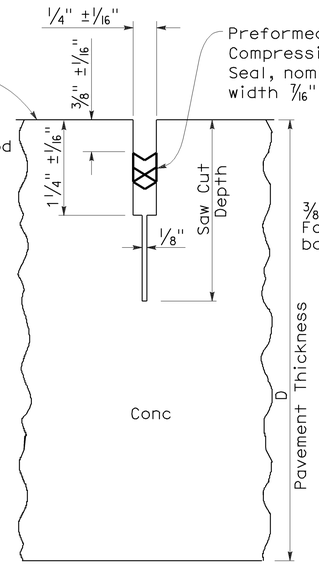

COMPRESSION SEAL

TYPE A2

Longitudinal Contraction Joints

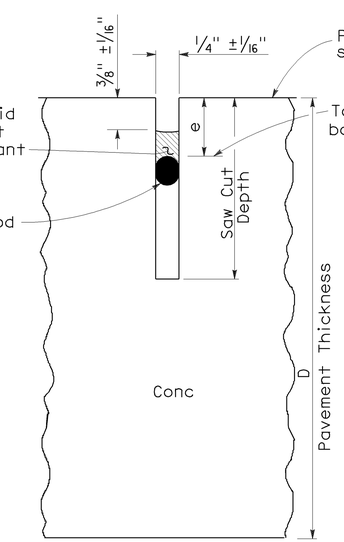

LIQUID SEALANT

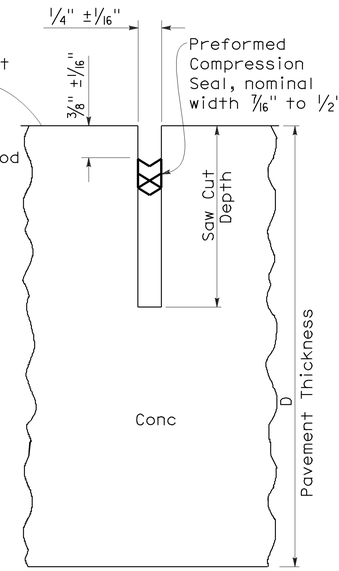

COMPRESSION SEAL

TYPE B

Longitudinal or Transverse Contraction Joint

LIQUID SEALANT RESERVOIR DEPTH

LIQUID SEALANT MATERIAL	3/8" Joint Width Type A1		1/4" Joint Width Type A2		1/4" Joint Width Type B
	DIMENSION		DIMENSION		DIMENSION
	a	b	c	d	e
SILCONE	1" ±1/16"	5/8" ±1/16"	15/16" ±1/16"	9/16" ±1/16"	9/16" ±1/16"
ASPHALT RUBBER	1 3/16" ±1/16"	3/4" ±1/16"	1 1/16" ±1/16"	11/16" ±1/16"	11/16" ±1/16"

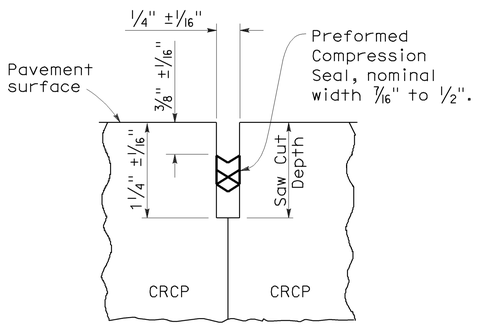

COMPRESSION SEAL

TYPE C

Transverse and Longitudinal Construction Joints (For CRCP)

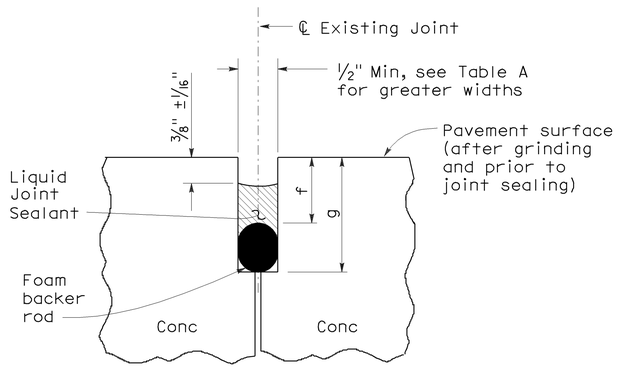

LIQUID SEALANT

TYPE R

Retrofit Transverse and Longitudinal Joints

TABLE A (TYPE R JOINT)

Sawn Joint Width	Backer Rod Diameter ± 1/16"	DIMENSION "f"	DIMENSION "g"
1"	1 5/16"	7/8"	2 1/4"
7/8"	1 3/16"	13/16"	2"
3/4"	1"	3/4"	1 3/4"
5/8"	7/8"	11/16"	1 1/2"
1/2"	11/16"	5/8"	1 1/4"

STATE OF CALIFORNIA
DEPARTMENT OF TRANSPORTATION

CONCRETE PAVEMENT-JOINT DETAILS

NO SCALE

RSP P20 DATED MAY 15, 2009 SUPERSEDES STANDARD PLAN P20 DATED MAY 1, 2006 - PAGE 128 OF THE STANDARD PLANS BOOK DATED MAY 2006.

REVISED STANDARD PLAN RSP P20

2006 REVISED STANDARD PLAN RSP P20

5-8-09

DIST	COUNTY	ROUTE	POST MILES TOTAL PROJECT	SHEET NO.	TOTAL SHEETS
06	Ker	5	36.1/54.2	49	67

William K. Farnbach
REGISTERED CIVIL ENGINEER

May 15, 2009
PLANS APPROVAL DATE

REGISTERED PROFESSIONAL ENGINEER — William K. Farnbach — No. C49042 — Exp. 9-30-10 — CIVIL — STATE OF CALIFORNIA

The State of California or its officers or agents shall not be responsible for the accuracy or completeness of electronic copies of this plan sheet.

To accompany plans dated 5-17-10

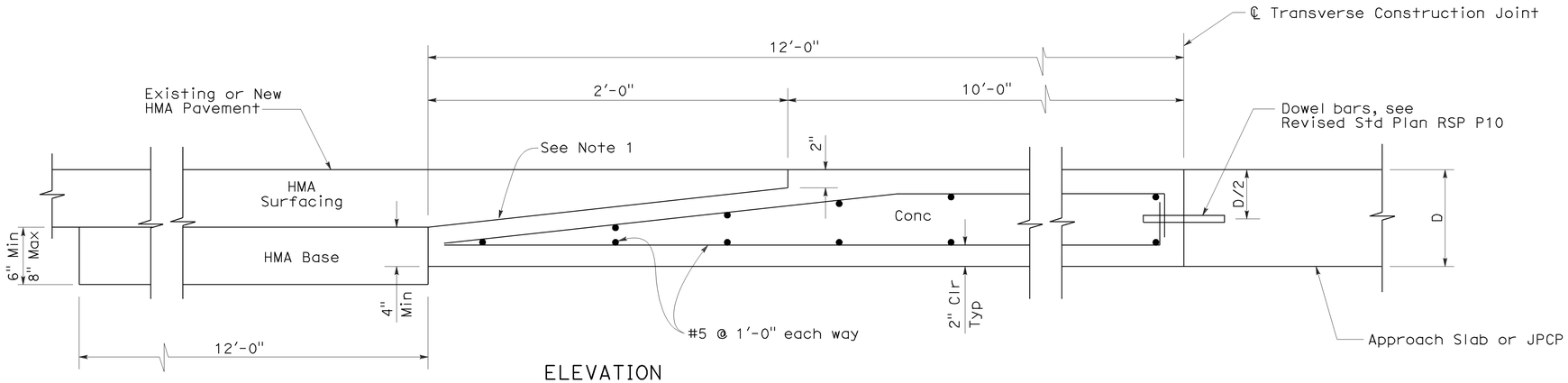

ELEVATION

CONCRETE PAVEMENT TO HOT MIXED ASPHALT PAVEMENT TRANSITION PANEL

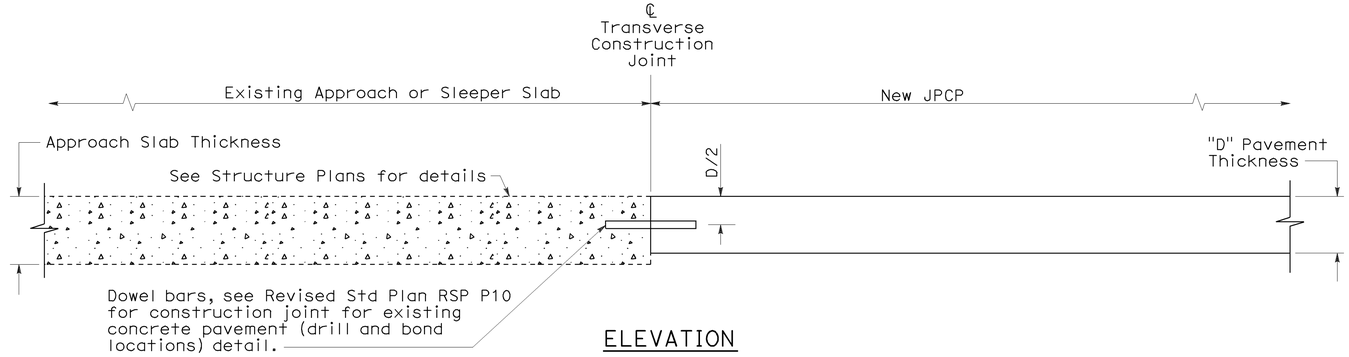

ELEVATION

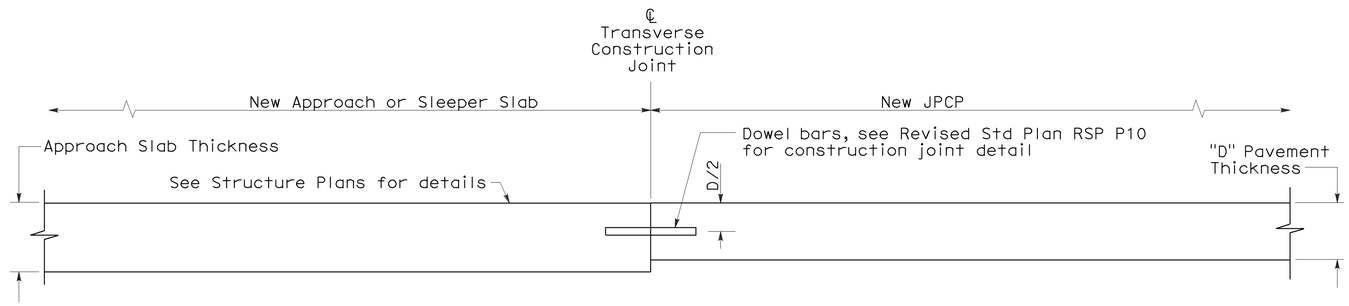

ELEVATION

CONCRETE PAVEMENT TRANSITION TO APPROACH OR SLEEPER SLAB

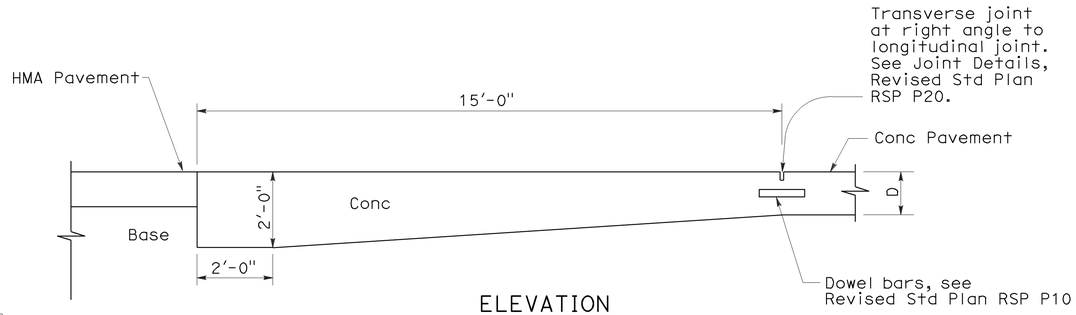

ELEVATION

PAVEMENT END ANCHOR

NOTE:

1. Heavy broom finish.

STATE OF CALIFORNIA
DEPARTMENT OF TRANSPORTATION

JOINTED PLAIN CONCRETE PAVEMENT-END PANEL PAVEMENT TRANSITIONS

NO SCALE

RSP P30 DATED MAY 15, 2009 SUPERSEDES STANDARD PLAN P30
DATED MAY 1, 2006 - PAGE 129 OF THE STANDARD PLANS BOOK DATED MAY 2006.

REVISED STANDARD PLAN RSP P30

2006 REVISED STANDARD PLAN RSP P30

5-8-09

DIST	COUNTY	ROUTE	POST MILES TOTAL PROJECT	SHEET NO.	TOTAL SHEETS
06	Ker	5	36.1/54.2	50	67

William K. Farnbach
REGISTERED CIVIL ENGINEER

June 5, 2009
PLANS APPROVAL DATE

The State of California or its officers or agents shall not be responsible for the accuracy or completeness of electronic copies of this plan sheet.

REGISTERED PROFESSIONAL ENGINEER
William K. Farnbach
No. 49042
Exp. 09-30-10
STATE OF CALIFORNIA

To accompany plans dated 5-17-10

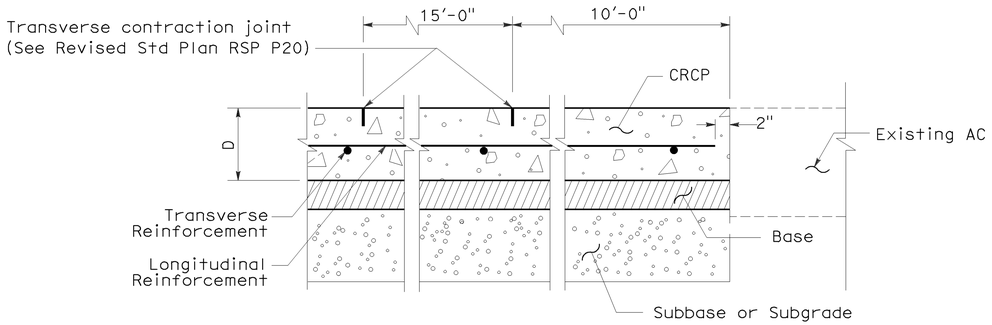

TERMINAL JOINT TYPE A

(For Existing AC)

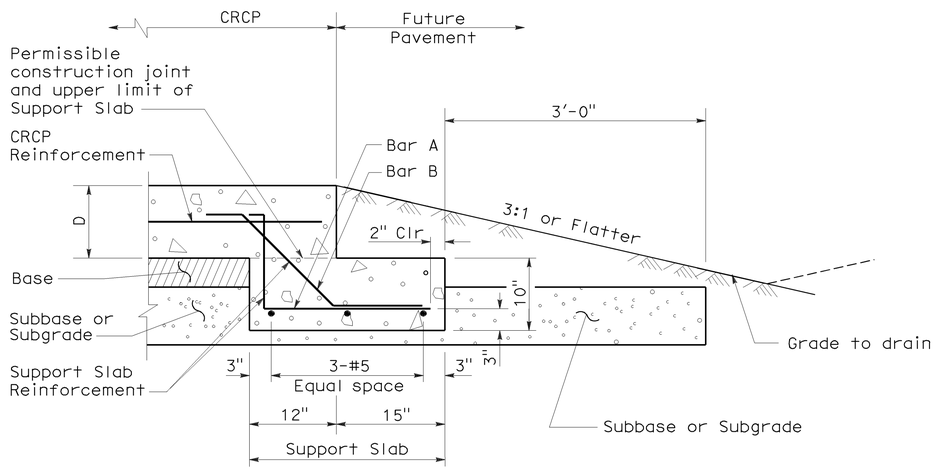

TERMINAL JOINT TYPE B

(For Future Pavement)

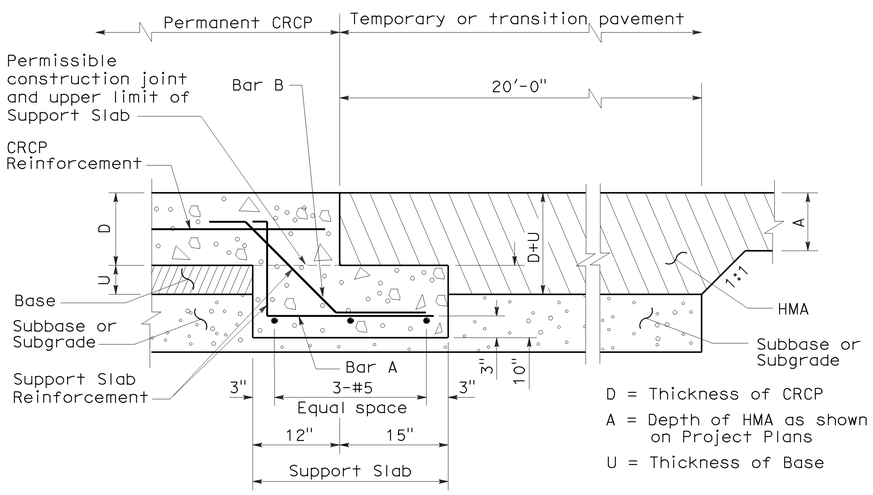

D = Thickness of CRCP

A = Depth of HMA as shown on Project Plans

U = Thickness of Base

TERMINAL JOINT TYPE C

(For Temporary HMA Pavement)

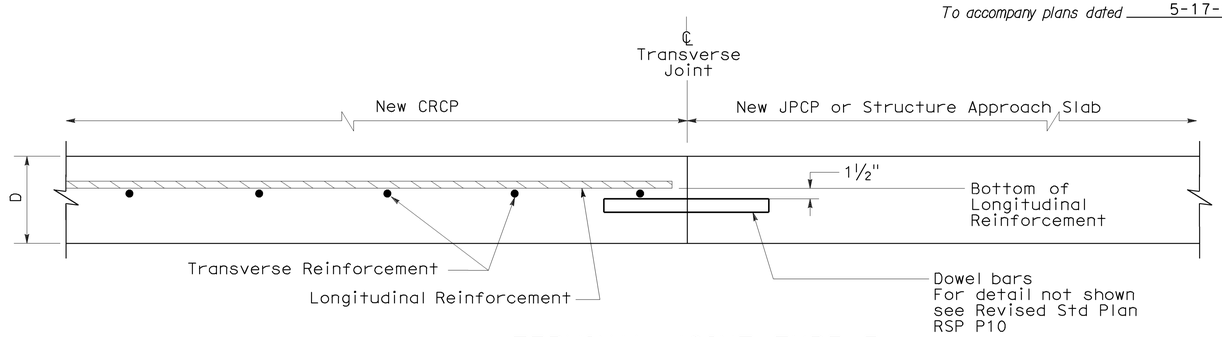

TERMINAL JOINT TYPE E

(For New JPCP or Structure Appproach Slabs)

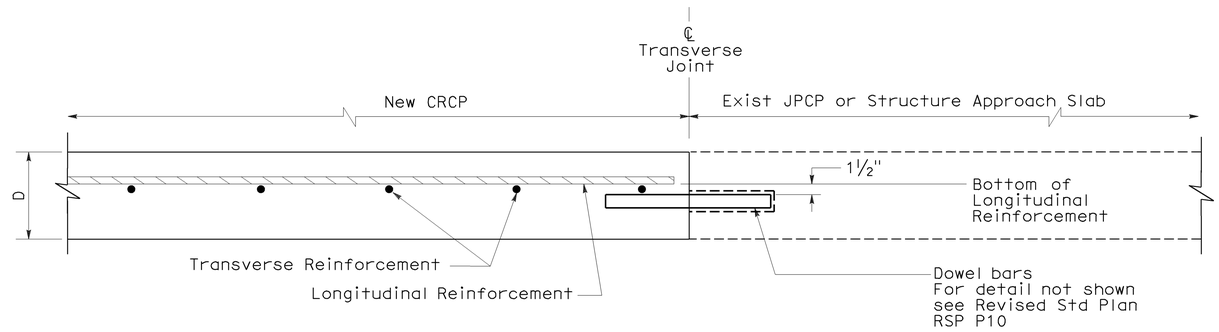

TERMINAL JOINT TYPE D

(For Existing JPCP or Structure Appproach Slabs)

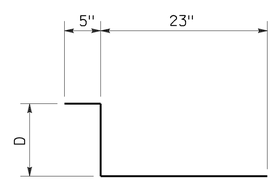

BAR "A" (#5)

AT 12" C-C

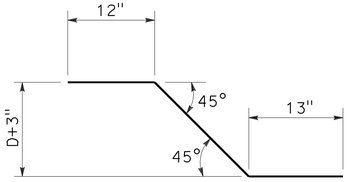

BAR "B" (#5)

AT 12" C-C

STATE OF CALIFORNIA
DEPARTMENT OF TRANSPORTATION

CONTINUOUSLY REINFORCED CONCRETE PAVEMENT- TERMINAL JOINT DETAILS

NO SCALE

NSP P31A DATED JUNE 5, 2009 SUPPLEMENTS THE STANDARD PLANS BOOK DATED MAY 2006.

NEW STANDARD PLAN NSP P31A

2006 NEW STANDARD PLAN NSP P31A

5-19-09

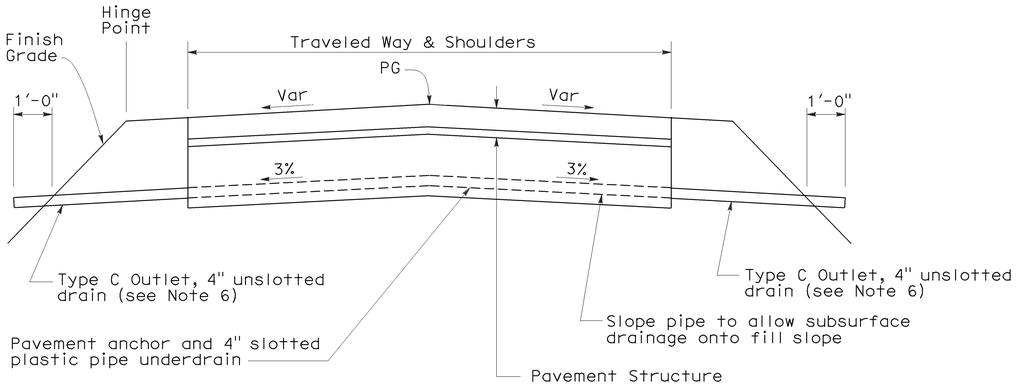

PAVEMENT ANCHOR PROFILE

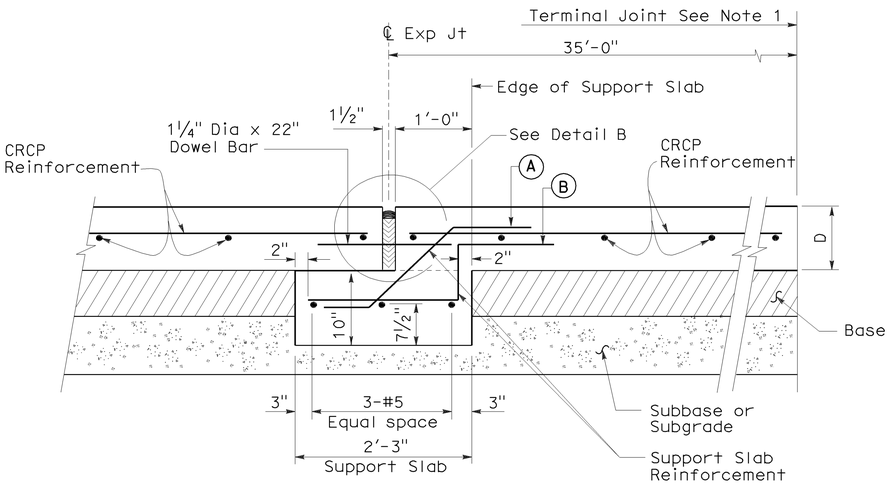

EXPANSION JOINT TYPE AN

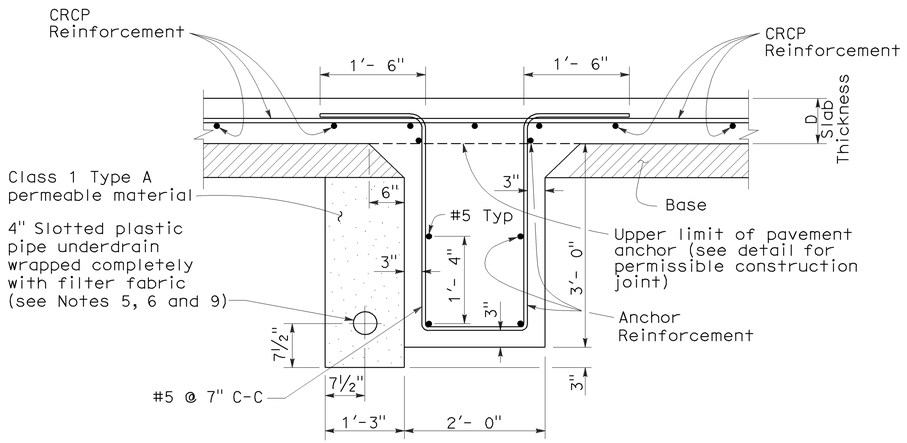

PAVEMENT ANCHOR

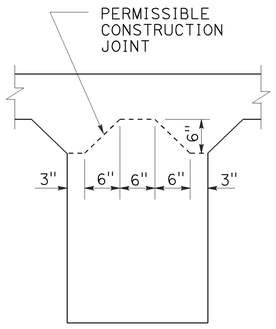

PAVEMENT ANCHOR DETAIL SHOWING PERMISSIBLE CONSTRUCTION JOINT

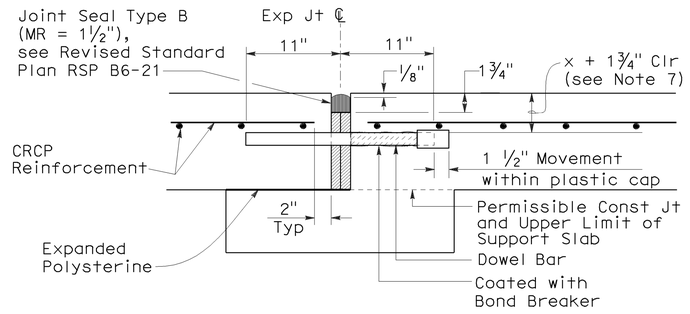

DETAIL B

(For layout, tolerances, and other details not shown, see Revised Standard Plan RSP P10.)

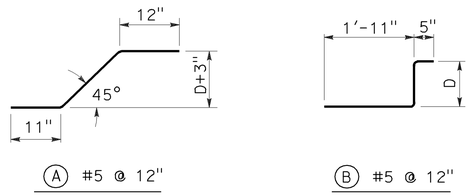

REINFORCEMENT DETAIL

NOTES:

1. For the locations of the terminal joints, expansion joints and pavement anchors, see project plans.
2. The CRCP shall continue across the pavement anchor and expansion joints as shown.
3. Details of reinforcement, tie bars, and longitudinal joints (and if necessary, transverse construction joints) are shown on New Standard Plan NSP P4.
4. Transverse construction joints are not allowed within 20'-0" of the pavement anchor.
5. When placing pipe through concrete barrier, use 4" unslotted plastic pipe wrapped completely with 9/16" polystyrene.
6. See Standard Plan D99B for details not shown.
7. See New Standard Plan NSP P4 for "x".
8. D = thickness of CRCP
9. Place the 4" Slotted Plastic Pipe on the high side of the longitudinal grade.

DIST	COUNTY	ROUTE	POST MILES TOTAL PROJECT	SHEET NO.	TOTAL SHEETS
06	Ker	5	36.1/54.2	51	67

William K. Farnbach
REGISTERED CIVIL ENGINEER

June 5, 2009
PLANS APPROVAL DATE

REGISTERED PROFESSIONAL ENGINEER — William K. Farnbach — No. 49042 — Exp. 09-30-10 — STATE OF CALIFORNIA

The State of California or its officers or agents shall not be responsible for the accuracy or completeness of electronic copies of this plan sheet.

To accompany plans dated 5-17-10

STATE OF CALIFORNIA
DEPARTMENT OF TRANSPORTATION

CONTINUOUSLY REINFORCED CONCRETE PAVEMENT- EXPANSION JOINT AND ANCHOR DETAILS

NO SCALE

NSP P31B DATED JUNE 5, 2009 SUPPLEMENTS THE STANDARD PLANS BOOK DATED MAY 2006.

NEW STANDARD PLAN NSP P31B

2006 NEW STANDARD PLAN NSP P31B

5-19-09

DIST	COUNTY	ROUTE	POST MILES TOTAL PROJECT	SHEET NO.	TOTAL SHEETS
06	Ker	5	36.1/54.2	52	67

Randell D. Hiatt
REGISTERED CIVIL ENGINEER

June 6, 2008
PLANS APPROVAL DATE

Randell D. Hiatt
No. C50200
Exp. 6-30-09
CIVIL
REGISTERED PROFESSIONAL ENGINEER
STATE OF CALIFORNIA

The State of California or its officers or agents shall not be responsible for the accuracy or completeness of electronic copies of this plan sheet.

To accompany plans dated 5-17-10

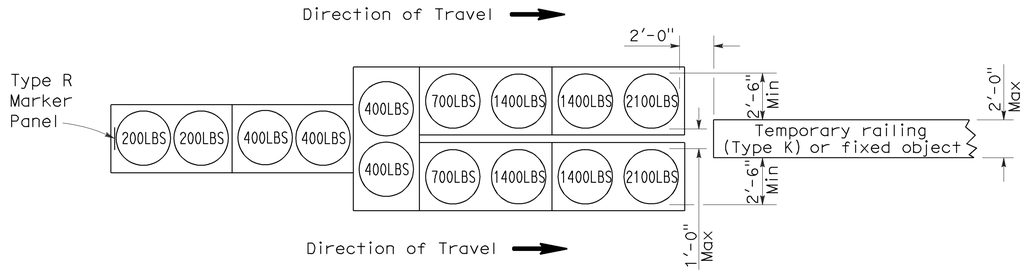

ARRAY 'TU14'

Approach speed 45 mph or more

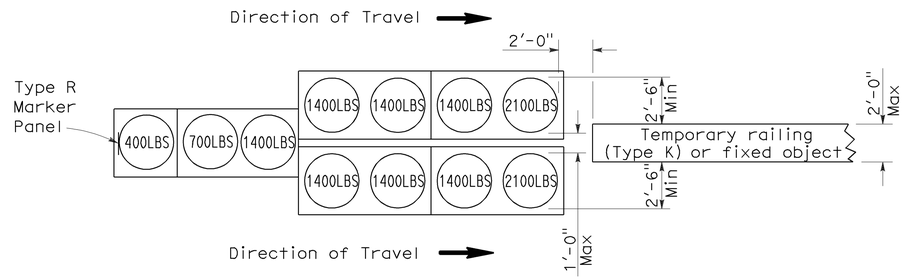

ARRAY 'TU11'

Approach speed less than 45 mph

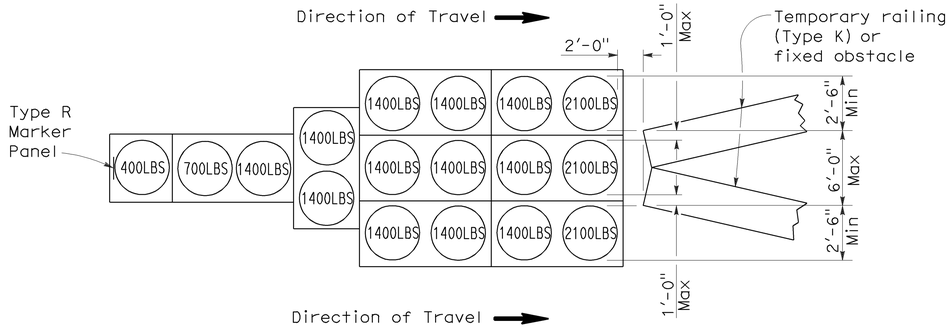

ARRAY 'TU17'

Approach speed less than 45 mph

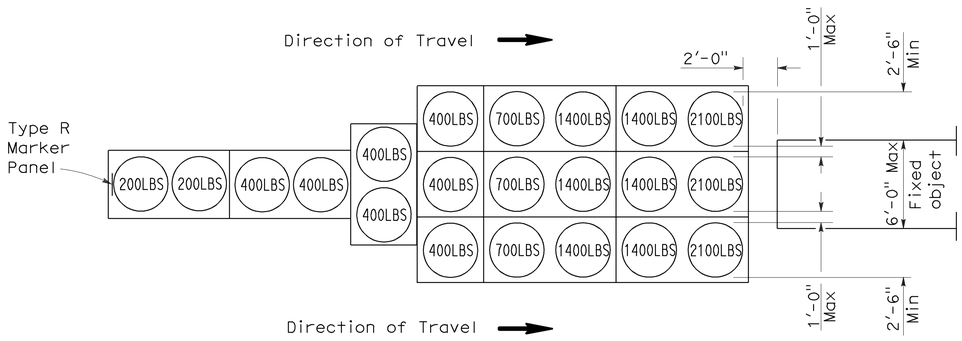

ARRAY 'TU21'

Approach speed 45 mph or more

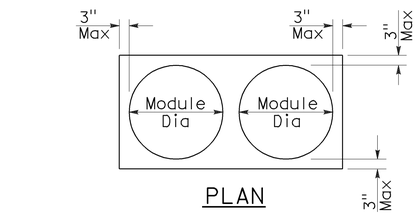

PLAN

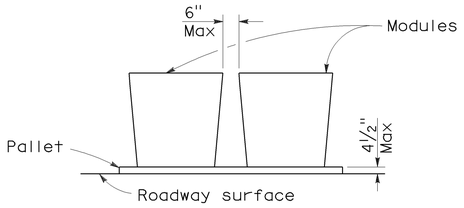

ELEVATION

CRASH CUSHION PALLET DETAIL

See Note 7

NOTES:

1. (XXX) Indicates sand filled module location and weight of sand in pounds for each module. Module spacing is based on the greater diameter of the module.
2. All sand weights are nominal.
3. Temporary crash cushion arrays shall not encroach on the traveled way.
4. Place the top of Type R marker panel 1" below the module lid.
5. Refer to Standard Plan A73B for marker details.
6. Approach speeds indicated conform to NCHRP 350 Report criteria.
7. Use of pallets is optional.

STATE OF CALIFORNIA
DEPARTMENT OF TRANSPORTATION

TEMPORARY CRASH CUSHION, SAND FILLED (UNIDIRECTIONAL)

NO SCALE

RSP T1A DATED JUNE 6, 2008 SUPERSEDES STANDARD PLAN T1A
DATED MAY 1, 2006 - PAGE 211 OF THE STANDARD PLANS BOOK DATED MAY 2006.

REVISED STANDARD PLAN RSP T1A

2006 REVISED STANDARD PLAN RSP T1A

5-15-08

DIST	COUNTY	ROUTE	POST MILES TOTAL PROJECT	SHEET NO.	TOTAL SHEETS
06	Ker	5	36.1/54.2	53	67

Randell D. Hiatt
REGISTERED CIVIL ENGINEER

June 6, 2008
PLANS APPROVAL DATE

Randell D. Hiatt
No. C50200
Exp. 6-30-09
CIVIL
REGISTERED PROFESSIONAL ENGINEER
STATE OF CALIFORNIA

The State of California or its officers or agents shall not be responsible for the accuracy or completeness of electronic copies of this plan sheet.

To accompany plans dated 5-17-10

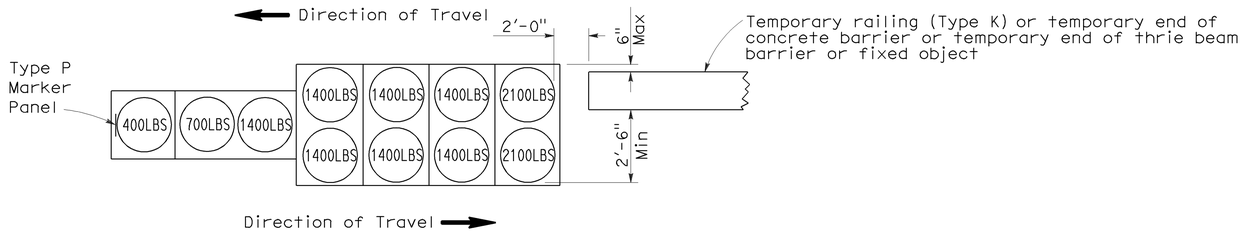

ARRAY 'TB11'

Approach speed less than 45 mph

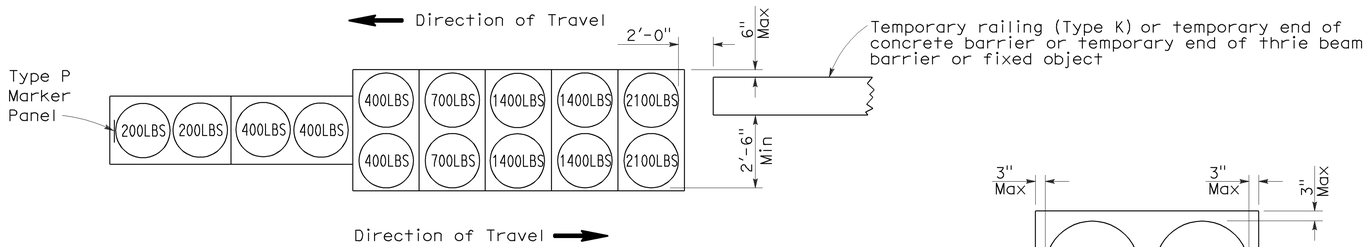

ARRAY 'TB14'

Approach speed 45 mph or more

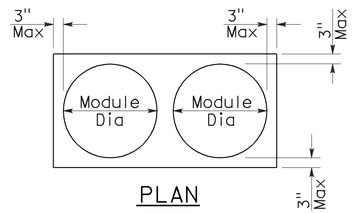

PLAN

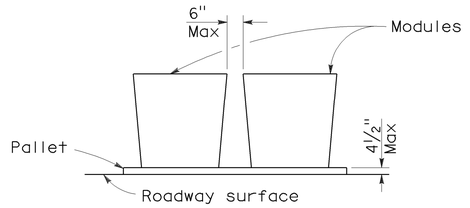

ELEVATION

CRASH CUSHION PALLET DETAIL

See Note 7

NOTES:

1. (XXX) Indicates sand filled module location and weight of sand in pounds for each module. Module spacing is based on the greater diameter of the module.
2. All sand weights are nominal.
3. Temporary crash cushion arrays shall not encroach on the traveled way.
4. Place the Type P marker panel so that the bottom of the panel rests upon the pallet.
5. Refer to Standard Plan A73B for marker details.
6. Approach speeds indicated conform to NCHRP 350 Report criteria.
7. Use of pallets is optional.

STATE OF CALIFORNIA
DEPARTMENT OF TRANSPORTATION

TEMPORARY CRASH CUSHION, SAND FILLED (BIDIRECTIONAL)

NO SCALE

RSP T1B DATED JUNE 6, 2008 SUPERSEDES STANDARD PLAN T1B
DATED MAY 1, 2006 - PAGE 212 OF THE STANDARD PLANS BOOK DATED MAY 2006.

REVISED STANDARD PLAN RSP T1B

2006 REVISED STANDARD PLAN RSP T1B

5-15-08

DIST	COUNTY	ROUTE	POST MILES TOTAL PROJECT	SHEET NO.	TOTAL SHEETS
06	Ker	5	36.1/54.2	54	67

Randell D. Hiatt
REGISTERED CIVIL ENGINEER

June 6, 2008
PLANS APPROVAL DATE

REGISTERED PROFESSIONAL ENGINEER
Randell D. Hiatt
No. C50200
Exp. 6-30-09
CIVIL
STATE OF CALIFORNIA

The State of California or its officers or agents shall not be responsible for the accuracy or completeness of electronic copies of this plan sheet.

To accompany plans dated 5-17-10

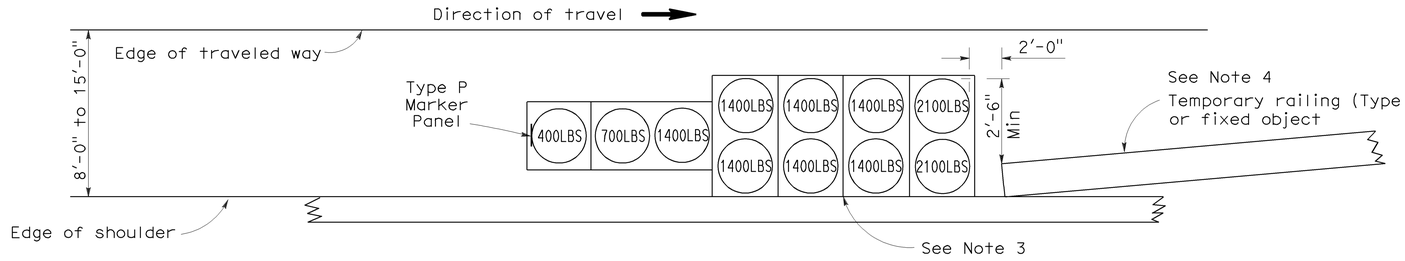

ARRAY 'TS11'

Approach speed less than 45 mph
See Note 9

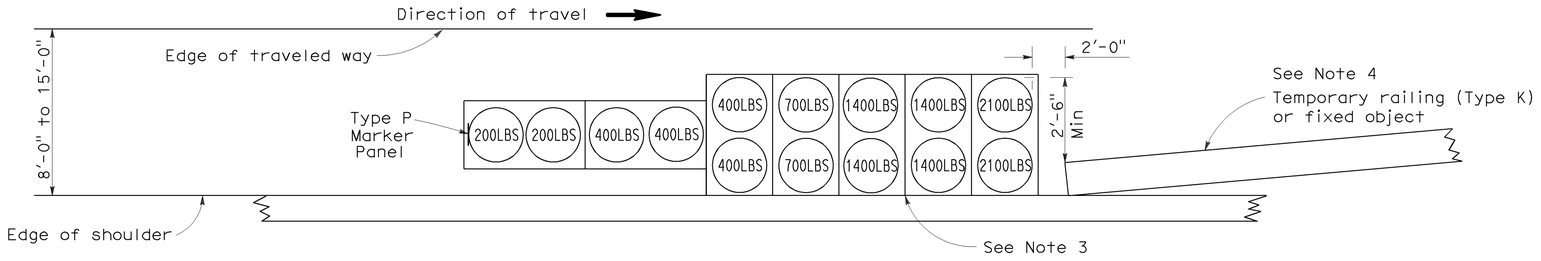

ARRAY 'TS14'

Approach speed 45 mph or more
See Note 9

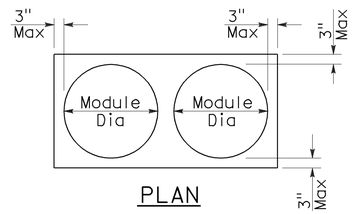

PLAN

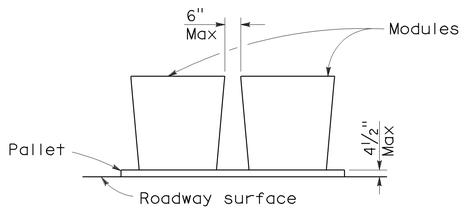

ELEVATION

CRASH CUSHION PALLET DETAIL

See Note 11

NOTES:

1. (XXX) Indicates sand filled module location and weight of sand in pounds for each module. Module spacing is based on the greater diameter of the module.
2. All sand weights are nominal.
3. The temporary crash cushion arrays shown on this plan shall be used only in locations where there will be traffic on one side of the temporary crash cushion array.
4. If the fixed object or approach end of the temporary railing is less than 15'-0" from the edge of traveled way, a temporary crash cushion is required in a construction or work zone.
5. Temporary crash cushion arrays shall not encroach on the traveled way.
6. Arrays for median shoulders shall conform to details shown on this plan for outside shoulders.
7. Place the Type P marker panel so that the bottom of the panel rests upon the pallet and faces traffic.
8. Refer to Standard Plan A73B for marker details.
9. For shoulder widths less than 8'-0", appropriate approved crash cushion protection, other than sand filled modules, shall be provided at fixed objects and at approach ends of temporary railing. The specific type of crash cushion shall be as shown on the project plans or as specified in the Special Provisions, or if not shown on the project plans or specified in the Special Provisions, shall be as approved by the Engineer.
10. Approach speeds indicated conform to NCHRP 350 Report criteria.
11. Use of pallets is optional.

STATE OF CALIFORNIA
DEPARTMENT OF TRANSPORTATION

TEMPORARY CRASH CUSHION, SAND FILLED (SHOULDER INSTALLATIONS)

NO SCALE

RSP T2 DATED JUNE 6, 2008 SUPERSEDES STANDARD PLAN T2
DATED MAY 1, 2006 - PAGE 213 OF THE STANDARD PLANS BOOK DATED MAY 2006.

REVISED STANDARD PLAN RSP T2

2006 REVISED STANDARD PLAN RSP T2

5-15-08

DIST	COUNTY	ROUTE	POST MILES TOTAL PROJECT	SHEET NO.	TOTAL SHEETS
06	Ker	5	36.1/54.2	55	67

Greg W. Edwards
REGISTERED CIVIL ENGINEER

November 17, 2006
PLANS APPROVAL DATE

REGISTERED PROFESSIONAL ENGINEER — Greg W. Edwards — No. C36386 — Exp. 6-30-08 CIVIL — STATE OF CALIFORNIA

The State of California or its officers or agents shall not be responsible for the accuracy or completeness of electronic copies of this plan sheet.

To accompany plans dated 5-17-10

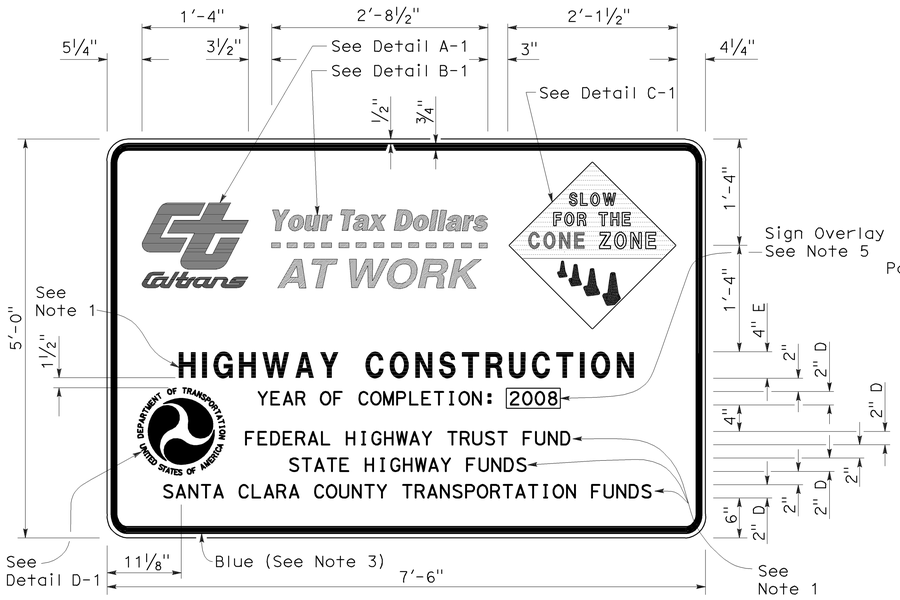

TYPE 1

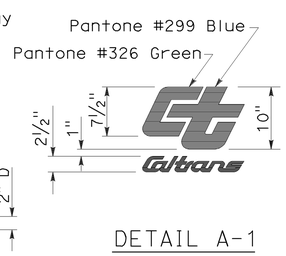

DETAIL A-1

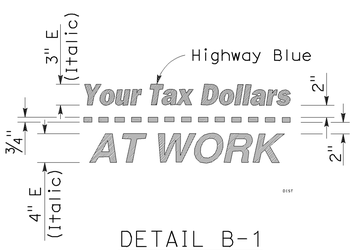

DETAIL B-1
(See Note 3)

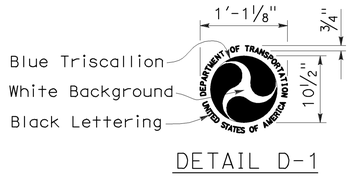

DETAIL D-1
(See Note 6)

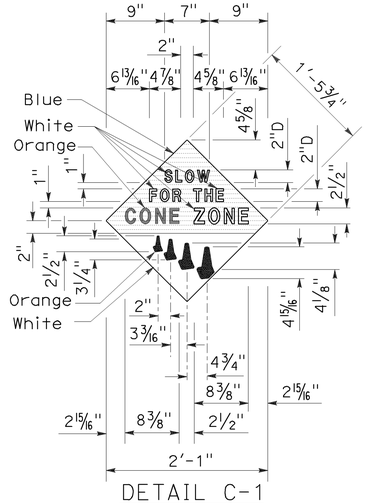

DETAIL C-1
(See Note 4)

NOTES:

1. The sign messages shown for type of project and fund types are examples only. See the Special Provisions for the applicable type of project and fund type messages to be used.
2. Except as otherwise shown, the legend of sign shall be black on a white background (non-reflective).
3. The border of the signs and details "B-1" and "B-2" shall be blue (non-reflective).
4. The diamond in details "C-1" and "C-2" shall be blue for the background of message, " SLOW FOR THE CONE ZONE", and white background for the orange cones. The color and type of font for the "SLOW FOR THE CONE ZONE" message shall be: "SLOW" white D; "FOR THE" white D; "CONE" orange Arial font; "ZONE" white Arial font.
5. Year of completion of project construction shown on the overlay is an example only. See the Special Provisions.
6. Use when the Project involves Federal Highway Trust Fund.

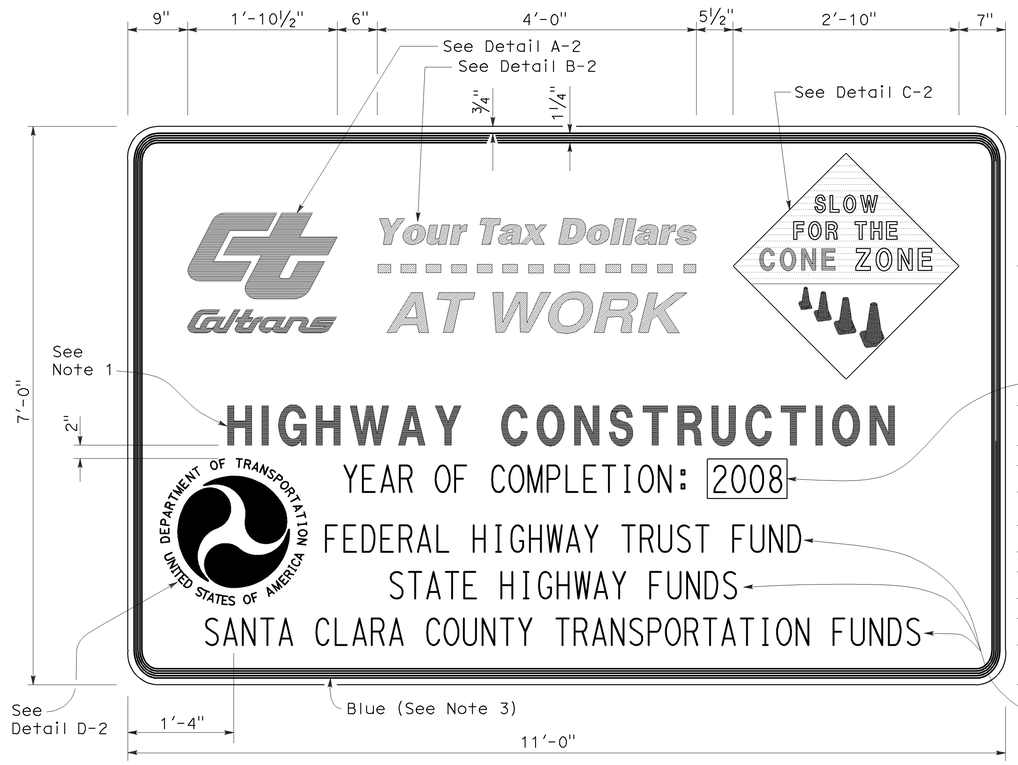

TYPE 2

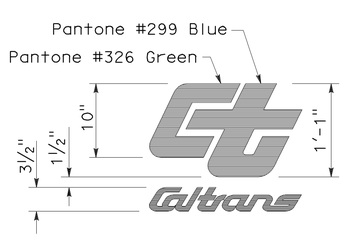

DETAIL A-2

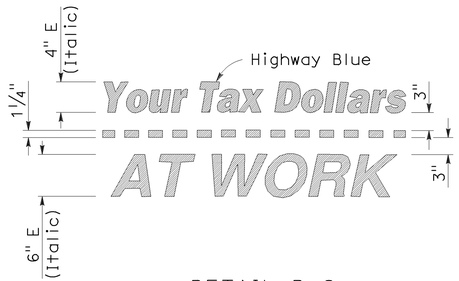

DETAIL B-2
(See Note 3)

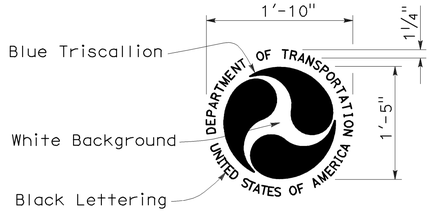

DETAIL D-2
(See Note 6)

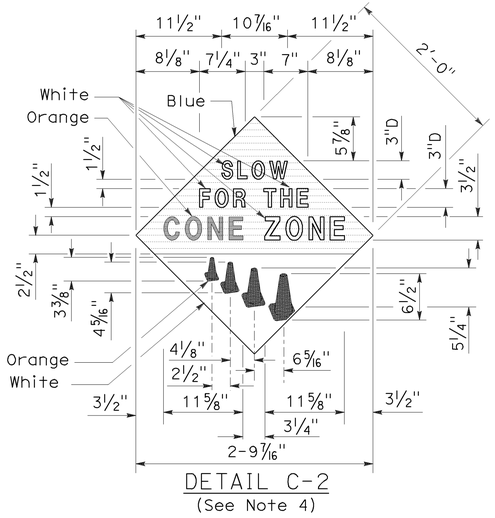

DETAIL C-2
(See Note 4)

STATE OF CALIFORNIA
DEPARTMENT OF TRANSPORTATION

CONSTRUCTION PROJECT FUNDING IDENTIFICATION SIGNS

NO SCALE

RSP T7 DATED NOVEMBER 17, 2006 SUPERSEDES STANDARD PLAN T7
DATED MAY 1, 2006 - PAGE 217 OF THE STANDARD PLANS BOOK DATED MAY 2006.

REVISED STANDARD PLAN RSP T7

2006 REVISED STANDARD PLAN RSP T7

9-7-06

DIST	COUNTY	ROUTE	POST MILES TOTAL PROJECT	SHEET NO.	TOTAL SHEETS
06	Ker	5	36.1/54.2	56	67

Robert B Schott
LICENSED LANDSCAPE ARCHITECT

August 15, 2008
PLANS Approval DATE

LICENSED LANDSCAPE ARCHITECT
Robert B. Schott 3685
Robert B Schott
Signature
11-04-08
Renewal Date
08-11-08
Date
STATE OF CALIFORNIA

The State of California or its officers or agents shall not be responsible for the accuracy or completeness of electronic copies of this plan sheet.

To accompany plans dated 5-17-10

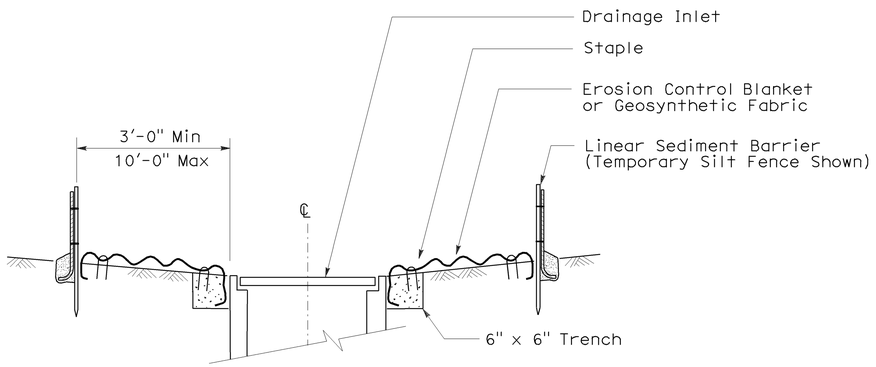

SECTION A-A

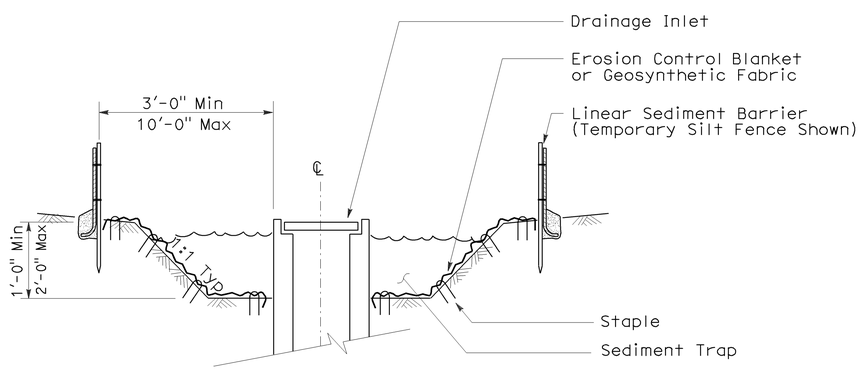

SECTION B-B

NOTES:

1. See Standard Plan T51 for Temporary Silt Fence.
2. Dimensions may vary to fit field conditions.

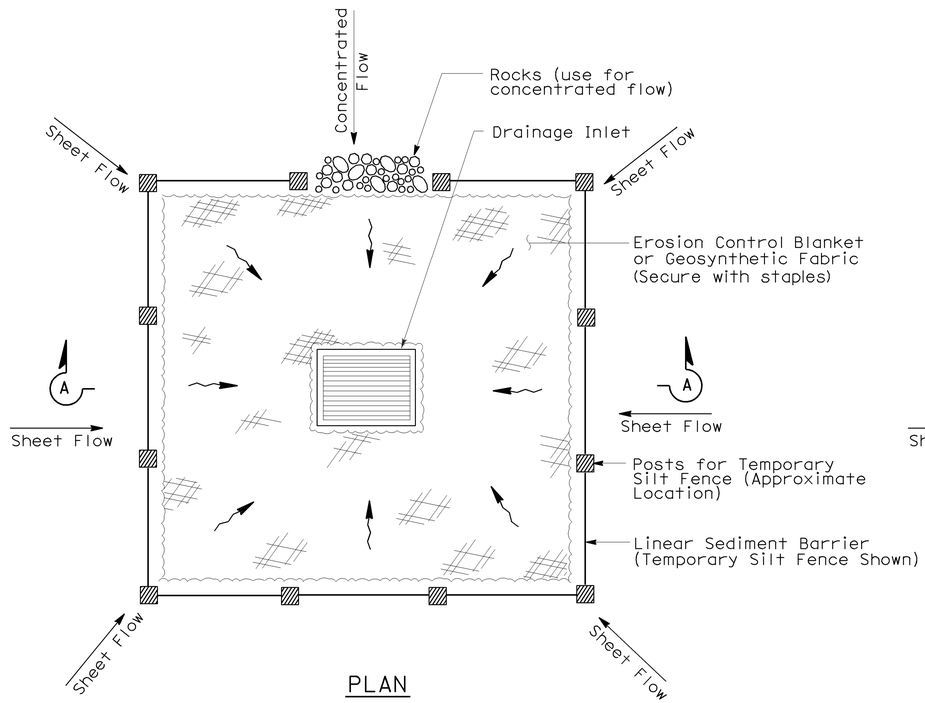

PLAN

TEMPORARY DRAINAGE INLET PROTECTION (TYPE 1)

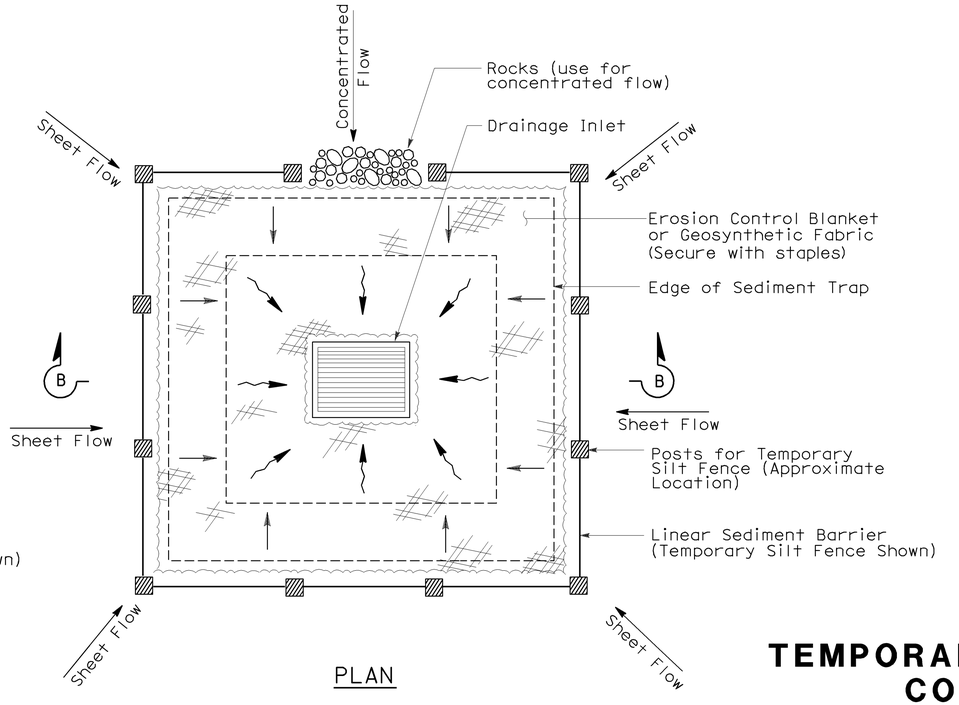

PLAN

TEMPORARY DRAINAGE INLET PROTECTION (TYPE 2) (EXCAVATED SEDIMENT TRAP)

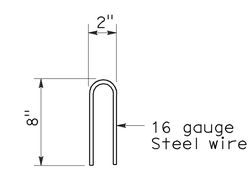

STAPLE DETAIL

STATE OF CALIFORNIA
DEPARTMENT OF TRANSPORTATION

TEMPORARY WATER POLLUTION CONTROL DETAILS (TEMPORARY DRAINAGE INLET PROTECTION)

NO SCALE

Nsp t61 dated august 15, 2008 supplements the standard plans book dated may 2006.

NEW STANDARD PLAN NSP T61

2006 NEW STANDARD PLAN NSP T61

7-11-08

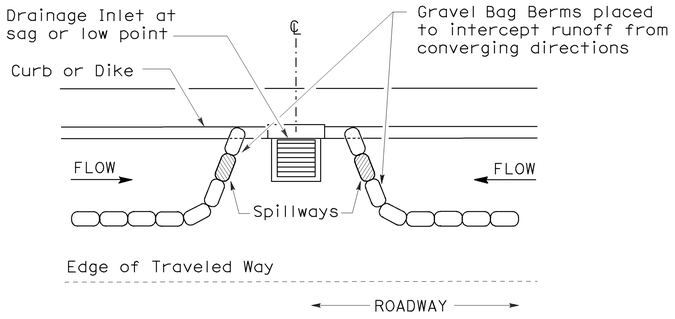

PLAN

CONFIGURATION FOR SAG POINT INLET (GRAVEL BAG BERM)

GRAVEL BAG BERM (TYPE 3A) SPACING TABLE

SLOPE OF ROADWAY (PERCENT)	1 to 3.9	4 to 5.9	6 to 7.9	8 to 10	10+
INTERVAL BETWEEN BERM	100′	75′	50′	25′	12′

For slope of less than 1%, install barriers only if erosion/sediment is prevalent

DIST	COUNTY	ROUTE	POST MILES TOTAL PROJECT	SHEET NO.	TOTAL SHEETS
06	Ker	5	36.1/54.2	57	67

Robert B Schott
LICENSED LANDSCAPE ARCHITECT

August 15, 2008
PLANS APPROVAL DATE

LICENSED LANDSCAPE ARCHITECT Robert B. Schott 3825 Signed 11-04-08 Renewal Date 08-11-08 Date STATE OF CALIFORNIA

The State of California or its officers or agents shall not be responsible for the accuracy or completeness of electronic copies of this plan sheet.

To accompany plans dated 5-17-10

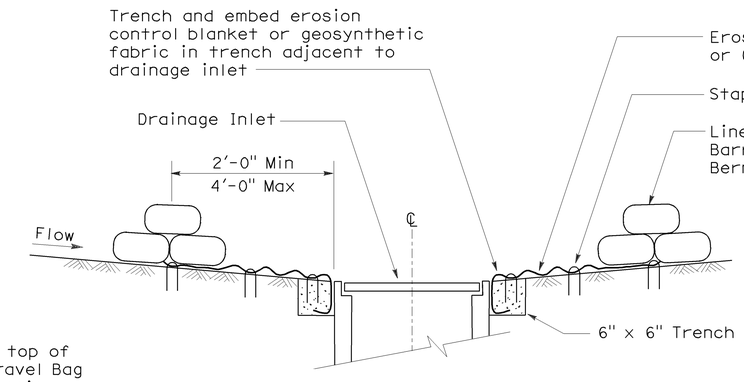

SECTION A-A

NOTES:

1. Place safety cones adjacent to drainage inlet protection.
2. Dimensions may vary to fit field conditions.
3. Install a minimum of 3 gravel bag berms upstream of each drainage inlet to be protected.
4. Position erosion control blanket or geosynthetic fabric at edge of concrete apron and secure in trench.
5. Erosion control blanket or geosynthetic fabric is not required if the area adjacent to the drainage inlet is vegetated or paved.

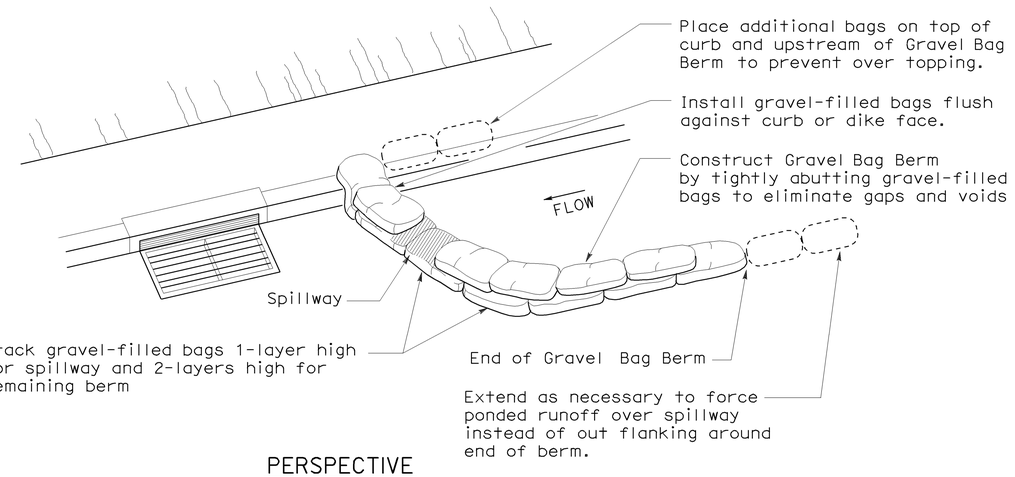

PERSPECTIVE

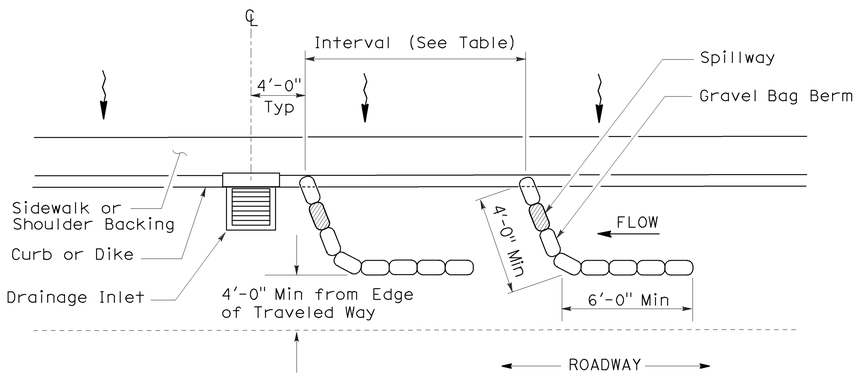

PLAN

TEMPORARY DRAINAGE INLET PROTECTION (TYPE 3A) (GRAVEL BAG BERM)

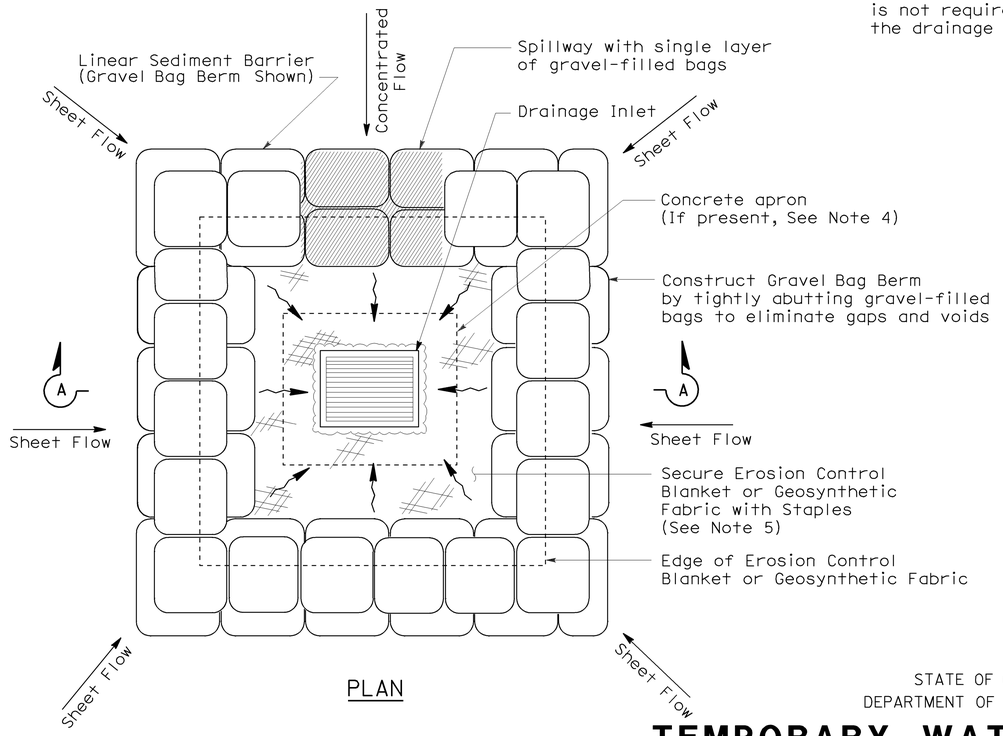

PLAN

TEMPORARY DRAINAGE INLET PROTECTION (TYPE 3B)

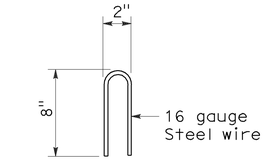

STAPLE DETAIL

STATE OF CALIFORNIA
DEPARTMENT OF TRANSPORTATION

TEMPORARY WATER POLLUTION CONTROL DETAILS (TEMPORARY DRAINAGE INLET PROTECTION)

NO SCALE

NSP T62 DATED AUGUST 15, 2008 SUPPLEMENTS THE STANDARD PLANS BOOK DATED MAY 2006.

NEW STANDARD PLAN NSP T62

2006 NEW STANDARD PLAN NSP T62

7-11-08

FLEXIBLE SEDIMENT BARRIER SPACING TABLE

SLOPE OF ROADWAY (PERCENT)	0 to 0.9	1 to 1.9	2 to 2.9	3 to 4	5+
INTERVAL BETWEEN BARRIERS	50′	35′	30′	25′	20′
ANGLE FROM FACE OF CURB	70°	70°	70°	45°	45°
SUGGESTED BARRIER LENGTH	6′	6′	6′	6′	6′

DIST	COUNTY	ROUTE	POST MILES TOTAL PROJECT	SHEET NO.	TOTAL SHEETS
06	Ker	5	36.1/54.2	58	67

Robert B Schott
LICENSED LANDSCAPE ARCHITECT

August 15, 2008
PLANS APPROVAL DATE

LICENSED LANDSCAPE ARCHITECT — Robert B. Schott 3835 — Signature — 11-04-08 Renewal Date — 08-11-08 Date — STATE OF CALIFORNIA

The State of California or its officers or agents shall not be responsible for the accuracy or completeness of electronic copies of this plan sheet.

To accompany plans dated 5-17-10

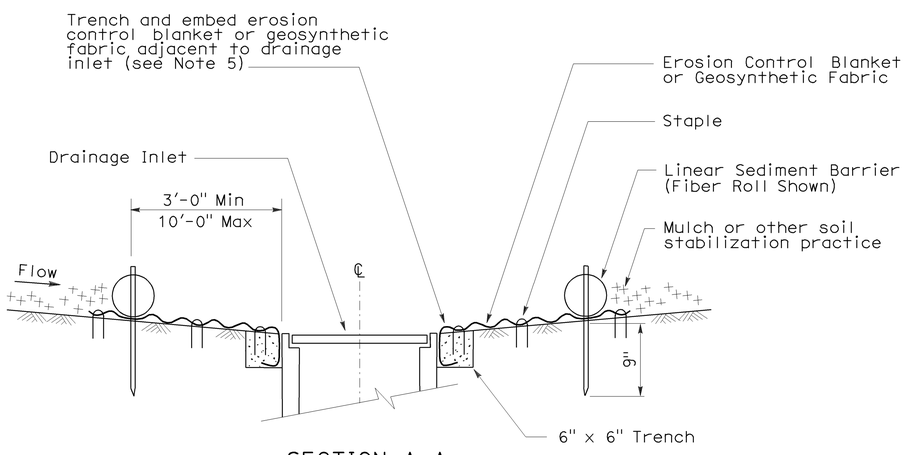

SECTION A-A

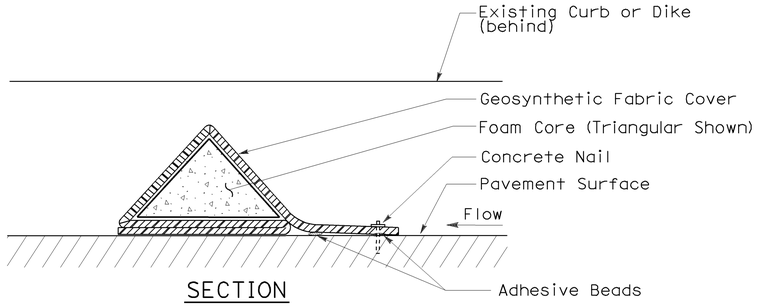

SECTION

FLEXIBLE SEDIMENT BARRIER DETAIL (FOAM BARRIER SHOWN)

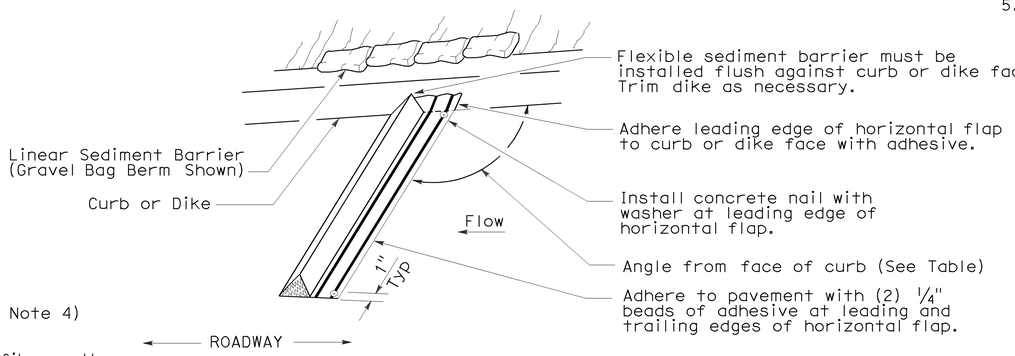

PERSPECTIVE

NOTES:

1. See Standard Plan T51 for Temporary Silt Fence.
2. Dimensions may vary to fit field conditions.
3. Install a minimum of 3 flexible sediment barriers upstream of each drainage inlet to be protected.
4. Position erosion control blanket or geosynthetic fabric at edge of concrete apron and secure in trench.
5. Erosion control blanket or geosynthetic fabric is not required if the area adjacent to the drainage inlet is vegetated.

PLAN

TEMPORARY DRAINAGE INLET PROTECTION (TYPE 4A)

PLAN

TEMPORARY DRAINAGE INLET PROTECTION (TYPE 4B) FLEXIBLE SEDIMENT BARRIER

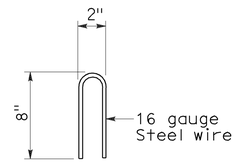

STAPLE DETAIL

STATE OF CALIFORNIA
DEPARTMENT OF TRANSPORTATION

TEMPORARY WATER POLLUTION CONTROL DETAILS (TEMPORARY DRAINAGE INLET PROTECTION)

NO SCALE

NSP T63 DATED AUGUST 15, 2008 SUPPLEMENTS THE STANDARD PLANS BOOK DATED MAY 2006.

NEW STANDARD PLAN NSP T63

2006 NEW STANDARD PLAN NSP T63

7-11-08

DIST	COUNTY	ROUTE	POST MILES TOTAL PROJECT	SHEET NO.	TOTAL SHEETS
06	Ker	5	36.1/54.2	59	67

Robert B Schott
LICENSED LANDSCAPE ARCHITECT

August 15, 2008
PLANS APPROVAL DATE

LICENSED LANDSCAPE ARCHITECT — Robert B. Schott 3835 — Signature — 11-04-08 Renewal Date — 08-11-08 Date — STATE OF CALIFORNIA

The State of California or its officers or agents shall not be responsible for the accuracy or completeness of electronic copies of this plan sheet.

To accompany plans dated 5-17-10

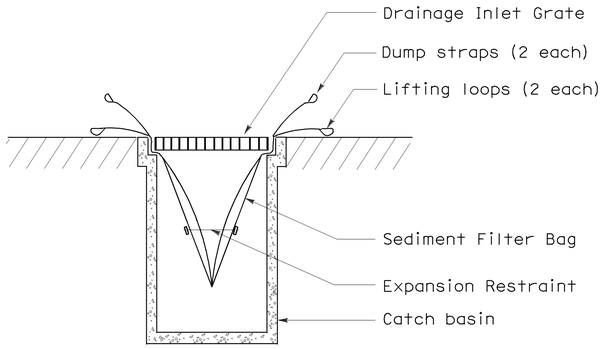

SECTION B-B

SEDIMENT FILTER BAG DETAIL

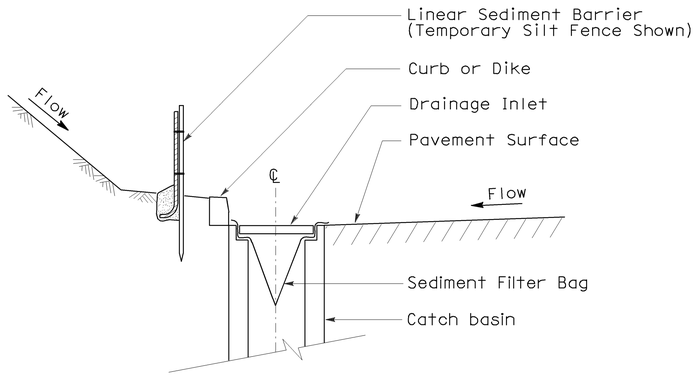

SECTION A-A

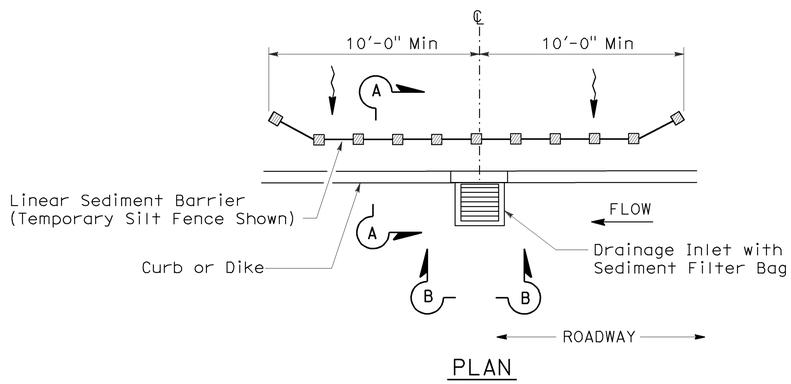

PLAN

TEMPORARY DRAINAGE INLET PROTECTION (TYPE 5) (SEDIMENT FILTER BAG)

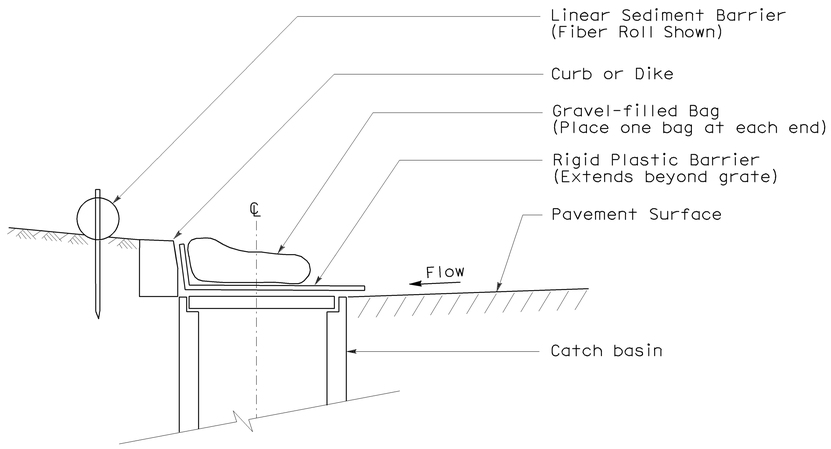

SECTION

TEMPORARY DRAINAGE INLET PROTECTION (TYPE 6A) (CATCH BASIN WITH GRATE)

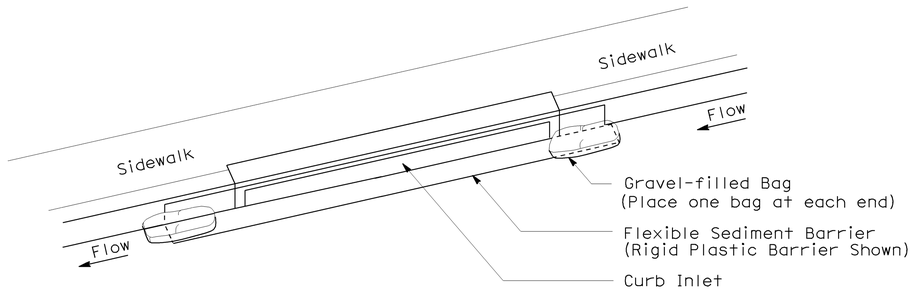

PERSPECTIVE

TEMPORARY DRAINAGE INLET PROTECTION (TYPE 6B) (CURB INLET WITHOUT GRATE)

NOTES:

1. See Standard Plan T51 for Temporary Silt Fence.
2. Dimensions may vary to fit field conditions.

STATE OF CALIFORNIA
DEPARTMENT OF TRANSPORTATION

TEMPORARY WATER POLLUTION CONTROL DETAILS (TEMPORARY DRAINAGE INLET PROTECTION)

NO SCALE

NSP T64 DATED AUGUST 15, 2008 SUPPLEMENTS THE STANDARD PLANS BOOK DATED MAY 2006.

NEW STANDARD PLAN NSP T64

2006 NEW STANDARD PLAN NSP T64

7-11-08

DIST	COUNTY	ROUTE	POST MILES TOTAL PROJECT	SHEET NO.	TOTAL SHEETS
06	Ker	5	36.1/54.2	60	67

Robert B Schott
LICENSED LANDSCAPE ARCHITECT

April 3, 2009
PLANS APPROVAL DATE

LICENSED LANDSCAPE ARCHITECT — Robert B. Schott 3835 — Signature — 11-30-10 Renewal Date — 2-25-09 Date — STATE OF CALIFORNIA

The State of California or its officers or agents shall not be responsible for the accuracy or completeness of electronic copies of this plan sheet.

To accompany plans dated 5-17-10

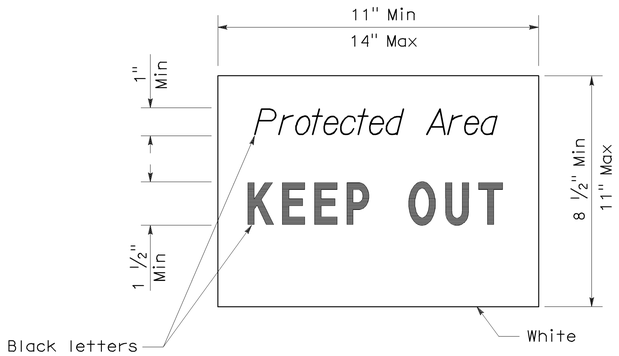

SIGN DETAIL

NOTE:

1. Temporary silt fence and temporary straw bale barrier shown for reference purposes only.

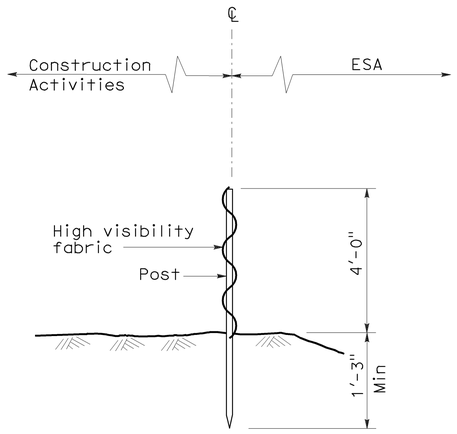

SECTION
TEMPORARY FENCE (TYPE ESA)

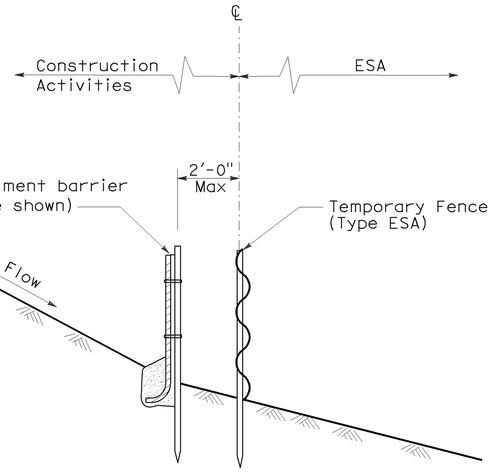

SECTION
PLACEMENT DETAIL
FOR TEMPORARY LINEAR SEDIMENT BARRIER
USED WITH TEMPORARY
FENCE (TYPE ESA)
(See Note 1)

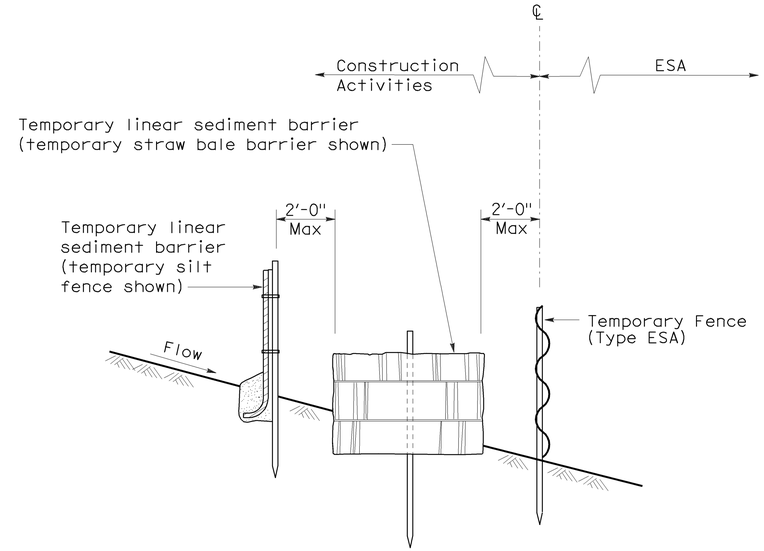

SECTION
PLACEMENT DETAIL
FOR TEMPORARY SILT FENCE
AND TEMPORARY STRAW BALE BARRIER
USED WITH TEMPORARY FENCE (TYPE ESA)
(See Note 1)

STATE OF CALIFORNIA
DEPARTMENT OF TRANSPORTATION

TEMPORARY WATER POLLUTION CONTROL DETAILS [TEMPORARY FENCE (TYPE ESA)]

NO SCALE

NSP T65 DATED APRIL 3, 2009 SUPPLEMENTS
THE STANDARD PLANS BOOK DATED MAY 2006.

NEW STANDARD PLAN NSP T65

2006 NEW STANDARD PLAN NSP T65

1-7-09

DIST	COUNTY	ROUTE	POST MILES TOTAL PROJECT	SHEET NO.	TOTAL SHEETS
06	Ker	5	36.1/54.2	61	67

Jeffrey G. McRae
REGISTERED ELECTRICAL ENGINEER

REGISTERED PROFESSIONAL ENGINEER
Jeffery G. McRae
No. E14512
Exp. 6-30-08
ELECTRICAL
STATE OF CALIFORNIA

October 5, 2007
PLANS APPROVAL DATE

The State of California or its officers or agents shall not be responsible for the accuracy or completeness of electronic copies of this plan sheet.

To accompany plans dated 5-17-10

ELECTROLIERS

STANDARD TYPES
15, 15D
15 STRUCTURE
21, 21D STRUCTURE
30
31
32
35
36-20A

High mast light pole

Double Arm lighting standard

Existing electrolier

Electrolier foundation (Future installation)

NOTES:

1. Luminaires shall be 310 W HPS when installed on Type 21, 21D, 30, 31, 32, 35 and 36-20A Standards, unless otherwise specified. Luminaires shall be 200 W HPS when installed on other type standards or poles, unless otherwise specified.
2. Luminaires shall be the cutoff type, ANSI Type III medium cutoff lighting distribution, unless otherwise specified.
3. Variations noted adjacent to symbol on project plans.

Electrolier (see project notes or project plans)

Luminaire on wood pole

STANDARD NOTES:

- AB Abandon. If applied to conduit, remove conductors.
- BC Install pull box in existing conduit run.
- BP Pedestrian barricade, type as indicated on plan.
- CB Install conduit into existing pull box.
- CC Connect new and existing conduit. Remove existing conductors and install conductors as indicated.
- CF Conduit to remain for future use. Remove conductors. Install pull wire or rope.
- DH Detector handhole.
- FA Foundation to be abandoned.
- IS Install sign on signal mast arm.
- NS No slip base on standard.
- PEC Photoelectric control.
- PEU Photoelectric unit.
- RC Equipment or material to be removed and become the property of the Contractor.
- RE Remove electrolier, fuses and ballast. Tape ends of conductors.
- RL Relocate equipment.
- RR Remove and reuse equipment.
- RS Remove and salvage equipment.
- SC Splice new to existing conductors.
- SD Service disconnect.
- SF Standard to remain for future use. Remove luminaire, pole conductors, fuses and ballast.
- TSP Telephone service point.

ABBREVIATIONS AND EQUIPMENT DESIGNATIONS

PROPOSED	EXISTING	
BBS	bbs	Battery backup system
BC	bc	Bolt circle
C	C	Conduit
CCTV	cctv	Closed circuit television
CKT	ckt	Circuit
CMS	cms	Changeable message sign
DLC	dlc	Loop detector lead-in cable
EMS	ems	Extinguishable message sign
EVC	evc	Emergency vehicle cable
EVD	evd	Emergency vehicle detector
FB	fb	Flashing beacon
FBCA	fbca	Flashing beacon control assembly
FBS	fbs	Flashing beacon with slip base
FO	fo	Fiber optic
G	G	Ground (Equipment Grounding Conductor)
GFCI	GFCI	Ground fault circuit interrupt
HAR	har	Highway advisory radio
HEX	hex	Hexagonal
HPS	hps	High pressure sodium
IISNS	iisns	Internally illuminated street name sign
ISL	isl	Induction sign lighting
LED	led	Light emitting diode
LMA	lma	Luminaire mast arm
LPS	lps	Low pressure sodium
LTG	ltg	Lighting
LUM	lum	Luminaire
MAT	mat	Mast arm mounting vehicle signal faces, top attachment
MAS	mas	Mast arm mounting vehicle signal faces, side attachment
MAS-4A	mas-4A	Mast arm mounting vehicle signal faces,
MAS-4B	mas-4B	side attachment - 4 signal section
MAS-4C	mas-4C	
MAS-5A	mas-5A	Mast arm mounting vehicle signal faces,
MAS-5B	mas-5B	side attachment - 5 signal section
MC	mc	Mercury contactor
M/M	m/m	Multiple to multiple transformer
MT	mt	Conduit with pull wire or rope only
MTG	mtg	Mounting
	mv	Mercury vapor lighting fixture
N	N	Neutral (Grounded Conductor)
NC	NC	Normally closed
NO	NO	Normally open
PB	pb	Pull box
PEC	pec	Photoelectric control (Type I, II, III, IV or V as shown)
PED	ped	Pedestrian
PEU	peu	Photoelectric unit
PPB	ppb	Pedestrian push button
RL		Relocated equipment
RM	rm	Ramp metering
SB	sb	Slip base
SIC	sic	Signal interconnect cable
SIG	sig	Signal
SMA	sma	Signal mast arm
SNS	sns	Street name sign
SP	sp	Service point
TDC	tdc	Telephone demarcation cabinet
TMS	tms	Traffic monitoring station
TOS	tos	Traffic Operations System
VEH	veh	Vehicle
XFMR	xfmr	Transformer
COMM	comm	Communication
RWIS	rwis	Roadway weather information system

SOFFIT AND WALL MOUNTED LUMINAIRES

Pendant, 70 W HPS unless otherwise specified.

Flush, 70 W HPS unless otherwise specified.

Wall surface, 70 W HPS unless otherwise specified.

Existing soffit or wall luminaire to remain unmodified.

Existing soffit or wall luminaire to be modified as specified.

NOTE:
Arrow indicates "street side" of luminaire.

STATE OF CALIFORNIA
DEPARTMENT OF TRANSPORTATION

ELECTRICAL SYSTEMS (SYMBOLS AND ABBREVIATIONS)

NO SCALE

RSP ES-1A DATED OCTOBER 5, 2007 SUPERSEDES STANDARD PLAN ES-1A
DATED MAY 1, 2006 - PAGE 400 OF THE STANDARD PLANS BOOK DATED MAY 2006.

REVISED STANDARD PLAN RSP ES-1A

2006 REVISED STANDARD PLAN RSP ES-1A

7-10-07

CONDUIT

PROPOSED	EXISTING	
— — —	— — —	Lighting Conduit, unless otherwise indicated or noted
— - — - —	— - — - —	Traffic signal conduit
—C— —	—c— —	Communication conduit
—T— —	—t— —	Telephone conduit
—F— —	—f— —	Fire alarm conduit
—FO— —	—fo— —	Fiber optic conduit
— — —┐	— — —┐	Conduit termination (RSP ES-9A C)
R	r	Conduit riser in/on structure or service pole

SERVICE EQUIPMENT

PROPOSED	EXISTING	
—OH—	—oh—	Overhead lines
U	U	Wood pole "U" indicates utility owned
		Pole guy with anchor
		Utility transformer - ground mounted
III		Service equipment enclosure type
		Service equipment enclosure door indicates front of enclosure
T	t	Telephone demarcation cabinet

POLE-MOUNTED SERVICE DESIGNATION

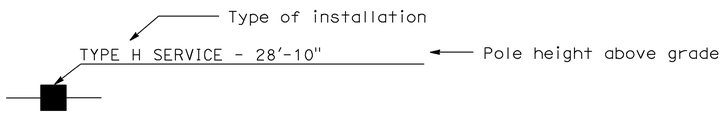

ILLUMINATED OVERHEAD SIGN

PROPOSED	EXISTING	
		Overhead sign - Single post
		Overhead sign - Two post
		Overhead sign - Mounted on structure
		Overhead sign with electrolier

SIGNAL EQUIPMENT

PROPOSED	EXISTING	
		Pedestrian signal face
		Pedestrian push button post
		Pedestrian barricade
		Vehicle signal face (with backplate, 3-Section: red, yellow and green)
		Vehicle signal face with angle visors
PV	PV	Modifications of basic symbols: "L" Indicates all non-arrow sections louvered "LG" Indicates louvered green section only "PV" Indicates 12" programmed visibility sections "8" indicates all 8" sections (only when specified)
		Type 15TS and Vehicle signal face
		Vehicle signal face with red, yellow and green left arrow sections
		Vehicle signal face with red and yellow sections and up green arrow
		Vehicle signal face (5 Section) with red, yellow and green sections and yellow and green right arrows
		Type 1 Standard and attached vehicle signal faces
		Standard with signal mast arm only and attached vehicle signal faces and internally illuminated street name sign
		Type 33 Standard, Left-turn vehicle signal face and sign
		Standard with luminaire and signal mast arms and attached vehicle signal faces
		Cantilever flashing beacon Type 9 Frame, with a sign unless otherwise specified or indicated
		Type 15-FBS Standard with two vehicle signal face sections with lens, backplate and visor with a sign
R	Y	Flashing beacon. One vehicle signal face section with lens, backplate and visor. "R" indicates red indication, "Y" indicates yellow indication
		Controller assembly. Door indicates front of cabinet

DIST	COUNTY	ROUTE	POST MILES TOTAL PROJECT	SHEET NO.	TOTAL SHEETS
06	Ker	5	36.1/54.2	62	67

Jeffery G. McRae
REGISTERED ELECTRICAL ENGINEER

October 5, 2007
PLANS APPROVAL DATE

REGISTERED PROFESSIONAL ENGINEER — Jeffery G. McRae — No. E14512 — Exp. 6-30-08 ELECTRICAL — STATE OF CALIFORNIA

The State of California or its officers or agents shall not be responsible for the accuracy or completeness of electronic copies of this plan sheet.

To accompany plans dated 5-17-10

SIGNAL EQUIPMENT Cont

PROPOSED	EXISTING	
●	○	Guard post
		Type 1 Standard with "Meter On" sign
		Emergency Vehicle detector

NOTES:

1. All signal sections shall be 12" unless shown otherwise.
2. Signal heads shall be provided with backplates unless shown otherwise.
3. Signal indication shall be LED.

STATE OF CALIFORNIA
DEPARTMENT OF TRANSPORTATION

ELECTRICAL SYSTEMS (SYMBOLS AND ABBREVIATIONS)

NO SCALE

RSP ES-1B DATED OCTOBER 5, 2007 SUPERCEDES STANDARD PLAN ES-1B
DATED MAY 1, 2006 - PAGE 401 OF THE STANDARD PLANS BOOK DATED MAY 2006.

REVISED STANDARD PLAN RSP ES-1B

2006 REVISED STANDARD PLAN RSP ES-1B

7-10-07

DIST	COUNTY	ROUTE	POST MILES TOTAL PROJECT	SHEET NO.	TOTAL SHEETS
06	Ker	5	36.1/54.2	63	67

Jeffery G. McRae
REGISTERED ELECTRICAL ENGINEER

October 5, 2007
PLANS APPROVAL DATE

REGISTERED PROFESSIONAL ENGINEER — Jeffery G. McRae — No. E14512 — Exp. 6-30-08 — ELECTRICAL — STATE OF CALIFORNIA

The State of California or its officers or agents shall not be responsible for the accuracy or completeness of electronic copies of this plan sheet.

To accompany plans dated 5-17-10

EQUIPMENT IDENTIFICATION

ILLUMINATED SIGN IDENTIFICATION NUMBER:

Sign No. 12345
10 ISL SCI 1.0

- Sign number - Place on post or structure
- Transformer rating (kVA)
- Lighting control type
- Number and type of fixtures

Do NOT place on standard or structure

ELECTROLIER OR EQUIPMENT IDENTIFICATION NUMBER:

12345 - 15'-0"

- Mast arm length, if shown. Do not place on standard or structure.
- Equipment number - Place on standard or structure. Existing equipment numbers are shown in parenthesis

CONDUIT AND CONDUCTOR IDENTIFICATION:

1½"C, 2#10, 15#14, 2 DLC

- Number and size of conductors and cables
- Size of conduit in inches

ø1, ø2, ø2P, etc. — Traffic phase identification for signal faces, detectors and phase diagrams

[1] [2] [3] — Project note numbers

(A) (B) (C) — Equipment description, installation or item numbers

△1 △2 △3 — Conduit run numbers

SIGNAL AND LIGHTING STANDARD (TYPICAL DESIGNATION):

19A - 3 - 100

- Wind velocity = 100 mph
- Case 3 arm loading
- Standard type
- Standard Plan sheet number
- Detail number or letter

MISCELLANEOUS EQUIPMENT

PROPOSED	EXISTING	
CMS	cms	Changeable message sign
		Closed circuit television camera
		Highway advisory radio pole and antenna
EMS	ems	Extinguishable message sign
M V	m v	Detection device M = Microwave sensor V = Video image sensor

WIRING DIAGRAM LEGEND

P	Pole
CB	Circuit breaker
A	Ampere
V	Volt
M	Metered
UM	Unmetered
NB	Neutral bus
GB	Ground bus
G	Equipment grounding conductor
N	Grounded conductor (Neutral)

- External conductor
- Conductor or bus
- Tie point
- Contactor coil
- Contactor, Contact NO
- Terminal blocks
- Contactor, Contact NC
- Enclosure bond
- Grounding electrode
- Circuit breaker
- Receptacle

PULL BOXES

PROPOSED	EXISTING	
		Pull box-No. 5 unless otherwise indicated or noted.
3	9A(21)	Pull box-Additional designations or descriptions

3 = No. 3½ pull box
5 = No. 5 pull box
6 = No. 6 pull box
7 = No. 7 (Ceiling pull box)
8 = No. 8 (Pendant soffit pull box)
9 = No. 9 pull box
9A = No. 9A pull box

(C) = Communications pull box
(E) = Pull box with extension
(S) = Sprinkler control pull box
(21) = Anchor bolts and conduit for future installation of Type 21 Standard
(T) = Traffic pull box

VEHICLE DETECTORS

5 J 9 U

- Vehicle detector designation
- U = Upper, L = Lower
- Slot number in input file
- Input file (I or J)
- Phase

PROPOSED	EXISTING	
		Type A detector loop. Outline of sawcut shown.
		Type B detector loop. Outline of sawcut shown.
		Type C detector loop. Outline of sawcut shown.
		Type D detector loop. Outline of sawcut shown.
		Type E detector loop. Outline of sawcut shown.
		Type Q detector loop. Outline of sawcut shown.
		Magnetic detector
DH	dh	Detector handhole
		Microwave or video detection zone

STATE OF CALIFORNIA
DEPARTMENT OF TRANSPORTATION

ELECTRICAL SYSTEMS (SYMBOLS AND ABBREVIATIONS)

NO SCALE

RSP ES-1C DATED OCTOBER 5, 2007 SUPERCEDES STANDARD PLAN ES-1C
DATED MAY 1, 2006 - PAGE 402 OF THE STANDARD PLANS BOOK DATED MAY 2006.

REVISED STANDARD PLAN RSP ES-1C

2006 REVISED STANDARD PLAN RSP ES-1C

7-10-07

DIST	COUNTY	ROUTE	POST MILES TOTAL PROJECT	SHEET NO.	TOTAL SHEETS
06	Ker	5	36.1/54.2	64	67

Jeffery G. McRae
REGISTERED ELECTRICAL ENGINEER

REGISTERED PROFESSIONAL ENGINEER
Jeffery G. McRae
No. E14512
Exp. 6-30-08
ELECTRICAL
STATE OF CALIFORNIA

October 5, 2007
PLANS APPROVAL DATE

The State of California or its officers or agents shall not be responsible for the accuracy or completeness of electronic copies of this plan sheet.

To accompany plans dated 5-17-10

NOTES-TYPE III SERVICE EQUIPMENT ENCLOSURES:

1. Service equipment enclosure and metering equipment shall meet the requirements of the service utility. The meter area shall have a sealable, lockable, weathertight cover that can be removed without the use of tools.

2. Service equipment enclosures shall be factory wired and conform to NEMA standards.

3. Dimensions of service equipment enclosures shall meet the requirements of the service utility.

4. The dead front panels on Type III service equipment enclosures shall have a continuous stainless steel or aluminum piano hinge. The panel in front of the breakers shall be secured with a latch or captive screws. No live parts shall be mounted on the dead front panel.

5. The exterior door shall have provisions for padlocking. The padlock hole shall be a minimum diameter of 7/16".

6. Enclosures housing transformers of more than one kVA shall have effective screened ventilation louver of not less than 50 square inches. Screen shall be stainless steel No. 304, with a No. 10 size mesh. Framed screen shall be secured with at least four bolts.

7. Fasteners on the exterior of the enclosure shall be vandal-resistant and shall not be removable from the exterior. Exterior screws, nuts, bolts and washers shall be stainless steel.

8. Landing lugs for incoming service conductors shall be compatible with either copper or aluminum conductors sized to suit the conductors shown on the plan. Landing lugs shall be copper or tin-plated aluminum. Neutral bus shall be rated for 125 A and be suitable for copper or aluminum conductors unless otherwise specified. The terminal shall include but not be limited to:

   a) Incoming terminals (landing lugs)
   b) Neutral lugs
   c) Solid neutral terminal strip

9. At least 6 standard single pole circuit breaker spaces, 3/4" nominal, shall be provided for branch circuits. Circuit breaker interiors shall be copper. Interiors of enclosure shall accept plug-in or cable-in/cable-out circuit breakers.

10. Control wiring shall be 600 V, 14 stranded machine tool wire. Where subject to flexing, 19 strand wire shall be used.

11. Main bus shall be rated for 125 A and shall be tin-plated copper.

12. A plastic laminated wiring diagram shall be provided with brass mounting eyelets and attached to the inside of the enclosure and the wiring diagram shall be affixed to the interior with a UL or ETL approved method.

13. An engraved phenolic nameplate on the dead front panel indicating the function of each circuit or device shall be installed with stainless steel rivets or stainless steel screws:

    a) Adjacent to the breaker or device with character size a minimum of 1/8".

    b) At the top of the exterior door panel indicating State system number, voltage level and number of phases with character size a minimum of 3/16".

14. The plan shows the approximate location of devices within the enclosure. Components may be rearranged, however, the "working" clearances within the service equipment enclosure shall be maintained.

15. In unpaved areas a raised portland cement concrete pad 2'-0" x 4" x width of foundation shall be constructed in front of new service equipment enclosure installation. Pad shall be set to elevation of foundation.

16. Foundation shall extend 2" minimum beyond edge of service equipment enclosure.

17. Internal bus, where shown, is typical only. Alternative design of proposed service equipment enclosure shall be submitted to the Engineer for approval.

18. Plug-in circuit breakers may be mounted in the vertical or horizontal position. Cable-in/cable-out circuit breakers shall be mounted in the vertical position.

19. Type III-AF and Type III-BF service equipment enclosures shall have the meter viewing windows located on the front side of the service equipment enclosures.

20. Type III-AR and Type III-BR service equipment enclosures shall be similarly constructed as Type III-AF and Type III-BF respectively, except the meter viewing windows shall be located on the back side of the service equipment enclosures.

21. Minimum clearance shall be required for front and back of service equipment enclosure per National Electrical Code, Article 110.26, "Spaces About Electric Equipment (600 Volts, Nominal, or Less)."

STATE OF CALIFORNIA
DEPARTMENT OF TRANSPORTATION

ELECTRICAL SYSTEMS (SERVICE EQUIPMENT NOTES TYPE III SERIES)

NO SCALE

RSP ES-2C DATED OCTOBER 5, 2007 SUPERCEDES STANDARD PLAN ES-2C
DATED MAY 1, 2006 - PAGE 405 OF THE STANDARD PLANS BOOK DATED MAY 2006.

REVISED STANDARD PLAN RSP ES-2C

2006 REVISED STANDARD PLAN RSP ES-2C

7-10-07

DIST	COUNTY	ROUTE	POST MILES TOTAL PROJECT	SHEET NO.	TOTAL SHEETS
06	Ker	5	36.1/54.2	65	67

Jeffery G. McRae
REGISTERED ELECTRICAL ENGINEER

October 5, 2007
PLANS APPROVAL DATE

Jeffery G. McRae
No. E14512
Exp. 6-30-08
ELECTRICAL
REGISTERED PROFESSIONAL ENGINEER
STATE OF CALIFORNIA

The State of California or its officers or agents shall not be responsible for the accuracy or completeness of electronic copies of this plan sheet.

To accompany plans dated 5-17-10

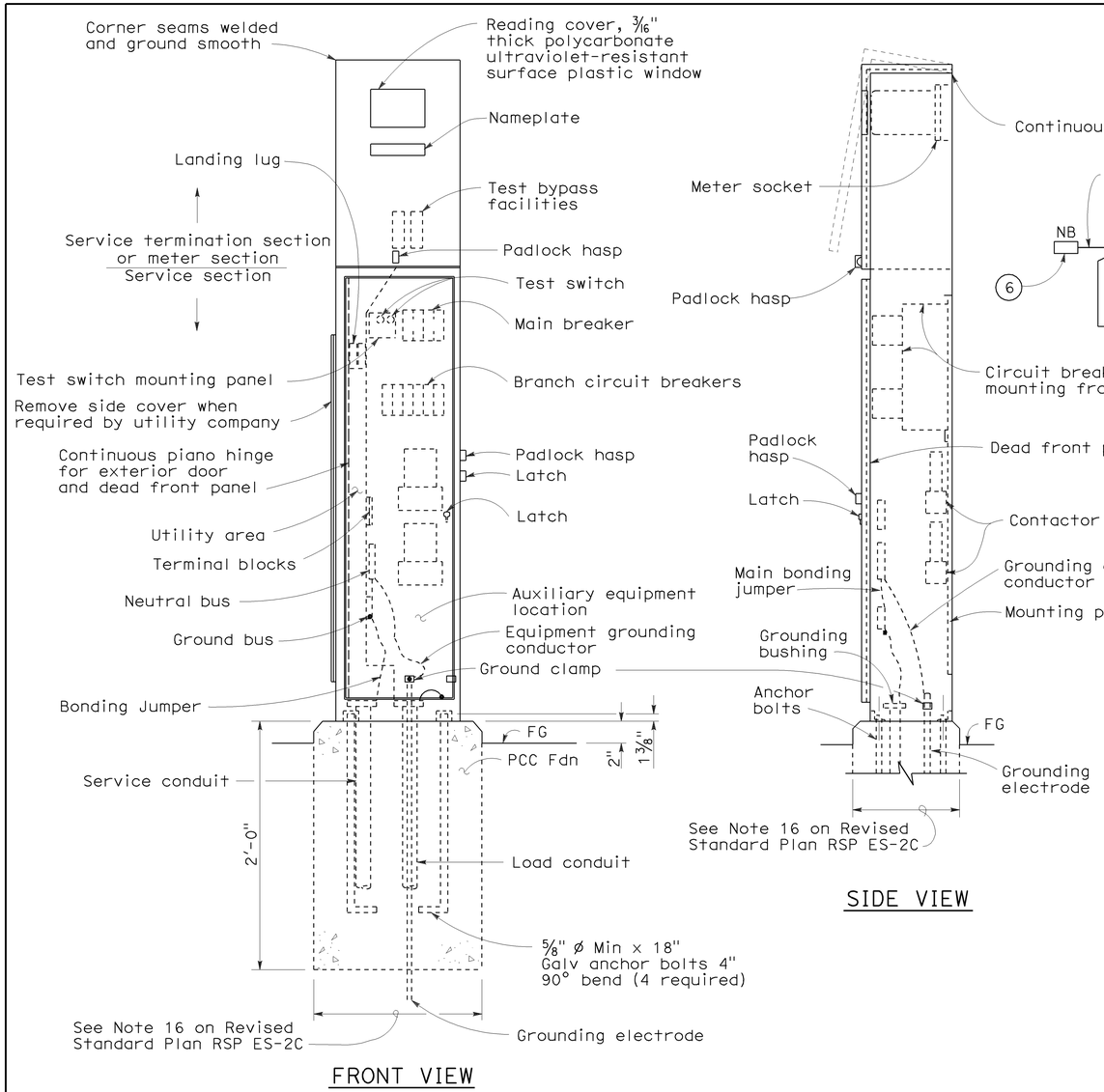

TYPE III-AF SERVICE EQUIPMENT ENCLOSURE (TYPICAL)

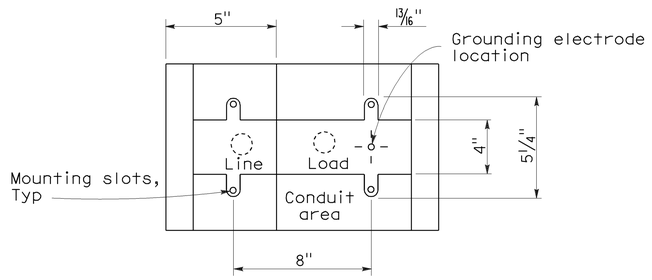

BASE FOR TYPE III-A SERVICE EQUIPMENT ENCLOSURE

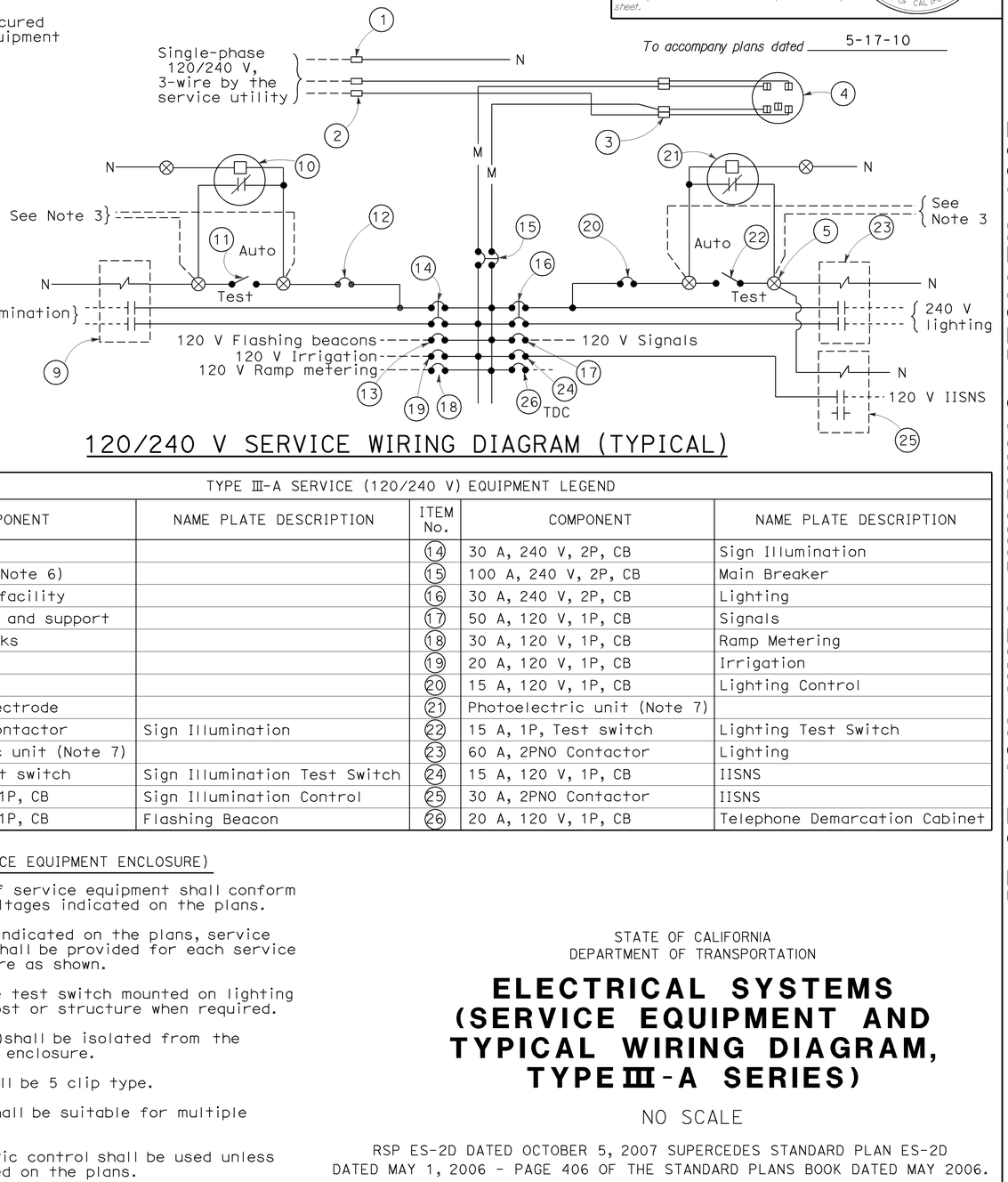

120/240 V SERVICE WIRING DIAGRAM (TYPICAL)

TYPE III-A SERVICE (120/240 V) EQUIPMENT LEGEND

ITEM No.	COMPONENT	NAME PLATE DESCRIPTION	ITEM No.	COMPONENT	NAME PLATE DESCRIPTION
(1)	Neutral lug		(14)	30 A, 240 V, 2P, CB	Sign Illumination
(2)	Landing lug (Note 6)		(15)	100 A, 240 V, 2P, CB	Main Breaker
(3)	Test bypass facility		(16)	30 A, 240 V, 2P, CB	Lighting
(4)	Meter socket and support		(17)	50 A, 120 V, 1P, CB	Signals
(5)	Terminal blocks		(18)	30 A, 120 V, 1P, CB	Ramp Metering
(6)	Neutral bus		(19)	20 A, 120 V, 1P, CB	Irrigation
(7)	Ground bus		(20)	15 A, 120 V, 1P, CB	Lighting Control
(8)	Grounding electrode		(21)	Photoelectric unit (Note 7)	
(9)	30 A, 2PNO Contactor	Sign Illumination	(22)	15 A, 1P, Test switch	Lighting Test Switch
(10)	Photoelectric unit (Note 7)		(23)	60 A, 2PNO Contactor	Lighting
(11)	15 A, 1P, Test switch	Sign Illumination Test Switch	(24)	15 A, 120 V, 1P, CB	IISNS
(12)	15 A, 120 V, 1P, CB	Sign Illumination Control	(25)	30 A, 2PNO Contactor	IISNS
(13)	15 A, 120 V, 1P, CB	Flashing Beacon	(26)	20 A, 120 V, 1P, CB	Telephone Demarcation Cabinet

NOTES: (FOR SERVICE EQUIPMENT ENCLOSURE)

1. Voltage ratings of service equipment shall conform to the service voltages indicated on the plans.
2. Unless otherwise indicated on the plans, service equipment items shall be provided for each service equipment enclosure as shown.
3. Connect to remote test switch mounted on lighting standards, sign post or structure when required.
4. Items No. (1) and (6) shall be isolated from the service equipment enclosure.
5. Meter sockets shall be 5 clip type.
6. The landing lug shall be suitable for multiple conductors.
7. Type V photoelectric control shall be used unless otherwise indicated on the plans.

STATE OF CALIFORNIA
DEPARTMENT OF TRANSPORTATION

ELECTRICAL SYSTEMS (SERVICE EQUIPMENT AND TYPICAL WIRING DIAGRAM, TYPE III-A SERIES)

NO SCALE

RSP ES-2D DATED OCTOBER 5, 2007 SUPERCEDES STANDARD PLAN ES-2D DATED MAY 1, 2006 - PAGE 406 OF THE STANDARD PLANS BOOK DATED MAY 2006.

REVISED STANDARD PLAN RSP ES-2D

2006 REVISED STANDARD PLAN RSP ES-2D

7-10-07

DIST	COUNTY	ROUTE	POST MILES TOTAL PROJECT	SHEET NO.	TOTAL SHEETS
06	Ker	5	36.1/54.2	66	67

Jeffery G. McRae
REGISTERED ELECTRICAL ENGINEER

October 5, 2007
PLANS APPROVAL DATE

REGISTERED PROFESSIONAL ENGINEER — Jeffery G. McRae — No. E14512 — Exp. 6-30-08 — ELECTRICAL — STATE OF CALIFORNIA

The State of California or its officers or agents shall not be responsible for the accuracy or completeness of electronic copies of this plan sheet.

To accompany plans dated 5-17-10

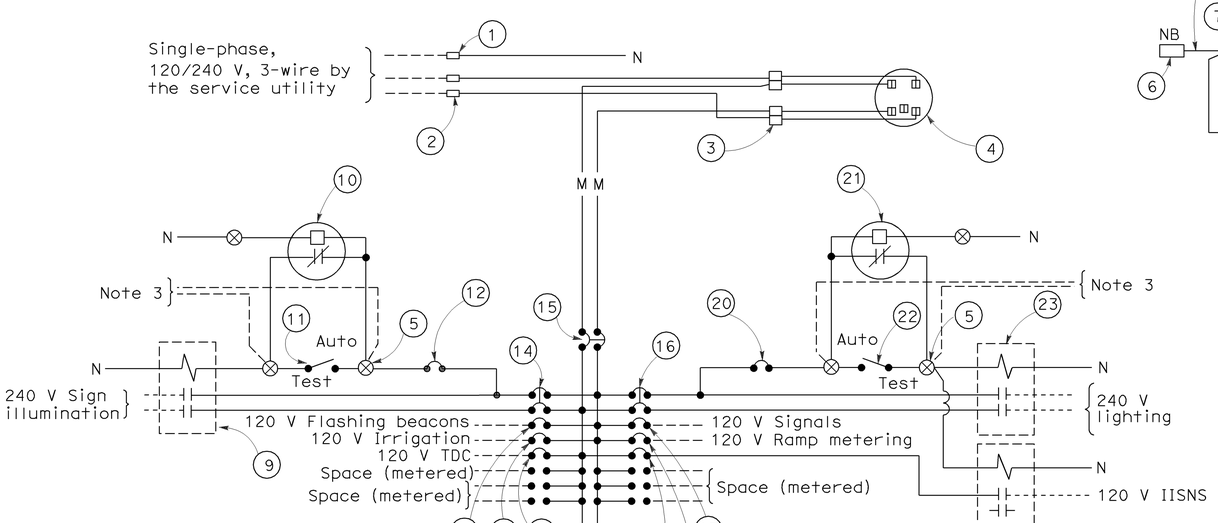

120/240 V SERVICE WIRING DIAGRAM (TYPICAL)

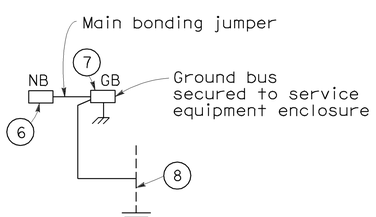

TYPE III-B SERVICE (120/240 V) EQUIPMENT LEGEND		
ITEM No.	COMPONENT	NAME PLATE DESCRIPTION
1	Neutral lug	
2	Landing lug (Note 6)	
3	Test bypass facility	
4	Meter socket and support	
5	Terminal blocks	
6	Neutral bus	
7	Ground bus	
8	Grounding electrode	
9	30 A, 2PNO Contactor	Sign Illumination
10	Photoelectric unit (Note 7)	
11	15 A, 1P, Test switch	Sign Illumination Test Switch
12	15 A, 120 V, 1P, CB	Sign Illumination Control
13	15 A, 120 V, 1P, CB	Flashing Beacon
14	30 A, 240 V, 2P, CB	Sign Illumination
15	100 A, 240 V, 2P, CB	Main Breaker
16	30 A, 240 V, 2P, CB	Lighting
17	50 A, 120 V, 1P, CB	Signals
18	30 A, 120 V, 1P, CB	Ramp Metering
19	20 A, 120 V, 1P, CB	Irrigation
20	15 A, 120 V, 1P, CB	Lighting Control
21	Photoelectric unit (Note 7)	
22	15 A, 1P, Test switch	Lighting Test Switch
23	60 A, 2PNO Contactor	Lighting
24	15 A, 120 V, 1P, CB	IISNS
25	30 A, 2PNO Contactor	IISNS
26	20 A, 120 V, IP, CB	Telephone Demarcation Cabinet

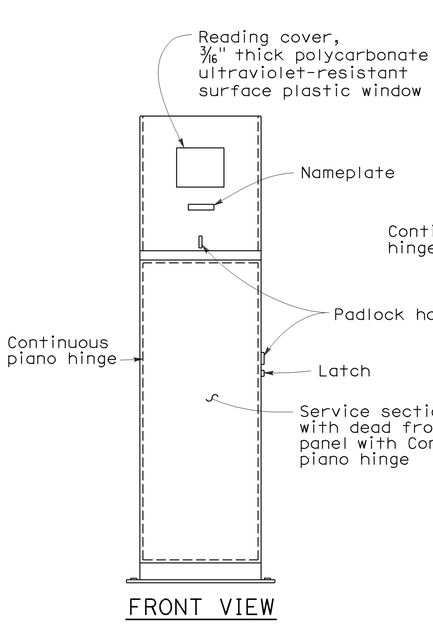

FRONT VIEW — SIDE VIEW

TYPE III-BF SERVICE EQUIPMENT ENCLOSURE WITH PROVISIONS FOR ONE 100 A METER (TYPICAL)

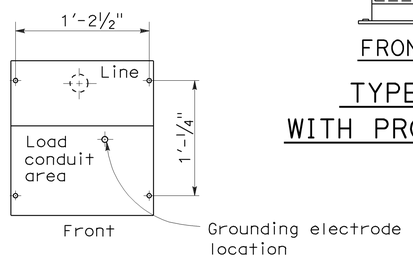

BASE FOR TYPE III-B SERVICE EQUIPMENT ENCLOSURE

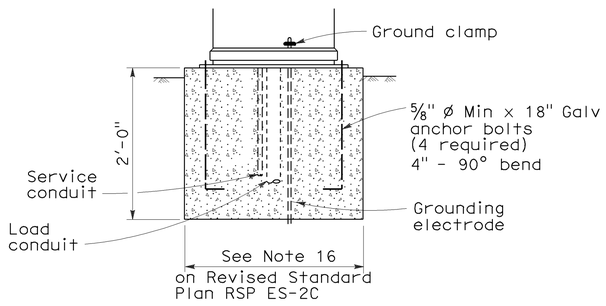

FRONT VIEW

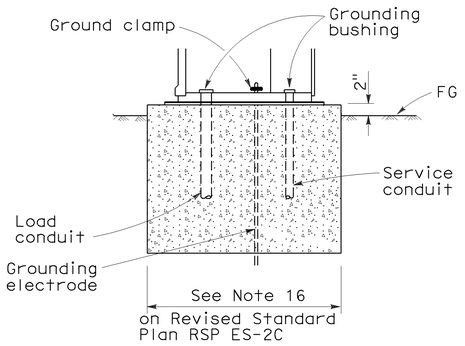

SIDE VIEW

TYPE III-B SERVICE EQUIPMENT ENCLOSURE FOUNDATION DETAILS

NOTES: (FOR SERVICE EQUIPMENT ENCLOSURE)

1. Voltage ratings of service equipment shall conform to the service voltages indicated on the plans.
2. Unless otherwise indicated on the plans, service equipment items shall be provided for each service equipment enclosure as shown.
3. Connect to remote test switch mounted on lighting standards, sign post or structure when required.
4. Items No. (1) and (6) shall be isolated from the service equipment enclosure.
5. Meter sockets shall be 5 clip type.
6. The landing lug shall be suitable for multiple conductors.
7. Type V photoelectric control shall be used unless otherwise indicated on the plans.

STATE OF CALIFORNIA
DEPARTMENT OF TRANSPORTATION

ELECTRICAL SYSTEMS (SERVICE EQUIPMENT AND TYPICAL WIRING DIAGRAM, TYPE III-B SERIES)

NO SCALE

RSP ES-2E DATED OCTOBER 5, 2007 SUPERCEDES STANDARD PLAN ES-2E DATED MAY 1, 2006 - PAGE 407 OF THE STANDARD PLANS BOOK DATED MAY 2006.

REVISED STANDARD PLAN RSP ES-2E

2006 REVISED STANDARD PLAN RSP ES-2E

7-10-07

DIST	COUNTY	ROUTE	POST MILES TOTAL PROJECT	SHEET NO.	TOTAL SHEETS
06	Ker	5	36.1/54.2	67	67

Jeffery G. McRae
REGISTERED ELECTRICAL ENGINEER

October 5, 2007
PLANS APPROVAL DATE

REGISTERED PROFESSIONAL ENGINEER — Jeffery G. McRae — No. E14512 — Exp. 6-30-08 — ELECTRICAL — STATE OF CALIFORNIA

The State of California or its officers or agents shall not be responsible for the accuracy or completeness of electronic copies of this plan sheet.

To accompany plans dated 5-17-10

LOOP INSTALLATION PROCEDURE

1. Loops shall be centered in lanes.
2. Saw slots in pavement for loop conductors as shown in details.
3. Distance between side of loop and a lead-in saw cut from adjacent detectors shall be 2'-0" minimum. Distance between lead-in saw cuts shall be 6" minimum.
4. Bottom of saw slot shall be smooth with no sharp edges.
5. Slots shall be washed until clean, blown out and thoroughly dried before installing loop conductors.
6. Adjacent loops on the same sensor unit channel shall be wound in opposite directions.
7. Identify and tag loop circuit pairs in the pull box with loop number, start (S) and finish (F) of conductor. Identify and tag lead-in-cable with sensor number and phase.
8. Install loop conductor in slot using a 3/16" to 1/4" thick wood paddle. Hold loop conductors with wood paddles (at the bottom of the sawed slot) during sealant placement.
9. No more than 2 twisted pairs shall be installed in one sawed slot.
10. Allow additional 5'-0" of slack length of conductor for the lead-in run to pull box.
11. The additional length of each conductor for each loop shall be twisted together into a pair (6 turns per 3'-4" minimum) before being placed in the slot and conduit leading to pull box.
12. Test each loop circuit for continuity, circuit resistance and insulation resistance at the pull box before filling slots.
13. Fill slots as shown in details.
14. Splice loop conductors to lead-in-cable. Splices shall be soldered.
15. End of lead-in-cable and Type 2 loop conductor shall be waterproofed prior to installing in conduit to prevent moisture from entering the cable.
16. Lead-in-cable shall not be spliced between the pull box and the controller cabinet terminals.
17. Test each loop circuit for continuity, circuit resistance and insulation resistance at the controller cabinet location.
18. Where loop conductors are not to be spliced to a lead-in-cable, the ends of the conductors shall be taped and waterproofed with electrical insulating coating.

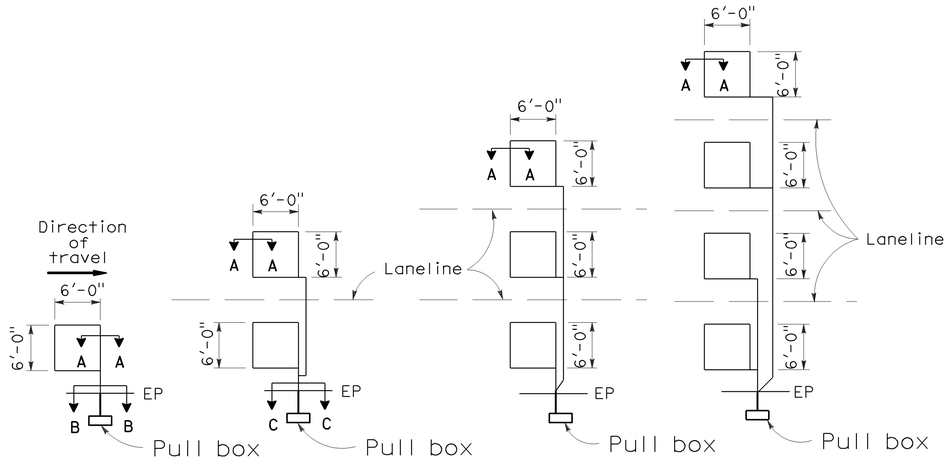

TYPE 1A INSTALLATION | TYPE 2A INSTALLATION | TYPE 3A INSTALLATION | TYPE 4A INSTALLATION

SAWCUT DETAILS

(Type A loop detector configurations illustrated)

1. 1A thru 4A = 1 Type A loop configuration in each lane.
2. 1B thru 4B = 1 Type B loop configuration in each lane.
3. 1C = 1 Type C loop configuration entering lanes as required.
4. 1D thru 4D = 1 Type D loop configuration in each lane.
5. 1E thru 4E = 1 Type E loop configuration in each lane.
6. 1Q thru 4Q = 1 Type Q loop configuration in each lane. (Use Type A, B, C, D, E or Q loop detector configurations only when specified or shown on plans)

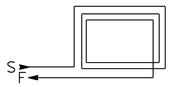

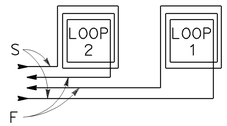

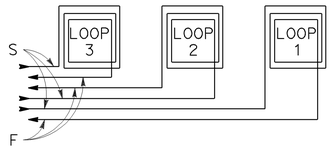

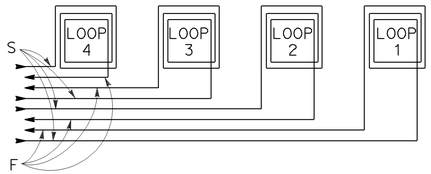

WINDING DETAILS

See Notes 6 and 7

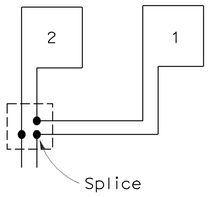

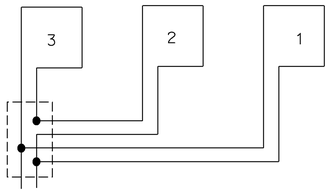

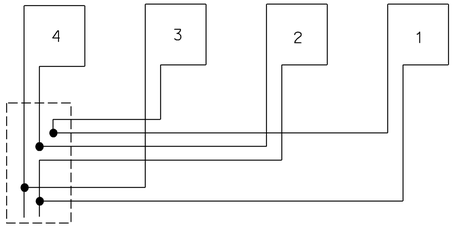

TYPICAL LOOP CONNECTIONS

(Dashed lines represent the pull box)

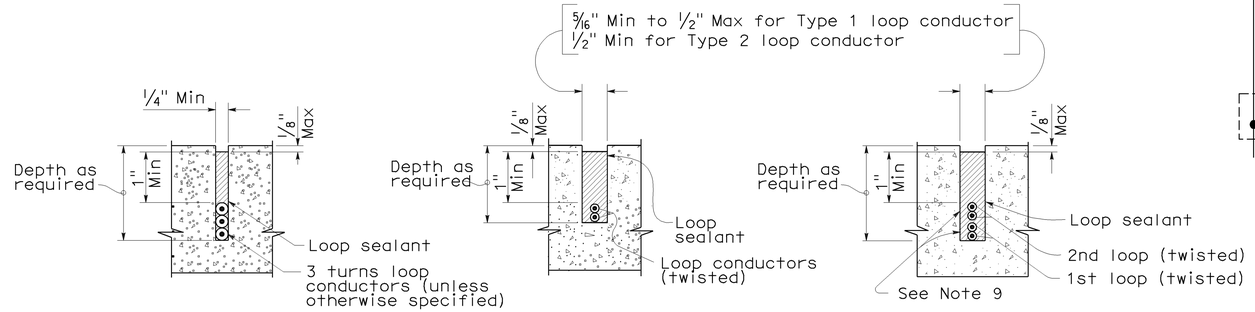

SECTION A-A | SECTION B-B | SECTION C-C

SLOT DETAILS - TYPE 1 AND TYPE 2 LOOP CONDUCTOR

STATE OF CALIFORNIA
DEPARTMENT OF TRANSPORTATION

ELECTRICAL SYSTEMS (DETECTORS)

NO SCALE

RSP ES-5A DATED OCTOBER 5, 2007 SUPERCEDES STANDARD PLAN ES-5A
DATED MAY 1, 2006 - PAGE 423 OF THE STANDARD PLANS BOOK DATED MAY 2006.

REVISED STANDARD PLAN RSP ES-5A

2006 REVISED STANDARD PLAN RSP ES-5A

8-17-07