Dist	COUNTY	ROUTE	POST MILES TOTAL PROJECT	SHEET No.	TOTAL SHEETS
06	Fre,Ker Tul	33,46,63 119,216,223	Var	1	33

STATE OF CALIFORNIA

DEPARTMENT OF TRANSPORTATION

PROJECT PLANS FOR CONSTRUCTION ON

STATE HIGHWAY

IN FRESNO, KERN AND TULARE COUNTIES AT VARIOUS LOCATIONS

TO BE SUPPLEMENTED BY STANDARD PLANS DATED 2010

INDEX OF PLANS

SHEET No.	DESCRIPTION
1	TITLE AND LOCATION MAP
2-7	LAYOUTS
8-14	CONSTRUCTION DETAILS
15	CONSTRUCTION AREA SIGNS AND PAVEMENT DELINEATION QUANTITIES
16	TRAFFIC HANDLING PLAN
17	TRAFFIC HANDLING QUANTITIES
18	SUMMARY OF QUANTITIES
19	EROSION CONTROL LEGEND
20-25	EROSION CONTROL PLANS
26-27	ELECTRICAL PLANS
28-31	REVISED STANDARD PLANS

STRUCTURE PLANS

32-33 STRUCTURE PLANS

THE STANDARD PLANS LIST APPLICABLE TO THIS CONTRACT IS INCLUDED IN THE NOTICE TO BIDDERS AND SPECIAL PROVISIONS BOOK.

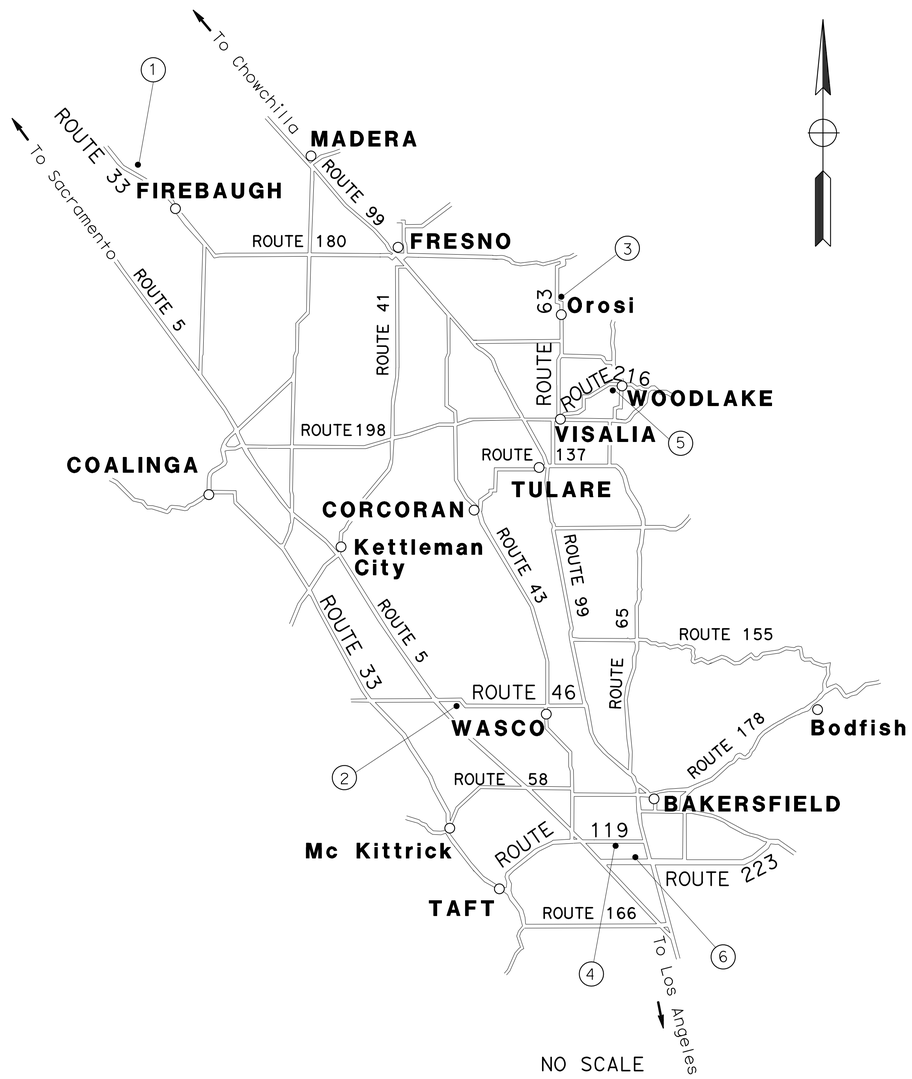

NO SCALE

LOCATIONS OF CONSTRUCTION

No.	COUNTY	ROUTE	POST MILE	DESCRIPTION	IMPROVEMENTS
1	Fre	33	79.75/79.97	BRIDGE No. 42-0030	RCB EXTENSION
2	Ker	46	32.75/32.95	BRIDGE No. 50-0029	INSTALL K RAIL
3	Tul	63	R24.56/R24.76	BRIDGE No. 46-0240	RCB EXTENSION
4	Ker	119	26.17/26.37	PIPE CULVERT	RCB EXTENSION
5	Tul	216	13.31/13.51	BRIDGE No. 46-0244	RCB EXTENSION
6	Ker	223	9.5/10.0	PIPE CULVERT	PIPE EXTENSION

LOCATION MAP

Eric Olson 5-20-13

PROJECT ENGINEER DATE
REGISTERED CIVIL ENGINEER

May 20, 2013

PLANS APPROVAL DATE

REGISTERED PROFESSIONAL ENGINEER ERIC H. OLSON No. 60801 Exp. 12/31/14 CIVIL STATE OF CALIFORNIA

THE STATE OF CALIFORNIA OR ITS OFFICERS OR AGENTS SHALL NOT BE RESPONSIBLE FOR THE ACCURACY OR COMPLETENESS OF SCANNED COPIES OF THIS PLAN SHEET.

PROJECT MANAGER ANAND KAPOOR

DESIGN ENGINEER DAVID FRANKE

THE CONTRACTOR SHALL POSSESS THE CLASS (OR CLASSES) OF LICENSE AS SPECIFIED IN THE "NOTICE TO BIDDERS."

CONTRACT No.	06-0J9304
PROJECT ID	0600000206

LAST REVISION 05-01-13

DATE PLOTTED => 04-JUN-2013
TIME PLOTTED => 14:06

Dist	COUNTY	ROUTE	POST MILES TOTAL PROJECT	SHEET No.	TOTAL SHEETS
06	Fre,Ker, Tul	33,46,63 119,216,223	Var	2	33

Eric Olson 5-20-13
REGISTERED CIVIL ENGINEER DATE

5-20-13
PLANS APPROVAL DATE

REGISTERED PROFESSIONAL ENGINEER ERIC H. OLSON No. 60801 Exp. 12/31/14 CIVIL STATE OF CALIFORNIA

THE STATE OF CALIFORNIA OR ITS OFFICERS OR AGENTS SHALL NOT BE RESPONSIBLE FOR THE ACCURACY OR COMPLETENESS OF SCANNED COPIES OF THIS PLAN SHEET.

NOTES:

1. FOR ACCURATE RIGHT OF WAY DATA, CONTACT RIGHT OF WAY ENGINEERING AT DISTRICT OFFICE.
2. PHONE CABLE ON EAST HEADWALL TO BE RELOCATED BY VERIZON PRIOR TO CONSTRUCTION.

ABBREVIATIONS

TBRBO	TO BE RELOCATED BY OTHERS
TCE	TEMPORARY CONSTRUCTION EASEMENT
DE	DRAINAGE EASEMENT

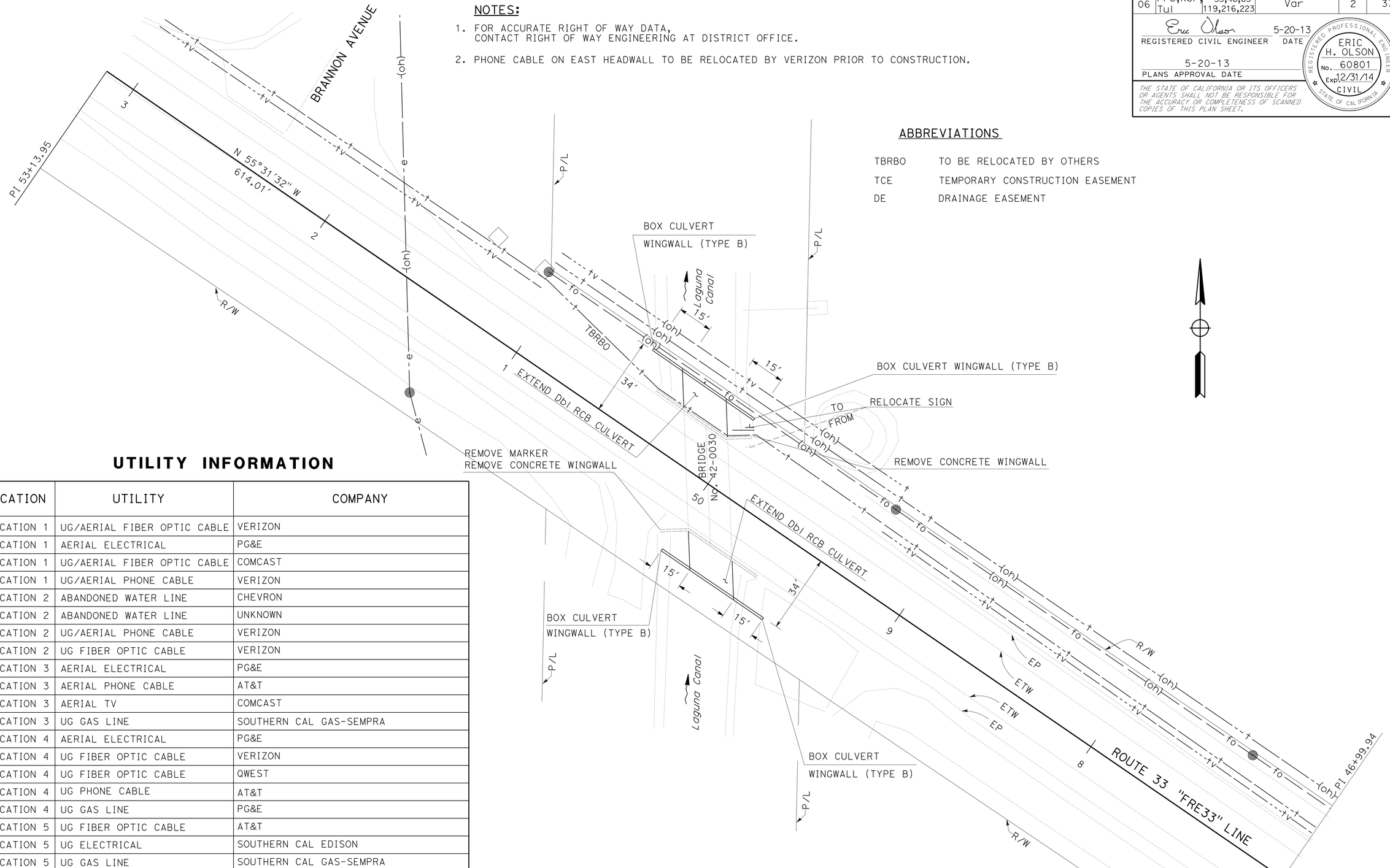

UTILITY INFORMATION

LOCATION	UTILITY	COMPANY
LOCATION 1	UG/AERIAL FIBER OPTIC CABLE	VERIZON
LOCATION 1	AERIAL ELECTRICAL	PG&E
LOCATION 1	UG/AERIAL FIBER OPTIC CABLE	COMCAST
LOCATION 1	UG/AERIAL PHONE CABLE	VERIZON
LOCATION 2	ABANDONED WATER LINE	CHEVRON
LOCATION 2	ABANDONED WATER LINE	UNKNOWN
LOCATION 2	UG/AERIAL PHONE CABLE	VERIZON
LOCATION 2	UG FIBER OPTIC CABLE	VERIZON
LOCATION 3	AERIAL ELECTRICAL	PG&E
LOCATION 3	AERIAL PHONE CABLE	AT&T
LOCATION 3	AERIAL TV	COMCAST
LOCATION 3	UG GAS LINE	SOUTHERN CAL GAS-SEMPRA
LOCATION 4	AERIAL ELECTRICAL	PG&E
LOCATION 4	UG FIBER OPTIC CABLE	VERIZON
LOCATION 4	UG FIBER OPTIC CABLE	QWEST
LOCATION 4	UG PHONE CABLE	AT&T
LOCATION 4	UG GAS LINE	PG&E
LOCATION 5	UG FIBER OPTIC CABLE	AT&T
LOCATION 5	UG ELECTRICAL	SOUTHERN CAL EDISON
LOCATION 5	UG GAS LINE	SOUTHERN CAL GAS-SEMPRA
LOCATION 5	UG PHONE CABLE	AT&T
LOCATION 5	UG WATER LINE	SENTINNEL BUTTE MUTUAL WATER COMPANY
LOCATION 6	UG PHONE CABLE	AT&T

LAYOUT (LOCATION 1) L-1

REVISED BY	DATE REVISED
	04/17/13

CALCULATED-DESIGNED BY	CHECKED BY
ERIC OLSON	JOHNNY SOLANO

FUNCTIONAL SUPERVISOR: DAVID FRANKE

STATE OF CALIFORNIA - DEPARTMENT OF TRANSPORTATION
Caltrans DESIGN

LAST REVISION 05-01-13 | DATE PLOTTED => 03-JUN-2013 | TIME PLOTTED => 16:13

Dist	COUNTY	ROUTE	POST MILES TOTAL PROJECT	SHEET No.	TOTAL SHEETS
06	Fre,Ker, Tul	33,46,63 119,216,223	Var	3	33

Eric Olson 5-20-13
REGISTERED CIVIL ENGINEER DATE

5-20-13
PLANS APPROVAL DATE

REGISTERED PROFESSIONAL ENGINEER ERIC H. OLSON No. 60801 Exp. 12/31/14 CIVIL STATE OF CALIFORNIA

THE STATE OF CALIFORNIA OR ITS OFFICERS OR AGENTS SHALL NOT BE RESPONSIBLE FOR THE ACCURACY OR COMPLETENESS OF SCANNED COPIES OF THIS PLAN SHEET.

NOTES:

1. FOR ACCURATE RIGHT OF WAY DATA, CONTACT RIGHT OF WAY ENGINEERING AT DISTRICT OFFICE.
2. STEEL CASING MARKED CHEVRON OIL LINE IS ABANDONED WATER LINE.
3. EXACT LOCATION OF TEMPORARY FENCE (TYPE ESA) TO BE DETERMINED BY ENGINEER.

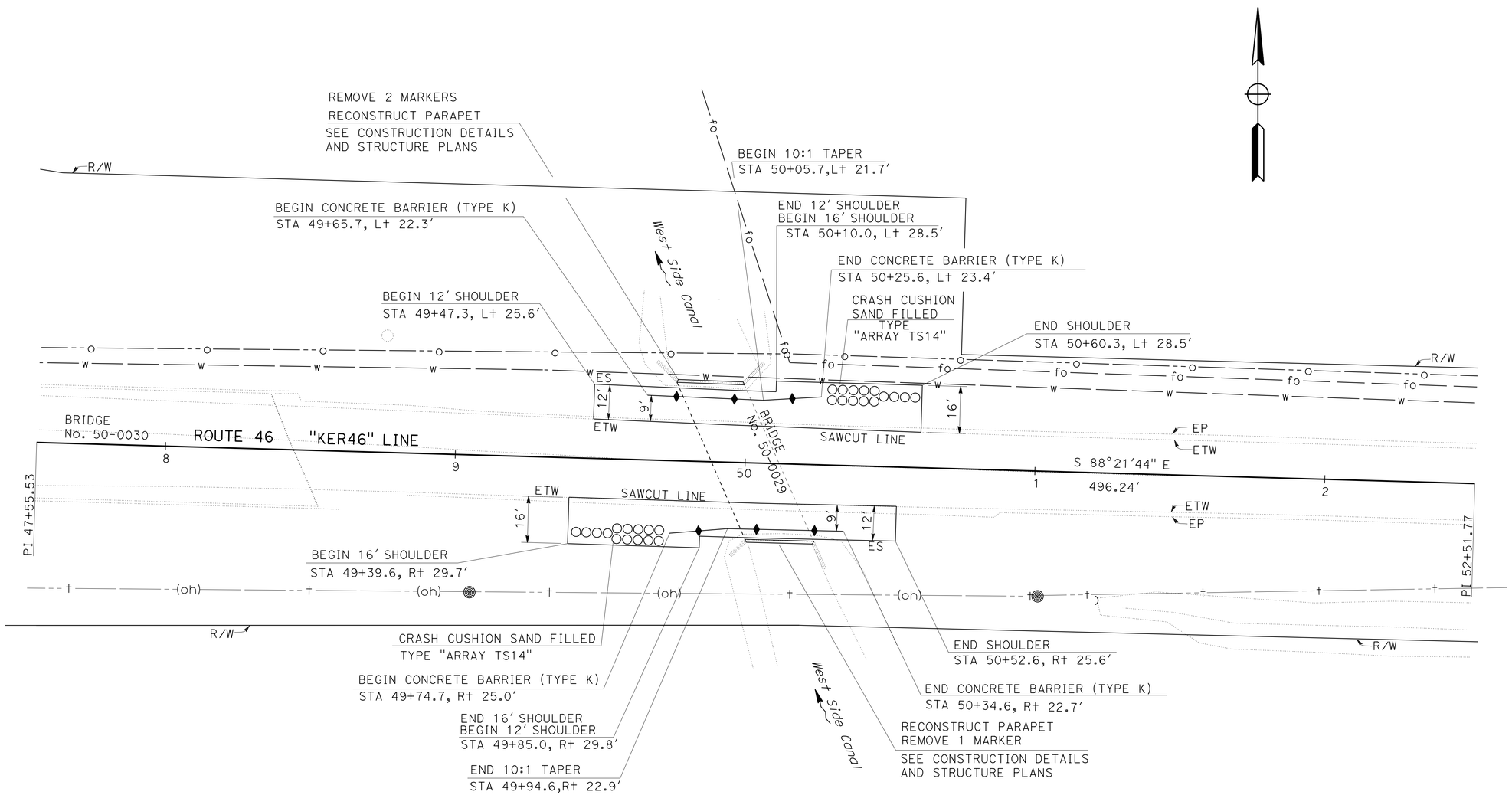

SCALE: 1" = 20'

LAYOUT
(LOCATION 2)
L-2

REVISED BY	DATE REVISED
	02/15/13

CALCULATED-DESIGNED BY: ERIC OLSON
CHECKED BY: JOHNNY SOLANO
FUNCTIONAL SUPERVISOR: DAVID FRANKE

STATE OF CALIFORNIA - DEPARTMENT OF TRANSPORTATION
Caltrans®
DESIGN

LAST REVISION 05-01-13
DATE PLOTTED => 03-JUN-2013
TIME PLOTTED => 16:13

Dist	COUNTY	ROUTE	POST MILES TOTAL PROJECT	SHEET No.	TOTAL SHEETS
06	Fre,Ker, Tul	33,46,63 119,216,223	Var	4	33

Eric Olson 5-20-13
REGISTERED CIVIL ENGINEER DATE

5-20-13
PLANS APPROVAL DATE

REGISTERED PROFESSIONAL ENGINEER ERIC H. OLSON No. 60801 Exp. 12/31/14 CIVIL STATE OF CALIFORNIA

THE STATE OF CALIFORNIA OR ITS OFFICERS OR AGENTS SHALL NOT BE RESPONSIBLE FOR THE ACCURACY OR COMPLETENESS OF SCANNED COPIES OF THIS PLAN SHEET.

NOTES:

FOR ACCURATE RIGHT OF WAY DATA,
CONTACT RIGHT OF WAY ENGINEERING AT DISTRICT OFFICE.

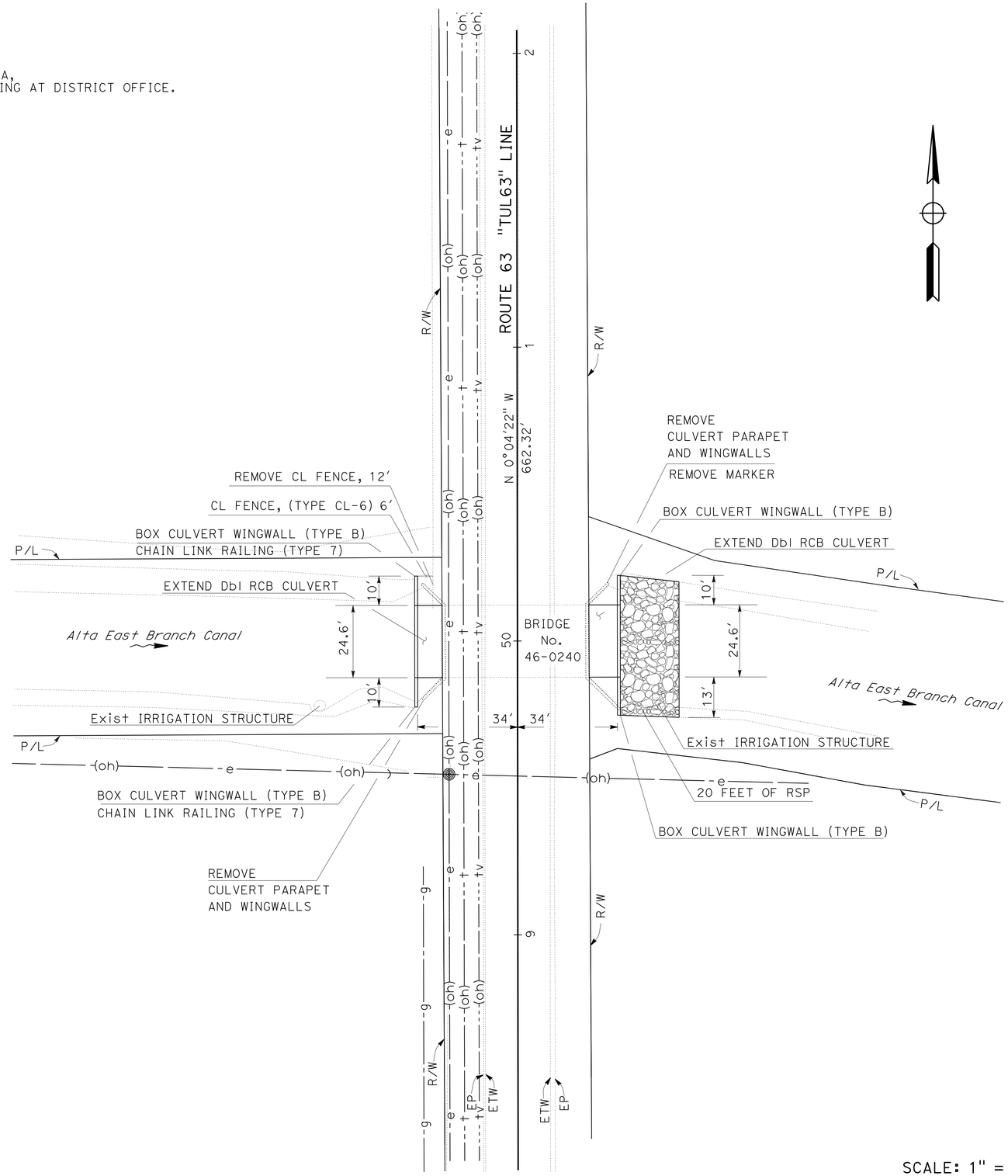

SCALE: 1" = 20'

LAYOUT
(LOCATION 3)
L-3

STATE OF CALIFORNIA - DEPARTMENT OF TRANSPORTATION
Caltrans®
DESIGN

FUNCTIONAL SUPERVISOR: DAVID FRANKE
CALCULATED-DESIGNED BY: ERIC OLSON
CHECKED BY: JOHNNY SOLANO
REVISED BY
DATE REVISED: 02/15/13

LAST REVISION 05-01-13
DATE PLOTTED => 03-JUN-2013
TIME PLOTTED => 16:13

Dist	COUNTY	ROUTE	POST MILES TOTAL PROJECT	SHEET No.	TOTAL SHEETS
06	Fre,Ker, Tul	33,46,63 119,216,223	Var	5	33

Eric Olson 5-20-13
REGISTERED CIVIL ENGINEER DATE

5-20-13
PLANS APPROVAL DATE

REGISTERED PROFESSIONAL ENGINEER ERIC H. OLSON No. 60801 Exp. 12/31/14 CIVIL STATE OF CALIFORNIA

THE STATE OF CALIFORNIA OR ITS OFFICERS OR AGENTS SHALL NOT BE RESPONSIBLE FOR THE ACCURACY OR COMPLETENESS OF SCANNED COPIES OF THIS PLAN SHEET.

NOTES:

1. FOR ACCURATE RIGHT OF WAY DATA, CONTACT RIGHT OF WAY ENGINEERING AT DISTRICT OFFICE.
2. SLURRY BACKFILL BETWEEN PIPES

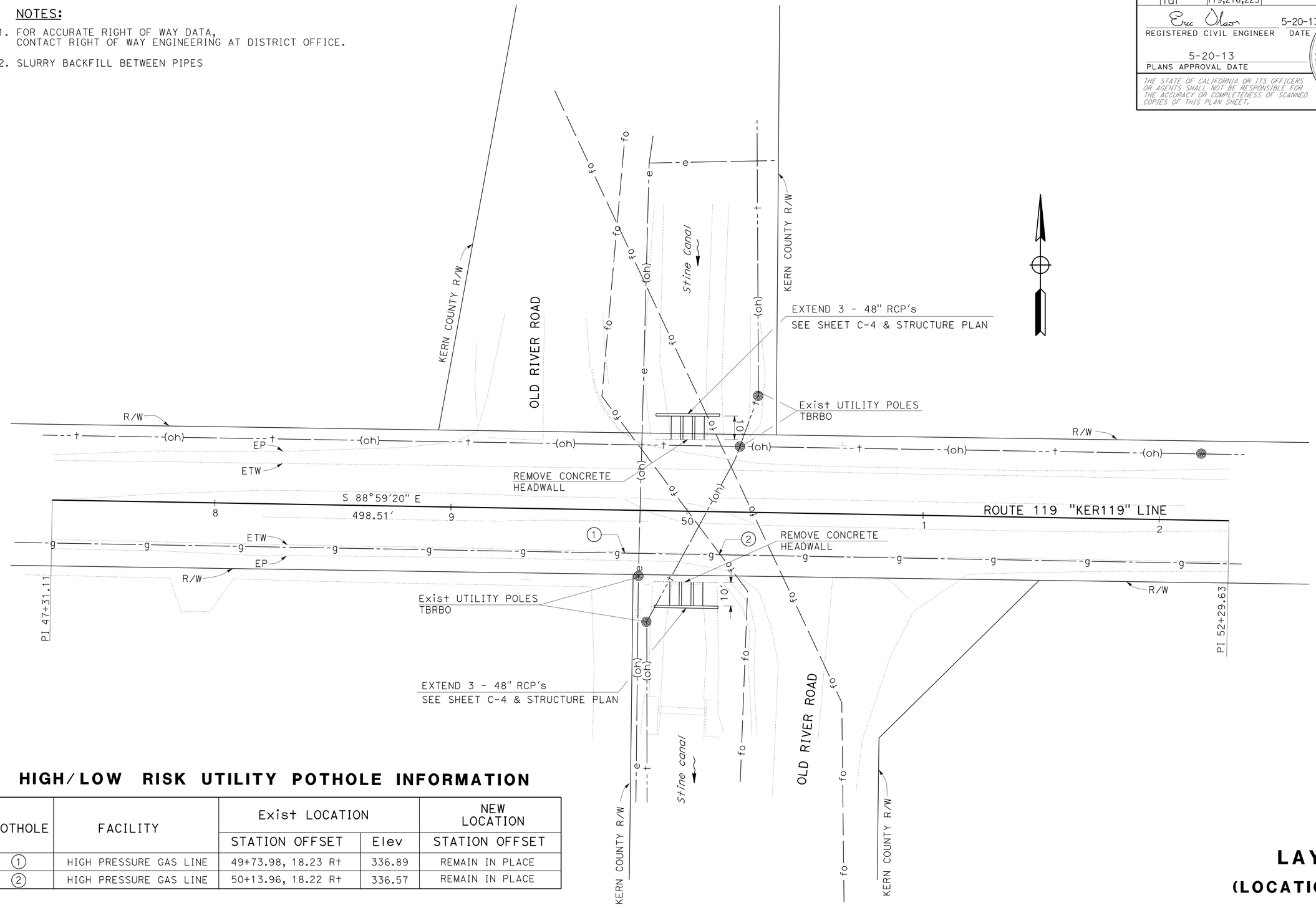

HIGH/LOW RISK UTILITY POTHOLE INFORMATION

POTHOLE	FACILITY	Exist LOCATION		NEW LOCATION
		STATION OFFSET	Elev	STATION OFFSET
1	HIGH PRESSURE GAS LINE	49+73.98, 18.23 Rt	336.89	REMAIN IN PLACE
2	HIGH PRESSURE GAS LINE	50+13.96, 18.22 Rt	336.57	REMAIN IN PLACE

SCALE: 1" = 20'

LAYOUT
(LOCATION 4)
L-4

ERIC OLSON	REVISED BY
JOHNNY SOLANO	DATE REVISED 02/15/13
CALCULATED-DESIGNED BY	
CHECKED BY	
FUNCTIONAL SUPERVISOR	
DAVID FRANKE	

STATE OF CALIFORNIA - DEPARTMENT OF TRANSPORTATION
Caltrans® DESIGN

LAST REVISION 05-01-13 | DATE PLOTTED => 03-JUN-2013 TIME PLOTTED => 16:13

Dist	COUNTY	ROUTE	POST MILES TOTAL PROJECT	SHEET No.	TOTAL SHEETS
06	Fre,Ker, Tul	33,46,63 119,216,223	Var	6	33

Eric Olson 5-20-13
REGISTERED CIVIL ENGINEER DATE

5-20-13
PLANS APPROVAL DATE

REGISTERED PROFESSIONAL ENGINEER ERIC H. OLSON No. 60801 Exp. 12/31/14 CIVIL STATE OF CALIFORNIA

THE STATE OF CALIFORNIA OR ITS OFFICERS OR AGENTS SHALL NOT BE RESPONSIBLE FOR THE ACCURACY OR COMPLETENESS OF SCANNED COPIES OF THIS PLAN SHEET.

NOTES:

1. FOR ACCURATE RIGHT OF WAY DATA, CONTACT RIGHT OF WAY ENGINEERING AT DISTRICT OFFICE.
2. SOUTHERN CAL GAS LINE (SEMPRA GAS) OPERATING AT 170 psi TBRBO.
3. EXACT LOCATION OF TEMPORARY FENCE (TYPE ESA) TO BE DETERMINED BY ENGINEER.

HIGH/LOW RISK UTILITY POTHOLE INFORMATION

POTHOLE	FACILITY	Exist LOCATION		NEW LOCATION
		STATION OFFSET	Elev	STATION OFFSET
3	HIGH PRESSURE GAS LINE	49+69.89, 28.73' R+	427.31	TBRBO
4	HIGH PRESSURE GAS LINE	49+82.15, 32.99' R+	423.67	TBRBO
5	HIGH PRESSURE GAS LINE	50+04.31, 33.36' R+	422.68	TBRBO
6	HIGH PRESSURE GAS LINE	50+16.65, 33.30' R+	423.68	TBRBO
7	HIGH PRESSURE GAS LINE	50+32.35, 25.56' R+	427.89	TBRBO
8	3 - 12KV ELECTRIC	49+60.99, 18.11' L+	428.93	REMAIN IN PLACE
9	3 - 12KV ELECTRIC	50+39.99, 18.05' L+	429.81	REMAIN IN PLACE

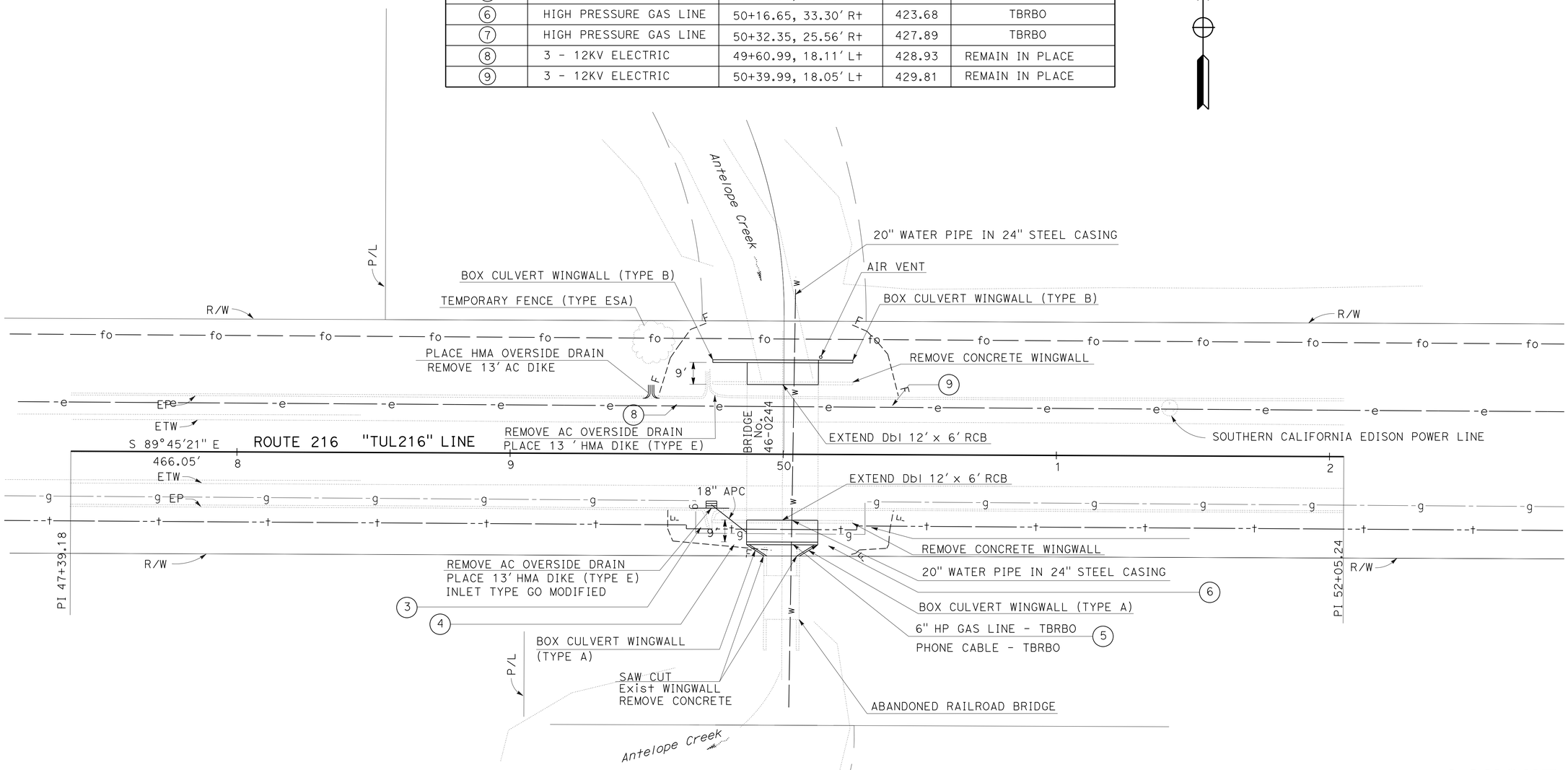

SCALE: 1" = 20'

LAYOUT
(LOCATION 5)
L-5

REVISED BY	DATE REVISED
	02/15/13

CALCULATED-DESIGNED BY: ERIC OLSON
CHECKED BY: JOHNNY SOLANO
FUNCTIONAL SUPERVISOR: DAVID FRANKE

STATE OF CALIFORNIA - DEPARTMENT OF TRANSPORTATION
Caltrans
DESIGN

LAST REVISION 05-01-13
DATE PLOTTED => 03-JUN-2013
TIME PLOTTED => 16:13

Dist	COUNTY	ROUTE	POST MILES TOTAL PROJECT	SHEET No.	TOTAL SHEETS
06	Fre,Ker, Tul	33,46,63 119,216,223	Var	7	33

Eric Olson 5-20-13
REGISTERED CIVIL ENGINEER DATE

5-20-13
PLANS APPROVAL DATE

REGISTERED PROFESSIONAL ENGINEER ERIC H. OLSON No. 60801 Exp. 12/31/14 CIVIL STATE OF CALIFORNIA

THE STATE OF CALIFORNIA OR ITS OFFICERS OR AGENTS SHALL NOT BE RESPONSIBLE FOR THE ACCURACY OR COMPLETENESS OF SCANNED COPIES OF THIS PLAN SHEET.

NOTES:

FOR ACCURATE RIGHT OF WAY DATA,
CONTACT RIGHT OF WAY ENGINEERING AT DISTRICT OFFICE.

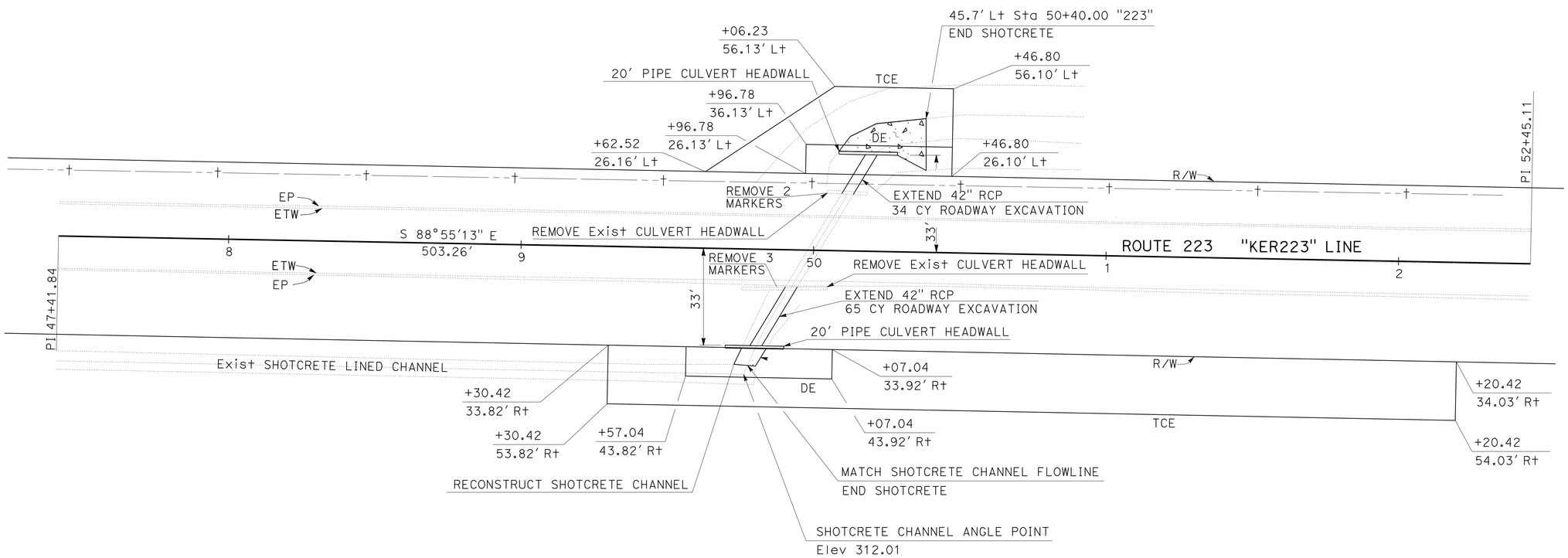

SCALE: 1" = 20'

LAYOUT
(LOCATION 6)
L-6

STATE OF CALIFORNIA - DEPARTMENT OF TRANSPORTATION
Caltrans
DESIGN

FUNCTIONAL SUPERVISOR: DAVID FRANKE
CALCULATED-DESIGNED BY: ERIC OLSON
CHECKED BY: JOHNNY SOLANO
REVISED BY
DATE REVISED 02/15/13

LAST REVISION 05-01-13
DATE PLOTTED => 03-JUN-2013
TIME PLOTTED => 16:13

Dist	COUNTY	ROUTE	POST MILES TOTAL PROJECT	SHEET No.	TOTAL SHEETS
06	Fre,Ker, Tul	33,46,63 119,216,223	Var	8	33

Eric Olson 5-20-13
REGISTERED CIVIL ENGINEER DATE

5-20-13
PLANS APPROVAL DATE

REGISTERED PROFESSIONAL ENGINEER ERIC H. OLSON No. 60801 Exp. 12/31/14 CIVIL STATE OF CALIFORNIA

THE STATE OF CALIFORNIA OR ITS OFFICERS OR AGENTS SHALL NOT BE RESPONSIBLE FOR THE ACCURACY OR COMPLETENESS OF SCANNED COPIES OF THIS PLAN SHEET.

NOTES:

1. FOR ACCURATE RIGHT OF WAY DATA, CONTACT RIGHT OF WAY ENGINEERING AT DISTRICT OFFICE.
2. REMOVAL SURFACE SHALL BE SANDBLASTED, CLEANED, AND ROUGHENED TO AMPLITUDE OF 1/4" BEFORE PLACING NEW CONCRETE.

LEGEND:

REMOVE CONCRETE AND PROTECT EXISTING REINFORCEMENT.

ABBREVIATION:

TBRBO TO BE RELOCATED BY OTHERS

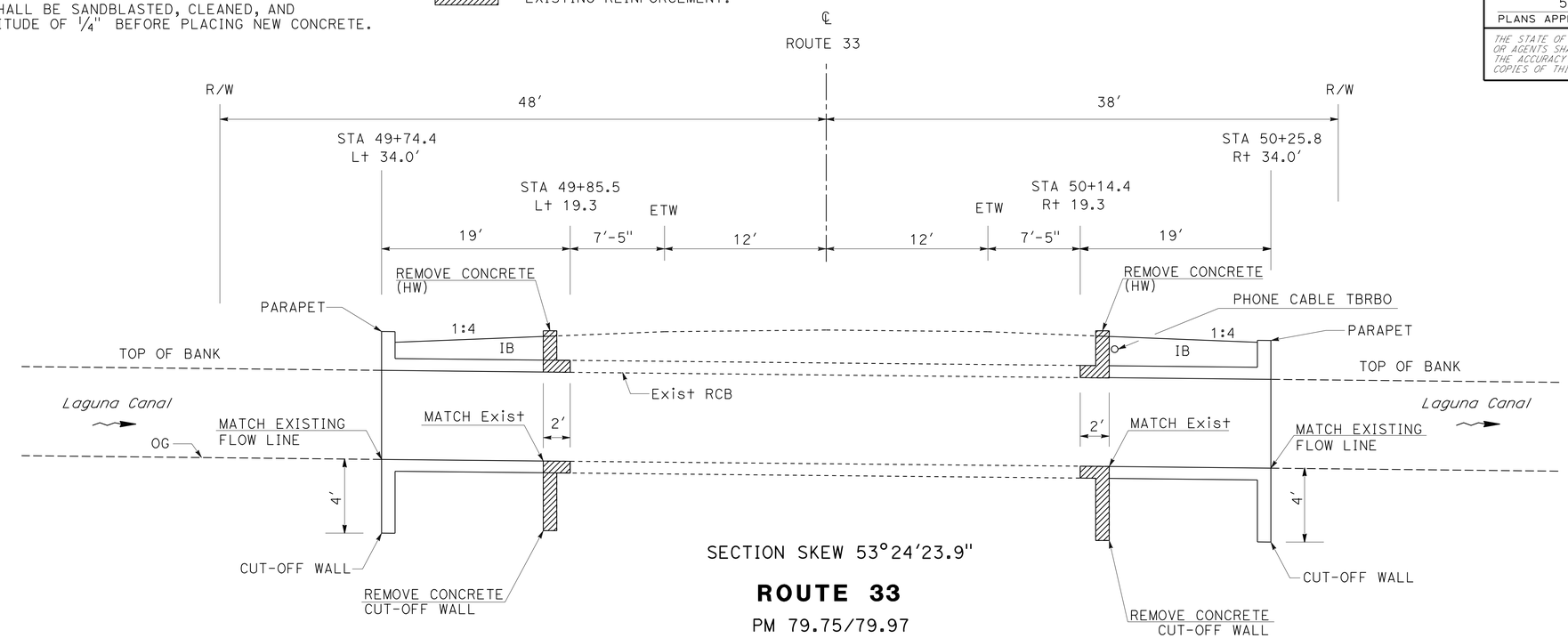

SECTION SKEW 53°24′23.9"

ROUTE 33

PM 79.75/79.97

FRESNO COUNTY

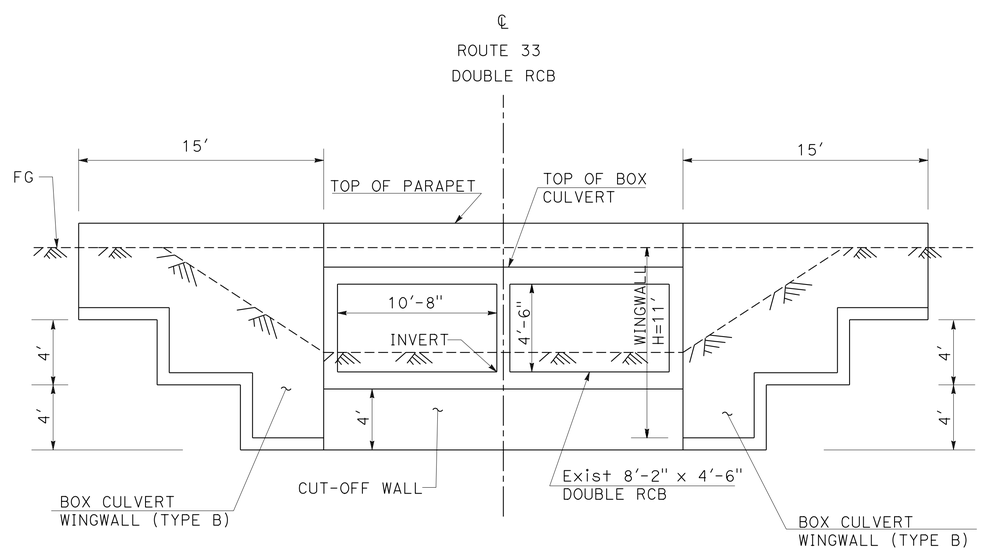

END ELEVATION

NO SCALE

CONSTRUCTION DETAILS

(LOCATION 1)

C-1

STATE OF CALIFORNIA - DEPARTMENT OF TRANSPORTATION
Caltrans®
DESIGN

FUNCTIONAL SUPERVISOR: DAVID FRANKE
CALCULATED-DESIGNED BY: ERIC OLSON
CHECKED BY: JOHNNY SOLANO
REVISED BY
DATE REVISED: 02/15/13

LAST REVISION 05-01-13
DATE PLOTTED => 03-JUN-2013
TIME PLOTTED => 16:13

Dist	COUNTY	ROUTE	POST MILES TOTAL PROJECT	SHEET No.	TOTAL SHEETS
06	Fre,Ker, Tul	33,46,63 119,216,223	Var	9	33

Eric Olson 5-20-13
REGISTERED CIVIL ENGINEER DATE

5-20-13
PLANS APPROVAL DATE

REGISTERED PROFESSIONAL ENGINEER ERIC H. OLSON No. 60801 Exp. 12/31/14 CIVIL STATE OF CALIFORNIA

THE STATE OF CALIFORNIA OR ITS OFFICERS OR AGENTS SHALL NOT BE RESPONSIBLE FOR THE ACCURACY OR COMPLETENESS OF SCANNED COPIES OF THIS PLAN SHEET.

NOTES:

FOR ACCURATE RIGHT OF WAY DATA,
CONTACT RIGHT OF WAY ENGINEERING AT DISTRICT OFFICE.

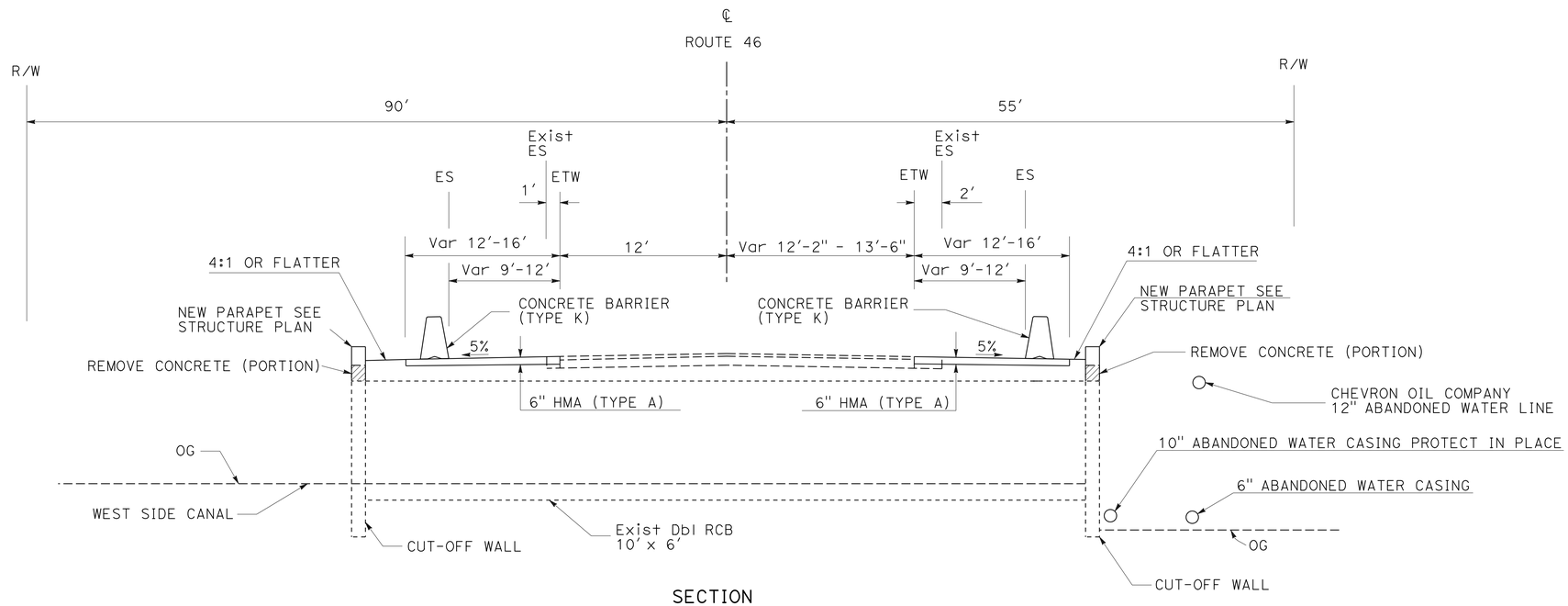

SECTION

ROUTE 46

PM 32.75/32.95

KERN COUNTY

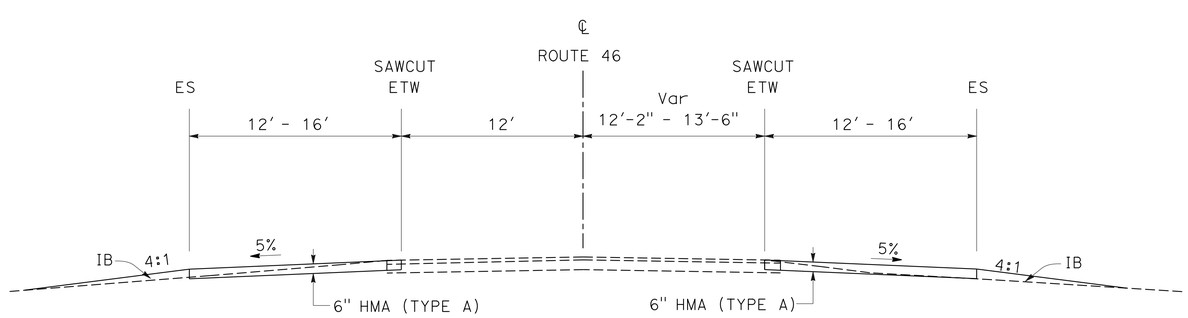

WESTBOUND
STA 49+47.3 TO 50+60.3

EASTBOUND
STA 49+39.6 TO 50+52.6

NO SCALE

CONSTRUCTION DETAILS

(LOCATION 2)

C-2

STATE OF CALIFORNIA - DEPARTMENT OF TRANSPORTATION
Caltrans
DESIGN

FUNCTIONAL SUPERVISOR: DAVID FRANKE
CALCULATED-DESIGNED BY: ERIC OLSON
CHECKED BY: JOHNNY SOLANO
REVISED BY
DATE REVISED 02/15/13

LAST REVISION 05-01-13
DATE PLOTTED => 03-JUN-2013
TIME PLOTTED => 16:13

Dist	COUNTY	ROUTE	POST MILES TOTAL PROJECT	SHEET No.	TOTAL SHEETS
06	Fre,Ker, Tul	33,46,63 119,216,223	Var	10	33

Eric Olson 5-20-13
REGISTERED CIVIL ENGINEER DATE

5-20-13
PLANS APPROVAL DATE

REGISTERED PROFESSIONAL ENGINEER ERIC H. OLSON No. 60801 Exp. 12/31/14 CIVIL STATE OF CALIFORNIA

THE STATE OF CALIFORNIA OR ITS OFFICERS OR AGENTS SHALL NOT BE RESPONSIBLE FOR THE ACCURACY OR COMPLETENESS OF SCANNED COPIES OF THIS PLAN SHEET.

NOTES:

FOR ACCURATE RIGHT OF WAY DATA,
CONTACT RIGHT OF WAY ENGINEERING AT DISTRICT OFFICE.

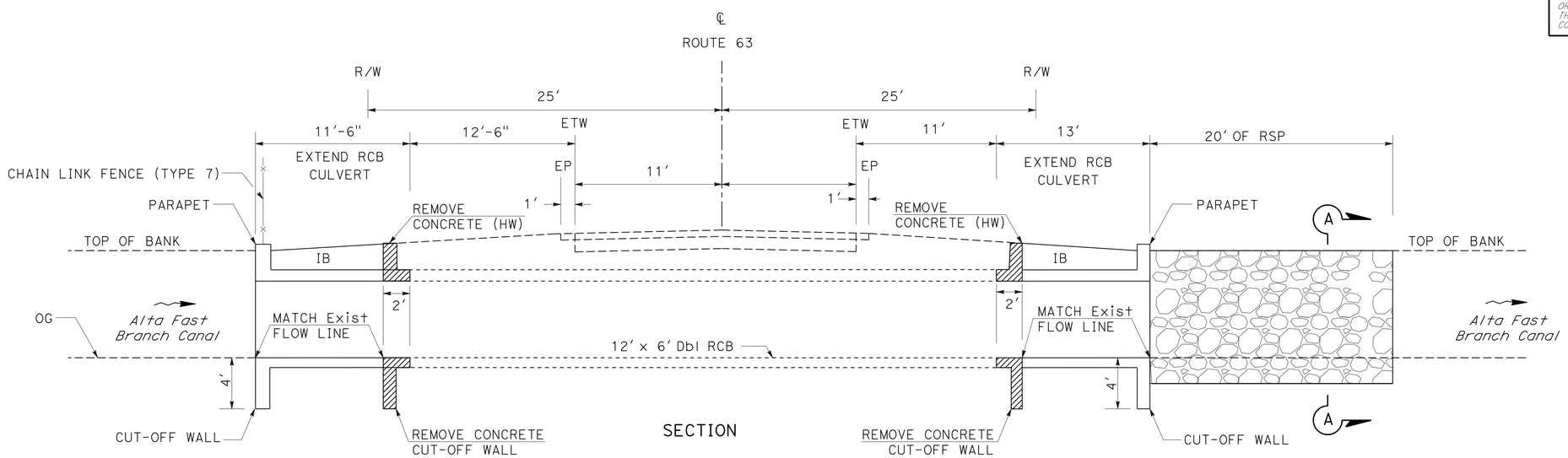

SECTION

ROUTE 63

PM R24.56/R24.76

TULARE COUNTY

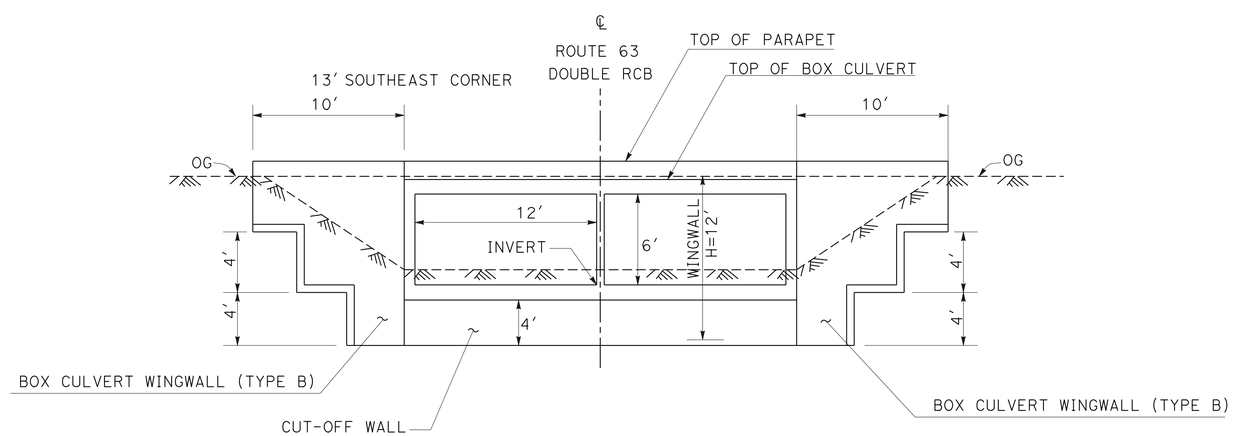

END ELEVATION

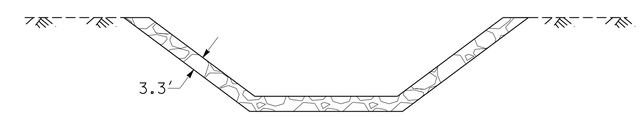

SECTION A-A

CONSTRUCTION DETAILS

(LOCATION 3)

NO SCALE

C-3

STATE OF CALIFORNIA - DEPARTMENT OF TRANSPORTATION
Caltrans® DESIGN
FUNCTIONAL SUPERVISOR: DAVID FRANKE
CALCULATED-DESIGNED BY: ERIC OLSON
CHECKED BY: JOHNNY SOLANO
REVISED BY
DATE REVISED: 02/15/13

LAST REVISION 05-01-13
DATE PLOTTED => 03-JUN-2013
TIME PLOTTED => 16:13

Dist	COUNTY	ROUTE	POST MILES TOTAL PROJECT	SHEET No.	TOTAL SHEETS
06	Fre,Ker, Tul	33,46,63 119,216,223	Var	11	33

Eric Olson 5-20-13
REGISTERED CIVIL ENGINEER DATE

5-20-13
PLANS APPROVAL DATE

REGISTERED PROFESSIONAL ENGINEER ERIC H. OLSON No. 60801 Exp. 12/31/14 CIVIL STATE OF CALIFORNIA

THE STATE OF CALIFORNIA OR ITS OFFICERS OR AGENTS SHALL NOT BE RESPONSIBLE FOR THE ACCURACY OR COMPLETENESS OF SCANNED COPIES OF THIS PLAN SHEET.

NOTES:

1. FOR ACCURATE RIGHT OF WAY DATA, CONTACT RIGHT OF WAY ENGINEERING AT DISTRICT OFFICE.
2. REPAVE ROADWAY AFTER EXCAVATION NECESSARY TO PLACE CONCRETE PIPE COLLARS.

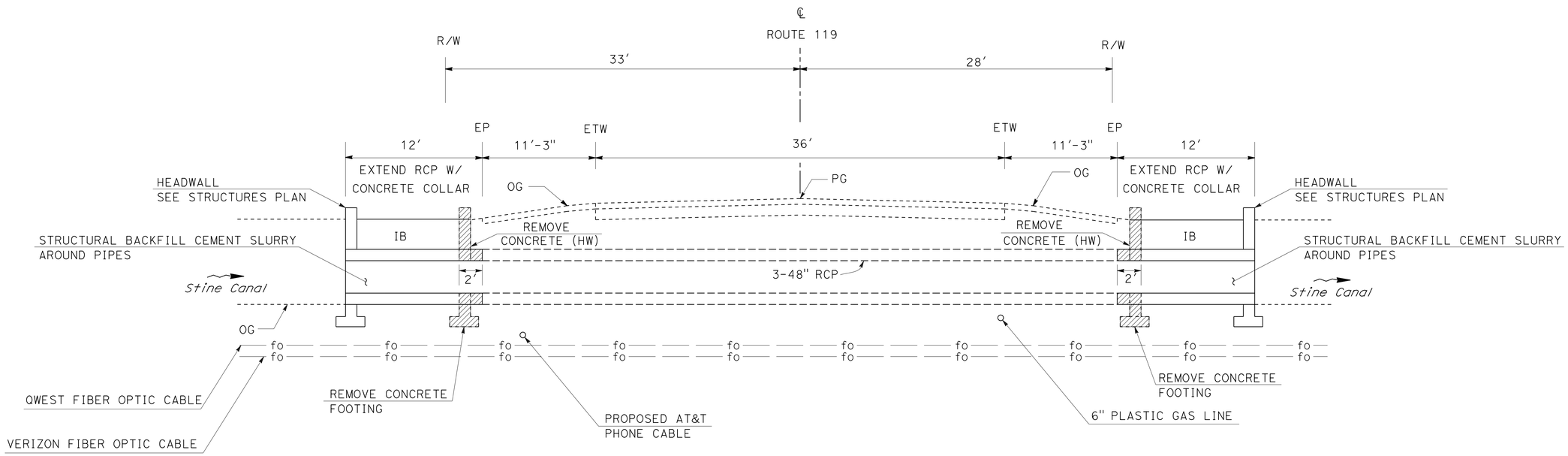

SECTION

ROUTE 119

PM 26.17/26.37

KERN COUNTY

NO SCALE

CONSTRUCTION DETAILS

(LOCATION 4)

C-4

STATE OF CALIFORNIA - DEPARTMENT OF TRANSPORTATION
Caltrans®
DESIGN

FUNCTIONAL SUPERVISOR: DAVID FRANKE

CALCULATED-DESIGNED BY: ERIC OLSON
CHECKED BY: JOHNNY SOLANO

REVISED BY
DATE REVISED: 02/15/13

LAST REVISION 05-01-13 | DATE PLOTTED => 03-JUN-2013 | TIME PLOTTED => 16:13

Dist	COUNTY	ROUTE	POST MILES TOTAL PROJECT	SHEET No.	TOTAL SHEETS
06	Fre,Ker, Tul	33,46,63 119,216,223	Var	12	33

Eric Olson 5-20-13
REGISTERED CIVIL ENGINEER DATE

5-20-13
PLANS APPROVAL DATE

REGISTERED PROFESSIONAL ENGINEER ERIC H. OLSON No. 60801 Exp. 12/31/14 CIVIL STATE OF CALIFORNIA

THE STATE OF CALIFORNIA OR ITS OFFICERS OR AGENTS SHALL NOT BE RESPONSIBLE FOR THE ACCURACY OR COMPLETENESS OF SCANNED COPIES OF THIS PLAN SHEET.

NOTES:

FOR ACCURATE RIGHT OF WAY DATA,
CONTACT RIGHT OF WAY ENGINEERING AT DISTRICT OFFICE.

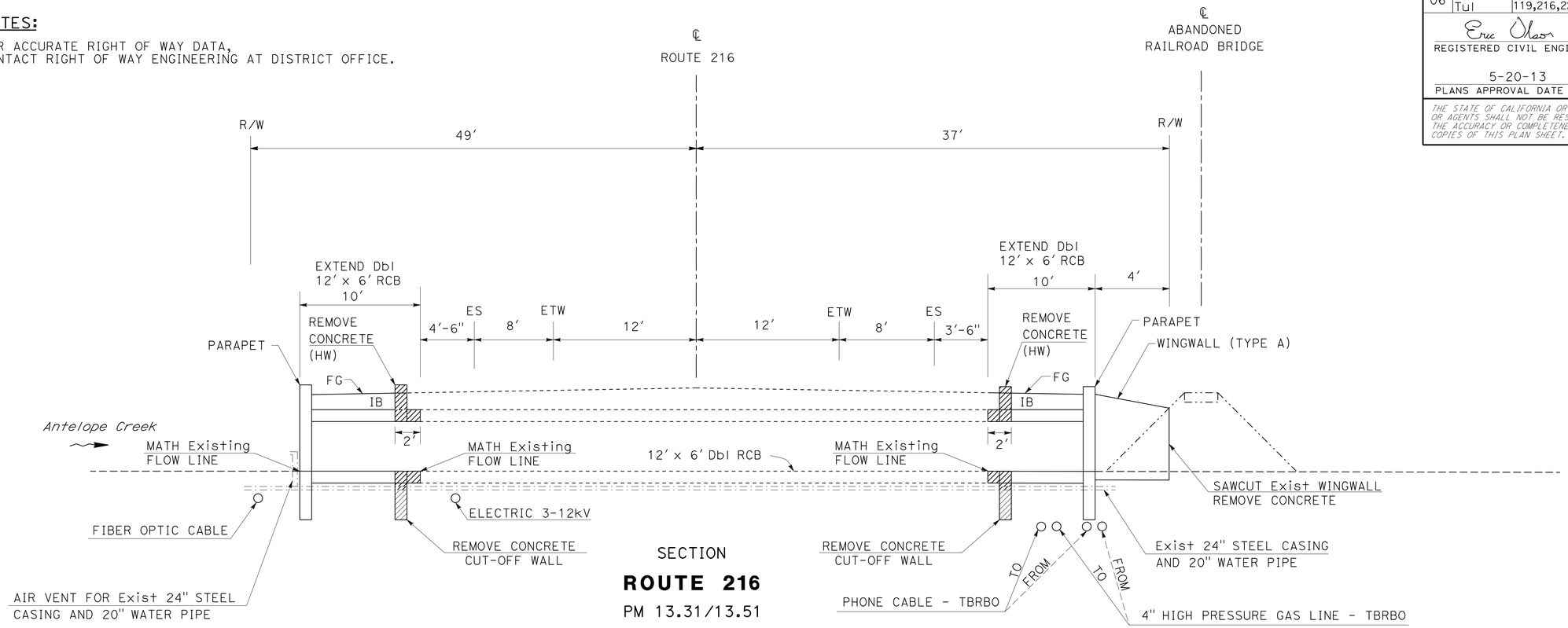

SECTION

ROUTE 216

PM 13.31/13.51

TULARE COUNTY

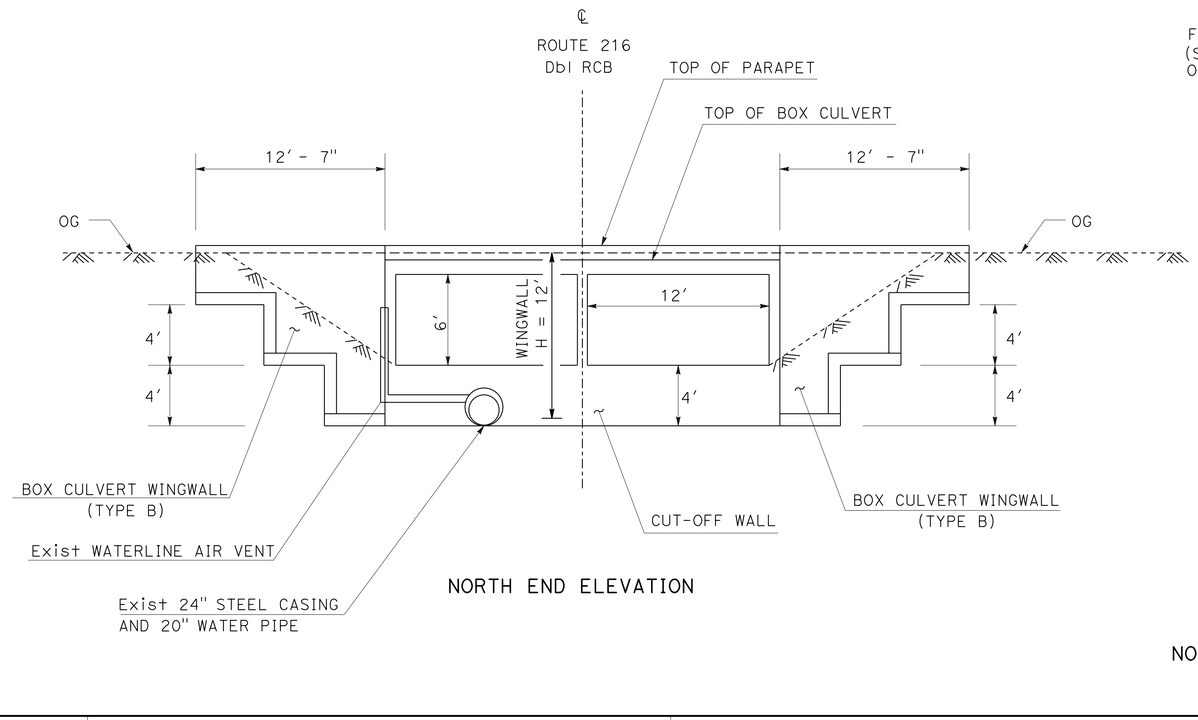

NORTH END ELEVATION

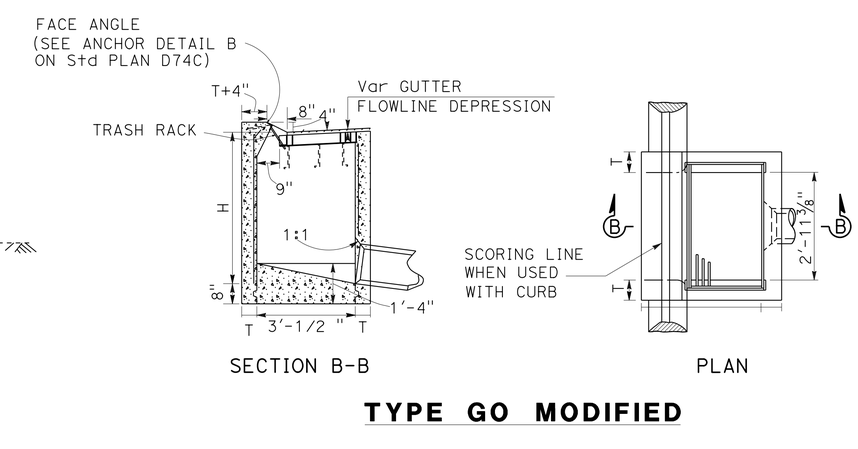

SECTION B-B PLAN

TYPE GO MODIFIED

NO SCALE

CONSTRUCTION DETAILS
(LOCATION 5)
C-5

STATE OF CALIFORNIA - DEPARTMENT OF TRANSPORTATION
DESIGN
Caltrans

FUNCTIONAL SUPERVISOR: DAVID FRANKE
CALCULATED-DESIGNED BY: ERIC OLSON
CHECKED BY: JOHNNY SOLANO
REVISED BY
DATE REVISED: 02/15/13

LAST REVISION: 05-01-13
DATE PLOTTED => 03-JUN-2013
TIME PLOTTED => 16:13

Dist	COUNTY	ROUTE	POST MILES TOTAL PROJECT	SHEET No.	TOTAL SHEETS
06	Fre,Ker, Tul	33,46,63 119,216,223	Var	13	33

Eric Olson 5-20-13
REGISTERED CIVIL ENGINEER DATE

5-20-13
PLANS APPROVAL DATE

REGISTERED PROFESSIONAL ENGINEER ERIC H. OLSON No. 60801 Exp. 12/31/14 CIVIL STATE OF CALIFORNIA

THE STATE OF CALIFORNIA OR ITS OFFICERS OR AGENTS SHALL NOT BE RESPONSIBLE FOR THE ACCURACY OR COMPLETENESS OF SCANNED COPIES OF THIS PLAN SHEET.

NOTES:

1. FOR ACCURATE RIGHT OF WAY DATA, CONTACT RIGHT OF WAY ENGINEERING AT DISTRICT OFFICE.
2. REPAVE ROADWAY AFTER EXCAVATION NECESSARY TO PLACE CONCRETE PIPE COLLARS.

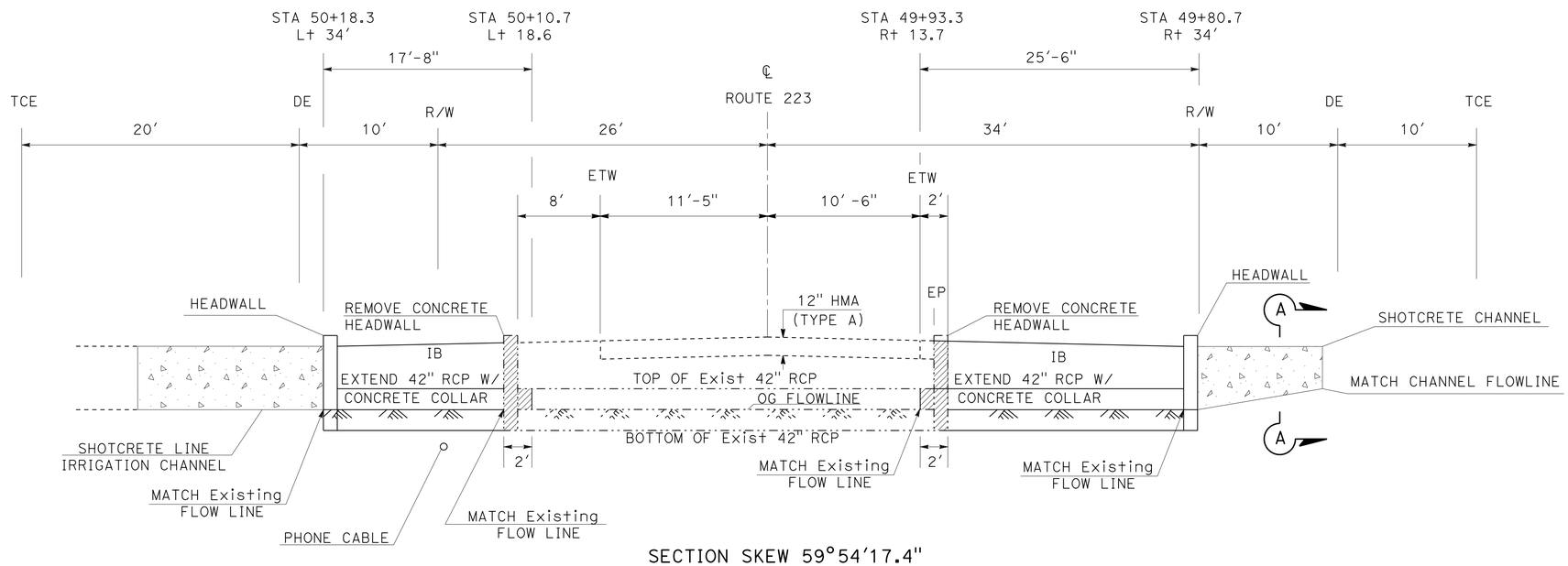

SECTION SKEW 59°54'17.4"

ROUTE 223

PM 9.5/10.0

KERN COUNTY

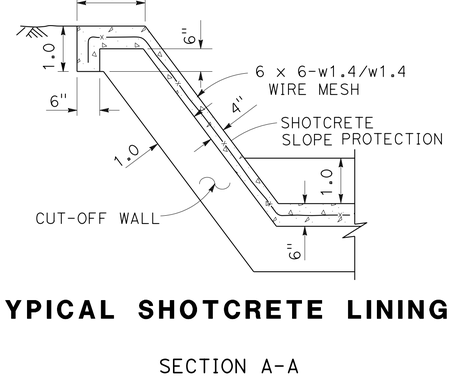

TYPICAL SHOTCRETE LINING

SECTION A-A

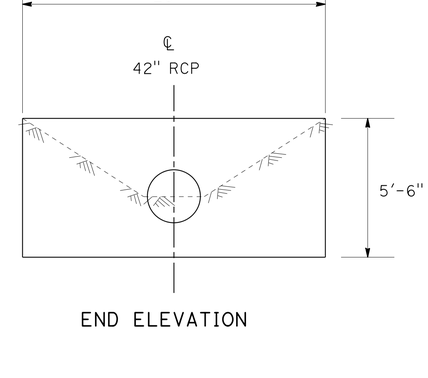

END ELEVATION

NO SCALE

CONSTRUCTION DETAILS

(LOCATION 6)

C-6

STATE OF CALIFORNIA - DEPARTMENT OF TRANSPORTATION
Caltrans®
DESIGN

FUNCTIONAL SUPERVISOR: DAVID FRANKE
CALCULATED-DESIGNED BY: ERIC OLSON
CHECKED BY: JOHNNY SOLANO
REVISED BY
DATE REVISED 02/15/13

LAST REVISION 05-01-13
DATE PLOTTED => 03-JUN-2013
TIME PLOTTED => 16:13

Dist	COUNTY	ROUTE	POST MILES TOTAL PROJECT	SHEET No.	TOTAL SHEETS
06	Fre,Ker, Tul	33,46,63 119,216,223	Var	14	33

Eric Olson 5-20-13
REGISTERED CIVIL ENGINEER DATE

5-20-13
PLANS APPROVAL DATE

REGISTERED PROFESSIONAL ENGINEER ERIC H. OLSON No. 60801 Exp. 12/31/14 CIVIL STATE OF CALIFORNIA

THE STATE OF CALIFORNIA OR ITS OFFICERS OR AGENTS SHALL NOT BE RESPONSIBLE FOR THE ACCURACY OR COMPLETENESS OF SCANNED COPIES OF THIS PLAN SHEET.

NOTES:

1. FOR ACCURATE RIGHT OF WAY DATA, CONTACT RIGHT OF WAY ENGINEERING AT DISTRICT OFFICE.
2. PLACE TYPICAL EROSION CONTROL AS SHOWN AND AS DIRECTED BY ENGINEER.
3. WHERE PIPE OF DIFFERENT DIAMETERS ARE JOINED WITH A CONCRETE COLLAR. "L" SHALL BE THOSE OF THE LARGER PIPE. D=D1 OR D2 WHICHEVER IS GREATER.
4. JOIN PIPES AT INVERTS WHERE THE SLOPE OF THE DOWNSTREAM PIPE. AND JOIN PIPES AT SOFFIT WHERE THE SLOPE OF THE UPSTREAM PIPE IS GREATER THAN THE SLOPE OF THE DOWNSTREAM PIPE.
5. "B" BARS TO BE LOCKED AROUND LONGITUDUNAL REINFORCEMENT. ROTATE BARS AS NECESSARY.
6. CONCRETE COLLAR SHOWN IS ADEQUATE FOR UP TO 40 FEET OF FILL.
7. FOR PIPE SIZE NOT LISTED USE NEXT LARGER.

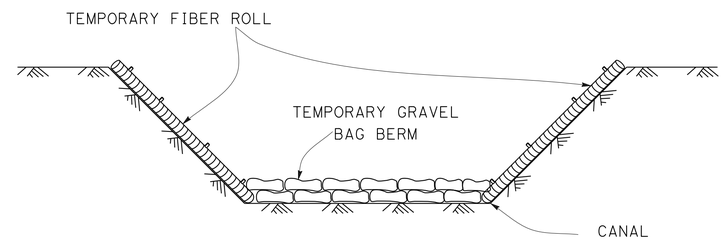

TYPICAL EROSION CONTROL

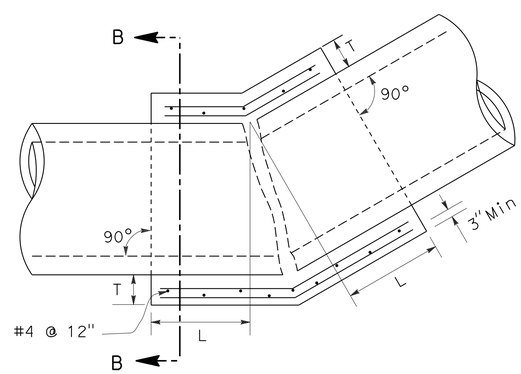

TYPICAL CONCRETE COLLAR FIELD BEND

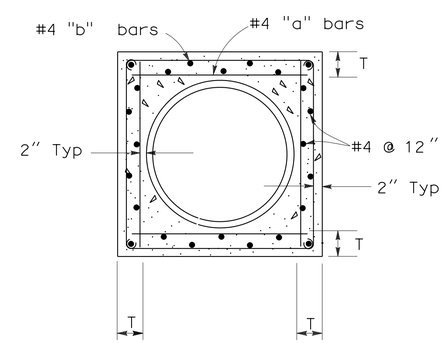

SECTION B-B

CONCRETE COLLAR DIMENSIONS

D	L	T	"a"
42"	1.5'	10"	@12"
48"	1.5'	10"	@12"

NO SCALE

CONSTRUCTION DETAILS

C-7

STATE OF CALIFORNIA - DEPARTMENT OF TRANSPORTATION
Caltrans® DESIGN
FUNCTIONAL SUPERVISOR DAVID FRANKE
CALCULATED-DESIGNED BY ERIC OLSON
CHECKED BY JOHNNY SOLANO
REVISED BY
DATE REVISED 02/15/13

LAST REVISION 05-01-13
DATE PLOTTED => 03-JUN-2013
TIME PLOTTED => 16:13

Dist	COUNTY	ROUTE	POST MILES TOTAL PROJECT	SHEET No.	TOTAL SHEETS
06	Fre,Ker, Tul	33,46,63 119,216,223	Var	15	33

Hassan Taha 04-22-13
REGISTERED CIVIL ENGINEER DATE

5-20-13
PLANS APPROVAL DATE

REGISTERED PROFESSIONAL ENGINEER HASSAN M. TAHA No. 60130 Exp. 06/30/14 CIVIL STATE OF CALIFORNIA

THE STATE OF CALIFORNIA OR ITS OFFICERS OR AGENTS SHALL NOT BE RESPONSIBLE FOR THE ACCURACY OR COMPLETENESS OF SCANNED COPIES OF THIS PLAN SHEET.

STATIONARY MOUNTED CONSTRUCTION AREA SIGNS

SIGN No.	SIGN CODE	SIGN MESSAGE	PANEL SIZE	No. OF POSTS AND SIZE	No. OF SIGNS
A	W20-1	ROAD WORK AHEAD	48" x 48"	1 - 6" x 6"	12
B	G20-2	END ROAD WORK	48" x 24"	1 - 4" x 6"	12

NOTES:

1. ALL TEMPORARY WARNING SIGNS SHALL HAVE BLACK LEGEND ON ORANGE BACKGROUND.
2. EXACT SIGN LOCATIONS TO BE DETERMINED BY THE ENGINEER.
3. FOR ADDITIONAL CONSTRUCTION AREA SIGNS, REFER TO TH-1 SHEET.

PAVEMENT DELINEATION

LOCATION No.	LOCATION STA TO STA	DETAIL No.	PAVEMENT MARKER (RETROREFLECTIVE) TYPE D EA	THERMOPLASTIC TRAFFIC STRIPE 4" SOLID LF
6	48+00 TO 52+50	27B		900
		22	40	900
	TOTAL		40	1800

LOCATION OF CONSTRUCTION

No.	COUNTY	ROUTE	POST MILE	DESCRIPTION	NOTES
1	Fre	33	79.75/79.97	BRIDGE No. 42-0030	RCB EXTENSION
2	Ker	46	32.75/32.95	BRIDGE No. 50-0029	INSTALL K RAIL
3	Tul	63	R24.56/R24.76	BRIDGE No. 46-0240	RCB EXTENSION
4	Ker	119	26.17/26.37	PIPE CULVERT	RCB EXTENSION
5	Tul	216	13.31/13.51	BRIDGE No. 46-0244	RCB EXTENSION
6	Ker	223	9.5/10.0	PIPE CULVERT	PIPE EXTENSION

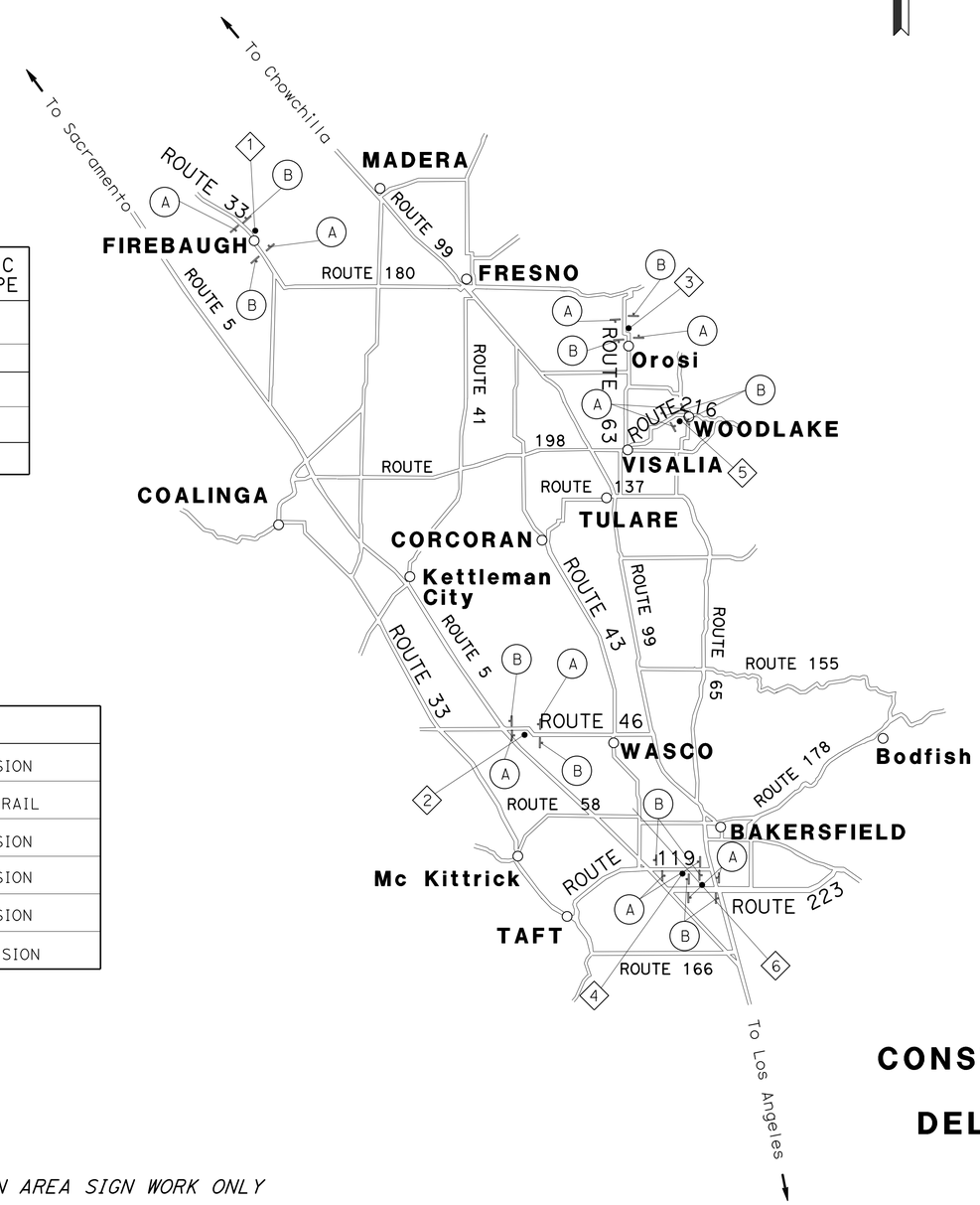

APPROVED FOR CONSTRUCTION AREA SIGN WORK ONLY

CONSTRUCTION AREA SIGNS AND PAVEMENT DELINEATION QUANTITIES

NO SCALE

CS-1

STATE OF CALIFORNIA - DEPARTMENT OF TRANSPORTATION
Caltrans
TRAFFIC DESIGN

FUNCTIONAL SUPERVISOR: MOHAMMED QATAMI
CALCULATED-DESIGNED BY: VANIK POGOSYAN
CHECKED BY: HASSAN TAHA
REVISED BY
DATE REVISED

LAST REVISION 05-01-13
DATE PLOTTED => 03-JUN-2013
TIME PLOTTED => 16:14

Dist	COUNTY	ROUTE	POST MILES TOTAL PROJECT	SHEET No.	TOTAL SHEETS
06	Fre,Ker, Tul	33,46,63 119,216,223	Var	16	33

Hassan Taha 04-22-13
REGISTERED CIVIL ENGINEER DATE

5-20-13
PLANS APPROVAL DATE

REGISTERED PROFESSIONAL ENGINEER HASSAN M. TAHA No. 60130 Exp. 06/30/14 CIVIL STATE OF CALIFORNIA

THE STATE OF CALIFORNIA OR ITS OFFICERS OR AGENTS SHALL NOT BE RESPONSIBLE FOR THE ACCURACY OR COMPLETENESS OF SCANNED COPIES OF THIS PLAN SHEET.

LEGEND:

- DIRECTION OF TRAFFIC
- CHANNELIZERS (SURFACE MOUNTED)
- Temp RAILING (TYPE K)
- Temp CRASH CUSHION ARRAY "TS14"
- CONSTRUCTION AREA
- ROADSIDE SIGN ONE-POST

NOTES:

1. ALL TEMPORARY WARNING SIGNS SHALL HAVE BLACK LEGEND ON ORANGE BACKGROUND
2. CALIFORNIA CODES ARE DESIGNATED BY (CA). OTHERWISE, FEDERAL (MUTCD) CODES ARE SHOWN
3. FOR ADDITIONAL CONSTRUCTION AREA SIGNS REFER TO SHEET CS-1
4. EXACT LOCATIONS OF CONSTRUCTION AREA SIGNS TO BE DETERMINED BY THE ENGINEER

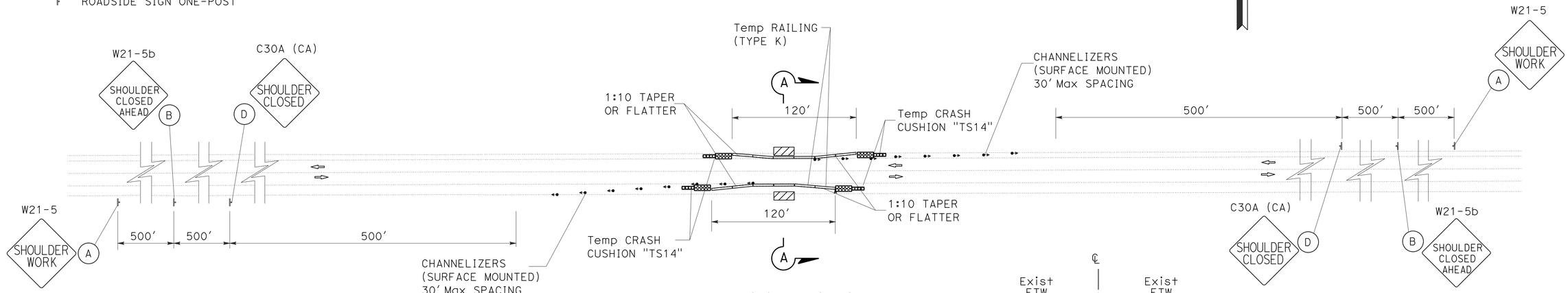

LOCATIONS

No.	COUNTY	ROUTE	POST MILE
1	Fre	33	79.75/79.97
2	Ker	46	32.75/32.95
3	Tul	63	R24.56/R24.76
4	Ker	119	26.17/26.37
5	Tul	216	13.31/13.51

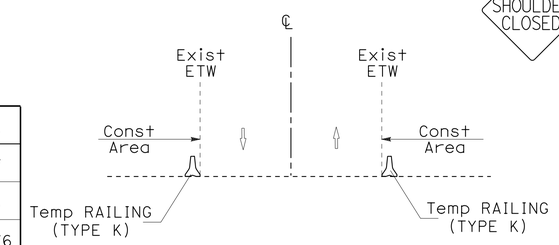

SECTION A-A
NO SCALE

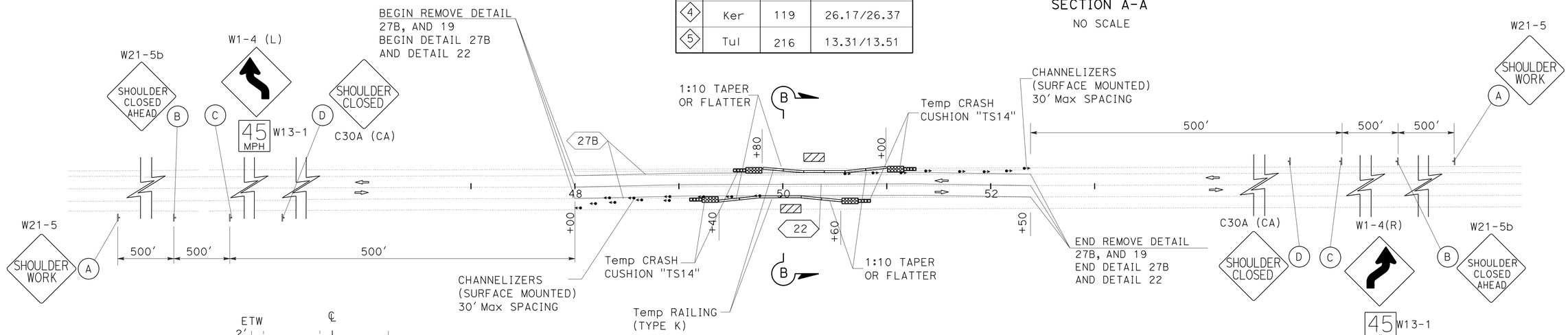

LOCATION

No.	COUNTY	ROUTE	POST MILE
6	Ker	223	9.5/10.0

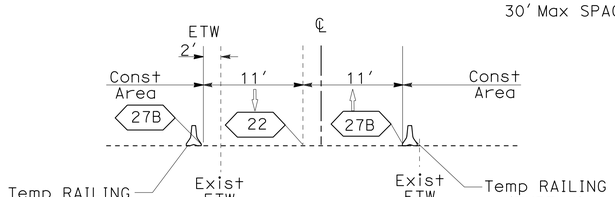

SECTION B-B
NO SCALE

APPROVED FOR TRAFFIC HANDLING WORK ONLY

TRAFFIC HANDLING PLAN

TH-1

SCALE:1"=50′

STATE OF CALIFORNIA - DEPARTMENT OF TRANSPORTATION
Caltrans®
TRAFFIC DESIGN

FUNCTIONAL SUPERVISOR: MOHAMMED QATAMI
CALCULATED-DESIGNED BY: VANIK POGOSYAN
CHECKED BY: HASSAN TAHA
REVISED BY
DATE REVISED

LAST REVISION 05-01-13
DATE PLOTTED => 03-JUN-2013
TIME PLOTTED => 16:14

Dist	COUNTY	ROUTE	POST MILES TOTAL PROJECT	SHEET No.	TOTAL SHEETS
06	Fre,Ker, Tul	33,46,63 119,216,223	Var	17	33

Hassan Taha 04-22-13
REGISTERED CIVIL ENGINEER DATE

5-20-13
PLANS APPROVAL DATE

REGISTERED PROFESSIONAL ENGINEER HASSAN M. TAHA No. 60130 Exp. 06/30/14 CIVIL STATE OF CALIFORNIA

THE STATE OF CALIFORNIA OR ITS OFFICERS OR AGENTS SHALL NOT BE RESPONSIBLE FOR THE ACCURACY OR COMPLETENESS OF SCANNED COPIES OF THIS PLAN SHEET.

STATIONARY MOUNTED CONSTRUCTION AREA SIGNS

SHEET No.	SIGN No.	SIGN CODE	SIGN MESSAGE	PANEL SIZE	No. OF POST AND SIZE	No. OF SIGNS
TH-1	A	W21-5	SHOULDER WORK	48" x 48"	1 - 4" x 6"	12
	B	W21-5b	SHOULDER CLOSED AHEAD	48" x 48"	1 - 4" x 6"	12
	C	W1-4	REVERSE CURVE(Rt,Lt)	48" x 48"	1 - 4" x 6"	2
		W13-1	ADVISORY SPEED	30" x 30"		
	D	C30A (CA)	SHOULDER CLOSED	48" x 48"	1 - 4" x 6"	12

TEMPORARY CRASH CUSHION MODULE

SHEET No.	LOCATION No.	EA
TH-1	1	56
	2	56
	3	56
	4	56
	5	56
	6	56
	TOTAL	336

TEMPORARY RAILING (TYPE K)

SHEET No.	LOCATION No.	LENGTH (LF)
TH-1	1	240
	2	240
	3	240
	4	240
	5	240
	6	240
	TOTAL	1440

CHANNELIZER (SURFACE MOUNTED)

SHEET No.	LOCATION No.	EA
TH-1	1	16
	2	16
	3	16
	4	16
	5	16
	6	16
	TOTAL	96

TEMPORARY PAVEMENT DELINEATION

SHEET No.	LOCATION No.	LOCATION STA TO STA	DETAIL No.	TEMPORARY PAVEMENT MARKER	REMOVE PAVEMENT MARKER	REMOVE THERMOPLASTIC TRAFFIC STRIPE		TEMPORARY TRAFFIC STRIPE (TAPE)
						WHITE	YELLOW (HAZARDOUS WASTE)	
				EA	EA	LF	LF	LF
TH-1	6	48+00 TO 52+50	27B			1800		900
			22	40				900
			19		32		563	
TOTAL				40	32	1800	563	1800

TRAFFIC HANDLING QUANTITIES

THQ-1

REVISED BY	DATE REVISED

CALCULATED-DESIGNED BY	CHECKED BY
VANIK POGOSYAN	HASSAN TAHA

FUNCTIONAL SUPERVISOR: MOHAMMED QATAMI

STATE OF CALIFORNIA - DEPARTMENT OF TRANSPORTATION
Caltrans
TRAFFIC DESIGN

LAST REVISION 05-01-13 | DATE PLOTTED => 03-JUN-2013 | TIME PLOTTED => 16:14

Dist	COUNTY	ROUTE	POST MILES TOTAL PROJECT	SHEET No.	TOTAL SHEETS
06	Fre,Ker, Tul	33,46,63 119,216,223	Var	18	33

Eric Olson 5-20-13
REGISTERED CIVIL ENGINEER DATE

5-20-13
PLANS APPROVAL DATE

REGISTERED PROFESSIONAL ENGINEER ERIC H. OLSON No. 60801 Exp. 12/31/14 CIVIL STATE OF CALIFORNIA

THE STATE OF CALIFORNIA OR ITS OFFICERS OR AGENTS SHALL NOT BE RESPONSIBLE FOR THE ACCURACY OR COMPLETENESS OF SCANNED COPIES OF THIS PLAN SHEET.

ROADWAY QUANTITIES

LOCATION	STRUCTURAL CONCRETE, BOX CULVERT	STRUCTURAL CONCRETE, RETAINING WALL	BAR REINFORCING STEEL (BOX CULVERT)	BAR REINFORCING STEEL (RETAINING WALL)	RCP		DRILL AND BOND DOWEL	CABLE RAILING	REMOVE CONCRETE	STRUCTURAL SHOTCRETE	ROADWAY EXCAVATION	IMPORTED BORROW	HOT MIX ASPHALT (TYPE A)	CLASS 2 AGGREGATE BASE	CONCRETE BARRIER (TYPE K)	CRASH CUSHION, SAND FILLED	ROCK SLOPE PROTECTION (1/4 T, METHOD B)	ROCK SLOPE PROTECTION FABRIC (CLASS 8)	STRUCTURAL BACKFILL (SLURRY CEMENT)	CHAIN LINK FENCE (TYPE CL-6)	REMOVE CHAIN LINK FENCE	CHAIN LINK RAILING (TYPE 7)	REMOVE MARKER	RELOCATE ROADSIDE SIGN
					42"	48"																		
	CY	CY	LB	LB	LF	LF	LF	LF	CY	CY	CY	CY	TON	CY	LF	EA	CY	SQYD	CY	LF	LF	LF	EA	EA
LOCATION 1 - SR 33 PM 79.75/79.97	70	64	14,934	5,700					49			114											1	1
LOCATION 2 - SR 46 PM 32.75/32.95		4		586			50		2		18	55	116		120	2							3	
LOCATION 3 - SR 63 PM R24.56/R24.76	62	54	14,638	4,386					48			92					120	110		6	12	45	1	
LOCATION 4 - SR 119 PM 26.17/26.37		8		551		60		51	13		110	44	8						30					
LOCATION 5 - SR 216 PM 13.31/13.51	48	62	11,260	5,100			10		34			110	2											
LOCATION 6 - SR 223 PM 9.5/10.0		7		390	44				9	5	98	69	27	98									5	
TOTAL	180	199	40,832	16,713	44	60	60	51	155	5	226	488	153	98	120	2	120	110	30	6	12	45	10	1

TEMPORARY WATER POLLUTION CONTROL

LOCATION	TEMPORARY FENCE (TYPE ESA)	TEMPORARY FIBER ROLL	TEMPORARY GRAVEL BAG BERM	TEMPORARY DRAINAGE INLET PROTECTION
	LF	LF	LF	EA
LOCATION 1		60	40	
LOCATION 2	200	60		
LOCATION 3		60	70	
LOCATION 4		40	50	
LOCATION 5	300	90	90	1
LOCATION 6		40	20	
TOTAL	500	350	270	1

ALTERNATIVE PIPE CULVERT

ALLOWABLE MATERIAL
RCP (FOR Min ALLOWABLE CLASS SEE STANDARD PLAN)
PLASTIC PIPE (TYPE S)

DRAINAGE QUANTITIES

LOCATION	INLET			PLACE HOT MIX ASPHALT (Misc AREA)	18" APC	PLACE HOT MIX ASPHALT DIKE (TYPE E)	REMOVE AC DIKE	REMOVE AC OVERSIDE DRAIN	* HOT MIX ASPHALT (TYPE A)	FRAME AND GRATE (N) (TYPE GO W/24-12x)
	DESIGN H (N)	MINOR CONCRETE (MINOR Str)	Misc IRON AND STEEL							
	LF	CY	LB	SQYD	LF	LF	LF	EA	TON	EA
LOCATION 5	3	1.24	239	14	17	13	26	2	2	1
TOTAL	3	1.24	239	14	17	13	26	2	2	1

(N) NOT A SEPARATE PAY ITEM, FOR INFORMATION ONLY.

* INCLUDED IN ROADWAY QUANTITIES TABLE.

SUMMARY OF QUANTITIES

Q-1

STATE OF CALIFORNIA - DEPARTMENT OF TRANSPORTATION
Caltrans® DESIGN

FUNCTIONAL SUPERVISOR: DAVID FRANKE
CALCULATED-DESIGNED BY: ERIC OLSON
CHECKED BY: JOHNNY SOLANO
REVISED BY
DATE REVISED: 2/15/13

LAST REVISION 05-01-13
DATE PLOTTED => 26-JUN-2013
TIME PLOTTED => 13:47

Dist	COUNTY	ROUTE	POST MILES TOTAL PROJECT	SHEET No.	TOTAL SHEETS
06	Fre,Ker, Tul	33,46,63 119,216,223	Var	19	33

R. Brad Cole
LICENSED LANDSCAPE ARCHITECT

5-20-13
PLANS APPROVAL DATE

LICENSED LANDSCAPE ARCHITECT
R. BRADBURY COLE No. 4598
R. Brad Cole
11/30/10
Renewal Date
5/20/13
Date
STATE OF CALIFORNIA

THE STATE OF CALIFORNIA OR ITS OFFICERS OR AGENTS SHALL NOT BE RESPONSIBLE FOR THE ACCURACY OR COMPLETENESS OF SCANNED COPIES OF THIS PLAN SHEET.

EROSION CONTROL (TYPE 1)

SEQUENCE	ITEM	MATERIAL		APPLICATION RATE	DEPTH
		DESCRIPTION	TYPE		
STEP 1	HYDROSEED	SEED	MIX 1	20 LB/ACRE	-
		FIBER	CELLULOSE	400 LB/ACRE	-
		FERTILIZER	ORGANIC*	100 LB/ACRE	-
STEP 2	HYDROMULCH	FIBER	CELLULOSE	800 LB/ACRE	-
		TACKIFIER	PSYLLIUM	400 LB/ACRE	-
		ALTERNATE FIBER	STRAW	1000 LB/ACRE	-

* ORGANIC FERTILIZER MUST BE PELLETED OR GRANULAR AND SHALL HAVE A GUARANTEED CHEMICAL ANALYSIS RANGE (N-P-K) (%) WITHIN: (N) 5 TO 7, (P) 1 TO 5, AND (K) 2 TO 10. THE CUMULATIVE (N) RELEASE RATE MUST BE NO MORE THAN 70 PERCENT THE FIRST 70 DAYS AFTER INCUBATION (86 DEGREE F) WITH 100 PERCENT AT 350 DAYS OR MORE.

SEED MIX

SEED	BOTANICAL NAME (COMMON NAME)	PERCENT GERMINATION (MINIMUM)	POUNDS PURE LIVE SEED PER ACRE (SLOPE MEASUREMENT)
MIX 1	ELYMUS GLAUCUS* (BLUE WILDRYE)	85	6
	ESCHSCHOLZIA CALIFORNICA* (CALIFORNIA POPPY)	80	3
	HORDEUM VULGARE* (COMMON BARLEY)	85	3
	NASSELLA PULCHRA* (PURPLE NEEDLE GRASS)	85	1
	TRIFOLIUM HIRTUM* (ROSE CLOVER)	80	1
	VULPIA MICROSTACHYS* (SMALL FESCUE)	90	6

*SEED PRODUCED IN CALIFORNIA ONLY.

EROSION CONTROL LEGEND

NO SCALE

ECL-1

STATE OF CALIFORNIA - DEPARTMENT OF TRANSPORTATION
Caltrans® LANDSCAPE ARCHITECTURE

SENIOR LANDSCAPE ARCHITECT: BRAD COLE
CALCULATED-DESIGNED BY: ROBYN FONG
CHECKED BY
REVISED BY: RF
DATE REVISED: 04/29/13

LAST REVISION 05-01-13
DATE PLOTTED => 03-JUN-2013
TIME PLOTTED => 16:14

Dist	COUNTY	ROUTE	POST MILES TOTAL PROJECT	SHEET No.	TOTAL SHEETS
06	Fre,Ker, Tul	33,46,63 119,216,223	Var	20	33

R. Brad Cole
LICENSED LANDSCAPE ARCHITECT

5-20-13
PLANS APPROVAL DATE

LICENSED LANDSCAPE ARCHITECT
R. BRADBURY COLE No. 4598
R. Brad Cole
Expiration Date 11/30/10
Renewal Date 5/20/13
Date
STATE OF CALIFORNIA

THE STATE OF CALIFORNIA OR ITS OFFICERS OR AGENTS SHALL NOT BE RESPONSIBLE FOR THE ACCURACY OR COMPLETENESS OF SCANNED COPIES OF THIS PLAN SHEET.

NOTES:

FOR ACCURATE RIGHT OF WAY DATA,
CONTACT RIGHT OF WAY ENGINEERING AT DISTRICT OFFICE.

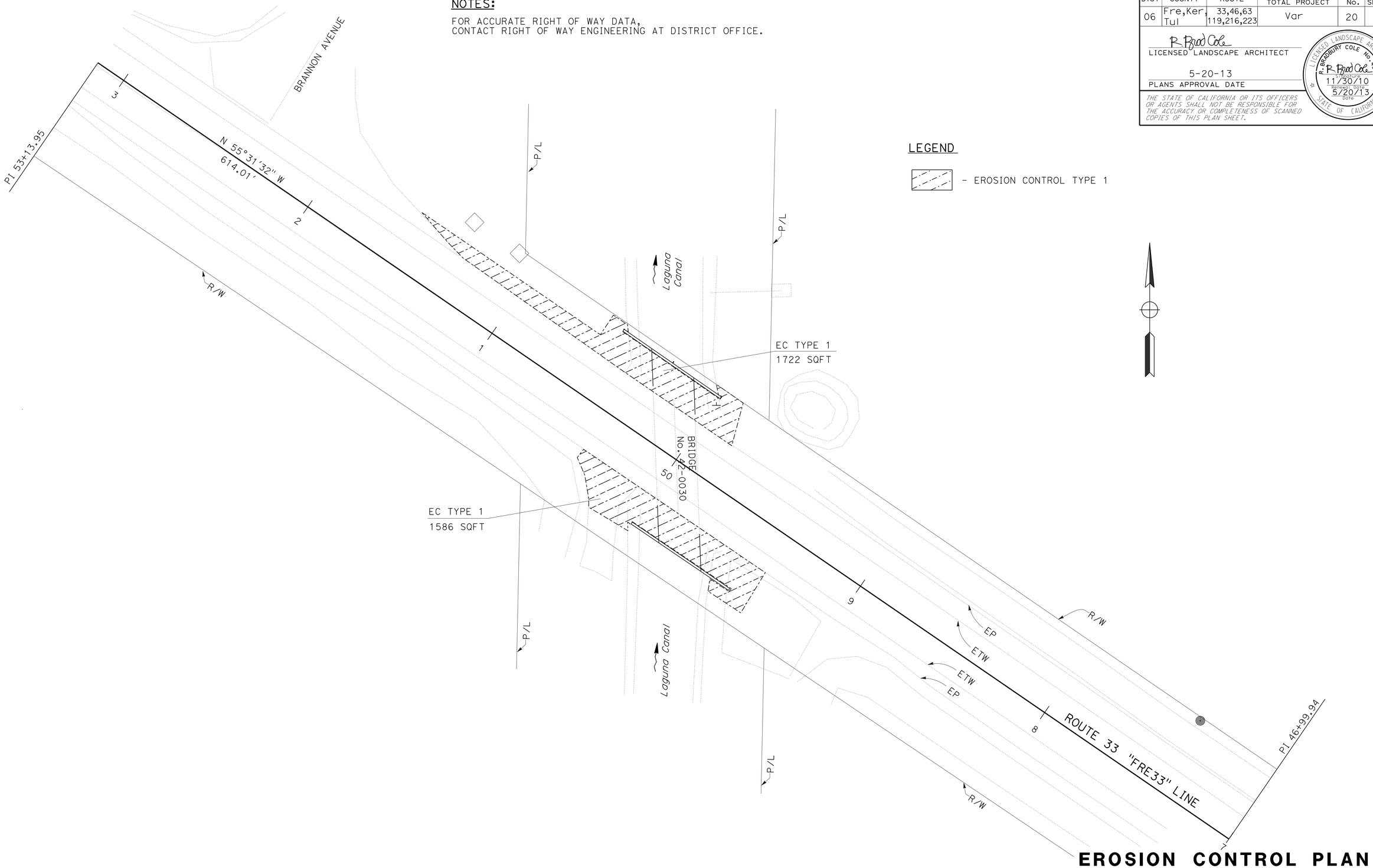

LEGEND

- EROSION CONTROL TYPE 1

EROSION CONTROL PLAN
(LOCATION 1)

APPROVED FOR EROSION CONTROL WORK ONLY

SCALE: 1" = 20'

EC-1

STATE OF CALIFORNIA - DEPARTMENT OF TRANSPORTATION
Caltrans® LANDSCAPE ARCHITECTURE

SENIOR LANDSCAPE ARCHITECT: BRAD COLE
CALCULATED-DESIGNED BY: ROBYN FONG
CHECKED BY:
REVISED BY: RF
DATE REVISED: 04/29/13

LAST REVISION 05-01-13
DATE PLOTTED => 04-JUN-2013
TIME PLOTTED => 14:17

Dist	COUNTY	ROUTE	POST MILES TOTAL PROJECT	SHEET No.	TOTAL SHEETS
06	Fre,Ker, Tul	33,46,63 119,216,223	Var	21	33

R. Brad Cole
LICENSED LANDSCAPE ARCHITECT

5-20-13
PLANS APPROVAL DATE

LICENSED LANDSCAPE ARCHITECT R. BRADBURY COLE No. 4518 R. Brad Cole Signature 11/30/10 Renewal Date 5/20/13 Date STATE OF CALIFORNIA

THE STATE OF CALIFORNIA OR ITS OFFICERS OR AGENTS SHALL NOT BE RESPONSIBLE FOR THE ACCURACY OR COMPLETENESS OF SCANNED COPIES OF THIS PLAN SHEET.

NOTES:

FOR ACCURATE RIGHT OF WAY DATA,
CONTACT RIGHT OF WAY ENGINEERING AT DISTRICT OFFICE.

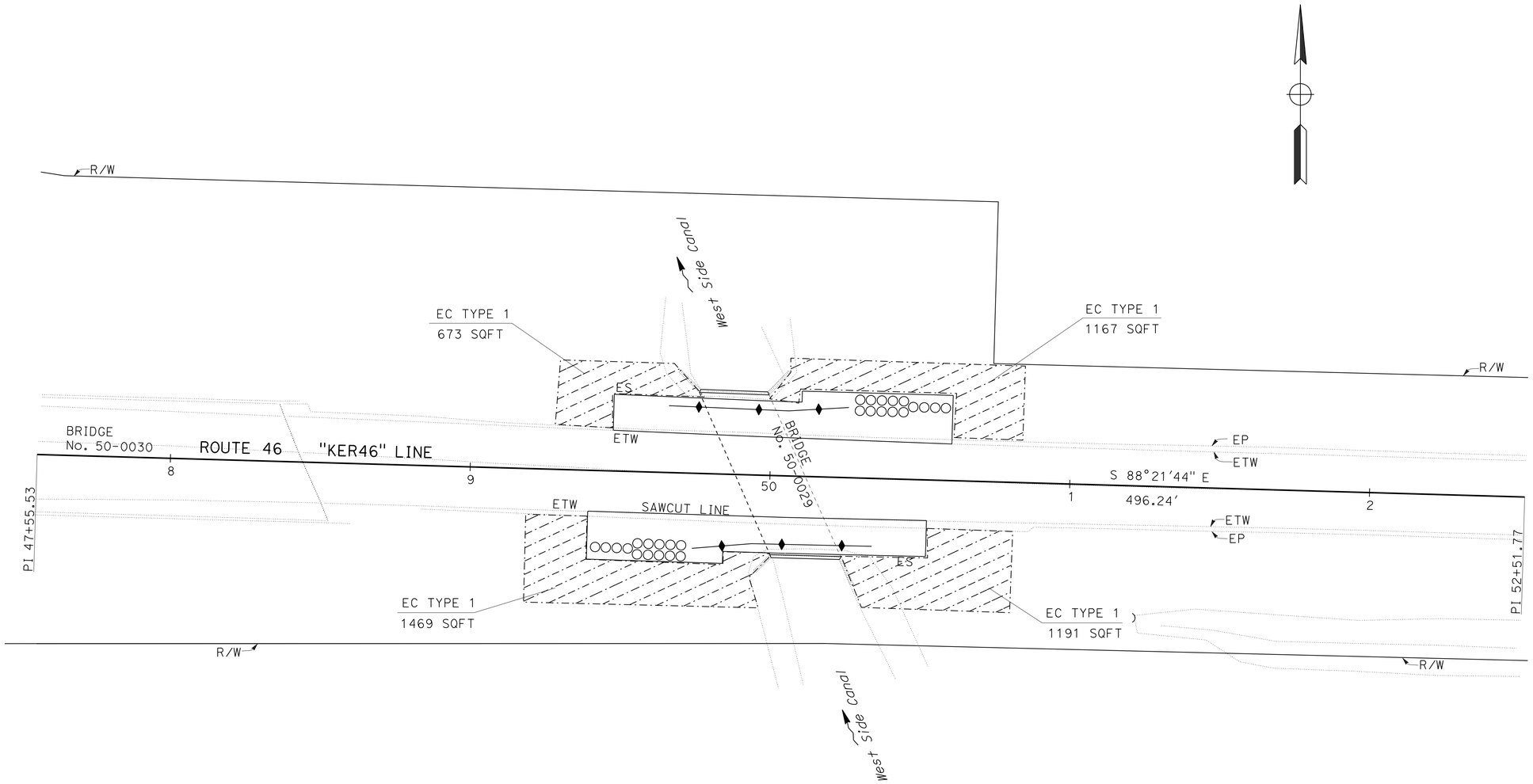

EROSION CONTROL PLAN
(LOCATION 2)
EC-2

SCALE: 1" = 20'

APPROVED FOR EROSION CONTROL WORK ONLY

STATE OF CALIFORNIA - DEPARTMENT OF TRANSPORTATION
Caltrans® LANDSCAPE ARCHITECTURE

SENIOR LANDSCAPE ARCHITECT: BRAD COLE
CALCULATED-DESIGNED BY: ROBYN FONG
CHECKED BY:
REVISED BY: RF
DATE REVISED: 04/29/13

LAST REVISION 05-01-13
DATE PLOTTED => 04-JUN-2013
TIME PLOTTED => 15:53

Dist	COUNTY	ROUTE	POST MILES TOTAL PROJECT	SHEET No.	TOTAL SHEETS
06	Fre,Ker, Tul	33,46,63 119,216,223	Var	22	33

R Brad Cole
LICENSED LANDSCAPE ARCHITECT

5-20-13
PLANS APPROVAL DATE

LICENSED LANDSCAPE ARCHITECT
R. BRADBURY COLE No. 4598
R Brad Cole
11/30/10
Expiration Date
5/20/13
Date
STATE OF CALIFORNIA

THE STATE OF CALIFORNIA OR ITS OFFICERS OR AGENTS SHALL NOT BE RESPONSIBLE FOR THE ACCURACY OR COMPLETENESS OF SCANNED COPIES OF THIS PLAN SHEET.

NOTES:

FOR ACCURATE RIGHT OF WAY DATA,
CONTACT RIGHT OF WAY ENGINEERING AT DISTRICT OFFICE.

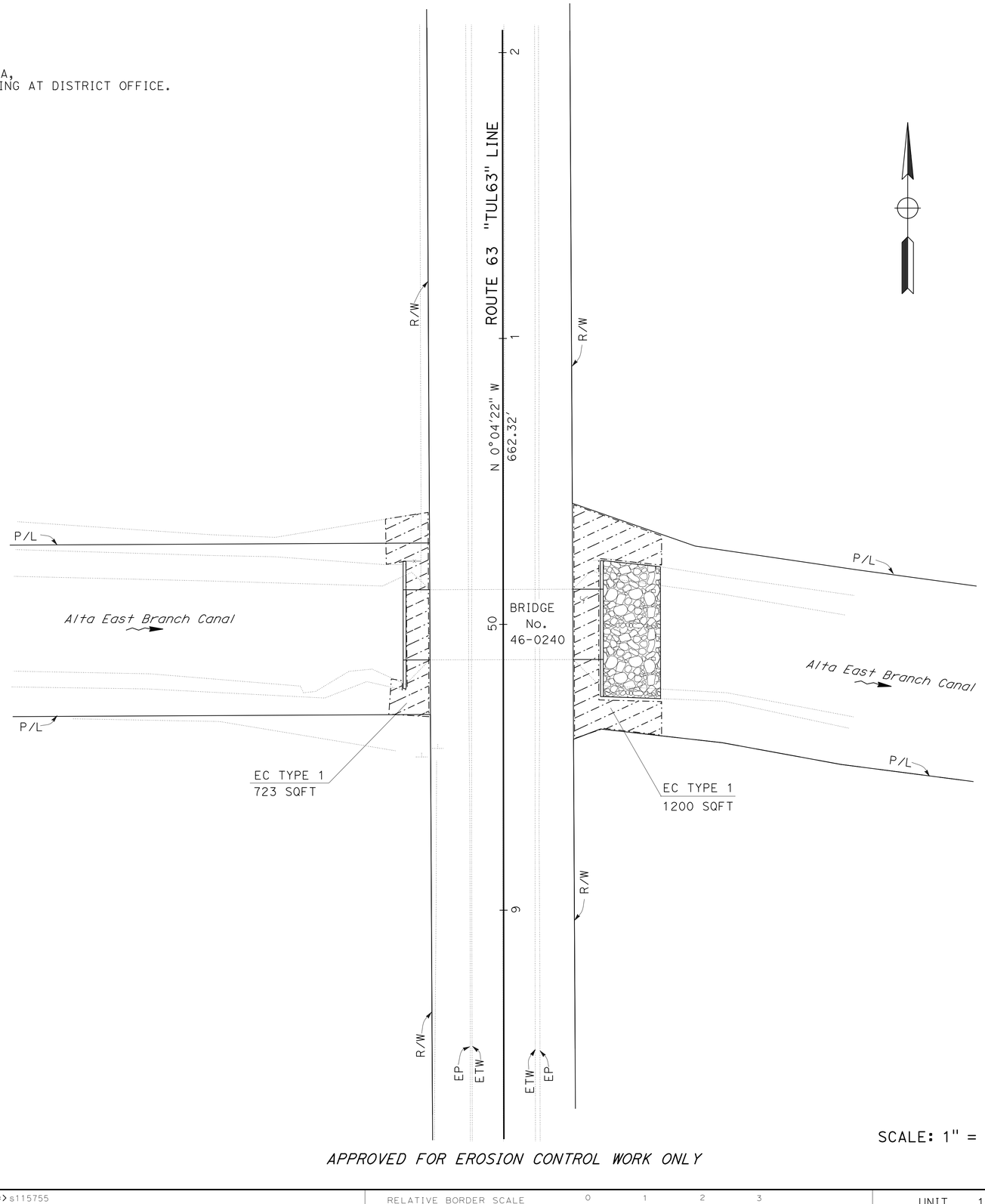

SCALE: 1" = 20'

APPROVED FOR EROSION CONTROL WORK ONLY

EROSION CONTROL PLAN
(LOCATION 3)
EC-3

STATE OF CALIFORNIA - DEPARTMENT OF TRANSPORTATION
Caltrans® LANDSCAPE ARCHITECTURE

SENIOR LANDSCAPE ARCHITECT: BRAD COLE
CALCULATED-DESIGNED BY: ROBYN FONG
CHECKED BY:
REVISED BY: RF
DATE REVISED: 04/29/13

LAST REVISION 05-01-13 | DATE PLOTTED => 04-JUN-2013 | TIME PLOTTED => 15:58

Dist	COUNTY	ROUTE	POST MILES TOTAL PROJECT	SHEET No.	TOTAL SHEETS
06	Fre,Ker, Tul	33,46,63 119,216,223	Var	23	33

R Brad Cole
LICENSED LANDSCAPE ARCHITECT

5-20-13
PLANS APPROVAL DATE

LICENSED LANDSCAPE ARCHITECT
R. BRADBURY COLE No. 4518
R Brad Cole
Signature
11/30/10
Renewal Date
5/20/13
Date
STATE OF CALIFORNIA

THE STATE OF CALIFORNIA OR ITS OFFICERS OR AGENTS SHALL NOT BE RESPONSIBLE FOR THE ACCURACY OR COMPLETENESS OF SCANNED COPIES OF THIS PLAN SHEET.

NOTES:

FOR ACCURATE RIGHT OF WAY DATA,
CONTACT RIGHT OF WAY ENGINEERING AT DISTRICT OFFICE.

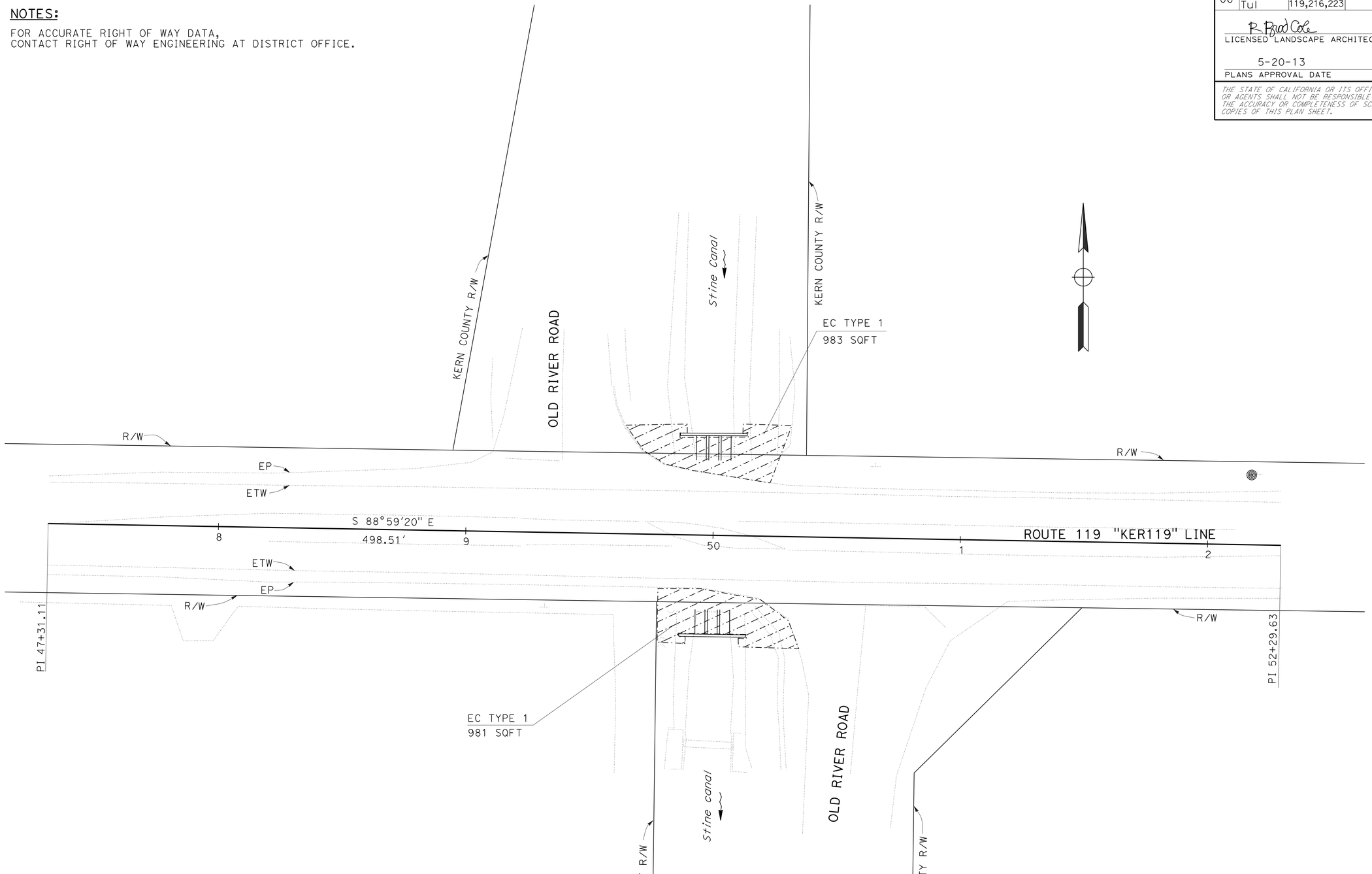

EROSION CONTROL PLAN

(LOCATION 4)

EC-4

SCALE: 1" = 20'

APPROVED FOR EROSION CONTROL WORK ONLY

REVISED BY	DATE REVISED
RF	04/29/13

CALCULATED-DESIGNED BY: ROBYN FONG
CHECKED BY: BRAD COLE
SENIOR LANDSCAPE ARCHITECT

STATE OF CALIFORNIA - DEPARTMENT OF TRANSPORTATION
Caltrans® LANDSCAPE ARCHITECTURE

LAST REVISION 05-01-13
DATE PLOTTED => 04-JUN-2013
TIME PLOTTED => 15:48

Dist	COUNTY	ROUTE	POST MILES TOTAL PROJECT	SHEET No.	TOTAL SHEETS
06	Fre,Ker, Tul	33,46,63 119,216,223	Var	24	33

R. Brad Cole
LICENSED LANDSCAPE ARCHITECT
5-20-13
PLANS APPROVAL DATE

LICENSED LANDSCAPE ARCHITECT
R. BRADBURY COLE No. 4518
R. Brad Cole
Signature
11/30/10
Renewal Date
5/20/13
Date
STATE OF CALIFORNIA

THE STATE OF CALIFORNIA OR ITS OFFICERS OR AGENTS SHALL NOT BE RESPONSIBLE FOR THE ACCURACY OR COMPLETENESS OF SCANNED COPIES OF THIS PLAN SHEET.

NOTES:

FOR ACCURATE RIGHT OF WAY DATA,
CONTACT RIGHT OF WAY ENGINEERING AT DISTRICT OFFICE.

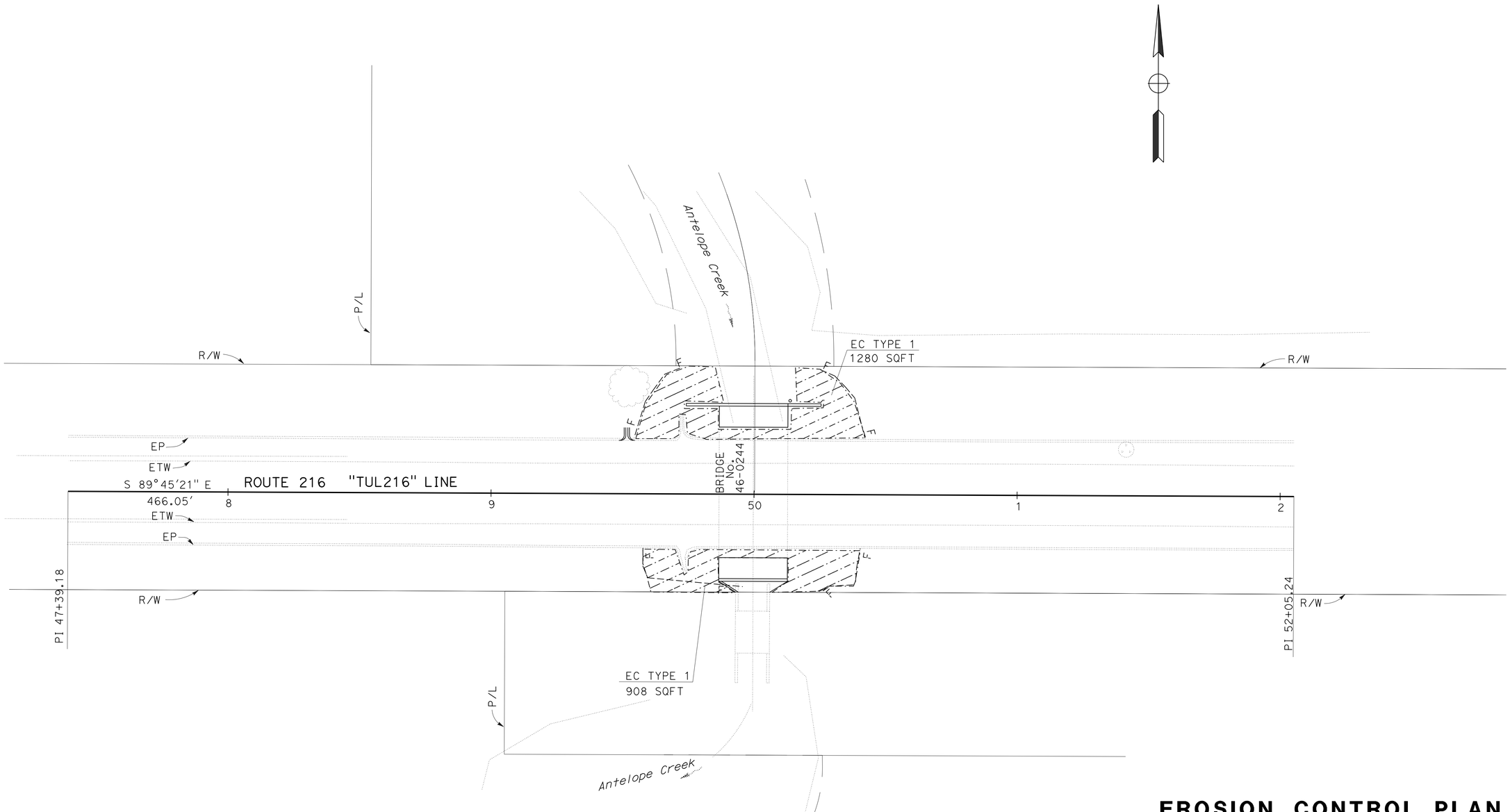

APPROVED FOR EROSION CONTROL WORK ONLY

SCALE: 1" = 20'

EROSION CONTROL PLAN
(LOCATION 5)
EC-5

STATE OF CALIFORNIA - DEPARTMENT OF TRANSPORTATION
Caltrans® LANDSCAPE ARCHITECTURE

SENIOR LANDSCAPE ARCHITECT: BRAD COLE
CALCULATED-DESIGNED BY: ROBYN FONG
CHECKED BY:
REVISED BY: RF
DATE REVISED: 04/29/13

LAST REVISION 05-01-13
DATE PLOTTED => 03-JUN-2013
TIME PLOTTED => 16:14

Dist	COUNTY	ROUTE	POST MILES TOTAL PROJECT	SHEET No.	TOTAL SHEETS
06	Fre,Ker, Tul	33,46,63 119,216,223	Var	25	33

R. Brad Cole
LICENSED LANDSCAPE ARCHITECT
5-20-13
PLANS APPROVAL DATE

LICENSED LANDSCAPE ARCHITECT R. BRADBURY COLE No. 4518 R. Brad Cole Signature 11/30/10 Renewal Date 5/20/13 Date STATE OF CALIFORNIA

THE STATE OF CALIFORNIA OR ITS OFFICERS OR AGENTS SHALL NOT BE RESPONSIBLE FOR THE ACCURACY OR COMPLETENESS OF SCANNED COPIES OF THIS PLAN SHEET.

NOTES:

FOR ACCURATE RIGHT OF WAY DATA,
CONTACT RIGHT OF WAY ENGINEERING AT DISTRICT OFFICE.

EROSION CONTROL ITEMS

SHEET NUMBER	DESCRIPTION	HYDROSEED	HYDROMULCH
		SQFT	SQFT
EC-1	EROSION CONTROL TYPE 1	3,308	3,308
EC-2	EROSION CONTROL TYPE 1	4,500	4,500
EC-3	EROSION CONTROL TYPE 1	1,923	1,923
EC-4	EROSION CONTROL TYPE 1	1,964	1,964
EC-5	EROSION CONTROL TYPE 1	2,188	2,188
EC-6	EROSION CONTROL TYPE 1	660	660
	TOTAL	14,543	14,543

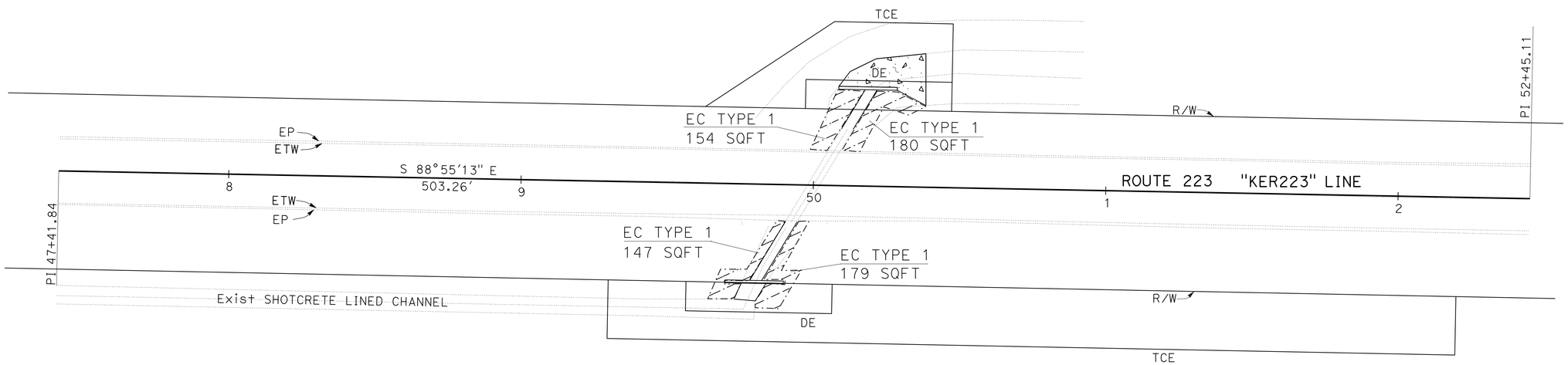

EROSION CONTROL PLAN AND QUANTITIES
(LOCATION 6)

SCALE: 1" = 20'

EC-6

APPROVED FOR EROSION CONTROL WORK ONLY

STATE OF CALIFORNIA - DEPARTMENT OF TRANSPORTATION
Caltrans® LANDSCAPE ARCHITECTURE
SENIOR LANDSCAPE ARCHITECT: BRAD COLE
CALCULATED-DESIGNED BY: ROBYN FONG
CHECKED BY:
REVISED BY: RF
DATE REVISED: 04/29/13

LAST REVISION 05-01-13
DATE PLOTTED => 03-JUN-2013
TIME PLOTTED => 16:14

Dist	COUNTY	ROUTE	POST MILES TOTAL PROJECT	SHEET No.	TOTAL SHEETS
06	Fre,Ker Tul	33,46,63 119,216,223	Var	26	33

Daniel Thanh Vo 5-20-13
REGISTERED ELECTRICAL ENGINEER DATE

5-20-13
PLANS APPROVAL DATE

REGISTERED PROFESSIONAL ENGINEER DANIEL THANH VO No. 17408 Exp. 09/30/14 ELECTRICAL STATE OF CALIFORNIA

THE STATE OF CALIFORNIA OR ITS OFFICERS OR AGENTS SHALL NOT BE RESPONSIBLE FOR THE ACCURACY OR COMPLETENESS OF SCANNED COPIES OF THIS PLAN SHEET.

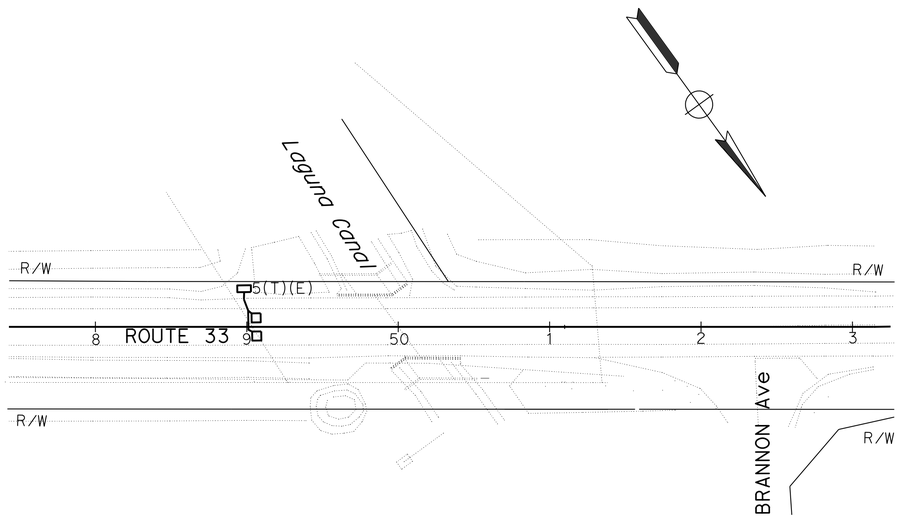

LOCATION-1

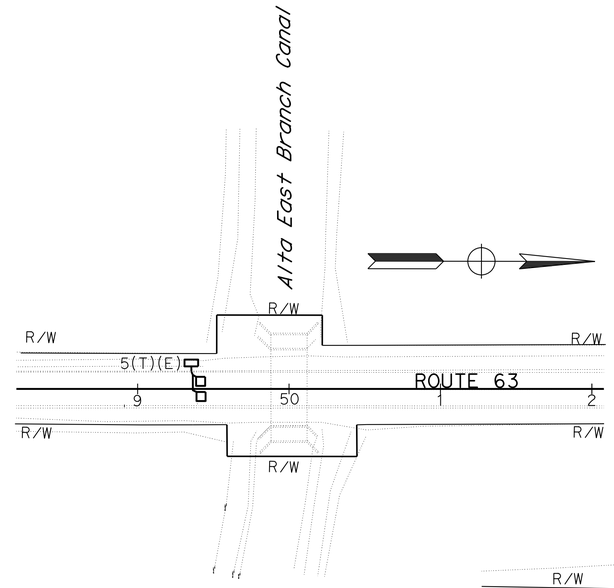

LOCATION-3

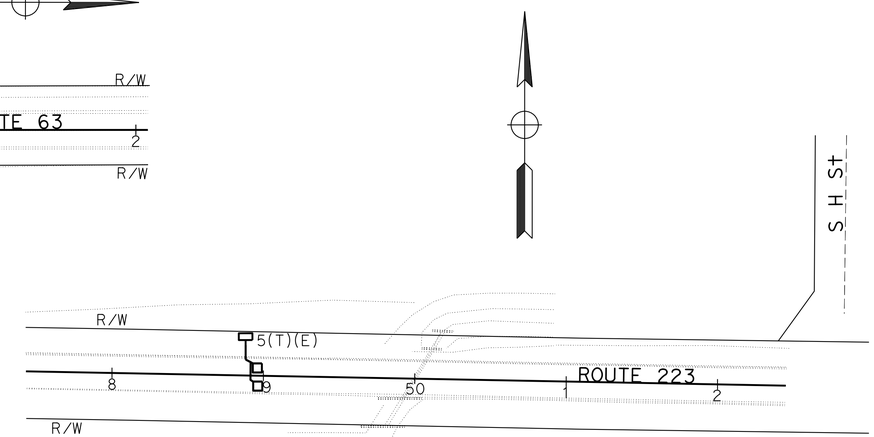

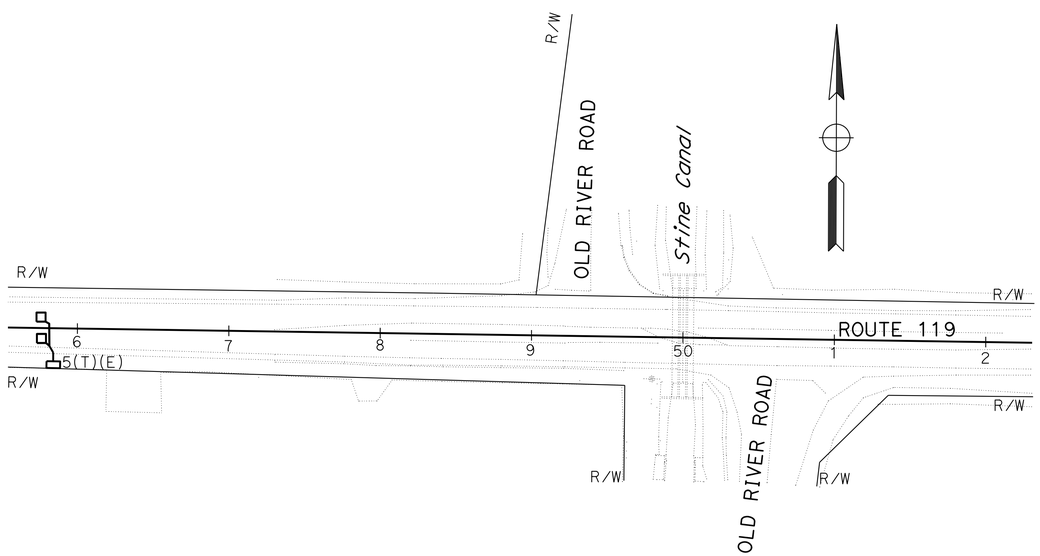

LOCATION-4

LOCATION-6

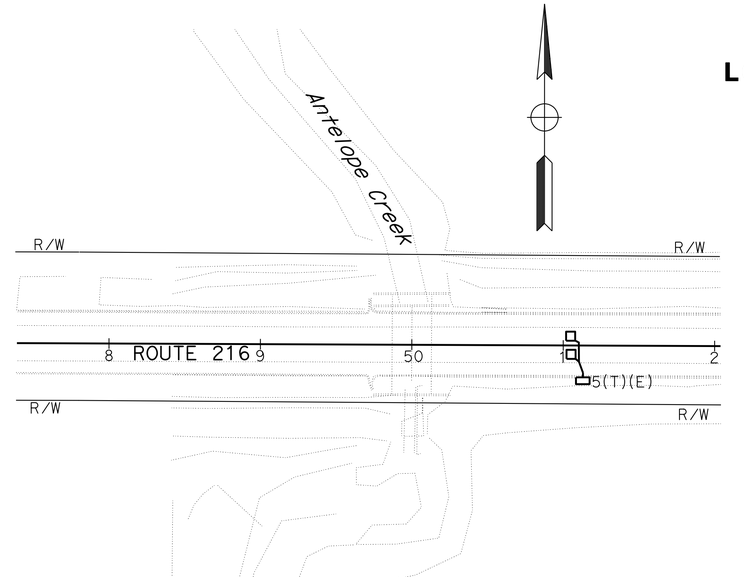

LOCATION-5

TRAFFIC COUNT STATION

E-1

APPROVED FOR ELECTRICAL WORK ONLY

SCALE 1'=50"

STATE OF CALIFORNIA - DEPARTMENT OF TRANSPORTATION
Caltrans® **ELECTRICAL DESIGN**

FUNCTIONAL SUPERVISOR: ALI BAKHDOUD
CALCULATED-DESIGNED BY: GURVINDERJIT S. BAINS
CHECKED BY: RAJPREET SINGH
REVISED BY
DATE REVISED

LAST REVISION 05-20-13
DATE PLOTTED => 06-JUN-2013
TIME PLOTTED => 08:54

Dist	COUNTY	ROUTE	POST MILES TOTAL PROJECT	SHEET No.	TOTAL SHEETS
06	Fre,Ker Tul	33,46,63 119,216,223	Var	27	33

REGISTERED ELECTRICAL ENGINEER 5-20-13 DATE

5-20-13
PLANS APPROVAL DATE

REGISTERED PROFESSIONAL ENGINEER DANIEL THANH VO No. 17408 Exp. 09/30/14 ELECTRICAL STATE OF CALIFORNIA

THE STATE OF CALIFORNIA OR ITS OFFICERS OR AGENTS SHALL NOT BE RESPONSIBLE FOR THE ACCURACY OR COMPLETENESS OF SCANNED COPIES OF THIS PLAN SHEET.

NOTE:

THE QUANTITIES ON THIS SHEET ARE FOR INFORMATION ONLY AND ARE NOT SEPARATE PAY ITEMS.

TRAFFIC COUNT STATION

SHEET No.	DETECTOR LOOP TYPE A	2"C, TYPE 3	No. 5(T)(E) PB
	EA	LF	EA
E-1	10	50	5

ELECTRICAL QUANTITIES
E-2

REVISED BY | DATE REVISED

GURVINDERJIT S. BAINS | RAJPREET SINGH

CALCULATED-DESIGNED BY | CHECKED BY

FUNCTIONAL SUPERVISOR: ALI BAKHDOUD

STATE OF CALIFORNIA - DEPARTMENT OF TRANSPORTATION
Caltrans® ELECTRICAL DESIGN

LAST REVISION 05-20-13 | DATE PLOTTED => 06-JUN-2013 | TIME PLOTTED => 08:50

Dist	COUNTY	ROUTE	POST MILES TOTAL PROJECT	SHEET No.	TOTAL SHEETS
06	Fre,Ker, Tul	33,46,63 119,216,223	Var	28	33

REGISTERED CIVIL ENGINEER

October 21, 2011
PLANS APPROVAL DATE

REGISTERED PROFESSIONAL ENGINEER Tillat Satter No. C42892 Exp. 3-31-12 CIVIL STATE OF CALIFORNIA

THE STATE OF CALIFORNIA OR ITS OFFICERS OR AGENTS SHALL NOT BE RESPONSIBLE FOR THE ACCURACY OR COMPLETENESS OF SCANNED COPIES OF THIS PLAN SHEET.

TO ACCOMPANY PLANS DATED 5-20-13

2010 REVISED STANDARD PLAN RSP B11-47

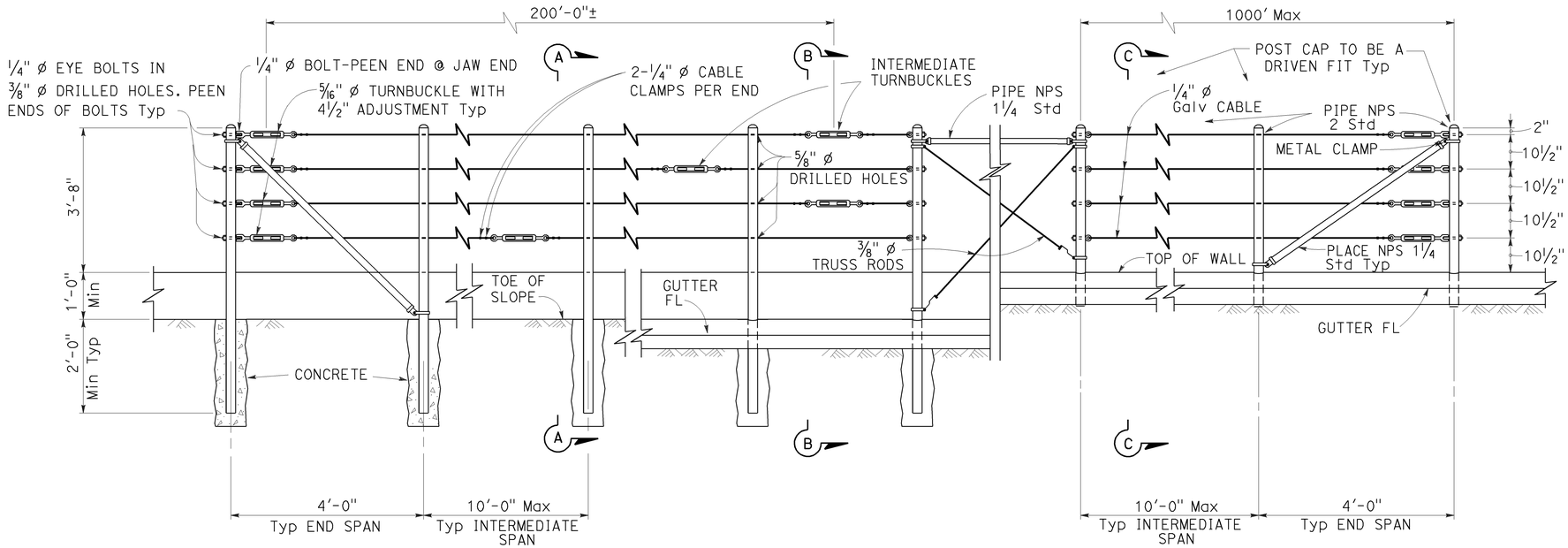

EXISTING WALL (WITHOUT GUTTER)
Existing

RETAINING WALL (WITH GUTTER)
Existing

RETAINING WALL (WITH GUTTER)
New construction

ELEVATION

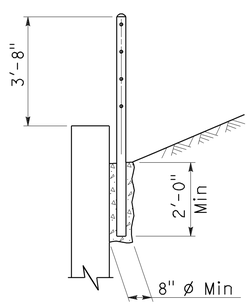

SECTION A-A
Existing

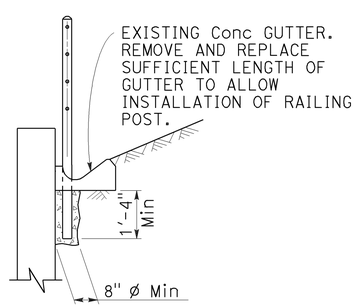

SECTION B-B
Existing

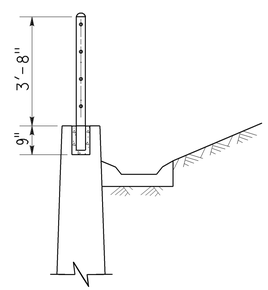

SECTION C-C
New construction

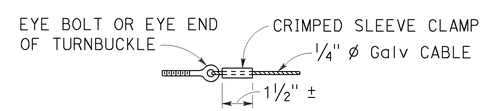

ALTERNATIVE CABLE CONNECTION

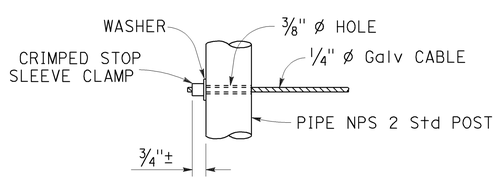

ALTERNATIVE DEAD END ANCHORAGE

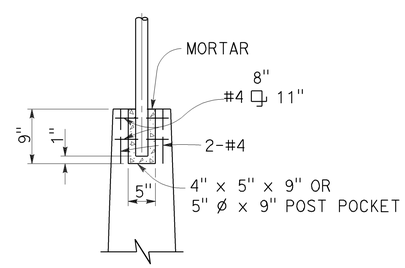

POST POCKET

NOTES:

1. Maximum distance between turnbuckles shall be 200'-0"±.
2. Intermediate turnbuckles to be placed in adjacent spans.
3. Cable shall not be spliced between intermediate turnbuckles and end posts.
4. Posts to be vertical.
5. Alignment of holes in posts may vary to conform to slope of top of retaining wall.
6. The Contractor shall verify all dependent dimensions in the field before ordering or fabricating any material.
7. Line posts shall be braced horizontally and trussed diagonally in both directions at intervals not to exceed 1000'.
8. Post pockets to be centered in top of wall.
9. Typical end spans, braced in both directions, shall be constructed at changes in line where the angle of deflection is 15° or more.
10. Provide thimbles at all cable loops.

STATE OF CALIFORNIA
DEPARTMENT OF TRANSPORTATION

CABLE RAILING

NO SCALE

RSP B11-47 DATED OCTOBER 21, 2011 SUPERSEDES STANDARD PLAN B11-47 DATED MAY 20, 2011 - PAGE 293 OF THE STANDARD PLANS BOOK DATED 2010.

REVISED STANDARD PLAN RSP B11-47

9-14-11

DIST	COUNTY	ROUTE	POST MILES TOTAL PROJECT	SHEET NO.	TOTAL SHEETS
06	Fre,Ker, Tul	33,46,63 119,216,223	Var	29	33

REGISTERED ELECTRICAL ENGINEER

January 20, 2012
PLANS APPROVAL DATE

REGISTERED PROFESSIONAL ENGINEER Jeffery G. McRae No. E14512 Exp. 6-30-12 ELECTRICAL STATE OF CALIFORNIA

THE STATE OF CALIFORNIA OR ITS OFFICERS OR AGENTS SHALL NOT BE RESPONSIBLE FOR THE ACCURACY OR COMPLETENESS OF SCANNED COPIES OF THIS PLAN SHEET.

TO ACCOMPANY PLANS DATED 5-20-13

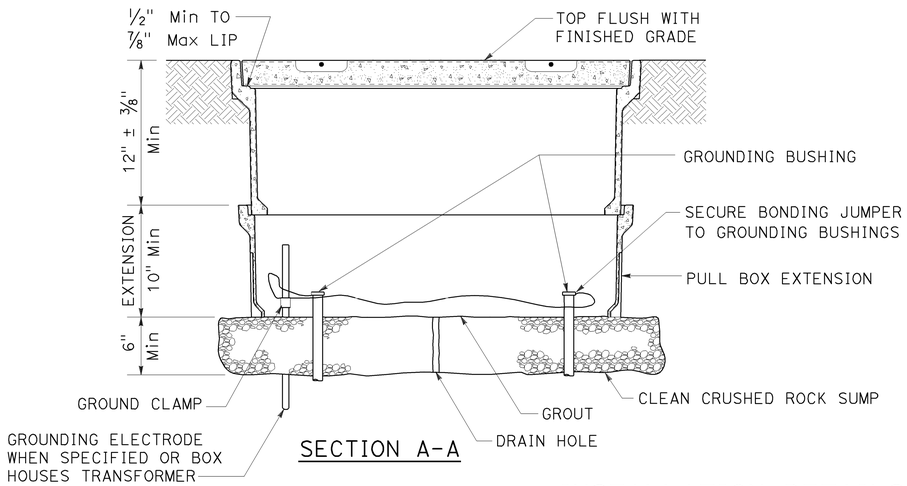

SECTION A-A

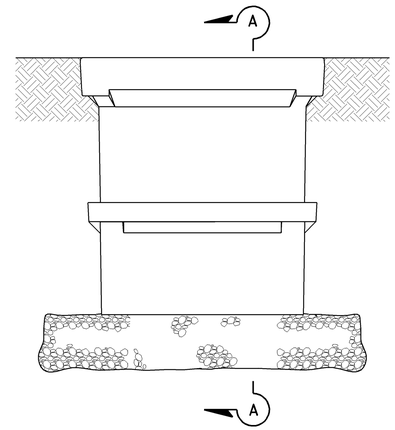

SIDE VIEW

INSTALLATION DETAILS

DETAIL A

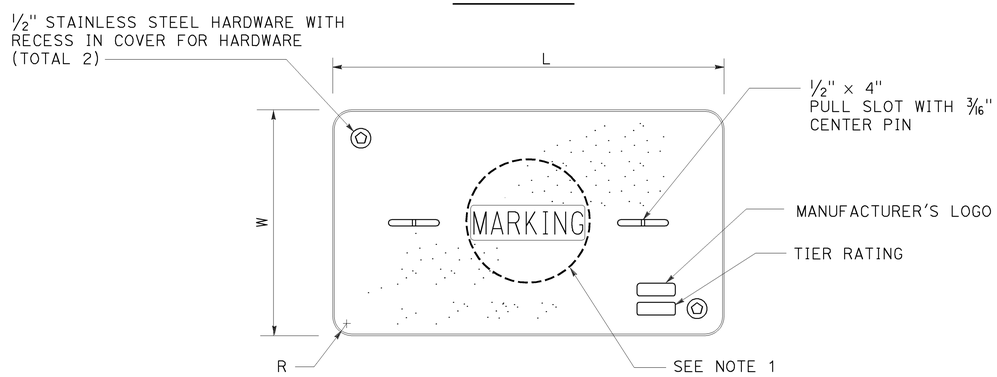

COVER TOP VIEW

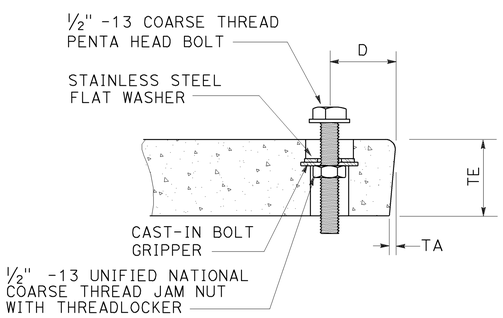

TYPICAL COVER CAPTIVE BOLT

OR SIMILAR

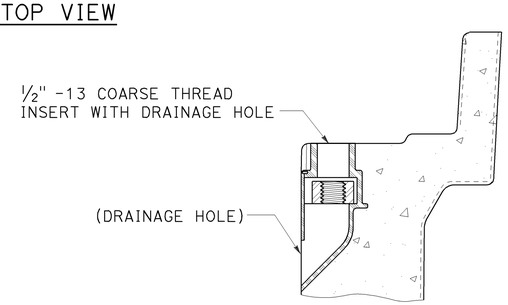

TYPICAL THREADED INSERT

OR SIMILAR

DIMENSION TABLE										
PULL BOX	PULL BOX			COVER						
	MINIMUM DEPTH BOX	MINIMUM DEPTH EXTENSION	MAXIMUM WEIGHT	L	W	R	TE	TA	D	MAXIMUM WEIGHT
No. 3 1/2	12"	N/A	40 lb	1' - 3 3/8"	10 1/8"	1 3/8"	2"	1/8"	1 3/4"	30 lb
No. 5	12"	10"	55 lb	1' - 11 1/4"	1' - 1 3/4"	1 3/8"	2"	1/8"	1 3/4"	60 lb
No. 6	12"	10"	70 lb	2' - 6 1/2"	1' - 5 1/2"	1 3/8"	2"	1/8"	2"	85 lb

NOTES ON PULL BOXES:

1. Pull box covers must be marked as follows: "SERVICE" Service circuits between service point and service disconnect; "SPRINKLER-CONTROL" sprinkler control circuits, 50 V or less; "CALTRANS" on all pull boxes, except pull boxes marked "SPRINKLER-CONTROL"; and "TELEPHONE" Telephone service;

   A) No. 3 1/2 pull box.
      1) "SIGNAL" - Traffic signal circuits with or without street or sign lighting circuits.
      2) "ST LIGHTING" - Street or sign lighting circuits where voltage is under 600 V.

   B) No. 5, 6, 9 or 9A pull box.
      1) "TRAFFIC SIGNAL" - Traffic signal circuits with or without street or sign lighting circuits.
      2) "STREET LIGHTING" - Street or sign lighting circuits where voltage is under 600 V.
      3) "STREET LIGHTING-HIGH VOLTAGE" - Street or sign lighting circuits where voltage is above 600 V.
      4) "IRRIGATION" - Circuits to irrigation controller 120 V or more.
      5) "RAMP METER" - Ramp meter circuits.
      6) "COUNT STATION" - Count or speed monitor circuits.
      7) "COMMUNICATIONS" - Communication circuits.
      8) "TOS COMMUNICATIONS" - TOS communication line.
      9) "TOS POWER" - TOS power.
      10) "TDC POWER" - Telephone demarcation cabinet power.
      11) "CCTV" - Closed circuit television circuits.
      12) "TMS" - Traffic monitoring station circuits.
      13) "CMS" - Changeable message sign circuits.
      14) "HAR" - Highway advisory radio circuits.

2. The nominal dimensions of the opening in which the cover sets must be the same as the cover dimensions (L and W) plus 1/8" or greater.
3. Covers and boxes must be interchangeable with California Standard. When interchanged with a standard, the top surfaces must be flush within 1/8". Top outside radius of covers and pull boxes must have a 1/8" radius.
4. Pull box extension may be another pull box as long as the bottom edge of the pull box can fit into the cover opening.

STATE OF CALIFORNIA
DEPARTMENT OF TRANSPORTATION

ELECTRICAL SYSTEMS (PULL BOX)

NO SCALE

RSP ES-8A DATED JANUARY 20, 2012 SUPPLEMENTS THE STANDARD PLANS BOOK DATED 2010.

REVISED STANDARD PLAN RSP ES-8A

2010 REVISED STANDARD PLAN RSP ES-8A

01-09-12

DIST	COUNTY	ROUTE	POST MILES TOTAL PROJECT	SHEET NO.	TOTAL SHEETS
06	Fre,Ker, Tul	33,46,63 119,216,223	Var	30	33

REGISTERED ELECTRICAL ENGINEER

January 20, 2012
PLANS APPROVAL DATE

REGISTERED PROFESSIONAL ENGINEER Jeffery G. McRae No. E14512 Exp. 6-30-12 ELECTRICAL STATE OF CALIFORNIA

THE STATE OF CALIFORNIA OR ITS OFFICERS OR AGENTS SHALL NOT BE RESPONSIBLE FOR THE ACCURACY OR COMPLETENESS OF SCANNED COPIES OF THIS PLAN SHEET.

TO ACCOMPANY PLANS DATED 5-20-13

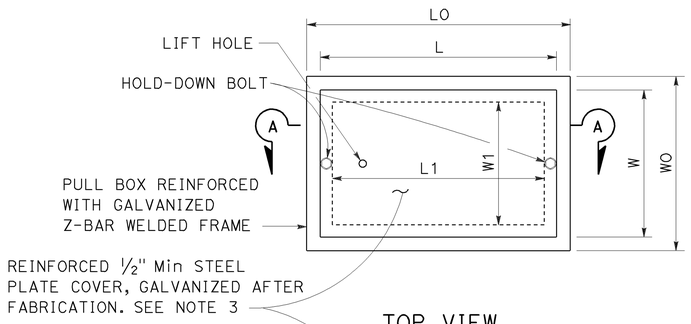

TOP VIEW

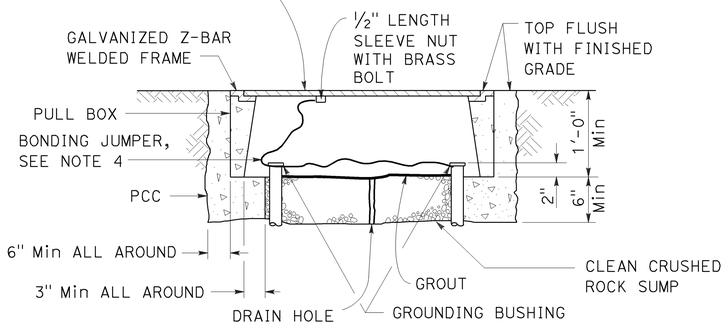

SECTION A-A

No. 3½(T), No. 5(T) AND No. 6(T) TRAFFIC PULL BOX

NOTES ON PULL BOXES:

1. Traffic pull box shall be provided with steel cover and special concrete footing. Steel cover shall have embossed non-skid pattern.
2. Steel reinforcing shall be as regularly used in the standard products of the respective manufacturer.
3. Pull box covers must be marked as follows: "SERVICE" Service circuits between service point and service disconnect; "SPRINKLER-CONTROL" Sprinkler control circuits, 50 V or less; "CALTRANS" On all pull boxes, except pull boxes marked "SPRINKLER-CONTROL"; and "TELEPHONE" Telephone service.
   A) No. 3½(T) pull box.
      1) "SIGNAL" - Traffic signal circuits with or without street or sign lighting circuits.
      2) "ST LIGHTING" - Street or sign lighting circuits where voltage is under 600 V.
   B) No. 5(T) or 6(T) pull box.
      1) "TRAFFIC SIGNAL" - Traffic signal circuits with or without street or sign lighting circuits.
      2) "STREET LIGHTING" - Street or sign lighting circuits where voltage is under 600 V.
      3) "STREET LIGHTING-HIGH VOLTAGE" - Street or sign lighting circuits where voltage is above 600 V.
      4) "IRRIGATION" - Circuits to irrigation controller 120 V or more.
      5) "RAMP METER" - Ramp meter circuits.
      6) "COUNT STATION" - Count or speed monitor circuits.
      7) "COMMUNICATION" - Communication circuits.
      8) "TOS COMMUNICATIONS" - TOS communications line.
      9) "TOS POWER" - TOS power.
      10) "TDC POWER" - Telephone demarcation cabinet power.
      11) "CCTV" - Closed circuit television circuits.
      12) "TMS" - Traffic monitoring station circuits.
      13) "CMS" - Changeable message sign circuits.
      14) "HAR" - Highway advisory radio circuits.
4. Bonding jumper for metal covers shall be 3' long, minimum.
5. The nominal dimensions of the opening in which the cover sets must be the same as the cover dimensions except the length and width dimensions shall be ⅛" greater.
6. Covers and boxes must be interchangeable with California standard male and female gages. When interchanged with a standard male or female gage, the top surfaces must be flush within ⅛".

DIMENSION TABLE

PULL BOX	BOX						COVER				
	MINIMUM * THICKNESS	MINIMUM DEPTH BOX AND EXTENSION	WO	LO	L1	W1	L **	W **	R	EDGE THICKNESS	EDGE TAPER
No. 3½(T)	1½"	1'-0"	1'-5"± 1"	1'-8⅞"±	1'-2½"±	10⅝"± 1"	1'-8"±	1'-1¾"±	0"	½"	NONE
No. 5(T)	1¾"	1'-0"	1'-11½"± 1"	2'-5½"±	1'-7"±	1'-1"± 1"	2'-3"±	1'-4"±	0"	½"	NONE
No. 6(T)	2"	1'-0"	2'-6"± 1"	2'-11½"±	1'-11½"±	1'-5"± 1"	2'-9"±	1'-8"±	0"	½"	NONE

* EXCLUDING CONDUIT WEB ** TOP DIMENSION

STATE OF CALIFORNIA
DEPARTMENT OF TRANSPORTATION

ELECTRICAL SYSTEMS (TRAFFIC RATED PULL BOX)

NO SCALE

RSP ES-8B DATED JANUARY 20, 2012 SUPPLEMENTS THE STANDARD PLANS BOOK DATED 2010.

REVISED STANDARD PLAN RSP ES-8B

2010 REVISED STANDARD PLAN RSP ES-8B

Dist	COUNTY	ROUTE	POST MILES TOTAL PROJECT	SHEET No.	TOTAL SHEETS
06	Fre,Ker, Tul	33,46,63 119,216,223	Var	31	33

REGISTERED CIVIL ENGINEER

April 19, 2013
PLANS APPROVAL DATE

REGISTERED PROFESSIONAL ENGINEER Gurinderpal Bhullar No. C48815 Exp. 9-30-14 CIVIL STATE OF CALIFORNIA

THE STATE OF CALIFORNIA OR ITS OFFICERS OR AGENTS SHALL NOT BE RESPONSIBLE FOR THE ACCURACY OR COMPLETENESS OF SCANNED COPIES OF THIS PLAN SHEET.

TO ACCOMPANY PLANS DATED 5-20-13

NOTES:

See Revised Standard Plan RSP T9 for tables.

Use cone spacing X for taper segment, Y for tangent segment or Z for conflict situations, as approriate, per Table 1, unless X, Y, or Z cone spacing is shown on this sheet.

Unless otherwise specified in the special provisions, all temporary warning signs shall have black legend on fluorescent orange background.

California codes are designated by (CA). Otherwise, Federal (MUTCD) codes are shown.

TYPICAL LANE CLOSURE WITH REVERSIBLE CONTROL

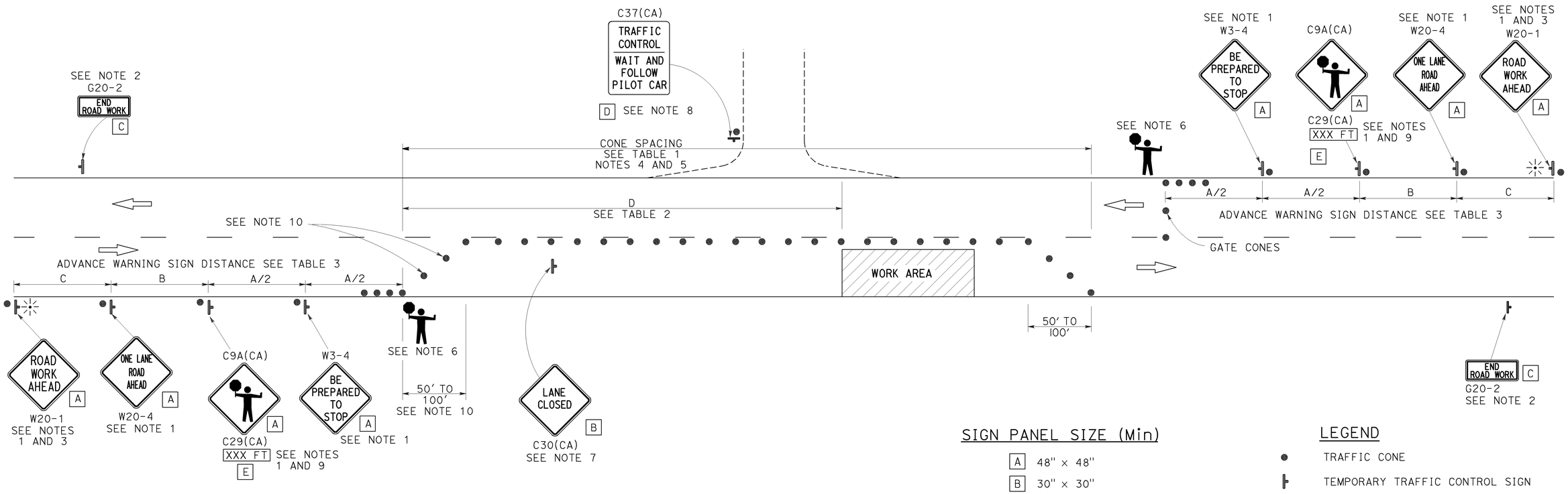

SIGN PANEL SIZE (Min)

A	48" × 48"
B	30" × 30"
C	36" × 18"
D	36" × 42"
E	20" × 7"

LEGEND

- TRAFFIC CONE
- TEMPORARY TRAFFIC CONTROL SIGN
- PORTABLE FLASHING BEACON
- FLAGGER

NOTES:

1. Each advance warning sign in each direction of travel shall be equipped with at least two flags for daytime closure. Each flag shall be at least 16" x 16" in size and shall be orange or fluorescent red-orange in color. Flashing beacons shall be placed at the locations indicated for lane closure during hours of darkness.
2. A G20-2 "END ROAD WORK" sign, as appropriate, shall be placed at the end of the lane control unless the end of work area is obvious, or ends within a larger project's limits.
3. If the W20-1 sign would follow within 2000' of a stationary W20-1 or G20-1 "ROAD WORK NEXT _____ MILES", use a W20-4 sign for the first advance warning sign.
4. All cones used for lane closures during the hours of darkness shall be fitted with retroreflective bands (or sleeves) as specified in the specifications.
5. Portable delineators, placed at one-half the spacing indicated for traffic cones, may be used instead of cones for daytime closures only.
6. Additional advance flaggers may be required. Flagger should stand in a conspicuous place, be visible to approaching traffic as well as approaching vehicles after the first vehicle has stopped. During the hours of darkness, the flagging-station and flagger shall be illuminated and clearly visible to approaching traffic. The illumination footprint of the lighting on the ground shall be at least 20' in diameter. Place a minimum of four cones at 50' intervals in advance of flagger station as shown.
7. Place C30(CA) "LANE CLOSED" sign at 500' to 1000' intervals throughout extended work areas. They are optional if the work area is visible from the flagger station.
8. When a pilot car is used, place a C37(CA) "TRAFFIC CONTROL-WAIT AND FOLLOW PILOT CAR" sign with black legend on white background at all intersections, driveways and alleys without a flagger within traffic control area. Signs shall be clean and visible at all times. Where traffic can not be effectively self-regulated, at least one flagger shall be used at each intersection within traffic control area.
9. An optional C29(CA) sign may be placed below the C9A(CA) sign.
10. Either traffic cones or barricades shall be placed on the taper. Barricades shall be Type I, II, or III.

STATE OF CALIFORNIA
DEPARTMENT OF TRANSPORTATION

TRAFFIC CONTROL SYSTEM FOR LANE CLOSURE ON TWO LANE CONVENTIONAL HIGHWAYS

NO SCALE

RSP T13 DATED APRIL 19, 2013 SUPERSEDES STANDARD PLAN T13 DATED MAY 20, 2011 - PAGE 241 OF THE STANDARD PLANS BOOK DATED 2010.

REVISED STANDARD PLAN RSP T13

2010 REVISED STANDARD PLAN RSP T13

4-2-13

DIST	COUNTY	ROUTE	POST MILES TOTAL PROJECT	SHEET No.	TOTAL SHEETS
06	Fre, Ker, Tul	33,46,63 119,216,223	Var	32	33

REGISTERED CIVIL ENGINEER — DATE 04-15-13

5-20-13
PLANS APPROVAL DATE

REGISTERED PROFESSIONAL ENGINEER — RICHARD MELKO — No. C61617 — Exp. 06-30-13 — CIVIL — STATE OF CALIFORNIA

The State of California or its officers or agents shall not be responsible for the accuracy or completeness of scanned copies of this plan sheet.

LEGEND:

Indicates existing structure & reinforcement

Denote concrete removal

NOTE:

1. Removal surface shall be sandblasted, cleaned,and roughened to an amplitude of 1/4" before placing new concrete.

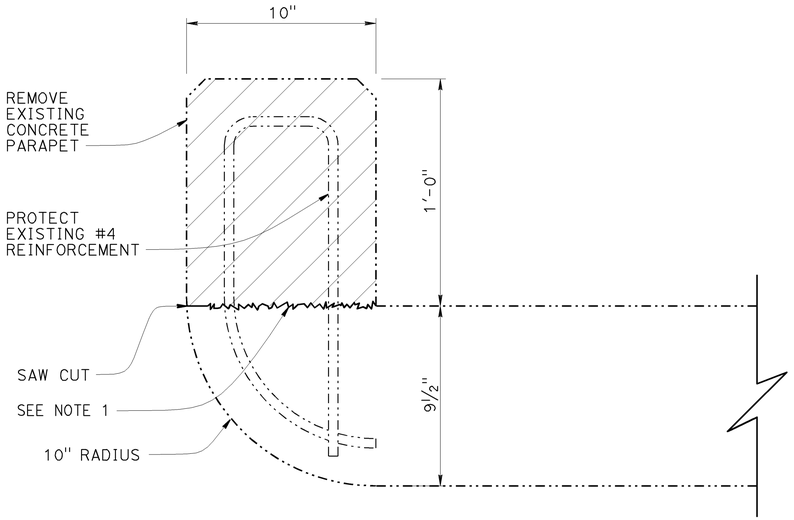

SECTION A-A: REMOVAL

3" = 1'-0"

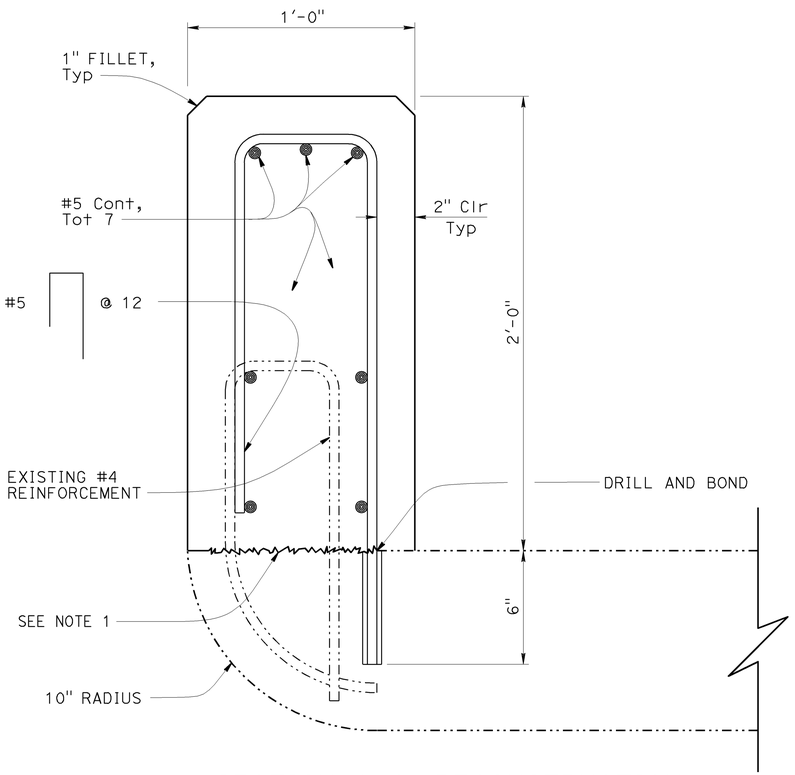

SECTION A-A: RECONSTRUCTION

3" = 1'-0"

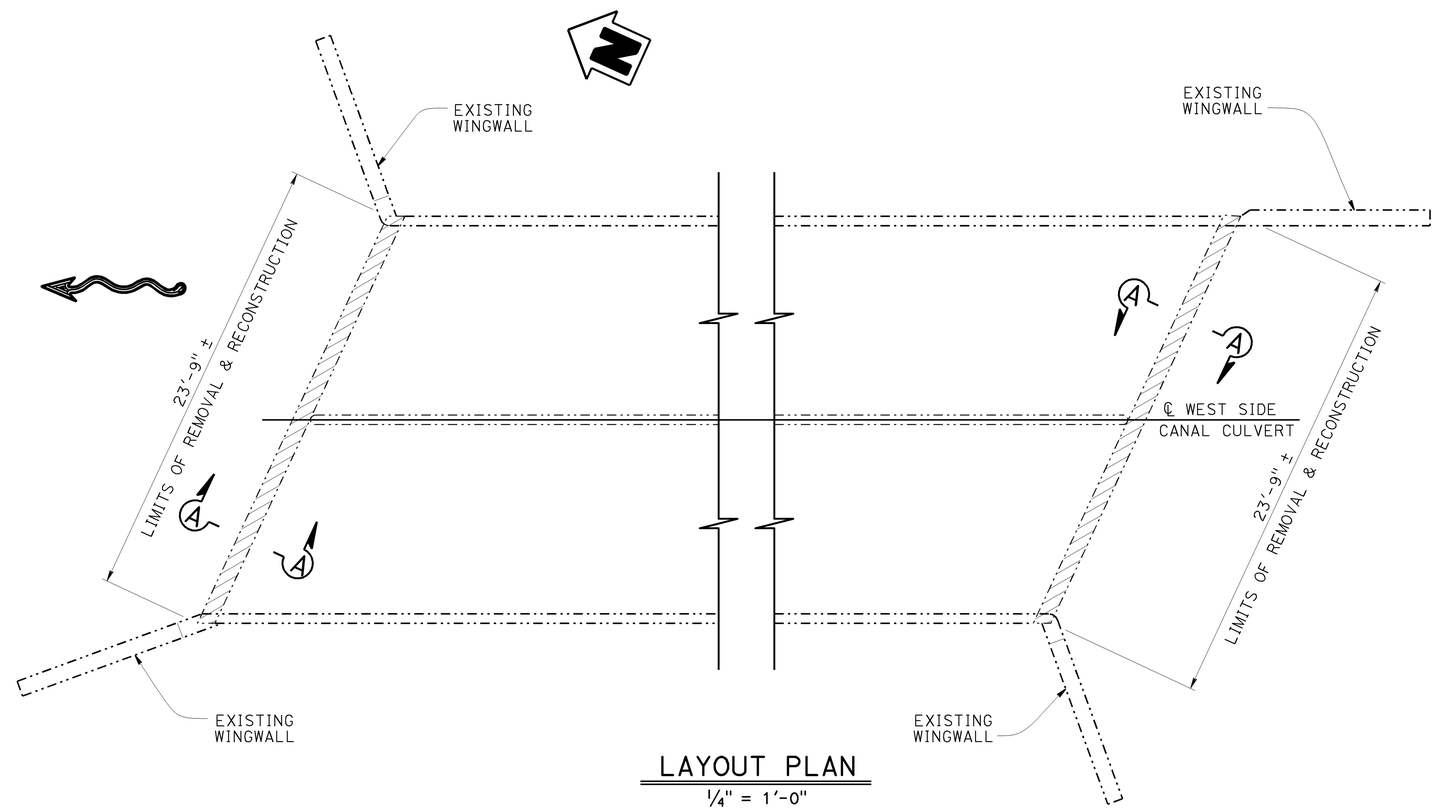

LAYOUT PLAN

1/4" = 1'-0"

DESIGN	BY RICHARD MELKO	CHECKED HERNAN PEREZ	
DETAILS	BY SUSAN NG	CHECKED RICHARD MELKO	
QUANTITIES	BY RICHARD MELKO	CHECKED SEIJI MORIMOTO	

STATE OF CALIFORNIA
DEPARTMENT OF TRANSPORTATION

DIVISION OF ENGINEERING SERVICES
STRUCTURE DESIGN
DESIGN BRANCH 6

BRIDGE NO. 50-0029
POST MILE 32.75/32.95

WEST SIDE CANAL CULVERT
PARAPET RECONSTRUCTION DETAIL

STRUCTURES DESIGN DETAIL SHEET (ENGLISH) (REV. 09-01-10)

ORIGINAL SCALE IN INCHES FOR REDUCED PLANS 0 1 2 3

UNIT: 3591
PROJECT NUMBER & PHASE: 0600000206-1
CONTRACT NO.: 06-0J9301

DISREGARD PRINTS BEARING EARLIER REVISION DATES

REVISION DATES				SHEET	OF
09-18-12	10-01-12	10-08-12	04-15-13	1	1

FILE => 06-0J9301headwall05-0029.dgn

USERNAME => s120746 DATE PLOTTED => 15-APR-2013 TIME PLOTTED => 14:21

DIST	COUNTY	ROUTE	POST MILES TOTAL PROJECT	SHEET No.	TOTAL SHEETS
06	Fre, Ker, Tul	33,46,63 119,216,223	Var	33	33

REGISTERED CIVIL ENGINEER 04-15-13 DATE

5-20-13
PLANS APPROVAL DATE

REGISTERED PROFESSIONAL ENGINEER RICHARD MELKO No. C61617 Exp. 06-30-13 CIVIL STATE OF CALIFORNIA

The State of California or its officers or agents shall not be responsible for the accuracy or completeness of scanned copies of this plan sheet.

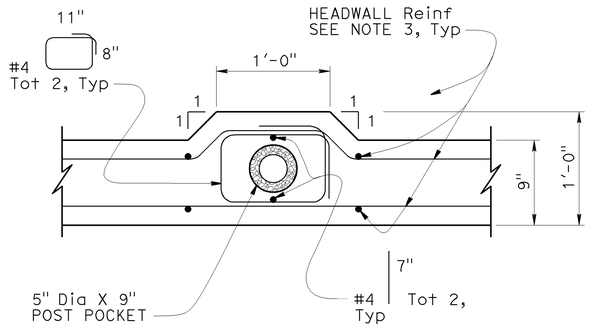

SECTION B-B

1½" = 1'-0"

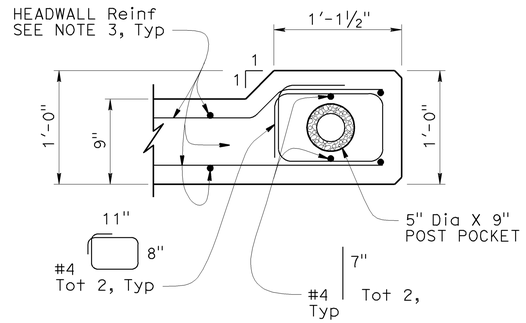

SECTION C-C

1½" = 1'-0"

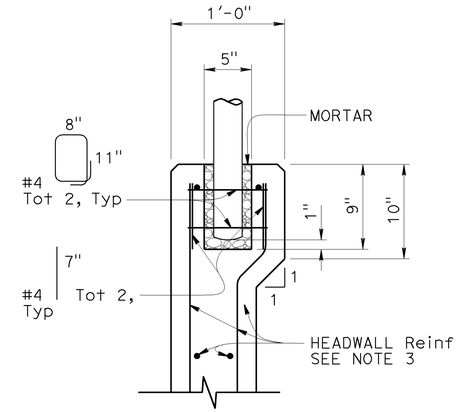

POST POCKET DETAILS

1½" = 1'-0"

NOTES:

1. For details not shown, see "Road Plans".
2. For Excavation and Backfill Limits, see "Road Plans".
3. Headwall reinforcement shall be bent around Cable Railing Post Pockets.
4. Cable Railing Posts shall be placed between RCP, and not directly on top of RCP.

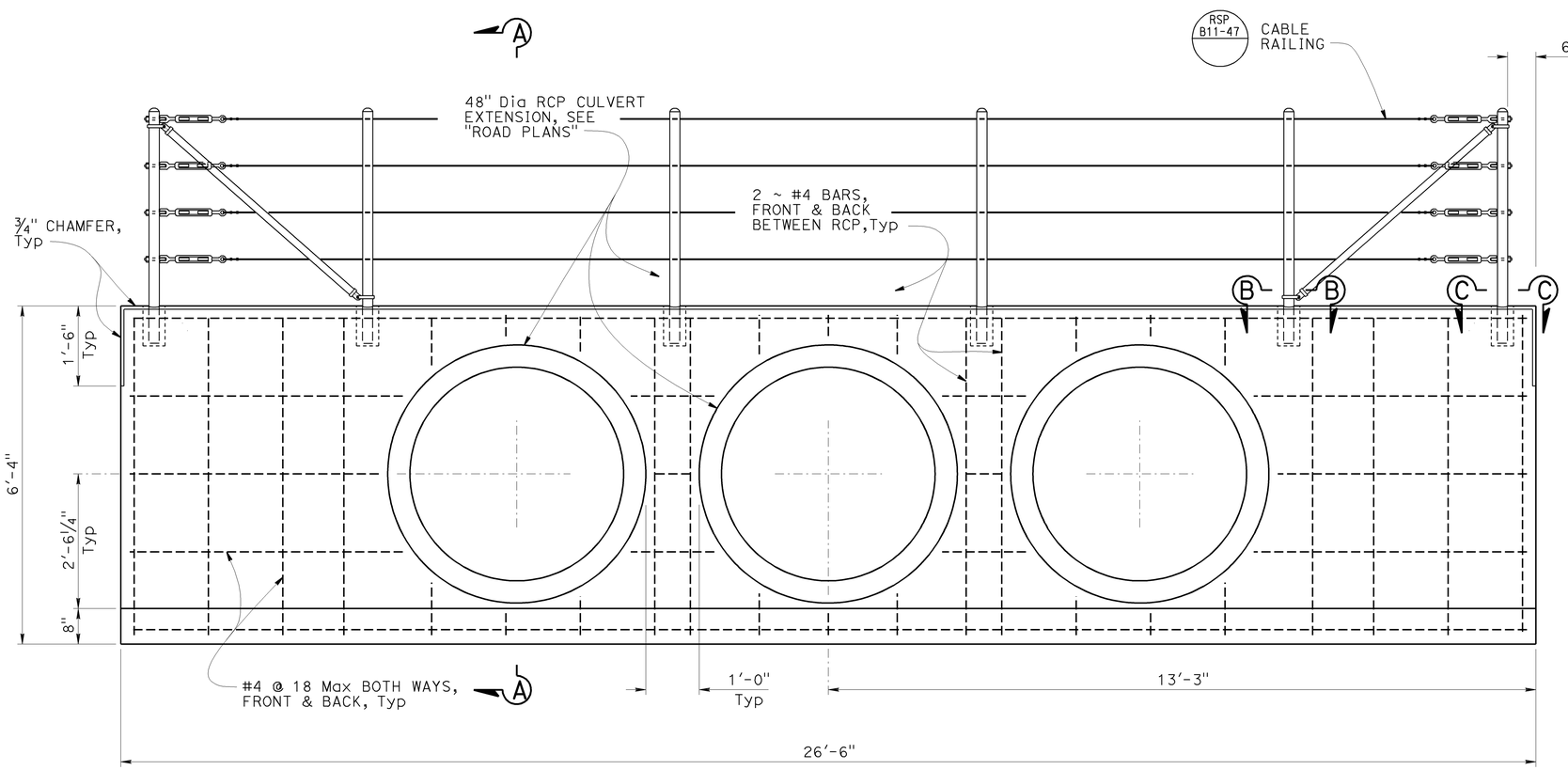

HEADWALL FRONT ELEVATION

¾" = 1'-0"

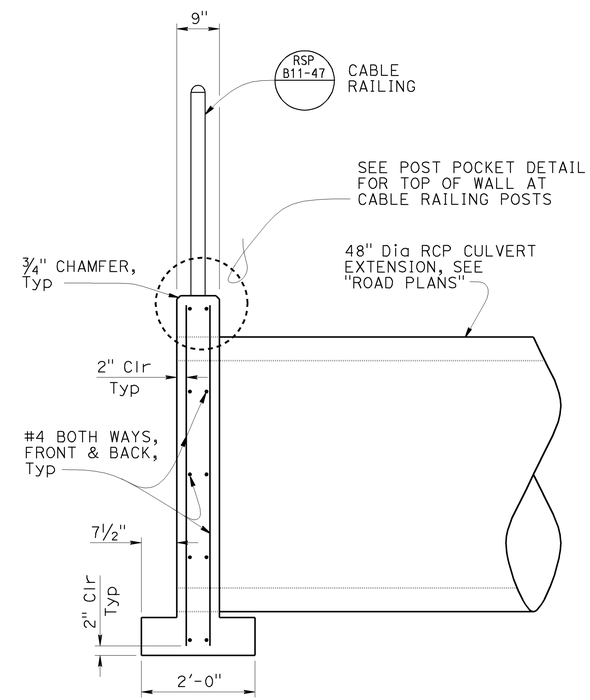

SECTION A-A

¾" = 1'-0"

	BY	CHECKED
DESIGN	RICHARD MELKO	SEIJI MORIMOTO
DETAILS	SUSAN NG	RICHARD MELKO
QUANTITIES	RICHARD MELKO	SEIJI MORIMOTO

STATE OF CALIFORNIA
DEPARTMENT OF TRANSPORTATION

DIVISION OF ENGINEERING SERVICES
STRUCTURE DESIGN
DESIGN BRANCH 6

BRIDGE NO. N/A
POST MILE 26.1

ROUTE 119 AT OLD RIVER RD
HEADWALL REPLACEMENT

STRUCTURES DESIGN DETAIL SHEET (ENGLISH) (REV. 09-01-10)

ORIGINAL SCALE IN INCHES FOR REDUCED PLANS 0 1 2 3

UNIT: 3591
PROJECT NUMBER & PHASE: 06000002601-1
CONTRACT NO.: 06-0J9301

DISREGARD PRINTS BEARING EARLIER REVISION DATES

REVISION DATES 09-24-12 10-08-12 04-15-13

SHEET 1 OF 1

FILE => 06-ker-119-headwall.dgn

USERNAME => s120745 DATE PLOTTED => 15-APR-2013 TIME PLOTTED => 14:27