ACNH-P099(532)E

Dist	COUNTY	ROUTE	POST MILES TOTAL PROJECT	SHEET No.	TOTAL SHEETS
06	Fre	99	17.3/18.0	1	39

INDEX OF PLANS

SHEET No.	DESCRIPTION
1	TITLE AND LOCATION MAP
2	TYPICAL CROSS SECTIONS
3-6	LAYOUTS
7-9	PROFILES
10	CONSTRUCTION DETAILS
11-15	DRAINAGE PROFILES
16	DRAINAGE QUANTITIES
17	CONSTRUCTION AREA SIGNS
18-19	TRAFFIC HANDLING PLANS
20-21	SUMMARY OF QUANTITIES
22	ELECTRICAL PLANS
23-39	REVISED AND NEW STANDARD PLANS

THE STANDARD PLANS LIST APPLICABLE TO THIS CONTRACT IS INCLUDED IN THE NOTICE TO BIDDERS AND SPECIAL PROVISIONS BOOK.

STATE OF CALIFORNIA

DEPARTMENT OF TRANSPORTATION

PROJECT PLANS FOR CONSTRUCTION ON

STATE HIGHWAY

IN FRESNO COUNTY
IN FRESNO
FROM NORTH AVENUE OVERCROSSING
TO 0.5 MILE SOUTH OF JENSEN AVENUE UNDERCROSSING

TO BE SUPPLEMENTED BY STANDARD PLANS DATED MAY 2006

LOCATION MAP

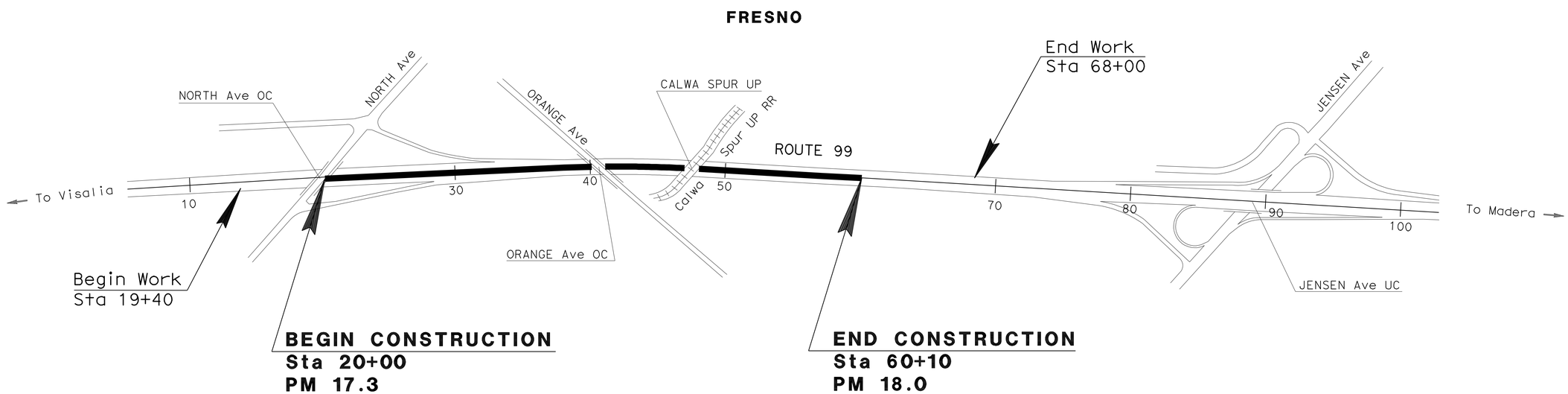

NO SCALE

THE CONTRACTOR SHALL POSSESS THE CLASS (OR CLASSES) OF LICENSE AS SPECIFIED IN THE "NOTICE TO BIDDERS."

PROJECT MANAGER: ABDUL EL-DAHABI

DESIGN ENGINEER: SANKU MOHAN

Lawrence Michael Lowe 10-28-09
PROJECT ENGINEER DATE
REGISTERED CIVIL ENGINEER

REGISTERED PROFESSIONAL ENGINEER
LAWRENCE MICHAEL LOWE
No. 66753
Exp. 9/30/10
CIVIL
STATE OF CALIFORNIA

February 16, 2010
PLANS APPROVAL DATE

THE STATE OF CALIFORNIA OR ITS OFFICERS OR AGENTS SHALL NOT BE RESPONSIBLE FOR THE ACCURACY OR COMPLETENESS OF ELECTRONIC COPIES OF THIS PLAN SHEET.

LAST REVISION 10-28-09

DATE PLOTTED => 30-MAR-2010
TIME PLOTTED => 10:40

CONTRACT No. 06-0J1604

Dist	COUNTY	ROUTE	POST MILES TOTAL PROJECT	SHEET No.	TOTAL SHEETS
06	Fre	99	17.3/18.0	2	39

Lawrence Michael Lowe 10-28-09
REGISTERED CIVIL ENGINEER DATE

2-16-10
PLANS APPROVAL DATE

REGISTERED PROFESSIONAL ENGINEER
LAWRENCE MICHAEL LOWE
No. 66753
Exp. 9/30/10
CIVIL
STATE OF CALIFORNIA

THE STATE OF CALIFORNIA OR ITS OFFICERS OR AGENTS SHALL NOT BE RESPONSIBLE FOR THE ACCURACY OR COMPLETENESS OF ELECTRONIC COPIES OF THIS PLAN SHEET.

NOTES:

1. DIMENSIONS OF PAVEMENT STRUCTURES (STRUCTURAL SECTIONS) ARE SUBJECT TO TOLERANCES SPECIFIED IN THE STANDARD SPECIFICATIONS.
2. SUPERELEVATION AS SHOWN OR AS DIRECTED BY THE ENGINEER.
3. FOR LOCATION AND TYPE OF HMA DIKE, SEE LAYOUT SHEETS.

ABBREVIATIONS:

TD - TOP OF DIKE
ESH - EDGE OF SHOTCRETE
EPC - EDGE OF PERVIOUS CONCRETE

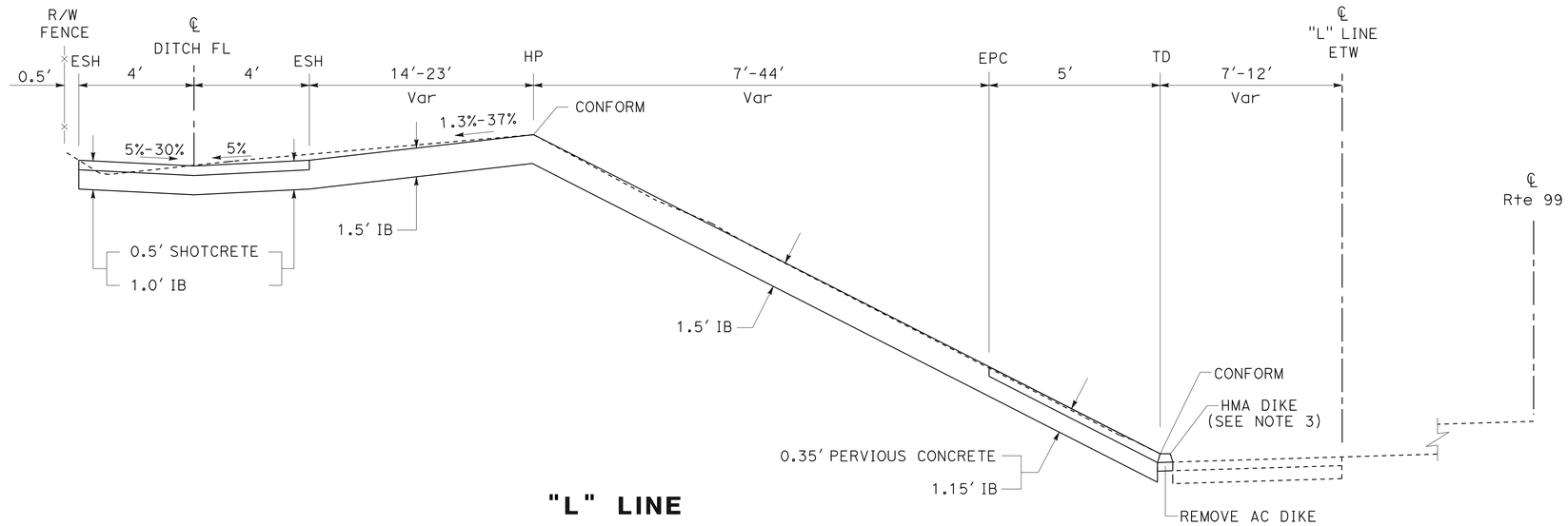

"L" LINE

Sta 10+00 TO Sta 39+00

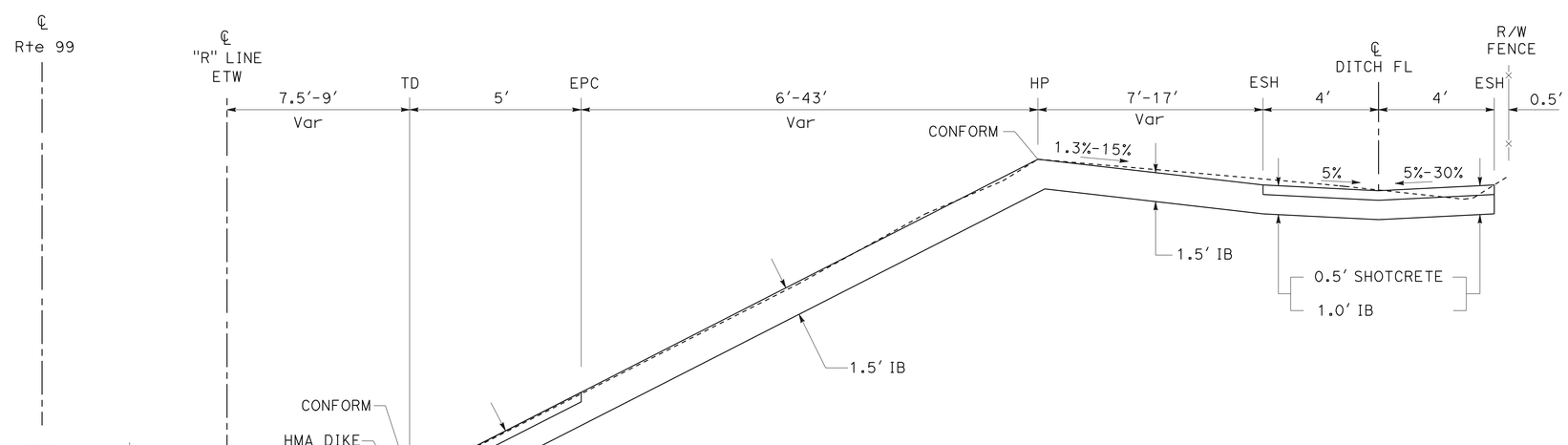

"R" LINE

Sta 62+55 TO Sta 93+00

TYPICAL CROSS SECTION X-1

NO SCALE

STATE OF CALIFORNIA - DEPARTMENT OF TRANSPORTATION
Caltrans DESIGN
FUNCTIONAL SUPERVISOR: SANKU MOHAN
CALCULATED-DESIGNED BY: JOO BAEK
CHECKED BY: LAWRENCE LOWE
REVISED BY / DATE REVISED

LAST REVISION 10-28-09 | DATE PLOTTED => 22-FEB-2010 | TIME PLOTTED => 15:13

Dist	COUNTY	ROUTE	POST MILES TOTAL PROJECT	SHEET No.	TOTAL SHEETS
06	Fre	99	17.3/18.0	3	39

Lawrence Michael Lowe 10-28-09
REGISTERED CIVIL ENGINEER DATE

2-16-10
PLANS APPROVAL DATE

REGISTERED PROFESSIONAL ENGINEER
LAWRENCE MICHAEL LOWE
No. 66753
Exp. 9/30/10
CIVIL
STATE OF CALIFORNIA

THE STATE OF CALIFORNIA OR ITS OFFICERS OR AGENTS SHALL NOT BE RESPONSIBLE FOR THE ACCURACY OR COMPLETENESS OF ELECTRONIC COPIES OF THIS PLAN SHEET.

NOTE: FOR ACCURATE RIGHT OF WAY DATA, CONTACT RIGHT OF WAY ENGINEERING AT THE DISTRICT OFFICE.

CURVE DATA

No.	R	Δ	T	L
1	250.00′	30°32′07"	68.24′	133.23′
2	2500.01′	7°28′16"	163.23′	326.00′
3	55.00′	94°54′09"	59.92′	91.10′

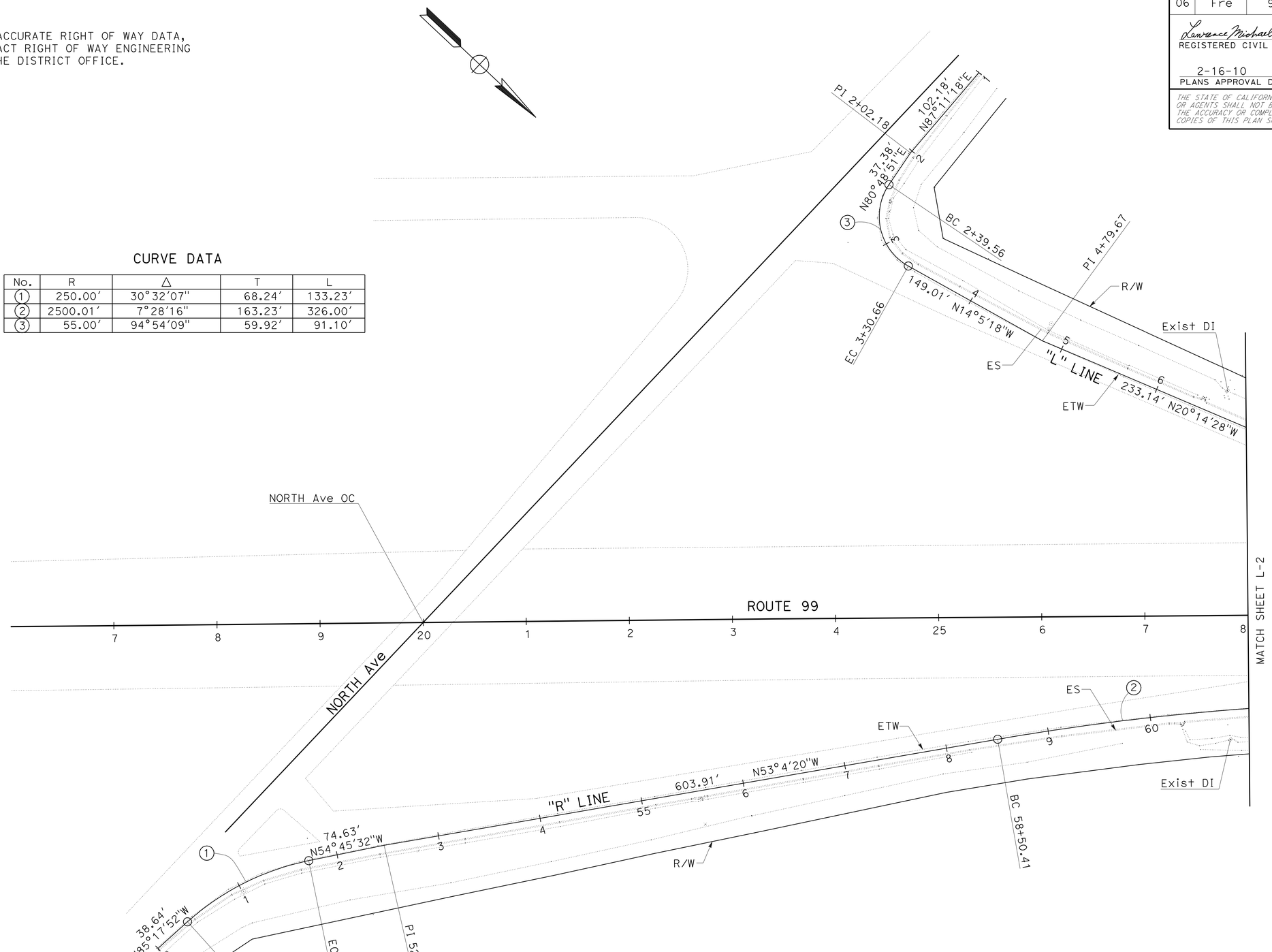

LAYOUT

SCALE: 1" = 50′ **L-1**

STATE OF CALIFORNIA - DEPARTMENT OF TRANSPORTATION
Caltrans **DESIGN**

FUNCTIONAL SUPERVISOR: SANKU MOHAN
CALCULATED-DESIGNED BY: JOO BAEK
CHECKED BY: LAWRENCE LOWE
REVISED BY
DATE REVISED

LAST REVISION 10-28-09
DATE PLOTTED => 22-FEB-2010
TIME PLOTTED => 15:14

Dist	COUNTY	ROUTE	POST MILES TOTAL PROJECT	SHEET No.	TOTAL SHEETS
06	Fre	99	17.3/18.0	4	39

Lawrence Michael Lowe 10-28-09
REGISTERED CIVIL ENGINEER DATE

2-16-10
PLANS APPROVAL DATE

REGISTERED PROFESSIONAL ENGINEER
LAWRENCE MICHAEL LOWE
No. 66753
Exp. 9/30/10
CIVIL
STATE OF CALIFORNIA

THE STATE OF CALIFORNIA OR ITS OFFICERS OR AGENTS SHALL NOT BE RESPONSIBLE FOR THE ACCURACY OR COMPLETENESS OF ELECTRONIC COPIES OF THIS PLAN SHEET.

NOTE: FOR ACCURATE RIGHT OF WAY DATA, CONTACT RIGHT OF WAY ENGINEERING AT THE DISTRICT OFFICE.

CURVE DATA

No.	R	Δ	T	L
2	2500.01′	7°28′16"	163.23′	326.00′
3	9500.01′	7°33′36"	627.67′	1253.52′
4	1000.00′	19°49′13"	174.71′	345.93′
5	10,000.00′	5°13′47"	456.69′	912.75′

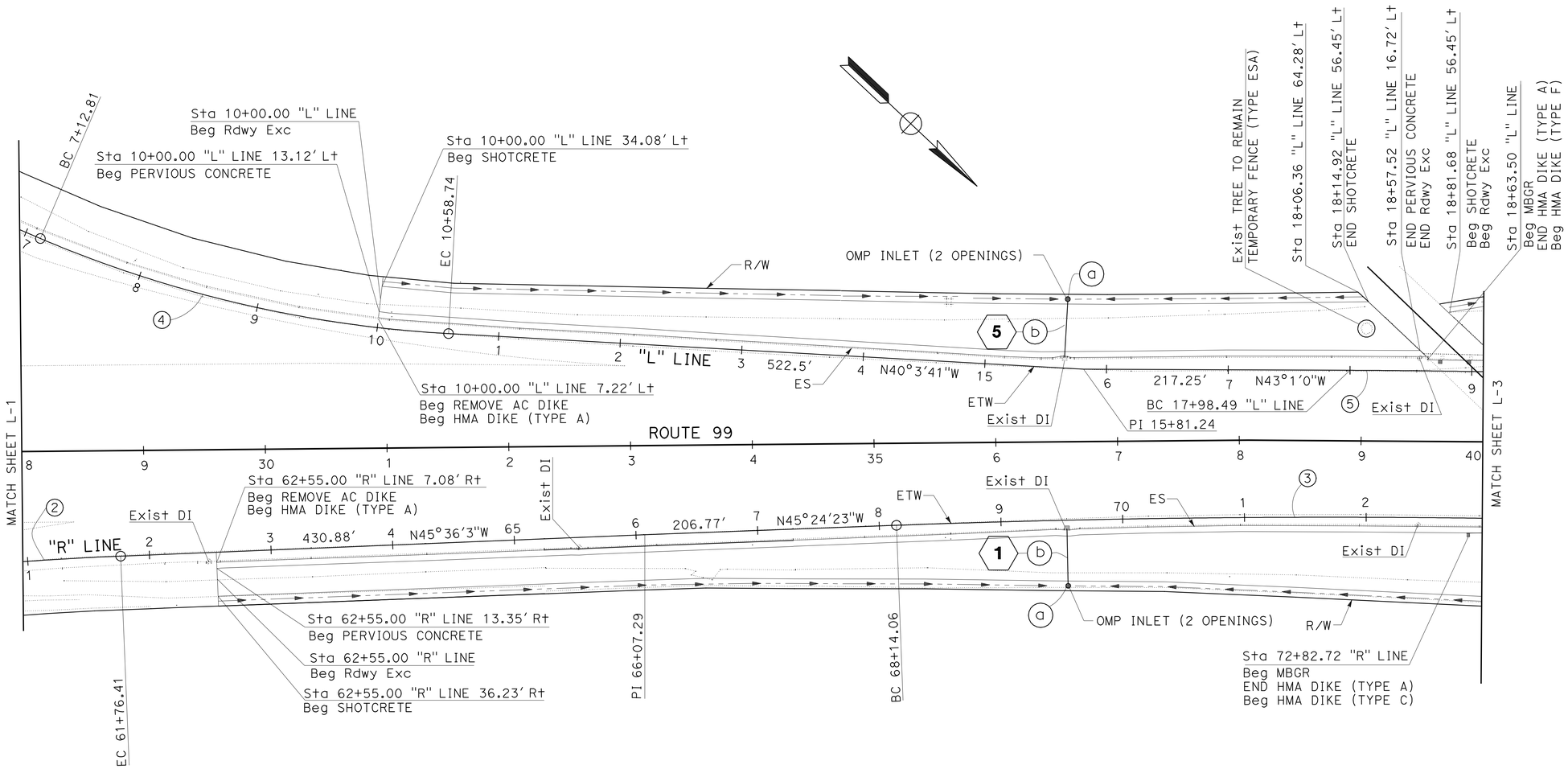

SCALE:1"=50′

LAYOUT L-2

REVISED BY	DATE REVISED

CALCULATED-DESIGNED BY
CHECKED BY

FUNCTIONAL SUPERVISOR

JOO BAEK
LAWRENCE LOWE
SANKU MOHAN

STATE OF CALIFORNIA - DEPARTMENT OF TRANSPORTATION
Caltrans
DESIGN

LAST REVISION 10-28-09
DATE PLOTTED => 22-FEB-2010
TIME PLOTTED => 15:14

Dist	COUNTY	ROUTE	POST MILES TOTAL PROJECT	SHEET No.	TOTAL SHEETS
06	Fre	99	17.3/18.0	5	39

Lawrence Michael Lowe 10-28-09
REGISTERED CIVIL ENGINEER DATE

2-16-10
PLANS APPROVAL DATE

REGISTERED PROFESSIONAL ENGINEER
LAWRENCE MICHAEL LOWE
No. 66753
Exp. 9/30/10
CIVIL
STATE OF CALIFORNIA

THE STATE OF CALIFORNIA OR ITS OFFICERS OR AGENTS SHALL NOT BE RESPONSIBLE FOR THE ACCURACY OR COMPLETENESS OF ELECTRONIC COPIES OF THIS PLAN SHEET.

NOTE: FOR ACCURATE RIGHT OF WAY DATA, CONTACT RIGHT OF WAY ENGINEERING AT THE DISTRICT OFFICE.

CURVE DATA

No.	R	Δ	T	L
3	9500.01′	7°33′36″	627.67′	1253.52′
5	10,000.00′	5°13′47″	456.69′	912.75′

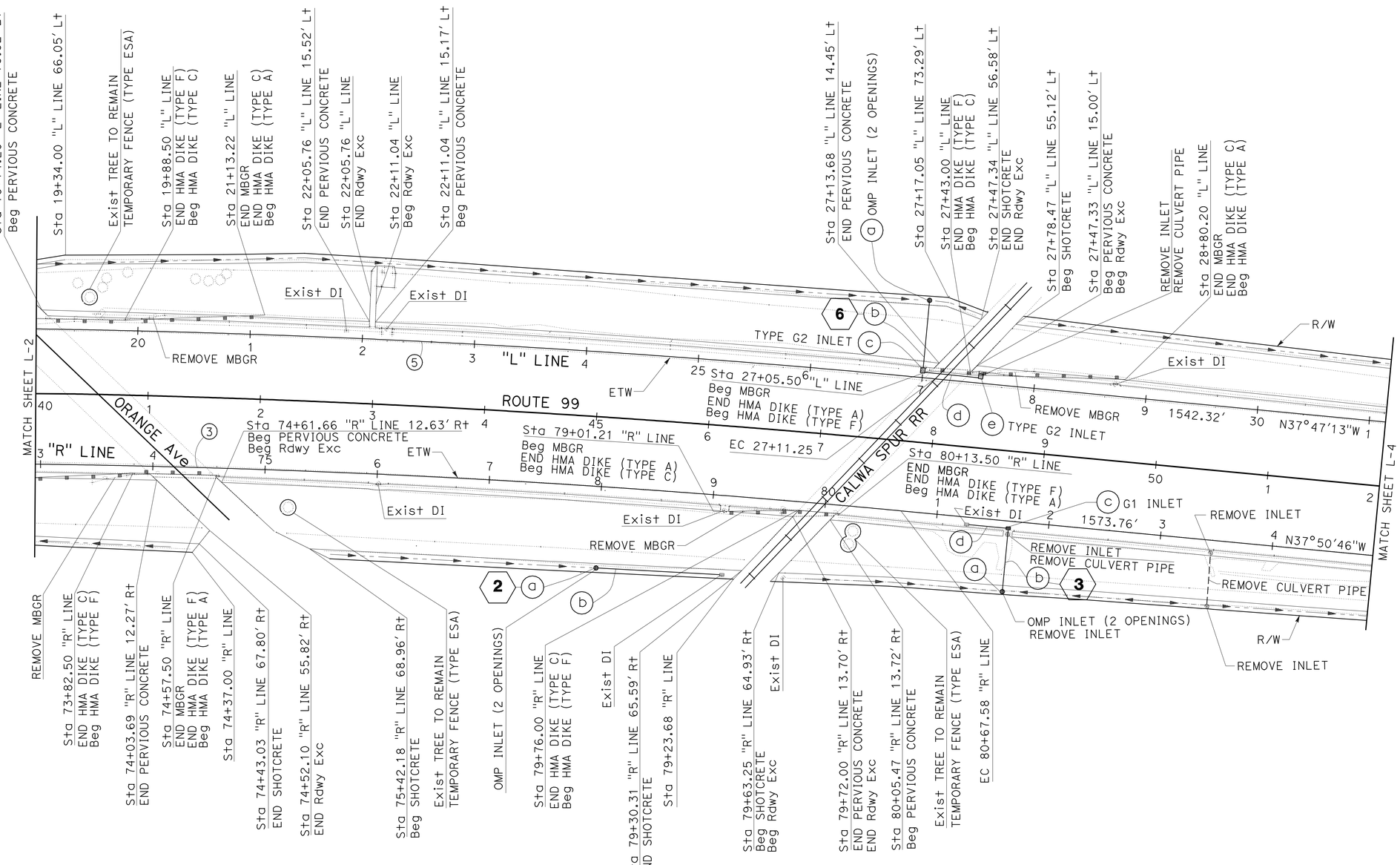

LAYOUT
L-3

SCALE: 1" = 50′

STATE OF CALIFORNIA - DEPARTMENT OF TRANSPORTATION
Caltrans
DESIGN

FUNCTIONAL SUPERVISOR: SANKU MOHAN
CALCULATED-DESIGNED BY: JOO BAEK
CHECKED BY: LAWRENCE LOWE
REVISED BY
DATE REVISED

LAST REVISION 10-28-09
DATE PLOTTED => 22-FEB-2010
TIME PLOTTED => 15:14

Dist	COUNTY	ROUTE	POST MILES TOTAL PROJECT	SHEET No.	TOTAL SHEETS
06	Fre	99	17.3/18.0	6	39

Lawrence Michael Lowe 10-28-09
REGISTERED CIVIL ENGINEER DATE

2-16-10
PLANS APPROVAL DATE

REGISTERED PROFESSIONAL ENGINEER
LAWRENCE MICHAEL LOWE
No. 66753
Exp. 9/30/10
CIVIL
STATE OF CALIFORNIA

THE STATE OF CALIFORNIA OR ITS OFFICERS OR AGENTS SHALL NOT BE RESPONSIBLE FOR THE ACCURACY OR COMPLETENESS OF ELECTRONIC COPIES OF THIS PLAN SHEET.

NOTE: FOR ACCURATE RIGHT OF WAY DATA, CONTACT RIGHT OF WAY ENGINEERING AT THE DISTRICT OFFICE.

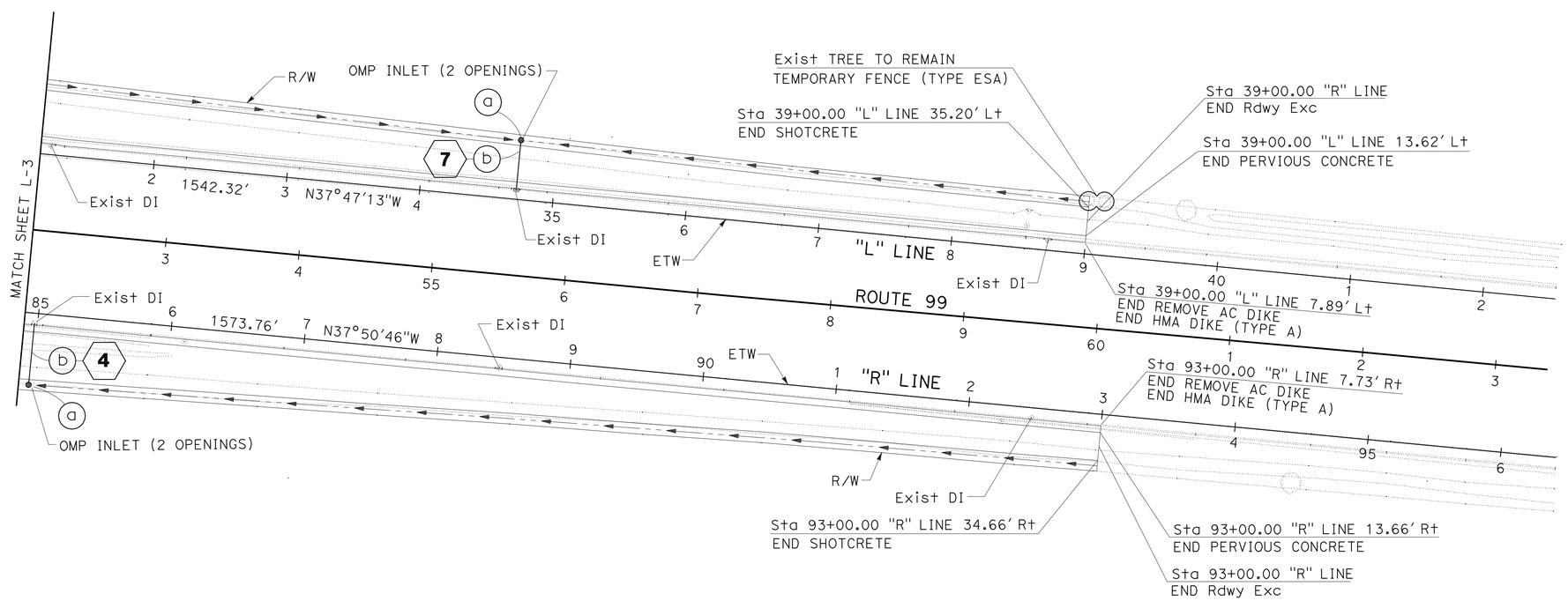

LAYOUT L-4

SCALE: 1" = 50'

STATE OF CALIFORNIA - DEPARTMENT OF TRANSPORTATION
Caltrans
DESIGN

FUNCTIONAL SUPERVISOR: SANKU MOHAN
CALCULATED-DESIGNED BY: JOO BAEK
CHECKED BY: LAWRENCE LOWE
REVISED BY
DATE REVISED

LAST REVISION 10-28-09
DATE PLOTTED => 22-FEB-2010
TIME PLOTTED => 15:14

Dist	COUNTY	ROUTE	POST MILES TOTAL PROJECT	SHEET No.	TOTAL SHEETS
06	Fre	99	17.3/18.0	7	39

Lawrence Michael Lowe 10-28-09
REGISTERED CIVIL ENGINEER DATE

2-16-10
PLANS APPROVAL DATE

REGISTERED PROFESSIONAL ENGINEER
LAWRENCE MICHAEL LOWE
No. 66753
Exp. 9/30/10
CIVIL
STATE OF CALIFORNIA

THE STATE OF CALIFORNIA OR ITS OFFICERS OR AGENTS SHALL NOT BE RESPONSIBLE FOR THE ACCURACY OR COMPLETENESS OF ElevECTRONIC COPIES OF THIS PLAN SHEET.

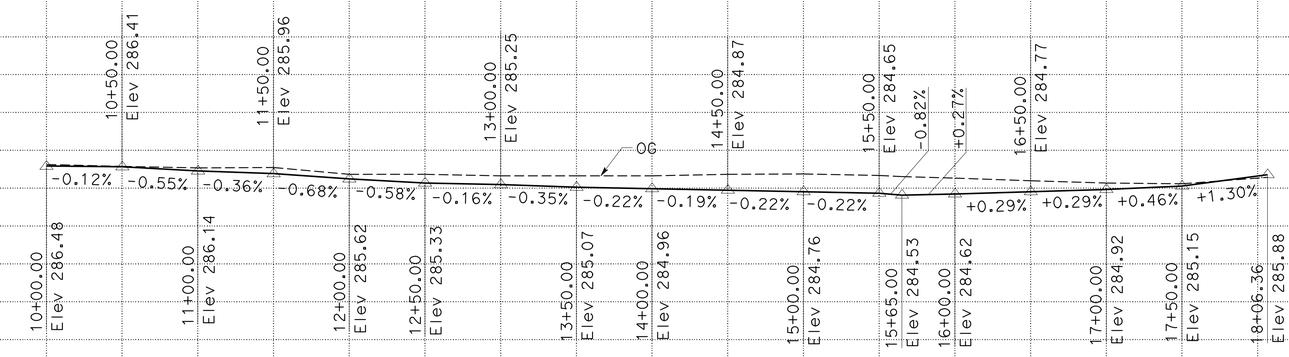

DITCH FLOW LINE
"L" LINE

SCALE: Horiz 1" = 50'
Vert 1" = 5'

STATION		10+00	+50	11+00	+50	12+00	+50	13+00	+50	14+00	+50	15+00	+50	16+00	+50	17+00	+50	18+00	TOTAL
CY	Exc	2155																	
	Emb	2090																	

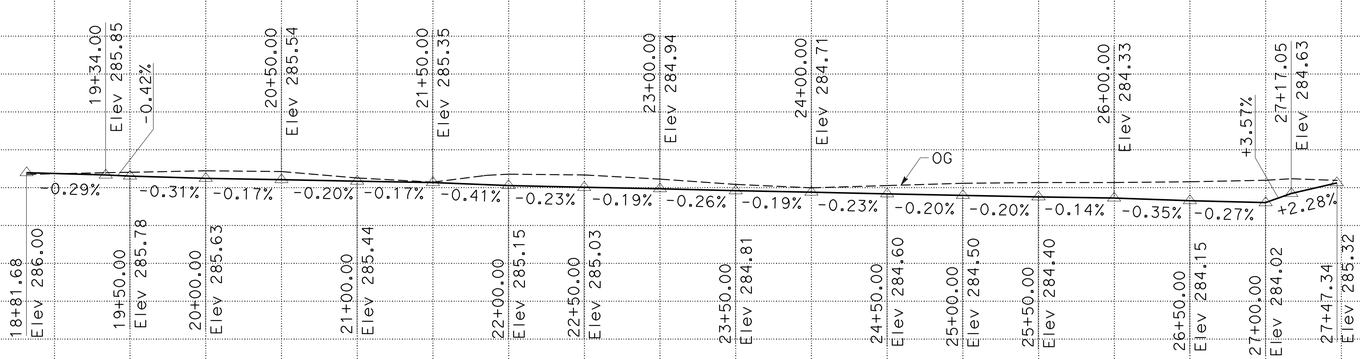

DITCH FLOW LINE
"L" LINE

SCALE: Horiz 1" = 50'
Vert 1" = 5'

PROFILE
P-1

STATION		19+00	+50	20+00	+50	21+00	+50	22+00	+50	23+00	+50	24+00	+50	25+00	+50	26+00	+50	27+00	+50	TOTAL
CY	Exc	3245																		
	Emb	2800																		

REVISED BY | DATE REVISED
JOO BAEK | LAWRENCE LOWE
CALCULATED-DESIGNED BY | CHECKED BY
FUNCTIONAL SUPERVISOR: SANKU MOHAN

STATE OF CALIFORNIA - DEPARTMENT OF TRANSPORTATION
Caltrans
DESIGN

LAST REVISION 10-28-09
DATE PLOTTED => 22-FEB-2010
TIME PLOTTED => 15:14

Dist	COUNTY	ROUTE	POST MILES TOTAL PROJECT	SHEET No.	TOTAL SHEETS
06	Fre	99	17.3/18.0	8	39

Lawrence Michael Lowe 10-28-09
REGISTERED CIVIL ENGINEER DATE

2-16-10
PLANS APPROVAL DATE

REGISTERED PROFESSIONAL ENGINEER
LAWRENCE MICHAEL LOWE
No. 66753
Exp. 9/30/10
CIVIL
STATE OF CALIFORNIA

THE STATE OF CALIFORNIA OR ITS OFFICERS OR AGENTS SHALL NOT BE RESPONSIBLE FOR THE ACCURACY OR COMPLETENESS OF ELECTRONIC COPIES OF THIS PLAN SHEET.

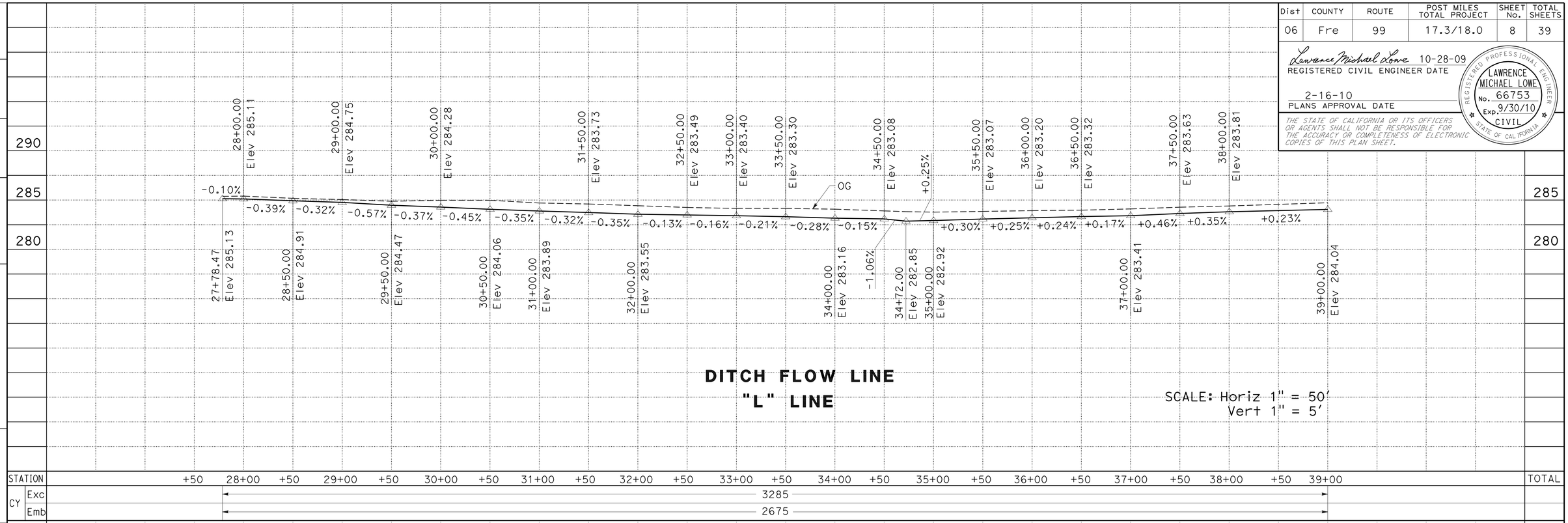

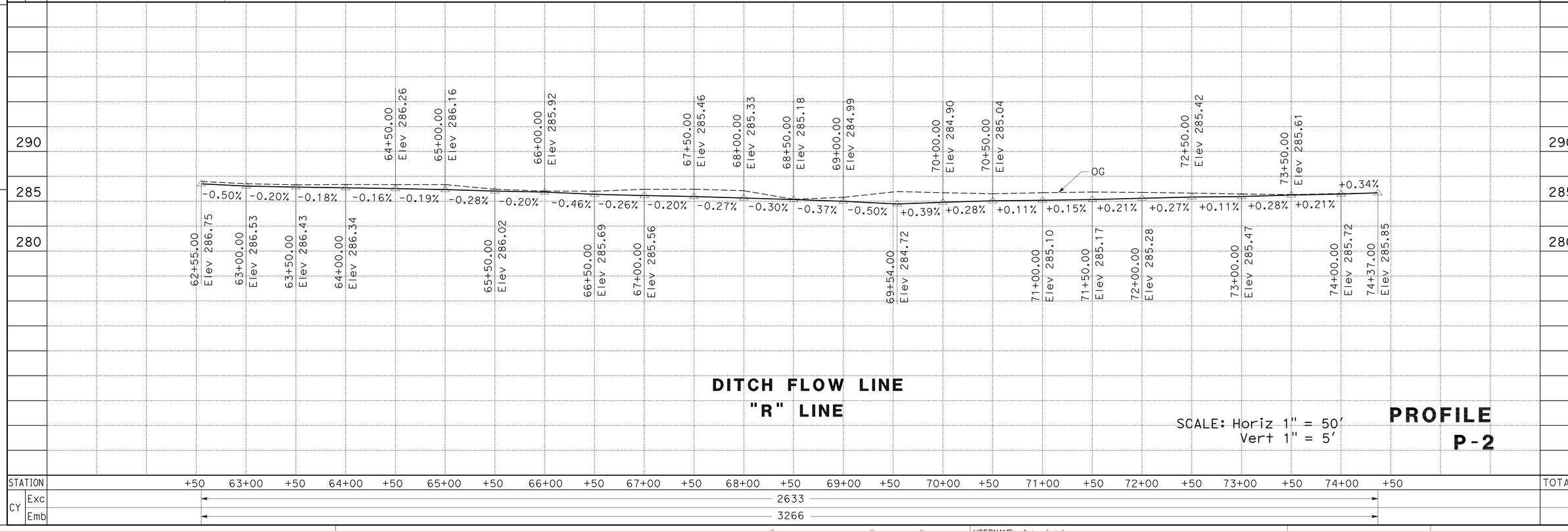

REVISED BY | DATE REVISED
JOO BAEK | LAWRENCE LOWE
CALCULATED-DESIGNED BY | CHECKED BY
FUNCTIONAL SUPERVISOR: SANKU MOHAN

STATE OF CALIFORNIA - DEPARTMENT OF TRANSPORTATION
Caltrans
DESIGN

LAST REVISION 10-28-09
DATE PLOTTED => 22-FEB-2010
TIME PLOTTED => 15:14

Dist	COUNTY	ROUTE	POST MILES TOTAL PROJECT	SHEET No.	TOTAL SHEETS
06	Fre	99	17.3/18.0	9	39

Lawrence Michael Lowe 10-28-09
REGISTERED CIVIL ENGINEER DATE

2-16-10
PLANS APPROVAL DATE

REGISTERED PROFESSIONAL ENGINEER
LAWRENCE MICHAEL LOWE
No. 66753
Exp. 9/30/10
CIVIL
STATE OF CALIFORNIA

THE STATE OF CALIFORNIA OR ITS OFFICERS OR AGENTS SHALL NOT BE RESPONSIBLE FOR THE ACCURACY OR COMPLETENESS OF ElevECTRONIC COPIES OF THIS PLAN SHEET.

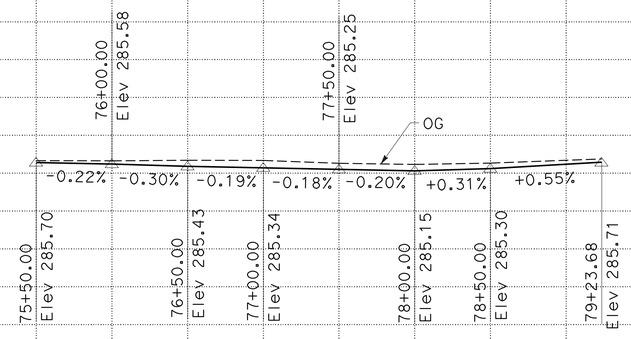

DITCH FLOW LINE
"R" LINE

SCALE: Horiz 1" = 50'
Vert 1" = 5'

STATION		+50	76+00	+50	77+00	+50	78+00	+50	79+00	TOTAL
CY	Exc	1228								
	Emb	1739								

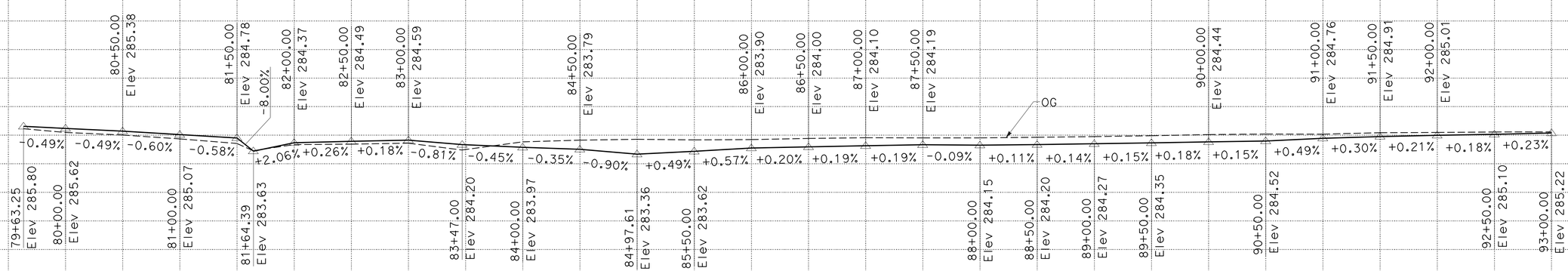

DITCH FLOW LINE
"R" LINE

SCALE: Horiz 1" = 50'
Vert 1" = 5'

PROFILE
P-3

STATION		+50	80+00	+50	81+00	+50	82+00	+50	83+00	+50	84+00	+50	85+00	+50	86+00	+50	87+00	+50	88+00	+50	89+00	+50	90+00	+50	91+00	+50	92+00	+50	93+00	TOTAL
CY	Exc	3134																												
	Emb	3463																												

REVISED BY | DATE REVISED
JOO BAEK | LAWRENCE LOWE
CALCULATED-DESIGNED BY | CHECKED BY
FUNCTIONAL SUPERVISOR: SANKU MOHAN
STATE OF CALIFORNIA - DEPARTMENT OF TRANSPORTATION
Caltrans DESIGN

LAST REVISION 10-28-09
DATE PLOTTED => 22-FEB-2010
TIME PLOTTED => 15:15

Dist	COUNTY	ROUTE	POST MILES TOTAL PROJECT	SHEET No.	TOTAL SHEETS
06	Fre	99	17.3/18.0	10	39

Lawrence Michael Lowe 10-28-09
REGISTERED CIVIL ENGINEER DATE

2-16-10
PLANS APPROVAL DATE

REGISTERED PROFESSIONAL ENGINEER LAWRENCE MICHAEL LOWE No. 66753 Exp. 9/30/10 CIVIL STATE OF CALIFORNIA

THE STATE OF CALIFORNIA OR ITS OFFICERS OR AGENTS SHALL NOT BE RESPONSIBLE FOR THE ACCURACY OR COMPLETENESS OF ELECTRONIC COPIES OF THIS PLAN SHEET.

SIDE SLOPE DIGOUTS TABLE

	STATION	VOLUME CY
"R" Line	66+55	18
"R" Line	67+00	18
"R" Line	68+00	31
"R" Line	69+00	31
"R" Line	70+00	50
"R" Line	70+50	17
"R" Line	72+00	37
"R" Line	74+00	6
"R" Line	81+20	22
"R" Line	81+60	22
"R" Line	83+50	56
"R" Line	85+50	15
"R" Line	89+00	19
"L" Line	14+50	15
	TOTAL	357 *

* SEE IMPORTED BORROW QUANTITIES TABLE, SHEET Q-1

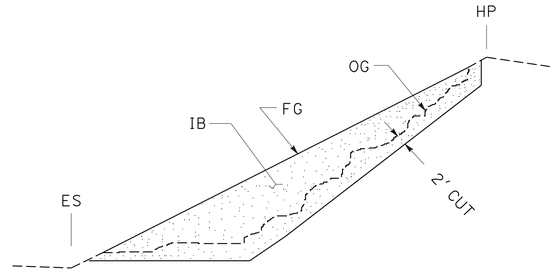

SECTION B-B

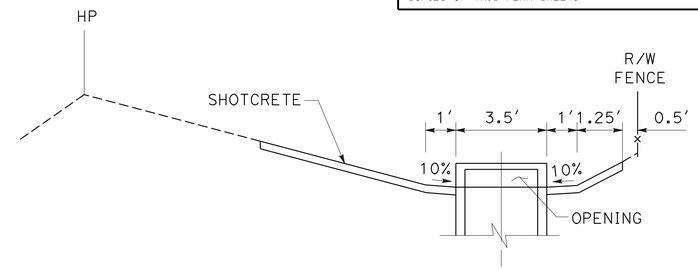

SECTION C-C

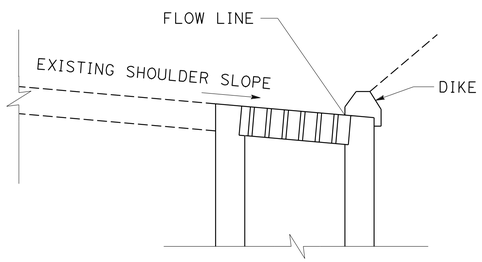

SECTION A-A

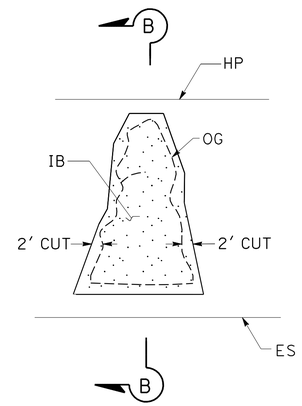

PLAN

SIDE SLOPE DIGOUTS

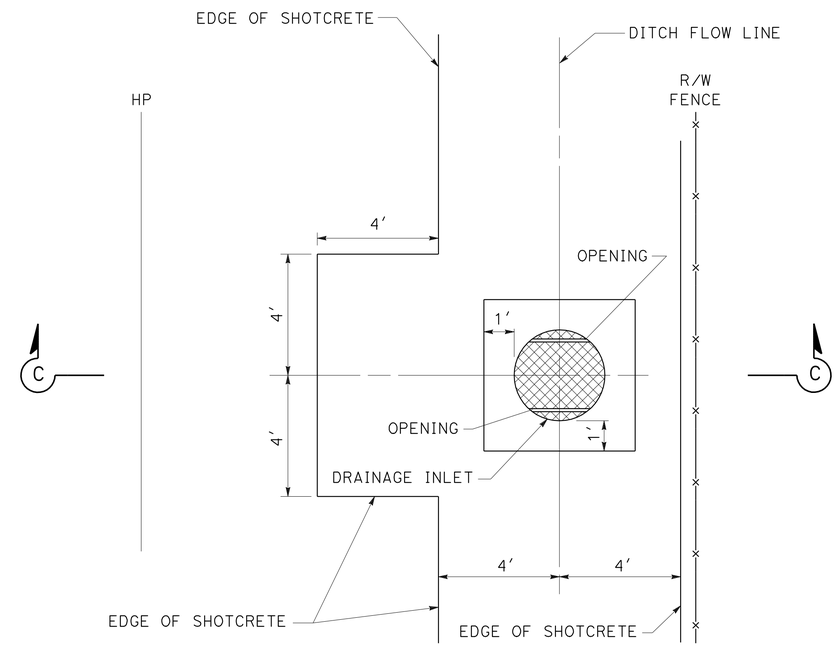

PLAN

TYPE OMP INLETS

DRAINAGE SYSTEM Nos. 1 2 3 4 5 6 7

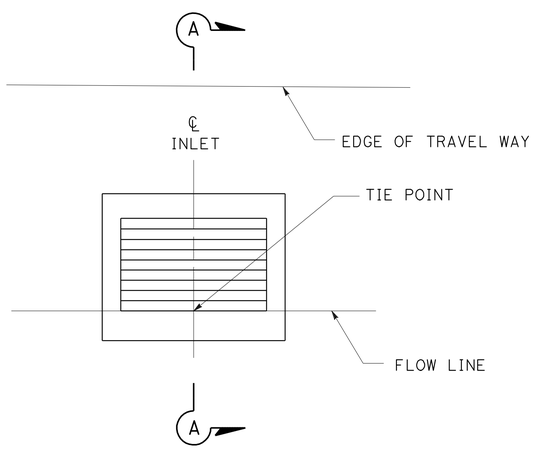

PLAN

TYPE G1 INLETS

DRAINAGE SYSTEM No. 3

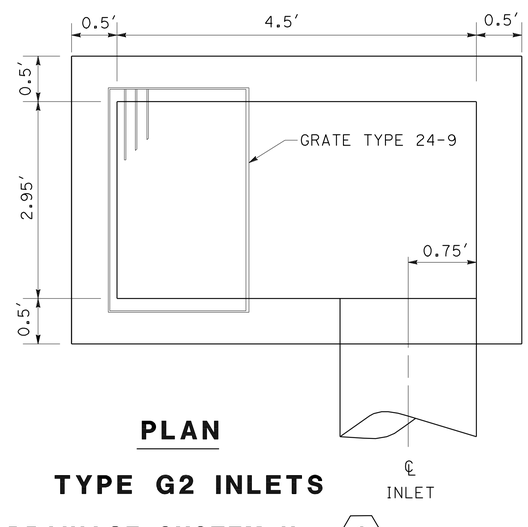

PLAN

TYPE G2 INLETS

DRAINAGE SYSTEM No. 6

CONSTRUCTION DETAILS

NO SCALE

C-1

STATE OF CALIFORNIA - DEPARTMENT OF TRANSPORTATION
Caltrans
DESIGN

FUNCTIONAL SUPERVISOR: SANKU MOHAN
CALCULATED-DESIGNED BY: JOO BAEK
CHECKED BY: LAWRENCE LOWE
REVISED BY
DATE REVISED

LAST REVISION 10-28-09
DATE PLOTTED => 22-FEB-2010
TIME PLOTTED => 15:15

Dist	COUNTY	ROUTE	POST MILES TOTAL PROJECT	SHEET No.	TOTAL SHEETS
06	Fre	99	17.3/18.0	11	39

Lawrence Michael Lowe 10-28-09
REGISTERED CIVIL ENGINEER DATE

2-16-10
PLANS APPROVAL DATE

REGISTERED PROFESSIONAL ENGINEER
LAWRENCE MICHAEL LOWE
No. 66753
Exp. 9/30/10
CIVIL
STATE OF CALIFORNIA

THE STATE OF CALIFORNIA OR ITS OFFICERS OR AGENTS SHALL NOT BE RESPONSIBLE FOR THE ACCURACY OR COMPLETENESS OF ELECTRONIC COPIES OF THIS PLAN SHEET.

ABBREVIATION:

S SLOPE

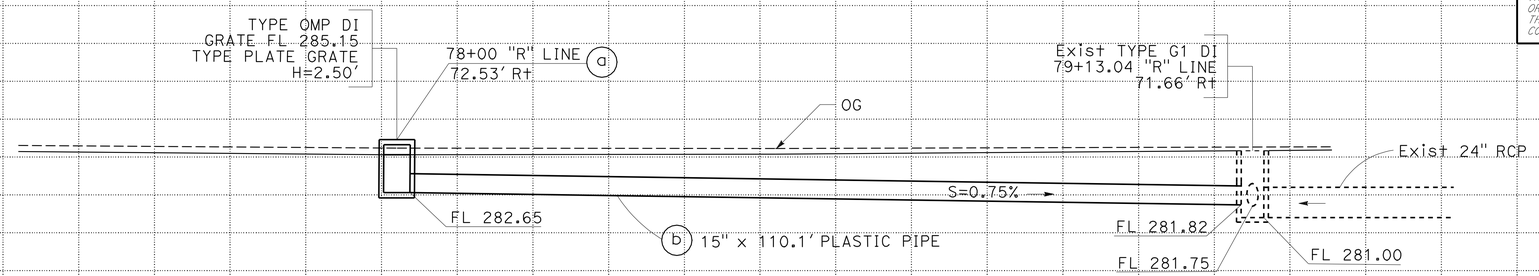

SCALE: Horiz 1" = 10'
Vert 1" = 5'

DRAINAGE SYSTEM No. 2

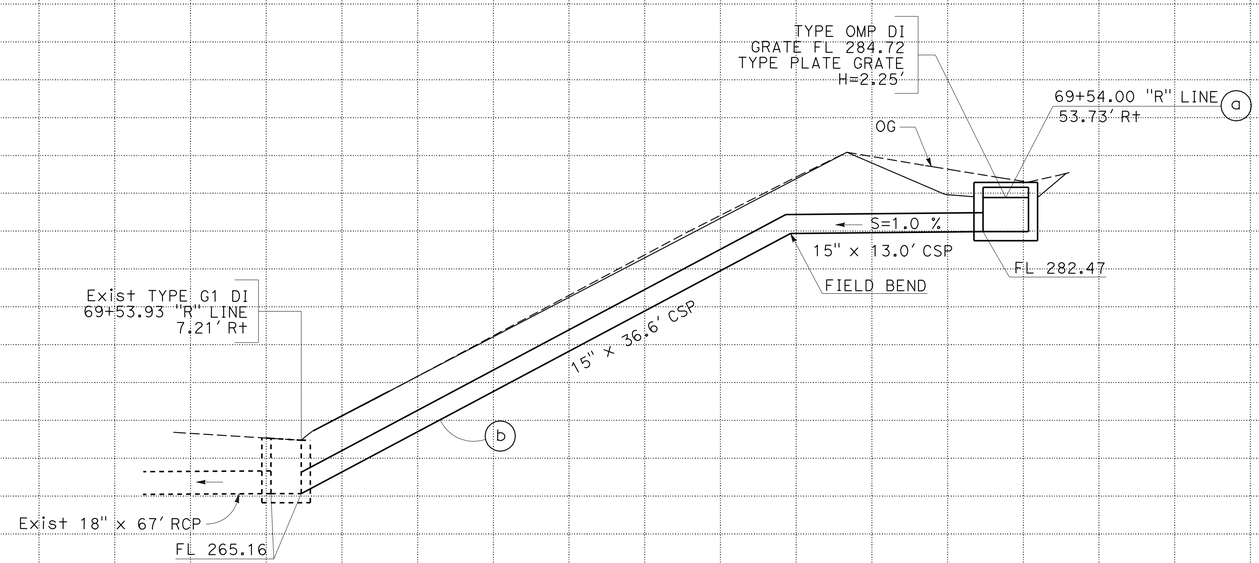

DRAINAGE SYSTEM No. 1

SCALE: Horiz 1" = 5'
Vert 1" = 5'

DRAINAGE PROFILE
DP-1

STATION		TOTAL
CY	Exc	
	Emb	

STATE OF CALIFORNIA - DEPARTMENT OF TRANSPORTATION
Caltrans
DESIGN

FUNCTIONAL SUPERVISOR: SANKU MOHAN
CALCULATED-DESIGNED BY: JOO BAEK
CHECKED BY: LAWRENCE LOWE
REVISED BY
DATE REVISED

LAST REVISION DATE PLOTTED => 22-FEB-2010
10-28-09 TIME PLOTTED => 15:15

Dist	COUNTY	ROUTE	POST MILES TOTAL PROJECT	SHEET No.	TOTAL SHEETS
06	Fre	99	17.3/18.0	12	39

Lawrence Michael Lowe 10-28-09
REGISTERED CIVIL ENGINEER DATE

2-16-10
PLANS APPROVAL DATE

REGISTERED PROFESSIONAL ENGINEER
LAWRENCE MICHAEL LOWE
No. 66753
Exp. 9/30/10
CIVIL
STATE OF CALIFORNIA

THE STATE OF CALIFORNIA OR ITS OFFICERS OR AGENTS SHALL NOT BE RESPONSIBLE FOR THE ACCURACY OR COMPLETENESS OF ELECTRONIC COPIES OF THIS PLAN SHEET.

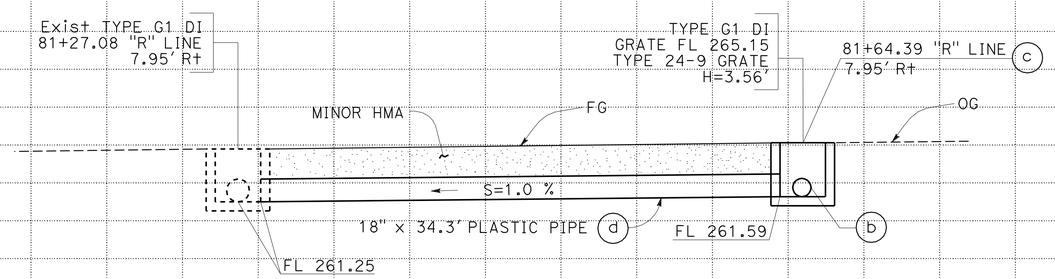

DRAINAGE SYSTEM No. 3

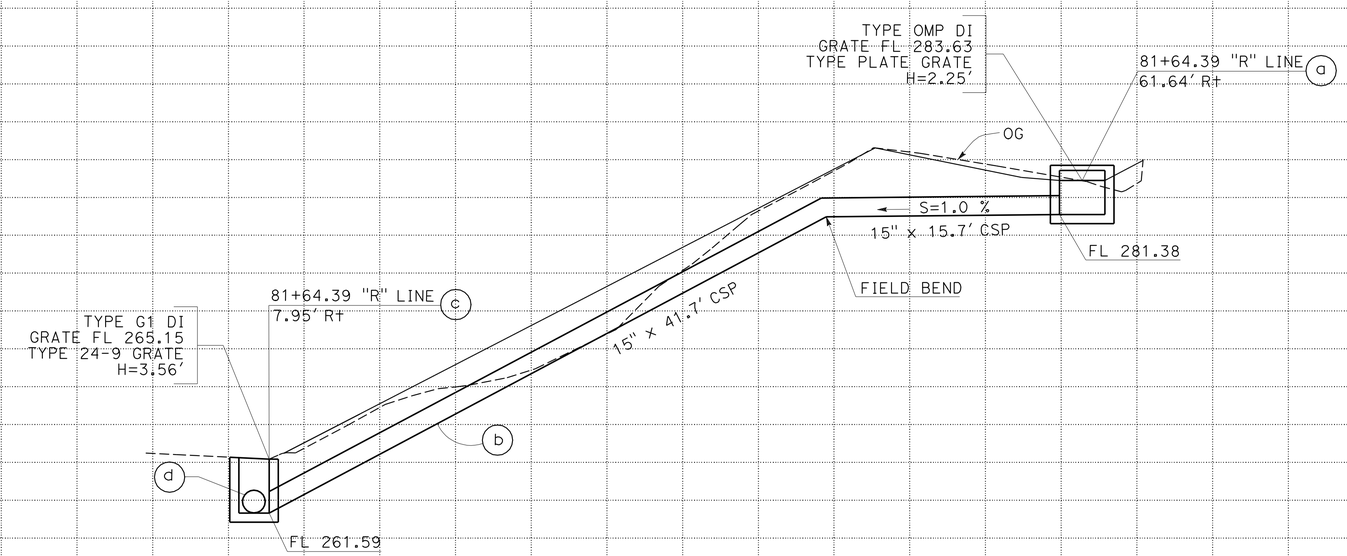

DRAINAGE SYSTEM No. 3

SCALE: Horiz 1" = 5'
Vert 1" = 5'

DRAINAGE PROFILE
DP-2

STATION		TOTAL
CY	Exc	
	Emb	

STATE OF CALIFORNIA - DEPARTMENT OF TRANSPORTATION
Caltrans
DESIGN

FUNCTIONAL SUPERVISOR: SANKU MOHAN
CALCULATED-DESIGNED BY: JOO BAEK
CHECKED BY: LAWRENCE LOWE
REVISED BY
DATE REVISED

LAST REVISION DATE PLOTTED => 22-FEB-2010
10-28-09 TIME PLOTTED => 15:15

Dist	COUNTY	ROUTE	POST MILES TOTAL PROJECT	SHEET No.	TOTAL SHEETS
06	Fre	99	17.3/18.0	13	39

Lawrence Michael Lowe 10-28-09
REGISTERED CIVIL ENGINEER DATE

2-16-10
PLANS APPROVAL DATE

REGISTERED PROFESSIONAL ENGINEER
LAWRENCE MICHAEL LOWE
No. 66753
Exp. 9/30/10
CIVIL
STATE OF CALIFORNIA

THE STATE OF CALIFORNIA OR ITS OFFICERS OR AGENTS SHALL NOT BE RESPONSIBLE FOR THE ACCURACY OR COMPLETENESS OF ELECTRONIC COPIES OF THIS PLAN SHEET.

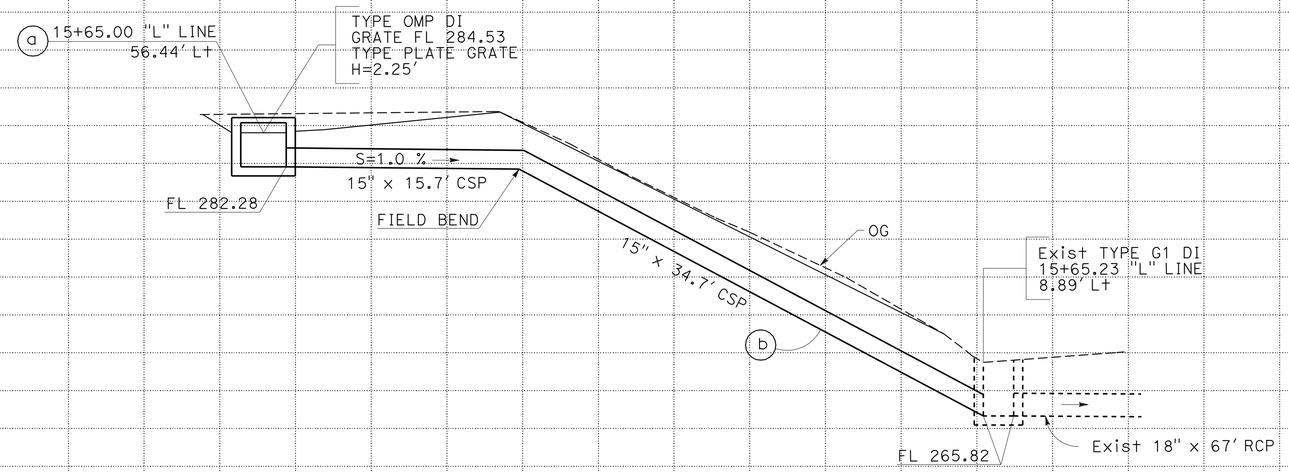

DRAINAGE SYSTEM No. 5

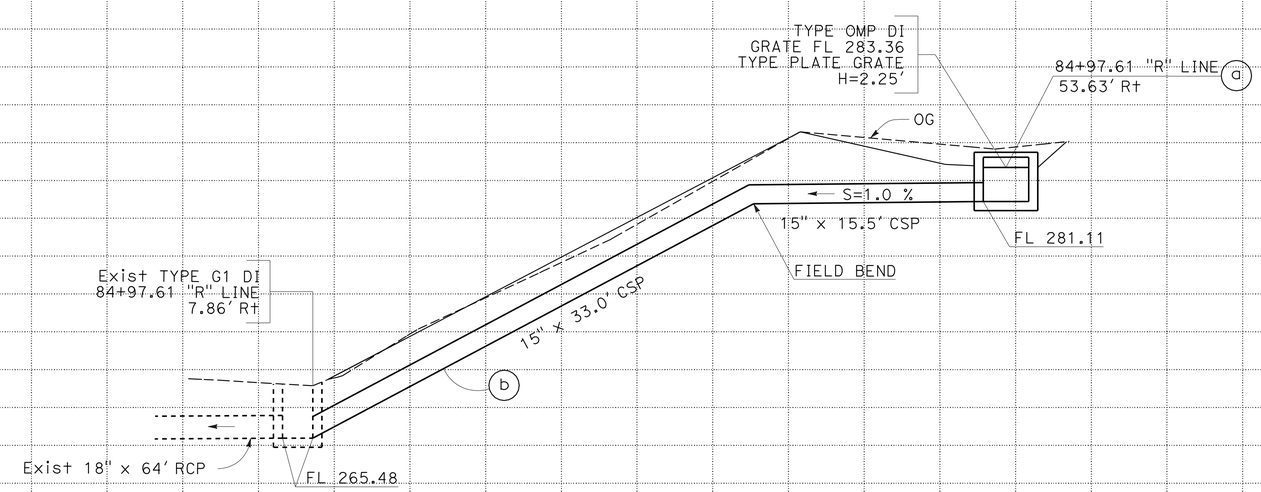

DRAINAGE SYSTEM No. 4

SCALE: Horiz 1" = 5'
Vert 1" = 5'

DRAINAGE PROFILE
DP-3

STATION		TOTAL
CY	Exc	
	Emb	

STATE OF CALIFORNIA - DEPARTMENT OF TRANSPORTATION
Caltrans
DESIGN

FUNCTIONAL SUPERVISOR: SANKU MOHAN
CALCULATED-DESIGNED BY: JOO BAEK
CHECKED BY: LAWRENCE LOWE
REVISED BY
DATE REVISED

LAST REVISION 10-28-09
DATE PLOTTED => 22-FEB-2010
TIME PLOTTED => 15:15

Dist	COUNTY	ROUTE	POST MILES TOTAL PROJECT	SHEET No.	TOTAL SHEETS
06	Fre	99	17.3/18.0	14	39

Lawrence Michael Lowe 10-28-09
REGISTERED CIVIL ENGINEER DATE

2-16-10
PLANS APPROVAL DATE

REGISTERED PROFESSIONAL ENGINEER
LAWRENCE MICHAEL LOWE
No. 66753
Exp. 9/30/10
CIVIL
STATE OF CALIFORNIA

THE STATE OF CALIFORNIA OR ITS OFFICERS OR AGENTS SHALL NOT BE RESPONSIBLE FOR THE ACCURACY OR COMPLETENESS OF ELECTRONIC COPIES OF THIS PLAN SHEET.

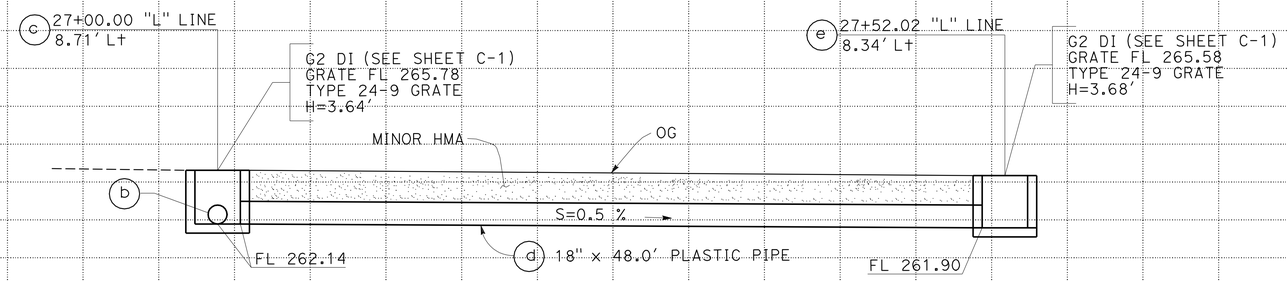

DRAINAGE SYSTEM No. 6

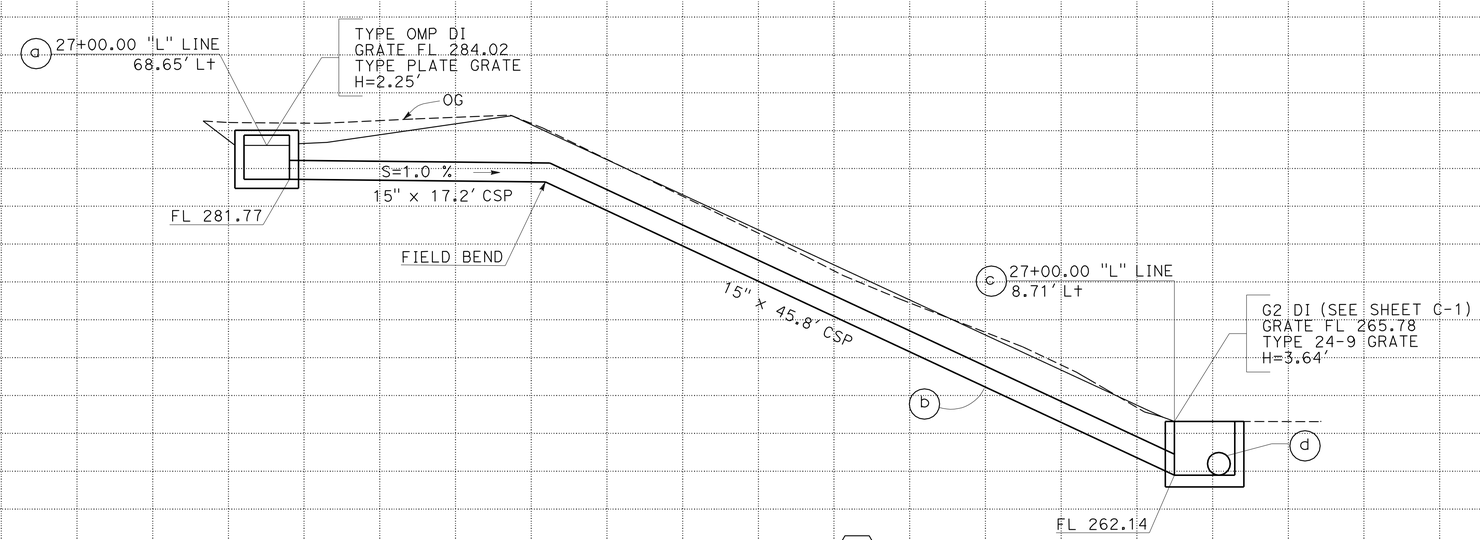

DRAINAGE SYSTEM No. 6

SCALE: Horiz 1" = 5'
Vert 1" = 5'

DRAINAGE PROFILE
DP-4

STATION		TOTAL
CY	Exc	
	Emb	

STATE OF CALIFORNIA - DEPARTMENT OF TRANSPORTATION
Caltrans
DESIGN
FUNCTIONAL SUPERVISOR: SANKU MOHAN
CALCULATED-DESIGNED BY: JOO BAEK
CHECKED BY: LAWRENCE LOWE
REVISED BY
DATE REVISED

LAST REVISION DATE PLOTTED => 22-FEB-2010
10-28-09 TIME PLOTTED => 15:15

Dist	COUNTY	ROUTE	POST MILES TOTAL PROJECT	SHEET No.	TOTAL SHEETS
06	Fre	99	17.3/18.0	15	39

Lawrence Michael Lowe 10-28-09
REGISTERED CIVIL ENGINEER DATE

2-16-10
PLANS APPROVAL DATE

REGISTERED PROFESSIONAL ENGINEER
LAWRENCE MICHAEL LOWE
No. 66753
Exp. 9/30/10
CIVIL
STATE OF CALIFORNIA

THE STATE OF CALIFORNIA OR ITS OFFICERS OR AGENTS SHALL NOT BE RESPONSIBLE FOR THE ACCURACY OR COMPLETENESS OF ELECTRONIC COPIES OF THIS PLAN SHEET.

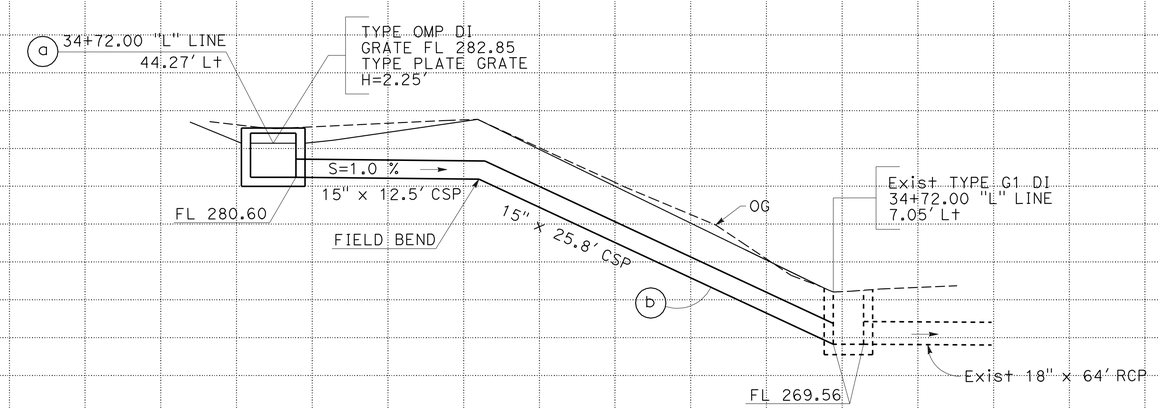

DRAINAGE SYSTEM No. 7

SCALE: Horiz 1" = 5'
Vert 1" = 5'

DRAINAGE PROFILE
DP-5

STATION		TOTAL
CY	Exc	
	Emb	

STATE OF CALIFORNIA - DEPARTMENT OF TRANSPORTATION
Caltrans
DESIGN
FUNCTIONAL SUPERVISOR: SANKU MOHAN
CALCULATED-DESIGNED BY: JOO BAEK
CHECKED BY: LAWRENCE LOWE
REVISED BY
DATE REVISED

LAST REVISION 10-28-09
DATE PLOTTED => 22-FEB-2010
TIME PLOTTED => 15:16

Dist	COUNTY	ROUTE	POST MILES TOTAL PROJECT	SHEET No.	TOTAL SHEETS
06	Fre	99	17.3/18.0	16	39

Lawrence Michael Lowe 10-28-09
REGISTERED CIVIL ENGINEER DATE

2-16-10
PLANS APPROVAL DATE

REGISTERED PROFESSIONAL ENGINEER
LAWRENCE MICHAEL LOWE
No. 66753
Exp. 9/30/10
CIVIL
STATE OF CALIFORNIA

THE STATE OF CALIFORNIA OR ITS OFFICERS OR AGENTS SHALL NOT BE RESPONSIBLE FOR THE ACCURACY OR COMPLETENESS OF ELECTRONIC COPIES OF THIS PLAN SHEET.

DRAINAGE QUANTITIES

	STATION	DRAINAGE SYSTEM No. ⬡	DRAINAGE UNIT ◯	15" CORRUGATED STEEL PIPE	15" PLASTIC PIPE (TYPE S)	18" PLASTIC PIPE (TYPE S)	MINOR CONCRETE (MINOR STRUCTURE)	36" CORRUGATED STEEL PIPE INLET	Misc IRON AND STEEL	DRAINAGE INLET MARKER	REMOVE INLET	REMOVE CULVERT	DESCRIPTION
				LF	LF	LF	CY	LF	LB	EA	EA	LF	
"R" LINE	69+54.00	1	a					4.0	177	1			OMP DRAINAGE INLET
"R" LINE		1	b	49.6									15" CORRUGATED STEEL PIPE
"R" LINE	78+00.00	2	a					3.8	177	1			OMP DRAINAGE INLET
"R" LINE		2	b		110.1								15" PLASTIC PIPE (TYPE S)
"R" LINE	81+64.39	3	a					3.8	177				OMP DRAINAGE INLET
"R" LINE		3	b	57.4									15" CORRUGATED STEEL PIPE
"R" LINE	81+64.39	3	c				1.1		263	1			G1 DRAINAGE INLET
"R" LINE		3	d			34.3							18" PLASTIC PIPE (TYPE S)
"R" LINE	84+97.61	4	a					3.8	177	1			OMP DRAINAGE INLET
"R" LINE		4	b	48.5									15" CORRUGATED STEEL PIPE
"L" LINE	15+65.00	5	a					3.8	177	1			OMP DRAINAGE INLET
"L" LINE		5	b	50.4									15" CORRUGATED STEEL PIPE
"L" LINE	27+00.00	6	a					3.8	177	1			OMP DRAINAGE INLET
"L" LINE		6	b	63.0									15" CORRUGATED STEEL PIPE
"L" LINE	27+00.00	6	c				3.0		263	1			G2 DRAINAGE INLET
"L" LINE		6	d			48.0							18" PLASTIC PIPE (TYPE S)
"L" LINE	27+52.02	6	e				3.0		263	1	1		G2 DRAINAGE INLET
"L" LINE	27+52.02	6	e									2.5	REMOVE CONCRETE PIPE
"L" LINE	34+72.00	7	a					3.8	177	1			OMP DRAINAGE INLET
"L" LINE		7	b	38.3									15" CORRUGATED STEEL PIPE
"R" LINE	81+64.39										1		REMOVE CORRUGATED STEEL INLET
"R" LINE												55	REMOVE CORRUGATED STEEL PIPE
"R" LINE	81+64.39										1		REMOVE CONCRETE INLET
"R" LINE	83+46.91										1		REMOVE CORRUGATED STEEL INLET
"R" LINE												55	REMOVE CORRUGATED STEEL PIPE
"R" LINE	83+45.84										1		REMOVE CONCRETE INLET
TOTAL				307.2	110.1	82.3	7.1	26.8	2028	9	5	112.5	

DRAINAGE QUANTITIES
DQ-1

REVISED BY | DATE REVISED
JESSA DHALIWAL | JOO BAEK
CALCULATED-DESIGNED BY | CHECKED BY
FUNCTIONAL SUPERVISOR: SANKU MOHAN
STATE OF CALIFORNIA - DEPARTMENT OF TRANSPORTATION
Caltrans DESIGN

LAST REVISION 10-28-09
DATE PLOTTED => 22-FEB-2010
TIME PLOTTED => 15:16

Dist	COUNTY	ROUTE	POST MILES TOTAL PROJECT	SHEET No.	TOTAL SHEETS
06	Fre	99	17.3/18.0	17	39

Hassan Taha 05-21-09
REGISTERED CIVIL ENGINEER DATE

2-16-10
PLANS APPROVAL DATE

REGISTERED PROFESSIONAL ENGINEER
HASSAN M. TAHA
No. 60130
Exp. 06/30/10
CIVIL
STATE OF CALIFORNIA

THE STATE OF CALIFORNIA OR ITS OFFICERS OR AGENTS SHALL NOT BE RESPONSIBLE FOR THE ACCURACY OR COMPLETENESS OF SCANNED COPIES OF THIS PLAN SHEET.

STATIONARY MOUNTED CONSTRUCTION AREA SIGNS

SIGN No.	SIGN CODE	PANEL SIZE (in)	SIGN MESSAGE	No. OF POST AND SIZE(in)	No. OF SIGNS
A	W20-1	60 x 60	ROAD WORK AHEAD	2- 6 x 6	4
B	W20-1	48 x 48	ROAD WORK AHEAD	1- 6 x 6	1
C	G20-2	60 x 24	END ROAD WORK	2- 4 x 4	2
E	C40(CA)	108 x 42	TRAFFIC FINES DOUBLED IN CONSTRUCTION ZONES	2- 6 x 6	2

NOTE: LOCATIONS OF CONSTRUCTION AREA SIGNS SHOWN ARE APPROXIMATE. EXACT LOCATIONS TO BE DETERMINED BY THE ENGINEER.

FRESNO

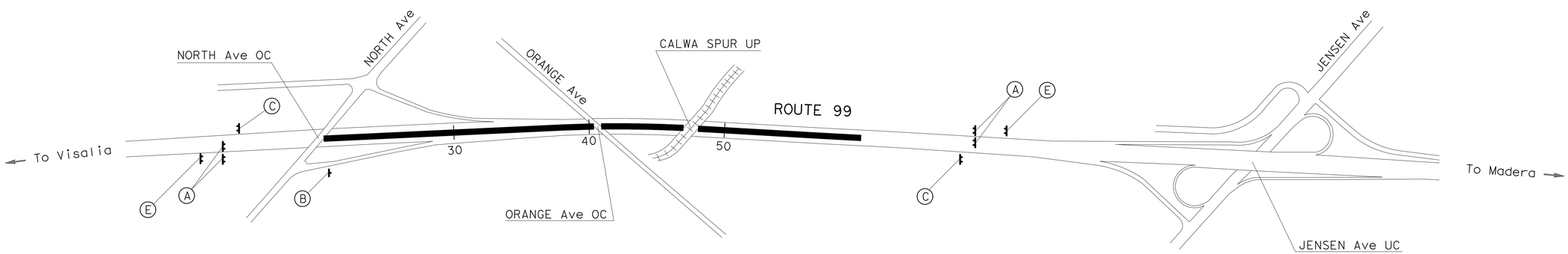

THIS PLAN ACCURATE FOR CONSTRUCTION AREA SIGNS ONLY.

CONSTRUCTION AREA SIGNS

NO SCALE

CS-1

STATE OF CALIFORNIA - DEPARTMENT OF TRANSPORTATION
Caltrans
TRAFFIC DESIGN

FUNCTIONAL SUPERVISOR: M. QATAMI
CALCULATED-DESIGNED BY: KHONDOKER IMTEAZ UDDIN
CHECKED BY: HASSAN TAHA
REVISED BY
DATE REVISED

LAST REVISION 05-21-09
DATE PLOTTED => 22-FEB-2010
TIME PLOTTED => 15:16

Dist	COUNTY	ROUTE	POST MILES TOTAL PROJECT	SHEET No.	TOTAL SHEETS
06	Fre	99	17.3/18.0	18	39

REGISTERED CIVIL ENGINEER 00-00-00 DATE

2-16-10
PLANS APPROVAL DATE

REGISTERED PROFESSIONAL ENGINEER
MAZIN H. AL-ALI
No. 65523
Exp. 9/30/11
CIVIL
STATE OF CALIFORNIA

THE STATE OF CALIFORNIA OR ITS OFFICERS OR AGENTS SHALL NOT BE RESPONSIBLE FOR THE ACCURACY OR COMPLETENESS OF SCANNED COPIES OF THIS PLAN SHEET.

LEGEND

- DIRECTION OF TRAVEL
- Temp Railing (TYPE K)
- TEMPORARY CRASH CUSHION MODULE
- CHANNELIZER (SURFACE MOUNTED)

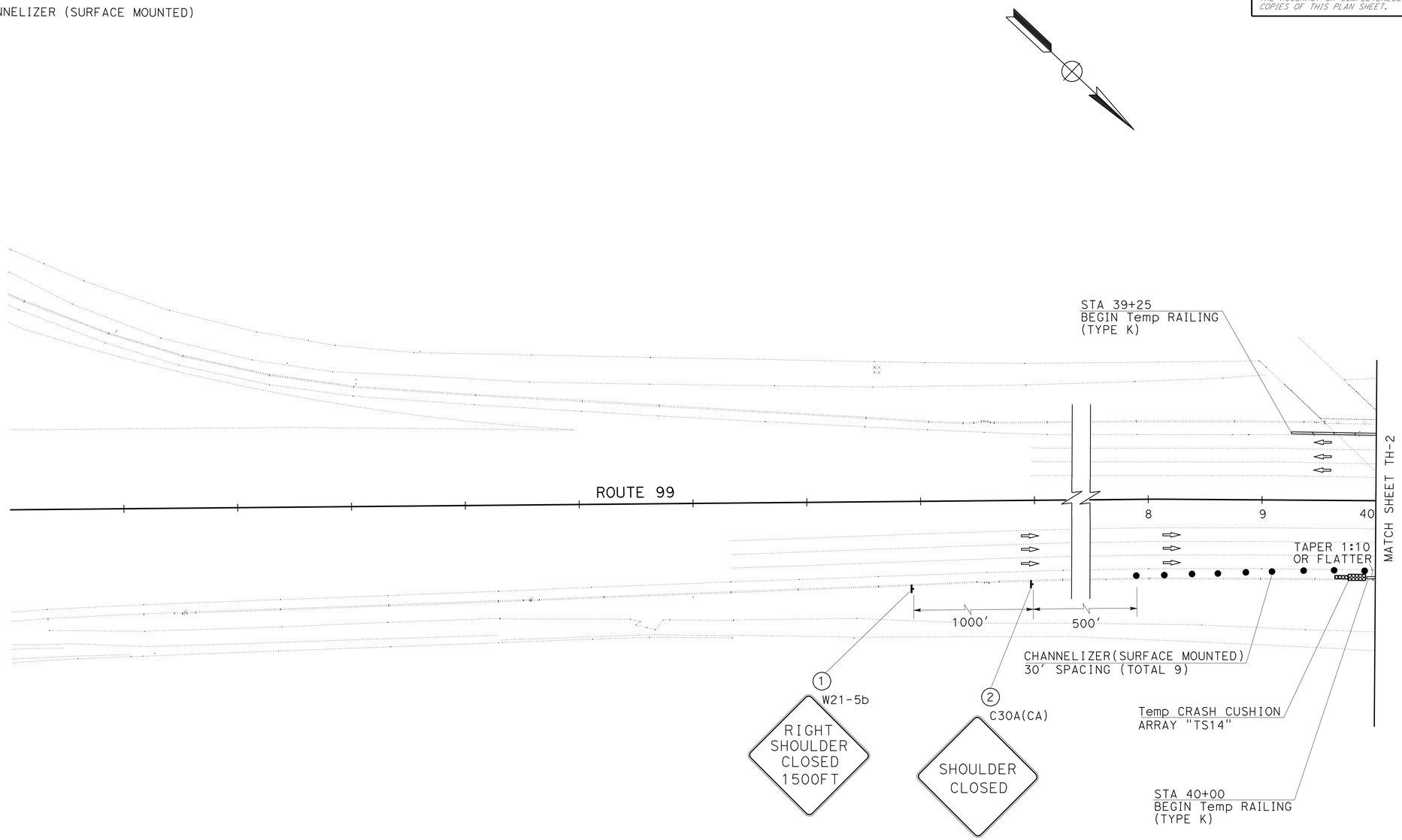

THIS PLAN ACCURATE FOR TRAFFIC HANDLING ONLY.

TRAFFIC HANDLING PLAN
TH-1

SCALE: 1"=50'

STATE OF CALIFORNIA - DEPARTMENT OF TRANSPORTATION
Caltrans
TRAFFIC DESIGN

FUNCTIONAL SUPERVISOR: MOHAMMED QATAMI
CALCULATED-DESIGNED BY: HASEEB YOUSAF
CHECKED BY: MAZIN AL-ALI
REVISED BY
DATE REVISED

LAST REVISION 10-28-09
DATE PLOTTED => 22-FEB-2010
TIME PLOTTED => 15:16

Dist	COUNTY	ROUTE	POST MILES TOTAL PROJECT	SHEET No.	TOTAL SHEETS
06	Fre	99	17.3/18.0	19	39

REGISTERED CIVIL ENGINEER 10-28-09 DATE

2-16-10
PLANS APPROVAL DATE

REGISTERED PROFESSIONAL ENGINEER MAZIN H. AL-ALI No. 65523 Exp. 9/30/11 CIVIL STATE OF CALIFORNIA

THE STATE OF CALIFORNIA OR ITS OFFICERS OR AGENTS SHALL NOT BE RESPONSIBLE FOR THE ACCURACY OR COMPLETENESS OF SCANNED COPIES OF THIS PLAN SHEET.

STATIONARY MOUNTED CONSTRUCTION AREA SIGNS

SIGN No.	SHEET No.	SIGN CODE	PANEL SIZE	No. OF POST AND SIZE	No. OF SIGNS
1	TH-1	W21-5b	48" x 48"	1- 6" x 6"	1
2		C30A(CA)	48" x 48"	1- 6" x 6"	1
3	TH-2	C30A(CA)	48" x 48"	1- 6" x 6"	1
4		W21-5b	48" x 48"	1- 6" x 6"	1

NOTE: 1. LOCATIONS OF CONSTRUCTION AREA SIGNS SHOWN ARE APPROXIMATE. EXACT LOCATIONS TO BE DETERMINED BY THE ENGINEER.
2. FOR ADDITIONAL CONSTRUCTION AREA SIGN SEE "CONSTRUCTION AREA SIGN SHEET" (CS-1).

TEMPORARY RAILING (TYPE K)

DIRECTION	SHEET No.	LOCATION	LF
SOUTHBOUND	TH-1 THRU TH-2	STA 39+25 TO STA 41+10	185
		STA 47+45 TO STA 49+32	187
NORTHBOUND	TH-1 THRU TH-2	STA 40+00 TO STA 41+82	182
		STA 45+71 TO STA 47+60	189
TOTAL			743

TEMPORARY CRASH CUSHION MODULE

SHEET No.	EA
TH-1	14
TH-2	42
TOTAL	56

CHANNELIZER (SURFACE MOUNTED)

SHEET No.	EA
TH-1	9
TH-2	63
TOTAL	72

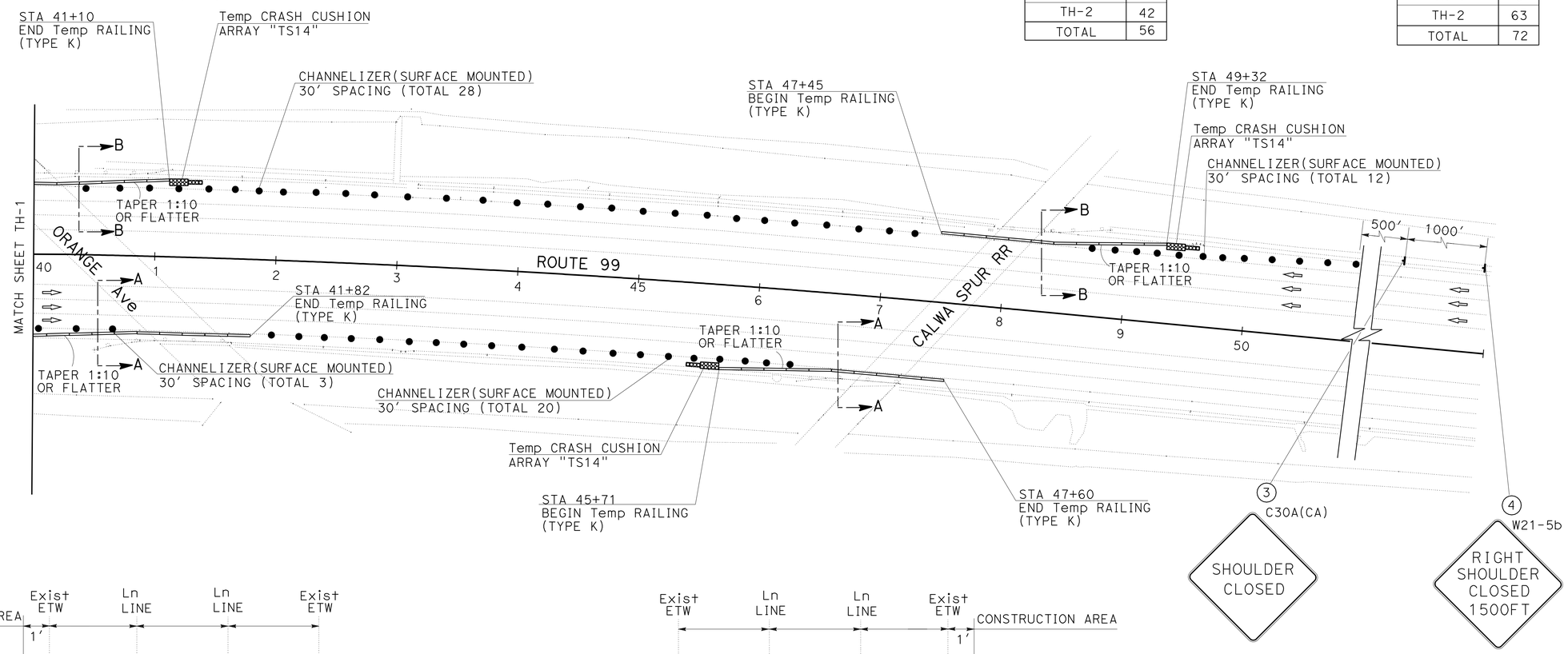

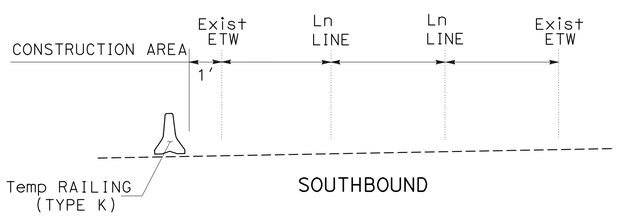

SOUTHBOUND

SECTION B-B
NO SCALE

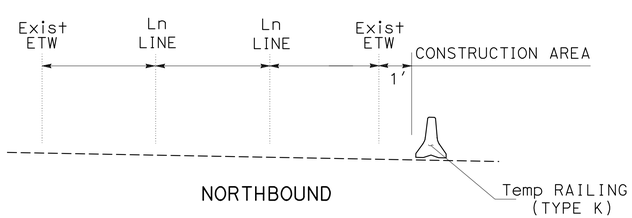

NORTHBOUND

SECTION A-A
NO SCALE

THIS PLAN ACCURATE FOR TRAFFIC HANDLING ONLY.

TRAFFIC HANDLING AND QUANTITIES PLAN

TH-2

SCALE: 1"=50'

STATE OF CALIFORNIA - DEPARTMENT OF TRANSPORTATION
Caltrans
TRAFFIC DESIGN
FUNCTIONAL SUPERVISOR MOHAMMED QATAMI
CALCULATED-DESIGNED BY MAZIN AL-ALI
CHECKED BY HASEEB YOUSAF
REVISED BY
DATE REVISED

LAST REVISION 07-07-09
DATE PLOTTED => 22-FEB-2010
TIME PLOTTED => 15:16

Dist	COUNTY	ROUTE	POST MILES TOTAL PROJECT	SHEET No.	TOTAL SHEETS
06	Fre	99	17.3/18.0	20	39

Lawrence Michael Lowe 10-28-09
REGISTERED CIVIL ENGINEER DATE

2-16-10
PLANS APPROVAL DATE

REGISTERED PROFESSIONAL ENGINEER
LAWRENCE MICHAEL LOWE
No. 66753
Exp. 9/30/10
CIVIL
STATE OF CALIFORNIA

THE STATE OF CALIFORNIA OR ITS OFFICERS OR AGENTS SHALL NOT BE RESPONSIBLE FOR THE ACCURACY OR COMPLETENESS OF ELECTRONIC COPIES OF THIS PLAN SHEET.

(N) NOT A SEPARATE PAY ITEM, FOR INFORMATION ONLY.

IMPORTED BORROW

	STATION FROM	STATION TO	(N) WIDTH LF	(N) AREA SF	(N) DEPTH LF	VOLUME CY	NOTES
"R" LINE	62+55.00	74+52.10		44,300.00	1.5	2,461.11	
"R" LINE	75+10.10	79+53.15		27,280.00	1.5	1,515.56	
"R" LINE	79+84.41	93+00.00		47,830.00	1.5	2,657.22	
"R" LINE	62+55.00	74+03.69	5	5,743.45	1.15	244.63	UNDER PERVIOUS CONCRETE
"R" LINE	74+61.66	79+72.00	5	2,551.70	1.15	108.68	UNDER PERVIOUS CONCRETE
"R" LINE	80+05.47	93+00.00	5	6,472.65	1.15	275.69	UNDER PERVIOUS CONCRETE
"R" LINE	62+55.00	74+43.03	8	9,504.24	1.0	352.01	UNDER SHOTCRETE
"R" LINE	75+42.18	79+30.31	8	3,105.04	1.0	115.00	UNDER SHOTCRETE
"R" LINE	79+63.25	93+00.00	8	10,694.00	1.0	396.07	UNDER SHOTCRETE
"L" LINE	10+00.00	18+36.52		29,720.00	1.5	1,651.11	
"L" LINE	19+00.00	27+25.00		42,720.00	1.5	2,373.33	
"L" LINE	27+65.00	39+00.00		37,760.00	1.5	2,097.78	
"L" LINE	10+00.00	18+57.52	5	4,287.60	1.15	182.62	UNDER PERVIOUS CONCRETE
"L" LINE	19+14.20	27+13.68	5	3,997.40	1.15	170.26	UNDER PERVIOUS CONCRETE
"L" LINE	27+47.33	39+00.00	5	5,763.35	1.15	245.48	UNDER PERVIOUS CONCRETE
"L" LINE	10+00.00	18+14.92	8	6,519.36	1.0	241.46	UNDER SHOTCRETE
"L" LINE	18+81.68	27+47.34	8	6,925.28	1.0	256.49	UNDER SHOTCRETE
"L" LINE	27+78.47	39+00.00	8	8,972.24	1.0	332.31	UNDER SHOTCRETE
					SUBTOTAL	15,676.81	
					SUBTOTAL *	357.00	
					TOTAL	16,033.81	

* FROM SIDE SLOPE DIGOUTS TABLE, SHEET DD-1

TEMPORARY FENCE (TYPE ESA)

	SIDE R	SIDE L	STATION	LF
"L" LINE	-	X	18+12.00	100
"L" LINE	-	X	19+50.00	100
"L" LINE	-	X	39+00.00	165
"R" LINE	X	-	75+20.00	100
"R" LINE	X	-	80+25.00	165
			TOTAL	630

X - DENOTES REQUIREMENT

SHOTCRETE

	STATION FROM	STATION TO	(N) AREA SF	(N) DEPTH LF	VOLUME CY
"R" LINE	62+55.00	74+43.03	9,504.24	.5	176.00
"R" LINE	75+42.18	79+30.31	3,105.04	.5	57.50
"R" LINE	79+63.25	93+00.00	10,694.00	.5	198.04
"L" LINE	10+00.00	18+14.92	6,519.36	.5	120.73
"L" LINE	18+81.68	27+47.34	6,925.28	.5	128.25
"L" LINE	27+78.47	39+00.00	8,972.24	.5	166.15
				TOTAL	846.67

EXCAVATION

	STATION FROM	STATION TO	VOLUME CY
"L" LINE	10+00.00	18+57.52	2,155
"L" LINE	18+81.68	27+47.34	3,245
"L" LINE	27+47.33	39+00.00	3,285
"R" LINE	62+55.00	74+52.10	2,633
"R" LINE	74+61.66	79+72.00	1,228
"R" LINE	79+63.25	93+00.00	3,134
		TOTAL	15,680

PERVIOUS CONCRETE

	STATION FROM	STATION TO	(N) AREA SF	(N) DEPTH LF	VOLUME CY
"R" LINE	62+55.00	74+03.69	5,743.45	0.35	74.45
"R" LINE	74+61.66	79+72.00	2,551.70	0.35	33.08
"R" LINE	80+05.47	93+00.00	6,472.65	0.35	83.90
"L" LINE	10+00.00	18+57.52	4,287.60	0.35	55.58
"L" LINE	19+14.20	27+13.68	3,997.40	0.35	51.82
"L" LINE	27+47.33	39+00.00	5,763.35	0.35	74.71
				TOTAL	373.54

TEMPORARY DRAINAGE INLET PROTECTION

	STATION	EA
"R" LINE	60+75.04	1
"R" LINE	62+48.72	1
"R" LINE	65+52.94	1
"R" LINE	69+53.93	1
"R" LINE	69+54.00	1
"R" LINE	72+42.64	1
"R" LINE	76+01.42	1
"R" LINE	78+00.00	1
"R" LINE	79+12.92	1
"R" LINE	79+13.04	1
"R" LINE	79+67.82	1
"R" LINE	81+27.08	1
"R" LINE	81+64.39	2
"R" LINE	84+97.61	2
"R" LINE	88+47.08	1
"R" LINE	92+47.42	1

	STATION	EA
"L" LINE	06+63.88	1
"L" LINE	15+65.00	1
"L" LINE	15+65.23	1
"L" LINE	18+56.58	1
"L" LINE	21+85.62	1
"L" LINE	22+21.71	1
"L" LINE	27+00.00	2
"L" LINE	27+52.02	1
"L" LINE	28+71.63	1
"L" LINE	31+22.26	1
"L" LINE	34+72.01	2
"L" LINE	38+72.14	1
	TOTAL	32

SUMMARY OF QUANTITIES

Q-1

REVISED BY | DATE REVISED
JESSA DHALIWAL | JOO BAEK
CALCULATED-DESIGNED BY | CHECKED BY
FUNCTIONAL SUPERVISOR: SANKU MOHAN
STATE OF CALIFORNIA - DEPARTMENT OF TRANSPORTATION
Caltrans DESIGN

LAST REVISION 10-28-09 | DATE PLOTTED => 22-FEB-2010 | TIME PLOTTED => 15:16

Dist	COUNTY	ROUTE	POST MILES TOTAL PROJECT	SHEET No.	TOTAL SHEETS
06	Fre	99	17.3/18.0	21	39

Lawrence Michael Lowe 10-28-09
REGISTERED CIVIL ENGINEER DATE

2-16-10
PLANS APPROVAL DATE

REGISTERED PROFESSIONAL ENGINEER LAWRENCE MICHAEL LOWE No. 66753 Exp. 9/30/10 CIVIL STATE OF CALIFORNIA

THE STATE OF CALIFORNIA OR ITS OFFICERS OR AGENTS SHALL NOT BE RESPONSIBLE FOR THE ACCURACY OR COMPLETENESS OF ELECTRONIC COPIES OF THIS PLAN SHEET.

(N) NOT A SEPARATE PAY ITEM, FOR INFORMATION ONLY.

REMOVE METAL BEAM GUARD RAILING

	STATION		LENGTH
	FROM	TO	LF
"L" LINE	18+64.09	20+23.47	159.95
"L" LINE	27+05.92	27+98.64	93.20
"R" LINE	73+46.19	74+58.52	113.07
"R" LINE	79+27.37	80+11.85	84.78
		TOTAL	451.00

METAL BEAM GUARD RAILING

	STATION		METAL BEAM GUARD RAILING (STEEL POST)	BURIED POST ANCHOR (N)	END ANCHOR ASSEMBLY (TYPE SFT)	FLARE TYPE
	FROM	TO	LF	EA	EA	
"L" LINE	18+63.50	21+13.22	250.00	1	1	11C
"L" LINE	27+05.50	28+80.20	175.00	1	1	11C
"R" LINE	72+82.72	74+57.50	175.00	1	1	11C
"R" LINE	79+01.21	80+13.50	112.50	1	1	11C
		TOTAL	712.50		4	

(N) - Not a pay item. For informational purposes only.

EROSION CONTROL (COMPOST BLANKET)

STATION	VOLUME	AREA (N)	COMPOST (EROSION CONTROL) (N)	PURE LIVE SEED (EROSION CONTROL) (N)
	CY	AC	CY	LB
"R" LINE 50+00.00 TO 62+55.00	168.1	1.25	168.1	52.13
"R" LINE 62+55.00 TO 74+52.10	137.1	1.02	137.1	42.53
"R" LINE 74+61.66 TO 79+72.00	84.7	0.63	84.7	26.27
"R" LINE 79+63.25 TO 93+00.00	147.9	1.10	147.9	45.87
"L" LINE 02+39.56 TO 10+00.00	98.1	0.73	98.1	30.44
"L" LINE 10+00.00 TO 18+57.52	92.8	0.69	92.8	28.77
"L" LINE 18+81.68 TO 27+13.68	133.1	0.99	133.1	41.28
"L" LINE 27+47.33 TO 39+00.00	117.0	0.87	117.0	36.28
TOTAL	978.8			

(N) - Not a pay item. For informational purposes only.

MODIFY LIGHTING AND SIGN ILLUMINATION

	STATION	EA
"L" LINE	10+00.00	1
"L" LINE	11+78.00	1
"L" LINE	13+60.00	1
"L" LINE	15+60.00	1
"L" LINE	17+65.00	1
"L" LINE	19+53.00	1
"R" LINE	66+96.00	1
"R" LINE	68+50.00	1
	TOTAL	8

REMOVE AC DIKE

	STATION		LENGTH
	FROM	TO	LF
"L" LINE	10+00.00	39+00.00	2900.00
"R" LINE	62+55.00	93+00.00	3045.00
		TOTAL	5945.00

MINOR HOT MIX ASPHALT

	STATION		LENGTH (N)	WEIGHT	NOTE
	FROM	TO	LF	TON	
"L" LINE	10+00.00	39+00.00	2900	79	DIKE
"L" LINE	10+00.00	39+00.00	2900	44	DIKE PAD
"L" LINE	27+00.00	27+52.02	48	12	DRAINAGE PIPE COVER
"R" LINE	62+55.00	93+00.00	3045	83	DIKE
"R" LINE	62+55.00	93+00.00	3045	46	DIKE PAD
"R" LINE	81+27.08	81+64.39	35	9	DRAINAGE PIPE COVER
			TOTAL	273	

(N) - Not a pay item. For informational purposes only.

PLACE HOT MIX ASPHALT DIKE

	STATION		TYPE A	TYPE C	TYPE F
	FROM	TO	LF	LF	LF
"L" LINE	10+00.00	18+63.50	863.50		
"L" LINE	18+63.50	19+88.50			125.00
"L" LINE	19+88.50	21+13.22		125.00	
"L" LINE	21+13.22	27+05.50	592.28		
"L" LINE	27+05.50	27+43.00			37.50
"L" LINE	27+43.00	28+80.20		137.50	
"L" LINE	28+80.20	39+00.00	1019.80		
"R" LINE	62+55.00	72+82.72	1027.72		
"R" LINE	72+82.72	73+82.50		100.00	
"R" LINE	73+82.50	74+57.50			75.00
"R" LINE	74+57.50	79+01.21	443.71		
"R" LINE	79+01.21	79+76.00		75.00	
"R" LINE	79+76.00	80+13.50			37.50
"R" LINE	80+13.50	93+00.00	1286.50		
		TOTAL	5233.51	437.50	275.00

SUMMARY OF QUANTITIES

Q-2

STATE OF CALIFORNIA - DEPARTMENT OF TRANSPORTATION
Caltrans DESIGN
FUNCTIONAL SUPERVISOR SANKU MOHAN
CALCULATED-DESIGNED BY JESSA DHALIWAL
CHECKED BY JOO BAEK
REVISED BY
DATE REVISED

LAST REVISION 10-28-09 | DATE PLOTTED => 22-FEB-2010 TIME PLOTTED => 15:17

Dist	COUNTY	ROUTE	POST MILES TOTAL PROJECT	SHEET No.	TOTAL SHEETS
06	Fre	99	17.3/18.0	22	39

Mona Attallah 10-28-09
REGISTERED ELECTRICAL ~~ENGINEER~~ DATE

2-16-10
PLANS APPROVAL DATE

REGISTERED PROFESSIONAL ENGINEER
MONA N. ATTALLAH
No. 18407
Exp. 6/30/10
ELECTRICAL
STATE OF CALIFORNIA

THE STATE OF CALIFORNIA OR ITS OFFICERS OR AGENTS SHALL NOT BE RESPONSIBLE FOR THE ACCURACY OR COMPLETENESS OF SCANNED COPIES OF THIS PLAN SHEET.

NOTES:

1. ALL PULL BOXES SHALL BE No. 5(E) UNLESS OTHERWISE NOTED.

2. FOR ACCURATE RIGHT OF WAY AND ACCESS DATA, CONTACT RIGHT OF WAY ENGINEERING AT THE DISTRICT OFFICE.

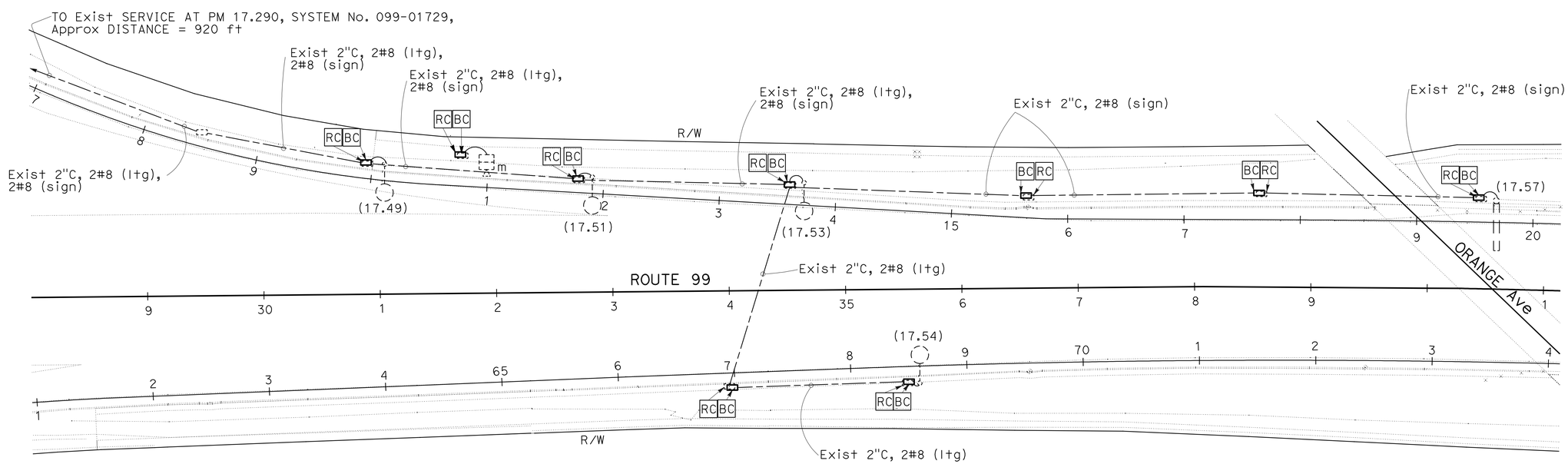

THIS PLAN IS ACCURATE FOR ELECTRICAL WORK ONLY.

REPLACE PULL BOX

SCALE: 1" = 50'

E-1

STATE OF CALIFORNIA - DEPARTMENT OF TRANSPORTATION
Caltrans
ELECTRICAL DESIGN

FUNCTIONAL SUPERVISOR: ALI BAKHDOUD

CALCULATED-DESIGNED BY: MONA ATTALLAH
CHECKED BY: RAJPREET SINGH

REVISED BY
DATE REVISED

LAST REVISION 10-23-09
DATE PLOTTED => 22-FEB-2010
TIME PLOTTED => 15:17

DIST	COUNTY	ROUTE	POST MILES TOTAL PROJECT	SHEET NO.	TOTAL SHEETS
06	Fre	99	17.3/18.0	23	39

Randell D. Hiatt
REGISTERED CIVIL ENGINEER

June 6, 2008
PLANS APPROVAL DATE

REGISTERED PROFESSIONAL ENGINEER Randell D. Hiatt No. C50200 Exp. 6-30-09 CIVIL STATE OF CALIFORNIA

The State of California or its officers or agents shall not be responsible for the accuracy or completeness of electronic copies of this plan sheet.

To accompany plans dated 2-16-10

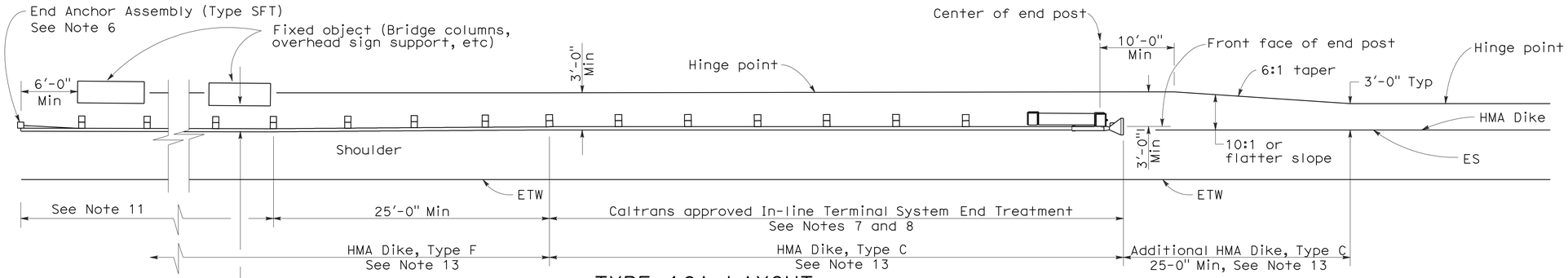

TYPE 16A LAYOUT

(GUARD RAILING INSTALLATION AT ROADSIDE FIXED OBJECT OR OBJECTS WITH AN IN-LINE END TREATMENT AT TRAFFIC APPROACH END OF RAILING)
See Notes 12 and 13

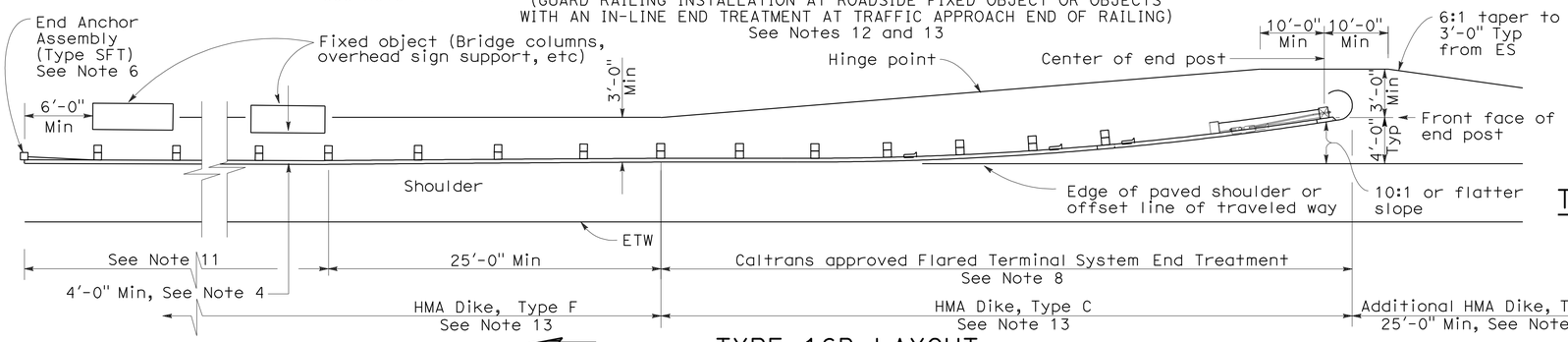

TYPE 16B LAYOUT

(GUARD RAILING INSTALLATION AT ROADSIDE FIXED OBJECT OR OBJECTS WITH A FLARED END TREATMENT AT TRAFFIC APPROACH END OF RAILING)
See Notes 12 and 13

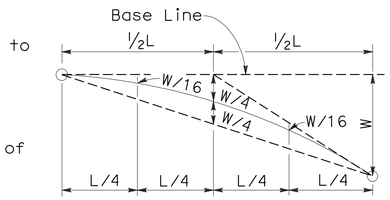

TYPICAL PARABOLIC LAYOUT

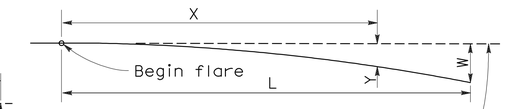

Base Line (Edge of paved shoulder or offset line of edge of traveled way)

$$Y = \frac{WX^2}{L^2}$$

Y = Offset from base line
W = Maximum offset
X = Distance along base line
L = Length of flare

PARABOLIC FLARE OFFSETS

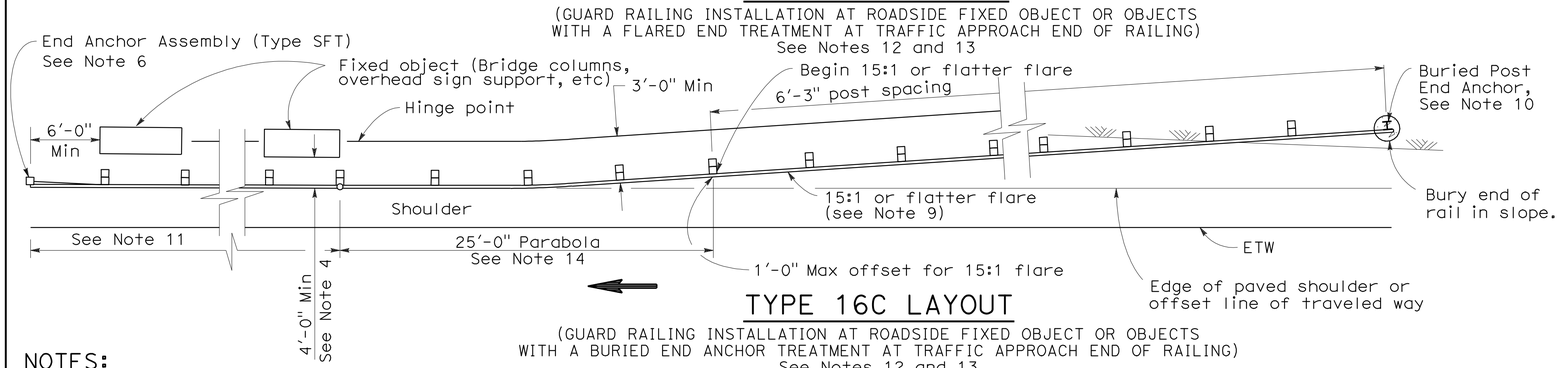

TYPE 16C LAYOUT

(GUARD RAILING INSTALLATION AT ROADSIDE FIXED OBJECT OR OBJECTS WITH A BURIED END ANCHOR TREATMENT AT TRAFFIC APPROACH END OF RAILING)
See Notes 12 and 13

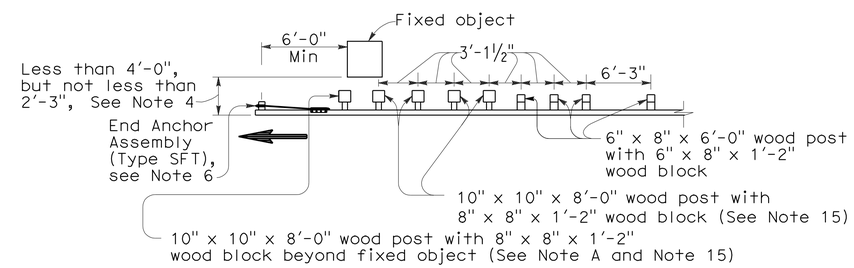

NOTE A: For a series of fixed objects (bridge columns, overhead sign supports, etc.) additional 10" x 10" x 8'-0" wood post with 8" x 8" x 1'-2" wood blocks at 3'-1½" center to center spacing are to be used between fixed objects.

STRENGTHENED RAILING SECTIONS FOR FIXED OBJECT

Use strengthened railing sections with Types 16A, 16B or 16C Layouts where minimum clearance between the face of the guard railing and fixed object(s) is less than 4'-0", but not less than 2'-3". See Note 4

NOTES:

1. Line post, blocks and hardware to be used are shown on Revised Standard Plans A77A1, A77A2, A77B1, A77C1 and A77C2.
2. Guard railing post spacing to be 6'-3" center to center, except as otherwise noted.
3. Except as noted, line posts are 6" x 8" x 6'-0" wood with 6" x 8" x 1'-2" wood blocks. W6 x 9 steel posts, 6'-0" in length, with 6" x 8" x 1'-2" notched wood blocks or notched recycled plastic blocks may be used for 6" x 8" x 6'-0" wood line posts with 6" x 8" x 1'-2" wood blocks where applicable and when specified.
4. A 4'-0" minimum clearance is required between the face of the railing and the face of a fixed object located directly behind standard guard railing sections with post spacing of 6'-3". Construct guard railing as shown in the detail "Strengthened Railing Sections for Fixed Objects" on this plan, where the clearance between the face of the railing and the face of a fixed object is less than 4'-0", but not less than 2'-3". Where the clearance is less than 2'-3", a concrete wall or barrier should be constructed to shield the fixed object(s).
5. Direction of adjacent traffic indicated by ⟶.
6. For End Anchor Assembly (Type SFT) details, see Standard Plan A77H1.
7. In-line Terminal System End Treatments are used where site conditions will not accommodate a flared end treatment.
8. The type of terminal system to be used will be shown on the Project Plans.
9. The 15:1 or flatter flare used with Type 16C Layout is based on the edge of the paved shoulder or offset line of edge of the traveled way. The length of guard railing within the 15:1 or flatter flare is based on site conditions and should be a length equal to multiples of 12'-6".
10. For details of the Buried Post End Anchor used with Type 16C Layout, see Standard Plan A77I2.
11. As site conditions dictate, construct additional guard railing to shield fixed object(s). Additional guard railing length equal to multiples of 12'-6". Post spacing at 6'-3" except as specified in Note 4.
12. Layout Types 16A, 16B or 16C are typically used where guard railing is recommended to shield roadside fixed object(s) and a crashworthy end treatment is required for only one direction of traffic.
13. Where placement of dike is required with guard railing, see Revised Standard Plan RSP A77C4 for dike positioning details.
14. For typical flare offsets for 25'-0" length parabola with maximum offset of 1'-0", see Revised Standard Plan RSP A77E1.
15. W6 x 15 steel post, 8'-0" in length, with 8" x 8" x 1'-2" notched wood block or notched recycled plastic blocks may be used in place of the 10" x 10" x 8'-0" wood post with 8" x 8" x 1'-2" wood block shown in the "Strengthened Railing Sections Detail".

STATE OF CALIFORNIA
DEPARTMENT OF TRANSPORTATION

METAL BEAM GUARD RAILING TYPICAL LAYOUTS FOR ROADSIDE FIXED OBJECTS

NO SCALE

RSP A77G3 DATED JUNE 6, 2008 SUPERSEDES STANDARD PLAN A77G3 DATED MAY 1, 2006 - PAGE 61 OF THE STANDARD PLANS BOOK DATED MAY 2006.

REVISED STANDARD PLAN RSP A77G3

2006 REVISED STANDARD PLAN RSP A77G3

12-10-07

DIST	COUNTY	ROUTE	POST MILES TOTAL PROJECT	SHEET NO.	TOTAL SHEETS
06	Fre	99	17.3/18.0	24	39

Randell D. Hiatt
REGISTERED CIVIL ENGINEER

June 6, 2008
PLANS APPROVAL DATE

REGISTERED PROFESSIONAL ENGINEER
Randell D. Hiatt
No. C50200
Exp. 6-30-09
CIVIL
STATE OF CALIFORNIA

The State of California or its officers or agents shall not be responsible for the accuracy or completeness of electronic copies of this plan sheet.

To accompany plans dated 2-16-10

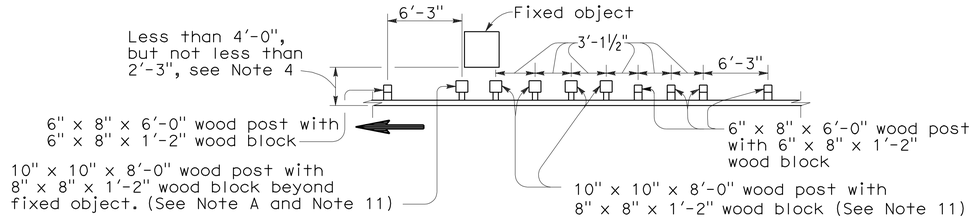

Note A. For a series of fixed objects (bridge columns, overhead sign supports, etc.) additional 10" x 10" x 8'-0" wood post with 8" x 8" x 1'-2" wood blocks at 3'-1½" center to center spacing are to be used between fixed object(s).

STRENGTHENED RAILING SECTIONS FOR FIXED OBJECT

Use strengthened railing sections with Layout Type 16H where minimum clearance between the face of the guard railing and fixed object(s) is less than 4'-0", but not less than 2'-3". See Note 4.

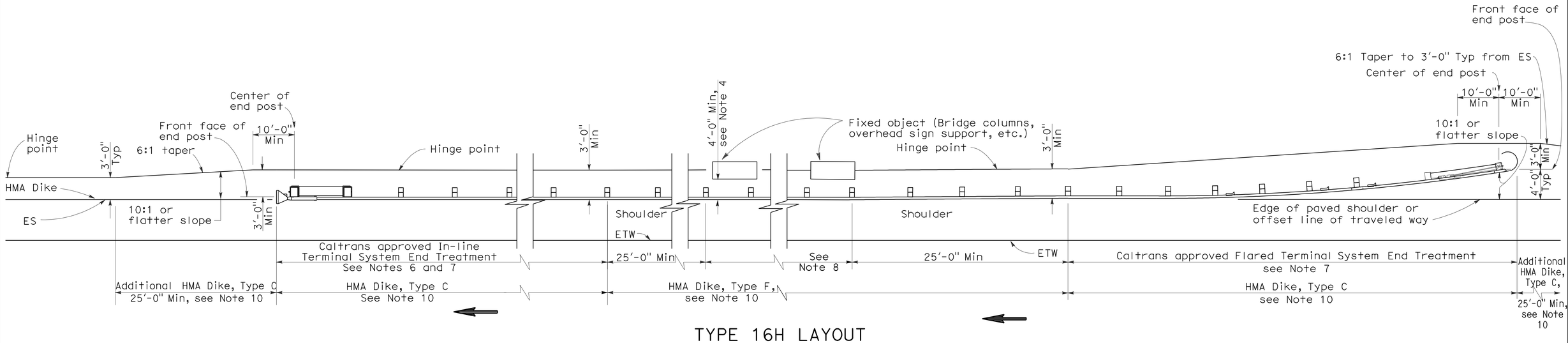

TYPE 16H LAYOUT

(GUARD RAILING INSTALLATION AT ROADSIDE FIXED OBJECT OR OBJECTS WITH A FLARED END TREATMENT AND AN IN-LINE TREATMENT AT THE ENDS OF RAILING)
See Note 9

NOTES:

1. Line post, blocks and hardware to be used are shown on Standard Plans A77A1, A77A2, A77B1, A77C1 and A77C2.
2. Guard railing post spacing to be 6'-3" center to center, except as otherwise noted.
3. Except as noted, line posts are 6" x 8" x 6'-0" wood with 6" x 8" x 1'-2" wood blocks. W6 x 9 steel posts, 6'-0" in length, with 6" x 8" x 1'-2" notched wood blocks or notched recycled plastic blocks may be used for 6" x 8" x 6'-0" wood posts with 6" x 8" x 1'-2" wood blocks where applicable and when specified.
4. A 4'-0" minimum clearance is required between the face of the railing and the face of a fixed object located directly behind standard guard railing sections with post spacing at 6'-3". Construct guard railing as shown in the detail "Strengthened Railing Sections for Fixed Objects" on this plan, where the clearance between the face of the railing and the face of a fixed object is less than 4'-0", but not less than 2'-3". Where the clearance is less than 2'-3", a concrete wall or barrier should be constructed to shield the fixed object(s).
5. Direction of adjacent traffic indicated by ⟶ .
6. In-line Terminal System End Treatments are used where site conditions will not accommodate a flared end treatment.
7. The type of terminal system to be used will be shown on the Project Plans.
8. As site conditions dictate, construct additional guard railing to shield fixed object(s). Additional guard railing length equal to multiples of 12'-6". Post spacing at 6'-3", except as specified in Note 4.
9. Layout Types 16D through 16L, shown on the A77G Series of Revised Standard PLans, typically used where guard railing is recommended to shield roadside fixed object(s) and a crashworthy end treatment is required for both directions of traffic.
10. Where placement of dike is required with guard railing, see Revised Standard Plan RSP A77C4 for dike positioning details.
11. W6 x 15 steel post, 8'-0" in length, with 8" x 8" x 1'-2" notched wood block or notched recycled plastic blocks may be used in place of the 10" x 10" x 8'-0" wood post with 8" x 8" x 1'-2" wood block shown in the "Strengthened Railing Sections Detail".

STATE OF CALIFORNIA
DEPARTMENT OF TRANSPORTATION

METAL BEAM GUARD RAILING TYPICAL LAYOUTS FOR ROADSIDE FIXED OBJECTS

NO SCALE

RSP A77G6 DATED JUNE 6, 2008 SUPERSEDES STANDARD PLAN A77G6
DATED MAY 1, 2006 - PAGE 64 OF THE STANDARD PLANS BOOK DATED MAY 2006.

REVISED STANDARD PLAN RSP A77G6

2006 REVISED STANDARD PLAN RSP A77G6

12-10-07

DIST	COUNTY	ROUTE	POST MILES TOTAL PROJECT	SHEET NO.	TOTAL SHEETS
06	Fre	99	17.3/18.0	25	39

Robert B Schott
LICENSED LANDSCAPE ARCHITECT

April 3, 2009
PLANS APPROVAL DATE

LICENSED LANDSCAPE ARCHITECT Robert B. Schott 3625 Signature 11-30-10 Renewal Date 2-25-09 Date STATE OF CALIFORNIA

The State of California or its officers or agents shall not be responsible for the accuracy or completeness of electronic copies of this plan sheet.

To accompany plans dated 2-16-10

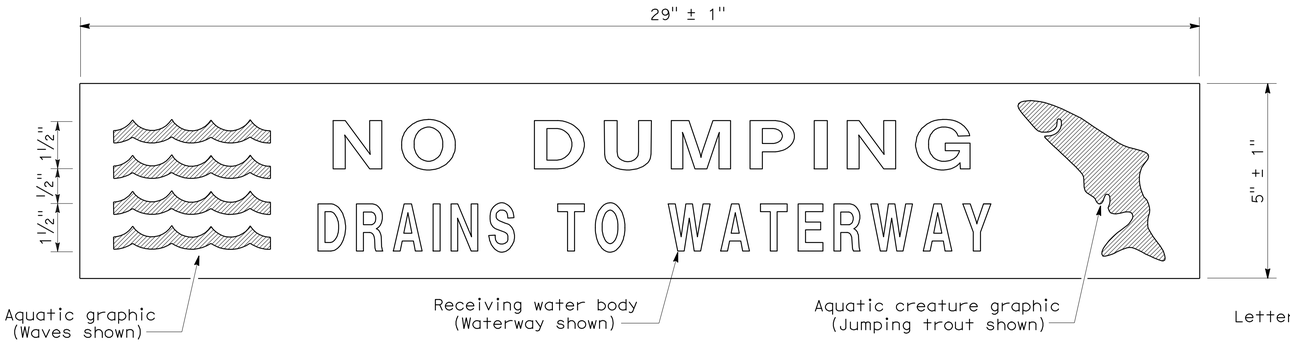

PLAN
DRAINAGE INLET MARKER
(PREFABRICATED THERMOPLASTIC)

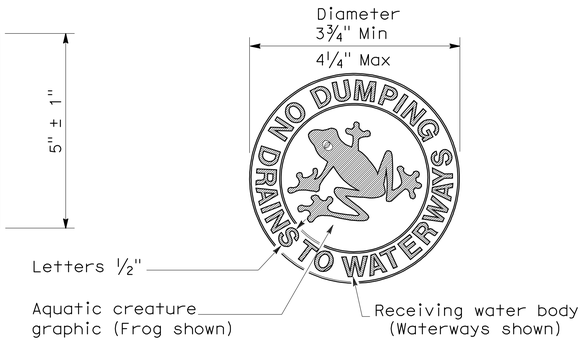

PLAN
DRAINAGE INLET MARKER
(MEDALLION)

PLAN
DRAINAGE INLET MARKER
(STAMPED CONCRETE IMPRINT)

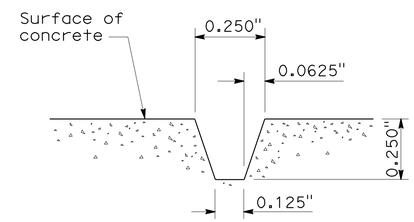

SECTION A-A
STAMPED CONCRETE
IMPRINT DETAIL

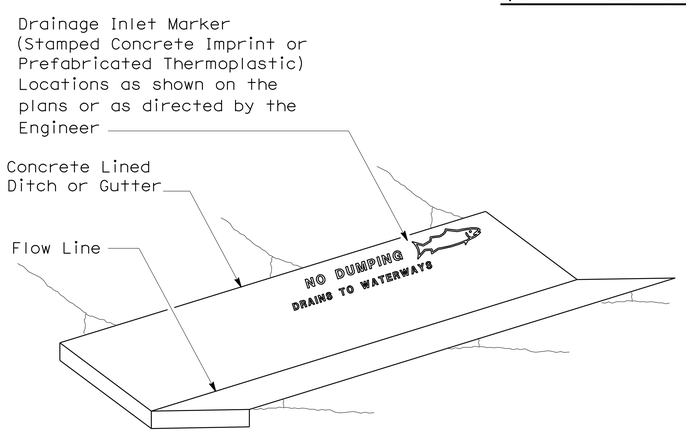

PERSPECTIVE
DRAINAGE INLET MARKER ON
CONCRETE LINED DITCH

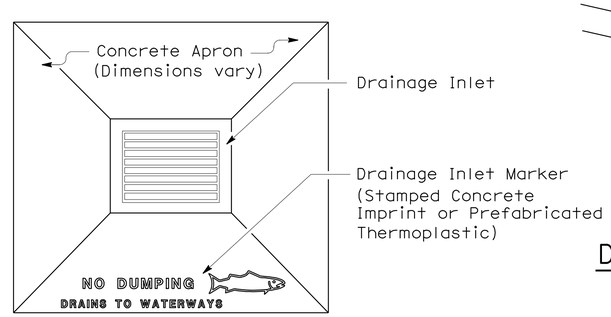

PLAN
DRAINAGE INLET MARKER ON
DRAINAGE INLET APRON

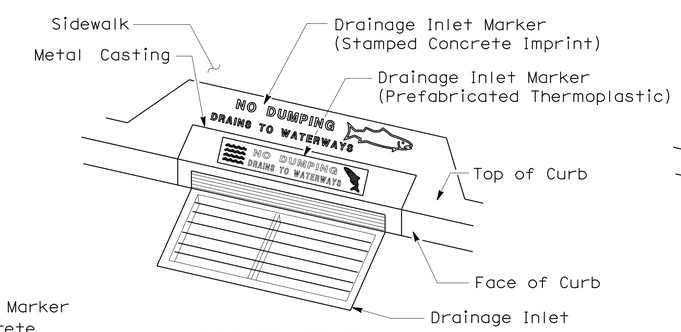

PERSPECTIVE
DRAINAGE INLET MARKER ON
DRAINAGE INLET

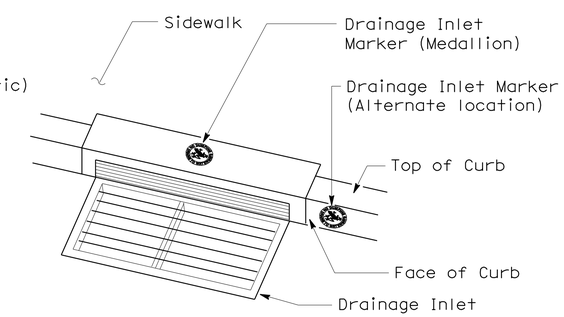

PERSPECTIVE
DRAINAGE INLET MARKER (MEDALLION)
ON DRAINAGE INLET

STATE OF CALIFORNIA
DEPARTMENT OF TRANSPORTATION

DRAINAGE INLET MARKERS

NO SCALE

NSP D71 DATED APRIL 3, 2009 SUPPLEMENTS
THE STANDARD PLANS BOOK DATED MAY 2006.

NEW STANDARD PLAN NSP D71

2006 NEW STANDARD PLAN NSP D71

7-24-08

DIST	COUNTY	ROUTE	POST MILES TOTAL PROJECT	SHEET NO.	TOTAL SHEETS
06	Fre	99	17.3/18.0	26	39

Raymond Don Tsztoo
REGISTERED CIVIL ENGINEER

January 18, 2008
PLANS APPROVAL DATE

REGISTERED PROFESSIONAL ENGINEER Raymond Don Tsztoo No. C37332 Exp. 6-30-08 CIVIL STATE OF CALIFORNIA

The State of California or its officers or agents shall not be responsible for the accuracy or completeness of electronic copies of this plan sheet.

To accompany plans dated 2-16-10

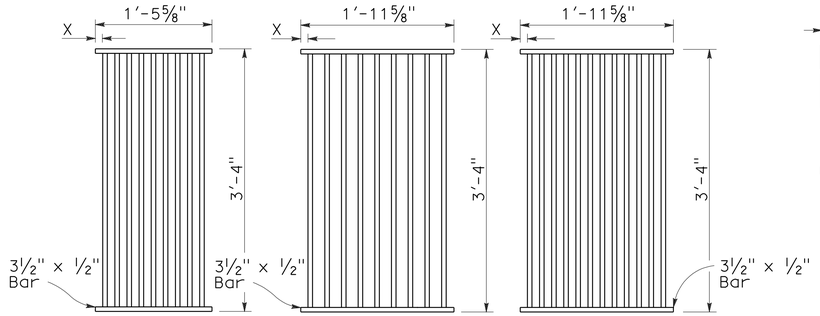

TYPE 18-9

1⅜" Clear spacing. Use within the roadbed on highways where bicycles and pedestrians are excluded.

TYPE 24-9

2" Clear spacing. Use in locations off the roadbed on all types of highways.

TYPE 24-12

1⅜" Clear spacing. Use within the roadbed on highways where bicycles and pedestrians are excluded.

RECTANGULAR GRATE DETAILS

(See table below)

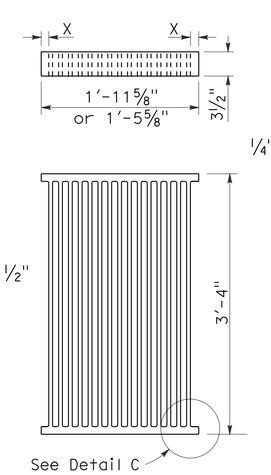

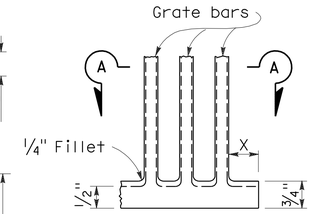

DETAIL C

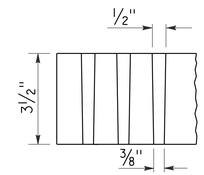

SECTION A-A

ALTERNATIVE CAST NODULAR IRON GRATE OR CAST STEEL GRATE

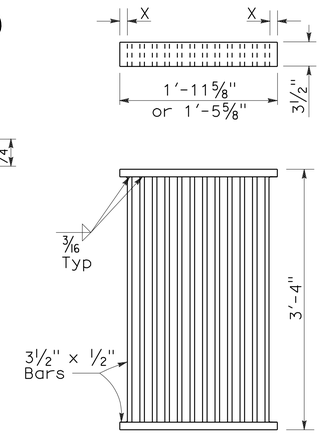

ALTERNATIVE WELDED GRATE

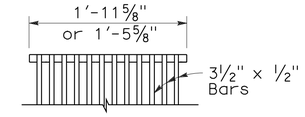

CAST END BLOCK

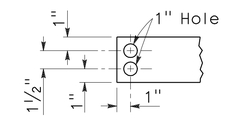

END OF BAR

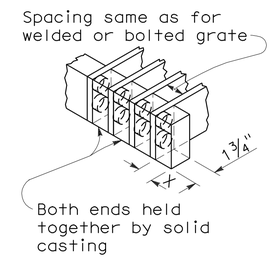

ALTERNATIVE CAST NODULAR IRON OR CAST STEEL END BLOCK GRATE

NOTES:

1. Grate type numbers refer to approximate width of grate in inches and number of bars, respectively.
2. Contractor has the option of using cast nodular iron, cast steel, welded, bolted, or cast end block grate.
3. See Special Provisions for requirements pertaining to galvanizing or asphalt dipping of grates and frames.
4. Rounded top of bars optional on all grates.
5. Pipe inlets with a grate shall be placed so that bars parallel direction of principle surface flow.
6. Full penetration butt welds may be substituted for the fillet welds on all anchors.
7. Standard square, hexagon, round or equivalent headed anchors may be substituted for the right angle hooks on the anchors shown on this plan.
8. Grate and frame weights are based on welded grates (weights of face angles, steps, protection bars, etc. are not included).

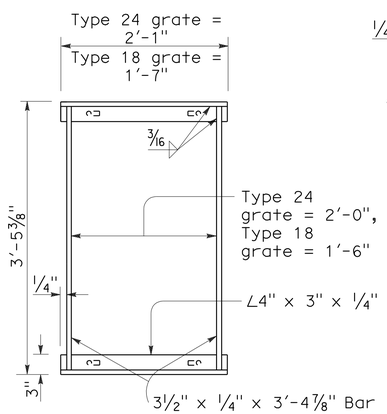

TYPICAL FRAME

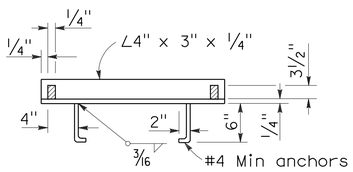

CROSS SECTION

(Thru frame)

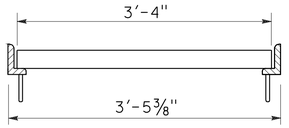

LONGITUDINAL SECTION

(Thru frame and grate)

RECTANGULAR FRAME DETAILS

(For all rectangular grates)

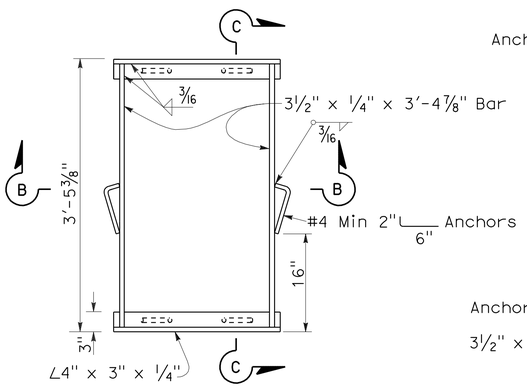

TYPICAL FRAME

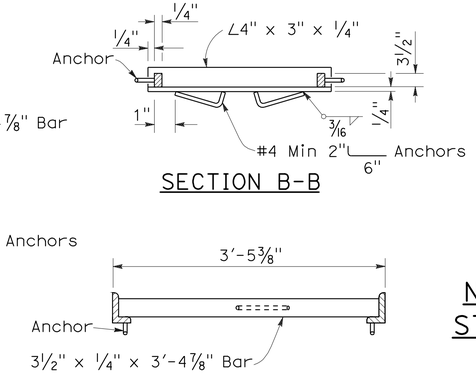

SECTION B-B

SECTION C-C

ALTERNATIVE ANCHOR FOR RECTANGULAR FRAME

(For details not shown, See Rectangular Frame Details)

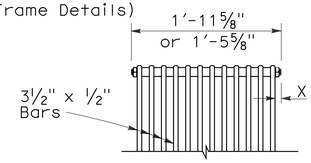

BOLTED END BLOCK

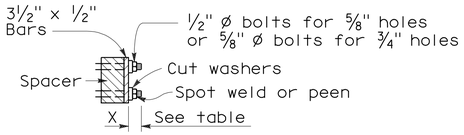

BOLTING DETAIL

ALTERNATIVE BOLTED GRATE

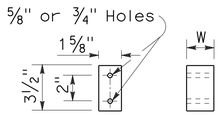

BAR SPACER

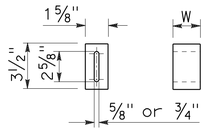

ALTERNATIVE SPACER

W = 1⅜" or 2"

GRATE BAR SPACING TABLE

TYPE	No. OF BARS	CLEAR BAR SPACING	X
18-9	9	1⅜"	1 1/16"
24-9	9	2"	1 9/16"
24-12	12	1⅜"	1¼"

INLET TYPE	COVER TYPE	WEIGHT LB
OS	PLATE	174
OL-7	PLATE	170
OL-10	PLATE	170
OL-14	PLATE	170
OL-21	PLATE	170
OCP	PLATE	112
OCPI	PLATE	112
OCPI	REDWOOD	42
OMP	PLATE	177
OMPI	PLATE	177

INLET TYPE	GRATE TYPE	No. OF GRATES	WEIGHT LB
GDO	24-12	2	634
GOL-7	24-12	1	326
GOL-10	24-12	1	326
GO,G1,G2,G3,G4 (TYPE 24)	24-9	1	263
	24-12	1	326
G4 (TYPE 18),G5,G6	18-9	1	249
GT1	18-9	2	498
GT2	18-9	2	498
GT3	24-12	2	652
GT4	24-12	2	652
TRASH RACK			22

BASIS FOR MISC IRON & STEEL FINAL PAY WEIGHTS FOR DRAINAGE INLETS

(See General Notes, No 8)

STATE OF CALIFORNIA
DEPARTMENT OF TRANSPORTATION

GRATE DETAILS

NO SCALE

RSP D77A DATED JANUARY 18, 2008 SUPERSEDES STANDARD PLAN D77A DATED MAY 1, 2006 - PAGE 155 OF THE STANDARD PLANS BOOK DATED MAY 2006.

REVISED STANDARD PLAN RSP D77A

2006 REVISED STANDARD PLAN RSP D77A

12-14-07

DIST	COUNTY	ROUTE	POST MILES TOTAL PROJECT	SHEET NO.	TOTAL SHEETS
06	Fre	99	17.3/18.0	27	39

Raymond Don Tsztoo
REGISTERED CIVIL ENGINEER

June 6, 2008
PLANS APPROVAL DATE

REGISTERED PROFESSIONAL ENGINEER
Raymond Don Tsztoo
No. C37332
Exp. 6-30-08
CIVIL
STATE OF CALIFORNIA

The State of California or its officers or agents shall not be responsible for the accuracy or completeness of electronic copies of this plan sheet.

ANNULAR AND HELICAL PROFILE

COUPLING TYPE	PIPE CORRUGATION	PIPE SIZE	W OR A	PIPE WALL THICKNESS CSP	PIPE WALL THICKNESS CAP	BAND THICKNESS CSP	BAND THICKNESS CAP	BAR AND STRAP (CSP ONLY) STRAP THICKNESS	BOLTS Dia	BAR Dia	BAR YIELD STRENGTH	ANGLE DIMENSIONS CSP	ANGLE DIMENSIONS CAP	BOLTS (No.- Dia) CSP	BOLTS (No.- Dia) CAP	RIVETS ANGLE TO BAND CSP	RIVETS ANGLE TO BAND CAP	SPOT WELDS ANGLE TO BAND CSP
TWO PIECE INTEGRAL FLANGE	1½′ × ¼"	6"-10"	7"	0.052"-0.079"	0.048"-0.060"	0.052"	0.060"							2-⅜"	2-⅜"			
		12"-18"	7"	0.052"-0.079"		0.064"								2-½"				
	2⅔" × ½"	12"-24"	7"	0.052"-0.079"	0.060"-0.105"	0.064"	0.060"							2-½"	2-½"			
UNIVERSAL	2⅔" × ½"	THROUGH 36"	12"	0.052"-0.138"	0.060"-0.135"	0.052"	0.060"					2" × 2" × 3/16"	2" × 2" × 3/16"	3-½"	3-½"	3-⅜"	3-⅜"	3-½"
		42"-60"	12"	0.052"-0.168"	0.075"-0.164"	0.052"	0.060"					2" × 2" × 3/16"	2" × 2" × 3/16"	3-½"	3-½"	3-⅜"	3-⅜"	5-½"
		THROUGH 72"	12"	0.052"-0.168"	0.164"	0.052"	0.105"	0.079"	½"	⅞"	32 ksi	2" × 2" × 3/16"	2" × 2" × 3/16"	3-½"	3-½"	3-⅜"	3-⅜"	5-½"
		78"-84"	16¼"	0.168"		0.079"		DOUBLE 0.079"	½"	⅞"	32 ksi							
ANNULAR	2⅔" × ½"	THROUGH 36"	7"	0.064"-0.138"	0.060"-0.135"	0.052"	0.060"	0.079"	½"	⅞"	32 ksi	2" × 2" × 3/16"	2" × 2" × 3/16"	2-½"	2-½"	3-⅜"	3-⅜"	3-½"
		42"-72"	12"	0.064"-0.168"	0.075"-0.164"	0.052"	0.105"	0.079"	½"	⅞"	32 ksi	2" × 2" × 3/16"	2" × 2" × 3/16"	3-½"	3-½"	3-⅜"	3-⅜"	5-½"
		78"-84"	12"	0.168"		0.079"		0.109"	½"	⅞"	45 ksi	2" × 2" × 3/16"		3-½"		3-⅜"		5-½"
	3" × 1"	48"-90"	14"	0.064"-0.109"		0.052"		0.079"	½"	⅞"	32 ksi	2" × 2" × 3/16"		3-½"		3-⅜"		5-½"
		96"-120"	14"	0.079"-0.109"		0.052"		0.109"	½"	⅞"	45 ksi	2" × 2" × 3/16"		3-½"		4-⅜"		
		42"-108"	14"		0.060"-0.135"		0.060"						2" × 2" × 3/16"		3-½"		3-⅜"	
HELICAL	2⅔" × ½"	THROUGH 36"	12"	0.052"-0.138"	0.060"-0.135"	0.052"	0.060"	0.079"	½"	⅞"	32 ksi	2" × 2" × 3/16"	2" × 2" × 3/16"	3-½"	3-½"	3-⅜"	3-⅜"	3-½"
		42"-72"	12"	0.052"-0.168"	0.075"-0.164"	0.052"	0.060"	0.079"	½"	⅞"	32 ksi	2" × 2" × 3/16"	2" × 2" × 3/16"	3-½"	3-½"	3-⅜"	3-⅜"	5-½"
		78"-84"	12"	0.168"		0.079"		0.109"	½"	⅞"	45 ksi	2" × 2" × 3/16"		3-½"		3-⅜"		5-½"
	3" × 1"	48"-90"	14"	0.064"-0.109"		0.052"		0.079"	½"	⅞"	32 ksi	2" × 2" × 3/16"		3-½"		3-⅜"		5-½"
		96"-120"	14"	0.079"-0.109"		0.052"		0.109"	½"	⅞"	45 ksi	2" × 2" × 3/16"		3-½"		4-⅜"		
		42"-108"	14"		0.060"-0.135"		0.060"						2" × 2" × 3/16"		3-½"		3-⅜"	
HUGGER	2⅔" × ½" REROLLED END	12"-54"	4"	0.052"-0.109"		0.052"						2½" × 1½" × 3/16"	2½" × 1½" × 3/16"	1-½"				3-½"
		60"-66"	4"	0.109"		0.064"						2½" × 1½" × 3/16"	2½" × 1½" × 3/16"	1-½"				3-½"
		36"-48"	4"	0.138"		0.064"						2½" × 1½" × 3/16"	2½" × 1½" × 3/16"	1-½"				3-½"
		THROUGH 72"	10½"	0.052"-0.168"		0.052"		0.079"	½"	⅞"	32 ksi							
		78"-84"	10½"	0.168"		0.079"		0.109"	½"	⅞"	45 ksi							
	3" × 1" REROLLED END	48"-90"	10½"	0.064"-0.109"		0.052"		0.079"	½"	⅞"	32 ksi							
		96"-120"	10½"	0.079"-0.109"		0.052"		0.109"	½"	⅞"	45 ksi							
	5" × 1" REROLLED END	48"-66"	7½"	0.064"-0.109"		0.064"		0.079"	½"	⅞"	32 ksi	2½" × 1½" × 3/16"	2½" × 1½" × 3/16"	1-½"				3-½"
		72"-90"	7½"	0.064"-0.079"		0.064"		0.079"	½"	⅞"	32 ksi	2½" × 1½" × 3/16"	2½" × 1½" × 3/16"	1-½"				3-½"
		48"-90"	7½"	0.064"-0.138"		0.064"		0.079"	½"	⅞"	32 ksi							
		48"-120"	12" SEE	0.064"-0.109"		0.064"		0.079"	½"	⅞"	32 ksi							
		48"-84"	12" NOTE	0.138"		0.064"		0.079"	½"	⅞"	32 ksi							
		90"-120"	12" 11	0.138"		0.064"		DOUBLE 0.079"	½"	⅞"	32 ksi							

SPIRAL RIB PROFILE

COUPLING TYPE	PIPE CORRUGATION	PIPE SIZE	W	PIPE WALL THICKNESS SSRP	PIPE WALL THICKNESS ASRP	BAND THICKNESS SSRP	BAND THICKNESS ASRP	BAR AND STRAP (SSRP ONLY) STRAP THICKNESS	BOLTS Dia	BAR Dia	BAR YIELD STRENGTH	ANGLE DIMENSIONS SSRP	ANGLE DIMENSIONS ASRP	BOLTS (No.- Dia) SSRP	BOLTS (No.- Dia) ASRP	RIVETS ANGLE TO BAND SSRP	RIVETS ANGLE TO BAND ASRP	SPOT WELDS ANGLE TO BAND SSRP
ANNULAR	2⅔" × ½" * REROLLED END	24"-36"	12"	0.064"-0.109"	0.060"-0.105"	0.052"	0.060"	0.079"	½"	⅞"	32 ksi	2" × 2" × 3/16"	2" × 2" × 3/16"	3-½"	3-½"	3-⅜"	3-⅜"	5-½"
		42"-60"	12"	0.064"-0.109"	0.075"-0.105"	0.052"	0.105"	0.079"	½"	⅞"	32 ksi	2" × 2" × 3/16"	2" × 2" × 3/16"	3-½"	3-½"	3-⅜"	3-⅜"	5-½"
		66"-72"	12"	0.064"-0.109"		0.052"		0.079"	½"	⅞"	32 ksi	2" × 2" × 3/16"	2" × 2" × 3/16"	3-½"	3-½"	3-⅜"	3-⅜"	5-½"
		78"-114"	12"	0.079"-0.109"		0.079"		0.109"	½"	⅞"	45 ksi	2" × 2" × 3/16"	2" × 2" × 3/16"	3-½"	3-½"	3-⅜"	3-⅜"	5-½"
HUGGER	2⅔" × ½" * REROLLED END	24"-72"	10½"	0.064"-0.109"		0.052"		0.079"	½"	⅞"	32 ksi							
		78"-84"	10½"	0.109"		0.079"		0.109"	½"	⅞"	45 ksi							

* See Note 14.

14. All profiles of Spiral Rib Pipe (¾" × ¾" ribs at 7½" pitch and ¾" × 1" ribs at 11½" pitch in both steel and aluminum and ¾" × 1" ribs at 8½" pitch in steel only) shall be manufactured with rerolled ends. Corrugation profile of the rerolled ends shall be 2⅔" × ½" annual corrugations with a minimum of two full corrugations at each end.

NOTES:

To accompany plans dated 2-16-10

1. All ferrous metal coupling band connection hardware shall be galvanized or electro-plated in accordance with the Standard Specifications.
2. For helically corrugated coupling bands, the connection angles may be oriented parallel to the pipe axis, provided connecting holes are slotted lengthwise sufficiently to allow adjustment for the helix angle.
3. Tension strap may be connected to band with either spot welds or fillet welds that develop minimum required strength of strap.
4. Use 1¼" gage line dimension on attached angle leg for rivets and spot welds.
5. Band thickness shall not be less than:
   a. 3 standard thicknesses lighter than the thickness of the pipe for Corrugated Steel Pipe.
   b. 2 standard thicknesses lighter than the thickness of the pipe and in no case lighter than 0.060" for Corrugated Aluminum Pipe.
6. Dimensions, thicknesses and strengths shown are minimum.
7. For pipe arches use same width band as for round pipe of equal periphery.
8. Fillet welds of equivalent strenght may be substituted for spot welds or rivets.
9. Spot welds shall develop minimum required strength of strap.
10. Pipe with rerolled ends having at least two 2⅔" × ½" annular corrugations at each end with or without an upturned flange may be connected with any of the annular coupling bands shown for pipe of the same diameter and wall thickness and having 2⅔" × ½" corrugations.
11. In the case of H-12 huggerbands, two piece bands are required for diameters through 96" and three piece bands are required for diameters 102" through 120".
12. Two piece bands are required for pipes greater than 42" diameter.
13. The 2¼" × 2" × 0.109" thick galvanized die-formed angle connector may be used in lieu of the 2" × 2" × 3/16" angle connector for standard joints only on pipes through 72" diameter.

STATE OF CALIFORNIA
DEPARTMENT OF TRANSPORTATION

CORRUGATED METAL PIPE COUPLING DETAILS No. 5 STANDARD JOINT

NO SCALE

RSP D97E DATED JUNE 6, 2008 SUPERSEDES STANDARD PLAN D97E DATED MAY 1, 2006 - PAGE 187 OF THE STANDARD PLANS BOOK DATED MAY 2006.

REVISED STANDARD PLAN RSP D97E

2006 REVISED STANDARD PLAN RSP D97E

4-2-08

DIST	COUNTY	ROUTE	POST MILES TOTAL PROJECT	SHEET NO.	TOTAL SHEETS
06	Fre	99	17.3/18.0	28	39

Randell D. Hiatt
REGISTERED CIVIL ENGINEER

June 6, 2008
PLANS APPROVAL DATE

REGISTERED PROFESSIONAL ENGINEER Randell D. Hiatt No. C50200 Exp. 6-30-09 CIVIL STATE OF CALIFORNIA

The State of California or its officers or agents shall not be responsible for the accuracy or completeness of electronic copies of this plan sheet.

To accompany plans dated 2-16-10

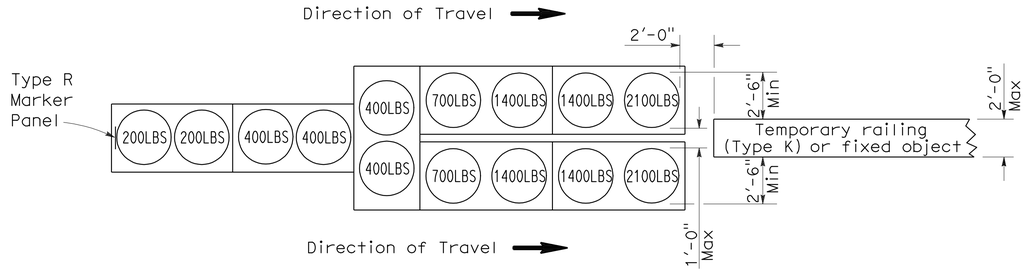

ARRAY 'TU14'

Approach speed 45 mph or more

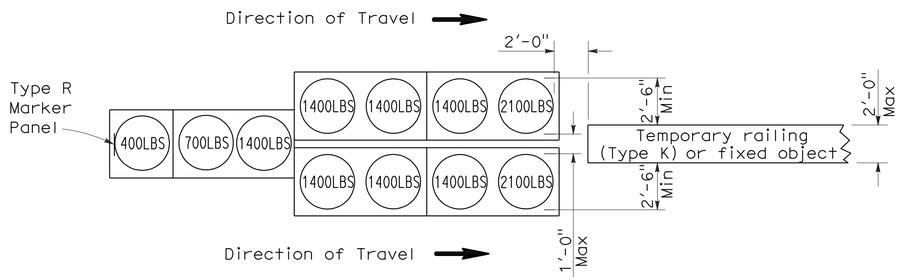

ARRAY 'TU11'

Approach speed less than 45 mph

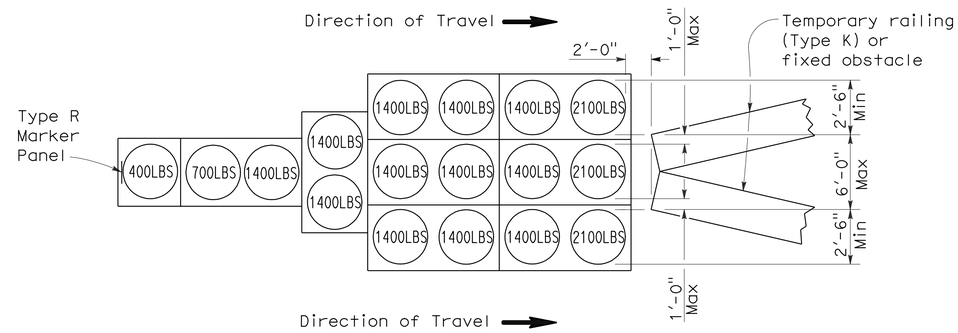

ARRAY 'TU17'

Approach speed less than 45 mph

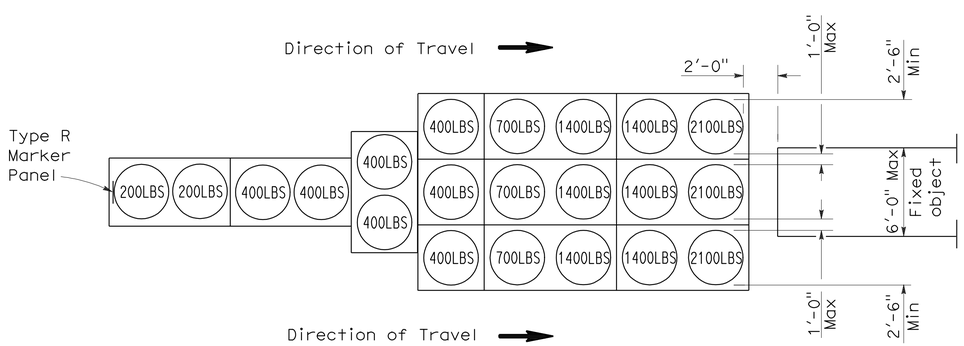

ARRAY 'TU21'

Approach speed 45 mph or more

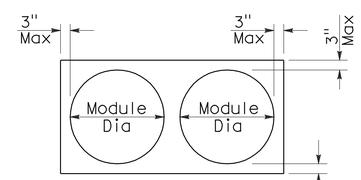

PLAN

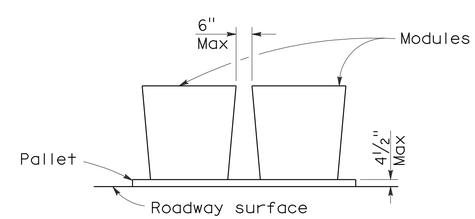

ELEVATION

CRASH CUSHION PALLET DETAIL

See Note 7

NOTES:

1. (XXX) Indicates sand filled module location and weight of sand in pounds for each module. Module spacing is based on the greater diameter of the module.
2. All sand weights are nominal.
3. Temporary crash cushion arrays shall not encroach on the traveled way.
4. Place the top of Type R marker panel 1" below the module lid.
5. Refer to Standard Plan A73B for marker details.
6. Approach speeds indicated conform to NCHRP 350 Report criteria.
7. Use of pallets is optional.

STATE OF CALIFORNIA
DEPARTMENT OF TRANSPORTATION

TEMPORARY CRASH CUSHION, SAND FILLED (UNIDIRECTIONAL)

NO SCALE

RSP T1A DATED JUNE 6, 2008 SUPERSEDES STANDARD PLAN T1A
DATED MAY 1, 2006 - PAGE 211 OF THE STANDARD PLANS BOOK DATED MAY 2006.

REVISED STANDARD PLAN RSP T1A

2006 REVISED STANDARD PLAN RSP T1A

5-15-08

DIST	COUNTY	ROUTE	POST MILES TOTAL PROJECT	SHEET NO.	TOTAL SHEETS
06	Fre	99	17.3/18.0	29	39

Randell D. Hiatt
REGISTERED CIVIL ENGINEER

June 6, 2008
PLANS APPROVAL DATE

REGISTERED PROFESSIONAL ENGINEER
Randell D. Hiatt
No. C50200
Exp. 6-30-09
CIVIL
STATE OF CALIFORNIA

The State of California or its officers or agents shall not be responsible for the accuracy or completeness of electronic copies of this plan sheet.

To accompany plans dated 2-16-10

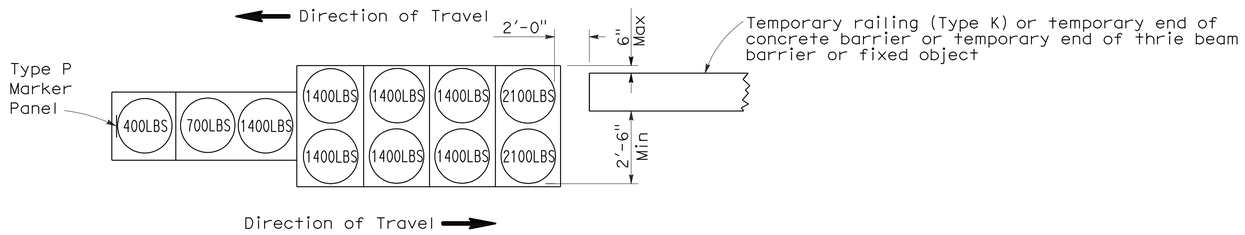

ARRAY 'TB11'

Approach speed less than 45 mph

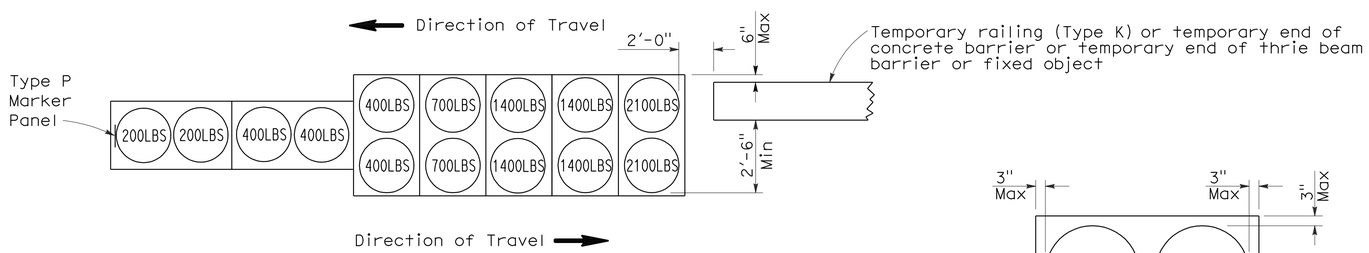

ARRAY 'TB14'

Approach speed 45 mph or more

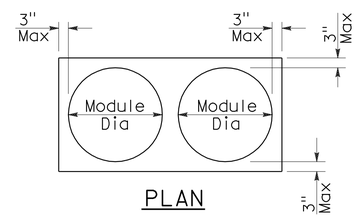

PLAN

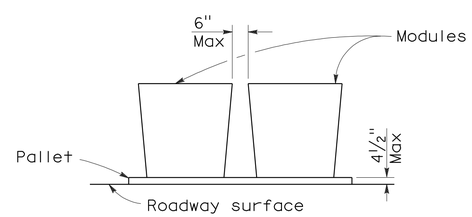

ELEVATION

CRASH CUSHION PALLET DETAIL

See Note 7

NOTES:

1. (XXX) Indicates sand filled module location and weight of sand in pounds for each module. Module spacing is based on the greater diameter of the module.
2. All sand weights are nominal.
3. Temporary crash cushion arrays shall not encroach on the traveled way.
4. Place the Type P marker panel so that the bottom of the panel rests upon the pallet.
5. Refer to Standard Plan A73B for marker details.
6. Approach speeds indicated conform to NCHRP 350 Report criteria.
7. Use of pallets is optional.

STATE OF CALIFORNIA
DEPARTMENT OF TRANSPORTATION

TEMPORARY CRASH CUSHION, SAND FILLED (BIDIRECTIONAL)

NO SCALE

RSP T1B DATED JUNE 6, 2008 SUPERSEDES STANDARD PLAN T1B
DATED MAY 1, 2006 - PAGE 212 OF THE STANDARD PLANS BOOK DATED MAY 2006.

REVISED STANDARD PLAN RSP T1B

2006 REVISED STANDARD PLAN RSP T1B

5-15-08

DIST	COUNTY	ROUTE	POST MILES TOTAL PROJECT	SHEET NO.	TOTAL SHEETS
06	Fre	99	17.3/18.0	30	39

Randell D. Hiatt
REGISTERED CIVIL ENGINEER

June 6, 2008
PLANS APPROVAL DATE

REGISTERED PROFESSIONAL ENGINEER
Randell D. Hiatt
No. C50200
Exp. 6-30-09
CIVIL
STATE OF CALIFORNIA

The State of California or its officers or agents shall not be responsible for the accuracy or completeness of electronic copies of this plan sheet.

To accompany plans dated 2-16-10

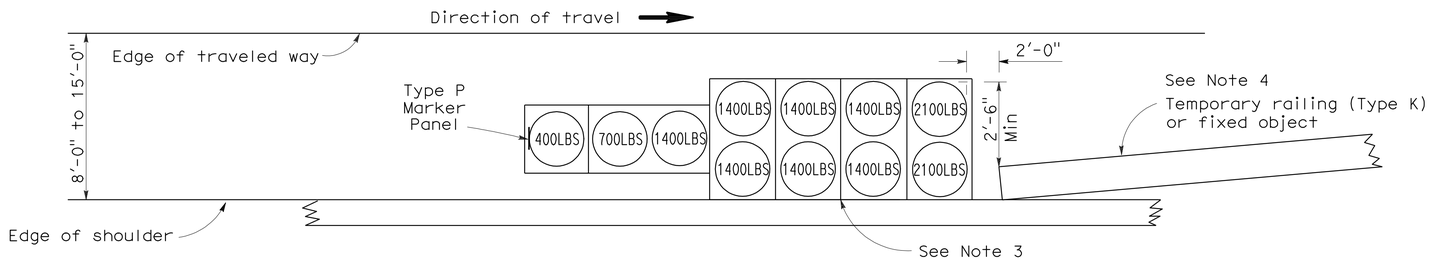

ARRAY 'TS11'

Approach speed less than 45 mph
See Note 9

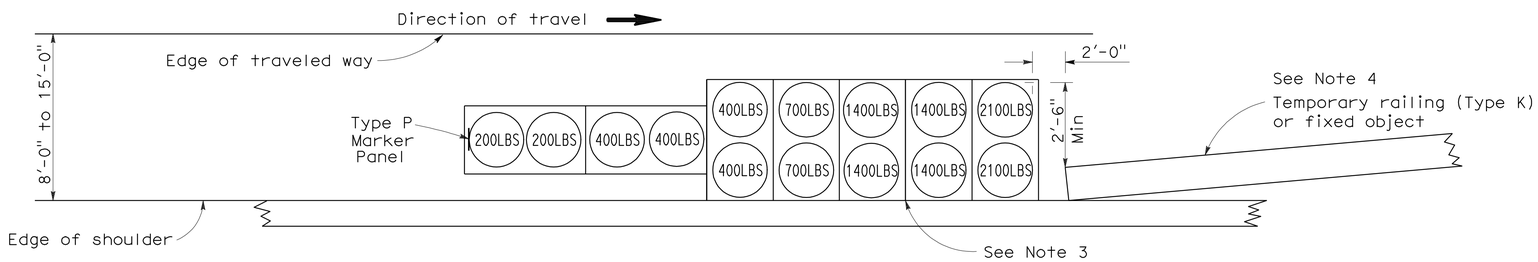

ARRAY 'TS14'

Approach speed 45 mph or more
See Note 9

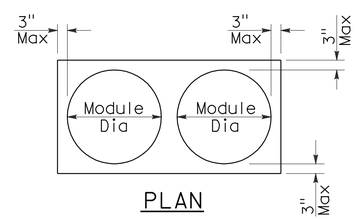

PLAN

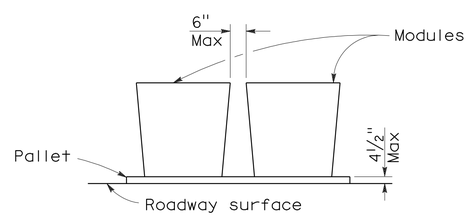

ELEVATION

CRASH CUSHION PALLET DETAIL

See Note 11

NOTES:

1. (XXX) Indicates sand filled module location and weight of sand in pounds for each module. Module spacing is based on the greater diameter of the module.
2. All sand weights are nominal.
3. The temporary crash cushion arrays shown on this plan shall be used only in locations where there will be traffic on one side of the temporary crash cushion array.
4. If the fixed object or approach end of the temporary railing is less than 15'-0" from the edge of traveled way, a temporary crash cushion is required in a construction or work zone.
5. Temporary crash cushion arrays shall not encroach on the traveled way.
6. Arrays for median shoulders shall conform to details shown on this plan for outside shoulders.
7. Place the Type P marker panel so that the bottom of the panel rests upon the pallet and faces traffic.
8. Refer to Standard Plan A73B for marker details.
9. For shoulder widths less than 8'-0", appropriate approved crash cushion protection, other than sand filled modules, shall be provided at fixed objects and at approach ends of temporary railing. The specific type of crash cushion shall be as shown on the project plans or as specified in the Special Provisions, or if not shown on the project plans or specified in the Special Provisions, shall be as approved by the Engineer.
10. Approach speeds indicated conform to NCHRP 350 Report criteria.
11. Use of pallets is optional.

STATE OF CALIFORNIA
DEPARTMENT OF TRANSPORTATION

TEMPORARY CRASH CUSHION, SAND FILLED (SHOULDER INSTALLATIONS)

NO SCALE

RSP T2 DATED JUNE 6, 2008 SUPERSEDES STANDARD PLAN T2
DATED MAY 1, 2006 - PAGE 213 OF THE STANDARD PLANS BOOK DATED MAY 2006.

REVISED STANDARD PLAN RSP T2

2006 REVISED STANDARD PLAN RSP T2

5-15-08

DIST	COUNTY	ROUTE	POST MILES TOTAL PROJECT	SHEET NO.	TOTAL SHEETS
06	Fre	99	17.3/18.0	31	39

REGISTERED CIVIL ENGINEER

November 17, 2006
PLANS APPROVAL DATE

REGISTERED PROFESSIONAL ENGINEER Greg W. Edwards No. C36386 Exp. 6-30-08 CIVIL STATE OF CALIFORNIA

The State of California or its officers or agents shall not be responsible for the accuracy or completeness of electronic copies of this plan sheet.

To accompany plans dated 2-16-10

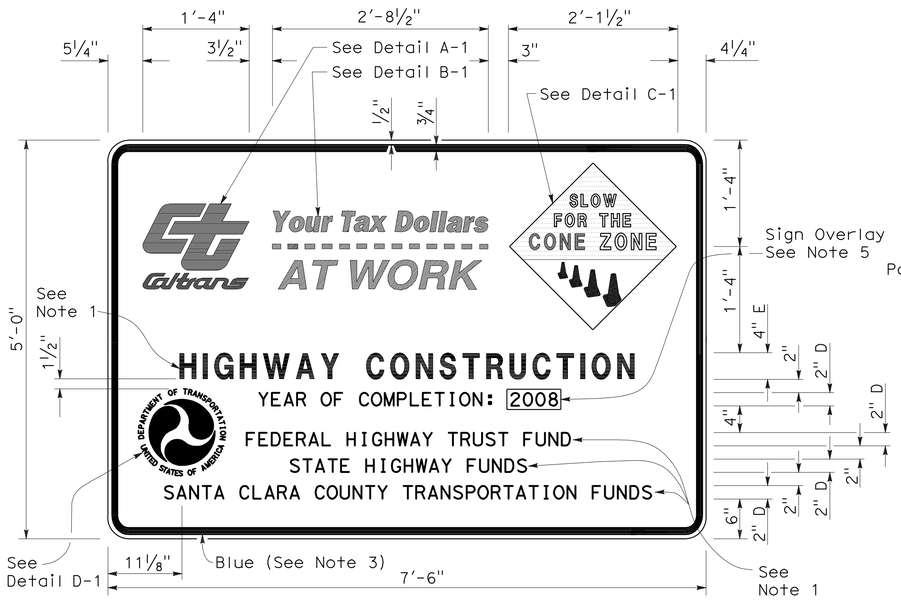

TYPE 1

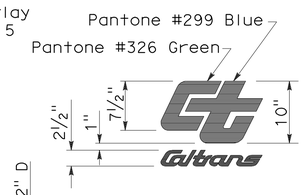

DETAIL A-1

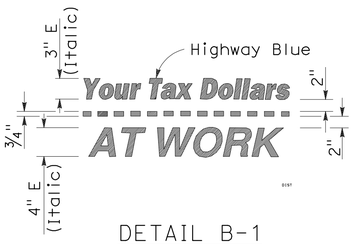

DETAIL B-1
(See Note 3)

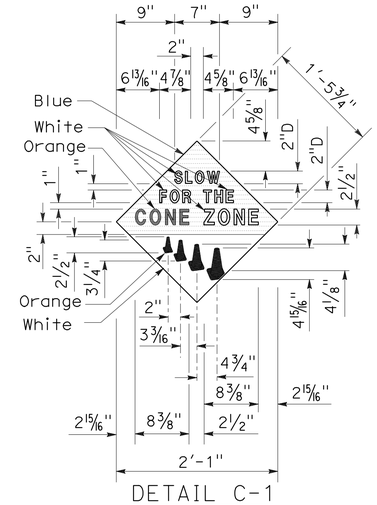

DETAIL C-1
(See Note 4)

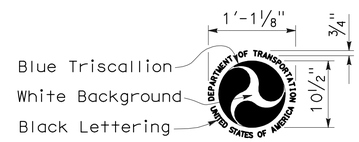

DETAIL D-1
(See Note 6)

NOTES:

1. The sign messages shown for type of project and fund types are examples only. See the Special Provisions for the applicable type of project and fund type messages to be used.
2. Except as otherwise shown, the legend of sign shall be black on a white background (non-reflective).
3. The border of the signs and details "B-1" and "B-2" shall be blue (non-reflective).
4. The diamond in details "C-1" and "C-2" shall be blue for the background of message, " SLOW FOR THE CONE ZONE", and white background for the orange cones. The color and type of font for the "SLOW FOR THE CONE ZONE" message shall be: "SLOW" white D; "FOR THE" white D; "CONE" orange Arial font; "ZONE" white Arial font.
5. Year of completion of project construction shown on the overlay is an example only. See the Special Provisions.
6. Use when the Project involves Federal Highway Trust Fund.

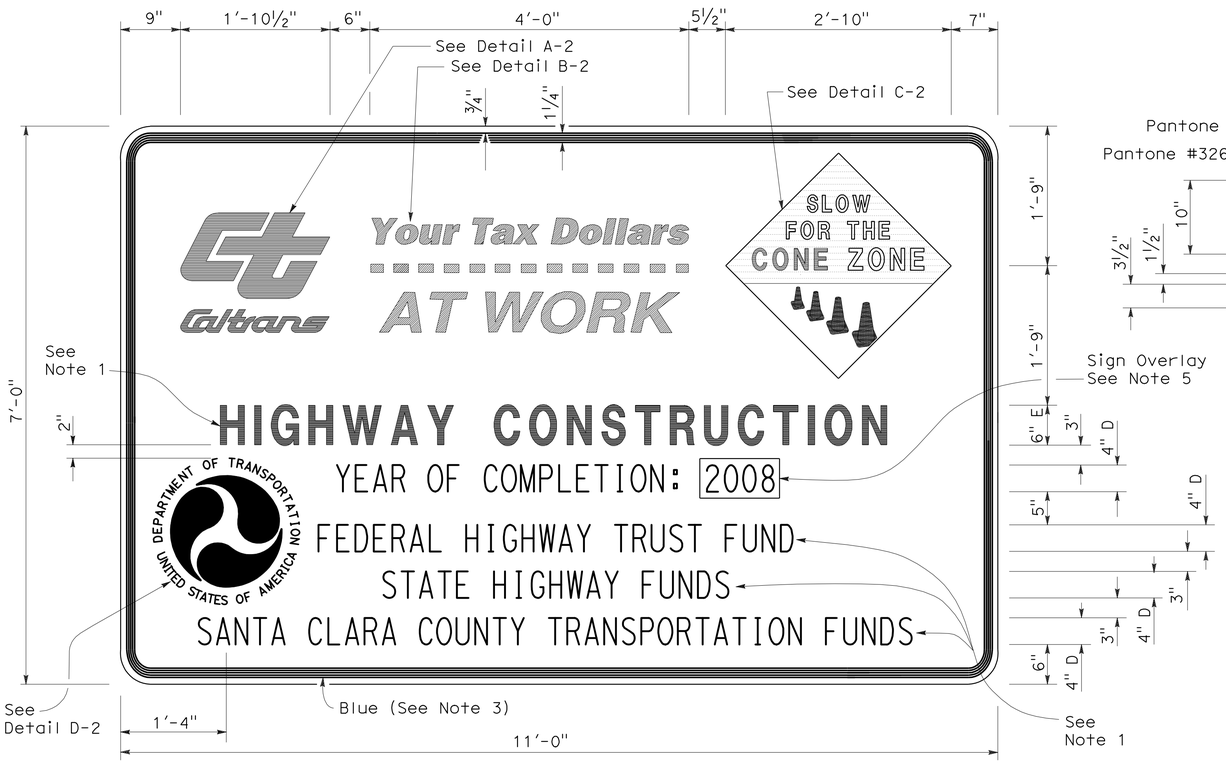

TYPE 2

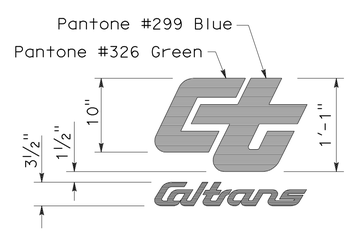

DETAIL A-2

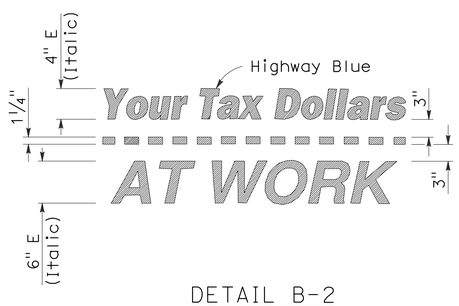

DETAIL B-2
(See Note 3)

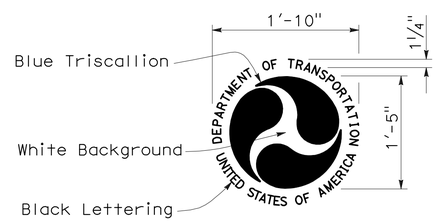

DETAIL D-2
(See Note 6)

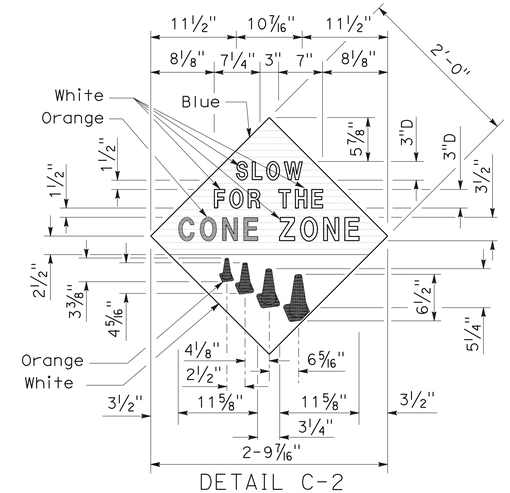

DETAIL C-2
(See Note 4)

STATE OF CALIFORNIA
DEPARTMENT OF TRANSPORTATION

CONSTRUCTION PROJECT FUNDING IDENTIFICATION SIGNS

NO SCALE

RSP T7 DATED NOVEMBER 17, 2006 SUPERSEDES STANDARD PLAN T7
DATED MAY 1, 2006 - PAGE 217 OF THE STANDARD PLANS BOOK DATED MAY 2006.

REVISED STANDARD PLAN RSP T7

2006 REVISED STANDARD PLAN RSP T7

9-7-06

DIST	COUNTY	ROUTE	POST MILES TOTAL PROJECT	SHEET NO.	TOTAL SHEETS
06	Fre	99	17.3/18.0	32	39

Robert B Schott
LICENSED LANDSCAPE ARCHITECT

August 15, 2008
PLANS Approval DATE

LICENSED LANDSCAPE ARCHITECT
Robert B. Schott 3625
Robert B Schott
Signature
11-04-08
Renewal Date
08-11-08
Date
STATE OF CALIFORNIA

The State of California or its officers or agents shall not be responsible for the accuracy or completeness of electronic copies of this plan sheet.

To accompany plans dated 2-16-10

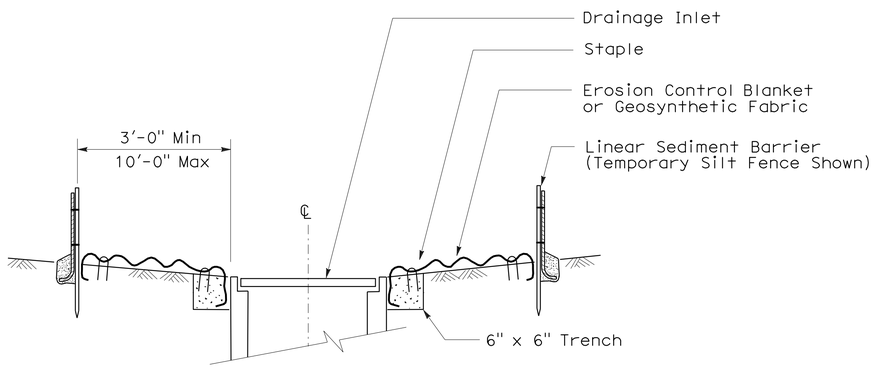

SECTION A-A

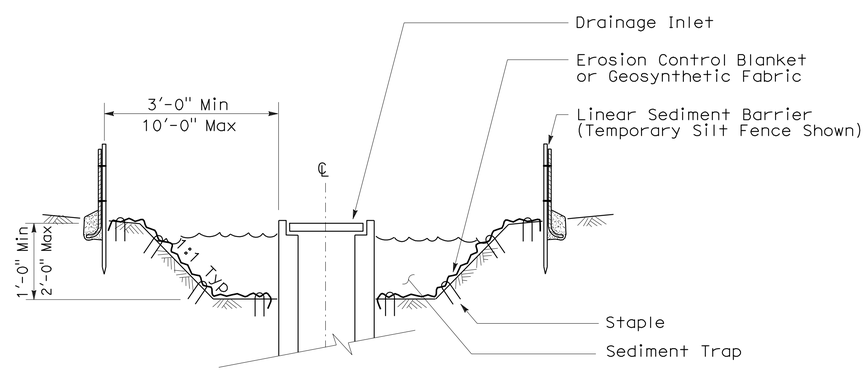

SECTION B-B

NOTES:

1. See Standard Plan T51 for Temporary Silt Fence.
2. Dimensions may vary to fit field conditions.

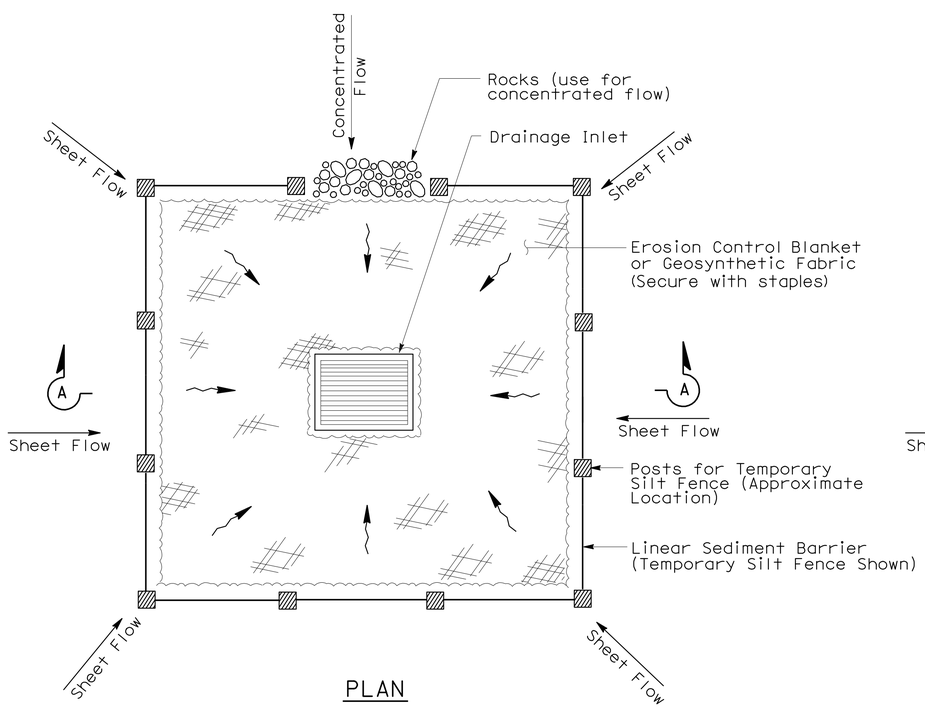

PLAN

TEMPORARY DRAINAGE
INLET PROTECTION (TYPE 1)

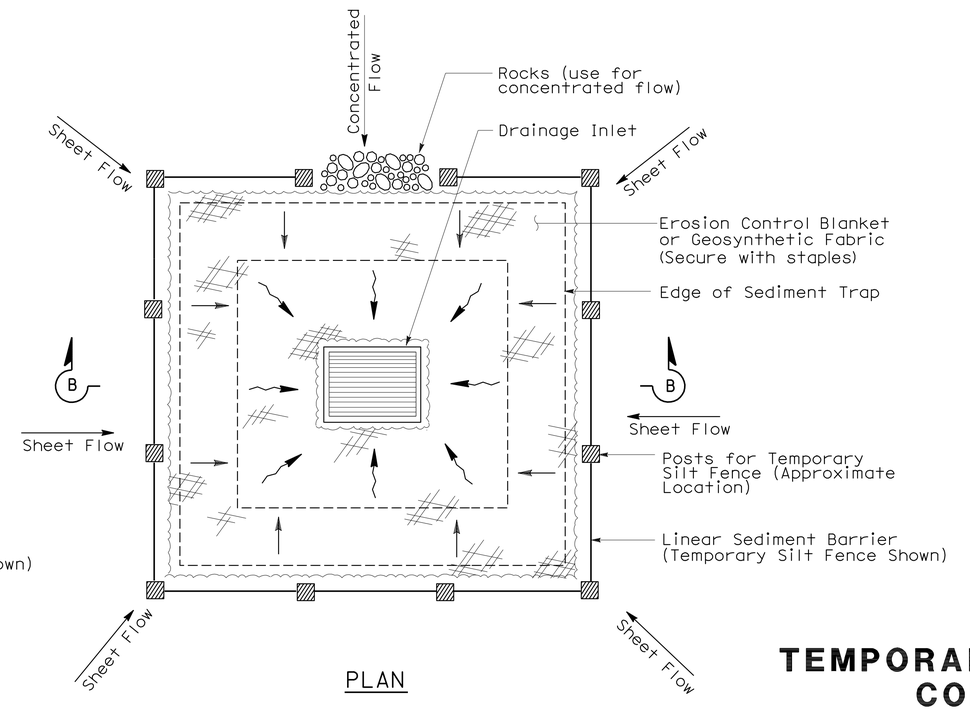

PLAN

TEMPORARY DRAINAGE
INLET PROTECTION (TYPE 2)
(EXCAVATED SEDIMENT TRAP)

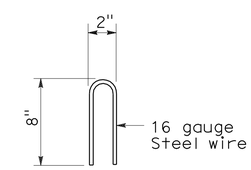

STAPLE DETAIL

STATE OF CALIFORNIA
DEPARTMENT OF TRANSPORTATION

TEMPORARY WATER POLLUTION CONTROL DETAILS (TEMPORARY DRAINAGE INLET PROTECTION)

NO SCALE

NSP T61 DATED AUGUST 15, 2008 SUPPLEMENTS
THE STANDARD PLANS BOOK DATED MAY 2006.

NEW STANDARD PLAN NSP T61

2006 NEW STANDARD PLAN NSP T61

7-11-08

DIST	COUNTY	ROUTE	POST MILES TOTAL PROJECT	SHEET NO.	TOTAL SHEETS
06	Fre	99	17.3/18.0	33	39

LICENSED LANDSCAPE ARCHITECT

August 15, 2008
PLANS APPROVAL DATE

The State of California or its officers or agents shall not be responsible for the accuracy or completeness of electronic copies of this plan sheet.

LICENSED LANDSCAPE ARCHITECT — Robert B. Schott — Signature — 11-04-08 Renewal Date — 08-11-08 Date — STATE OF CALIFORNIA

To accompany plans dated 2-16-10

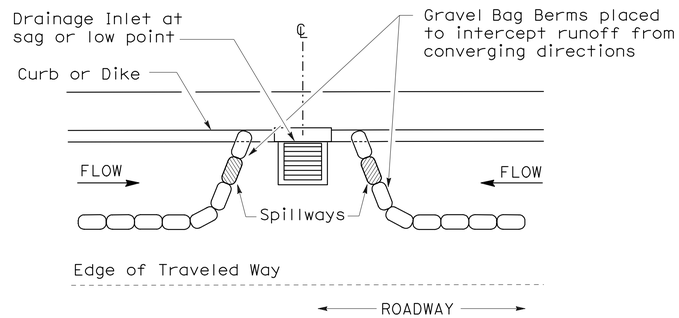

PLAN

CONFIGURATION FOR SAG POINT INLET (GRAVEL BAG BERM)

GRAVEL BAG BERM (TYPE 3A) SPACING TABLE

SLOPE OF ROADWAY (PERCENT)	1 to 3.9	4 to 5.9	6 to 7.9	8 to 10	10+
INTERVAL BETWEEN BERM	100′	75′	50′	25′	12′

For slope of less than 1%, install barriers only if erosion/sediment is prevalent

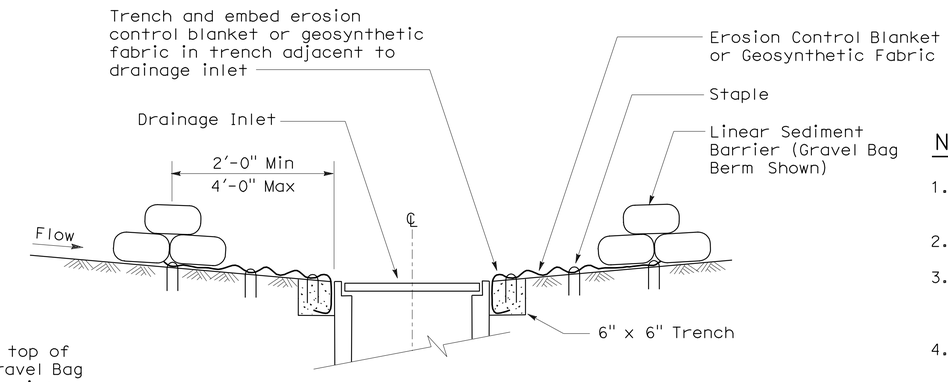

SECTION A-A

NOTES:

1. Place safety cones adjacent to drainage inlet protection.
2. Dimensions may vary to fit field conditions.
3. Install a minimum of 3 gravel bag berms upstream of each drainage inlet to be protected.
4. Position erosion control blanket or geosynthetic fabric at edge of concrete apron and secure in trench.
5. Erosion control blanket or geosynthetic fabric is not required if the area adjacent to the drainage inlet is vegetated or paved.

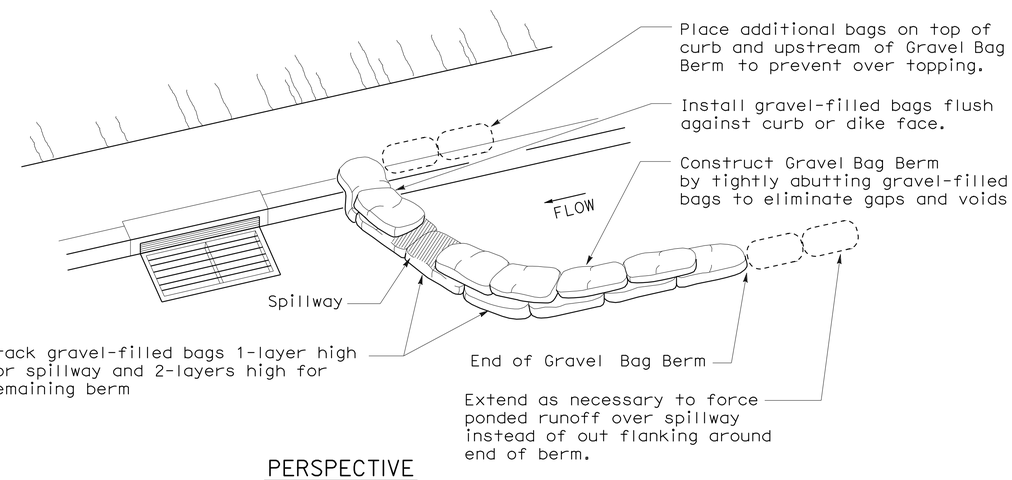

PERSPECTIVE

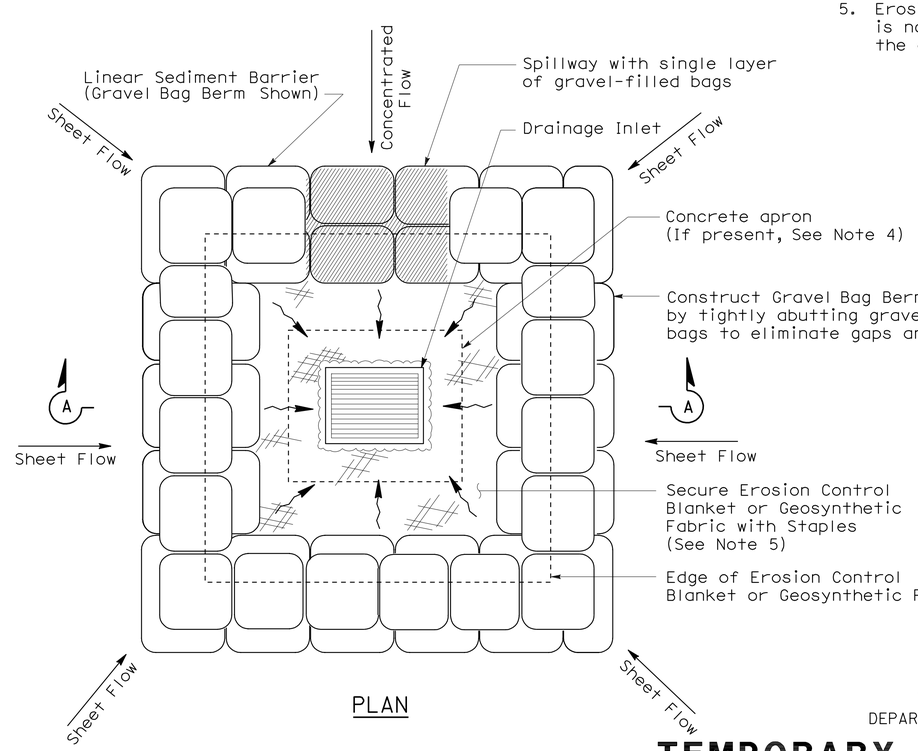

PLAN

TEMPORARY DRAINAGE INLET PROTECTION (TYPE 3B)

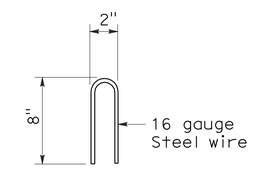

STAPLE DETAIL

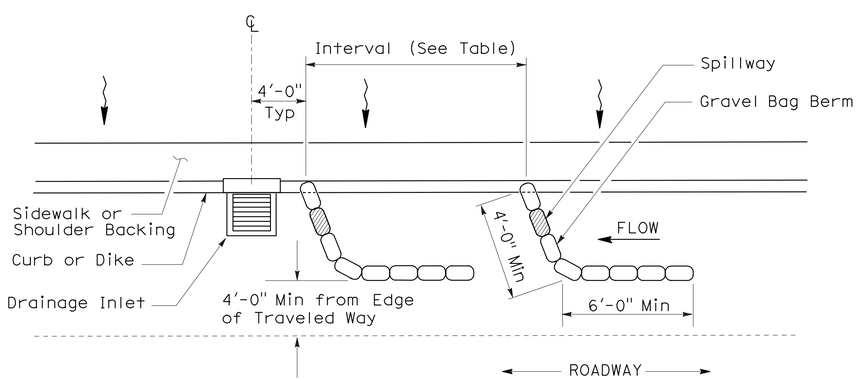

PLAN

TEMPORARY DRAINAGE INLET PROTECTION (TYPE 3A) (GRAVEL BAG BERM)

STATE OF CALIFORNIA
DEPARTMENT OF TRANSPORTATION

TEMPORARY WATER POLLUTION CONTROL DETAILS (TEMPORARY DRAINAGE INLET PROTECTION)

NO SCALE

NSP T62 DATED AUGUST 15, 2008 SUPPLEMENTS THE STANDARD PLANS BOOK DATED MAY 2006.

NEW STANDARD PLAN NSP T62

2006 NEW STANDARD PLAN NSP T62

7-11-08

DIST	COUNTY	ROUTE	POST MILES TOTAL PROJECT	SHEET NO.	TOTAL SHEETS
06	Fre	99	17.3/18.0	34	39

Robert B Schott
LICENSED LANDSCAPE ARCHITECT

August 15, 2008
PLANS APPROVAL DATE

LICENSED LANDSCAPE ARCHITECT Robert B. Schott 3625 Signature 11-04-08 Renewal Date 08-11-08 Date STATE OF CALIFORNIA

The State of California or its officers or agents shall not be responsible for the accuracy or completeness of electronic copies of this plan sheet.

To accompany plans dated 2-16-10

FLEXIBLE SEDIMENT BARRIER SPACING TABLE

SLOPE OF ROADWAY (PERCENT)	0 to 0.9	1 to 1.9	2 to 2.9	3 to 4	5+
INTERVAL BETWEEN BARRIERS	50′	35′	30′	25′	20′
ANGLE FROM FACE OF CURB	70°	70°	70°	45°	45°
SUGGESTED BARRIER LENGTH	6′	6′	6′	6′	6′

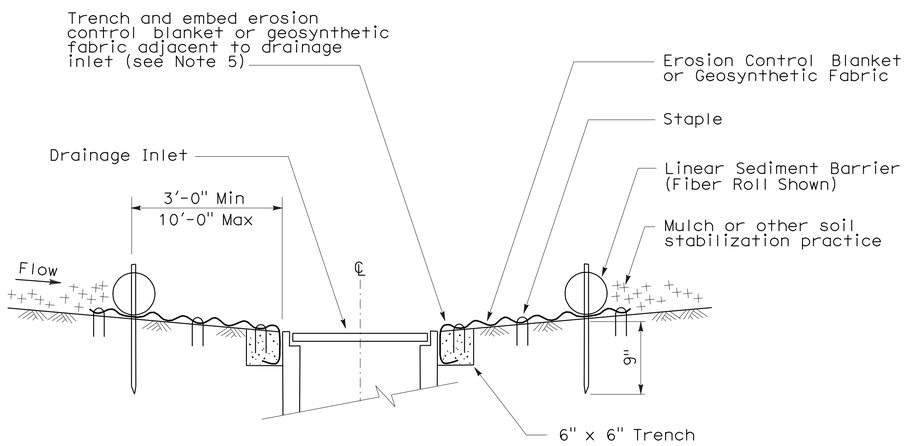

SECTION A-A

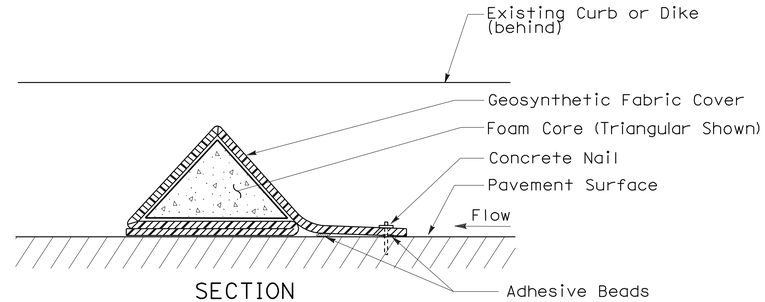

SECTION

FLEXIBLE SEDIMENT BARRIER DETAIL (FOAM BARRIER SHOWN)

NOTES:

1. See Standard Plan T51 for Temporary Silt Fence.
2. Dimensions may vary to fit field conditions.
3. Install a minimum of 3 flexible sediment barriers upstream of each drainage inlet to be protected.
4. Position erosion control blanket or geosynthetic fabric at edge of concrete apron and secure in trench.
5. Erosion control blanket or geosynthetic fabric is not required if the area adjacent to the drainage inlet is vegetated.

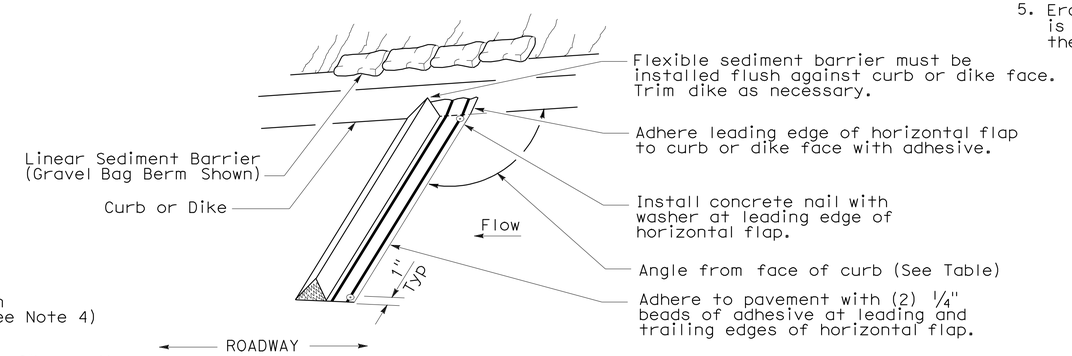

PERSPECTIVE

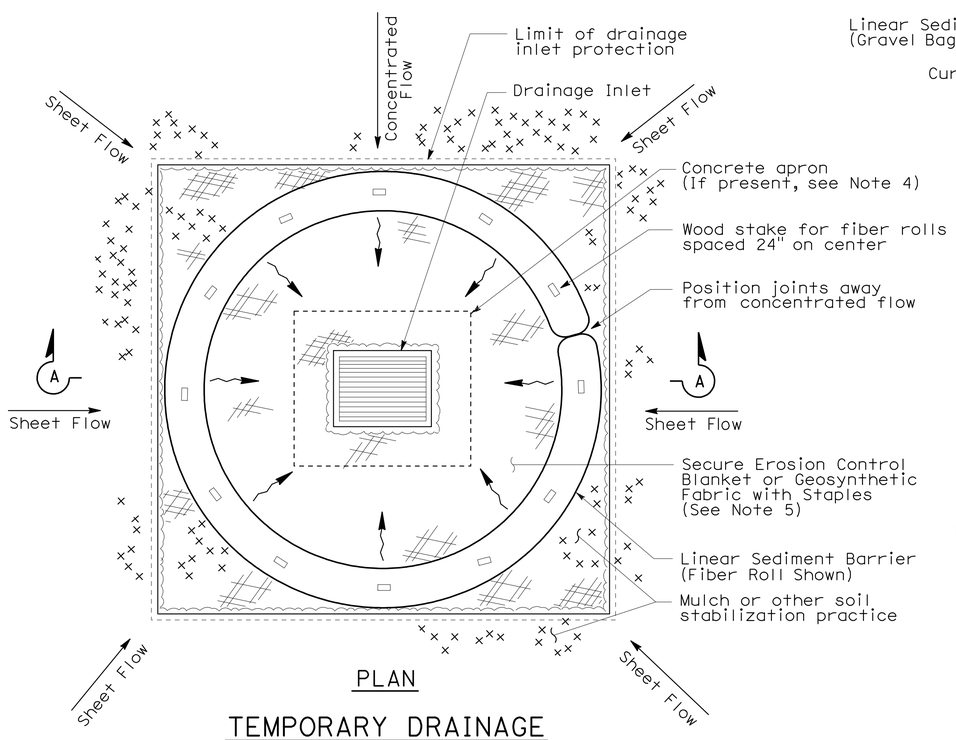

PLAN

TEMPORARY DRAINAGE INLET PROTECTION (TYPE 4A)

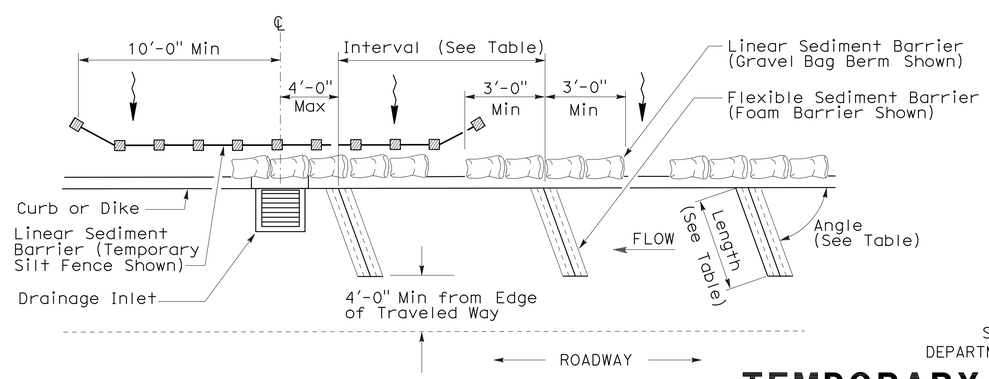

PLAN

TEMPORARY DRAINAGE INLET PROTECTION (TYPE 4B) FLEXIBLE SEDIMENT BARRIER

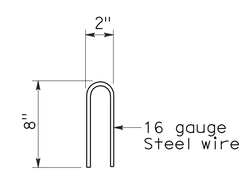

STAPLE DETAIL

STATE OF CALIFORNIA
DEPARTMENT OF TRANSPORTATION

TEMPORARY WATER POLLUTION CONTROL DETAILS (TEMPORARY DRAINAGE INLET PROTECTION)

NO SCALE

NSP T63 DATED AUGUST 15, 2008 SUPPLEMENTS THE STANDARD PLANS BOOK DATED MAY 2006.

NEW STANDARD PLAN NSP T63

2006 NEW STANDARD PLAN NSP T63

7-11-08

DIST	COUNTY	ROUTE	POST MILES TOTAL PROJECT	SHEET NO.	TOTAL SHEETS
06	Fre	99	17.3/18.0	35	39

Robert B Schott
LICENSED LANDSCAPE ARCHITECT

August 15, 2008
PLANS APPROVAL DATE

LICENSED LANDSCAPE ARCHITECT
Robert B. Schott 3625
Signature
11-04-08
Renewal Date
08-11-08
Date
STATE OF CALIFORNIA

The State of California or its officers or agents shall not be responsible for the accuracy or completeness of electronic copies of this plan sheet.

To accompany plans dated 2-16-10

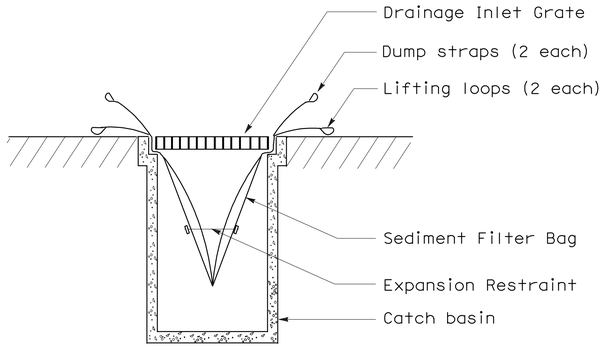

SECTION B-B

SEDIMENT FILTER BAG DETAIL

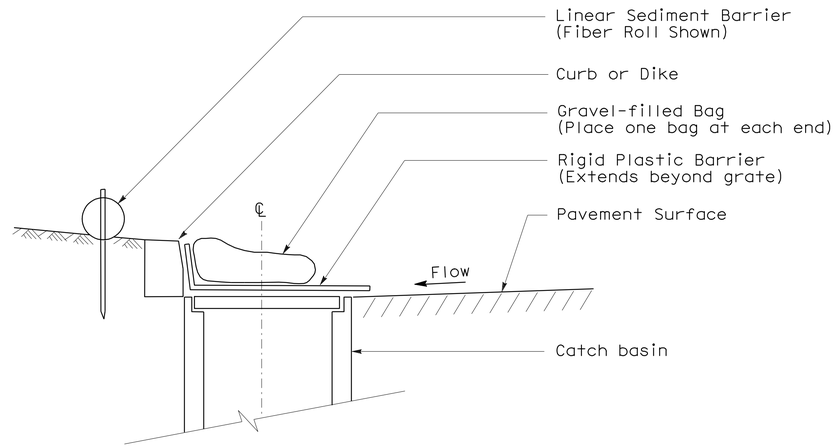

SECTION

TEMPORARY DRAINAGE INLET PROTECTION (TYPE 6A) (CATCH BASIN WITH GRATE)

NOTES:

1. See Standard Plan T51 for Temporary Silt Fence.
2. Dimensions may vary to fit field conditions.

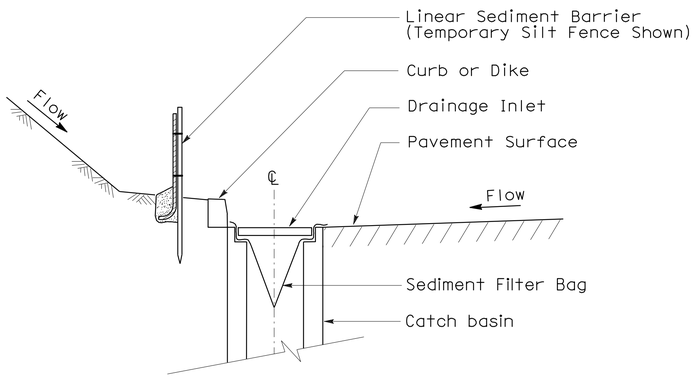

SECTION A-A

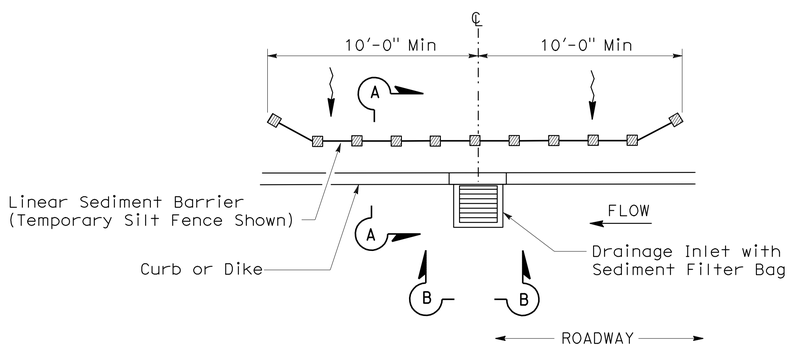

PLAN

TEMPORARY DRAINAGE INLET PROTECTION (TYPE 5) (SEDIMENT FILTER BAG)

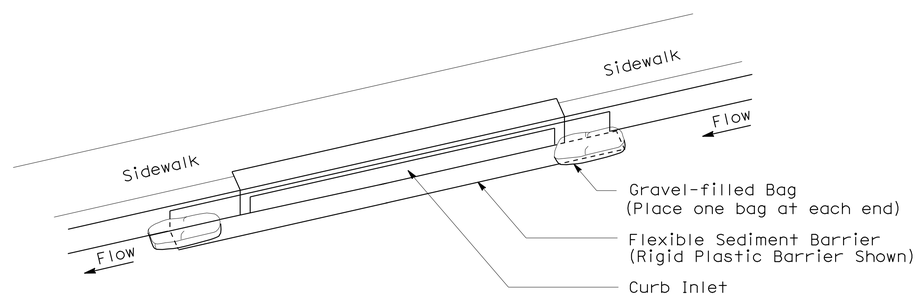

PERSPECTIVE

TEMPORARY DRAINAGE INLET PROTECTION (TYPE 6B) (CURB INLET WITHOUT GRATE)

STATE OF CALIFORNIA
DEPARTMENT OF TRANSPORTATION

TEMPORARY WATER POLLUTION CONTROL DETAILS (TEMPORARY DRAINAGE INLET PROTECTION)

NO SCALE

NSP T64 DATED AUGUST 15, 2008 SUPPLEMENTS
THE STANDARD PLANS BOOK DATED MAY 2006.

NEW STANDARD PLAN NSP T64

2006 NEW STANDARD PLAN NSP T64

7-11-08

DIST	COUNTY	ROUTE	POST MILES TOTAL PROJECT	SHEET NO.	TOTAL SHEETS
06	Fre	99	17.3/18.0	36	39

LICENSED LANDSCAPE ARCHITECT

April 3, 2009
PLANS APPROVAL DATE

LICENSED LANDSCAPE ARCHITECT
Robert B. Schott 3625
Signature
11-30-10
Renewal Date
2-25-09
Date
STATE OF CALIFORNIA

The State of California or its officers or agents shall not be responsible for the accuracy or completeness of electronic copies of this plan sheet.

To accompany plans dated 2-16-10

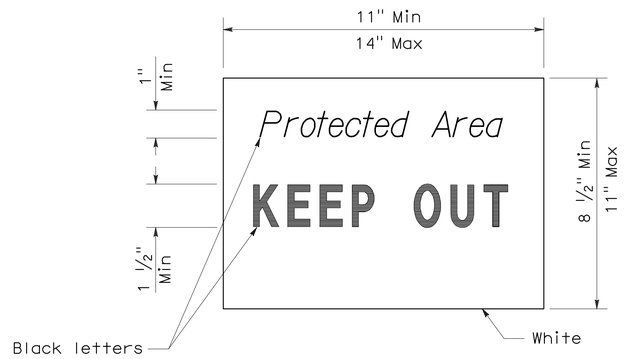

SIGN DETAIL

NOTE:

1. Temporary silt fence and temporary straw bale barrier shown for reference purposes only.

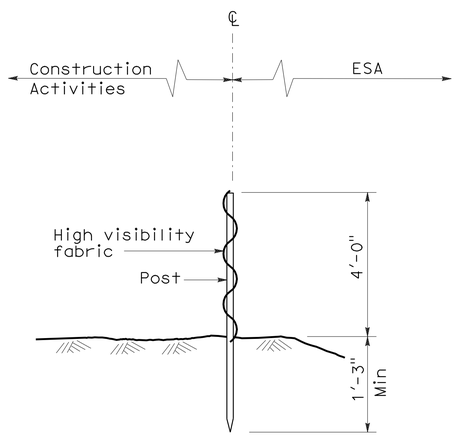

SECTION
TEMPORARY FENCE (TYPE ESA)

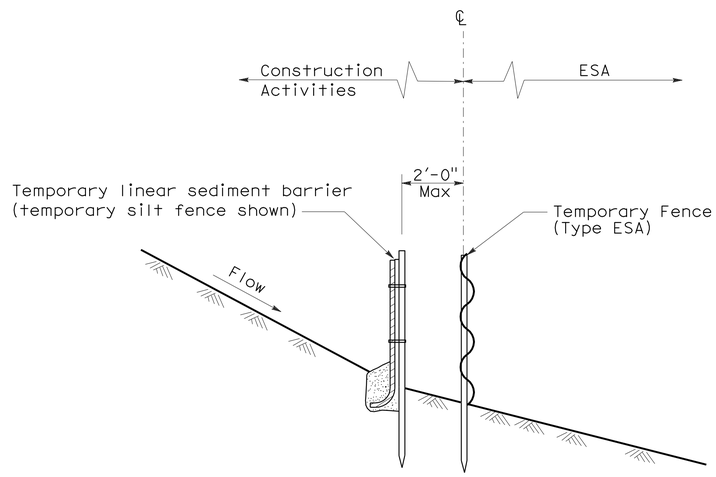

SECTION
PLACEMENT DETAIL
FOR TEMPORARY LINEAR SEDIMENT BARRIER
USED WITH TEMPORARY
FENCE (TYPE ESA)
(See Note 1)

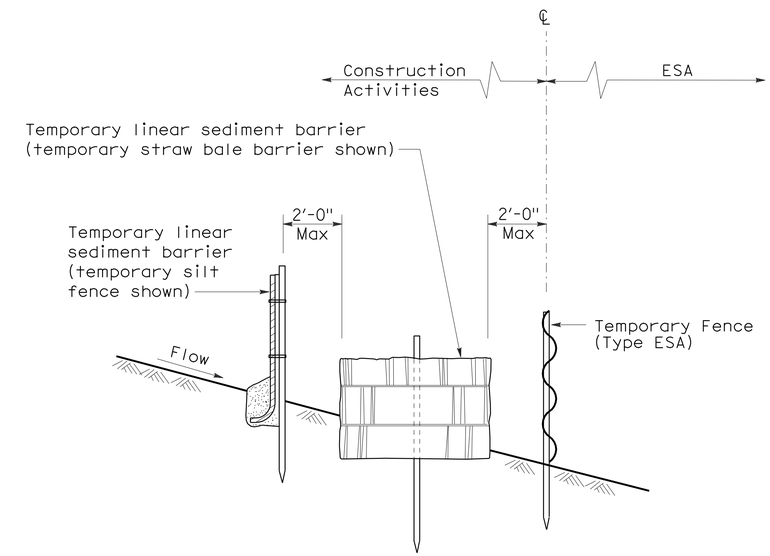

SECTION
PLACEMENT DETAIL
FOR TEMPORARY SILT FENCE
AND TEMPORARY STRAW BALE BARRIER
USED WITH TEMPORARY FENCE (TYPE ESA)
(See Note 1)

STATE OF CALIFORNIA
DEPARTMENT OF TRANSPORTATION

TEMPORARY WATER POLLUTION CONTROL DETAILS [TEMPORARY FENCE (TYPE ESA)]

NO SCALE

NSP T65 DATED APRIL 3, 2009 SUPPLEMENTS
THE STANDARD PLANS BOOK DATED MAY 2006.

NEW STANDARD PLAN NSP T65

2006 NEW STANDARD PLAN NSP T65

DIST	COUNTY	ROUTE	POST MILES TOTAL PROJECT	SHEET NO.	TOTAL SHEETS
06	Fre	99	17.3/18.0	37	39

REGISTERED ELECTRICAL ENGINEER

October 5, 2007
PLANS APPROVAL DATE

REGISTERED PROFESSIONAL ENGINEER Jeffery G. McRae No. E14512 Exp. 6-30-08 ELECTRICAL STATE OF CALIFORNIA

The State of California or its officers or agents shall not be responsible for the accuracy or completeness of electronic copies of this plan sheet.

To accompany plans dated 2-16-10

ELECTROLIERS

STANDARD TYPES
15, 15D
15 STRUCTURE
21, 21D STRUCTURE
30
31
32
35
36-20A

High mast light pole

Double Arm lighting standard

Existing electrolier

Electrolier foundation (Future installation)

NOTES:

1. Luminaires shall be 310 W HPS when installed on Type 21, 21D, 30, 31, 32, 35 and 36-20A Standards, unless otherwise specified. Luminaires shall be 200 W HPS when installed on other type standards or poles, unless otherwise specified.
2. Luminaires shall be the cutoff type, ANSI Type III medium cutoff lighting distribution, unless otherwise specified.
3. Variations noted adjacent to symbol on project plans.

Electrolier (see project notes or project plans)

Luminaire on wood pole

STANDARD NOTES:

- AB — Abandon. If applied to conduit, remove conductors.
- BC — Install pull box in existing conduit run.
- BP — Pedestrian barricade, type as indicated on plan.
- CB — Install conduit into existing pull box.
- CC — Connect new and existing conduit. Remove existing conductors and install conductors as indicated.
- CF — Conduit to remain for future use. Remove conductors. Install pull wire or rope.
- DH — Detector handhole.
- FA — Foundation to be abandoned.
- IS — Install sign on signal mast arm.
- NS — No slip base on standard.
- PEC — Photoelectric control.
- PEU — Photoelectric unit.
- RC — Equipment or material to be removed and become the property of the Contractor.
- RE — Remove electrolier, fuses and ballast. Tape ends of conductors.
- RL — Relocate equipment.
- RR — Remove and reuse equipment.
- RS — Remove and salvage equipment.
- SC — Splice new to existing conductors.
- SD — Service disconnect.
- SF — Standard to remain for future use. Remove luminaire, pole conductors, fuses and ballast.
- TSP — Telephone service point.

ABBREVIATIONS AND EQUIPMENT DESIGNATIONS

PROPOSED	EXISTING	
BBS	bbs	Battery backup system
BC	bc	Bolt circle
C	C	Conduit
CCTV	cctv	Closed circuit television
CKT	ckt	Circuit
CMS	cms	Changeable message sign
DLC	dlc	Loop detector lead-in cable
EMS	ems	Extinguishable message sign
EVC	evc	Emergency vehicle cable
EVD	evd	Emergency vehicle detector
FB	fb	Flashing beacon
FBCA	fbca	Flashing beacon control assembly
FBS	fbs	Flashing beacon with slip base
FO	fo	Fiber optic
G	G	Ground (Equipment Grounding Conductor)
GFCI	GFCI	Ground fault circuit interrupt
HAR	har	Highway advisory radio
HEX	hex	Hexagonal
HPS	hps	High pressure sodium
IISNS	iisns	Internally illuminated street name sign
ISL	isl	Induction sign lighting
LED	led	Light emitting diode
LMA	lma	Luminaire mast arm
LPS	lps	Low pressure sodium
LTG	ltg	Lighting
LUM	lum	Luminaire
MAT	mat	Mast arm mounting vehicle signal faces, top attachment
MAS	mas	Mast arm mounting vehicle signal faces, side attachment
MAS-4A	mas-4A	Mast arm mounting vehicle signal faces, side attachment - 4 signal section
MAS-4B	mas-4B	
MAS-4C	mas-4C	
MAS-5A	mas-5A	Mast arm mounting vehicle signal faces, side attachment - 5 signal section
MAS-5B	mas-5B	
MC	mc	Mercury contactor
M/M	m/m	Multiple to multiple transformer
MT	mt	Conduit with pull wire or rope only
MTG	mtg	Mounting
	mv	Mercury vapor lighting fixture
N	N	Neutral (Grounded Conductor)
NC	NC	Normally closed
NO	NO	Normally open
PB	pb	Pull box
PEC	pec	Photoelectric control (Type I, II, III, IV or V as shown)
PED	ped	Pedestrian
PEU	peu	Photoelectric unit
PPB	ppb	Pedestrian push button
RL		Relocated equipment
RM	rm	Ramp metering
SB	sb	Slip base
SIC	sic	Signal interconnect cable
SIG	sig	Signal
SMA	sma	Signal mast arm
SNS	sns	Street name sign
SP	sp	Service point
TDC	tdc	Telephone demarcation cabinet
TMS	tms	Traffic monitoring station
TOS	tos	Traffic Operations System
VEH	veh	Vehicle
XFMR	xfmr	Transformer
COMM	comm	Communication
RWIS	rwis	Roadway weather information system

SOFFIT AND WALL MOUNTED LUMINAIRES

Pendant, 70 W HPS unless otherwise specified.

Flush, 70 W HPS unless otherwise specified.

Wall surface, 70 W HPS unless otherwise specified.

Existing soffit or wall luminaire to remain unmodified.

Existing soffit or wall luminaire to be modified as specified.

NOTE:

Arrow indicates "street side" of luminaire.

STATE OF CALIFORNIA
DEPARTMENT OF TRANSPORTATION

ELECTRICAL SYSTEMS (SYMBOLS AND ABBREVIATIONS)

NO SCALE

RSP ES-1A DATED OCTOBER 5, 2007 SUPERSEDES STANDARD PLAN ES-1A DATED MAY 1, 2006 - PAGE 400 OF THE STANDARD PLANS BOOK DATED MAY 2006.

REVISED STANDARD PLAN RSP ES-1A

2006 REVISED STANDARD PLAN RSP ES-1A

DIST	COUNTY	ROUTE	POST MILES TOTAL PROJECT	SHEET NO.	TOTAL SHEETS
06	Fre	99	17.3/18.0	38	39

REGISTERED ELECTRICAL ENGINEER

October 5, 2007
PLANS APPROVAL DATE

REGISTERED PROFESSIONAL ENGINEER Jeffery G. McRae No. E14512 Exp. 6-30-08 ELECTRICAL STATE OF CALIFORNIA

The State of California or its officers or agents shall not be responsible for the accuracy or completeness of electronic copies of this plan sheet.

To accompany plans dated 2-16-10

CONDUIT

PROPOSED	EXISTING	
		Lighting Conduit, unless otherwise indicated or noted
		Traffic signal conduit
C	c	Communication conduit
T	t	Telephone conduit
F	f	Fire alarm conduit
FO	fo	Fiber optic conduit
		Conduit termination (RSP ES-9A C)
R	r	Conduit riser in/on structure or service pole

SERVICE EQUIPMENT

PROPOSED	EXISTING	
OH	oh	Overhead lines
U	U	Wood pole "U" indicates utility owned
		Pole guy with anchor
		Utility transformer - ground mounted
III		Service equipment enclosure type
		Service equipment enclosure door indicates front of enclosure
T	t	Telephone demarcation cabinet

POLE-MOUNTED SERVICE DESIGNATION

Type of installation

TYPE H SERVICE - 28'-10" ← Pole height above grade

ILLUMINATED OVERHEAD SIGN

PROPOSED	EXISTING	
		Overhead sign - Single post
		Overhead sign - Two post
		Overhead sign - Mounted on structure
		Overhead sign with electrolier

SIGNAL EQUIPMENT

PROPOSED	EXISTING	
		Pedestrian signal face
		Pedestrian push button post
		Pedestrian barricade
		Vehicle signal face (with backplate, 3-Section: red, yellow and green)
		Vehicle signal face with angle visors
PV	PV	Modifications of basic symbols: "L" indicates all non-arrow sections louvered "LG" indicates louvered green section only "PV" indicates 12" programmed visibility sections "8" indicates all 8" sections (only when specified)
		Type 15TS and Vehicle signal face
		Vehicle signal face with red, yellow and green left arrow sections
		Vehicle signal face with red and yellow sections and up green arrow
		Vehicle signal face (5 Section) with red, yellow and green sections and yellow and green right arrows
		Type 1 Standard and attached vehicle signal faces
		Standard with signal mast arm only and attached vehicle signal faces and internally illuminated street name sign
		Type 33 Standard, Left-turn vehicle signal face and sign
		Standard with luminaire and signal mast arms and attached vehicle signal faces
		Cantilever flashing beacon Type 9 Frame, with a sign unless otherwise specified or indicated
		Type 15-FBS Standard with two vehicle signal face sections with lens, backplate and visor with a sign
R	Y	Flashing beacon. One vehicle signal face section with lens, backplate and visor. "R" indicates red indication, "Y" indicates yellow indication
		Controller assembly. Door indicates front of cabinet

SIGNAL EQUIPMENT Cont

PROPOSED	EXISTING	
		Guard post
		Type 1 Standard with "Meter On" sign
		Emergency Vehicle detector

NOTES:

1. All signal sections shall be 12" unless shown otherwise.
2. Signal heads shall be provided with backplates unless shown otherwise.
3. Signal indication shall be LED.

STATE OF CALIFORNIA
DEPARTMENT OF TRANSPORTATION

ELECTRICAL SYSTEMS (SYMBOLS AND ABBREVIATIONS)

NO SCALE

RSP ES-1B DATED OCTOBER 5, 2007 SUPERCEDES STANDARD PLAN ES-1B DATED MAY 1, 2006 - PAGE 401 OF THE STANDARD PLANS BOOK DATED MAY 2006.

REVISED STANDARD PLAN RSP ES-1B

2006 REVISED STANDARD PLAN RSP ES-1B

7-10-07

DIST	COUNTY	ROUTE	POST MILES TOTAL PROJECT	SHEET NO.	TOTAL SHEETS
06	Fre	99	17.3/18.0	39	39

REGISTERED ELECTRICAL ENGINEER

October 5, 2007
PLANS APPROVAL DATE

The State of California or its officers or agents shall not be responsible for the accuracy or completeness of electronic copies of this plan sheet.

REGISTERED PROFESSIONAL ENGINEER Jeffery G. McRae No. E14512 Exp. 6-30-08 ELECTRICAL STATE OF CALIFORNIA

To accompany plans dated 2-16-10

EQUIPMENT IDENTIFICATION

ILLUMINATED SIGN IDENTIFICATION NUMBER:

Sign No. 12345
10 ISL SCI 1.0

- Sign number - Place on post or structure
- Transformer rating (kVA)
- Lighting control type
- Number and type of fixtures

Do NOT place on standard or structure

ELECTROLIER OR EQUIPMENT IDENTIFICATION NUMBER:

12345 - 15'-0"

- Mast arm length, if shown. Do not place on standard or structure.
- Equipment number - Place on standard or structure. Existing equipment numbers are shown in parenthesis

CONDUIT AND CONDUCTOR IDENTIFICATION:

1½"C, 2#10, 15#14, 2 DLC

- Number and size of conductors and cables
- Size of conduit in inches

Ø1, Ø2, Ø2P, etc.	Traffic phase identification for signal faces, detectors and phase diagrams
1 2 3	Project note numbers
A B C	Equipment description, installation or item numbers
1 2 3	Conduit run numbers

SIGNAL AND LIGHTING STANDARD (TYPICAL DESIGNATION):

19A - 3 - 100

- Wind velocity = 100 mph
- Case 3 arm loading
- Standard type
- Standard Plan sheet number
- Detail number or letter

MISCELLANEOUS EQUIPMENT

PROPOSED	EXISTING	
CMS	cms	Changeable message sign
		Closed circuit television camera
		Highway advisory radio pole and antenna
EMS	ems	Extinguishable message sign
M V	m v	Detection device M = Microwave sensor V = Video image sensor

WIRING DIAGRAM LEGEND

P	Pole
CB	Circuit breaker
A	Ampere
V	Volt
M	Metered
UM	Unmetered
NB	Neutral bus
GB	Ground bus
G	Equipment grounding conductor
N	Grounded conductor (Neutral)

- External conductor
- Conductor or bus
- Tie point
- Contactor coil
- Contactor, Contact NO
- Terminal blocks
- Contactor, Contact NC
- Enclosure bond
- Grounding electrode
- Circuit breaker
- Receptacle

PULL BOXES

PROPOSED EXISTING

Pull box-No. 5 unless otherwise indicated or noted.

3 9A(21)

Pull box-Additional designations or descriptions

3 = No. 3½ pull box
5 = No. 5 pull box
6 = No. 6 pull box
7 = No. 7 (Ceiling pull box)
8 = No. 8 (Pendant soffit pull box)
9 = No. 9 pull box
9A = No. 9A pull box

(C) = Communications pull box
(E) = Pull box with extension
(S) = Sprinkler control pull box
(21) = Anchor bolts and conduit for future installation of Type 21 Standard
(T) = Traffic pull box

VEHICLE DETECTORS

5 J 9 U

- Vehicle detector designation
- U = Upper
- L = Lower
- Slot number in input file
- Input file (I or J)
- Phase

PROPOSED EXISTING

	Type A detector loop. Outline of sawcut shown.
	Type B detector loop. Outline of sawcut shown.
	Type C detector loop. Outline of sawcut shown.
	Type D detector loop. Outline of sawcut shown.
	Type E detector loop. Outline of sawcut shown.
	Type Q detector loop. Outline of sawcut shown.
	Magnetic detector
DH dh	Detector handhole
	Microwave or video detection zone

STATE OF CALIFORNIA
DEPARTMENT OF TRANSPORTATION

ELECTRICAL SYSTEMS (SYMBOLS AND ABBREVIATIONS)

NO SCALE

RSP ES-1C DATED OCTOBER 5, 2007 SUPERCEDES STANDARD PLAN ES-1C DATED MAY 1, 2006 - PAGE 402 OF THE STANDARD PLANS BOOK DATED MAY 2006.

REVISED STANDARD PLAN RSP ES-1C

2006 REVISED STANDARD PLAN RSP ES-1C

7-10-07