Dist	COUNTY	ROUTE	POST MILES TOTAL PROJECT	SHEET No.	TOTAL SHEETS
06	Kin	41	R37.5/R38.1	4	57

REGISTERED CIVIL ENGINEER 4-8-12 DATE

4-9-12
PLANS APPROVAL DATE

REGISTERED PROFESSIONAL ENGINEER ROY J. SHAVER No. 44587 Exp. 3/31/14 CIVIL STATE OF CALIFORNIA

THE STATE OF CALIFORNIA OR ITS OFFICERS OR AGENTS SHALL NOT BE RESPONSIBLE FOR THE ACCURACY OR COMPLETENESS OF SCANNED COPIES OF THIS PLAN SHEET.

NOTE:

FOR ACCURATE RIGHT OF WAY DATA, CONTACT RIGHT OF WAY ENGINEERING AT THE DISTRICT OFFICE.

LEGEND:

- REMOVE AC SURFACING (Rdwy Exc)
- STAGING AREA
- COLD PLANE AC PAVEMENT
- TFESA · TEMPORARY FENCE (TYPE ~~ESA~~) WILDLIFE EXCLUSION TKR
- TEMPORARY FIBER ROLLS

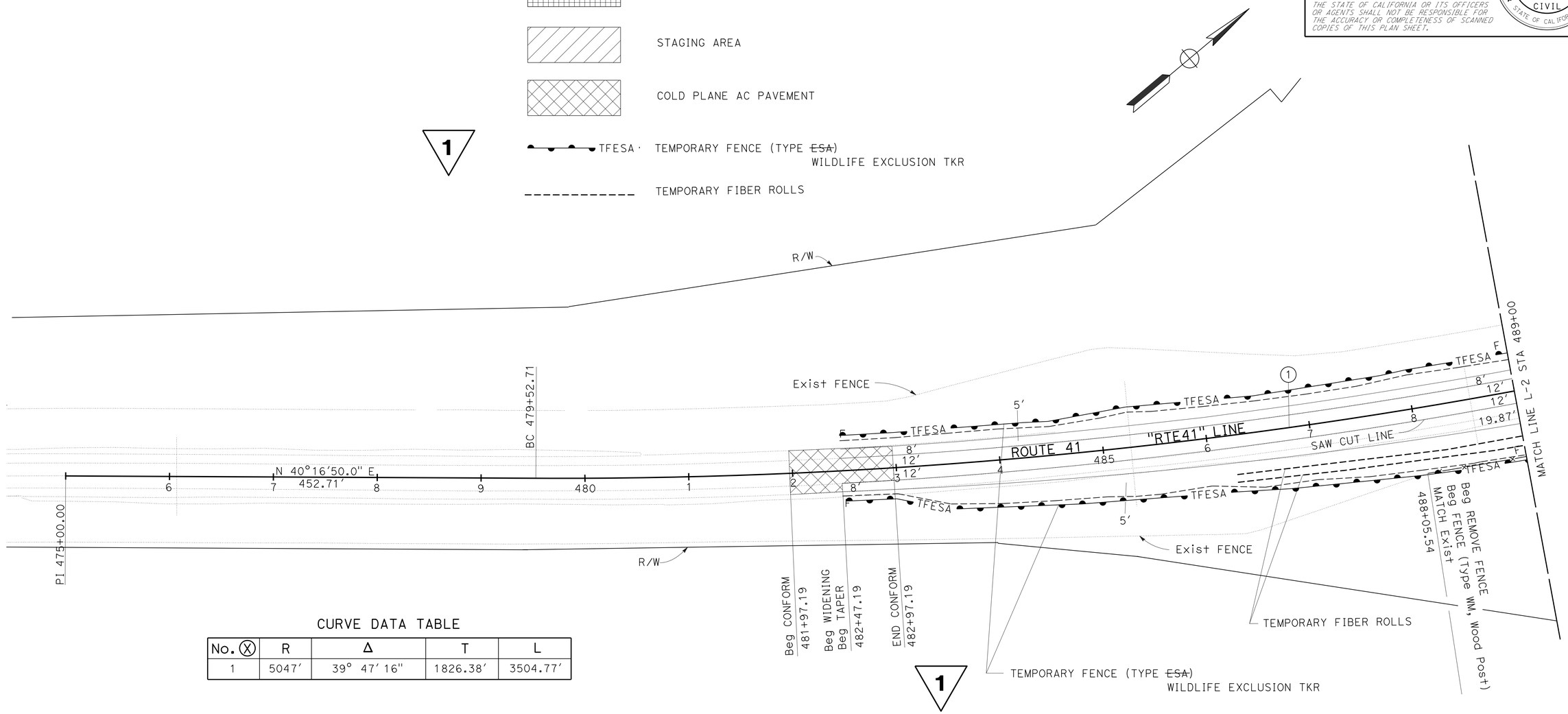

CURVE DATA TABLE

No. (X)	R	Δ	T	L
1	5047'	39° 47' 16"	1826.38'	3504.77'

1 REVISED PER ADDENDUM No. 1 DATED AUGUST 29, 2012

LAYOUT

SCALE: 1" = 50'

L-1

STATE OF CALIFORNIA - DEPARTMENT OF TRANSPORTATION

Caltrans DESIGN

FUNCTIONAL SUPERVISOR: DAVID FRANKE

CALCULATED-DESIGNED BY: CARLOS GONZALEZ

CHECKED BY: ROY SHAVER

REVISED BY: CJG

DATE REVISED: 7/27/11

LAST REVISION: 04-09-12

DATE PLOTTED => 27-AUG-2012
TIME PLOTTED => 11:30

Dist	COUNTY	ROUTE	POST MILES TOTAL PROJECT	SHEET No.	TOTAL SHEETS
06	Kin	41	R37.5/R38.1	15A	52

REGISTERED CIVIL ENGINEER 8-10-12 DATE

04-09-12
PLANS APPROVAL DATE

REGISTERED PROFESSIONAL ENGINEER ROY J. SHAVER No. 44587 Exp. 3/31/14 CIVIL STATE OF CALIFORNIA

THE STATE OF CALIFORNIA OR ITS OFFICERS OR AGENTS SHALL NOT BE RESPONSIBLE FOR THE ACCURACY OR COMPLETENESS OF SCANNED COPIES OF THIS PLAN SHEET.

1

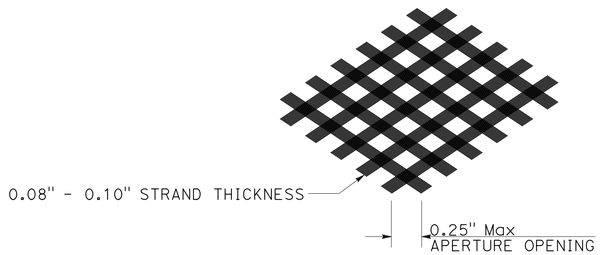

DIAMOND

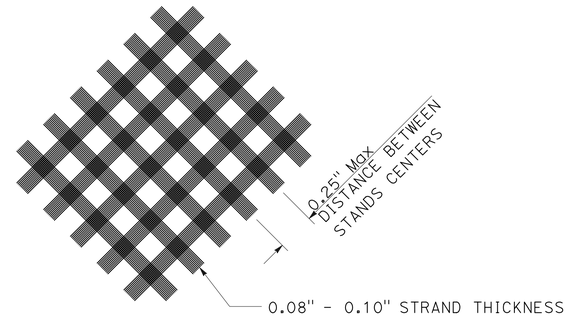

SQUARE

FENCE FABRIC DETAIL

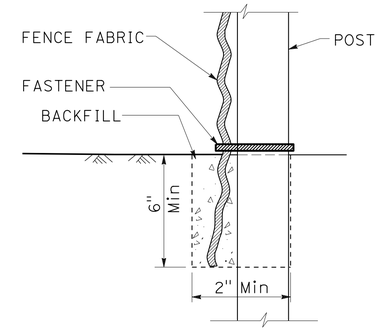

SECTION

TRENCH DETAIL

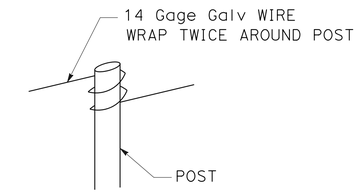

TENSION WIRE DETAIL

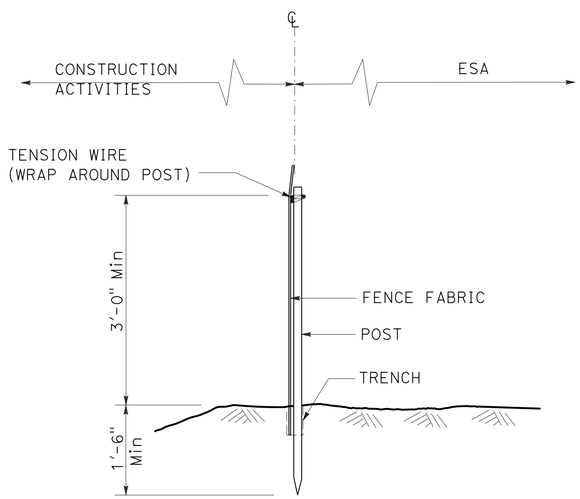

SECTION

FENCE DETAIL

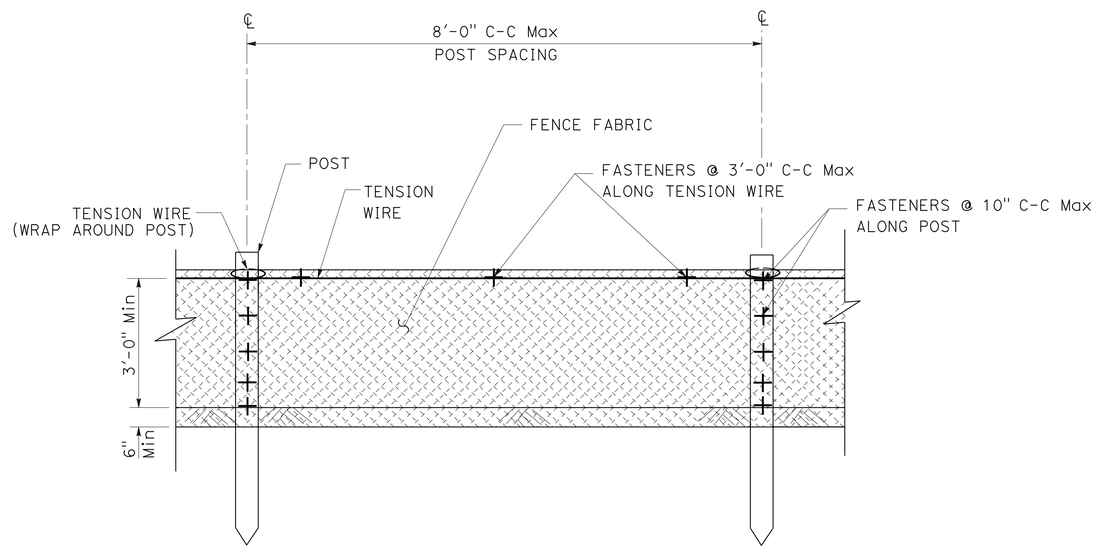

ELEVATION

FENCE DETAIL

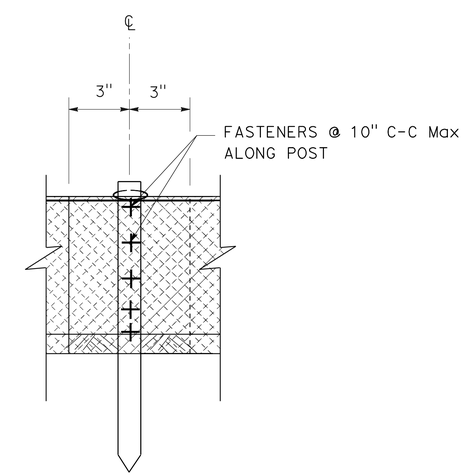

OVERLAP DETAIL

TEMPORARY FENCE (WILDLIFE EXCLUSION TKR)

1 **ADDED PER ADDENDUM No. 1 DATED AUGUST 29, 2012**

CONSTRUCTION DETAILS
(TEMPORARY FENCE (WILDLIFE EXCLUSION TKR))

NO SCALE

C-3

STATE OF CALIFORNIA - DEPARTMENT OF TRANSPORTATION
Caltrans® DESIGN

FUNCTIONAL SUPERVISOR: DAVID FRANKE
CALCULATED-DESIGNED BY: CARLOS GONZALES
CHECKED BY: ROY SHAVER
REVISED BY
DATE REVISED

LAST REVISION 08-10-12
DATE PLOTTED => 27-AUG-2012
TIME PLOTTED => 11:30

Dist	COUNTY	ROUTE	POST MILES TOTAL PROJECT	SHEET No.	TOTAL SHEETS
06	Kin	41	R37.5/R38.1	27	57

REGISTERED CIVIL ENGINEER 4-8-12 DATE

4-9-12
PLANS APPROVAL DATE

REGISTERED PROFESSIONAL ENGINEER ROY J. SHAVER No. 44587 Exp. 3/31/14 CIVIL STATE OF CALIFORNIA

THE STATE OF CALIFORNIA OR ITS OFFICERS OR AGENTS SHALL NOT BE RESPONSIBLE FOR THE ACCURACY OR COMPLETENESS OF SCANNED COPIES OF THIS PLAN SHEET.

NOTES:

1. FOR ACCURATE RIGHT OF WAY DATA, CONTACT RIGHT OF WAY ENGINEERING AT THE DISTRICT OFFICE.
2. LOCATIONS OF UTILITY FACILITIES SHOWN ON THE PLANS ARE APPROXIMATE AND SHALL BE VERIFIED BY THE CONTRACTOR PRIOR TO CONSTRUCTION.
3. UTILITY OWNERSHIP ON THIS PROJECT:
   - NATURAL GAS - SOCAL GAS
   - ELECTRIC - PACIFIC GAS & ELECTRIC COMPANY (PG&E)
   - TELEPHONE - AT&T
   - SANITARY SEWER - CITY OF LEMOORE
   - FIBER OPTIC - AT&T
   - CABLE TV - COMCAST
4. ALL UTILITIES ARE EXISTING UNLESS OTHERWISE NOTED.
5. ALL PROPOSED UTILITIES SHALL BE INSTALLED BY OTHERS.

LEGEND:

----gs———————---gs- Exist (6" Dia steel, 390 psig) SOCAL Gas Line

(1) Pothole Location and Number

X Proposed Utility Pole

* Existing Utility Pole

TBRBO - To Be Relocated By Others (During Construction)

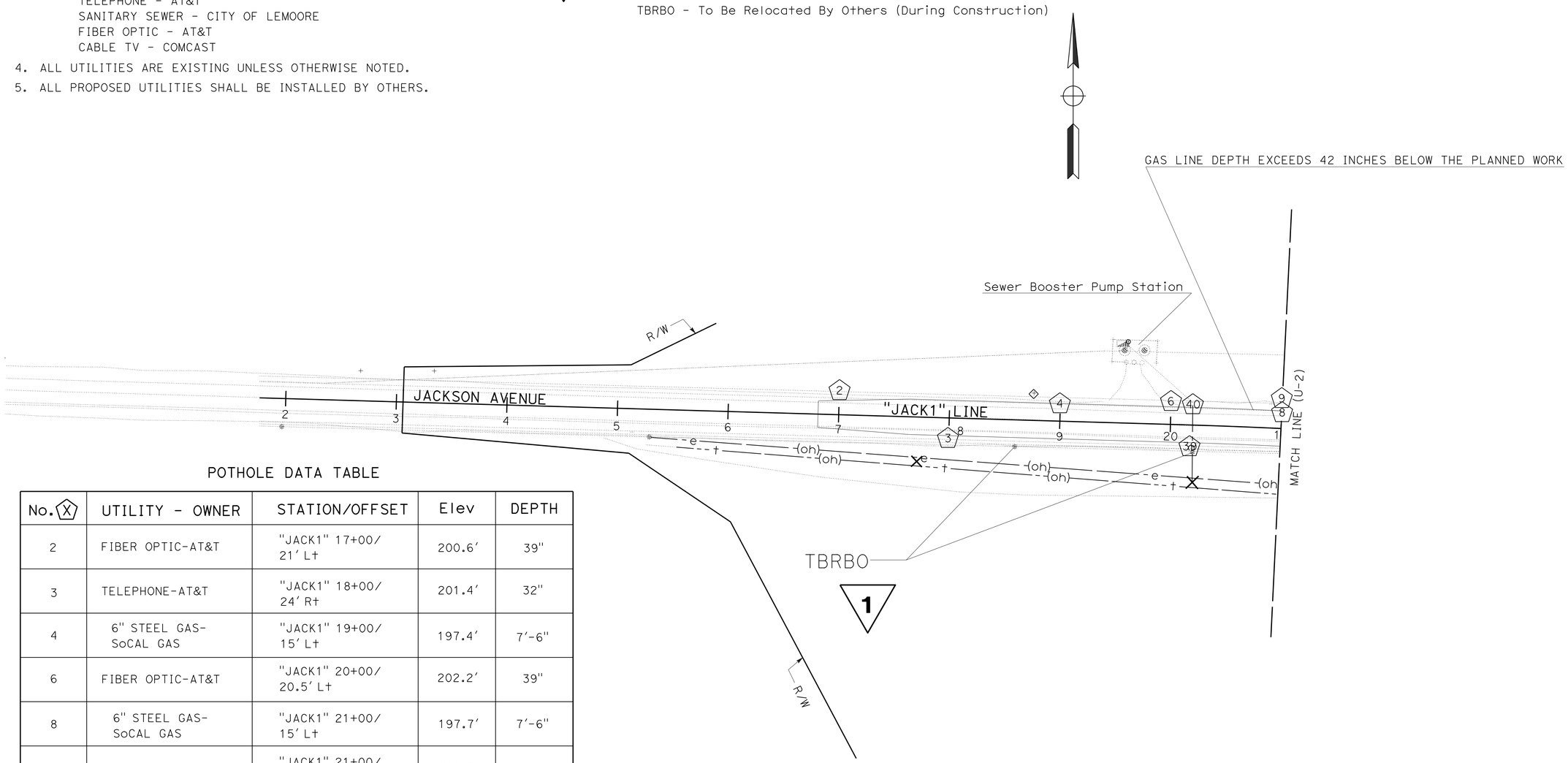

POTHOLE DATA TABLE

No. (X)	UTILITY - OWNER	STATION/OFFSET	Elev	DEPTH
2	FIBER OPTIC-AT&T	"JACK1" 17+00/ 21' L+	200.6'	39"
3	TELEPHONE-AT&T	"JACK1" 18+00/ 24' R+	201.4'	32"
4	6" STEEL GAS- SoCAL GAS	"JACK1" 19+00/ 15' L+	197.4'	7'-6"
6	FIBER OPTIC-AT&T	"JACK1" 20+00/ 20.5' L+	202.2'	39"
8	6" STEEL GAS- SoCAL GAS	"JACK1" 21+00/ 15' L+	197.7'	7'-6"
9	FIBER OPTIC-AT&T	"JACK1" 21+00/ 21' L+	202.5'	31"
39	ELECTRIC SERVICE -PG&E	"JACK1" 20+20/ 20' R+	202.0'	35"
40	ELECTRIC SERVICE -PG&E	"JACK1" 20+20/ 18.5' L+	203.2'	29"

(1) **REVISED PER ADDENDUM No. 1 DATED AUGUST 29, 2012**

APPROVED FOR UTILITY INFORMATION ONLY

UTILITY PLAN

SCALE: 1" = 50'

U-1

REVISED BY	DATE REVISED
CJG	7/27/11

CALCULATED-DESIGNED BY: CARLOS GONZALEZ
CHECKED BY: ROY SHAVER
FUNCTIONAL SUPERVISOR: DAVID FRANKE

STATE OF CALIFORNIA - DEPARTMENT OF TRANSPORTATION
Caltrans
DESIGN

LAST REVISION 04-09-12 | DATE PLOTTED => 27-AUG-2012 | TIME PLOTTED => 11:30

Dist	COUNTY	ROUTE	POST MILES TOTAL PROJECT	SHEET No.	TOTAL SHEETS
06	Kin	41	R37.5/R38.1	28	52

REGISTERED CIVIL ENGINEER 4-8-12 DATE

04-09-12
PLANS APPROVAL DATE

REGISTERED PROFESSIONAL ENGINEER ROY J. SHAVER No. 44587 Exp. 3/31/14 CIVIL STATE OF CALIFORNIA

THE STATE OF CALIFORNIA OR ITS OFFICERS OR AGENTS SHALL NOT BE RESPONSIBLE FOR THE ACCURACY OR COMPLETENESS OF SCANNED COPIES OF THIS PLAN SHEET.

NOTE:

FOR ACCURATE RIGHT OF WAY DATA, CONTACT

RIGHT OF WAY ENGINEERING AT THE DISTRICT OFFICE.

POTHOLE DATA TABLE

No. (X)	UTILITY - OWNER	STATION/OFFSET	Elev	DEPTH
8	6" STEEL GAS-SoCAL GAS	"JACK1" 17+00/ 21' Lt	197.7'	7'-6"
9	FIBER OPTIC-AT&T	"JACK1" 17+00/ 21' Lt	202.5'	31"
10	TELEPHONE-AT&T	"JACK1" 21+05/ 23.8' Rt	202.2	33"
11	6" STEEL GAS-SoCAL GAS	"JACK1" 23+00/ 23.9' Lt	197.5'	7'-6"
13	TELEPHONE-AT&T	"JACK1" 23+58/ 18.3' Rt	201.7'	38"
23	6" STEEL GAS-SoCAL GAS	"JACK1" 27+00/ 53.5' Lt	197.0'	9'-0"
24	TELEPHONE-AT&T	"JACK1" 26+85/ 16.7' Lt	202.6'	34"
25	30" PLASTIC SEWER -CITY OF LEMOORE	"JACK1" 27+60/ 20.6' Rt	199.8'	36"
42	FIBER OPTIC-AT&T	"JACK1" 27+90/ 63.9' Lt	203.2'	34"

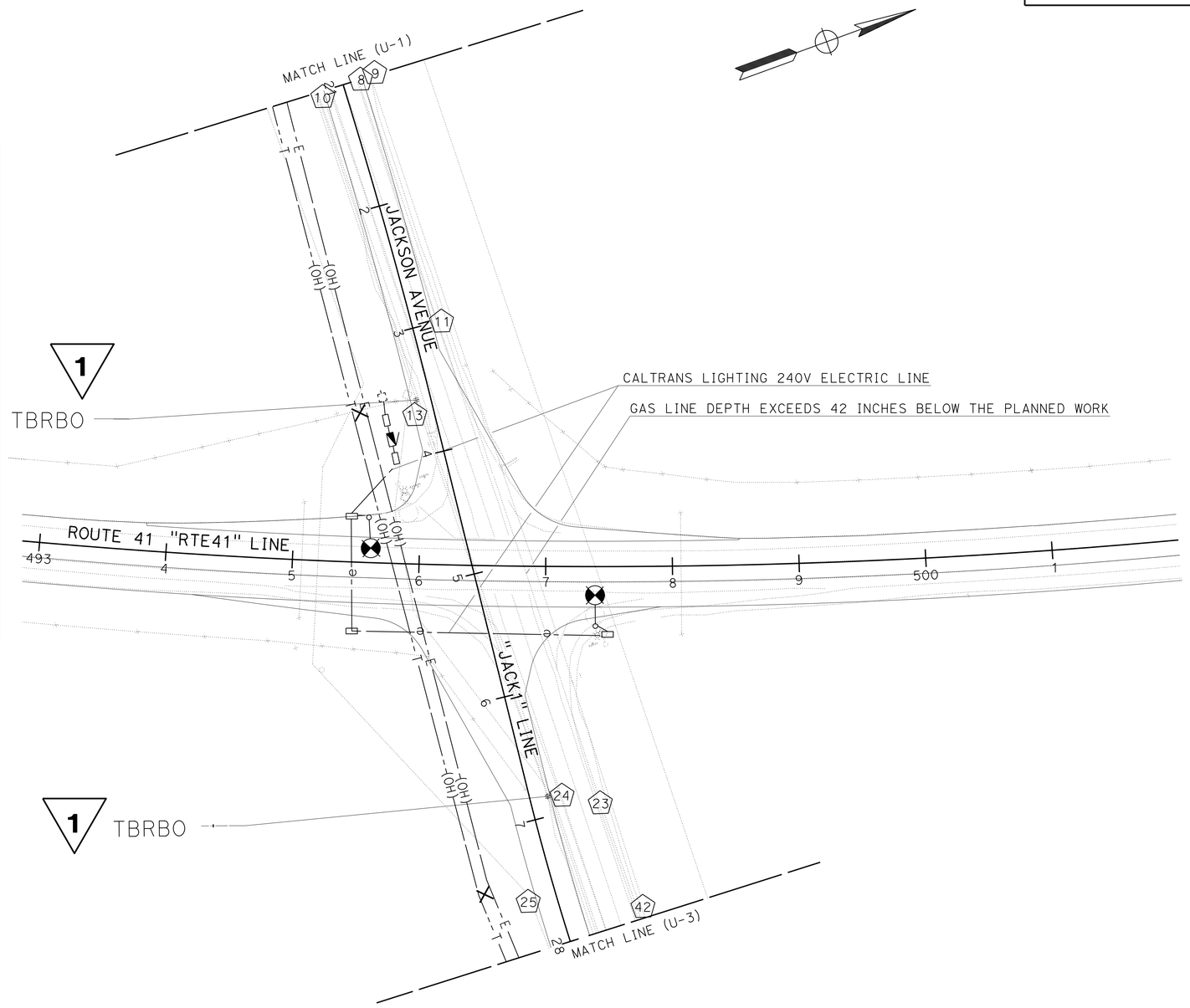

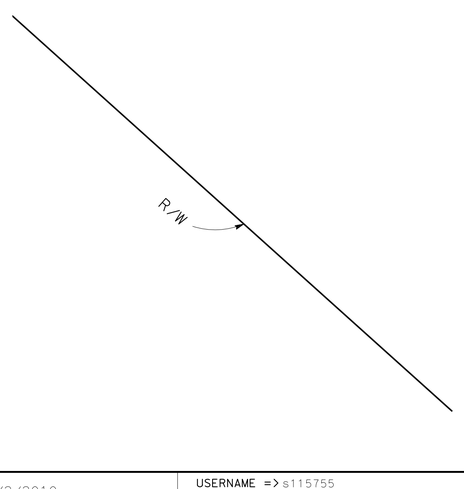

1 **REVISED PER ADDENDUM No. 1 DATED AUGUST 29, 2012**

APPROVED FOR UTILITY INFORMATION ONLY

UTILITY PLAN

SCALE: 1" = 50'

U-2

STATE OF CALIFORNIA - DEPARTMENT OF TRANSPORTATION
Caltrans
DESIGN

FUNCTIONAL SUPERVISOR: DAVID FRANKE
CALCULATED-DESIGNED BY: CARLOS GONZALEZ
CHECKED BY: ROY SHAVER
REVISED BY: CJG
DATE REVISED: 11/01/11

LAST REVISION 04-09-12
DATE PLOTTED => 27-AUG-2012
TIME PLOTTED => 11:30

Dist	COUNTY	ROUTE	POST MILES TOTAL PROJECT	SHEET No.	TOTAL SHEETS
06	Kin	41	R37.5/R38.1	29	52

REGISTERED CIVIL ENGINEER 4-8-12 DATE

04-09-12
PLANS APPROVAL DATE

REGISTERED PROFESSIONAL ENGINEER ROY J. SHAVER No. 44587 Exp. 3/31/14 CIVIL STATE OF CALIFORNIA

THE STATE OF CALIFORNIA OR ITS OFFICERS OR AGENTS SHALL NOT BE RESPONSIBLE FOR THE ACCURACY OR COMPLETENESS OF SCANNED COPIES OF THIS PLAN SHEET.

NOTE:

FOR ACCURATE RIGHT OF WAY DATA, CONTACT RIGHT OF WAY ENGINEERING AT THE DISTRICT OFFICE.

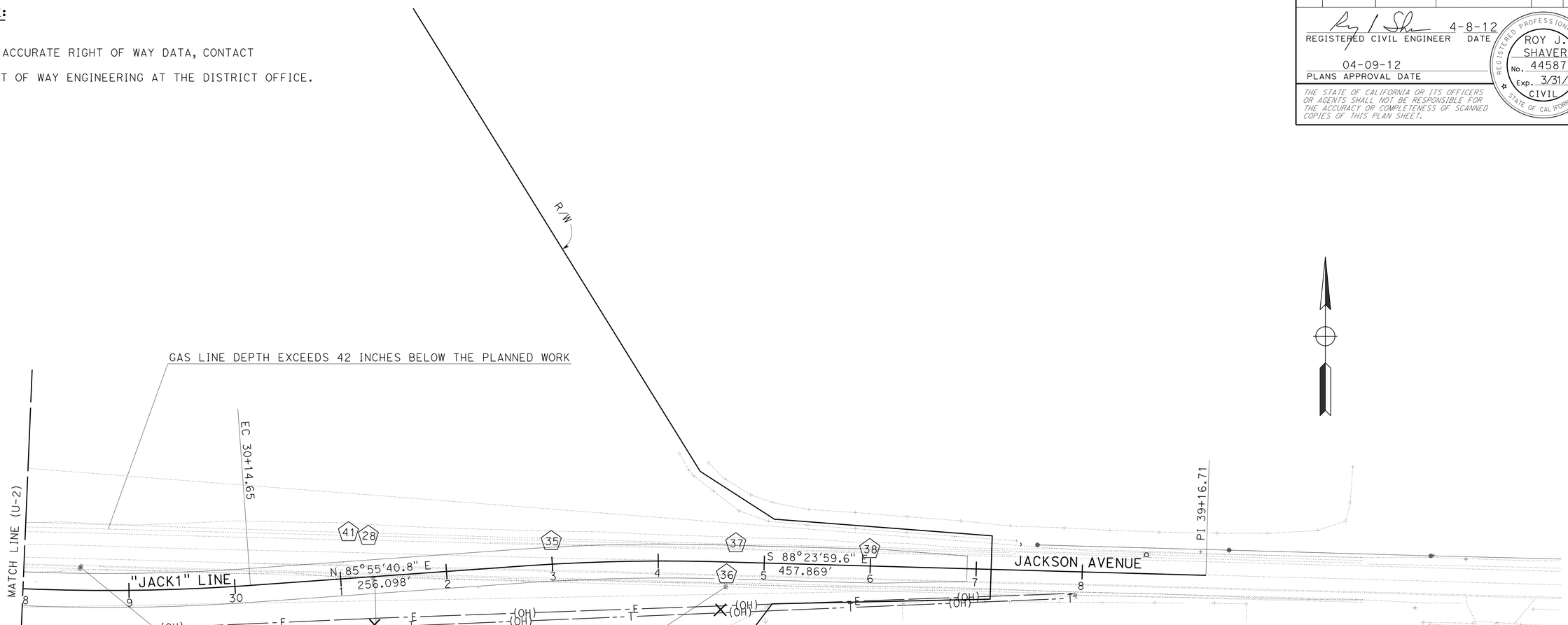

1 TBRBO

POTHOLE DATA TABLE

No. (X)	UTILITY - OWNER	STATION/OFFSET	Elev	DEPTH
28	6" STEEL GAS-SoCAL GAS	"JACK1" 31+29/ 38.6 Lt	198.2'	7'-3"
32	TELEPHONE-AT&T	"JACK1" 31+04/ 3.5' Lt	202.3'	37"
35	6" STEEL GAS-SoCAL GAS	"JACK1" 33+00/ 22.1' Lt	199.1'	6'-4"
36	TELEPHONE-AT&T	"JACK1" 34+64/ 21.5' Rt	201.4'	44"
37	FIBER OPTIC-AT&T	"JACK1" 34+74/ 17' Lt	202.0'	38"
38	6" STEEL GAS-SoCAL GAS	"JACK1" 36+00/ 15' Lt	198.2	6'-11"
41	FIBER OPTIC-AT&T	"JACK1" 31+10/ 43.3' Lt	202.6'	32"

1 **REVISED PER ADDENDUM No. 1 DATED AUGUST 29, 2012**

APPROVED FOR UTILITY INFORMATION ONLY

UTILITY PLAN

SCALE: 1" = 50'

U-3

STATE OF CALIFORNIA - DEPARTMENT OF TRANSPORTATION
Caltrans
DESIGN

FUNCTIONAL SUPERVISOR: DAVID FRANKE
CALCULATED-DESIGNED BY: CARLOS GONZALEZ
CHECKED BY: ROY SHAVER
REVISED BY: CJG
DATE REVISED: 7/27/11

LAST REVISION 04-09-12
DATE PLOTTED => 27-AUG-2012
TIME PLOTTED => 11:30

Dist	COUNTY	ROUTE	POST MILES TOTAL PROJECT	SHEET No.	TOTAL SHEETS
06	Kin	41	R37.5/R38.1	41	57

REGISTERED CIVIL ENGINEER 4-8-12 DATE

04-09-12
PLANS APPROVAL DATE

REGISTERED PROFESSIONAL ENGINEER ROY J. SHAVER No. 44587 Exp. 3/31/14 CIVIL STATE OF CALIFORNIA

THE STATE OF CALIFORNIA OR ITS OFFICERS OR AGENTS SHALL NOT BE RESPONSIBLE FOR THE ACCURACY OR COMPLETENESS OF SCANNED COPIES OF THIS PLAN SHEET.

1

WATER POLLUTION CONTROL

LOCATION	TEMPORARY FENCE (TYPE ~~ESA~~) WILDLIFE EXCLUSION TKR	TEMPORARY FIBER ROLL
	LF	LF
Var	~~9,525~~ 7,500	2,006
"JACK 1" 29+00 - 30+00		
TOTAL	~~9,525~~ 7,500	2,006

HMA OVERSIDE DRAIN

LOCATION	HMA*	PLACE HMA (Misc AREA)
	TON	SQYD
"JACK 1" 24+20, 27.83' R+	1.37	4.2
"JACK 1" 23+50, 23.90' L+	1.37	5.3
TOTAL	2.74	9.5

* Quantity Included in Roadway Quantities

SURVEY MONUMENT

LOCATION	TYPE A
	EA
"RTE 41" 493+88.43, 18.70' R+	1
TOTAL	1

PULL BOX (No. 3-1/2)

LOCATION	EA	REMARKS
"JACK 1" 28+17, 43.76' L+	1	COVER Exist SURVEY MONUMENT
TOTAL	1	

1 **REVISED PER ADDENDUM No. 1 DATED AUGUST 29, 2012**

SUMMARY OF QUANTITIES
Q-2

STATE OF CALIFORNIA - DEPARTMENT OF TRANSPORTATION
Caltrans DESIGN
FUNCTIONAL SUPERVISOR DAVID FRANKE
CALCULATED-DESIGNED BY MICHAEL ZAMORA
CHECKED BY ROY J SHAVER
REVISED BY
DATE REVISED

LAST REVISION 04-09-12 DATE PLOTTED => 27-AUG-2012 TIME PLOTTED => 11:30