ACSTP-P168(056)E

Dist	COUNTY	ROUTE	POST MILES TOTAL PROJECT	SHEET No.	TOTAL SHEETS
06	Fre	168	R14.4/R15.0	1	52

STATE OF CALIFORNIA
DEPARTMENT OF TRANSPORTATION

PROJECT PLANS FOR CONSTRUCTION ON
STATE HIGHWAY

IN FRESNO COUNTY
NEAR CLOVIS, FROM 0.4 MILE WEST OF SHEPHERD AVENUE TO 0.3 MILE EAST OF SHEPHERD AVENUE

TO BE SUPPLEMENTED BY STANDARD PLANS DATED MAY 2006

INDEX OF PLANS

SHEET No.	DESCRIPTION
1	TITLE AND LOCATION MAP
2-6	TYPICAL CROSS SECTIONS
7-9	LAYOUT
10	PROFILE
11-12	PROFILE AND SUPERELEVATION DIAGRAM
13-17	CONSTRUCTION DETAILS
18-19	TEMPORARY WATER POLLUTION PLAN
20-24	DRAINAGE PROFILES, DETAILS AND QUANTITIES
25-27	UTILITY PLAN
28	CONSTRUCTION AREA SIGNS
29-32	STAGE CONSTRUCTION
33	TRAFFIC HANDLING PLAN (DETOUR PLAN)
34-37	PAVEMENT DELINEATION PLAN, SIGN PLAN AND SIGN QUANTITIES
38-39	SUMMARY OF QUANTITIES
40	REMOVE EXISTING ELECTRICAL SYSTEM
41-52	REVISED AND NEW STANDARD PLANS

THE STANDARD PLANS LIST APPLICABLE TO THIS CONTRACT IS INCLUDED IN THE NOTICE TO BIDDERS AND SPECIAL PROVISIONS BOOK.

LOCATION MAP

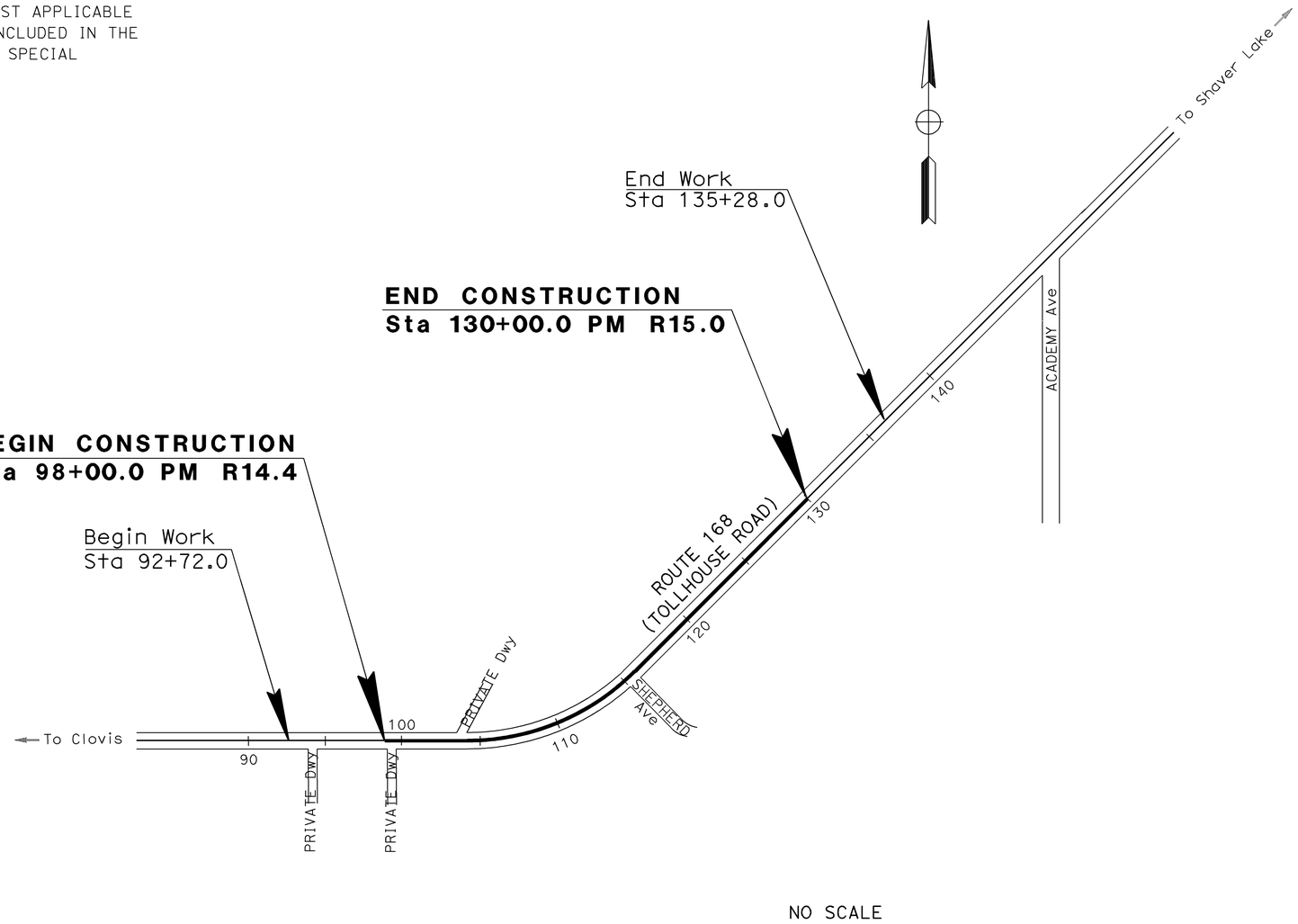

NO SCALE

THE CONTRACTOR SHALL POSSESS THE CLASS (OR CLASSES) OF LICENSE AS SPECIFIED IN THE "NOTICE TO BIDDERS."

PROJECT MANAGER: SUZIE HOLDRIDGE
DESIGN ENGINEER: JUN XU

PROJECT ENGINEER REGISTERED CIVIL ENGINEER — DATE 11-15-11

REGISTERED PROFESSIONAL ENGINEER — RODRIGO M. CRUZ — No. 57918 — Exp. 06/30/12 — CIVIL — STATE OF CALIFORNIA

April 30, 2012
PLANS APPROVAL DATE

THE STATE OF CALIFORNIA OR ITS OFFICERS OR AGENTS SHALL NOT BE RESPONSIBLE FOR THE ACCURACY OR COMPLETENESS OF SCANNED COPIES OF THIS PLAN SHEET.

CONTRACT No.	06-0H9404
PROJECT ID	0600000150

LAST REVISION 04-30-12
DATE PLOTTED => 23-MAY-2012
TIME PLOTTED => 08:58

Dist	COUNTY	ROUTE	POST MILES TOTAL PROJECT	SHEET No.	TOTAL SHEETS
06	Fre	168	R14.4/R15.0	2	52

REGISTERED CIVIL ENGINEER 04-30-12 DATE

4-30-12
PLANS APPROVAL DATE

REGISTERED PROFESSIONAL ENGINEER RODRIGO M.CRUZ No. 57918 Exp 06/30/12 CIVIL STATE OF CALIFORNIA

THE STATE OF CALIFORNIA OR ITS OFFICERS OR AGENTS SHALL NOT BE RESPONSIBLE FOR THE ACCURACY OR COMPLETENESS OF SCANNED COPIES OF THIS PLAN SHEET.

NOTES:

1. DIMENSIONS OF THE PAVEMENT STRUCTURES (STRUCTURAL SECTIONS) ARE SUBJECT TO TOLERANCES IN THE STANDARD SPECIFICATIONS.
2. SUPERELEVATION AS SHOWN OR AS DIRECTED BY THE ENGINEER.
3. SHOULDER BACKING TO FIT AROUND UTILITY POLES IN CONFLICT NOT SUBJECT FOR RELOCATION.
4. DEPTH OF SHOULDER BACKING SHALL BE 0.50′ Min.
5. Exist ROUTE 168 FROM Sta 2099+60 TO Sta 2104+50 TO BE RE-GRADED. SEE X-SECTION SHEET X-5.

ABBRIEVATIONS:

ATB - ASPHALT TREATED BASE
CP - CATCH POINT

DESIGN DESIGNATIONS (Rte 168)

DESCRIPTION	2012-2022	2012-2032
2012 ADT	9,500	9,500
2022 ADT	14,300	-
2032 ADT	-	21,500
2022 DHV	1,550	-
2032 DHV	-	2,350
D	79 %	79 %
T	1 %	1 %
TI	9.0	10.5
V (DESIGN)	65 MPH	

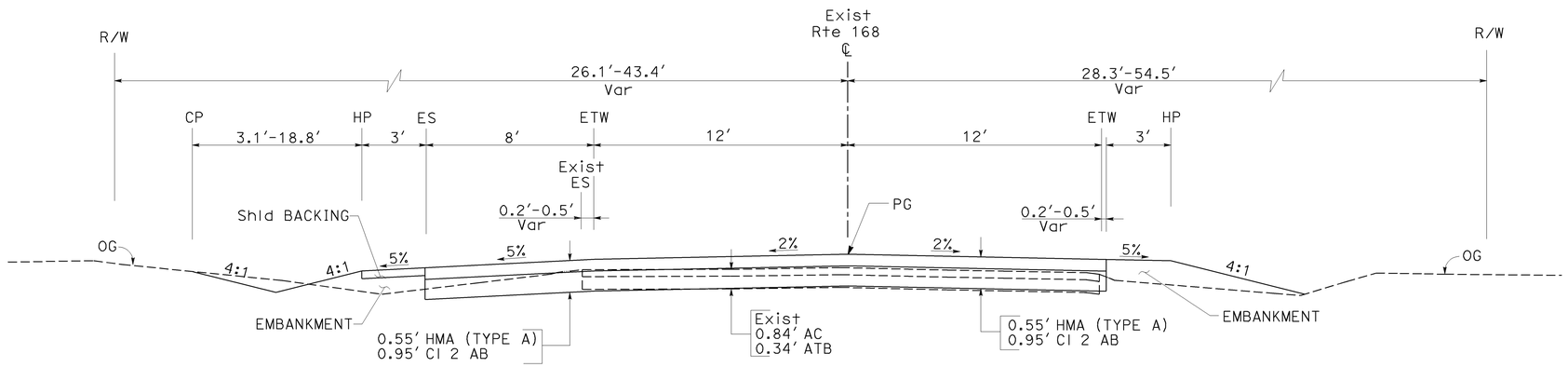

ROUTE 168
Sta 102+40.00 TO Sta 103+50.00

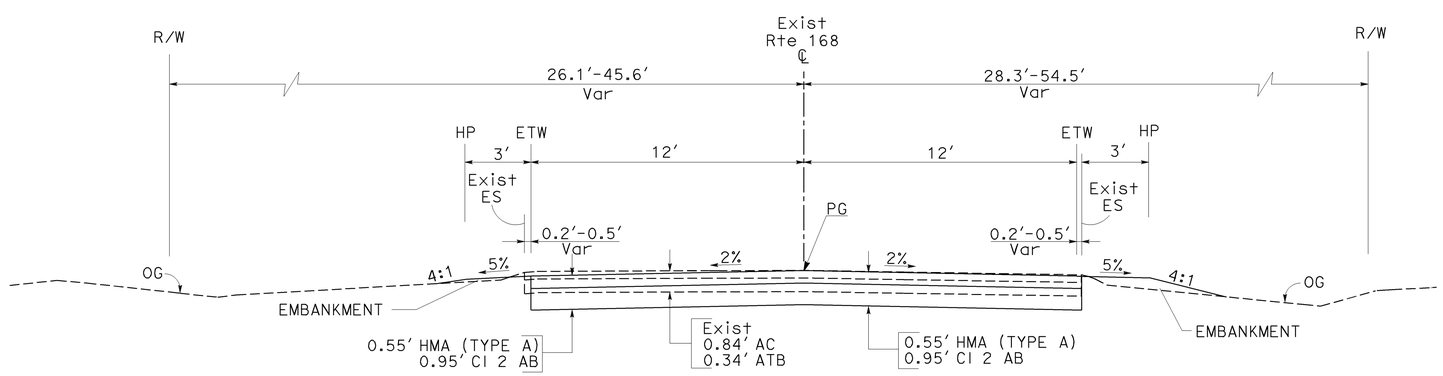

ROUTE 168
Sta 99+00.00 TO Sta 102+40.00

TYPICAL CROSS SECTIONS

NO SCALE

X-1

REVISED BY	DATE REVISED
I. LEE	04/18/12

CALCULATED-DESIGNED BY: IRENE LEE
CHECKED BY: RODRIGO CRUZ
FUNCTIONAL SUPERVISOR: JUN XU

STATE OF CALIFORNIA - DEPARTMENT OF TRANSPORTATION
Caltrans
DESIGN

LAST REVISION 04-30-12 | DATE PLOTTED => 01-MAY-2012 | TIME PLOTTED => 15:33

Dist	COUNTY	ROUTE	POST MILES TOTAL PROJECT	SHEET No.	TOTAL SHEETS
06	Fre	168	R14.4/R15.0	3	52

REGISTERED CIVIL ENGINEER 04-30-12 DATE

4-30-12
PLANS APPROVAL DATE

REGISTERED PROFESSIONAL ENGINEER RODRIGO M. CRUZ No. 57918 Exp. 06/30/12 CIVIL STATE OF CALIFORNIA

THE STATE OF CALIFORNIA OR ITS OFFICERS OR AGENTS SHALL NOT BE RESPONSIBLE FOR THE ACCURACY OR COMPLETENESS OF SCANNED COPIES OF THIS PLAN SHEET.

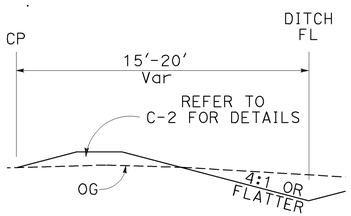

ROUTE 168 WESTBOUND
Sta 105+00.00 TO Sta 107+00.00

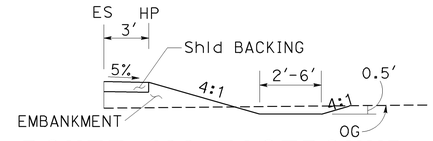

ROUTE 168 EASTBOUND
Sta 117+30.00 TO Sta 118+07.95

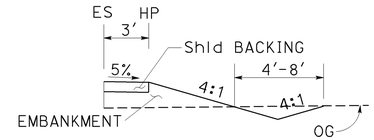

ROUTE 168 EASTBOUND
Sta 105+44.92 TO Sta 111+40.00
Sta 114+00.00 TO Sta 114+70.00
Sta 116+87.89 TO Sta 117+30.00

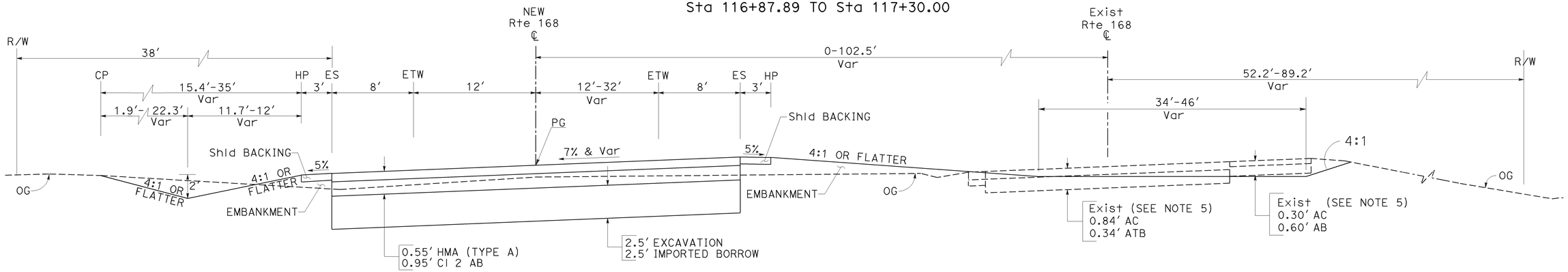

ROUTE 168
CURVE SECTION
Sta 105+44.92 TO Sta 118+07.95

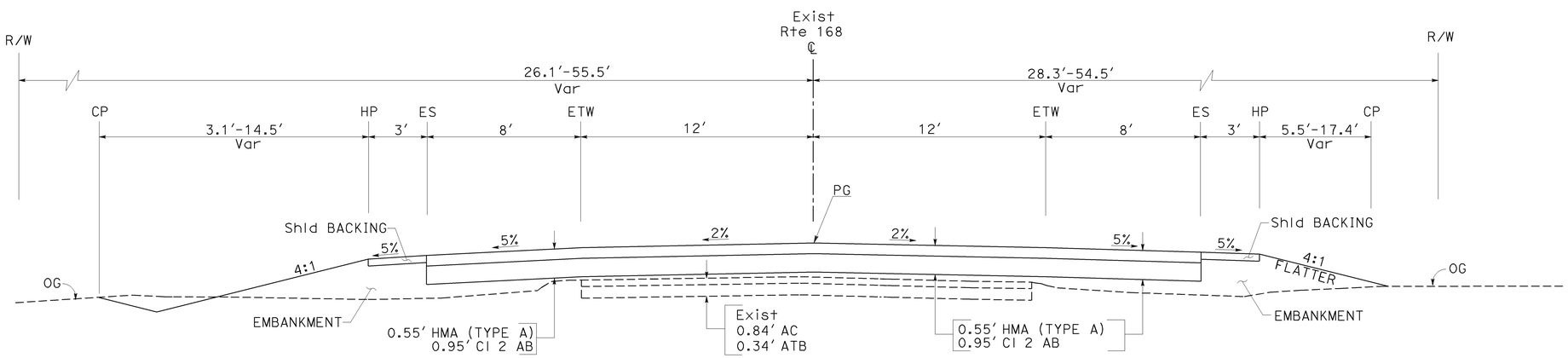

ROUTE 168
TANGENT SECTION
Sta 103+50.00 TO Sta 105+44.92

TYPICAL CROSS SECTIONS

NO SCALE

X-2

REVISED BY	DATE REVISED
I. LEE	04/18/12

CALCULATED-DESIGNED BY: IRENE LEE
CHECKED BY: RODRIGO CRUZ
FUNCTIONAL SUPERVISOR: JUN XU

STATE OF CALIFORNIA - DEPARTMENT OF TRANSPORTATION
Caltrans
DESIGN

LAST REVISION 04-30-12
DATE PLOTTED => 01-MAY-2012
TIME PLOTTED => 15:33

Dist	COUNTY	ROUTE	POST MILES TOTAL PROJECT	SHEET No.	TOTAL SHEETS
06	Fre	168	R14.4/R15.0	4	52

REGISTERED CIVIL ENGINEER 04-30-12 DATE

4-30-12
PLANS APPROVAL DATE

REGISTERED PROFESSIONAL ENGINEER RODRIGO M. CRUZ No. 57918 Exp. 06/30/12 CIVIL STATE OF CALIFORNIA

THE STATE OF CALIFORNIA OR ITS OFFICERS OR AGENTS SHALL NOT BE RESPONSIBLE FOR THE ACCURACY OR COMPLETENESS OF SCANNED COPIES OF THIS PLAN SHEET.

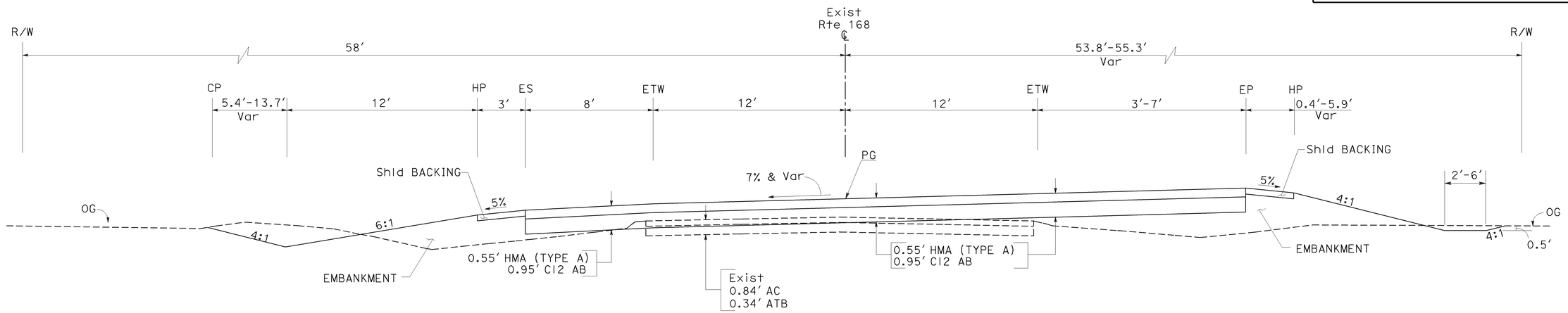

ROUTE 168

Sta 118+10.00 TO Sta 119+30.00

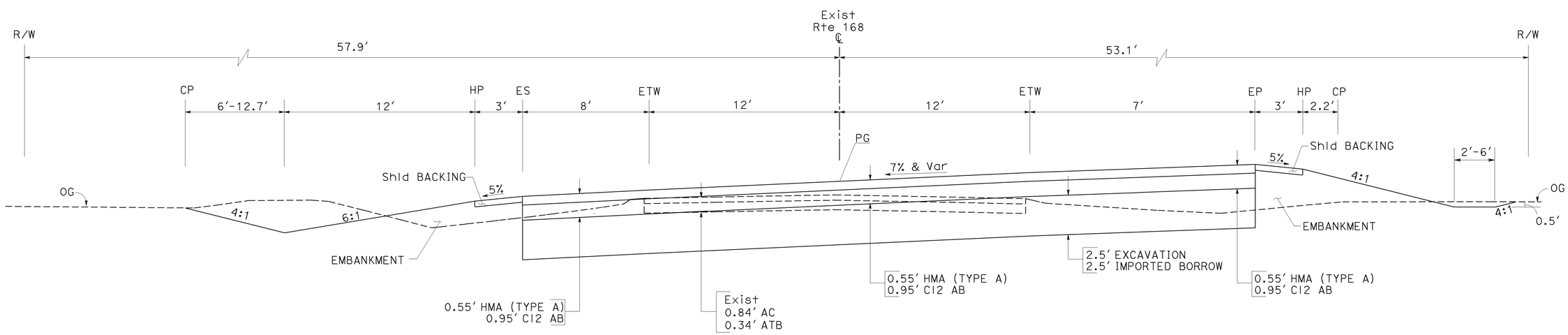

ROUTE 168

Sta 118+07.95 TO Sta 118+10.00

TYPICAL CROSS SECTIONS

NO SCALE

X-3

REVISED BY	DATE REVISED
I. LEE	04/18/12

CALCULATED-DESIGNED BY: IRENE LEE
CHECKED BY: RODRIGO CRUZ
FUNCTIONAL SUPERVISOR: JUN XU

STATE OF CALIFORNIA - DEPARTMENT OF TRANSPORTATION
Caltrans
DESIGN

LAST REVISION 04-30-12
DATE PLOTTED => 01-MAY-2012
TIME PLOTTED => 15:33

Dist	COUNTY	ROUTE	POST MILES TOTAL PROJECT	SHEET No.	TOTAL SHEETS
06	Fre	168	R14.4/R15.0	5	52

REGISTERED CIVIL ENGINEER 04-30-12 DATE

4-30-12
PLANS APPROVAL DATE

REGISTERED PROFESSIONAL ENGINEER RODRIGO M. CRUZ No. 57918 Exp. 06/30/12 CIVIL STATE OF CALIFORNIA

THE STATE OF CALIFORNIA OR ITS OFFICERS OR AGENTS SHALL NOT BE RESPONSIBLE FOR THE ACCURACY OR COMPLETENESS OF SCANNED COPIES OF THIS PLAN SHEET.

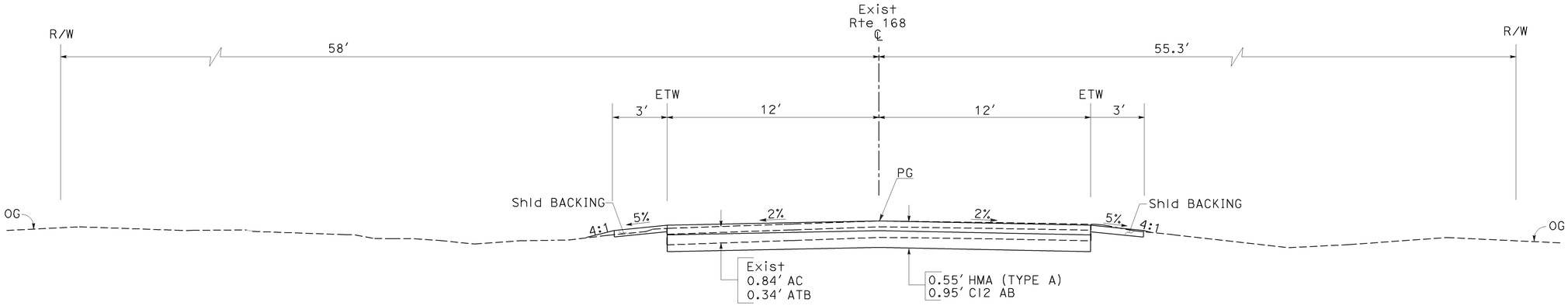

ROUTE 168

Sta 125+25.00 TO Sta 127+50.00

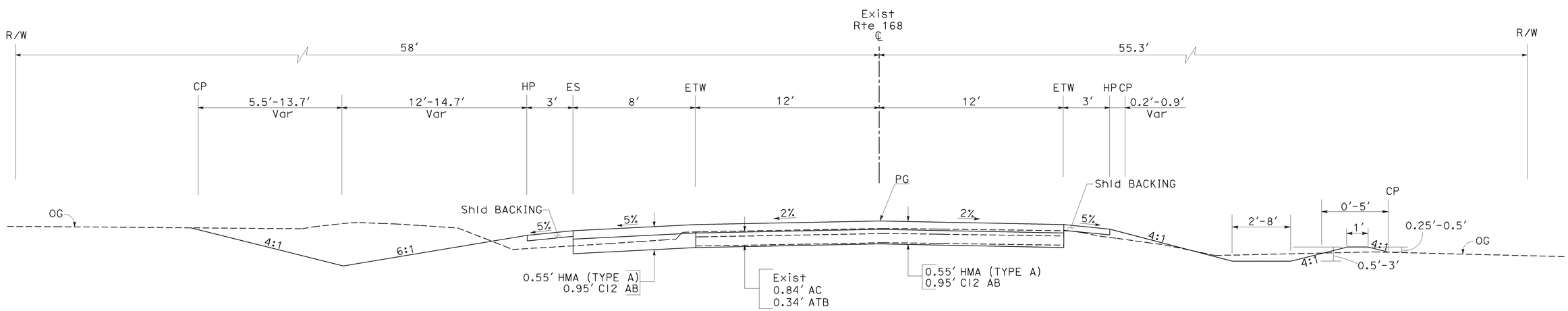

ROUTE 168

Sta 119+30.00 TO Sta 125+25.00

TYPICAL CROSS SECTIONS

NO SCALE

X-4

REVISED BY	DATE REVISED
I. LEE	04/18/12

CALCULATED-DESIGNED BY	CHECKED BY
IRENE LEE	RODRIGO CRUZ

FUNCTIONAL SUPERVISOR: JUN XU

STATE OF CALIFORNIA - DEPARTMENT OF TRANSPORTATION

Caltrans® **DESIGN**

LAST REVISION 04-30-12 | DATE PLOTTED => 01-MAY-2012 | TIME PLOTTED => 15:33

Dist	COUNTY	ROUTE	POST MILES TOTAL PROJECT	SHEET No.	TOTAL SHEETS
06	Fre	168	R14.4/R15.0	6	52

REGISTERED CIVIL ENGINEER 04-30-12 DATE

4-30-12
PLANS APPROVAL DATE

REGISTERED PROFESSIONAL ENGINEER RODRIGO M.CRUZ No. 57918 Exp. 06/30/12 CIVIL STATE OF CALIFORNIA

THE STATE OF CALIFORNIA OR ITS OFFICERS OR AGENTS SHALL NOT BE RESPONSIBLE FOR THE ACCURACY OR COMPLETENESS OF SCANNED COPIES OF THIS PLAN SHEET.

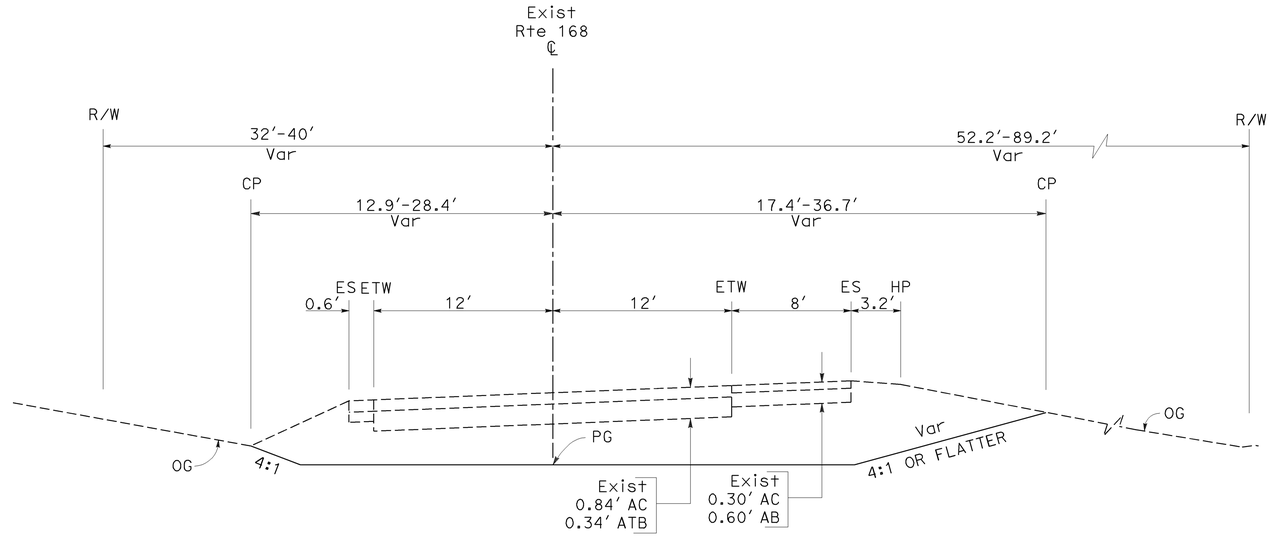

Exist ROUTE 168

Sta 2099+60 TO Sta 2104+50

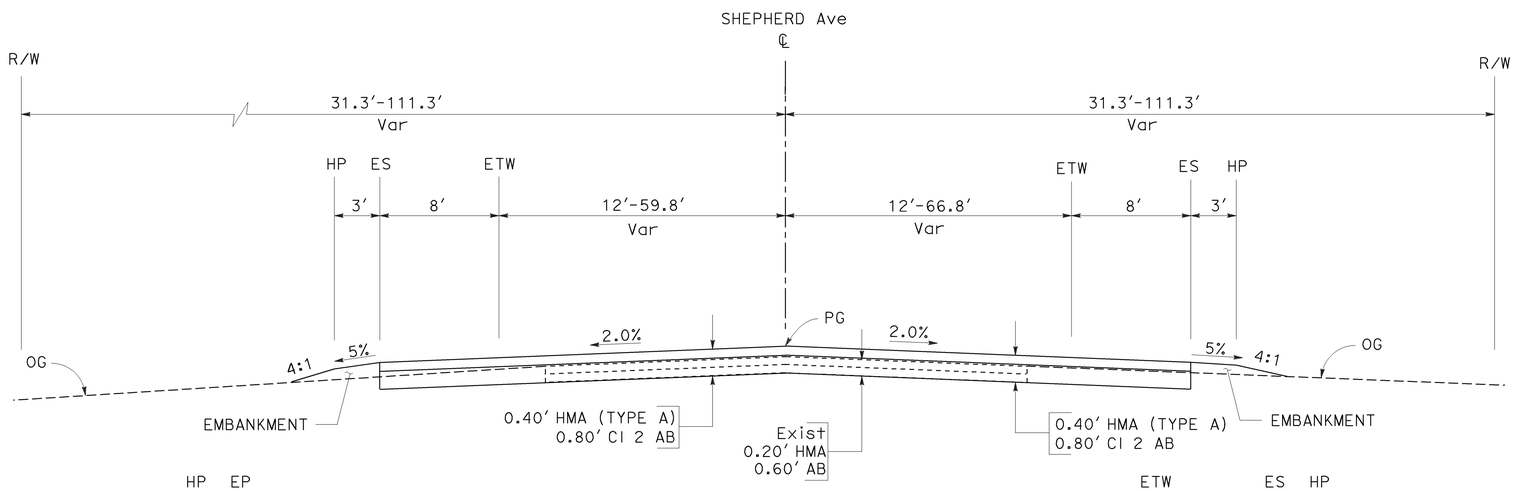

SHEPHERD AVENUE

Sta 10+47.31 TO Sta 13+50.00

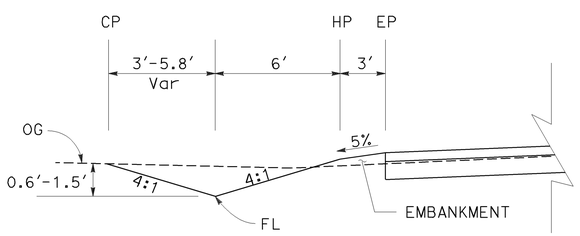

Sta 12+90.00 TO Sta 13+50.00

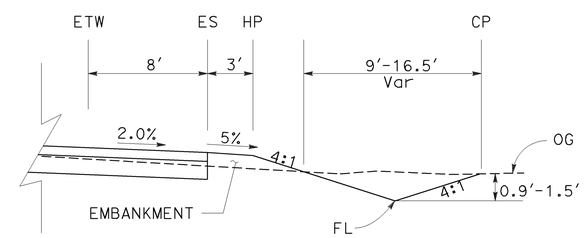

Sta 10+59.92 TO Sta 10+89.08

TYPICAL CROSS SECTIONS

NO SCALE

X-5

REVISED BY	DATE REVISED
I. LEE	04/18/12

CALCULATED-DESIGNED BY	CHECKED BY
IRENE LEE	RODRIGO CRUZ

FUNCTIONAL SUPERVISOR: JUN XU

STATE OF CALIFORNIA - DEPARTMENT OF TRANSPORTATION

Caltrans® DESIGN

LAST REVISION 04-30-12 | DATE PLOTTED => 01-MAY-2012 | TIME PLOTTED => 15:33

Dist	COUNTY	ROUTE	POST MILES TOTAL PROJECT	SHEET No.	TOTAL SHEETS
06	Fre	168	R14.4/R15.0	7	52

REGISTERED CIVIL ENGINEER 04-30-12 DATE

4-30-12
PLANS APPROVAL DATE

REGISTERED PROFESSIONAL ENGINEER RODRIGO M.CRUZ No. 57918 Exp. 06/30/12 CIVIL STATE OF CALIFORNIA

THE STATE OF CALIFORNIA OR ITS OFFICERS OR AGENTS SHALL NOT BE RESPONSIBLE FOR THE ACCURACY OR COMPLETENESS OF SCANNED COPIES OF THIS PLAN SHEET.

NOTES:

1. FOR ACCURATE RIGHT OF WAY DATA, CONTACT RIGHT OF WAY ENGINEERING AT THE DISTRICT OFFICE.
2. SEE X-SECTION SHEETS FOR LOCATIONS OF FULL ROADWAY RECONSTRUCTION OF Exist PAVEMENT.
3. SEE ELECTRICAL PLANS FOR EXISTING CALTRANS-OWNED UTILITIES TO BE REMOVED.

LEGEND:

- TFESA — Temp FENCE (TYPE ESA)
- DRAINAGE SYSTEM No.
- DRAINAGE UNIT
- GUTTER FLOW LINES

CURVE DATA

No.	R	Δ	T	L
1	1625.00′	44°32′0.0"	665.36′	1263.04′

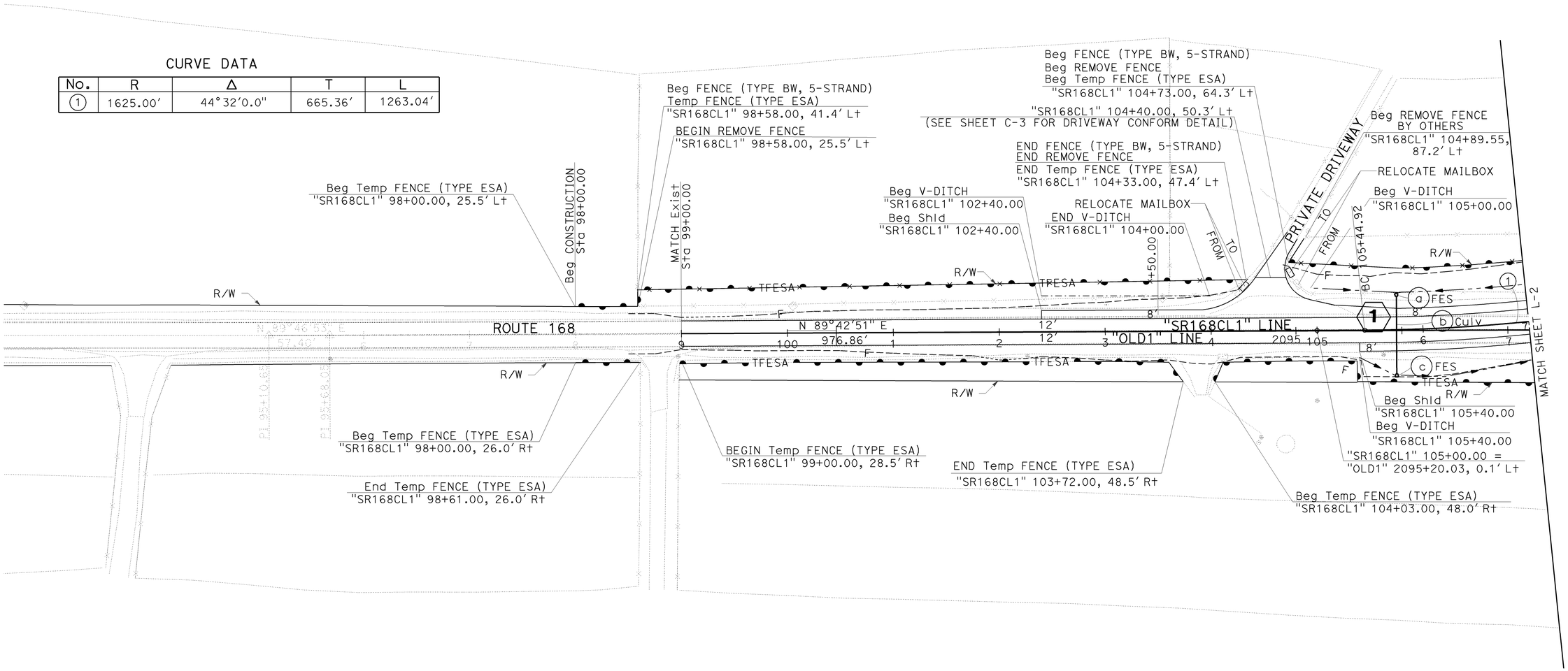

LAYOUT

SCALE: 1"=50′

L-1

REVISED BY	DATE REVISED
I. LEE	12/21/11

CALCULATED-DESIGNED BY	CHECKED BY
IRENE LEE	RODRIGO CRUZ

FUNCTIONAL SUPERVISOR: JUN XU

STATE OF CALIFORNIA - DEPARTMENT OF TRANSPORTATION

Caltrans® DESIGN

LAST REVISION 04-30-12 | DATE PLOTTED => 01-MAY-2012 | TIME PLOTTED => 15:33

Dist	COUNTY	ROUTE	POST MILES TOTAL PROJECT	SHEET No.	TOTAL SHEETS
06	Fre	168	R14.4/R15.0	8	52

REGISTERED CIVIL ENGINEER 04-30-12 DATE

4-30-12
PLANS APPROVAL DATE

REGISTERED PROFESSIONAL ENGINEER RODRIGO M.CRUZ No. 57918 Exp. 06/30/12 CIVIL STATE OF CALIFORNIA

THE STATE OF CALIFORNIA OR ITS OFFICERS OR AGENTS SHALL NOT BE RESPONSIBLE FOR THE ACCURACY OR COMPLETENESS OF SCANNED COPIES OF THIS PLAN SHEET.

CURVE DATA

No.	R	Δ	T	L
1	1625.00′	44°32′0.0"	665.36′	1263.04′
2	1641.82′	8°49′51.7"	126.78′	253.05′
3	1649.81′	8°49′51.8"	127.40′	254.29′
4	1649.01′	1°45′46.7"	25.37′	50.74′
5	1657.00′	1°45′46.7"	25.49′	50.99′
6	75.00′	60°35′19.0"	43.82′	79.31′
7	67.00′	60°35′19.0"	39.14′	70.85′
8	50.00′	53°6′2.0"	24.99′	46.34′
9	42.00′	53°8′37.7"	21.01′	38.96′
10	299.11′	43°57′9.5"	120.71′	229.46′
11	393.99′	27°33′32.3"	96.62′	189.51′

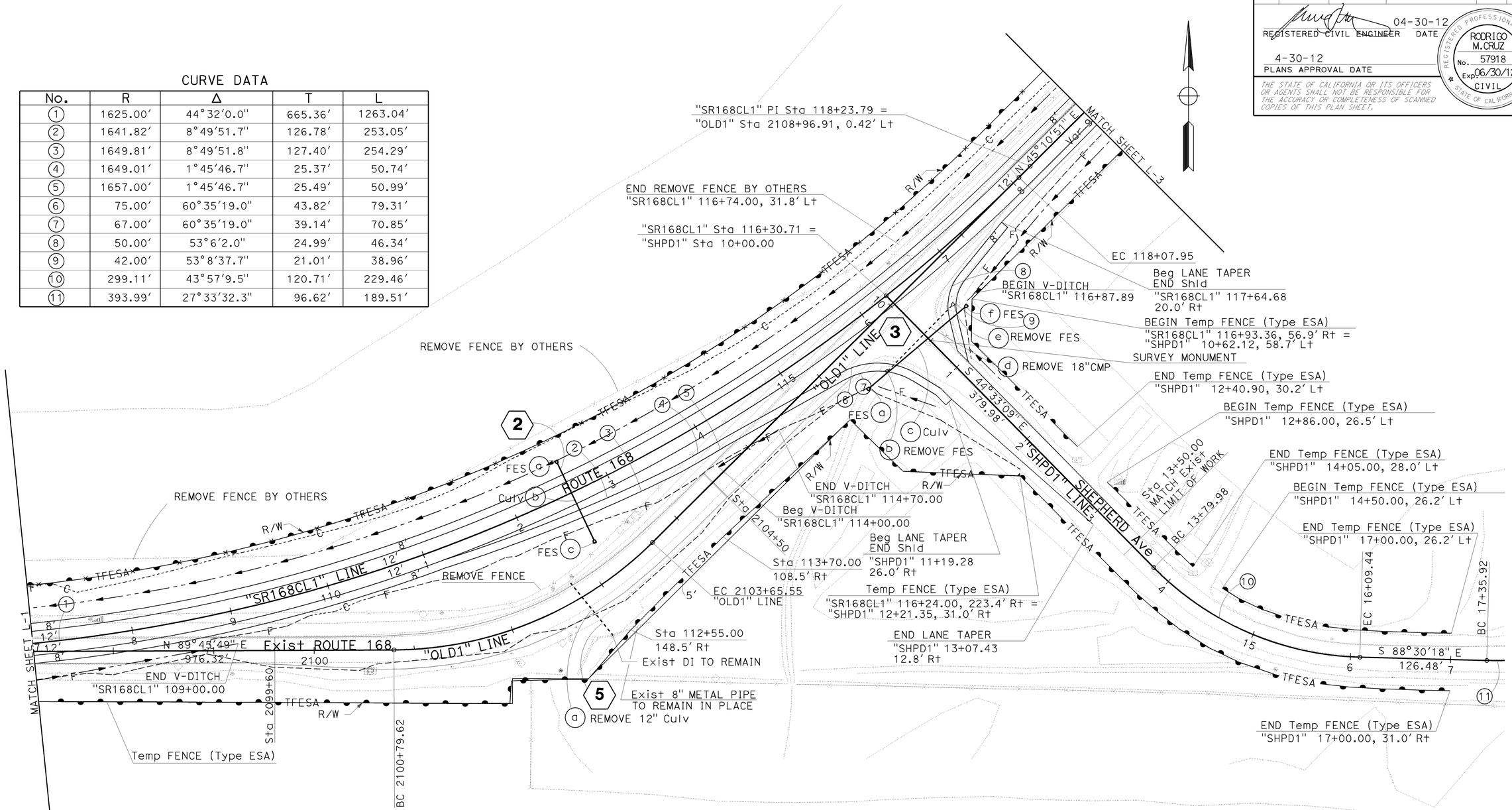

LAYOUT

SCALE: 1"=50′

L-2

STATE OF CALIFORNIA - DEPARTMENT OF TRANSPORTATION

Caltrans DESIGN

FUNCTIONAL SUPERVISOR: JUN XU

CALCULATED-DESIGNED BY: IRENE LEE — REVISED BY: I. LEE

CHECKED BY: RODRIGO CRUZ — DATE REVISED: 12/21/11

LAST REVISION 04-30-12 — DATE PLOTTED => 17-MAY-2012 — TIME PLOTTED => 16:07

Dist	COUNTY	ROUTE	POST MILES TOTAL PROJECT	SHEET No.	TOTAL SHEETS
06	Fre	168	R14.4/R15.0	9	52

REGISTERED CIVIL ENGINEER 04-30-12 DATE

4-30-12
PLANS APPROVAL DATE

REGISTERED PROFESSIONAL ENGINEER RODRIGO M. CRUZ No. 57918 Exp. 06/30/12 CIVIL STATE OF CALIFORNIA

THE STATE OF CALIFORNIA OR ITS OFFICERS OR AGENTS SHALL NOT BE RESPONSIBLE FOR THE ACCURACY OR COMPLETENESS OF SCANNED COPIES OF THIS PLAN SHEET.

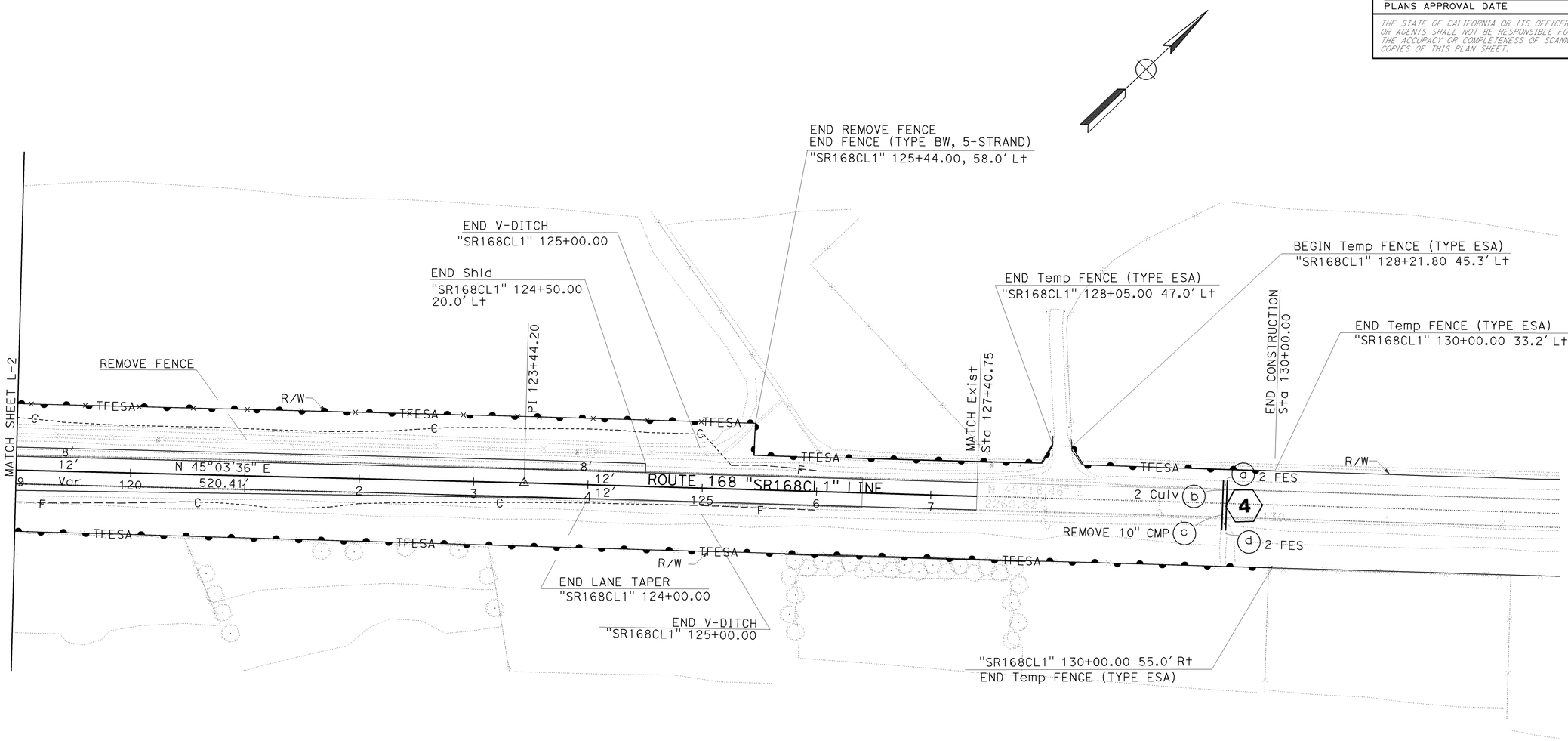

LAYOUT

SCALE: 1"=50'

L-3

REVISED BY	DATE REVISED
IRENE LEE	RODRIGO CRUZ

CALCULATED-DESIGNED BY / CHECKED BY

FUNCTIONAL SUPERVISOR: JUN XU

STATE OF CALIFORNIA - DEPARTMENT OF TRANSPORTATION

Caltrans® **DESIGN**

LAST REVISION 04-30-12 | DATE PLOTTED => 01-MAY-2012 | TIME PLOTTED => 15:33

Dist	COUNTY	ROUTE	POST MILES TOTAL PROJECT	SHEET No.	TOTAL SHEETS
06	Fre	168	R14.4/R15.0	10	52

REGISTERED CIVIL ENGINEER 04-30-12 DATE

4-30-12
PLANS APPROVAL DATE

REGISTERED PROFESSIONAL ENGINEER RODRIGO M. CRUZ No. 57918 Exp. 06/30/12 CIVIL STATE OF CALIFORNIA

THE STATE OF CALIFORNIA OR ITS OFFICERS OR AGENTS SHALL NOT BE RESPONSIBLE FOR THE ACCURACY OR COMPLETENESS OF SCANNED COPIES OF THIS PLAN SHEET.

ABBRIEVATION:

VPOT - VERTICAL POINT OF TANGENT

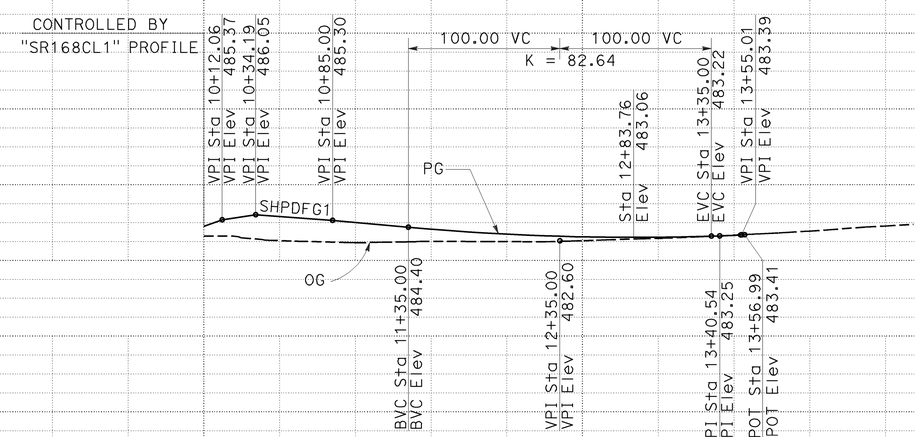

PROFILE
SHEPHERD AVENUE EAST
"SHPD1" LINE

SCALE: Horz 1"=50'
Vert 1"=10'

PROFILE

P-1

STATION		10+00	1	2	3	4	15+00	TOTAL
CY	Exc	26						26
	Emb	774						774

STATE OF CALIFORNIA - DEPARTMENT OF TRANSPORTATION
DESIGN
Caltrans

FUNCTIONAL SUPERVISOR: JUN XU
CALCULATED-DESIGNED BY: RODRIGO CRUZ
CHECKED BY: ROD MENDOZA
REVISED BY: I. LEE
DATE REVISED: 04/22/12

LAST REVISION 04-30-12
DATE PLOTTED => 01-MAY-2012
TIME PLOTTED => 15:33

Dist	COUNTY	ROUTE	POST MILES TOTAL PROJECT	SHEET No.	TOTAL SHEETS
06	Fre	168	R14.4/R15.0	11	52

REGISTERED CIVIL ENGINEER 04-30-12 DATE

4-30-12
PLANS APPROVAL DATE

REGISTERED PROFESSIONAL ENGINEER RODRIGO M.CRUZ No. 57918 Exp 06/30/12 CIVIL STATE OF CALIFORNIA

THE STATE OF CALIFORNIA OR ITS OFFICERS OR AGENTS SHALL NOT BE RESPONSIBLE FOR THE ACCURACY OR COMPLETENESS OF SCANNED COPIES OF THIS PLAN SHEET.

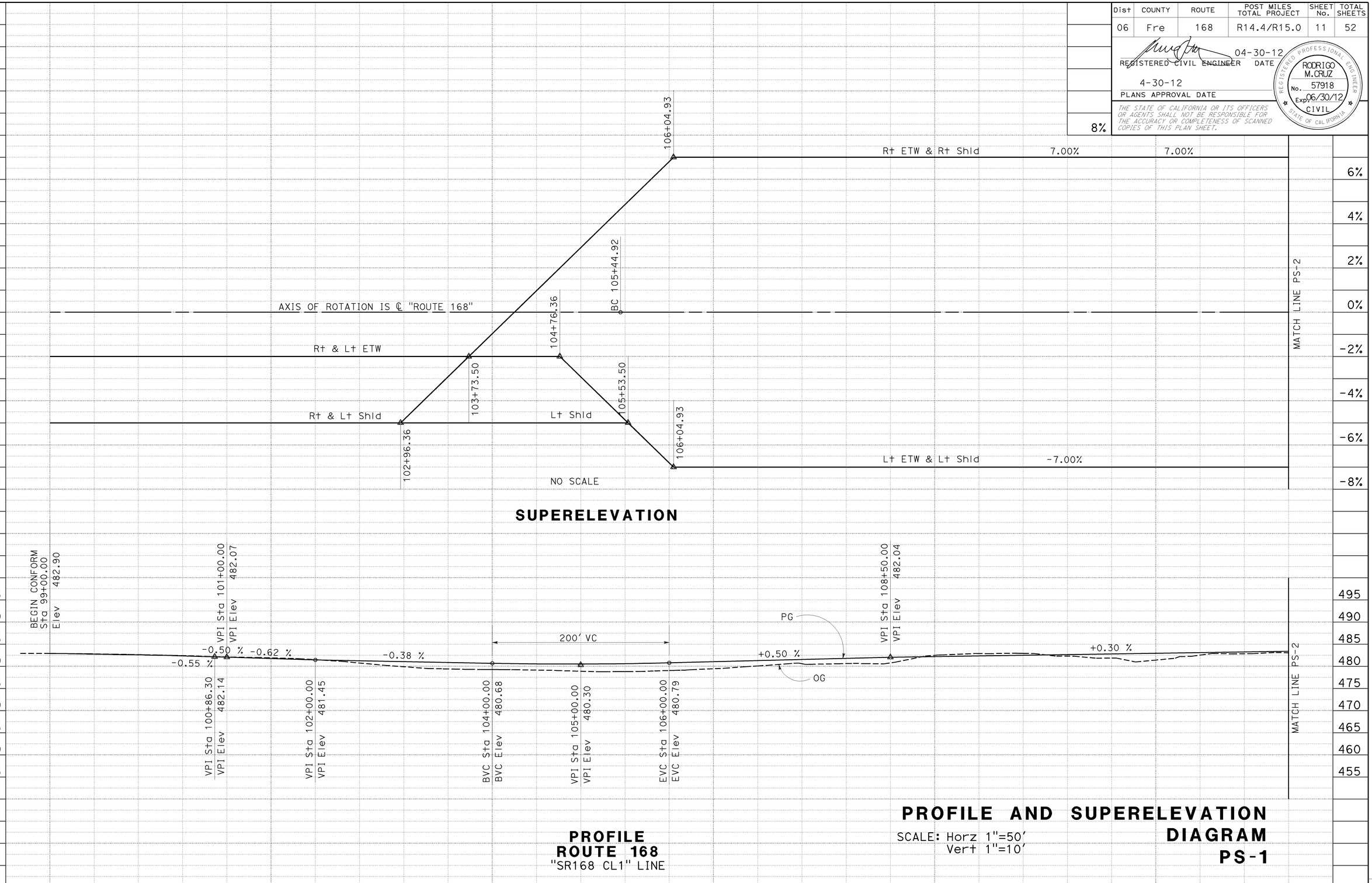

STATION	99+00	100+00	101+00	102+00	103+00	104+00	105+00	106+00	107+00	108+00	109+00	110+00	111+00	112+00	113+00	TOTAL
CY Exc								7120								7120
CY Emb								1496								1496

I. LEE 12/22/11
REVISED BY DATE REVISED
IRENE LEE RODRIGO CRUZ
CALCULATED-DESIGNED BY CHECKED BY
FUNCTIONAL SUPERVISOR JUN XU

STATE OF CALIFORNIA - DEPARTMENT OF TRANSPORTATION
DESIGN
Caltrans

LAST REVISION 04-30-12
DATE PLOTTED => 01-MAY-2012
TIME PLOTTED => 15:34

Dist	COUNTY	ROUTE	POST MILES TOTAL PROJECT	SHEET No.	TOTAL SHEETS
06	Fre	168	R14.4/R15.0	12	52

REGISTERED CIVIL ENGINEER 04-30-12 DATE

4-30-12
PLANS APPROVAL DATE

REGISTERED PROFESSIONAL ENGINEER RODRIGO M.CRUZ No. 57918 Exp. 06/30/12 CIVIL STATE OF CALIFORNIA

THE STATE OF CALIFORNIA OR ITS OFFICERS OR AGENTS SHALL NOT BE RESPONSIBLE FOR THE ACCURACY OR COMPLETENESS OF SCANNED COPIES OF THIS PLAN SHEET.

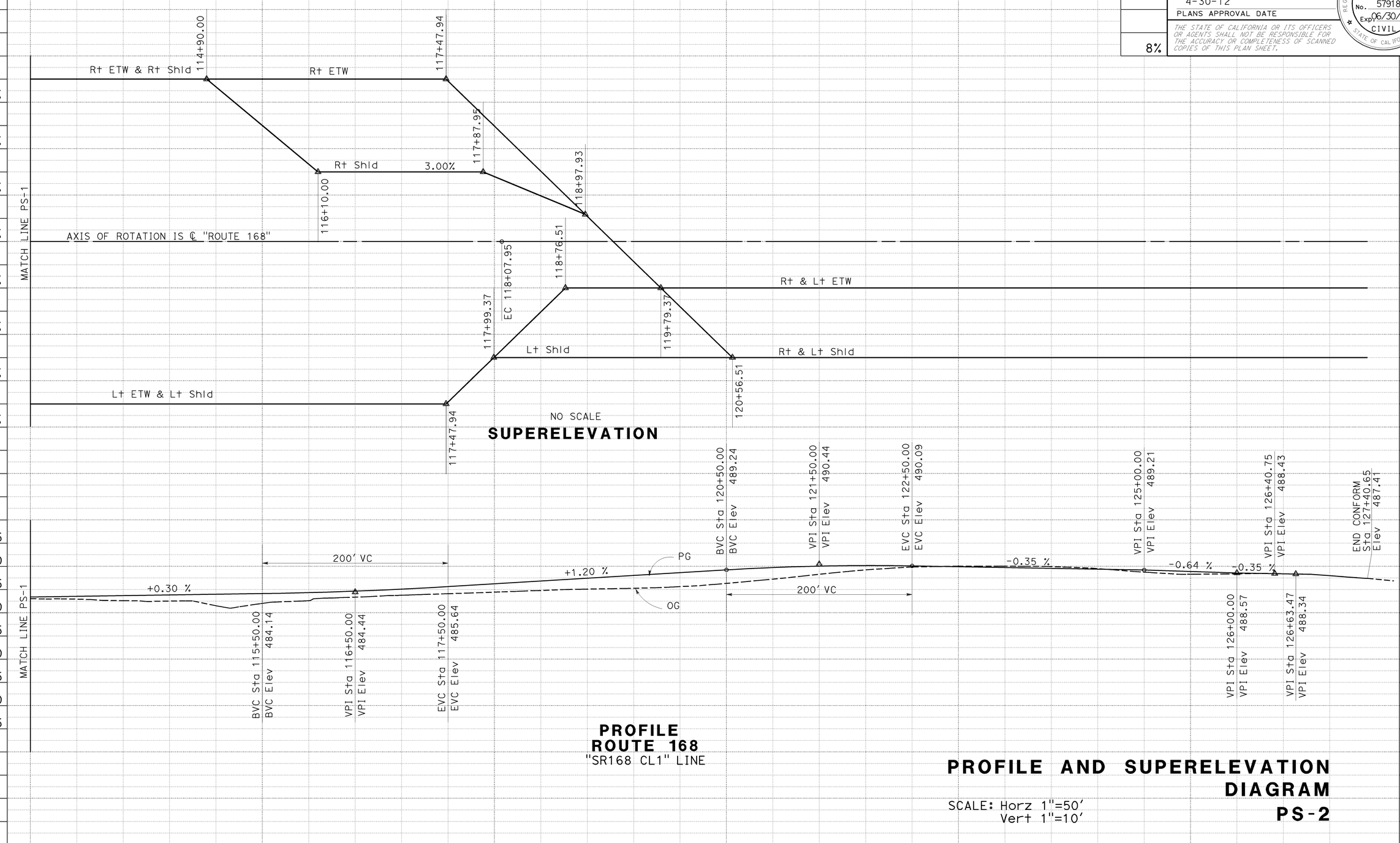

I. LEE	12/22/11
REVISED BY	DATE REVISED
IRENE LEE	RODRIGO CRUZ
CALCULATED-DESIGNED BY	CHECKED BY
FUNCTIONAL SUPERVISOR	JUN XU

STATE OF CALIFORNIA - DEPARTMENT OF TRANSPORTATION
Caltrans
DESIGN

LAST REVISION 04-30-12
DATE PLOTTED => 01-MAY-2012
TIME PLOTTED => 15:34

Dist	COUNTY	ROUTE	POST MILES TOTAL PROJECT	SHEET No.	TOTAL SHEETS
06	Fre	168	R14.4/R15.0	13	52

REGISTERED CIVIL ENGINEER 04-30-12 DATE

4-30-12
PLANS APPROVAL DATE

REGISTERED PROFESSIONAL ENGINEER RODRIGO M. CRUZ No. 57918 Exp. 06/30/12 CIVIL STATE OF CALIFORNIA

THE STATE OF CALIFORNIA OR ITS OFFICERS OR AGENTS SHALL NOT BE RESPONSIBLE FOR THE ACCURACY OR COMPLETENESS OF SCANNED COPIES OF THIS PLAN SHEET.

NOTE:

FOR CURVE DATA, SEE SHEET L-2.

ABBRIEVATION:

CP - CATCH POINT

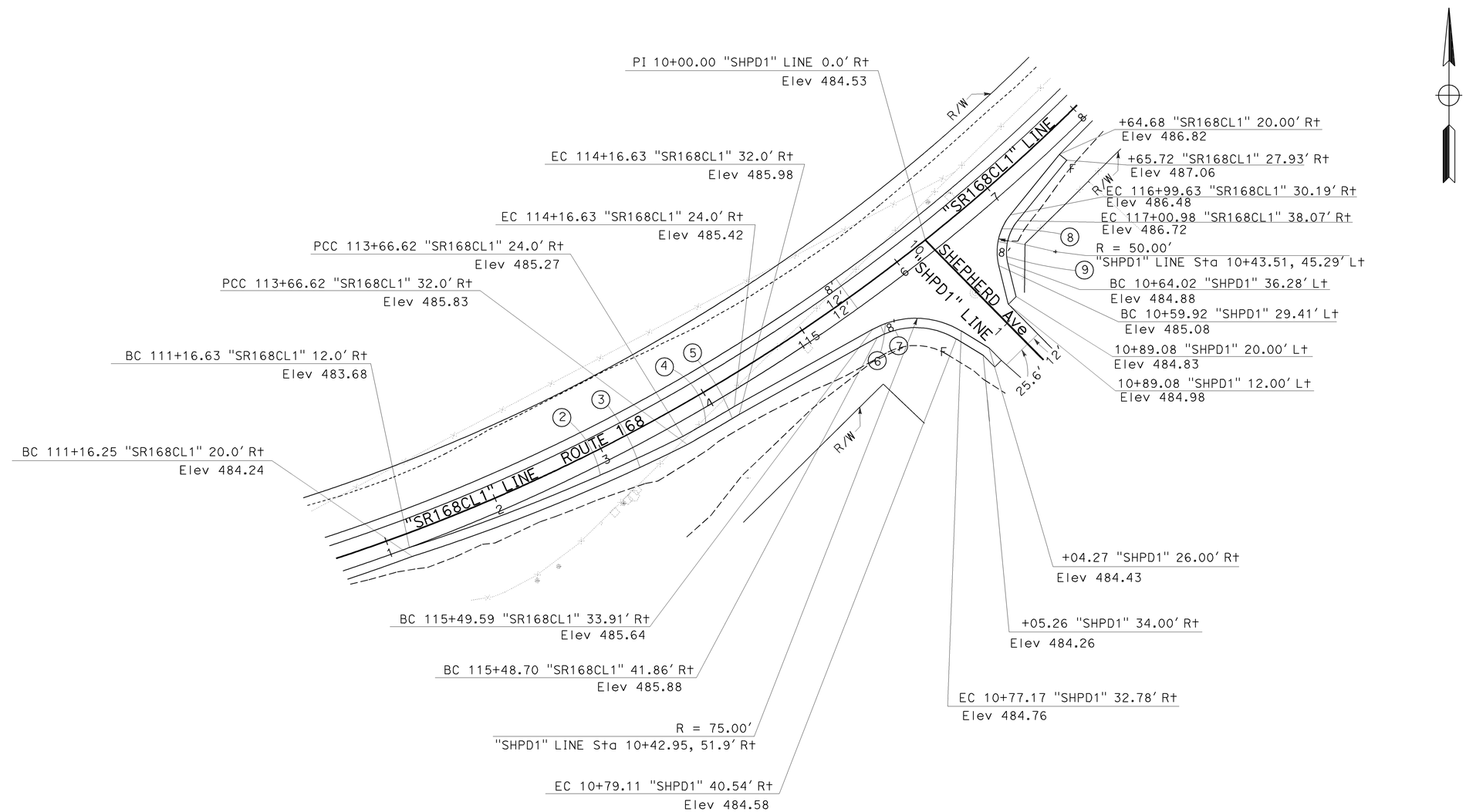

CONSTRUCTION DETAILS

SCALE: 1"=50'

C-1

STATE OF CALIFORNIA - DEPARTMENT OF TRANSPORTATION
Caltrans
DESIGN

FUNCTIONAL SUPERVISOR: JUN XU
CALCULATED-DESIGNED BY: ROD MENDOZA
CHECKED BY: RODRIGO CRUZ
REVISED BY: I. LEE
DATE REVISED: 12/22/11

LAST REVISION 04-30-12 | DATE PLOTTED => 01-MAY-2012 | TIME PLOTTED => 15:34

Dist	COUNTY	ROUTE	POST MILES TOTAL PROJECT	SHEET No.	TOTAL SHEETS
06	Fre	168	R14.4/R15.0	14	52

REGISTERED CIVIL ENGINEER 04-30-12 DATE

4-30-12
PLANS APPROVAL DATE

REGISTERED PROFESSIONAL ENGINEER RODRIGO M.CRUZ No. 57918 Exp 06/30/12 CIVIL STATE OF CALIFORNIA

THE STATE OF CALIFORNIA OR ITS OFFICERS OR AGENTS SHALL NOT BE RESPONSIBLE FOR THE ACCURACY OR COMPLETENESS OF SCANNED COPIES OF THIS PLAN SHEET.

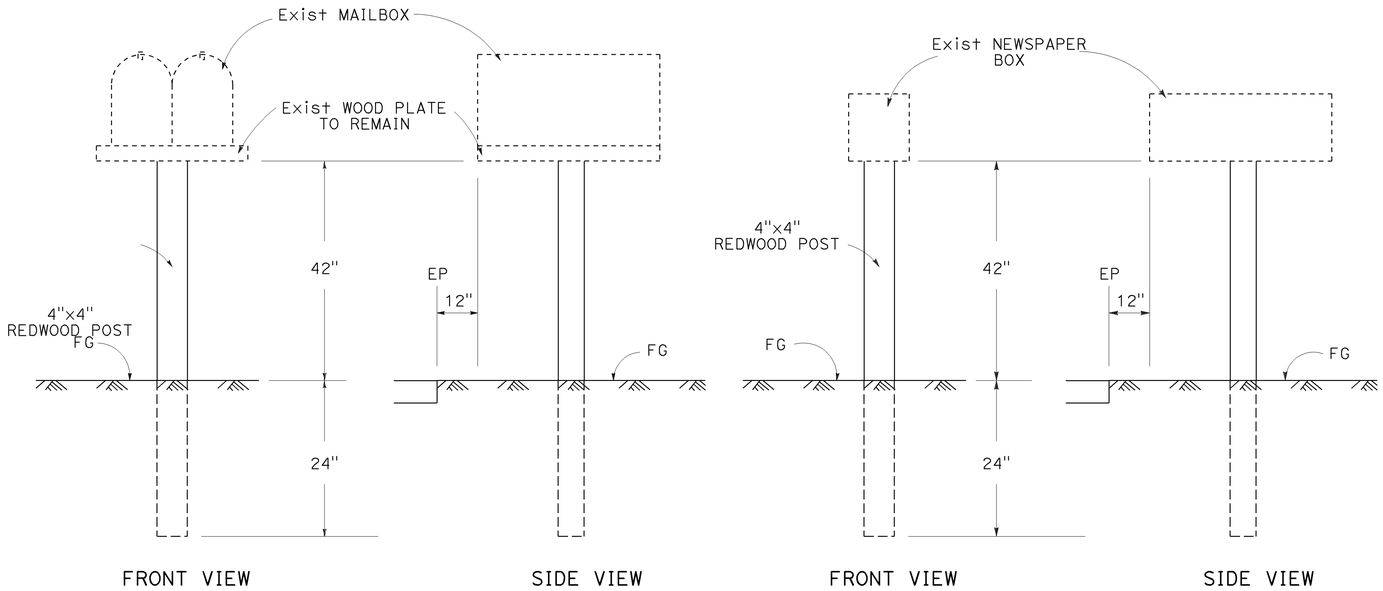

RELOCATE MAILBOX/NEWSPAPER BOX DETAILS

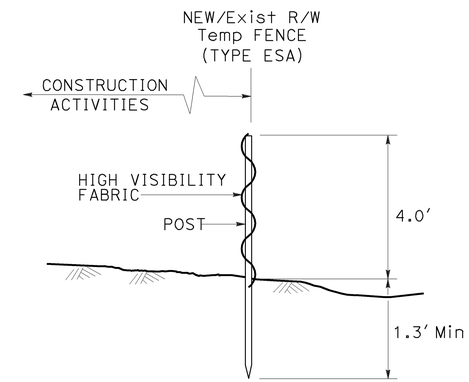

SECTION

TEMPORARY FENCE (TYPE ESA)

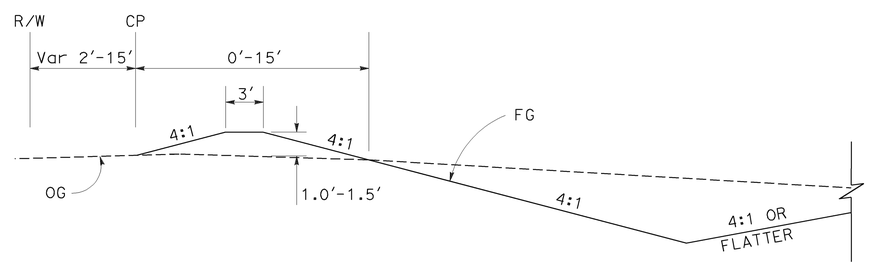

SIDE DITCH BERM DETAILS
(Sta 105+00 TO 107+00 "SR168CL1" LINE)

CONSTRUCTION DETAILS

NO SCALE

C-2

REVISED BY	DATE REVISED
I. LEE	04/18/12

CALCULATED-DESIGNED BY	CHECKED BY
IRENE LEE	RODRIGO CRUZ

FUNCTIONAL SUPERVISOR: JUN XU

STATE OF CALIFORNIA - DEPARTMENT OF TRANSPORTATION
Caltrans®
DESIGN

LAST REVISION 04-30-12 | DATE PLOTTED => 01-MAY-2012 | TIME PLOTTED => 15:34

Dist	COUNTY	ROUTE	POST MILES TOTAL PROJECT	SHEET No.	TOTAL SHEETS
06	Fre	168	R14.4/R15.0	15	52

REGISTERED CIVIL ENGINEER 04-30-12 DATE

4-30-12
PLANS APPROVAL DATE

REGISTERED PROFESSIONAL ENGINEER RODRIGO M. CRUZ No. 57918 Exp. 06/30/12 CIVIL STATE OF CALIFORNIA

THE STATE OF CALIFORNIA OR ITS OFFICERS OR AGENTS SHALL NOT BE RESPONSIBLE FOR THE ACCURACY OR COMPLETENESS OF SCANNED COPIES OF THIS PLAN SHEET.

LEGEND (THIS Sht ONLY):

DRIVEWAY

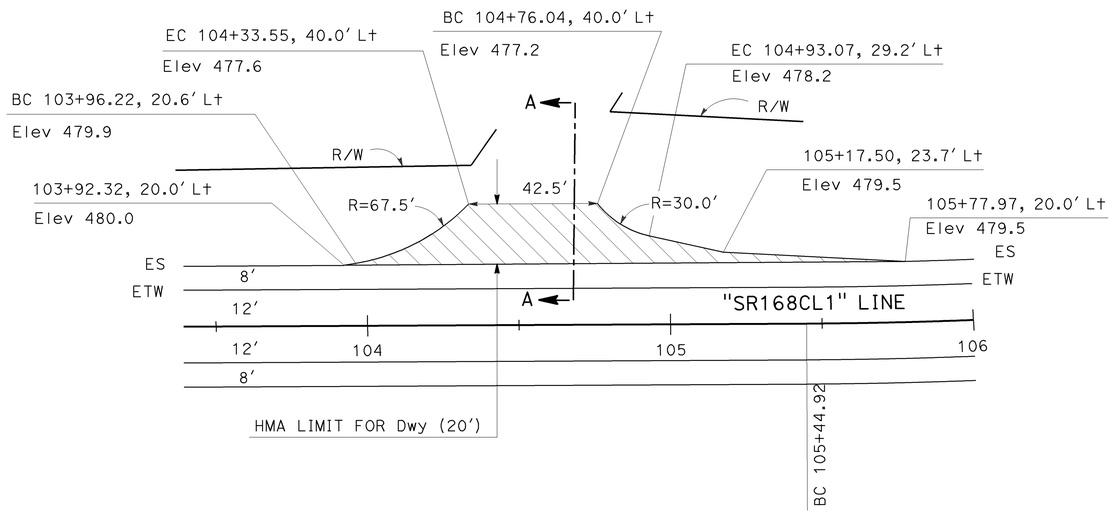

PLAN

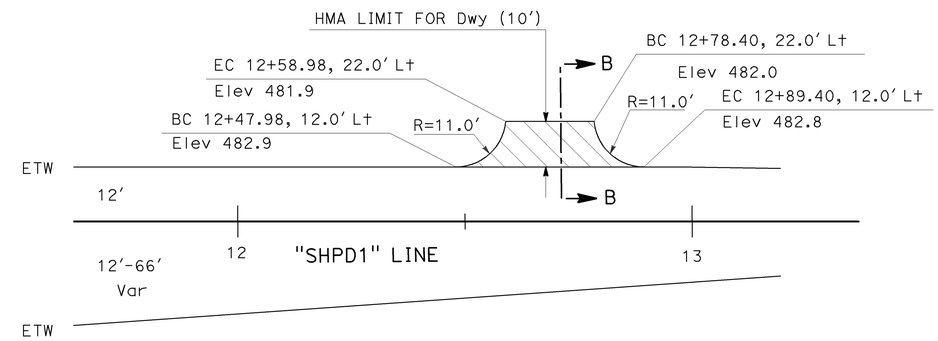

PLAN

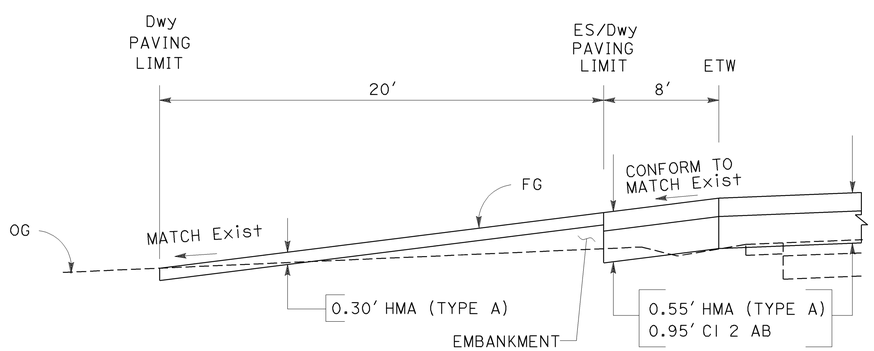

SECTION A-A

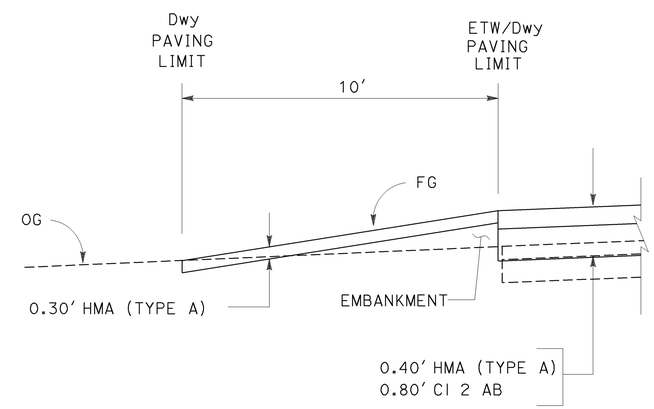

SECTION B-B

DRIVEWAY DETAILS

CONSTRUCTION DETAILS

NO SCALE

C-3

I. LEE	04/20/12
REVISED BY	DATE REVISED
IRENE LEE	RODRIGO CRUZ
CALCULATED-DESIGNED BY	CHECKED BY
FUNCTIONAL SUPERVISOR	JUN XU

STATE OF CALIFORNIA - DEPARTMENT OF TRANSPORTATION

Caltrans DESIGN

LAST REVISION 04-30-12 | DATE PLOTTED => 01-MAY-2012 TIME PLOTTED => 15:34

Dist	COUNTY	ROUTE	POST MILES TOTAL PROJECT	SHEET No.	TOTAL SHEETS
06	Fre	168	R14.4/R15.0	16	52

REGISTERED CIVIL ENGINEER 04-30-12 DATE

4-30-12
PLANS APPROVAL DATE

REGISTERED PROFESSIONAL ENGINEER RODRIGO M.CRUZ No. 57918 Exp 06/30/12 CIVIL STATE OF CALIFORNIA

THE STATE OF CALIFORNIA OR ITS OFFICERS OR AGENTS SHALL NOT BE RESPONSIBLE FOR THE ACCURACY OR COMPLETENESS OF SCANNED COPIES OF THIS PLAN SHEET.

LEGEND (THIS Sht ONLY):

RUMBLE STRIP

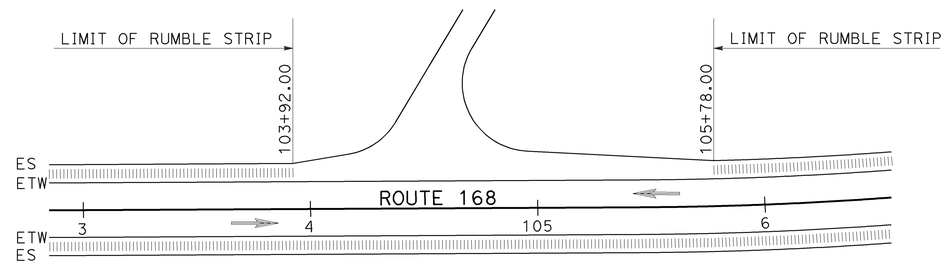

AT PRIVATE DRIVEWAY LOCATION

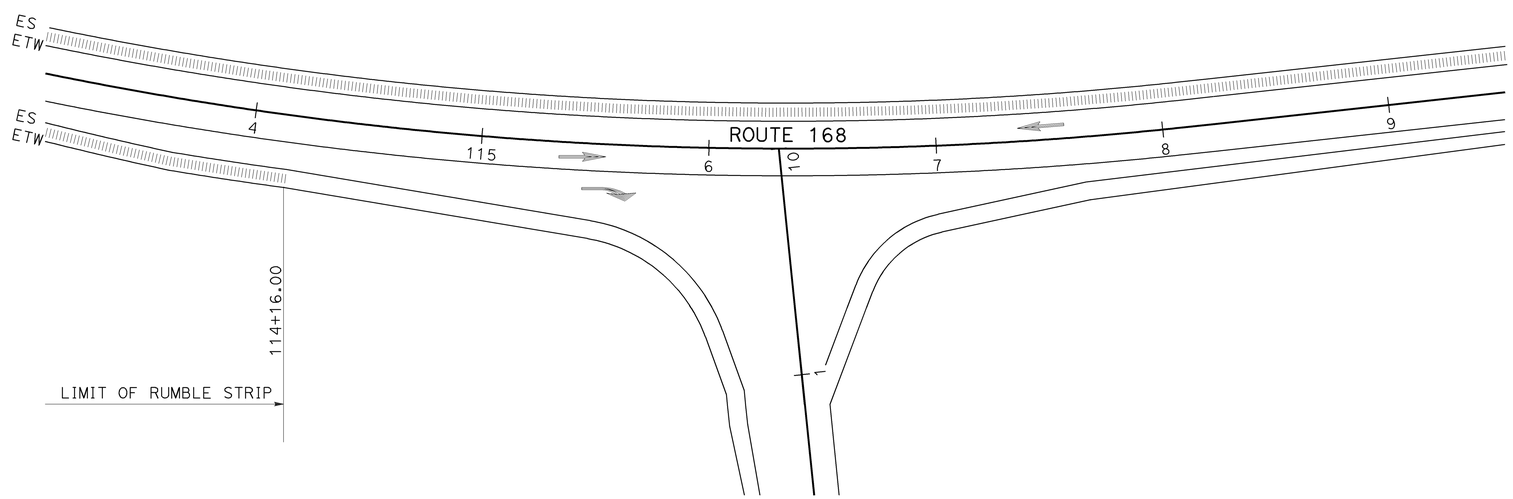

AT INTERSECTION LOCATION
SHEPHERD AVENUE

TYPICAL LIMIT OF SHOULDER RUMBLE STRIP
(GROUND-IN INDENTATIONS)

CONSTRUCTION DETAILS

NO SCALE

C-4

STATE OF CALIFORNIA - DEPARTMENT OF TRANSPORTATION
Caltrans
DESIGN

FUNCTIONAL SUPERVISOR: JUN XU

CALCULATED-DESIGNED BY: IRENE LEE
CHECKED BY: RODRIGO CRUZ

REVISED BY
DATE REVISED

LAST REVISION 04-30-12
DATE PLOTTED => 17-MAY-2012
TIME PLOTTED => 16:07

Dist	COUNTY	ROUTE	POST MILES TOTAL PROJECT	SHEET No.	TOTAL SHEETS
06	Fre	168	R14.4/R15.0	17	52

REGISTERED CIVIL ENGINEER 04-30-12 DATE

4-30-12
PLANS APPROVAL DATE

REGISTERED PROFESSIONAL ENGINEER RODRIGO M.CRUZ No. 57918 Exp 06/30/12 CIVIL STATE OF CALIFORNIA

THE STATE OF CALIFORNIA OR ITS OFFICERS OR AGENTS SHALL NOT BE RESPONSIBLE FOR THE ACCURACY OR COMPLETENESS OF SCANNED COPIES OF THIS PLAN SHEET.

LEGEND (THIS Sht ONLY):

COLLECT DUFF

APPLY DUFF

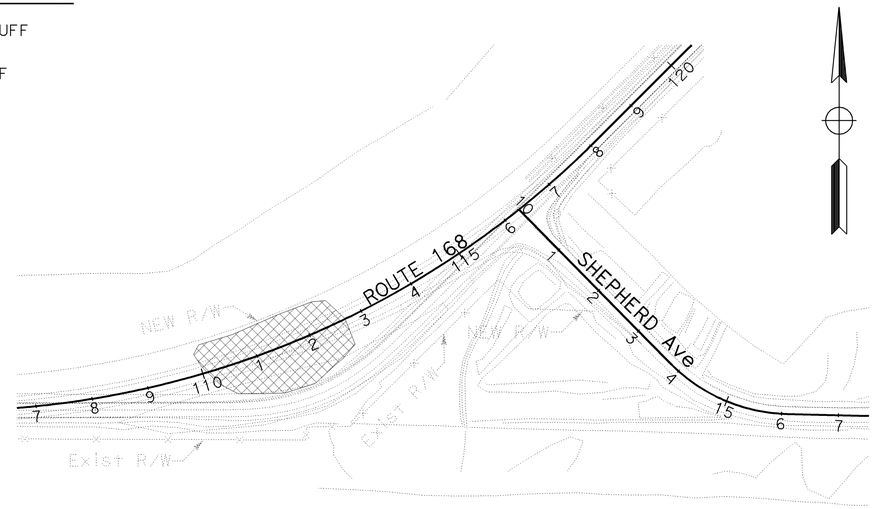

COLLECT DUFF BEFORE CONSTRUCTION

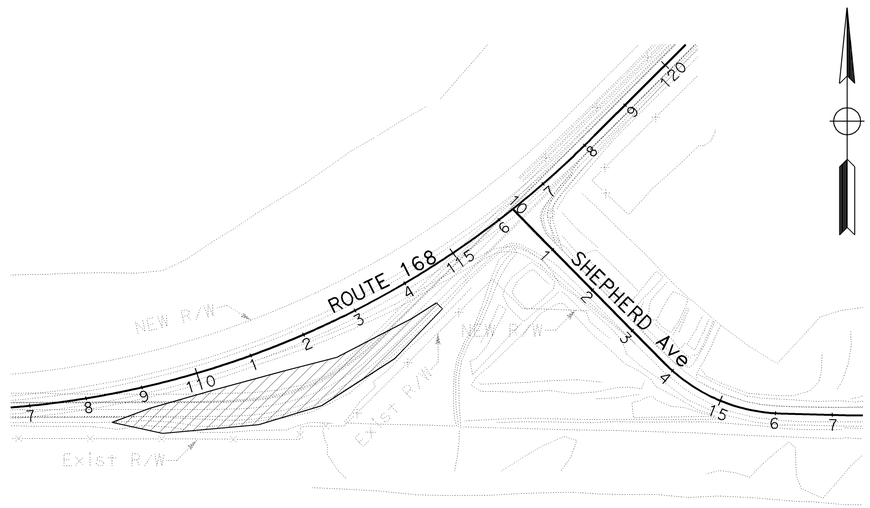

APPLY DUFF AFTER CONSTRUCTION

DUFF LOCATION
FROM 109+00 TO 115+00 "SR168CL1"

CONSTRUCTION DETAILS

NO SCALE

C-5

STATE OF CALIFORNIA - DEPARTMENT OF TRANSPORTATION
Caltrans
DESIGN

FUNCTIONAL SUPERVISOR: JUN XU

CALCULATED-DESIGNED BY: IRENE LEE
CHECKED BY: RODRIGO CRUZ

REVISED BY | DATE REVISED

LAST REVISION 04-30-12 | DATE PLOTTED => 01-MAY-2012 | TIME PLOTTED => 15:34

Dist	COUNTY	ROUTE	POST MILES TOTAL PROJECT	SHEET No.	TOTAL SHEETS
06	Fre	168	R14.4/R15.0	18	52

REGISTERED CIVIL ENGINEER 04-30-12 DATE

4-30-12
PLANS APPROVAL DATE

REGISTERED PROFESSIONAL ENGINEER RODRIGO M. CRUZ No. 57918 Exp. 06/30/12 CIVIL STATE OF CALIFORNIA

THE STATE OF CALIFORNIA OR ITS OFFICERS OR AGENTS SHALL NOT BE RESPONSIBLE FOR THE ACCURACY OR COMPLETENESS OF SCANNED COPIES OF THIS PLAN SHEET.

NOTE:

FOR ACCURATE RIGHT OF WAY DATA, CONTACT RIGHT OF WAY ENGINEERING AT THE DISTRICT OFFICE.

LEGEND:

Temp FIBER ROLL (TOE OF SLOPE)

Temp CONSTRUCTION ENTRANCE

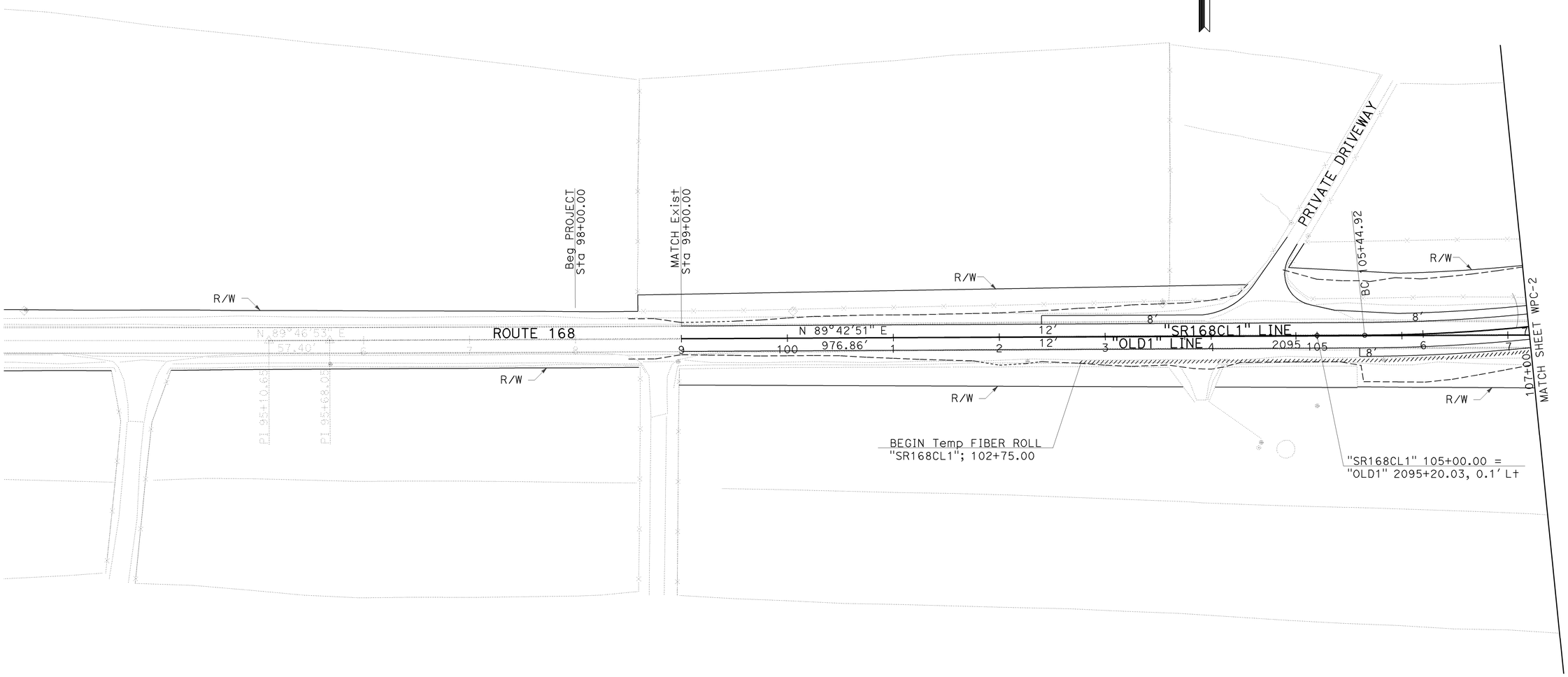

TEMPORARY WATER POLLUTION CONTROL PLAN

SCALE: 1"=50'

WPC-1

APPROVED FOR TEMPORARY WATER POLLUTION CONTROL WORK ONLY

STATE OF CALIFORNIA - DEPARTMENT OF TRANSPORTATION
Caltrans
DESIGN

FUNCTIONAL SUPERVISOR: JUN XU
CALCULATED-DESIGNED BY: IRENE LEE
CHECKED BY: RODRIGO CRUZ
REVISED BY
DATE REVISED

LAST REVISION 04-30-12
DATE PLOTTED => 01-MAY-2012
TIME PLOTTED => 15:34

Dist	COUNTY	ROUTE	POST MILES TOTAL PROJECT	SHEET No.	TOTAL SHEETS
06	Fre	168	R14.4/R15.0	19	52

REGISTERED CIVIL ENGINEER 04-30-12 DATE

4-30-12
PLANS APPROVAL DATE

REGISTERED PROFESSIONAL ENGINEER RODRIGO M. CRUZ No. 57918 Exp. 06/30/12 CIVIL STATE OF CALIFORNIA

THE STATE OF CALIFORNIA OR ITS OFFICERS OR AGENTS SHALL NOT BE RESPONSIBLE FOR THE ACCURACY OR COMPLETENESS OF SCANNED COPIES OF THIS PLAN SHEET.

NOTE:

FOR ACCURATE RIGHT OF WAY DATA, CONTACT RIGHT OF WAY ENGINEERING AT THE DISTRICT OFFICE.

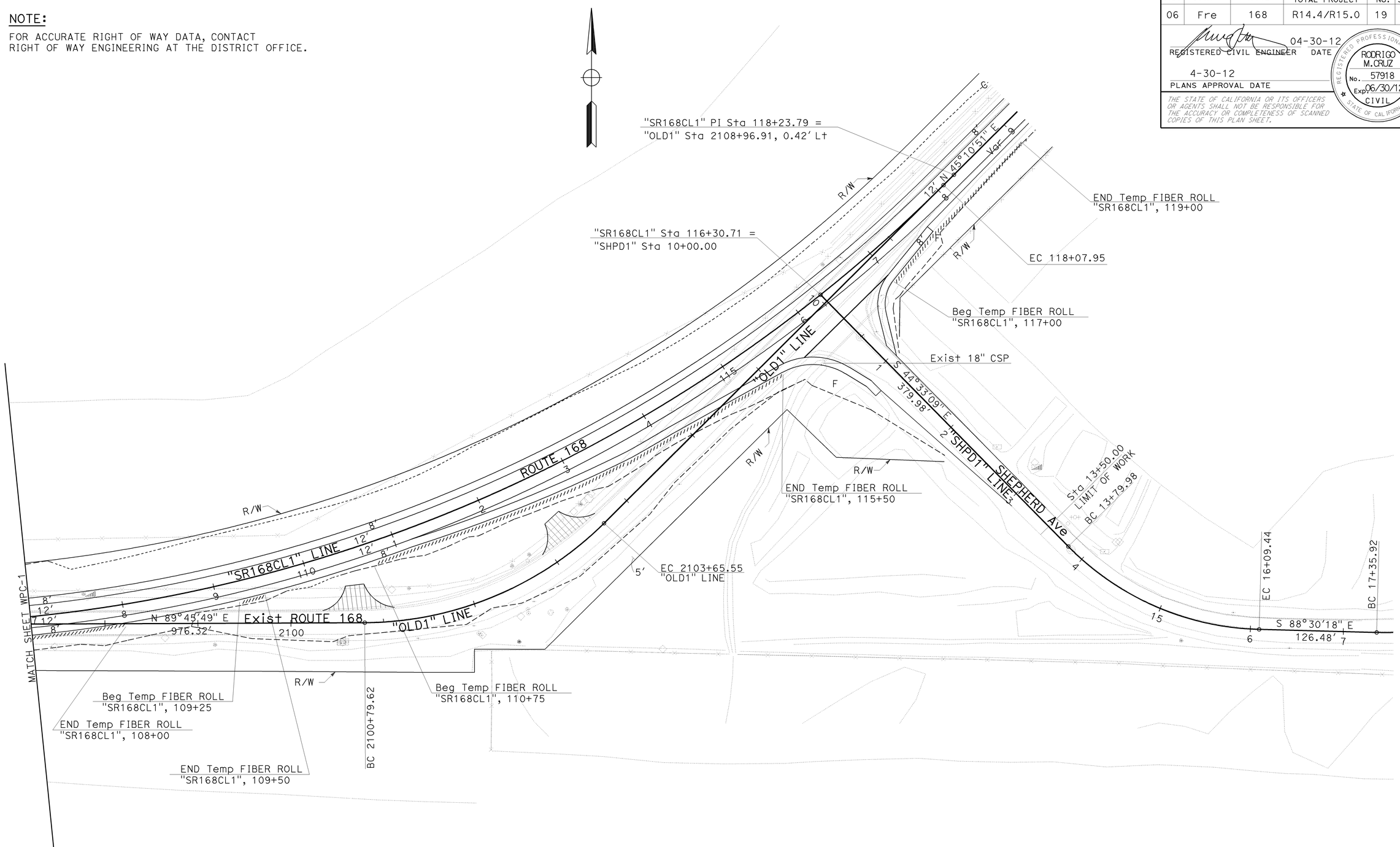

TEMPORARY WATER POLLUTION CONTROL PLAN

SCALE: 1"=50'

WPC-2

APPROVED FOR TEMPORARY WATER POLLUTION CONTROL WORK ONLY

STATE OF CALIFORNIA - DEPARTMENT OF TRANSPORTATION

Caltrans

DESIGN

FUNCTIONAL SUPERVISOR: JUN XU

CALCULATED-DESIGNED BY: IRENE LEE

CHECKED BY: RODRIGO CRUZ

REVISED BY

DATE REVISED

LAST REVISION 04-30-12

DATE PLOTTED => 01-MAY-2012

TIME PLOTTED => 15:34

Dist	COUNTY	ROUTE	POST MILES TOTAL PROJECT	SHEET No.	TOTAL SHEETS
06	FRE	168	R14.4/R15.0	20	52

REGISTERED CIVIL ENGINEER 04-30-12 DATE

4-30-12
PLANS APPROVAL DATE

REGISTERED PROFESSIONAL ENGINEER RODRIGO M. CRUZ No. 57918 Exp. 06/30/12 CIVIL STATE OF CALIFORNIA

THE STATE OF CALIFORNIA OR ITS OFFICERS OR AGENTS SHALL NOT BE RESPONSIBLE FOR THE ACCURACY OR COMPLETENESS OF SCANNED COPIES OF THIS PLAN SHEET.

LEGEND:

CONCRETE BACKFILL

NOTE: REFER TO DD-1 SHEET FOR LOW CLEARANCE SLAB CONCRETE BACKFILL DETAILS.

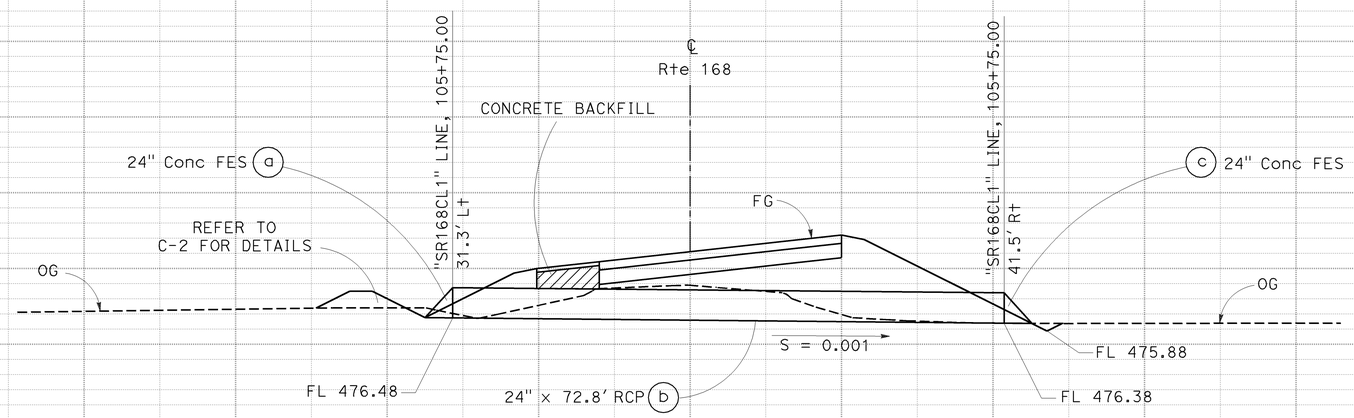

DRAINAGE SYSTEM No. 1

Sta 105+75.00

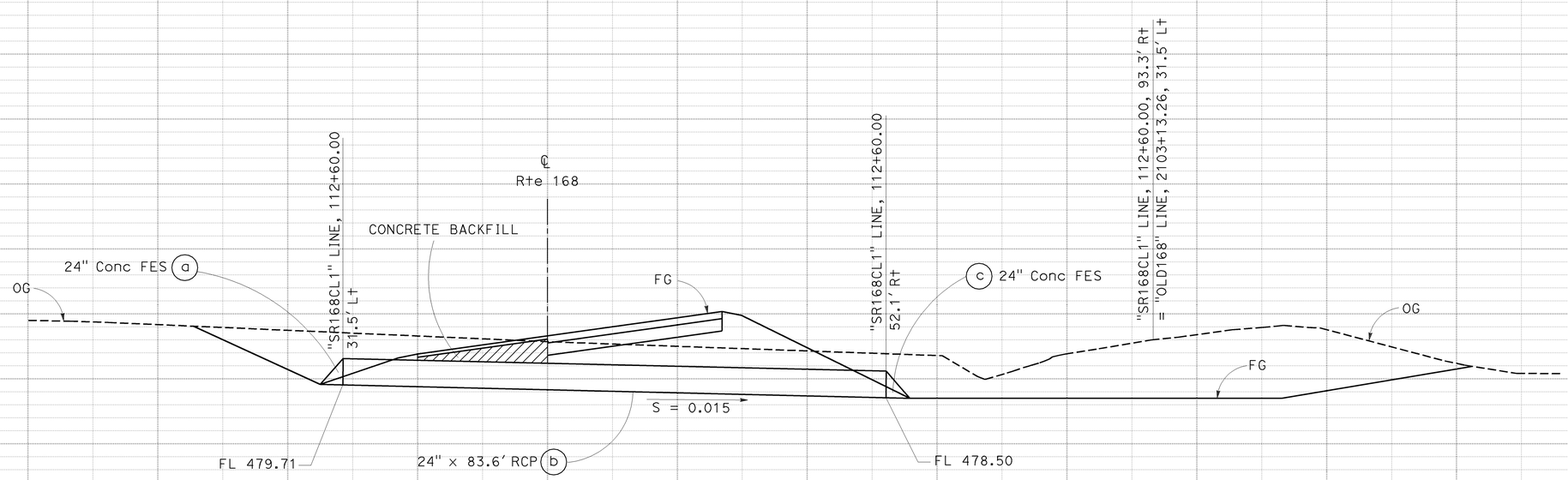

DRAINAGE SYSTEM No. 2

Sta 112+60.00

DRAINAGE PROFILES

SCALE: Horiz 1"=10'
Vert 1"=5'

DP-1

STATION		TOTAL
CY	Exc	
	Emb	

STATE OF CALIFORNIA - DEPARTMENT OF TRANSPORTATION
Caltrans
DESIGN

FUNCTIONAL SUPERVISOR: JUN XU
CALCULATED-DESIGNED BY: IRENE LEE
CHECKED BY: RODRIGO CRUZ
REVISED BY: I. LEE
DATE REVISED: 01/09/12

LAST REVISION DATE PLOTTED => 01-MAY-2012
TIME PLOTTED => 15:34
04-30-12

Dist	COUNTY	ROUTE	POST MILES TOTAL PROJECT	SHEET No.	TOTAL SHEETS
06	FRE	168	R14.4/R15.0	21	52

REGISTERED CIVIL ENGINEER 04-30-12 DATE

4-30-12
PLANS APPROVAL DATE

REGISTERED PROFESSIONAL ENGINEER RODRIGO M.CRUZ No. 57918 Exp 06/30/12 CIVIL STATE OF CALIFORNIA

THE STATE OF CALIFORNIA OR ITS OFFICERS OR AGENTS SHALL NOT BE RESPONSIBLE FOR THE ACCURACY OR COMPLETENESS OF SCANNED COPIES OF THIS PLAN SHEET.

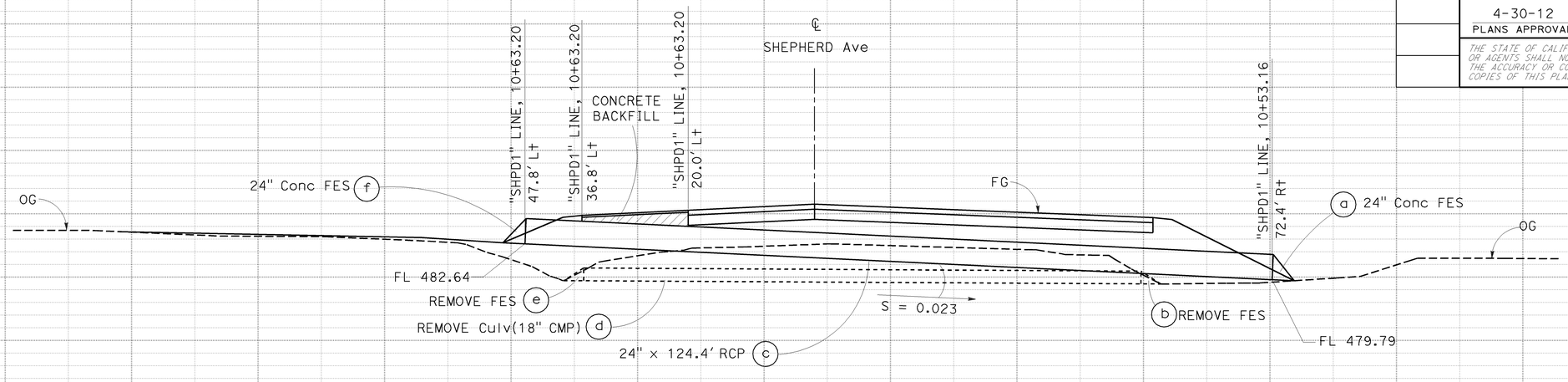

DRAINAGE SYSTEM No. 3

Sta 10+53.16

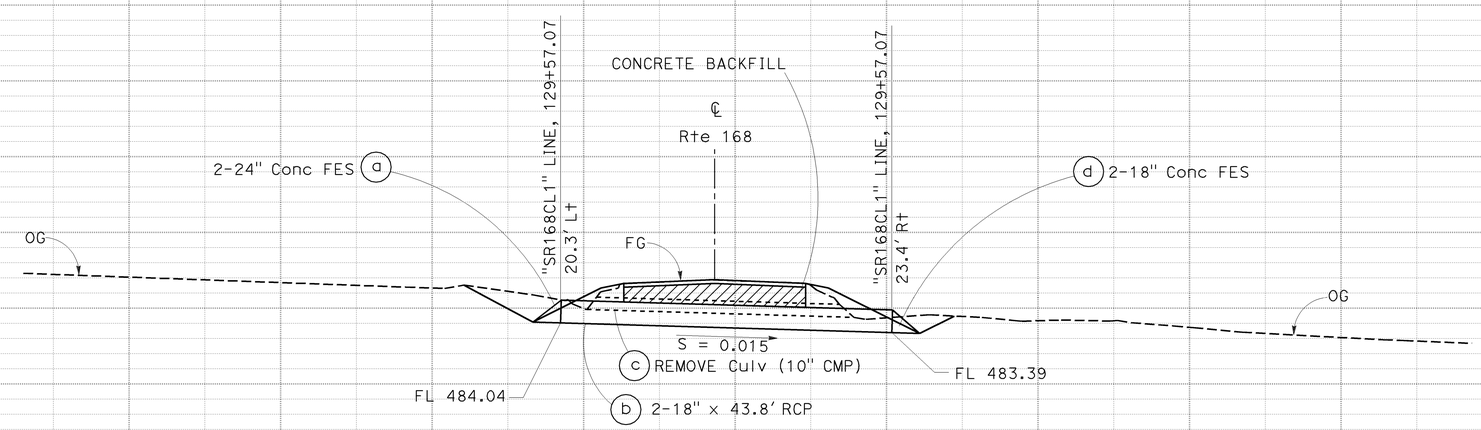

DRAINAGE SYSTEM No. 4

Sta 129+57.07

DRAINAGE PROFILES

SCALE: Horiz 1"=10'
Vert 1"=5'

DP-2

STATION	TOTAL
CY Exc	
CY Emb	

STATE OF CALIFORNIA - DEPARTMENT OF TRANSPORTATION
Caltrans
DESIGN
FUNCTIONAL SUPERVISOR: JUN XU
CALCULATED-DESIGNED BY: IRENE LEE
CHECKED BY: RODRIGO CRUZ
REVISED BY
DATE REVISED

LAST REVISION 04-30-12
DATE PLOTTED => 01-MAY-2012
TIME PLOTTED => 15:34

Dist	COUNTY	ROUTE	POST MILES TOTAL PROJECT	SHEET No.	TOTAL SHEETS
06	FRE	168	R14.4/R15.0	22	52

REGISTERED CIVIL ENGINEER 04-30-12 DATE

4-30-12
PLANS APPROVAL DATE

REGISTERED PROFESSIONAL ENGINEER RODRIGO M.CRUZ No. 57918 Exp. 06/30/12 CIVIL STATE OF CALIFORNIA

THE STATE OF CALIFORNIA OR ITS OFFICERS OR AGENTS SHALL NOT BE RESPONSIBLE FOR THE ACCURACY OR COMPLETENESS OF SCANNED COPIES OF THIS PLAN SHEET.

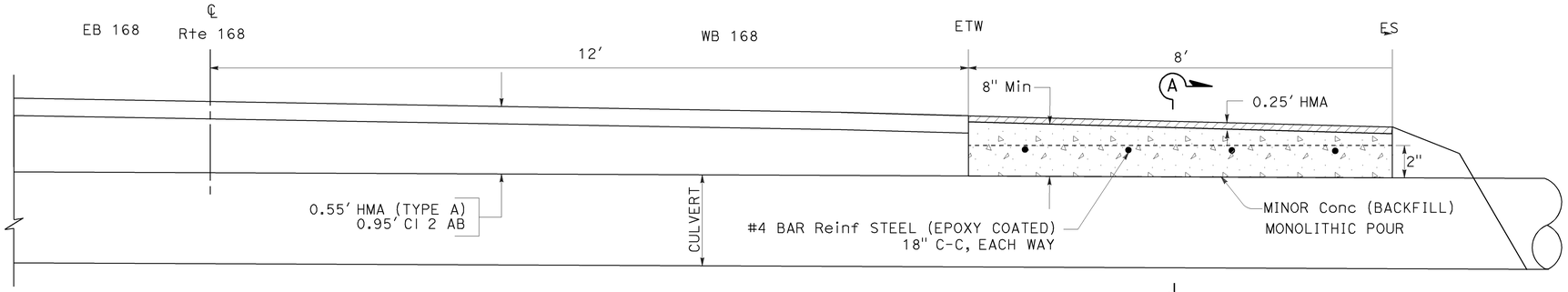

TYPICAL CONCRETE BACKFILL FOR DRAINAGE SYSTEM #1

Sta 105+75 "SR168CL1" LINE

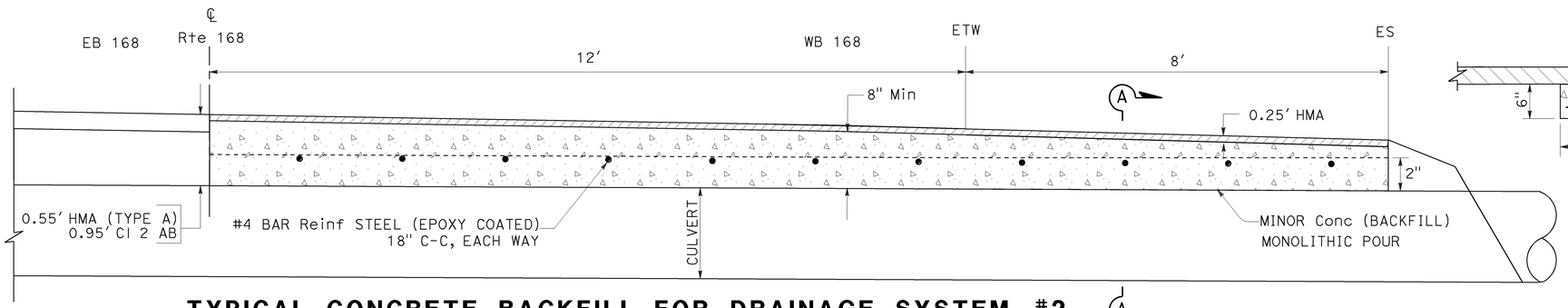

TYPICAL CONCRETE BACKFILL FOR DRAINAGE SYSTEM #2

Sta 112+60 "SR168CL1" LINE

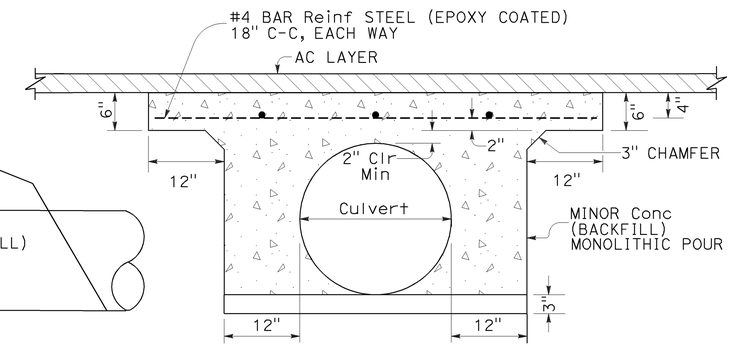

SECTION A-A

SEE NOTE 1

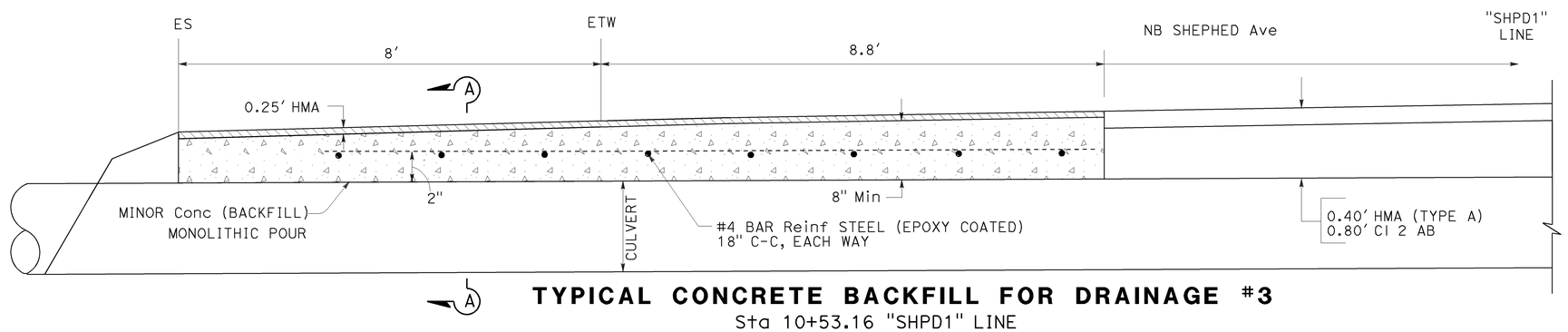

TYPICAL CONCRETE BACKFILL FOR DRAINAGE #3

Sta 10+53.16 "SHPD1" LINE

PROFILE

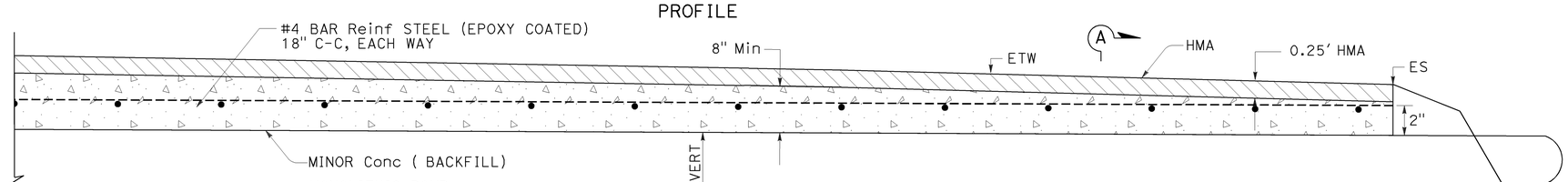

TYPICAL CONCRETE BACKFILL FOR DRAINAGE #4

Sta 129+57.07 "SR168CL1" LINE

PROFILE

LEGEND:

- CONCRETE BACKFILL
- HOT MIX ASPHALT

NOTES:

1. MAXIMUM RCP DIAMETER 48"
2. REBAR TO BE EPOXY-COATED.
3. LONGITUDINAL JOINT SAW CUT DEPTH Max @ 2" PER WIDTH OF REINFORCED SLAB.

DRAINAGE DETAILS

NO SCALE

DD-1

REVISED BY | DATE REVISED
IRENE LEE | RODRIGO CRUZ
CALCULATED-DESIGNED BY | CHECKED BY
FUNCTIONAL SUPERVISOR
JUN XU

STATE OF CALIFORNIA - DEPARTMENT OF TRANSPORTATION
Caltrans
DESIGN

LAST REVISION 04-30-12 | DATE PLOTTED => 01-MAY-2012 | TIME PLOTTED => 15:34

Dist	COUNTY	ROUTE	POST MILES TOTAL PROJECT	SHEET No.	TOTAL SHEETS
06	FRE	168	R14.4/R15.0	23	52

REGISTERED CIVIL ENGINEER 04-30-12 DATE

4-30-12
PLANS APPROVAL DATE

REGISTERED PROFESSIONAL ENGINEER RODRIGO M.CRUZ No. 57918 Exp. 06/30/12 CIVIL STATE OF CALIFORNIA

THE STATE OF CALIFORNIA OR ITS OFFICERS OR AGENTS SHALL NOT BE RESPONSIBLE FOR THE ACCURACY OR COMPLETENESS OF SCANNED COPIES OF THIS PLAN SHEET.

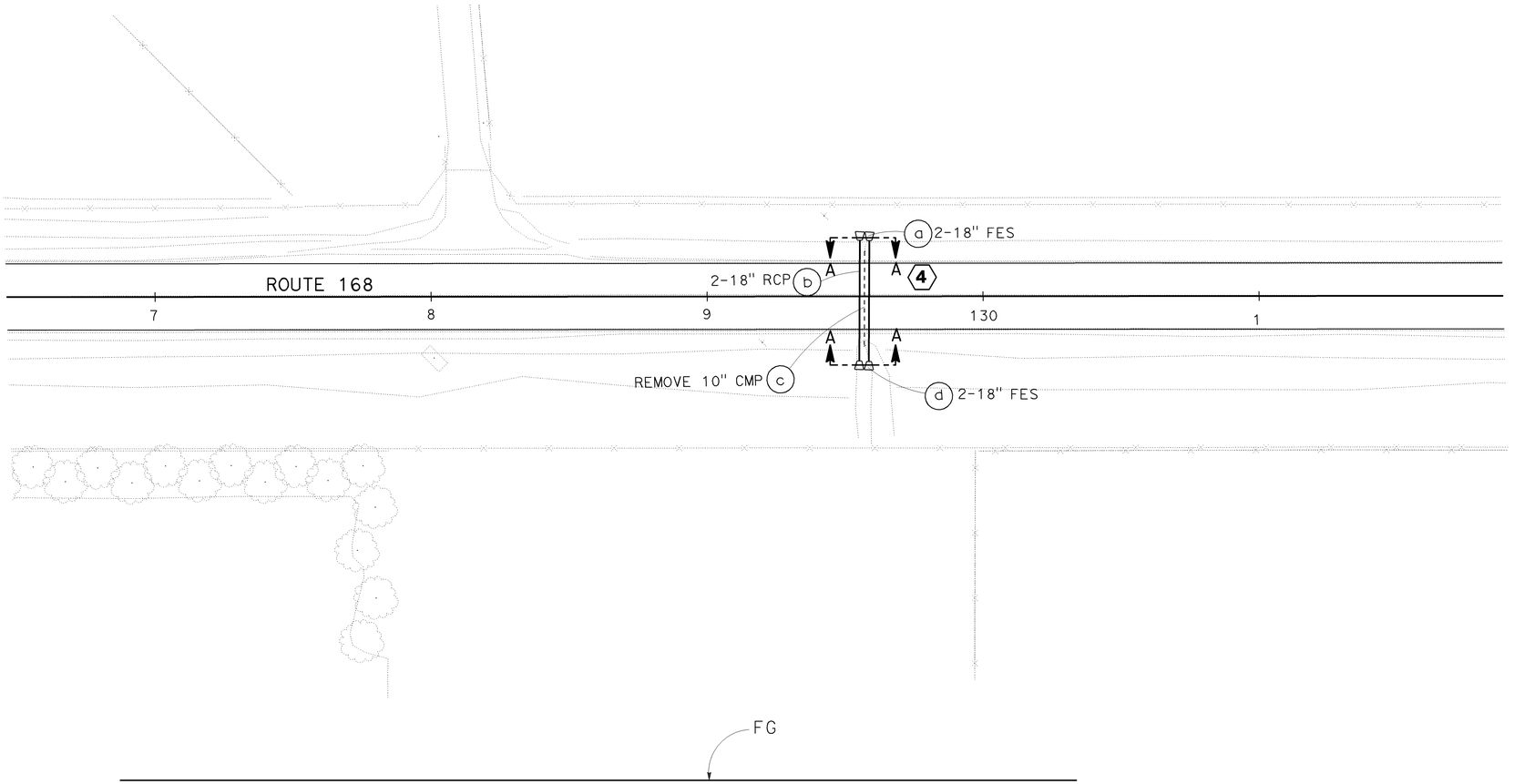

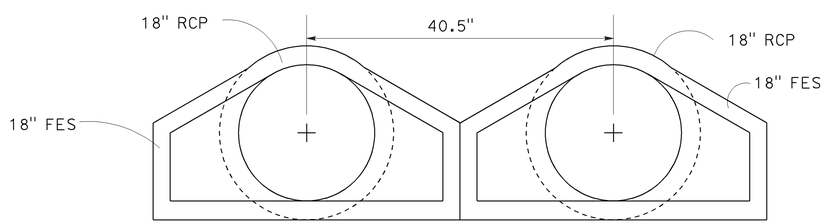

SECTION A-A

DUAL PIPE DRAINAGE DETAILS FOR SYSTEM #4

DRAINAGE DETAILS

NO SCALE

DD-2

STATE OF CALIFORNIA - DEPARTMENT OF TRANSPORTATION
Caltrans
DESIGN

FUNCTIONAL SUPERVISOR: JUN XU
CALCULATED-DESIGNED BY: IRENE LEE
CHECKED BY: RODRIGO CRUZ
REVISED BY
DATE REVISED

LAST REVISION 04-30-12
DATE PLOTTED => 01-MAY-2012
TIME PLOTTED => 15:34

Dist	COUNTY	ROUTE	POST MILES TOTAL PROJECT	SHEET No.	TOTAL SHEETS
06	Fre	168	R14.4/R15.0	24	52

REGISTERED CIVIL ENGINEER 04-30-12 DATE

4-30-12
PLANS APPROVAL DATE

REGISTERED PROFESSIONAL ENGINEER RODRIGO M.CRUZ No. 57918 Exp 06/30/12 CIVIL STATE OF CALIFORNIA

THE STATE OF CALIFORNIA OR ITS OFFICERS OR AGENTS SHALL NOT BE RESPONSIBLE FOR THE ACCURACY OR COMPLETENESS OF SCANNED COPIES OF THIS PLAN SHEET.

DRAINAGE QUANTITIES

DRAINAGE SHEET No.	DRAINAGE SYSTEM No. ⬡	DRAINAGE UNIT ◯		RCP 18" LF	RCP 24" LF	18" CONCRETE FES EA	24" CONCRETE FES EA	CONCRETE BACKFILL CY	REMOVE FES EA	REMOVE CULVERT LF	(N) MAXIMUM COVER FT	BAR REINFORCING STEEL (EPOXY COATED) LB	DESCRIPTION	STATION	LAYOUT SHEET No.	DRAINAGE SYSTEM No. ⬡	DRAINAGE UNIT ◯
L-1	1	a					1						24" CONCRETE FES	"SR168CL1" 105+75.00, 31.3′ L†	L-1	1	a
		b			72.8			3.5			3.7	33.6	24" RCP	a TO c			b
		c					1						24" CONCRETE FES	"SR168CL1" 105+75.00, 41.5′ R†			c
L-2	2	a					1						24" CONCRETE FES	"SR168CL1" 112+60.00, 31.5′ L†	L-2	2	a
		b			83.6			8.3			4.6	88.6	24" RCP	a TO c			b
		c					1						24" CONCRETE FES	"SR168CL1" 112+60.00, 52.1′ R†			c
L-2	3	a					1						24" CONCRETE FES	"SHPD1" 10+53.16, 72.4′ R†	L-3	3	a
		b							1				REMOVE FES	"SHPD1" 10+53.16, 51.6′ R†			b
		c			124.4			8.0			4.2	76.3	24" RCP	f TO a			c
		d								88.1			REMOVE 18" CMP	e TO b			d
		e							1				REMOVE FES	"SHPD1" 10+53.16, 36.5′ L†			e
		f					1						24" CONCRETE FES	"SHPD1" 10+63.20, 47.8′ L†			f
L-3	4	a				2							18" CONCRETE FES	"SR168CL1" 129+57.07′ 20.3′ L†	L-3	4	a
		b		87.6				11.4			3.2	110.0	2-18" RCP	a TO d			b
		c								35.7			REMOVE 10" CMP	"SR168CL1" 129+57.07′ 16.8′ L† TO "SR168CL1" 129+57.07′ 18.4′ R†			c
		d				2							18" CONCRETE FES	"SR168CL1" 129+57.07′ 23.4′ R†			d
L-2	5	a								65.1			REMOVE 12" CMP	"SR168CL1" 112+23.00′ 84.0′ R† TO "SR168CL1" 112+40.00′ 147.0′ R†	L-2	5	a
	TOTAL			87.6	280.8	4	6	31.2	2	188.9		308.5					

(N) - NOT A SEPARATE PAY ITEM, FOR INFORMATION USE ONLY.

DRAINAGE QUANTITIES
DQ-1

STATE OF CALIFORNIA - DEPARTMENT OF TRANSPORTATION
Caltrans
DESIGN

FUNCTIONAL SUPERVISOR: JUN XU
CALCULATED-DESIGNED BY: IRENE LEE
CHECKED BY: RODRIGO CRUZ
REVISED BY
DATE REVISED

LAST REVISION 04-30-12
DATE PLOTTED => 01-MAY-2012
TIME PLOTTED => 15:34

Dist	COUNTY	ROUTE	POST MILES TOTAL PROJECT	SHEET No.	TOTAL SHEETS
06	Fre	168	R14.4/R15.0	25	52

REGISTERED CIVIL ENGINEER 04-30-12 DATE

4-30-12
PLANS APPROVAL DATE

REGISTERED PROFESSIONAL ENGINEER RODRIGO M.CRUZ No. 57918 Exp. 06/30/12 CIVIL STATE OF CALIFORNIA

THE STATE OF CALIFORNIA OR ITS OFFICERS OR AGENTS SHALL NOT BE RESPONSIBLE FOR THE ACCURACY OR COMPLETENESS OF SCANNED COPIES OF THIS PLAN SHEET.

NOTES:

1. LOCATIONS OF UTILITY FACILITIES SHOWN ON THESE PLANS ARE APPROXIMATE AND SHALL BE VERIFIED BY THE CONTRACTOR PRIOR TO CONSTRUCTION.
2. ALL UTILITIES SHOWN ARE EXISTING UNLESS OTHERWISE SHOWN.
3. UTILITY OWNERSHIP ON THIS PROJECT :
   ELECTRIC - PACIFIC GAS & ELECTRIC COMPANY (PG&E)
   TELEPHONE - AT&T
   FLASHING BEACON, ELECTRIC METER & PULL BOX - CALTRANS (CT)
4. ALL OTHER EXISTING CALTRANS-OWNED UTILITIES NOT SHOWN TO BE REMOVED, SEE ELECTRICAL PLANS FOR DETAILS.
5. EXISTING LIGHTINGS MOUNTED ON PG&E POLES TO REMAIN IN PLACE WHILE EXISTING Rte 168 IS STILL BEING USED. ONCE TRAFFIC IS DIVERTED TO THE NEW Hwy ALIGNMENT, THEY SHALL BE SHUT OFF AND REMOVED BY OTHERS.

LEGEND:

- UTILITY POLE
- UTILITY PEDESTAL
- UTILITY CABINET
- PULL BOX
- ELECTRIC METER
- ABANDONED

ABBREVIATIONS:

PG&E - PACIFIC GAS & ELECTRIC COMPANY
CT - CALTRANS
AT&T - AMERICAN TELEPHONE AND TELEGRAPH COMPANY

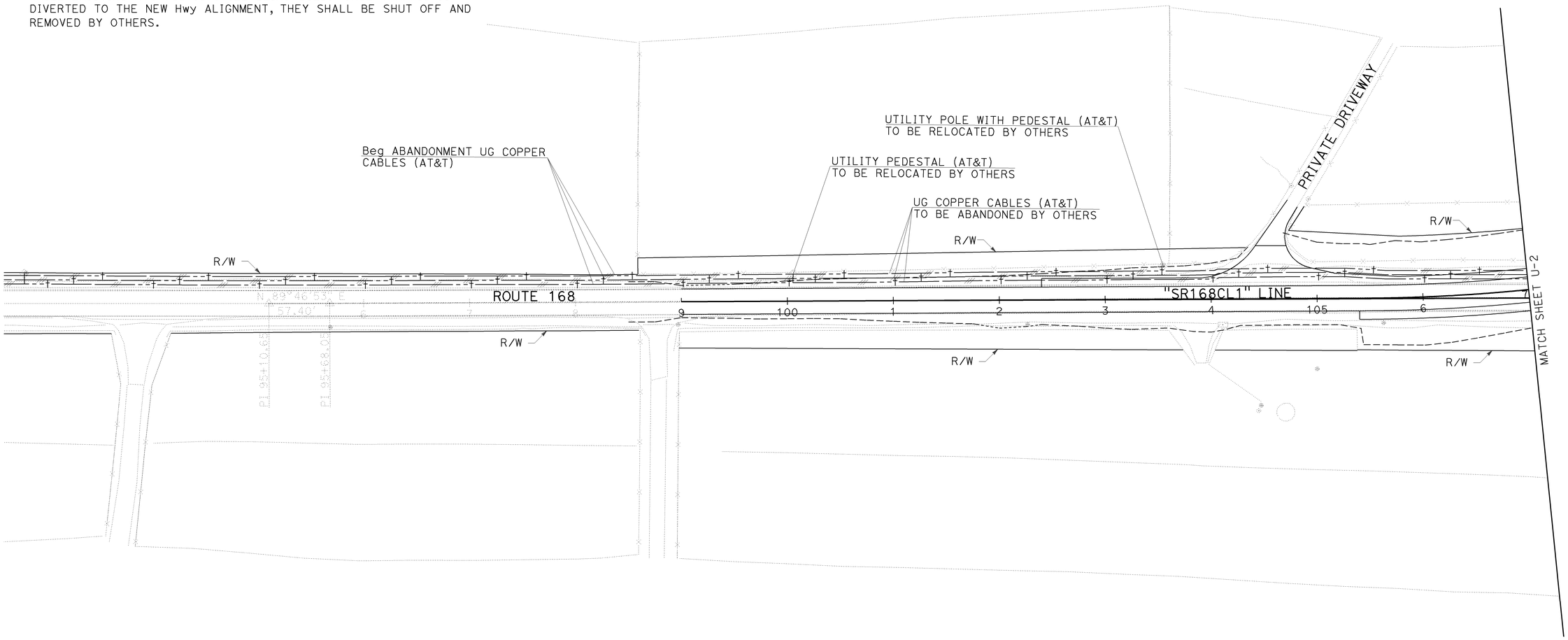

UTILITY PLAN

SCALE: 1"=50'

U-1

APPROVED FOR UTILITY INFORMATION ONLY

STATE OF CALIFORNIA - DEPARTMENT OF TRANSPORTATION
Caltrans
DESIGN

FUNCTIONAL SUPERVISOR: JUN XU
CALCULATED-DESIGNED BY: IRENE LEE
CHECKED BY: RODRIGO CRUZ
REVISED BY: I. LEE
DATE REVISED: 11/3/11

LAST REVISION 04-30-12
DATE PLOTTED => 01-MAY-2012
TIME PLOTTED => 15:34

Dist	COUNTY	ROUTE	POST MILES TOTAL PROJECT	SHEET No.	TOTAL SHEETS
06	Fre	168	R14.4/R15.0	26	52

REGISTERED CIVIL ENGINEER 04-30-12 DATE

4-30-12
PLANS APPROVAL DATE

REGISTERED PROFESSIONAL ENGINEER RODRIGO M.CRUZ No. 57918 Exp. 06/30/12 CIVIL STATE OF CALIFORNIA

THE STATE OF CALIFORNIA OR ITS OFFICERS OR AGENTS SHALL NOT BE RESPONSIBLE FOR THE ACCURACY OR COMPLETENESS OF SCANNED COPIES OF THIS PLAN SHEET.

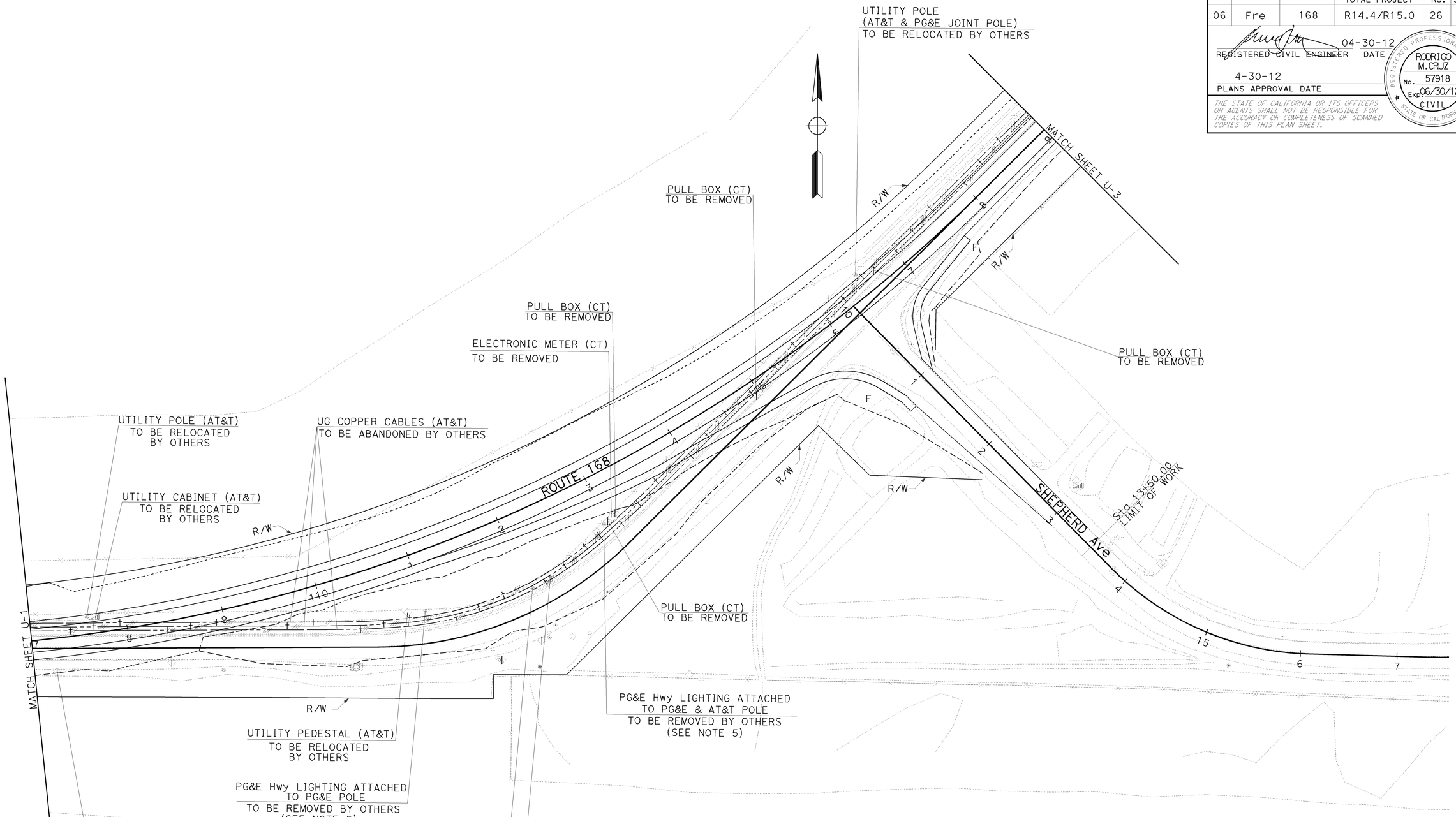

UTILITY PLAN

SCALE: 1"=50'

U-2

APPROVED FOR UTILITY INFORMATION ONLY

STATE OF CALIFORNIA - DEPARTMENT OF TRANSPORTATION
Caltrans®
DESIGN

FUNCTIONAL SUPERVISOR: JUN XU

CALCULATED-DESIGNED BY: IRENE LEE
CHECKED BY: RODRIGO CRUZ

REVISED BY: I. LEE
DATE REVISED: 11/3/11

LAST REVISION: 04-30-12
DATE PLOTTED => 01-MAY-2012
TIME PLOTTED => 15:34

Dist	COUNTY	ROUTE	POST MILES TOTAL PROJECT	SHEET No.	TOTAL SHEETS
06	Fre	168	R14.4/R15.0	27	52

REGISTERED CIVIL ENGINEER 04-30-12 DATE

4-30-12
PLANS APPROVAL DATE

REGISTERED PROFESSIONAL ENGINEER RODRIGO M. CRUZ No. 57918 Exp. 06/30/12 CIVIL STATE OF CALIFORNIA

THE STATE OF CALIFORNIA OR ITS OFFICERS OR AGENTS SHALL NOT BE RESPONSIBLE FOR THE ACCURACY OR COMPLETENESS OF SCANNED COPIES OF THIS PLAN SHEET.

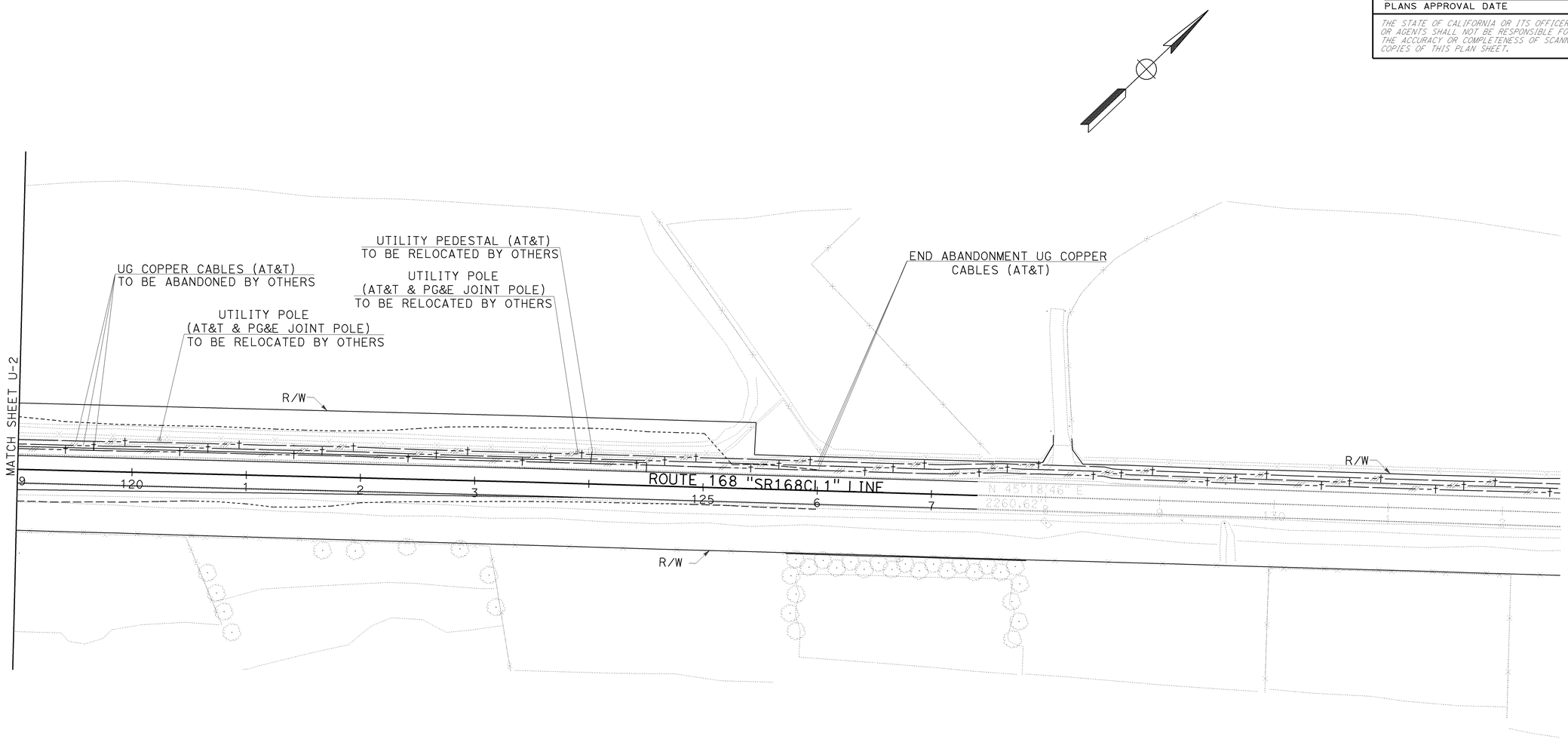

UTILITY PLAN

SCALE: 1"=50'

U-3

APPROVED FOR UTILITY INFORMATION ONLY

STATE OF CALIFORNIA - DEPARTMENT OF TRANSPORTATION
Caltrans
DESIGN

FUNCTIONAL SUPERVISOR: JUN XU
CALCULATED-DESIGNED BY: IRENE LEE
CHECKED BY: RODRIGO CRUZ
REVISED BY: I. LEE
DATE REVISED: 11/3/11

LAST REVISION 04-30-12 | DATE PLOTTED => 01-MAY-2012 | TIME PLOTTED => 15:34

Dist	COUNTY	ROUTE	POST MILES TOTAL PROJECT	SHEET No.	TOTAL SHEETS
06	Fre	168	R14.4/R15.0	28	52

Hassan Taha 04-30-12
REGISTERED CIVIL ENGINEER DATE

4-30-12
PLANS APPROVAL DATE

REGISTERED PROFESSIONAL ENGINEER
HASSAN M. TAHA
No. 60130
Exp. 06/30/12
CIVIL
STATE OF CALIFORNIA

THE STATE OF CALIFORNIA OR ITS OFFICERS OR AGENTS SHALL NOT BE RESPONSIBLE FOR THE ACCURACY OR COMPLETENESS OF SCANNED COPIES OF THIS PLAN SHEET.

NOTES:

1. EXACT SIGN LOCATIONS TO BE DETERMINED BY THE ENGINEER.
2. FOR ADDITIONAL CONSTRUCTION AREA SIGNS, REFER TO TRAFFIC HANDLING PLANS.

STATIONARY MOUNTED CONSTRUCTION AREA SIGNS

SIGN No.	SIGN CODE	SIGN MESSAGE	PANEL SIZE (in)	No. OF POST AND SIZE (in)	No. OF SIGNS
A	W20-1	ROAD WORK AHEAD	48 x 48	1 - 6 x 6	4
B	G20-2	END ROAD WORK	36 x 18	1 - 4 x 4	2

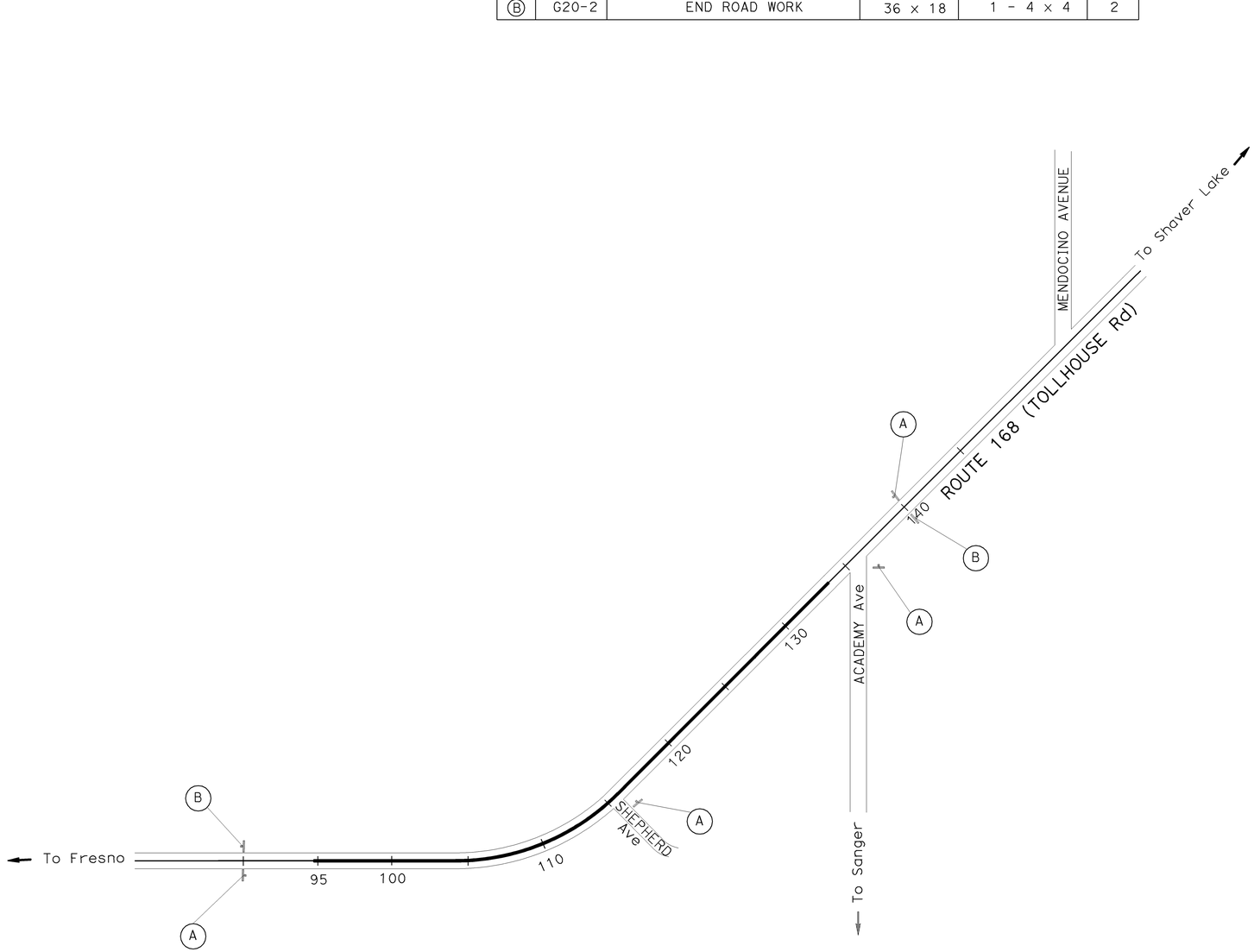

APPROVED FOR CONSTRUCTION AREA SIGN WORK ONLY

CONSTRUCTION AREA SIGNS

NO SCALE

CS-1

STATE OF CALIFORNIA - DEPARTMENT OF TRANSPORTATION
Caltrans® TRAFFIC DESIGN

FUNCTIONAL SUPERVISOR: MOHAMMED QATAMI
CALCULATED-DESIGNED BY: VANIK POGOSYAN
CHECKED BY: HASSAN TAHA
REVISED BY
DATE REVISED

LAST REVISION 04-30-12
DATE PLOTTED => 01-MAY-2012
TIME PLOTTED => 15:34

Dist	COUNTY	ROUTE	POST MILES TOTAL PROJECT	SHEET No.	TOTAL SHEETS
06	Fre	168	R14.4/R15.0	29	52

REGISTERED CIVIL ENGINEER 04-30-12 DATE

4-30-12
PLANS APPROVAL DATE

REGISTERED PROFESSIONAL ENGINEER RODRIGO M. CRUZ No. 57918 Exp. 06/30/12 CIVIL STATE OF CALIFORNIA

THE STATE OF CALIFORNIA OR ITS OFFICERS OR AGENTS SHALL NOT BE RESPONSIBLE FOR THE ACCURACY OR COMPLETENESS OF SCANNED COPIES OF THIS PLAN SHEET.

LEGEND:

- CONSTRUCTION THIS STAGE
- COMPLETED PREVIOUS STAGE/PHASE
- DIRECTION OF TRAFFIC

STAGE 1 WORK

1. PLACE DELINEATOR (CLASS 1) AS SHOWN BELOW.
2. CONSTRUCT NEW WB & EB LANES INCLUDING WESTBOUND SIDE SLOPES WITH GUTTER EXCEPT TOP 0.15′ HMA LAYER.

NOTES:

1. EXISTING HWY 168 STILL OPEN TO TRAFFIC.
2. SEE TYPICAL X-SECTION SHEETS FOR DETAILS NOT SHOWN.
3. REFER TO Q-1 SHEET FOR DELINEATOR (CLASS 1) QUANTITY.

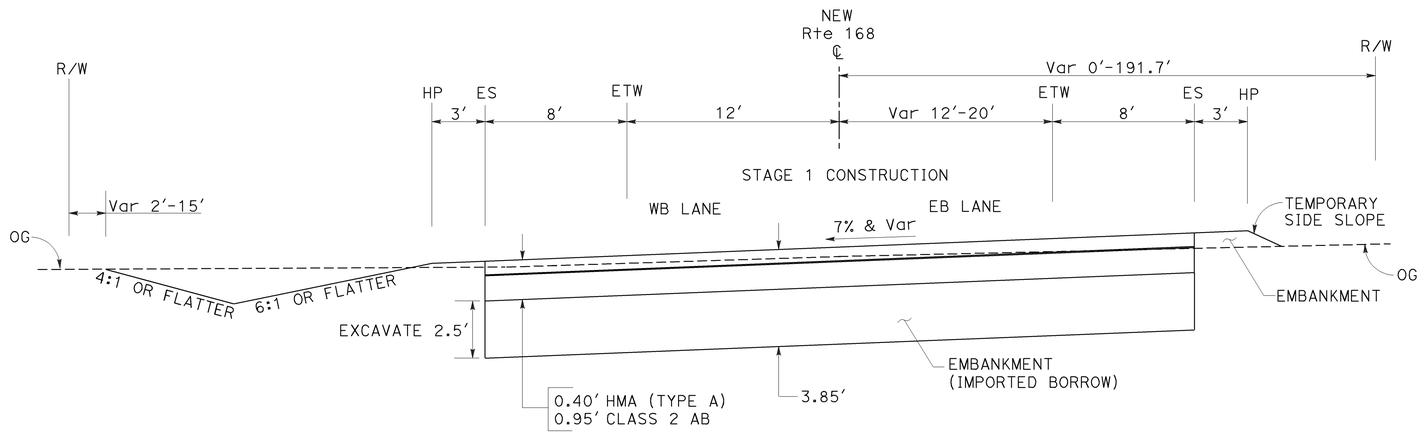

SECTION A-A
NO SCALE

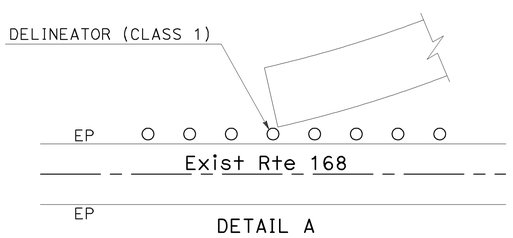

DETAIL A

Sta 109+00.00 TO Sta 114+00.00

APPROVED FOR STAGE CONSTRUCTION WORK ONLY

SCALE: 1"=100′

STAGE CONSTRUCTION (STAGE 1)

SC-1

STATE OF CALIFORNIA - DEPARTMENT OF TRANSPORTATION
Caltrans
DESIGN

FUNCTIONAL SUPERVISOR: JUN XU
CALCULATED-DESIGNED BY: RODRIGO CRUZ
CHECKED BY: IRENE LEE
REVISED BY
DATE REVISED

LAST REVISION 04-30-12
DATE PLOTTED => 01-MAY-2012
TIME PLOTTED => 15:34

Dist	COUNTY	ROUTE	POST MILES TOTAL PROJECT	SHEET No.	TOTAL SHEETS
06	Fre	168	R14.4/R15.0	30	52

REGISTERED CIVIL ENGINEER 04-30-12 DATE

4-30-12
PLANS APPROVAL DATE

REGISTERED PROFESSIONAL ENGINEER RODRIGO M. CRUZ No. 57918 Exp. 06/30/12 CIVIL STATE OF CALIFORNIA

THE STATE OF CALIFORNIA OR ITS OFFICERS OR AGENTS SHALL NOT BE RESPONSIBLE FOR THE ACCURACY OR COMPLETENESS OF SCANNED COPIES OF THIS PLAN SHEET.

STAGE 2 WORK

1. CLOSE EXISTING WB 168 FROM Sta 106+00 TO Sta 126+00 WITH DELINEATOR (CLASS 1), ALTERNATE REVERSING TRAFFIC CONTROL AND 24-HOUR FLAGGING.
2. COMPLETE CONSTRUCTION WORK ON BOTH ENDS OF THE CONNECTING SEGMENT FOR NEW WB 168 EXCEPT TOP 0.15′ HMA LAYER.
3. PRIVATE DRIVEWAY ACCESS SHALL BE PROVIDED AT ALL TIMES.
4. TEMPORARILY CLOSE SHEPHERD AVENUE AND DIVERT TRAFFIC TO ACADEMY AVENUE.
5. CONSTRUCT PRIVATE DRIVEWAY. MAINTAIN DRIVEWAY ACCESS ONTO Rte 168.

NOTES:

1. TRAFFIC WILL BE USING EXISTING EB 168 AS ALTERNATE REVERSING TRAFFIC CONTROL WITH 24-HOUR FLAGGING.
2. SEE TYPICAL X-SECTION SHEETS FOR DETAILS NOT SHOWN.

Sta 102+00.00 AND Sta 120+00.00

SECTION B-B

NO SCALE

Sta 106+00.00

SECTION C-C

NO SCALE

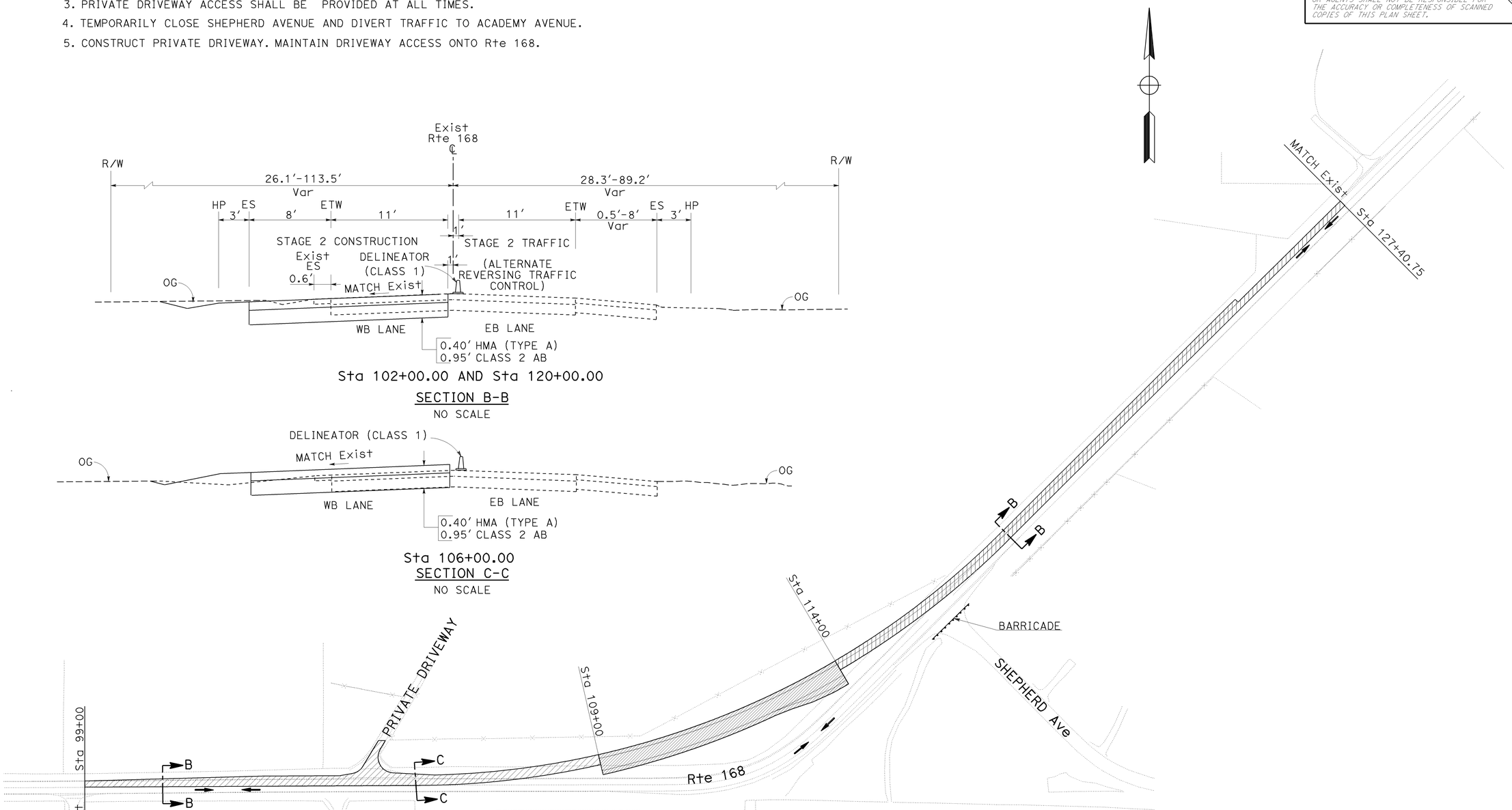

APPROVED FOR STAGE CONSTRUCTION WORK ONLY

SCALE: 1"=100′

STAGE CONSTRUCTION SC-2

(STAGE 2)

STATE OF CALIFORNIA - DEPARTMENT OF TRANSPORTATION
Caltrans
DESIGN

FUNCTIONAL SUPERVISOR: JUN XU
CALCULATED-DESIGNED BY: RODRIGO CRUZ
CHECKED BY: IRENE LEE
REVISED BY
DATE REVISED

LAST REVISION 04-30-12
DATE PLOTTED => 01-MAY-2012
TIME PLOTTED => 15:34

Dist	COUNTY	ROUTE	POST MILES TOTAL PROJECT	SHEET No.	TOTAL SHEETS
06	Fre	168	R14.4/R15.0	31	52

REGISTERED CIVIL ENGINEER 04-30-12 DATE

4-30-12
PLANS APPROVAL DATE

REGISTERED PROFESSIONAL ENGINEER RODRIGO M.CRUZ No. 57918 Exp 06/30/12 CIVIL STATE OF CALIFORNIA

THE STATE OF CALIFORNIA OR ITS OFFICERS OR AGENTS SHALL NOT BE RESPONSIBLE FOR THE ACCURACY OR COMPLETENESS OF SCANNED COPIES OF THIS PLAN SHEET.

STAGE 3 WORK

1. DIVERT TRAFFIC TO THE NEW WB LANE USING AN ALTERNATE REVERSING TRAFFIC CONTROL AND 24-HOUR FLAGGING.
2. CLOSE SHEPHERD AVENUE INTERSECTION AND PORTION OF OLD WB & EB 168. ACCESS THRU 168 WILL BE DIVERTED TO ACADEMY AVENUE.
3. CONSTRUCT SHEPHERD AVENUE INTERSECTION INCLUDING REMAINING PORTION OF WORK CONNECTED TO THE NEW LANES.
4. MAINTAIN ACCESS AT PRIVATE DRIVEWAY.
5. COMPLETE FINAL 0.15' HMA THROUGHOUT.

NOTE:

SEE TYPICAL X-SECTION SHEETS FOR DETAILS NOT SHOWN.

SECTION D-D
NO SCALE

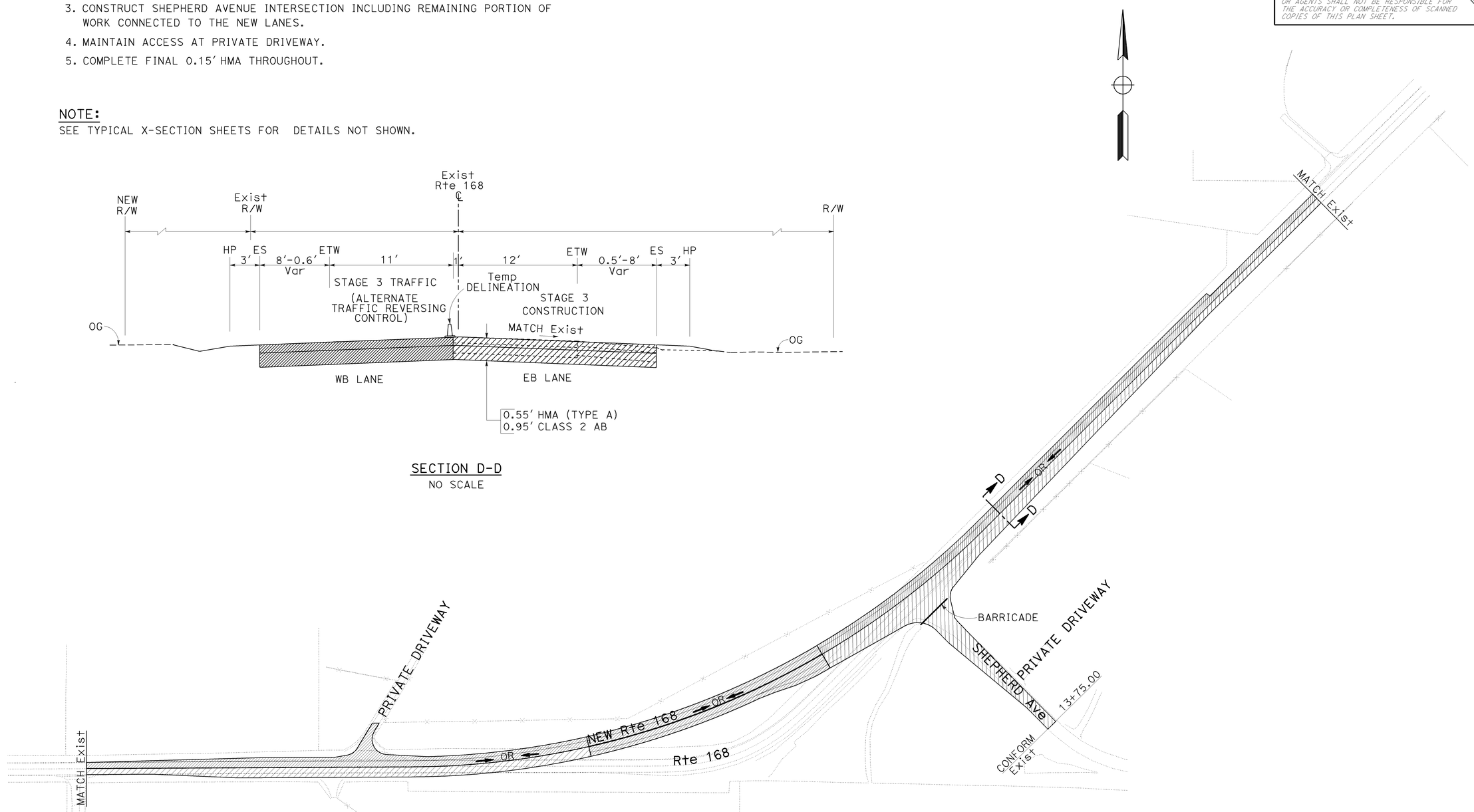

APPROVED FOR STAGE CONSTRUCTION WORK ONLY

SCALE: 1"=100'

STAGE CONSTRUCTION (STAGE 3)

SC-3

STATE OF CALIFORNIA - DEPARTMENT OF TRANSPORTATION
Caltrans
DESIGN

FUNCTIONAL SUPERVISOR: JUN XU
CALCULATED-DESIGNED BY: RODRIGO CRUZ
CHECKED BY: IRENE LEE
REVISED BY
DATE REVISED

LAST REVISION 04-30-12 | DATE PLOTTED => 01-MAY-2012 | TIME PLOTTED => 15:34

Dist	COUNTY	ROUTE	POST MILES TOTAL PROJECT	SHEET No.	TOTAL SHEETS
06	Fre	168	R14.4/R15.0	32	52

REGISTERED CIVIL ENGINEER 04-30-12 DATE

4-30-12
PLANS APPROVAL DATE

REGISTERED PROFESSIONAL ENGINEER RODRIGO M. CRUZ No. 57918 Exp. 06/30/12 CIVIL STATE OF CALIFORNIA

THE STATE OF CALIFORNIA OR ITS OFFICERS OR AGENTS SHALL NOT BE RESPONSIBLE FOR THE ACCURACY OR COMPLETENESS OF SCANNED COPIES OF THIS PLAN SHEET.

STAGE 4 WORK

1. OPEN BOTH NEW LANES TO TRAFFIC.
2. OBLITERATE PORTION OF OLD EXISTING PAVEMENT THEN RE-GRADE. SEE Sht L-2 FOR LIMITS OF AC REMOVAL AND EXCAVATION.
3. COMPLETE SIDE SLOPES.
4. COMPLETE SHOULDER BACKING.

SECTION E-E
NO SCALE

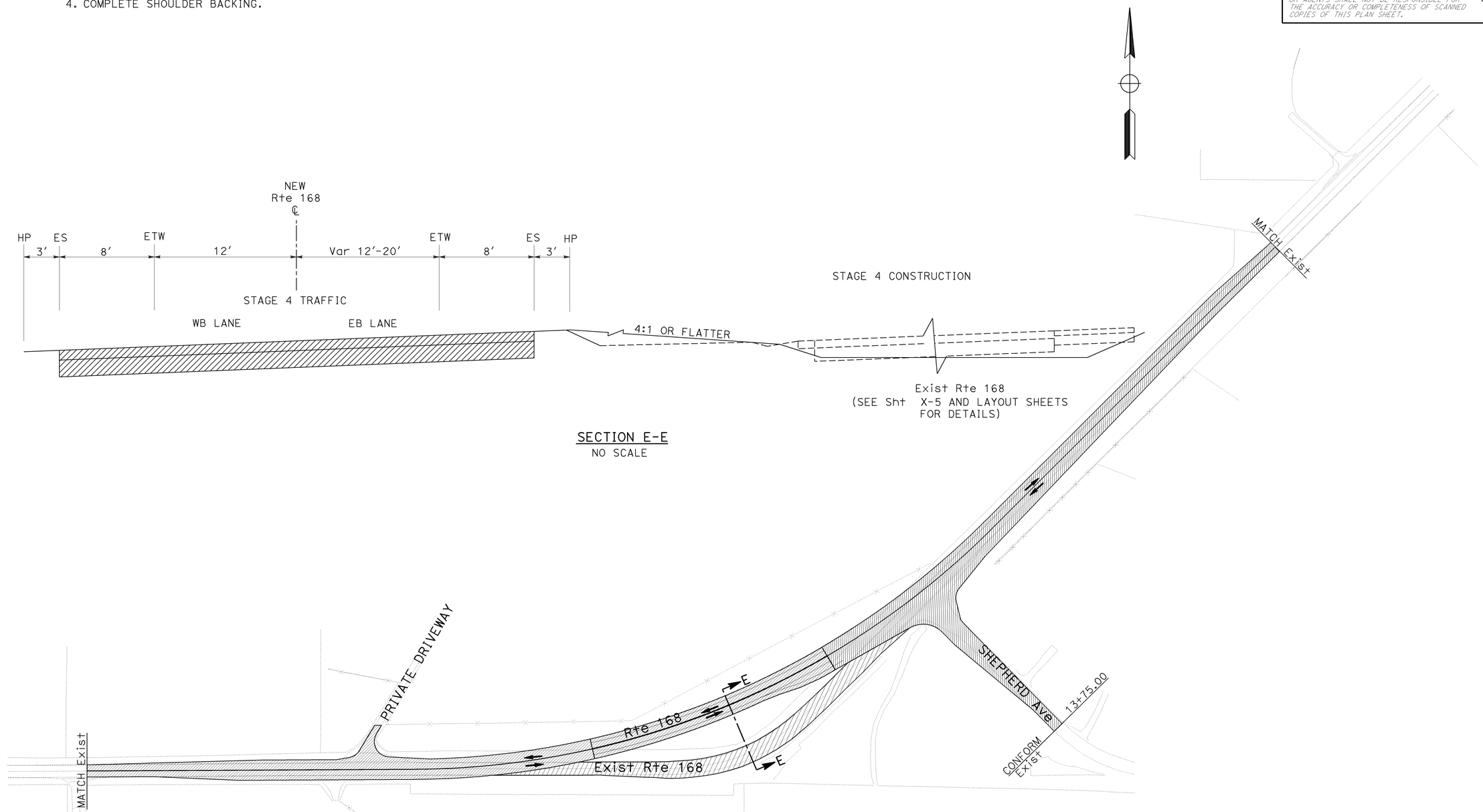

APPROVED FOR STAGE CONSTRUCTION WORK ONLY

SCALE: 1"=100′

STAGE CONSTRUCTION
(STAGE 4)
SC-4

STATE OF CALIFORNIA - DEPARTMENT OF TRANSPORTATION
Caltrans
DESIGN
FUNCTIONAL SUPERVISOR: JUN XU
CALCULATED-DESIGNED BY: RODRIGO CRUZ
CHECKED BY: IRENE LEE
REVISED BY
DATE REVISED

LAST REVISION 04-30-12 | DATE PLOTTED => 01-MAY-2012 | TIME PLOTTED => 15:34

Dist	COUNTY	ROUTE	POST MILES TOTAL PROJECT	SHEET No.	TOTAL SHEETS
06	Fre	168	R14.4/R15.0	33	52

Hassan Taha 04-30-12
REGISTERED CIVIL ENGINEER DATE

4-30-12
PLANS APPROVAL DATE

REGISTERED PROFESSIONAL ENGINEER HASSAN M. TAHA No. 60130 Exp. 06/30/12 CIVIL STATE OF CALIFORNIA

THE STATE OF CALIFORNIA OR ITS OFFICERS OR AGENTS SHALL NOT BE RESPONSIBLE FOR THE ACCURACY OR COMPLETENESS OF SCANNED COPIES OF THIS PLAN SHEET.

CONSTRUCTION AREA SIGNS
(STATIONARY MOUNTED)(TRAFFIC HANDLING)

SIGN	SIGN CODE	PANEL SIZE	SIGN MESSAGE	No. OF SIGNS	No. OF POST AND SIZE
G	SC1(CA)	60" x 24"	SHEPHERD AVE CLOSED	1	1- 4"x 6"
	SC3(CA)	36" x 12"	DETOUR UP ARROW	1	
H	SC1(CA)	60" x 30"	SHEPHERD AVE CLOSED USE ACADEMY AVE	1	1- 4"x 6"
	M4-10(L†)	48" x 18"	DETOUR ARROW	1	
I	M4-10(R†)	48" x 18"	DETOUR ARROW	1	1- 4"x 6"
J	G28-2(CA)	32" x 25"	SHIELD(168)	1	1- 4"x 6"
	M6-3	21" x 15"	ARROW	1	
K	G28-2(CA)	32" x 25"	SHIELD(168)	4	1- 4"x 6"
	M6-1	21" x 15"	ARROW	4	
L	M4-8a	24" x 18"	END DETOUR	2	1- 4"x 6"

NOTES:
1. FOR ADDITIONAL CONSTRUCTION AREA SIGNS REFER TO SHEET CS-1.
2. EXACT SIGN LOCATIONS TO BE DETERMINED BY THE ENGINEER.

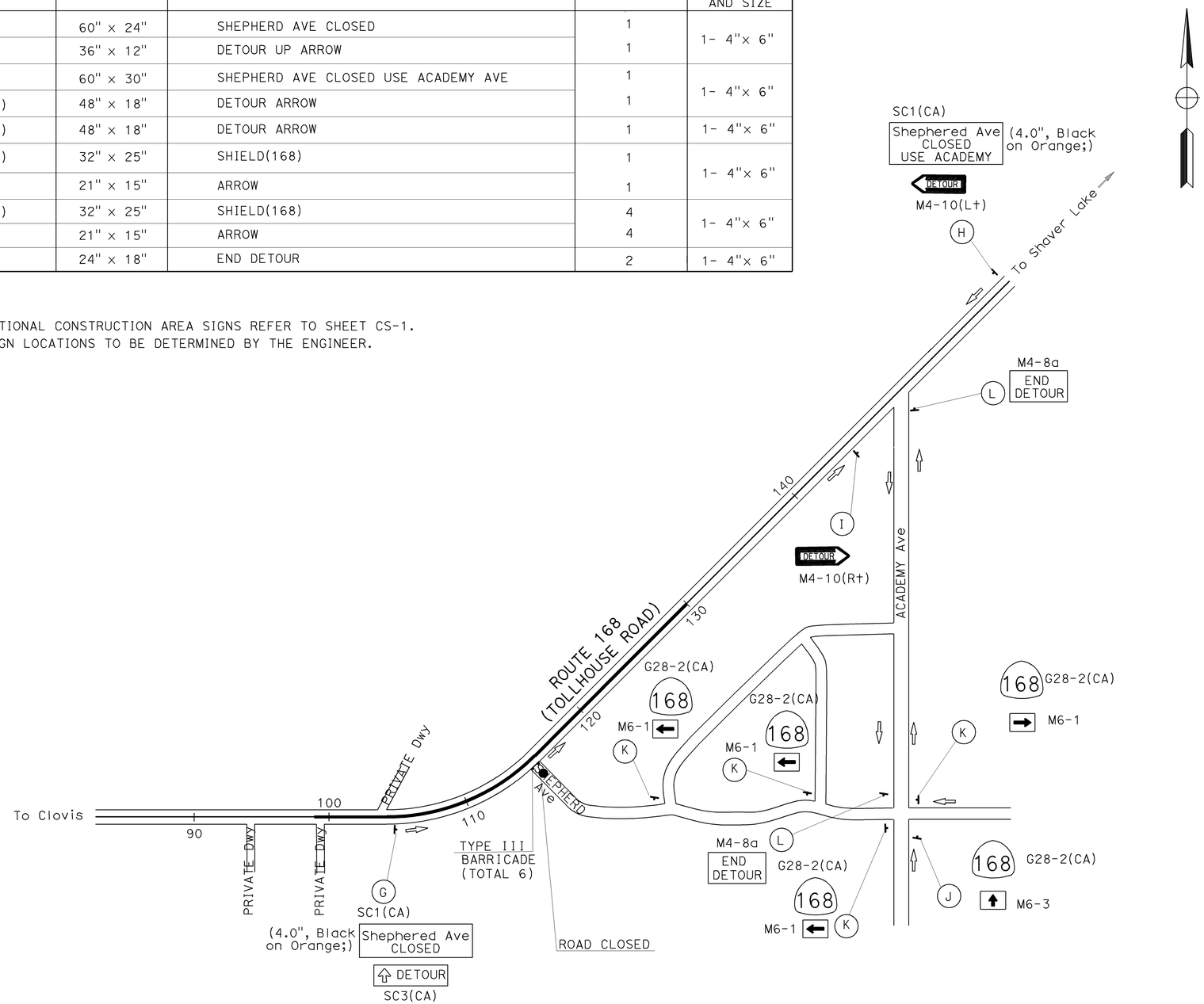

TYPE III BARRICADE

SHEET No.	BARRICADE
	EA
TH-1	6

APPROVED FOR TRAFFIC HANDLING WORK ONLY

TRAFFIC HANDLING PLAN AND QUANTITIES (DETOUR PLAN)

NO SCALE

TH-1

STATE OF CALIFORNIA - DEPARTMENT OF TRANSPORTATION
Caltrans
TRAFFIC DESIGN

FUNCTIONAL SUPERVISOR: MOHAMMED QATAMI
CALCULATED-DESIGNED BY: VANIK POGOSYAN
CHECKED BY: HASSAN TAHA
REVISED BY
DATE REVISED

LAST REVISION 04-30-12
DATE PLOTTED => 17-MAY-2012
TIME PLOTTED => 16:07

Dist	COUNTY	ROUTE	POST MILES TOTAL PROJECT	SHEET No.	TOTAL SHEETS
06	Fre	168	R14.4/R15.0	34	52

Hassan Taha 04-30-12
REGISTERED CIVIL ENGINEER DATE

4-30-12
PLANS APPROVAL DATE

REGISTERED PROFESSIONAL ENGINEER
HASSAN M. TAHA
No. 60130
Exp. 06/30/12
CIVIL
STATE OF CALIFORNIA

THE STATE OF CALIFORNIA OR ITS OFFICERS OR AGENTS SHALL NOT BE RESPONSIBLE FOR THE ACCURACY OR COMPLETENESS OF SCANNED COPIES OF THIS PLAN SHEET.

LEGEND:

- XX — TRAFFIC STRIPE DETAIL No.
- X — ROADSIDE SIGN NUMBER
- ROADSIDE SIGN ONE POST
- TYPE IV ARROW
- TO / FROM — RELOCATE ROADSIDE SIGN
- ● — REMOVE ROADSIDE SIGN

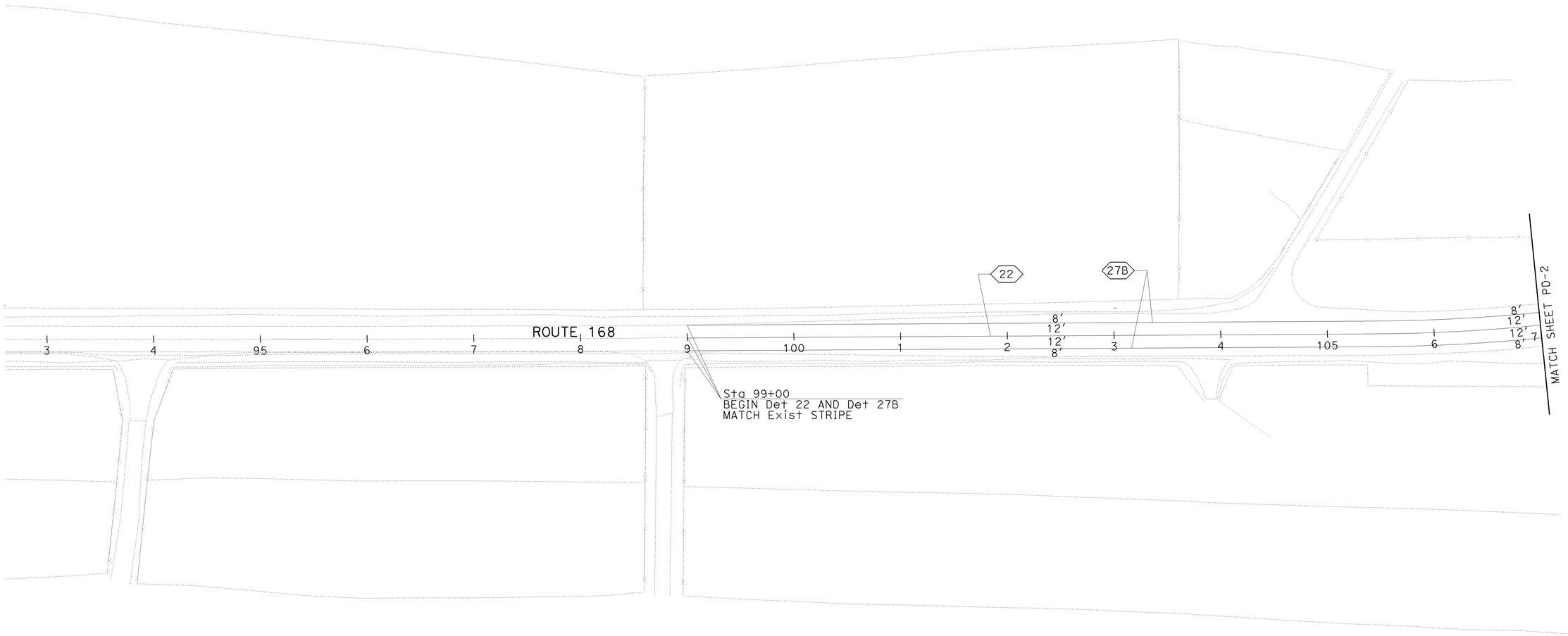

PAVEMENT DELINEATION PLAN AND SIGN PLAN

APPROVED FOR PAVEMENT DELINEATION WORK ONLY

SCALE: 1"=50'

PD-1

STATE OF CALIFORNIA - DEPARTMENT OF TRANSPORTATION
Caltrans
TRAFFIC DESIGN

FUNCTIONAL SUPERVISOR: MOHAMMED QATAMI
CALCULATED-DESIGNED BY: VANIK POGOSYAN
CHECKED BY: HASSAN TAHA
REVISED BY
DATE REVISED

LAST REVISION 04-30-12
DATE PLOTTED => 01-MAY-2012
TIME PLOTTED => 15:34

Dist	COUNTY	ROUTE	POST MILES TOTAL PROJECT	SHEET No.	TOTAL SHEETS
06	Fre	168	R14.4/R15.0	35	52

Hassan Taha 04-30-12
REGISTERED CIVIL ENGINEER DATE

4-30-12
PLANS APPROVAL DATE

REGISTERED PROFESSIONAL ENGINEER
HASSAN M. TAHA
No. 60130
Exp. 06/30/12
CIVIL
STATE OF CALIFORNIA

THE STATE OF CALIFORNIA OR ITS OFFICERS OR AGENTS SHALL NOT BE RESPONSIBLE FOR THE ACCURACY OR COMPLETENESS OF SCANNED COPIES OF THIS PLAN SHEET.

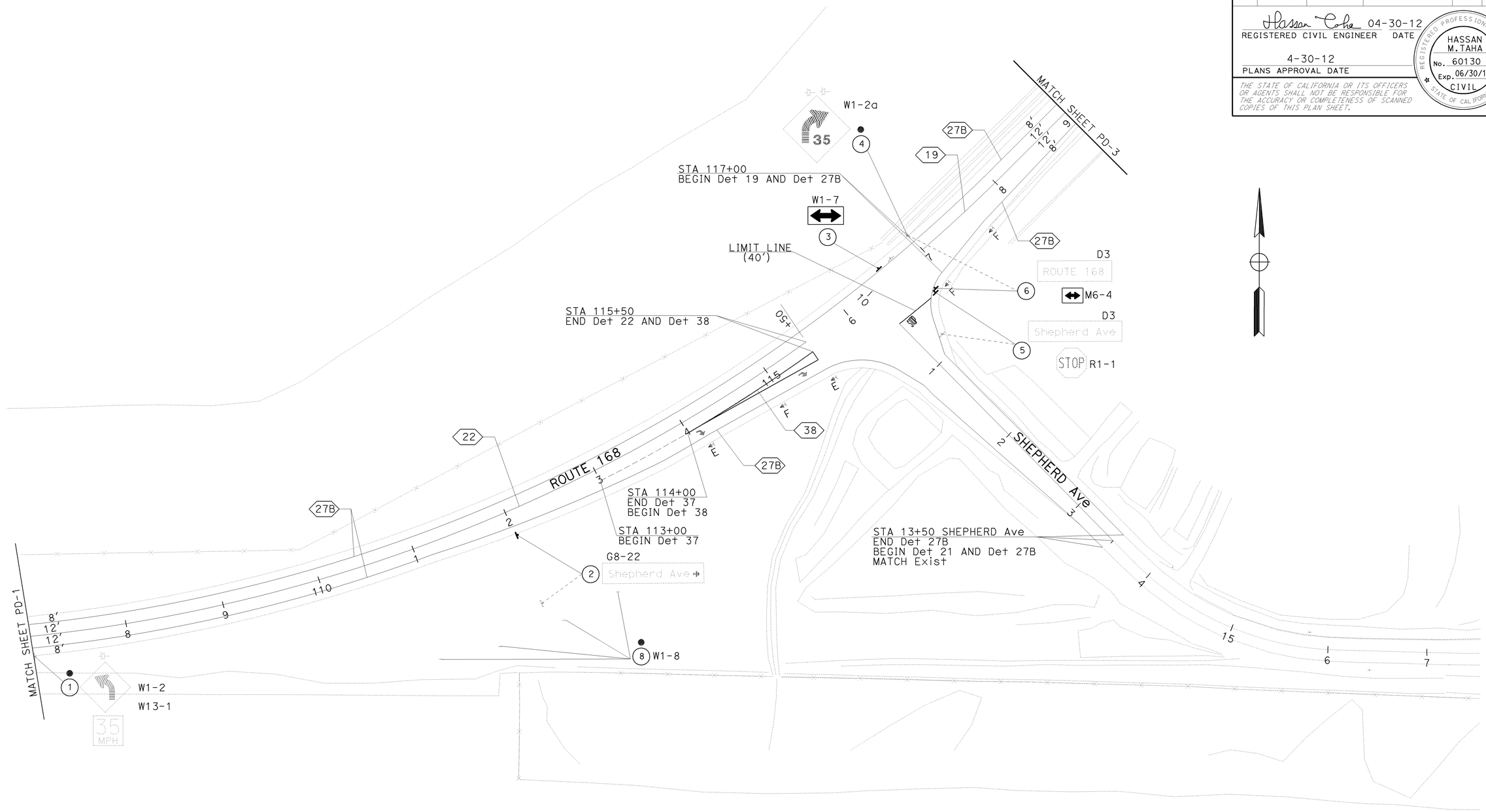

PAVEMENT DELINEATION PLAN AND SIGN PLAN

SCALE: 1"=50'

PD-2

APPROVED FOR PAVEMENT DELINEATION WORK ONLY

STATE OF CALIFORNIA - DEPARTMENT OF TRANSPORTATION
Caltrans
TRAFFIC DESIGN

FUNCTIONAL SUPERVISOR: MOHAMMED QATAMI
CALCULATED-DESIGNED BY: VANIK POGOSYAN
CHECKED BY: HASSAN TAHA
REVISED BY
DATE REVISED

LAST REVISION 04-30-12
DATE PLOTTED => 17-MAY-2012
TIME PLOTTED => 16:07

Dist	COUNTY	ROUTE	POST MILES TOTAL PROJECT	SHEET No.	TOTAL SHEETS
06	Fre	168	R14.4/R15.0	36	52

Hassan Taha 04-30-12
REGISTERED CIVIL ENGINEER DATE

4-30-12
PLANS APPROVAL DATE

REGISTERED PROFESSIONAL ENGINEER
HASSAN M. TAHA
No. 60130
Exp. 06/30/12
CIVIL
STATE OF CALIFORNIA

THE STATE OF CALIFORNIA OR ITS OFFICERS OR AGENTS SHALL NOT BE RESPONSIBLE FOR THE ACCURACY OR COMPLETENESS OF SCANNED COPIES OF THIS PLAN SHEET.

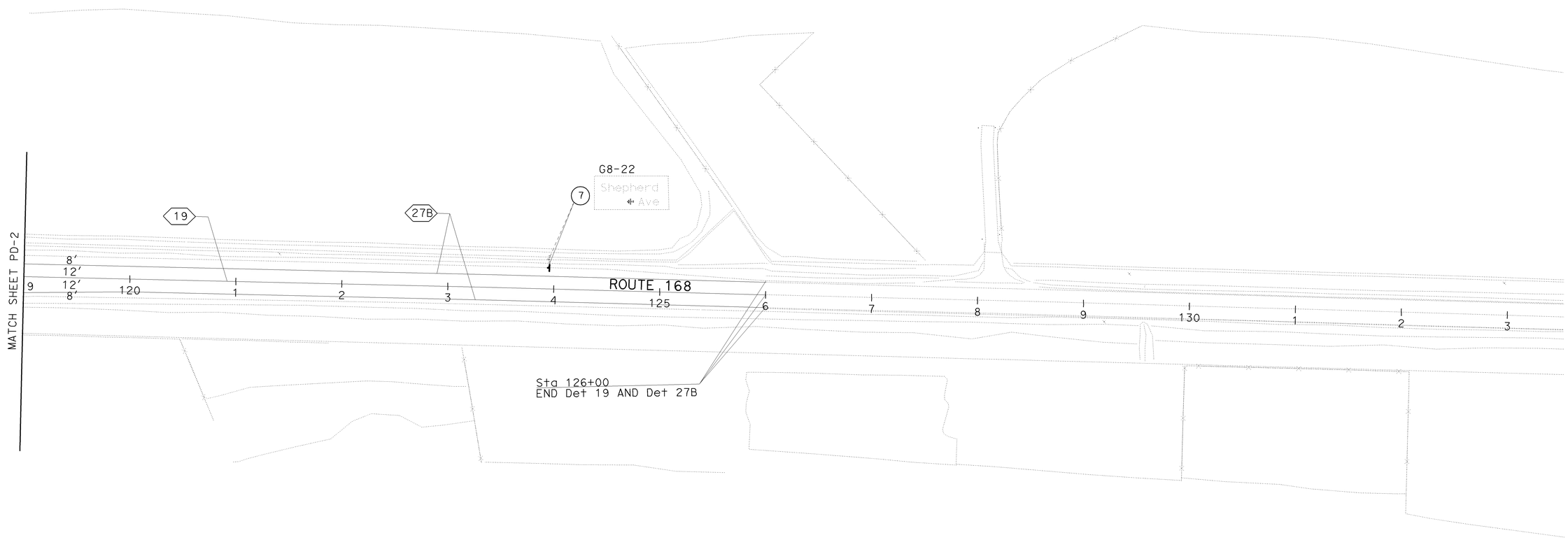

PAVEMENT DELINEATION PLAN AND SIGN PLAN

SCALE: 1"=50'

APPROVED FOR PAVEMENT DELINEATION WORK ONLY

PD-3

STATE OF CALIFORNIA - DEPARTMENT OF TRANSPORTATION
Caltrans
TRAFFIC DESIGN

FUNCTIONAL SUPERVISOR: MOHAMMED QATAMI

CALCULATED-DESIGNED BY: VANIK POGOSYAN
CHECKED BY: HASSAN TAHA

REVISED BY
DATE REVISED

LAST REVISION 04-30-12 | DATE PLOTTED => 01-MAY-2012 | TIME PLOTTED => 15:35

Dist	COUNTY	ROUTE	POST MILES TOTAL PROJECT	SHEET No.	TOTAL SHEETS
06	Fre	168	R14.4/R15.0	37	52

Hassan Taha 04-30-12
REGISTERED CIVIL ENGINEER DATE

4-30-12
PLANS APPROVAL DATE

REGISTERED PROFESSIONAL ENGINEER
HASSAN M. TAHA
No. 60130
Exp. 06/30/12
CIVIL
STATE OF CALIFORNIA

THE STATE OF CALIFORNIA OR ITS OFFICERS OR AGENTS SHALL NOT BE RESPONSIBLE FOR THE ACCURACY OR COMPLETENESS OF SCANNED COPIES OF THIS PLAN SHEET.

PAVEMENT DELINEATION QUANTITIES

SHEET No.		LOCATION STA TO STA	DIRECTION	DETAIL No.	PAVEMENT MARKER RETROREFLECTIVE				THERMOPLASTIC TRAFFIC STRIPE					THERMOPLASTIC PAVEMENT MARKING	
					TYPE C RED-CLEAR	TYPE D Yellow (Two-Way)	TYPE G Clear (One-Way)	TYPE H Yellow (One-Way)	4" YELLOW	4" WHITE	8" WHITE	8" BROKEN (12'-3')	4" BROKEN (36'-12')		
						EA			LF	LF	LF	LF	LF	Description	SQFT
PD-1 AND PD-3	Route 168	99+00 TO 115+50	E/W	22		140			3300					2-TYPE IV ARROW	30
		99+00 TO 126+00	W	27B						2700				1-LIMIT LINE	40
		99+00 TO 116+00	E	27B						1700					
		113+00 TO 114+00	E/W	37	8		10					100			
		114+00 TO 115+00	W	38			7				150				
		114+00 TO 115+00	E	38			7				150				
		117+00 TO 126+00	E	27B						900					
		117+00 TO 122+00	E/W	22		44			1000						
		122+00 TO 126+00	E/W	19		12		18	400				400		
	Shepherd Ave	10+43 TO 13+50		27B						307					
				27B						307					
				21					614						
SUB TOTAL					8	196	24	18	5314	5814	300	100	400		70
TOTAL					246				11128		300	100	400		70

SIGN QUANTITIES

SHEET No.	SIGN No.	SIGN CODE	SIGN MESSAGE	No. OF POST AND SIZE	PANEL SIZE	BACKGROUND		LEGEND		STANDARD GRAFFITI FILM	FURNISH SINGLE SHEET ALUMINUM SIGN (0.063"-UNFRAMED)	ROADSIDE SIGN ONE POST	RELOCATE ROADSIDE SIGN	REMOVE ROADSIDE SIGN
						SHEETING COLOR	Retroreflectivity ASTM TYPE	SHEETING COLOR	Retroreflectivity ASTM TYPE					
											SQFT	EA	EA	EA
PD-1	1	W1-2												1
		W13-1												
	2	G8-22	Shepherd Ave➔										1	
	3	W1-7	Tow -Direction Large Arrow	1 - 4" x 6"	48" x 24"	YELLOW	III	BLACK	IV	X	8.00	1		
	4	W1-2a	RIGHT LANE MUST TURN RIGHT											1
	5	D3	Shepherd Ave										1	
		R1-1	STOP											
	6	D3	ROUTE 168										1	
		M6-4	Direction Arrow Auxiliary	1 - 4" x 6"	21" x 15"	GREEN	III	WHITE	IV	X	2.19			
	7	G8-22	Shepherd Ave➔										1	
	8	W1-8	Chevron Alignment											4
										TOTAL	10.19	1	4	6

* NOT A SEPARATE PAY ITEM, See E-PLANS.

PAVEMENT DELINEATION AND SIGN QUANTITIES

NO SCALE

PDQ-1

REVISED BY | DATE REVISED
VANIK POGOSYAN | HASSAN TAHA
CALCULATED-DESIGNED BY | CHECKED BY
FUNCTIONAL SUPERVISOR | MOHAMMED QATAMI
STATE OF CALIFORNIA - DEPARTMENT OF TRANSPORTATION
Caltrans® TRAFFIC DESIGN

LAST REVISION 04-30-12 | DATE PLOTTED => 17-MAY-2012 | TIME PLOTTED => 16:07

Dist	COUNTY	ROUTE	POST MILES TOTAL PROJECT	SHEET No.	TOTAL SHEETS
06	Fre	168	R14.4/R15.0	38	52

REGISTERED CIVIL ENGINEER 04-30-12 DATE

4-30-12
PLANS APPROVAL DATE

REGISTERED PROFESSIONAL ENGINEER RODRIGO M.CRUZ No. 57918 Exp. 06/30/12 CIVIL STATE OF CALIFORNIA

THE STATE OF CALIFORNIA OR ITS OFFICERS OR AGENTS SHALL NOT BE RESPONSIBLE FOR THE ACCURACY OR COMPLETENESS OF SCANNED COPIES OF THIS PLAN SHEET.

HOT MIX ASPHALT (TYPE A)

DESCRIPTION	TON
Rte 168 TRAVELED WAY AND SHOULDERS	4376
SHEPHERD AVENUE	410
PRIVATE DRIVEWAYS	44
TOTAL	4830

CLASS 2 AGGREGATE BASE

DESCRIPTION	CY
Rte 168 TRAVELED WAY AND SHOULDERS	3730
SHEPHERD AVENUE	400
TOTAL	4130

TACK COAT

DESCRIPTION	TON
Rte 168 TRAVELED WAY AND SHOULDERS	3.7
SHEPHERD AVENUE	0.4
PRIVATE DRIVEWAYS	0.1
TOTAL	4.2

EARTHWORK

DESCRIPTION	ROADWAY EXCAVATION CY	(N) EMBANKMENT CY	IMPORTED BORROW CY
Rte 168 TRAVELED WAY AND SHOULDERS	9,980	3,740	5,390
SHEPHERD AVENUE	30	775	
"OLD 168" , STA 109+50 TO STA 113+50 "SR168CL1"	2,005		
TOTAL	12,015		5,390

(N) NOT A SEPARATE PAY ITEM. FOR INFORMATION ONLY.

FENCE

LOCATION	FENCE (TYPE BW, WOOD POST) LF	REMOVE FENCE (TYPE BW) LF
"SR168CL1" 98+58.00, 41.4′ Lt TO 104+33.00, 47.4′ Lt	575	
"SR168CL1" 98+58.00, 25.5′ Lt TO 104+33.00, 47.4′ Lt		579
"SR168CL1" 104+73.00, 64.3′ Lt TO 125+44.00, 58.0′ Lt	2054	2180
"SR168CL1" 104+89.55, 87.2′ Lt TO 116+74.00, 31.8′ Lt		
TOTAL	2629	2759

(N) NOT A SEPARATE PAY ITEM. FOR INFORMATION ONLY.

DELINEATOR (CLASS 1)

LOCATION	EA	REMARK
"SR168CL1" 108+00.00, 30.0′ Rt TO 115+00.00, 30.0′ Rt	28	DURING STAGE 1 CONSTRUCTION AT THE NEW CURVE ALIGNMENT

EROSION CONTROL

LOCATION	DESCRIPTION	COMPOST BLANKET	COMPOST BLANKET (N)	PURE LIVE SEED (N)
		CY	ACRE	LB
Rte 168, Sta 98+58.00 TO Sta 126+00.00 INCLUDE SHEPHERD Ave	DSA LOCATIONS	284.0	2.1	59.0
	TOTAL	284.0		

(N) NOT A SEPARATE PAY ITEM. FOR INFORMATION ONLY.

SHOULDER BACKING

LOCATION	TON
"SR168CL1" 102+40.00 TO 118+07.95, Lt/Rt	238
"SR168CL1" 118+07.95 TO 127+50.00, Lt/Rt	149
TOTAL	387

SUMMARY OF QUANTITIES

Q-1

REVISED BY: I. LEE — DATE REVISED: 01/04/12
IRENE LEE — RODRIGO CRUZ
CALCULATED-DESIGNED BY — CHECKED BY
FUNCTIONAL SUPERVISOR: JUN XU

STATE OF CALIFORNIA - DEPARTMENT OF TRANSPORTATION
Caltrans® DESIGN

LAST REVISION 04-30-12 | DATE PLOTTED => 17-MAY-2012 | TIME PLOTTED => 16:07

Dist	COUNTY	ROUTE	POST MILES TOTAL PROJECT	SHEET No.	TOTAL SHEETS
06	Fre	168	R14.4/R15.0	39	40

REGISTERED CIVIL ENGINEER 04-30-12 DATE

4-30-12
PLANS APPROVAL DATE

REGISTERED PROFESSIONAL ENGINEER RODRIGO M.CRUZ No. 57918 Exp 06/30/12 CIVIL STATE OF CALIFORNIA

THE STATE OF CALIFORNIA OR ITS OFFICERS OR AGENTS SHALL NOT BE RESPONSIBLE FOR THE ACCURACY OR COMPLETENESS OF SCANNED COPIES OF THIS PLAN SHEET.

TEMPORARY FENCE (TYPE ESA)

LOCATION	LF
"SR168CL1" 98+00.00, 25.5' Lt to 104+33.00, 47.4' Lt	649
"SR168CL1" 104+73.00, 64.3' Lt to 128+05.00, 47.0' Lt	2360
"SR168CL1" 128+21.80, 45.3' Lt to 131+00.00, 33.2' Lt	187
"SR168CL1" 98+00.00, 26.0' Rt to 98+61.00, 26.0' Rt	62
"SR168CL1" 99+00.00, 28.6' Rt to 103+72.00, 48.5' Rt	485
"SR168CL1" 104+03.00, 48.0' Rt to 116+24.00, 223.4' Rt	1476
"SR168CL1" 116+93.36, 56.9' Rt to 131+00.00, 55.0' Rt	1313
"SHPD1" 10+62.12, 58.7' Lt to 12+40.90, 30.2' Lt	192
"SHPD1" 12+86.00, 26.5' Lt to 14+05.00, 28.0' Lt	121
"SHPD1" 14+50.00, 26.2' Lt to 17+00.00, 26.2' Lt	237
"SHPD1" 12+21.35, 31.0' Rt to 17+00.00, 31.0' Rt	502
TOTAL	7584

RELOCATE MAILBOX

NEW LOCATION		EA
STATION	OFFSET	
104+32	"SR168CL1" 42.0' Lt	2
104+75	"SR168CL1" 53.0' Lt	1
	TOTAL	3

TEMPORARY FIBER ROLL

LOCATION	LF
Rte 168 102+75 TO 108+00 Rt	525
Rte 168 109+25 TO 109+50 Rt	25
Rte 168 110+75 TO 115+50 Rt	475
Rte 168 117+00 TO 119+00 Rt	200
TOTAL	1225

SHOULDER RUMBLE STRIP (HMA, GROUND-IN INDENTATIONS)

LOCATION	STATION		(N) Ft	Sta
	Beg	END		
*EB SHOULDER	105+40.00	114+16.00	876	9
*WB SHOULDER	102+40.00	103+92.00	364	4
*WB SHOULDER	105+78.00	124+50.00	1872	19
			TOTAL	32

* SEE SHEET C-4 FOR LIMITS OF RUMBLE STRIP.
(N) - NOT A SEPARATE PAY ITEM, FOR INFORMATION ONLY

DUFF

LOCATION	(N) COLLECT AREA (SQ YD)	APPLY AREA (SQ YD)
STA 110+00 TO 113+00 "SR168CL1"	3708.9	
STA 108+30 TO 114+30 "SR168CL1"		3708.7
	TOTAL	3708.7

(N) - NOT SEPARATE PAY ITEM. QUANTITY IS INCLUDED AS "CLEARING AND GRUBBING".

SUMMARY OF QUANTITIES

Q-2

STATE OF CALIFORNIA - DEPARTMENT OF TRANSPORTATION
Caltrans DESIGN

FUNCTIONAL SUPERVISOR: JUN XU
CALCULATED-DESIGNED BY: IRENE LEE
CHECKED BY: RODRIGO CRUZ
REVISED BY: I. LEE
DATE REVISED: 04/18/12

LAST REVISION 04-30-12 | DATE PLOTTED => 17-MAY-2012 | TIME PLOTTED => 16:07

Dist	COUNTY	ROUTE	POST MILES TOTAL PROJECT	SHEET No.	TOTAL SHEETS
06	Fre	168	R14.4/R15.0	40	52

REGISTERED ELECTRICAL ENGINEER 04-29-12 DATE

4-30-12
PLANS APPROVAL DATE

REGISTERED PROFESSIONAL ENGINEER
DANIEL THANH VO
No. 17408
Exp. 9/30/12
ELECTRICAL
STATE OF CALIFORNIA

THE STATE OF CALIFORNIA OR ITS OFFICERS OR AGENTS SHALL NOT BE RESPONSIBLE FOR THE ACCURACY OR COMPLETENESS OF SCANNED COPIES OF THIS PLAN SHEET.

NOTE:

FOR ACCURATE RIGHT OF WAY DATA, CONTACT RIGHT OF WAY ENGINEERING AT THE DISTRICT OFFICE.

ABBREVIATION:

PG&E - PACIFIC GAS AND ELECTRIC COMPANY

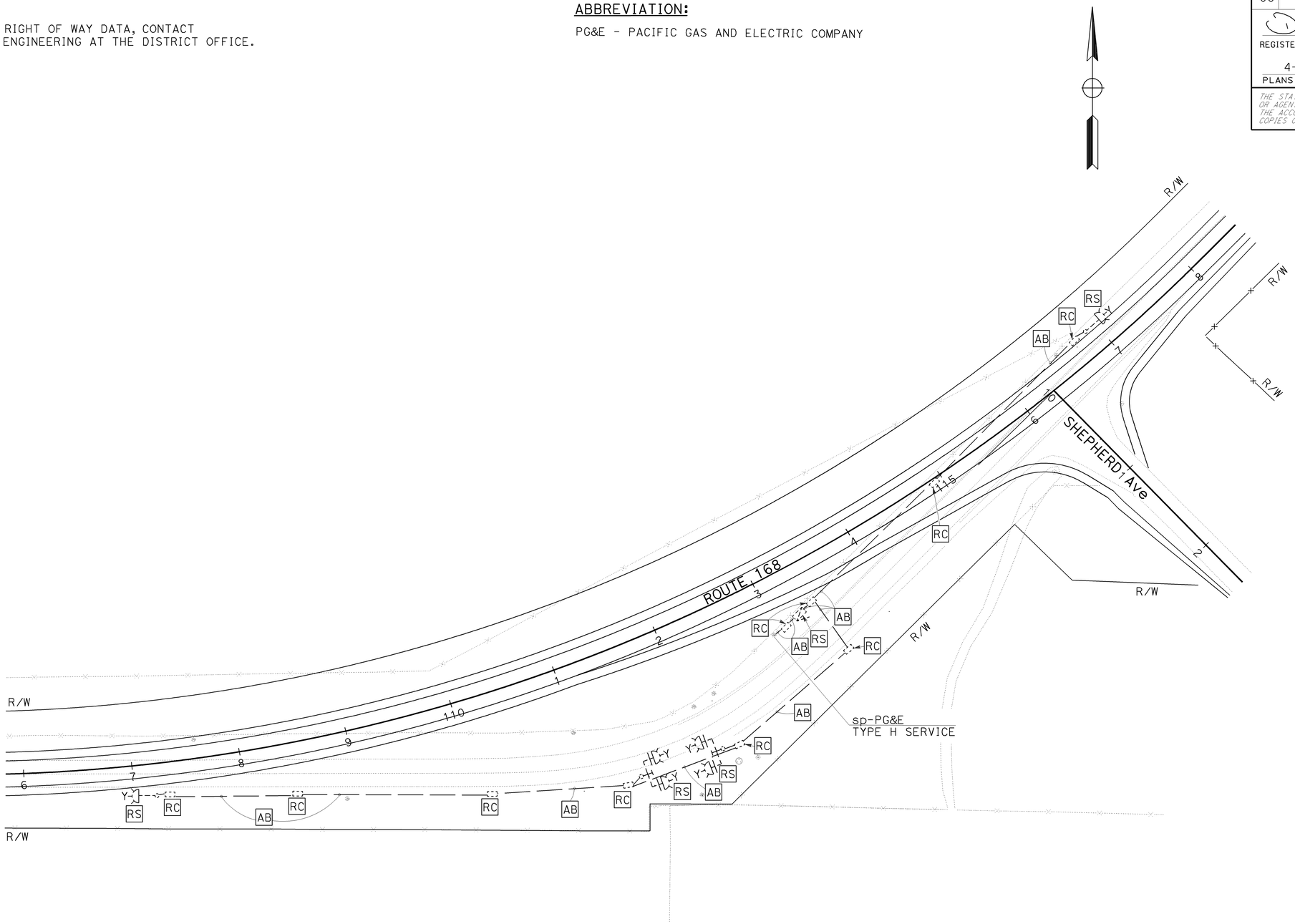

REMOVE EXISTING ELECTRICAL SYSTEM

E-1

APPROVED FOR ELECTRICAL WORK ONLY

SCALE: 1"=50'

STATE OF CALIFORNIA - DEPARTMENT OF TRANSPORTATION
Caltrans® **ELECTRICAL DESIGN**

FUNCTIONAL SUPERVISOR: ALI BAKHDOUD
CALCULATED-DESIGNED BY: DANIEL VO
CHECKED BY: MONA ATTALLAH
REVISED BY
DATE REVISED

LAST REVISION 04-30-12
DATE PLOTTED => 01-MAY-2012
TIME PLOTTED => 15:35

DIST	COUNTY	ROUTE	POST MILES TOTAL PROJECT	SHEET NO.	TOTAL SHEETS
06	Fre	168	R14.4/R15.0	41	52

LICENSED LANDSCAPE ARCHITECT

April 3, 2009
PLANS APPROVAL DATE

The State of California or its officers or agents shall not be responsible for the accuracy or completeness of electronic copies of this plan sheet.

LICENSED LANDSCAPE ARCHITECT — Gregory A. Balzer 3878 — Chapter 6 — 02-28-11 Renewal date — 03-04-09 Date — STATE OF CALIFORNIA

To accompany plans dated 4-30-12

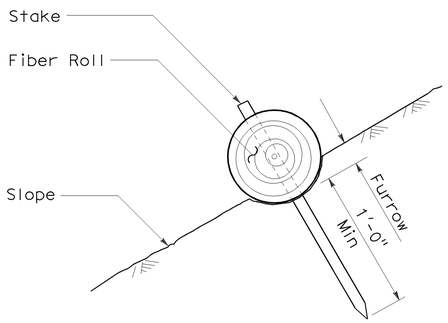

SECTION

FIBER ROLL (TYPE 1)

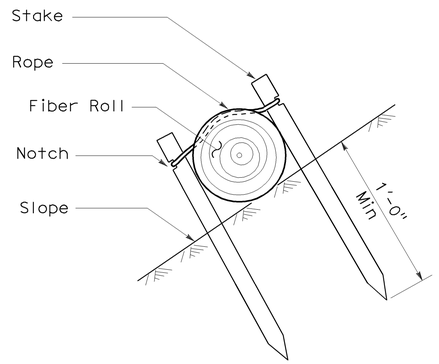

SECTION

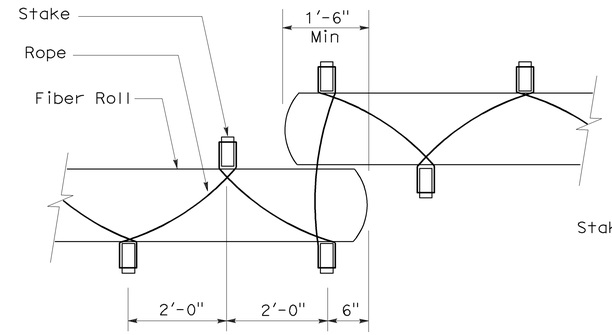

PLAN

FIBER ROLL (TYPE 2)

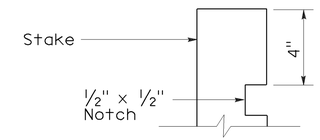

ELEVATION

STAKE NOTCH DETAIL

NOTES:

1. Fiber roll spacing varies depending upon slope inclination.
2. Installations shown in the perspectives are for slope inclination of 10:1 and steeper.

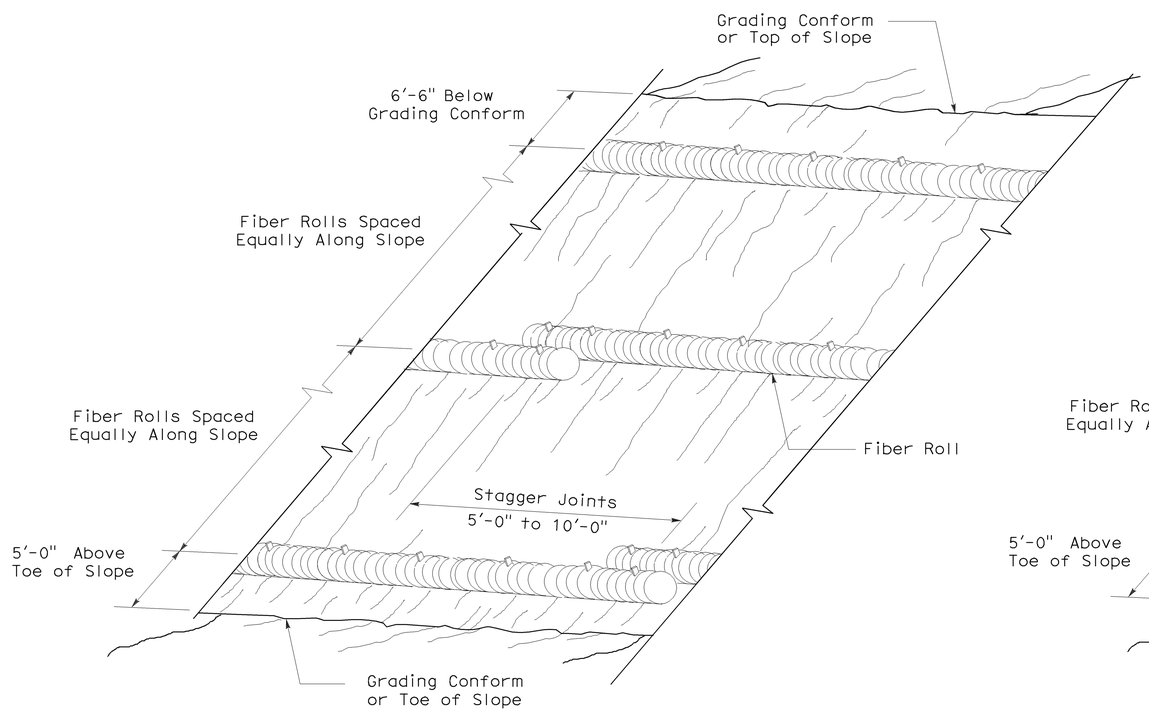

PERSPECTIVE

FIBER ROLL (TYPE 1)

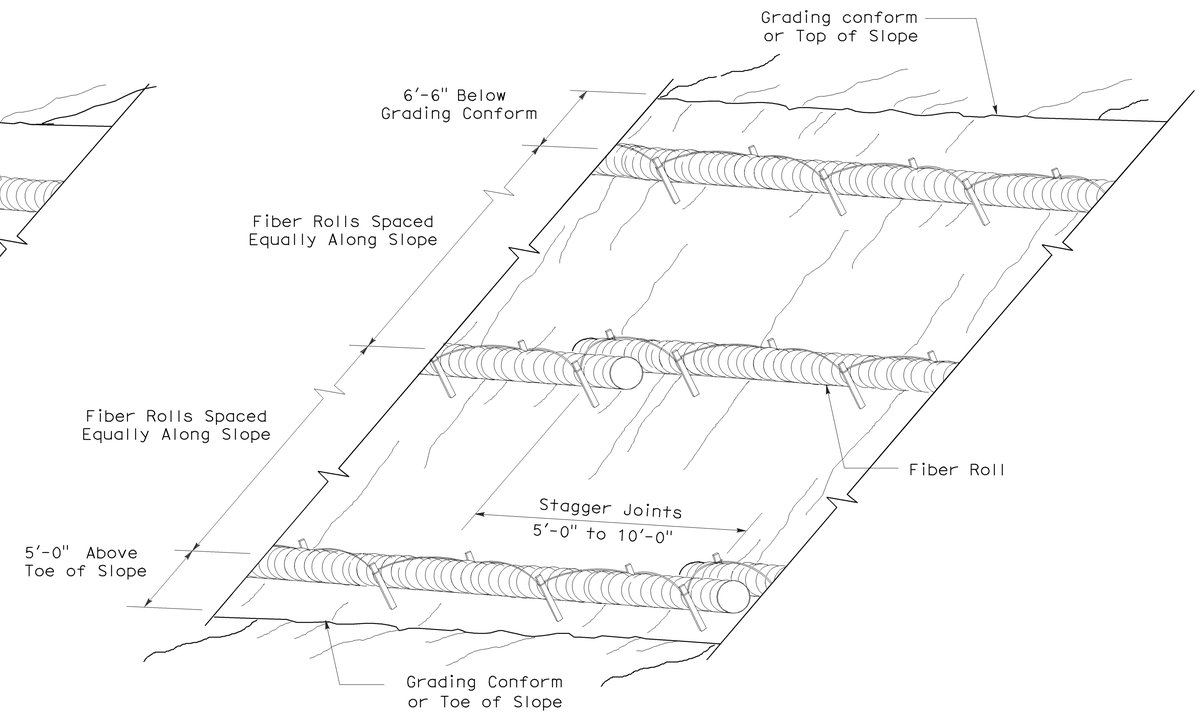

PERSPECTIVE

FIBER ROLL (TYPE 2)

STATE OF CALIFORNIA
DEPARTMENT OF TRANSPORTATION

EROSION CONTROL DETAILS (FIBER ROLL)

NO SCALE

RNSP H51 DATED APRIL 3, 2009 SUPERSEDES NSP H51 DATED DECEMBER 1, 2006 THAT SUPPLEMENTS THE STANDARD PLANS BOOK DATED MAY 2006.

REVISED NEW STANDARD PLAN RNSP H51

2006 REVISED NEW STANDARD PLAN RNSP H51

3-4-09

DIST	COUNTY	ROUTE	POST MILES TOTAL PROJECT	SHEET NO.	TOTAL SHEETS
06	Fre	168	R14.4/R15.0	42	52

Randell D. Hiatt
REGISTERED CIVIL ENGINEER

June 6, 2008
PLANS APPROVAL DATE

REGISTERED PROFESSIONAL ENGINEER
Randell D. Hiatt
No. C50200
Exp. 6-30-09
CIVIL
STATE OF CALIFORNIA

The State of California or its officers or agents shall not be responsible for the accuracy or completeness of electronic copies of this plan sheet.

To accompany plans dated 4-30-12

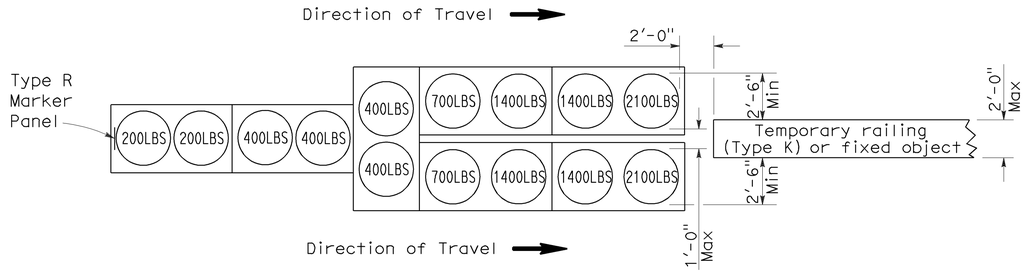

ARRAY 'TU14'

Approach speed 45 mph or more

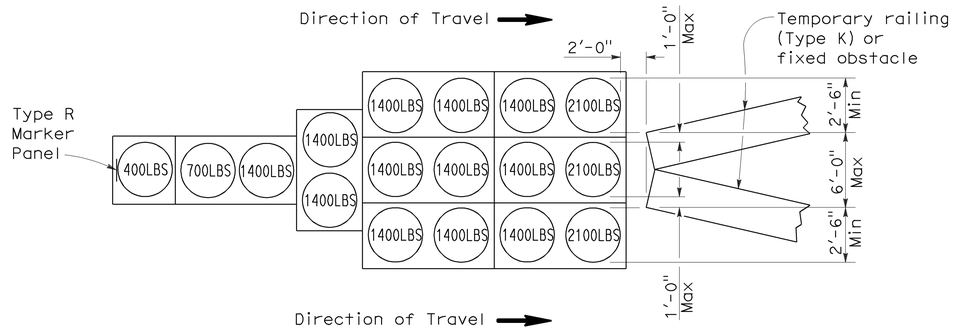

ARRAY 'TU17'

Approach speed less than 45 mph

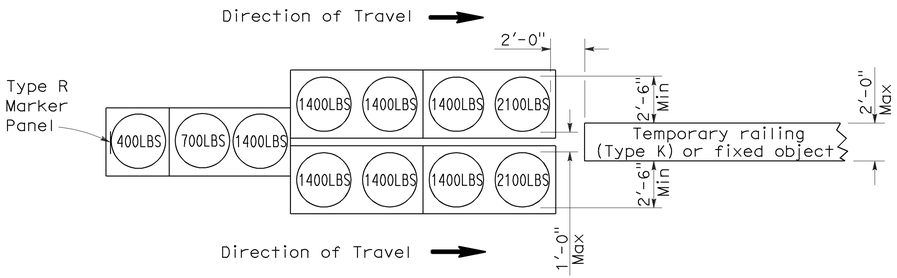

ARRAY 'TU11'

Approach speed less than 45 mph

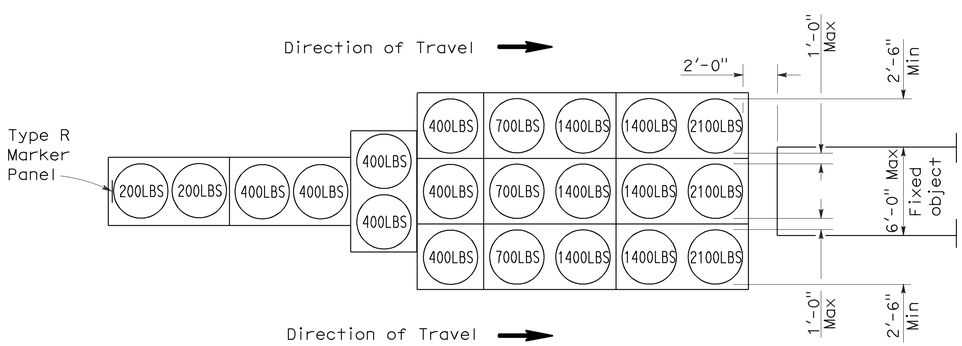

ARRAY 'TU21'

Approach speed 45 mph or more

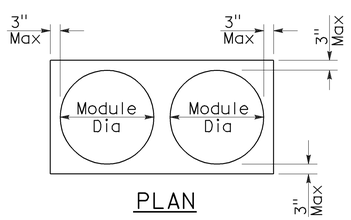

PLAN

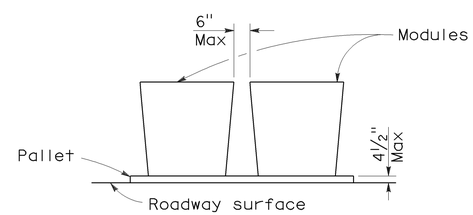

ELEVATION

CRASH CUSHION PALLET DETAIL

See Note 7

NOTES:

1. (XXX) Indicates sand filled module location and weight of sand in pounds for each module. Module spacing is based on the greater diameter of the module.
2. All sand weights are nominal.
3. Temporary crash cushion arrays shall not encroach on the traveled way.
4. Place the top of Type R marker panel 1" below the module lid.
5. Refer to Standard Plan A73B for marker details.
6. Approach speeds indicated conform to NCHRP 350 Report criteria.
7. Use of pallets is optional.

STATE OF CALIFORNIA
DEPARTMENT OF TRANSPORTATION

TEMPORARY CRASH CUSHION, SAND FILLED (UNIDIRECTIONAL)

NO SCALE

RSP T1A DATED JUNE 6, 2008 SUPERSEDES STANDARD PLAN T1A
DATED MAY 1, 2006 - PAGE 211 OF THE STANDARD PLANS BOOK DATED MAY 2006.

REVISED STANDARD PLAN RSP T1A

2006 REVISED STANDARD PLAN RSP T1A

5-15-08

DIST	COUNTY	ROUTE	POST MILES TOTAL PROJECT	SHEET NO.	TOTAL SHEETS
06	Fre	168	R14.4/R15.0	43	52

Randell D. Hiatt
REGISTERED CIVIL ENGINEER

June 6, 2008
PLANS APPROVAL DATE

REGISTERED PROFESSIONAL ENGINEER
Randell D. Hiatt
No. C50200
Exp. 6-30-09
CIVIL
STATE OF CALIFORNIA

The State of California or its officers or agents shall not be responsible for the accuracy or completeness of electronic copies of this plan sheet.

To accompany plans dated 4-30-12

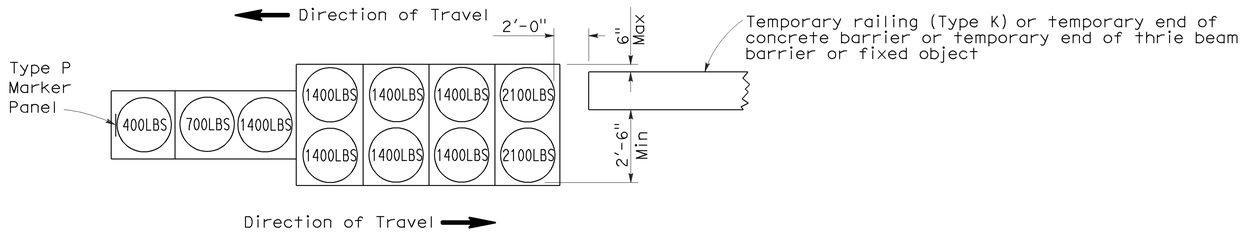

ARRAY 'TB11'

Approach speed less than 45 mph

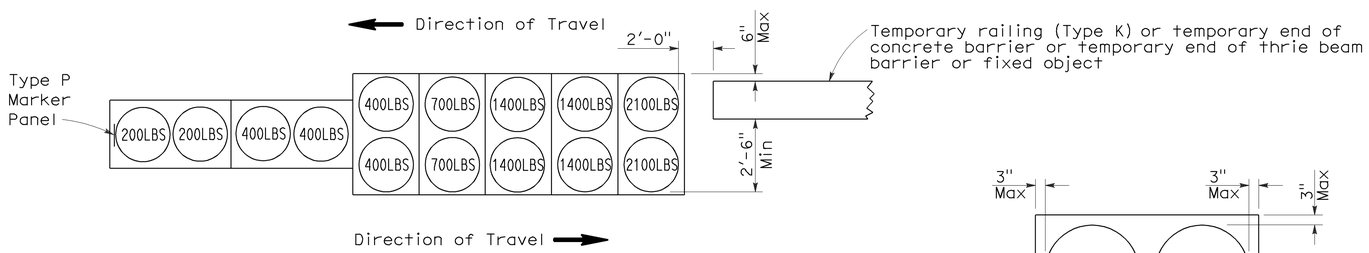

ARRAY 'TB14'

Approach speed 45 mph or more

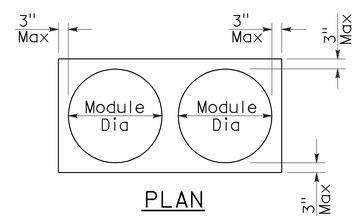

PLAN

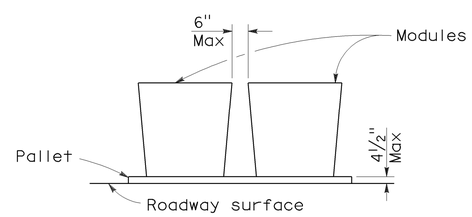

ELEVATION

CRASH CUSHION PALLET DETAIL

See Note 7

NOTES:

1. (XXX) Indicates sand filled module location and weight of sand in pounds for each module. Module spacing is based on the greater diameter of the module.
2. All sand weights are nominal.
3. Temporary crash cushion arrays shall not encroach on the traveled way.
4. Place the Type P marker panel so that the bottom of the panel rests upon the pallet.
5. Refer to Standard Plan A73B for marker details.
6. Approach speeds indicated conform to NCHRP 350 Report criteria.
7. Use of pallets is optional.

STATE OF CALIFORNIA
DEPARTMENT OF TRANSPORTATION

TEMPORARY CRASH CUSHION, SAND FILLED (BIDIRECTIONAL)

NO SCALE

RSP T1B DATED JUNE 6, 2008 SUPERSEDES STANDARD PLAN T1B
DATED MAY 1, 2006 - PAGE 212 OF THE STANDARD PLANS BOOK DATED MAY 2006.

REVISED STANDARD PLAN RSP T1B

2006 REVISED STANDARD PLAN RSP T1B

5-15-08

DIST	COUNTY	ROUTE	POST MILES TOTAL PROJECT	SHEET NO.	TOTAL SHEETS
06	Fre	168	R14.4/R15.0	44	52

Randell D. Hiatt
REGISTERED CIVIL ENGINEER

June 6, 2008
PLANS APPROVAL DATE

REGISTERED PROFESSIONAL ENGINEER
Randell D. Hiatt
No. C50200
Exp. 6-30-09
CIVIL
STATE OF CALIFORNIA

The State of California or its officers or agents shall not be responsible for the accuracy or completeness of electronic copies of this plan sheet.

To accompany plans dated 4-30-12

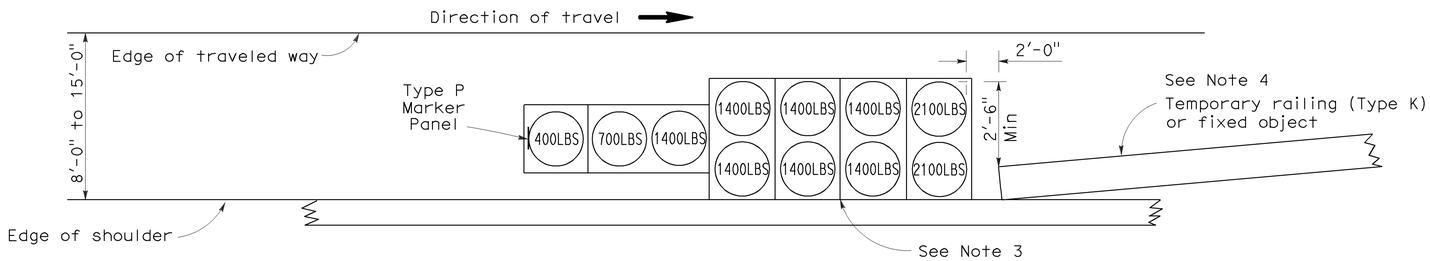

ARRAY 'TS11'

Approach speed less than 45 mph
See Note 9

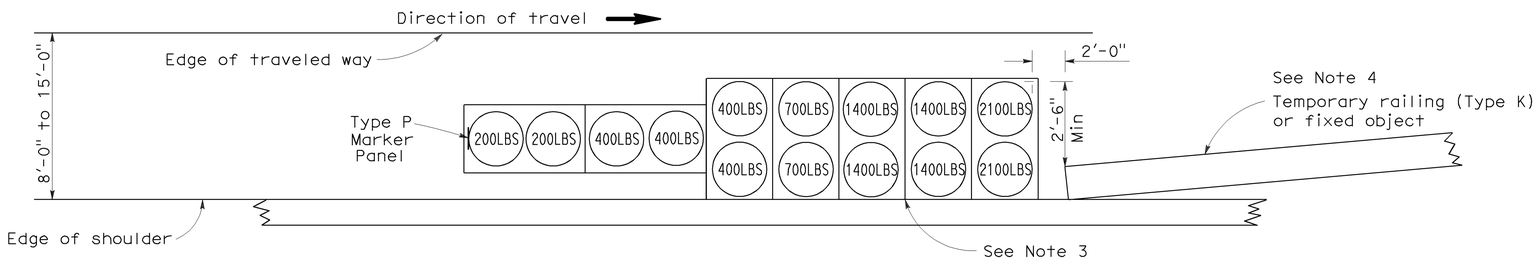

ARRAY 'TS14'

Approach speed 45 mph or more
See Note 9

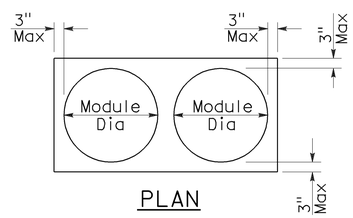

PLAN

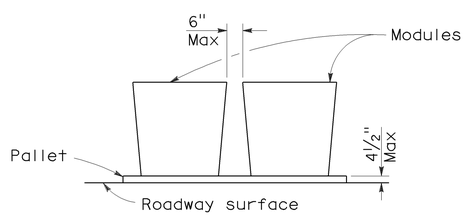

ELEVATION

CRASH CUSHION PALLET DETAIL

See Note 11

NOTES:

1. (XXX) Indicates sand filled module location and weight of sand in pounds for each module. Module spacing is based on the greater diameter of the module.
2. All sand weights are nominal.
3. The temporary crash cushion arrays shown on this plan shall be used only in locations where there will be traffic on one side of the temporary crash cushion array.
4. If the fixed object or approach end of the temporary railing is less than 15'-0" from the edge of traveled way, a temporary crash cushion is required in a construction or work zone.
5. Temporary crash cushion arrays shall not encroach on the traveled way.
6. Arrays for median shoulders shall conform to details shown on this plan for outside shoulders.
7. Place the Type P marker panel so that the bottom of the panel rests upon the pallet and faces traffic.
8. Refer to Standard Plan A73B for marker details.
9. For shoulder widths less than 8'-0", appropriate approved crash cushion protection, other than sand filled modules, shall be provided at fixed objects and at approach ends of temporary railing. The specific type of crash cushion shall be as shown on the project plans or as specified in the Special Provisions, or if not shown on the project plans or specified in the Special Provisions, shall be as approved by the Engineer.
10. Approach speeds indicated conform to NCHRP 350 Report criteria.
11. Use of pallets is optional.

STATE OF CALIFORNIA
DEPARTMENT OF TRANSPORTATION

TEMPORARY CRASH CUSHION, SAND FILLED (SHOULDER INSTALLATIONS)

NO SCALE

RSP T2 DATED JUNE 6, 2008 SUPERSEDES STANDARD PLAN T2
DATED MAY 1, 2006 - PAGE 213 OF THE STANDARD PLANS BOOK DATED MAY 2006.

REVISED STANDARD PLAN RSP T2

2006 REVISED STANDARD PLAN RSP T2

5-15-08

Dist	COUNTY	ROUTE	POST MILES TOTAL PROJECT	SHEET No.	TOTAL SHEETS
06	Fre	168	R14.4/R15.0	45	52

Randell D. Hiatt
REGISTERED CIVIL ENGINEER

May 20, 2011
PLANS APPROVAL DATE

REGISTERED PROFESSIONAL ENGINEER
Randell D. Hiatt
No. C50200
Exp. 6-30-11
CIVIL
STATE OF CALIFORNIA

The State of California or its officers or agents shall not be responsible for the accuracy or completeness of electronic copies of this plan sheet.

To accompany plans dated 4-30-12

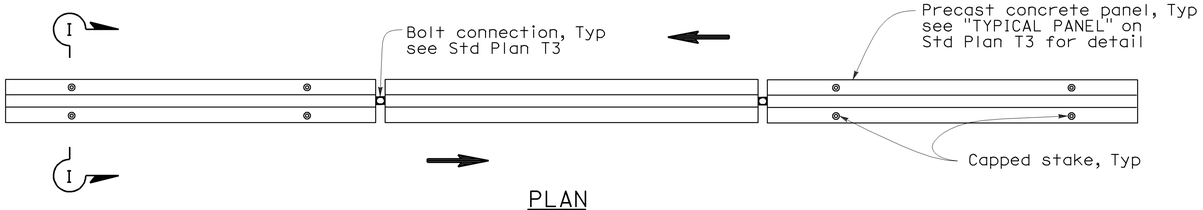

PLAN

RAILING STAKING CONFIGURATION FOR TWO-WAY TRAFFIC

See Note 1

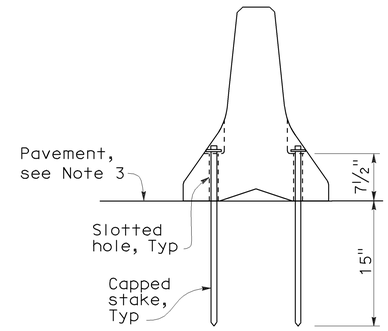

SECTION I-I

NOTES:

1. Where Type K Temporary Railing is placed as a temporary or long term barrier in two-way traffic on highways with less than 24" from the edge of traveled way, use four capped stakes per every other panel with end panels staked.
2. Where Type K Temporary Railing is placed 3" to 24" from the edge of an excavation on highways, use two capped stakes per panel along the traffic side.
3. Staked Type K Temporary Railing must be supported by at least 4" thick concrete, hot mix asphalt or existing asphalt concrete pavement.
4. The minimum yield strength for the washer must be 60,000 psi.
5. Direction of adjacent traffic indicated by ⟶.

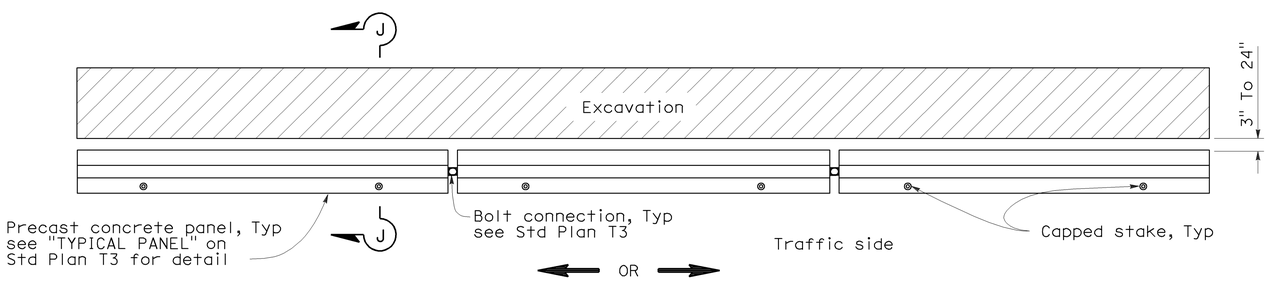

PLAN

RAILING STAKING CONFIGURATION ADJACENT TO AN EXCAVATION

See Note 2

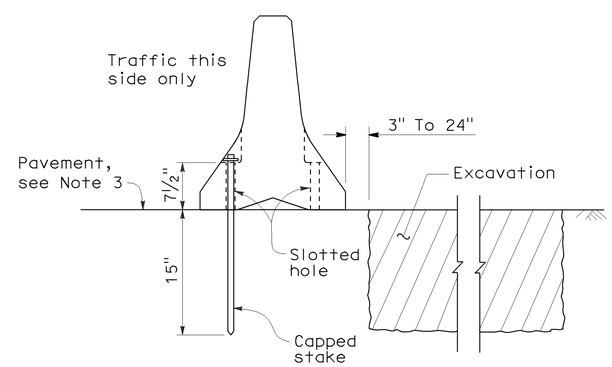

SECTION J-J

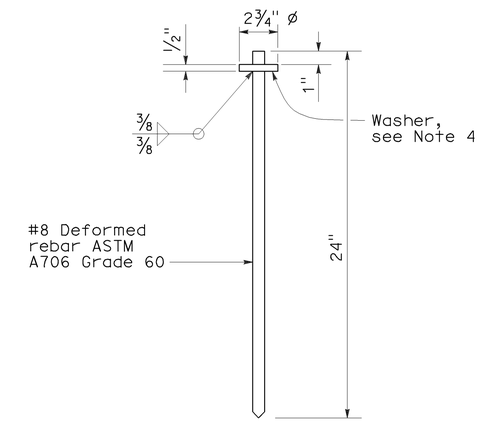

CAPPED STAKE DETAIL

STATE OF CALIFORNIA
DEPARTMENT OF TRANSPORTATION

TEMPORARY RAILING (TYPE K)

NO SCALE

NSP T3A DATED MAY 20, 2011 SUPPLEMENTS
THE STANDARD PLANS BOOK DATED MAY 2006.

NEW STANDARD PLAN NSP T3A

2006 NEW STANDARD PLAN NSP T3A

DIST	COUNTY	ROUTE	POST MILES TOTAL PROJECT	SHEET NO.	TOTAL SHEETS
06	Fre	168	R14.4/R15.0	46	52

REGISTERED CIVIL ENGINEER

November 17, 2006
PLANS APPROVAL DATE

REGISTERED PROFESSIONAL ENGINEER — Greg W. Edwards — No. C36386 — Exp. 6-30-08 — CIVIL — STATE OF CALIFORNIA

The State of California or its officers or agents shall not be responsible for the accuracy or completeness of electronic copies of this plan sheet.

To accompany plans dated 4-30-12

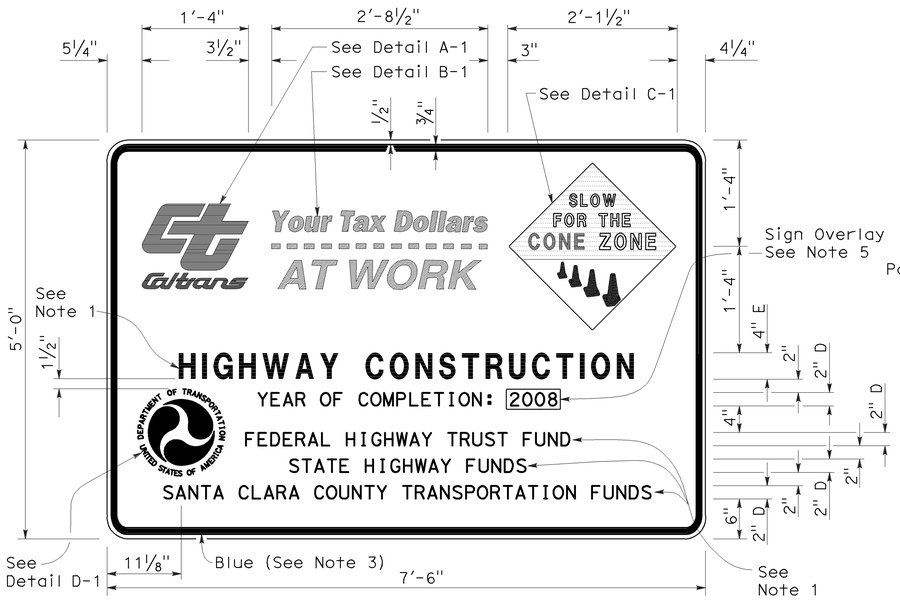

TYPE 1

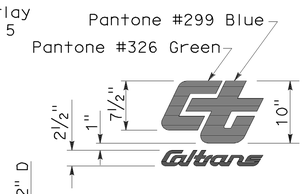

DETAIL A-1

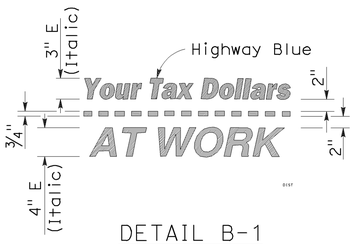

DETAIL B-1
(See Note 3)

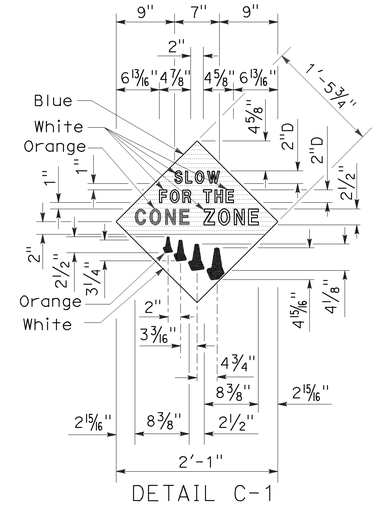

DETAIL C-1
(See Note 4)

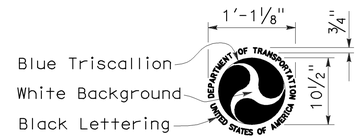

DETAIL D-1
(See Note 6)

NOTES:

1. The sign messages shown for type of project and fund types are examples only. See the Special Provisions for the applicable type of project and fund type messages to be used.
2. Except as otherwise shown, the legend of sign shall be black on a white background (non-reflective).
3. The border of the signs and details "B-1" and "B-2" shall be blue (non-reflective).
4. The diamond in details "C-1" and "C-2" shall be blue for the background of message, " SLOW FOR THE CONE ZONE", and white background for the orange cones. The color and type of font for the "SLOW FOR THE CONE ZONE" message shall be: "SLOW" white D; "FOR THE" white D; "CONE" orange Arial font; "ZONE" white Arial font.
5. Year of completion of project construction shown on the overlay is an example only. See the Special Provisions.
6. Use when the Project involves Federal Highway Trust Fund.

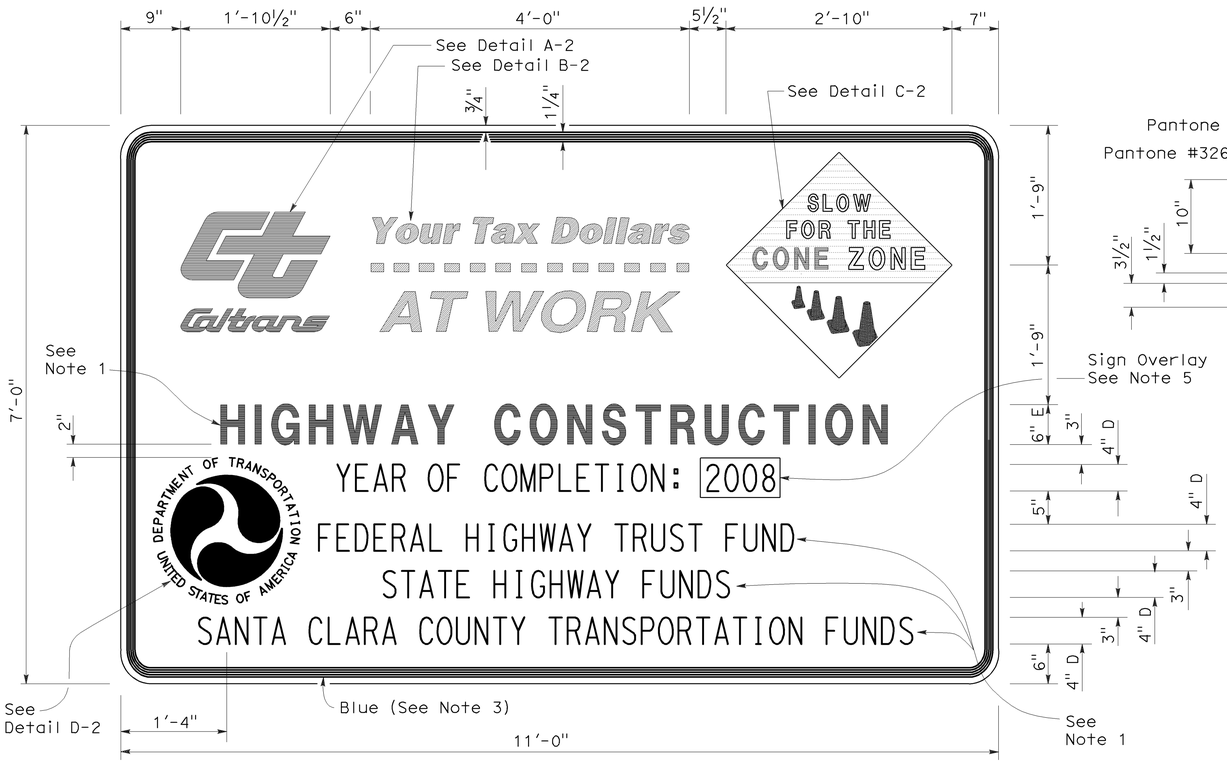

TYPE 2

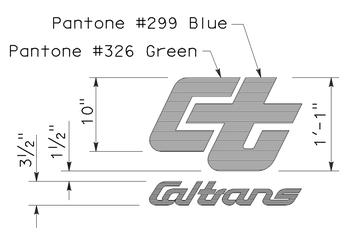

DETAIL A-2

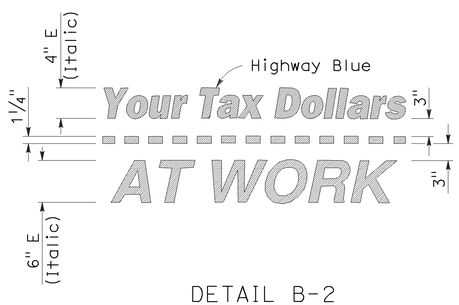

DETAIL B-2
(See Note 3)

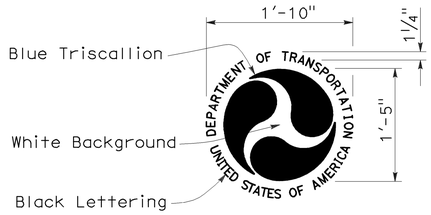

DETAIL D-2
(See Note 6)

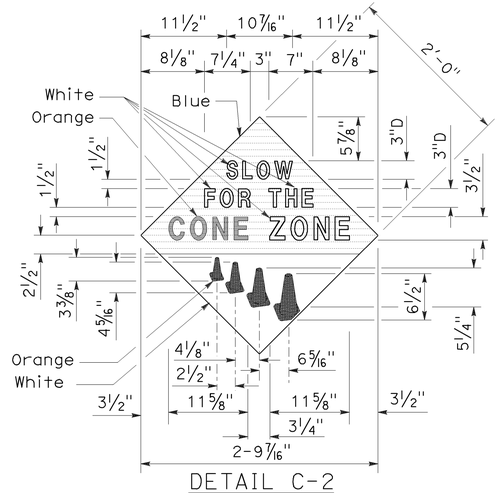

DETAIL C-2
(See Note 4)

STATE OF CALIFORNIA
DEPARTMENT OF TRANSPORTATION

CONSTRUCTION PROJECT FUNDING IDENTIFICATION SIGNS

NO SCALE

RSP T7 DATED NOVEMBER 17, 2006 SUPERSEDES STANDARD PLAN T7
DATED MAY 1, 2006 - PAGE 217 OF THE STANDARD PLANS BOOK DATED MAY 2006.

REVISED STANDARD PLAN RSP T7

2006 REVISED STANDARD PLAN RSP T7

9-7-06

DIST	COUNTY	ROUTE	POST MILES TOTAL PROJECT	SHEET NO.	TOTAL SHEETS
06	Fre	168	R14.4/R15.0	47	52

LICENSED LANDSCAPE ARCHITECT

April 3, 2009
PLANS APPROVAL DATE

The State of California or its officers or agents shall not be responsible for the accuracy or completeness of electronic copies of this plan sheet.

LICENSED LANDSCAPE ARCHITECT — Robert B. Schott 3635 — Registration Expiration 11-30-10 — Renewal Date 2-25-09 — Date — STATE OF CALIFORNIA

To accompany plans dated 4-30-12

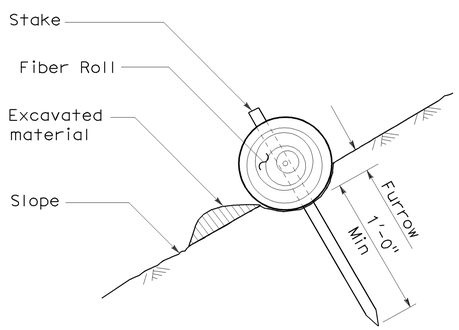

SECTION

TEMPORARY FIBER ROLL (TYPE 1)

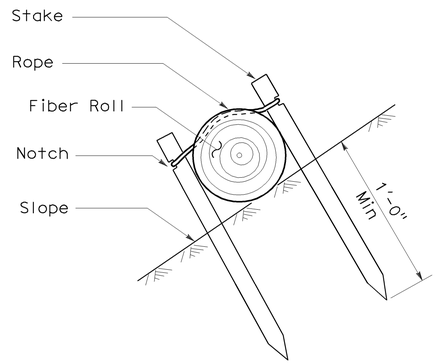

SECTION

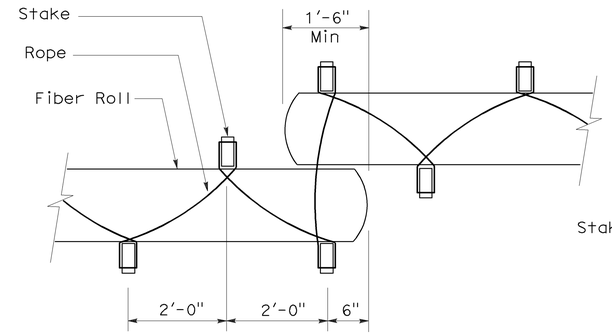

PLAN

TEMPORARY FIBER ROLL (TYPE 2)

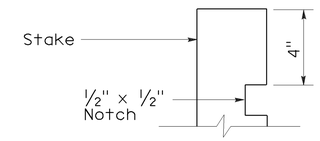

ELEVATION

STAKE NOTCH DETAIL

NOTES:

1. Temporary fiber roll spacing varies depending upon slope inclination.
2. Installations shown in the perspectives are for slope inclination of 10:1 and steeper.

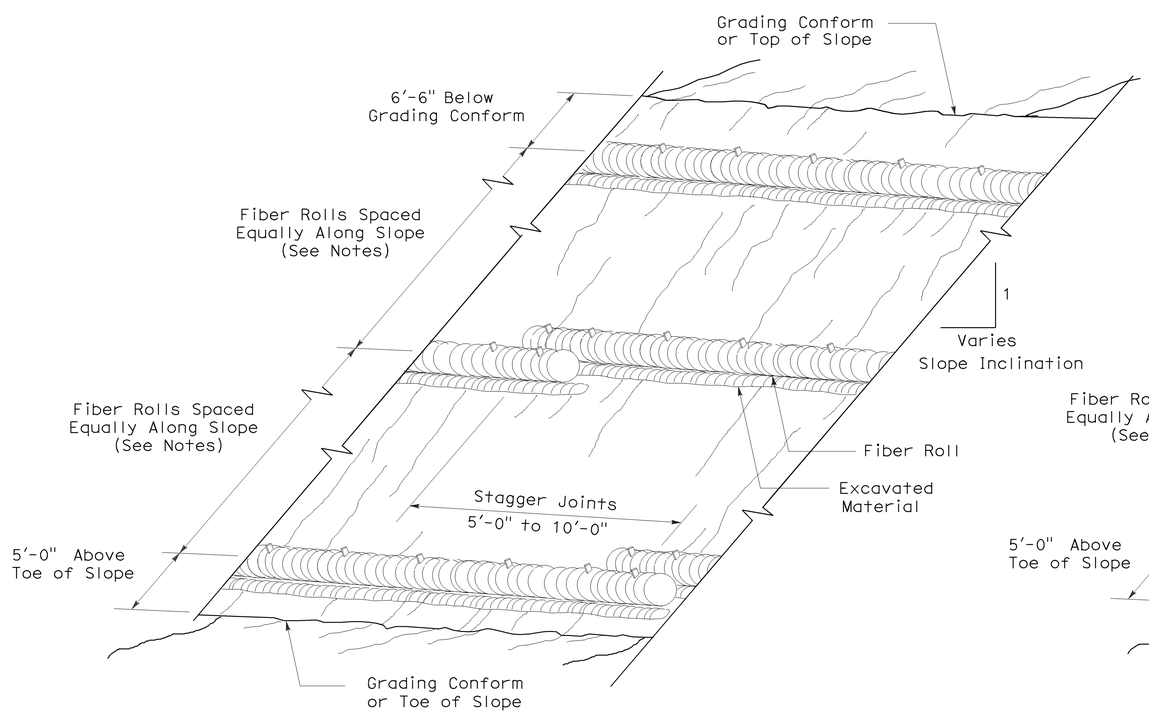

PERSPECTIVE

TEMPORARY FIBER ROLL (TYPE 1)

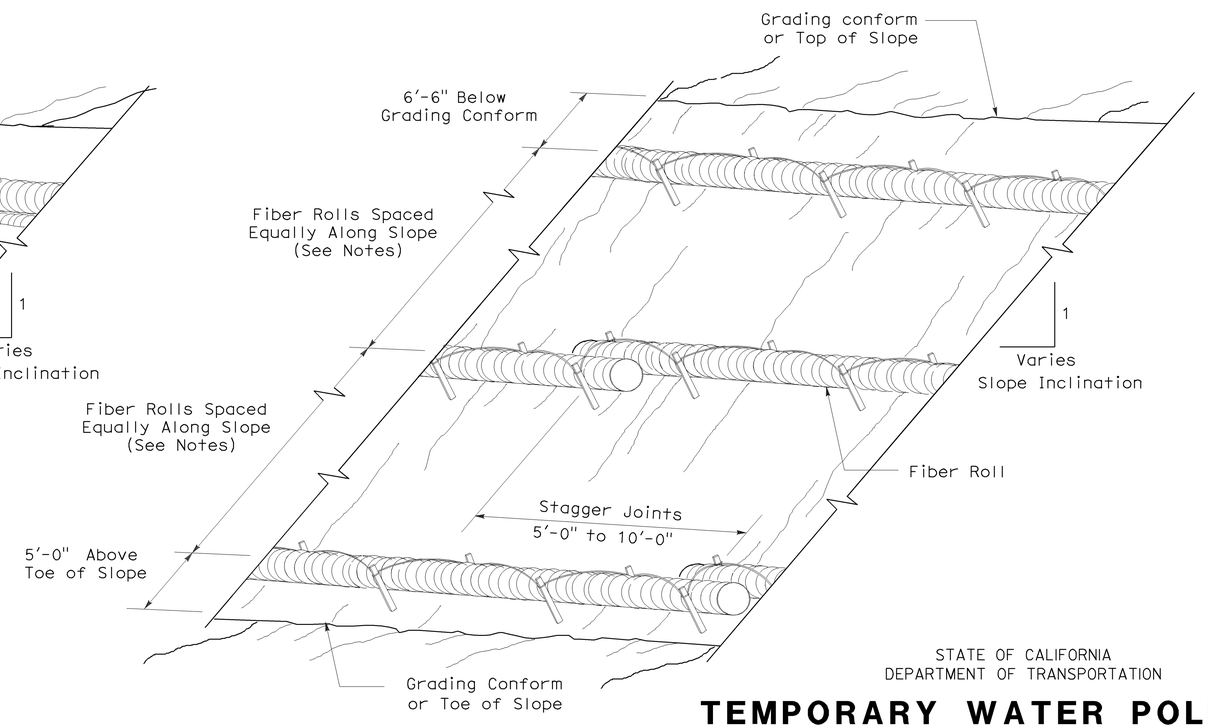

PERSPECTIVE

TEMPORARY FIBER ROLL (TYPE 2)

STATE OF CALIFORNIA
DEPARTMENT OF TRANSPORTATION

TEMPORARY WATER POLLUTION CONTROL DETAILS (TEMPORARY FIBER ROLL)

NO SCALE

RSP T56 DATED APRIL 3, 2009 SUPERSEDES STANDARD PLAN T56
DATED MAY 1, 2006 - PAGE 232 OF THE STANDARD PLANS BOOK DATED MAY 2006.

REVISED STANDARD PLAN RSP T56

2006 REVISED STANDARD PLAN RSP T56

2-23-09

DIST	COUNTY	ROUTE	POST MILES TOTAL PROJECT	SHEET NO.	TOTAL SHEETS
06	Fre	168	R14.4/R15.0	48	52

LICENSED LANDSCAPE ARCHITECT

April 3, 2009
PLANS APPROVAL DATE

LICENSED LANDSCAPE ARCHITECT
Robert B. Schott 3625
Signature
11-30-10
Renewal Date
2-25-09
Date
STATE OF CALIFORNIA

The State of California or its officers or agents shall not be responsible for the accuracy or completeness of electronic copies of this plan sheet.

To accompany plans dated 4-30-12

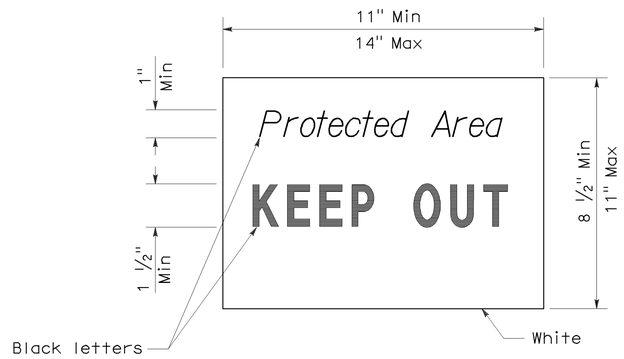

SIGN DETAIL

NOTE:

1. Temporary silt fence and temporary straw bale barrier shown for reference purposes only.

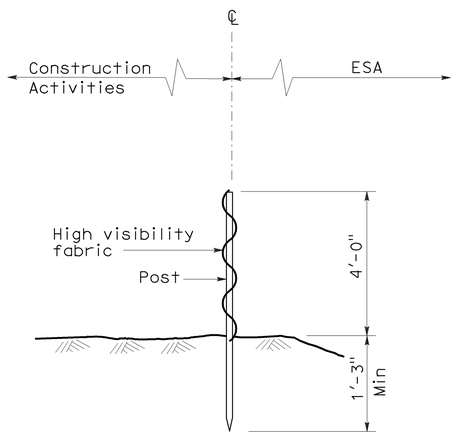

SECTION
TEMPORARY FENCE (TYPE ESA)

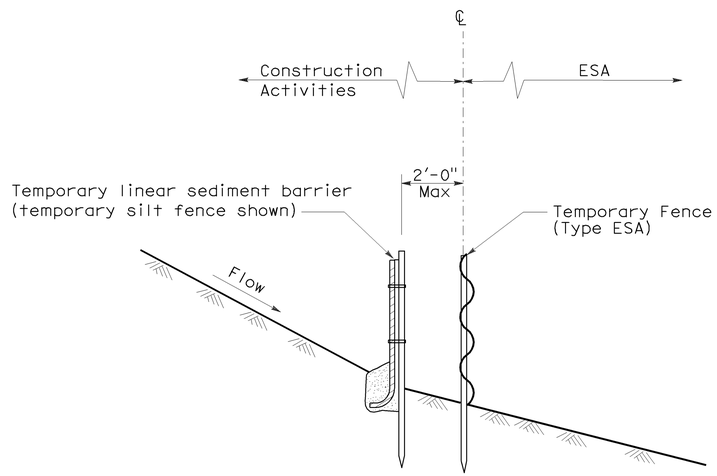

SECTION
PLACEMENT DETAIL
FOR TEMPORARY LINEAR SEDIMENT BARRIER
USED WITH TEMPORARY
FENCE (TYPE ESA)
(See Note 1)

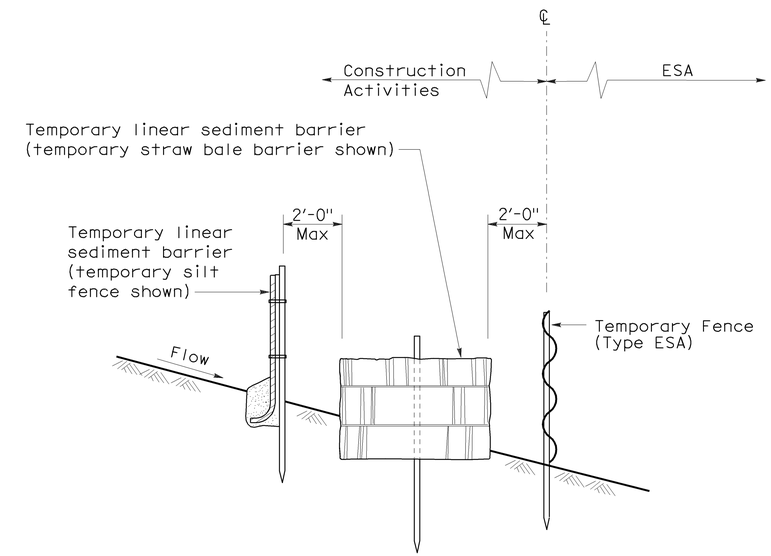

SECTION
PLACEMENT DETAIL
FOR TEMPORARY SILT FENCE
AND TEMPORARY STRAW BALE BARRIER
USED WITH TEMPORARY FENCE (TYPE ESA)
(See Note 1)

STATE OF CALIFORNIA
DEPARTMENT OF TRANSPORTATION

TEMPORARY WATER POLLUTION CONTROL DETAILS [TEMPORARY FENCE (TYPE ESA)]

NO SCALE

NSP T65 DATED APRIL 3, 2009 SUPPLEMENTS
THE STANDARD PLANS BOOK DATED MAY 2006.

NEW STANDARD PLAN NSP T65

2006 NEW STANDARD PLAN NSP T65

DIST	COUNTY	ROUTE	POST MILES TOTAL PROJECT	SHEET NO.	TOTAL SHEETS
06	Fre	168	R14.4/R15.0	49	52

REGISTERED ELECTRICAL ENGINEER

October 5, 2007
PLANS APPROVAL DATE

REGISTERED PROFESSIONAL ENGINEER Jeffery G. McRae No. E14512 Exp. 6-30-08 ELECTRICAL STATE OF CALIFORNIA

The State of California or its officers or agents shall not be responsible for the accuracy or completeness of electronic copies of this plan sheet.

To accompany plans dated 4-30-12

ELECTROLIERS

STANDARD TYPES
15, 15D
15 STRUCTURE
21, 21D STRUCTURE
30
31
32
35
36-20A

High mast light pole

Double Arm lighting standard

Existing electrolier

Electrolier foundation (Future installation)

NOTES:

1. Luminaires shall be 310 W HPS when installed on Type 21, 21D, 30, 31, 32, 35 and 36-20A Standards, unless otherwise specified. Luminaires shall be 200 W HPS when installed on other type standards or poles, unless otherwise specified.
2. Luminaires shall be the cutoff type, ANSI Type Ⅲ medium cutoff lighting distribution, unless otherwise specified.
3. Variations noted adjacent to symbol on project plans.

Electrolier (see project notes or project plans)

Luminaire on wood pole

STANDARD NOTES:

- AB — Abandon. If applied to conduit, remove conductors.
- BC — Install pull box in existing conduit run.
- BP — Pedestrian barricade, type as indicated on plan.
- CB — Install conduit into existing pull box.
- CC — Connect new and existing conduit. Remove existing conductors and install conductors as indicated.
- CF — Conduit to remain for future use. Remove conductors. Install pull wire or rope.
- DH — Detector handhole.
- FA — Foundation to be abandoned.
- IS — Install sign on signal mast arm.
- NS — No slip base on standard.
- PEC — Photoelectric control.
- PEU — Photoelectric unit.
- RC — Equipment or material to be removed and become the property of the Contractor.
- RE — Remove electrolier, fuses and ballast. Tape ends of conductors.
- RL — Relocate equipment.
- RR — Remove and reuse equipment.
- RS — Remove and salvage equipment.
- SC — Splice new to existing conductors.
- SD — Service disconnect.
- SF — Standard to remain for future use. Remove luminaire, pole conductors, fuses and ballast.
- TSP — Telephone service point.

ABBREVIATIONS AND EQUIPMENT DESIGNATIONS

PROPOSED	EXISTING	
BBS	bbs	Battery backup system
BC	bc	Bolt circle
C	C	Conduit
CCTV	cctv	Closed circuit television
CKT	ckt	Circuit
CMS	cms	Changeable message sign
DLC	dlc	Loop detector lead-in cable
EMS	ems	Extinguishable message sign
EVC	evc	Emergency vehicle cable
EVD	evd	Emergency vehicle detector
FB	fb	Flashing beacon
FBCA	fbca	Flashing beacon control assembly
FBS	fbs	Flashing beacon with slip base
FO	fo	Fiber optic
G	G	Ground (Equipment Grounding Conductor)
GFCI	GFCI	Ground fault circuit interrupt
HAR	har	Highway advisory radio
HEX	hex	Hexagonal
HPS	hps	High pressure sodium
IISNS	iisns	Internally illuminated street name sign
ISL	isl	Induction sign lighting
LED	led	Light emitting diode
LMA	lma	Luminaire mast arm
LPS	lps	Low pressure sodium
LTG	ltg	Lighting
LUM	lum	Luminaire
MAT	mat	Mast arm mounting vehicle signal faces, top attachment
MAS	mas	Mast arm mounting vehicle signal faces, side attachment
MAS-4A	mas-4A	Mast arm mounting vehicle signal faces, side attachment - 4 signal section
MAS-4B	mas-4B	
MAS-4C	mas-4C	
MAS-5A	mas-5A	Mast arm mounting vehicle signal faces, side attachment - 5 signal section
MAS-5B	mas-5B	
MC	mc	Mercury contactor
M/M	m/m	Multiple to multiple transformer
MT	mt	Conduit with pull wire or rope only
MTG	mtg	Mounting
	mv	Mercury vapor lighting fixture
N	N	Neutral (Grounded Conductor)
NC	NC	Normally closed
NO	NO	Normally open
PB	pb	Pull box
PEC	pec	Photoelectric control (Type Ⅰ, Ⅱ, Ⅲ, Ⅳ or Ⅴ as shown)
PED	ped	Pedestrian
PEU	peu	Photoelectric unit
PPB	ppb	Pedestrian push button
RL		Relocated equipment
RM	rm	Ramp metering
SB	sb	Slip base
SIC	sic	Signal interconnect cable
SIG	sig	Signal
SMA	sma	Signal mast arm
SNS	sns	Street name sign
SP	sp	Service point
TDC	tdc	Telephone demarcation cabinet
TMS	tms	Traffic monitoring station
TOS	tos	Traffic Operations System
VEH	veh	Vehicle
XFMR	xfmr	Transformer
COMM	comm	Communication
RWIS	rwis	Roadway weather information system

SOFFIT AND WALL MOUNTED LUMINAIRES

Pendant, 70 W HPS unless otherwise specified.

Flush, 70 W HPS unless otherwise specified.

Wall surface, 70 W HPS unless otherwise specified.

Existing soffit or wall luminaire to remain unmodified.

Existing soffit or wall luminaire to be modified as specified.

NOTE:

Arrow indicates "street side" of luminaire.

STATE OF CALIFORNIA
DEPARTMENT OF TRANSPORTATION

ELECTRICAL SYSTEMS (SYMBOLS AND ABBREVIATIONS)

NO SCALE

RSP ES-1A DATED OCTOBER 5, 2007 SUPERSEDES STANDARD PLAN ES-1A
DATED MAY 1, 2006 - PAGE 400 OF THE STANDARD PLANS BOOK DATED MAY 2006.

REVISED STANDARD PLAN RSP ES-1A

2006 REVISED STANDARD PLAN RSP ES-1A

DIST	COUNTY	ROUTE	POST MILES TOTAL PROJECT	SHEET NO.	TOTAL SHEETS
06	Fre	168	R14.4/R15.0	50	52

REGISTERED ELECTRICAL ENGINEER

October 5, 2007
PLANS APPROVAL DATE

REGISTERED PROFESSIONAL ENGINEER Jeffery G. McRae No. E14512 Exp. 6-30-08 ELECTRICAL STATE OF CALIFORNIA

The State of California or its officers or agents shall not be responsible for the accuracy or completeness of electronic copies of this plan sheet.

To accompany plans dated 4-30-12

CONDUIT

PROPOSED	EXISTING	
		Lighting Conduit, unless otherwise indicated or noted
		Traffic signal conduit
C	c	Communication conduit
T	t	Telephone conduit
F	f	Fire alarm conduit
FO	fo	Fiber optic conduit
		Conduit termination (RSP ES-9A C)
R	r	Conduit riser in/on structure or service pole

SERVICE EQUIPMENT

PROPOSED	EXISTING	
OH	oh	Overhead lines
U	U	Wood pole "U" indicates utility owned
		Pole guy with anchor
		Utility transformer - ground mounted
III		Service equipment enclosure type
		Service equipment enclosure door indicates front of enclosure
T	t	Telephone demarcation cabinet

POLE-MOUNTED SERVICE DESIGNATION

Type of installation

TYPE H SERVICE - 28'-10" ← Pole height above grade

ILLUMINATED OVERHEAD SIGN

PROPOSED	EXISTING	
		Overhead sign - Single post
		Overhead sign - Two post
		Overhead sign - Mounted on structure
		Overhead sign with electrolier

SIGNAL EQUIPMENT

PROPOSED	EXISTING	
		Pedestrian signal face
		Pedestrian push button post
		Pedestrian barricade
		Vehicle signal face (with backplate, 3-Section: red, yellow and green)
		Vehicle signal face with angle visors
PV	PV	Modifications of basic symbols: "L" indicates all non-arrow sections louvered "LG" indicates louvered green section only "PV" indicates 12" programmed visibility sections "8" indicates all 8" sections (only when specified)
		Type 15TS and Vehicle signal face
		Vehicle signal face with red, yellow and green left arrow sections
		Vehicle signal face with red and yellow sections and up green arrow
		Vehicle signal face (5 Section) with red, yellow and green sections and yellow and green right arrows
		Type 1 Standard and attached vehicle signal faces
		Standard with signal mast arm only and attached vehicle signal faces and internally illuminated street name sign
		Type 33 Standard, Left-turn vehicle signal face and sign
		Standard with luminaire and signal mast arms and attached vehicle signal faces
		Cantilever flashing beacon Type 9 Frame, with a sign unless otherwise specified or indicated
		Type 15-FBS Standard with two vehicle signal face sections with lens, backplate and visor with a sign
R	Y	Flashing beacon. One vehicle signal face section with lens, backplate and visor. "R" indicates red indication, "Y" indicates yellow indication
		Controller assembly. Door indicates front of cabinet

SIGNAL EQUIPMENT Cont

PROPOSED	EXISTING	
		Guard post
		Type 1 Standard with "Meter On" sign
		Emergency Vehicle detector

NOTES:

1. All signal sections shall be 12" unless shown otherwise.
2. Signal heads shall be provided with backplates unless shown otherwise.
3. Signal indication shall be LED.

STATE OF CALIFORNIA
DEPARTMENT OF TRANSPORTATION

ELECTRICAL SYSTEMS (SYMBOLS AND ABBREVIATIONS)

NO SCALE

RSP ES-1B DATED OCTOBER 5, 2007 SUPERCEDES STANDARD PLAN ES-1B DATED MAY 1, 2006 - PAGE 401 OF THE STANDARD PLANS BOOK DATED MAY 2006.

REVISED STANDARD PLAN RSP ES-1B

2006 REVISED STANDARD PLAN RSP ES-1B

7-10-07

DIST	COUNTY	ROUTE	POST MILES TOTAL PROJECT	SHEET NO.	TOTAL SHEETS
06	Fre	168	R14.4/R15.0	51	52

REGISTERED ELECTRICAL ENGINEER

October 5, 2007
PLANS APPROVAL DATE

REGISTERED PROFESSIONAL ENGINEER Jeffery G. McRae No. E14512 Exp. 6-30-08 ELECTRICAL STATE OF CALIFORNIA

The State of California or its officers or agents shall not be responsible for the accuracy or completeness of electronic copies of this plan sheet.

To accompany plans dated 4-30-12

EQUIPMENT IDENTIFICATION

ILLUMINATED SIGN IDENTIFICATION NUMBER:

Sign No. 12345
10 ISL SCI 1.0

- Sign number - Place on post or structure
- Transformer rating (kVA)
- Lighting control type
- Number and type of fixtures

Do NOT place on standard or structure

ELECTROLIER OR EQUIPMENT IDENTIFICATION NUMBER:

12345 - 15'-0"

- Mast arm length, if shown. Do not place on standard or structure.
- Equipment number - Place on standard or structure. Existing equipment numbers are shown in parenthesis

CONDUIT AND CONDUCTOR IDENTIFICATION:

1½"C, 2#10, 15#14, 2 DLC

- Number and size of conductors and cables
- Size of conduit in inches

Ø1, Ø2, Ø2P, etc.	Traffic phase identification for signal faces, detectors and phase diagrams
1 2 3	Project note numbers
A B C	Equipment description, installation or item numbers
1 2 3	Conduit run numbers

SIGNAL AND LIGHTING STANDARD (TYPICAL DESIGNATION):

19A - 3 - 100

- Wind velocity = 100 mph
- Case 3 arm loading
- Standard type
- Standard Plan sheet number
- Detail number or letter

MISCELLANEOUS EQUIPMENT

PROPOSED	EXISTING	
CMS	cms	Changeable message sign
		Closed circuit television camera
		Highway advisory radio pole and antenna
EMS	ems	Extinguishable message sign
M V	m v	Detection device M = Microwave sensor V = Video image sensor

WIRING DIAGRAM LEGEND

P	Pole
CB	Circuit breaker
A	Ampere
V	Volt
M	Metered
UM	Unmetered
NB	Neutral bus
GB	Ground bus
G	Equipment grounding conductor
N	Grounded conductor (Neutral)

- External conductor
- Conductor or bus
- Tie point
- Contactor coil
- Contactor, Contact NO
- Terminal blocks
- Contactor, Contact NC
- Enclosure bond
- Grounding electrode
- Circuit breaker
- Receptacle

PULL BOXES

PROPOSED EXISTING

Pull box-No. 5 unless otherwise indicated or noted.

3 9A(21)

Pull box-Additional designations or descriptions

3 = No. 3½ pull box
5 = No. 5 pull box
6 = No. 6 pull box
7 = No. 7 (Ceiling pull box)
8 = No. 8 (Pendant soffit pull box)
9 = No. 9 pull box
9A = No. 9A pull box

(C) = Communications pull box
(E) = Pull box with extension
(S) = Sprinkler control pull box
(21) = Anchor bolts and conduit for future installation of Type 21 Standard
(T) = Traffic pull box

VEHICLE DETECTORS

5 J 9 U

- Vehicle detector designation
- U = Upper
- L = Lower
- Slot number in input file
- Input file (I or J)
- Phase

PROPOSED	EXISTING	
		Type A detector loop. Outline of sawcut shown.
		Type B detector loop. Outline of sawcut shown.
		Type C detector loop. Outline of sawcut shown.
		Type D detector loop. Outline of sawcut shown.
		Type E detector loop. Outline of sawcut shown.
		Type Q detector loop. Outline of sawcut shown.
		Magnetic detector
DH	dh	Detector handhole
		Microwave or video detection zone

STATE OF CALIFORNIA
DEPARTMENT OF TRANSPORTATION

ELECTRICAL SYSTEMS (SYMBOLS AND ABBREVIATIONS)

NO SCALE

RSP ES-1C DATED OCTOBER 5, 2007 SUPERCEDES STANDARD PLAN ES-1C DATED MAY 1, 2006 - PAGE 402 OF THE STANDARD PLANS BOOK DATED MAY 2006.

REVISED STANDARD PLAN RSP ES-1C

2006 REVISED STANDARD PLAN RSP ES-1C

DIST	COUNTY	ROUTE	POST MILES TOTAL PROJECT	SHEET NO.	TOTAL SHEETS
06	Fre	168	R14.4/R15.0	52	52

REGISTERED ELECTRICAL ENGINEER

October 5, 2007
PLANS APPROVAL DATE

REGISTERED PROFESSIONAL ENGINEER
Jeffery G. McRae
No. E14512
Exp. 6-30-08
ELECTRICAL
STATE OF CALIFORNIA

The State of California or its officers or agents shall not be responsible for the accuracy or completeness of electronic copies of this plan sheet.

To accompany plans dated 4-30-12

2006 REVISED STANDARD PLAN RSP ES-2C

NOTES-TYPE III SERVICE EQUIPMENT ENCLOSURES:

1. Service equipment enclosure and metering equipment shall meet the requirements of the service utility. The meter area shall have a sealable, lockable, weathertight cover that can be removed without the use of tools.

2. Service equipment enclosures shall be factory wired and conform to NEMA standards.

3. Dimensions of service equipment enclosures shall meet the requirements of the service utility.

4. The dead front panels on Type III service equipment enclosures shall have a continuous stainless steel or aluminum piano hinge. The panel in front of the breakers shall be secured with a latch or captive screws. No live parts shall be mounted on the dead front panel.

5. The exterior door shall have provisions for padlocking. The padlock hole shall be a minimum diameter of 7/16".

6. Enclosures housing transformers of more than one kVA shall have effective screened ventilation louver of not less than 50 square inches. Screen shall be stainless steel No. 304, with a No. 10 size mesh. Framed screen shall be secured with at least four bolts.

7. Fasteners on the exterior of the enclosure shall be vandal-resistant and shall not be removable from the exterior. Exterior screws, nuts, bolts and washers shall be stainless steel.

8. Landing lugs for incoming service conductors shall be compatible with either copper or aluminum conductors sized to suit the conductors shown on the plan. Landing lugs shall be copper or tin-plated aluminum. Neutral bus shall be rated for 125 A and be suitable for copper or aluminum conductors unless otherwise specified. The terminal shall include but not be limited to:

   a) Incoming terminals (landing lugs)
   b) Neutral lugs
   c) Solid neutral terminal strip

9. At least 6 standard single pole circuit breaker spaces, 3/4" nominal, shall be provided for branch circuits. Circuit breaker interiors shall be copper. Interiors of enclosure shall accept plug-in or cable-in/cable-out circuit breakers.

10. Control wiring shall be 600 V, 14 stranded machine tool wire. Where subject to flexing, 19 strand wire shall be used.

11. Main bus shall be rated for 125 A and shall be tin-plated copper.

12. A plastic laminated wiring diagram shall be provided with brass mounting eyelets and attached to the inside of the enclosure and the wiring diagram shall be affixed to the interior with a UL or ETL approved method.

13. An engraved phenolic nameplate on the dead front panel indicating the function of each circuit or device shall be installed with stainless steel rivets or stainless steel screws:

    a) Adjacent to the breaker or device with character size a minimum of 1/8".

    b) At the top of the exterior door panel indicating State system number, voltage level and number of phases with character size a minimum of 3/16".

14. The plan shows the approximate location of devices within the enclosure. Components may be rearranged, however, the "working" clearances within the service equipment enclosure shall be maintained.

15. In unpaved areas a raised portland cement concrete pad 2'-0" x 4" x width of foundation shall be constructed in front of new service equipment enclosure installation. Pad shall be set to elevation of foundation.

16. Foundation shall extend 2" minimum beyond edge of service equipment enclosure.

17. Internal bus, where shown, is typical only. Alternative design of proposed service equipment enclosure shall be submitted to the Engineer for approval.

18. Plug-in circuit breakers may be mounted in the vertical or horizontal position. Cable-in/cable-out circuit breakers shall be mounted in the vertical position.

19. Type III-AF and Type III-BF service equipment enclosures shall have the meter viewing windows located on the front side of the service equipment enclosures.

20. Type III-AR and Type III-BR service equipment enclosures shall be similarly constructed as Type III-AF and Type III-BF respectively, except the meter viewing windows shall be located on the back side of the service equipment enclosures.

21. Minimum clearance shall be required for front and back of service equipment enclosure per National Electrical Code, Article 110.26, "Spaces About Electric Equipment (600 Volts, Nominal, or Less)."

STATE OF CALIFORNIA
DEPARTMENT OF TRANSPORTATION

ELECTRICAL SYSTEMS (SERVICE EQUIPMENT NOTES TYPE III SERIES)

NO SCALE

RSP ES-2C DATED OCTOBER 5, 2007 SUPERCEDES STANDARD PLAN ES-2C
DATED MAY 1, 2006 - PAGE 405 OF THE STANDARD PLANS BOOK DATED MAY 2006.

REVISED STANDARD PLAN RSP ES-2C