| Dist | COUNTY | ROUTE | POST MILES TOTAL PROJECT | SHEET No. | TOTAL SHEETS |
|---|---|---|---|---|---|
| 06 | Ker | 184 | 1.0 | 1 | 35 |

STATE OF CALIFORNIA
# DEPARTMENT OF TRANSPORTATION

ACSTP-P184(014)E

# PROJECT PLANS FOR CONSTRUCTION ON
# STATE HIGHWAY
## IN KERN COUNTY AT LAMONT AT DI GIORGIO ROAD

INDEX OF PLANS


| SHEET No. | DESCRIPTION |
|---|---|
| 1 | TITLE AND LOCATION MAP |
| 2 | TYPICAL CROSS SECTIONS |
| 3 | LAYOUT |
| 4-6 | CONSTRUCTION DETAILS |
| 7 | DRAINAGE PLAN |
| 8 | UTILITY PLAN |
| 9 | CONSTRUCTION AREA SIGNS |
| 10-11 | PAVEMENT DELINEATION PLANS AND QUANTITIES |
| 12 | SUMMARY OF QUANTITIES |
| 13-15 | ELECTRICAL PLANS |
| 16-35 | REVISED AND NEW STANDARD PLANS |


THE STANDARD PLANS LIST APPLICABLE TO THIS CONTRACT IS INCLUDED IN THE NOTICE TO BIDDERS AND SPECIAL PROVISIONS BOOK.

TO BE SUPPLEMENTED BY STANDARD PLANS DATED MAY 2006

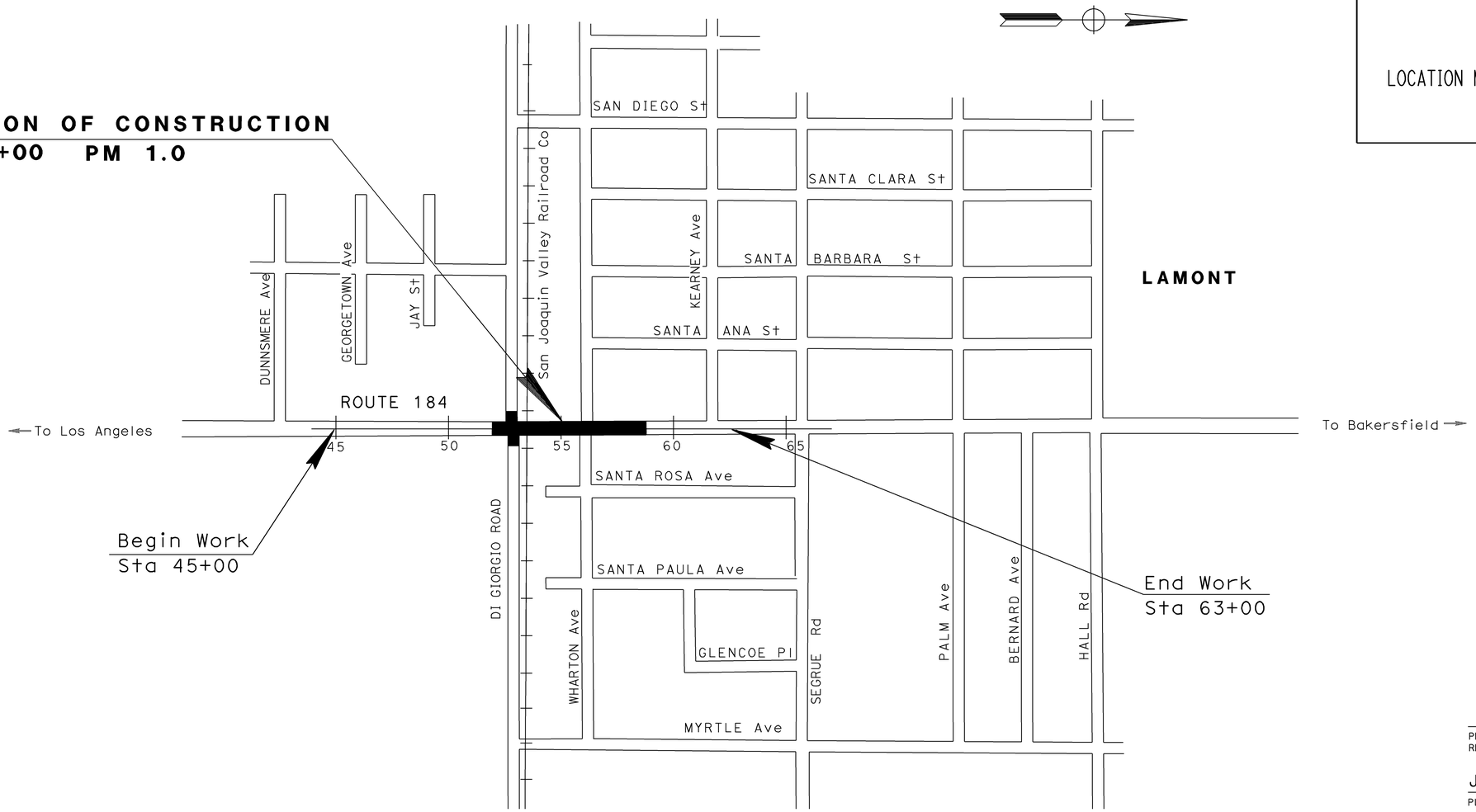

LOCATION MAP

Scott Friesen 12/03/10
PROJECT ENGINEER REGISTERED CIVIL ENGINEER — DATE

January 10, 2011
PLANS APPROVAL DATE

REGISTERED PROFESSIONAL ENGINEER SCOTT M FRIESEN No. 57969 Exp. 6/30/12 CIVIL STATE OF CALIFORNIA

*THE STATE OF CALIFORNIA OR ITS OFFICERS OR AGENTS SHALL NOT BE RESPONSIBLE FOR THE ACCURACY OR COMPLETENESS OF SCANNED COPIES OF THIS PLAN SHEET.*

NO SCALE

THE CONTRACTOR SHALL POSSESS THE CLASS (OR CLASSES) OF LICENSE AS SPECIFIED IN THE "NOTICE TO BIDDERS."

PROJECT MANAGER: FRANK MOMEN
DESIGN ENGINEER: M. LIM

| CONTRACT No. | 06-0H8304 |
|---|---|
| PROJECT ID | 0600000141 |

LAST REVISION 01-24-11 — DATE PLOTTED => 07-MAR-2011 TIME PLOTTED => 11:33

| Dist | COUNTY | ROUTE | POST MILES TOTAL PROJECT | SHEET No. | TOTAL SHEETS |
|---|---|---|---|---|---|
| 06 | Ker | 184 | 1.0 | 2 | 35 |

REGISTERED CIVIL ENGINEER 12/03/10 DATE

1-10-11
PLANS APPROVAL DATE

REGISTERED PROFESSIONAL ENGINEER SCOTT M. FRIESEN No. 57969 Exp. 6/30/12 CIVIL STATE OF CALIFORNIA

*THE STATE OF CALIFORNIA OR ITS OFFICERS OR AGENTS SHALL NOT BE RESPONSIBLE FOR THE ACCURACY OR COMPLETENESS OF SCANNED COPIES OF THIS PLAN SHEET.*

NOTES:

1. DIMENSIONS OF THE PAVEMENT STRUCTURES (STRUCTURAL SECTIONS) ARE SUBJECT TO TOLERANCES SPECIFIED IN THE STANDARD SPECIFICATIONS.
2. SUPERELEVATION AS SHOWN OR AS DIRECTED BY THE ENGINEER.
3. FOR LOCATION AND TYPE OF CONCRETE CURB, SEE CONSTRUCTION DETAILS.
4. FOR LOCATION OF COLD PLANE AC Pvmt, SEE CONSTRUCTION DETAILS.
5. FOR ACCURATE RIGHT OF WAY DATA, CONTACT RIGHT OF WAY ENGINEERING AT THE DISTRICT OFFICE.

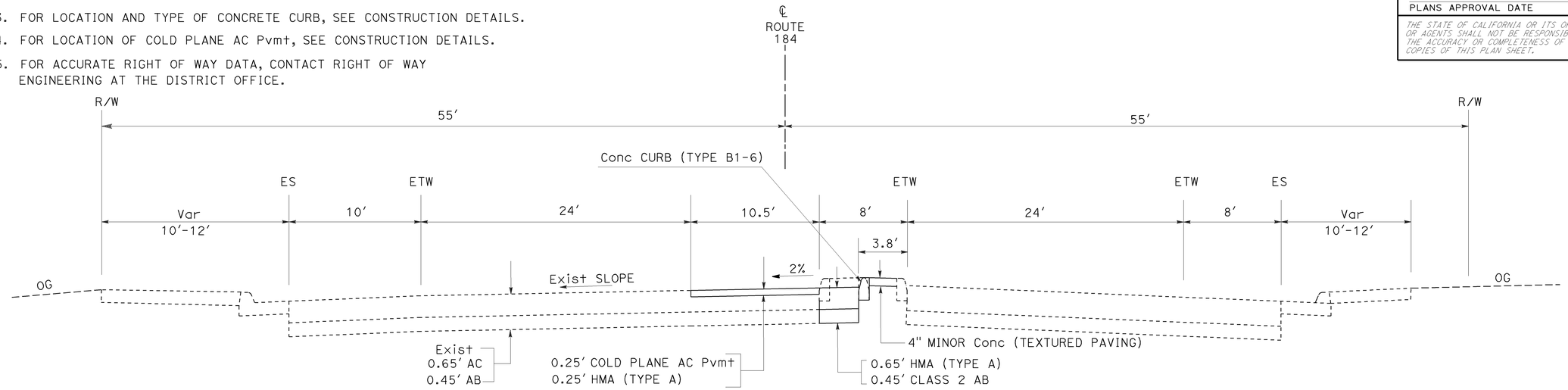


## ROUTE 184

Sta 56+75.42 TO Sta 59+70.50

DESIGN DESIGNATION (ROUTE 184)

| | |
|---|---|
| 2011 ADT | 21,100 |
| D | 60% |
| T | 16% |
| V | 40 mph |

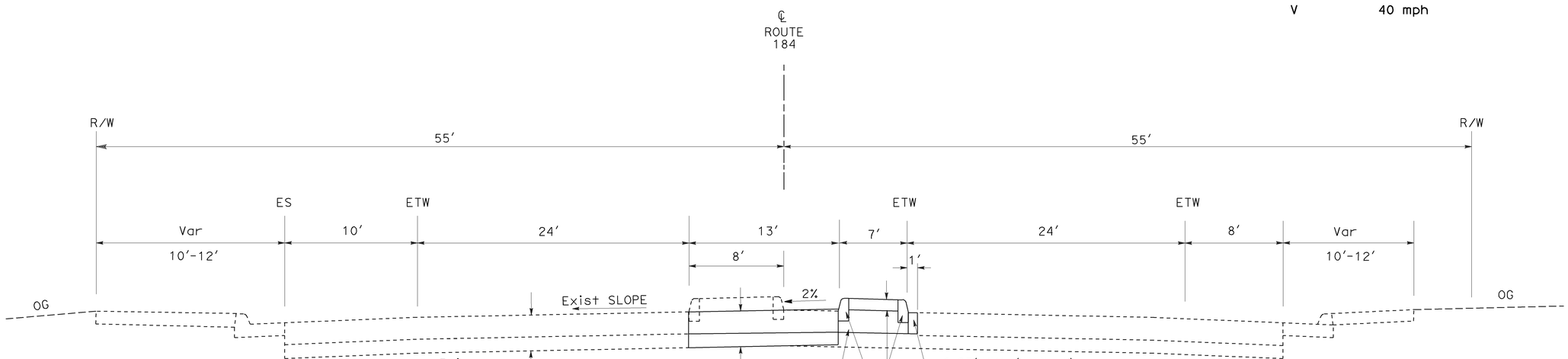


## ROUTE 184

Sta 54+35 TO Sta 56+00

# TYPICAL CROSS SECTIONS

NO SCALE

**X-1**

STATE OF CALIFORNIA - DEPARTMENT OF TRANSPORTATION
DESIGN
FUNCTIONAL SUPERVISOR: MICHAEL K. LIM
CALCULATED-DESIGNED BY: TONY HO
CHECKED BY: SCOTT M. FRIESEN
REVISED BY
DATE REVISED

LAST REVISION 01-24-11
DATE PLOTTED => 07-MAR-2011
TIME PLOTTED => 16:40

| Dist | COUNTY | ROUTE | POST MILES TOTAL PROJECT | SHEET No. | TOTAL SHEETS |
|---|---|---|---|---|---|
| 06 | Ker | 184 | 1.0 | 3 | 35 |

REGISTERED CIVIL ENGINEER DATE 12/03/10

1-10-11
PLANS APPROVAL DATE

REGISTERED PROFESSIONAL ENGINEER SCOTT M FRIESEN No. 57969 Exp 6/30/12 CIVIL STATE OF CALIFORNIA

*THE STATE OF CALIFORNIA OR ITS OFFICERS OR AGENTS SHALL NOT BE RESPONSIBLE FOR THE ACCURACY OR COMPLETENESS OF SCANNED COPIES OF THIS PLAN SHEET.*

NOTE: FOR ACCURATE RIGHT OF WAY DATA, CONTACT RIGHT OF WAY ENGINEERING AT THE DISTRICT OFFICE.

## LEGEND:

- 0.25′ COLD PLANE AC PAVEMENT
  0.25′ HMA (TYPE A)
- 0.90′ HMA (TYPE A)

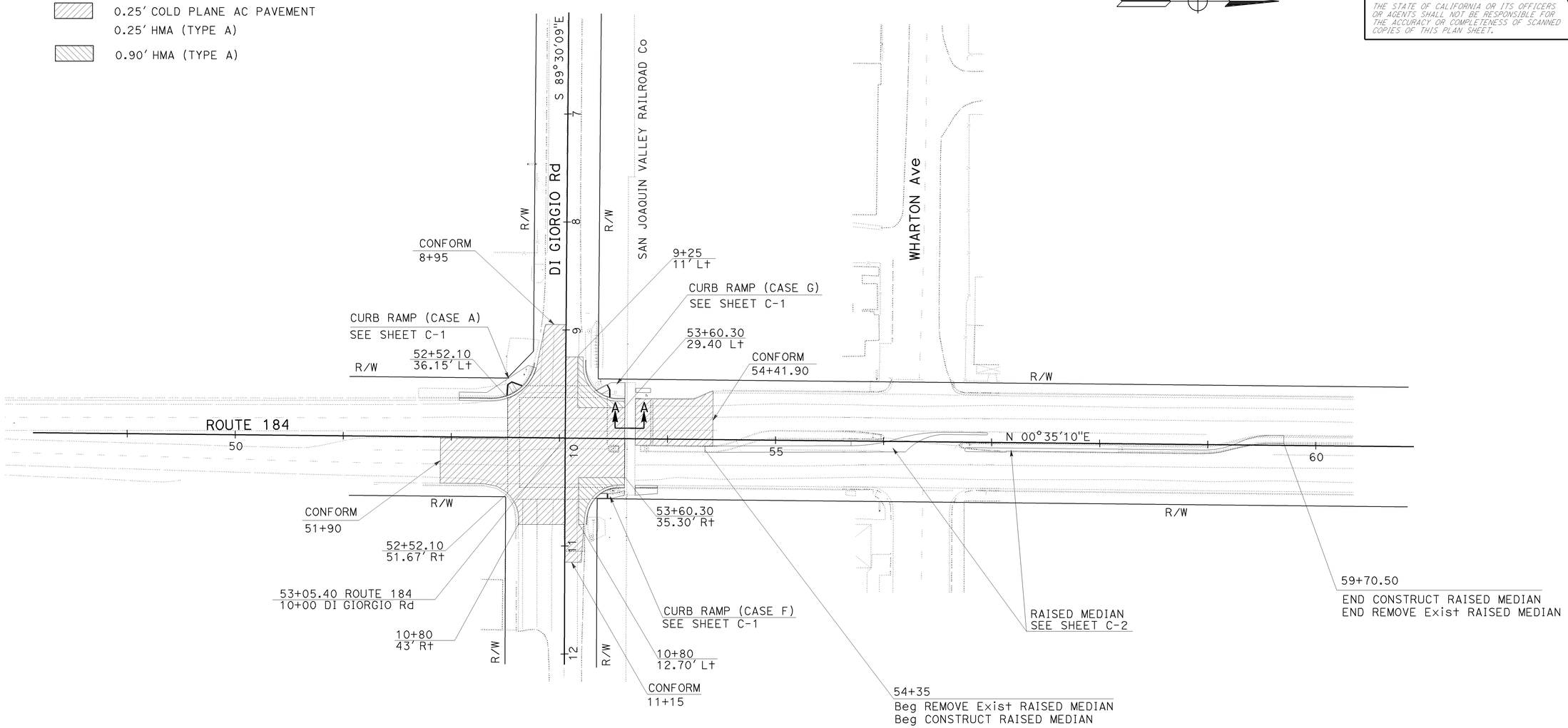


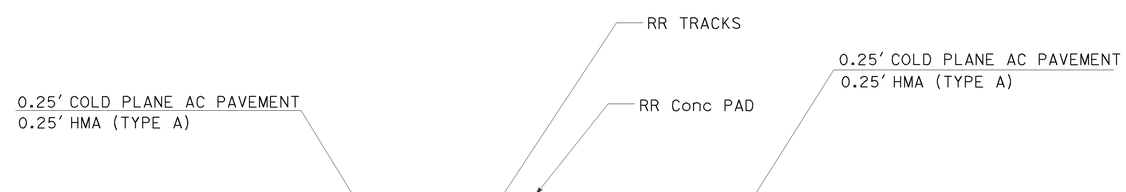


## SECTION A-A

## LAYOUT

SCALE 1″=50′ **L-1**

| | |
|---|---|
| TONY HO | REVISED BY |
| SCOTT M. FRIESEN | DATE REVISED |
| CALCULATED-DESIGNED BY | |
| CHECKED BY | |
| MICHAEL K. LIM | FUNCTIONAL SUPERVISOR |

STATE OF CALIFORNIA - DEPARTMENT OF TRANSPORTATION
DESIGN
Caltrans

LAST REVISION 01-10-11 | DATE PLOTTED => 01-MAR-2011 | TIME PLOTTED => 14:14

| Dist | COUNTY | ROUTE | POST MILES TOTAL PROJECT | SHEET No. | TOTAL SHEETS |
|---|---|---|---|---|---|
| 06 | Ker | 184 | 1.0 | 4 | 35 |

REGISTERED CIVIL ENGINEER 12/03/10 DATE

1-10-11
PLANS APPROVAL DATE

REGISTERED PROFESSIONAL ENGINEER SCOTT M. FRIESEN No. 57969 Exp 6/30/12 CIVIL STATE OF CALIFORNIA

*THE STATE OF CALIFORNIA OR ITS OFFICERS OR AGENTS SHALL NOT BE RESPONSIBLE FOR THE ACCURACY OR COMPLETENESS OF SCANNED COPIES OF THIS PLAN SHEET.*

NOTES: 1. ALL ELEVATIONS ARE RELATIVE.
2. FOR ACCURATE RIGHT OF WAY DATA, CONTACT RIGHT OF WAY ENGINEERING AT THE DISTRICT OFFICE.

**LEGEND:**

- 0.25′ COLD PLANE AC PAVEMENT
  0.25′ HMA (TYPE A)
- REMOVE RAISED MEDIAN
  0.65′ HMA (TYPE A)
  0.45′ CLASS 2 AB
- 0.65′ HMA (TYPE A)
  0.45′ CLASS 2 AB

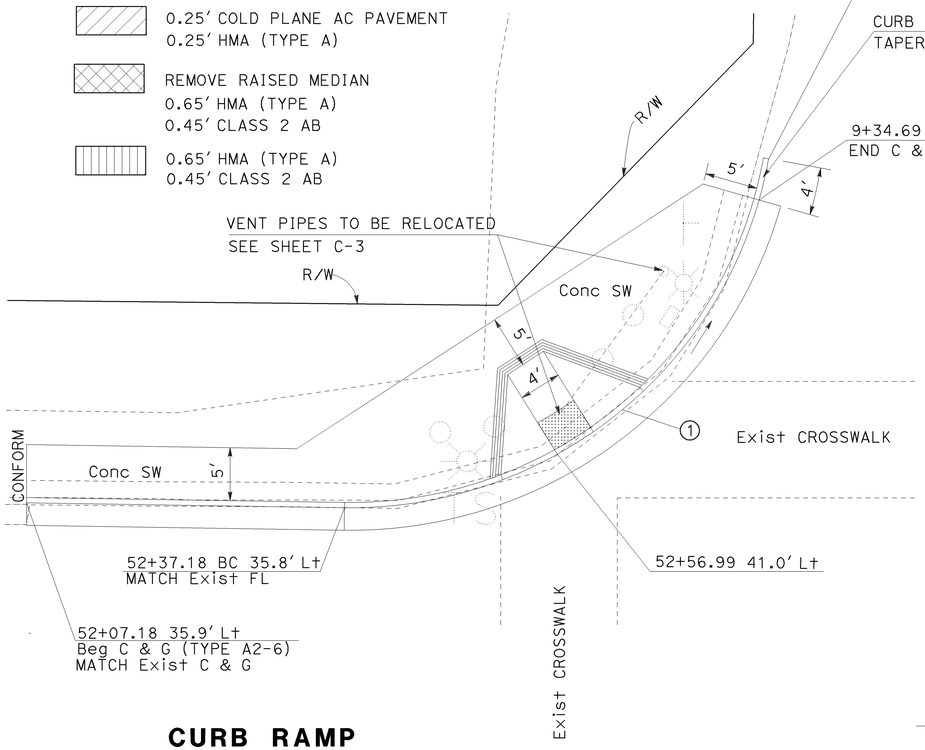


## CURB RAMP CASE A

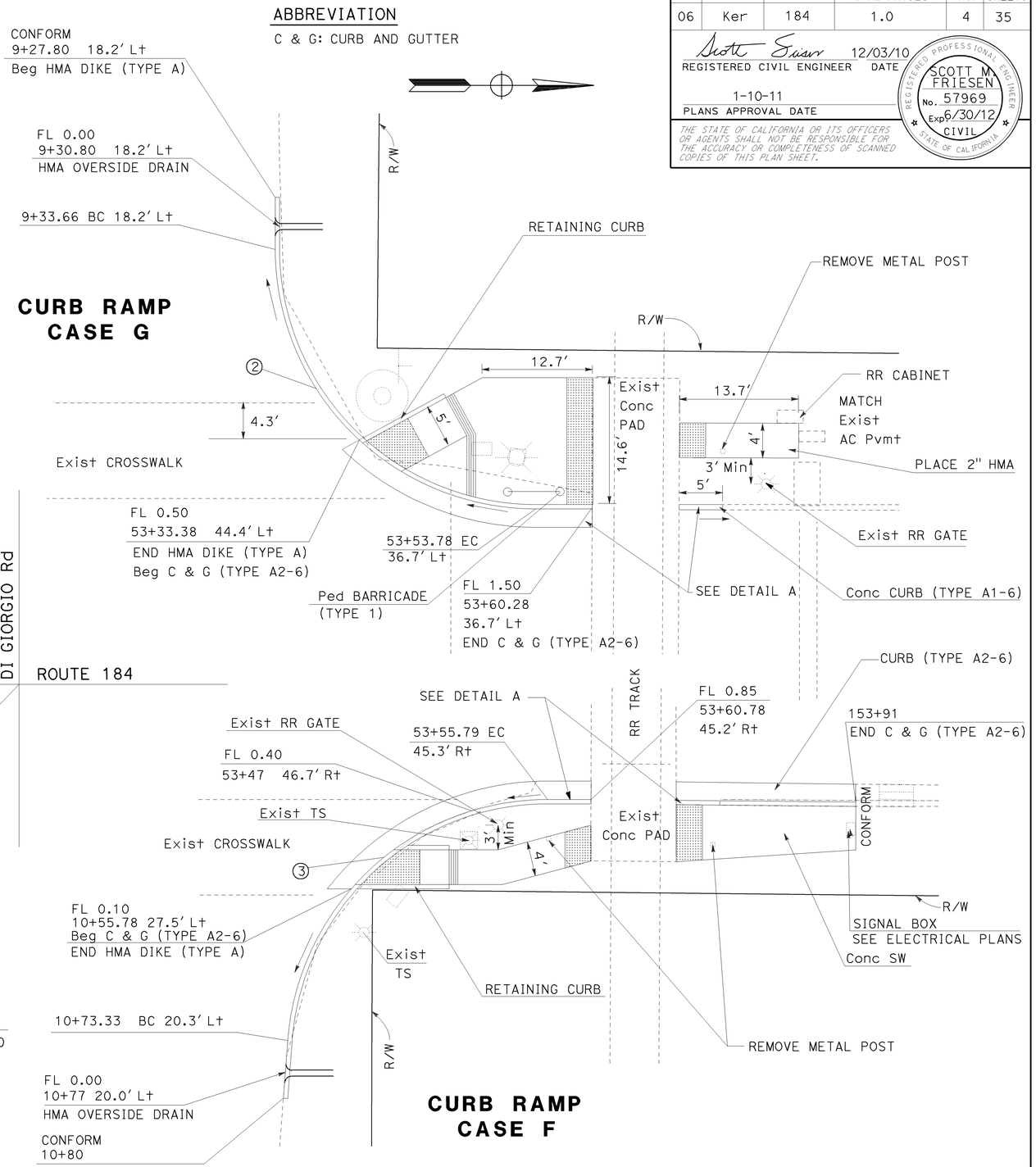


## CURB RAMP CASE G

## CURB RAMP CASE F

**ABBREVIATION**

C & G: CURB AND GUTTER

**CURVE DATA**

| No. | R | Δ | T | L |
|---|---|---|---|---|
| 1 | 40′ | 80°42′21" | 33.99′ | 56.34′ |
| 2 | 30′ | 90°00′00" | 30.00′ | 47.12′ |
| 3 | 30′ | 85°40′55" | 27.82′ | 44.86′ |

## DETAIL A

ELEVATION VIEW

# CURB RAMPS

# CONSTRUCTION DETAILS C-1

NO SCALE

STATE OF CALIFORNIA - DEPARTMENT OF TRANSPORTATION
DESIGN
FUNCTIONAL SUPERVISOR: MICHAEL K. LIM
CALCULATED-DESIGNED BY: TONY HO
CHECKED BY: SCOTT M. FRIESEN
REVISED BY
DATE REVISED

LAST REVISION 01-10-11
DATE PLOTTED => 01-MAR-2011
TIME PLOTTED => 14:14

| Dist | COUNTY | ROUTE | POST MILES TOTAL PROJECT | SHEET No. | TOTAL SHEETS |
|---|---|---|---|---|---|
| 06 | Ker | 184 | 1.0 | 5 | 35 |

REGISTERED CIVIL ENGINEER 12/03/10 DATE

1-10-11
PLANS APPROVAL DATE

REGISTERED PROFESSIONAL ENGINEER SCOTT M FRIESEN No. 57969 Exp 6/30/12 CIVIL STATE OF CALIFORNIA

*THE STATE OF CALIFORNIA OR ITS OFFICERS OR AGENTS SHALL NOT BE RESPONSIBLE FOR THE ACCURACY OR COMPLETENESS OF SCANNED COPIES OF THIS PLAN SHEET.*

NOTE: FOR ACCURATE RIGHT OF WAY DATA, CONTACT RIGHT OF WAY ENGINEERING AT THE DISTRICT OFFICE.

## CURVE DATA

| No. | R | Δ | T | L |
|---|---|---|---|---|
| ① | 150.00′ | 16°31′22" | 21.78′ | 43.26′ |
| ② | 150.00′ | 17°05′50" | 22.55′ | 44.76′ |
| ③ | 50.00′ | 48°07′38" | 22.33′ | 42.00′ |
| ④ | 75.00′ | 25°13′15" | 16.78′ | 33.01′ |
| ⑤ | 75.00′ | 25°16′35" | 16.82′ | 33.09′ |

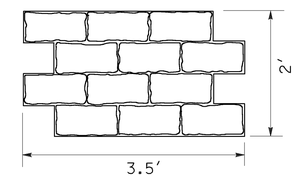


## TEXTURED PAVING DETAIL (COBBLESTONE RUNNING BOND PATTERN)

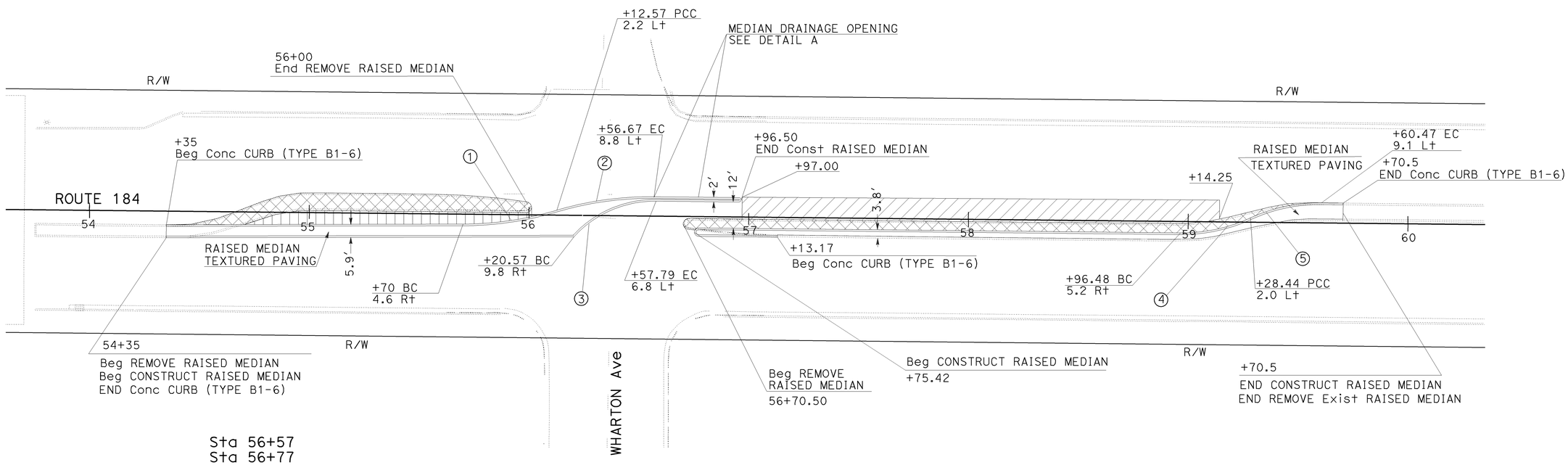


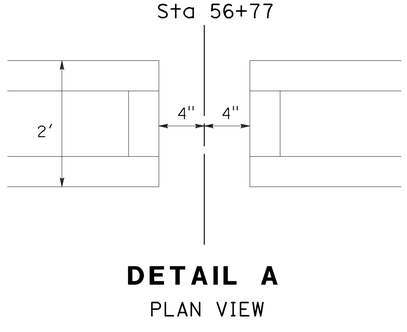


## DETAIL A
PLAN VIEW

# CONSTRUCTION DETAILS
SCALE 1"=25′ **C-2**

STATE OF CALIFORNIA - DEPARTMENT OF TRANSPORTATION
DESIGN
FUNCTIONAL SUPERVISOR: MICHAEL K. LIM
CALCULATED-DESIGNED BY: TONY HO
CHECKED BY: SCOTT M. FRIESEN
REVISED BY
DATE REVISED

LAST REVISION 01-24-11 DATE PLOTTED => 07-MAR-2011 TIME PLOTTED => 11:33

| Dist | COUNTY | ROUTE | POST MILES TOTAL PROJECT | SHEET No. | TOTAL SHEETS |
|---|---|---|---|---|---|
| 06 | Ker | 184 | 1.0 | 6 | 35 |

REGISTERED CIVIL ENGINEER 12/03/10 DATE

1-10-11
PLANS APPROVAL DATE

REGISTERED PROFESSIONAL ENGINEER SCOTT M FRIESEN No. 57969 Exp 6/30/12 CIVIL STATE OF CALIFORNIA

*THE STATE OF CALIFORNIA OR ITS OFFICERS OR AGENTS SHALL NOT BE RESPONSIBLE FOR THE ACCURACY OR COMPLETENESS OF SCANNED COPIES OF THIS PLAN SHEET.*

NOTE: FOR ACCURATE RIGHT OF WAY DATA, CONTACT RIGHT OF WAY ENGINEERING AT THE DISTRICT OFFICE.

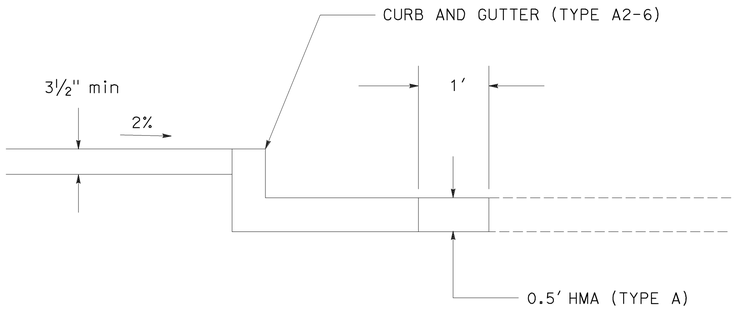


SECTION B-B

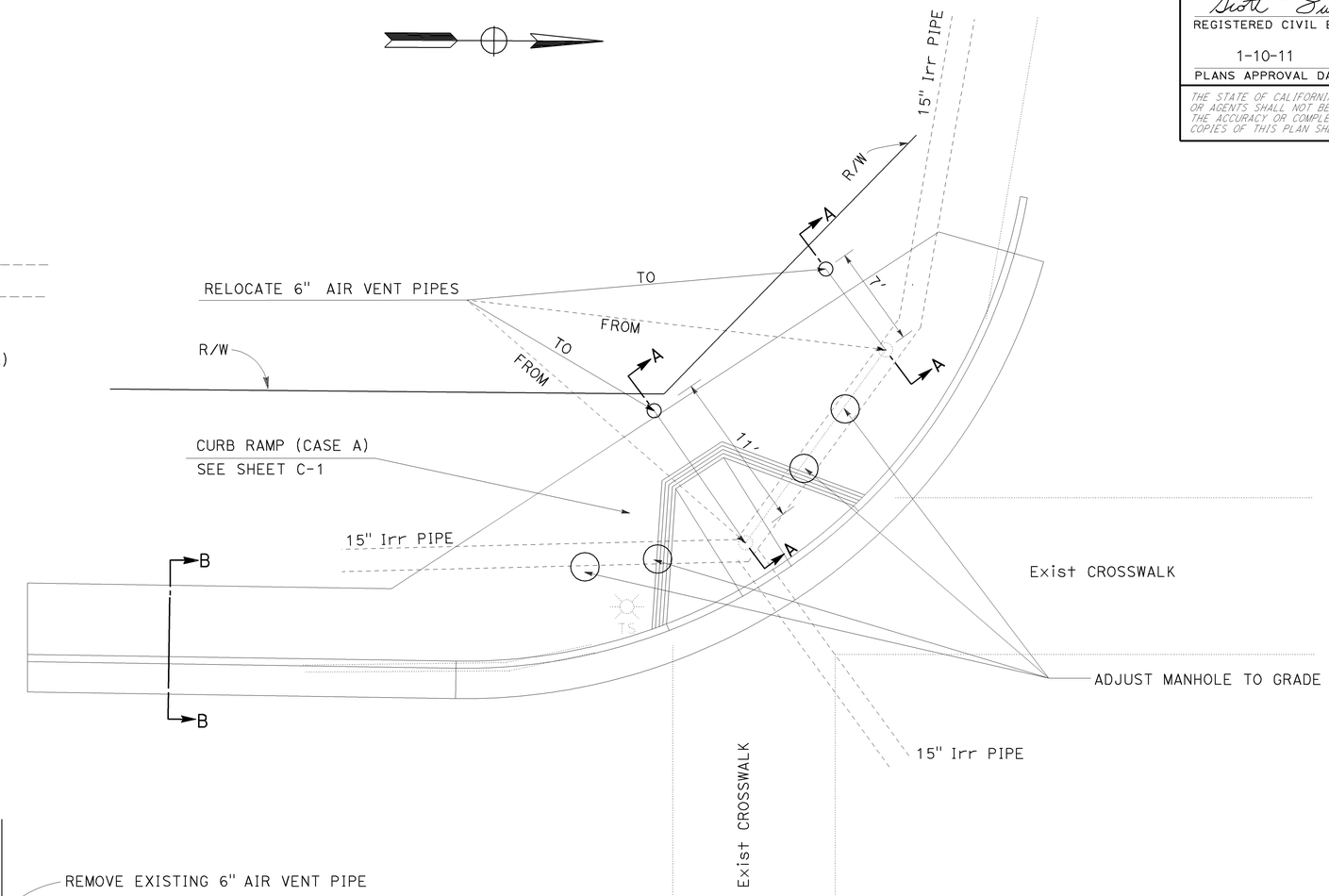


**VENT PIPE RELOCATIONS**

PLAN VIEW

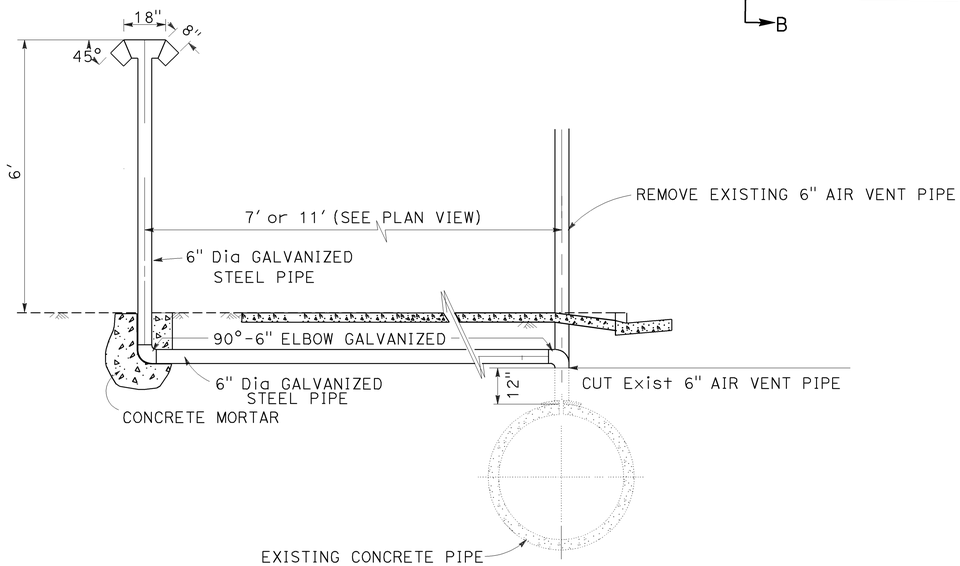


**VENT PIPE RELOCATIONS**

SECTION A-A

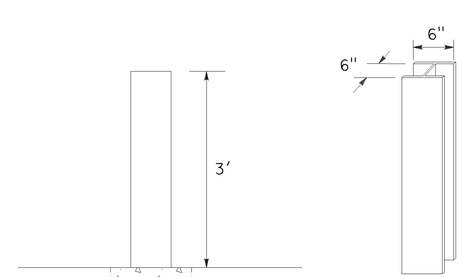


PLAN VIEW

3-D VIEW

**REMOVE METAL POST**

**CONSTRUCTION DETAILS**

NO SCALE

**C-3**

| | | | |
|---|---|---|---|
| TONY HO | SCOTT M. FRIESEN | | REVISED BY / DATE REVISED |
| CALCULATED-DESIGNED BY | CHECKED BY | | |
| FUNCTIONAL SUPERVISOR | MICHAEL K. LIM | | |

STATE OF CALIFORNIA - DEPARTMENT OF TRANSPORTATION

Caltrans

**DESIGN**

LAST REVISION 01-24-11 | DATE PLOTTED => 07-MAR-2011 | TIME PLOTTED => 11:33

NOTE: FOR ACCURATE RIGHT OF WAY DATA, CONTACT RIGHT OF WAY ENGINEERING AT THE DISTRICT OFFICE.

LEGEND

(1) DRAINAGE SYSTEM No.

(x) DRAINAGE UNIT

# SUMMARY OF DRAINAGE QUANTITIES

| 15" RCP (LF) | 18" RCP (LF) | 15" Conc FES (EA) | 18" Conc FES (EA) | REMOVE HEADWALL (EA) | DESCRIPTION | STATION | DRAINAGE UNIT | DRAINAGE SYSTEM No. | PLAN SHEET |
|---|---|---|---|---|---|---|---|---|---|
| 4 | 4 | | | | 2-3' PIPE EXTENSIONS | 9+31.18 DI GIORGIO Rd | a | 1 | D-1 |
| | | 1 | 1 | | 18" Conc FES | 9+31.18 DI GIORGIO Rd | b | | D-1 |
| | | | | 1 | REMOVE HEADWALL | 9+34.18 DI GIORGIO Rd | c | | D-1 |
| 4 | 4 | 1 | 1 | 1 | | | TOTAL | | |

| Dist | COUNTY | ROUTE | POST MILES TOTAL PROJECT | SHEET No. | TOTAL SHEETS |
|---|---|---|---|---|---|
| 06 | Ker | 184 | 1.0 | 7 | 35 |

REGISTERED CIVIL ENGINEER 12/03/10 DATE

1-10-11
PLANS APPROVAL DATE

REGISTERED PROFESSIONAL ENGINEER SCOTT M FRIESEN No. 57969 Exp 6/30/12 CIVIL STATE OF CALIFORNIA

*THE STATE OF CALIFORNIA OR ITS OFFICERS OR AGENTS SHALL NOT BE RESPONSIBLE FOR THE ACCURACY OR COMPLETENESS OF SCANNED COPIES OF THIS PLAN SHEET.*

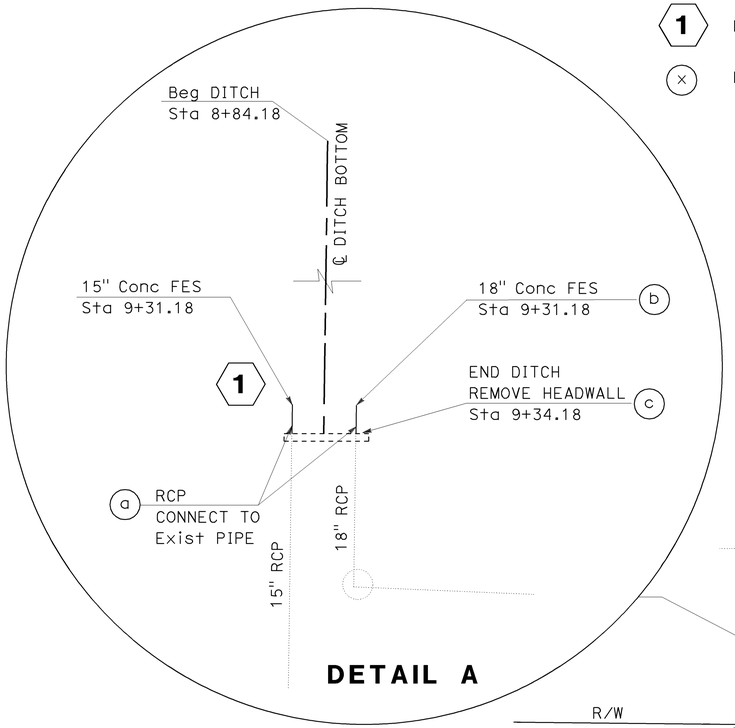


DETAIL A

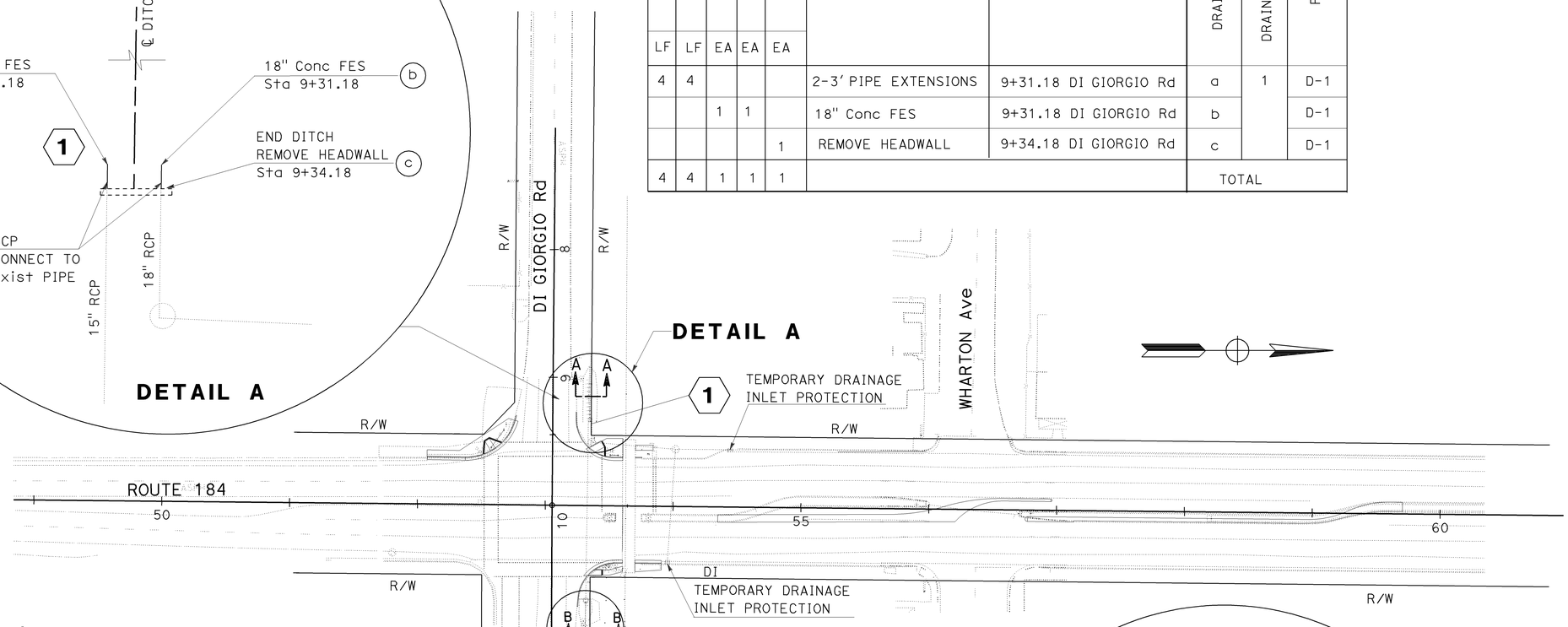


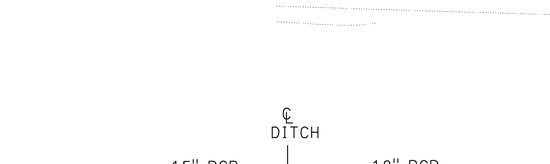


SECTION A-A

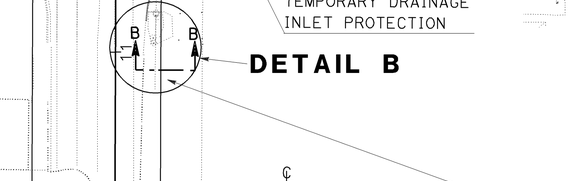


SECTION B-B

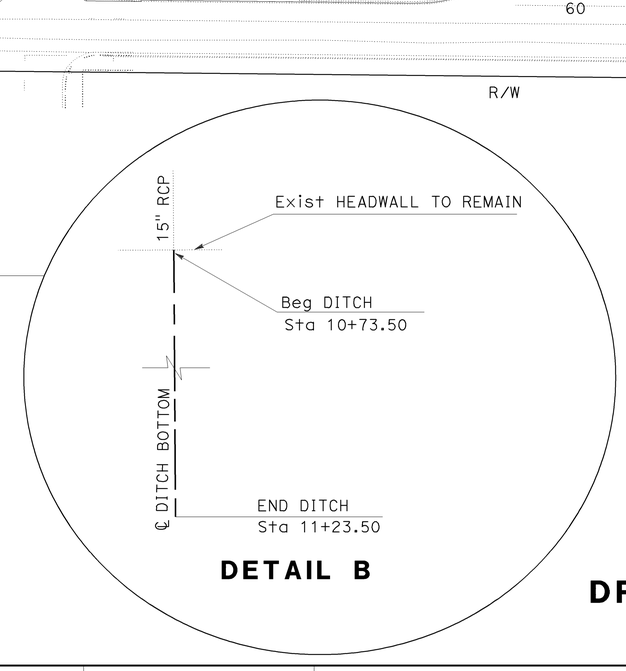


DETAIL B

THIS PLAN ACCURATE FOR DRAINAGE ONLY

# DRAINAGE PLAN

SCALE 1"=50'

D-1

STATE OF CALIFORNIA - DEPARTMENT OF TRANSPORTATION

Caltrans DESIGN

FUNCTIONAL SUPERVISOR: MICHAEL K. LIM

CALCULATED-DESIGNED BY: TONY HO

CHECKED BY: SCOTT M. FRIESEN

REVISED BY / DATE REVISED

LAST REVISION 01-24-11

DATE PLOTTED => 07-MAR-2011
TIME PLOTTED => 11:33

| Dist | COUNTY | ROUTE | POST MILES TOTAL PROJECT | SHEET No. | TOTAL SHEETS |
|---|---|---|---|---|---|
| 06 | Ker | 184 | 1.0 | 8 | 35 |

REGISTERED CIVIL ENGINEER 12/03/10 DATE

1-10-11
PLANS APPROVAL DATE

REGISTERED PROFESSIONAL ENGINEER SCOTT M FRIESEN No. 57969 Exp 6/30/12 CIVIL STATE OF CALIFORNIA

*THE STATE OF CALIFORNIA OR ITS OFFICERS OR AGENTS SHALL NOT BE RESPONSIBLE FOR THE ACCURACY OR COMPLETENESS OF SCANNED COPIES OF THIS PLAN SHEET.*

NOTES:

1. FOR ACCURATE RIGHT OF WAY DATA, CONTACT RIGHT OF WAY ENGINEERING AT THE DISTRICT OFFICE.
2. ALL UTILITIES SHOWN ARE EXISTING UNLESS OTHERWISE NOTED.
3. LOCATION OF UTILITY FACILITIES SHOWN ON THIS PLAN WERE OBTAINED FROM OWNER'S RECORDS OR FROM PUBLIC AGENCIES. THEY ARE APPROXIMATE AND SHALL BE VERIFIED BY THE CONTRACTOR PRIOR TO CONSTRUCTION.
4. UTILITY OWNERSHIP ON THIS PROJECT:

| | |
|---|---|
| ELECTRIC | - PACIFIC GAS & ELECTRIC (PG&E) |
| GAS | - SOUTHERN CALIFORNIA GAS COMPANY |
| WATER/SEWER/STORM DRAIN | - LAMONT PUBLIC UTILITY DISTRICT (LPUD) |
| TELEPHONE | - AMERICAN TELEPHONE AND TELEGRAPH (AT&T) |
| CABLE TELEVISION | - BRIGHT HOUSE NETWORKS |

LEGEND:

INDICATES POTHOLE LOCATION

POTHOLE NUMBER

KV = KILOVOLT

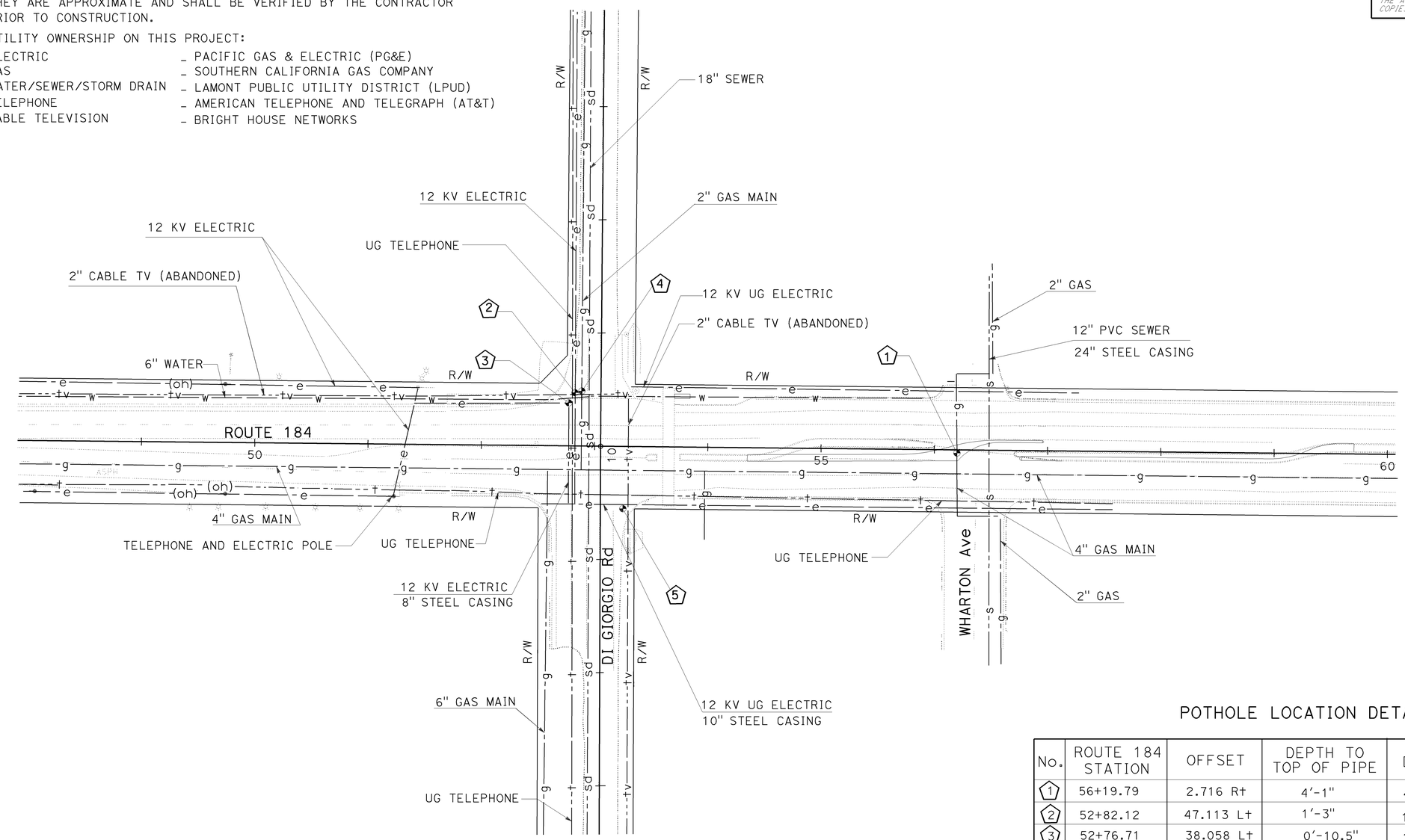


POTHOLE LOCATION DETAILS

| No. | ROUTE 184 STATION | OFFSET | DEPTH TO TOP OF PIPE | DESCRIPTION OF UTILITY |
|---|---|---|---|---|
| 1 | 56+19.79 | 2.716 Rt | 4'-1" | 4" GAS MAIN |
| 2 | 52+82.12 | 47.113 Lt | 1'-3" | 12 KV ELECTRIC |
| 3 | 52+76.71 | 38.058 Lt | 0'-10.5" | 12 KV ELECTRIC |
| 4 | 52+88.24 | 48.657 Lt | 3'-4" | 2" GAS MAIN |
| 5 | 53+25.17 | 54.907 Rt | 4'-0" | 12 KV ELECTRIC |

THIS PLAN ACCURATE FOR UTILITIES ONLY

# UTILITY PLAN
## U-1

SCALE: 1"=50'

STATE OF CALIFORNIA - DEPARTMENT OF TRANSPORTATION
DESIGN
FUNCTIONAL SUPERVISOR: MICHAEL K. LIM
CALCULATED-DESIGNED BY: TONY HO
CHECKED BY: SCOTT M. FRIESEN
REVISED BY
DATE REVISED

LAST REVISION 01-10-11
DATE PLOTTED => 01-MAR-2011
TIME PLOTTED => 14:14

| Dist | COUNTY | ROUTE | POST MILES TOTAL PROJECT | SHEET No. | TOTAL SHEETS |
|---|---|---|---|---|---|
| 06 | Ker | 184 | 1.0 | 9 | 35 |

Sandy L Le 12/06/10
REGISTERED CIVIL ENGINEER DATE

1-10-11
PLANS APPROVAL DATE

REGISTERED PROFESSIONAL ENGINEER
SANDY L. LE
No. 67065
Exp. 9/30/12
CIVIL
STATE OF CALIFORNIA

*the STATE OF CALIFORNIA OR ITS OFFICERS OR AGENTS SHALL NOT BE RESPONSIBLE FOR the ACCURACY OR COMPLETENESS OF SCANNED COPIES OF this PLAN SHEET.*

## STATIONARY MOUNTED CONSTRUCTION AREA SIGNS

| SIGN No. | SIGN CODE | PANEL SIZE | SIGN MESSAGE | No. OF POST AND SIZE | No. OF SIGNS |
|---|---|---|---|---|---|
| A | W20-1 | 36" x 36" | ROAD WORK AHEAD | 1 - 4" x 6" | 6 |
| B | G20-2 | 36" x 18" | END ROAD WORK | 1 - 4" x 4" | 2 |

NOTE: SIGN LOCATIONS SHOWN ARE APPROXIMATE ONLY. EXACT LOCATIONS TO BE DETERMINED BY THE ENGINEER.

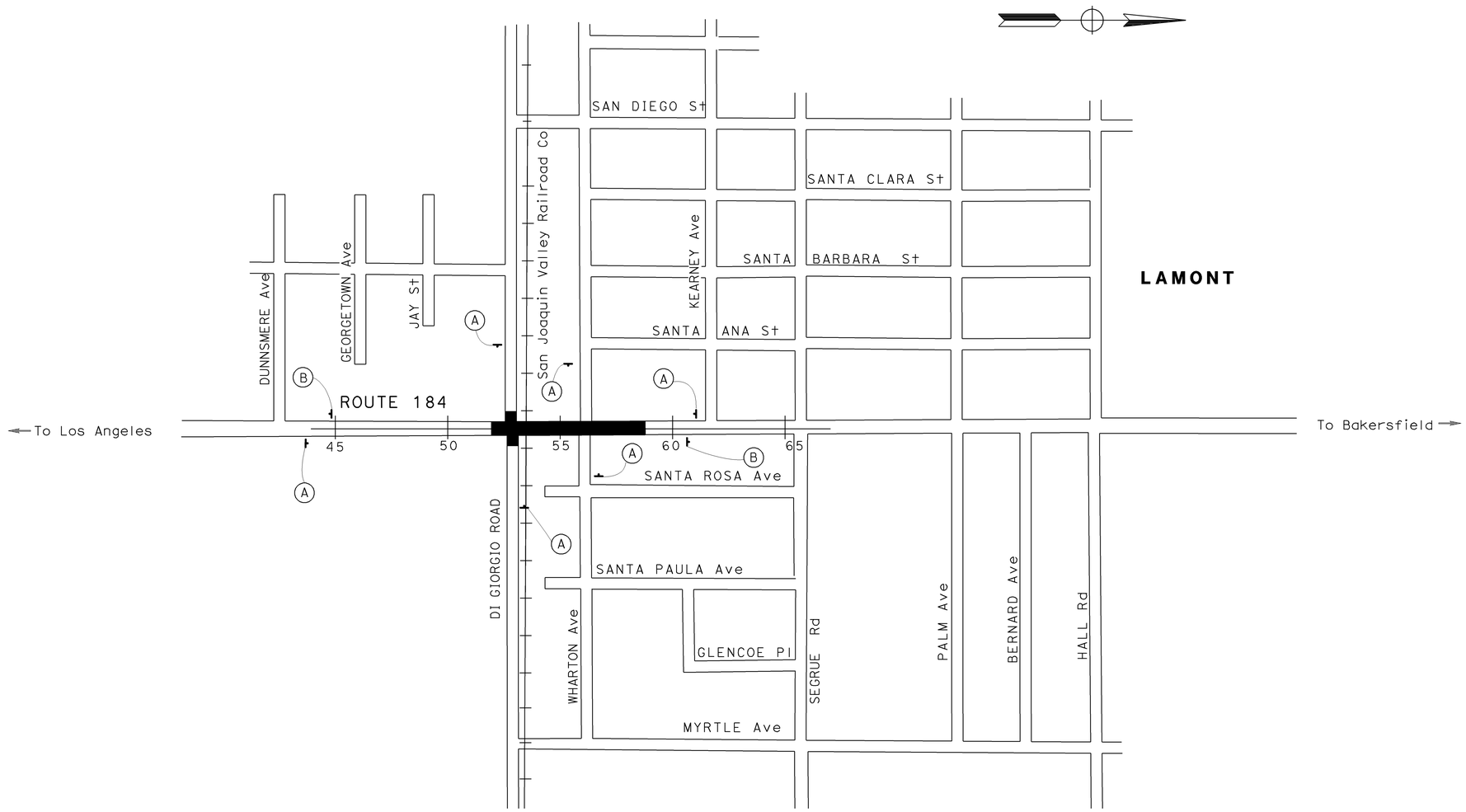


THIS PLAN ACCURATE FOR CONSTRUCTION AREA SIGN ONLY

## CONSTRUCTION AREA SIGNS

NO SCALE

**CS-1**

STATE OF CALIFORNIA - DEPARTMENT OF TRANSPORTATION
Caltrans® TRAFFIC DESIGN

FUNCTIONAL SUPERVISOR: MOHAMMED QATAMI
CALCULATED-DESIGNED BY: SANDY LE
CHECKED BY: HASSAN TAHA
REVISED BY
DATE REVISED

LAST REVISION 12-06-10 | DATE PLOTTED => 01-MAR-2011 | TIME PLOTTED => 14:14

| Dist | COUNTY | ROUTE | POST MILES TOTAL PROJECT | SHEET No. | TOTAL SHEETS |
|---|---|---|---|---|---|
| 06 | Ker | 184 | 1.0 | 10 | 35 |

Sandy L Le 12/06/10
REGISTERED CIVIL ENGINEER DATE

1-10-11
PLANS APPROVAL DATE

REGISTERED PROFESSIONAL ENGINEER SANDY L. LE No. 67065 Exp. 9/30/12 CIVIL STATE OF CALIFORNIA

*the STATE OF CALIFORNIA OR ITS OFFICERS OR AGENTS SHALL NOT BE RESPONSIBLE FOR the ACCURACY OR COMPLETENESS OF SCANNED COPIES OF this PLAN SHEET.*

## LEGEND

- XX TRAFFIC STRIPE DETAIL No.
- PAVEMENT MARKING TYPE III(L) ARROW
- (XX) ROADSIDE SIGN No.
- ● RESET ROADSIDE SIGN
- TO / FROM RELOCATE ROADSIDE SIGN
- OBJECT MARKER TYPE OM2-2V
- ROADSIDE SIGN-ONE POST
- ELECTRICAL SIGNAL SYSTEM: SEE "E" SHEETS

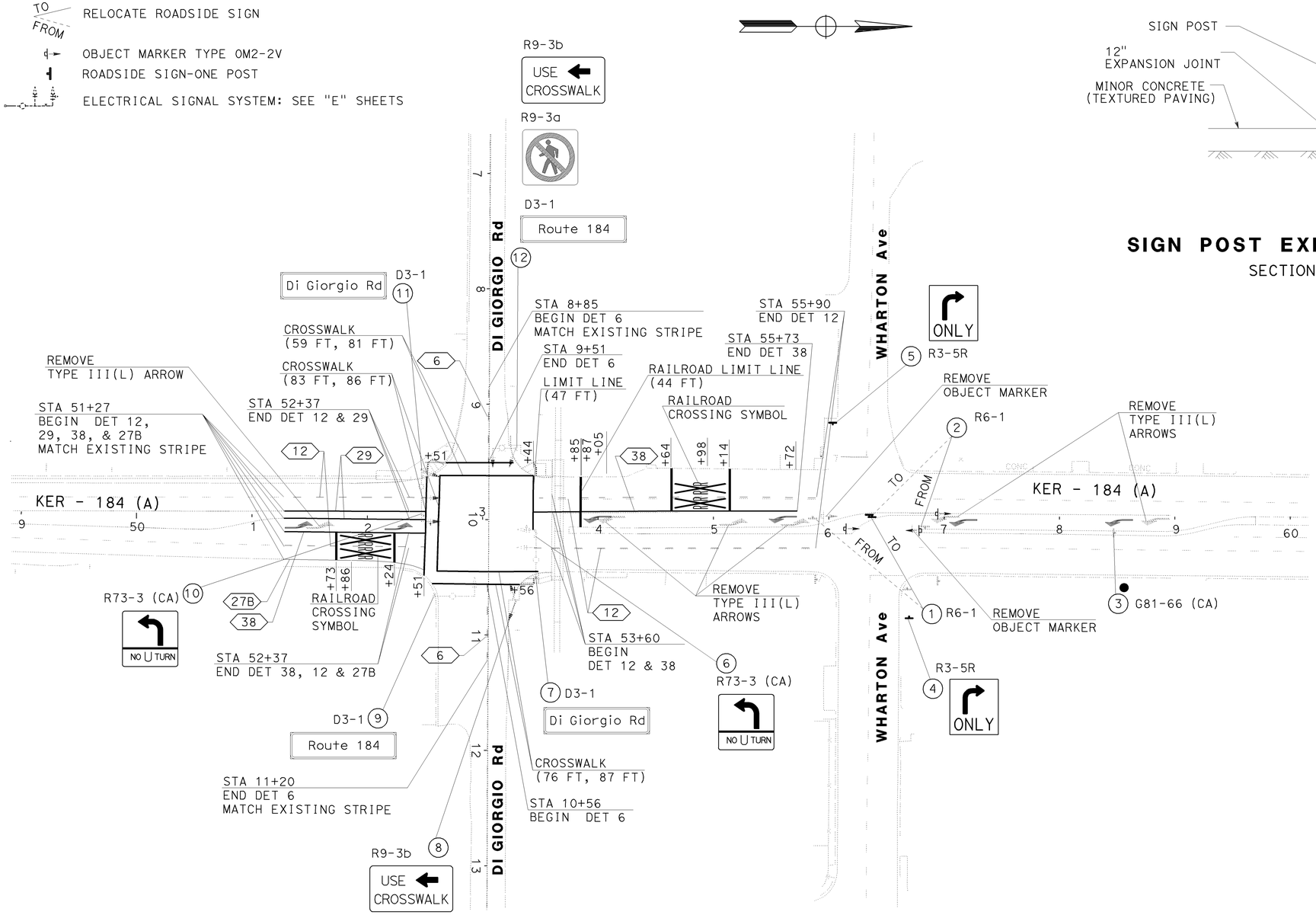


THIS PLAN ACCURATE FOR PAVEMENT DELINEATION AND SIGN WORK ONLY

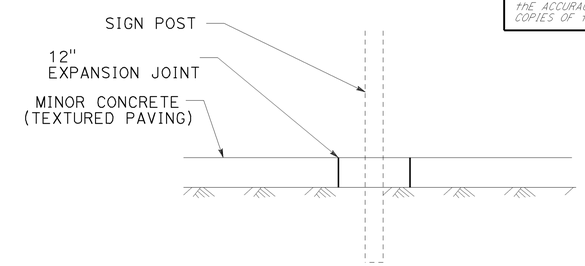


## SIGN POST EXPANSION JOINT
SECTION B-B

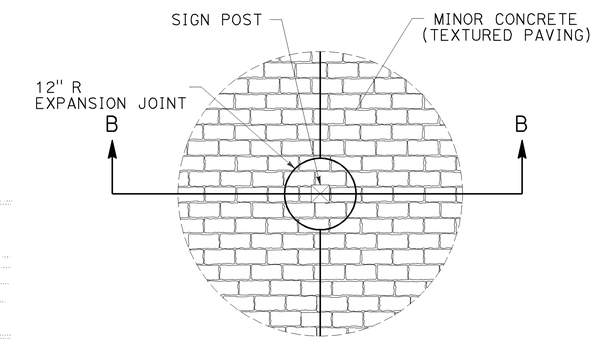


## SIGN POST EXPANSION JOINT
PLAN

## SIGN POST EXPANSION JOINT LOCATION

| SIGN # | ONE POST EA (N) |
|---|---|
| 1 AND 2 | 1 |
| 3 | 1 |

(N) NOT A SEPARATE PAY ITEM.
FOR INFORMATION ONLY.

# PAVEMENT DELINEATION AND SIGN PLAN

SCALE: 1" = 50'

**PD-1**

STATE OF CALIFORNIA - DEPARTMENT OF TRANSPORTATION
Caltrans TRAFFIC DESIGN

FUNCTIONAL SUPERVISOR: MOHAMMED QATAMI
CALCULATED-DESIGNED BY: SANDY LE
CHECKED BY: HASSAN TAHA
REVISED BY / DATE REVISED

LAST REVISION 12-06-10 DATE PLOTTED => 01-MAR-2011 TIME PLOTTED => 14:14

| Dist | COUNTY | ROUTE | POST MILES TOTAL PROJECT | SHEET No. | TOTAL SHEETS |
|---|---|---|---|---|---|
| 06 | Ker | 184 | 1.0 | 11 | 35 |

REGISTERED CIVIL ENGINEER 12/06/10 DATE

1-10-11
PLANS APPROVAL DATE

REGISTERED PROFESSIONAL ENGINEER SANDY L. LE No. 67065 Exp. 9/30/12 CIVIL STATE OF CALIFORNIA

*the STATE OF CALIFORNIA OR ITS OFFICERS OR AGENTS SHALL NOT BE RESPONSIBLE FOR the ACCURACY OR COMPLETENESS OF SCANNED COPIES OF this PLAN SHEET.*

# ROADSIDE SIGN QUANTITIES

| SHEET No. | SIGN No. | SIGN CODE | SIGN MESSAGE | PANEL SIZE | No. OF POSTS AND POST SIZE | SINGLE FACED | DOUBLE FACED | BACKGROUND SHEETING COLOR | BACKGROUND Retroreflectivity ASTM TYPE | LEGEND SHEETING COLOR | LEGEND Retroreflectivity ASTM TYPE | GRAFFITI FLOW STANDARD | GRAFFITI FLOW PREMIUM | FURNISHED SINGLE SHEET ALUMINUM SIGN UNFRAMED 0.063" | FURNISHED SINGLE SHEET ALUMINUM SIGN UNFRAMED 0.080" | ROADSIDE SIGN-ONE POST | RELOCATE ROADSIDE SIGN | RESET ROADSIDE SIGN | INSTALL SIGN (STRAP AND SADDLE BRACKET METHOD) (N) | INSTALL SIGN (MAST-ARM HANGER METHOD) (N) | REMARKS |
|---|---|---|---|---|---|---|---|---|---|---|---|---|---|---|---|---|---|---|---|---|---|
| | | | | | | | | | | | | | | SQFT | SQFT | EA | EA | EA | EA | EA | |
| PD-1 | 1 | R6-1 | ONE WAY | | | | | | | | | | | | | | 1 | | | | |
| | 2 | R6-1 | ONE WAY | | | | | | | | | | | | | | 1 | | | | |
| | 3 | G81-66 (CA) | REPORT DRUNK DRIVERS CALL 911 | | | | | | | | | | | | | | | 1 | | | |
| | 4 | R3-5R | RIGHT TURN ONLY | 30" x 36" | 1 - 4" x 6" | X | | WHITE | III | BLACK | | X | | 7.5 | | 1 | | | | | |
| | 5 | R3-5R | RIGHT TURN ONLY | 30" x 36" | 1 - 4" x 6" | X | | WHITE | III | BLACK | | X | | 7.5 | | 1 | | | | | |
| | 6 | R73-3 (CA) | LEFT TURN/NO U TURN | 36" x 36" | | X | | WHITE | III | BLACK | | X | | 9.0 | | | | | | 1 | ELECTRICAL PLAN |
| | 7 | D3-1 | Di Giorgio Rd | 72" x 18" | | X | | GREEN | VII | BLACK | VII | | X | | 9.0 | | | | 1 | | ELECTRICAL PLAN |
| | 8 | R9-3b | USE CROSSWALK | 18" x 12" | | X | | WHITE | III | BLACK | III | X | | 1.50 | | | | | 1 | | ELECTRICAL PLAN |
| | | R9-3a | NO PEDESTRIAN CROSSING SYMBOL | 18" x 18" | | X | | WHITE | III | BLACK/RED | III | X | | 2.25 | | | | | | | |
| | 9 | D3-1 | Route 184 | 60" x 18" | | X | | GREEN | VII | BLACK | VII | | X | | 7.5 | | | | 1 | | ELECTRICAL PLAN |
| | 10 | R73-3 (CA) | LEFT TURN/NO U TURN | 36" x 36" | | X | | WHITE | III | BLACK | | X | | 9.0 | | | | | | 1 | ELECTRICAL PLAN |
| | 11 | D3-1 | Di Giorgio Rd | 72" x 18" | | X | | GREEN | VII | BLACK | VII | | X | | 9.0 | | | | 1 | | ELECTRICAL PLAN |
| | 12 | D3-1 | Route 184 | 60" x 18" | | X | | GREEN | VII | BLACK | VII | | X | | 7.5 | | | | 1 | | ELECTRICAL PLAN |
| | | R9-3b | USE CROSSWALK | 18" x 12" | | X | | WHITE | III | BLACK | III | X | | 1.50 | | | | | | | |
| | | R9-3a | NO PEDESTRIAN CROSSING SYMBOL | 18" x 18" | | X | | WHITE | III | BLACK/RED | III | X | | 2.25 | | | | | | | |
| | | | | | | | | | | | TOTAL | | | 40.5 | 33.0 | 2 | 2 | 1 | | | |

(N) NOT A SEPARATE PAY ITEM, FOR INFORMATION ONLY.

# PAVEMENT DELINEATION QUANTITIES

| SHEET No. | ROUTE | LOCATION FROM | LOCATION TO | DIRECTION | DETAIL No. | PAVEMENT MARKERS (RETROREFLECTIVE) TYPE D TWO-WAY YELLOW | PAVEMENT MARKERS (RETROREFLECTIVE) TYPE G ONE-WAY CLEAR | THERMOPLASTIC TRAFFIC STRIPE SOLID 4" | THERMOPLASTIC TRAFFIC STRIPE SOLID 8" | THERMOPLASTIC TRAFFIC STRIPE (BROKEN 36-12) 4" | THERMOPLASTIC PAVEMENT MARKING DESCRIPTION | THERMOPLASTIC PAVEMENT MARKING SQFT | THERMOPLASTIC PAVEMENT MARKING REMOVE |
|---|---|---|---|---|---|---|---|---|---|---|---|---|---|
| | | | | | | EA | EA | LF | LF | LF | | | SQFT |
| PD-1 | Route 184 | 51+27 | 52+51 | NB | 12 | | 4 | | | 124 | 1-CROSSWALK (59 FT, 81 FT) | 140 | |
| | | 51+27 | 52+51 | NB | 29 | 14 | | 496 | | | 1-CROSSWALK (83 FT, 86 FT) | 169 | |
| | | 51+27 | 52+51 | NB | 38 | | 6 | | 124 | | 1-CROSSWALK (76 FT, 87 FT) | 163 | |
| | | 51+27 | 52+51 | SB | 12 | | 4 | | | 124 | 1-LIMIT LINE (47 FT) | 47 | |
| | | 51+27 | 52+51 | NB | 27B | | | 124 | | | 1-RAILROAD LIMIT LINE (44 FT) | 88 | |
| | | 53+44 | 55+90 | NB | 12 | | 6 | | | 246 | 6-TYPE III (L) ARROWS | 252 | 252 |
| | | 53+44 | 55+73 | SB | 38 | | 11 | | 229 | | 4-RAILROAD CROSSING SYMBOL | 528 | |
| | | 53+44 | 55+90 | SB | 12 | | 6 | | | 246 | | | |
| | Di Giorgio Rd | 8+85 | 9+51 | | 6 | 2 | | | | 66 | | | |
| | | 10+56 | 11+20 | | 6 | 2 | | | | 64 | | | |
| SUBTOTAL | | | | | | 18 | 37 | 620 | 353 | 870 | | 1387 | 252 |
| TOTAL | | | | | | 55 | | 620 | 353 | 870 | | 1387 | 252 |

# MARKER QUANTITIES

| SHEET No. | OBJECT MARKER | REMOVE MARKER |
|---|---|---|
| | EA | EA |
| PD-1 | 1 | 1 |
| | 2 | 1 |
| TOTAL | 3 | 2 |

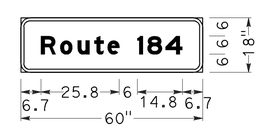


3.0" Radius, 1.0" Border,
White on Green;
[Route 184] E Mod;

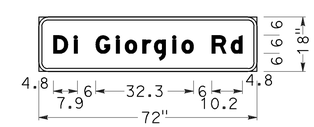


3.0" Radius, 1.0" Border,
White on Green;
[Di Giorgio Rd] E Mod;

# PAVEMENT DELINEATION AND SIGN QUANTITIES

## PDQ-1

REVISED BY | DATE REVISED
SANDY LE | HASSAN TAHA
CALCULATED-DESIGNED BY | CHECKED BY
FUNCTIONAL SUPERVISOR: MOHAMMED QATAMI

STATE OF CALIFORNIA - DEPARTMENT OF TRANSPORTATION
Caltrans TRAFFIC DESIGN

LAST REVISION 12-06-10 | DATE PLOTTED => 07-MAR-2011 | TIME PLOTTED => 11:33

| Dist | COUNTY | ROUTE | POST MILES TOTAL PROJECT | SHEET No. | TOTAL SHEETS |
|---|---|---|---|---|---|
| 06 | Ker | 184 | 1.0 | 12 | 35 |

Scott Friesen 12/03/10
REGISTERED CIVIL ENGINEER DATE

1-10-11
PLANS APPROVAL DATE

REGISTERED PROFESSIONAL ENGINEER SCOTT M FRIESEN No. 57969 Exp 6/30/12 CIVIL STATE OF CALIFORNIA

*THE STATE OF CALIFORNIA OR ITS OFFICERS OR AGENTS SHALL NOT BE RESPONSIBLE FOR THE ACCURACY OR COMPLETENESS OF SCANNED COPIES OF THIS PLAN SHEET.*

## ROADWAY EXCAVATION

| LOCATION | CY |
|---|---|
| SW CORNER CURB RAMP | 9.7 |
| NW CORNER (INCLUDES CURB RAMP) | 26.4 |
| NE CORNER (INCLUDES CURB RAMP) | 26.5 |
| ROUTE 184 Sta 54+35 TO Sta 56+96.50 | 79.4 |
| ROUTE 184 Sta 56+75.42 TO Sta 59+70.50 | 46.4 |
| DITCH NW CORNER | 10.0 |
| DITCH NE CORNER | 8.0 |
| TOTAL | 206.4 |

## REMOVE CONCRETE

| LOCATION | CURB | TEXTURED CONCRETE |
|---|---|---|
| | CY | CY |
| ROUTE 184 Sta 54+35 TO Sta 56+00 | 9.9 | 19.7 |
| ROUTE 184 Sta 56+70.50 TO Sta 59+70.50 | 7.4 | 20.7 |
| SW CORNER OF INTERSECTION | 1.8 | |
| SUBTOTAL | 19.2 | 40.4 |
| TOTAL | 59.6 | |

## EROSION CONTROL (COMPOST BLANKET)

| LOCATION | | Qty | COMPOST (EROSION CONTROL) (N) | PURE LIVE SEED (EROSION CONTROL) (N) |
|---|---|---|---|---|
| | | CY | CY | LB |
| DITCH 1 | NW CORNER | 5.0 | 5.0 | 0.46 |
| DITCH 2 | NE CORNER | 5.0 | 5.0 | 0.46 |
| | | 10.0 | | |

(N) - Not a seperate pay item. For informational purposes only.

## 6" GALVANIZED STEEL PIPE

| LOCATION | LF |
|---|---|
| SW CORNER (SOUTH VENT PIPE) | 23 |
| SW CORNER (NORTH VENT PIPE) | 19 |
| TOTAL | 42 |

## MINOR CONCRETE

| LOCATION | CURB | CURB RAMP AND SIDEWALK | TEXTURED PAVING |
|---|---|---|---|
| | CY | CY | SQFT |
| SW CORNER CURB RAMP | 5.0 | 8.1 | |
| NW CORNER CURB RAMP | 2.1 | 3.5 | |
| NE CORNER CURB RAMP | 3.4 | 2.7 | |
| ROUTE 184 Sta 54+35 TO Sta 56+96.50 | 15.6 | | 1133 |
| ROUTE 184 Sta 56+75.42 TO Sta 59+70.50 | 10.3 | | 814 |
| SUBTOTAL | 36.4 | 14.3 | 1947 |
| TOTAL | 50.7 | | 1947 |

## STRUCTURAL SECTION

| LOCATION | COLD PLANE AC Pvmt | HMA (TYPE A) | CLASS 2 AB | TACK COAT |
|---|---|---|---|---|
| | SQYD | TON | CY | TON |
| ROUTE 184/DI GIORGIO INTERSECTION | 2108.0 | 359.3 | | 1.2 |
| NW CORNER OF INTERSECTION | | 46.4 | | |
| NE CORNER OF INTERSECTION | | 48.2 | | |
| ROUTE 184 Sta 54+35 TO Sta 56+00 | | 84.5 | 28.9 | 0.3 |
| ROUTE 184 Sta 56+70.50 TO Sta 59+70.50 | 251.0 | 96.8 | 18.6 | 0.2 |
| PLACE HMA (Misc AREA) | | 2.8 | | |
| HMA DIKE (TYPE A) | | 1.6 | | |
| ROUTE 184 MEDIAN (0.65' HMA) | | 19.8 | | |
| TOTAL | 2359.0 | 659.4 | 47.5 | 1.7 |

## PLACE HMA (Misc AREA)

| LOCATION | SQYD |
|---|---|
| NW CORNER OVERSIDE DRAIN | 5.0 |
| NE CORNER OVERSIDE DRAIN | 5.0 |
| NW CORNER HMA PATH | 6.1 |
| TOTAL | 16.1 |

## PLACE HMA DIKE (TYPE A)

| LOCATION | LF |
|---|---|
| NW CORNER CURB RAMP | 30.7 |
| NE CORNER CURB RAMP | 26.0 |
| TOTAL | 56.7 |

## ADJUST MANHOLE TO GRADE

| LOCATION | EA |
|---|---|
| SW CORNER | 4 |

# SUMMARY OF QUANTITIES

Q-1

STATE OF CALIFORNIA - DEPARTMENT OF TRANSPORTATION
DESIGN
FUNCTIONAL SUPERVISOR: MICHAEL K. LIM
CALCULATED-DESIGNED BY: TONY HO
CHECKED BY: SCOTT M. FRIESEN
REVISED BY
DATE REVISED

LAST REVISION 01-24-11
DATE PLOTTED => 07-MAR-2011
TIME PLOTTED => 11:33

| Dist | COUNTY | ROUTE | POST MILES TOTAL PROJECT | SHEET No. | TOTAL SHEETS |
|---|---|---|---|---|---|
| 06 | Ker | 184 | 1.0 | 13 | 35 |

REGISTERED ELECTRICAL ENGINEER 1-10-11 DATE

1-10-11
PLANS APPROVAL DATE

REGISTERED PROFESSIONAL ENGINEER RAJPREET SINGH No. 17496 Exp. 6/30/11 ELECTRICAL STATE OF CALIFORNIA

*THE STATE OF CALIFORNIA OR ITS OFFICERS OR AGENTS SHALL NOT BE RESPONSIBLE FOR THE ACCURACY OR COMPLETENESS OF SCANNED COPIES OF THIS PLAN SHEET.*

## LEGEND: (FOR SHEETS E-1 THROUGH E-3)

1 Exist 120/240 V, 1Ø, 3-WIRE, TYPE III-BF SERVICE EQUIPMENT ENCLOSURE WITH THE FOLLOWING CIRCUIT BREAKERS:

CTID No. 06501840001021T

| AMPERES | VOLTS | POLES | NAMEPLATE | METER | PHOTOELECTRIC CONTROL TYPE |
|---|---|---|---|---|---|
| 100 | 240 | 3 | MAIN BREAKER | 1 YES/ 2 NO | —— |
| 30 | 240 | 2 | LIGHTING | NO | IV |
| 40 | 120 | 1 | TRAFFIC SIGNAL | YES | —— |
| 40 | 120 | 1 | SPARE | YES | —— |

2 Exist MODEL 2070 CONTROLLER ASSEMBLY WITH MODEL 332 CABINET AND BATTERY BACKUP SYSTEM.

3 Exist PG&E PULL BOX.

4 RC ALL Exist CONDUCTORS EXCEPT 2#12 RAILROAD PREEMPTION.

5 Exist 3"C, RS MAGNETIC DETECTOR.

6 RC CONDUCTORS. RR 1 SIC

7 180' TO LIMIT LINE.

8 REFER TO SIGN PLANS FOR SIGN DETAILS.

## NOTES:

1. LOOP DETECTORS SHALL BE CONNECTED IN PB AS SHOWN IN DETAIL A FOR 1 TYPE D LOOP AND 3 TYPE A LOOPS ON ONE SENSOR UNIT CHANNEL.
2. LOOP DETECTORS SHALL BE CONNECTED IN PB AS SHOWN IN DETAIL B FOR 1 TYPE D LOOP AND 2 TYPE A LOOPS ON ONE SENSOR UNIT CHANNEL.
3. ALL PULL BOXES SHALL BE No. 5 WITH EXTENSION UNLESS OTHERWISE NOTED.

## ABBREVIATIONS:

PG&E = PACIFIC GAS AND ELECTRIC COMPANY
AT&T = AMERICAN TELEPHONE AND TELEGRAPH
CTID = CALTRANS IDENTIFICATION

## SYMBOLS:

RAILROAD CONTROLLER CABINET

Exist EQUIPMENT DESCRIPTION

Exist CONDUIT RUN NUMBER

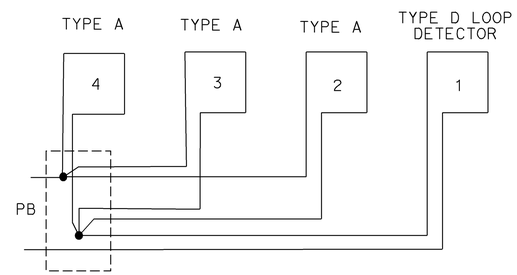


## DETAIL A

1D + 3A LOOP CONNECTION

## CONDUIT AND CONDUCTOR SCHEDULE

| CONDUCTOR DESIGNATION | | | | CONDUIT RUN NUMBER AND SIZE | | | | | | | | | | |
|---|---|---|---|---|---|---|---|---|---|---|---|---|---|---|
| CABLE TYPE | POLE | PHASE | | 1 3-3" | 2 2" | 3 4" | 4 4" | 5 4" | 6 4" | 7 4" | 8 1½" | 9 4" | 10 4" | 11 2½" |
| VEH-PED 12CSC | a | 4,4P | 2 | 1 1 | | | | | | | | | | |
| | b | 1,2,2P | 4 | 1 1 | 1 1 | | | | | | | | | |
| | c | 1,6,6P | 4 | 1 1 | | 1 1 | | | | | | | | |
| | D | 4,8,4P | 6 | 1 1 | | 1 1 | 1 1 | | | | | | | |
| | E | 8 | | 1 | | 1 | 1 | 1 | | | | | | |
| | F | 5,6,6P | 6 | 1 1 | | | | | | 1 1 | | 1 1 | 1 1 | |
| | g | 2,5,2P | 2 | 1 1 | | | | | | | | 1 1 | 1 1 | |
| 3CSC | H | 4,8 | | 1 | | | | | | | | | 1 | |
| | | TOTAL | | 8 6 | 1 1 | 3 2 | 2 1 | 1 0 | 0 0 | 1 1 | 0 0 | 2 2 | 3 2 | 0 0 |
| AWG | CIRCUIT | | | | | | | | | | | | | |
| #8 | LIGHTING | | | | 2 | | 2 | 2 | 2 | 2 | | 2 | 2 | |
| #6 | SIGNAL | | | 2 | | | | | | 2 | | 2 | 2 | |
| #12 | RAILROAD PREEMPTION | | | 2 | | | | | | | 2 | | | 2 |
| sic | | | | 1 | | | | | | | | | | |
| DETECTORS-TYPE B DLC | | | | | | | | | | | | | | |
| DLC | | Ø1 | | 2 | | | | | | 2 | | 2 | 2 | |
| | | Ø2 | | 2 | 2 | | | | | | | | | |
| | | Ø2 ADV | | 1 | 1 | | | | | | | | | |
| | | Ø4 | | 1 | | 1 | 1 | | | | | | | |
| | | Ø4 ADV | | 1 | | 1 | 1 | 1 | | | | | | |
| | | Ø5 | | 2 | 2 | | | | | | | | | |
| | | Ø6 | | 2 | | | | | | 2 | | 2 | 2 | |
| | | Ø6 ADV | | 1 | | | | | | 1 | | 1 | 1 | |
| | | Ø8 | | 1 | | | | | | | | | 1 | |
| | | Ø8 ADV | | 1 | | | | | | | | | | |
| TOTAL | | | | 14 | 5 | 2 | 2 | 1 | 0 | 5 | 0 | 5 | 6 | 0 |

## POLE AND EQUIPMENT SCHEDULE

| No. | STANDARD TYPE | STANDARD SMA (ft) | STANDARD LMA (ft) | VEH SIG MTG MAST ARM | VEH SIG MTG POLE | PED SIG MTG | PPB Ø | PPB ARROW | HPS LUM (W) | SPECIAL REQUIREMENTS |
|---|---|---|---|---|---|---|---|---|---|---|
| a | 24-3-70 | 35 | 12 | MAS | SV-1-T | SP-1-T | 2 | ← | 200 | RS ppb. Add PPB. INSTALL D3-1 SIGN (ROUTE 184) ON SIGNAL POLE. 8 |
| b | 1-A | | | | TV-2-T | SP-1-T | 4 | → | | RS TV-2-T. INSTALL TV-2-T. |
| c | 26-4-100 | 45 | 12 | MAS MAT | SV-1-T | SP-1-T | 4 | ← | 200 | F= 20.5'. INSTALL D3-1 SIGN (DI GIORGIO Rd) ON SIGNAL POLE. INSTALL R73-3(CA) SIGN ON SMA. 8 |
| D | 1-A | | | | TV-2-T | SP-1-T | 6 | → | | |
| E | 17-3-70 | 20 | 12 | MAS | SV-1-T | | | | 200 | RL FROM POLE e. RS SV-1-T AND ppb. Add SV-1-T ON SIGNAL POLE. INSTALL D3-1 SIGN (ROUTE 184), R9-3A, AND R9-3B ON SIGNAL POLE. 8 |
| F | 1-A | | | | TV-2-T | SP-1-T | 6 | ← | | |
| g | 26-4-70 | 40 | 12 | MAS MAT | SV-1-T | SP-1-T | 2 | → | 200 | RS SV-1-T. INSTALL SV-1-T, SP-1-T, AND PPB. INSTALL R73-3(CA) SIGN ON SMA. INSTALL D3-1 SIGN (DI GIORGIO Rd) ON SIGNAL POLE. 8 |
| H | 1-A | | | | TV-2-T | | | | | INSTALL R9-3A, AND R9-3B ON SIGNAL POLE. 8 |
| c | 24-4-70 | 35 | 12 | MAS MAT | SV-1-T | SP-1-T | 4 | ← | 200 | RS |
| d | 1-A | | | | TV-2-T | SP-1-T | 6 | → | | RS |
| e | 17-3-70 | 20 | 12 | MAS | SV-1-T | SP-1-T | 6 | ← | 200 | RL TO POLE E. |
| f | 1-A | | | | TV-2-T | SP-1-T | 8 | → | | RS |
| h | 1-A | | | | TV-2-T | | 2 | → | | RS |

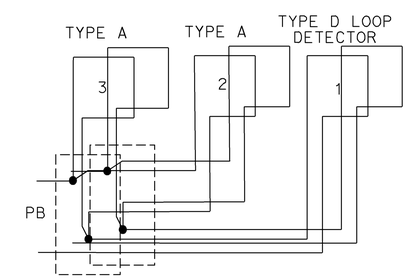


## DETAIL B

1D + 2A LOOP CONNECTION

# SIGNAL AND LIGHTING
## (ROUTE 184 / DI GIORGIO ROAD)

NO SCALE

**E-1**

THIS PLAN IS ACCURATE FOR ELECTRICAL WORK ONLY.

STATE OF CALIFORNIA - DEPARTMENT OF TRANSPORTATION
Caltrans® ELECTRICAL DESIGN
FUNCTIONAL SUPERVISOR: ALI BAKHDOUD
CALCULATED-DESIGNED BY: RAJPREET SINGH
CHECKED BY: KARIM ABDOLLAHIAN
REVISED BY
DATE REVISED

LAST REVISION 01-06-11
DATE PLOTTED => 01-MAR-2011
TIME PLOTTED => 14:14

| Dist | COUNTY | ROUTE | POST MILES TOTAL PROJECT | SHEET No. | TOTAL SHEETS |
|---|---|---|---|---|---|
| 06 | Ker | 184 | 1.0 | 14 | 35 |

REGISTERED ELECTRICAL ENGINEER 1-10-11 DATE

1-10-11
PLANS APPROVAL DATE

REGISTERED PROFESSIONAL ENGINEER RAJPREET SINGH No. 17496 Exp. 6/30/11 ELECTRICAL STATE OF CALIFORNIA

*THE STATE OF CALIFORNIA OR ITS OFFICERS OR AGENTS SHALL NOT BE RESPONSIBLE FOR THE ACCURACY OR COMPLETENESS OF SCANNED COPIES OF THIS PLAN SHEET.*

## NOTES:

1. FOR LEGEND AND SCHEDULES SEE SHEET E-1.
2. FOR ACCURATE RIGHT OF WAY DATA, CONTACT RIGHT OF WAY ENGINEERING AT THE DISTRICT OFFICE.

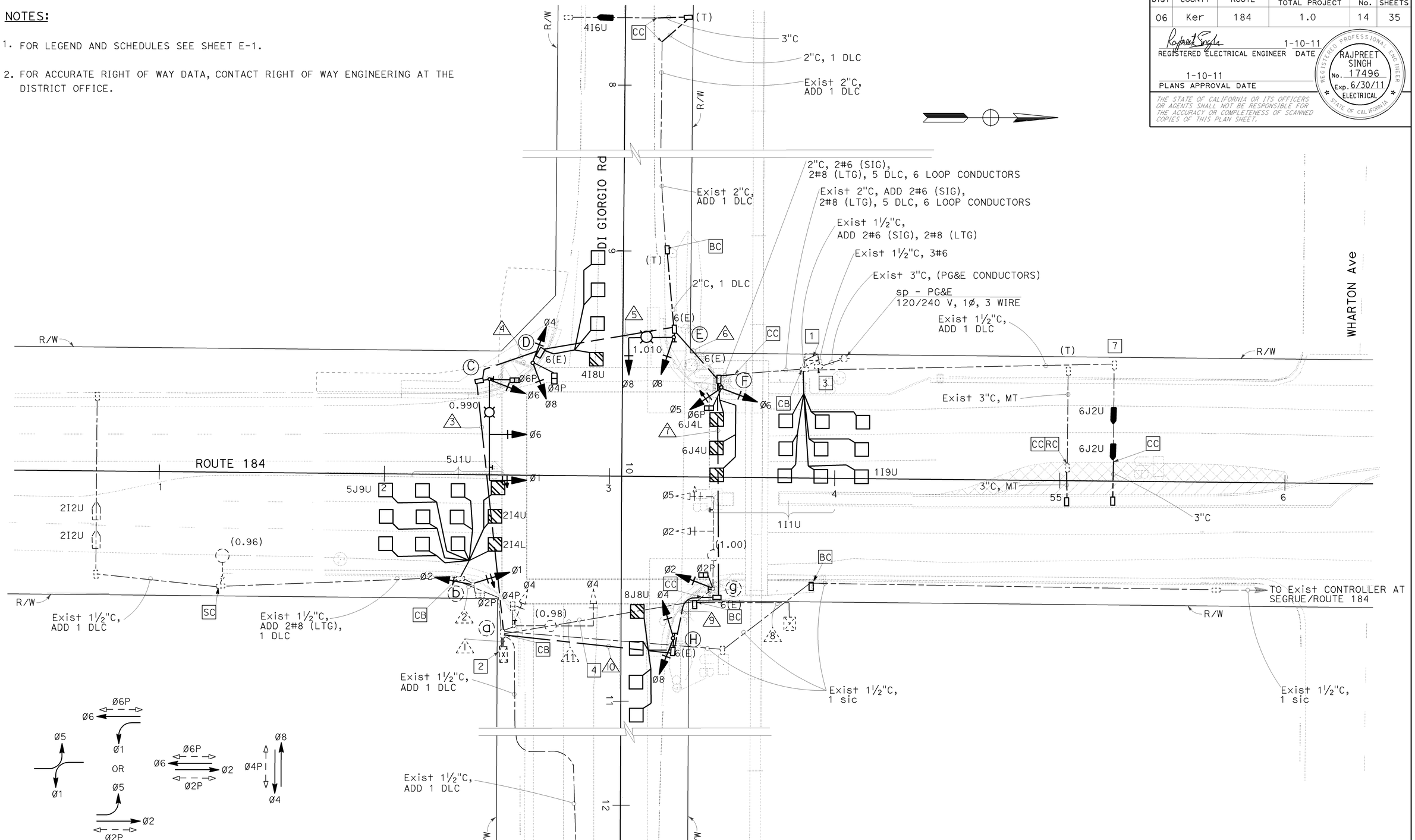





PHASE DIAGRAM
STEADY DEMAND SEQUENCE

# SIGNAL AND LIGHTING
## (ROUTE 184 / DI GIORGIO ROAD)
## E-2

SCALE: 1"=20'

THIS PLAN IS ACCURATE FOR ELECTRICAL WORK ONLY.

STATE OF CALIFORNIA - DEPARTMENT OF TRANSPORTATION
Caltrans® ELECTRICAL DESIGN

FUNCTIONAL SUPERVISOR: ALI BAKHDOUD
CALCULATED-DESIGNED BY: KARIM ABDOLLAHIAN
CHECKED BY: RAJPREET SINGH
REVISED BY
DATE REVISED

LAST REVISION 01-06-11
DATE PLOTTED => 01-MAR-2011
TIME PLOTTED => 14:14

| Dist | COUNTY | ROUTE | POST MILES TOTAL PROJECT | SHEET No. | TOTAL SHEETS |
|---|---|---|---|---|---|
| 06 | Ker | 184 | 1.0 | 15 | 35 |

REGISTERED ELECTRICAL ENGINEER 1-10-11 DATE

1-10-11
PLANS APPROVAL DATE

REGISTERED PROFESSIONAL ENGINEER RAJPREET SINGH No. 17496 Exp. 6/30/11 ELECTRICAL STATE OF CALIFORNIA

*THE STATE OF CALIFORNIA OR ITS OFFICERS OR AGENTS SHALL NOT BE RESPONSIBLE FOR THE ACCURACY OR COMPLETENESS OF SCANNED COPIES OF THIS PLAN SHEET.*

NOTES:

1. FOR LEGEND AND SCHEDULES SEE SHEET E-1.
2. FOR ACCURATE RIGHT OF WAY DATA, CONTACT RIGHT OF WAY ENGINEERING AT THE DISTRICT OFFICE.

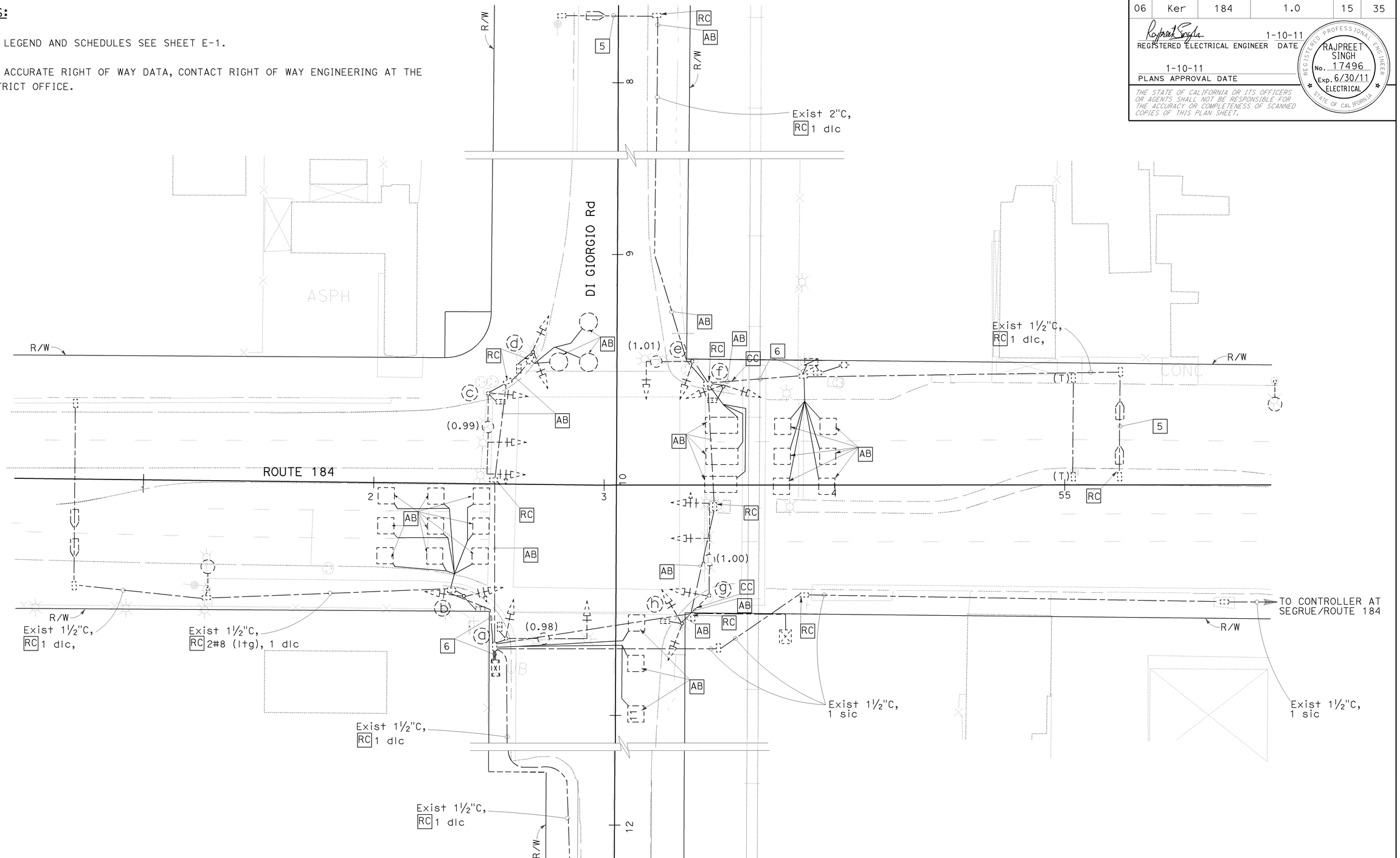


THIS PLAN IS ACCURATE FOR ELECTRICAL WORK ONLY.

# SIGNAL AND LIGHTING
## (ROUTE 184 / DI GIORGIO ROAD)

SCALE: 1"=20'

**E-3**

STATE OF CALIFORNIA - DEPARTMENT OF TRANSPORTATION
Caltrans® ELECTRICAL DESIGN

FUNCTIONAL SUPERVISOR: ALI BAKHDOUD
CALCULATED-DESIGNED BY: KARIM ABDOLLAHIAN
CHECKED BY: RAJPREET SINGH
REVISED BY
DATE REVISED

LAST REVISION 01-06-11
DATE PLOTTED => 01-MAR-2011
TIME PLOTTED => 14:14

| DIST | COUNTY | ROUTE | POST MILES TOTAL PROJECT | SHEET NO. | TOTAL SHEETS |
|---|---|---|---|---|---|
| 06 | Ker | 184 | 1.0 | 16 | 35 |

REGISTERED CIVIL ENGINEER

June 6, 2008
PLANS APPROVAL DATE

REGISTERED PROFESSIONAL ENGINEER
Donald E. Howe
No. C46402
Exp. 3-31-09
CIVIL
STATE OF CALIFORNIA

*The State of California or its officers or agents shall not be responsible for the accuracy or completeness of electronic copies of this plan sheet.*

*To accompany plans dated* 1-10-11

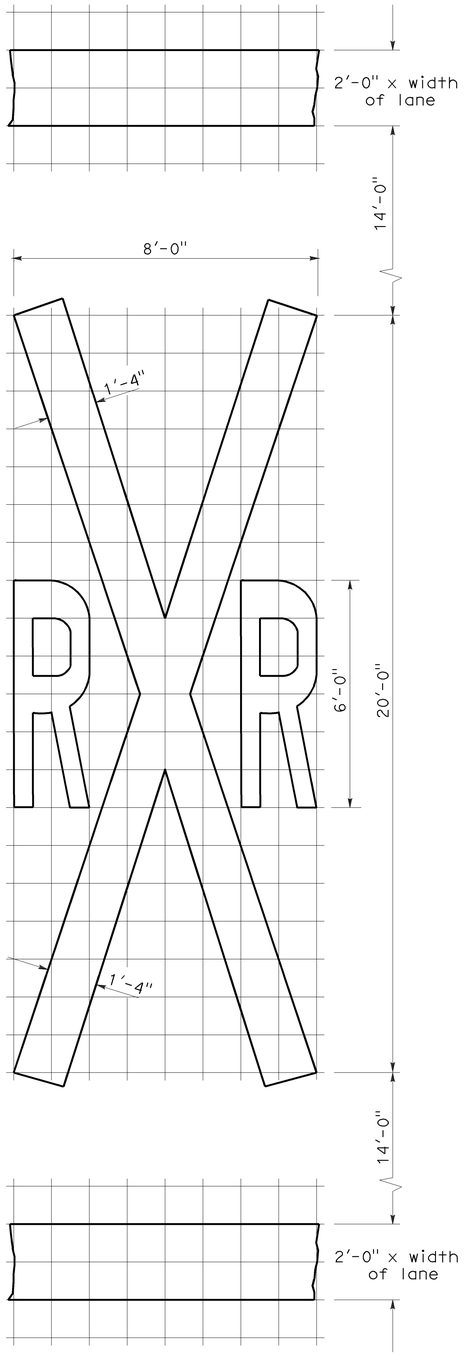


RAILROAD CROSSING SYMBOL

✳70 sq ft DOES NOT INCLUDE THE 2'-0" x VARIABLE WIDTH TRANSVERSE LINES.

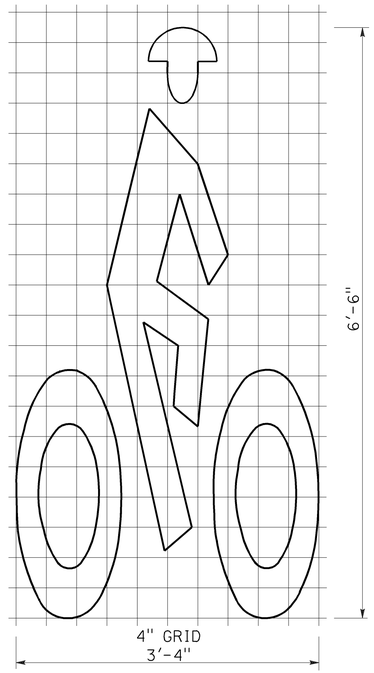


A=7 sq ft

BIKE LANE SYMBOL

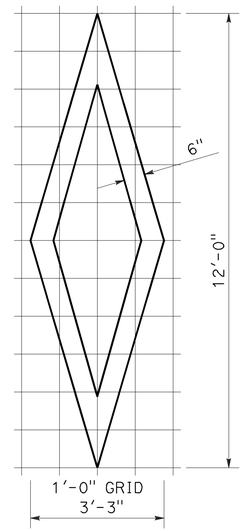


A=11 sq ft

DIAMOND SYMBOL

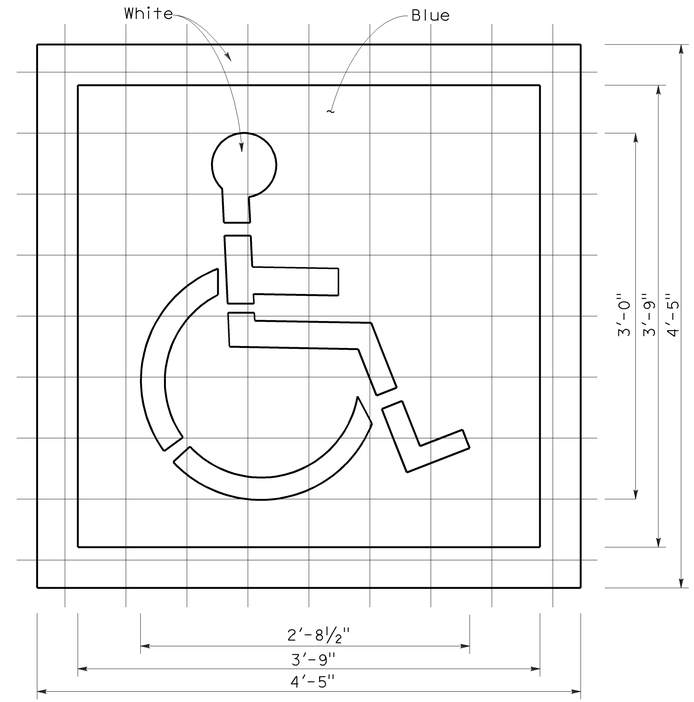


A (White) =9 sq ft
A (Blue) =14 sq ft

INTERNATIONAL SYMBOL OF ACCESSIBILITY MARKING

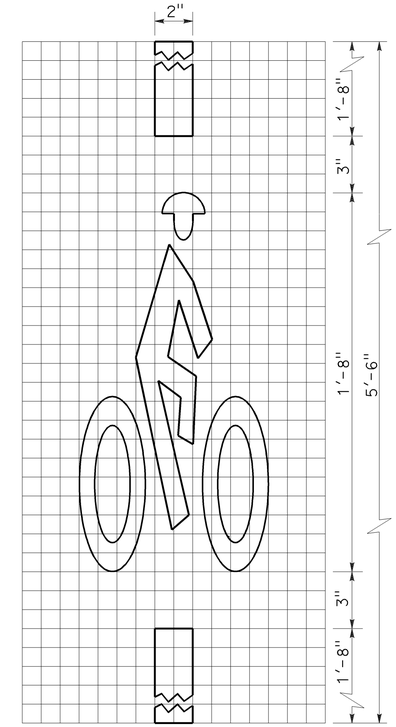


A=2 sq ft

BICYCLE LOOP DETECTOR SYMBOL

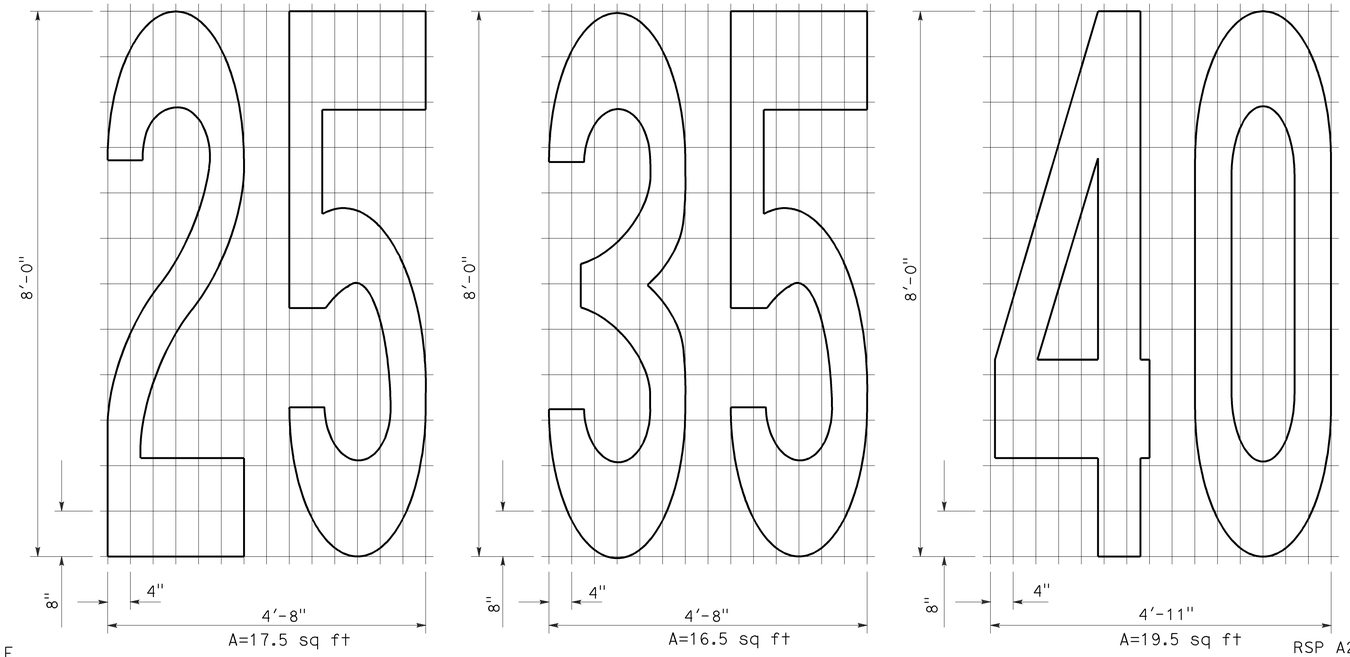


A=17.5 sq ft
A=16.5 sq ft
A=19.5 sq ft

NUMERALS

NOTE:

1. Minor variations in dimensions may be accepted by the Engineer.

STATE OF CALIFORNIA
DEPARTMENT OF TRANSPORTATION

# PAVEMENT MARKINGS SYMBOLS AND NUMERALS

NO SCALE

RSP A24C DATED JUNE 6, 2008 SUPERSEDES STANDARD PLAN A24C DATED MAY 1, 2006 - PAGE 11 OF THE STANDARD PLANS BOOK DATED MAY 2006.

**REVISED STANDARD PLAN RSP A24C**

**2006 REVISED STANDARD PLAN RSP A24C**

5-27-08

| DIST | COUNTY | ROUTE | POST MILES TOTAL PROJECT | SHEET NO. | TOTAL SHEETS |
|---|---|---|---|---|---|
| 06 | Ker | 184 | 1.0 | 17 | 35 |

REGISTERED CIVIL ENGINEER

November 17, 2006
PLANS APPROVAL DATE

REGISTERED PROFESSIONAL ENGINEER
Michael Janzen
No. 44788
Exp. 03-31-08
CIVIL
STATE OF CALIFORNIA

*The State of California or its officers or agents shall not be responsible for the accuracy or completeness of electronic copies of this plan sheet.*

*To accompany plans dated* 1-10-11

**2006 REVISED STANDARD PLAN RSP A87A**

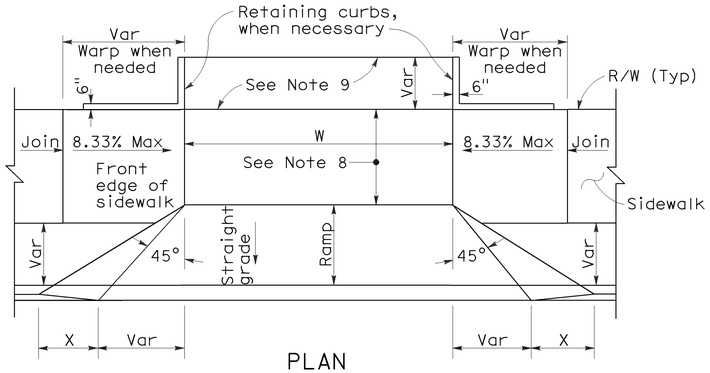


PLAN

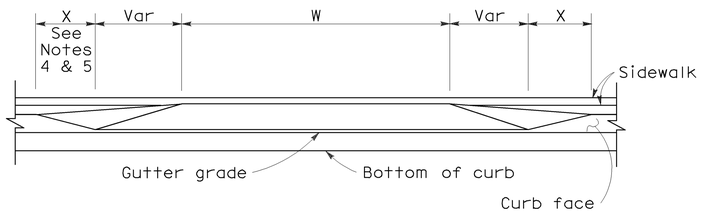


ELEVATION

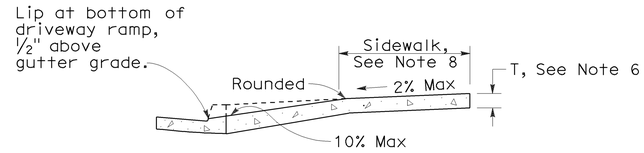


CASE A

Typical driveway, sidewalk not depressed

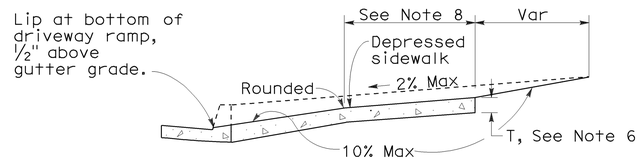


CASE B

Driveway with depressed sidewalk

SECTIONS

## DRIVEWAYS

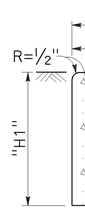


TYPE A1 CURBS

See Table A

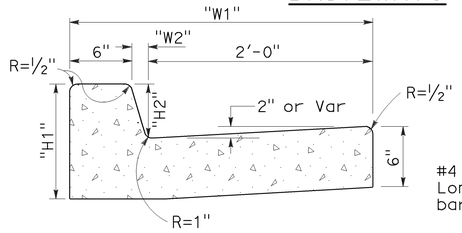


TYPE A2 CURBS

See Table A

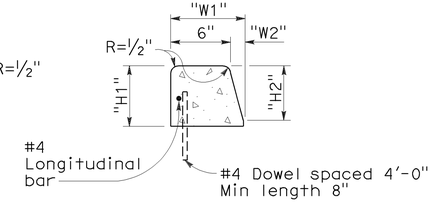


TYPE A3 CURBS

Superimposed on existing pavement
See Table A

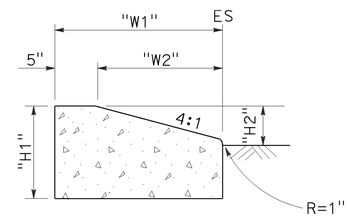


TYPE D CURBS

See Table A

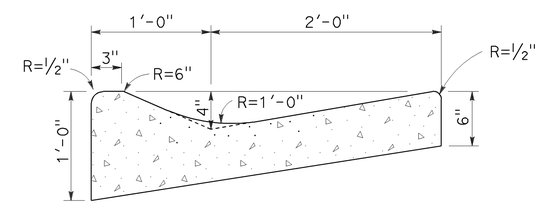


TYPE E CURB

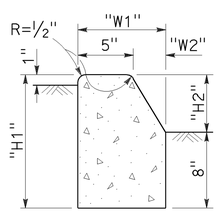


TYPE B1 CURBS

See Table A

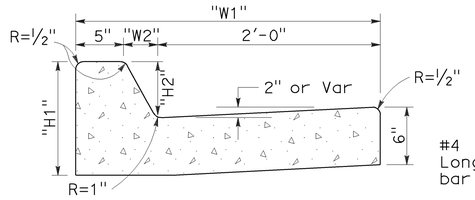


TYPE B2 CURBS

See Table A

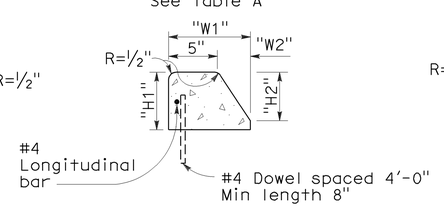


TYPE B3 CURBS

Superimposed on existing pavement
See Table A

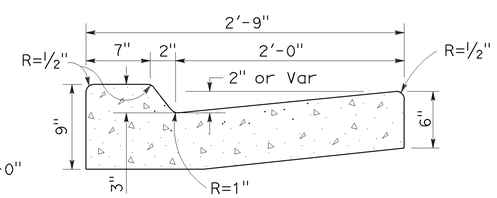


TYPE B4 CURBS

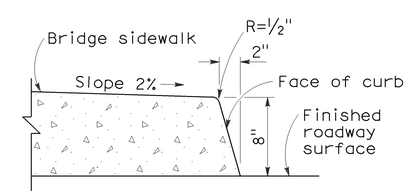


TYPE H CURB

On Bridges

## CURB QUANTITIES

| TYPE | CUBIC YARDS PER LINEAR FOOT |
|---|---|
| A1-6 | 0.02585 |
| A1-8 | 0.03084 |
| A2-6 | 0.05903 |
| A2-8 | 0.06379 |
| A3-6 | 0.01036 |
| A3-8 | 0.01435 |
| B1-4 | 0.02185 |
| B1-6 | 0.02930 |
| B2-4 | 0.05515 |
| B2-6 | 0.06171 |
| B3-4 | 0.00641 |
| B3-6 | 0.01074 |
| B4 | 0.05709 |
| D-4 | 0.04083 |
| D-6 | 0.06804 |
| E | 0.06661 |

## TABLE A

| CURB TYPE | DIMENSIONS "H1" | "H2" | "W1" | "W2" |
|---|---|---|---|---|
| A1-6 | 1'-2" | 6" | 7½" | 1½" |
| A1-8 | 1'-4" | 8" | 8" | 2" |
| A2-6 | 1'-0" | 6" | 2'-7½" | 1½" |
| A2-8 | 1'-2" | 8" | 2'-8" | 2" |
| A3-6 | 6" | 5" | 7¼" | 1¼" |
| A3-8 | 8" | 7" | 7¾" | 1¾" |
| B1-4 | 1'-0" | 4" | 7½" | 2½" |
| B1-6 | 1'-2" | 6" | 9" | 4" |
| B2-4 | 10" | 4" | 2'-7½" | 2½" |
| B2-6 | 1'-0" | 6" | 2'-9" | 4" |
| B3-4 | 4" | 3" | 7" | 2" |
| B3-6 | 6" | 5" | 8½" | 3½" |
| D-4 | 10" | 4" | 1'-6" | 1'-1" |
| D-6 | 1'-0" | 6" | 2'-2" | 1'-8" |

## NOTES:

1. Case A driveway section typically applies.
2. Use Case B driveway section when ramp slopes would exceed 10% in Case A.
3. Use Case B driveway section when sidewalk cross slope would exceed 2% in Case A.
4. X=3'-0" except for curb heights over 10" where 4:1 slopes shall be used on curb slope.
5. X is a variable when sidewalk is located where wheelchairs may traverse the surface. Slopes shall not exceed 8.33%.
6. Sidewalk and ramp thickness "T" at driveway shall be 4" for residental and 6" for commercial.
7. Difference in slope of the driveway ramp and the slope of a line between the gutter and a point on the roadway 5'-0" from gutter line shall not exceed 15%. Reduce driveway ramp slope, not gutter slope, where required.
8. Minimum width of clear passageway for sidewalk shall be 4'-0".
9. Retaining curbs and acquisition of construction easement may be necessary for narrow sidewalks or curb heights in excess of 6".
10. Across the pedestrian route at curb ramp locations, the gutter pan slope shall not exceed 1" of depth for each 2'-0" of width.

## CURBS

STATE OF CALIFORNIA
DEPARTMENT OF TRANSPORTATION

# CURBS AND DRIVEWAYS

NO SCALE

RSP A87A DATED NOVEMBER 17, 2006 SUPERSEDES STANDARD PLAN A87A DATED MAY 1, 2006 - PAGE 113 OF THE STANDARD PLANS BOOK DATED MAY 2006.

**REVISED STANDARD PLAN RSP A87A**

10-25-06

| DIST | COUNTY | ROUTE | POST MILES TOTAL PROJECT | SHEET NO. | TOTAL SHEETS |
|---|---|---|---|---|---|
| 06 | Ker | 184 | 1.0 | 18 | 35 |

REGISTERED CIVIL ENGINEER

September 1, 2006
PLANS APPROVAL DATE

REGISTERED PROFESSIONAL ENGINEER — Hector David Cordova — No. C41957 — Exp. 3-31-08 — CIVIL — STATE OF CALIFORNIA

*The State of California or its officers or agents shall not be responsible for the accuracy or completeness of electronic copies of this plan sheet.*

*To accompany plans dated* 1-10-11

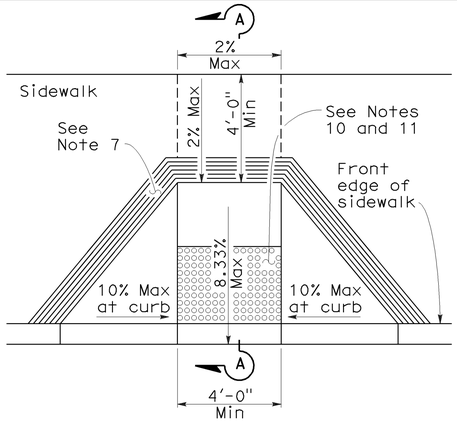


CASE A

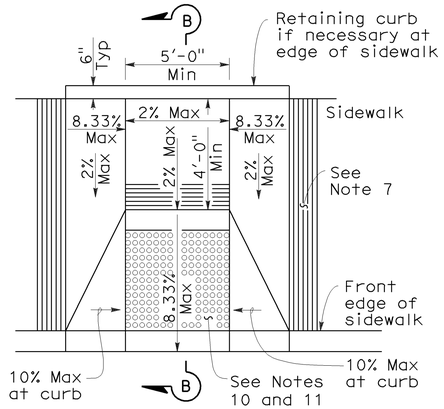


CASE B

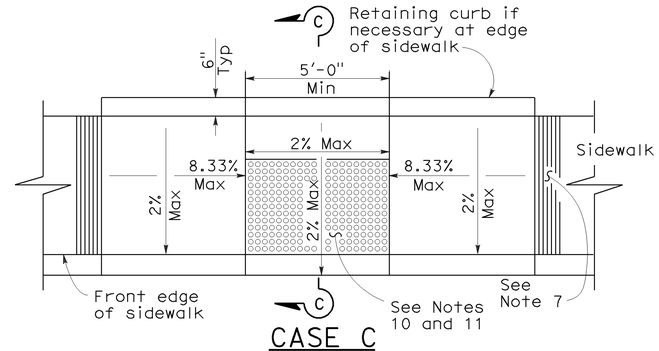


CASE C

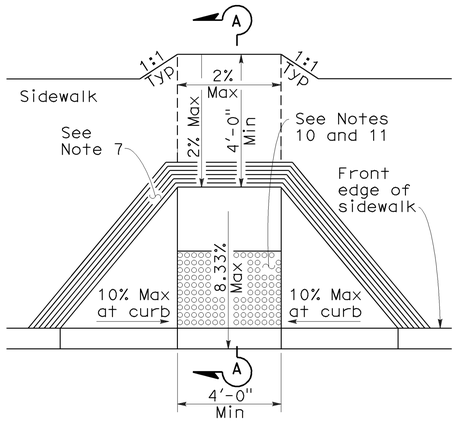


CASE D

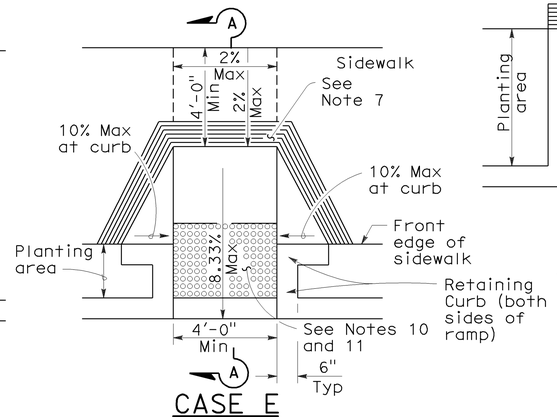


CASE E

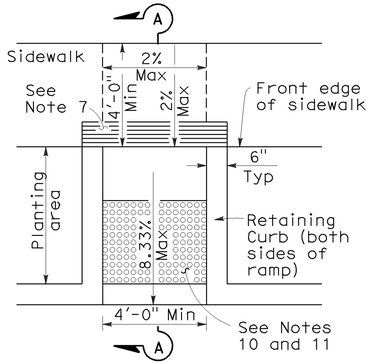


CASE F

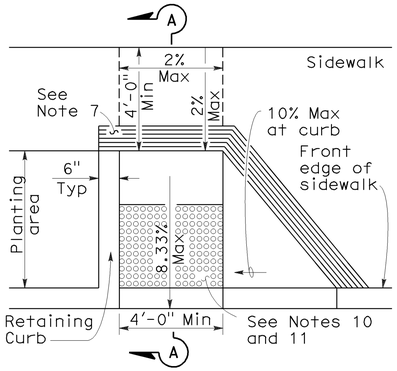


CASE G

See Note 4

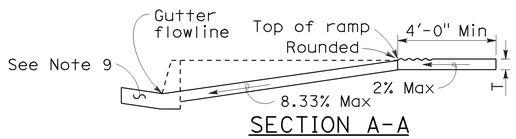


SECTION A-A

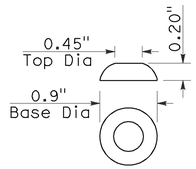


RAISED TRUNCATED DOME

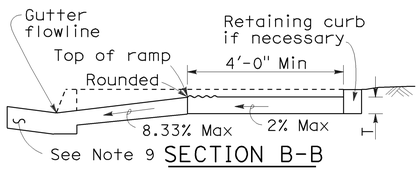


SECTION B-B

Depress entire sidewalk as required

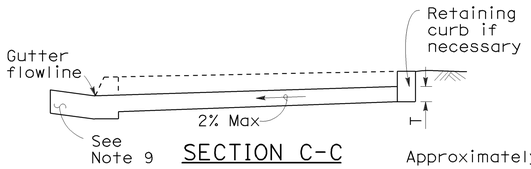


SECTION C-C

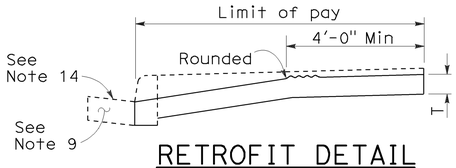


RETROFIT DETAIL

Existing curb and sidewalk

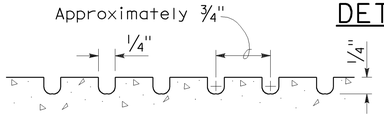


GROOVING DETAIL

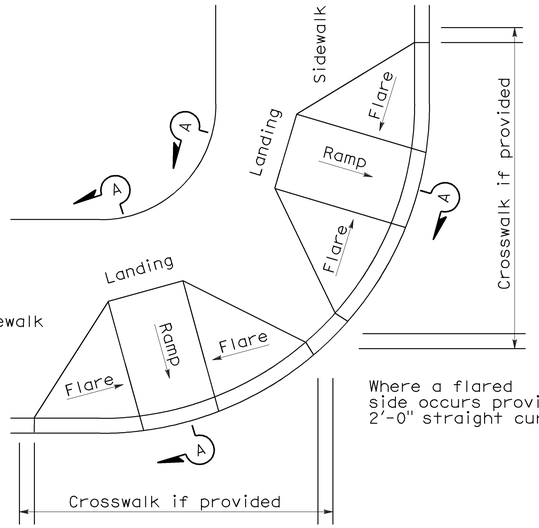


DETAIL A

TYPICAL TWO-RAMP CORNER INSTALLATION

See Note 1

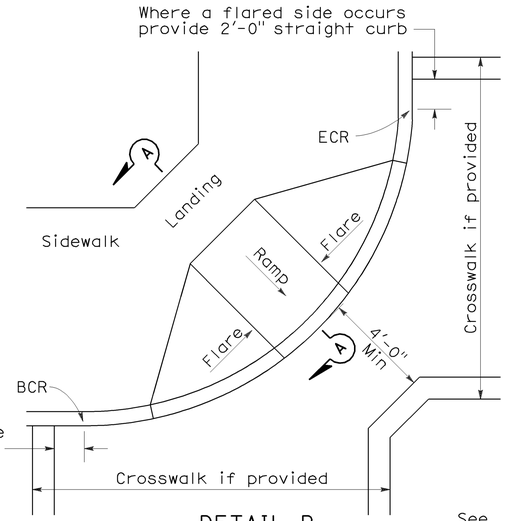


DETAIL B

TYPICAL ONE-RAMP CORNER INSTALLATION

See Notes 1 and 3

## NOTES:

1. As site conditions dictate, Case A through Case G curb ramps may be used for corner installations similar to those shown in Detail A and Detail B. The case of curb ramps used in Detail A do not have to be the same. Case A through Case G curb ramps also may be used at mid block locations, as site conditions dictate.
2. If distance from curb to back of sidewalk is too short to accommodate ramp and 4'-0" platform (landing) as shown in Case A, the sidewalk may be depressed longitudinally as in Case B, or C or may be widened as in Case D.
3. When ramp is located in center of curb return, crosswalk configuration must be similar to that shown for Detail B.
4. As site conditions dictate, the retaining curb side and the flared side of the Case G ramp shall be constructed in reversed position.
5. If located on a curve, the sides of the ramp need not be parallel, but the minimum width of the ramp shall be 4'-0".
6. Side slope of ramp flares vary uniformly from a maximum of 10% at curb to conform with longitudinal sidewalk slope adjacent to top of the ramp, except in Case C and Case F.
7. The curb ramp shall be outlined, as shown, with a 1'-0" wide border with 1/4" grooves approximately 3/4" on center. See grooving detail.
8. Transitions from ramps and landing to walks, gutters or streets shall be flush and free of abrupt changes.
9. Maximum slopes of adjoining gutters, the road surface immediately adjacent to the curb ramp or accessible route shall not exceed 5 percent within 4'-0" of the top and bottom of the curb ramp.
10. Curb ramps shall have a detectable warning surface that extends the full width and 3'-0" depth of the ramp. Detectable Warning Surfaces shall conform to the details on this plan and the requirements in the Special Provisions.
11. The edge of the detectable warning surface nearest the street shall be between 6" and 8" from the gutter flowline.
12. Sidewalk and ramp thickness, "T", shall be 3 1/2" minimum.
13. Utility pull boxes, manholes, vaults and all other utility facilities within the boundaries of the curb ramp will be relocated or adjusted to grade by the owner prior to, or in conjunction with, curb ramp construction.
14. For retrofit conditions, removal and replacement of curb apron will be at the Contractor's option, unless otherwise shown on project plans.

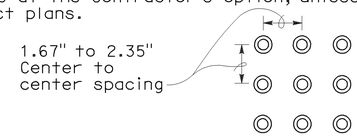


RAISED TRUNCATED DOME PATTERN (IN-LINE)

DETECTABLE WARNING SURFACE

See Note 10

STATE OF CALIFORNIA
DEPARTMENT OF TRANSPORTATION

# CURB RAMP DETAILS

NO SCALE

RSP A88A DATED SEPTEMBER 1, 2006 SUPERSEDES STANDARD PLAN A88A DATED MAY 1, 2006 - PAGE 115 OF THE STANDARD PLANS BOOK DATED MAY 2006.

**REVISED STANDARD PLAN RSP A88A**

**2006 REVISED STANDARD PLAN RSP A88A**

8-3-06

| DIST | COUNTY | ROUTE | POST MILES TOTAL PROJECT | SHEET NO. | TOTAL SHEETS |
|---|---|---|---|---|---|
| 06 | Ker | 184 | 1.0 | 19 | 35 |

Randell D. Hiatt
REGISTERED CIVIL ENGINEER

June 6, 2008
PLANS APPROVAL DATE

REGISTERED PROFESSIONAL ENGINEER
Randell D. Hiatt
No. C50200
Exp. 6-30-09
CIVIL
STATE OF CALIFORNIA

*The State of California or its officers or agents shall not be responsible for the accuracy or completeness of electronic copies of this plan sheet.*

*To accompany plans dated* 1-10-11

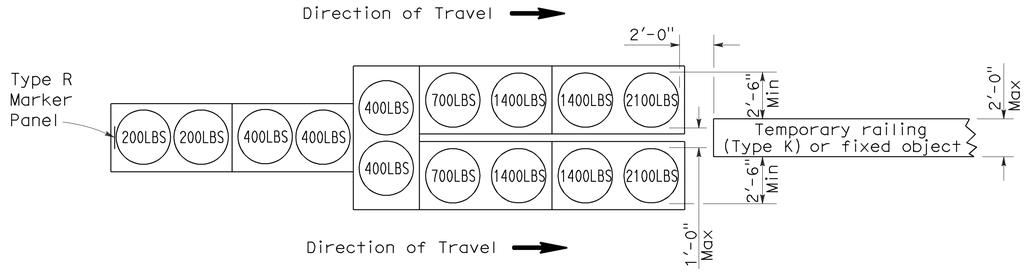


## ARRAY 'TU14'

Approach speed 45 mph or more

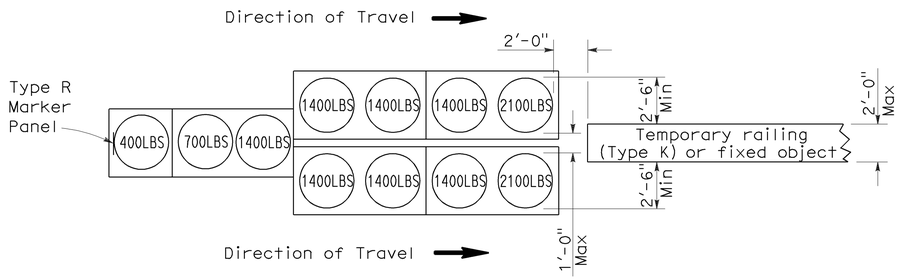


## ARRAY 'TU11'

Approach speed less than 45 mph

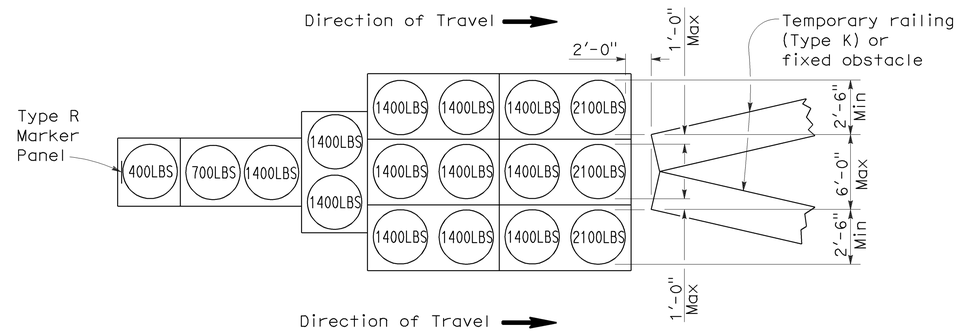


## ARRAY 'TU17'

Approach speed less than 45 mph

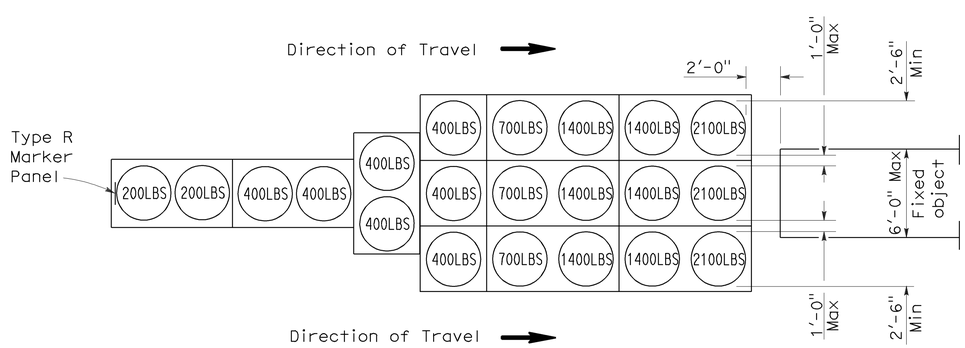


## ARRAY 'TU21'

Approach speed 45 mph or more

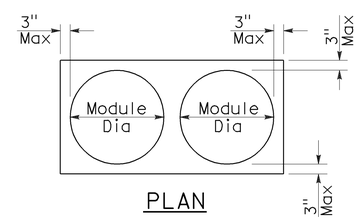


PLAN

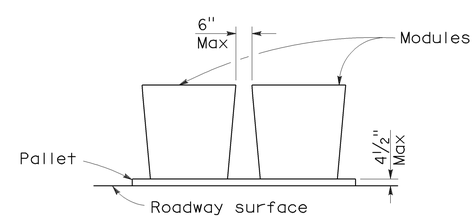


ELEVATION

## CRASH CUSHION PALLET DETAIL

See Note 7

## NOTES:

1. (XXX) Indicates sand filled module location and weight of sand in pounds for each module. Module spacing is based on the greater diameter of the module.
2. All sand weights are nominal.
3. Temporary crash cushion arrays shall not encroach on the traveled way.
4. Place the top of Type R marker panel 1" below the module lid.
5. Refer to Standard Plan A73B for marker details.
6. Approach speeds indicated conform to NCHRP 350 Report criteria.
7. Use of pallets is optional.

STATE OF CALIFORNIA
DEPARTMENT OF TRANSPORTATION

# TEMPORARY CRASH CUSHION, SAND FILLED (UNIDIRECTIONAL)

NO SCALE

RSP T1A DATED JUNE 6, 2008 SUPERSEDES STANDARD PLAN T1A
DATED MAY 1, 2006 - PAGE 211 OF THE STANDARD PLANS BOOK DATED MAY 2006.

**REVISED STANDARD PLAN RSP T1A**

**2006 REVISED STANDARD PLAN RSP T1A**

5-15-08

| DIST | COUNTY | ROUTE | POST MILES TOTAL PROJECT | SHEET NO. | TOTAL SHEETS |
|---|---|---|---|---|---|
| 06 | Ker | 184 | 1.0 | 20 | 35 |

Randell D. Hiatt
REGISTERED CIVIL ENGINEER

June 6, 2008
PLANS APPROVAL DATE

REGISTERED PROFESSIONAL ENGINEER
Randell D. Hiatt
No. C50200
Exp. 6-30-09
CIVIL
STATE OF CALIFORNIA

*The State of California or its officers or agents shall not be responsible for the accuracy or completeness of electronic copies of this plan sheet.*

*To accompany plans dated* 1-10-11

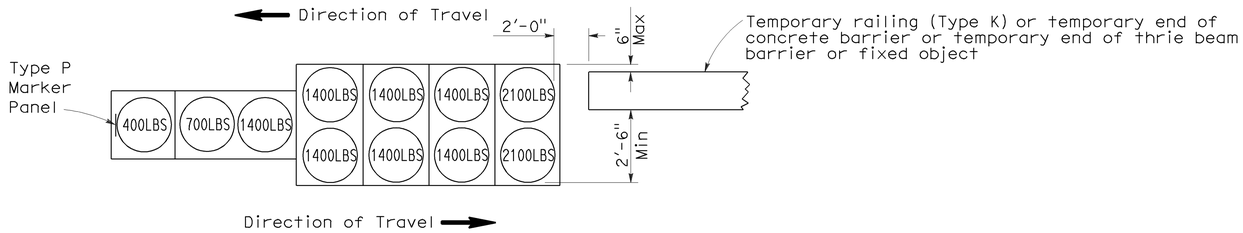


ARRAY 'TB11'

Approach speed less than 45 mph

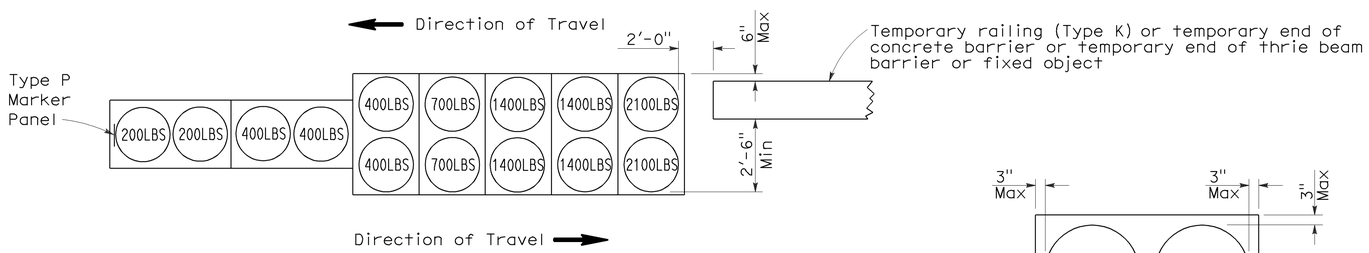


ARRAY 'TB14'

Approach speed 45 mph or more

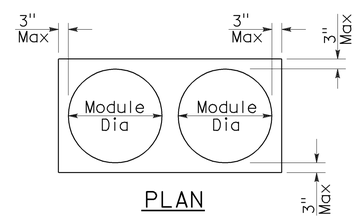


PLAN

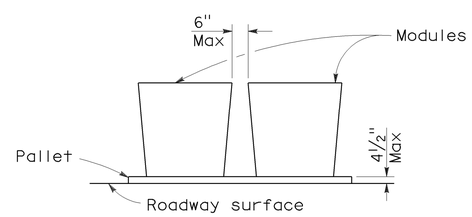


ELEVATION

CRASH CUSHION PALLET DETAIL

See Note 7

NOTES:

1. (XXX) Indicates sand filled module location and weight of sand in pounds for each module. Module spacing is based on the greater diameter of the module.
2. All sand weights are nominal.
3. Temporary crash cushion arrays shall not encroach on the traveled way.
4. Place the Type P marker panel so that the bottom of the panel rests upon the pallet.
5. Refer to Standard Plan A73B for marker details.
6. Approach speeds indicated conform to NCHRP 350 Report criteria.
7. Use of pallets is optional.

STATE OF CALIFORNIA
DEPARTMENT OF TRANSPORTATION

# TEMPORARY CRASH CUSHION, SAND FILLED (BIDIRECTIONAL)

NO SCALE

RSP T1B DATED JUNE 6, 2008 SUPERSEDES STANDARD PLAN T1B
DATED MAY 1, 2006 - PAGE 212 OF THE STANDARD PLANS BOOK DATED MAY 2006.

**REVISED STANDARD PLAN RSP T1B**

**2006 REVISED STANDARD PLAN RSP T1B**

5-15-08

| DIST | COUNTY | ROUTE | POST MILES TOTAL PROJECT | SHEET NO. | TOTAL SHEETS |
|---|---|---|---|---|---|
| 06 | Ker | 184 | 1.0 | 21 | 35 |

Randell D. Hiatt
REGISTERED CIVIL ENGINEER

June 6, 2008
PLANS APPROVAL DATE

REGISTERED PROFESSIONAL ENGINEER
Randell D. Hiatt
No. C50200
Exp. 6-30-09
CIVIL
STATE OF CALIFORNIA

*The State of California or its officers or agents shall not be responsible for the accuracy or completeness of electronic copies of this plan sheet.*

*To accompany plans dated* 1-10-11

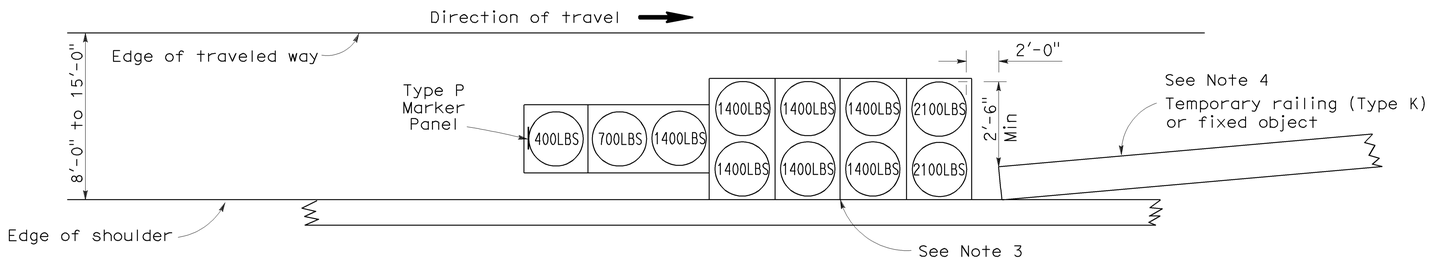


## ARRAY 'TS11'

Approach speed less than 45 mph
See Note 9

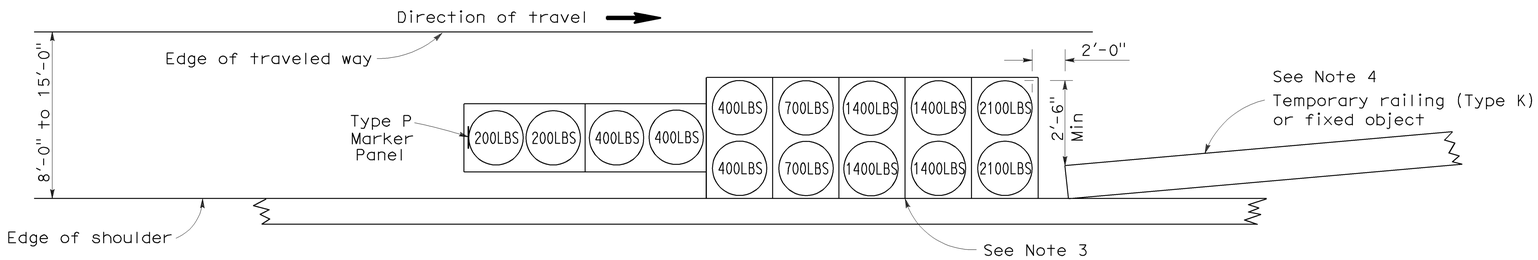


## ARRAY 'TS14'

Approach speed 45 mph or more
See Note 9

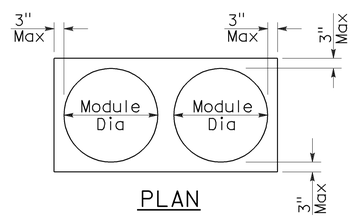


PLAN

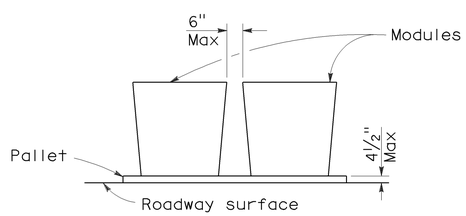


ELEVATION

## CRASH CUSHION PALLET DETAIL

See Note 11

## NOTES:

1. (XXX) Indicates sand filled module location and weight of sand in pounds for each module. Module spacing is based on the greater diameter of the module.
2. All sand weights are nominal.
3. The temporary crash cushion arrays shown on this plan shall be used only in locations where there will be traffic on one side of the temporary crash cushion array.
4. If the fixed object or approach end of the temporary railing is less than 15'-0" from the edge of traveled way, a temporary crash cushion is required in a construction or work zone.
5. Temporary crash cushion arrays shall not encroach on the traveled way.
6. Arrays for median shoulders shall conform to details shown on this plan for outside shoulders.
7. Place the Type P marker panel so that the bottom of the panel rests upon the pallet and faces traffic.
8. Refer to Standard Plan A73B for marker details.
9. For shoulder widths less than 8'-0", appropriate approved crash cushion protection, other than sand filled modules, shall be provided at fixed objects and at approach ends of temporary railing. The specific type of crash cushion shall be as shown on the project plans or as specified in the Special Provisions, or if not shown on the project plans or specified in the Special Provisions, shall be as approved by the Engineer.
10. Approach speeds indicated conform to NCHRP 350 Report criteria.
11. Use of pallets is optional.

STATE OF CALIFORNIA
DEPARTMENT OF TRANSPORTATION

# TEMPORARY CRASH CUSHION, SAND FILLED (SHOULDER INSTALLATIONS)

NO SCALE

RSP T2 DATED JUNE 6, 2008 SUPERSEDES STANDARD PLAN T2
DATED MAY 1, 2006 - PAGE 213 OF THE STANDARD PLANS BOOK DATED MAY 2006.

**REVISED STANDARD PLAN RSP T2**

**2006 REVISED STANDARD PLAN RSP T2**

5-15-08

| DIST | COUNTY | ROUTE | POST MILES TOTAL PROJECT | SHEET NO. | TOTAL SHEETS |
|---|---|---|---|---|---|
| 06 | Ker | 184 | 1.0 | 22 | 35 |

LICENSED LANDSCAPE ARCHITECT

August 15, 2008
PLANS Approval DATE

*The State of California or its officers or agents shall not be responsible for the accuracy or completeness of electronic copies of this plan sheet.*

LICENSED LANDSCAPE ARCHITECT — Robert B. Schott — Signature — 11-04-08 Renewal Date — 08-11-08 Date — STATE OF CALIFORNIA

*To accompany plans dated* 1-10-11

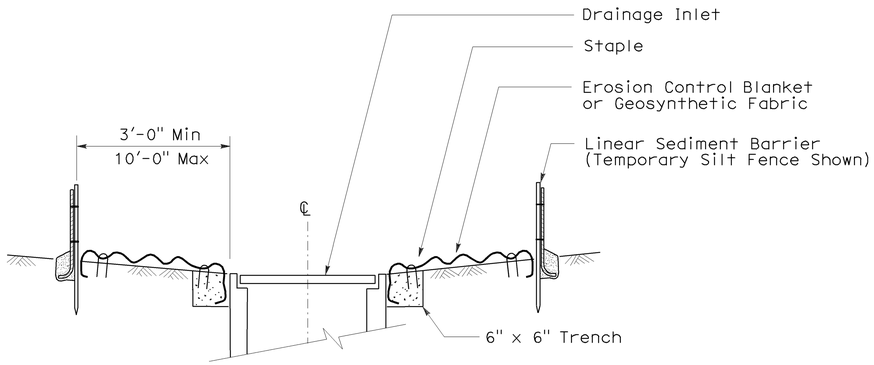


SECTION A-A

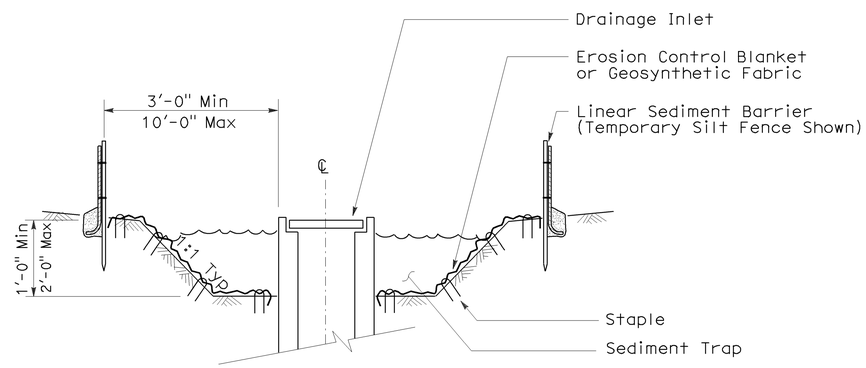


SECTION B-B

## NOTES:

1. See Standard Plan T51 for Temporary Silt Fence.
2. Dimensions may vary to fit field conditions.

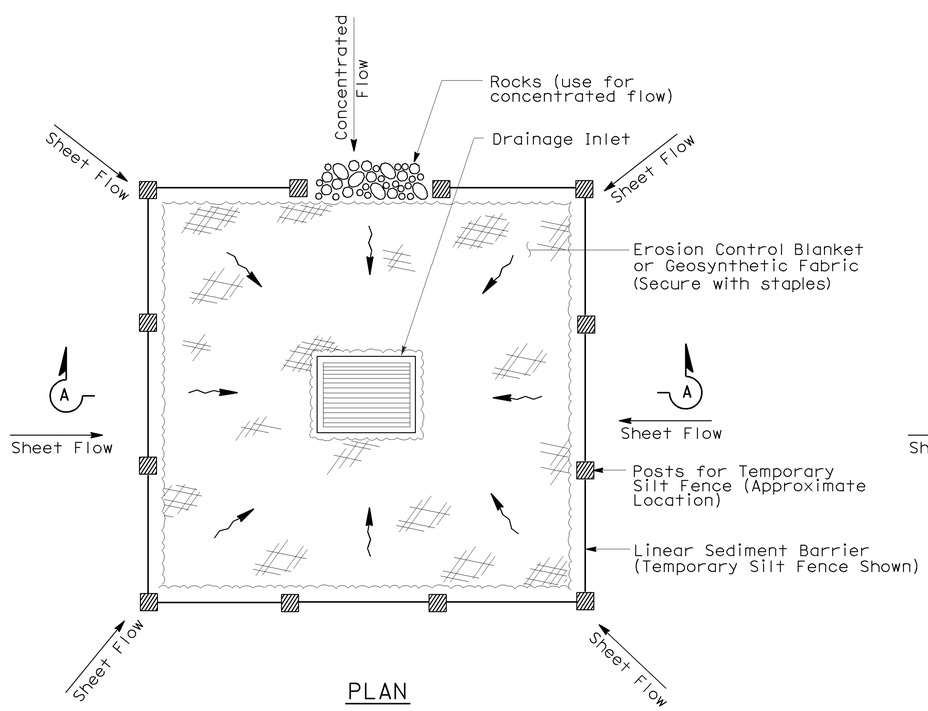


PLAN

TEMPORARY DRAINAGE INLET PROTECTION (TYPE 1)

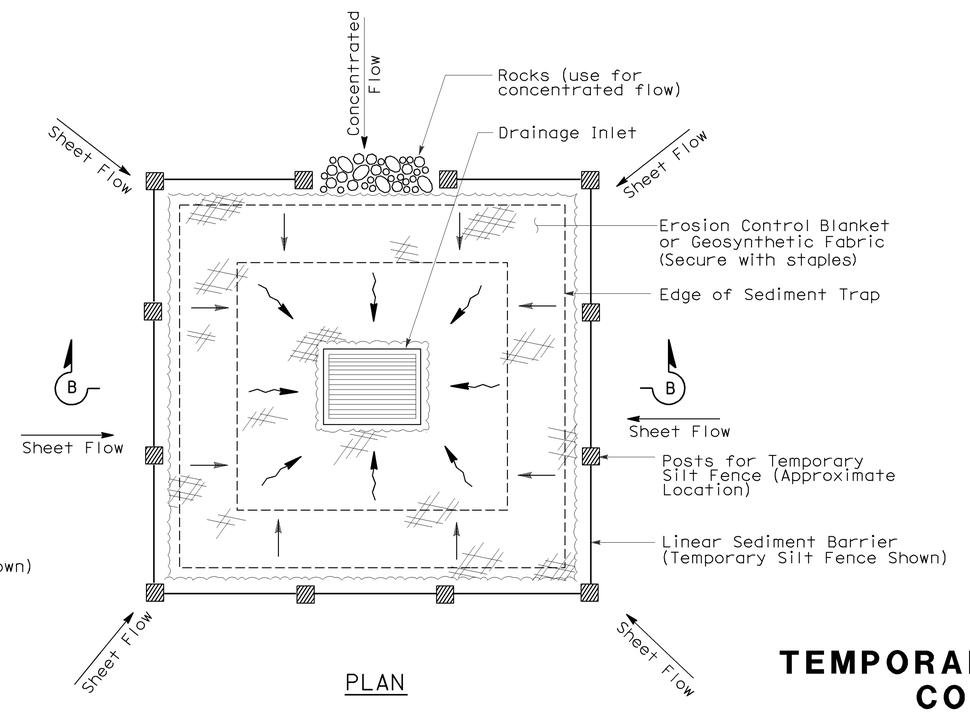


PLAN

TEMPORARY DRAINAGE INLET PROTECTION (TYPE 2) (EXCAVATED SEDIMENT TRAP)

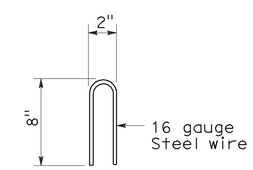


STAPLE DETAIL

STATE OF CALIFORNIA
DEPARTMENT OF TRANSPORTATION

# TEMPORARY WATER POLLUTION CONTROL DETAILS (TEMPORARY DRAINAGE INLET PROTECTION)

NO SCALE

Nsp t61 dated august 15, 2008 supplements the standard plans book dated may 2006.

**NEW STANDARD PLAN NSP T61**

**2006 NEW STANDARD PLAN NSP T61**

7-11-08

| DIST | COUNTY | ROUTE | POST MILES TOTAL PROJECT | SHEET NO. | TOTAL SHEETS |
|---|---|---|---|---|---|
| 06 | Ker | 184 | 1.0 | 23 | 35 |

LICENSED LANDSCAPE ARCHITECT

August 15, 2008
PLANS APPROVAL DATE

*The State of California or its officers or agents shall not be responsible for the accuracy or completeness of electronic copies of this plan sheet.*

LICENSED LANDSCAPE ARCHITECT — Robert B. Schott — Signature — 11-04-08 Renewal Date — 08-11-08 Date — STATE OF CALIFORNIA

*To accompany plans dated* 1-10-11

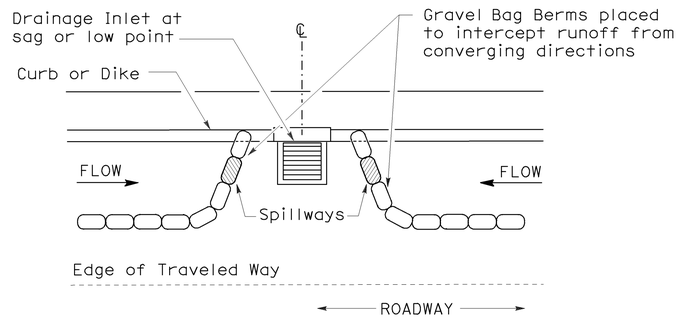


PLAN

## CONFIGURATION FOR SAG POINT INLET (GRAVEL BAG BERM)

## GRAVEL BAG BERM (TYPE 3A) SPACING TABLE

| SLOPE OF ROADWAY (PERCENT) | 1 to 3.9 | 4 to 5.9 | 6 to 7.9 | 8 to 10 | 10+ |
|---|---|---|---|---|---|
| INTERVAL BETWEEN BERM | 100′ | 75′ | 50′ | 25′ | 12′ |

For slope of less than 1%, install barriers only if erosion/sediment is prevalent

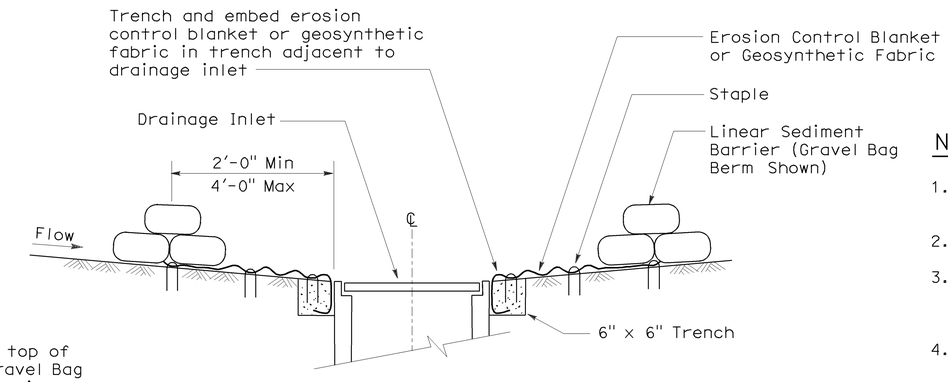


SECTION A-A

## NOTES:

1. Place safety cones adjacent to drainage inlet protection.
2. Dimensions may vary to fit field conditions.
3. Install a minimum of 3 gravel bag berms upstream of each drainage inlet to be protected.
4. Position erosion control blanket or geosynthetic fabric at edge of concrete apron and secure in trench.
5. Erosion control blanket or geosynthetic fabric is not required if the area adjacent to the drainage inlet is vegetated or paved.

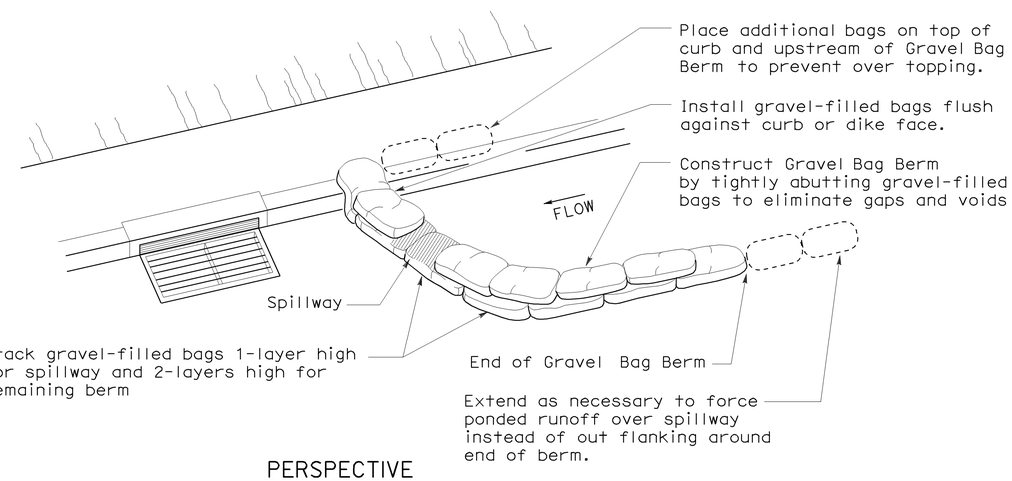


PERSPECTIVE

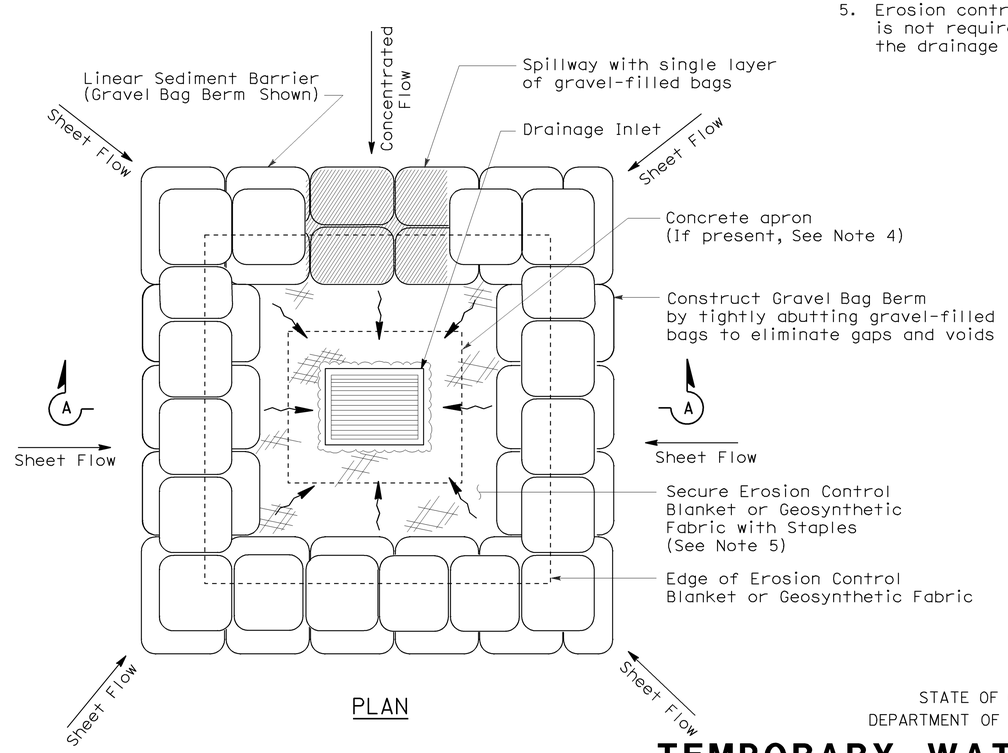


PLAN

## TEMPORARY DRAINAGE INLET PROTECTION (TYPE 3B)

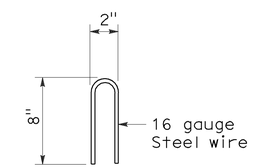


STAPLE DETAIL

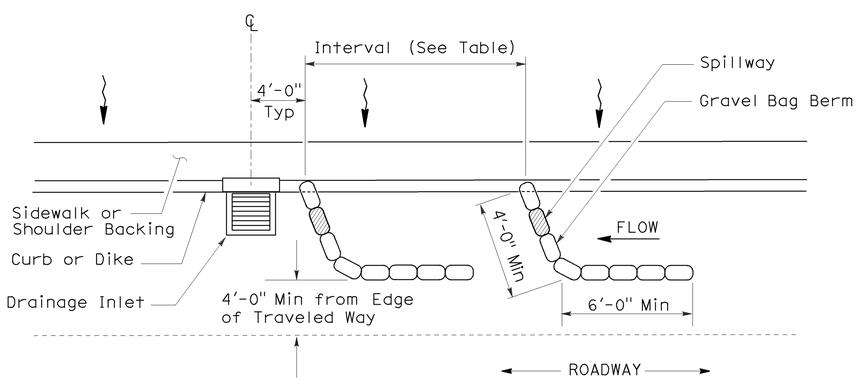


PLAN

## TEMPORARY DRAINAGE INLET PROTECTION (TYPE 3A) (GRAVEL BAG BERM)

STATE OF CALIFORNIA
DEPARTMENT OF TRANSPORTATION

# TEMPORARY WATER POLLUTION CONTROL DETAILS (TEMPORARY DRAINAGE INLET PROTECTION)

NO SCALE

NSP T62 DATED AUGUST 15, 2008 SUPPLEMENTS THE STANDARD PLANS BOOK DATED MAY 2006.

**NEW STANDARD PLAN NSP T62**

**2006 NEW STANDARD PLAN NSP T62**

7-11-08

| DIST | COUNTY | ROUTE | POST MILES TOTAL PROJECT | SHEET NO. | TOTAL SHEETS |
|---|---|---|---|---|---|
| 06 | Ker | 184 | 1.0 | 24 | 35 |

LICENSED LANDSCAPE ARCHITECT

August 15, 2008
PLANS APPROVAL DATE

*The State of California or its officers or agents shall not be responsible for the accuracy or completeness of electronic copies of this plan sheet.*

LICENSED LANDSCAPE ARCHITECT — Robert B. Schott — Signature — 11-04-08 Renewal Date — 08-11-08 Date — STATE OF CALIFORNIA

*To accompany plans dated* 1-10-11

## FLEXIBLE SEDIMENT BARRIER SPACING TABLE

| SLOPE OF ROADWAY (PERCENT) | 0 to 0.9 | 1 to 1.9 | 2 to 2.9 | 3 to 4 | 5+ |
|---|---|---|---|---|---|
| INTERVAL BETWEEN BARRIERS | 50′ | 35′ | 30′ | 25′ | 20′ |
| ANGLE FROM FACE OF CURB | 70° | 70° | 70° | 45° | 45° |
| SUGGESTED BARRIER LENGTH | 6′ | 6′ | 6′ | 6′ | 6′ |

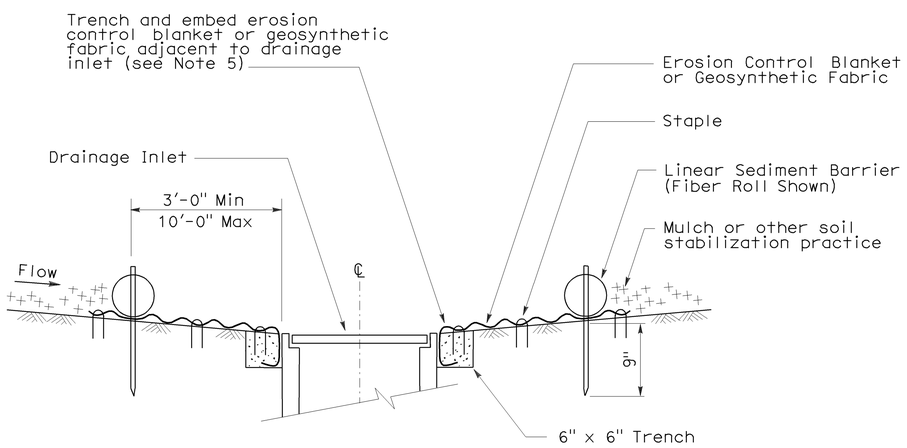


SECTION A-A

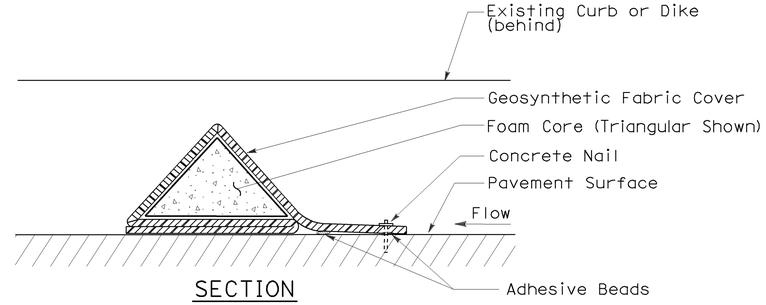


SECTION

## FLEXIBLE SEDIMENT BARRIER DETAIL (FOAM BARRIER SHOWN)

## NOTES:

1. See Standard Plan T51 for Temporary Silt Fence.
2. Dimensions may vary to fit field conditions.
3. Install a minimum of 3 flexible sediment barriers upstream of each drainage inlet to be protected.
4. Position erosion control blanket or geosynthetic fabric at edge of concrete apron and secure in trench.
5. Erosion control blanket or geosynthetic fabric is not required if the area adjacent to the drainage inlet is vegetated.

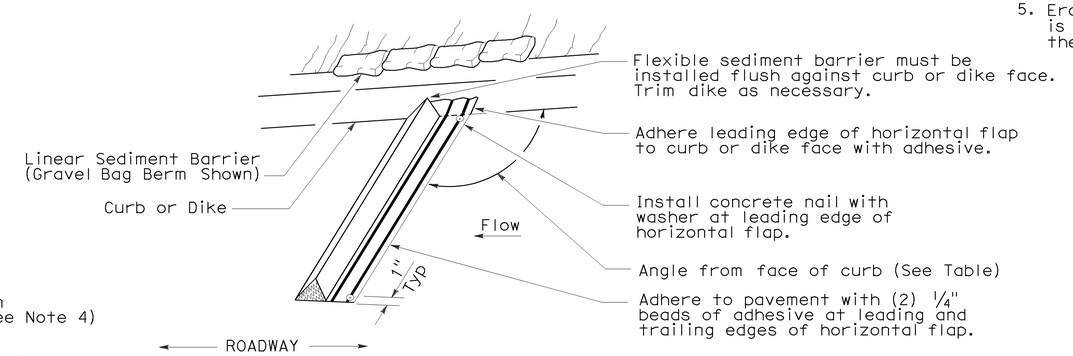


PERSPECTIVE

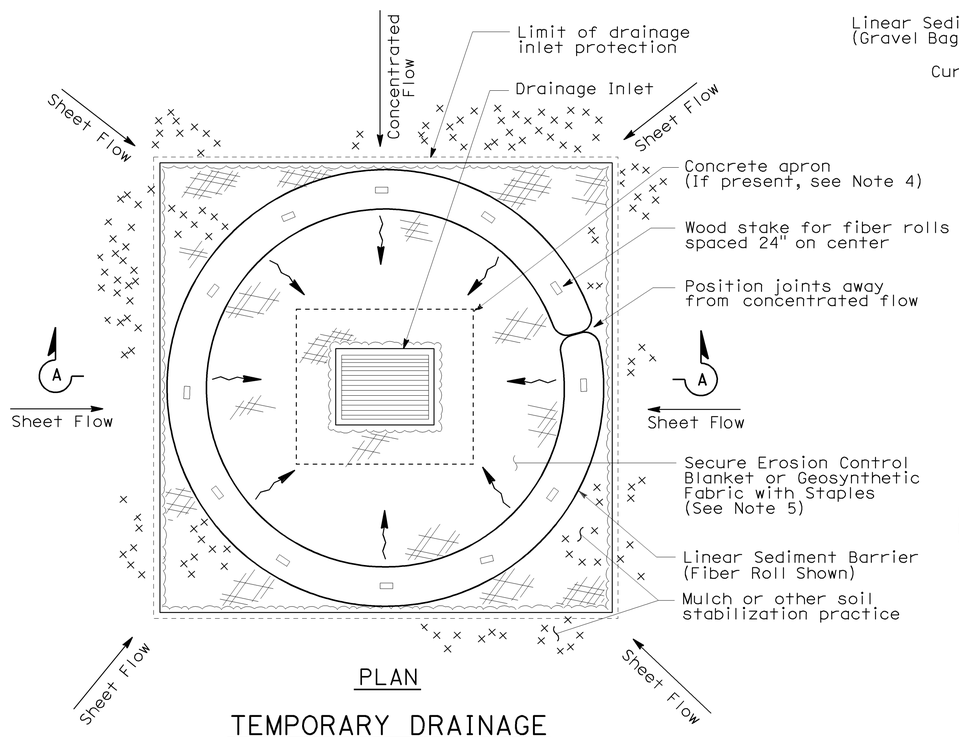


PLAN

## TEMPORARY DRAINAGE INLET PROTECTION (TYPE 4A)

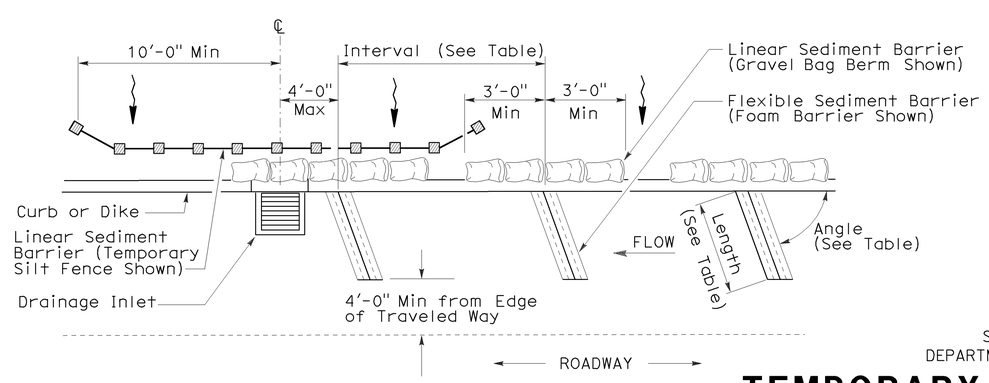


PLAN

## TEMPORARY DRAINAGE INLET PROTECTION (TYPE 4B) FLEXIBLE SEDIMENT BARRIER

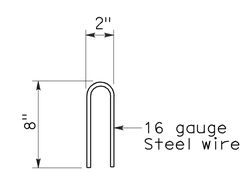


STAPLE DETAIL

STATE OF CALIFORNIA
DEPARTMENT OF TRANSPORTATION

# TEMPORARY WATER POLLUTION CONTROL DETAILS (TEMPORARY DRAINAGE INLET PROTECTION)

NO SCALE

NSP T63 DATED AUGUST 15, 2008 SUPPLEMENTS THE STANDARD PLANS BOOK DATED MAY 2006.

**NEW STANDARD PLAN NSP T63**

**2006 NEW STANDARD PLAN NSP T63**

7-11-08

| DIST | COUNTY | ROUTE | POST MILES TOTAL PROJECT | SHEET NO. | TOTAL SHEETS |
|---|---|---|---|---|---|
| 06 | Ker | 184 | 1.0 | 25 | 35 |

LICENSED LANDSCAPE ARCHITECT

August 15, 2008
PLANS APPROVAL DATE

*The State of California or its officers or agents shall not be responsible for the accuracy or completeness of electronic copies of this plan sheet.*

LICENSED LANDSCAPE ARCHITECT — Robert B. Schott — Signature — 11-04-08 Renewal Date — 08-11-08 Date — STATE OF CALIFORNIA

*To accompany plans dated* 1-10-11

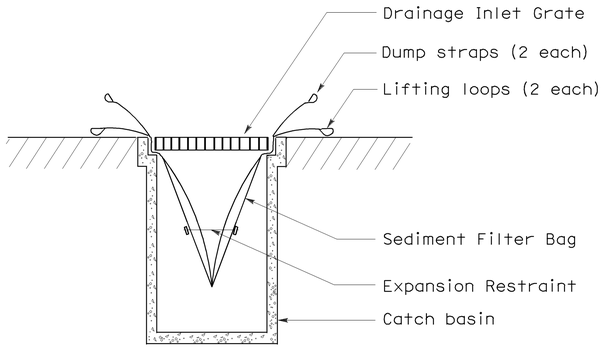


SECTION B-B

## SEDIMENT FILTER BAG DETAIL

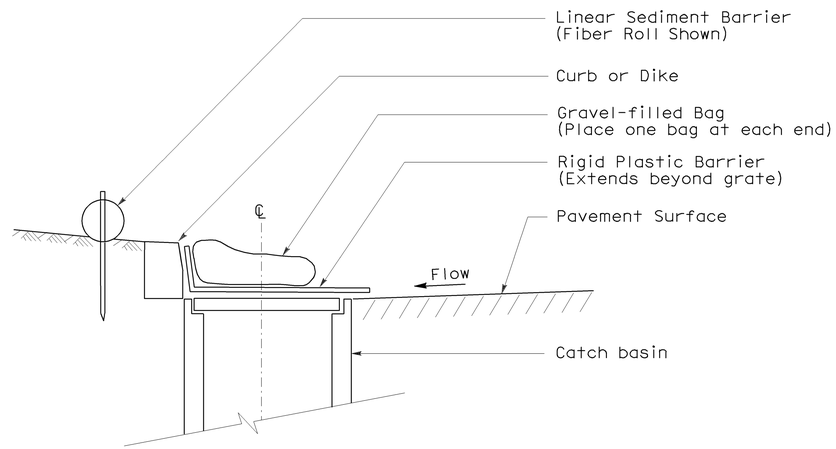


SECTION

## TEMPORARY DRAINAGE INLET PROTECTION (TYPE 6A) (CATCH BASIN WITH GRATE)

NOTES:

1. See Standard Plan T51 for Temporary Silt Fence.
2. Dimensions may vary to fit field conditions.

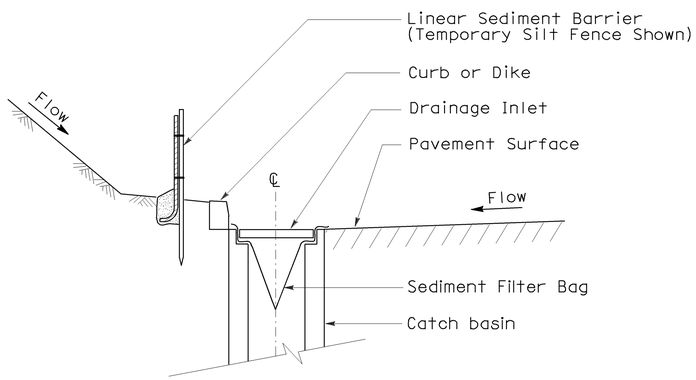


SECTION A-A

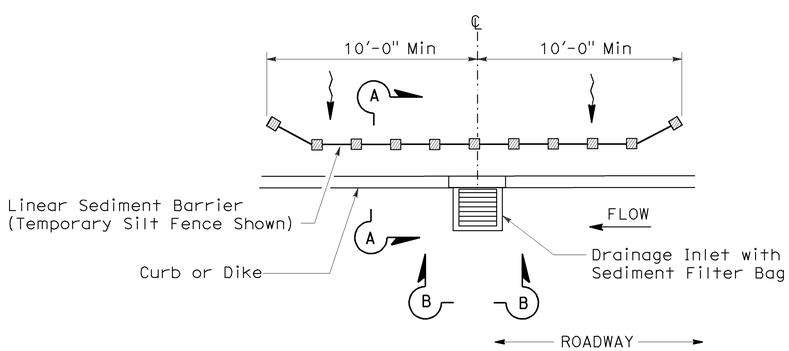


PLAN

## TEMPORARY DRAINAGE INLET PROTECTION (TYPE 5) (SEDIMENT FILTER BAG)

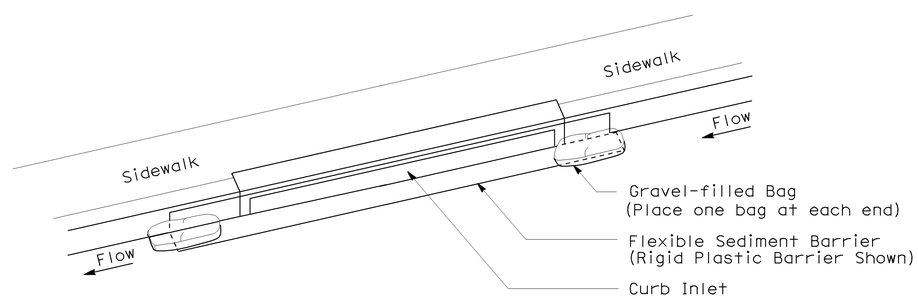


PERSPECTIVE

## TEMPORARY DRAINAGE INLET PROTECTION (TYPE 6B) (CURB INLET WITHOUT GRATE)

STATE OF CALIFORNIA
DEPARTMENT OF TRANSPORTATION

# TEMPORARY WATER POLLUTION CONTROL DETAILS (TEMPORARY DRAINAGE INLET PROTECTION)

NO SCALE

NSP T64 DATED AUGUST 15, 2008 SUPPLEMENTS
THE STANDARD PLANS BOOK DATED MAY 2006.

**NEW STANDARD PLAN NSP T64**

**2006 NEW STANDARD PLAN NSP T64**

7-11-08

| DIST | COUNTY | ROUTE | POST MILES TOTAL PROJECT | SHEET NO. | TOTAL SHEETS |
|---|---|---|---|---|---|
| 06 | Ker | 184 | 1.0 | 26 | 35 |

REGISTERED ELECTRICAL ENGINEER

October 5, 2007
PLANS APPROVAL DATE

REGISTERED PROFESSIONAL ENGINEER Jeffery G. McRae No. E14512 Exp. 6-30-08 ELECTRICAL STATE OF CALIFORNIA

*The State of California or its officers or agents shall not be responsible for the accuracy or completeness of electronic copies of this plan sheet.*

*To accompany plans dated* 1-10-11

# 2006 REVISED STANDARD PLAN RSP ES-1A

## ELECTROLIERS

| STANDARD TYPES |
|---|
| 15, 15D |
| 15 STRUCTURE |
| 21, 21D STRUCTURE |
| 30 |
| 31 |
| 32 |
| 35 |
| 36-20A |

High mast light pole

Double Arm lighting standard

Existing electrolier

Electrolier foundation (Future installation)

### NOTES:

1. Luminaires shall be 310 W HPS when installed on Type 21, 21D, 30, 31, 32, 35 and 36-20A Standards, unless otherwise specified. Luminaires shall be 200 W HPS when installed on other type standards or poles, unless otherwise specified.
2. Luminaires shall be the cutoff type, ANSI Type Ⅲ medium cutoff lighting distribution, unless otherwise specified.
3. Variations noted adjacent to symbol on project plans.

Electrolier (see project notes or project plans)

Luminaire on wood pole

## STANDARD NOTES:

- AB — Abandon. If applied to conduit, remove conductors.
- BC — Install pull box in existing conduit run.
- BP — Pedestrian barricade, type as indicated on plan.
- CB — Install conduit into existing pull box.
- CC — Connect new and existing conduit. Remove existing conductors and install conductors as indicated.
- CF — Conduit to remain for future use. Remove conductors. Install pull wire or rope.
- DH — Detector handhole.
- FA — Foundation to be abandoned.
- IS — Install sign on signal mast arm.
- NS — No slip base on standard.
- PEC — Photoelectric control.
- PEU — Photoelectric unit.
- RC — Equipment or material to be removed and become the property of the Contractor.
- RE — Remove electrolier, fuses and ballast. Tape ends of conductors.
- RL — Relocate equipment.
- RR — Remove and reuse equipment.
- RS — Remove and salvage equipment.
- SC — Splice new to existing conductors.
- SD — Service disconnect.
- SF — Standard to remain for future use. Remove luminaire, pole conductors, fuses and ballast.
- TSP — Telephone service point.

## ABBREVIATIONS AND EQUIPMENT DESIGNATIONS

| PROPOSED | EXISTING | |
|---|---|---|
| BBS | bbs | Battery backup system |
| BC | bc | Bolt circle |
| C | C | Conduit |
| CCTV | cctv | Closed circuit television |
| CKT | ckt | Circuit |
| CMS | cms | Changeable message sign |
| DLC | dlc | Loop detector lead-in cable |
| EMS | ems | Extinguishable message sign |
| EVC | evc | Emergency vehicle cable |
| EVD | evd | Emergency vehicle detector |
| FB | fb | Flashing beacon |
| FBCA | fbca | Flashing beacon control assembly |
| FBS | fbs | Flashing beacon with slip base |
| FO | fo | Fiber optic |
| G | G | Ground (Equipment Grounding Conductor) |
| GFCI | GFCI | Ground fault circuit interrupt |
| HAR | har | Highway advisory radio |
| HEX | hex | Hexagonal |
| HPS | hps | High pressure sodium |
| IISNS | iisns | Internally illuminated street name sign |
| ISL | isl | Induction sign lighting |
| LED | led | Light emitting diode |
| LMA | lma | Luminaire mast arm |
| LPS | lps | Low pressure sodium |
| LTG | ltg | Lighting |
| LUM | lum | Luminaire |
| MAT | mat | Mast arm mounting vehicle signal faces, top attachment |
| MAS | mas | Mast arm mounting vehicle signal faces, side attachment |
| MAS-4A | mas-4A | Mast arm mounting vehicle signal faces, side attachment - 4 signal section |
| MAS-4B | mas-4B | |
| MAS-4C | mas-4C | |
| MAS-5A | mas-5A | Mast arm mounting vehicle signal faces, side attachment - 5 signal section |
| MAS-5B | mas-5B | |
| MC | mc | Mercury contactor |
| M/M | m/m | Multiple to multiple transformer |
| MT | mt | Conduit with pull wire or rope only |
| MTG | mtg | Mounting |
| | mv | Mercury vapor lighting fixture |
| N | N | Neutral (Grounded Conductor) |
| NC | NC | Normally closed |
| NO | NO | Normally open |
| PB | pb | Pull box |
| PEC | pec | Photoelectric control (Type Ⅰ, Ⅱ, Ⅲ, Ⅳ or Ⅴ as shown) |
| PED | ped | Pedestrian |
| PEU | peu | Photoelectric unit |
| PPB | ppb | Pedestrian push button |
| RL | | Relocated equipment |
| RM | rm | Ramp metering |
| SB | sb | Slip base |
| SIC | sic | Signal interconnect cable |
| SIG | sig | Signal |
| SMA | sma | Signal mast arm |
| SNS | sns | Street name sign |
| SP | sp | Service point |
| TDC | tdc | Telephone demarcation cabinet |
| TMS | tms | Traffic monitoring station |
| TOS | tos | Traffic Operations System |
| VEH | veh | Vehicle |
| XFMR | xfmr | Transformer |
| COMM | comm | Communication |
| RWIS | rwis | Roadway weather information system |

## SOFFIT AND WALL MOUNTED LUMINAIRES

Pendant, 70 W HPS unless otherwise specified.

Flush, 70 W HPS unless otherwise specified.

Wall surface, 70 W HPS unless otherwise specified.

Existing soffit or wall luminaire to remain unmodified.

Existing soffit or wall luminaire to be modified as specified.

### NOTE:

Arrow indicates "street side" of luminaire.

STATE OF CALIFORNIA
DEPARTMENT OF TRANSPORTATION

# ELECTRICAL SYSTEMS (SYMBOLS AND ABBREVIATIONS)

NO SCALE

RSP ES-1A DATED OCTOBER 5, 2007 SUPERSEDES STANDARD PLAN ES-1A
DATED MAY 1, 2006 - PAGE 400 OF THE STANDARD PLANS BOOK DATED MAY 2006.

**REVISED STANDARD PLAN RSP ES-1A**

| DIST | COUNTY | ROUTE | POST MILES TOTAL PROJECT | SHEET NO. | TOTAL SHEETS |
|---|---|---|---|---|---|
| 06 | Ker | 184 | 1.0 | 27 | 35 |

REGISTERED ELECTRICAL ENGINEER

October 5, 2007
PLANS APPROVAL DATE

REGISTERED PROFESSIONAL ENGINEER Jeffery G. McRae No. E14512 Exp. 6-30-08 ELECTRICAL STATE OF CALIFORNIA

*The State of California or its officers or agents shall not be responsible for the accuracy or completeness of electronic copies of this plan sheet.*

*To accompany plans dated* 1-10-11

## CONDUIT

| PROPOSED | EXISTING | |
|---|---|---|
| | | Lighting Conduit, unless otherwise indicated or noted |
| | | Traffic signal conduit |
| C | c | Communication conduit |
| T | t | Telephone conduit |
| F | f | Fire alarm conduit |
| FO | fo | Fiber optic conduit |
| | | Conduit termination (RSP ES-9A C) |
| R | r | Conduit riser in/on structure or service pole |

## SERVICE EQUIPMENT

| PROPOSED | EXISTING | |
|---|---|---|
| OH | oh | Overhead lines |
| U | U | Wood pole "U" indicates utility owned |
| | | Pole guy with anchor |
| | | Utility transformer - ground mounted |
| III | | Service equipment enclosure type |
| | | Service equipment enclosure door indicates front of enclosure |
| T | t | Telephone demarcation cabinet |

## POLE-MOUNTED SERVICE DESIGNATION

Type of installation

TYPE H SERVICE - 28'-10" ← Pole height above grade

## ILLUMINATED OVERHEAD SIGN

| PROPOSED | EXISTING | |
|---|---|---|
| | | Overhead sign - Single post |
| | | Overhead sign - Two post |
| | | Overhead sign - Mounted on structure |
| | | Overhead sign with electrolier |

## SIGNAL EQUIPMENT

| PROPOSED | EXISTING | |
|---|---|---|
| | | Pedestrian signal face |
| | | Pedestrian push button post |
| | | Pedestrian barricade |
| | | Vehicle signal face (with backplate, 3-Section: red, yellow and green) |
| | | Vehicle signal face with angle visors |
| PV | PV | Modifications of basic symbols: "L" indicates all non-arrow sections louvered "LG" indicates louvered green section only "PV" indicates 12" programmed visibility sections "8" indicates all 8" sections (only when specified) |
| | | Type 15TS and Vehicle signal face |
| | | Vehicle signal face with red, yellow and green left arrow sections |
| | | Vehicle signal face with red and yellow sections and up green arrow |
| | | Vehicle signal face (5 Section) with red, yellow and green sections and yellow and green right arrows |
| | | Type 1 Standard and attached vehicle signal faces |
| | | Standard with signal mast arm only and attached vehicle signal faces and internally illuminated street name sign |
| | | Type 33 Standard, Left-turn vehicle signal face and sign |
| | | Standard with luminaire and signal mast arms and attached vehicle signal faces |
| | | Cantilever flashing beacon Type 9 Frame, with a sign unless otherwise specified or indicated |
| | | Type 15-FBS Standard with two vehicle signal face sections with lens, backplate and visor with a sign |
| R | Y | Flashing beacon. One vehicle signal face section with lens, backplate and visor. "R" indicates red indication, "Y" indicates yellow indication |
| | | Controller assembly. Door indicates front of cabinet |

## SIGNAL EQUIPMENT Cont

| PROPOSED | EXISTING | |
|---|---|---|
| | | Guard post |
| | | Type 1 Standard with "Meter On" sign |
| | | Emergency Vehicle detector |

## NOTES:

1. All signal sections shall be 12" unless shown otherwise.
2. Signal heads shall be provided with backplates unless shown otherwise.
3. Signal indication shall be LED.

STATE OF CALIFORNIA
DEPARTMENT OF TRANSPORTATION

# ELECTRICAL SYSTEMS (SYMBOLS AND ABBREVIATIONS)

NO SCALE

RSP ES-1B DATED OCTOBER 5, 2007 SUPERCEDES STANDARD PLAN ES-1B DATED MAY 1, 2006 - PAGE 401 OF THE STANDARD PLANS BOOK DATED MAY 2006.

**REVISED STANDARD PLAN RSP ES-1B**

**2006 REVISED STANDARD PLAN RSP ES-1B**

7-10-07

| DIST | COUNTY | ROUTE | POST MILES TOTAL PROJECT | SHEET NO. | TOTAL SHEETS |
|---|---|---|---|---|---|
| 06 | Ker | 184 | 1.0 | 28 | 35 |

REGISTERED ELECTRICAL ENGINEER

October 5, 2007
PLANS APPROVAL DATE

REGISTERED PROFESSIONAL ENGINEER
Jeffery G. McRae
No. E14512
Exp. 6-30-08
ELECTRICAL
STATE OF CALIFORNIA

*The State of California or its officers or agents shall not be responsible for the accuracy or completeness of electronic copies of this plan sheet.*

*To accompany plans dated* 1-10-11

# EQUIPMENT IDENTIFICATION

## ILLUMINATED SIGN IDENTIFICATION NUMBER:

Sign No. 12345 — Sign number - Place on post or structure

10 ISL SCI 1.0
- 1.0 — Transformer rating (kVA)
- SCI — Lighting control type
- ISL — Number and type of fixtures

Do NOT place on standard or structure

## ELECTROLIER OR EQUIPMENT IDENTIFICATION NUMBER:

12345 - 15'-0"
- 15'-0" — Mast arm length, if shown. Do not place on standard or structure.
- 12345 — Equipment number - Place on standard or structure. Existing equipment numbers are shown in parenthesis

## CONDUIT AND CONDUCTOR IDENTIFICATION:

1½"C, 2#10, 15#14, 2 DLC
- 2#10, 15#14, 2 DLC — Number and size of conductors and cables
- 1½"C — Size of conduit in inches

| | |
|---|---|
| Ø1, Ø2, Ø2P, etc. | Traffic phase identification for signal faces, detectors and phase diagrams |
| 1 2 3 | Project note numbers |
| A B C | Equipment description, installation or item numbers |
| 1 2 3 | Conduit run numbers |

## SIGNAL AND LIGHTING STANDARD (TYPICAL DESIGNATION):

19A - 3 - 100
- 100 — Wind velocity = 100 mph
- 3 — Case 3 arm loading
- 19A — Standard type
- Standard Plan sheet number
- Detail number or letter

## MISCELLANEOUS EQUIPMENT

| PROPOSED | EXISTING | |
|---|---|---|
| CMS | cms | Changeable message sign |
| | | Closed circuit television camera |
| | | Highway advisory radio pole and antenna |
| EMS | ems | Extinguishable message sign |
| M V | m v | Detection device<br>M = Microwave sensor<br>V = Video image sensor |

## WIRING DIAGRAM LEGEND

| | |
|---|---|
| P | Pole |
| CB | Circuit breaker |
| A | Ampere |
| V | Volt |
| M | Metered |
| UM | Unmetered |
| NB | Neutral bus |
| GB | Ground bus |
| G | Equipment grounding conductor |
| N | Grounded conductor (Neutral) |

External conductor
Conductor or bus
Tie point
Contactor coil
Contactor, Contact NO
Terminal blocks
Contactor, Contact NC
Enclosure bond
Grounding electrode
Circuit breaker
Receptacle

## PULL BOXES

PROPOSED EXISTING

Pull box-No. 5 unless otherwise indicated or noted.

3 — 9A(21)

Pull box-Additional designations or descriptions

3 = No. 3½ pull box
5 = No. 5 pull box
6 = No. 6 pull box
7 = No. 7 (Ceiling pull box)
8 = No. 8 (Pendant soffit pull box)
9 = No. 9 pull box
9A = No. 9A pull box

(C) = Communications pull box
(E) = Pull box with extension
(S) = Sprinkler control pull box
(21) = Anchor bolts and conduit for future installation of Type 21 Standard
(T) = Traffic pull box

## VEHICLE DETECTORS

5 J 9 U
- U = Upper, L = Lower
- Slot number in input file
- Input file (I or J)
- Phase
- Vehicle detector designation

PROPOSED EXISTING

| | |
|---|---|
| | Type A detector loop. Outline of sawcut shown. |
| | Type B detector loop. Outline of sawcut shown. |
| | Type C detector loop. Outline of sawcut shown. |
| | Type D detector loop. Outline of sawcut shown. |
| | Type E detector loop. Outline of sawcut shown. |
| | Type Q detector loop. Outline of sawcut shown. |
| | Magnetic detector |
| DH dh | Detector handhole |
| | Microwave or video detection zone |

STATE OF CALIFORNIA
DEPARTMENT OF TRANSPORTATION

# ELECTRICAL SYSTEMS (SYMBOLS AND ABBREVIATIONS)

NO SCALE

RSP ES-1C DATED OCTOBER 5, 2007 SUPERCEDES STANDARD PLAN ES-1C DATED MAY 1, 2006 - PAGE 402 OF THE STANDARD PLANS BOOK DATED MAY 2006.

**REVISED STANDARD PLAN RSP ES-1C**

**2006 REVISED STANDARD PLAN RSP ES-1C**

7-10-07

| DIST | COUNTY | ROUTE | POST MILES TOTAL PROJECT | SHEET NO. | TOTAL SHEETS |
|---|---|---|---|---|---|
| 06 | Ker | 184 | 1.0 | 29 | 35 |

REGISTERED ELECTRICAL ENGINEER

June 6, 2008
PLANS APPROVAL DATE

REGISTERED PROFESSIONAL ENGINEER
Jeffery G. McRae
No. E14512
Exp. 6-30-10
ELECTRICAL
STATE OF CALIFORNIA

*The State of California or its officers or agents shall not be responsible for the accuracy or completeness of electronic copies of this plan sheet.*

*To accompany plans dated* 1-10-11

## VISORS

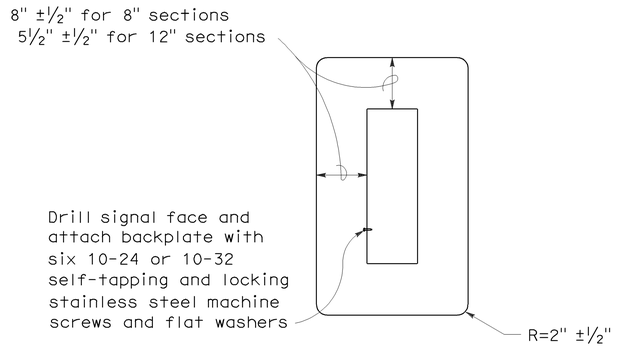


## 8" AND 12" SECTIONS

## BACKPLATE

1/16" minimum thickness
3001-14 aluminum, or plastic when specified

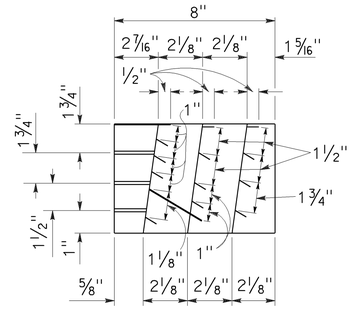


## SECTION A-A

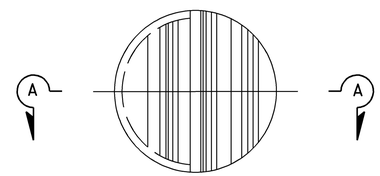


## FRONT VIEW

## DIRECTIONAL LOUVER

Directional louvers shall be oriented as directed by the Engineer and secured in place with one plated brass machine screw and nut.

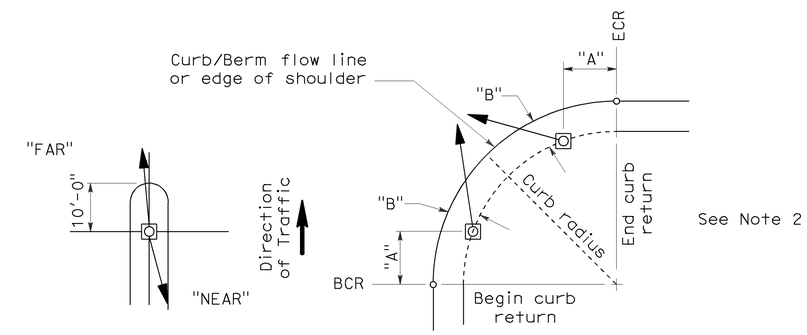


## NOTES:

1. Typical signal pole placement unless dimensioned on plans.
2. For "A" and "B" dimensions, see Pole Schedule, or as directed by the Engineer.

## SIGNAL STANDARD PLACEMENT DIMENSIONS AND EQUIPMENT LOCATIONS

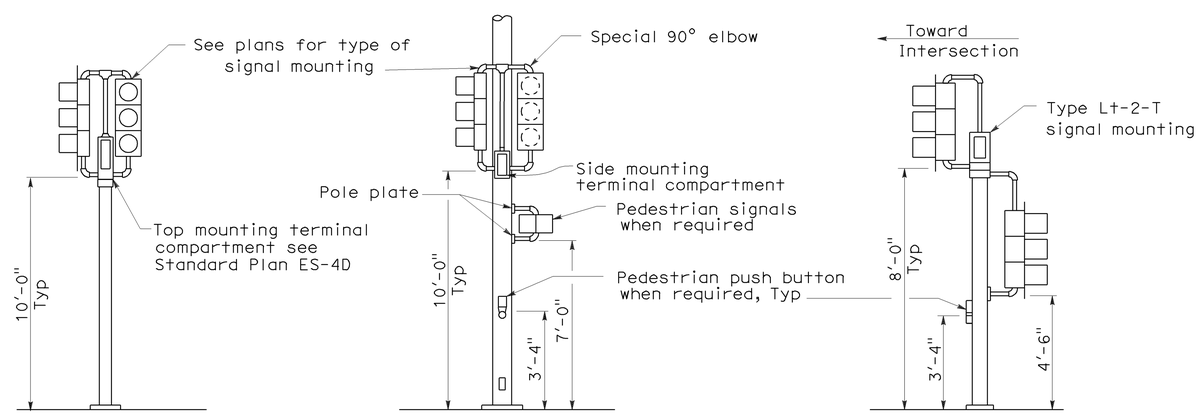


## TOP MOUNTED SIGNALS (TV)

Type 1-A, 1-B, 1-C and 1-D standard as indicated on the plans

## SIDE MOUNTED SIGNALS (SV AND SP)

Normally used on standards with luminaire or signal mast arm

## LEFT TURN LANE SIGNAL

Type 1-A, 1-B, 1-C and 1-D standard as indicated on plans

## TYPICAL SIGNAL INSTALLATIONS

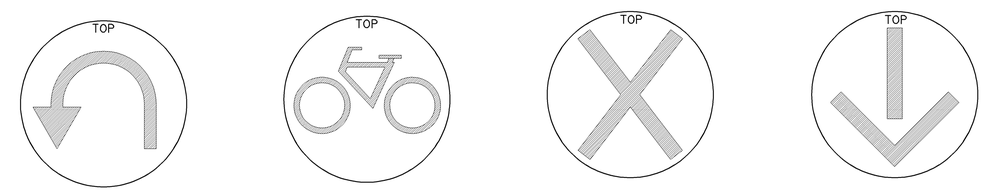


U-TURN SIGNAL FACE | BICYCLE SIGNAL FACE | LANE CONTROL SIGNAL FACE | LANE CONTROL SIGNAL FACE

STATE OF CALIFORNIA
DEPARTMENT OF TRANSPORTATION

# ELECTRICAL SYSTEMS (SIGNAL HEADS AND MOUNTINGS)

NO SCALE

RSP ES-4C DATED JUNE 6, 2008 SUPERSEDES STANDARD PLAN ES-4C DATED MAY 1, 2006 - PAGE 420 OF THE STANDARD PLANS BOOK DATED MAY 2006.

**REVISED STANDARD PLAN RSP ES-4C**

**2006 REVISED STANDARD PLAN RSP ES-4C**

5-19-08

| DIST | COUNTY | ROUTE | POST MILES TOTAL PROJECT | SHEET NO. | TOTAL SHEETS |
|---|---|---|---|---|---|
| 06 | Ker | 184 | 1.0 | 30 | 35 |

REGISTERED ELECTRICAL ENGINEER

June 6, 2008
PLANS APPROVAL DATE

REGISTERED PROFESSIONAL ENGINEER Jeffery G. McRae No. E14512 Exp. 6-30-10 ELECTRICAL STATE OF CALIFORNIA

*The State of California or its officers or agents shall not be responsible for the accuracy or completeness of electronic copies of this plan sheet.*

*To accompany plans dated* 1-10-11

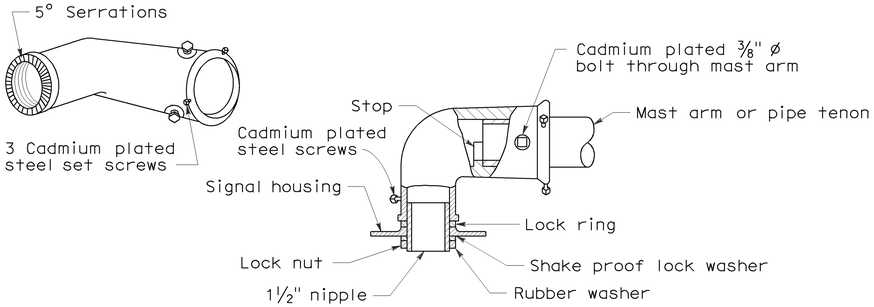


MAST ARM MOUNTING - TYPE "MAT"

For 2 NPS pipe, see Note 1.

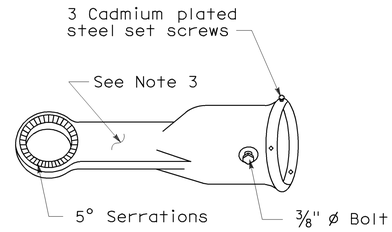


MAST ARM MOUNTING - TYPE "MAS"

For 2 NPS pipe. See Note 1.

SIGNAL SLIP FITTERS

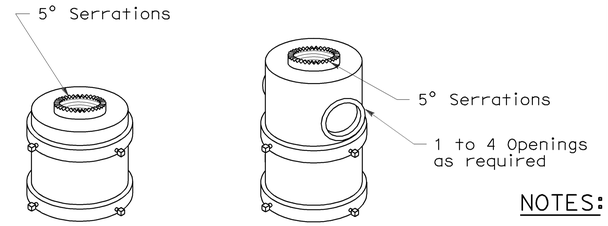


For one mounting For mulitiple mountings

TOP MOUNTINGS

For 4 NPS pipe, see Note 2.

## NOTES:

1. After mast arm signal has been plumbed and secured, drill 7/16" hole through mast arm tenon in line with slip fitter hole. Place a cadmium plated 3/8" ø galvanized bolt with washer under bolt head through hole and secure with washer, nut, and locknut. Seal openings between mast arm mountings and mast arm with mastic.
2. (a) Threaded top mounted slip fitter openings shall be 1½ NPS.
   (b) Serrations in fittings shall match those on bottom of signal heads or in lock ring.
   (c) Top opening shall be offset when backplate is used.
3. Wireway shall have a cross section area of 0.95 square inch minimum. Minimum width of ½".

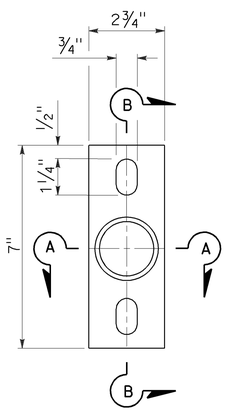


POLE PLATE

For side mountings

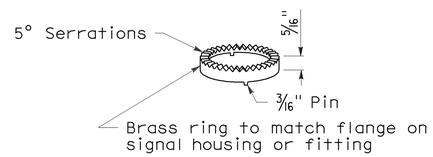


LOCK RING

Use where locking ring is not integral with signal housing or fitting.

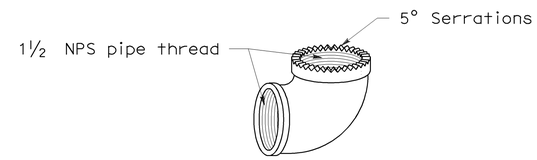


SPECIAL 90° ELBOW

One for each signal head, except those with special slip fitter mounting

MISCELLANEOUS MOUNTING HARDWARE

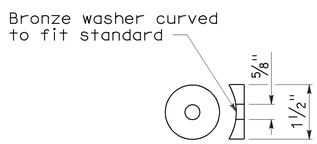


DETAIL "C"

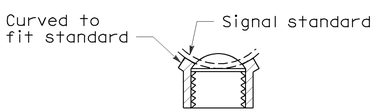


SECTION A-A

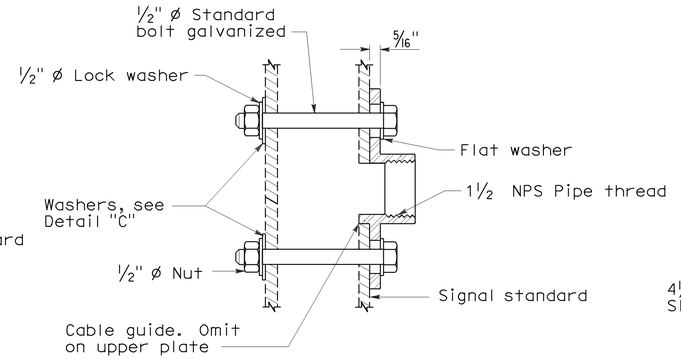


SECTION B-B

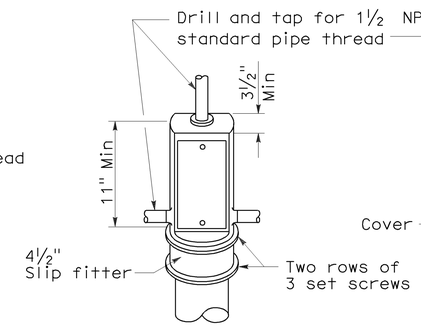


TOP MOUNTING

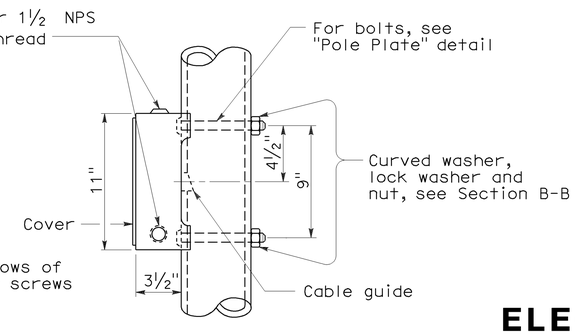


SIDE MOUNTING

TERMINAL COMPARTMENTS

STATE OF CALIFORNIA
DEPARTMENT OF TRANSPORTATION

# ELECTRICAL SYSTEMS (SIGNAL HEADS AND MOUNTINGS)

NO SCALE

RSP ES-4D DATED June 6, 2008 SUPERSEDES STANDARD PLAN ES-4D
DATED MAY 1, 2006 - PAGE 421 OF THE STANDARD PLANS BOOK DATED MAY 2006.

**REVISED STANDARD PLAN RSP ES-4D**

**2006 REVISED STANDARD PLAN RSP ES-4D**

5-19-08

| DIST | COUNTY | ROUTE | POST MILES TOTAL PROJECT | SHEET NO. | TOTAL SHEETS |
|---|---|---|---|---|---|
| 06 | Ker | 184 | 1.0 | 31 | 35 |

REGISTERED ELECTRICAL ENGINEER

October 5, 2007
PLANS APPROVAL DATE

REGISTERED PROFESSIONAL ENGINEER Jeffery G. McRae No. E14512 Exp. 6-30-08 ELECTRICAL STATE OF CALIFORNIA

*The State of California or its officers or agents shall not be responsible for the accuracy or completeness of electronic copies of this plan sheet.*

*To accompany plans dated* 1-10-11

# LOOP INSTALLATION PROCEDURE

1. Loops shall be centered in lanes.
2. Saw slots in pavement for loop conductors as shown in details.
3. Distance between side of loop and a lead-in saw cut from adjacent detectors shall be 2'-0" minimum. Distance between lead-in saw cuts shall be 6" minimum.
4. Bottom of saw slot shall be smooth with no sharp edges.
5. Slots shall be washed until clean, blown out and thoroughly dried before installing loop conductors.
6. Adjacent loops on the same sensor unit channel shall be wound in opposite directions.
7. Identify and tag loop circuit pairs in the pull box with loop number, start (S) and finish (F) of conductor. Identify and tag lead-in-cable with sensor number and phase.
8. Install loop conductor in slot using a 3/16" to 1/4" thick wood paddle. Hold loop conductors with wood paddles (at the bottom of the sawed slot) during sealant placement.
9. No more than 2 twisted pairs shall be installed in one sawed slot.
10. Allow additional 5'-0" of slack length of conductor for the lead-in run to pull box.
11. The additional length of each conductor for each loop shall be twisted together into a pair (6 turns per 3'-4" minimum) before being placed in the slot and conduit leading to pull box.
12. Test each loop circuit for continuity, circuit resistance and insulation resistance at the pull box before filling slots.
13. Fill slots as shown in details.
14. Splice loop conductors to lead-in-cable. Splices shall be soldered.
15. End of lead-in-cable and Type 2 loop conductor shall be waterproofed prior to installing in conduit to prevent moisture from entering the cable.
16. Lead-in-cable shall not be spliced between the pull box and the controller cabinet terminals.
17. Test each loop circuit for continuity, circuit resistance and insulation resistance at the controller cabinet location.
18. Where loop conductors are not to be spliced to a lead-in-cable, the ends of the conductors shall be taped and waterproofed with electrical insulating coating.

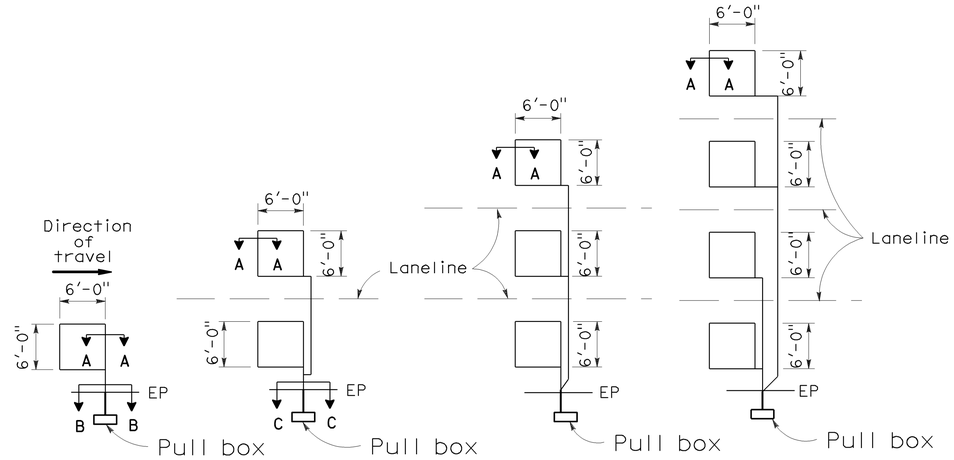


TYPE 1A INSTALLATION | TYPE 2A INSTALLATION | TYPE 3A INSTALLATION | TYPE 4A INSTALLATION

## SAWCUT DETAILS

(Type A loop detector configurations illustrated)

1. 1A thru 4A = 1 Type A loop configuration in each lane.
2. 1B thru 4B = 1 Type B loop configuration in each lane.
3. 1C = 1 Type C loop configuration entering lanes as required.
4. 1D thru 4D = 1 Type D loop configuration in each lane.
5. 1E thru 4E = 1 Type E loop configuration in each lane.
6. 1Q thru 4Q = 1 Type Q loop configuration in each lane. (Use Type A, B, C, D, E or Q loop detector configurations only when specified or shown on plans)

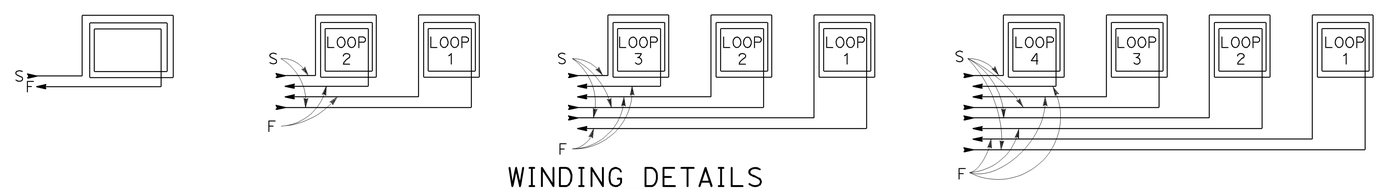


## WINDING DETAILS

See Notes 6 and 7

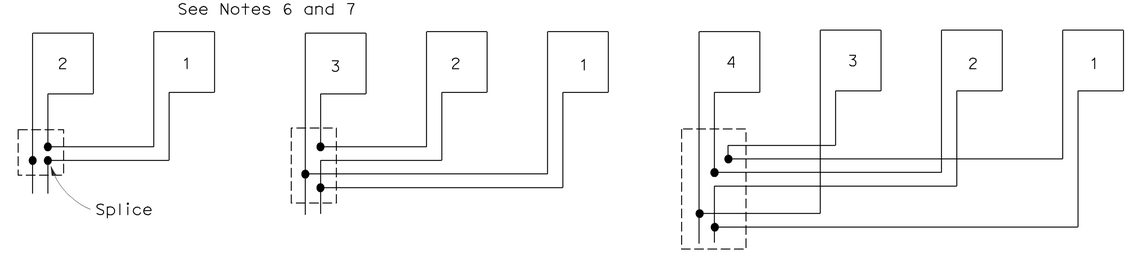


## TYPICAL LOOP CONNECTIONS

(Dashed lines represent the pull box)

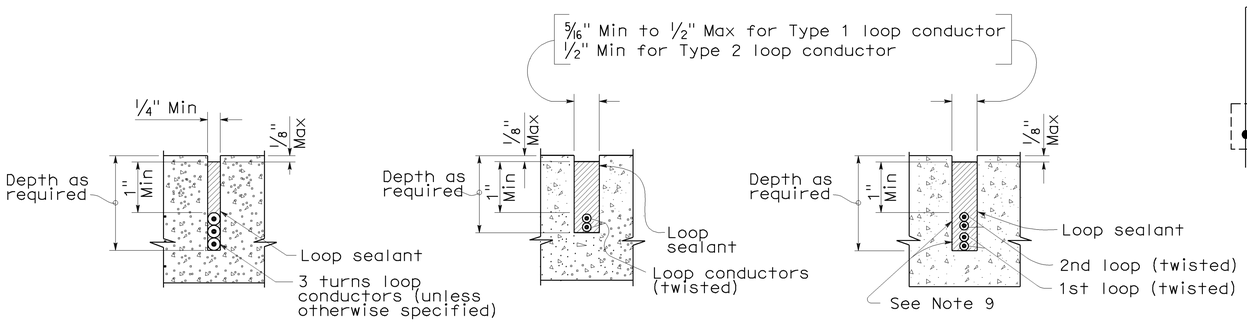


SECTION A-A | SECTION B-B | SECTION C-C

## SLOT DETAILS - TYPE 1 AND TYPE 2 LOOP CONDUCTOR

STATE OF CALIFORNIA
DEPARTMENT OF TRANSPORTATION

# ELECTRICAL SYSTEMS (DETECTORS)

NO SCALE

RSP ES-5A DATED OCTOBER 5, 2007 SUPERCEDES STANDARD PLAN ES-5A DATED MAY 1, 2006 - PAGE 423 OF THE STANDARD PLANS BOOK DATED MAY 2006.

**REVISED STANDARD PLAN RSP ES-5A**

**2006 REVISED STANDARD PLAN RSP ES-5A**

8-17-07

| DIST | COUNTY | ROUTE | POST MILES TOTAL PROJECT | SHEET NO. | TOTAL SHEETS |
|---|---|---|---|---|---|
| 06 | Ker | 184 | 1.0 | 32 | 35 |

REGISTERED CIVIL ENGINEER

October 5, 2007
PLANS APPROVAL DATE

REGISTERED PROFESSIONAL ENGINEER
Stanley P. Johnson
No. C57793
Exp. 3-31-08
CIVIL
STATE OF CALIFORNIA

*The State of California or its officers or agents shall not be responsible for the accuracy or completeness of electronic copies of this plan sheet.*

*To accompany plans dated* 1-10-11

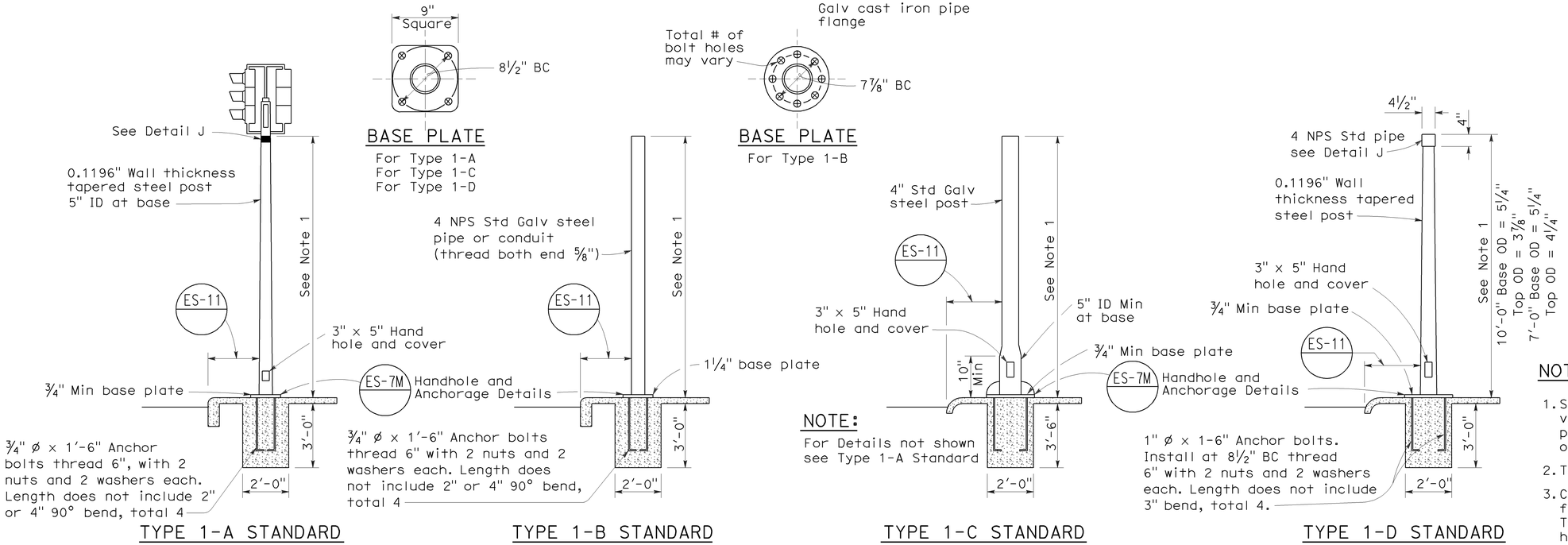


## TYPE 1 SIGNAL STANDARDS

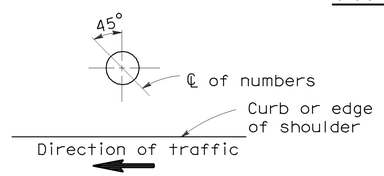


PLAN

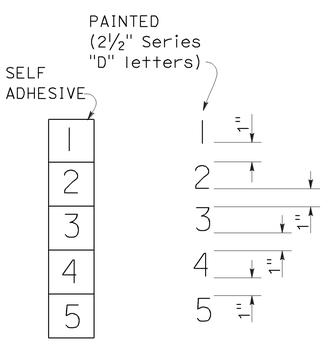


NUMBER DETAIL

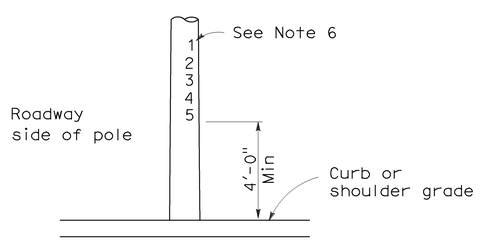


TYPIC NUMBER FORMAT

## LOCATION OF EQUIPMENT NUMBERS ON STANDARDS AND POSTS

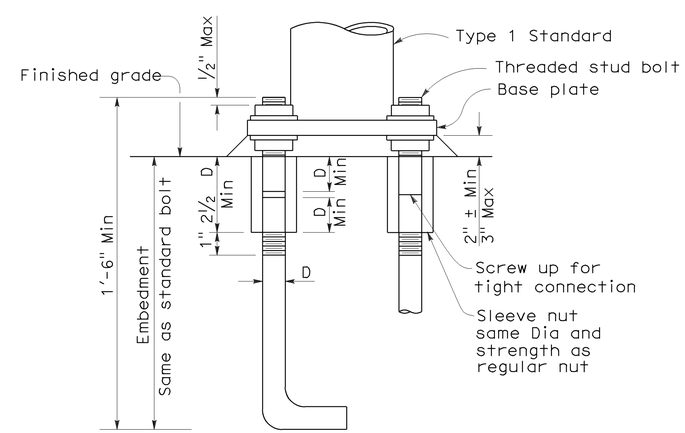


## ANCHOR BOLTS WITH SLEEVE NUTS

Sleeve nuts to be used only when shown or specified on Project Plans

D = Diameter of anchor bolt

## NOTES:

1. Standards shall be 10'-0" ± 2" for vehicle signals and 7'-0" ± 2" for pedestrian signals unless otherwise noted on plans.
2. Top of standards shall be 4½" OD.
3. Conduits shall extend 2" maximum above finished surface of foundation and for Types 1-A, 1-C and 1-D shall be sloped toward handhole.
4. Anchor bolts shall be bonded to conduit or grounding conductor.
5. Conduit between standard and adjacent pull box shall be 2" minimum.
6. Paint numbers on roadway side facing traffic when electrolier or post is left of direction of traffic.

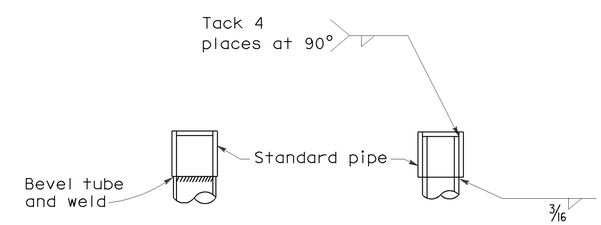


DETAIL J

Tube may be inserted into pipe or butted as required

STATE OF CALIFORNIA
DEPARTMENT OF TRANSPORTATION

# ELECTRICAL SYSTEMS (SIGNAL AND LIGHTING STANDARD TYPE 1 STANDARD AND EQUIPMENT NUMBERING)

NO SCALE

RSP ES-7B DATED OCTOBER 5, 2007 SUPERCEDES STANDARD PLAN ES-7B DATED MAY 1, 2006 - PAGE 438 OF THE STANDARD PLANS BOOK DATED MAY 2006.

**REVISED STANDARD PLAN RSP ES-7B**

**2006 REVISED STANDARD PLAN RSP ES-7B**

7-10-07

| DIST | COUNTY | ROUTE | POST MILES TOTAL PROJECT | SHEET NO. | TOTAL SHEETS |
|---|---|---|---|---|---|
| 06 | Ker | 184 | 1.0 | 33 | 35 |

REGISTERED CIVIL ENGINEER

June 15, 2007
PLANS APPROVAL DATE

REGISTERED PROFESSIONAL ENGINEER Stanley P. Johnson No. C57793 Exp. 3-31-08 CIVIL STATE OF CALIFORNIA

*The State of California or its officers or agents shall not be responsible for the accuracy or completeness of electronic copies of this plan sheet.*

*To accompany plans dated* 1-10-11

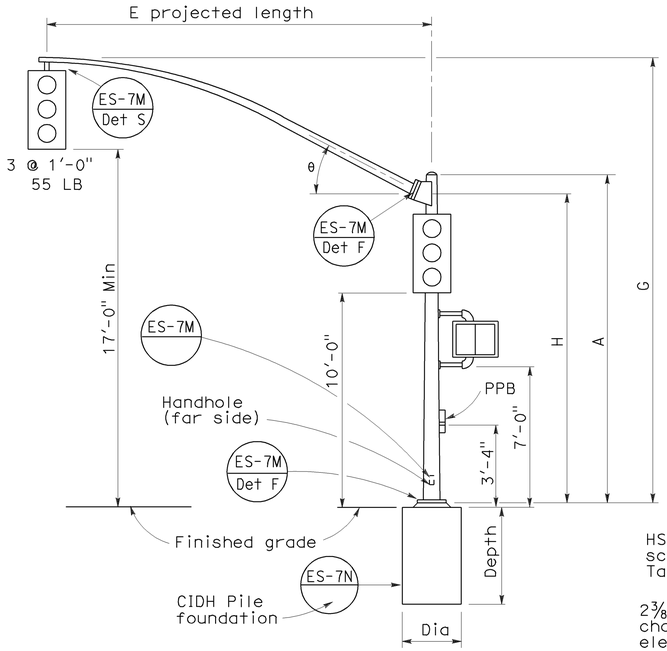


ELEVATION

TYPE 16-1-100, 18-1-100

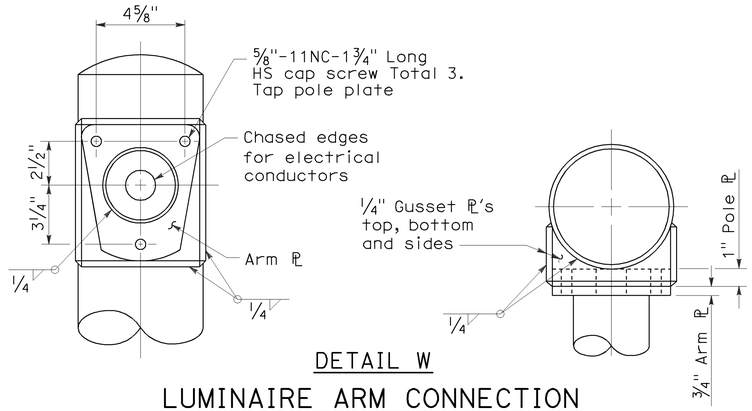


DETAIL W

LUMINAIRE ARM CONNECTION

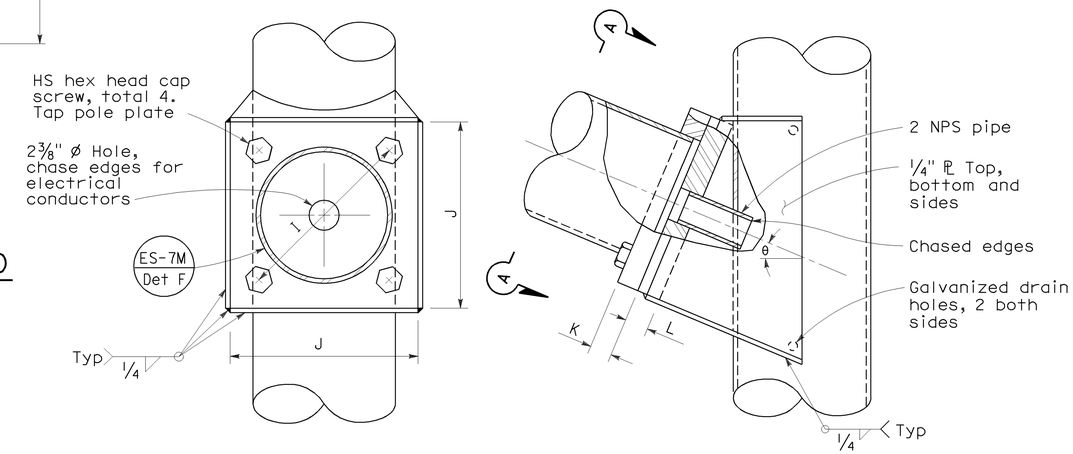


VIEW A-A

ELEVATION

SIGNAL ARM CONNECTION DETAILS

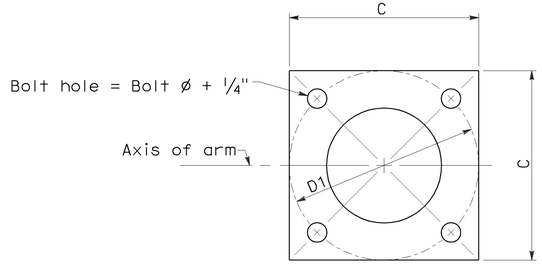


BASE PLATE

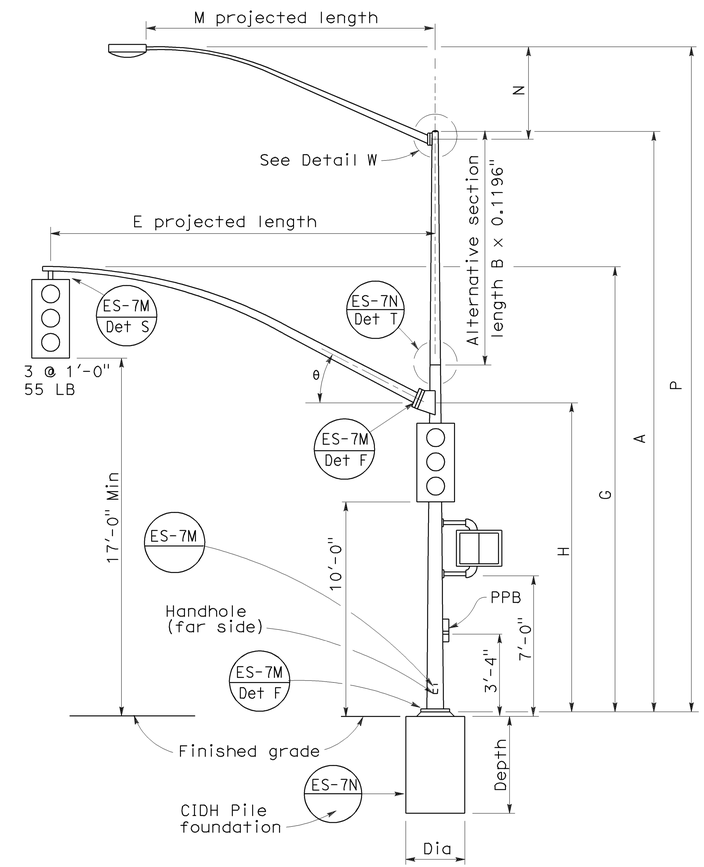


ELEVATION

TYPE 19-1-100, 19A-1-100

| SIGNAL ARM DATA | | | | | | | | | | |
|---|---|---|---|---|---|---|---|---|---|---|
| E Projected Length | G Mounting Height | H | Min OD At Pole | Thickness | I Bolt Circle | HS Cap Screws | J Plate size | K Arm ℙ Thickness | L Pole ℙ Thickness | θ |
| 15'-0" | 21'-8"± | 17'-6" | 7" | 0.1196" | 12" | 1¼"-7NC-3" | 1'-0" | 1¼" | 1½" | 23° |
| 20'-0" | 21'-8"± | | 7⅛" | | | | | | | |
| 25'-0" | 22'-8"± | 16'-0" | 7 5/16" | | | | | | | |
| 30'-0" | 23'-0"± | | 8" | | | | | | | |

| LUMINAIRE ARM DATA | | | | | |
|---|---|---|---|---|---|
| M Projected Length | N Rise | Min OD at Pole | Thickness | P Mounting Height 30'-0" Pole | P Mounting Height 35'-0" Pole |
| 6'-0" | 2'-0"± | 3¼" | 0.1196" | 31'-6"± | 36'-6"± |
| 8'-0" | 2'-6"± | 3½" | | 32'-0"± | 37'-0"± |
| 10'-0" | 3'-3"± | 3⅞" | | 32'-9"± | 37'-9"± |
| 12'-0" | 4'-3"± | | | 33'-9"± | 38'-9"± |
| 15'-0" | 4'-9"± | 4¼" | | 34'-3"± | 39'-3"± |

| Pole Type | Load Case | Wind Velocity mph | POLE DATA A Height | Min OD Base | Min OD Top | Thickness | Alternative Section B Length | Alternative Section Bottom | Alternative Section Top | BASE PLATE DATA C | D1 Bolt Circle | Thickness | Anchor Bolts Size | Luminaire Arm | Signal Arm | CIDH PILE FOUNDATION Diameter | Depth | Reinforced |
|---|---|---|---|---|---|---|---|---|---|---|---|---|---|---|---|---|---|---|
| 16-1-100 | 1 | 100 | 18'-6" | 10¾" | 8¼" | 0.1793" | None | | | 1'-6" | 1'-5½" | 1¼" | 1½" Ø × 42" × 6" | None | 15'-0", 20'-0" | 2'-6" | 7'-2" | Yes |
| 18-1-100 | | | 17'-0" | | 8 7/16" | | None | | | | | | | None | | | | |
| 19-1-100 | | | 30'-0" | | 6⅝" | | 10'-0" | 8" | 6⅝" | | | | | 6'-15' [12'-0"] | 25'-0", 30'-0" | | | |
| 19A-1-100 | | | 35'-0" | | 5 15/16" | | 15'-0" | | 5 15/16" | | | | | 6'-15' [15'-0"] | | | | |

☐ Indicates arm length to be used unless otherwise noted on plans.

STATE OF CALIFORNIA
DEPARTMENT OF TRANSPORTATION

# ELECTRICAL SYSTEMS (SIGNAL AND LIGHTING STANDARD CASE 1 ARM LOADING WIND VELOCITY = 100 MPH ARM LENGTHS 15' TO 30')

NO SCALE

RSP ES-7C DATED JUNE 15, 2007 SUPERSEDES STANDARD PLAN ES-7C DATED MAY 1, 2006 - PAGE 439 OF THE STANDARD PLANS BOOK DATED MAY 2006.

**REVISED STANDARD PLAN RSP ES-7C**

**2006 REVISED STANDARD PLAN RSP ES-7C**

1-26-07

| DIST | COUNTY | ROUTE | POST MILES TOTAL PROJECT | SHEET NO. | TOTAL SHEETS |
|---|---|---|---|---|---|
| 06 | Ker | 184 | 1.0 | 34 | 35 |

REGISTERED CIVIL ENGINEER

June 30, 2006
PLANS APPROVAL DATE

REGISTERED PROFESSIONAL ENGINEER
Jeffrey B. Woody
No. C41260
Exp. 3-31-07
CIVIL
STATE OF CALIFORNIA

*The State of California or its officers or agents shall not be responsible for the accuracy or completeness of electronic copies of this plan sheet.*

*To accompany plans dated* 1-10-11

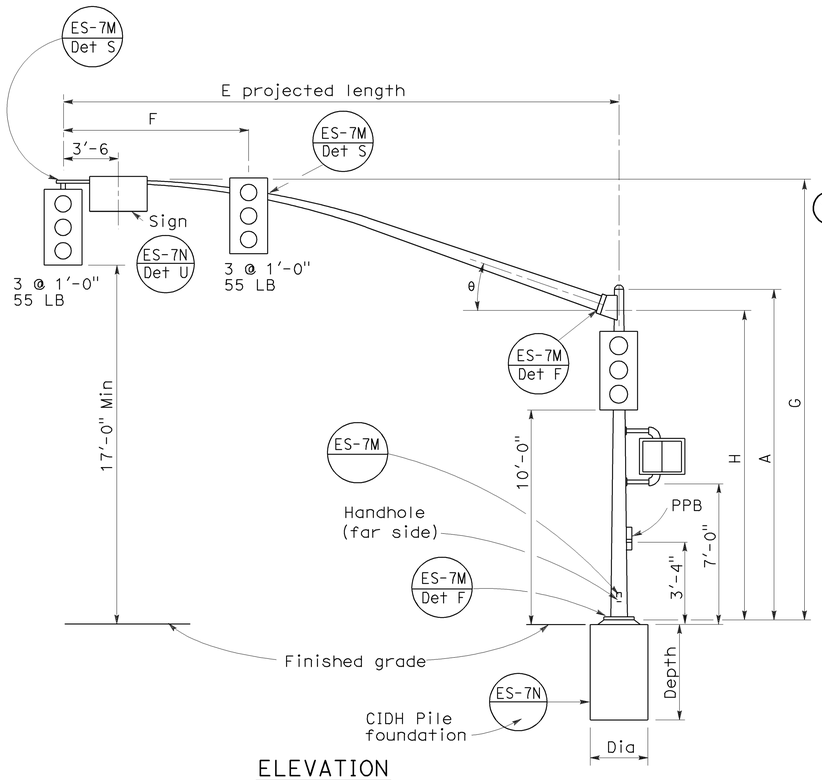


ELEVATION

## TYPE 16-3-100, 18-3-100, 23-3-100, 27-3-100

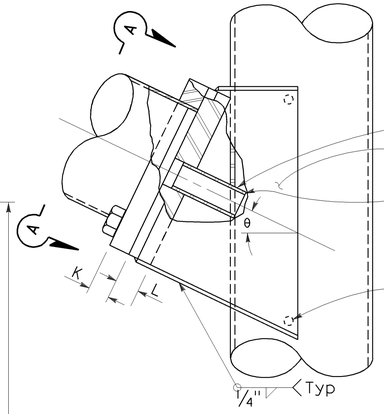


ELEVATION

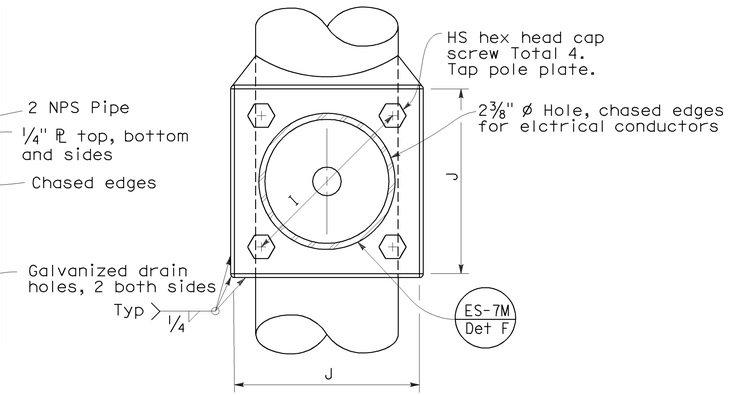


VIEW A-A

## SIGNAL ARM CONNECTION DETAILS

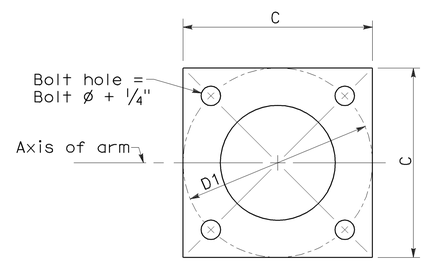


BASE PLATE

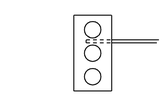

Type 17-3-100

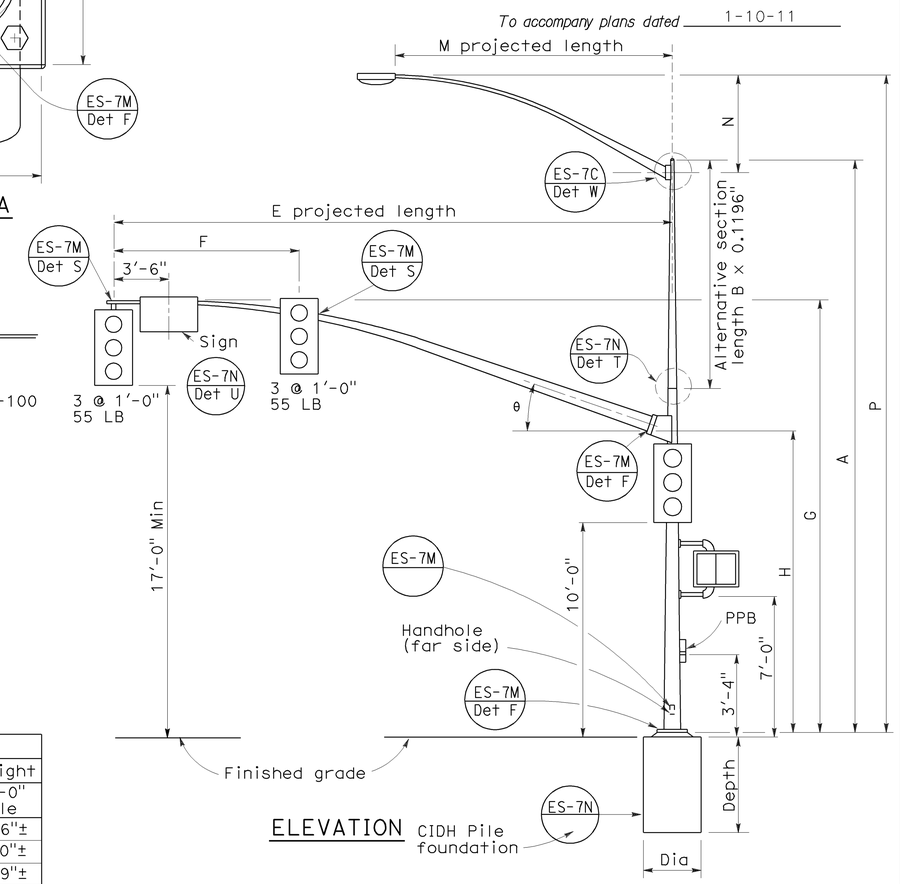


ELEVATION

## TYPE 17-3-100, 24A-3-100, 19-3-100, 26-3-100, 19A-3-100, 26A-3-100, 24-3-100

| SIGNAL ARM DATA | | | | | | | | | | | |
|---|---|---|---|---|---|---|---|---|---|---|---|
| E Projected Length | F Min Spacing | G Mounting Height | H | Min OD At Pole | Thickness | I Bolt Circle | HS Cap Screws | J Plate Size | K Arm PL Thickness | L Pole PL Thickness | θ |
| 15'-0" | 8'-0" | 21'-8"± | 17'-6" | 6 5/8" | 0.1793" | 12" | 1 1/4"-7NC-3" | 1'-0" | 1 1/4" | 1 1/2" | 23° |
| 20'-0" | | 21'-8"± | | 7" | | | | | | | |
| 25'-0" | 12'-0" | 22'-8"± | 16'-0" | 7 5/16" | 0.2391" | | | | | | |
| 30'-0" | | 23'-0"± | | 8" | | | | | | | |
| 35'-0" | 14'-0" | | | 8 3/4" | | 13" | | 1'-1" | 1 1/2" | 1 3/4" | 21° |
| 40'-0" | 15'-0" | | | 9 3/8" | | | | | | | 15° |
| 45'-0" | | 23'-8"± | | 10 1/16" | | | | | | | |

| LUMINAIRE ARM DATA | | | | | |
|---|---|---|---|---|---|
| M Projected Length | N Rise | Min OD at Pole | Thickness | P Mounting Height 30'-0" Pole | P Mounting Height 35'-0" Pole |
| 6'-0" | 2'-0"± | 3 1/4" | 0.1196" | 31'-6"± | 36'-6"± |
| 8'-0" | 2'-6"± | 3 1/2" | | 32'-0"± | 37'-0"± |
| 10'-0" | 3'-3"± | 3 7/8" | | 32'-9"± | 37'-9"± |
| 12'-0" | 4'-3"± | | | 33'-9"± | 38'-9"± |
| 15'-0" | 4'-9"± | 4 1/4" | | 34'-3"± | 39'-3"± |

| Pole Type | Load Case | Wind Velocity mph | POLE DATA A Height | Min OD Base | Min OD Top | Thickness | Alternative Section B Length | Alternative Section Bottom | Alternative Section Top | BASE PLATE DATA C | D1 Bolt Circle | Thickness | Anchor Bolts Size | Luminaire Arm | Signal Arm | CIDH PILE FOUNDATION Diameter | Depth | Reinforced |
|---|---|---|---|---|---|---|---|---|---|---|---|---|---|---|---|---|---|---|
| 16-3-100 | 3 | 100 | 18'-6" | 10 3/4" | 8 1/4" | 0.1793" | None | | | 1'-6" | 1'-5 1/2" | 1 1/2" | 2"ø x 42" x 6" | None | 15'-0", 20'-0", | 3'-0" | 9'-0" | Yes |
| 17-3-100 | | | 30'-0" | | 6 5/8" | | 10'-0" | 8" | 7 5/16" | | | | | 6'-15' [12'-0"] | | | | |
| 18-3-100 | | | 17'-0" | 1'-0" | 8 7/16" | 0.2391" | None | | | | | | | None | 25'-0", [30'-0"] | | | |
| 19-3-100 | | | 30'-0" | | 7 7/8" | | 10'-0" | 9 1/4" | 7 7/8" | | | | | 6'-15' [12'-0"] | | | | |
| 19A-3-100 | | | 35'-0" | | 7 3/16" | | 15'-0" | | 7 3/16" | | | | | 6'-15' [15'-0"] | | | | |
| 23-3-100 | | | 17'-0" | | 9 5/8" | | None | | | | | | | None | 35'-0" | | | |
| 24-3-100 | | | 30'-0" | | 7 7/8" | | 10'-0" | 9 1/4" | 7 7/8" | | | | | 6'-15' [12'-0"] | | | | |
| 24A-3-100 | | | 35'-0" | | 7 3/16" | | 15'-0" | | 7 3/16" | | | | | 6'-15' [15'-0"] | | | | |
| 26-3-100 | | | 30'-0" | 1'-1/8" | 8" | 0.3125" | 10'-0" | 9 3/8" | 8" | | | | | 6'-15' [12'-0"] | 40'-0", [45'-0"] | | | |
| 26A-3-100 | | | 35'-0" | | 7 5/16" | | 15'-0" | | 7 5/16" | | | | | 6'-15' [15'-0"] | | | | |
| 27-3-100 | | | 17'-0" | | 9 3/4" | | None | | | | | | | None | | | | |

☐ Indicates arm length to be used unless otherwise noted on plans.

STATE OF CALIFORNIA
DEPARTMENT OF TRANSPORTATION

# ELECTRICAL SYSTEMS (SIGNAL AND LIGHTING STANDARD CASE 3 ARM LOADING WIND VELOCITY=100 MPH ARM LENGTHS 15' TO 45')

NO SCALE

RSP ES-7E DATED JUNE 30, 2006 SUPERSEDES STANDARD PLAN DATED MAY 1, 2006 - PAGE 441 OF THE STANDARD PLANS BOOK DATED MAY 2006.

**REVISED STANDARD PLAN RSP ES-7E**

**2006 REVISED STANDARD PLAN RSP ES-7E**

5-9-06

| DIST | COUNTY | ROUTE | POST MILES TOTAL PROJECT | SHEET NO. | TOTAL SHEETS |
|---|---|---|---|---|---|
| 06 | Ker | 184 | 1.0 | 35 | 35 |

REGISTERED CIVIL ENGINEER

October 5, 2007
PLANS APPROVAL DATE

REGISTERED PROFESSIONAL ENGINEER
Stanley P. Johnson
No. C57793
Exp. 3-31-08
CIVIL
STATE OF CALIFORNIA

*The State of California or its officers or agents shall not be responsible for the accuracy or completeness of electronic copies of this plan sheet.*

*To accompany plans dated* 1-10-11

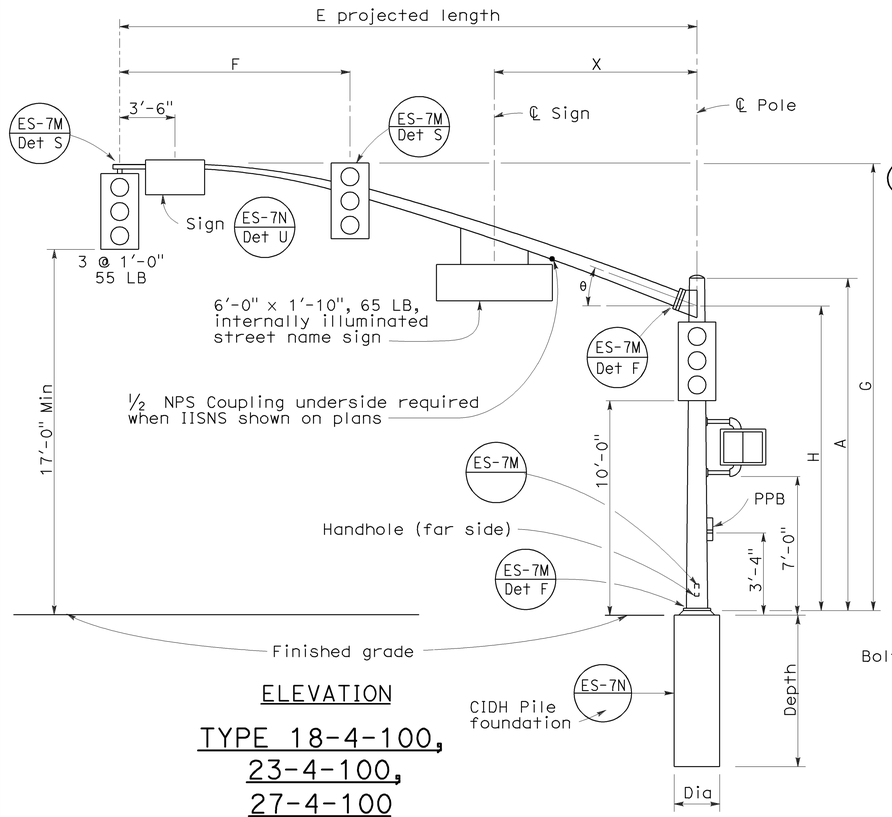


ELEVATION

TYPE 18-4-100,
23-4-100,
27-4-100

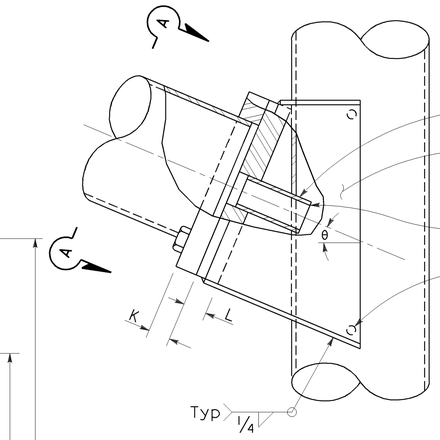


ELEVATION

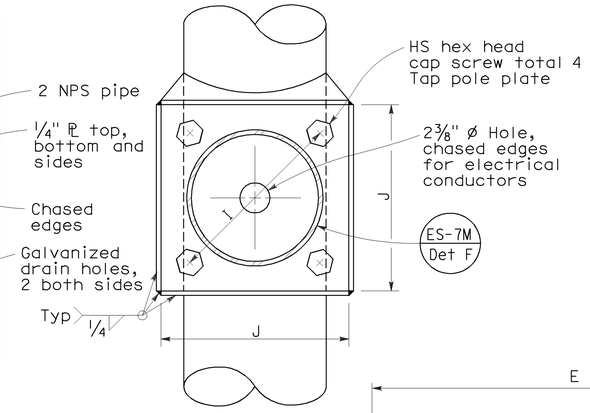


VIEW A-A

SIGNAL ARM CONNECTION DETAILS

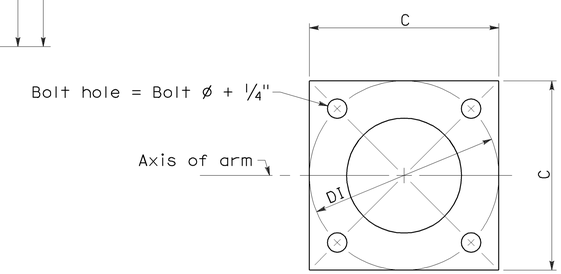


BASE PLATE

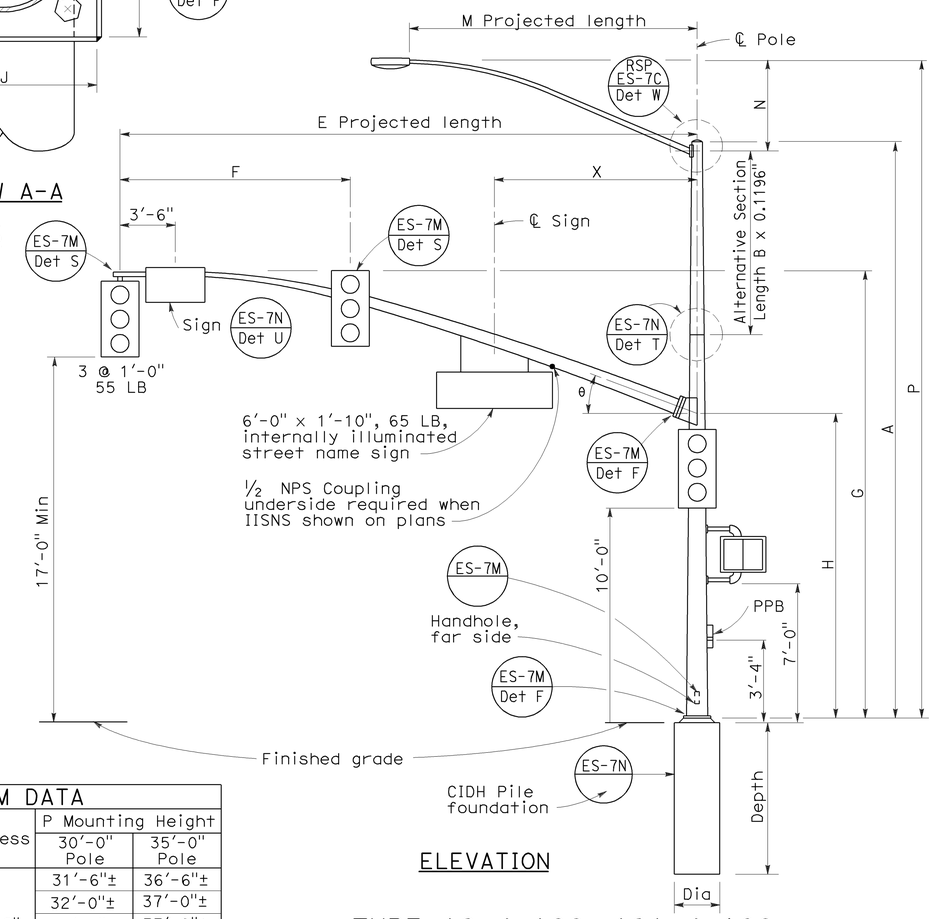


ELEVATION

TYPE 19-4-100, 19A-4-100,
24-4-100, 24A-4-100,
26-4-100, 26A-4-100

**SIGNAL ARM DATA**

| E Projected Length | F Min Spacing | G Mounting Height | H | Min OD at Pole | Thickness | I Bolt Circle | HS Cap Screws | J Plate Size | K Arm PL Thickness | L Pole PL Thickness | θ | X Max |
|---|---|---|---|---|---|---|---|---|---|---|---|---|
| 25'-0" | 10'-0" | 22'-8"± | 16'-0" | 7 5/16" | 0.2391" | 12" | 1¼"-7NC-3" | 1'-0" | 1¼" | 1½" | 23° | 10'-6" |
| 30'-0" | 12'-0" | 23'-0"± | | 8" | | | | | | | | |
| 35'-0" | 14'-0" | | | 8 11/16" | | 13½" | | 1'-1½" | 1½" | 1¾" | 21° | |
| 40'-0" | 15'-0" | | | 9⅜" | | | | | | | 15° | 13'-0" |
| 45'-0" | | 23'-8"± | | 10¼" | | | | | | | | |

**LUMINAIRE ARM DATA**

| M Projected Length | N Rise | Min OD at Pole | Thickness | P Mounting Height 30'-0" Pole | P Mounting Height 35'-0" Pole |
|---|---|---|---|---|---|
| 6'-0" | 2'-0"± | 3¼" | 0.1196" | 31'-6"± | 36'-6"± |
| 8'-0" | 2'-6"± | 3½" | | 32'-0"± | 37'-0"± |
| 10'-0" | 3'-3"± | 3⅞" | | 32'-9"± | 37'-9"± |
| 12'-0" | 4'-3"± | | | 33'-9"± | 38'-9"± |
| 15'-0" | 4'-9"± | 4¼" | | 34'-3"± | 39'-3"± |

**POLE DATA / BASE PLATE DATA / CIDH PILE FOUNDATION**

| Pole Type | Load Case | Wind Velocity mph | A Height | Min OD Base | Min OD Top | Thickness | Alternative Section B Length | Alternative Section Bottom | Alternative Section Top | C | DI Bolt Circle | Thickness | Anchor Bolts Size | Luminaire Arm | Signal Arm | Dia | Depth | Reinforced |
|---|---|---|---|---|---|---|---|---|---|---|---|---|---|---|---|---|---|---|
| 18-4-100 | 4 | 100 | 17'-0" | 12" | 9" | 0.2391" | None | | | 1'-6" | 1'-6" | 1½" | 2" Ø x 42" x 6" | None | 25'-0", [30'-0"] | 3'-0" | 9'-0" | Yes |
| 19-4-100 | | | 30'-0" | | 8" | | 10'-0" | 9⅜" | 8" | | | | | 6'-15' [12'-0"] | | | | |
| 19A-4-100 | | | 35'-0" | | 7 5/16" | | 15'-0' | | 7 5/16" | | | | | 6'-15' [15'-0"] | | | | |
| 23-4-100 | | | 17'-0" | | 9" | | None | | | | | | | None | 35'-0" | | | |
| 24-4-100 | | | 30'-0" | | 8" | | 10'-0" | 9⅜" | 8" | | | | | 6'-15' [12'-0"] | | | | |
| 24A-4-100 | | | 35'-0" | | 7 5/16" | | 15'-0" | | 7 5/16" | | | | | 6'-15' [15'-0"] | | | | |
| 26-4-100 | | | 30'-0" | 12½" | 8" | 0.3125" | 10'-0" | 9¾" | 8⅜" | | | | | 6'-15' [12'-0"] | 40'-0", [45'-0"] | | | |
| 26A-4-100 | | | 35'-0" | | 7 5/16" | | 15'-0" | | 7 11/16" | | | | | 6'-15' [15'-0"] | | | | |
| 27-4-100 | | | 17'-0" | | 9¾" | | None | | | | | | | None | | | | |

☐ Indicates arm length to be used unless otherwise noted on plans.

STATE OF CALIFORNIA
DEPARTMENT OF TRANSPORTATION

# ELECTRICAL SYSTEMS (SIGNAL AND LIGHTING STANDARD CASE 4 ARM LOADING WIND VELOCITY=100 MPH ARM LENGTHS 25' TO 45')

NO SCALE

RSP ES-7F DATED OCTOBER 5, 2007 SUPERCEDES RSP ES-7F DATED NOVEMBER 17, 2006 AND STANDARD PLAN ES-7F DATED MAY 1, 2006 - PAGE 442 OF THE STANDARD PLANS BOOK DATED MAY 2006.

**REVISED STANDARD PLAN RSP ES-7F**

**2006 REVISED STANDARD PLAN RSP ES-7F**

7-10-07