Dist	COUNTY	ROUTE	POST MILES TOTAL PROJECT	SHEET No.	TOTAL SHEETS
06	Kin	198	R19.0/T21.7	1	53

ACHSNHG-P198(053)E

STATE OF CALIFORNIA
DEPARTMENT OF TRANSPORTATION

PROJECT PLANS FOR CONSTRUCTION ON
STATE HIGHWAY

IN KINGS COUNTY IN AND NEAR HANFORD
FROM EAST OF 10TH AVENUE OVERCROSSING
TO 0.7 MILE EAST OF ROUTE 43/198 SEPARATION

TO BE SUPPLEMENTED BY STANDARD PLANS DATED MAY 2006

INDEX OF PLANS

SHEET No.	DESCRIPTION
1	TITLE AND LOCATION MAP
2-3	TYPICAL CROSS SECTIONS
4-9	LAYOUTS
10-16	PROFILES
17-19	CONSTRUCTION DETAILS
20-33	DRAINAGE PROFILES, DETAILS AND QUANTITIES
34-38	UTILITY PLANS
39	TRAFFIC HANDLING PLAN AND QUANTITIES
40	CONSTRUCTION AREA SIGNS
41	PAVEMENT DELINEATION AND SIGN QUANTITIES
42	SUMMARY OF QUANTITIES
43	SIGN DETAILS
44-53	REVISED AND NEW STANDARD PLANS

THE STANDARD PLANS LIST APPLICABLE TO THIS CONTRACT IS INCLUDED IN THE NOTICE TO BIDDERS AND SPECIAL PROVISIONS BOOK.

LOCATION MAP

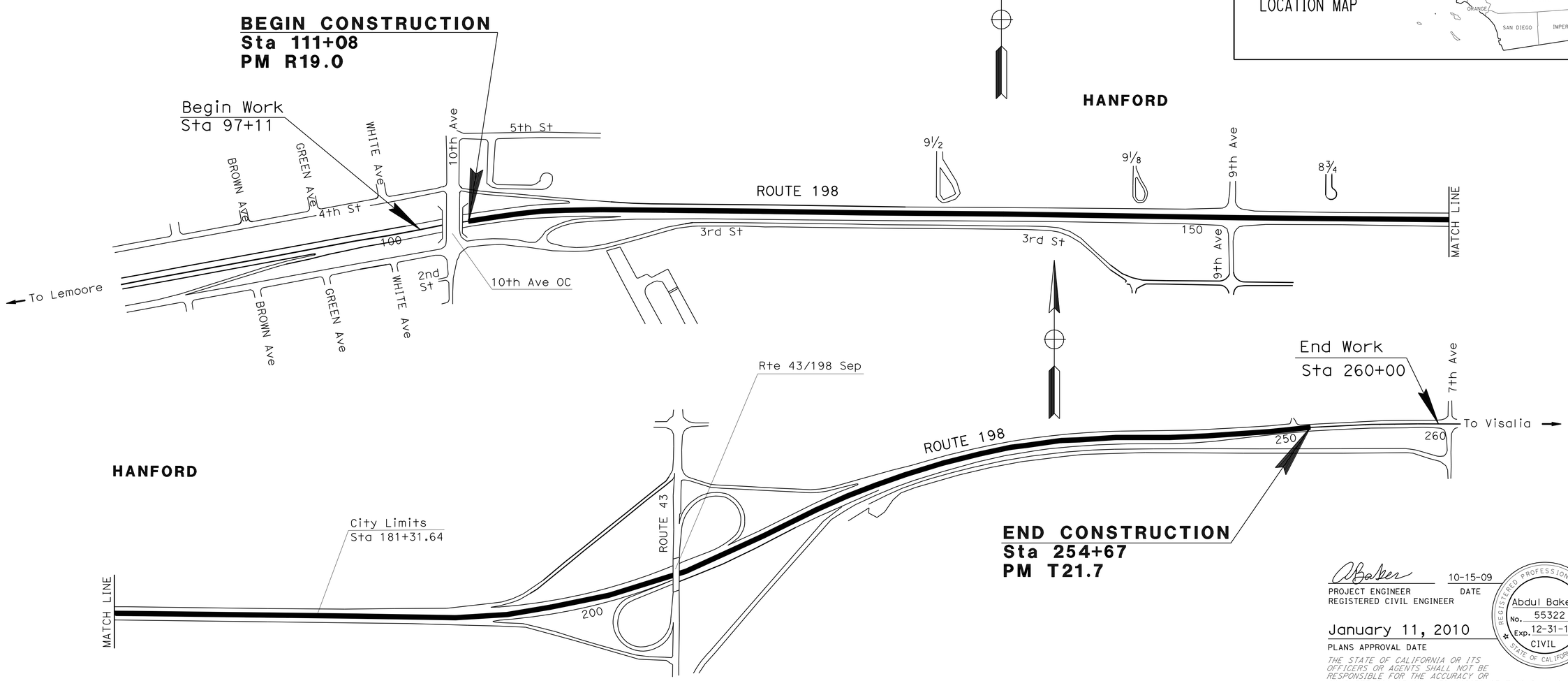

NO SCALE

THE CONTRACTOR SHALL POSSESS THE CLASS (OR CLASSES) OF LICENSE AS SPECIFIED IN THE "NOTICE TO BIDDERS."

PROJECT MANAGER GARTH FERNANDEZ

DESIGN ENGINEER ABDUL BAKER

10-15-09
PROJECT ENGINEER DATE
REGISTERED CIVIL ENGINEER

January 11, 2010
PLANS APPROVAL DATE

REGISTERED PROFESSIONAL ENGINEER
Abdul Baker
No. 55322
Exp. 12-31-10
CIVIL
STATE OF CALIFORNIA

THE STATE OF CALIFORNIA OR ITS OFFICERS OR AGENTS SHALL NOT BE RESPONSIBLE FOR THE ACCURACY OR COMPLETENESS OF SCANNED COPIES OF THIS PLAN SHEET.

CONTRACT No. **06-0H7404**

LAST REVISION 10-06-09
DATE PLOTTED => 23-FEB-2010
TIME PLOTTED => 11:45

Dist	COUNTY	ROUTE	POST MILES TOTAL PROJECT	SHEET No.	TOTAL SHEETS
06	Kin	198	R19.0/T21.7	2	53

REGISTERED CIVIL ENGINEER 10-15-09 DATE

1-11-10
PLANS APPROVAL DATE

REGISTERED PROFESSIONAL ENGINEER Abdul Baker No. 55322 Exp 12-31-10 CIVIL STATE OF CALIFORNIA

THE STATE OF CALIFORNIA OR ITS OFFICERS OR AGENTS SHALL NOT BE RESPONSIBLE FOR THE ACCURACY OR COMPLETENESS OF SCANNED COPIES OF THIS PLAN SHEET.

NOTES:

1. DIMENSIONS OF THE PAVEMENT STRUCTURES (STRUCTURAL SECTIONS) ARE SUBJECT TO TOLERANCES SPECIFIED IN THE STANDARD SPECIFICATIONS.
2. SUPERELEVATION AS SHOWN OR AS DIRECTED BY THE ENGINEER.
3. FOR DETAIL LOCATION AND CONCRETE BARRIER TYPE, SEE LAYOUT SHEETS.

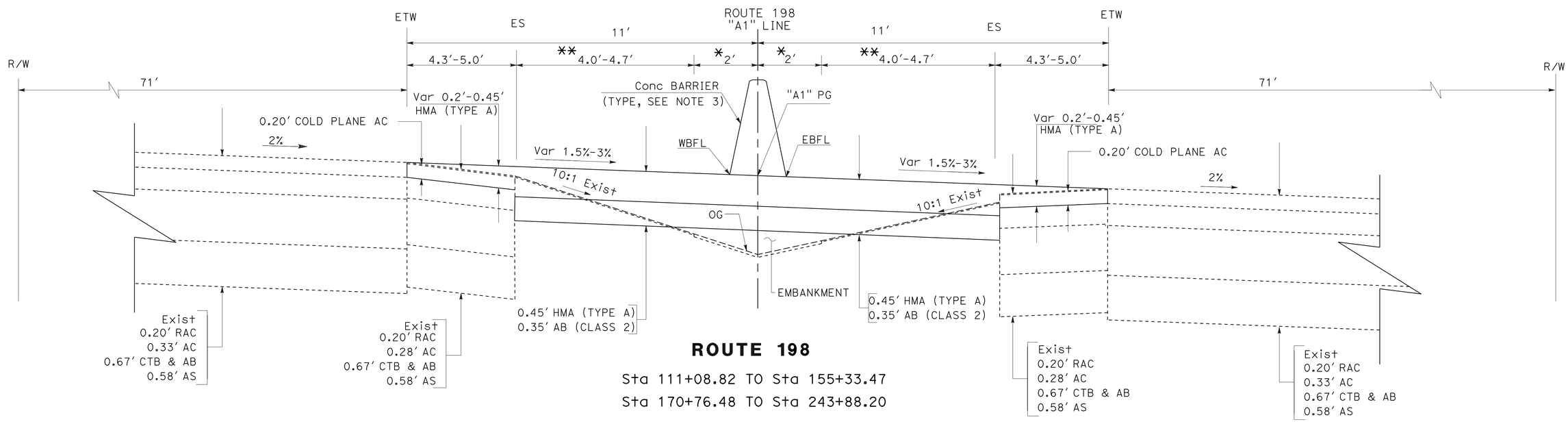

ROUTE 198

Sta 111+08.82 TO Sta 155+33.47

Sta 170+76.48 TO Sta 243+88.20

* REMOVE CONCRETE 6"

** REMOVE AC PAVEMENT 0.2′

TYPICAL CROSS SECTIONS

NO SCALE

X-1

STATE OF CALIFORNIA - DEPARTMENT OF TRANSPORTATION

Caltrans® DESIGN DIVISION

FUNCTIONAL SUPERVISOR: RORY QUINCE

CALCULATED-DESIGNED BY: ELTAHIR ATAELGEED

CHECKED BY: GURJOT GILL

REVISED BY

DATE REVISED

LAST REVISION DATE PLOTTED => 14-JAN-2010 TIME PLOTTED => 13:42

10-14-09

BORDER LAST REVISED 4/11/2008

RELATIVE BORDER SCALE IS IN INCHES 0 1 2 3

USERNAME => trmikesl
DGN FILE => 60h740ca001.dgn

CU 06262

EA 0H7401

Dist	COUNTY	ROUTE	POST MILES TOTAL PROJECT	SHEET No.	TOTAL SHEETS
06	Kin	198	R19.0/T21.7	3	53

REGISTERED CIVIL ENGINEER 10-15-09 DATE

1-11-10
PLANS APPROVAL DATE

REGISTERED PROFESSIONAL ENGINEER Abdul Baker No. 55322 Exp 12-31-10 CIVIL STATE OF CALIFORNIA

THE STATE OF CALIFORNIA OR ITS OFFICERS OR AGENTS SHALL NOT BE RESPONSIBLE FOR THE ACCURACY OR COMPLETENESS OF SCANNED COPIES OF THIS PLAN SHEET.

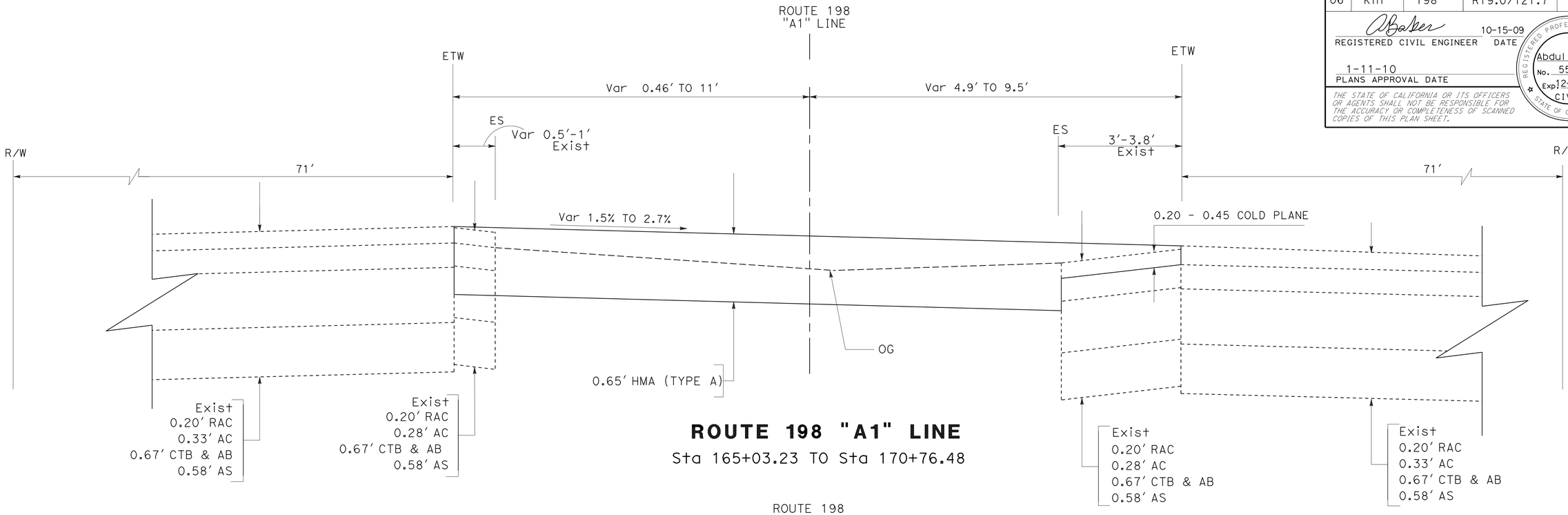

ROUTE 198 "A1" LINE

Sta 165+03.23 TO Sta 170+76.48

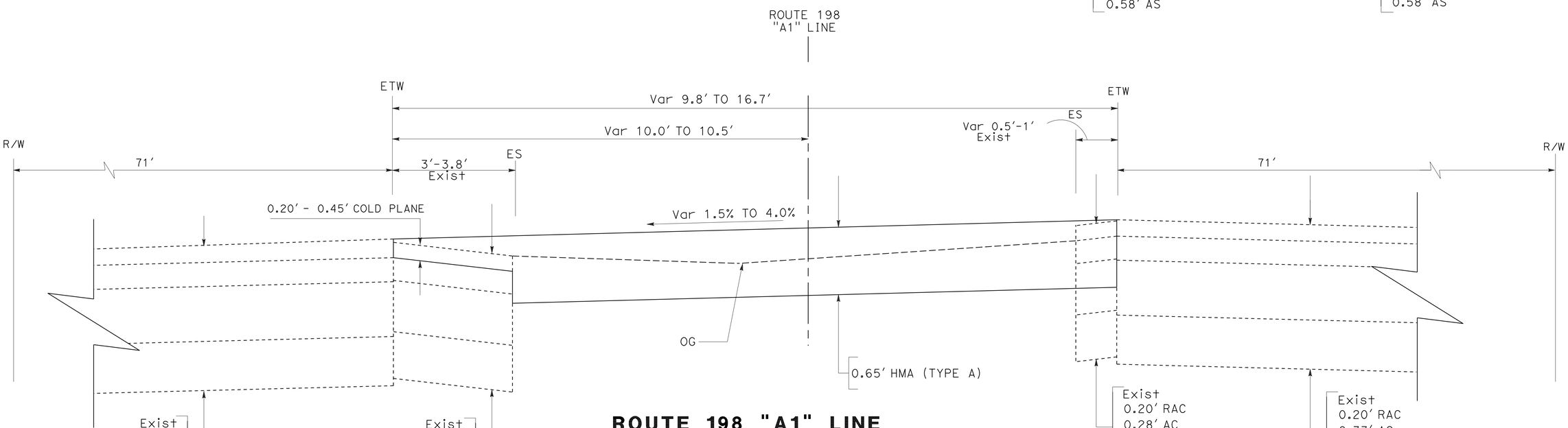

ROUTE 198 "A1" LINE

Sta 155+33.47 TO Sta 161+04.85

TYPICAL CROSS SECTIONS

NO SCALE

X-2

STATE OF CALIFORNIA - DEPARTMENT OF TRANSPORTATION
Caltrans
DESIGN DIVISION

FUNCTIONAL SUPERVISOR: RORY QUINCE
CALCULATED-DESIGNED BY: ELTAHIR ATAELGEED
CHECKED BY: GURJOT GILL
REVISED BY
DATE REVISED

LAST REVISION 10-14-09 | DATE PLOTTED => 14-JAN-2010 | TIME PLOTTED => 13:42

Dist	COUNTY	ROUTE	POST MILES TOTAL PROJECT	SHEET No.	TOTAL SHEETS
06	Kin	198	R19.0/T21.7	4	53

REGISTERED CIVIL ENGINEER 10-15-09 DATE

1-11-10
PLANS APPROVAL DATE

REGISTERED PROFESSIONAL ENGINEER Abdul Baker No. 55322 Exp. 12-31-10 CIVIL STATE OF CALIFORNIA

THE STATE OF CALIFORNIA OR ITS OFFICERS OR AGENTS SHALL NOT BE RESPONSIBLE FOR THE ACCURACY OR COMPLETENESS OF SCANNED COPIES OF THIS PLAN SHEET.

NOTE:

1. FOR ACCURATE RIGHT OF WAY AND ACCESS DATA, CONTACT RIGHT OF WAY ENGINEERING AT THE DISTRICT OFFICE.

LEGEND

- COLD PLANE AC PAVEMENT
- (1) CURVE NUMBER
- DIRECTION OF TRAFFIC
- CRASH CUSHION
- (X) DRAINAGE SYSTEM No.
- (a) DRAINAGE UNIT No.
- [1] APPROXIMATE LOCATION OF EXISTING UNDERGROUND CALTRANS ELECTRICAL CONDUIT. PROTECT IN PLACE. EXACT LOCATION SHALL BE DETERMINED IN THE FIELD BY THE ENGINEER.

CURVE DATA

No.	R	Δ	T	L
(1)	4950.00′	11°03′55"	479.48′	955.98′

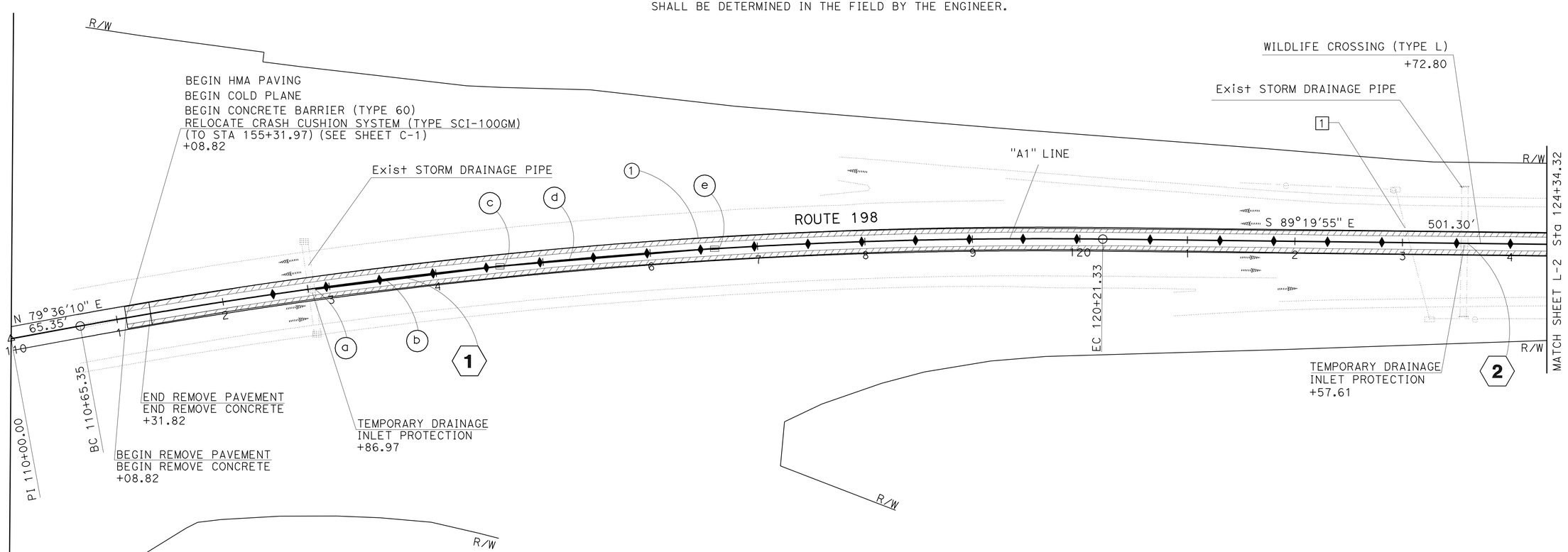

SCALE: 1" = 50′

LAYOUT
L-1

STATE OF CALIFORNIA - DEPARTMENT OF TRANSPORTATION
Caltrans® DESIGN

FUNCTIONAL SUPERVISOR: RORY QUINCE
CALCULATED-DESIGNED BY: ELTAHIR ATAELGEED
CHECKED BY: GURJOT GILL
REVISED BY
DATE REVISED

LAST REVISION 09-30-09
DATE PLOTTED => 14-JAN-2010
TIME PLOTTED => 13:42

Dist	COUNTY	ROUTE	POST MILES TOTAL PROJECT	SHEET No.	TOTAL SHEETS
06	Kin	198	R19.0/T21.7	5	53

REGISTERED CIVIL ENGINEER 10-15-09 DATE

1-11-10
PLANS APPROVAL DATE

REGISTERED PROFESSIONAL ENGINEER Abdul Baker No. 55322 Exp. 12-31-10 CIVIL STATE OF CALIFORNIA

THE STATE OF CALIFORNIA OR ITS OFFICERS OR AGENTS SHALL NOT BE RESPONSIBLE FOR THE ACCURACY OR COMPLETENESS OF SCANNED COPIES OF THIS PLAN SHEET.

NOTE:

1. FOR ACCURATE RIGHT OF WAY AND ACCESS DATA, CONTACT RIGHT OF WAY ENGINEERING AT THE DISTRICT OFFICE.

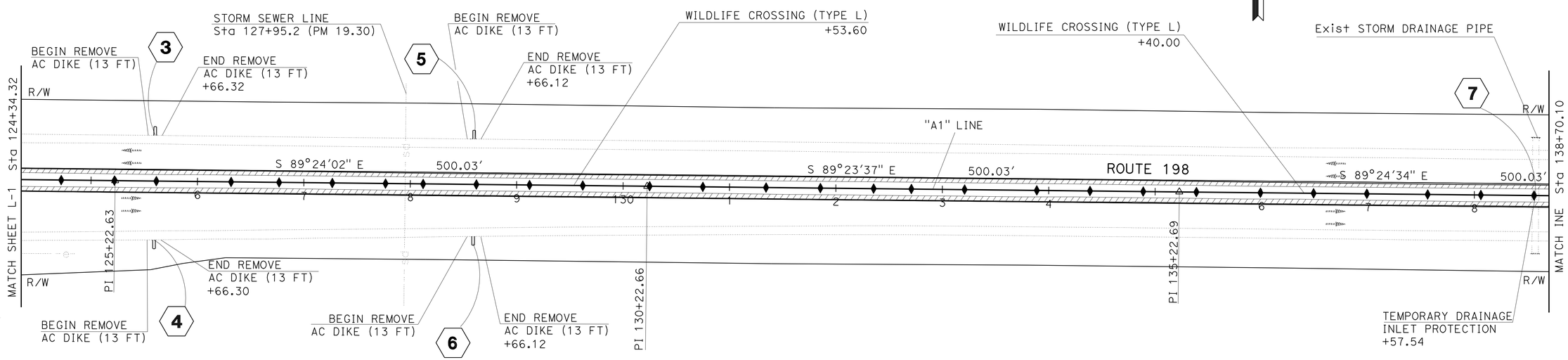

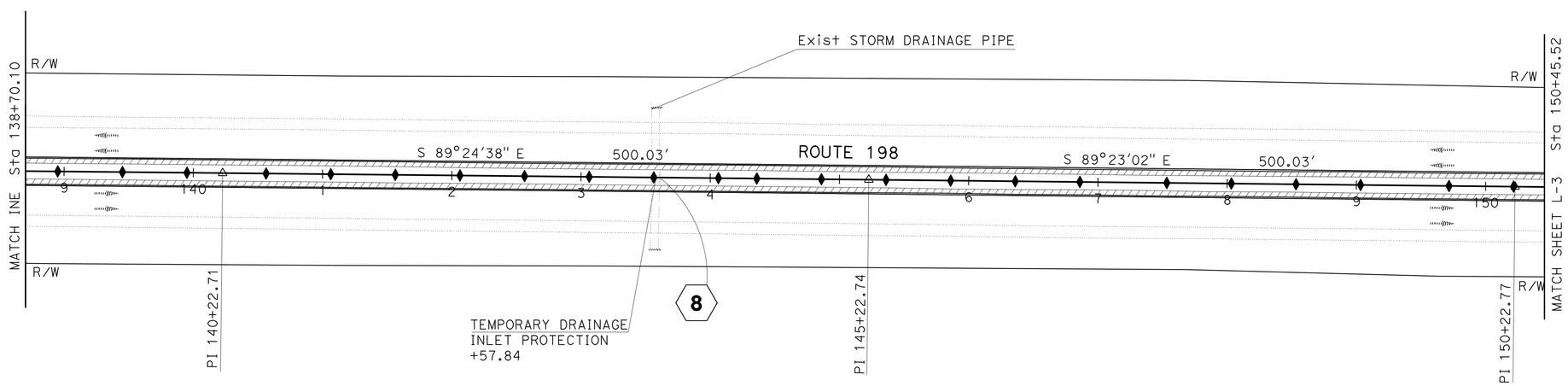

SCALE: 1" = 50'

LAYOUT L-2

STATE OF CALIFORNIA - DEPARTMENT OF TRANSPORTATION
Caltrans
DESIGN

FUNCTIONAL SUPERVISOR: RORY QUINCE
CALCULATED-DESIGNED BY: ELTAHIR ATAELGEED
CHECKED BY: GURJOT GILL
REVISED BY
DATE REVISED

LAST REVISION 09-30-09
DATE PLOTTED => 14-JAN-2010
TIME PLOTTED => 13:42

Dist	COUNTY	ROUTE	POST MILES TOTAL PROJECT	SHEET No.	TOTAL SHEETS
06	Kin	198	R19.0/T21.7	6	53

REGISTERED CIVIL ENGINEER 10-15-09 DATE

1-11-10
PLANS APPROVAL DATE

REGISTERED PROFESSIONAL ENGINEER Abdul Baker No. 55322 Exp. 12-31-10 CIVIL STATE OF CALIFORNIA

THE STATE OF CALIFORNIA OR ITS OFFICERS OR AGENTS SHALL NOT BE RESPONSIBLE FOR THE ACCURACY OR COMPLETENESS OF SCANNED COPIES OF THIS PLAN SHEET.

NOTE:

1. FOR ACCURATE RIGHT OF WAY AND ACCESS DATA, CONTACT RIGHT OF WAY ENGINEERING AT THE DISTRICT OFFICE.

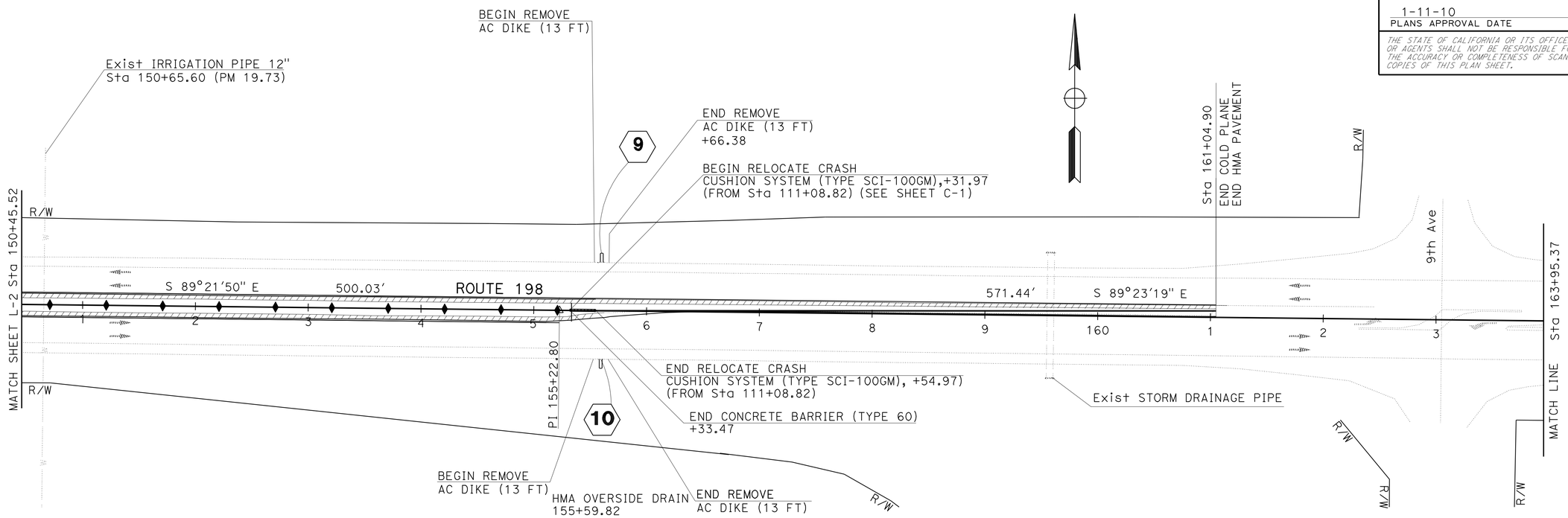

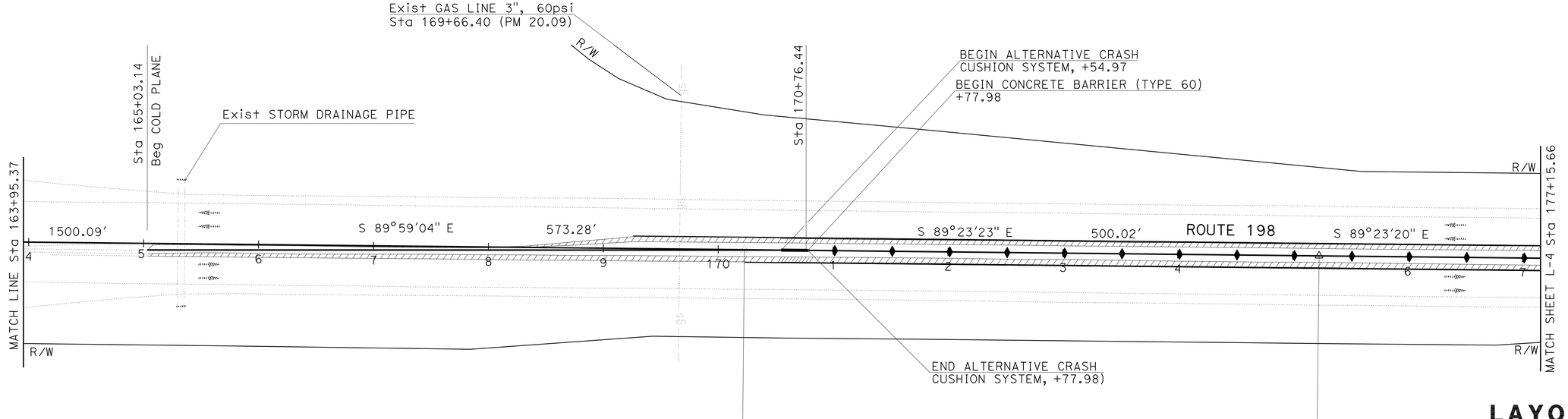

SCALE: 1" = 50'

LAYOUT L-3

STATE OF CALIFORNIA - DEPARTMENT OF TRANSPORTATION
Caltrans
DESIGN

FUNCTIONAL SUPERVISOR: RORY QUINCE
CALCULATED-DESIGNED BY: ELTAHIR ATAELGEED
CHECKED BY: GURJOT GILL
REVISED BY
DATE REVISED

LAST REVISION 09-30-09
DATE PLOTTED => 14-JAN-2010
TIME PLOTTED => 13:42

Dist	COUNTY	ROUTE	POST MILES TOTAL PROJECT	SHEET No.	TOTAL SHEETS
06	Kin	198	R19.0/T21.7	7	53

REGISTERED CIVIL ENGINEER 10-15-09 DATE

1-11-10
PLANS APPROVAL DATE

REGISTERED PROFESSIONAL ENGINEER Abdul Baker No. 55322 Exp. 12-31-10 CIVIL STATE OF CALIFORNIA

THE STATE OF CALIFORNIA OR ITS OFFICERS OR AGENTS SHALL NOT BE RESPONSIBLE FOR THE ACCURACY OR COMPLETENESS OF SCANNED COPIES OF THIS PLAN SHEET.

NOTE:

1. FOR ACCURATE RIGHT OF WAY AND ACCESS DATA, CONTACT RIGHT OF WAY ENGINEERING AT THE DISTRICT OFFICE.

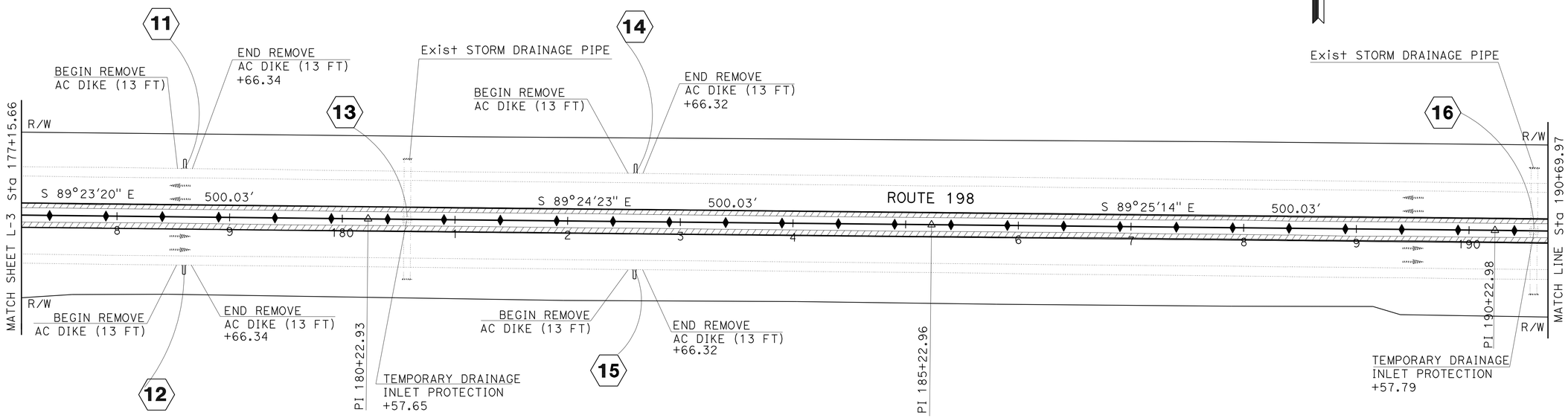

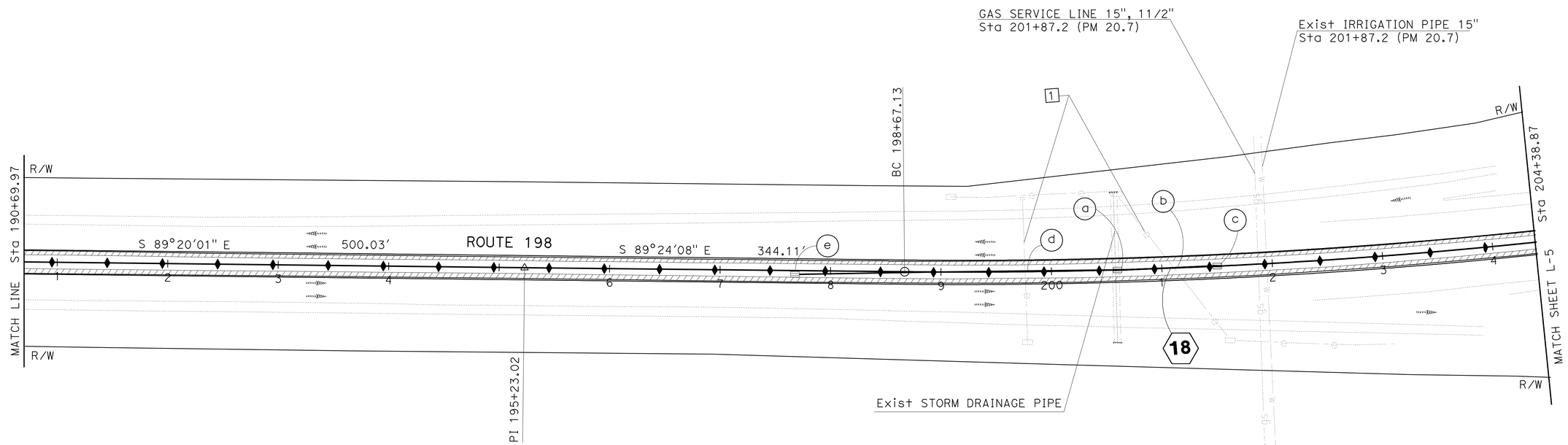

SCALE: 1" = 50'

LAYOUT L-4

STATE OF CALIFORNIA - DEPARTMENT OF TRANSPORTATION
Caltrans
DESIGN

FUNCTIONAL SUPERVISOR: RORY QUINCE
CALCULATED-DESIGNED BY: ELTAHIR ATAELGEED
CHECKED BY: GURJOT GILL
REVISED BY
DATE REVISED

LAST REVISION 12-09-09
DATE PLOTTED => 14-JAN-2010
TIME PLOTTED => 13:42

Dist	COUNTY	ROUTE	POST MILES TOTAL PROJECT	SHEET No.	TOTAL SHEETS
06	Kin	198	R19.0/T21.7	8	53

REGISTERED CIVIL ENGINEER — DATE: 10-15-09

1-11-10
PLANS APPROVAL DATE

REGISTERED PROFESSIONAL ENGINEER — Abdul Baker No. 55322 Exp. 12-31-10 CIVIL — STATE OF CALIFORNIA

THE STATE OF CALIFORNIA OR ITS OFFICERS OR AGENTS SHALL NOT BE RESPONSIBLE FOR THE ACCURACY OR COMPLETENESS OF SCANNED COPIES OF THIS PLAN SHEET.

NOTE:

1. FOR ACCURATE RIGHT OF WAY AND ACCESS DATA, CONTACT RIGHT OF WAY ENGINEERING AT THE DISTRICT OFFICE.

CURVE DATA

No.	R	Δ	T	L
(2)	5000.00′	26°10′37″	1162.48′	2284.38′

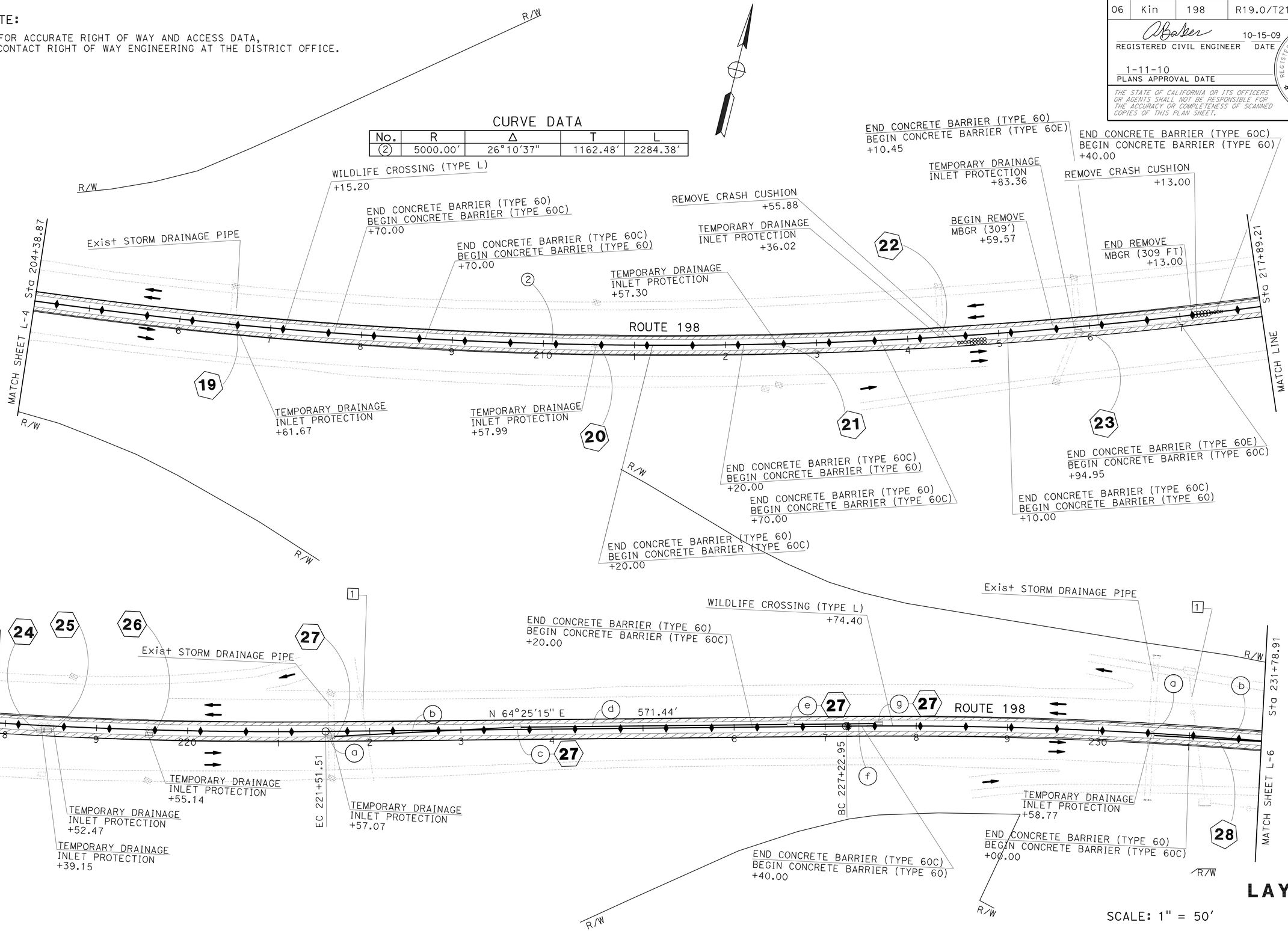

LAYOUT L-5

SCALE: 1" = 50′

STATE OF CALIFORNIA - DEPARTMENT OF TRANSPORTATION
Caltrans® DESIGN

FUNCTIONAL SUPERVISOR: RORY QUINCE
CALCULATED-DESIGNED BY: ELTAHIR ATAELGEED
CHECKED BY: GURJOT GILL
REVISED BY / DATE REVISED

LAST REVISION DATE PLOTTED => 14-JAN-2010
12-10-09 TIME PLOTTED => 13:43

BORDER LAST REVISED 4/11/2008 | RELATIVE BORDER SCALE IS IN INCHES 0 1 2 3 | USERNAME => trmikesl | DGN FILE => 60h740ea005.dgn | CU 06262 | EA 0H7401

Dist	COUNTY	ROUTE	POST MILES TOTAL PROJECT	SHEET No.	TOTAL SHEETS
06	Kin	198	R19.0/T21.7	9	53

REGISTERED CIVIL ENGINEER 10-15-09 DATE

1-11-10
PLANS APPROVAL DATE

REGISTERED PROFESSIONAL ENGINEER Abdul Baker No. 55322 Exp. 12-31-10 CIVIL STATE OF CALIFORNIA

THE STATE OF CALIFORNIA OR ITS OFFICERS OR AGENTS SHALL NOT BE RESPONSIBLE FOR THE ACCURACY OR COMPLETENESS OF SCANNED COPIES OF THIS PLAN SHEET.

NOTE:

1. FOR ACCURATE RIGHT OF WAY AND ACCESS DATA, CONTACT RIGHT OF WAY ENGINEERING AT THE DISTRICT OFFICE.

CURVE DATA

No.	R	Δ	T	L
3	5000′	24°59′38"	1108.19′	2181.12′
4	5061.79′	3°29′49"	154.51	308.93′

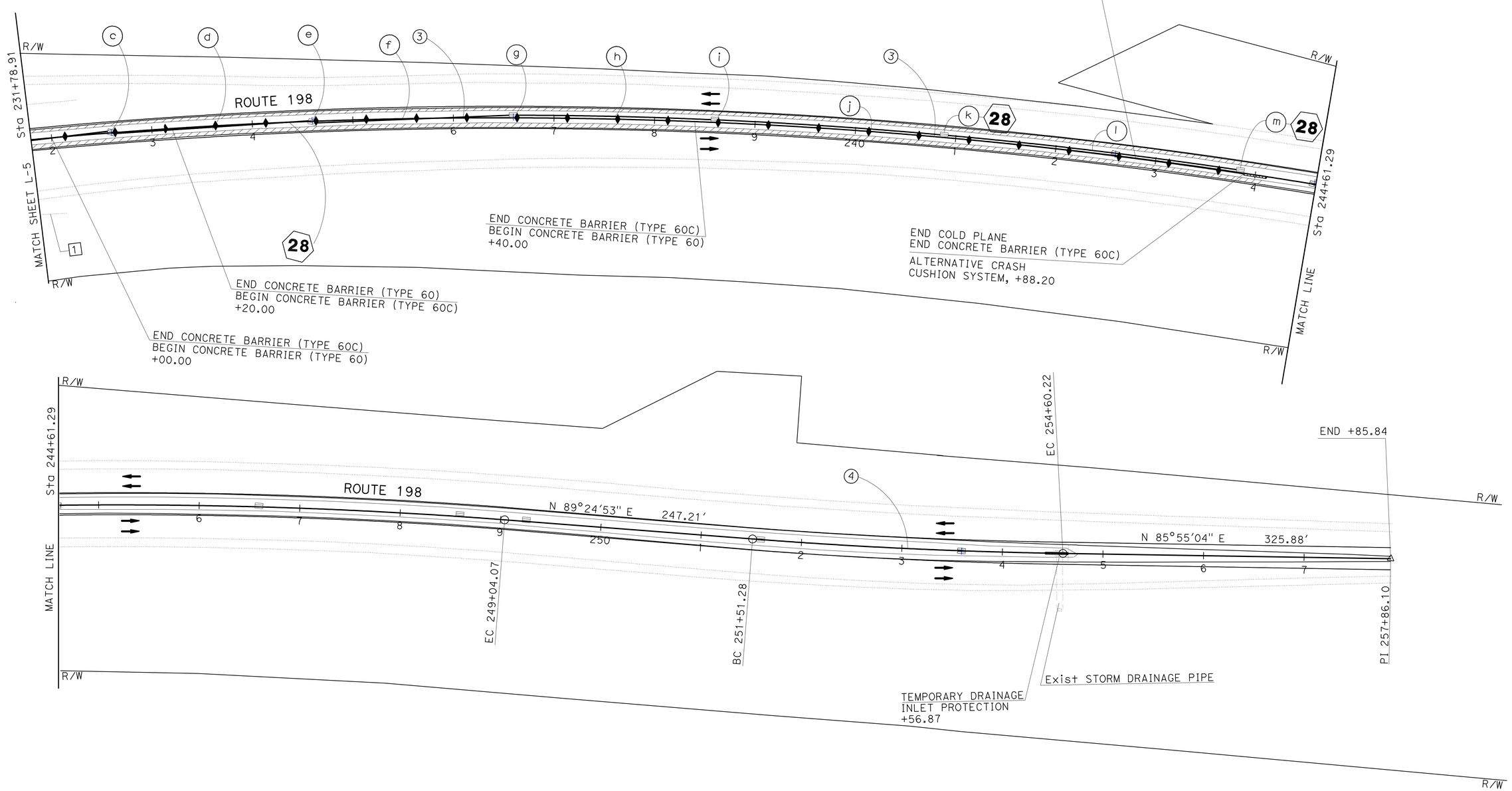

SCALE: 1" = 50′

LAYOUT L-6

STATE OF CALIFORNIA - DEPARTMENT OF TRANSPORTATION
Caltrans
DESIGN

FUNCTIONAL SUPERVISOR: RORY QUINCE
CALCULATED-DESIGNED BY: ELTAHIR ATAELGEED
CHECKED BY: GURJOT GILL
REVISED BY
DATE REVISED

LAST REVISION 09-30-09
DATE PLOTTED => 14-JAN-2010
TIME PLOTTED => 13:43

Dist	COUNTY	ROUTE	POST MILES TOTAL PROJECT	SHEET No.	TOTAL SHEETS
06	Kin	198	R19.0/T21.7	10	53

REGISTERED CIVIL ENGINEER 10-15-09 DATE

1-11-10
PLANS APPROVAL DATE

REGISTERED PROFESSIONAL ENGINEER
Abdul Baker
No. 55322
Exp. 12-31-10
CIVIL
STATE OF CALIFORNIA

THE STATE OF CALIFORNIA OR ITS OFFICERS OR AGENTS SHALL NOT BE RESPONSIBLE FOR THE ACCURACY OR COMPLETENESS OF SCANNED COPIES OF THIS PLAN SHEET.

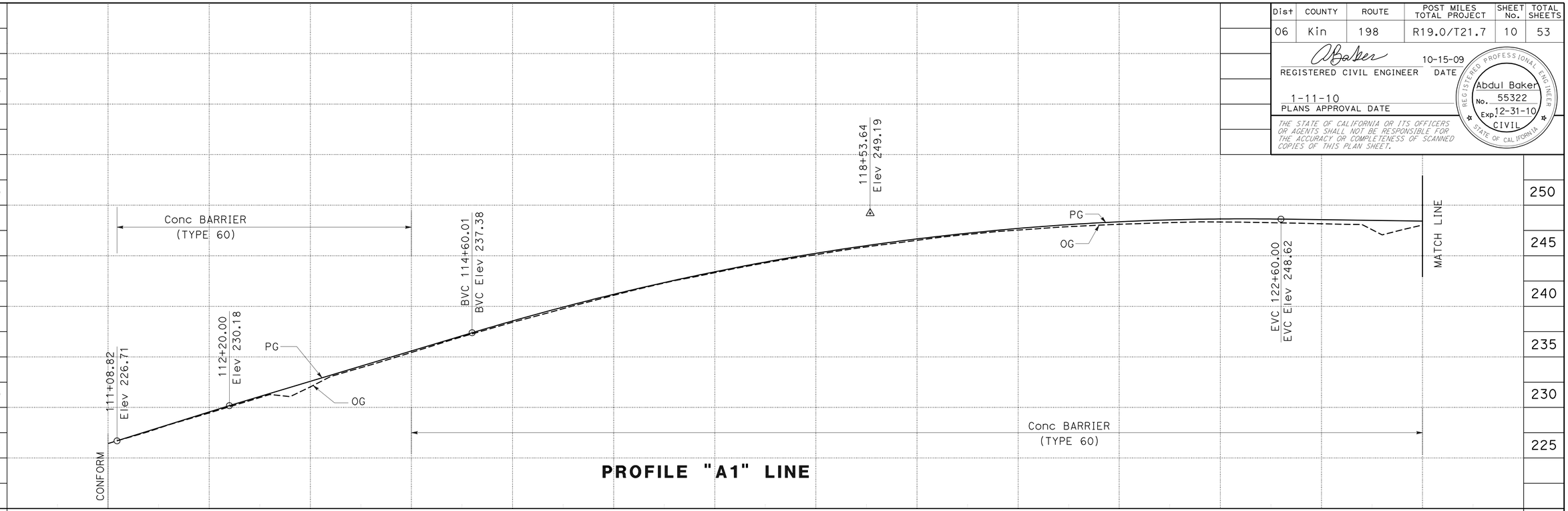

PROFILE "A1" LINE

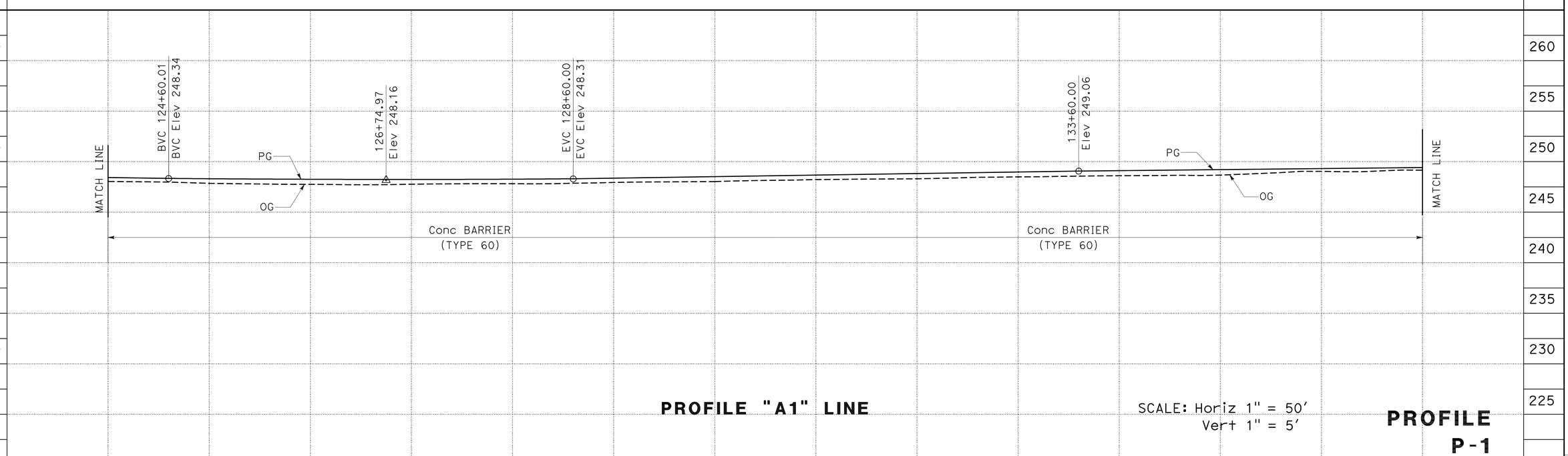

PROFILE "A1" LINE

SCALE: Horiz 1" = 50'
Vert 1" = 5'

PROFILE P-1

CY	
Exc	
Emb	

STATE OF CALIFORNIA - DEPARTMENT OF TRANSPORTATION
Caltrans
DESIGN

FUNCTIONAL SUPERVISOR: RORY QUINCE
CALCULATED-DESIGNED BY: ELTAHIR ATAELGEED
CHECKED BY: GURJOT GILL
REVISED BY
DATE REVISED

LAST REVISION DATE PLOTTED => 14-JAN-2010
TIME PLOTTED => 13:43
10-06-09

Dist	COUNTY	ROUTE	POST MILES TOTAL PROJECT	SHEET No.	TOTAL SHEETS
06	Kin	198	R19.0/T21.7	11	53

REGISTERED CIVIL ENGINEER — DATE: 10-15-09

1-11-10
PLANS APPROVAL DATE

REGISTERED PROFESSIONAL ENGINEER — Abdul Baker — No. 55322 — Exp. 12-31-10 — CIVIL — STATE OF CALIFORNIA

THE STATE OF CALIFORNIA OR ITS OFFICERS OR AGENTS SHALL NOT BE RESPONSIBLE FOR THE ACCURACY OR COMPLETENESS OF SCANNED COPIES OF THIS PLAN SHEET.

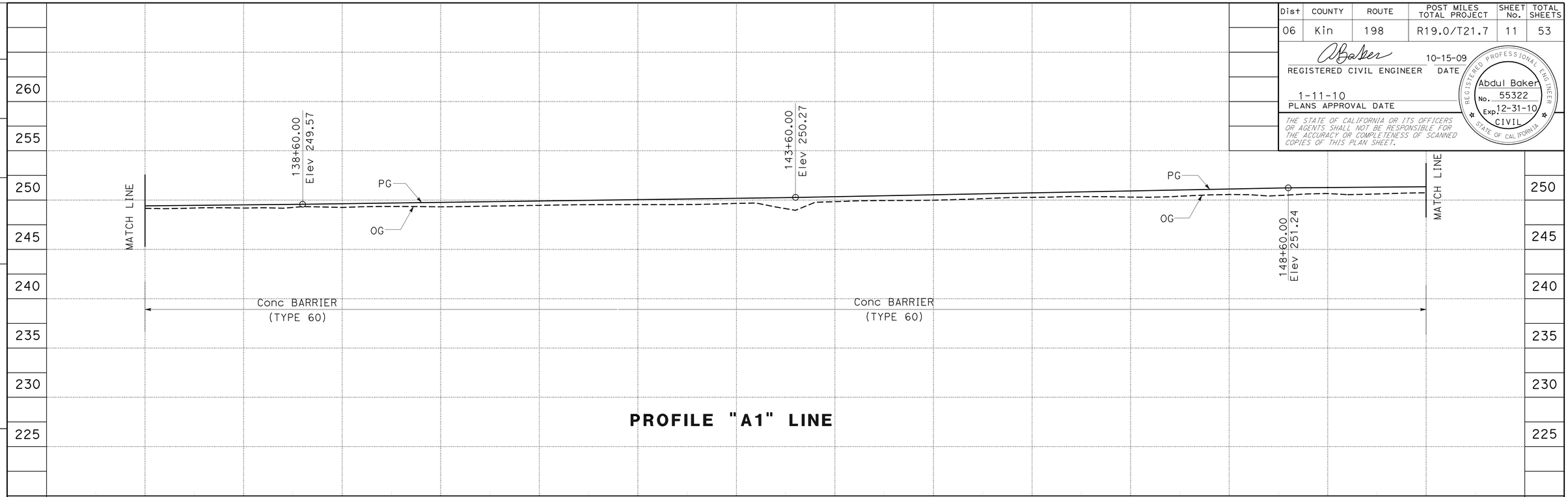

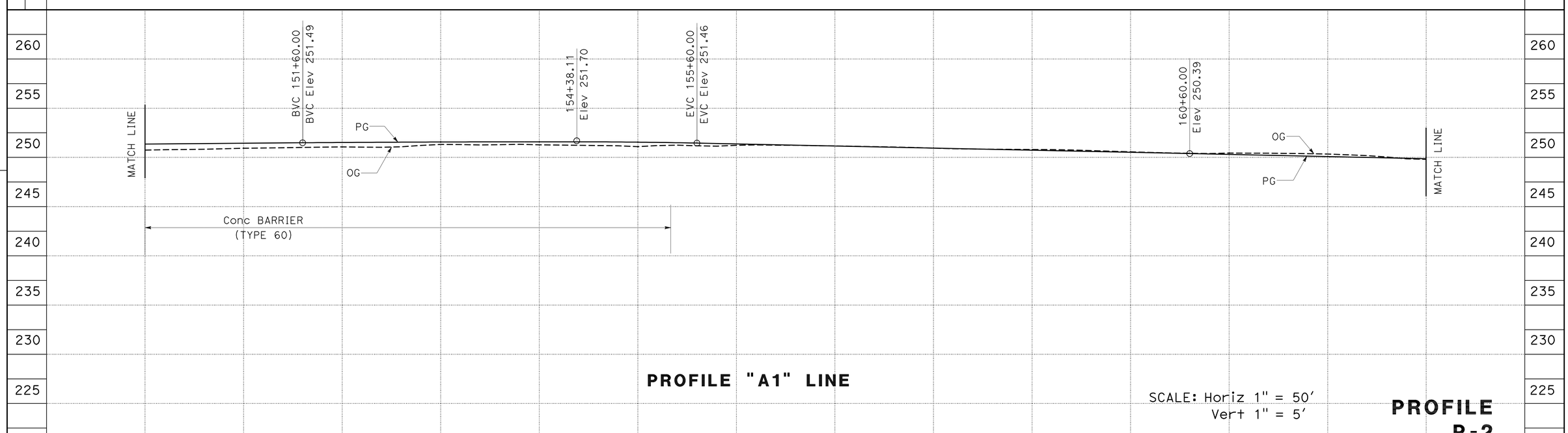

SCALE: Horiz 1" = 50'
Vert 1" = 5'

PROFILE
P-2

STATE OF CALIFORNIA - DEPARTMENT OF TRANSPORTATION
DESIGN
Caltrans

FUNCTIONAL SUPERVISOR: RORY QUINCE
CALCULATED-DESIGNED BY: GURJOT GILL
CHECKED BY: ELTAHIR ATAELGEED
REVISED BY / DATE REVISED

LAST REVISION — DATE PLOTTED => 14-JAN-2010 — TIME PLOTTED => 13:43
10-06-09

BORDER LAST REVISED 4/11/2008 | RELATIVE BORDER SCALE IS IN INCHES 0 1 2 3 | USERNAME => trmikesl | DGN FILE => 60h740fa002.dgn | CU 06262 | EA 0H7401

Dist	COUNTY	ROUTE	POST MILES TOTAL PROJECT	SHEET No.	TOTAL SHEETS
06	Kin	198	R19.0/T21.7	12	53

REGISTERED CIVIL ENGINEER — DATE 10-15-09

1-11-10
PLANS APPROVAL DATE

REGISTERED PROFESSIONAL ENGINEER — Abdul Baker — No. 55322 — Exp. 12-31-10 — CIVIL — STATE OF CALIFORNIA

THE STATE OF CALIFORNIA OR ITS OFFICERS OR AGENTS SHALL NOT BE RESPONSIBLE FOR THE ACCURACY OR COMPLETENESS OF SCANNED COPIES OF THIS PLAN SHEET.

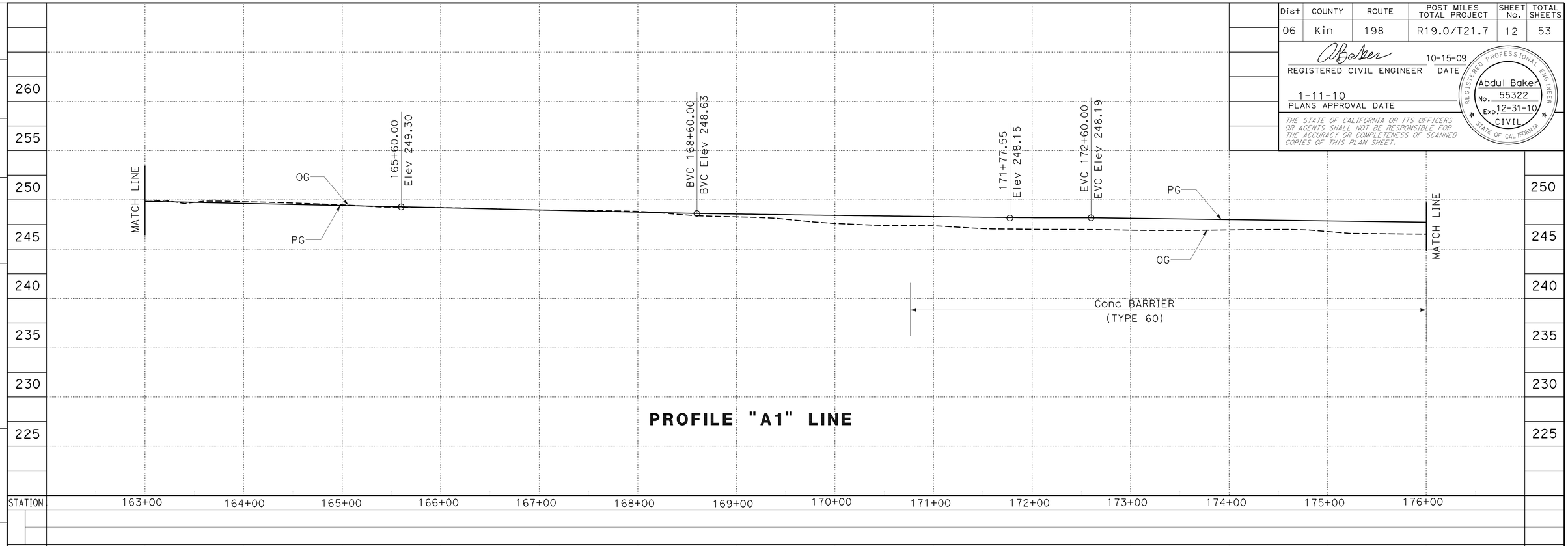

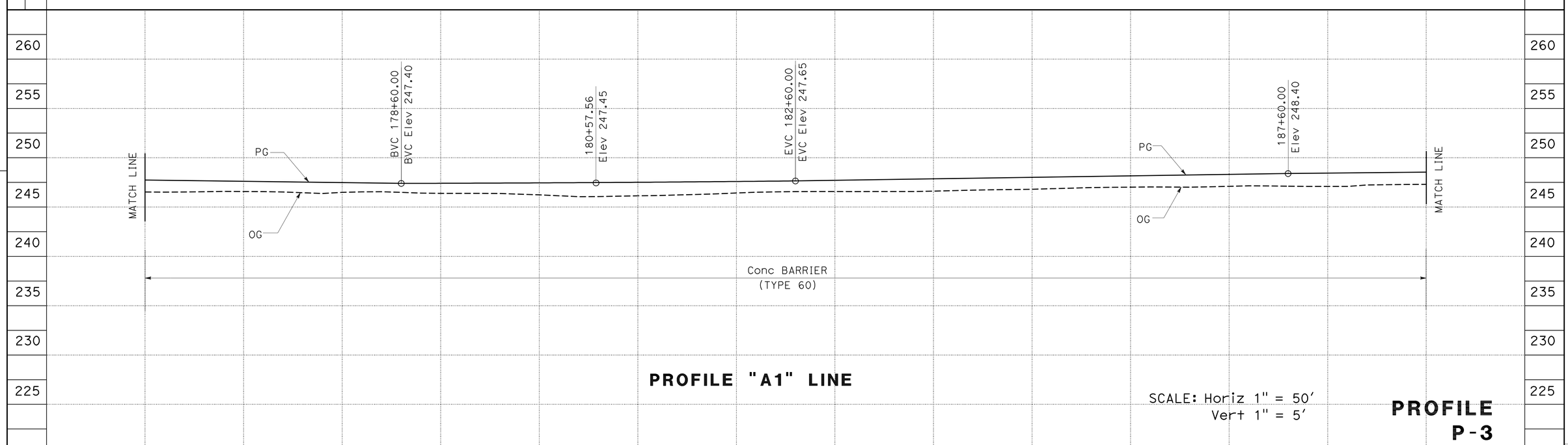

SCALE: Horiz 1" = 50'
Vert 1" = 5'

PROFILE P-3

CY	
Exc	
Emb	

STATE OF CALIFORNIA - DEPARTMENT OF TRANSPORTATION
Caltrans
DESIGN

FUNCTIONAL SUPERVISOR: RORY QUINCE
CALCULATED-DESIGNED BY: ELTAHIR ATAELGEED
CHECKED BY: GURJOT GILL
REVISED BY
DATE REVISED

LAST REVISION — DATE PLOTTED => 14-JAN-2010 — TIME PLOTTED => 13:43
10-06-09

BORDER LAST REVISED 4/11/2008

RELATIVE BORDER SCALE IS IN INCHES 0 1 2 3

USERNAME => trmikesl
DGN FILE => 60h740fa003.dgn

CU 06262

EA 0H7401

Dist	COUNTY	ROUTE	POST MILES TOTAL PROJECT	SHEET No.	TOTAL SHEETS
06	Kin	198	R19.0/T21.7	13	53

REGISTERED CIVIL ENGINEER — DATE 10-15-09

1-11-10
PLANS APPROVAL DATE

REGISTERED PROFESSIONAL ENGINEER — Abdul Baker — No. 55322 — Exp. 12-31-10 — CIVIL — STATE OF CALIFORNIA

THE STATE OF CALIFORNIA OR ITS OFFICERS OR AGENTS SHALL NOT BE RESPONSIBLE FOR THE ACCURACY OR COMPLETENESS OF SCANNED COPIES OF THIS PLAN SHEET.

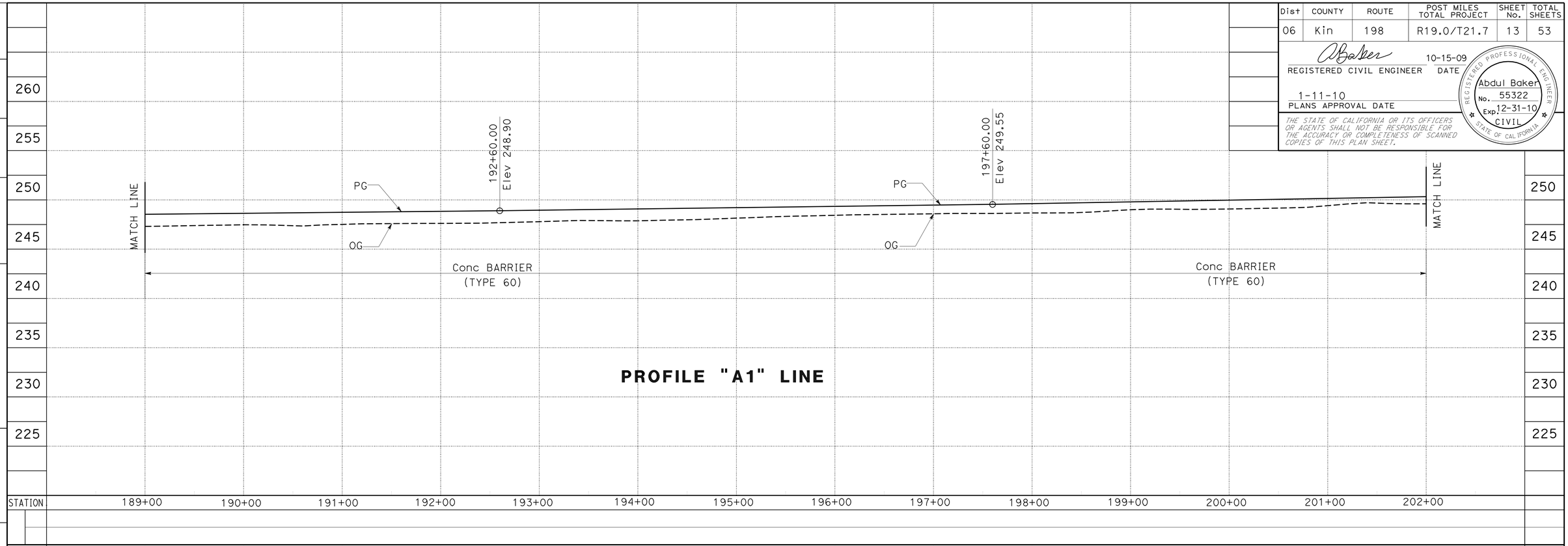

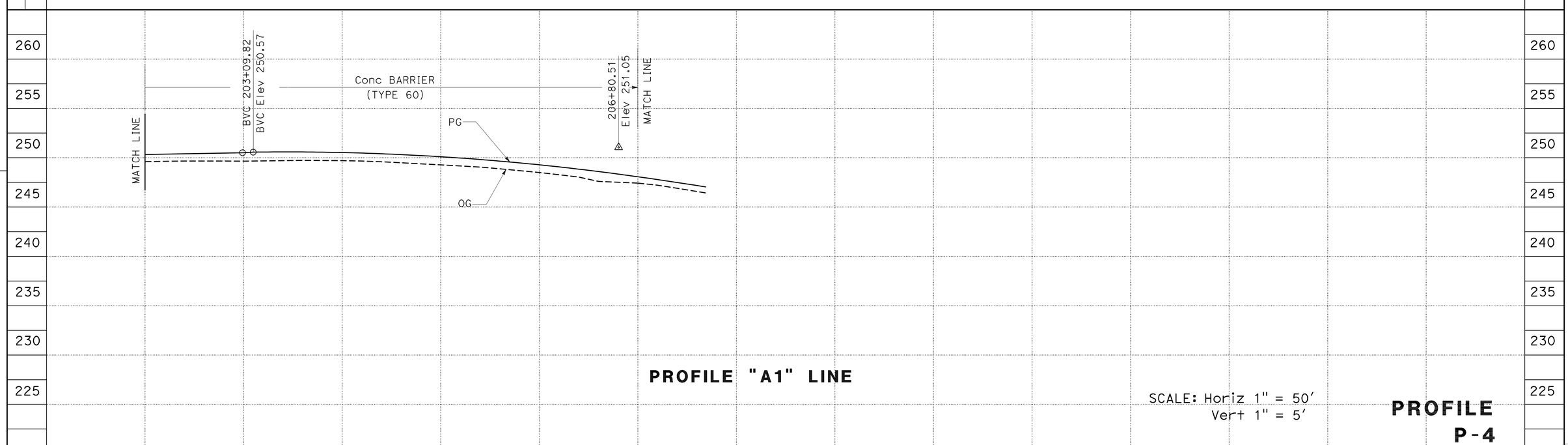

SCALE: Horiz 1" = 50'
Vert 1" = 5'

PROFILE
P-4

STATE OF CALIFORNIA - DEPARTMENT OF TRANSPORTATION
DESIGN
Caltrans

FUNCTIONAL SUPERVISOR: RORY QUINCE
CALCULATED-DESIGNED BY: ELTAHIR ATAELGEED
CHECKED BY: GURJOT GILL
REVISED BY
DATE REVISED

LAST REVISION DATE PLOTTED => 14-JAN-2010
TIME PLOTTED => 13:43
10-06-09

BORDER LAST REVISED 4/11/2008
RELATIVE BORDER SCALE IS IN INCHES 0 1 2 3
USERNAME => trmikesl
DGN FILE => 60h740fa004.dgn
CU 06262
EA 0H7401

Dist	COUNTY	ROUTE	POST MILES TOTAL PROJECT	SHEET No.	TOTAL SHEETS
06	Kin	198	R19.0/T21.7	14	53

REGISTERED CIVIL ENGINEER — DATE: 10-15-09

1-11-10
PLANS APPROVAL DATE

REGISTERED PROFESSIONAL ENGINEER — Abdul Baker — No. 55322 — Exp. 12-31-10 — CIVIL — STATE OF CALIFORNIA

THE STATE OF CALIFORNIA OR ITS OFFICERS OR AGENTS SHALL NOT BE RESPONSIBLE FOR THE ACCURACY OR COMPLETENESS OF SCANNED COPIES OF THIS PLAN SHEET.

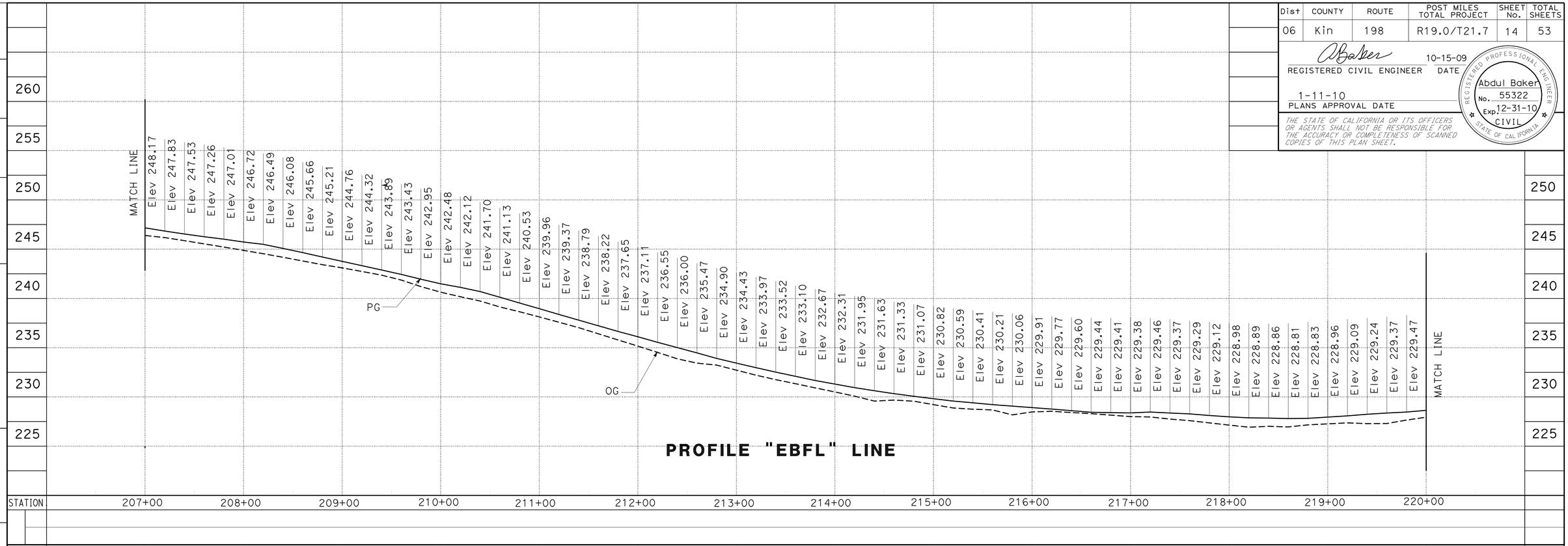

PROFILE "EBFL" LINE

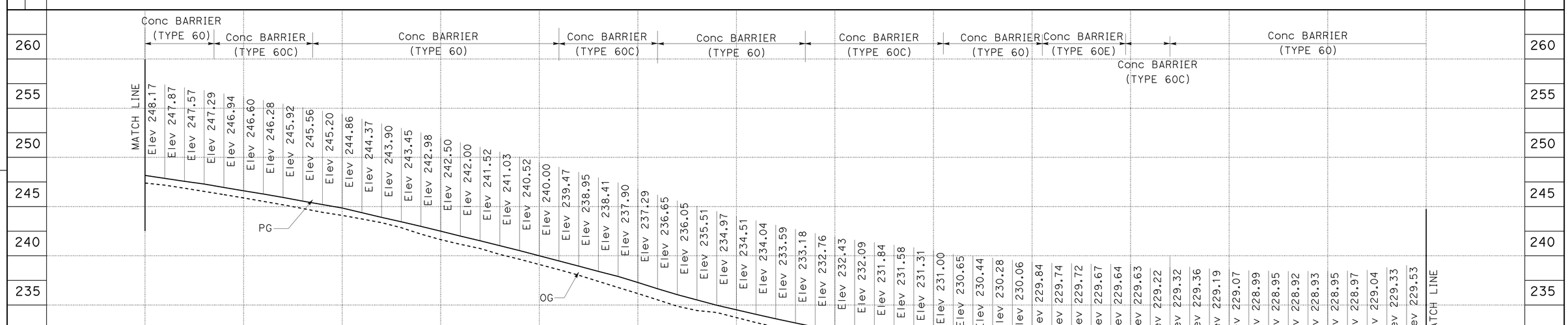

PROFILE "WBFL" LINE

SCALE: Horiz 1" = 50'
Vert 1" = 5'

PROFILE
P-5

CY	
Exc	
Emb	

ELTAHIR ATAELGEED — REVISED BY
GURJOT GILL — DATE REVISED
CALCULATED-DESIGNED BY
CHECKED BY
RORY QUINCE — FUNCTIONAL SUPERVISOR

STATE OF CALIFORNIA - DEPARTMENT OF TRANSPORTATION
Caltrans
DESIGN

LAST REVISION 12-10-09
DATE PLOTTED => 14-JAN-2010
TIME PLOTTED => 13:43

Dist	COUNTY	ROUTE	POST MILES TOTAL PROJECT	SHEET No.	TOTAL SHEETS
06	Kin	198	R19.0/T21.7	15	53

REGISTERED CIVIL ENGINEER 10-15-09 DATE

1-11-10
PLANS APPROVAL DATE

REGISTERED PROFESSIONAL ENGINEER Abdul Baker No. 55322 Exp. 12-31-10 CIVIL STATE OF CALIFORNIA

THE STATE OF CALIFORNIA OR ITS OFFICERS OR AGENTS SHALL NOT BE RESPONSIBLE FOR THE ACCURACY OR COMPLETENESS OF SCANNED COPIES OF THIS PLAN SHEET.

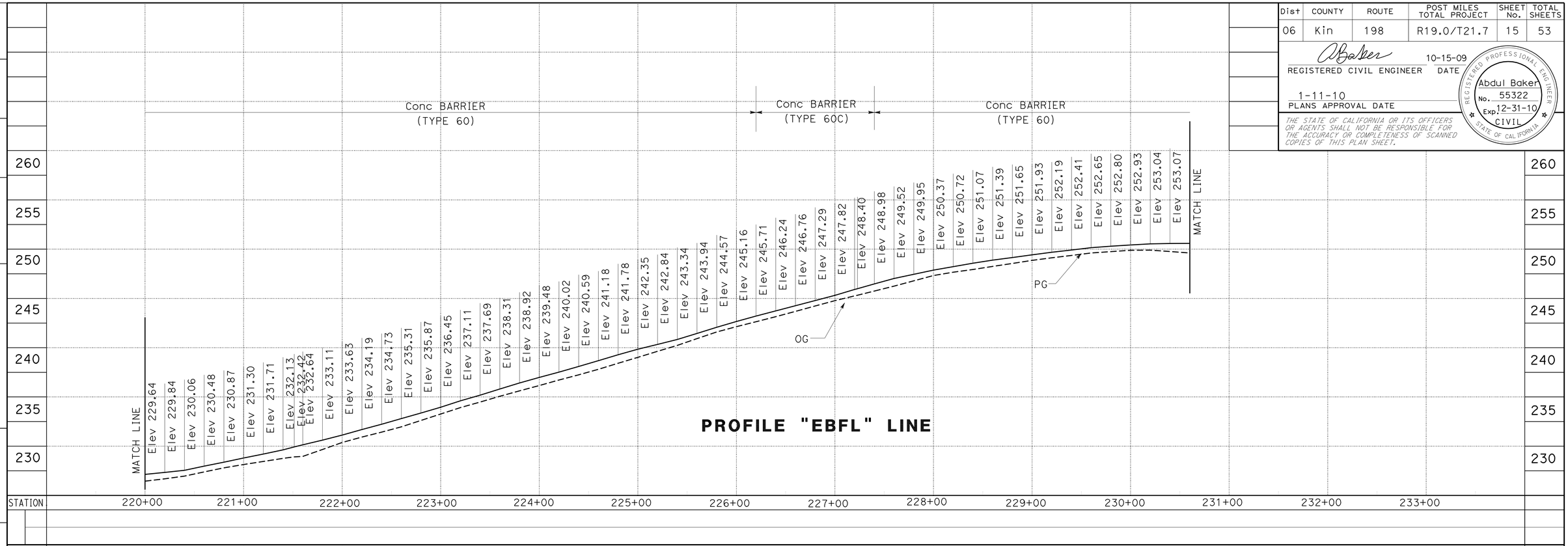

PROFILE "EBFL" LINE

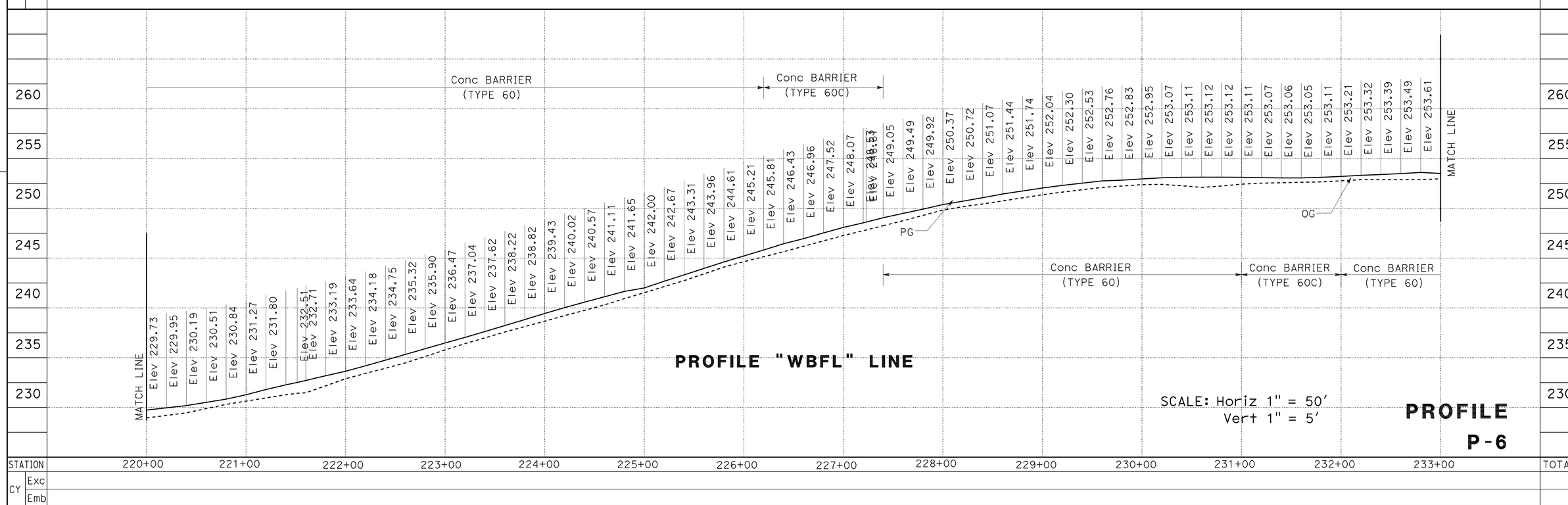

PROFILE "WBFL" LINE

SCALE: Horiz 1" = 50'
Vert 1" = 5'

PROFILE
P-6

STATE OF CALIFORNIA - DEPARTMENT OF TRANSPORTATION
Caltrans
DESIGN

FUNCTIONAL SUPERVISOR: RORY QUINCE
CALCULATED-DESIGNED BY: ELTAHIR ATAELGEED
CHECKED BY: GURJOT GILL
REVISED BY
DATE REVISED

LAST REVISION 10-06-09
DATE PLOTTED => 14-JAN-2010
TIME PLOTTED => 13:44

BORDER LAST REVISED 4/11/2008
RELATIVE BORDER SCALE IS IN INCHES 0 1 2 3
USERNAME => trmikesl
DGN FILE => 60h740fa006.dgn
CU 06262
EA 0H7401

Dist	COUNTY	ROUTE	POST MILES TOTAL PROJECT	SHEET No.	TOTAL SHEETS
06	Kin	198	R19.0/T21.7	16	53

REGISTERED CIVIL ENGINEER — DATE: 10-15-09

1-11-10
PLANS APPROVAL DATE

REGISTERED PROFESSIONAL ENGINEER — Abdul Baker — No. 55322 — Exp. 12-31-10 — CIVIL — STATE OF CALIFORNIA

THE STATE OF CALIFORNIA OR ITS OFFICERS OR AGENTS SHALL NOT BE RESPONSIBLE FOR THE ACCURACY OR COMPLETENESS OF SCANNED COPIES OF THIS PLAN SHEET.

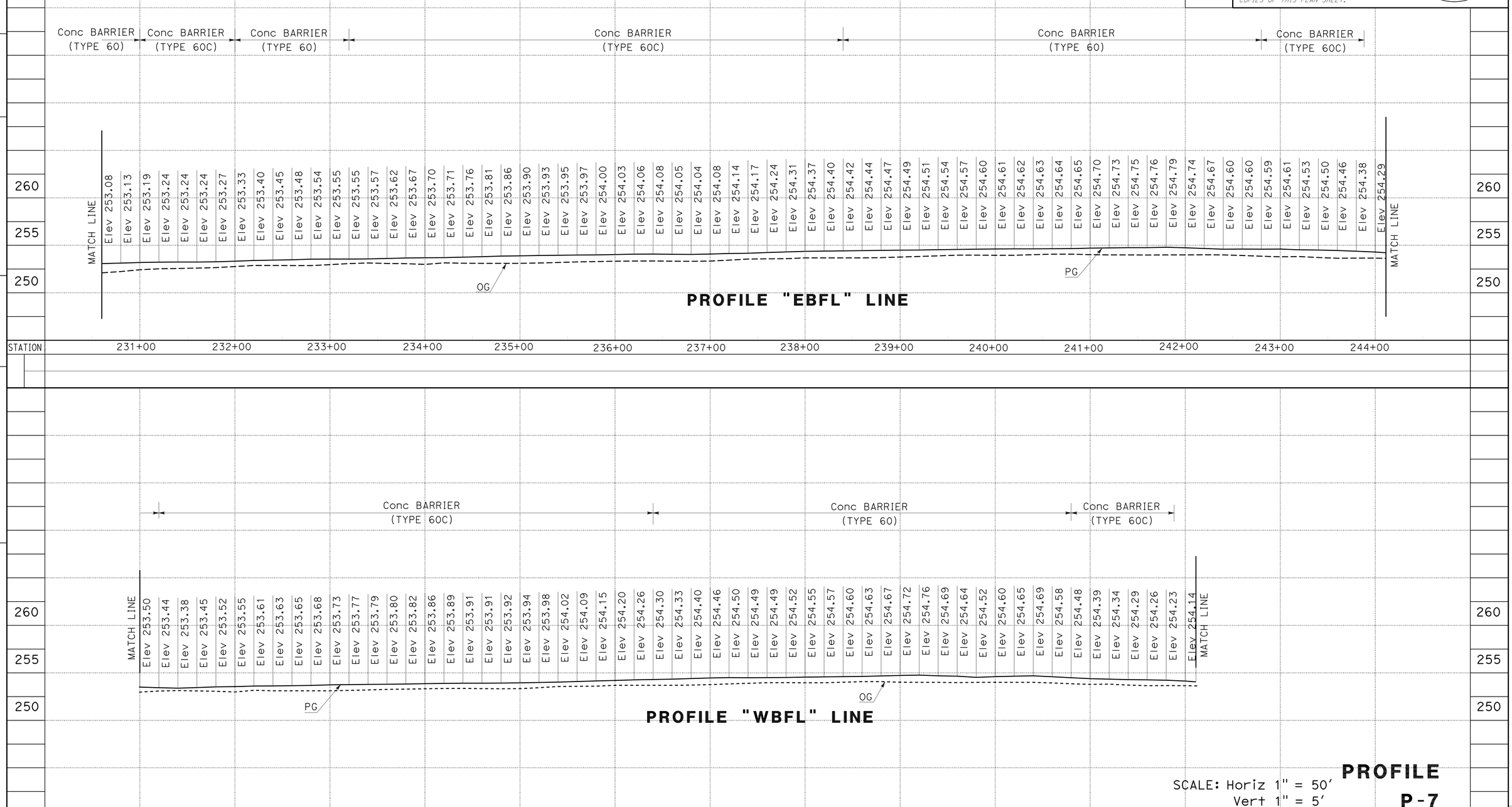

PROFILE "EBFL" LINE

PROFILE "WBFL" LINE

SCALE: Horiz 1" = 50'
Vert 1" = 5'

PROFILE
P-7

CY	
Exc	
Emb	

STATE OF CALIFORNIA - DEPARTMENT OF TRANSPORTATION
Caltrans
DESIGN

FUNCTIONAL SUPERVISOR: RORY QUINCE
CALCULATED-DESIGNED BY: GURJOT GILL
CHECKED BY: ELTAHIR ATAELGEED
REVISED BY / DATE REVISED

LAST REVISION 10-06-09 — DATE PLOTTED => 14-JAN-2010 — TIME PLOTTED => 15:04

Dist	COUNTY	ROUTE	POST MILES TOTAL PROJECT	SHEET No.	TOTAL SHEETS
06	Kin	198	R19.0/T21.7	17	53

REGISTERED CIVIL ENGINEER 10-15-09 DATE

1-11-10
PLANS APPROVAL DATE

REGISTERED PROFESSIONAL ENGINEER
Abdul Baker
No. 55322
Exp. 12-31-10
CIVIL
STATE OF CALIFORNIA

THE STATE OF CALIFORNIA OR ITS OFFICERS OR AGENTS SHALL NOT BE RESPONSIBLE FOR THE ACCURACY OR COMPLETENESS OF SCANNED COPIES OF THIS PLAN SHEET.

NOTE:
1. CROSS SLOPE AT TOP OF CONCRETE PAD NOT TO EXCEED 1:12, CROSS SLOPE SHOULD NOT VARY MORE THAN 1:48.

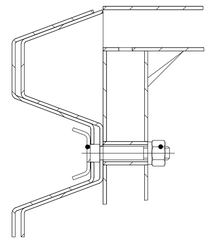

DETAIL B

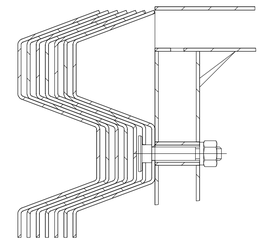

DETAIL A

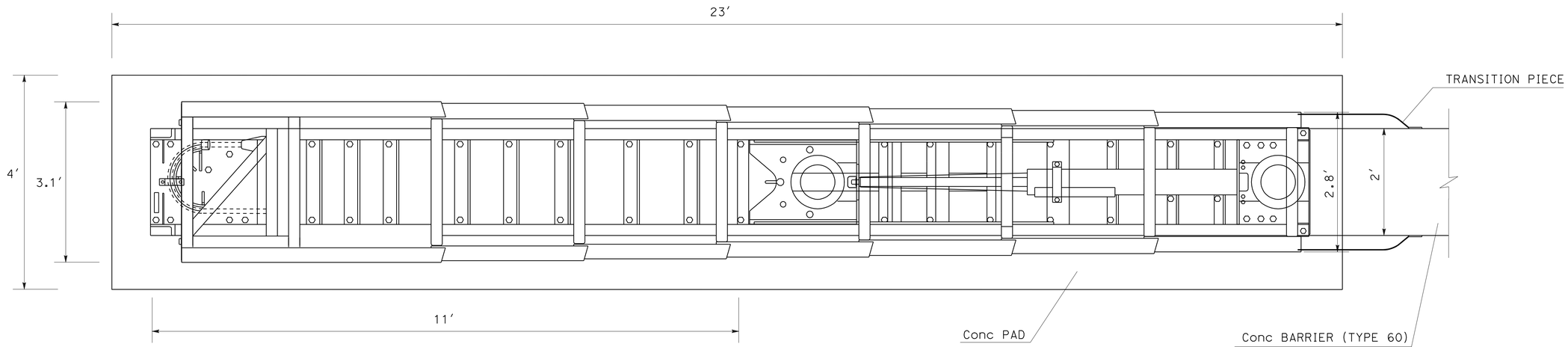

PLAN VIEW

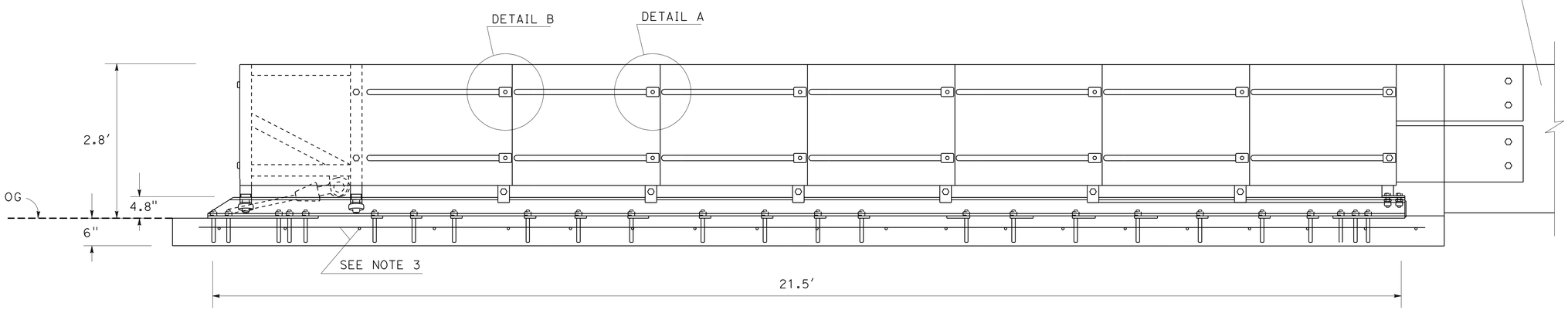

ELEVATION

CRASH CUSHION (TYPE SMART SCI100GM)

CONSTRUCTION DETAILS

NO SCALE

C-1

STATE OF CALIFORNIA - DEPARTMENT OF TRANSPORTATION
DESIGN
Caltrans

FUNCTIONAL SUPERVISOR: RORY QUINCE
CALCULATED-DESIGNED BY: ELTAHIR ATAELGEED
CHECKED BY: GURJOT GILL
REVISED BY
DATE REVISED

LAST REVISION 08-24-09
DATE PLOTTED => 14-JAN-2010
TIME PLOTTED => 13:44

Dist	COUNTY	ROUTE	POST MILES TOTAL PROJECT	SHEET No.	TOTAL SHEETS
06	Kin	198	R19.0/T21.7	18	53

REGISTERED CIVIL ENGINEER 10-15-09 DATE

1-11-10
PLANS APPROVAL DATE

REGISTERED PROFESSIONAL ENGINEER
Abdul Baker
No. 55322
Exp. 12-31-10
CIVIL
STATE OF CALIFORNIA

THE STATE OF CALIFORNIA OR ITS OFFICERS OR AGENTS SHALL NOT BE RESPONSIBLE FOR THE ACCURACY OR COMPLETENESS OF SCANNED COPIES OF THIS PLAN SHEET.

LEGEND

→ Direction Of Traffic.

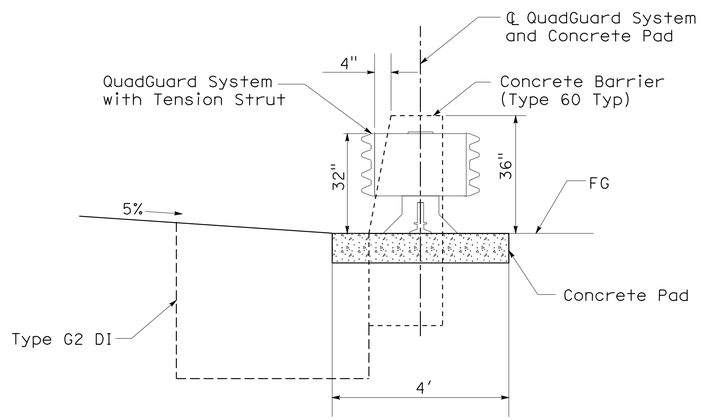

SECTION A-A

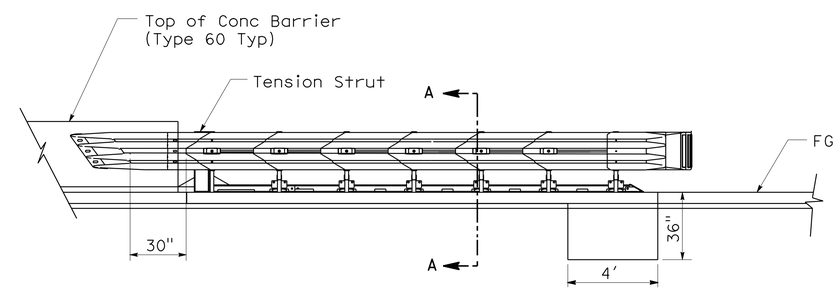

MODEL No.	No. OF BAYS	CARTRIDGES		NOMINAL WIDTH	EFFECTIVE LENGTH
		TYPE I	TYPE II		
QS2406Y	06	04	03	24"	.25"

CRASH CUSHION FRANGIBLE CARTRIDGE (QuadGuard)

FOR DETAILS NOT SHOWN, SEE MANUFACTURER'S DESIGN AND INSTALLATION DETAILS.

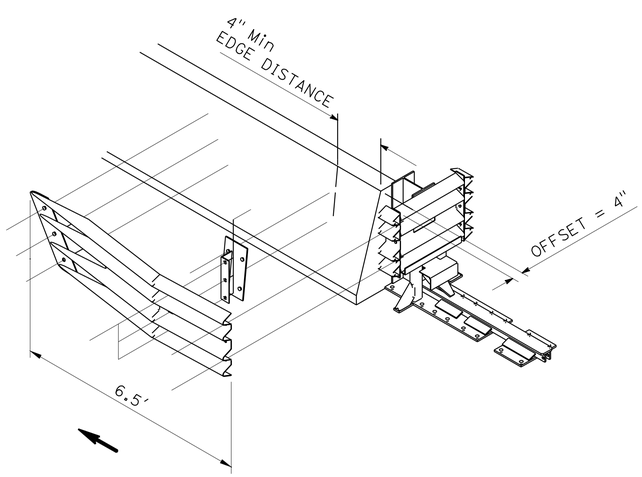

QUADGUARD SYSTEM
LEFT SIDE APPLICATION

CRASH CUSHION SYSTEM (TYPE QUADGUARD)

NO SCALE

CONSTRUCTION DETAILS

C-2

STATE OF CALIFORNIA - DEPARTMENT OF TRANSPORTATION
Caltrans®
DESIGN

FUNCTIONAL SUPERVISOR: RORY QUINCE
CALCULATED-DESIGNED BY: ELTAHIR ATAELGEED
CHECKED BY: GURJOT GILL
REVISED BY
DATE REVISED

LAST REVISION 10-12-09
DATE PLOTTED => 14-JAN-2010
TIME PLOTTED => 13:44

Dist	COUNTY	ROUTE	POST MILES TOTAL PROJECT	SHEET No.	TOTAL SHEETS
06	Kin	198	R19.0/T21.7	19	53

REGISTERED CIVIL ENGINEER — DATE 10-15-09

1-11-10
PLANS APPROVAL DATE

REGISTERED PROFESSIONAL ENGINEER — Abdul Baker — No. 55322 — Exp. 12-31-10 — CIVIL — STATE OF CALIFORNIA

THE STATE OF CALIFORNIA OR ITS OFFICERS OR AGENTS SHALL NOT BE RESPONSIBLE FOR THE ACCURACY OR COMPLETENESS OF SCANNED COPIES OF THIS PLAN SHEET.

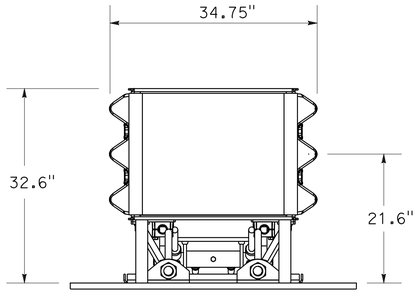

SECTION A-A

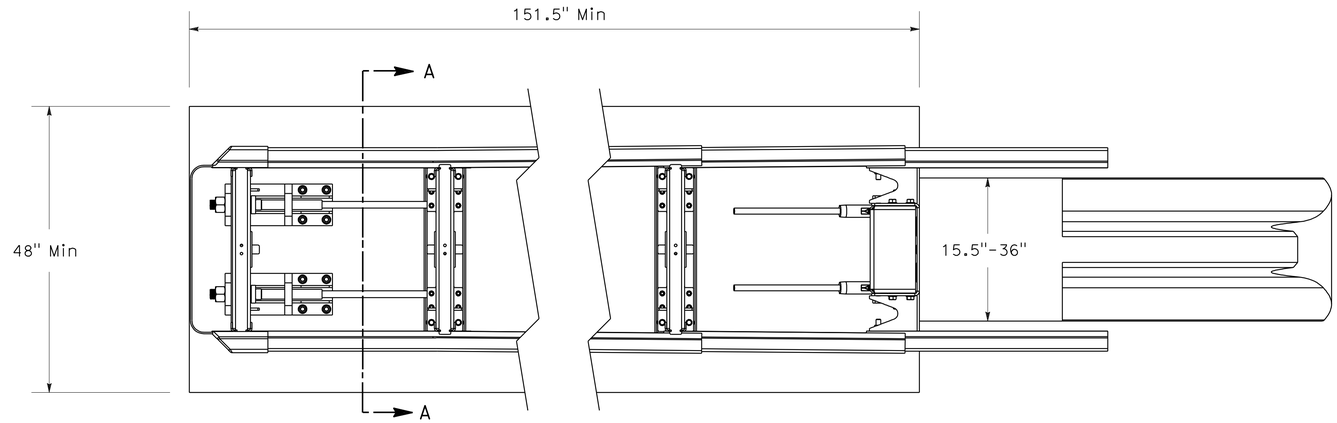

PLAN VIEW

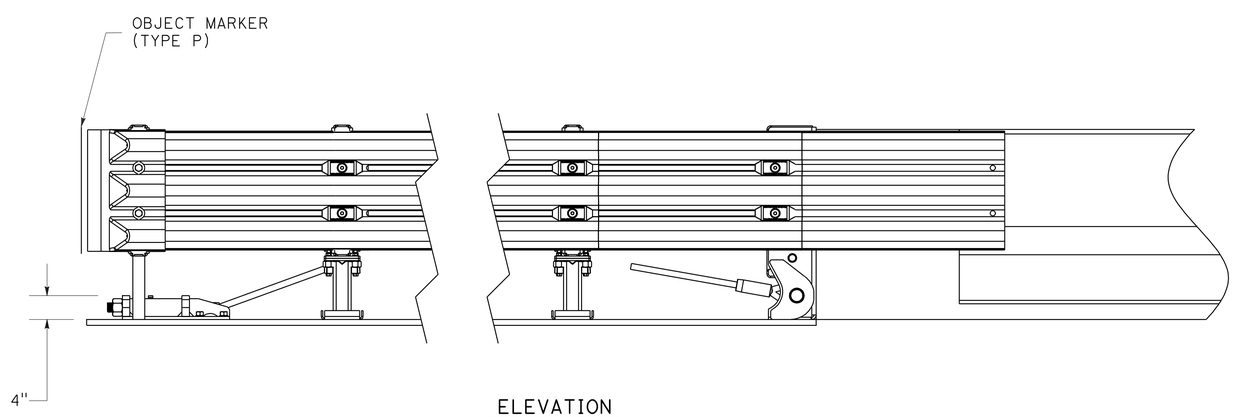

ELEVATION

CRASH CUSHION (TYPE TAU-II)

NO SCALE

CONSTRUCTION DETAILS
C-3

REVISED BY	DATE REVISED

CALCULATED-DESIGNED BY	ELTAHIR ATAELGEED
CHECKED BY	GURJOT GILL
FUNCTIONAL SUPERVISOR	RORY QUINCE

STATE OF CALIFORNIA - DEPARTMENT OF TRANSPORTATION
Caltrans
DESIGN

LAST REVISION 10-12-09 | DATE PLOTTED => 14-JAN-2010 | TIME PLOTTED => 13:44

Dist	COUNTY	ROUTE	POST MILES TOTAL PROJECT	SHEET No.	TOTAL SHEETS
06	Kin	198	R19.0/T21.7	20	53

REGISTERED CIVIL ENGINEER 10-15-09 DATE

1-11-10
PLANS APPROVAL DATE

REGISTERED PROFESSIONAL ENGINEER Abdul Baker No. 55322 Exp 12-31-10 CIVIL STATE OF CALIFORNIA

THE STATE OF CALIFORNIA OR ITS OFFICERS OR AGENTS SHALL NOT BE RESPONSIBLE FOR THE ACCURACY OR COMPLETENESS OF SCANNED COPIES OF THIS PLAN SHEET.

NOTES:

1. ALL STATIONS, OFFSETS AND CORRESPONDING SHOWN LEADER LINES ARE TO THE FLOW LINE AT CURB UNLESS OTHERWISE SHOWN.
2. ALL DRAINAGE STRUCTURES ARE RADIALTO THE REFERENCED ALIGNMENT UNLESS OTHERWISE SHOWN.

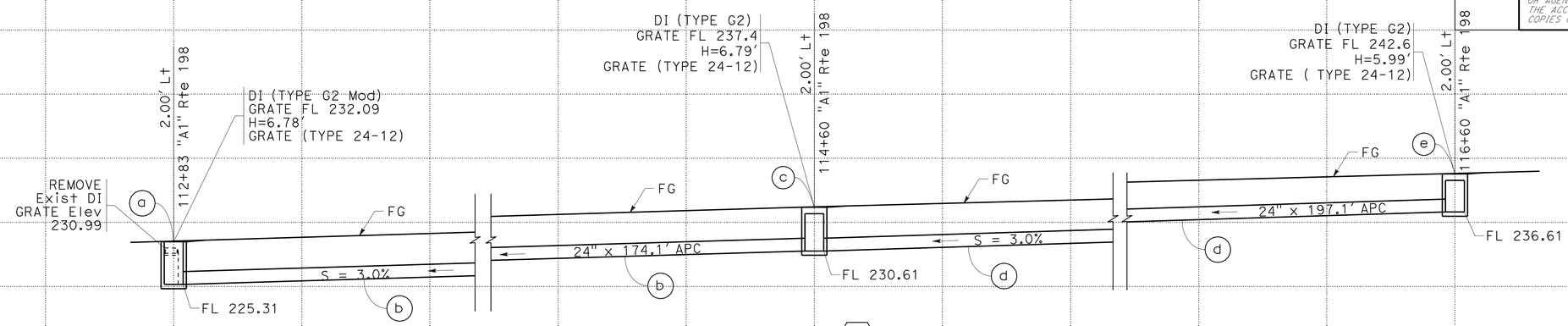

DRAINAGE SYSTEM No. 1

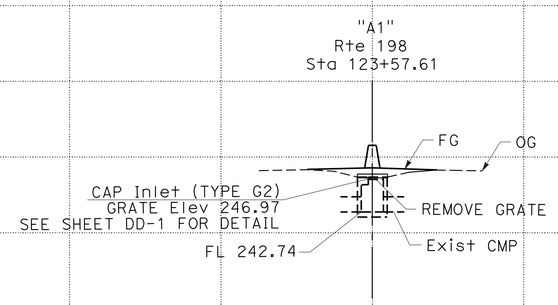

DRAINAGE SYSTEM No. 2

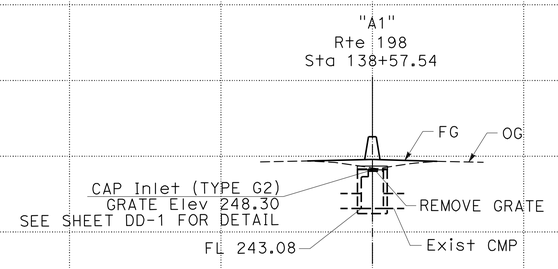

DRAINAGE SYSTEM No. 7

DRAINAGE PROFILE

SCALE: Horiz 1" = 10'
Vert 1" = 10'

DP-1

REVISED BY | DATE REVISED
ELTAHIR ATAELGEED | GURJOT GILL
CALCULATED-DESIGNED BY | CHECKED BY
FUNCTIONAL SUPERVISOR: RORY QUINCE
STATE OF CALIFORNIA - DEPARTMENT OF TRANSPORTATION
Caltrans DESIGN

LAST REVISION 10-08-09 | DATE PLOTTED => 14-JAN-2010 | TIME PLOTTED => 13:45

Dist	COUNTY	ROUTE	POST MILES TOTAL PROJECT	SHEET No.	TOTAL SHEETS
06	Kin	198	R19.0/T21.7	21	53

REGISTERED CIVIL ENGINEER 10-15-09 DATE

1-11-10
PLANS APPROVAL DATE

REGISTERED PROFESSIONAL ENGINEER Abdul Baker No. 55322 Exp 12-31-10 CIVIL STATE OF CALIFORNIA

THE STATE OF CALIFORNIA OR ITS OFFICERS OR AGENTS SHALL NOT BE RESPONSIBLE FOR THE ACCURACY OR COMPLETENESS OF SCANNED COPIES OF THIS PLAN SHEET.

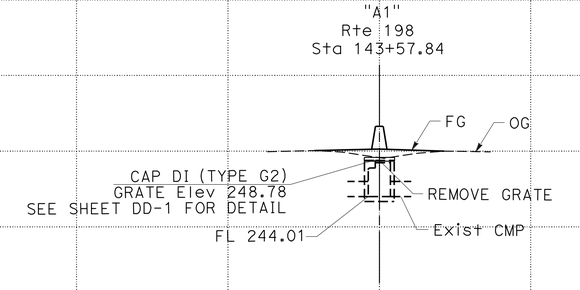

DRAINAGE SYSTEM No. 8

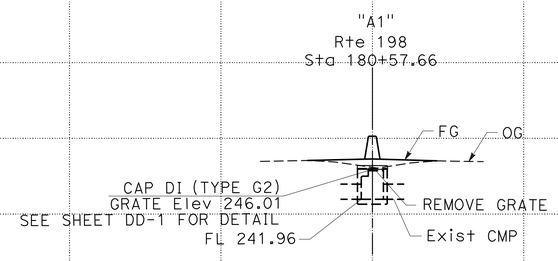

DRAINAGE SYSTEM No. 13

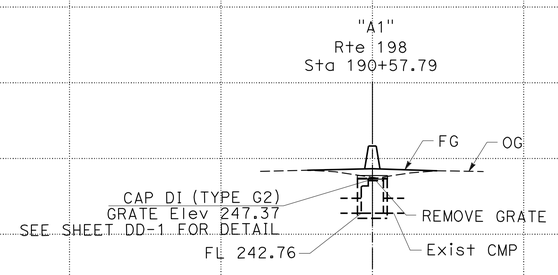

DRAINAGE SYSTEM No. 16

PROFILE

SCALE: Horiz 1" = 10'
Vert 1" = 10'

DP-2

STATE OF CALIFORNIA - DEPARTMENT OF TRANSPORTATION
Caltrans®
DESIGN
FUNCTIONAL SUPERVISOR: RORY QUINCE
CALCULATED-DESIGNED BY: ELTAHIR ATAELGEED
CHECKED BY: GURJOT GILL
REVISED BY
DATE REVISED

LAST REVISION DATE PLOTTED => 14-JAN-2010
TIME PLOTTED => 13:45
10-08-09

Dist	COUNTY	ROUTE	POST MILES TOTAL PROJECT	SHEET No.	TOTAL SHEETS
06	Kin	198	R19.0/T21.7	22	53

REGISTERED CIVIL ENGINEER DATE 10-15-09

1-11-10
PLANS APPROVAL DATE

REGISTERED PROFESSIONAL ENGINEER
Abdul Baker
No. 55322
Exp 12-31-10
CIVIL
STATE OF CALIFORNIA

THE STATE OF CALIFORNIA OR ITS OFFICERS OR AGENTS SHALL NOT BE RESPONSIBLE FOR THE ACCURACY OR COMPLETENESS OF SCANNED COPIES OF THIS PLAN SHEET.

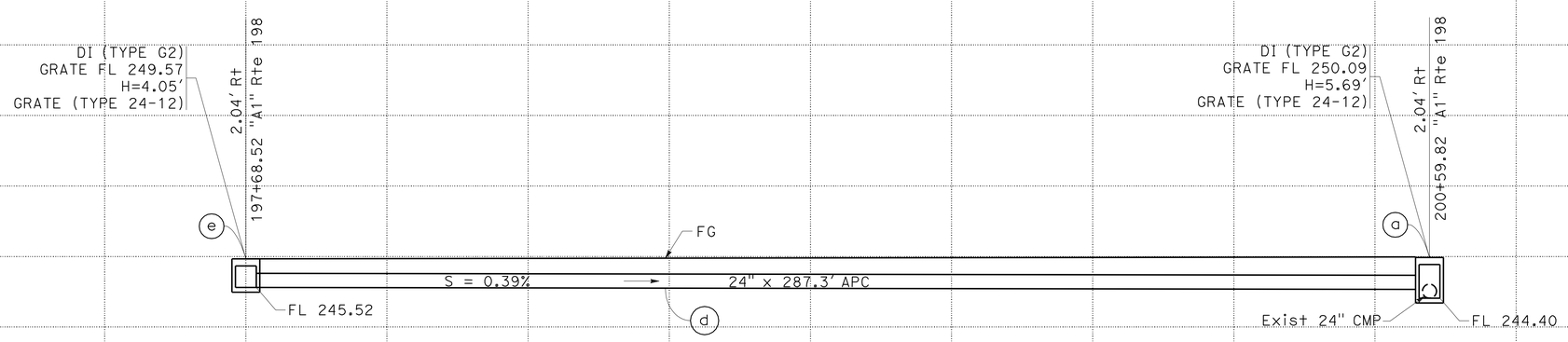

DRAINAGE SYSTEM No. 18 (Continued)

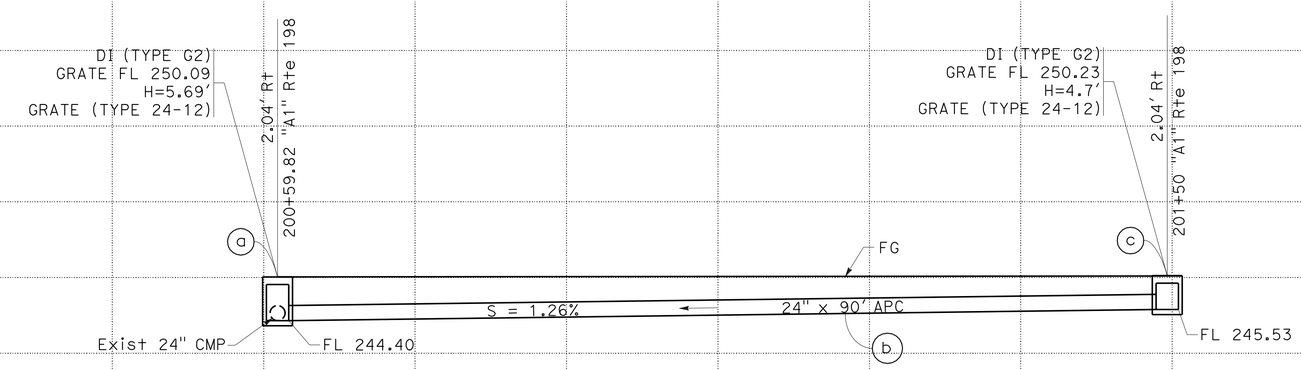

DRAINAGE SYSTEM No. 18

DRAINAGE PROFILE

SCALE: Horiz 1" = 10'
Vert 1" = 10'

DP-3

STATE OF CALIFORNIA - DEPARTMENT OF TRANSPORTATION
Caltrans
DESIGN
FUNCTIONAL SUPERVISOR: RORY QUINCE
CALCULATED-DESIGNED BY: GURJOT GILL
CHECKED BY: ELTAHIR ATAELGEED
REVISED BY
DATE REVISED

LAST REVISION 12-10-09
DATE PLOTTED => 14-JAN-2010
TIME PLOTTED => 13:45

Dist	COUNTY	ROUTE	POST MILES TOTAL PROJECT	SHEET No.	TOTAL SHEETS
06	Kin	198	R19.0/T21.7	23	53

REGISTERED CIVIL ENGINEER 10-15-09 DATE

1-11-10
PLANS APPROVAL DATE

REGISTERED PROFESSIONAL ENGINEER
Abdul Baker
No. 55322
Exp 12-31-10
CIVIL
STATE OF CALIFORNIA

THE STATE OF CALIFORNIA OR ITS OFFICERS OR AGENTS SHALL NOT BE RESPONSIBLE FOR THE ACCURACY OR COMPLETENESS OF SCANNED COPIES OF THIS PLAN SHEET.

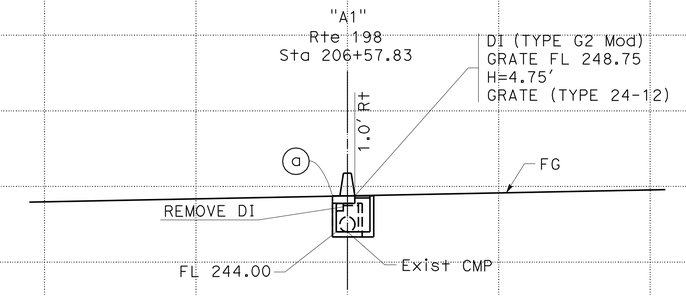

DRAINAGE SYSTEM No. 19

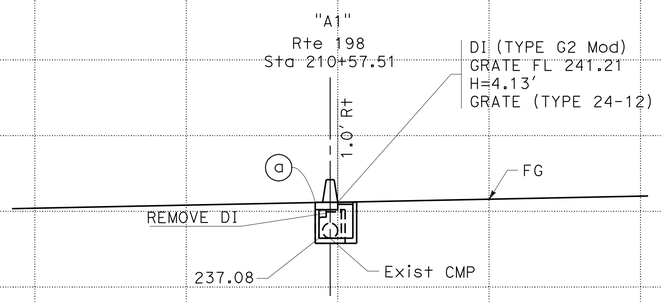

DRAINAGE SYSTEM No. 20

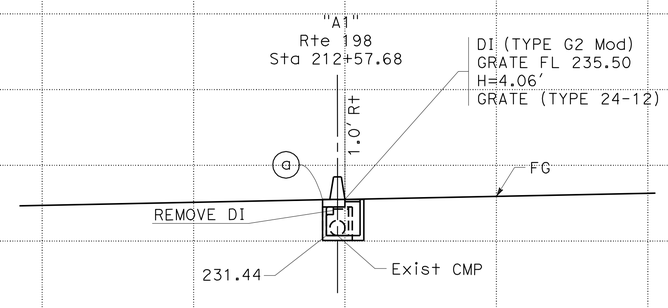

DRAINAGE SYSTEM No. 21

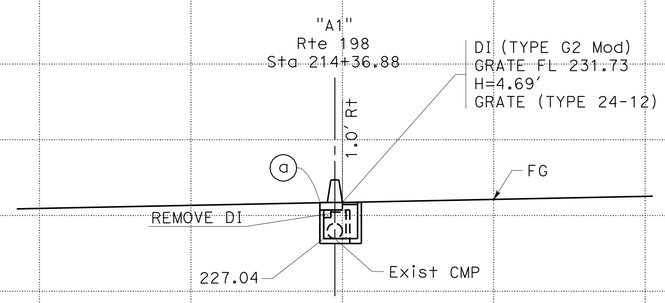

DRAINAGE SYSTEM No. 22

DRAINAGE PROFILE

SCALE: Horiz 1" = 10'
Vert 1" = 10'

DP-4

REVISED BY | DATE REVISED
ELTAHIR ATAELGEED | GURJOT GILL
CALCULATED-DESIGNED BY | CHECKED BY
FUNCTIONAL SUPERVISOR: RORY QUINCE
STATE OF CALIFORNIA - DEPARTMENT OF TRANSPORTATION
Caltrans® DESIGN

LAST REVISION 10-08-09 | DATE PLOTTED => 14-JAN-2010 | TIME PLOTTED => 13:46

Dist	COUNTY	ROUTE	POST MILES TOTAL PROJECT	SHEET No.	TOTAL SHEETS
06	Kin	198	R19.0/T21.7	24	53

REGISTERED CIVIL ENGINEER DATE 10-15-09

1-11-10
PLANS APPROVAL DATE

REGISTERED PROFESSIONAL ENGINEER
Abdul Baker
No. 55322
Exp 12-31-10
CIVIL
STATE OF CALIFORNIA

THE STATE OF CALIFORNIA OR ITS OFFICERS OR AGENTS SHALL NOT BE RESPONSIBLE FOR THE ACCURACY OR COMPLETENESS OF SCANNED COPIES OF THIS PLAN SHEET.

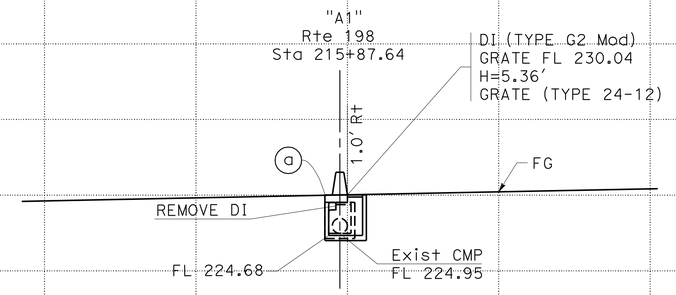

DRAINAGE SYSTEM No. 23

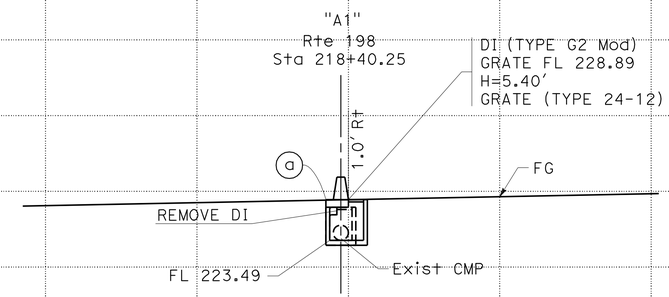

DRAINAGE SYSTEM No. 24

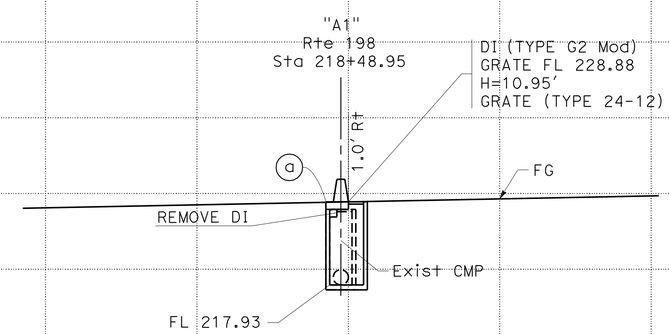

DRAINAGE SYSTEM No. 25

DRAINAGE PROFILE

SCALE: Horiz 1" = 10'
Vert 1" = 10'

DP-5

REVISED BY | DATE REVISED
ELTAHIR ATAELGEED | GURJOT GILL
CALCULATED-DESIGNED BY | CHECKED BY
FUNCTIONAL SUPERVISOR | RORY QUINCE
STATE OF CALIFORNIA - DEPARTMENT OF TRANSPORTATION
Caltrans
DESIGN

LAST REVISION DATE PLOTTED => 14-JAN-2010
10-08-09 TIME PLOTTED => 13:46

Dist	COUNTY	ROUTE	POST MILES TOTAL PROJECT	SHEET No.	TOTAL SHEETS
06	Kin	198	R19.0/T21.7	25	53

REGISTERED CIVIL ENGINEER 10-15-09 DATE

1-11-10
PLANS APPROVAL DATE

REGISTERED PROFESSIONAL ENGINEER
Abdul Baker
No. 55322
Exp 12-31-10
CIVIL
STATE OF CALIFORNIA

THE STATE OF CALIFORNIA OR ITS OFFICERS OR AGENTS SHALL NOT BE RESPONSIBLE FOR THE ACCURACY OR COMPLETENESS OF SCANNED COPIES OF THIS PLAN SHEET.

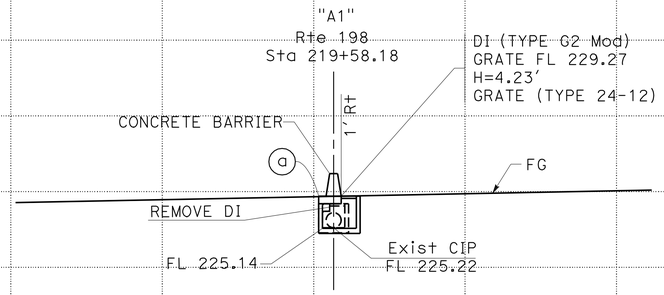

DRAINAGE SYSTEM No. 26

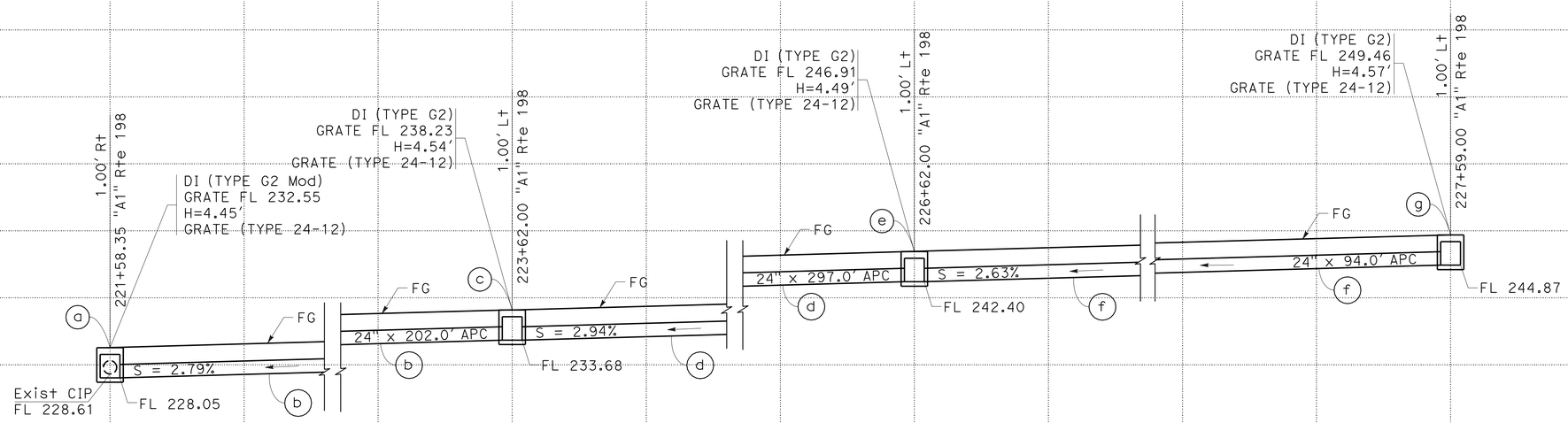

DRAINAGE SYSTEM No. 27

DRAINAGE PROFILE

SCALE: Horiz 1" = 10'
Vert 1" = 10'

DP-6

STATE OF CALIFORNIA - DEPARTMENT OF TRANSPORTATION
Caltrans
DESIGN
FUNCTIONAL SUPERVISOR: RORY QUINCE
CALCULATED-DESIGNED BY: GURJOT GILL
CHECKED BY: ELTAHIR ATAELGEED
REVISED BY
DATE REVISED

LAST REVISION DATE PLOTTED => 14-JAN-2010
10-08-09 TIME PLOTTED => 13:46

Dist	COUNTY	ROUTE	POST MILES TOTAL PROJECT	SHEET No.	TOTAL SHEETS
06	Kin	198	R19.0/T21.7	26	53

REGISTERED CIVIL ENGINEER 10-15-09 DATE

1-11-10
PLANS APPROVAL DATE

REGISTERED PROFESSIONAL ENGINEER Abdul Baker No. 55322 Exp 12-31-10 CIVIL STATE OF CALIFORNIA

THE STATE OF CALIFORNIA OR ITS OFFICERS OR AGENTS SHALL NOT BE RESPONSIBLE FOR THE ACCURACY OR COMPLETENESS OF SCANNED COPIES OF THIS PLAN SHEET.

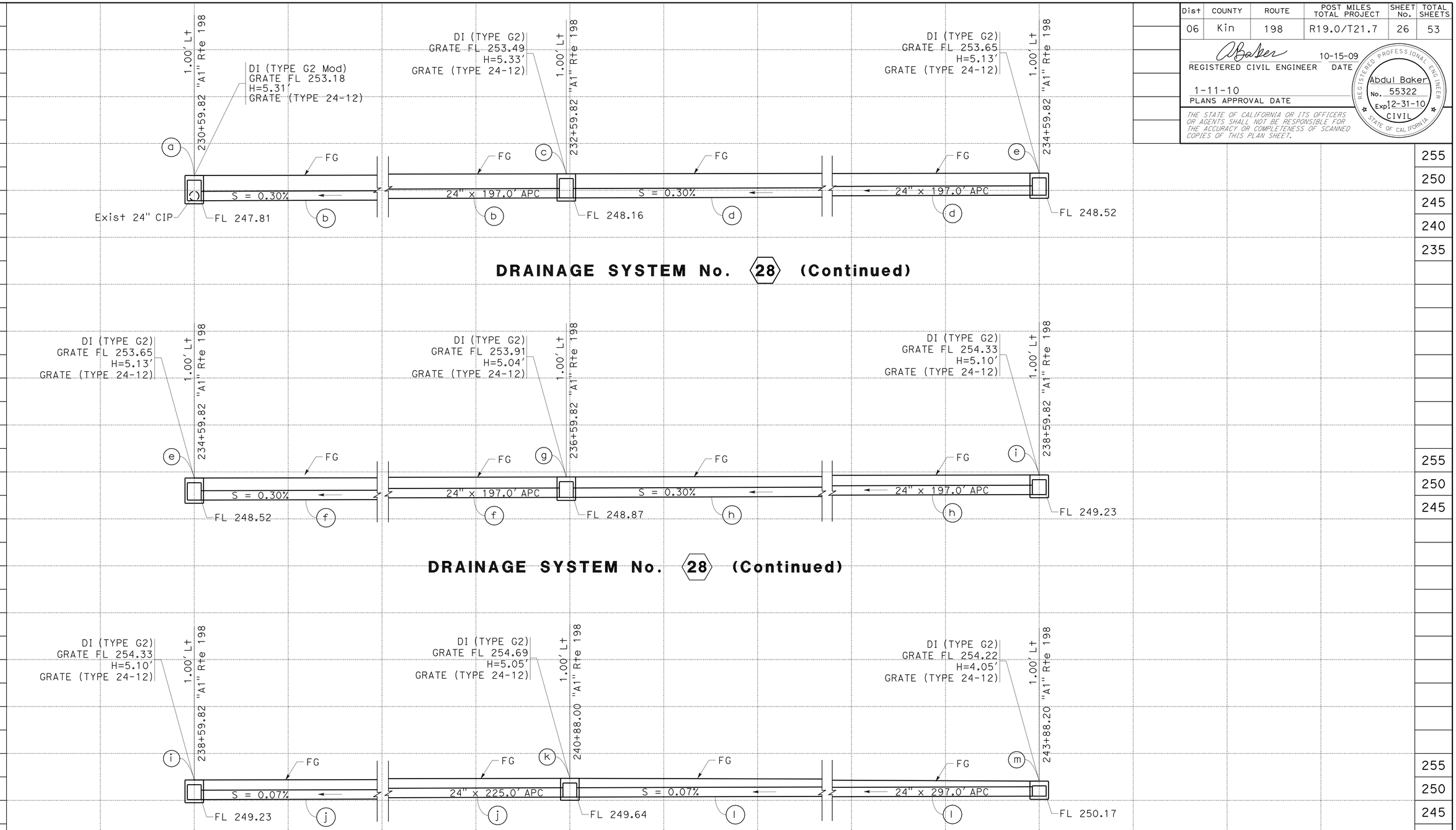

DRAINAGE PROFILE

SCALE: Horiz 1" = 10' **DP-7**
Vert 1" = 10'

STATE OF CALIFORNIA - DEPARTMENT OF TRANSPORTATION
Caltrans® DESIGN

FUNCTIONAL SUPERVISOR: RORY QUINCE
CALCULATED-DESIGNED BY: ELTAHIR ATAELGEED
CHECKED BY: GURJOT GILL
REVISED BY / DATE REVISED

LAST REVISION 10-08-09
DATE PLOTTED => 14-JAN-2010
TIME PLOTTED => 13:47

Dist	COUNTY	ROUTE	POST MILES TOTAL PROJECT	SHEET No.	TOTAL SHEETS
06	Kin	198	R19.0/T21.7	27	53

REGISTERED CIVIL ENGINEER 10-15-09 DATE

1-11-10
PLANS APPROVAL DATE

REGISTERED PROFESSIONAL ENGINEER Abdul Baker No. 55322 Exp 12-31-10 CIVIL STATE OF CALIFORNIA

THE STATE OF CALIFORNIA OR ITS OFFICERS OR AGENTS SHALL NOT BE RESPONSIBLE FOR THE ACCURACY OR COMPLETENESS OF SCANNED COPIES OF THIS PLAN SHEET.

LEGEND

DRAINAGE SYSTEM (X)

DRAINAGE UNIT No. (X)

REMOVE CONCRETE

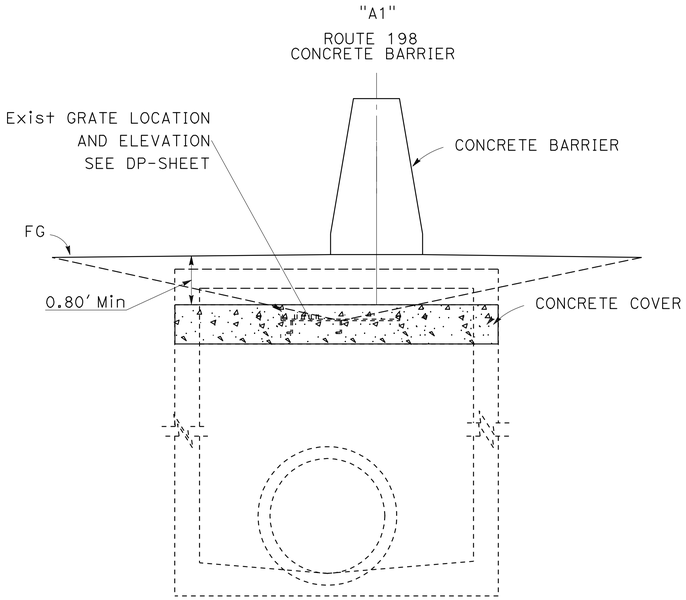

SECTION A-A

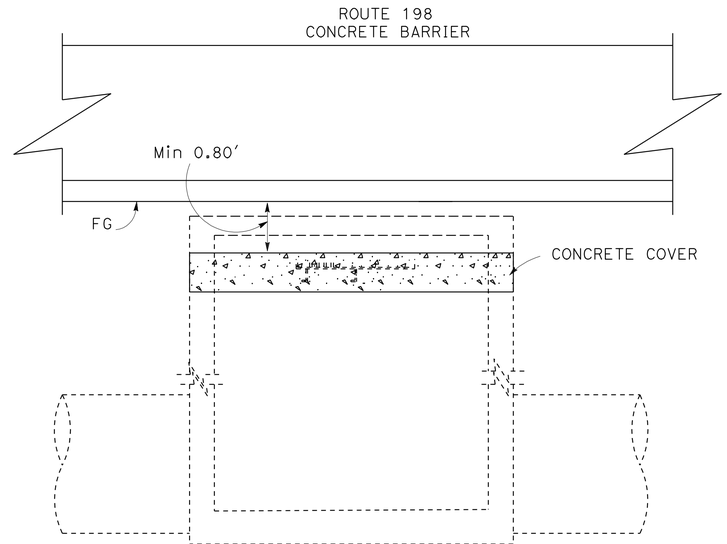

SECTION B-B

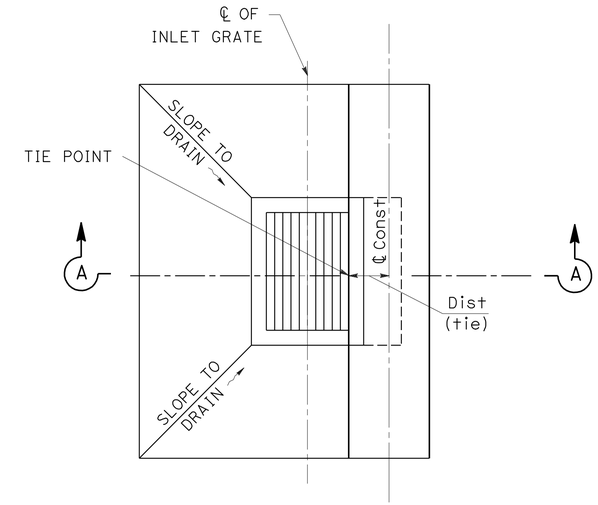

MEDIAN BARRIER INLET
WITH AC OVERSIDE DRAIN

TYPICAL STRUCTURE TIE POINTS

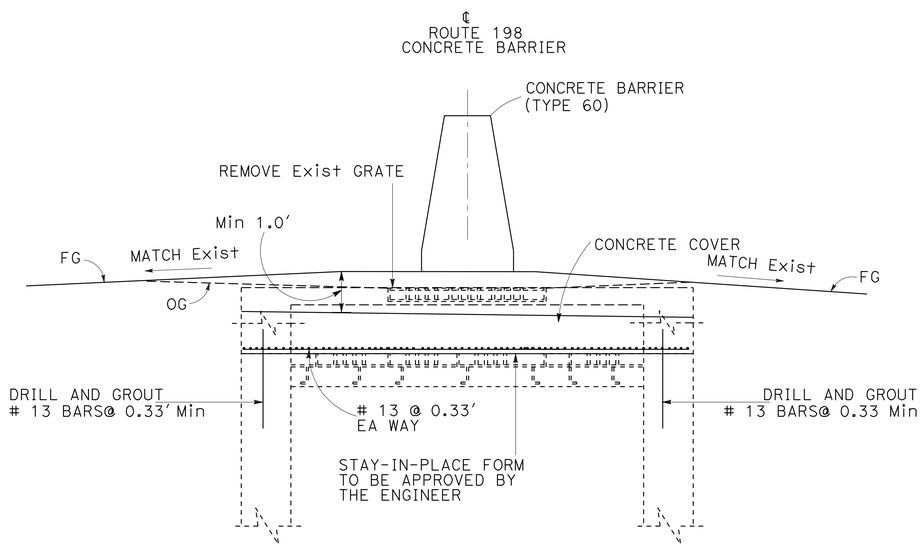

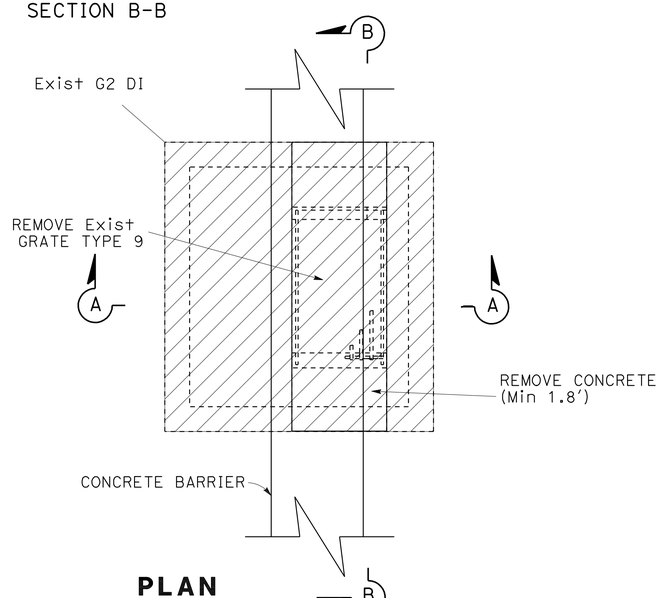

PLAN

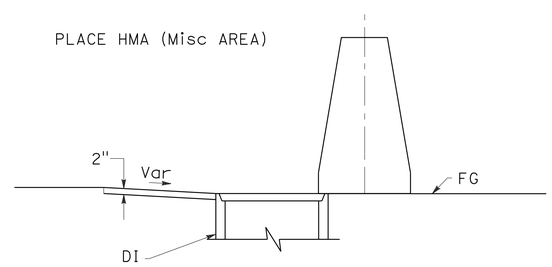

SECTION A-A

DRAINAGE SYSTEM No. (2) (7) (8) (13) (16)

CAP INLET

DRAINAGE DETAILS

NO SCALE

DD-1

STATE OF CALIFORNIA - DEPARTMENT OF TRANSPORTATION
Caltrans®
DESIGN
FUNCTIONAL SUPERVISOR: RORY QUINCE
CALCULATED-DESIGNED BY: ELTAHIR ATAELGEED
CHECKED BY: GURJOT GILL
REVISED BY
DATE REVISED

LAST REVISION 10-14-09
DATE PLOTTED => 14-JAN-2010
TIME PLOTTED => 13:47

Dist	COUNTY	ROUTE	POST MILES TOTAL PROJECT	SHEET No.	TOTAL SHEETS
06	Kin	198	R19.0/T21.7	28	53

REGISTERED CIVIL ENGINEER 10-15-09 DATE

1-11-10
PLANS APPROVAL DATE

REGISTERED PROFESSIONAL ENGINEER
Abdul Baker
No. 55322
Exp 12-31-10
CIVIL
STATE OF CALIFORNIA

THE STATE OF CALIFORNIA OR ITS OFFICERS OR AGENTS SHALL NOT BE RESPONSIBLE FOR THE ACCURACY OR COMPLETENESS OF SCANNED COPIES OF THIS PLAN SHEET.

LEGEND

DRAINAGE SYSTEM (X)

DRAINAGE UNIT No. (x)

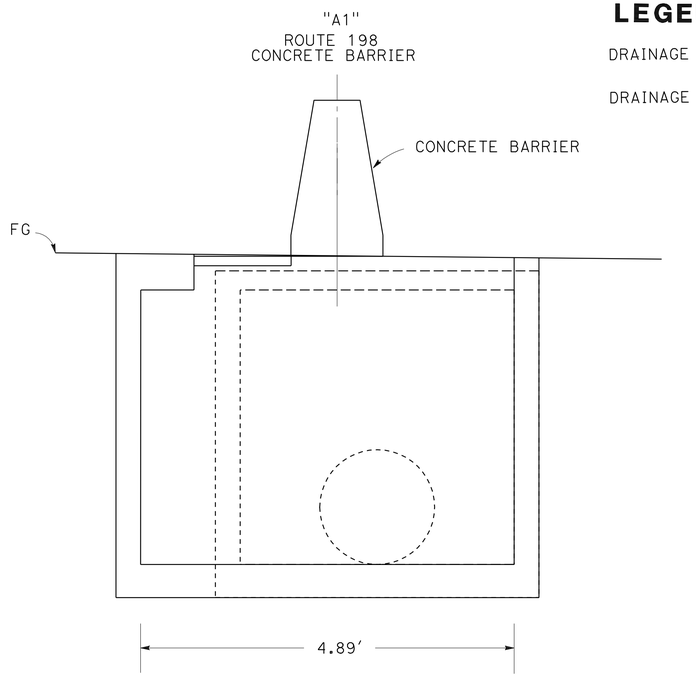

Mod DRAINAGE SYSTEM No. 1 (a)

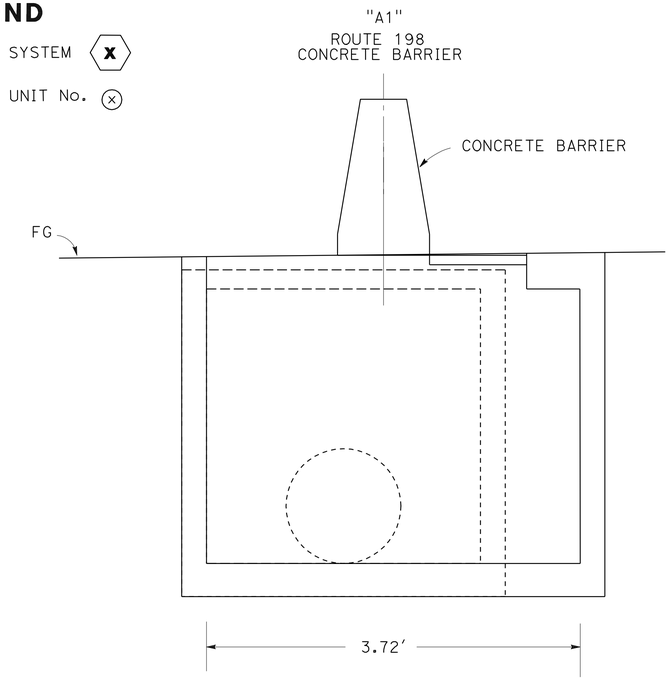

Mod DRAINAGE SYSTEM No. 19 (a)

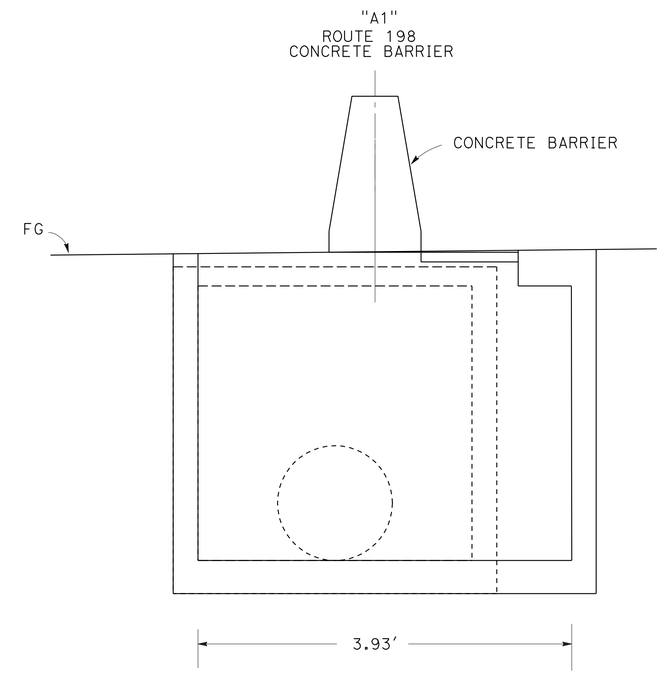

Mod DRAINAGE SYSTEM No. 20 (a)

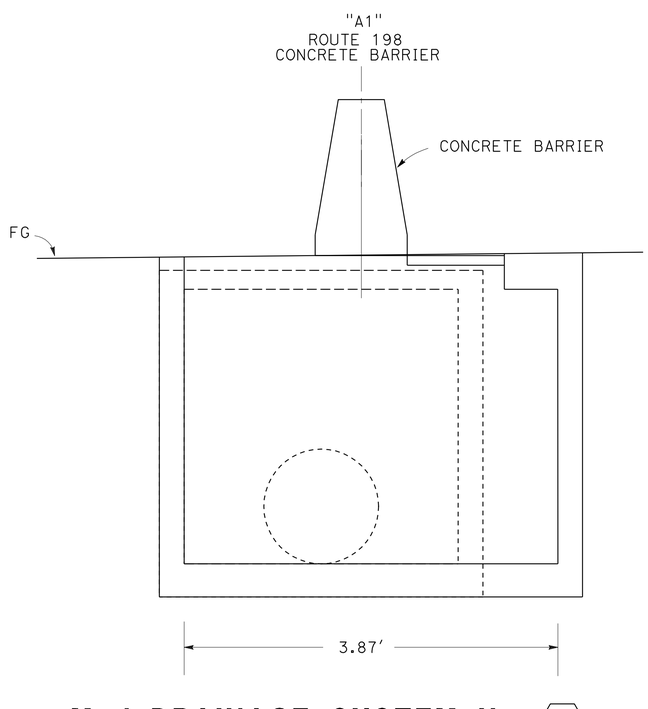

Mod DRAINAGE SYSTEM No. 21 (a)

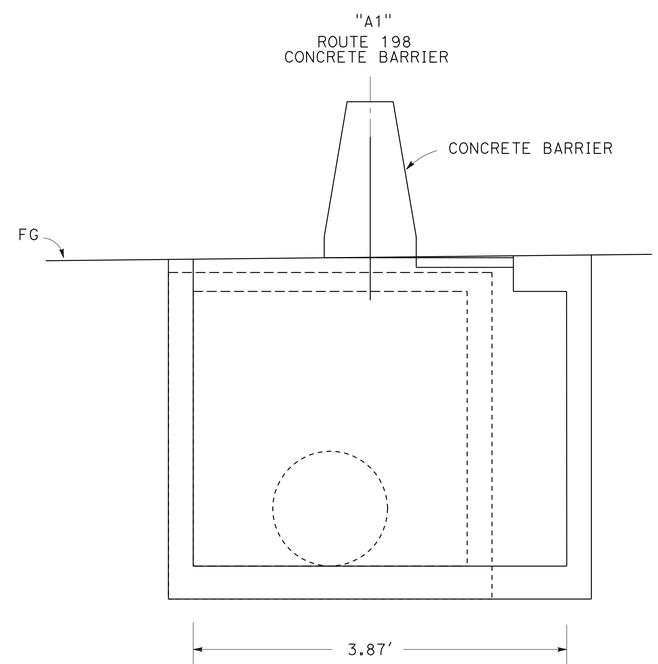

Mod DRAINAGE SYSTEM No. 22 (a)

DRAINAGE DETAILS
NO SCALE

DD-2

STATE OF CALIFORNIA - DEPARTMENT OF TRANSPORTATION
Caltrans
DESIGN

FUNCTIONAL SUPERVISOR: RORY QUINCE
CALCULATED-DESIGNED BY: ELTAHIR ATAELGEED
CHECKED BY: GURJOT GILL
REVISED BY
DATE REVISED

LAST REVISION 10-08-09
DATE PLOTTED => 14-JAN-2010
TIME PLOTTED => 13:47

Dist	COUNTY	ROUTE	POST MILES TOTAL PROJECT	SHEET No.	TOTAL SHEETS
06	Kin	198	R19.0/T21.7	29	53

REGISTERED CIVIL ENGINEER 10-15-09 DATE

1-11-10
PLANS APPROVAL DATE

REGISTERED PROFESSIONAL ENGINEER
Abdul Baker
No. 55322
Exp. 12-31-10
CIVIL
STATE OF CALIFORNIA

THE STATE OF CALIFORNIA OR ITS OFFICERS OR AGENTS SHALL NOT BE RESPONSIBLE FOR THE ACCURACY OR COMPLETENESS OF SCANNED COPIES OF THIS PLAN SHEET.

LEGEND

DRAINAGE SYSTEM (X)

DRAINAGE UNIT No. (x)

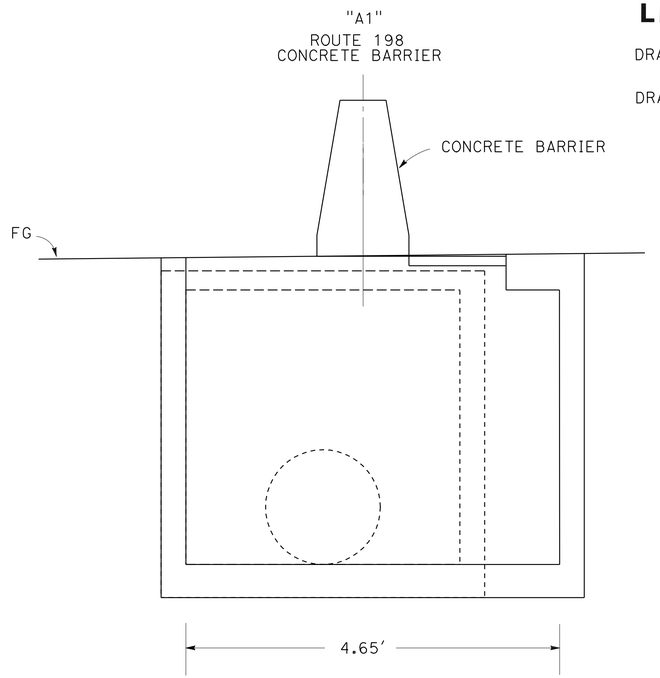

Mod DRAINAGE SYSTEM No. 23 (a)

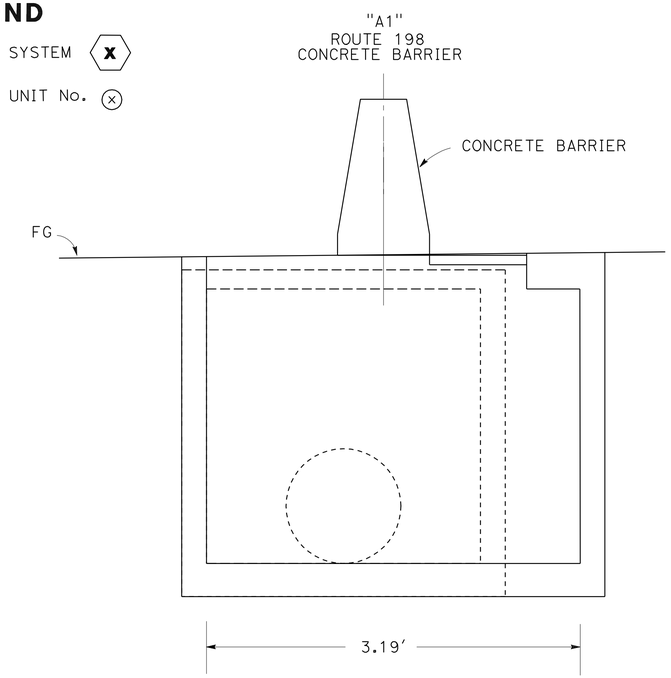

Mod DRAINAGE SYSTEM No. 24 (a)

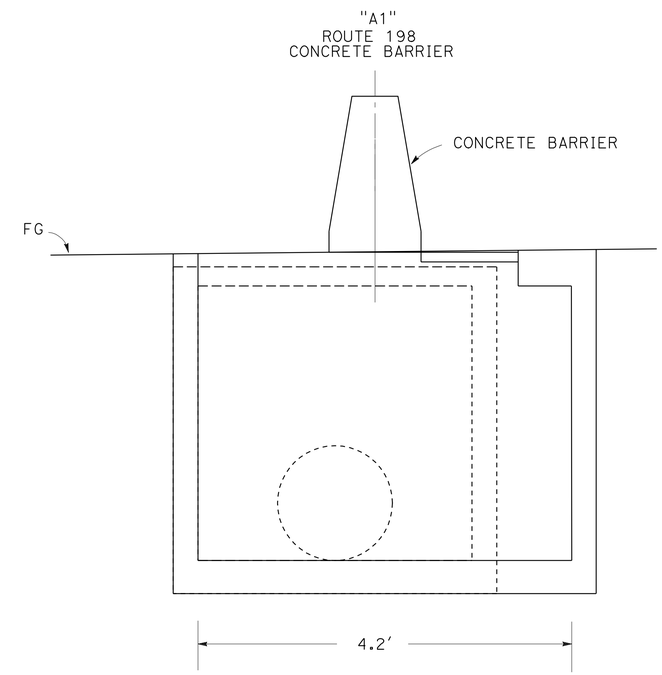

Mod DRAINAGE SYSTEM No. 25 (a)

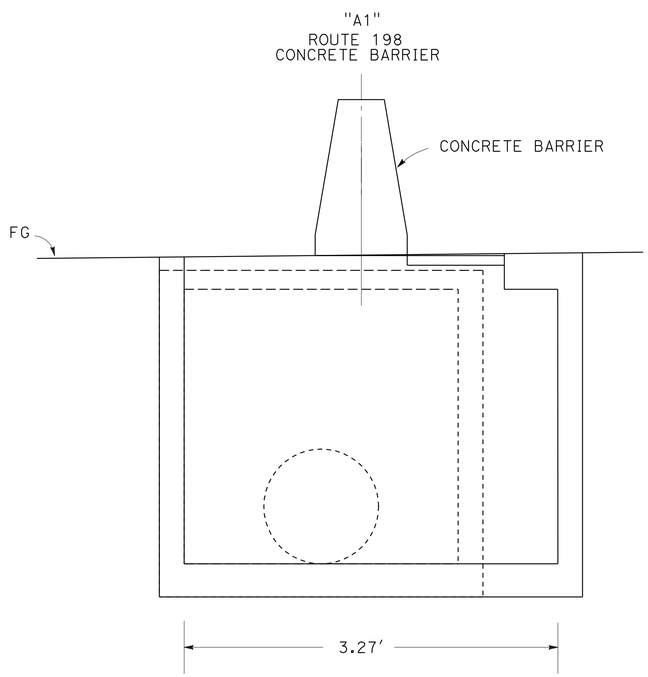

Mod DRAINAGE SYSTEM No. 26 (a)

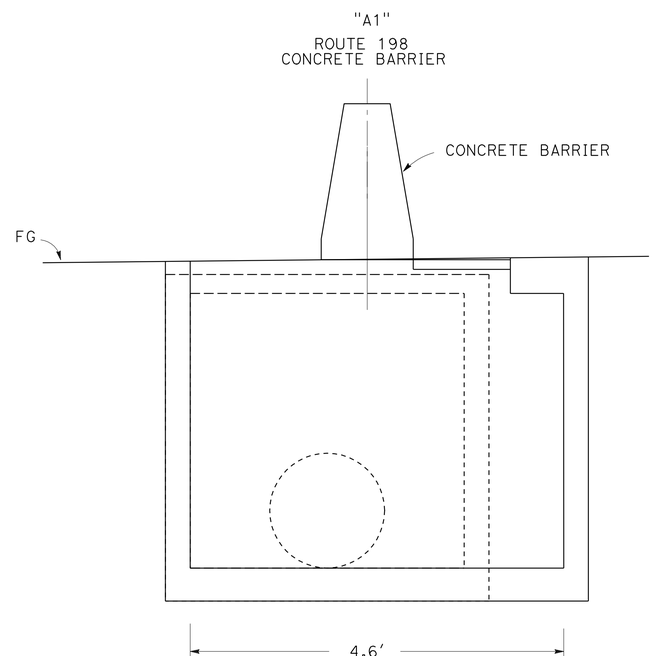

Mod DRAINAGE SYSTEM No. 27 (a)

DRAINAGE DETAILS
DD-3

NO SCALE

STATE OF CALIFORNIA - DEPARTMENT OF TRANSPORTATION
Caltrans
DESIGN

FUNCTIONAL SUPERVISOR: RORY QUINCE
CALCULATED-DESIGNED BY: ELTAHIR ATAELGEED
CHECKED BY: GURJOT GILL
REVISED BY
DATE REVISED

LAST REVISION 10-08-09
DATE PLOTTED => 14-JAN-2010
TIME PLOTTED => 13:48

Dist	COUNTY	ROUTE	POST MILES TOTAL PROJECT	SHEET No.	TOTAL SHEETS
06	Kin	198	R19.0/T21.7	30	53

REGISTERED CIVIL ENGINEER 10-15-09 DATE

1-11-10
PLANS APPROVAL DATE

REGISTERED PROFESSIONAL ENGINEER
Abdul Baker
No. 55322
Exp. 12-31-10
CIVIL
STATE OF CALIFORNIA

THE STATE OF CALIFORNIA OR ITS OFFICERS OR AGENTS SHALL NOT BE RESPONSIBLE FOR THE ACCURACY OR COMPLETENESS OF SCANNED COPIES OF THIS PLAN SHEET.

LEGEND

DRAINAGE SYSTEM (X)

DRAINAGE UNIT No. (x)

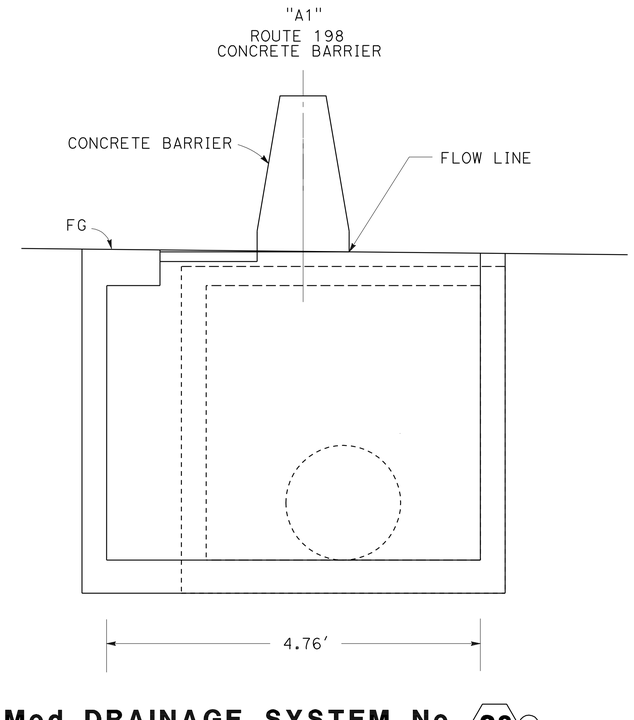

Mod DRAINAGE SYSTEM No. 28 (a)

DRAINAGE DETAILS
NO SCALE

DD-4

STATE OF CALIFORNIA - DEPARTMENT OF TRANSPORTATION
Caltrans
DESIGN

FUNCTIONAL SUPERVISOR: RORY QUINCE
CALCULATED-DESIGNED BY: ELTAHIR ATAELGEED
CHECKED BY: GURJOT GILL
REVISED BY
DATE REVISED

LAST REVISION DATE PLOTTED => 14-JAN-2010
10-08-09 TIME PLOTTED => 13:48

Dist	COUNTY	ROUTE	POST MILES TOTAL PROJECT	SHEET No.	TOTAL SHEETS
06	Kin	198	R19.0/T21.7	31	53

REGISTERED CIVIL ENGINEER 10-15-09 DATE

1-11-10
PLANS APPROVAL DATE

REGISTERED PROFESSIONAL ENGINEER Abdul Baker No. 55322 Exp 12-31-10 CIVIL STATE OF CALIFORNIA

THE STATE OF CALIFORNIA OR ITS OFFICERS OR AGENTS SHALL NOT BE RESPONSIBLE FOR THE ACCURACY OR COMPLETENESS OF SCANNED COPIES OF THIS PLAN SHEET.

NOTE: ALL JOINT TYPE ARE STANDARD.

ALLOWABLE ALTERNATIVE PIPE CULVERT			
Alt PIPE	RCP	PP	SSRP (POLYMER SHEET COATING)
24" APC		SMOOTH INTERIOR WALL	.064" THICK

DRAINAGE QUANTITIES

DRAINAGE PLAN SHEET No.	DRAINAGE SYSTEM No. ⬡	DRAINAGE UNIT ○	DRAINAGE INLET: MINOR CONCRETE (MINOR STRUCTURE) CY	DRAINAGE INLET: DESIGN HEIGHT (N) LF	DRAINAGE INLET: Misc IRON AND STEEL LB	CAP INLET EA	REMOVE INLET EA	24" APC LF	REMOVE AC DIKE LF	BACKFILL OVER APC (N) CY	REMOVE GRATE (N) EA	PLACE HOT MIX ASPHALT (Misc AREA) SQYD	MAXIMUM COVER (N) LF	DESCRIPTION	STATION
L-1	1	a	2.62	6.78′	326		1					3.73		DI TYPE G2, REMOVE Exist inlet	112+83.00 "A LINE" 2.0′ Lt
		b						174.1′		220			4.8′	24" APC	
		c	2.28	6.79′	326							3.73		DI TYPE G2	114+60.00 "A LINE" 2.0′ Lt
		d						197.1′		250			4.9′	24" APC	
L-1	1	e	2.08	5.99′	326							3.73		DI TYPE G2	116+60.00 "A LINE" 2.0′ Lt
L-1	2	a				1					1				123+57.61 ℄ "A LINE"
L-2	3	a							13′			2.52		AC OVERSIDE DRAIN	125+59.81 "A LINE" 42.92′ Lt
L-2	4	a							13′			2.54		AC OVERSIDE DRAIN	125+59.81 "A LINE" 55.31′ Rt
L-2	5	a							13′			2.52		AC OVERSIDE DRAIN	128+59.62 "A LINE" 42.63′ Lt
L-2	6	a							13′			2.52		AC OVERSIDE DRAIN	128+59.62 "A LINE" 48.87′ Rt
L-2	7	a				1					1				138+57.54 ℄ "A LINE"
L-2	8	a				1					1				143+57.84 ℄ "A LINE"
L-3	9	a							13′			2.52		AC OVERSIDE DRAIN	155+59.88 "A LINE" 42.93′ Lt
L-3	10	a							13′			2.52		AC OVERSIDE DRAIN	155+59.88 "A LINE" 42.87′ Rt
L-4	11	a							13′			2.52		AC OVERSIDE DRAIN	178+59.84 "A LINE" 42.99′ Lt
L-4	12	a							13′			2.52		AC OVERSIDE DRAIN	178+59.84 "A LINE" 42.80′ Rt
L-4	13	a				1					1				180+57.66 ℄ "A LINE"
L-4	14	a							13′			2.52		AC OVERSIDE DRAIN	182+59.84 "A LINE" 42.91′ Lt
L-4	15	a							13′			2.52		AC OVERSIDE DRAIN	182+59.84 "A LINE" 42.59′ Rt
L-4	16	a				1					1				190+57.79 ℄ "A LINE"
SUB TOTAL			6.98		978	5	1	371.2	130			36.4			

(N) = NOT A SEPARATE PAY ITEM, FOR INFORMATION ONLY

DRAINAGE QUANTITIES
DQ-1

ELTAHIR ATAELGEED — REVISED BY
GURJOT GILL — DATE REVISED
CALCULATED-DESIGNED BY
CHECKED BY
FUNCTIONAL SUPERVISOR
RORY QUINCE
STATE OF CALIFORNIA - DEPARTMENT OF TRANSPORTATION
Caltrans
DESIGN

LAST REVISION 12-10-09 DATE PLOTTED => 14-JAN-2010 TIME PLOTTED => 13:48

Dist	COUNTY	ROUTE	POST MILES TOTAL PROJECT	SHEET No.	TOTAL SHEETS
06	Kin	198	R19.0/T21.7	32	53

REGISTERED CIVIL ENGINEER 10-15-09 DATE

1-11-10
PLANS APPROVAL DATE

REGISTERED PROFESSIONAL ENGINEER Abdul Baker No. 55322 Exp 12-31-10 CIVIL STATE OF CALIFORNIA

THE STATE OF CALIFORNIA OR ITS OFFICERS OR AGENTS SHALL NOT BE RESPONSIBLE FOR THE ACCURACY OR COMPLETENESS OF SCANNED COPIES OF THIS PLAN SHEET.

DRAINAGE QUANTITIES

DRAINAIGE PLAN SHEET No.	DRAINAGE SYSTEM No. ⬡	DRAINAGE UNIT ○	DRAINAGE INLET: MINOR CONCRETE (MINOR STRUCTURE)	DRAINAGE INLET: DESIGN HEIGHT (N)	DRAINAGE INLET: Misc IRON AND STEEL	CAP INLET	REMOVE INLET	24" APC	BACKFILL OVER APC (N)	REMOVE AC DIKE	REMOVE GRATE (N)	PLACE HOT MIX ASPHALT (Misc AREA)	MAXIMUM COVER (N)	DESCRIPTION	STATION
			CY	FT	LB	EA	EA	LF	CY	LF	EA	SQYD	FT		
L-4	18	a	2.02	5.69′	326							3.73		DI TYPE G2	200+59.82 "A LINE" 2.0′ R†
		b						90.0′	115				3.8′	24" APC	
		c	1.58	4.07′	326							3.73		DI TYPE G2	202+09.82 "A LINE" 2.0′ R†
		d						287.3′					2.5′	24" APC	
L-4	18	e	1.58	4.05′	326							3.73		DI TYPE G2	197+68.52 "A LINE" 2.0′ R†
L-5	19	a	1.89	4.75′	326		1					3.73		DI TYPE G2	206+57.83 "A LINE" 2.0′ R†
L-5	20	a	1.77	4.13′	326		1					3.73		DI TYPE G2	210+57.51 "A LINE" 2.0′ R†
L-5	21	a	1.74	4.06′	326		1					3.73		DI TYPE G2	212+57.68 "A LINE" 2.0′ R†
L-5	22	a	1.91	4.69′	326		1					3.73		DI TYPE G2	214+36.88 "A LINE" 2.0′ R†
L-5	23	a	2.21	5.36′	326		1					3.73		DI TYPE G2	215+87.64 "A LINE" 2.0′ R†
L-5	24	a	1.96	5.40′	326		1					3.73		DI TYPE G2	218+40.25 "A LINE" 2.0′ R†
L-5	25	a	5.58	10.95′	398		1					3.73		DI TYPE G2	218+48.95 "A LINE" 2.0′ R†
L-5	26	a	1.86	4.25′	326		1					3.73		DI TYPE G2	219+58.18 "A LINE" 2.0′ R†
L-5	27	a	1.99	4.45′	326		1					3.73		DI TYPE G2	221+58.35 "A LINE" 1.0′ R†
		b						200.7′	227				3.8′	24" APC	
		c	1.86	4.54′	326							3.73		DI TYPE G2	223+62.00 "A LINE" 1.0′ R†
		d						297.0′	272				3.1′	24" APC	
		e	1.74	4.49′	326							3.73		DI TYPE G2	226+62.00 "A LINE" 1.0′ L†
		f						94.0′	75				2.7′	24" APC	
		g	1.65	4.57′	326							3.73		DI TYPE G2	227+59.00 "A LINE" 1.0′ L†
L-5	28	a	2.24	5.31′	326							3.73		DI TYPE G2	230+59.82 "A LINE" 1.0′ L†
		b						197.0′	222				3.8′	24" APC	
		c	1.86	5.33′	326							3.73		DI TYPE G2	232+59.82 "A LINE" 1.0′ L†
		d						197.0′	181				3.1′	24" APC	
		e	1.74	5.13′	326							3.73		DI TYPE G2	234+59.82 "A LINE" 1.0′ L†
		f						197.0′	158				2.7′	24" APC	
		g	1.65	5.04′	326							3.73		DI TYPE G2	236+59.82 "A LINE" 1.0′ L†
		h						197.0′	134				2.3′	24" APC	
		i	1.61	5.1′	326							3.73		DI TYPE G2	238+59.82 "A LINE" 1.0′ L†
		j						225.0′	146				2.2′	24" APC	
		k	1.57	5.05′	326							3.73		DI TYPE G2	240+88.00 "A LINE" 1.0′ L†
		l						297.0′	176				2.0′	24" APC	
L-6	28	m	1.57	4.05′	326							3.73		DI TYPE G2	243+38.20 "A LINE" 1.0′ L†
SUB TOTAL			43.58		7172		9	2279.0′				82.06			

(N) = NOT A SEPARATE PAY ITEM, FOR INFORMATION ONLY

DRAINAGE QUANTITIES
DQ-2

STATE OF CALIFORNIA - DEPARTMENT OF TRANSPORTATION
Caltrans® DESIGN

FUNCTIONAL SUPERVISOR: RORY QUINCE
CALCULATED-DESIGNED BY: ALTAHIR ATAELGEED
CHECKED BY: GURJOT GILL
REVISED BY
DATE REVISED

LAST REVISION 12-10-09 DATE PLOTTED => 14-JAN-2010 TIME PLOTTED => 13:48

Dist	COUNTY	ROUTE	POST MILES TOTAL PROJECT	SHEET No.	TOTAL SHEETS
06	Kin	198	R19.0/T21.7	33	53

REGISTERED CIVIL ENGINEER 10-15-09 DATE

1-11-10
PLANS APPROVAL DATE

REGISTERED PROFESSIONAL ENGINEER Abdul Baker No. 55322 Exp. 12-31-10 CIVIL STATE OF CALIFORNIA

THE STATE OF CALIFORNIA OR ITS OFFICERS OR AGENTS SHALL NOT BE RESPONSIBLE FOR THE ACCURACY OR COMPLETENESS OF SCANNED COPIES OF THIS PLAN SHEET.

SUMMARY OF DRAINAGE QUANTITIES

DRAINAIGE QUANTITY SHEET No.	DRAINAGE INLET: MINOR CONCRETE MINOR STRUCTURE	DRAINAGE INLET: Misc IRON AND STEEL	CAP INLET	REMOVE INLET	24" APC	REMOVE AC DIKE	BACKFILL OVER APC (N)	REMOVE GRATE (N)	PLACE HOT MIX ASPHALT (MISCELLANEOUS AREA) *	24" AFES
	CY	LB	EA	EA	LF	LF	CY	EA	SQYD	EA
DQ-1	6.98	978	5	1	371.2	130			36.4	1
DQ-2	43.58	7172		9	2279				82.06	
TOTAL	50.56	8150	5	10	2650.2	130			118.46 *	1

(N) = NOT A SEPARATE PAY ITEM, FOR INFORMATION ONLY.

* QUANTITY IS ADDED TO ROADWAY QUANTITIES IN Q-1 SHEET.

DRAINAGE QUANTITIES
DQ-3

STATE OF CALIFORNIA - DEPARTMENT OF TRANSPORTATION
Caltrans DESIGN

FUNCTIONAL SUPERVISOR: RORY QUINCE
CALCULATED-DESIGNED BY: ELTAHIR ATAELGEED
CHECKED BY: GURJOT GILL
REVISED BY
DATE REVISED

LAST REVISION 08-28-09 | DATE PLOTTED => 14-JAN-2010 | TIME PLOTTED => 13:48

Dist	COUNTY	ROUTE	POST MILES TOTAL PROJECT	SHEET No.	TOTAL SHEETS
06	Kin	198	R19.0/T21.7	34	53

REGISTERED CIVIL ENGINEER 10-15-09 DATE

1-11-10
PLANS APPROVAL DATE

REGISTERED PROFESSIONAL ENGINEER
Abdul Baker
No. 55322
Exp 12-31-10
CIVIL
STATE OF CALIFORNIA

THE STATE OF CALIFORNIA OR ITS OFFICERS OR AGENTS SHALL NOT BE RESPONSIBLE FOR THE ACCURACY OR COMPLETENESS OF SCANNED COPIES OF THIS PLAN SHEET.

NOTE:

LOCATION OF UTILITY FACILITIES SHOWN ON THESE PLANS ARE APPROXIMATE AND SHALL BE VERFIED BY THE CONTRACTOR PRIOR TO CONSTRUCTION.

LEGEND:

—— -e —— -	UNDERGROUND ELECTRIC CABLE
—— -- sd —— -	STORM SEWER LINE
---- gs —— —	GAS LINE
- —— w —— —	IRRIGATION PIPE

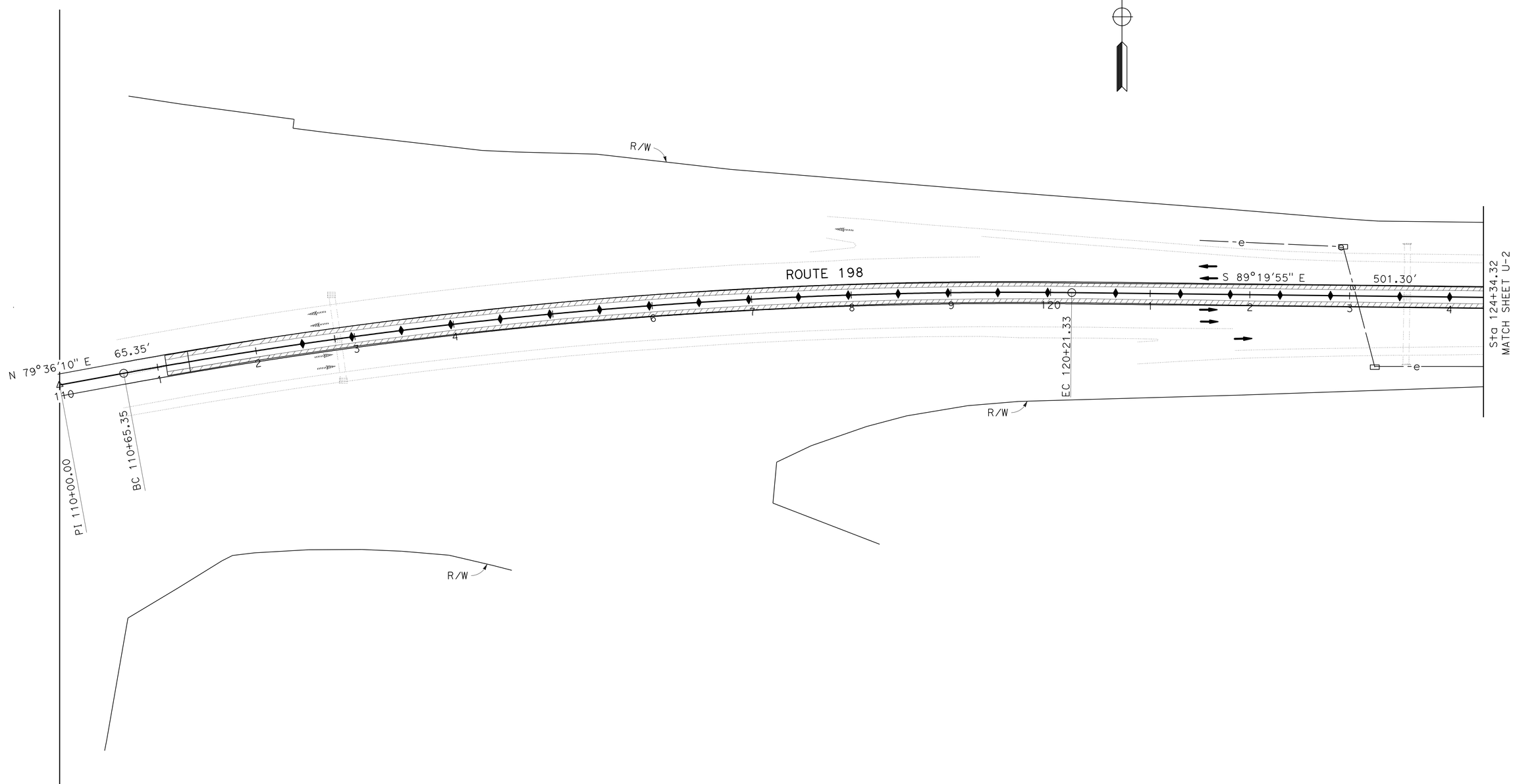

THIS PLAN ACCURATE FOR UTILITIES INFORMATION ONLY.

UTILITY PLAN

SCALE: 1" = 50'

U-1

REVISED BY	DATE REVISED

CALCULATED-DESIGNED BY	CHECKED BY
ELTAHIR ATAELGEED	GURJOT GILL

FUNCTIONAL SUPERVISOR: RORY QUINCE

STATE OF CALIFORNIA - DEPARTMENT OF TRANSPORTATION

Caltrans

DESIGN

LAST REVISION 10-08-09 | DATE PLOTTED => 14-JAN-2010 | TIME PLOTTED => 13:49

Dist	COUNTY	ROUTE	POST MILES TOTAL PROJECT	SHEET No.	TOTAL SHEETS
06	Kin	198	R19.0/T21.7	35	53

REGISTERED CIVIL ENGINEER 10-15-09 DATE

1-11-10
PLANS APPROVAL DATE

REGISTERED PROFESSIONAL ENGINEER
Abdul Baker
No. 55322
Exp 12-31-10
CIVIL
STATE OF CALIFORNIA

THE STATE OF CALIFORNIA OR ITS OFFICERS OR AGENTS SHALL NOT BE RESPONSIBLE FOR THE ACCURACY OR COMPLETENESS OF SCANNED COPIES OF THIS PLAN SHEET.

NOTE:

LOCATION OF UTILITY FACILITIES SHOWN ON THESE PLANS ARE APPROXIMATE AND SHALL BE VERFIED BY THE CONTRACTOR PRIOR TO CONSTRUCTION.

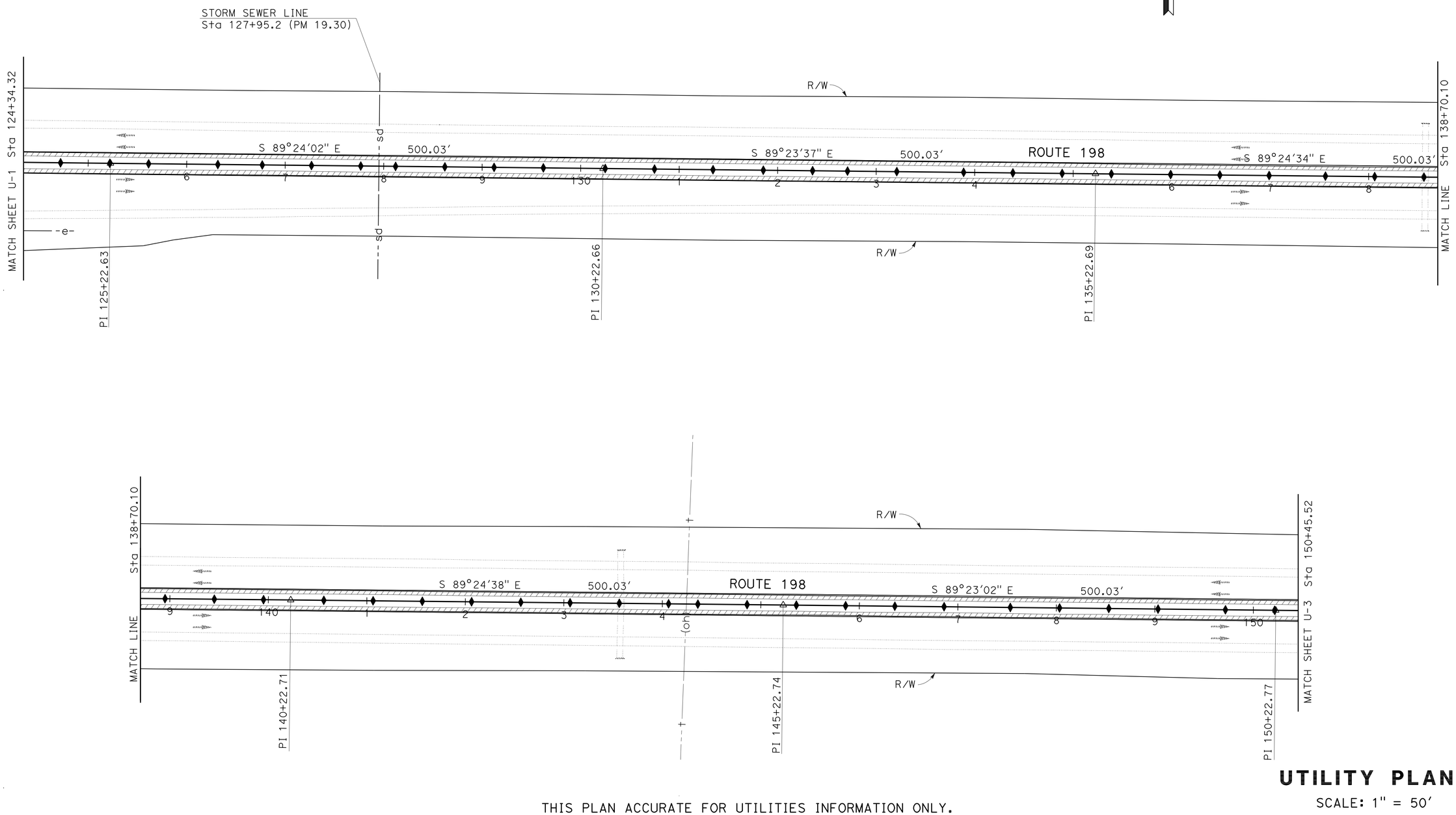

THIS PLAN ACCURATE FOR UTILITIES INFORMATION ONLY.

UTILITY PLAN

SCALE: 1" = 50'

U-2

STATE OF CALIFORNIA - DEPARTMENT OF TRANSPORTATION
Caltrans
DESIGN

FUNCTIONAL SUPERVISOR: RORY QUINCE
CALCULATED-DESIGNED BY: ELTAHIR ATAELGEED
CHECKED BY: GURJOT GILL
REVISED BY
DATE REVISED

LAST REVISION 12-14-09
DATE PLOTTED => 14-JAN-2010
TIME PLOTTED => 13:49

Dist	COUNTY	ROUTE	POST MILES TOTAL PROJECT	SHEET No.	TOTAL SHEETS
06	Kin	198	R19.0/T21.7	36	53

REGISTERED CIVIL ENGINEER DATE 10-15-09

1-11-10
PLANS APPROVAL DATE

REGISTERED PROFESSIONAL ENGINEER Abdul Baker No. 55322 Exp 12-31-10 CIVIL STATE OF CALIFORNIA

THE STATE OF CALIFORNIA OR ITS OFFICERS OR AGENTS SHALL NOT BE RESPONSIBLE FOR THE ACCURACY OR COMPLETENESS OF SCANNED COPIES OF THIS PLAN SHEET.

NOTE:

LOCATION OF UTILITY FACILITIES SHOWN ON THESE PLANS ARE APPROXIMATE AND SHALL BE VERFIED BY THE CONTRACTOR PRIOR TO CONSTRUCTION.

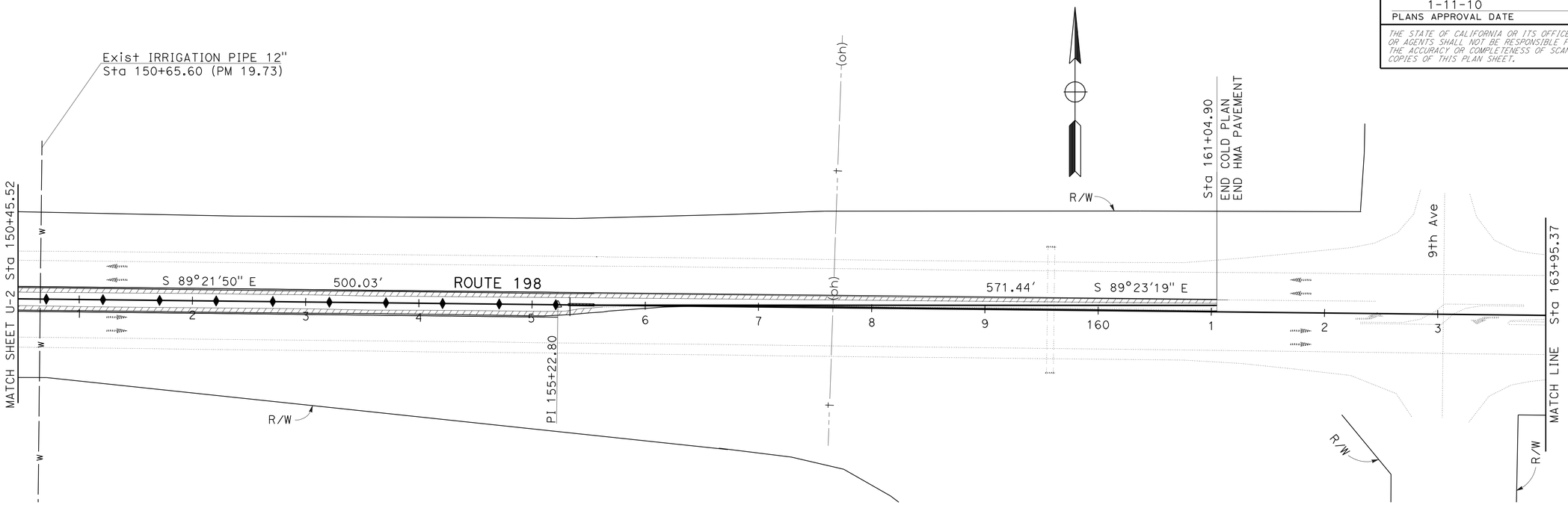

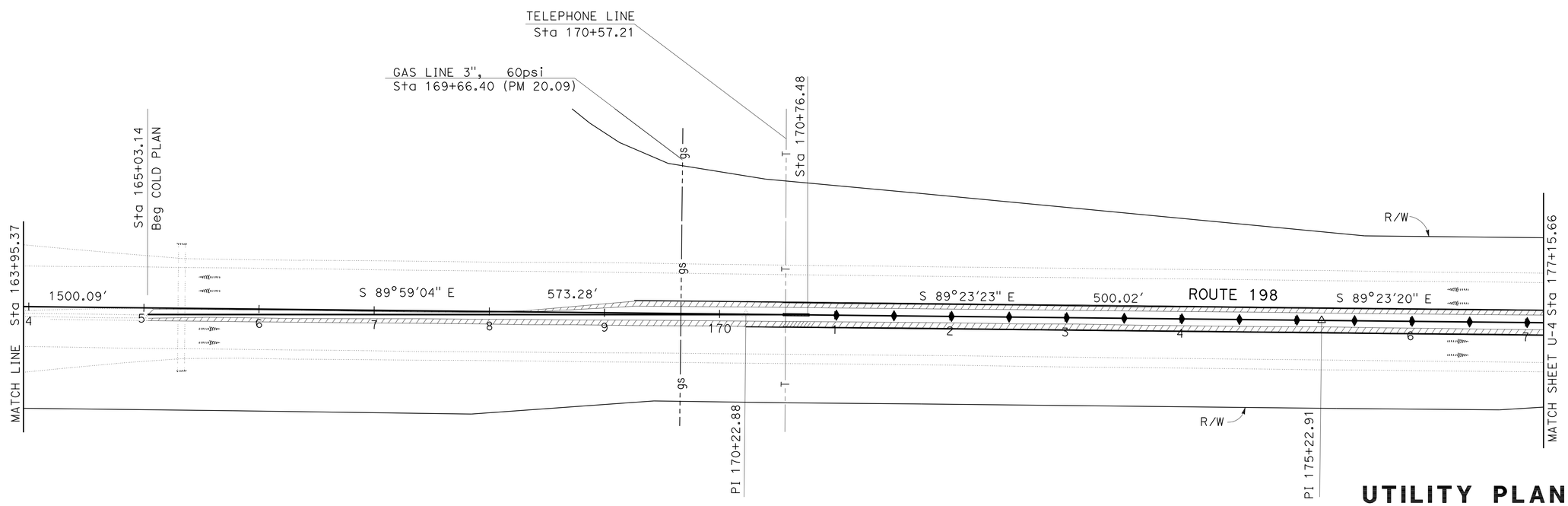

THIS PLAN ACCURATE FOR UTILITIES INFORMATION ONLY.

UTILITY PLAN

SCALE: 1" = 50'

U-3

STATE OF CALIFORNIA - DEPARTMENT OF TRANSPORTATION

DESIGN

FUNCTIONAL SUPERVISOR: RORY QUINCE

CALCULATED-DESIGNED BY: ELTAHIR ATAELGEED

CHECKED BY: GURJOT GILL

REVISED BY | DATE REVISED

LAST REVISION 12-14-09 | DATE PLOTTED => 14-JAN-2010 | TIME PLOTTED => 13:49

BORDER LAST REVISED 4/11/2008 | RELATIVE BORDER SCALE IS IN INCHES 0 1 2 3 | USERNAME => trmikesl | DGN FILE => 60h740ka003.dgn | CU 06262 | EA 0H7401

Dist	COUNTY	ROUTE	POST MILES TOTAL PROJECT	SHEET No.	TOTAL SHEETS
06	Kin	198	R19.0/T21.7	37	53

REGISTERED CIVIL ENGINEER 10-15-09 DATE

1-11-10
PLANS APPROVAL DATE

REGISTERED PROFESSIONAL ENGINEER Abdul Baker No. 55322 Exp. 12-31-10 CIVIL STATE OF CALIFORNIA

THE STATE OF CALIFORNIA OR ITS OFFICERS OR AGENTS SHALL NOT BE RESPONSIBLE FOR THE ACCURACY OR COMPLETENESS OF SCANNED COPIES OF THIS PLAN SHEET.

NOTE:

LOCATION OF UTILITY FACILITIES SHOWN ON THESE PLANS ARE APPROXIMATE AND SHALL BE VERFIED BY THE CONTRACTOR PRIOR TO CONSTRUCTION.

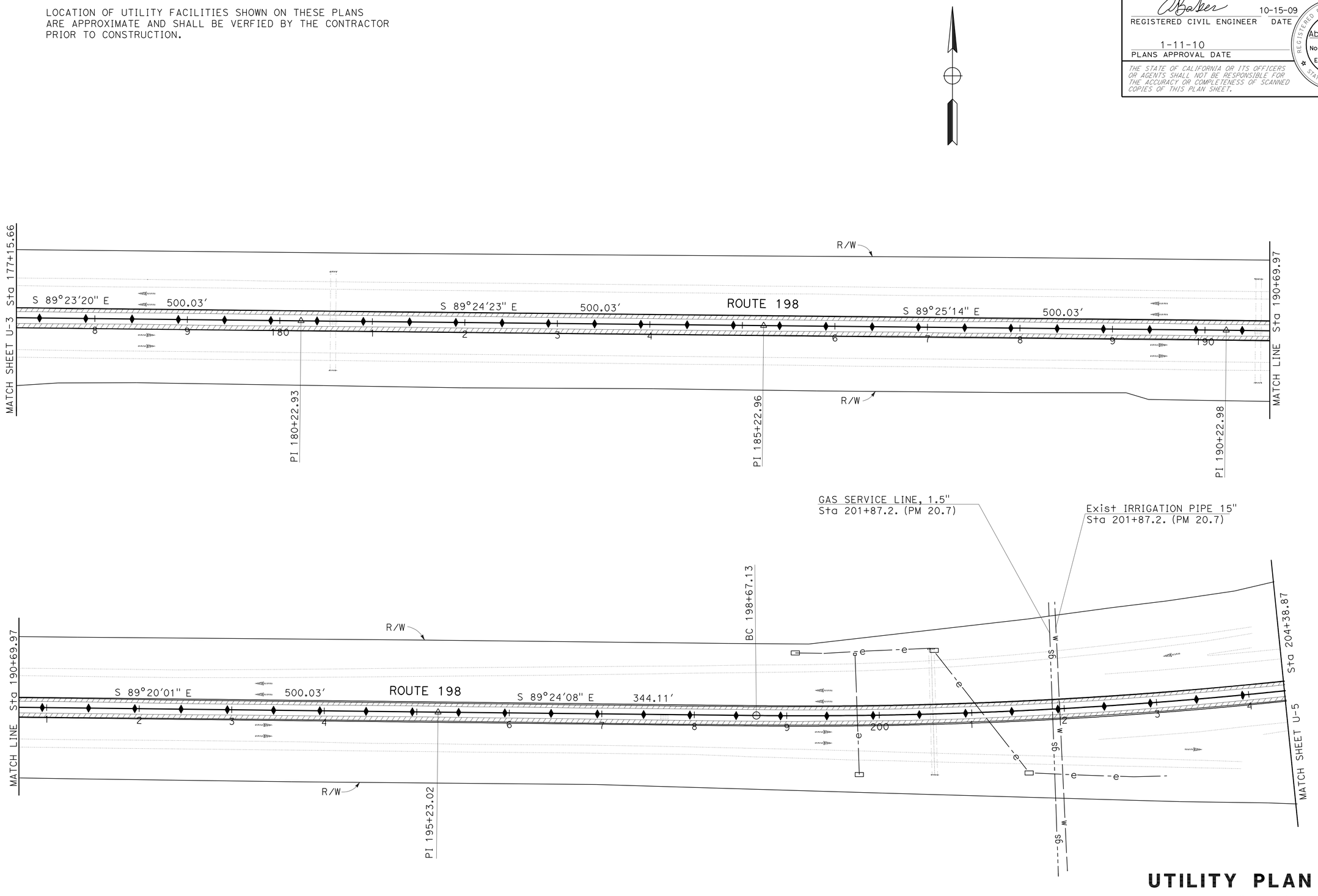

UTILITY PLAN

SCALE: 1" = 50'

U-4

THIS PLAN ACCURATE FOR UTILITIES INFORMATION ONLY.

STATE OF CALIFORNIA - DEPARTMENT OF TRANSPORTATION

Caltrans DESIGN

FUNCTIONAL SUPERVISOR: RORY QUINCE

CALCULATED-DESIGNED BY: ELTAHIR ATAELGEED

CHECKED BY: GURJOT GILL

REVISED BY

DATE REVISED

LAST REVISION 10-08-09

DATE PLOTTED => 14-JAN-2010

TIME PLOTTED => 13:49

Dist	COUNTY	ROUTE	POST MILES TOTAL PROJECT	SHEET No.	TOTAL SHEETS
06	Kin	198	R19.0/T21.7	38	53

REGISTERED CIVIL ENGINEER — DATE: 10-15-09

PLANS APPROVAL DATE: 1-11-10

REGISTERED PROFESSIONAL ENGINEER — Abdul Baker No. 55322 Exp 12-31-10 CIVIL — STATE OF CALIFORNIA

THE STATE OF CALIFORNIA OR ITS OFFICERS OR AGENTS SHALL NOT BE RESPONSIBLE FOR THE ACCURACY OR COMPLETENESS OF SCANNED COPIES OF THIS PLAN SHEET.

NOTE:

LOCATION OF UTILITY FACILITIES SHOWN ON THESE PLANS ARE APPROXIMATE AND SHALL BE VERFIED BY THE CONTRACTOR PRIOR TO CONSTRUCTION.

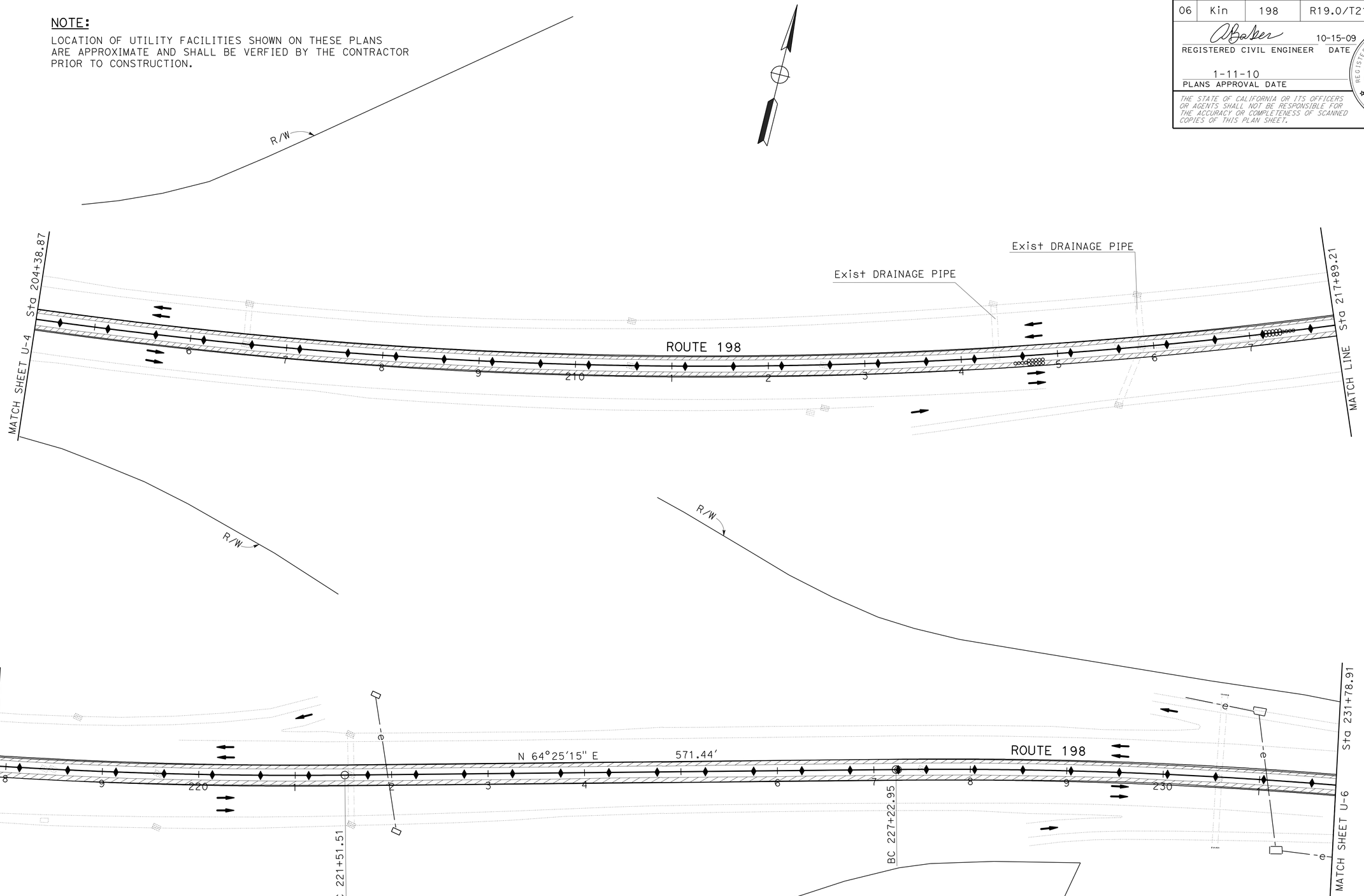

THIS PLAN ACCURATE FOR UTILITIES INFORMATION ONLY.

UTILITY PLAN

SCALE: 1" = 50'

U-5

STATE OF CALIFORNIA - DEPARTMENT OF TRANSPORTATION

Caltrans®

DESIGN

FUNCTIONAL SUPERVISOR: RORY QUINCE

CALCULATED-DESIGNED BY: ELTAHIR ATAELGEED

CHECKED BY: GURJOT GILL

REVISED BY

DATE REVISED

LAST REVISION 10-08-09

DATE PLOTTED => 14-JAN-2010

TIME PLOTTED => 13:49

BORDER LAST REVISED 4/11/2008

RELATIVE BORDER SCALE IS IN INCHES 0 1 2 3

USERNAME => trmikesl

DGN FILE => 60h740ka005.dgn

CU 06262

EA 0H7401

Dist	COUNTY	ROUTE	POST MILES TOTAL PROJECT	SHEET No.	TOTAL SHEETS
06	Kin	198	R19.0/T21.7	39	53

REGISTERED CIVIL ENGINEER DATE 07-02-09

1-11-10
PLANS APPROVAL DATE

REGISTERED PROFESSIONAL ENGINEER ANDREY CHEVYCHALOV No. 68378 Exp. 9-30-11 CIVIL STATE OF CALIFORNIA

THE STATE OF CALIFORNIA OR ITS OFFICERS OR AGENTS SHALL NOT BE RESPONSIBLE FOR THE ACCURACY OR COMPLETENESS OF ELECTRONIC COPIES OF THIS PLAN SHEET.

LEGEND:

- DIRECTION OF TRAFFIC
- CHANNELIZERS (SURFACE MOUNTED)
- Temp RAILING (TYPE K)
- Temp CRASH CUSHION ARRAY "TS14"
- CONSTRUCTION AREA
- ROADSIDE SIGN ONE-POST

CHANNELIZER (SURFACE MOUNTED)

SHEET No.	EA
TH-1	22
TOTAL	22

TEMPORARY CRASH CUSHION MODULE

SHEET No.	EA
TH-1	28
TOTAL	28

CONSTRUCTION AREA SIGNS

SHEET No.	SIGN No.	SIGN CODE	SIGN MESSAGE	PANEL SIZE	No. OF POST AND SIZE	No. OF SIGNS
TH-1	1	C30A (CA)	SHOULDER CLOSED	30" x 30"	1 - 4" x 4"	1
	2	C30A (CA)	SHOULDER CLOSED	30" x 30"	1 - 4" x 4"	1

TEMPORARY RAILING (TYPE K)

	DIRECTION	STATION BEGIN	STATION END	DISTANCE (FT)
ROUTE 198	E/B	214+20	217+40	320
	W/B	215+30	218+50	320
			TOTAL	640

NOTE:

1. FOR ADDITIONAL CONSTRUCTION AREA SIGNS, REFER TO SHEET CS-1.

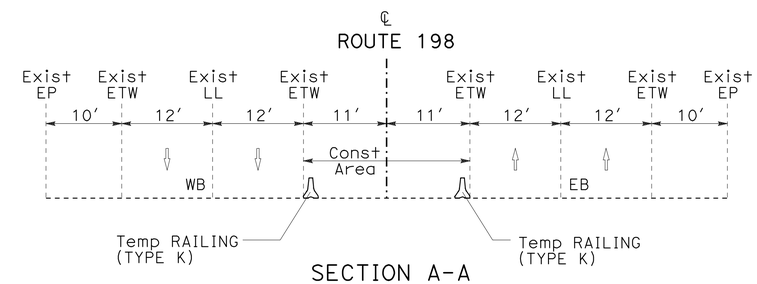

SECTION A-A
NO SCALE

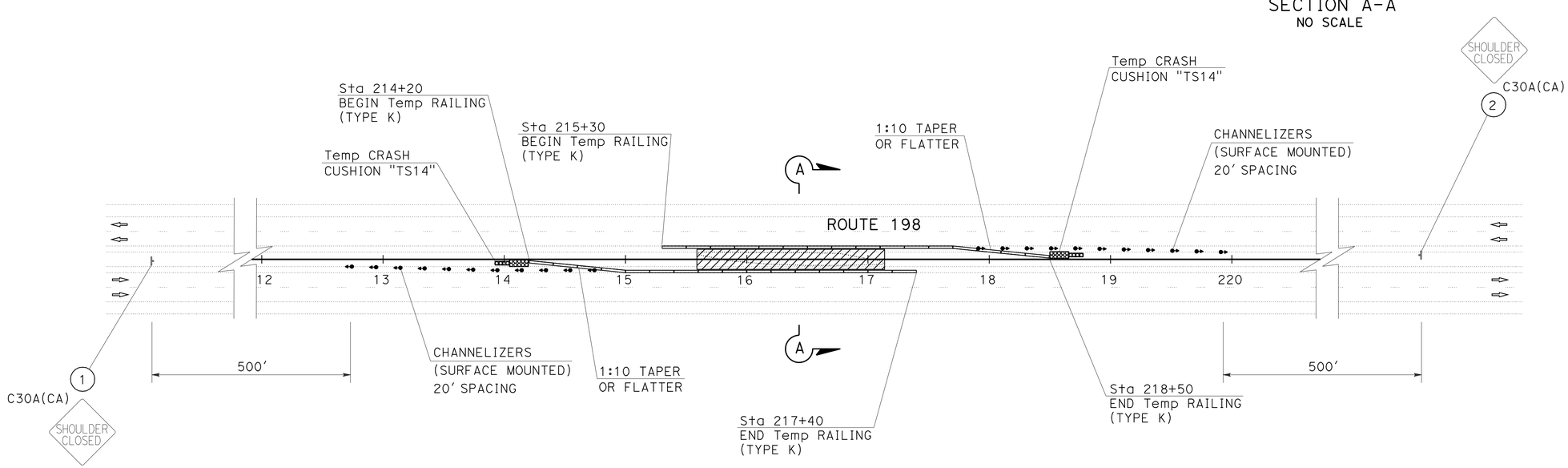

THIS PLAN ACCURATE FOR TRAFFIC HANDLING PLAN ONLY.

TRAFFIC HANDLING PLAN AND QUANTITIES

SCALE: 1" = 50′

TH-1

STATE OF CALIFORNIA - DEPARTMENT OF TRANSPORTATION
Caltrans®
TRAFFIC DESIGN

FUNCTIONAL SUPERVISOR: MOHAMMED QATAMI
CALCULATED-DESIGNED BY: SOFIAN DAWOOD
CHECKED BY: ANDREY CHEVYCHALOV
REVISED BY
DATE REVISED

LAST REVISION 09-30-09
DATE PLOTTED => 14-JAN-2010
TIME PLOTTED => 13:49

Dist	COUNTY	ROUTE	POST MILES TOTAL PROJECT	SHEET No.	TOTAL SHEETS
06	Kin	198	R19.0/T21.7	40	53

REGISTERED CIVIL ENGINEER 07-02-09 DATE

1-11-10
PLANS APPROVAL DATE

REGISTERED PROFESSIONAL ENGINEER ANDREY CHEVYCHALOV No. 68378 Exp. 9-30-11 CIVIL STATE OF CALIFORNIA

THE STATE OF CALIFORNIA OR ITS OFFICERS OR AGENTS SHALL NOT BE RESPONSIBLE FOR THE ACCURACY OR COMPLETENESS OF ELECTRONIC COPIES OF THIS PLAN SHEET.

STATIONARY MOUNTED CONSTRUCTION AREA SIGNS

SIGN No.	SIGN CODE	PANEL SIZE	SIGN MESSAGE	No. OF POSTS	POST SIZE	No. OF SIGNS
A	W20-1	48" x 48"	ROAD WORK AHEAD	1	6" x 6"	7
B	W20-1	30" x 30"	ROAD WORK AHEAD	1	4" x 4"	2
C	G20-2	48" x 24"	END ROAD WORK	1	4" x 6"	2

NOTES:

1. LOCATIONS OF CONSTRUCTION AREA SIGNS SHOWN ARE APPROXIMATE EXACT LOCATIONS TO BE DETERMINED BY THE ENGINEER.
2. FOR ADDITIONAL CONSTRUCTION AREA SIGNS, REFER TO TRAFFIC HANDLING PLANS.

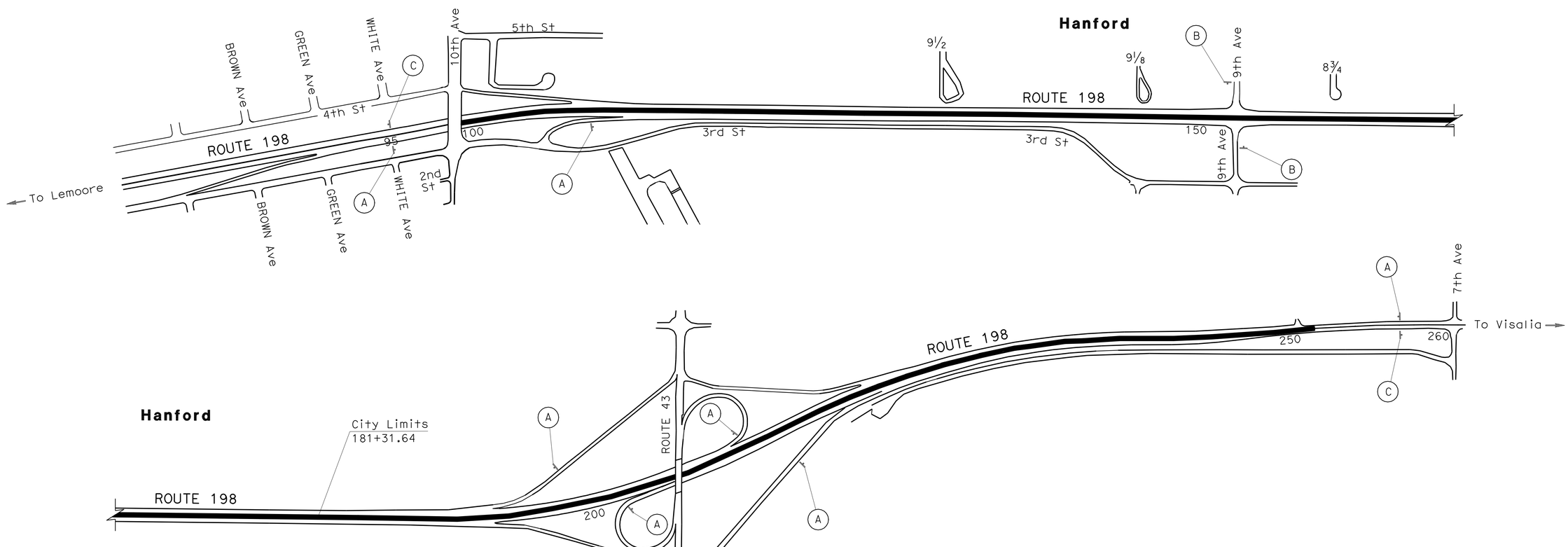

CONSTRUCTION AREA SIGNS

NO SCALE

CS-1

THIS PLAN ACCURATE FOR CONSTRUCTION AREA SIGNS WORK ONLY.

STATE OF CALIFORNIA - DEPARTMENT OF TRANSPORTATION
Caltrans
TRAFFIC DESIGN

FUNCTIONAL SUPERVISOR: MOHAMMED QATAMI
CALCULATED-DESIGNED BY: SOFIAN DAWOOD
CHECKED BY: ANDREY CHEVYCHALOV
REVISED BY
DATE REVISED

LAST REVISION DATE PLOTTED => 14-JAN-2010
TIME PLOTTED => 13:50
09-30-09

Dist	COUNTY	ROUTE	POST MILES TOTAL PROJECT	SHEET No.	TOTAL SHEETS
06	Kin	198	R19.0/T21.7	41	53

AChevychalov 07-02-09
REGISTERED CIVIL ENGINEER DATE

1-11-10
PLANS APPROVAL DATE

REGISTERED PROFESSIONAL ENGINEER
ANDREY CHEVYCHALOV
No. 68378
Exp. 9-30-11
CIVIL
STATE OF CALIFORNIA

THE STATE OF CALIFORNIA OR ITS OFFICERS OR AGENTS SHALL NOT BE RESPONSIBLE FOR THE ACCURACY OR COMPLETENESS OF ELECTRONIC COPIES OF THIS PLAN SHEET.

PAVEMENT DELINEATION QUANTITIES

LOCATION	DIRECTION	DETAIL No.	PAVEMENT MARKER RETROREFLECTIVE TYPE H YELLOW (ONE-WAY)	THERMOPLASTIC TRAFFIC STRIPE (SPRAYABLE) 4"	REMOVE PAVEMENT MARKER
			EA	LF	EA
Sta 111+08 TO Sta 155+55	EB	25	94	4,447	94
Sta 111+08 TO Sta 161+05	WB	25	105	4,997	105
Sta 165+03 TO Sta 255+00	EB	25	188	8,997	188
Sta 170+55 TO Sta 255+00	WB	25	177	8,445	177
TOTAL			542	25,784	542

SIGN QUANTITIES

SIGN MESSAGE	REMOVE ROADSIDE SIGN	METAL (RAIL MOUNTED SIGN)	REMARKS
	EA	LB	
CROSS TRAFFIC AHEAD	1	120	SALVAGE SIGN PANEL AND REUSE
CROSS TRAFFIC AHEAD	1	120	SALVAGE SIGN PANEL AND REUSE
END FREEWAY 1/2 MILE	1	120	SALVAGE SIGN PANEL AND REUSE
END DIVIDED ROAD	1	120	SALVAGE SIGN PANEL AND REUSE
LANE ENDS (SYMBOL) DO NOT PASS	1	130	SALVAGE SIGN PANEL AND REUSE
TOTAL	5	610	

LOCATIONS OF THE NEW SIGNS ARE THE SAME AS EXISTING SIGNS OR AS DIRECTED BY THE ENGINEER.

PAVEMENT DELINEATION AND SIGN QUANTITIES

PDQ-1

STATE OF CALIFORNIA - DEPARTMENT OF TRANSPORTATION
Caltrans
TRAFFIC DESIGN

FUNCTIONAL SUPERVISOR: MOHAMMED QATAMI
CALCULATED-DESIGNED BY: SOFIAN DAWOOD
CHECKED BY: ANDREY CHEVYCHALOV
REVISED BY
DATE REVISED

LAST REVISION 09-30-09
DATE PLOTTED => 14-JAN-2010
TIME PLOTTED => 13:50

Dist	COUNTY	ROUTE	POST MILES TOTAL PROJECT	SHEET No.	TOTAL SHEETS
06	Kin	198	R19.0/T21.7	42	53

REGISTERED CIVIL ENGINEER 10-15-09 DATE

1-11-10
PLANS APPROVAL DATE

REGISTERED PROFESSIONAL ENGINEER Abdul Baker No. 55322 Exp. 12-31-10 CIVIL STATE OF CALIFORNIA

THE STATE OF CALIFORNIA OR ITS OFFICERS OR AGENTS SHALL NOT BE RESPONSIBLE FOR THE ACCURACY OR COMPLETENESS OF SCANNED COPIES OF THIS PLAN SHEET.

ROADWAY QUANTITIES

STATION FROM	STATION TO	HOT MIX ASPHALT (TYPE A)	COLD PLANE ASPHALT CONCRETE PAVEMENT	TACK COAT	ROADWAY EXCAVATION	CLASS 2 AGGREGATE BASE	PLACE HOT MIX ASPHALT (MISCELLANEOUS AREA)	REMOVE CONCRETE	REMOVE PAVEMENT
		TON	SQYD	TON	CY	CY	SQYD	CY	CY
111+08.82	161+04.85	8008	12,720	6.03	2188	1890			
165+03.23	244+88.20								
111+08.82	111+31.82							50	35
PLACE HOT MIX ASPHALT (MISCELLANEOUS AREA)		16.43					118.46*		
TOTAL		8024.43	12,720	6.03	2188	1890	118.46	50	35

* QUANTITIES ARE FROM DQ-3 SHEET

CONCRETE BARRIER

STATION FROM	STATION TO	CONCRETE BARRIER (TYPE 60)	CONCRETE BARRIER (TYPE 60C)	CONCRETE BARRIER (TYPE 60E)	REMOVE MBGR
		LF	LF	LF	LF
111+08.82	155+33.47	4,424.65			
170+76.48	207+70.00	3,693.52			
207+70.00	208+70.00		100		
208+70.00	211+20.00	250			
211+20.00	212+20.00		100		
212+20.00	213+70.00	150			
213+70.00	215+10.00		140		
215+10.00	216+10.45	100.45			
216+10.45	216+94.95			84.5	309
216+94.95	217+40.00		45.05		
217+40.00	226+20.00	880			
226+20.00	227+40.00		120		
227+40.00	231+00.00	360			
231+00.00	232+00.00		100		
232+00.00	233+20.00	120			
233+20.00	238+40.00		520		
238+40.00	242+80.00	440			
242+80.00	243+88.20		108.2		
TOTAL		10,418.62	1233.25	84.5	309

RECOLATE CRASH CUSHION

CRASH CUSHION	EA
Sta 111+08.82 TO 155+31.97	1
TOTAL	1

TEMPORARY DRAINAGE INLET PROTECTION

STATION	EA
112+86.97 Rte 198	1
123+57.61 Rte 198	1
138+57.54 Rte 198	1
143+57.84 Rte 198	1
180+57.65 Rte 198	1
190+57.79 Rte 198	1
206+61.67 Rte 198	1
210+57.99 Rte 198	1
212+57.30 Rte 198	1
214+36.02 Rte 198	1
215+83.36 Rte 198	1
218+39.15 Rte 198	1
218+52.47 Rte 198	1
219+55.14 Rte 198	1
221+57.07 Rte 198	1
230+58.77 Rte 198	1
254+56.87 Rte 198	1
TOTAL	17

ALTERNATIVE CRASH CUSHION SYSTEM

CRASH CUSHION	EA
Sta 170+54.97 TO 170+77.97	1
Sta 243+88.20 TO 244+11.20	1
TOTAL	2

REMOVE CRASH CUSHION (SAND FILLED)

CRASH CUSHION	EA
Sta 214+55.88	1
Sta 217+13.00	1
TOTAL	2

WILDLIFE PASSAGE WAY (TYPE L)

STATION	(N) EA
123+72.80 Rte 198	1
129+53.60 Rte 198	1
136+40.00 Rte 198	1
207+15.20 Rte 198	1
227+74.40 Rte 198	1

(N) = NOT A SEPARATE PAY ITEM, FOR INFORMATION ONLY

SUMMARY OF QUANTITIES

Q-1

STATE OF CALIFORNIA - DEPARTMENT OF TRANSPORTATION
Caltrans DESIGN

FUNCTIONAL SUPERVISOR: RORY QUINCE
CALCULATED-DESIGNED BY: ELTAHIR ATAELGEED
CHECKED BY: GURJOT GILL
REVISED BY
DATE REVISED

LAST REVISION 10-14-09
DATE PLOTTED => 14-JAN-2010
TIME PLOTTED => 13:50

Dist	COUNTY	ROUTE	POST MILES TOTAL PROJECT	SHEET No.	TOTAL SHEETS
06	Kin	198	R19.0/T21.7	43	53

REGISTERED CIVIL ENGINEER 07-02-09 DATE

1-11-10
PLANS APPROVAL DATE

REGISTERED PROFESSIONAL ENGINEER ANDREY CHEVYCHALOV No. 68378 Exp. 9-30-11 CIVIL STATE OF CALIFORNIA

THE STATE OF CALIFORNIA OR ITS OFFICERS OR AGENTS SHALL NOT BE RESPONSIBLE FOR THE ACCURACY OR COMPLETENESS OF SCANNED COPIES OF THIS PLAN SHEET.

NOTES: (BARRIER MOUNTED SIGN)

1. FOR DETAILS NOT SHOWN, SEE STANDARD PLANS.
2. ALL BOLTS SHALL HAVE A WASHER UNDER THE NUT. BOLTS THROUGH POST SHALL BE 1/2" DIAMETER BOLTS THROUGH SIGN PANEL AND BRACE SHALL BE 3/8" DIAMETER. REAM HOLES IN SIGN AS REQUIRED.
3. ALL STEEL TO BE GALVANIZED.
4. FOR LOCATION OF SIGNS, SEE PDQ-1.

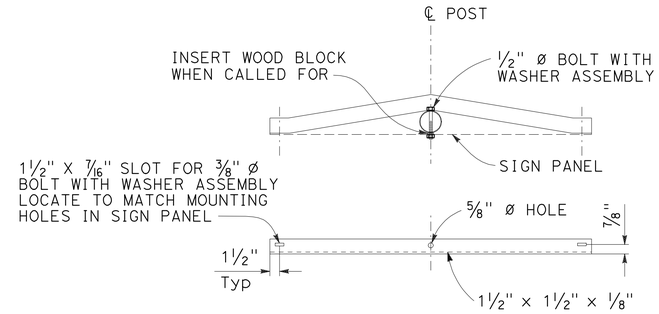

BACK BRACE DETAILS

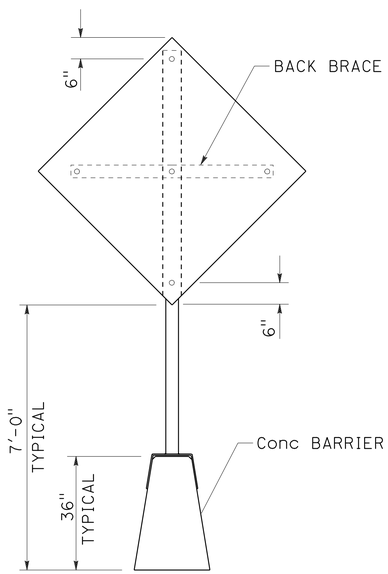

SECTION

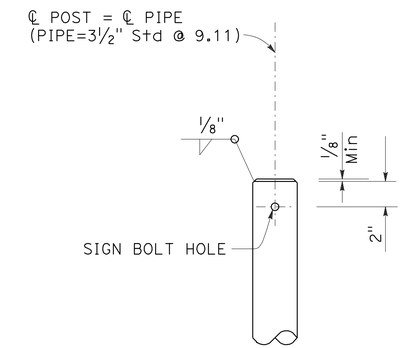

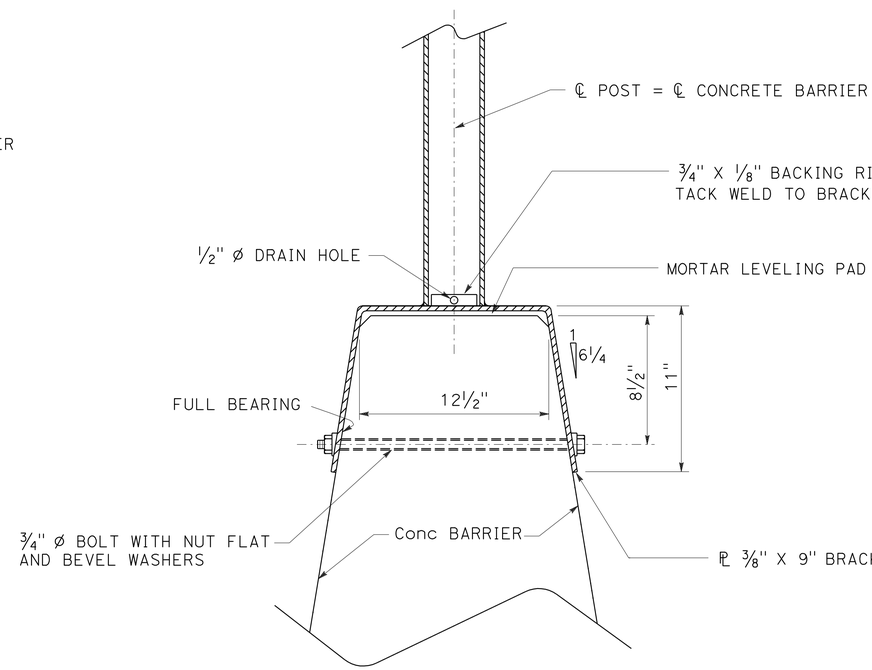

SECTION A-A

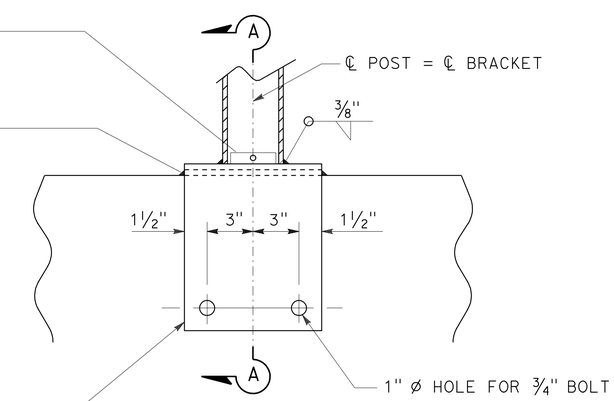

ELEVATION

BASE PLATE, ANCHORAGE & TOP OF POST DETAILS
BARRIER MOUNTED SIGN

SIGN DETAILS

NO SCALE **SD-1**

STATE OF CALIFORNIA - DEPARTMENT OF TRANSPORTATION
Caltrans
TRAFFIC DESIGN
FUNCTIONAL SUPERVISOR MOHAMMED QATAMI
CALCULATED-DESIGNED BY SOFIAN DAWOOD
CHECKED BY ANDREY CHEVYCHALOV
REVISED BY
DATE REVISED

LAST REVISION 09-30-09
DATE PLOTTED => 14-JAN-2010
TIME PLOTTED => 13:50

DIST	COUNTY	ROUTE	POST MILES TOTAL PROJECT	SHEET NO.	TOTAL SHEETS
06	Kin	198	R19.0/T21.7	44	53

Randell D. Hiatt
REGISTERED CIVIL ENGINEER

June 6, 2008
PLANS APPROVAL DATE

REGISTERED PROFESSIONAL ENGINEER Randell D. Hiatt No. C50200 Exp. 6-30-09 CIVIL STATE OF CALIFORNIA

The State of California or its officers or agents shall not be responsible for the accuracy or completeness of electronic copies of this plan sheet.

To accompany plans dated 1-11-10

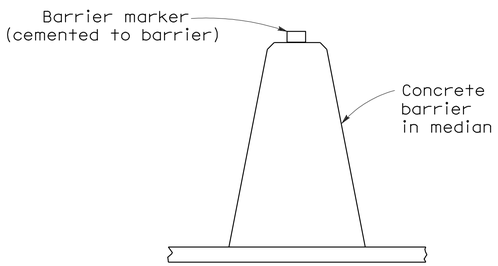

CONCRETE BARRIER TYPE 60 DELINEATION

See Notes 7 and 8

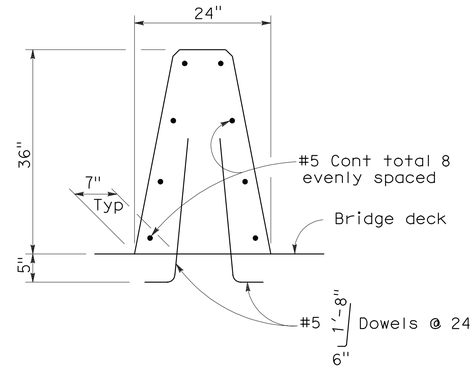

CONCRETE BARRIER TYPE 60A

Details similar to Type 60 except as noted.

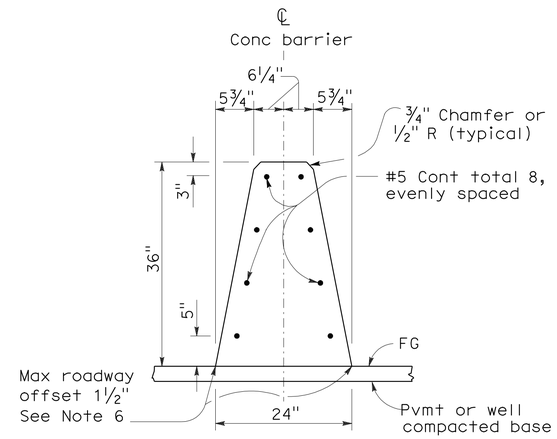

CONCRETE BARRIER TYPE 60

NOTES:

1. See Standard Plan A76B for details of Concrete Barrier Type 60 end anchors, connection to structures and transitions to Concrete Barrier Type 50 and Concrete Barrier Type 60S.
2. See Standard Plan A76C for Concrete Barrier Type 60 transitions at bridge column and sign pedestals.
3. Where glare screen is required on Concrete Barrier Type 60, use Concrete Barrier Type 60G.
4. Where the concrete barrier is added to the face of existing concrete structure, match existing weep holes.
5. Expansion joints in concrete barrier shall be located at all deck, pavement and principal wall joints. Expansion joint filler material shall be the same size as joint or ½" minimum.
6. Where roadway offset is greater than 1½", see Concrete Barrier Type 60C.
7. Barrier delineation to be used when required by the Special Provisions.
8. Spacing of barrier markers to match spacing of raised pavement markers on the adjacent median edgeline pavement delineation.
9. Reinforcing stirrup not required for roadway offsets less than 1'-0".
10. For roadway surfaces offset greater than 1½" to 3", no rebars required. For roadway surfaces offset greater than 3" to 8" use two #4 rebars at 3" above the lower roadway surface. For roadway surfaces offset greater than 8" to 12", use two #4 rebars at 3" above the lower roadway surface and two #4 rebars at 8" above the lower roadway surface. For roadway surfaces offset greater than 12" to 36", use two #4 rebars at 3" above the lower roadway surface and two #4 rebars at every 8" increment vertical spacing above the first two #4 rebars.

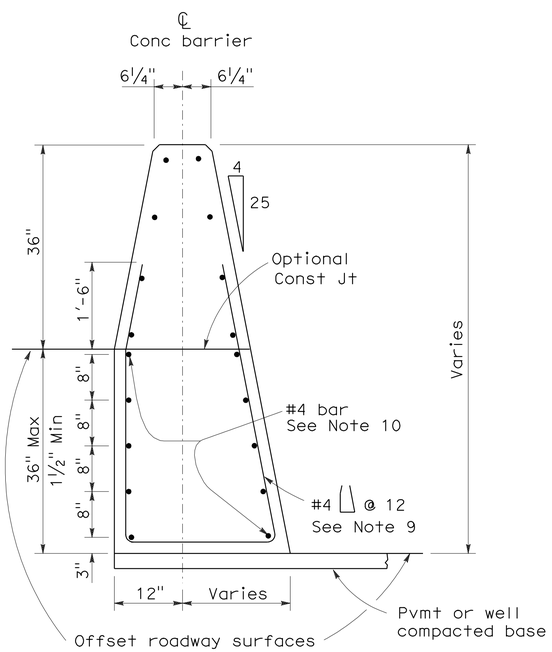

CONCRETE BARRIER TYPE 60C

Details similar to Type 60 except as noted.
Concrete barrier end anchor when necessary.
36" roadway surfaces offset shown.

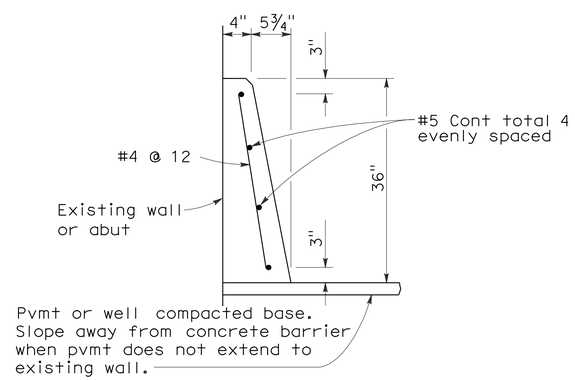

CONCRETE BARRIER TYPE 60D

STATE OF CALIFORNIA
DEPARTMENT OF TRANSPORTATION

CONCRETE BARRIER TYPE 60

NO SCALE

RSP A76A DATED JUNE 6, 2008 SUPERSEDES STANDARD PLAN A76A
DATED MAY 1, 2006 - PAGE 29 OF THE STANDARD PLANS BOOK DATED MAY 2006.

REVISED STANDARD PLAN RSP A76A

2006 REVISED STANDARD PLAN RSP A76A

5-21-08

DIST	COUNTY	ROUTE	POST MILES TOTAL PROJECT	SHEET NO.	TOTAL SHEETS
06	Kin	198	R19.0/T21.7	45	53

Raymond Don Tsztoo
REGISTERED CIVIL ENGINEER

January 18, 2008
PLANS APPROVAL DATE

REGISTERED PROFESSIONAL ENGINEER Raymond Don Tsztoo No. C37332 Exp. 6-30-08 CIVIL STATE OF CALIFORNIA

The State of California or its officers or agents shall not be responsible for the accuracy or completeness of electronic copies of this plan sheet.

To accompany plans dated 1-11-10

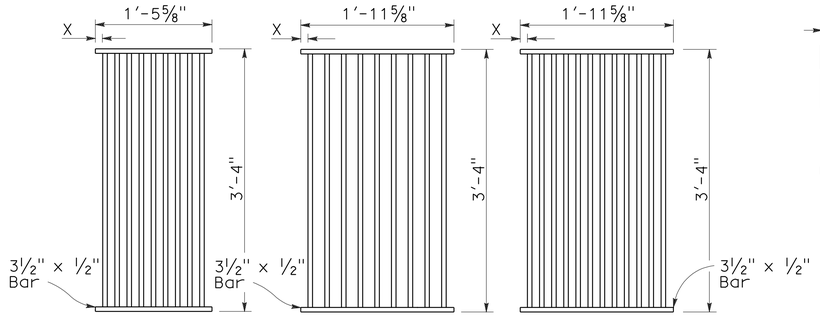

TYPE 18-9

1⅜" Clear spacing. Use within the roadbed on highways where bicycles and pedestrians are excluded.

TYPE 24-9

2" Clear spacing. Use in locations off the roadbed on all types of highways.

TYPE 24-12

1⅜" Clear spacing. Use within the roadbed on highways where bicycles and pedestrians are excluded.

RECTANGULAR GRATE DETAILS

(See table below)

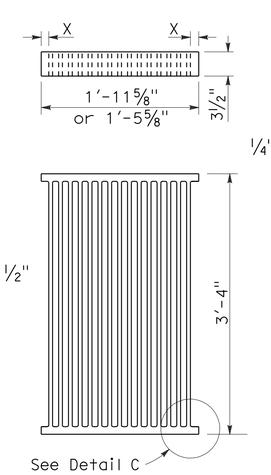

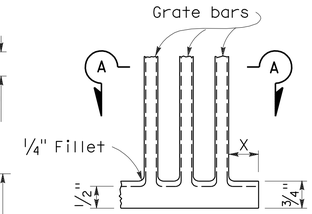

DETAIL C

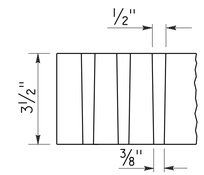

SECTION A-A

ALTERNATIVE CAST NODULAR IRON GRATE OR CAST STEEL GRATE

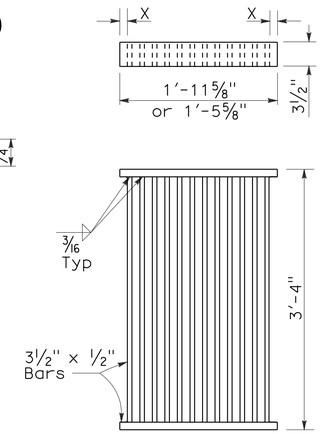

ALTERNATIVE WELDED GRATE

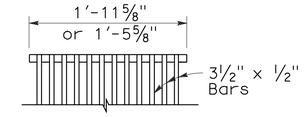

CAST END BLOCK

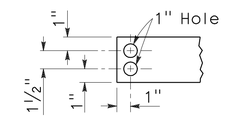

END OF BAR

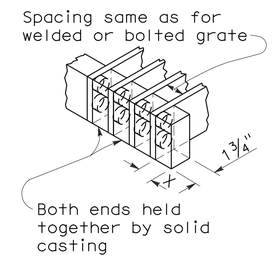

ALTERNATIVE CAST NODULAR IRON OR CAST STEEL END BLOCK GRATE

NOTES:

1. Grate type numbers refer to approximate width of grate in inches and number of bars, respectively.
2. Contractor has the option of using cast nodular iron, cast steel, welded, bolted, or cast end block grate.
3. See Special Provisions for requirements pertaining to galvanizing or asphalt dipping of grates and frames.
4. Rounded top of bars optional on all grates.
5. Pipe inlets with a grate shall be placed so that bars parallel direction of principle surface flow.
6. Full penetration butt welds may be substituted for the fillet welds on all anchors.
7. Standard square, hexagon, round or equivalent headed anchors may be substituted for the right angle hooks on the anchors shown on this plan.
8. Grate and frame weights are based on welded grates (weights of face angles, steps, protection bars, etc. are not included).

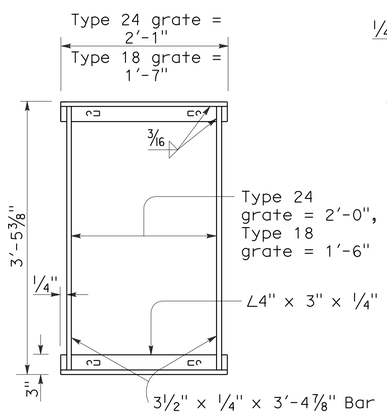

TYPICAL FRAME

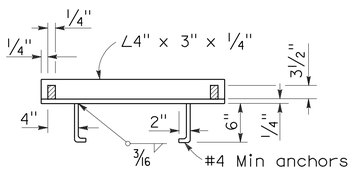

CROSS SECTION

(Thru frame)

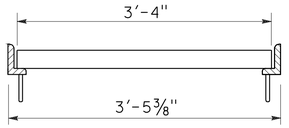

LONGITUDINAL SECTION

(Thru frame and grate)

RECTANGULAR FRAME DETAILS

(For all rectangular grates)

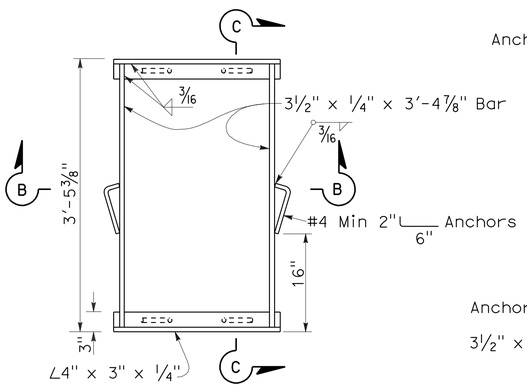

TYPICAL FRAME

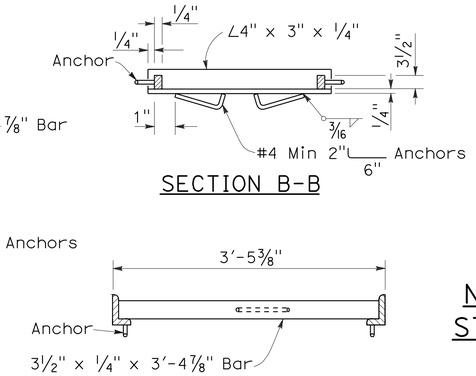

SECTION B-B

SECTION C-C

ALTERNATIVE ANCHOR FOR RECTANGULAR FRAME

(For details not shown, See Rectangular Frame Details)

INLET TYPE	GRATE TYPE	No. OF GRATES	WEIGHT LB
GDO	24-12	2	634
GOL-7	24-12	1	326
GOL-10	24-12	1	326
GO,G1,G2,G3,G4 (TYPE 24)	24-9	1	263
	24-12	1	326
G4 (TYPE 18),G5,G6	18-9	1	249
GT1	18-9	2	498
GT2	18-9	2	498
GT3	24-12	2	652
GT4	24-12	2	652
TRASH RACK			22

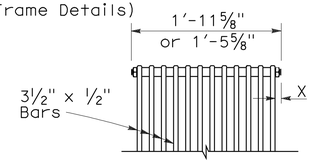

BOLTED END BLOCK

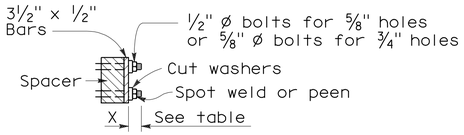

BOLTING DETAIL

ALTERNATIVE BOLTED GRATE

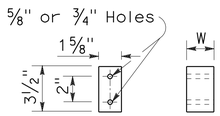

BAR SPACER

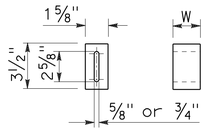

ALTERNATIVE SPACER

W = 1⅜" or 2"

GRATE BAR SPACING TABLE

TYPE	No. OF BARS	CLEAR BAR SPACING	X
18-9	9	1⅜"	1 1/16"
24-9	9	2"	1 9/16"
24-12	12	1⅜"	1¼"

INLET TYPE	COVER TYPE	WEIGHT LB
OS	PLATE	174
OL-7	PLATE	170
OL-10	PLATE	170
OL-14	PLATE	170
OL-21	PLATE	170
OCP	PLATE	112
OCPI	PLATE	112
OCPI	REDWOOD	42
OMP	PLATE	177
OMPI	PLATE	177

BASIS FOR MISC IRON & STEEL FINAL PAY WEIGHTS FOR DRAINAGE INLETS

(See General Notes, No 8)

STATE OF CALIFORNIA
DEPARTMENT OF TRANSPORTATION

GRATE DETAILS

NO SCALE

RSP D77A DATED JANUARY 18, 2008 SUPERSEDES STANDARD PLAN D77A DATED MAY 1, 2006 - PAGE 155 OF THE STANDARD PLANS BOOK DATED MAY 2006.

REVISED STANDARD PLAN RSP D77A

2006 REVISED STANDARD PLAN RSP D77A

12-14-07

DIST	COUNTY	ROUTE	POST MILES TOTAL PROJECT	SHEET NO.	TOTAL SHEETS
06	Kin	198	R19.0/T21.7	46	53

Randell D. Hiatt
REGISTERED CIVIL ENGINEER

June 6, 2008
PLANS APPROVAL DATE

REGISTERED PROFESSIONAL ENGINEER
Randell D. Hiatt
No. C50200
Exp. 6-30-09
CIVIL
STATE OF CALIFORNIA

The State of California or its officers or agents shall not be responsible for the accuracy or completeness of electronic copies of this plan sheet.

To accompany plans dated 1-11-10

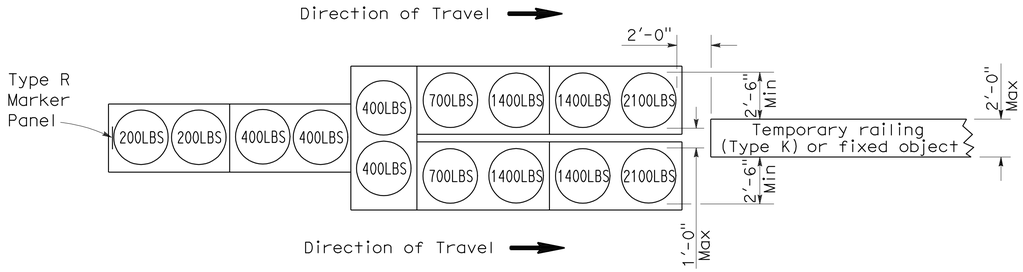

ARRAY 'TU14'

Approach speed 45 mph or more

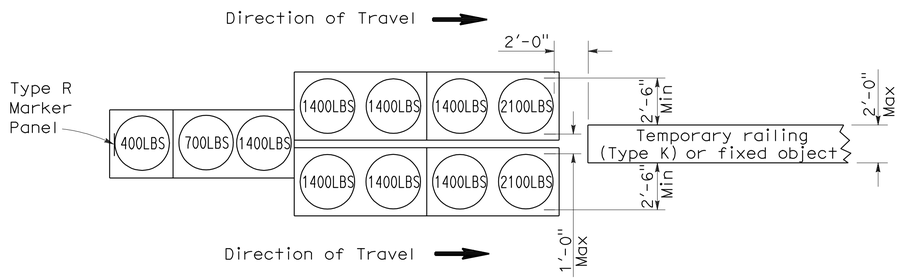

ARRAY 'TU11'

Approach speed less than 45 mph

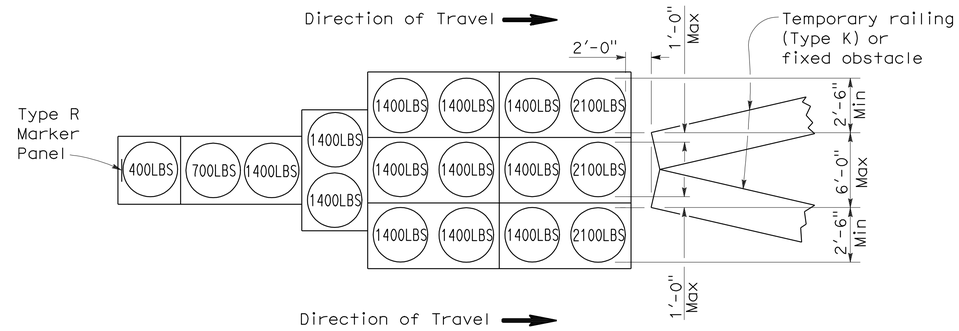

ARRAY 'TU17'

Approach speed less than 45 mph

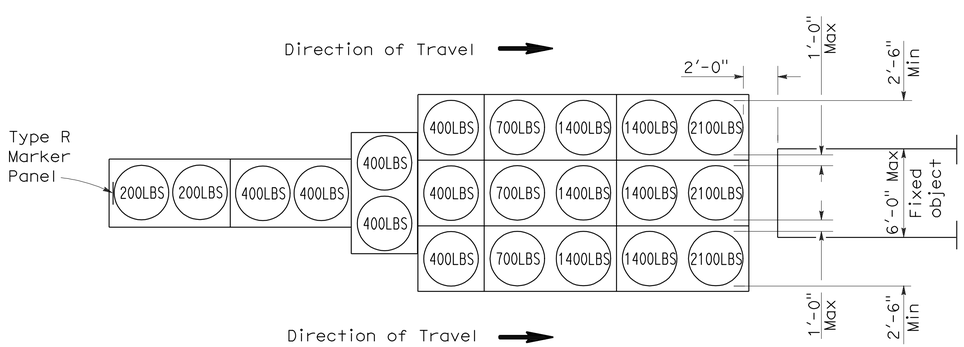

ARRAY 'TU21'

Approach speed 45 mph or more

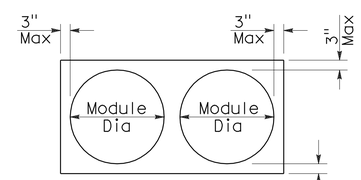

PLAN

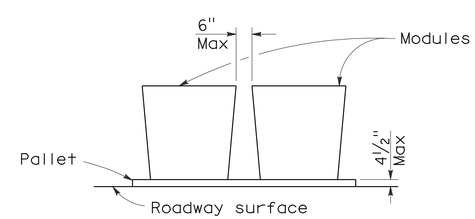

ELEVATION

CRASH CUSHION PALLET DETAIL

See Note 7

NOTES:

1. (XXX) Indicates sand filled module location and weight of sand in pounds for each module. Module spacing is based on the greater diameter of the module.
2. All sand weights are nominal.
3. Temporary crash cushion arrays shall not encroach on the traveled way.
4. Place the top of Type R marker panel 1" below the module lid.
5. Refer to Standard Plan A73B for marker details.
6. Approach speeds indicated conform to NCHRP 350 Report criteria.
7. Use of pallets is optional.

STATE OF CALIFORNIA
DEPARTMENT OF TRANSPORTATION

TEMPORARY CRASH CUSHION, SAND FILLED (UNIDIRECTIONAL)

NO SCALE

RSP T1A DATED JUNE 6, 2008 SUPERSEDES STANDARD PLAN T1A
DATED MAY 1, 2006 - PAGE 211 OF THE STANDARD PLANS BOOK DATED MAY 2006.

REVISED STANDARD PLAN RSP T1A

2006 REVISED STANDARD PLAN RSP T1A

5-15-08

DIST	COUNTY	ROUTE	POST MILES TOTAL PROJECT	SHEET NO.	TOTAL SHEETS
06	Kin	198	R19.0/T21.7	47	53

Randell D. Hiatt
REGISTERED CIVIL ENGINEER

June 6, 2008
PLANS APPROVAL DATE

REGISTERED PROFESSIONAL ENGINEER
Randell D. Hiatt
No. C50200
Exp. 6-30-09
CIVIL
STATE OF CALIFORNIA

The State of California or its officers or agents shall not be responsible for the accuracy or completeness of electronic copies of this plan sheet.

To accompany plans dated 1-11-10

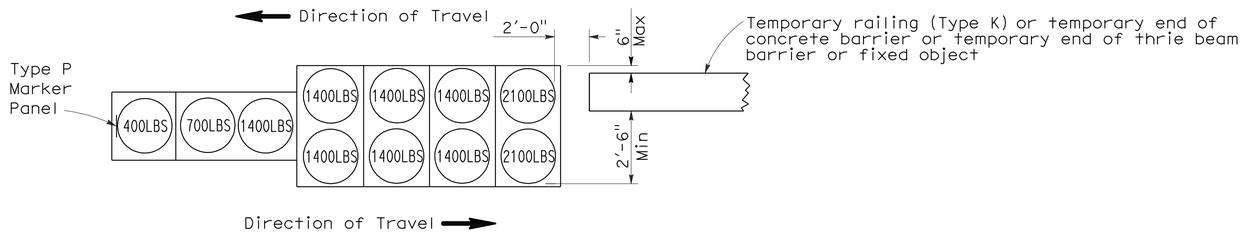

ARRAY 'TB11'

Approach speed less than 45 mph

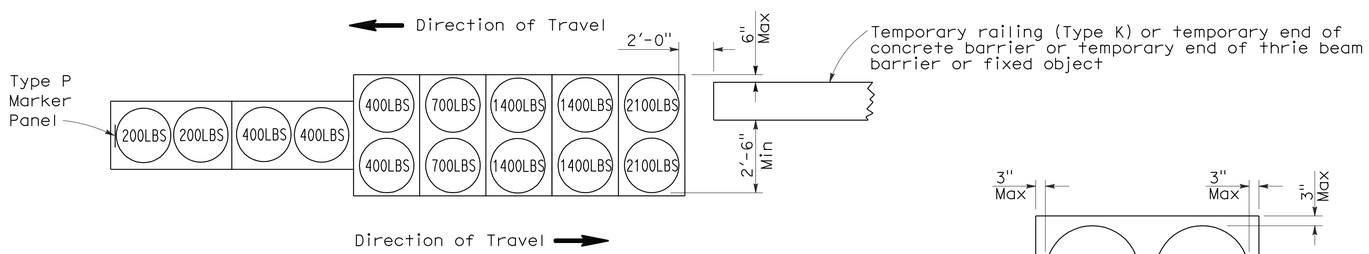

ARRAY 'TB14'

Approach speed 45 mph or more

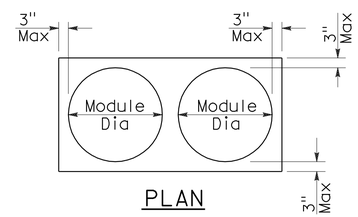

PLAN

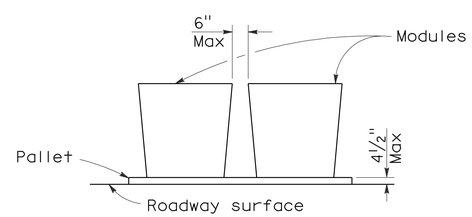

ELEVATION

CRASH CUSHION PALLET DETAIL

See Note 7

NOTES:

1. (XXX) Indicates sand filled module location and weight of sand in pounds for each module. Module spacing is based on the greater diameter of the module.
2. All sand weights are nominal.
3. Temporary crash cushion arrays shall not encroach on the traveled way.
4. Place the Type P marker panel so that the bottom of the panel rests upon the pallet.
5. Refer to Standard Plan A73B for marker details.
6. Approach speeds indicated conform to NCHRP 350 Report criteria.
7. Use of pallets is optional.

STATE OF CALIFORNIA
DEPARTMENT OF TRANSPORTATION

TEMPORARY CRASH CUSHION, SAND FILLED (BIDIRECTIONAL)

NO SCALE

RSP T1B DATED JUNE 6, 2008 SUPERSEDES STANDARD PLAN T1B
DATED MAY 1, 2006 - PAGE 212 OF THE STANDARD PLANS BOOK DATED MAY 2006.

REVISED STANDARD PLAN RSP T1B

2006 REVISED STANDARD PLAN RSP T1B

5-15-08

DIST	COUNTY	ROUTE	POST MILES TOTAL PROJECT	SHEET NO.	TOTAL SHEETS
06	Kin	198	R19.0/T21.7	48	53

Randell D. Hiatt
REGISTERED CIVIL ENGINEER

June 6, 2008
PLANS APPROVAL DATE

REGISTERED PROFESSIONAL ENGINEER
Randell D. Hiatt
No. C50200
Exp. 6-30-09
CIVIL
STATE OF CALIFORNIA

The State of California or its officers or agents shall not be responsible for the accuracy or completeness of electronic copies of this plan sheet.

To accompany plans dated 1-11-10

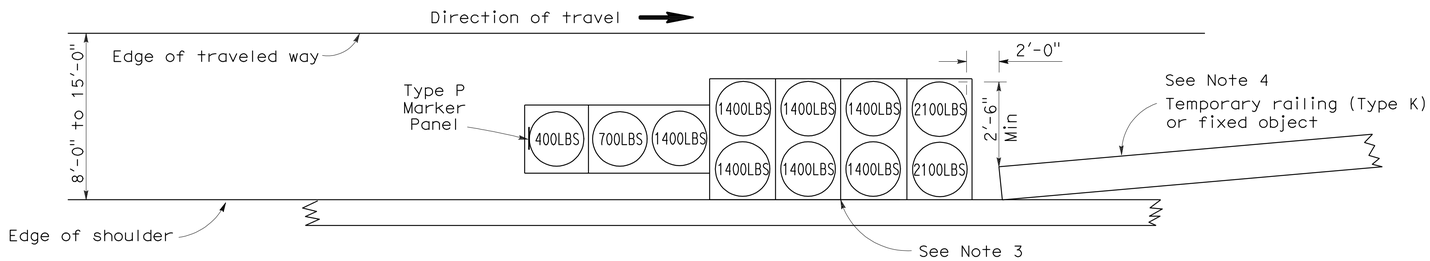

ARRAY 'TS11'

Approach speed less than 45 mph
See Note 9

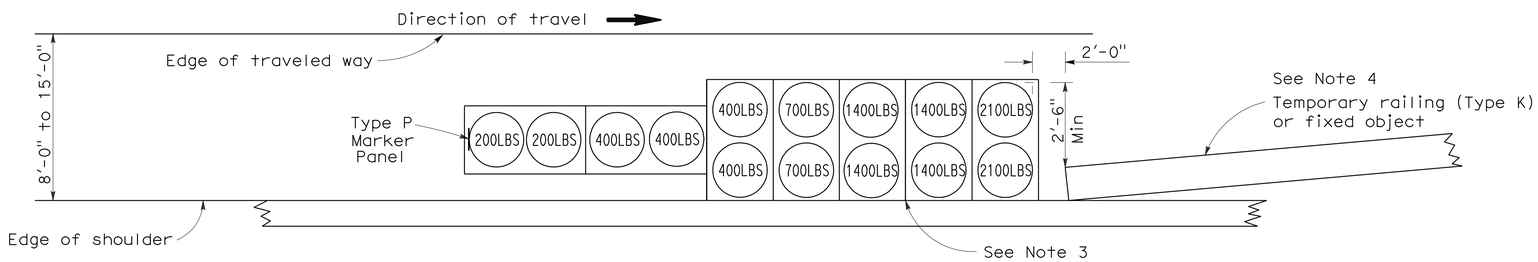

ARRAY 'TS14'

Approach speed 45 mph or more
See Note 9

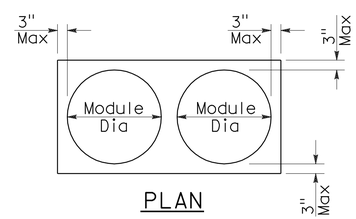

PLAN

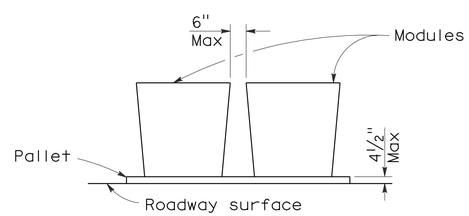

ELEVATION

CRASH CUSHION PALLET DETAIL

See Note 11

NOTES:

1. (XXX) Indicates sand filled module location and weight of sand in pounds for each module. Module spacing is based on the greater diameter of the module.
2. All sand weights are nominal.
3. The temporary crash cushion arrays shown on this plan shall be used only in locations where there will be traffic on one side of the temporary crash cushion array.
4. If the fixed object or approach end of the temporary railing is less than 15'-0" from the edge of traveled way, a temporary crash cushion is required in a construction or work zone.
5. Temporary crash cushion arrays shall not encroach on the traveled way.
6. Arrays for median shoulders shall conform to details shown on this plan for outside shoulders.
7. Place the Type P marker panel so that the bottom of the panel rests upon the pallet and faces traffic.
8. Refer to Standard Plan A73B for marker details.
9. For shoulder widths less than 8'-0", appropriate approved crash cushion protection, other than sand filled modules, shall be provided at fixed objects and at approach ends of temporary railing. The specific type of crash cushion shall be as shown on the project plans or as specified in the Special Provisions, or if not shown on the project plans or specified in the Special Provisions, shall be as approved by the Engineer.
10. Approach speeds indicated conform to NCHRP 350 Report criteria.
11. Use of pallets is optional.

STATE OF CALIFORNIA
DEPARTMENT OF TRANSPORTATION

TEMPORARY CRASH CUSHION, SAND FILLED (SHOULDER INSTALLATIONS)

NO SCALE

RSP T2 DATED JUNE 6, 2008 SUPERSEDES STANDARD PLAN T2
DATED MAY 1, 2006 - PAGE 213 OF THE STANDARD PLANS BOOK DATED MAY 2006.

REVISED STANDARD PLAN RSP T2

2006 REVISED STANDARD PLAN RSP T2

5-15-08

DIST	COUNTY	ROUTE	POST MILES TOTAL PROJECT	SHEET NO.	TOTAL SHEETS
06	Kin	198	R19.0/T21.7	49	53

REGISTERED CIVIL ENGINEER

November 17, 2006
PLANS APPROVAL DATE

REGISTERED PROFESSIONAL ENGINEER
Greg W. Edwards
No. C36386
Exp. 6-30-08
CIVIL
STATE OF CALIFORNIA

The State of California or its officers or agents shall not be responsible for the accuracy or completeness of electronic copies of this plan sheet.

To accompany plans dated 1-11-10

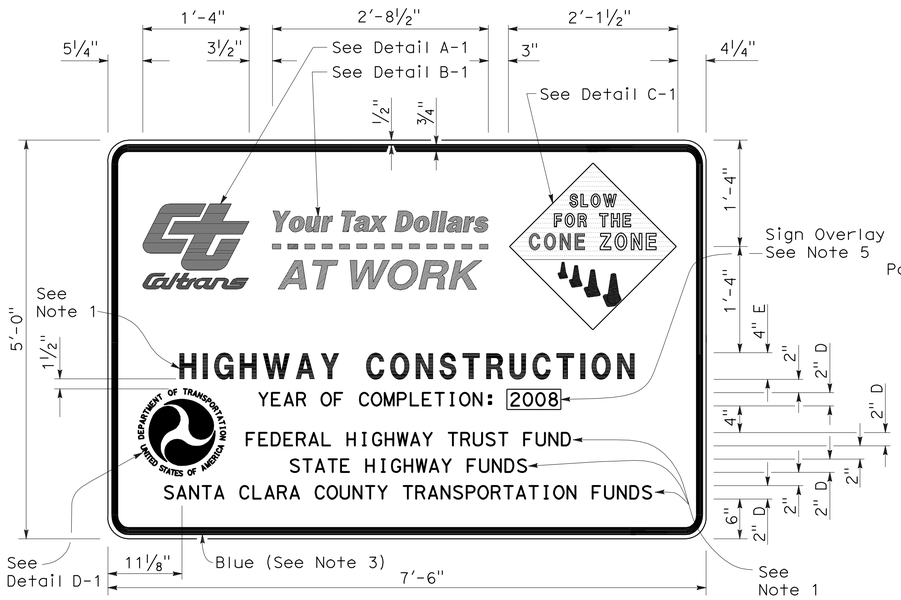

TYPE 1

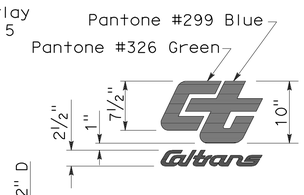

DETAIL A-1

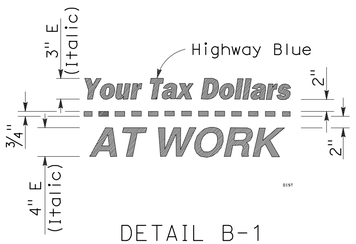

DETAIL B-1
(See Note 3)

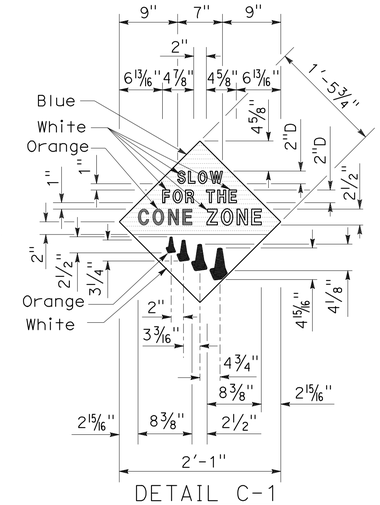

DETAIL C-1
(See Note 4)

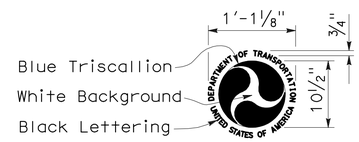

DETAIL D-1
(See Note 6)

NOTES:

1. The sign messages shown for type of project and fund types are examples only. See the Special Provisions for the applicable type of project and fund type messages to be used.
2. Except as otherwise shown, the legend of sign shall be black on a white background (non-reflective).
3. The border of the signs and details "B-1" and "B-2" shall be blue (non-reflective).
4. The diamond in details "C-1" and "C-2" shall be blue for the background of message, " SLOW FOR THE CONE ZONE", and white background for the orange cones. The color and type of font for the "SLOW FOR THE CONE ZONE" message shall be: "SLOW" white D; "FOR THE" white D; "CONE" orange Arial font; "ZONE" white Arial font.
5. Year of completion of project construction shown on the overlay is an example only. See the Special Provisions.
6. Use when the Project involves Federal Highway Trust Fund.

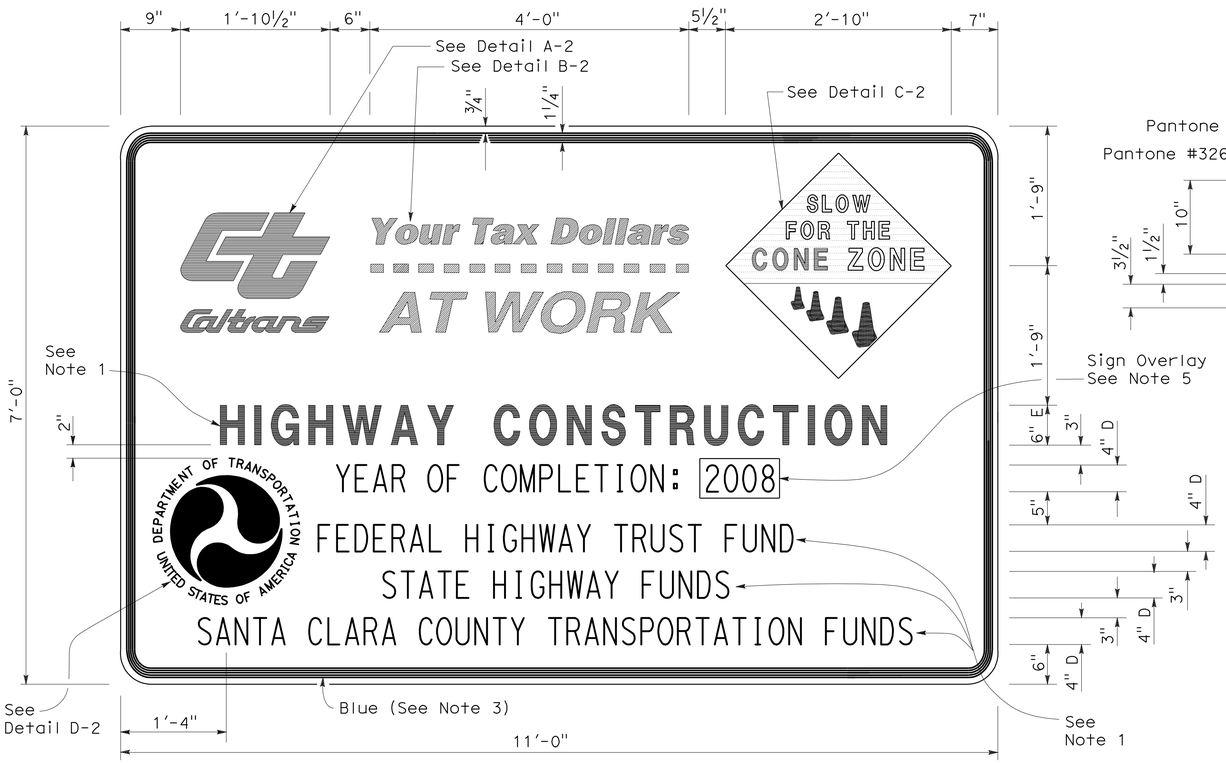

TYPE 2

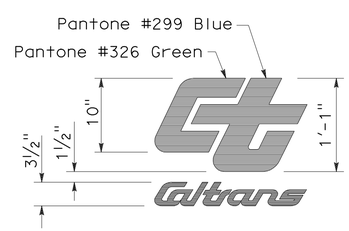

DETAIL A-2

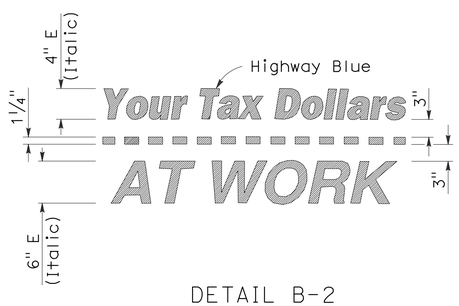

DETAIL B-2
(See Note 3)

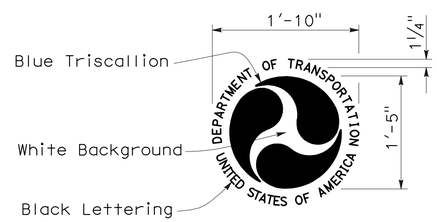

DETAIL D-2
(See Note 6)

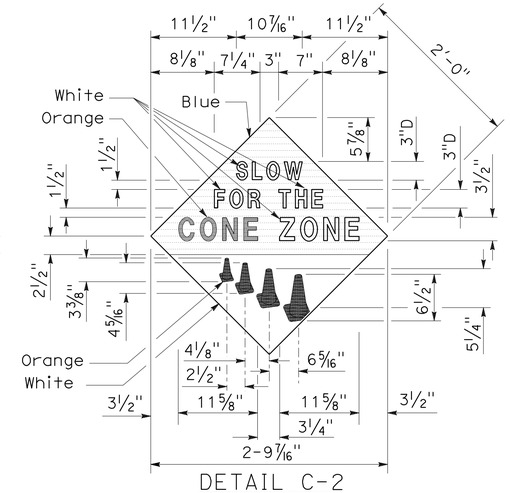

DETAIL C-2
(See Note 4)

STATE OF CALIFORNIA
DEPARTMENT OF TRANSPORTATION

CONSTRUCTION PROJECT FUNDING IDENTIFICATION SIGNS

NO SCALE

RSP T7 DATED NOVEMBER 17, 2006 SUPERSEDES STANDARD PLAN T7
DATED MAY 1, 2006 - PAGE 217 OF THE STANDARD PLANS BOOK DATED MAY 2006.

REVISED STANDARD PLAN RSP T7

2006 REVISED STANDARD PLAN RSP T7

9-7-06

DIST	COUNTY	ROUTE	POST MILES TOTAL PROJECT	SHEET NO.	TOTAL SHEETS
06	Kin	198	R19.0/T21.7	50	53

LICENSED LANDSCAPE ARCHITECT

August 15, 2008
PLANS Approval DATE

LICENSED LANDSCAPE ARCHITECT
Robert B. Schott 3625
Signature
11-04-08
Renewal Date
08-11-08
Date
STATE OF CALIFORNIA

The State of California or its officers or agents shall not be responsible for the accuracy or completeness of electronic copies of this plan sheet.

To accompany plans dated 1-11-10

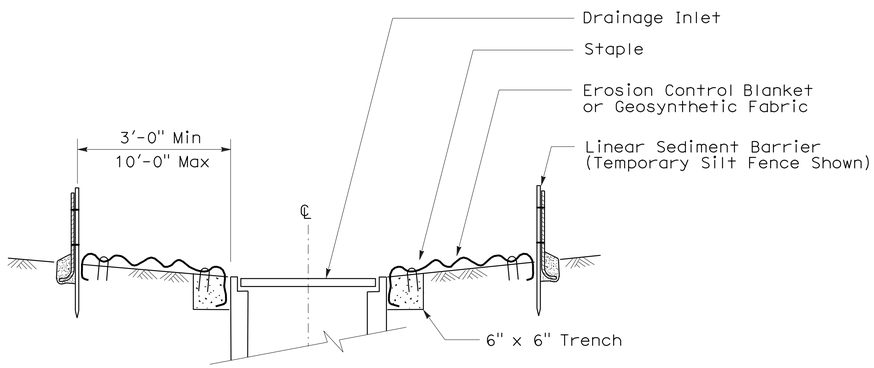

SECTION A-A

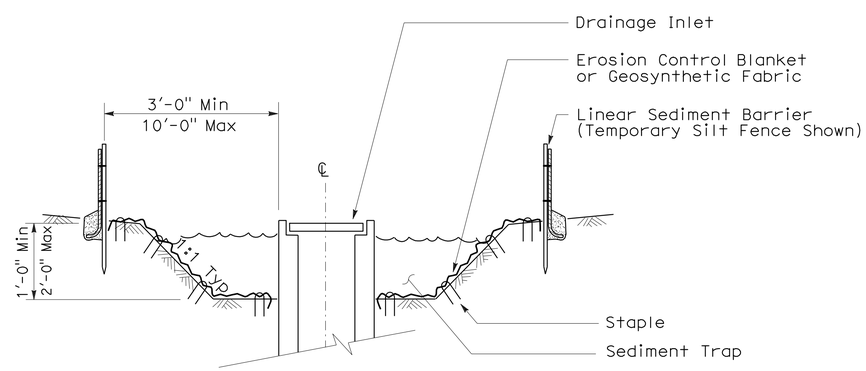

SECTION B-B

NOTES:

1. See Standard Plan T51 for Temporary Silt Fence.
2. Dimensions may vary to fit field conditions.

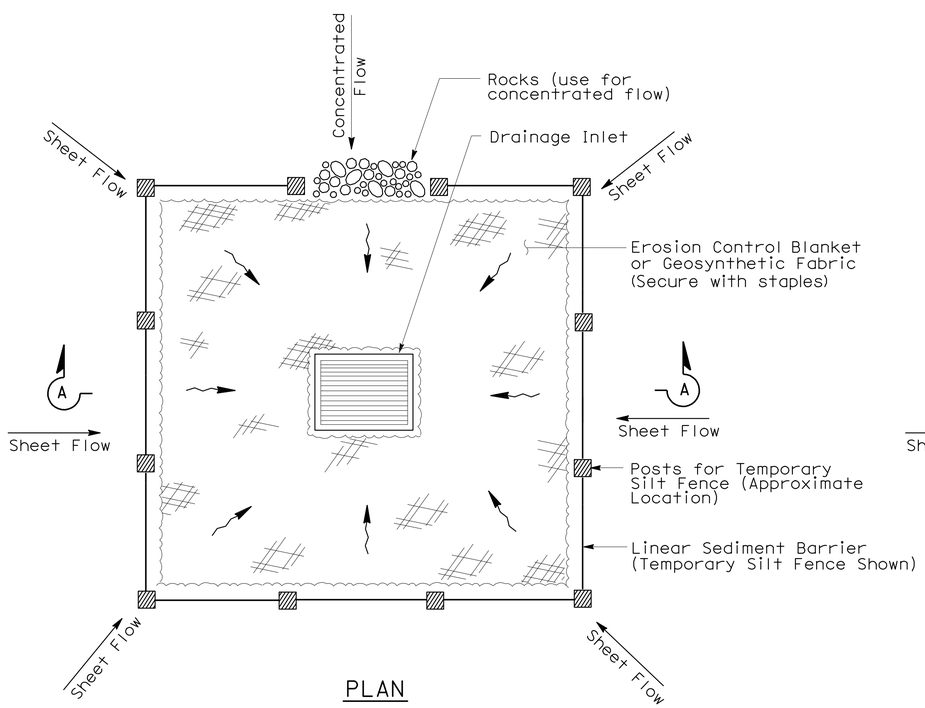

PLAN

TEMPORARY DRAINAGE
INLET PROTECTION (TYPE 1)

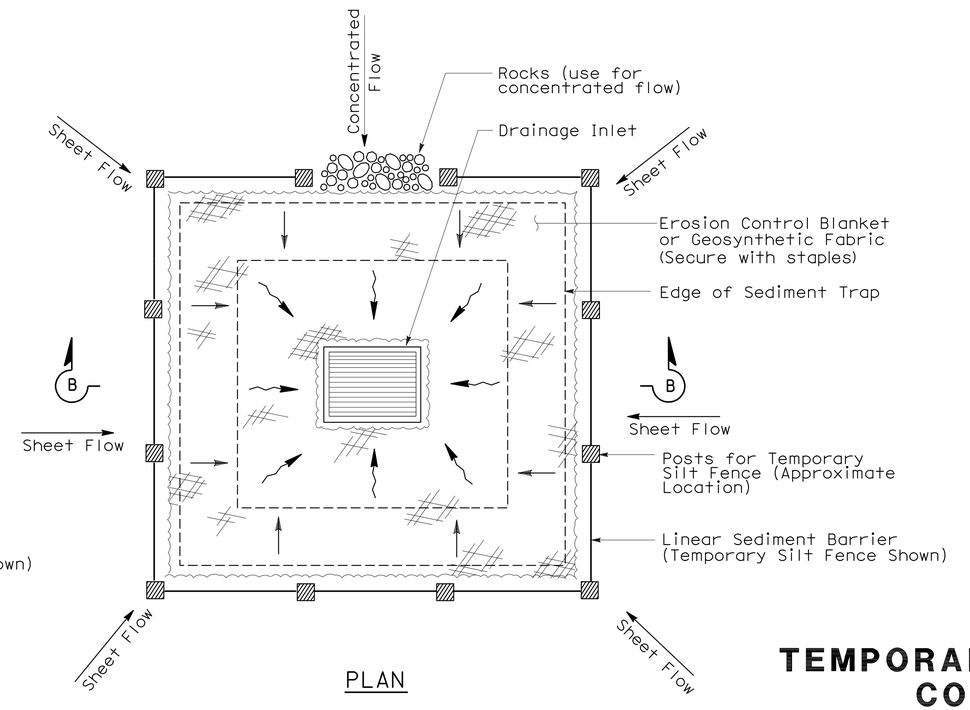

PLAN

TEMPORARY DRAINAGE
INLET PROTECTION (TYPE 2)
(EXCAVATED SEDIMENT TRAP)

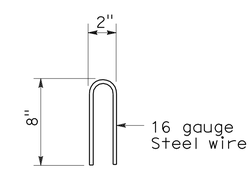

STAPLE DETAIL

STATE OF CALIFORNIA
DEPARTMENT OF TRANSPORTATION

TEMPORARY WATER POLLUTION CONTROL DETAILS (TEMPORARY DRAINAGE INLET PROTECTION)

NO SCALE

NSP T61 DATED AUGUST 15, 2008 SUPPLEMENTS
THE STANDARD PLANS BOOK DATED MAY 2006.

NEW STANDARD PLAN NSP T61

2006 NEW STANDARD PLAN NSP T61

7-11-08

DIST	COUNTY	ROUTE	POST MILES TOTAL PROJECT	SHEET NO.	TOTAL SHEETS
06	Kin	198	R19.0/T21.7	51	53

LICENSED LANDSCAPE ARCHITECT

August 15, 2008
PLANS APPROVAL DATE

LICENSED LANDSCAPE ARCHITECT Robert B. Schott 3625 Signature 11-04-08 Renewal Date 08-11-08 Date STATE OF CALIFORNIA

The State of California or its officers or agents shall not be responsible for the accuracy or completeness of electronic copies of this plan sheet.

To accompany plans dated 1-11-10

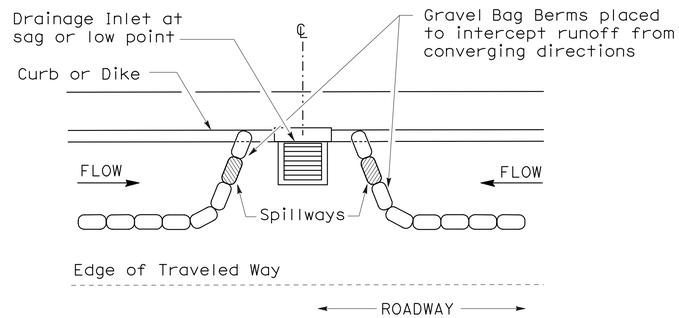

PLAN

CONFIGURATION FOR SAG POINT INLET (GRAVEL BAG BERM)

GRAVEL BAG BERM (TYPE 3A) SPACING TABLE

SLOPE OF ROADWAY (PERCENT)	1 to 3.9	4 to 5.9	6 to 7.9	8 to 10	10+
INTERVAL BETWEEN BERM	100′	75′	50′	25′	12′

For slope of less than 1%, install barriers only if erosion/sediment is prevalent

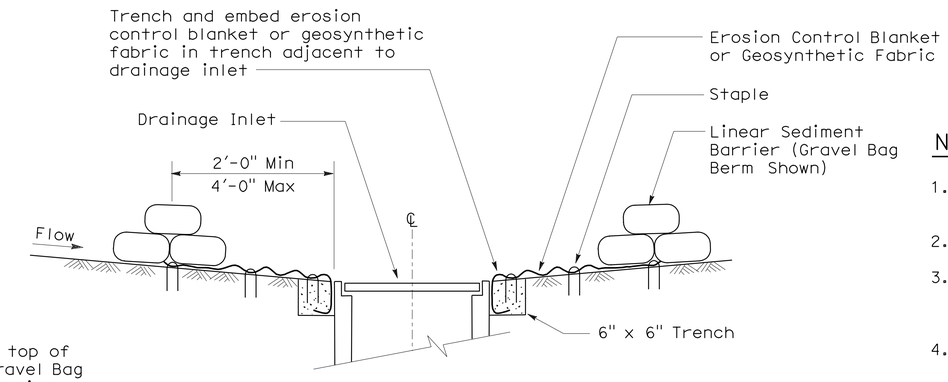

SECTION A-A

NOTES:

1. Place safety cones adjacent to drainage inlet protection.
2. Dimensions may vary to fit field conditions.
3. Install a minimum of 3 gravel bag berms upstream of each drainage inlet to be protected.
4. Position erosion control blanket or geosynthetic fabric at edge of concrete apron and secure in trench.
5. Erosion control blanket or geosynthetic fabric is not required if the area adjacent to the drainage inlet is vegetated or paved.

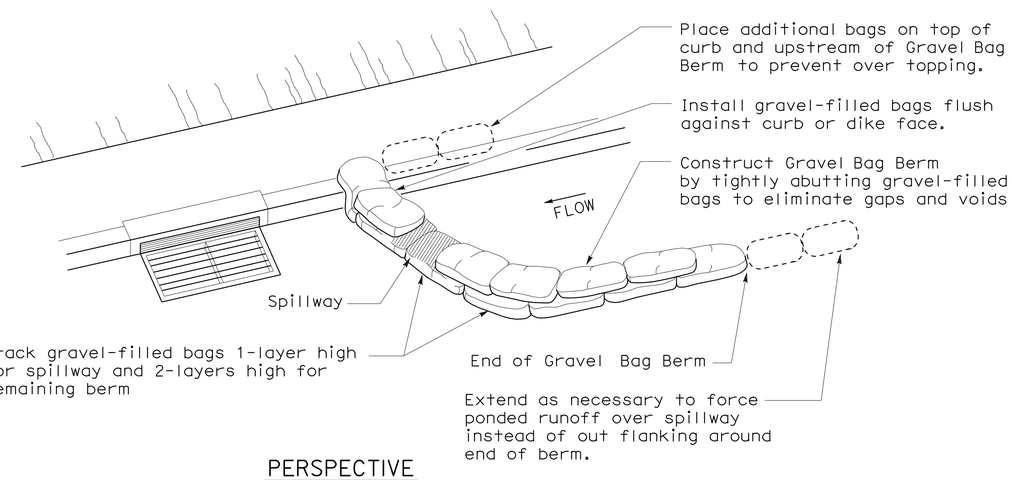

PERSPECTIVE

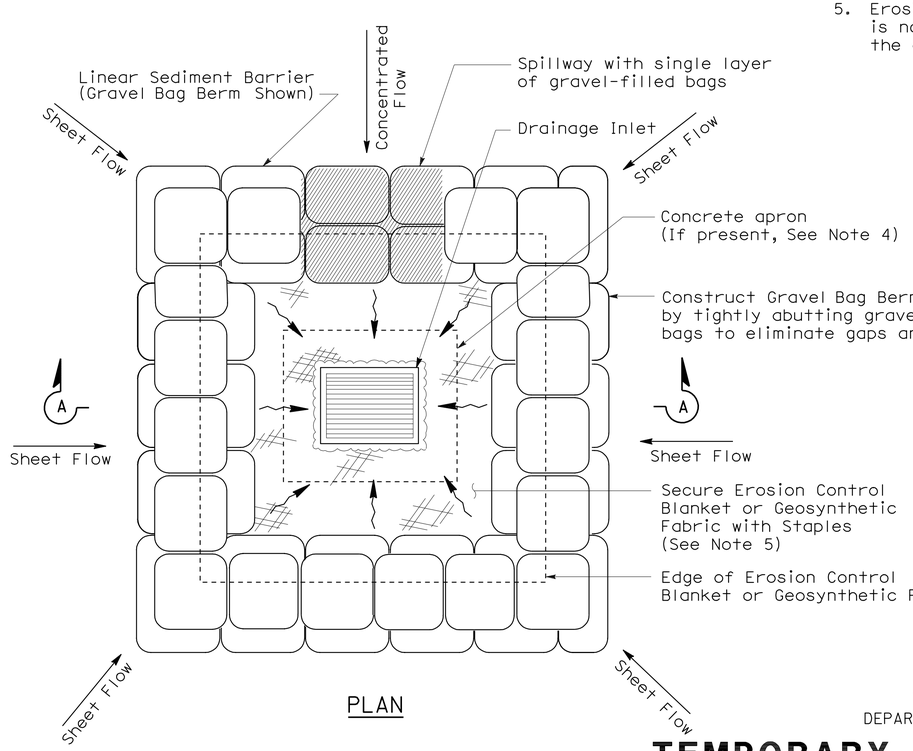

PLAN

TEMPORARY DRAINAGE INLET PROTECTION (TYPE 3B)

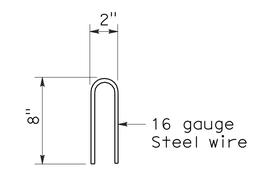

STAPLE DETAIL

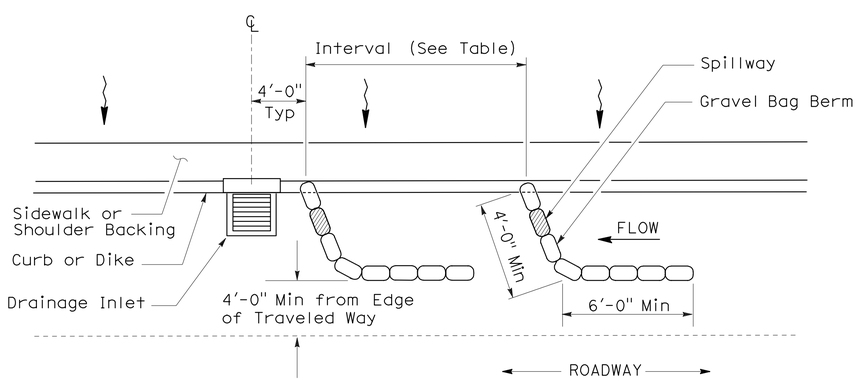

PLAN

TEMPORARY DRAINAGE INLET PROTECTION (TYPE 3A) (GRAVEL BAG BERM)

STATE OF CALIFORNIA
DEPARTMENT OF TRANSPORTATION

TEMPORARY WATER POLLUTION CONTROL DETAILS (TEMPORARY DRAINAGE INLET PROTECTION)

NO SCALE

NSP T62 DATED AUGUST 15, 2008 SUPPLEMENTS THE STANDARD PLANS BOOK DATED MAY 2006.

NEW STANDARD PLAN NSP T62

2006 NEW STANDARD PLAN NSP T62

7-11-08

DIST	COUNTY	ROUTE	POST MILES TOTAL PROJECT	SHEET NO.	TOTAL SHEETS
06	Kin	198	R19.0/T21.7	52	53

LICENSED LANDSCAPE ARCHITECT

August 15, 2008
PLANS APPROVAL DATE

The State of California or its officers or agents shall not be responsible for the accuracy or completeness of electronic copies of this plan sheet.

LICENSED LANDSCAPE ARCHITECT — Robert B. Schott — Signature — 11-04-08 Renewal Date — 08-11-08 Date — STATE OF CALIFORNIA

To accompany plans dated 1-11-10

FLEXIBLE SEDIMENT BARRIER SPACING TABLE

SLOPE OF ROADWAY (PERCENT)	0 to 0.9	1 to 1.9	2 to 2.9	3 to 4	5+
INTERVAL BETWEEN BARRIERS	50′	35′	30′	25′	20′
ANGLE FROM FACE OF CURB	70°	70°	70°	45°	45°
SUGGESTED BARRIER LENGTH	6′	6′	6′	6′	6′

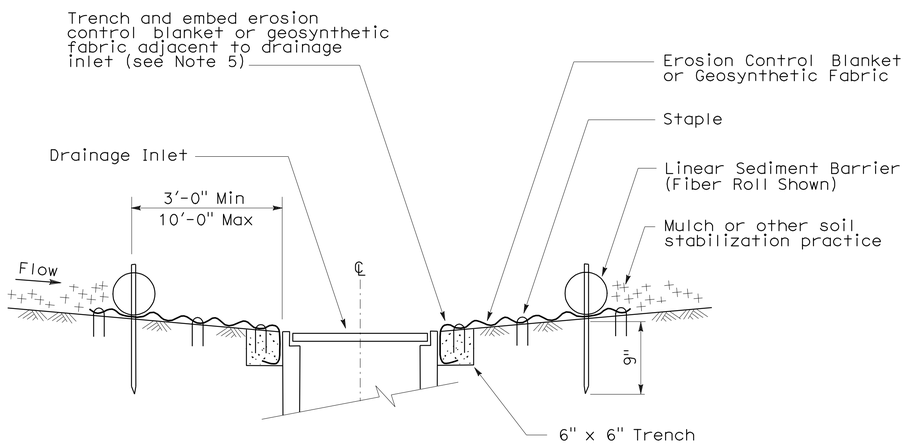

SECTION A-A

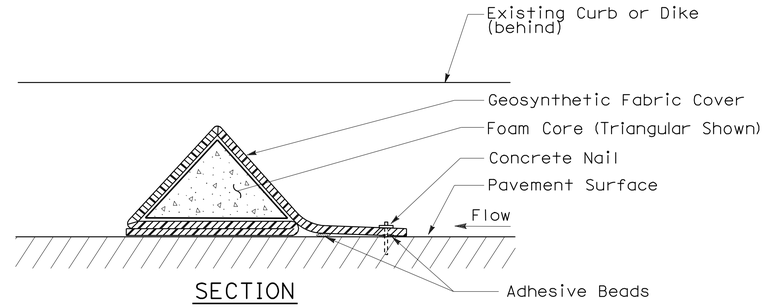

SECTION

FLEXIBLE SEDIMENT BARRIER DETAIL (FOAM BARRIER SHOWN)

NOTES:

1. See Standard Plan T51 for Temporary Silt Fence.
2. Dimensions may vary to fit field conditions.
3. Install a minimum of 3 flexible sediment barriers upstream of each drainage inlet to be protected.
4. Position erosion control blanket or geosynthetic fabric at edge of concrete apron and secure in trench.
5. Erosion control blanket or geosynthetic fabric is not required if the area adjacent to the drainage inlet is vegetated.

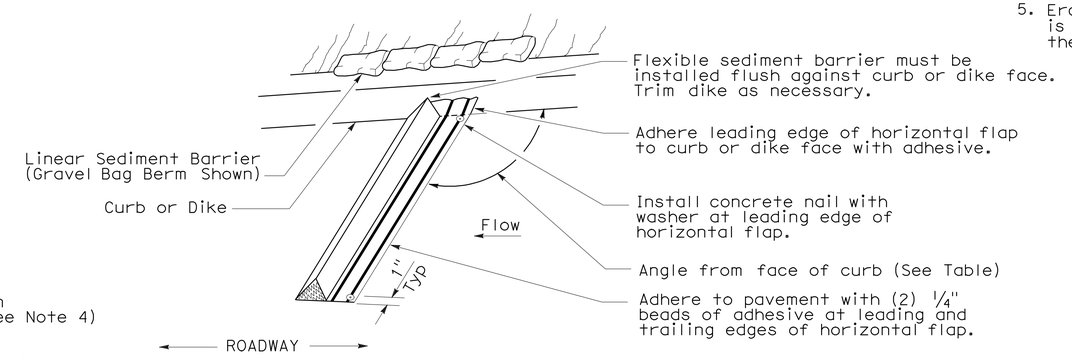

PERSPECTIVE

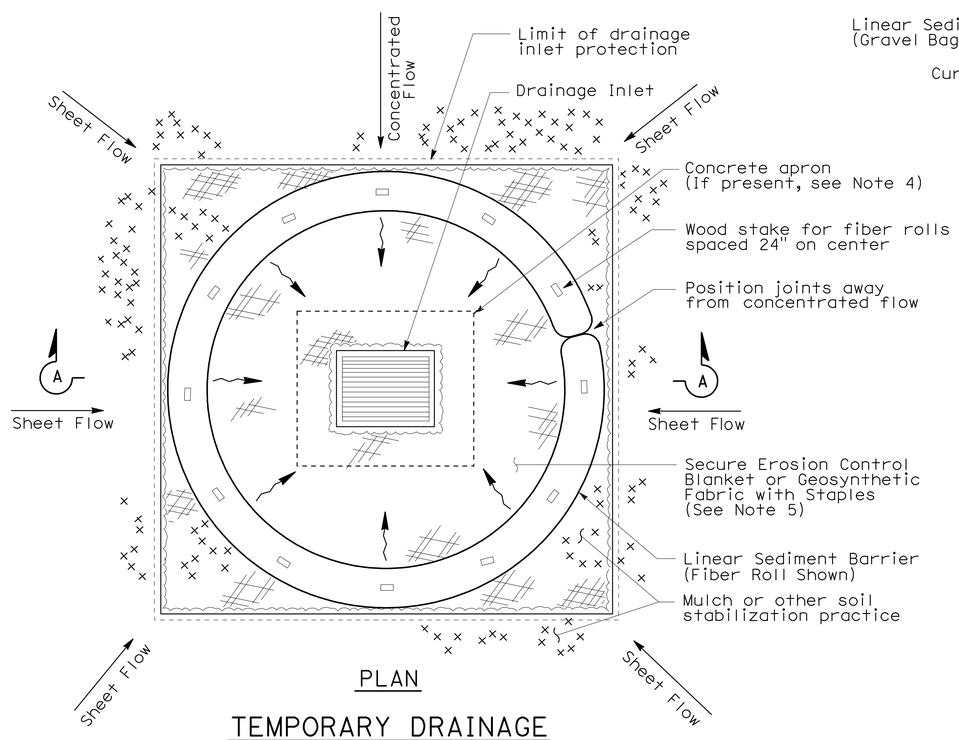

PLAN

TEMPORARY DRAINAGE INLET PROTECTION (TYPE 4A)

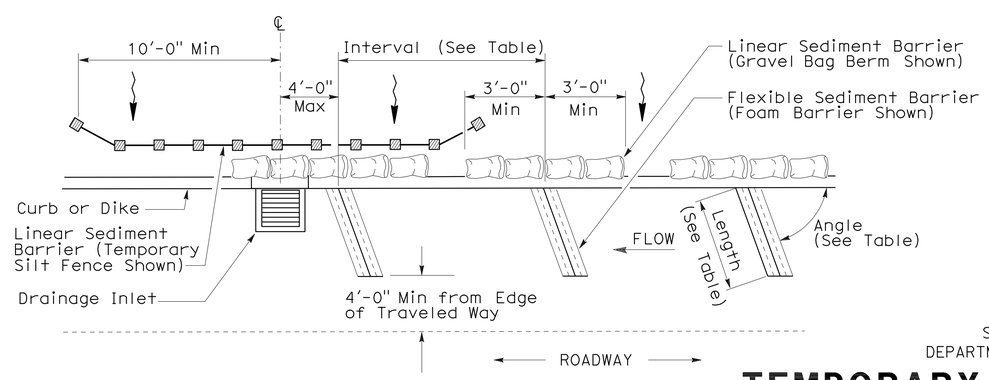

PLAN

TEMPORARY DRAINAGE INLET PROTECTION (TYPE 4B) FLEXIBLE SEDIMENT BARRIER

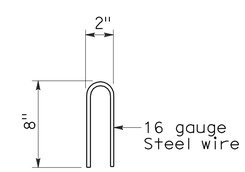

STAPLE DETAIL

STATE OF CALIFORNIA
DEPARTMENT OF TRANSPORTATION

TEMPORARY WATER POLLUTION CONTROL DETAILS (TEMPORARY DRAINAGE INLET PROTECTION)

NO SCALE

NSP T63 DATED AUGUST 15, 2008 SUPPLEMENTS THE STANDARD PLANS BOOK DATED MAY 2006.

NEW STANDARD PLAN NSP T63

2006 NEW STANDARD PLAN NSP T63

DIST	COUNTY	ROUTE	POST MILES TOTAL PROJECT	SHEET NO.	TOTAL SHEETS
06	Kin	198	R19.0/T21.7	53	53

LICENSED LANDSCAPE ARCHITECT

August 15, 2008
PLANS APPROVAL DATE

LICENSED LANDSCAPE ARCHITECT
Robert B. Schott 3625
Signature
11-04-08
Renewal Date
08-11-08
Date
STATE OF CALIFORNIA

The State of California or its officers or agents shall not be responsible for the accuracy or completeness of electronic copies of this plan sheet.

To accompany plans dated 1-11-10

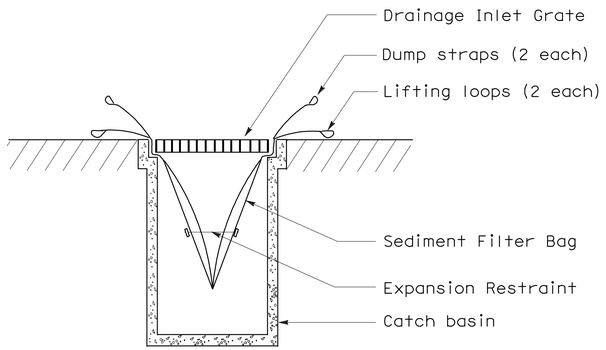

SECTION B-B

SEDIMENT FILTER BAG DETAIL

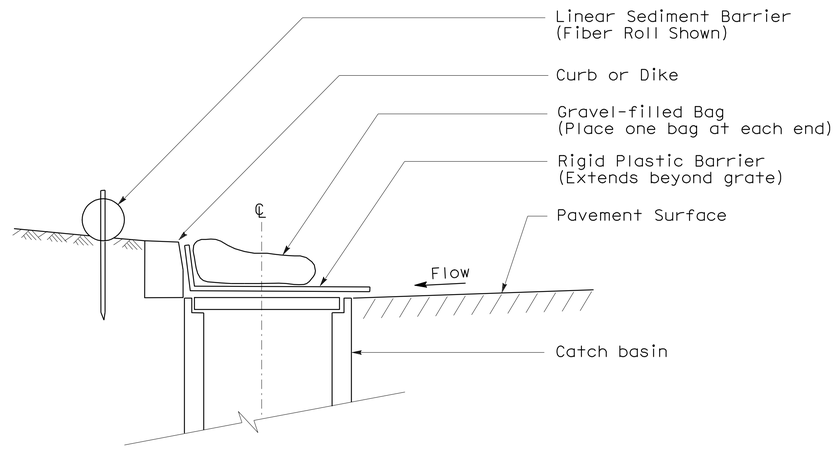

SECTION

TEMPORARY DRAINAGE INLET PROTECTION (TYPE 6A) (CATCH BASIN WITH GRATE)

NOTES:

1. See Standard Plan T51 for Temporary Silt Fence.
2. Dimensions may vary to fit field conditions.

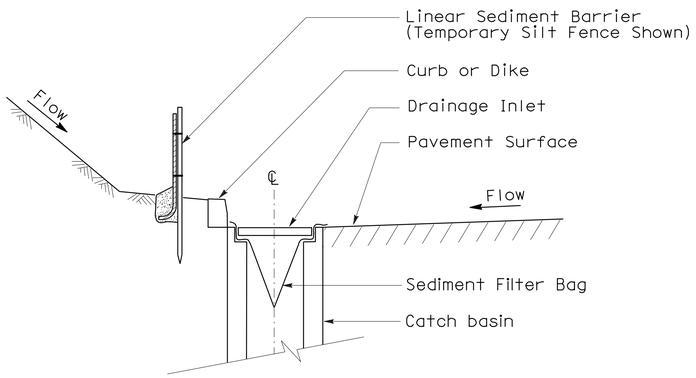

SECTION A-A

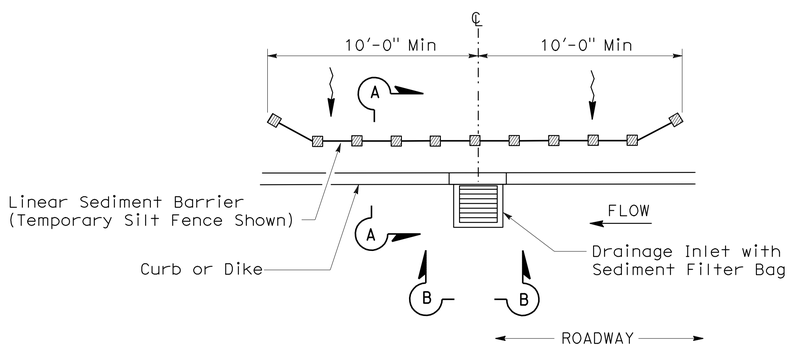

PLAN

TEMPORARY DRAINAGE INLET PROTECTION (TYPE 5) (SEDIMENT FILTER BAG)

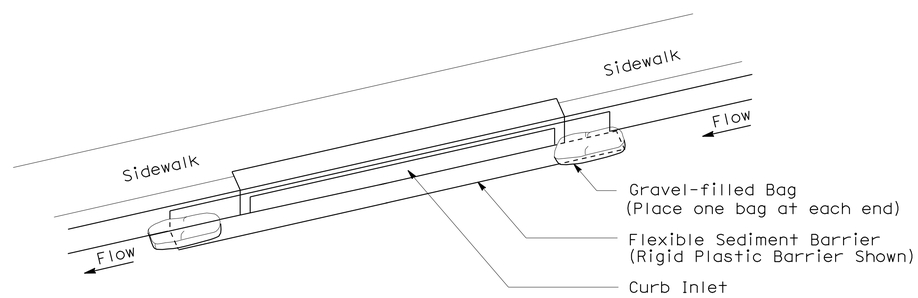

PERSPECTIVE

TEMPORARY DRAINAGE INLET PROTECTION (TYPE 6B) (CURB INLET WITHOUT GRATE)

STATE OF CALIFORNIA
DEPARTMENT OF TRANSPORTATION

TEMPORARY WATER POLLUTION CONTROL DETAILS (TEMPORARY DRAINAGE INLET PROTECTION)

NO SCALE

NSP T64 DATED AUGUST 15, 2008 SUPPLEMENTS
THE STANDARD PLANS BOOK DATED MAY 2006.

NEW STANDARD PLAN NSP T64

2006 NEW STANDARD PLAN NSP T64

7-11-08