INFORMATION HANDOUT

For Contract No. 06-0H6414
At 06-Ker-178-R4.4

Identified by
Project ID 0614000265

PERMITS

1) US Department of Fish and Wildlife Service

MATERIALS INFORMATION

2) Final Foundation Report, Sunny Lane POC, Bridge # 50-0517, May 30, 2014

3) Addendum to Final Foundation Report dated May 30, 2014

4) Alternative In-Line Terminal System

5) Alternative Flared Terminal System

United States Department of the Interior

FISH AND WILDLIFE SERVICE
Sacramento Fish and Wildlife Office
2800 Cottage Way, Room W-2605
Sacramento, California 95825-1846

In Reply Refer To:
08ESMF00-2012-I-0162-1

JUN 05 2012

Ms. Carrie Swanberg
Interim Branch Chief, Southern Central Region Biology
California Department of Transportation, District 6
855 M Street, Suite 200
Fresno, California 93721

Subject: Informal Consultation on the Two Pedestrian Overcrossings Replacement Project in Kern County, California (California Department of Transportation EA 06-0H640; KER-99-PM 49.6, KER-178-PM R4.35)

Dear Ms. Swanberg:

This is the U.S. Fish and Wildlife Service's (Service) response to the California Department of Transportation's (Caltrans) request for concurrence on the proposed Two Pedestrian Overcrossings Replacement Project (project) in Kern County, California. Under the provisions of the July 1, 2007, Pilot Program Memorandum of Understanding between the Federal Highway Administration (FHWA) and Caltrans, FHWA assigned, and Caltrans assumed, FHWA's responsibilities under the National Environmental Policy Act as well as its responsibilities for environmental review, consultation, and coordination under other Federal environmental laws. Your letter, dated January 9, 2012, was received in this office on January 20, 2012. At issue are the effects of this proposed project on the federally-endangered San Joaquin kit fox (*Vulpes macrotis mutica*). Caltrans has determined that the proposed project may affect, but is not likely to affect adversely the San Joaquin kit fox, and requests concurrence from the Service with this determination. This response was prepared in accordance with section 7(a)(2) of the Endangered Species Act of 1973, as amended (16 U.S.C. 1531 *et seq.*) (Act).

The findings and recommendations of this letter are based on: (1) Caltrans' January 9, 2012, letter requesting concurrence; (2) the accompanying January 2012, *Kern County Pedestrian Overcrossings Natural Environment Study-Minimal Impacts (NES-MI)*; (3) design drawings delineating the project footprints of each of the two alternatives for the two overcrossing locations; (4) proposed right-of-way (ROW) maps showing permanent and temporary easements for each of the two alternatives for the two overcrossing locations; (5) electronic-mail (e-mail) correspondence between the Service and Caltrans; and (6) other information available to the Service.

Project Description

Caltrans proposes to replace two pedestrian overcrossing structures at two different locations in Kern County in order to comply with current design standards for disabled access, as required by the Americans with Disabilities Act. The first structure, pedestrian overcrossing #1 (POC #1), is located in the small farming community of McFarland and crosses over State Route (SR) 99 at postmile (PM) 49.6 just north of Kern Avenue; it also crosses over the Southern Pacific Railroad (SPR). The second structure, POC #2, is located in the northeastern part of the City of Bakersfield and crosses over SR 178 at PM R4.35, just south of the Sunny Lane/Height Street intersection.

Each location has two design alternatives. For POC #1, Alternative 1 proposes to replace the existing structure with a new eight-foot (ft.) wide reinforced concrete box situated 200 ft. south of the existing structure. The new structure will utilize turnaround ramps to create a flatter slope for wheelchair access, all contained within a smaller footprint. Alternative 2 will replace the existing structure with a new eight-ft. wide reinforced concrete box girder structure located 200 ft. north of the existing structure. In this instance, the new structure will utilize longer ramps to flatten the slope for wheelchair access. For POC #2, Alternative 1 will replace the existing structure with a new eight-ft. wide reinforced concrete box girder located 100 ft. east of the existing overcrossing; it will utilize turnaround ramps to provide a flatter slope for wheelchair access, contained within a smaller footprint. Alternative 2 proposes to replace the existing structure with a new eight-ft. wide reinforced concrete box located some distance west of the existing overcrossing; it will utilize longer ramps to flatten the slopes into and out of the structure to make it wheelchair accessible.

Caltrans has identified Alternative 1 as the preferred alternative design for each POC location; however, Caltrans has requested that both alternatives at each location continue to be combined for purposes of this consultation in order to account for the greatest extent of construction impacts and to provide Caltrans the flexibility of adjusting and realigning the footprint of the proposed POC structures as Caltrans continues to refine the structural designs.

At each POC location, five non-consecutive nights of work will be necessary in order to avoid major traffic delays on the freeways; work at each site includes two nights to demolish the existing structure, two nights to install falsework, and one night to disassemble and remove falsework following construction completion.

Temporary construction easements at the POC #1 site (Alternative 1: 0.31 ac of railroad ROW and 0.14 acre (ac) of County ROW; Alternative 2: 0.44 ac of railroad ROW and 0.14 ac of County ROW) will be obtained in order to cover certain construction-related activities, e.g. staging. Staging areas and access routes for POC #1 are reasonably likely to be located in an area of temporary easement in between the County Road and the existing Caltrans ROW for southbound SR 99, and also in other portions of temporary easements adjacent to parts of the proposed structure situated east of northbound SR 99. Permanent construction easements (Alternative 1: 0.45 ac of railroad ROW and 0.14 ac of County ROW; Alternative 2: 0.49 ac of railroad ROW and 0.08 ac of County ROW) will be acquired as new Caltrans ROW. Temporary

construction easements at the POC #2 site (Alternative 1: 0.08 ac of City of Bakersfield (City) ROW; Alternative 2: 0.05 ac of County ROW, 0.14 ac of City ROW, and 0.14 ac of Assessor's Parcel Number (APN) 12612503, Golden State Palms Inc.) also will be obtained to cover various construction-related activities. Staging areas and access routes for POC #2 are reasonably likely to be located in areas of temporary easements located between Height Street and the existing Caltrans ROW boundary for westbound SR 178, and in a segment of temporary easement between Rollo Ravine and the existing Caltrans ROW boundary for eastbound SR 178. Permanent construction easements (Alternative 1 only: 0.004 ac of County ROW and 0.09 ac of City ROW) will be acquired as new Caltrans ROW.

Since the project involves elevated structures with only minor ground work for the foundation, access ramps, and the landings/sidewalks, little use of fill material is anticipated; what minor fill there is may be required at the entrances to the access ramps where they are not supported by columns. The tentative construction schedule is from February 2014 to August 2014.

Action Area

The action area is defined in 50 CFR § 402.02, as "all areas to be affected directly or indirectly by the Federal action and not merely the immediate area involved in the action." For the proposed project, the action area consists of the construction footprints combining both Alternatives 1 and 2 at each of the two overcrossing sites. This includes the existing and proposed POC #1 structures; a segment of the SR 99 hardscape and associated median space, along with a segment of the County Road hardscape located between the Caltrans and SPR ROWs; portions of ruderal/disturbed land within the existing Caltrans ROW; and portions of ruderal/disturbed land and urban areas identified within both the SPR ROW and County ROW that will be acquired through permanent and temporary easements since these areas will be affected directly by demolition and replacement activities and likely used for equipment access routes and as staging areas. The action area also includes the existing and proposed POC #2 structures; a segment of the SR 178 hardscape and associated median space; portions of ruderal/disturbed habitat within the existing Caltrans ROW in which overcrossing-related activities will occur; and portions of ruderal/disturbed habitat within the County ROW, City ROW, and APN 12612503 Golden State Palms Inc. that will be acquired through permanent and temporary easements since these areas also will be affected directly by construction activities and used for access routes and as staging areas. The action area further includes portions of ruderal/disturbed habitat within a buffer area extending around the project footprints that may be affected indirectly as a result of project construction work.

Proposed Avoidance and Minimization Measures

According to the NES-MI, Caltrans proposes to implement the following specific measures to minimize and avoid impacts to the San Joaquin kit fox.

1. Pre-construction surveys within the project limits will be conducted no more than 30 calendar days prior to the start of construction in accordance with the Service's most recent available guidelines; currently, this is the revised 2011 *U.S. Fish and Wildlife Service Standardized Recommendations for Protection of the Endangered San Joaquin*

Kit Fox Prior to or During Ground Disturbance (Standardized Recommendations). Surveys will involve walking the project footprints, as well as any adjacent areas buffering the footprints that are accessible to the public and in which San Joaquin kit fox presence may be found (e.g. dens and related sign).

2. An employee education program will be conducted by a Service-approved biologist(s) for all construction personnel prior to ground-breaking; the program will consist of a description of the species and its habitat needs, the status of the species and its protection under the Act, the conservation measures taken to reduce and avoid impacts to the species, and the penalties for not complying with biological minimization requirements. Training will be repeated for all new personnel before they access the project site.

3. Project-related vehicles will observe a 20 mile-per-hour speed limit in all project areas. Vehicle travel will be limited to established roadways.

4. Since the San Joaquin kit fox is most active at night, the majority of work will be restricted to taking place during the day, with the exception of five nights at each POC location for demolition and falsework activities that would otherwise cause major disruptions to traffic and pose safety issues if carried out during daytime hours.

    a. A Service-approved biologist(s) will be present on-site during all night work to monitor for San Joaquin kit fox presence. If an individual is discovered in the project area, all work activities will cease and the Service will be notified within 12 hours. Work will not resume until Caltrans receives approval from the Service.

5. All food-related trash items such as wrappers, cans, bottles, and food scraps will be disposed of in closed containers and removed daily from the entire project site in order to reduce the potential for attracting scavengers and predator species.

6. No firearms will be allowed on-site; nor will any pets be permitted on-site in order to prevent harassment, injury, or transmission of disease to the San Joaquin kit fox and in order to avoid the destruction of dens.

7. The contractor will take measures to prevent the inadvertent entrapment of the San Joaquin kit fox or other species during construction in all excavated, steep-walled holes or trenches more than two feet deep; excavations will be covered with plywood at the close of each work day or provided with escape ramps constructed of fill or wooden planks. Prior to any holes or trenches being filled, they will be inspected thoroughly for trapped individuals. Since the San Joaquin kit fox also is attracted to artificial den-like structures and may enter them becoming trapped or injured, all construction pipes, culverts, or similar structures with a diameter of four inches or greater stored on-site also will be inspected by the contractor prior to the structures being buried, capped, or moved. If a San Joaquin kit fox is discovered, that section of pipe will not be moved (other than to transfer it to a safe location if necessary) until the Service and the California Department of Fish and Game (CDFG) have been consulted and the individual is allowed to leave without harassment.

8. If a San Joaquin kit fox den is discovered during construction, all work activity within a 150 ft. radius of the den will be halted and the Resident Engineer will be contacted immediately. The Service and the CDFG will be contacted for guidance as soon as possible.

9. A representative will be appointed by Caltrans who will be the contact source for any employee or contractor who inadvertently kills or injures a San Joaquin kit fox or who finds a dead, injured, or entrapped individual. If an individual is found, all construction activity within a 150 ft. radius of the San Joaquin kit fox will cease and the representative will be contacted immediately. Both the Service and the CDFG will be contacted within three working days of such incidents.

Determination

Caltrans has determined that the proposed project is unlikely to affect adversely the San Joaquin kit fox. Project activities at both POC #1 and #2 locations will occur within the existing Caltrans ROW, within the City, County, and SPR ROW properties, and within the APN; therefore, Caltrans plans to acquire portions of these ruderal/disturbed, and urban areas through permanent easements (as new Caltrans ROW) and through temporary easements to cover the effects of construction.

According to the California Natural Diversity Database (CNDDB, 2012)[1], there are five records of the San Joaquin kit fox within the McFarland United States Geological Survey (USGS) 7.5-minute quadrangle, which covers the project area for POC #1, and 22 records within the Oil Center USGS 7.5-minute quadrangle, which covers the project area for POC #2. The closest observation to POC #1 is located within 3.5 miles of the site and dates from 1975, while the record closest to POC #2 is located approximately 0.9 mile from the site and dates from 2007. Caltrans biologists conducted a habitat assessment of the action area on October 14, 2011. According to Caltrans, the study area at POC #1 is disturbed, and comprised of urban and ruderal areas with weedy non-native vegetation such as tumbleweeds (*Salsola* sp.) and wild fescue (*Vulpia* sp.), while the habitat surrounding POC #2 is urban and consists of highway landscaping, such as iceplant (*Carpobrotus* sp.) and oleanders (*Nerium oleander*). Neither location provides the type of high quality habitat in which the San Joaquin kit fox typically dens or forages. No signs of known dens or scat were detected during the field review.

However, because the San Joaquin kit fox is known to inhabit and utilize lands in proximity to the action area (e.g. according to CNDDB records and other known occurrences/dens identified in the 2010 *Draft Thomas Roads Improvement Program San Joaquin Kit Fox Effects Analysis, Mitigation Strategy, and Implementation Plan*, prepared for a separate collection of Caltrans projects in the Bakersfield area), it is possible that the San Joaquin kit fox may also occur in the action area, most reasonably as a transient forager dispersing through the project sites to other more suitable locations. Given the absence of known dens and the poor quality habitat, it is

1 California Natural Diversity Database (CNDDB). 2012. Natural Heritage Division, California Department of Fish and Game. RareFind 4. Accessed March 6, 2012. Sacramento, California.

unlikely that the species would reside permanently at these sites. However, California ground squirrel (*Spermophilus beecheyi*) burrows were observed at POC #1, so it is possible these could be modified as potential dens for future use by the San Joaquin kit fox. Also, the City of Bakersfield supports a well-documented urban population of the species and so it is reasonably likely that the San Joaquin kit fox also may occur at POC #2 during construction.

Portions of the ruderal/disturbed areas acquired as new Caltrans ROW through permanent easements to cover construction activities at both overcrossing sites will be impacted by demolition of the existing structures and pile driving and excavation associated with construction of the replacement overcrossings; areas of temporary easements will be affected temporarily as a result of their utilization for staging and access purposes, and for storage and movement of materials and debris. However, given the relatively small-scale scope of work and the existing habitat conditions, along with the implementation of the proposed conservation measures, any effects to the San Joaquin kit fox will be insignificant or discountable.

After reviewing Caltrans' request letter and NES-MI, drawings of the design alternatives, ROW maps, and other information sources, and discussing project aspects with Caltrans, the Service concurs with the determination that the proposed project may affect, but is not likely to affect adversely the San Joaquin kit fox.

Closing Statement

This concludes the Service's review of the proposed Two Pedestrian Overcrossings Replacement Project and its consideration of the project's effects to the species. No further coordination with the Service under the Act is necessary at this time. Please note, however, that take of listed species is not exempted from the prohibitions described under section 9 of the Act. We concur that the project as proposed is not likely to result in take, but if conditions change so that the project may adversely affect listed species, initiation of formal consultation, as provided in 50 CFR § 402.14, is required.

Please contact Jen Schofield, Fish and Wildlife Biologist, or Thomas Leeman, San Joaquin Valley Division Chief, at (916) 414-6600 if you have any questions regarding this letter.

Sincerely,

Daniel Russell

Daniel Russell
Deputy Assistant Field Supervisor

cc:
Ms. Annee Ferranti, CDFG, Fresno, California

M e m o r a n d u m

Flex your power!
Be energy efficient!

To: DON NGUYEN-TAN (Acting Chief)
Design Branch 6
Office of Bridge Design North & Central
Structure Design
Division of Engineering Services

Date: May 30, 2014

File: 06-KER-178-R3.8/R4.8
EA: 06-0H641
ID 0614000265
Sunny Lane POC
(replace)
Br. No. 50-0517

From: **DEPARTMENT OF TRANSPORTATION**
DIVISION OF ENGINEERING SERVICES
GEOTECHNICAL SERVICES – MS 5

Subject: Final Foundation Report

Introduction

Per your request, we are providing foundation recommendations for the bridge project referenced above. It is proposed to replace the existing structure (50-0334). This report is for use by the project design engineer, construction personnel, bidders and contractors.

Pertinent Plans and Data

The following resources were used in the assessment of the site conditions for these recommendations:

1. The general plan and provided loads for the proposed new bridge.
2. The as-built Log of Test Borings (LOTB) conducted for the original bridge in 1962.
3. CA Dept. of Water Resources (DWR) water well data.
4. DWR, Bulletin 118, CA Groundwater, Tulare Lake Hydrologic Region (2003).
5. U.S.D.A. Natural Resources Conservation Service Web Soil Survey (WSS).

Site Geology and Subsurface Conditions

The subsurface geology at the project site consists of alluvial fan and flood plain deposits. These deposits are composed of silty sands with gravel and cobbles. These materials are dense to approximately 25 feet below the ground surface below which they become very dense.

Laboratory Testing

No laboratory testing was performed for this report.

Subsurface Exploration

No recent exploratory borings were conducted for the bridge replacement. The 1962 borings for the original bridge structure were used for this report.

Groundwater

Regional records (DWR Well No. 29S28E17R001M et. al.) indicate that regional groundwater was approximately 325 feet below the ground surface in 1988. Groundwater level trends (DWR Bulletin 118) indicate that the groundwater level has been decreasing by over 50 feet in the region from 1970 to 2000. Localized perched/shallow water conditions may be encountered due to seasonal fluctuations, regulated flows and diversions. Groundwater is not a factor for foundation design and is not expected to be a factor during construction.

Seismic Recommendations

Using soil information from the as-built borings for the existing Sunny Lane POC, a V_{S30} (the weighted average shear wave velocity for the top 100 feet of foundation material) of 890 ft/s was calculated for the proposed bridge site.

The deterministic spectrum from the Caltrans ARS Online Tool (version 2.3.06) is based on the nearest active fault which controls ground motion. This fault is the White Wolf fault (ID No. 230) with MMax of 7.4. The fault is located southeast of the proposed bridge site and the closest distance from the bridge site to the fault rupture plane is approximately 17 miles. Caltrans ARS Online Tool refers to this fault as reverse.

According to the "Methodology for Developing Design Response Spectrum for Use in Seismic Design Recommendations, November 2012", the governing design Acceleration Response Spectrum (ARS) curves are obtained by any or a combination of the following three methods for Sunny Lane POC:

1. Statewide minimum deterministic spectrum with MMax of 6.5, vertical strike-slip event with a rupture distance of 7.5 miles.
2. Deterministic Seismic Hazard spectrum from the Caltrans ARS Online Tool (version 2.3.06).
3. The USGS Interactive Deaggregation procedure with a 5% Probability of Exceedance in 50 years (975 years return period).

For the proposed Sunny Lane POC, the recommended ARS curve was obtained using method 3 as stated above. The peak ground acceleration is estimated to be 0.38g. The recommended ARS curve is presented on **Plate No. 1**.

Soil liquefaction occurs when loose, water-saturated soils lose shear strength in response to the sudden shaking from an earthquake and begin behaving like a liquid, reducing their ability to support embankments and structures. As groundwater is greater than 100 feet below the ground surface, the potential for liquefaction is considered non-existent.

The potential for surface rupture due to fault movement is considered minimal as there are no known faults projecting towards or passing directly through the bridge site.

Corrosivity

Corrosion testing of the subsurface soils was not performed as there was no exploratory excavations (borings or trenches) conducted. A search on the WSS online tool indicates that the project site soils from depths of 0 to 65 feet are classified as Type #136, Cuyama-Urban-Delano and have chemical properties that characterize these materials as moderately corrosive to untreated steel foundation elements and low corrosive to concrete.

Scour

The bridge site will not be subjected to stream instability.

As-Built Foundation Information

The existing bridge is a reinforced, 9-span concrete slab structure The as-built records (50-0334) indicate the bridge foundations consist of spread footings at all of the support locations. The bottom-of-footing elevations range from 560.5 to 568.0 feet with dimensions ranging from 10 X 4 feet to 12 X 7 feet.

Foundation Recommendations

<u>Bent Piles (LRFD)</u>

Based on the review of the structure plans, existing bridge records and structural design requirements, the optimum foundation types are Standard Class 200, Alternative “W” pipe piles at bents 4, 6, 7, 9 and 12. Table 1 lists the foundation recommendation parameters. Table 2 is the pile data table to be included in the project contract documents.

<u>Bent Spread Footings (LRFD)</u>

The optimum foundation support type for bents 2, 3, 5, 8, 10 and 11 is spread footings. Table 3 lists the recommended soil bearing and stress limits at these locations.

Abutment Spread Footings (WSD)

Based on a review of the as-built LOTB for the structure, the subsurface soil is adequate to support spread footings at the abutment locations. Table 3 lists the recommended soil bearing and stress limits at these locations.

Tables

Table 1.
Foundation Recommendations for Bents with Piles

Supp Loc	Pile Type	Cut-off Elev (ft)	Service-I Limit State Load Per Support (kips)	Total Permissible Support Settlement (inches)	Required Factored Nominal Resistance (kips)				Design Tip Elevations (ft)	Spec Tip Elev (ft)	Nominal Driving Resistance Required (kips)
					Strength Limit		Extreme Event				
					Comp φ=0.7	Tension φ=0.7	Comp φ=1.0	Tension φ=1.0			
Bent 4	Class 200 Alt "W"	571.10	383	1	219	0	333	168	516 (a-I) 514 (a-II) 523 (b-II)	514	333
Bent 6	Class 200 Alt "W"	568.75	193	1	140	72	188	91	524 (a-I) 529 (b-I) 525 (a-II) 531 (b-II)	524	200
Bent 7	Class 200 Alt "W"	576.85	334	1	214	63	246	132	522 (a-I) 540 (b-I) 528 (a-II) 534 (b-II)	522	306
Bent 9	Class 200 Alt "W"	575.60	318	1	221	5	298	168	521 (a-I) 561 (b-I) 523 (a-II) 529 (b-II)	521	316
Bent 12	Class 200 Alt "W"	575.55	272	1	176	0	322	198	527 (a-I) 520 (a-II) 524 (b-II)	520	322

Design tip elevations are controlled by: (a-I) Compression (Strength Limit), (b-I) Tension (Strength Limit), (a-II) Compression (Extreme Event), (b-II) Tension (Extreme Event).

Table 2.
Pile Data for Contract Plans

Support Location	Pile Type	Nominal Resistance (kips)		Design Tip Elevations (ft)	Specified Tip Elevation (ft)	Nominal Driving Resistance (kips)
		Compression	Tension			
Bent 4	Class 200 Alt "W"	333	168	514 (a) 523 (b)	514	333
Bent 6	Class 200 Alt "W"	200	103	524 (a) 529 (b)	524	200
Bent 7	Class 200 Alt "W"	306	132	522 (a) 534 (b)	522	306
Bent 9	Class 200 Alt "W"	316	168	521 (a) 529 (b)	521	316
Bent 12	Class 200 Alt "W"	322	198	520 (a) 524 (b)	520	322

Design tip elevations for Bents are controlled by: (a) Compression, (b) Tension

Table 3
Foundation Design Recommendations for Spread Footings

Support	Footing Size		Bottom of Footing Elevation (ft)	Minimum Footing Embedment Depth (ft)	Total Permissible Support Settlement (in)	WSD (LRFD Service-I Limit State Load Combination)		LRFD		
								Service	Strength $\varphi_b = 0.45$	Extreme Event $\varphi_b = 1.00$
	B	L				Permissible Gross Contact Stress (ksf)	Allowable Gross Bearing Capacity (ksf)	Net Permissible Contact Stress (ksf)	Factored Gross Nominal Bearing Resistance (ksf)	Factored Gross Nominal Bearing Resistance (ksf)
Abut 1	7	11.16	571.5	3.5	1	5.8	8.2	N/A	N/A	N/A
Bent 2	10	10	569	6.0	1	N/A	N/A	4.6	25.8	57.3
Bent 3	12	14.5	569	6.0	1	N/A	N/A	4.0	26.7	59.4
Bent 5	10	10	569.5	5.5	1	N/A	N/A	4.3	24.2	53.8
Bent 8	8	8	569.5	5.5	1	N/A	N/A	5.2	22.9	50.8
Bent 10	10	10	568.5	6.5	1	N/A	N/A	4.9	27.4	60.9
Bent 11	16	18	568.5	6.5	1	N/A	N/A	3.4	31.3	69.4
Abut 13	7	11.16	571.5	3.5	1	5.3	7.8	N/A	N/A	N/A

Table 4[1]
Spread Footing Data Table

Support Location	Working Stress Design (WSD)		Load Resistance Factor Design (LRFD)		
	Permissible Gross Contact Stress (Settlement) (ksf)	Allowable Gross Bearing Capacity (ksf)	**Service[2]** Permissible Net Contact Stress (Settlement) (ksf)	**Strength/Construction[3]** Factored Gross Nominal Bearing Resistance $\varphi_b = 0.45$ (ksf)	**Extreme Event[3]** Factored Gross Nominal Bearing Resistance $\varphi_b = 1.00$ (ksf)
Abut 1	5.8	8.2	N/A	N/A	N/A
Bent 2	N/A	N/A	4.6	25.8	57.3
Bent 3	N/A	N/A	4.0	26.7	59.4
Bent 5	N/A	N/A	4.3	24.2	53.8
Bent 8	N/A	N/A	5.2	22.9	50.8
Bent 10	N/A	N/A	4.9	27.4	60.9
Bent 11	N/A	N/A	3.4	31.3	69.4
Abut 13	5.3	7.8	N/A	N/A	N/A

Spread footing data table notes:
1. Stresses and resistances were calculated for controlling load combinations.
2. Controlling load combination for Service Limit State is the one resulting in the highest ratio of $q_{n,u}/q_{pn}$ for foundations on soil, or $q_{n,max}/q_{pn}$ for foundations on rock.
3. Controlling load combination for Strength, Construction, and Extreme Event is the one resulting in the highest ratio of $q_{g,u}/q_R$ for foundations on soil, or $q_{g,max}/q_R$ for foundations on rock.

Construction Considerations

1. The presence of cobble sized clasts was noted in the as-built LOTB for the original structure and more recently, in open construction trenches in the adjacent area. The Contractor should anticipate difficult and erratic driving of the steel pipe piles.

2. The use of undersized predrilling for the pipe piles is not allowed due to possible impact on the tensional capacity of the piles. The use of center relief drilling will be allowed above the bottom of the pile during driving if hard driving conditions are encountered. The use of center relief drilling shall be stopped 8 feet above the specified pile tip. The contractor shall include center relief drilling in their bidding documents.

3. Spread footings shall be placed neat against competent materials. All loose materials shall be removed prior to placement of concrete. All footing excavations are to be inspected and approved by this Office or a representative of the Office of Structure Construction, when excavations are completed to the bottom of footing and prior to placement of rebar.

4. The recommended pile tip elevations exceed the maximum depth explored on the as-built LOTB used for this report. The contractor should be aware that verification borings will be conducted prior to the ready-to-list (RTL) phase of the project.

If any conceptual changes are proposed during final project design, the Office of Geotechnical Design-North should review those changes to determine if the recommendations contained herein are still applicable.

Project Information

This section discloses to bidders and contractors a list of pertinent information available for their inspection prior to bid opening. The following is information originating from Geotechnical Services.

Data and information attached with the project plans are:
One Log of Test Borings As-Built sheet for original bridge.

Data and information included in the Information Handout provided to the bidders and contractors are:
None.

Data and information available for inspection at the District Office:
None.

Data and information available for inspection at the Transportation Laboratory are:
Final Foundation Report. Sunny Lane POC, Bridge #50-0517, May 30, 2014

If you have any questions or comments, or need additional information please contact Christopher Koepke at (916) 227-1040, Ben Barnes at 227-1039 or Qiang (John) Huang at (916) 227-1037.

Report by:

REGISTERED GEOLOGIST
CHRISTOPHER W. KOEPKE
No. 2207
CERTIFIED ENGINEERING GEOLOGIST
Exp. 10-14-14
STATE OF CALIFORNIA

REGISTERED PROFESSIONAL ENGINEER
BENJAMIN M. BARNES
No. 66090
Exp. 6/30/2014
CIVIL
STATE OF CALIFORNIA

Christopher Koepke
Engineering Geologist
Office of Geotechnical Design – North
Branch E

Benjamin M. Barnes
Transportation Engineer
Office of Geotechnical Design – North
Branch E

Attachment: ARS curve

cc: Qiang Huang, R.E. Pending, Structures OE, D06 DME, GS File System :: (all via e-copy)

Sunny Lane POC

Bridge No. 50-0334 **Latitude** 35.3933 **Longitude** -118.9721 **Control** Probabilistic

Period (s)	Sa(g)
0.01	0.38
0.05	0.57
0.10	0.68
0.15	0.76
0.20	0.82
0.25	0.81
0.30	0.80
0.40	0.72
0.50	0.67
0.60	0.63
0.70	0.61
0.85	0.56
1.00	0.53
1.20	0.45
1.50	0.37
2.00	0.29
3.00	0.19
4.00	0.14
5.00	0.11

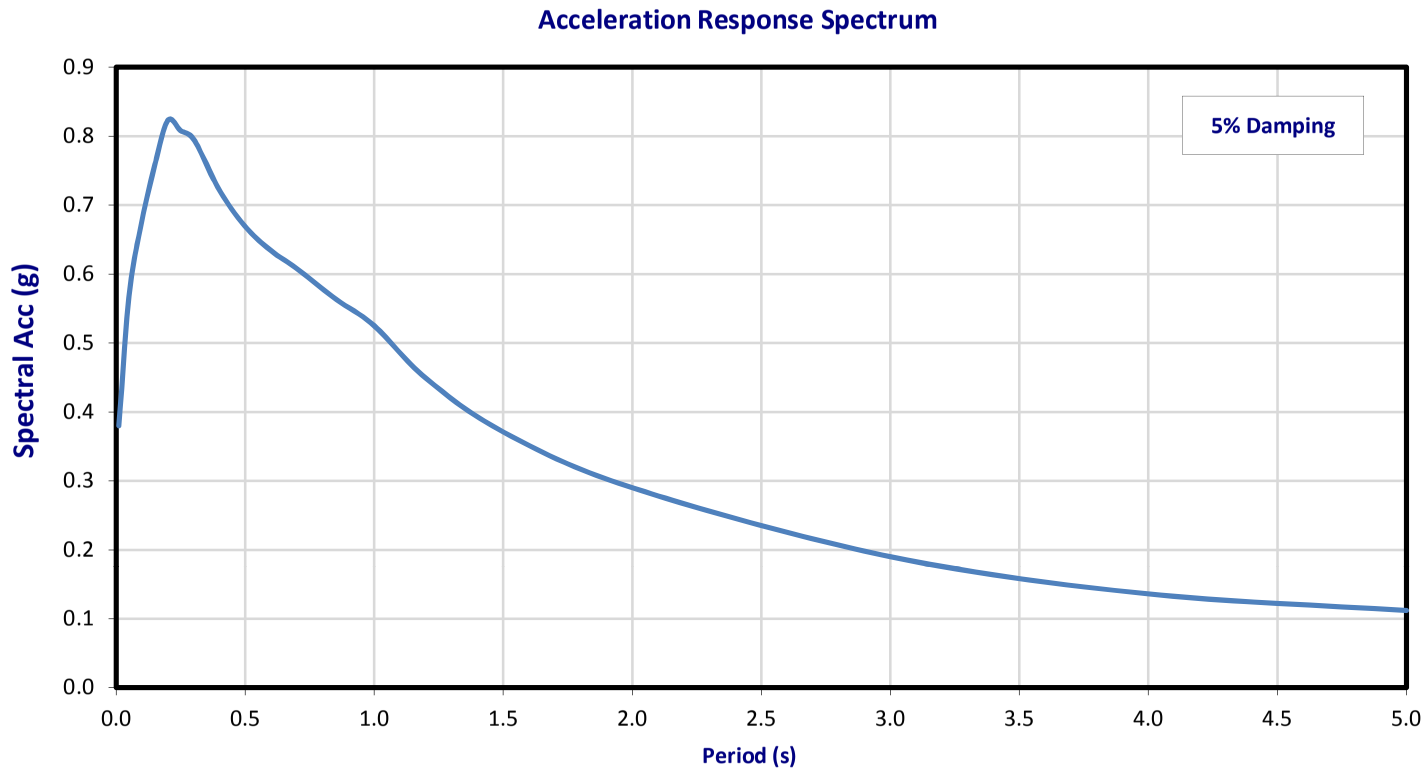

Deterministic Procedure Data

Fault	White Wolf					
Fault ID	230		R_{rup}	17	miles	
Mmax	7.4		R_{jb}	17	miles	
Style	Rev		R_x	17	miles	
Dip (deg)	75		V_{S30}	890	ft/s	
Dip Dir	SE		$Z_{1.0}$	N/A	miles	
Z_{TOR}	0	miles	$Z_{2.5}$	N/A	miles	
Z_{BOT}	9	miles				

Note: The ARS curve above is based on the USGS 5% Probability of Exceedance in 50 years (975 years return period).

Caltrans	Division of Engineering Services Geotechnical Services Office of Geotechnical Design - North	ID 0600000133	ARS Curve	Plate No. 1
		EA 06-0H6401	06-KER-178 PM R3.8/R4.8	

State of California
Department of Transportation

California State Transportation Agency

M e m o r a n d u m

Flex your power!
Be energy efficient!

To: DON NGUYEN-TAN (Acting Chief)
Design Branch 6
Office of Bridge Design North & Central
Structure Design
Division of Engineering Services

Date: May 30, 2014

File: 06-KER-178-R3.8/R4.8
EA: 06-0H641
ID 0614000265
Sunny Lane POC
(replace)
Br. No. 50-0517

From: **DEPARTMENT OF TRANSPORTATION**
DIVISION OF ENGINEERING SERVICES
GEOTECHNICAL SERVICES – MS 5

Subject: Addendum to Final Foundation Report dated May 30, 2014

A composite soil sample representative of the subsurface materials in contact with the proposed new foundation was obtained and tested for corrosion potential. The results of the corrosion testing are as follows:

- Resistivity: 1195 ohm-cm
- pH: 7.62
- Chloride: Not tested
- Sulfate: Not tested

Note: Testing is not performed for chloride and sulfate if the resistivity and pH results indicate a nonpotential for salts.

The site subsurface soils are to be considered non-corrosive to foundation elements.

REGISTERED GEOLOGIST
CHRISTOPHER W. KOEPKE
No. 2207
CERTIFIED ENGINEERING GEOLOGIST
Exp. 10-14-14
STATE OF CALIFORNIA

Christopher Koepke
Engineering Geologist
Office of Geotechnical Design – North
Branch E

cc: GS File System "GeoDog"

ITEM NO.	PART NUMBER	DESCRIPTION	QTY	UOM
1	BSI-1301252-KT	X-Tension Terminal Comp, 31 in	1	EACH
2	K070202	X-Tension Hardware Kit, GT,	1	EACH
3	K070206	X-Tension System Hardware Kit,	1	EACH
4	K070210	X-Tension GT Guardrail	1	EACH
5	B061100	BSI, I-Beam Post, Middle, X350	1	EACH
6	MANXT1	X-TENSION Installation Manual	1	EACH

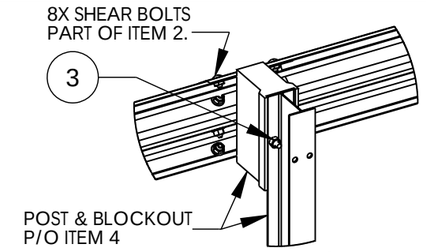

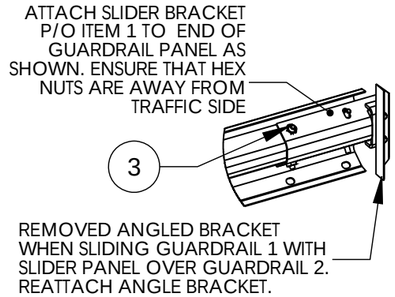

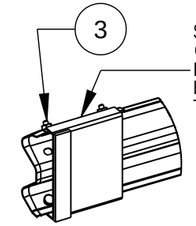

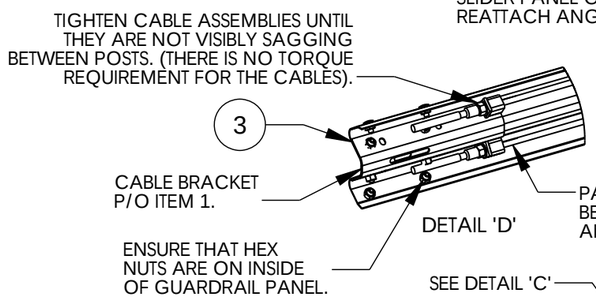

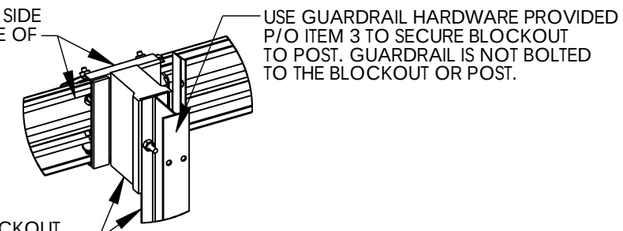

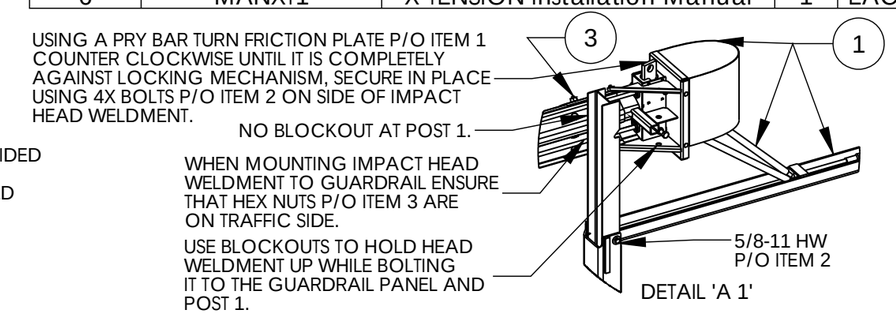

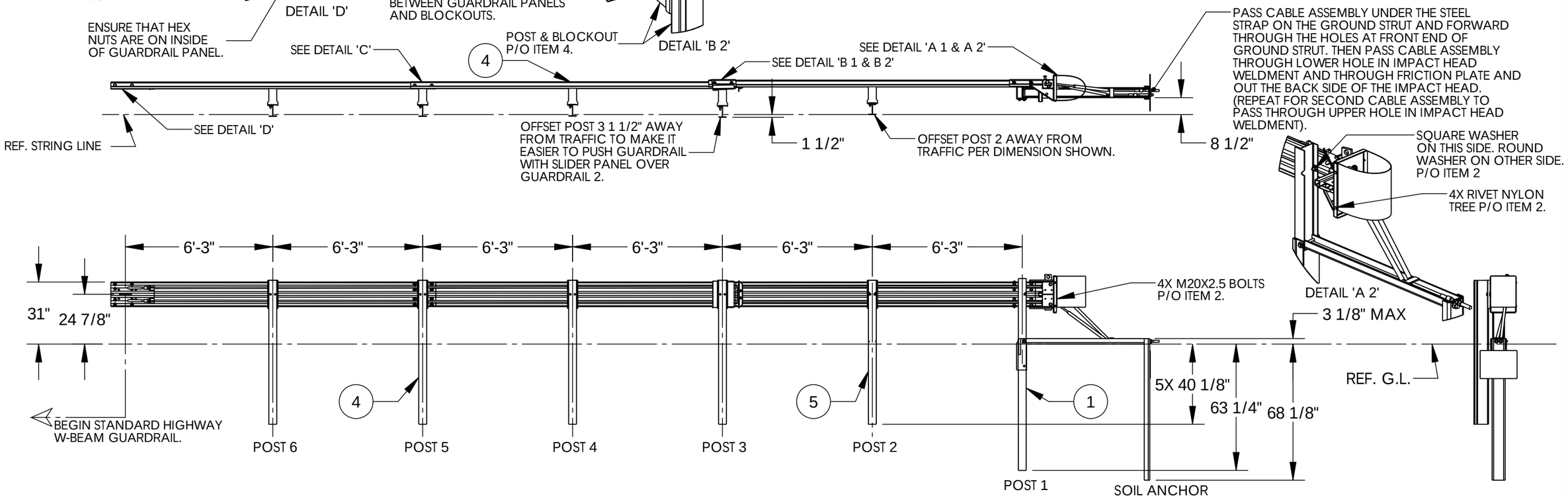

NOTES: UNLESS OTHERWISE SPECIFIED.

1. SYSTEM TO BE INSTALLED PER MANUFACTURER SPECIFICATIONS.
2. ONLY TIGHTEN THE CABLE ASSEMBLIES USING THE NUTS AT THE CABLE BRACKET (SEE DETAIL 'D'). DO NOT TIGHTEN THE CABLES AT THE FRONT OF THE GROUND ANCHOR.
3. WHEN DRIVING STEEL POST, ENSURE THAT A DRIVING CAP WITH TIMBER OR PLASTIC INSERT IS USED TO PREVENT DAMAGE TO THE GALVANIZING TO THE TOP OF THE POST.

© 2012 BARRIER SYSTEMS INC. THE INFORMATION CONTAINED IN THIS DRAWING IS THE SOLE PROPERTY OF BARRIER SYSTEMS INC. ANY REPRODUCTION IN PART OR WHOLE WITHOUT THE WRITTEN PERMISSION OF BARRIER SYSTEMS INC. IS PROHIBITED.

APPROVALS

DRAWN BY:	NMV
DRAWN DATE:	2/08/13
APPR'D BY:	JMT
APPR'D DATE:	2/08/13

UNLESS OTHERWISE SPECIFIED DIMENSIONS ARE IN INCHES. TOLERANCES ARE:
FRACTIONS ±1/16 DECIMAL .XX = ±.03 .XXX = ±.010 ANGLES ±1/2°
INTERPRET DIMENSIONS AND TOLERANCES PER ASME Y14.5-1994

THIRD ANGLE PROJECTION

DO NOT SCALE DRAWING

REV	ECN#	DATE
B	2067	05/02/13
A	2022	2/08/13

LINDSAY™ TRANSPORTATION SOLUTIONS

BARRIER SYSTEMS INC.
3333 Vaca Valley Parkway Ste 800
Vacaville, CA 95688
Tel: 888-800-3691
www.barriersystemsinc.com

TITLE
X-TENSION GUARDRAIL TERMINAL SYSTEM STEEL POST WITH COMPOSITE BLOCKOUT 31" RAIL HEIGHT

SIZE	DWG NO.	REV.
B	XTGTSS5	B

SCALE 1:50 SHEET 1 OF 1

Doc. B100108

Last Saved by: jeff.thompson; Friday, May 03, 2013 1:23:29 PM

ET-31™ Guardrail End Treatment
NCHRP Report 350 Test Level 3
System Length 46'-10 1/2" (14.29 m)

For specific assembly, maintenance, or repair details refer to the state or specifying agency's standard drawings and/or Trinity standard layout drawings.

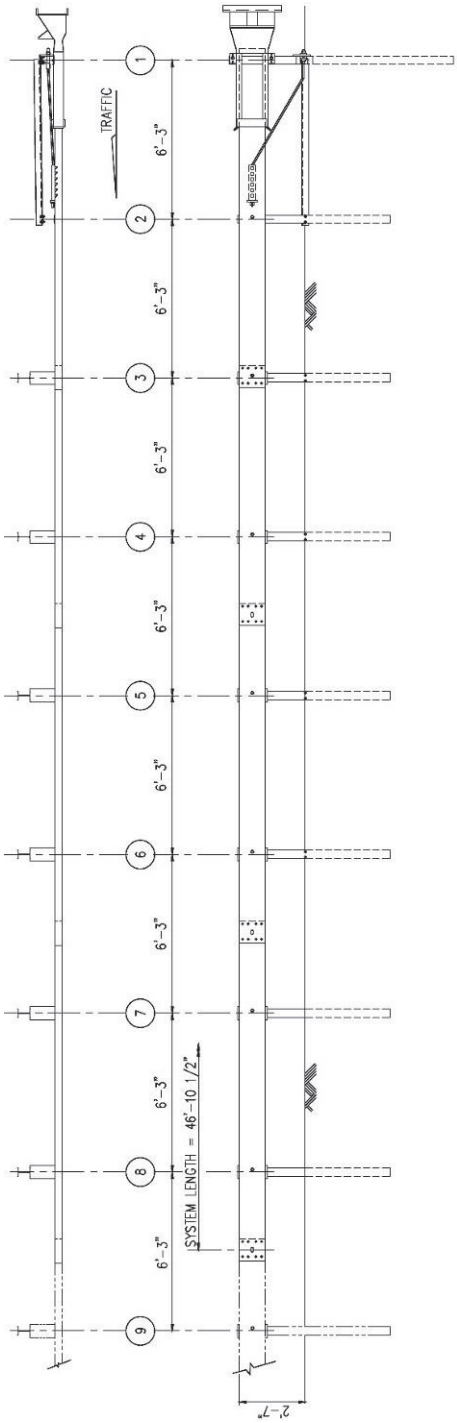

Figure 3 (TL-3)

[This drawing represents one version of the 46'-10 1/2" (14.29 m) system]

All rights in copyright reserved

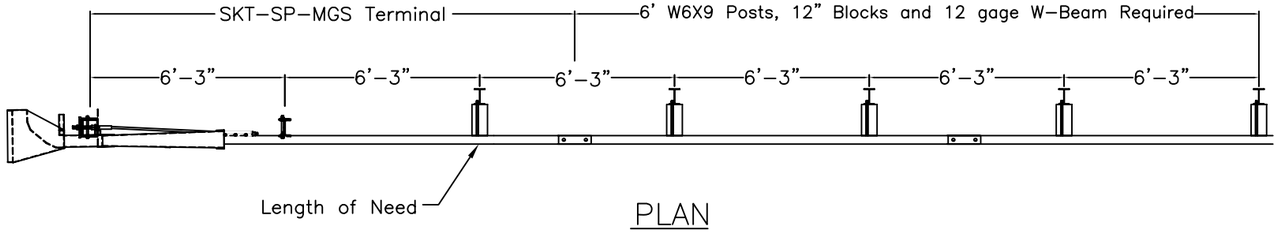

PLAN

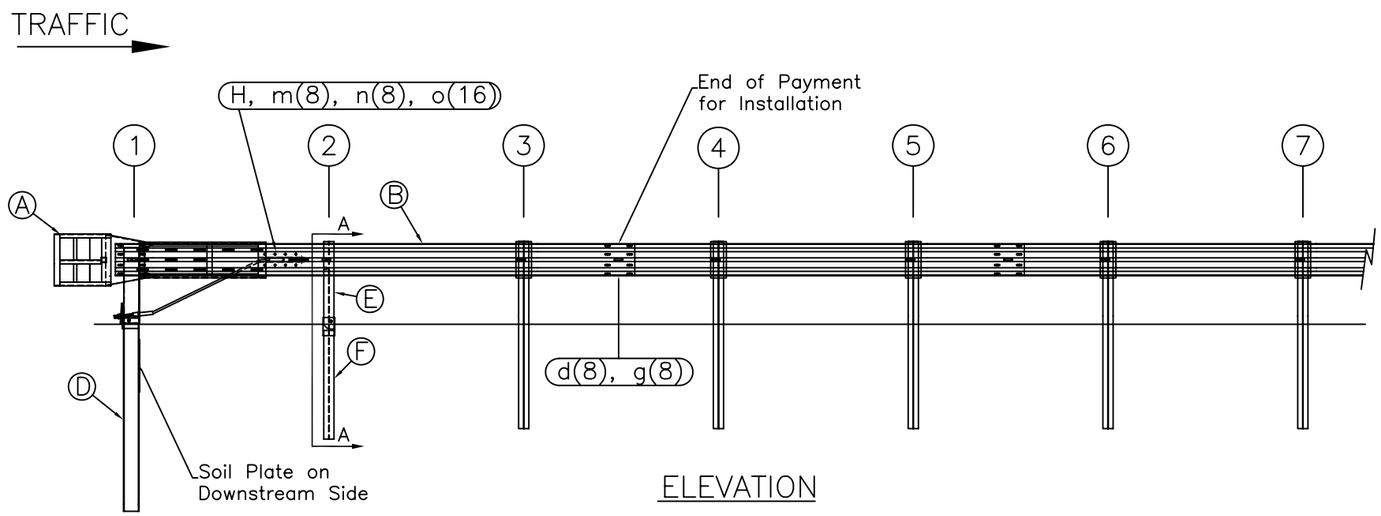

ELEVATION

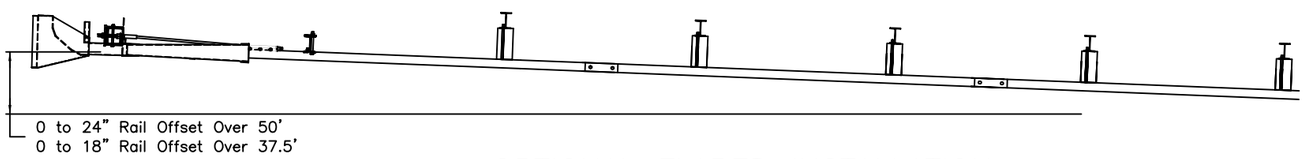

OPTIONAL FLARED INSTALLATION

25:1 maximum flare rate

ITEM	QTY	BILL OF MATERIALS	ITEM NO.
A	1	IMPACT HEAD	S3000
B	1	W-BEAM GUARDRAIL END SECTION, 12 Ga.	MGS-SF1303
C	1	FIRST POST TOP (6X6X$\frac{1}{8}$" Tube)	TPHP1A
D	1	FIRST POST BOTTOM (6' W6X15)	TPHP1B
E	1	SECOND POST ASSEMBLY TOP	UHP2A
F	1	SECOND POST ASSEMBLY BOTTOM	HP3B
G	1	BEARING PLATE	E750
H	1	CABLE ANCHOR BOX	S760
J	1	BCT CABLE ANCHOR ASSEMBLY	E770
		HARDWARE (ALL DIMENSIONS IN INCHES)	
a	2	5/16 x 1 HEX BOLT GRD 5	B5160104A
b	4	5/16 WASHER	W0516
c	2	5/16 HEX NUT	N0516
d	9	5/8 Dia. x 1 1/4 SPLICE BOLT (POST #2)	B580122
e	1	5/8 Dia. x 9 HEX BOLT GRD 5	B580904A
f	3	5/8 WASHER	W050
g	10	5/8 Dia. H.G.R NUT	N050
h	1	3/4 Dia. x 8 1/2 HEX BOLT GRD A449	B340854A
j	1	3/4 Dia. HEX NUT	N030
k	2	1 ANCHOR CABLE HEX NUT	N100
l	2	1 ANCHOR CABLE WASHER	W100
m	8	CABLE ANCHOR BOX SHOULDER BOLT	SB58A
n	8	1/2 A325 STRUCTURAL NUT	N055A
o	16	1 1/16 OD x 9/16 ID A325 STR. WASHER	W050A

GENERAL NOTES:

1. All bolts, nuts, cable assemblies, cable anchors and bearing plates shall be galvanized.
2. The lower sections of the Posts 1&2 shall not protrude more than 4 in above the ground (measured along a 5' cord). Site grading may be necessary to meet this requirement.
3. The lower sections of the hinged posts should not be driven with the upper post attached. If the post is placed in a drilled hole, the backfill material must be satisfactorily compacted to prevent settlement.
4. When competent rock is encountered, a 12" Ø post hole, 20 in. deep cored into the rock surface may be used if approved by the engineer for post 1. Granular material will be placed in the bottom of the hole, approximately 2.5" deep to provide drainage. The first post can be field cut to length, placed in the hole and backfilled with suitable backfill. The soil plate may be trimmed if required.
5. A site evaluation should be considered if there is less than 25' between the outlet side of the terminal and any adjacent driving lane.
6. The breakaway cable assembly must be taut. A locking device (vice grips or channel lock pliers) should be used to prevent the cable from twisting when tightening nuts.

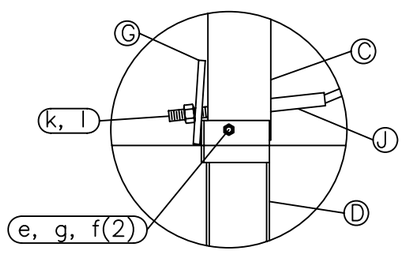

Post #1 Connection Detail

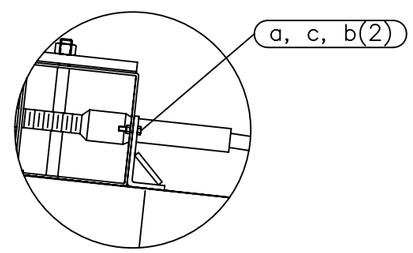

Impact Head Connection Detail

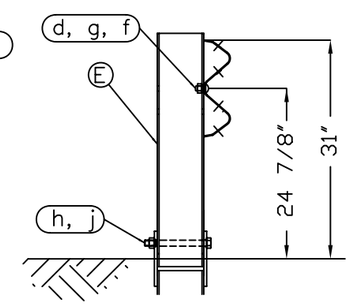

SECTION A-A

Post #2

RSI
Road Systems, Inc.
Big Spring, TX
Phone: 432-263-2435
or Phone: 330-346-0721

SKT-SP-MGS Terminal
Midwest Guardrail System
31" Top of Rail

Sheet: 1
Date: 02/24/10
By: JRR
Drawing Name: SKT-SP-S-MGS
Scale: None
Rev: 0

OFFSET NOTES:
1) POST OFFSET DIMENSIONS ARE GIVEN TO THE CENTER OF THE TRAFFIC FACE OF POSTS, EXCEPT AT POSTS #7 & #8, WHERE DIMENSION IS TO CENTER OF THE TRAFFIC FACE OF THE BLOCKOUTS.
2) GUARDRAIL BETWEEN POST 1-7 IS ON A STRAIGHT LINE FLARE.

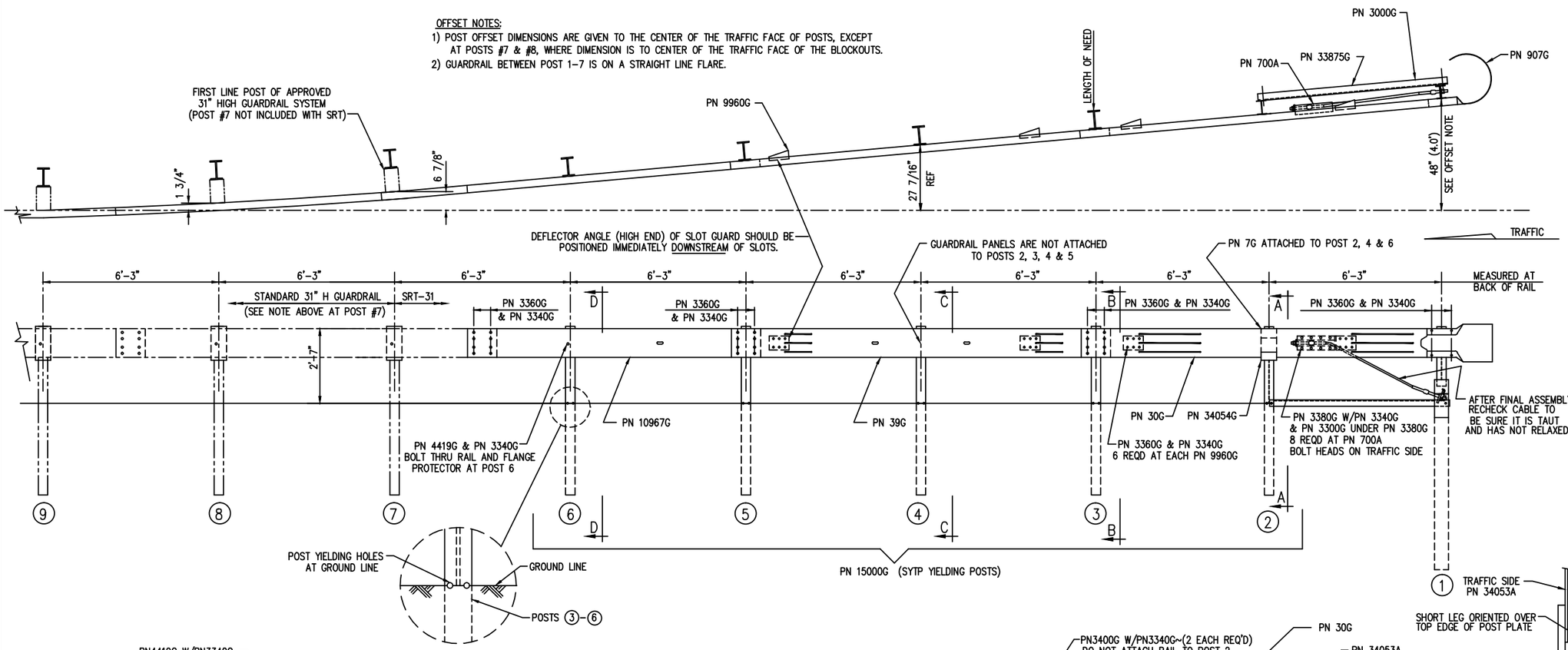

BILL OF MATERIAL

	PN	QTY	DESCRIPTION
	7G	3	12/6"/FLG PROTECTOR (AT POST 2, 4 & 6)
	30G	1	12/12'6/S SRT-1 (GUARDRAIL)
	39G	1	12/12'6/S SRT-2 (GUARDRAIL)
	700A	1	CABLE ANCHOR BRACKET
	907G	1	12/BUFFER/ROLLED (TERMINAL)
	3000G	1	3/4 x 6'-6" CABLE
HARDWARE	3240G	2	5/16" WASHER (AT POST 1)
HARDWARE	3245G	2	5/16" HEX NUT (AT POST 1)
HARDWARE	3300G	12	5/8" WASHER
HARDWARE	3340G	67	5/8" HEX HGR NUT
HARDWARE	3360G	52	5/8"ø x 1 1/4" HGR SPLICE BOLT
HARDWARE	3380G	8	5/8"ø x 1 1/2" HEX HD BOLT
HARDWARE	3400G	4	5/8"ø x 2" HGR POST BOLT (AT POSTS 1, 2 & 4)
HARDWARE	3391G	2	5/8"ø x 1 3/4" HEX BOLT (A325) (AT STRUT)
HARDWARE	3900G	2	1" WASHER (AT CABLE)
HARDWARE	3910G	2	1" HEX NUT (AT CABLE)
HARDWARE	4211G	2	5/16"ø x 1 3/4" HEX BOLT (AT POST 1)
HARDWARE	4419G	1	5/8"ø x 1 3/4" COUNTERSUNK HD BOLT (AT POST 6)
	9960G	4	SLOT GUARD BRACKET
	10967G	1	12/9'4.5/3'1.5/S SRT-3 (GUARDRAIL)
	15000G	5	6'-0" SYT POST (W6 X 8.5)
	33909G	1	CABLE ANCHOR BRACKET (AT POST 1)
	33875G	1	ANGLE STRUT 3 x 3 x 1/4
	34052A	1	CR POST 1 BOT (W6 x 15)
	34053A	1	CR POST 1 TOP (W6 x 8.5)
	34054G	1	POST SHELF ANGLE (AT POST 2)

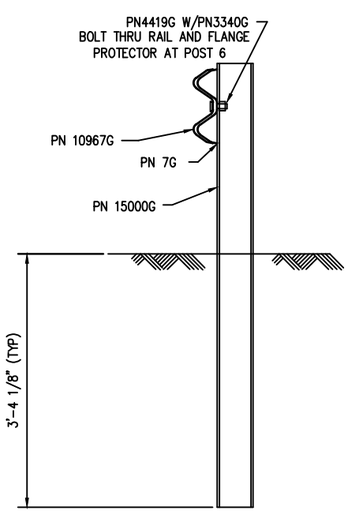

SECTION "D-D"
(@ POST #6)

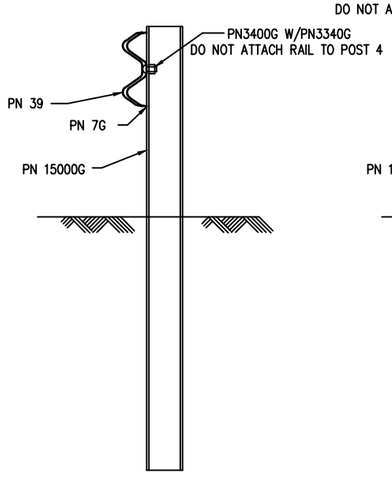

SECTION "C-C"
(@ POST #4)

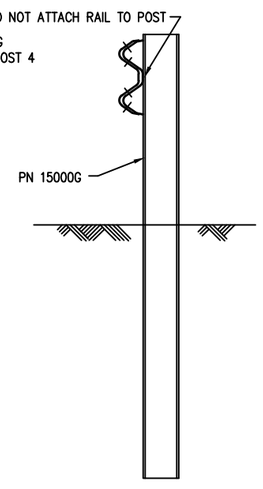

SECTION "B-B"
(@ POST #3 & #5)

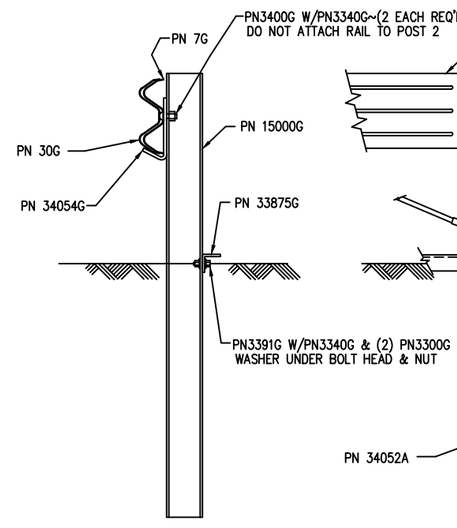

SECTION "A-A"
(@ POST #2)

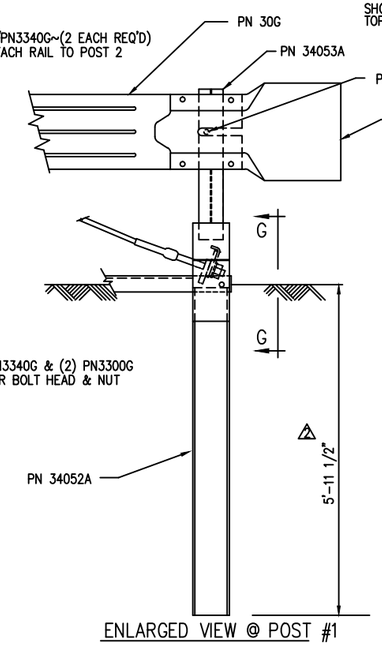

ENLARGED VIEW @ POST #1

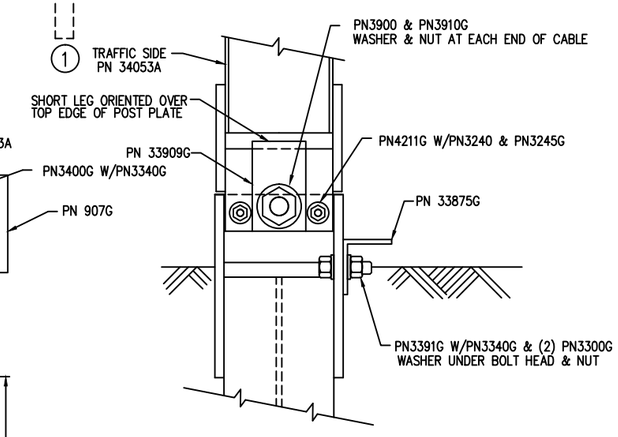

VIEW "G-G"
(@ POST #1)

REV.	CHK'D	BY	DATE	REMARKS
4	BT	LH	10/6/10	OFFSET POSTS #7 & #8
3	BT	LH	2/26/09	REVISED HARDWARE
2	SG	LH	7/28/08	REVISED POST #1 LENGTH IN GROUND
1	SG	LH	1/16/08	REVISED HARDWARE QUANTITY IN BILL OF MATERIAL

SRT-31

SLOTTED RAIL TERMINAL SRT-31 (31" H)
ERECTION DETAILS
(3 PANELS, CR AND SYT POSTS)

DRAWN	BT
CHECKED	SG
SCALE	NTS
DATE	10/30/07
ENG. FILE #	SS436-01E
SHT.No.	E1 OF 1
DRAWING NO.	SS 436
REV.	4

The drawings and the information shown thereon are copyrighted by Trinity Highway Products (2010) and the sole property of Trinity Highway Products. Neither the drawings nor such information is to be used for any purpose other than that for which it was specifically furnished from Trinity Highway Products, LLC., nor is any reproduction authorized without written permission.

TRINITY HIGHWAY PRODUCTS, LLC.
2525 STEMMONS FREEWAY
DALLAS, TX 75207

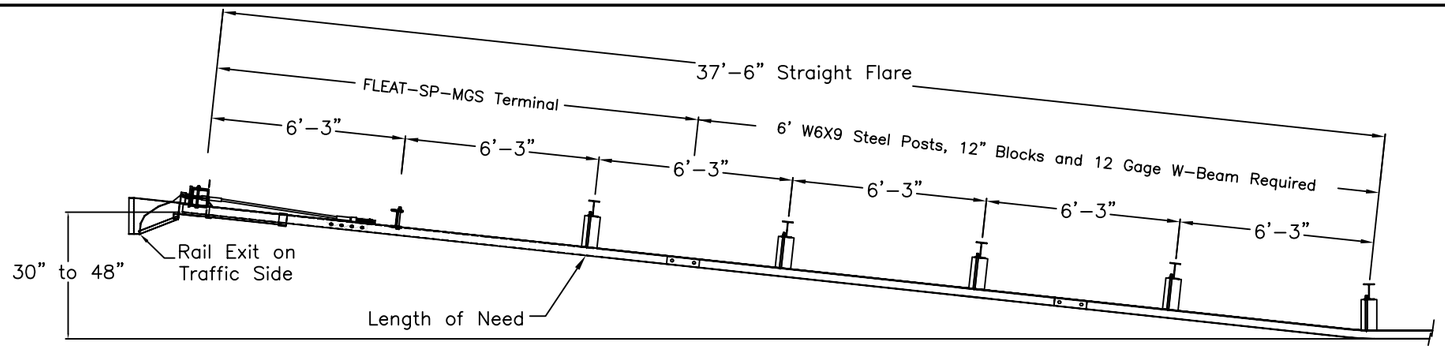

PLAN

TRAFFIC

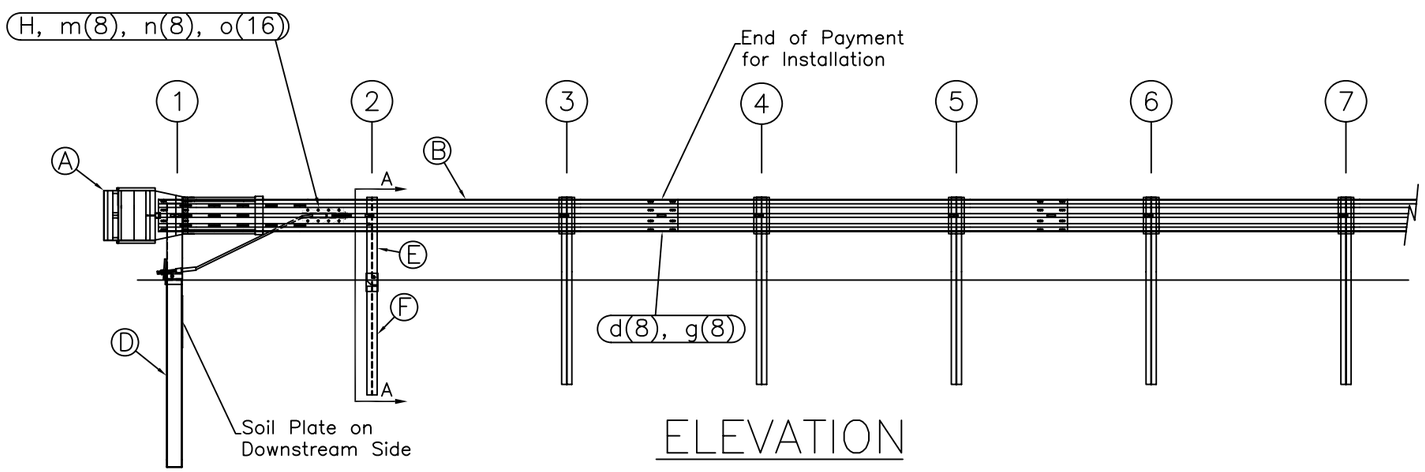

ELEVATION

ITEM	QTY	BILL OF MATERIALS	ITEM NO.
A	1	IMPACT HEAD	F3000
B	1	W-BEAM GUARDRAIL END SECTION, 12 Ga.	MGS-SF1303
C	1	FIRST POST TOP (6X6X$\frac{1}{8}$" Tube)	TPHP1A
D	1	FIRST POST BOTTOM (6' W6X15)	TPHP1B
E	1	SECOND POST ASSEMBLY TOP	UHP2A
F	1	SECOND POST ASSEMBLY BOTTOM	HP3B
G	1	BEARING PLATE	E750
H	1	CABLE ANCHOR BOX	S760
J	1	BCT CABLE ANCHOR ASSEMBLY	E770
		HARDWARE (ALL DIMENSIONS IN INCHES)	
a	2	5/16 x 1 HEX BOLT GRD 5	B5160104A
b	4	5/16 WASHER	W0516
c	2	5/16 HEX NUT	N0516
d	9	5/8 Dia. x 1 1/4 SPLICE BOLT (POST #2)	B580122
e	1	5/8 Dia. x 9 HEX BOLT GRD 5	B580904A
f	3	5/8 WASHER	W050
g	10	5/8 Dia. H.G.R NUT	N050
h	1	3/4 Dia. x 8 1/2 HEX BOLT GRD A449	B340854A
j	1	3/4 Dia. HEX NUT	N030
k	2	1 ANCHOR CABLE HEX NUT	N100
l	2	1 ANCHOR CABLE WASHER	W100
m	8	CABLE ANCHOR BOX SHOULDER BOLT	SB58A
n	8	1/2 A325 STRUCTURAL NUT	N055A
o	16	1 1/16 OD x 9/16 ID A325 STR. WASHER	W050A

GENERAL NOTES:
1. All bolts, nuts, cable assemblies, cable anchors and bearing plates shall be galvanized.
2. The lower sections of the Posts 1&2 shall not protrude more than 4 in above the ground (measured along a 5' cord). Site grading may be necessary to meet this requirement.
3. The lower sections of the hinged posts should not be driven with the upper post attached. If the post is placed in a drilled hole, the backfill material must be satisfactorily compacted to prevent settlement.
4. When competent rock is encountered, a 12" Ø post hole, 20 in. deep cored into the rock surface may be used if approved by the engineer for post 1. Granular material will be placed in the bottom of the hole, approximately 2.5" deep to provide drainage. The first post can be field cut to length, placed in the hole and backfilled with suitable backfill. The soil plate may be trimmed if required.
5. The breakaway cable assembly must be taut. A locking device (vice grips or channel lock pliers) should be used to prevent the cable from twisting when tightening nuts.

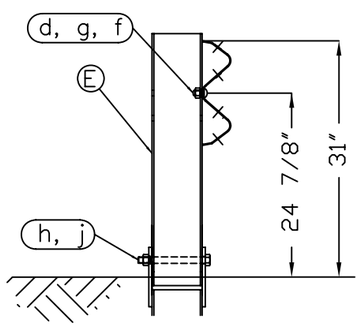

SECTION A-A
Post #2

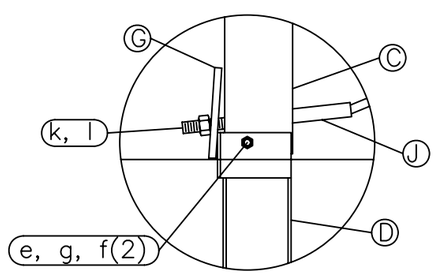

Post #1 Connection Detail

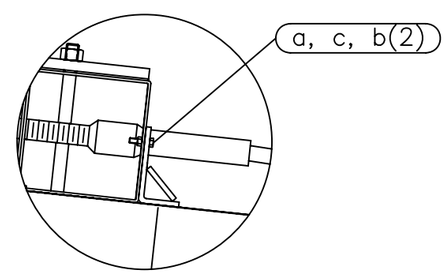

Impact Head Connection Detail

Road Systems, Inc.
Big Spring, TX
Phone: 432-263-2435
or Phone: 330-346-0721

FLEAT-SP-MGS Terminal
Midwest Guardrail System
31" Top of Rail

Sheet: 1
Date: 02/24/10
By: JRR
Drawing Name: FLT-SP-S-MGS
Scale: None
Rev: 0

NOTES: UNLESS OTHERWISE SPECIFIED.
1. X-TENSION SYSTEM TO BE INSTALLED PER MANUFACTURER'S INSTRUCTIONS.
2. SYSTEM SHOWN USING STEEL WIDE FLANGE POST WITH COMPOSITE OR PLASTIC BLOCKOUTS. POST 2 MUST BE A BREAKAWAY STYLE POST CRIMPED (AS SHOWN).
3. SYSTEM MAY ALSO USE TIMBER CRT POSTS WITH TIMBER BLOCKOUTS OR STEEL POSTS WITH TIMBER BLOCKOUTS.

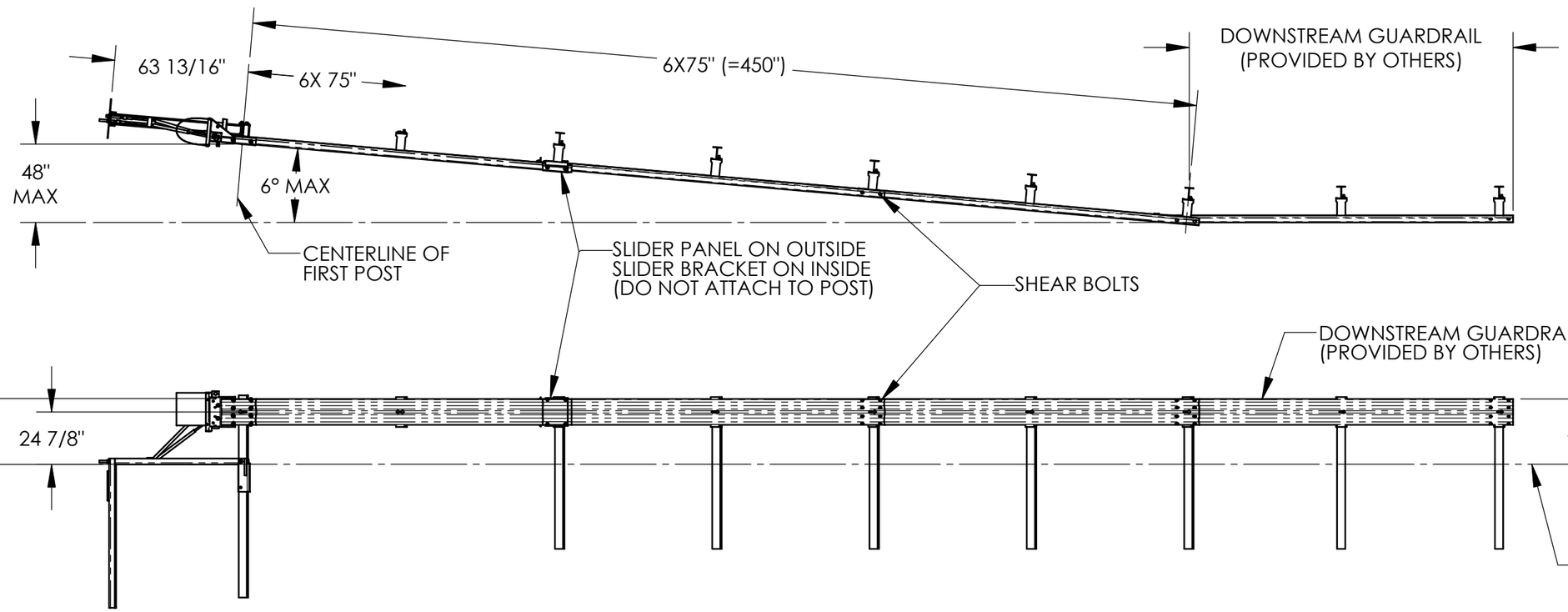

© 2012 BARRIER SYSTEMS INC.
THE INFORMATION CONTAINED IN THIS DRAWING IS THE SOLE PROPERTY OF BARRIER SYSTEMS INC. ANY REPRODUCTION IN PART OR WHOLE WITHOUT THE WRITTEN PERMISSION OF BARRIER SYSTEMS INC. IS PROHIBITED.

APPROVALS

DRAWN BY: NMB
DRAWN DATE: 5/28/14
APPR'D BY:
APPR'D DATE:

UNLESS OTHERWISE SPECIFIED DIMENSIONS ARE IN INCHES. TOLERANCES ARE:
FRACTIONS ±1/16 DECIMAL .XX = ±.03 .XXX = ±.010 ANGLES ±1/2°
INTERPRET DIMENSIONS AND TOLERANCES PER ASME Y14.5-1994

THIRD ANGLE PROJECTION

DO NOT SCALE DRAWING

REV	ECN#	DATE
0	AP 01059	5/28/14

LINDSAY™ TRANSPORTATION SOLUTIONS

BARRIER SYSTEMS INC.
3333 Vaca Valley Parkway Ste 800
Vacaville, CA 95688
Tel: 888-800-3691
www.barriersystemsinc.com

TITLE
31" X-TENSION GUARDRAIL SYSTEM FLARED CALTRANS

SIZE B | DWG NO. BSI-1405049-AP | REV. 0
SCALE 1:60 | SHEET 1 OF 1

Doc. B100108

Last Saved by: nvoelte; Thursday, May 29, 2014 8:42:09 AM