FOR CONTRACT NO.: 06-0H1804

INFORMATION HANDOUT

WATER QUALITY

CALIFORNIA REGIONAL WATER QUALITY CONTROL BOARD
WDID NO. 6B151205006

AGREEMENTS

CALIFORNIA DEPARTMENT OF FISH AND GAME
NOTIFICATION NO. 1600-2012-0099-R4

UNITED STATES FISH AND WILDLIFE SERVICE

MATERIALS INFORMATION

ASBESTOS AND LEAD-CONTAINING PAINT SURVEY FOR RED ROCK CANYON BRIDGE (MARCH 2009)

ALTERNATIVE FLARED TERMINAL SYSTEM DETAILS

FOUNDATION REPORT FOR RED ROCK CANYON BRIDGE
BRIDGE NO. 50-0178

FINAL HYDRAULIC REPORT FOR RED ROCK CANYON BRIDGE
BRIDGE NO. 50-0178

PRELIMINARY SEISMIC AND GEOLOGY REPORT

ROUTE: 14-KER-39.3/40.3

WATER QUALITY

CALIFORNIA REGIONAL WATER QUALITY CONTROL BOARD
WDID NO. 6B151205006

CALIFORNIA
Water Boards

EDMUND G. BROWN JR.
GOVERNOR

MATTHEW RODRIQUEZ
SECRETARY FOR
ENVIRONMENTAL PROTECTION

Lahontan Regional Water Quality Control Board

MEMORANDUM

WDID No. 6B151205006

TO: Carrie Swanberg
California Department of Transportation
District 6
855 "M" Street, Suite 200
Fresno, CA 93721-2716
Email: carrie_swanberg@dot.ca.gov

FROM: Mike Plaziak, P.G.
Supervising Engineering Geologist

DATE: August 17, 2012

SUBJECT: NOTICE OF APPLICABILITY FOR GENERAL WASTE DISCHARGE REQUIREMENTS FOR SMALL CONSTRUCTION, INCLUDING UTILITY, PUBLIC WORKS, AND MINOR STREAMBED/LAKEBED ALTERATION PROJECTS, BOARD ORDER NO. R6T-2003-0004, RED ROCK CANYON BRIDGE REPLACEMENT PROJECT, KERN COUNTY

California Regional Water Quality Control Board, Lahontan Region (Water Board) staff received an application for Waste Discharge Requirements (WDRs) for dredge and fill in waters of the State for the Red Rock Canyon Bridge Replacement Project (Project) on May 29, 2012. Supporting information was received on July 12, 2012, July 20, 2012, and on August 8, 2012. Water Board staff has determined that the proposed Project meets the requirements to be regulated under General Waste Discharge Requirements for Small Construction, Including Utility, Public Works, and Minor Streambed/Lakebed Alteration Projects (General Permit), Board Order No. R6T-2003-0004. The California Department of Transportation, District 6 (Applicant), is hereby assigned General Permit Order No. R6T-2003-0004-194 and Waste Discharge Identification (WDID) No. 6B151205006 for its Project. By this Notice of Applicability (NOA), the fill and excavation related discharges to waters of the State associated with the Project are authorized and subject to compliance with the General Permit. A copy of the General Permit is attached. Please use the above-referenced WDID number in future correspondence regarding this Project.

PROJECT DESCRIPTION

This NOA is based upon the information provided in the application and subsequent correspondence. Project details are summarized in the following table.

Table of Project Information:

WDID Number	6B151205006
Applicant	California Department of Transportation, District 6 855 "M" Street, Suite 200 Fresno, CA 93721-2716 Contact: Carrie Swanberg
Project Name	Red Rock Canyon Bridge Replacement Project
Project Purpose and Description	The purpose of the Project is to replace the existing bridge with a structure that meets current design and safety standards. The new structure will have fewer support columns and a longer span than the existing structure with the new bridge abutments being constructed outside the ordinary high water mark of the channel.
Location (closest City and County)	Red Rock Canyon State Park; Cantil, Kern County
Latitude/Longitude	35.357, -117.976 (center)
Hydrologic Unit(s)	Freemont Hydrologic Unit 625.00, Dove Springs Hydrologic Area 625.10
Project Area	12.5 acres
Receiving Water(s) Name	Dry Wash, tributary to Koehn Lake
Water Body Type(s)	Ephemeral
Wetlands within Project area	Yes
Beneficial Uses	MUN, AGR, GWR, FRSH, NAV, REC-1, REC-2, WARM, WILD, WQE, FLD
Permanent Impact to Waters of State (WOS)	0.007 acres; 20 linear feet
Temporary Impact to WOS	0.655 acres; 166 linear feet
Non-Compensatory Mitigation	During the Project, the applicant will follow best management practices (BMPs) including construction stormwater controls designed to minimize the short-term degradation of water quality. Work within channel is authorized only during dry weather conditions. Should inclement weather occur, all work within the channel must stop and all equipment and materials must be removed from those areas. All temporary impact areas will be restored to pre-Project conditions.
Compensatory Mitigation	The Applicant proposes to enhance a minimum of 0.038 acres of wetland habitat onsite through planting of willow cuttings in a suitable wetland location within the Applicant's existing right-of-way. Monitoring of the

Table of Project Information:

	mitigation site will occur annually for a minimum of five years. Annual reports documenting the success of the mitigation activities will be submitted to the Water Board by December 15th for a minimum of five years and until the success criteria have been met. The first annual report is due December 15, 2013. The proposed mitigation is outlined in the Wetland Habitat Mitigation and Monitoring Plan dated July 20, 2012.
Applicable Fees	$ 6,318.00 ($944.00 base fee + [($4,059 per acre x 0.662 acre of permanent and temporary impact to non-federal waters) x 2]); Project fees are calculated based on area of impact for fill and excavation
Fees Received	$985.00
Fees Due	$5,333.00

CEQA COMPLIANCE

The California Department of Transportation (Caltrans) prepared an Initial Study and Mitigated Negative Declaration (IS/MND) for the Red Rock Canyon Bridge Replacement Project. The IS/MND was prepared pursuant to the California Environmental Quality Act (CEQA), Public Resources Code 21000, et seq., and circulated under State Clearinghouse Number 2009081084. A Notice of Determination was filed on December 3, 2009, following public review.

The Water Board, acting as a CEQA Responsible Agency in compliance with CCR, title 14, section 15096, has considered the MND prepared by Caltrans with respect to water quality. As a result of the analysis, the Water Board finds, with the conditions required in the General Order, the mitigation measures in the MND are adequate to reduce potentially significant water quality impacts to less than significant.

REPORTING

In accordance with the Monitoring and Reporting Program No. 2003-0004, the Applicant must submit to the Water Board a final report with its Notice of Completion describing and documenting the implementation of the Wetland Habitat Mitigation and Monitoring Plan (HMMP), which is dated July 20, 2012. The report must compare the mitigation measures to the success criteria specified in the HMMP.

GENERAL INFORMATION

1. The applicant must remit to this office an additional **$5,333.00** (see Table of Project Information) to complete the filing fee for the Project application, pursuant to CCR, section 2200. The check should be made payable to the **State Water Resources Control Board**. The authorization to operate the

Project pursuant to these WDRs is conditioned upon payment of all applicable fees for review and processing the application.

2. The Project must be constructed and operated in accordance with the Project description in the application and subsequent information provided to the Water Board. Deviation from the Project description constitutes a violation of the conditions upon which this Notice of Applicability was granted.

3. Neither Project construction activities nor operation of the Project may cause a violation of the Water Quality Control Plan for the Lahontan Region, may cause a condition or threatened condition of pollution or nuisance, or cause any other violation of the California Water Code.

4. Failure to abide by the conditions of the General Permit could result in an enforcement action as authorized by provisions of the California Porter-Cologne Water Quality Control Act.

5. Coverage under the General Permit shall continue until revoked in writing by the Executive Officer of the Water Board. Revocation procedures are found in the Administrative Provisions, Section IV.C, of the enclosed General Permit.

We look forward to working with you in your efforts to protect water quality. If you have questions, please contact Jan Zimmerman, Engineering Geologist, at (760) 241-7376 (jzimmerman@waterboards.ca.gov), or Patrice Copeland, Senior Engineering Geologist, at (760) 241-7404 (pcopeland@waterboards.ca.gov). Please use the WDID referenced in the subject line of this letter for future correspondence regarding this project.

Enc: General WDR Permit Order No. R6T-2003-0004 and Monitoring and Reporting Program No. R6T-2003-0004

cc: Ronald Cummings, Caltrans District 6
(via email, Ronald_cummings@dot.ca.gov)

cc w/o enc: Laura Peterson-Diaz, California Department of Fish and Game
(via email, LPDIAZ@dfg.ca.gov)
Bill Orme, SWRCB, Division of Water Quality
(via email, stateboard401@waterboards.ca.gov)

JZ/rp NOA_RedRockBridge.docx

CALIFORNIA REGIONAL WATER QUALITY CONTROL BOARD
LAHONTAN REGION

BOARD ORDER NO. R6T-2003-0004

GENERAL WASTE DISCHARGE REQUIREMENTS
FOR

SMALL CONSTRUCTION PROJECTS, INCLUDING UTILITY, PUBLIC WORKS, AND MINOR STREAMBED/LAKEBED ALTERATION PROJECTS IN THE LAHONTAN REGION EXCLUDING THE LAKE TAHOE HYDROLOGIC UNIT

The California Regional Water Quality Control Board, Lahontan Region (Regional Board) finds:

1. In accordance with Section 13260 of the California Water Code, the discharge of storm water runoff and products of erosion from small construction projects, including utility, public works, within certain sensitive watersheds in the Lahontan Region, and discharges associated with minor streambed/lakebed alteration projects in the Lahontan Region is considered to be a discharge of waste that could affect the quality of waters of the State.

2. The Regional Board may prescribe requirements for any proposed discharge, in accordance with Section 13263 of the California Water Code.

3. Implementation of temporary best management practices (BMPs) is an effective and economical means of preventing or minimizing the discharge of the products of erosion, sediment-laden storm water, and minor waste material spills from small construction projects.

4. Implementation of permanent best management practices (BMPs) after construction is an effective means of treating storm water runoff from impervious surfaces and of preventing erosion following construction of small sites.

5. This General Permit regulates: 1) discharges associated with minor streambed/lakebed alteration projects in the Lahontan Region; and 2) storm water discharges from small construction activity that enter surface waters either directly or indirectly through drainage conveyances or municipal separate storm sewer facilities within the following Hydrologic Units/Areas in the Lahontan Region (see Attachments "A", "B", and "C"):

    a. Little Truckee River Hydrologic Unit (HU No. 636.00)
    b. Truckee River Hydrologic Area (HU No. 635.20)
    c. West Fork Carson River Hydrologic Unit (HU No. 633.00)
    d. East Fork Carson River Hydrologic Unit (HU No. 632.00)
    e. Mono Hydrologic Unit (HU No. 601.00)
    f. Long Hydrologic Area (HU No. 603.10)

6. Small construction projects located within the jurisdiction of local agencies that have entered into a Memorandum of Understanding (MOU) with the Regional Board to implement a storm water construction pollution control program in accordance with the *Water Quality Control Plan for the Lahontan Region* (Basin Plan) are not subject to this General Permit. The Town of Mammoth Lakes has entered into such an MOU with the Regional Board and upon adoption of this Permit the Regional Board waives requirements for submitting Reports of Waste Discharge for small construction activity, as defined in Finding 9, within the Mammoth Lakes jurisdiction. Subsequent to the adoption of this Order, other jurisdictions may enter into MOUs with the Regional Board and qualify for a similar waiver.

7. Discharges of storm water runoff and products of erosion from certain construction projects in the Lake Tahoe Hydrologic Unit are regulated under separate General Waste Discharge Requirements and are not covered under this permit.

8. This General Permit does not preempt or supersede the authority of local storm water management agencies to prohibit, restrict, or control storm water discharges to separate storm sewer systems or other watercourses within their jurisdiction, as allowed by State and Federal law.

9. For purposes of this Order, a "small construction project" includes construction activity that results in land disturbance of 10,000 square feet or more and is not covered under the State Water Resources Control Board (SWRCB) Water Quality Order 99-08-DWQ (Statewide Construction General Permit). Land disturbance is clearing, grading, or disturbances to the ground, including excavation and stockpiling, within the footprint of the structure to be constructed, and any staging and access areas that disturb native soil conditions. Only the actual area of land disturbance is considered when determining whether a project must be covered under this Permit. For example, if a 1-acre parcel (43,560 square feet) is to be developed, but only 9,000 square feet of soil will be disturbed within the project site, coverage under this Permit is not required. Small construction projects also include utility projects proposed by a public or private utility and public works projects proposed by a public entity that involve 10,000 square feet or more of land disturbance.

   The Statewide Construction General Permit currently covers projects involving one acre or more of land disturbance. Small construction activity that results in land disturbances of less than 10,000 square feet is subject to this General Permit if the construction activity is part of a larger common plan of development that, as a whole, encompasses 10,000 square feet, but less than 1 acre of soil disturbance. For example, a single development that is completed in two separate phases, with each phase disturbing 8,000 square feet, would require coverage under this Permit because the total land disturbance associated with the project as a whole is 16,000 square feet. For purposes of this Order, Construction activity does not include routine maintenance to maintain original line and grade, hydraulic capacity, or original purpose of the facility, nor does it include emergency construction activities required to protect public health and safety.

10. For purposes of this order, a "minor streambed/lakebed alteration project" is one that includes soil disturbing work, including maintenance dredging, within the high water mark of any water body in the Lahontan Region or the 100-year floodplain in the Truckee and Little Truckee River Hydrologic Units, and is not regulated by the Army Corps of Engineers under Clean Water Act (CWA) Section 404.

11. This General Permit does not authorize discharges of fill or dredged material regulated by the U.S. Army Corps of Engineers under CWA Section 404 and does not constitute a state water quality certification under CWA Section 401.

12. To obtain authorization for proposed storm water discharges associated with land disturbing activities to ground and/or surface waters pursuant to this General Permit, the Discharger must submit a Notice of Intent (NOI – Attachment "D") to comply with the General Permit and a filing fee to the Regional Board prior to commencement of construction activities. The NOI must include a description of specific temporary and permanent Best Management Practices (BMPs) to be implemented to prevent or minimize the discharge of waste from the project site during and after construction (see Attachment "E"). For proposed construction activity on easements or on nearby property by agreement or permission, the entity responsible for the construction activity must submit the NOI and filing fee and shall be responsible for development and implementation of the BMPs. Coverage under the General Permit shall begin upon written notification from the Regional Board or 30 days following Regional Board receipt of an NOI if the applicant receives no response from the Regional Board.

13. If an individual National Pollutant Discharge Elimination System (NPDES) Permit is issued to a discharger for activities otherwise subject to this General Permit, or if an alternative general or individual permit is subsequently adopted which covers storm water discharges regulated by this General Permit, the applicability of this General Permit to such discharges is automatically terminated on the effective date of the individual permit or the date of approval for coverage under the subsequent General Permit.

14. Potential pollutant discharges from projects covered under this General Permit consist of products of erosion, construction waste materials, dewatering waste, turbid water and waste earthen materials from work within surface waters, and small amounts of petroleum products from construction equipment.

15. The Regional Board adopted and the State Water Resources Control Board (SWRCB) approved the *Water Quality Control Plan for the Lahontan Region* (Basin Plan). This General Permit implements the Basin Plan. Dischargers regulated by this General Permit must comply with the water quality standards, guidelines, and prohibitions in the Basin Plan, and subsequent amendments thereto.

16. Runoff from the project sites will potentially enter either ground or surface waters of the Hydrologic Units/Areas listed in Finding 5.

17. The beneficial uses of ground and surface waters within the Hydrologic Units/Areas listed in Finding 5 are provided in Chapter 2 of the Basin Plan. There are a variety of designated beneficial uses for individual water bodies that are too numerous to list in this General Permit. The pertinent information is available from the Basin Plan at the Regional Board offices and may be found at the following website - http://www.swrcb.ca.gov/rwqcb6/files.htm

18. A Negative Declaration for the adoption of this General Permit was certified by the Regional Board on January 8, 2003 (Resolution No. R6T-2003-0004) in accordance with the California Environmental Quality Act (Public Resources Code Section 21000 et seq.).

19. The projects regulated by this General Permit are typically nonrecurring and short-term construction projects that will normally be completed within two construction seasons. The applicability of these requirements to the specific project may be revoked pursuant to Administrative Provisions – Section IV.D.

20. The Regional Board has notified the interested agencies and persons of its intent to adopt general waste discharge requirements for small construction projects and has provided them with an opportunity to submit their written views and recommendations.

21. The Regional Board in a public meeting heard and considered all comments pertaining to the requirements.

IT IS HEREBY ORDERED that all dischargers submitting an NOI, applicable fee, and BMP plan in accordance with this permit shall comply with the following:

I. DISCHARGE PROHIBITIONS

A. The discharge of waste[1], including but not limited to, waste earthen materials (such as soil, silt, sand, clay, rock, or other organic or mineral material) that causes violation of any narrative water quality objective contained in the Basin Plan, including the Nondegradation Objective, is prohibited.

B. The discharge of waste that causes violation of any numeric water quality objective contained in the Basin Plan is prohibited.

C. Where any numeric or narrative water quality objective contained in the Basin Plan is already being violated, the discharge of waste that causes further degradation or pollution is prohibited.

D. The discharge, attributable to human activities, of solid or liquid waste materials, including but not limited to soil, silt, clay, sand, or other organic or earthen material, to surface waters of the Truckee River and Little Truckee River Hydrologic Units, is prohibited.

E. The discharge or threatened discharge, attributable to human activities, of solid or liquid waste materials, including but not limited to soil, silt, clay, sand, or other organic or earthen material, to lands within the 100-year floodplain of the Little Truckee River and Truckee River, or any tributary to the Little Truckee and Truckee Rivers, is prohibited. A summary of the waste discharge prohibitions and exception criteria is presented in Attachment "F."

F. Unless specifically granted, authorization pursuant to this General Permit does not constitute an exemption to applicable discharge prohibitions prescribed in the Basin Plan.

G. Unless otherwise authorized by a separate waste discharge permit, discharges of material other than storm water, including dewatering waste, to a separate storm sewer system or waters of the state are prohibited. Discharge of dewatering waste to land is covered under this General Permit providing that there are no pollutants present that could degrade groundwater quality. If no land disposal alternatives exist for dewatering waste, the Discharger may seek coverage to discharge dewatering waste to surface waters under a separate NPDES permit by submitting a separate Report of Waste Discharge.

H. Discharges of non-storm water are allowed only when necessary for performance and completion of construction projects and where they do not cause or contribute to a violation of any water quality standard. Such discharges must be described in the BMP plan (see Provision III – Best Management Practices). Wherever feasible, alternatives that do not result in the discharge of non-storm water, or that discharge any non-storm water to land, shall be implemented.

---

[1] CWC Section 13050(d): "Waste" includes sewage and any and all other waste substances, liquid, solid, gaseous, or radioactive, associated with human habitation, or of human or animal origin, or from any producing, manufacturing, or processing operation, including waste placed within containers of whatever nature prior to, and for purposes of, disposal.

I. Storm water discharges regulated by this General Permit shall not contain a hazardous substance equal to or in excess of a reportable quantity listed in 40 CFR Part 117 and/or 40 CFR Part 302.

J. Except under emergency conditions, land disturbance between October 15 of any year and May 1 of the following year is prohibited in the Little Truckee River and Truckee River Hydrologic Units. Where it can be shown that granting a variance would not cause or contribute to the degradation of water quality, an exception to the dates stated above may be granted in writing by the Executive Officer.

K. The discharge of fresh concrete or grout to surface waters is prohibited, unless the discharge is confined to the work area and isolated from flowing streams or water bodies.

L. The discharge of oil, gasoline, diesel fuel, any petroleum derivative, any toxic chemical, or hazardous waste is prohibited.

M. The discharge of waste, including wastes contained in storm water, shall not cause a pollution, threatened pollution, or nuisance as defined in Section 13050 of the California Water Code.

II. RECEIVING WATER LIMITATIONS

A. Storm water discharges and authorized nonstorm water discharges to any ground water or surface water shall not adversely impact human health or the environment.

B. The discharge of storm water from the project area to surface waters shall not cause or contribute to a violation of any narrative or numeric water quality objective contained in the Basin Plan. Where any numeric or narrative water quality objective contained in the Basin Plan is already being violated, the discharge of waste that causes further degradation or pollution is prohibited. A complete listing of water quality objectives is presented in the Basin Plan, Chapter 3 and can be found at the following website - http://www.swrcb.ca.gov/rwqcb6/files.htm

Water quality objectives that apply to all surface waters within the Lahontan Region include, but are not limited to, the following construction-related pollutants.

Oil and Grease
Waters shall not contain oils, greases, waxes or other materials in concentrations that result in a visible film or coating on the surface of the water or on objects in the water, that cause nuisance, or that otherwise adversely affect the water for beneficial uses.

For natural high quality waters, the concentration of oils, greases, or other film or coat generating substances shall not be altered.

pH
In fresh waters with designated beneficial uses of COLD or WARM, changes in normal ambient pH levels shall not exceed 0.5 pH units. For all other waters of the Region, the pH shall not be depressed below 6.5 nor raised above 8.5.

The Regional Board recognizes that some waters of the Region may have natural pH levels outside of the 6.5 to 8.5 range. Compliance with the pH objective for these waters will be determined on a case-by-case basis.

Sediment
The suspended sediment load and suspended sediment discharge rate of surface waters shall not be altered in such a manner as to cause nuisance or adversely affect the water for beneficial uses.

Settleable Materials
Waters shall not contain substances in concentrations that result in deposition of material that causes nuisance or that adversely affects the water for beneficial uses. For natural high quality waters, the concentration of settleable materials shall not be raised by more that 0.1 milliliter per liter.

Turbidity
Waters shall be free of changes in turbidity that cause nuisance or adversely affect the water for beneficial uses. For all waters, increases in turbidity shall not exceed natural levels by more than 10 percent. Additionally for the Little Truckee Hydrologic Unit and Truckee River Hydrologic Area, turbidity shall not be raised above 3 Nephelometric Turbidity Units (NTU) mean of monthly means. Additionally for the West Fork Carson River Hydrologic Unit, the turbidity shall not be raised above a mean of monthly means value of 2 NTU.

Toxicity
All waters shall be maintained free of toxic substances in concentrations that are toxic to, or that produce detrimental physiological responses in human, plant, animal, or aquatic life.

C. Should it be determined by the Discharger or Regional Board staff that storm water discharges and/or authorized nonstorm water discharges are causing or contributing to a violation of an applicable water quality standard, the Discharger shall:

1. Implement corrective measures immediately following discovery that water quality standards were violated, followed by notification to the Regional Board by telephone as soon as possible but no later than 48 hours after the discharge has been discovered. This notification shall be followed by a report within 14 calendar days to the Regional Board, unless otherwise directed by the Regional Board, describing (1) the nature and cause of the water quality standard violation; (2) the BMPs currently being implemented; (3) any additional BMPs which will be implemented to prevent or reduce pollutants that are causing or contributing to the violation of water quality standards; and (4) any maintenance or repair of BMPs. This report shall include an implementation schedule for corrective actions and shall describe the actions taken to reduce the pollutants causing or contributing to the violation.

2. The Discharger shall revise storm water pollution control measures and monitoring procedures to incorporate: 1) the additional BMPs that have been, and will be implemented; 2) the implementation schedule; and 3) any additional monitoring needed.

3. Nothing in this section shall prevent the Regional Board from enforcing any provisions of this General Permit while the Discharger prepares and implements the above report.

III. BEST MANAGEMENT PRACTICES (BMPs)

A. Prior to the initiation of any construction related activities, the Discharger shall develop a BMP implementation plan and install temporary erosion control facilities to prevent transport of earthen materials and other wastes off the property. Guidance for developing the BMP plan is provided in Attachment "E."

B. All land disturbing activities shall be conducted in accordance with the Lahontan Region Project Guidelines for Erosion Control (Attachment "G").

C. If the Regional Board determines that the proposed BMPs will not achieve the applicable standards and receiving water objectives, the Discharger may be required to implement additional or alternative BMPs.

IV. ADMINISTRATIVE PROVISIONS

A. Applicability and Timing

1. Upon receipt of the applicable filing fee, an NOI to comply with the provisions of this General Permit, and an adequate BMP plan, the Discharger will be issued a written Notice of Applicability (NOA). The Regional Board reserves the right to request additional information if the NOI and/or BMP plan is deemed inadequate.

2. The Discharger shall submit a NOI, a BMP plan, and the appropriate fee at least 30 days prior to the proposed date of construction. Additional time (up to 120 days) will be required for projects that propose disturbance to flood plains or waters of the state. Construction may not begin until a written NOA is received from the Regional Board or 30 days have elapsed from the date the NOI was received by the Regional Board. If the Discharger is notified in writing that the NOI and/or BMP plan is incomplete, the Discharger must provide the additional information requested in the notice and the Regional Board may take up to 30 days to respond with an NOA or request for additional information.

3. All Dischargers must implement the BMP plan and the Monitoring and Reporting Program upon commencement of construction.

4. Projects may be brought to the Regional Board for consideration of adoption of an individual WDR when the Executive Officer deems it necessary to achieve water quality protection.

5. The conditions of this General Permit do not exempt the Discharger from compliance with any other laws, regulations, or ordinances which may be applicable, do not legalize land treatment and disposal facilities, and leave unaffected any further restraints on those facilities which may be contained in other statutes or required by other regulatory agencies.

B. Provisions

1. All Dischargers must comply with the lawful requirements of municipalities, counties, drainage districts, and other local agencies regarding discharges of storm water to drainage systems or other water courses under their jurisdiction.

2. The Discharger shall at all times fully comply with the engineering plans, specifications, and technical reports developed for the project and/or submitted with the NOI. The Discharger shall at all times fully comply with the BMP Plan.

3. The Discharger must comply with the Standard Provisions for Waste Discharge Requirements contained in Attachment "H", which is made part of this General Permit.

4. Pursuant to California Water Code Section 13267, the Discharger shall comply with Monitoring and Reporting Program No. **R6T-2003-0004** hereby made a part of this General Permit.

5. The owners of property subject to this General Permit shall have a continuing responsibility for ensuring compliance with the General Permit. The Discharger identified in the NOA shall remain liable for General Permit violations until an NOI is received from the new owner/operator. Notification of applicable General Permit requirements shall be furnished to the new owners and/or operators and a copy of such notification shall be sent to the Regional Board. This General Permit is transferable to the new owner. Any change in the ownership and/or operation of property subject to this General Permit shall be reported to the Regional Board. The new owner must comply with the General Permit, including the Monitoring and Reporting Program.

C. Revocation Procedures

Coverage under the General Permit shall continue until revoked in writing by the Regional Board staff. The Discharger is responsible for notifying the Regional Board in writing that the project is complete, certifying that the required conditions are met, and requesting revocation of coverage under the General Permit. The General Permit for the specific project will be revoked provided the following conditions are met: 1) the construction project is complete and soil stabilization measures are in place and functioning; 2) permanent BMPs have been installed and are functional; 3) information required by the attached Monitoring and Reporting Program has been submitted; and 4) Regional Board staff have inspected the site, if deemed necessary.

I, Harold J. Singer, Executive Officer, do hereby certify that the foregoing is a full, true and correct copy of an Order adopted by the California Regional Water Quality Control Board, Lahontan Region, on January 8, 2003.

Harold J. Singer

HAROLD J. SINGER
EXECUTIVE OFFICER

Attachment A: Map of Little Truckee River Hydrologic Unit and Truckee River Hydrologic Area

Attachment B: Map of West and East Forks Carson River Hydrologic Units

Attachment C: Map of Mono Hydrologic Unit and Long Hydrologic Area

Attachment D: Notice of Intent Form

Attachment E: Best Management Practices Plan

Attachment F: Waste Discharge Prohibitions and Exception Criteria for Projects within the Truckee River Hydrologic Unit

Attachment G: Lahontan Region Project Guidelines for Erosion Control

Attachment H: Standard Provision for Waste Discharge Requirements

BA/cgT: Small Construction General Permit WDR

Attachment "A"
Little Truckee River Hydrologic Unit
And
Truckee River Hydrologic Area

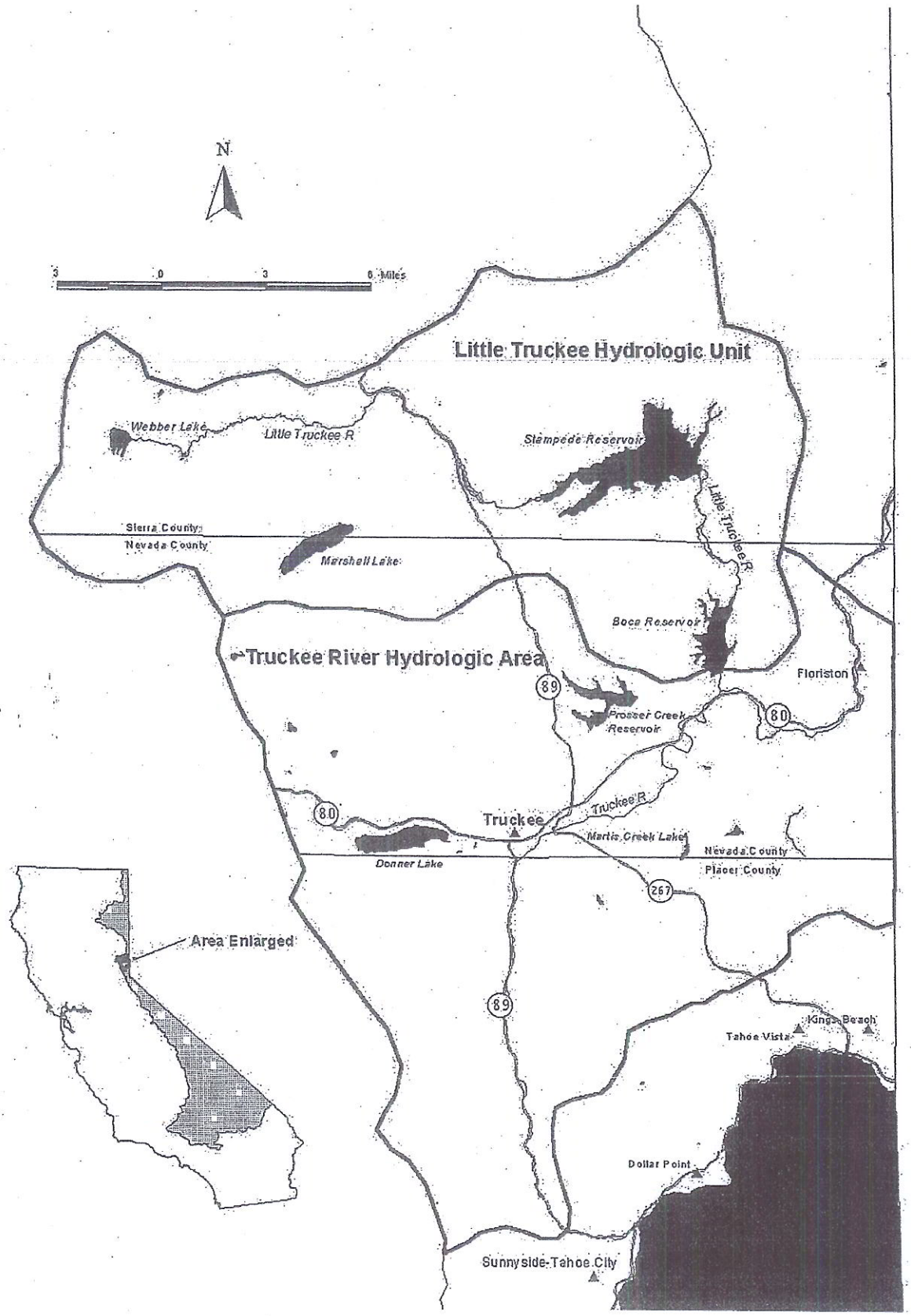

Attachment "B"
West and East Fork Carson River
Hydrologic Units

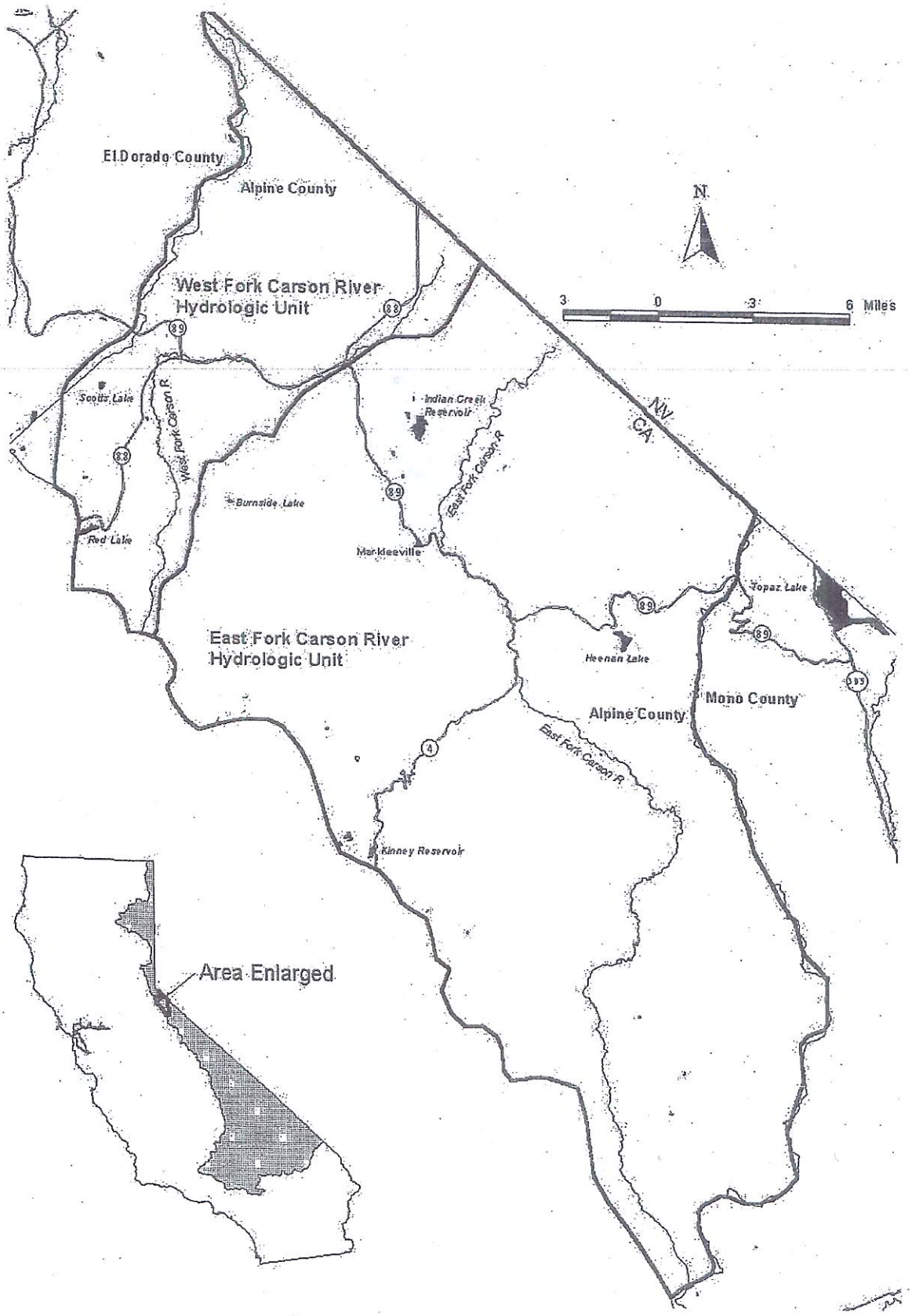

Attachment "C"
Mono Hydrologic Unit
And
Long Hydrologic Area

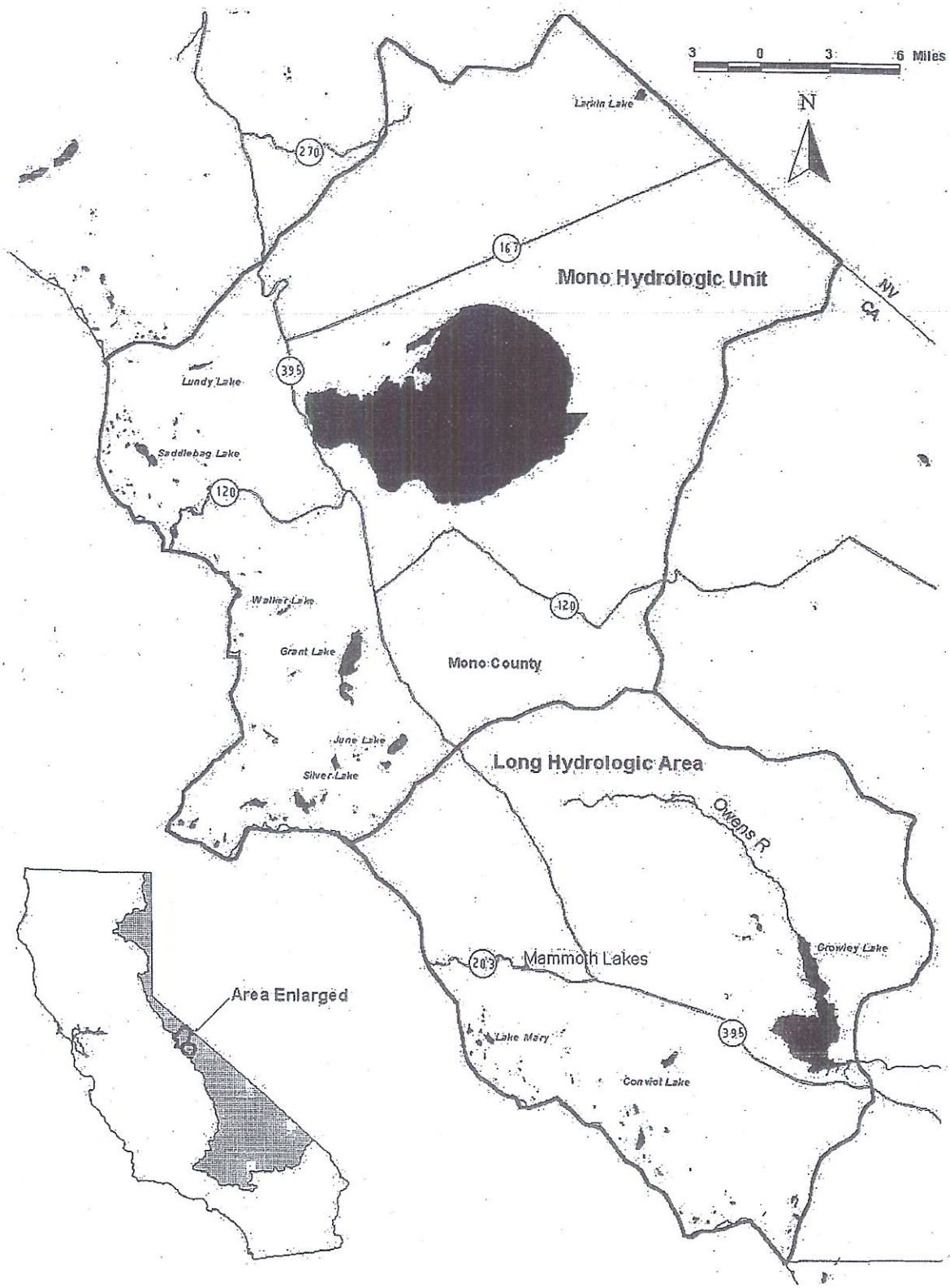

ATTACHMENT "D"

California Regional Water Quality Control Board – Lahontan Region

NOTICE OF INTENT

TO COMPLY WITH THE TERMS OF THE
GENERAL WASTE DISCHARGE REQUIREMENTS
FOR
SMALL CONSTRUCTION PROJECTS, INCLUDING UTILITY, PUBLIC WORKS, AND MINOR STREAMBED/LAKEBED ALTERATION PROJECTS
IN THE LAHONTAN REGION
EXCLUDING THE LAKE TAHOE HYDROLOGIC UNIT
(WQ ORDER No. R6T-2003-0004)

I. NOI STATUS (SEE INSTRUCTIONS)

MARK ONLY ONE ITEM 1. ☐ New Construction 2. ☐ Change of Information for WDID# _____

II. PROPERTY OWNER

Name	Contact Person		
Mailing Address	Title		
City	State	Zip	Phone ( ) –

III. DEVELOPER/CONTRACTOR INFORMATION

Developer/Contractor	Contact Person		
Mailing Address	Title		
City	State	Zip	Phone ( ) –

IV. CONSTRUCTION PROJECT INFORMATION

Site/Project Name	Site Contact Person		
Physical Address/Location	Latitude ____°	Longitude ____°	County
City (or nearest City)	Zip	Site Phone Number ( ) –	Emergency Phone Number ( ) –

A. Total size of construction site area: _____ Acres

B. Total area to be disturbed: _____ Acres (% of total _____)

C. Percent of site imperviousness (including rooftops):
Before Construction: _____%
After Construction: _____%

D. Tract Number(s): _____, _____

E. Mile Post Marker: _____

F. Is the construction site part of a larger common plan of development or sale?
☐ YES ☐ NO

G. Name of plan or development:

H. Construction commencement date: ____/____/____

I. % of site to be mass graded: _____

J. Projected construction dates:
Complete grading: ____/____/____ Complete project: ____/____/____

K. Type of Construction (Check all that apply):

1. ☐ Residential 2. ☐ Commercial 3. ☐ Industrial 4. ☐ Reconstruction 5. ☐ Transportation

6. ☐ Utility Description: _____ 7. ☐ Other (Please List): _____

V. BILLING INFORMATION

SEND BILL TO:	Name	Contact Person	
☐ OWNER (as in II. above)			
☐ DEVELOPER (as in III. above)	Mailing Address	Phone/Fax	
☐ OTHER (enter information at right)	City	State	Zip

VI. REGULATORY STATUS

A. Has a local agency approved a required erosion/sediment control plan? ☐ YES ☐ NO

Does the erosion/sediment control plan address construction activities such as infrastructure and structures? ☐ YES ☐ NO

Name of local agency: _____ Phone: ( ) –

B. Is this project or any part thereof, subject to conditions imposed under a CWA Section 404 permit or 401 Water Quality Certification? ☐ YES ☐ NO

If yes, provide details: _____

VII. RECEIVING WATER INFORMATION

A. Does the storm water runoff from the construction site discharge to (Check all that apply):

1. ☐ **Indirectly to waters of the State**
2. ☐ **Storm drain system - Enter owner's name:** _____
3. ☐ **Directly to waters of State (e.g. , river, lake, creek, stream, wetlands)**

B. Name of receiving water: (river, lake, creek, stream, wetlands): _____

VIII. BEST MANAGEMENT PRACTICES (BMP) PLAN AND FEE

Have you included a BMP Plan with this submittal? .. ☐ YES ☐ NO

Have you included payment of the annual fee with this submittal? ☐ YES ☐ NO

X. CERTIFICATIONS

"I certify under penalty of law that this document and all attachments were prepared under my direction and supervision in accordance with a system designed to assure that qualified personnel properly gather and evaluate the information submitted. Based on my inquiry of the person or persons who manage the system, or those persons directly responsible for gathering the information, the information submitted is, to the best of my knowledge and belief, true, accurate, and complete. I am aware that there are significant penalties for submitting false information, including the possibility of fine or imprisonment. In addition, I certify that the provisions of the permit, including the development and implementation of a Storm Water Pollution Prevention Plan and a Monitoring Program Plan will be complied with."

Printed Name: _____

Signature: _____ **Date:** _____

Title: _____

ATTACHMENT "E"

BEST MANAGEMENT PRACTICES PLAN

The purpose of the Best Management Practices (BMP) plan is to evaluate potential sources of sediment and other pollutants at the construction site and put controls in place that will effectively prevent pollutant discharges to surface and ground waters. The following general pollution control elements should be addressed in the BMP Plan:

1. retain soil and sediment on the construction site;
2. prevent non-storm water discharges that would discharge pollutants off site;
3. prevent the discharge of other pollutants associated with construction activities to land or surface waters;
4. permanently stabilize disturbed soils; and
5. minimize the effects of increased storm water runoff from impervious surfaces.

For detailed information on construction related BMPs, the EPA document Storm Water Management for Construction Activities: Developing Pollution Prevention Plans and Best Management Practices may be found at the following website:
http://cfpub.epa.gov/npdes/pkeyword.cfm?keywords=BMPs&program_id=0

Additional information may be also be obtained by contacting the Lahontan Regional Water Quality Control Board.

Specific guidance for completing the Best Management Practices (BMP) Plan is provided below. The BMP Plan must be submitted with the Notice of Intent (NOI) to obtain coverage under the General Permit. Use the attached form for preparing the BMP plan.

Temporary Erosion Control

This element of the BMP Plan addresses temporary erosion control or soil stabilization measures to be implemented during the time while active construction and land disturbing work is active. The most efficient way to address erosion control is to preserve existing vegetation where feasible, limit disturbance, and stabilize and revegetate disturbed areas as soon as possible after grading or construction. Use of temporary erosion control measures is especially important on large graded sites where soil exposure to rainfall and wind can cause significant soil loss if left unprotected during the time active construction activities are conducted. Some of these measures may overlap with the permanent soil stabilization measures discussed later in the section. Until permanent vegetation is established, temporarily covering the soil is the most cost-effective and expeditious method to prevent and minimize erosion.

Indicate on the BMP Plan what methods will be used to prevent erosion from cut and fill slopes and other disturbed areas after grading activities are completed, but before permanent soil stabilization measures can be implemented. Options may include, but are not limited to:

- **Covering with mulch**
- **Temporary seeding or planting**
- **Applying soil stabilizers or binders (tackifier)**

- **Placing fiber rolls/logs on bare slopes**
- **Covering surfaces with erosion control blankets**
- **Diverting run off around disturbed areas using stabilized conveyances**

Sediment Control

Sediment control BMPs are required at appropriate locations along the site perimeter and at all internal inlets to the storm drain system. Sediment controls used in combination with the erosion controls described above can effectively prevent the discharge of pollutants off site. Effective filtration devices, barriers, and settling devices shall be selected, installed and maintained properly. The sediment control plan must also include provisions to temporarily stabilize construction access points such that soil, sediment, and other construction related materials are not tracked out beyond the site perimeter.

Indicate on the BMP Plan what sediment controls will be used at the site. Options may include, but are not limited to:

Filter barriers -
- **fiber rolls/logs**
- **silt fence**
- **straw bale barriers**
- **gravel inlet filters**

Retention structures -
- **sediment traps**
- **settling basins**

Stabilized access points/good housekeeping –
- **crushed rock**
- **mulch**
- **landing mats**
- **frequent sweeping**

Stabilization

All disturbed areas of the construction site must be stabilized once construction is complete. Disturbed areas include drainage ditches or channels. Stabilization means implementing permanent rather than temporary erosion controls. It is recommended to stabilize disturbed areas in inactive (no further land disturbance planned) portions of the site as soon as feasible. Final stabilization for the purposes of submitting a Notice of Termination (NOT) is satisfied when all soil disturbing activities are completed AND EITHER OF THE TWO FOLLOWING CRITERIA ARE MET:

1. A uniform vegetative cover with 70 percent coverage has been established OR:

2. equivalent stabilization measures have been employed. These measures include the use of such BMPs as mulch, erosion blankets, rip rap, fiber treatments, or other erosion resistant soil coverings or treatments.

Where background native vegetation covers less than 100 percent of the surface, such as in arid areas, the 70 percent coverage criteria is adjusted as follows: if the native vegetation on adjacent undisturbed areas covers 50 percent of the ground surface, 70 percent of 50 percent (.70 X .50=.35) would require 35 percent total uniform surface coverage.

Indicate on the BMP Plan what stabilization measures will be used at the site. Options may include, but are not limited to:

- **Seeding and/or planting (including hydro mulching/seeding)**
- **Mulching (wood chips, gravel, other) in combination with seeding/planting**
- **Installing erosion blankets (typically used on steeper disturbed slopes or unlined drainage ditches in combination with permanent seeding/planting)**
- **Placing rip rap**

Non-Storm Water Management

Non-storm water discharges should be eliminated or reduced to the extent feasible. Certain non-storm water discharges (e.g. irrigation of vegetative erosion control measures, pipe flushing and testing) may be necessary for the completion of some construction projects and are authorized by this General Permit. Other non-storm water discharges such as concrete washout, and driveway and street washing that would flush sediment or other pollutants to storm drains or surface waters are not allowed and would be a violation of this General Permit. De-watering waste should be discharged to land and infiltrated. A separate permit may be necessary if de-watering waste must be discharged to surface waters due to site constraints.

Indicate on the BMP Plan how unauthorized non-storm water discharges will be controlled. Options include, but are not limited to:

- **Approved off-site wash-out and wash-down areas**
- **Lined wash-out containment basins/traps**
- **De-watering waste infiltration or containment**

Spill Prevention and Control

The BMP Plan must describe measures to prevent and control potential leaks/spills of petroleum products such as fuels and lubricating materials, and other potentially hazardous materials. Secured storage areas for fuels and chemicals should be established and sufficient spill cleanup materials should be at the site to respond to accidental spills.

Indicate on the BMP Plan what spill prevention and control measures will be used. Options include, but are not limited to:

- **Covered material storage**
- **Material storage containment (berms, lined surfaces, secondary containment devices etc.)**
- **Regular equipment leak inspections**
- **Drip pans**
- **Absorbents**

Post-Construction Storm Water Management

Post-construction storm water controls are needed to reduce the impacts of adding impervious surfaces to the landscape and adding potential pollutant sources within storm water drainage areas. Additional impervious surfaces reduce storm water infiltration and storage and increase the volume and velocity of run off down stream from developed sites. Whenever possible, use of infiltration and treatment devices is encouraged. Specific requirements for infiltration or treatment of storm water runoff volume from a 20-year, 1-hour storm from all impervious surfaces in the Truckee River, Little Truckee River, and Mammoth Lakes watersheds must be met (see Attachment "G") Design approaches that limit overall land disturbance and reduce the amount of impervious surfaces are encouraged. Additional post-construction BMPs should also be incorporated into projects as appropriate and be properly maintained.

Indicate on the BMP Plan what post-construction BMPs will be implemented. Options include, but are not limited to:

- **Infiltration structures**
- **Detention/retention basins**
- **Storm water treatment vaults**
- **Biofilter BMPs (typically vegetated swales, strips, and buffers)**
- **Energy dissipation devices (structures designed to prevent erosion and slow water velocity associated with conveyance systems**
- **Efficient irrigation systems**
- **Proper drain plumbing (e.g. ensuring that interior drains are not connected to a storm sewer system)**

Maintenance, Inspection, and Repair

BMPs implemented at the site must be properly maintained to be effective. The BMP plan shall include provisions to inspect and maintain all BMPs identified in the plan throughout the duration of the project. Sites that are inactive and winterized through the wet season should be checked periodically to ensure the site remains stable. For sites where construction activity is conducted through the wet season, the Discharger must ensure that BMPs remain effective.

Indicate on the BMP Plan how BMPs will be inspected and repaired in accordance with the following minimum program:

For inactive construction sites during wet season -

- **Cease construction through wet season and winterize (see Attachment "G")**

For active construction sites during wet season -

- **Inspect BMPs before and after storm events**
- **Inspect BMPs once each 24-hour period during extended storm events**
- **Implement repairs or design changes as soon as feasible depending upon worker safety and field conditions**
- **Have provisions to respond to failures and emergencies**

BEST MANAGEMENT PRACTICES PLAN

Discharger Name: _____

Site Name: _____

Street Address: _____

City: _____

County: _____

Use the template provided below to identify BMPs to be implemented at the construction site. Check the boxes next to the BMPs that will be used. If other BMPs will be used, describe them in the space provided for "Other BMP." Attach additional sheets if needed.

TEMPORARY EROSION CONTROL

Erosion from graded or disturbed areas, including cut and fill slopes, will be temporarily protected once soil disturbing activities are completed by the following method(s):

- ☐ **Covering with mulch**
- ☐ **Temporary seeding or planting**
- ☐ **Applying soil stabilizers or binders (tackifier)**
- ☐ **Placing fiber rolls/logs on bare slopes**
- ☐ **Covering surfaces with erosion control blankets**
- ☐ **Diverting run off around disturbed areas using stabilized conveyances**
- ☐ **Other (describe below)**

BEST MANAGEMENT PRACTICES PLAN

SEDIMENT CONTROL

Excess sediment will be prevented from running off the site or to storm drain inlets by the following method(s):

Filter barriers -

- ☐ **fiber rolls**
- ☐ **silt fence**
- ☐ **straw bale barriers**
- ☐ **gravel inlet filters**

Retention structures -

- ☐ **sediment traps**
- ☐ **settling basins**

Stabilized access points/good housekeeping –

- ☐ **crushed rock**
- ☐ **mulch**
- ☐ **landing mats**
- ☐ **frequent sweeping**

☐ **Other (describe below)**

BEST MANAGEMENT PRACTICES PLAN

STABILIZATION

Disturbed soil areas not covered with impervious surfaces will be permanently stabilized by the following method(s):

- ☐ **Seeding and/or planting (including hydro mulching/seeding)**
- ☐ **Mulching (wood chips, gravel, other) in combination with seeding/planting**
- ☐ **Installing erosion blankets (typically used on steeper disturbed slopes or unlined drainage ditches in combination with permanent seeding/planting)**
- ☐ **Placing rip rap (describe location)**
- ☐ **Other (describe below)**

NON-STORM WATER MANAGEMENT

Unauthorized non-storm water discharges will be controlled using the following method(s):

- ☐ **Approved off-site wash-out and wash-down areas (describe location)**
- ☐ **Lined wash-out containment basins/traps (describe location)**
- ☐ **De-watering waste infiltration or containment (describe location)**
- ☐ **Other (describe below)**

POST-CONSTRUCTION STORM WATER MANAGEMENT

The following post-construction BMPs will be implemented to reduce impacts from additional impervious surfaces and pollutant sources (include design calculations used to size BMPs):

- ☐ **Infiltration structures**
- ☐ **Detention/retention basins**
- ☐ **Storm water treatment vaults**
- ☐ **Biofilter BMPs (typically vegetated swales, strips, and buffers)**
- ☐ **Energy dissipation devices (structures designed to prevent erosion and slow water velocity associated with conveyance systems**
- ☐ **Efficient irrigation systems**
- ☐ **Proper plumbing design (e.g. ensuring that interior drains are not connected to a storm sewer system)**
- ☐ **Other (describe below)**

MAINTENANCE, INSPECTION, AND REPAIR

BMPs will be inspected and repaired in accordance with the following minimum program:

For inactive construction sites during wet season (October 15 – May 1) –

- ☐ **Cease construction through wet season and winterize (see Attachment "G")**

For active construction sites during wet season (October 15 – May 1) –

- ☐ **Inspect BMPs, and repair if needed, before and after storm events**
- ☐ **Inspect BMPs once each 24-hour period during extended storm events**
- ☐ **Implement repairs or design changes as soon as feasible depending upon worker safety and field conditions**
- ☐ **Have provisions to respond to failures and emergencies**
- ☐ **Other (describe below)**

ATTACHMENT "F"

CALIFORNIA REGIONAL WATER QUALITY CONTROL BOARD
LAHONTAN REGION

WASTE DISCHARGE PROHIBITIONS
AND
EXCEPTION CRITERIA
FOR PROJECTS WITHIN THE TRUCKEE RIVER HYDROLOGIC UNIT

The *Water Quality Control Plan for the Lahontan Region* (Basin Plan) prohibits the discharge or threatened discharge, attributable to human activities, of solid or liquid waste[1] materials (including, but not limited to, soil, silt, clay, sand and other organic and earthen materials) to lands within the 100-year floodplain of the Truckee River or within the 100-year floodplain of any tributary[2] to the Truckee River. The Regional Board may grant exceptions to the prohibition for repair or replacement of existing structures provided that a loss of additional floodplain area or volume does not occur, and Best Management Practices and mitigation measures are used to minimize any potential soil erosion and/or surface runoff problems.

The Regional Board may also grant exceptions to the prohibition for the following types of new projects:

(1) Projects solely intended to reduce or mitigate existing sources of erosion or water pollution, or to restore the functional value to previously disturbed floodplain areas.

(2) Bridge abutments, approaches, or other essential transportation facilities identified in an approved county general plan.

(3) Projects necessary to protect public health or safety, or to provide essential public services.

(4) Projects necessary for public recreation.

(5) Projects that will provide outdoor public recreation within portions of the 100-year flood plain that have been substantially altered by grading and/or filling activities which occurred prior to June 26, 1975.

---

1 Waste includes earthen material placed in a water body or carried to waters by erosive forces. Construction activity involving ground disturbance within 100-year floodplain areas is generally considered to constitute a threat of discharge.

2 Tributaries include: perennial surface waters (rivers. streams, lakes, wetlands) and ephemeral (seasonal) watercourses exhibiting evidence of the occurrence of flowing water, and having the potential to transport water and/or sediment to another water body, including, but not limited to, named and unnamed streams, wetlands, and lakes.

The Basin Plan allows an exception to the prohibitions for new projects only when the Regional Board makes all of the following findings:

- The project is included in one or more of the five categories listed above.
- There is no reasonable alternative to locating the project or portions of the project within the 100-year flood plain.
- The project, by its very nature, must be located within the 100-year flood plain. (The determination of whether a project, by its very nature, must be located in a 100-year flood plain shall not apply to projects in category (5), above, and shall be based on the type of project proposed, not the particular site proposed.)
- The project incorporates measures which will ensure that any erosion and surface runoff problems caused by the project are mitigated to levels of insignificance.
- The project will not individually or cumulatively with other projects, directly or indirectly, degrade water quality or impair beneficial uses of water.
- The project will not reduce the flood flow attenuation capacity, the surface flow treatment capacity, or the ground water flow treatment capacity from existing conditions. All 100-year flood plain areas and volumes lost as a result of the project must be completely mitigated by restoration of previously-disturbed floodplain within or as close as practical to the project site.[3] The restored, new, or enlarged floodplain shall be of sufficient area and volume to more than compensate for the flood flow attenuation capacity, surface flow treatment capacity and ground water flow treatment capacity which are lost as a result of the project.

---

3 This finding will not be required for new projects necessary to protect public health and safety. For new projects necessary to provide essential public services, this finding will not be required when the Regional Board finds mitigation measures to be infeasible because the financial resources of the project proponent are severely limited.

ATTACHMENT "G"

LAHONTAN REGION
PROJECT GUIDELINES FOR EROSION CONTROL

In the interest of protecting surface water quality from unnatural or accelerated erosion caused by land development, the following guidelines shall be followed:

Guidelines Applicable To: **Little Truckee River Hydrologic Unit (HU No. 636.00)**
Truckee River Hydrologic Area (HU No. 635.20)
West Fork Carson River Hydrologic Unit (HU No. 633.00)
East Fork Carson River Hydrologic Unit (HU No. 632.00)
Mono Hydrologic Unit (HU No. 601.00)
Long Hydrologic Area (HU No. 603.10)

Temporary Construction BMPs

1. Surplus or waste materials shall not be placed in drainage ways or within the 100-year flood plain of surface waters.

2. All loose piles of soil, silt, clay, sand, debris, or earthen materials shall be protected in a reasonable manner to prevent discharge of pollutants to waters of the State. Material stockpiles should be placed on the upgradient side of excavation whenever possible. Stockpiles may also be protected by covering to prevent contact with precipitation and by placing sediment barriers around the stockpiles.

3. Dewatering shall be done in a manner so as to prevent the discharge of pollutants, including earthen materials, from the site. The first option is to discharge dewatering waste to land. A separate permit may be required if, due to site constraints, dewatering waste must be discharged to surface waters. Contact the Regional Board for information on discharging to surface waters.

4. All disturbed areas shall be stabilized by appropriate erosion and/or sediment control measures by October 15 of each year.

5. All work performed between October 15th and May 1st of each year shall be conducted in such a manner that the project can be winterized within 48 hours. Winterized means implementing erosion and/or sediment controls that will prevent the discharge of earthen materials from the site and the controls will remain effective throughout the rainy/snow season without requiring maintenance. In general, this requires stabilizing bare disturbed soils with mulch, erosion protection blankets, or other suitable materials, and installing perimeter sediment controls such as fiber logs or other similar materials that will remain effective during significant rain and snow events.

6. After completion of a construction project, all surplus or waste earthen material shall be removed from the site and deposited at a legal point of disposal.

7. All non-construction areas (areas outside of the construction zone that will remain undisturbed) shall be protected by fencing or other means to prevent unnecessary encroachment outside the active construction zone.

8. During construction, temporary erosion control facilities (e.g., impermeable dikes, filter fences, weed-free straw bales, etc.) shall be used as necessary to prevent discharge of earthen materials from the site during periods of precipitation or runoff.

9. Control of run-on water from offsite areas shall be managed (protected, diverted, treated, etc.) to prevent such water from degrading before it discharges from the site.

10. Where construction activities involve the crossing and/or alteration of a stream channel, such activities require a prior written agreement with the California Department of Fish and Game and shall be timed whenever possible to occur during the period in which streamflow is expected to be lowest for the year. Other control measures may be used as necessary to prevent adverse effects from work in surface waters.

Permanent Construction BMPs

1. Impervious surfaces should be constructed with infiltration trenches or comparable infiltration structures along downgradient sides to infiltrate the increase in runoff resulting from the new impervious surfaces. Infiltration structures should also be constructed to accept runoff from structural (roof top) drip lines. Other control measures may be considered if design and/or site constraints are such that construction of infiltration devices is infeasible. Additional specific design specifications are required for the Truckee, Little Truckee and Long Hydrologic Units/Areas (see specific requirements below).

2. Where possible, existing drainage patterns shall not be significantly modified.

3. Drainage swales disturbed by construction activities shall be stabilized by the addition of crushed rock or riprap, as necessary, or other appropriate stabilization methods.

4. Revegetated areas shall be regularly and continually maintained in order to assure adequate growth and root development. Physical erosion control measures (controls other than live vegetation) shall be placed on a routine maintenance and inspection program to provide continued erosion control integrity.

Additional Requirements for Specific Watersheds

Truckee River Hydrologic Area and Little Truckee Hydrologic Unit

1. Runoff from impervious surfaces shall be treated or contained onsite. For purposes of this requirement, the volume of water to be contained or treated is the 20-year, one-hour storm, which is equal to 0.7 inches of rain.

2. Except in the event of emergencies, land disturbance associated with project construction is prohibited between October 15th and May 1st of the following year. Exemptions may be granted by the Executive Officer on a case by case basis.

Long Hydrologic Area

Policy: (Contact the Regional Water Quality Control Board for information on permitting requirements delegated to the Town of Mammoth Lakes under a Memorandum of Understanding)

1. For Mammoth Lakes watershed at an elevation above 7,000 feet, drainage collection, retention, and infiltration facilities shall be constructed and maintained to prevent transport of the runoff from a 20-year, 1-hour design storm from the project site. A 20-year, 1-hour design storm for the Mammoth Lakes area is equal to 1.0 inch of rainfall.

ATTACHMENT "H"

CALIFORNIA REGIONAL WATER QUALITY CONTROL BOARD
LAHONTAN REGION

STANDARD PROVISIONS
FOR WASTE DISCHARGE REQUIREMENTS

1. Inspection and Entry

The discharger shall permit Regional Board staff:

a. to enter upon premises in which an effluent source is located or in which any required records are kept;

b. to copy any records relating to the discharge or relating to compliance with the waste discharge requirements;

c. to inspect monitoring equipment or records; and

d. to sample any discharge.

2. Reporting Requirements

a. Pursuant to California Water Code 13267(b), the discharger shall immediately notify the Regional Board by telephone whenever an adverse condition occurred as a result of this discharge; written confirmation shall follow within two weeks. An adverse condition includes, but is not limited to, spills of petroleum products or toxic chemicals, or damage to control facilities that could affect compliance.

b. Pursuant to California Water Code Section 13260 (c), any proposed material change in the character of the waste, manner or method of treatment or disposal, increase of discharge, or location of discharge, shall be reported to the Regional Board at least 120 days in advance of implementation of any such proposal. This shall include, but not be limited to, all significant soil disturbances.

c. The owner(s) of, and discharger upon, property subject to waste discharge requirements shall be considered to have a continuing responsibility for ensuring compliance with applicable waste discharge requirements in the operations or use of the owned property. Pursuant to California Water Code Section 13260(c), any change in the ownership and/or operation of property subject to the waste discharge requirements shall be reported to the Regional Board. Notification of applicable waste discharge requirements shall be furnished in writing to the new owners and/or operators and a copy of such notification shall be sent to the Regional Board.

d. If a discharger becomes aware that any information submitted to the Regional Board is incorrect, the discharger shall immediately notify the Regional Board, in writing, and correct that information.

e. Reports required by the waste discharge requirements, and other information requested by the Regional Board, must be signed by a duly authorized representative of the discharger. Under Section 13268 of the California Water Code, any person failing or refusing to furnish technical or monitoring reports, or falsifying any information provided therein, is guilty of a misdemeanor and may be liable civilly in an amount of up to one thousand dollars ($1000) for each day of violation.

f. If the discharger becomes aware that their waste discharge requirements are no longer needed (because the project will not be built or the discharge will cease) the discharger shall notify the Regional Board in writing and request that their waste discharge requirements be rescinded.

3. Right to Revise Waste Discharge Requirements

The Board reserves the privilege of changing all or any portion of the waste discharge requirements upon legal notice to and after opportunity to be heard is given to all concerned parties.

4. Duty to Comply

Failure to comply with the waste discharge requirements may constitute a violation of the California Water Code and is grounds for enforcement action or for permit termination, revocation and reissuance, or modification.

5. Duty to Mitigate

The discharger shall take all reasonable steps to minimize or prevent any discharge in violation of the waste discharge requirements which has a reasonable likelihood of adversely affecting human health or the environment.

6. Proper Operation and Maintenance

The discharger shall at all times properly operate and maintain all facilities and systems of treatment and control (and related appurtenances) that are installed or used by the discharger to achieve compliance with the waste discharge requirements. Proper operation and maintenance includes adequate laboratory control, where appropriate, and appropriate quality assurance procedures. This provision requires the operation of backup or auxiliary facilities or similar systems that are installed by the discharger, when necessary to achieve compliance with the conditions of the waste discharge requirements.

7. Waste Discharge Requirement Actions

The waste discharge requirements may be modified, revoked and reissued, or terminated for cause. The filing of a request by the discharger for waste discharge requirement

modification, revocation and reissuance, termination, or a notification of planned changes or anticipated noncompliance, does not stay any of the waste discharge requirements conditions.

8. Property Rights

The waste discharge requirements do not convey any property rights of any sort, or any exclusive privileges, nor does it authorize any injury to private property or any invasion of personal rights, nor any infringement of federal, state or local laws or regulations.

9. Enforcement

The California Water Code provides for civil liability and criminal penalties for violations or threatened violations of the waste discharge requirements including imposition of civil liability or referral to the Attorney General.

10. Availability

A copy of the waste discharge requirements shall kept and maintained by the discharger and be available at all times to operating personnel.

11. Severability

Provisions of the waste discharge requirements are severable. If any provision of the requirements is found invalid, the remainder of the requirements shall not be affected.

12. Public Access

General public access shall be effectively excluded from treatment and disposal facilities.

13. Transfers

Providing there is no material change in the operation of the facility, this Order may be transferred to a new owner or operation. The owner/operator must request the transfer in writing and receive written approval from the Regional Board Executive Officer.

14. Definitions

a. "Surface waters" as used in this Order, include, but are not limited to, live streams, either perennial or ephemeral, which flow in natural or artificial water courses and natural lakes and artificial impoundments of waters. "Surface waters" does not include artificial water courses or impoundments used exclusively for wastewater disposal.

b. "Ground waters" as used in this Order, include, but are not limited to, all subsurface waters being above atmospheric pressure and the capillary fringe of these waters.

15. Storm Protection

All facilities used for collection, transport, treatment, storage, or disposal of waste shall be adequately protected against overflow, washout, inundation, structural damage or a significant reduction in efficiency resulting from a storm or flood having a recurrence interval of once in 100 years.

CALIFORNIA REGIONAL WATER QUALITY CONTROL BOARD
LAHONTAN REGION

MONITORING AND REPORTING PROGRAM NO. R6T-2003-0004
GENERAL WASTE DISCHARGE REQUIREMENTS

FOR

SMALL CONSTRUCTION PROJECTS, INCLUDING UTILITY, PUBLIC WORKS, AND MINOR STREAMBED/LAKEBED ALTERATION PROJECTS
LAHONTAN REGION
EXCLUDING THE LAKE TAHOE HYDROLOGIC UNIT

A. An inspection of the construction site shall be made daily during active construction and monthly during long periods of inactivity (e.g. winter), by the Discharger, resident engineer, superintendent, general contractor, or equivalent. The purpose of the inspection is to discover potential water quality problems at the construction site so that the Discharger can implement corrective measures. The following items should be inspected at the site, as applicable:

1. Damaged containment dikes or erosion fencing
2. Unauthorized access by vehicles and/or sediment tracking off the site
3. Boundary fence damage or removal
4. Disturbed areas with no erosion control protection
5. Evidence of any sediment leakage through erosion control fencing or containment dikes
6. Soil piles unprotected or located in drainage ways
7. Spilled chemicals, paints, fuels, oils, sealants, etc.
8. Upstream runoff diversion structures in place and operational
9. Any signs of downstream erosion from runoff discharges
10. Sediment accumulation within onsite storm water drainage facilities

B. Following completion of project construction, the Discharger shall submit a notice of completion and request for revocation of coverage under the permit. The notice of completion should include the following information:

1. Details on any modification from the construction plans to the proposed stormwater collection, treatment, or disposal facilities.

2. Details on any changes to the amount of impervious coverage for this project.

3. Any significant problems which occurred during project construction and remedial measures taken.

4. Statement that onsite stabilization/revegetation measures have been completed.

5. Certification that project is in compliance with the requirements of the General Permit.

The final report shall contain the name of the project and shall be signed and dated by the property owner or his legal representative. The report shall be submitted to the Regional Board office in South Lake Tahoe.

Ordered by Harold J. Singer Date: Jan 8, 2003
HAROLD J. SINGER
EXECUTIVE OFFICER

BA/cgT: Small Construction M&R

AGREEMENTS

CALIFORNIA DEPARTMENT OF FISH AND GAME
NOTIFICATION NO. 1600-2012-0099-R4

CALIFORNIA DEPARTMENT OF FISH AND GAME
REGION 4 - CENTRAL REGION
1234 East Shaw Avenue
Fresno, California 93710

STREAMBED ALTERATION AGREEMENT
NOTIFICATION NO. 1600-2012-0099-R4
Red Rock Canyon Wash, Kern County

CALIFORNIA DEPARTMENT OF TRANSPORTATION
CALTRANS DISTRICT 6
Carrie Swanberg
855 M Street, Suite 200
Fresno, California 93721

SR 14 RED ROCK CANYON BRIDGE PROJECT
06-KER-14 PM 39.3-40.3 EA 06-0H180

This Streambed Alteration Agreement (Agreement) is entered into between the California Department of Fish and Game (DFG) and California Department of Transportation Caltrans District 6 (Permittee) as represented by Carrie Swanberg acting on behalf of Permittee.

RECITALS

WHEREAS, pursuant to Fish and Game Code (FGC) Section 1602, Permittee notified DFG on May 25, 2012 that Permittee intends to complete the Project described herein.

WHEREAS, pursuant to FGC Section 1603, DFG has determined that the Project could substantially adversely affect existing fish or wildlife resources and has included measures in the Agreement necessary to protect those resources.

WHEREAS, Permittee has reviewed the Agreement and accepts its terms and conditions, including the measures to protect fish and wildlife resources.

NOW THEREFORE, Permittee agrees to complete the Project in accordance with the Agreement.

PROJECT LOCATION

The Project is located on State Route (SR) 14 where it crosses the Red Rock Canyon Wash at PM 40.0, in Kern County, State of California; Township 30 South, Range 37 East, Section 3, United States Geological Survey (USGS) map Cantil, Mount Diablo meridian. Latitude: 35.21421 Longitude: -117.58590.

PROJECT DESCRIPTION

The Project is limited to:

- Bridge 50-178 on SR 14 where it crosses Red Rock Canyon Wash is currently 60 feet wide and will be replaced with a new bridge 72 feet wide to allow for 10 foot wide shoulders on the bridge. The highway shoulders to the approaches to the bridge will also be widened to 10 feet from just south of the bridge to approximately 0.3 miles north of the bridge. The new bridge will be 406 feet long, an increase of approximately 12 feet in length over the existing bridge. There are currently 7 bents of 11 columns for a total of 77 columns, each 18 inches in diameter. This will be changed to 6 bents of 8 columns for a total of 48 columns, each 30 inches in diameter, with 3 of the bents now sited within the "Waters of the State."

- Permanent impacts to Red Rock Canyon Wash include 0.007 acres of unvegetated channel bed where the bridge columns will be installed. The new columns will result in a reduction of 13.5 cubic yards (cy) of fill compared to the previous bridge. The project also includes 5.6 cy of Rock Slope Protection. There will also be temporary impacts to 0.038 acres of Baltic rush dominated wetland.

- Equipment to be used includes but is not limited to a backhoe, bulldozer/loader, backhoe, Bidwell screeds, bobcat, compressor, crane, excavator, forklift, front-end loader, genie man lift, haul truck, ready-mix truck, and water truck. Some construction equipment will need to enter the channel, but will not be stored there when not in use. Equipment staging will be located at a large, previously disturbed turn-out on the west side of SR 14, south of the bridge.

- Work will be done during the dry season when water is not present; therefore, a Water Diversion will not be required.

- The Project will require cutting back a red willow (*Salix laevigata*), which is growing as a multi-stem clump with stem sizes ranging from 1 to 6 inches in diameter at breast height (DBH). The roots will be left in place and allowed to re-sprout. Cuttings from the tree will be planted in the vicinity of the Project in Caltrans Right-of-Way (ROW).

- Known populations of Red Rock tarplant will be protected from Project impacts through avoidance; further, any topsoil removed in the vicinity of Red Rock tarplant populations will be collected, stored, and re-spread after the Project is completed, to preserve any seeds that may have been more widely dispersed by this rare plant.

PROJECT IMPACTS

Plant and Animal Special Status Species: This Agreement is intended to avoid, minimize, and mitigate adverse impacts to the fish and wildlife resources that occupy the Project area, and the immediate adjacent riparian habitat. Absent implementation of the protective measures required by this Agreement, the species presented in Table A and

their habitat types could potentially be impacted within the area covered by this Agreement, as well other as birds, mammals, fish, reptiles, amphibians, invertebrates, and plants that comprise the local riparian ecosystem.

TABLE A				
Name	Scientific Name	Listing		
		Federal	State	Other
Birds				
golden eagle	*Aquila chrysaetos*	---	SOC	**SFP**
burrowing owl	*Athene cunicularia*	---	SOC	---
prairie falcon	*Falco mexicanus*	---	SOC	---
tricolored blackbird	*Agelaius tricolor*	---	SOC	---
Crissal thrasher	*Toxostoma crissale*	---	SOC	---
Le Conte's thrasher	*Toxostoma lecontei*	---	SOC	---
long-eared owl	*Asio otus*	---	SOC	---
Mammals				
Mohave ground squirrel	*Xerospermophilus mohavensis*	---	**T**	---
American badger	*Taxidea taxus*	---	SOC	---
pallid bat	*Antrozous pallidus*	---	SOC	---
spotted bat	*Euderma maculantum*	---	SOC	---
Reptiles				
desert tortoise	*Gopherus agassizii*	**T**	**T**	---
Plants				
Red Rock tarplant	*Deinandra arida*	---	**Rare**	1B.2
alkali mariposa-lily	*Calochortus striatus*	---	SOC	1B.2
Red Rock poppy	*Eschscholzia minut*	---	SOC	1B.2
Charlotte's phancelia	*Phacelia nashiana*	---	SOC	1B.2
creamy blazing star	*Mentzelia tridentate*	---	SOC	1B.3

T = Threatened, E = Endangered, R = Rare, PT = Potentially Threatened, D = De-Listed, SOC = Species of Special Concern, CNPS = California Native Plant Society, SFP = State Fully Protected Species.

MEASURES TO PROTECT FISH AND WILDLIFE RESOURCES

1. Administrative Measures

Permittee shall meet each administrative requirement described below.

1.1 Documentation at Project Site. Permittee shall make the Agreement, any extensions and amendments to the Agreement, and all related notification materials and California Environmental Quality Act (CEQA) documents, readily available at the Project site at all times and shall be presented to DFG personnel or personnel from another State, Federal, or local agency upon request.

1.2 Providing Agreement to Persons at Project Site. Permittee shall provide copies of the Agreement and any extensions and amendments to the Agreement to all persons who will be working on the Project at the Project site on behalf of Permittee, including but not limited to contractors, subcontractors, inspectors, and monitors.

1.3 Notification of Conflicting Provisions. Permittee shall notify DFG if Permittee determines or learns that a Provision in the Agreement might conflict with a Provision imposed on the Project by another local, State, or Federal agency. In that event, DFG shall contact Permittee to resolve any conflict.

1.4 Project Site Entry. Permittee agrees that DFG personnel may enter the Project site at any time to verify compliance with the Agreement.

1.5 Legal Obligations. This Agreement does not exempt the Permittee from complying with all other applicable local, State, and Federal law, or other legal obligations.

1.6 Unauthorized "Take". This Agreement does not authorize the "take" (defined in FGC Section 86 as to hunt, pursue, catch, capture, or kill; or attempt to hunt, pursue, catch, capture, or kill) of State- or federally listed threatened or endangered species. Any such "take" shall require separate permitting as may be required.

1.7 Water Diversion. To the extent that the Provisions of this Agreement provide for the diversion of water, they are agreed to with the understanding that the Permittee possesses the legal right to so divert such water.

1.8 Trespass. To the extent that the Provisions of this Agreement provide for activities that require the Permittee to trespass on another owner's property, they are agreed to with the understanding that the Permittee possesses the legal right to so trespass.

1.9 Construction/Work Schedule. The Permittee shall submit a **construction/work schedule** to DFG (mail, or fax to (559) 243-4020, with reference to Agreement 2012-0099-R4) prior to beginning any activities covered by this Agreement. The Permittee shall also notify DFG upon the completion of the activities covered by this Agreement.

1.10 Permittee shall submit to DFG in writing the **biologist(s) qualifications** (including names, business address(es), and contact information) of all biologists (Approved Biologist(s)) proposed to conduct the necessary biological surveys and monitoring included as Avoidance and Minimization Measures in this Agreement. Permittee shall obtain written DFG approval of the Approved Biologist(s) at least 14 days prior to conducting the necessary corresponding survey and monitoring work.

1.11 Training. Prior to starting any activity within the stream, all employees, contractors, and visitors who will be present during Project activities shall have received training from a qualified individual on the contents of this Agreement, the resources at stake, and the legal consequences of non-compliance. A **training sign-in sheet** for the employees and contractors shall be provided to DFG and shall include the date of the training and who gave the training.

2. Avoidance and Minimization Measures

To avoid or minimize adverse impacts to fish and wildlife resources identified above, Permittee shall implement each measure listed below.

2.1 Construction/Work Hours. All non-emergency work activities during the construction phase will be confined to daylight hours. For purposes of this Agreement, "daylight hours" are defined as that daytime period between sunrise and sunset.

2.2 Flagging/Fencing. Prior to any activity within the stream, the Permittee shall identify the limits of the required access routes and encroachment into the stream. These "work area" limits shall be identified with brightly-colored flagging/fencing. Work completed under this Agreement shall be limited to this defined area only. Flagging/fencing shall be maintained in good repair for the duration of the Project. All areas beyond the identified work area limits shall be considered Environmentally Sensitive Areas (ESA) and shall not be disturbed.

2.3 Listed Species.

(a) This Agreement does not allow for the "take," or "incidental take," of any State- or federally listed threatened or endangered species. Liability for any "take," or "incidental take," of such listed species remains the separate responsibility of the Permittee for the duration of the Project.

(b) The Permittee affirms that no "take" of listed species will occur as a result of this Project and will take prudent measures to ensure that all "take" is avoided. The Permittee acknowledges that they fully understand that they do not have State "incidental take" authority. If any State- or federally listed threatened or endangered species occur within the proposed work area or could be impacted by the work proposed, and thus "taken" as a result of Project activities, the Permittee is responsible for obtaining and complying with required State and federally threatened and endangered species permits or other written authorization before proceeding with this Project.

(c) **Pre-activity Surveys** for potential rare, threatened, or endangered species (with emphasis but not limited to the species listed above in Table A) shall be conducted by an Approved Biologist within 30 days prior to commencement of Project activities or as specified within current survey protocols. Surveys must be conducted on the Project Impact Area (PIA) and all access routes to avoid and minimize "incidental take," confirm previous observations, identify any areas occupied by listed or sensitive species, and clearly mark all resources to be avoided by Project activities. All surveys for State threatened, endangered, or fully-protected species shall be done in accordance with the appropriate protocol, and during the appropriate flowering period for plant species, unless appropriate preconstruction surveys determine the lack of habitat for these species or all potential habitats are flagged and avoided. If any State- or federally listed threatened or endangered animal species are found within the

PIA or could be impacted by the work proposed the Permittee shall notify DFG of the discovery prior to commencement of construction. A new Agreement and/or a 2081(b) State Incidental Take Permit may be necessary and a new CEQA analysis may need to be conducted, before work can begin. All fully protected species shall be completely avoided.

(d) Golden Eagle: No Project-related activities shall be completed from February 1 through August 31 unless an Approved Biologist surveys for nesting activity of golden eagles within a ½-mile radius of the Project site no more than two (2) weeks before construction begins. **Golden Eagle Surveys** shall be conducted at appropriate nesting times and concentrate on mature trees, including Joshua trees (*Yucca brevifolia*), and suitable rock shelves and cliffs. If an active golden eagle nest is found, no Project activities shall occur within a 0.5 mile no disturbance buffer until the young have fledged and are no longer dependent on parental care or the nest for survival, as confirmed in writing by DFG.

(e) Burrowing Owl: No more than 30 days prior to commencing Project-related activities, an Approved Biologist shall conduct **Burrowing Owl Surveys** according to the Burrowing Owl Survey Protocol and Mitigation Guidelines developed by The California Burrowing Owl Consortium (2011). Surveys shall include the Project site and a 500-foot buffer. If any active burrowing owl burrows are observed, these burrows shall be designated an ESA, protected, and monitored by an Approved Biologist during Project-related activities. A minimum 250-foot avoidance buffer shall be established and maintained around each owl burrow during the nesting season (February 1 through August 31). If active burrowing owl burrows are observed outside of the nesting season, a minimum 150-foot no-disturbance buffer shall be established around each burrow. Implementation of passive relocation with one-way doors is not authorized by DFG for this Project.

(f) Mohave Ground Squirrel (MGS): Project activities may proceed according to the following options: 1) All potential MGS burrows shall be flagged and avoided by a minimum 50-foot no-disturbance buffer. An Approved Biologist shall be present during all ground disturbing activities during the active season of the species and shall halt Project activities if MGS is detected in or adjacent to the Project area, until the individual leaves of its own volition. DFG shall be notified for consultation before work shall be allowed to resume. OR
2) Protocol-level trapping surveys to detect MGS presence shall be conducted. **MGS Trapping Results** shall be submitted to DFG prior to starting ground-disturbing activities. If MGS is detected, or if "take" avoidance is not feasible, Permittee shall halt and not resume work until an ITP is acquired for MGS.

(g) American Badger: Any American badger detected within the Project area during Project activities shall be allowed to move out of the work area of its own volition. If American badger is denning on or immediately adjacent to the Project site, Permittee shall consult with DFG to determine whether the

animal(s) may be evicted from the den. Eviction of badgers shall not be approved by DFG unless it is confirmed that no dependent young are present.

(h) Bats: Bats shall not be disturbed without specific notice to and consultation with DFG. Focused **Bat Surveys** shall be conducted by an Approved Biologist to determine if bat species are roosting near the work area. Survey methodology may include visual surveys of bats (observation of presence of bats during foraging period), inspection of for suitable habitat or bat sign (guano), or use of ultrasonic detectors (Anabat, etc.). A survey report shall be completed that includes, but is not limited to, the survey methodology and, if present, the species, colony size, roost location, and characteristics. If bats are observed roosting in the Project vicinity, Permittee shall submit a **Bat Exclusion Plan** for DFG approval. If exclusion measures are unsuccessful and bat species are still present, the Permittee shall contact DFG and mitigation shall be developed in consultation with DFG.

(i) Desert Tortoise: Prior to ground-disturbing activities associated with the Agreement, Approved Biologist(s) shall be present to perform focused **Desert Tortoise Survey**. These surveys shall cover the Project area and a 50-foot buffer zone. If desert tortoise or their sign are detected during pre-construction surveys, the Permittee shall notify DFG immediately. The Approved Biologist shall alert work crews to their presence, and burrows within the construction area shall be flagged, designated as ESA, and protected with a 50-foot no-disturbance buffer for the duration of the Project. If desert tortoise is found on the site during Project implementation, all activity within 500 feet shall cease until the individual leaves the Project area of its own volition. Specified desert tortoise buffer size may be reduced on a case-by-case basis if DFG concurs, based on compelling biological or ecological reasoning provided by an Approved Biologist, that implementation of a specified smaller buffer distance will still avoid Project-related "take" of desert tortoise. Any variance of the standard buffers must be approved in advance by DFG in writing. If avoidance of burrows and individuals is not feasible according to the above description, Permittee shall acquire an ITP for desert tortoise.

(j) Sensitive Plant Species: Sensitive plants, including but not limited to State rare Red Rock tarplant, have the potential to exist in the vicinity of the proposed Project footprint. Therefore, if suitable habitat is present, Permittee shall conduct focused **Plant Surveys** for these plants and natural communities on the Project site well in advance of any planned ground-disturbing activities. Repeated floristic surveys shall be conducted by a qualified botanist multiple times during the appropriate floristic period(s) in order to adequately assess the potential Project-related impacts to listed plant species. If sensitive plant species are found, Permittee shall identify them with flagging and avoid with a 25-foot no-disturbance buffer during Project activities. If any State-listed threatened or endangered plant species are found within the PIA or could be impacted by the work proposed, a new Agreement and/or a 2081(b) State Incidental Take Permit may be necessary and a new CEQA analysis may need

to be conducted, before work can begin. All "Rare" plants shall be completely avoided. If any non-listed sensitive plant species other then Red Rock tarplant are found during surveys closer then 25 feet that cannot be avoided, Permittee shall consult with DFG for further guidance and written approval to proceed.

2.4 Fish and Wildlife.

(a) If any fish or wildlife is encountered during the course of construction, said fish and wildlife shall be allowed to leave the construction area unharmed.

(b) Pursuant to FGC Sections 3503 and 3503.5, it is unlawful to "take," possess, or needlessly destroy the nest or eggs of any bird or bird-of-prey. To protect nesting birds, no construction shall be completed from March 1 through August 31 unless the following **Avian Surveys** are completed by an Approved Biologist within 14 days prior to commencing Project activities.

Non-listed Raptors: Survey for nesting activity of raptors within a 500-foot radius of the construction site. Surveys shall be conducted at appropriate nesting times and concentrate on trees, shrubs and rock outcrops with the potential to support raptor nests. If any active nests are observed, these nests and nest trees shall be designated an ESA and protected with a minimum 500-foot buffer until young have fledged and are no longer reliant on the nest site or parental care.

Other Avian Species: Survey riparian areas for nesting activity within a 250-foot radius of the defined work area two (2) to three (3) weeks before construction begins. If any nesting activity is found, these nests and nest trees shall be designated an ESA and protected with a minimum 250-foot buffer until young have fledged and are no longer reliant on the nest site or parental care.

(c) Buffer Size: Specified avian buffer size may be reduced on a case-by-case basis if DFG concurs, based on compelling biological or ecological reasoning provided by an Approved Biologist, that implementation of a specified smaller buffer distance will still avoid Project-related "take" of adults, juveniles, chicks, or eggs associated with a particular nest. Any variance of the standard buffers must be approved in advance by DFG in writing. Avoidance buffers shall be maintained for the duration of the Project during the entire nesting season unless the qualified biologist has determined that the young have fledged or are no longer dependent upon parental care.

(d) Swallows: If swallows are actively nesting, then Project Activities shall not commence before September 1. Alternatively, prior to February 15, residual (previous year) nests shall be removed and the underside of the bridge shall be covered with ½- to ¾-inch mesh net or poultry wire. The netting shall remain in place until September 1 or until construction activities at Project Area are complete. The netting must be anchored such that swallows cannot attach

their nests to the bridge structure through gaps in the net. If a swallow successfully completes a nest (within the netted area) during Project Activities, the USFWS shall be contacted and the appropriate permit(s) for its removal obtained before work resumes during the nesting season.

(e) Removal of Trees/Shrubs during Fall/Winter Months: To avoid potential impacts to nesting birds, trees and shrubs designated for removal shall be cut down during the time period of September 1 to January 15. Trees/shrubs may be removed between January 16 and August 31 only if the Permittee has received written approval from DFG. An Approved Biologist shall survey the proposed work area to verify the presence or absence of nesting birds and submit a detailed survey report, including mapping of any nests found, to DFG for review and potential approval.

2.5 Vegetation.

(a) The disturbance or removal of vegetation shall not exceed the minimum necessary to complete operations and shall only occur within the defined work area. Precautions shall be taken to avoid other damage to vegetation by people or equipment. Disturbed portions of the stream bed, banks, or channel shall be restored to as near their original condition as possible (see Restoration/Revegetation below).

(b) The Permittee shall document the number and species of all native riparian woody-stemmed plants in excess of four (4) inches DBH that are removed or are damaged during construction. Riparian trees and shrubs with a DBH of four (4) inches or greater that are damaged or removed shall be replaced by replanting like species at a 3:1 ratio (replaced to lost). Mitigation for heritage trees 24-inches or greater shall require replanting of like species at a 10:1 ratio. This documentation shall be used as the basis for replacement mitigation (see Restoration/Revegetation below).

(c) Vegetation or material removed from the Project site shall be disposed of at an appropriate and legal off-site location where the material cannot enter the stream channel. No such material shall be stockpiled in the streambed, banks, or channel without measures to ensure its stability, preventing accidental discharge into the stream.

2.6 Vehicles.

(a) Vehicles shall not be operated in areas where surface water is present. Vehicles shall only operate in the channel during naturally dry conditions or while the affected section of stream is dewatered.

(b) Construction vehicle access to the stream's banks and bed shall be limited to predetermined ingress and egress corridors on existing roads. All other areas adjacent to the work site shall be considered an ESA and shall remain off-limits

to construction equipment. Vehicle corridors and the ESA shall be identified by the Permittee's resident engineer in consultation with the DFG representative.

(c) Vehicles shall not be driven where wetland vegetation, riparian vegetation, or aquatic organisms may be destroyed, except as otherwise provided for in the Agreement, and as necessary to complete the authorized work.

(d) Any equipment or vehicles driven and/or operated within or adjacent to the stream shall be checked and maintained daily to prevent leaks of materials that, if introduced to water, could be deleterious to aquatic and terrestrial life.

(e) Staging and storage areas for equipment, materials, fuels, lubricants, and solvents shall be located outside of the stream channel and banks. Stationary equipment such as motors, pumps, generators, compressors, and welders, located within or adjacent to the stream, shall be positioned over drip-pans. Vehicles shall be moved away from the stream prior to refueling and lubrication.

2.7 Structures.

(a) The Permittee shall confirm that all structures are designed (i.e., size and alignment), constructed, and maintained such that they shall not cause long-term changes in water flows that adversely modify the existing stream bed/bank contours or increase sediment deposition or cause significant new erosion.

(b) Structures and associated materials not designed to withstand high seasonal flows shall be removed to areas above the high-water mark before such flows occur.

2.8 Fill/Spoil.

(a) Spoil storage sites shall not be located within the stream, where spoil could be washed into the stream, or where it will cover aquatic or riparian vegetation. Rock, gravel, and/or other materials shall not be imported into or moved within the bed or banks of the stream, except as otherwise addressed in this Agreement.

(b) Fill shall be limited to the minimal amount necessary to accomplish the agreed activities. Excess fill material shall be moved off-site at Project completion.

(c) Fill material shall be free of any pollutants or deleterious debris.

2.9 Erosion.

(a) No work within the banks of the stream will be conducted during or immediately following large rainfall events. All disturbed soils within the Project site shall be stabilized to reduce erosion potential, both during and following construction.

Temporary erosion control devices, including but not limited to straw bales, silt fencing, wattles, and sand bags, may be used as appropriate to prevent siltation of the stream.

(b) Permittee shall prohibit the use of erosion control materials that are potentially harmful to animals, such as erosion control matting with mono-filament netting, in areas where there is habitat for species that could be vulnerable.

(c) Any installation of non-erodible materials not described in the original Project description shall be coordinated with DFG. Coordination may include the negotiation of additional Agreement Provisions for this activity.

(d) Silty water shall not be discharged into the stream, or created within the stream. The Permittee's ability to minimize siltation shall be the subject of preconstruction planning and feature implementation. Precautions to minimize siltation may require that the work site be isolated so that silt or other deleterious materials are not allowed to pass to downstream reaches. The placement of any structure or materials in the stream for this purpose, not included in the original Project description, shall be coordinated with DFG. If it is determined that silt levels resulting from Project-related activities constitute a threat to aquatic life, activities associated with the siltation shall be halted until effective DFG-approved control devices are installed, or abatement procedures are initiated.

2.10 Pollution:

(a) The Permittee and all contractors shall be subject to the water pollution regulations found in the Department of FGC sections 5650 and 12015.

(b) All equipment operators shall be trained in the procedures to be taken should an accident occur. Prior to the commencement of work, the Permittee shall provide DFG with an **Emergency Response Plan** that shall be kept on-site during all phases of construction. The Plan shall identify the actions that shall be taken in the event of a spill of petroleum products, contaminated soil, or other material harmful to fish, plants, or aquatic life. Emergency response materials shall be kept at the site and be readily available to allow rapid containment and cleanup of any spilled material. In the event that a spill occurs, all Project activities shall immediately cease until cleanup of the spilled materials is completed.

(c) The cleanup of all spilled materials shall begin immediately. DFG shall be notified immediately by the Permittee of any spills.

(d) Raw cement, concrete or washings thereof, asphalt, drilling fluids or lubricants, paint or other coating material, oil or other petroleum products, or any other Project-generated debris, building materials, and rubbish that could harm fish

or wildlife shall be immediately removed from any area where such materials could be washed into the "Waters of the State".

2.11 Trash, Excess Material and Debris.

(a) Permittee shall ensure that trash and food items are contained in animal-proof containers and removed at least once a week to avoid attracting opportunistic predators such as ravens, coyotes, and feral dogs.

(b) All excess material and debris shall be removed from the Project site at the completion of construction.

(c) Any lead paint, creosote, petroleum products, or other hazardous materials shall be removed and disposed of at a facility legally licensed to accept such materials. Under no circumstance shall any hazardous materials be disposed of in a manner inconsistent or out of compliance with applicable State or Federal law.

3. Compensatory Measures

To compensate for adverse impacts to fish and wildlife resources identified above that cannot be avoided or minimized, Permittee shall implement each measure listed below.

3.1 Restoration/Revegetation.

(a) The Permittee shall remove and recontour any Project-constructed access corridors in the stream channel, bed, or banks to restore the original configuration and channel width to the extent possible.

(b) All disturbed soils and new fill, including recontoured slopes and all other cleared areas, shall be revegetated with riparian vegetation or other plants. If the Project causes any exposed slopes or exposed areas on the river or tributary banks, these areas shall be seeded with a blend of a minimum of three (3) locally native grass species and covered with weed-free straw or mulch as appropriate. One (1) or two (2) sterile non-native perennial grass species may be added to the seed mix provided that amount does not exceed 25 percent of the total seed mix by count. Local native wildflower and/or shrub seeds may also be included in the seed mix. The seeding shall be completed as soon as possible, but no later than November 15 of the year construction ends. A **Seed Mixture** shall be submitted to DFG for approval prior to application. At the discretion of DFG, all exposed areas where seeding is considered unsuccessful after 90 days shall receive appropriate soil preparation and a second application of seeding and straw or mulch as soon as is practical on a date mutually agreed upon.

(c) Where suitable vegetation cannot be reasonably expected to become established, non-erodible materials shall be used for such stabilization. Any

installation of non-erodible materials not described in the original Project description shall be coordinated with DFG. Coordination may include the negotiation of additional Agreement Provisions for this activity.

(d) All disturbed soils and new fill, including recontoured slopes and all other cleared areas, shall be revegetated with riparian vegetation or other plants, as appropriate. If any native riparian vegetation with a DBH four (4) inches or greater shall be damaged or removed from the Project area, the Permittee shall develop a **Revegetation Plan** for the site and submit it to DFG for approval prior to commencement of the proposed work. All Plans shall specifically address plantings of native trees, shrubs, herbs and grasses removed, as indicated in Avoidance and Minimization Measure 2.5(b) above, and include monitoring and maintenance to ensure a minimum of 70 percent survival for the plantings after five (5) years.

4. Reporting Measures

Permittee shall meet each reporting requirement described below.

4.1 Obligations of the Permittee.

(a) The Permittee shall have primary responsibility for monitoring compliance with all protective measures included as "Measures" in this Agreement. Protective measures must be implemented within the time periods indicated in the Agreement and the program described below.

(b) The Permittee (or the Permittee's designee) shall ensure the implementation of the Measures of the Agreement, and shall monitor the effectiveness of these Measures.

(c) A **Final Project Report** to be submitted within 30 days after the Project is completed. The final report shall summarize the Project-construction, including any problems relating to the protective measures of this Agreement. "Before and after" photo documentation of the Project site shall be required.

4.2 Reports and Information. The Permittee shall submit the following Reports and Information to DFG by the timelines indicated:

- Construction/work schedule (Administrative Measure 1.9) at least five (5) days prior to start of activities.
- Biologist(s) qualifications at least 14 days prior to the scheduled start of surveys or monitoring (Administrative Measure 1.10).
- Employee and contractor training sign-in sheet (Administrative Measure 1.11) within five (5) days of the training date.

- Results of Pre-activity Surveys (Avoidance and Minimization Measure 2.3(c)).
- Results of the Golden Eagle Survey if construction is scheduled between February 1 and August 31 (Avoidance and Minimization Measure 2.3(d)).
- Results of the Burrowing Owl Survey if construction is scheduled between February 1 and August 31 (Avoidance and Minimization Measure 2.3(e)).
- Results of MGS Trapping Survey if the Permittee cannot maintain a minimum 50-foot buffer from all burrows (Avoidance and Minimization Measure 2.3 (f)).
- Results of the Bat Survey and, if necessary, a Bat Exclusion Plan (Avoidance and Minimization Measure 2.3(h)).
- Results of the Desert Tortoise Survey (Avoidance and Minimization Measure 2.3(i)).
- Results of Plant Surveys if suitable habitat for rare, threatened, or endangered plant species is present in the vicinity of the Project (Avoidance and Minimization Measure 2.3 (j)).
- Results of Avian Surveys for nesting birds if construction is scheduled between February 1 and August 31 (Avoidance and Minimization Measure 2.4(b)) or if trees or shrubs must be removed between January 16 and September 15 (Avoidance and Minimization Measure 2.4(e)).
- An Emergency Response Plan (Avoidance and Minimization Measure 2.10(b)).
- If required, a Seed Mixture to be used to control erosion prior to application (Compensatory Measure 3.1(b)).
- Revegetation Plan prior to implementation (Compensatory Measure 3.1(d)).
- A Final Project Report within 30 days of Project completion (Reporting Measure 4.1(c)).

Results of the above listed surveys shall be submitted to DFG no less than five (5) days prior to start of activities.

CONTACT INFORMATION

Any communication that Permittee or DFG submits to the other shall be in writing and any communication or documentation shall be delivered to the address below by U.S. mail, fax, or email, or to such other address as Permittee or DFG specifies by written notice to the other.

To Permittee:

California Department of Transportation (Caltrans)
District 6
Carrie Swanberg
855 M Street, Suite 200
Fresno, California 93721
(559) 445-6406
Fax: (559) 445-6236
Carrie_Swanberg@dot.ca.gov

To DFG:

Department of Fish and Game
Region 4 - Central Region
1234 East Shaw Avenue
Fresno, California 93710
Attn: Lake and Streambed Alteration Program – Laura Peterson-Diaz
Notification No. 1600-2012-0099-R4
Phone: (559) 243-4017, extension 225
Fax: (559) 243-4020
lpdiaz@dfg.ca.gov

LIABILITY

Permittee shall be solely liable for any violations of the Agreement, whether committed by Permittee or any person acting on behalf of Permittee, including its officers, employees, representatives, agents or contractors and subcontractors, to complete the Project or any activity related to it that the Agreement authorizes.

This Agreement does not constitute DFG's endorsement of, or require Permittee to proceed with the Project. The decision to proceed with the Project is Permittee's alone.

SUSPENSION AND REVOCATION

DFG may suspend or revoke in its entirety the Agreement if it determines that Permittee or any person acting on behalf of Permittee, including its officers, employees, representatives, agents, or contractors and subcontractors, is not in compliance with the Agreement.

Before DFG suspends or revokes the Agreement, it shall provide Permittee written notice by certified or registered mail that it intends to suspend or revoke. The notice shall state the reason(s) for the proposed suspension or revocation, provide Permittee an opportunity to correct any deficiency before DFG suspends or revokes the Agreement, and include instructions to Permittee, if necessary, including but not limited to a directive to immediately cease the specific activity or activities that caused DFG to issue the notice.

ENFORCEMENT

Nothing in the Agreement precludes DFG from pursuing an enforcement action against Permittee instead of, or in addition to, suspending or revoking the Agreement.

Nothing in the Agreement limits or otherwise affects DFG's enforcement authority or that of its enforcement personnel.

OTHER LEGAL OBLIGATIONS

This Agreement does not relieve Permittee or any person acting on behalf of Permittee, including its officers, employees, representatives, agents, or contractors and subcontractors, from obtaining any other permits or authorizations that might be required under other Federal, State, or local laws or regulations before beginning the Project or an activity related to it.

This Agreement does not relieve Permittee or any person acting on behalf of Permittee, including its officers, employees, representatives, agents, or contractors and subcontractors, from complying with other applicable statutes in the FGC including, but not limited to, FGC sections 2050 *et seq.* (threatened and endangered species), 3503 (bird nests and eggs), 3503.5 (birds of prey), 5650 (water pollution), 5652 (refuse disposal into water), 5901 (fish passage), 5937 (sufficient water for fish), and 5948 (obstruction of stream).

Nothing in the Agreement authorizes Permittee or any person acting on behalf of Permittee, including its officers, employees, representatives, agents, or contractors and subcontractors, to trespass.

AMENDMENT

DFG may amend the Agreement at any time during its term if DFG determines the amendment is necessary to protect an existing fish or wildlife resource.

Permittee may amend the Agreement at any time during its term, provided the amendment is mutually agreed to in writing by DFG and Permittee. To request an amendment, Permittee shall submit to DFG a completed DFG "Request to Amend Lake or Streambed Alteration" form and include with the completed form payment of the corresponding amendment fee identified in DFG's current fee schedule (see Cal. Code Reg., Title 14, § 699.5).

TRANSFER AND ASSIGNMENT

This Agreement may not be transferred or assigned to another entity, and any purported transfer or assignment of the Agreement to another entity shall not be valid or effective, unless the transfer or assignment is requested by Permittee in writing, as specified below, and thereafter DFG approves the transfer or assignment in writing.

The transfer or assignment of the Agreement to another entity shall constitute a minor amendment, and therefore to request a transfer or assignment, Permittee shall submit to DFG a completed DFG "Request to Amend Lake or Streambed Alteration" form and include with the completed form payment of the minor amendment fee identified in DFG's current fee schedule (see Cal. Code Reg., Title 14, § 699.5).

EXTENSIONS

In accordance with FGC section 1605(b), Permittee may request one (1) extension of the Agreement, provided the request is made prior to the expiration of the Agreement's term. To request an extension, Permittee shall submit to DFG a completed DFG "Request to Extend Lake or Streambed Alteration" form and include with the completed form payment of the extension fee identified in DFG's current fee schedule (see Cal. Code Reg., Title 14, § 699.5). DFG shall process the extension request in accordance with FGC section 1605(b) through (e).

If Permittee fails to submit a request to extend the Agreement prior to its expiration, Permittee must submit a new notification and notification fee before beginning or continuing the Project the Agreement covers (FGC § 1605, subd. (f)).

EFFECTIVE DATE

The Agreement becomes effective on the date of DFG's signature, which shall be: 1) after Permittee's signature; 2) after DFG complies with all applicable requirements under the California Environmental Quality Act (CEQA); and 3) after payment of the applicable FGC section 711.4 filing fee listed at http://www.dfg.ca.gov/habcon/ceqa/ceqa_changes.html.

TERM

This Agreement shall remain in effect for five (5) years beginning on the date signed by DFG, unless it is terminated or extended before then. All Provisions in the Agreement shall remain in force throughout its term. Permittee shall remain responsible for implementing any Provisions specified herein to protect fish and wildlife resources after the Agreement expires or is terminated, as FGC section 1605(a)(2) requires.

CALIFORNIA ENVIRONMENTAL QUALITY ACT (CEQA) COMPLIANCE

In approving this Agreement, DFG is independently required to assess the applicability of CEQA. The features of this Agreement shall be considered as part of the overall Project description.

The Permittee's concurrence signature on this Agreement serves as confirmation to DFG that the activities that shall be conducted under the terms of this Agreement are consistent with the Project described in the CEQA Mitigated Negative Declaration (State Clearinghouse No. 2009081084) prepared for the Red Rock Canyon Bridge Replacement

Project by Caltrans as the Lead Agency. A copy of this document was provided with the Section 1602 Notification.

DFG, as a CEQA Responsible Agency, shall make findings and submit a Notice of Determination to the State Clearinghouse upon signing this Agreement.

EXHIBITS

The documents listed below are included as exhibits to the Agreement and incorporated herein by reference.

Exhibit 1: Figure 1. Project Location USGS Quad Map.

AUTHORITY

If the person signing the Agreement (signatory) is doing so as a representative of Permittee, the signatory hereby acknowledges that he or she is doing so on Permittee's behalf and represents and warrants that he or she has the authority to legally bind Permittee to the Provisions herein.

AUTHORIZATION

This Agreement authorizes only the Project described herein. If Permittee begins or completes a Project different from the Project the Agreement authorizes, Permittee may be subject to civil or criminal prosecution for failing to notify DFG in accordance with FGC section 1602.

CONCURRENCE

The undersigned accepts and agrees to comply with all provisions contained herein.

FOR CALIFORNIA DEPARTMENT OF TRANSPORTATION

Carrie Swanberg
Acting Biology Branch Chief
Caltrans Central Region (Districts 5, 6, 9 and 10)

9/4/2012
Date

FOR DEPARTMENT OF FISH AND GAME

Jeffrey R. Single, Ph.D.
Regional Manager

9/7/12
Date

Prepared by: Laura Peterson-Diaz
Environmental Scientist

Figure 1

Exhibit A

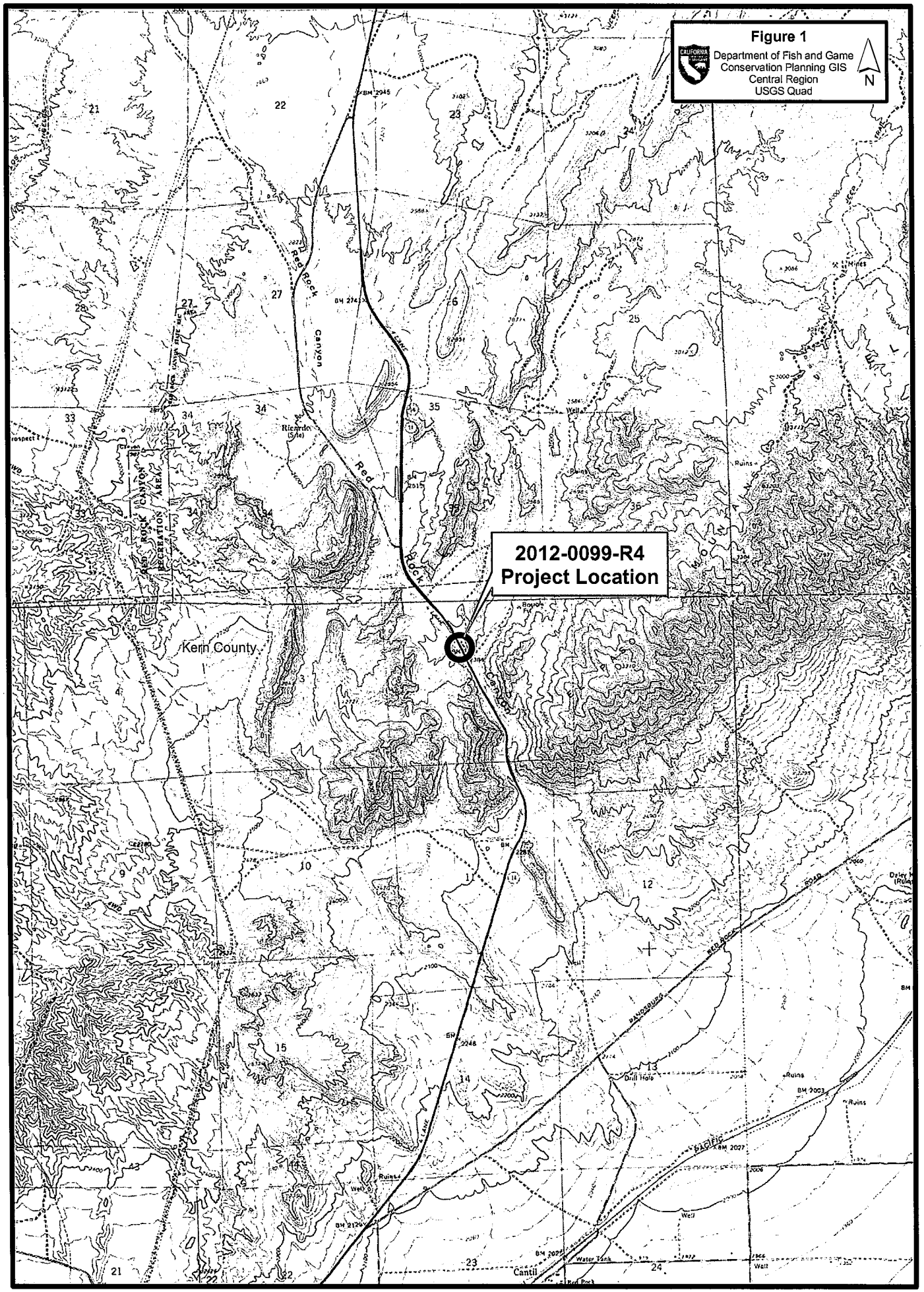
Figure 1
Department of Fish and Game
Conservation Planning GIS
Central Region
USGS Quad
N
2012-0099-R4
Project Location
Kern County
Red Rock Canyon
Red Rock Canyon Recreation Area
Cantil

UNITES STATES FISH AND WILDLIFE SERVICE

United States Department of the Interior

FISH AND WILDLIFE SERVICE
Ventura Fish and Wildlife Office
2493 Portola Road, Suite B
Ventura, California 93003

IN REPLY REFER TO:
08EVEN00-2012-I-0350

September 11, 2012

Carrie Swanberg
Central Region Biology Branch
Department of Transportation
855 M Street, Suite 200
Fresno, California 93721

Subject: Red Rock Canyon Bridge Replacement Project on State Route 14, Kern County, California (06-0H180; 06-KER-14-PM 39.3/40.3)

Dear Ms. Swanberg:

We have reviewed your letter, dated May 10, 2012, and received in our office on May 15, 2012, requesting our concurrence with your determination that the subject project is not likely to adversely affect the federally threatened desert tortoise (*Gopherus agassizii*). Following receipt of your letter we had several discussions with your staff regarding the appropriateness and effectiveness of the protective measures for the proposed project. We received a revised list of protective measures on August 24, 2012. The Federal Highway Administration has delegated authority for consultation to the California Department of Transportation (Caltrans); consequently, your request and our response are made pursuant to section 7(a)(2) of the Endangered Species Act of 1973, as amended.

On July 21, 2009, we issued a letter concurring with Caltrans' determination that the subject project was not likely to adversely affect the desert tortoise. However, since then the proposed project has changed to include work on an additional 0.5 mile of State Route 14, and Caltrans determined that the installation of desert tortoise exclusion fencing along portions of the project area was infeasible. Consequently, Caltrans reinitiated consultation on the proposed project.

The proposed project would involve the demolition of the existing Red Rock Canyon bridge and construction of a new bridge structure; raising the roadway profile and bridge profile; widening the shoulders on the approaches to the bridge and on the bridge; grading, paving, and installation of concrete rock slope protection; installation and reconstruction of guardrails; placing signs and striping; and installation of erosion control. Additionally, work within the expanded portion of the project area (i.e., the 0.5 mile section of State Route 14) would involve installation of an asphalt overlay and shoulder backing, and guardrail reconstruction. Project work would occur within the existing right-of-way, roadbed, and bladed shoulders. During construction Caltrans would implement the following protective measures: worker education program; pre-construction surveys for desert tortoise by a qualified biologist; installation of fencing, where

feasible, along the perimeter of the project area; use of a qualified biologist to serve as a monitor for the duration of construction; litter control; and, if necessary, establish buffers around live desert tortoises and burrows.

We concur with your determination that the proposed project is not likely to adversely affect the desert tortoise. We have reached this conclusion because, outside of the existing roadbed, project work would occur within areas located along the shoulder of State Route 14 and underneath the bridge. These areas are frequently disturbed by motorists, off-highway vehicles, and flash flooding; therefore, it is unlikely these areas contain suitable habitat for the desert tortoise. However, because suitable habitat occurs adjacent to the project area Caltrans has proposed numerous measures that would protect the desert tortoise. Consequently, further consultation, pursuant to section 7(a)(2) of the Act, is not required. If the proposed action changes in any manner that could result in adverse effects that you have not anticipated, you should contact us immediately to determine whether additional consultation would be appropriate.

If you have any questions regarding this matter, please contact Erin Nordin of my staff at (760) 872-5020.

Sincerely,

Carl T. Benz
Assistant Field Supervisor

MATERIALS INFORMATION

ASBESTOS AND LEAD-CONTAINING PAINT SURVEY FOR RED ROCK CANYON BRIDGE (MARCH 2009)

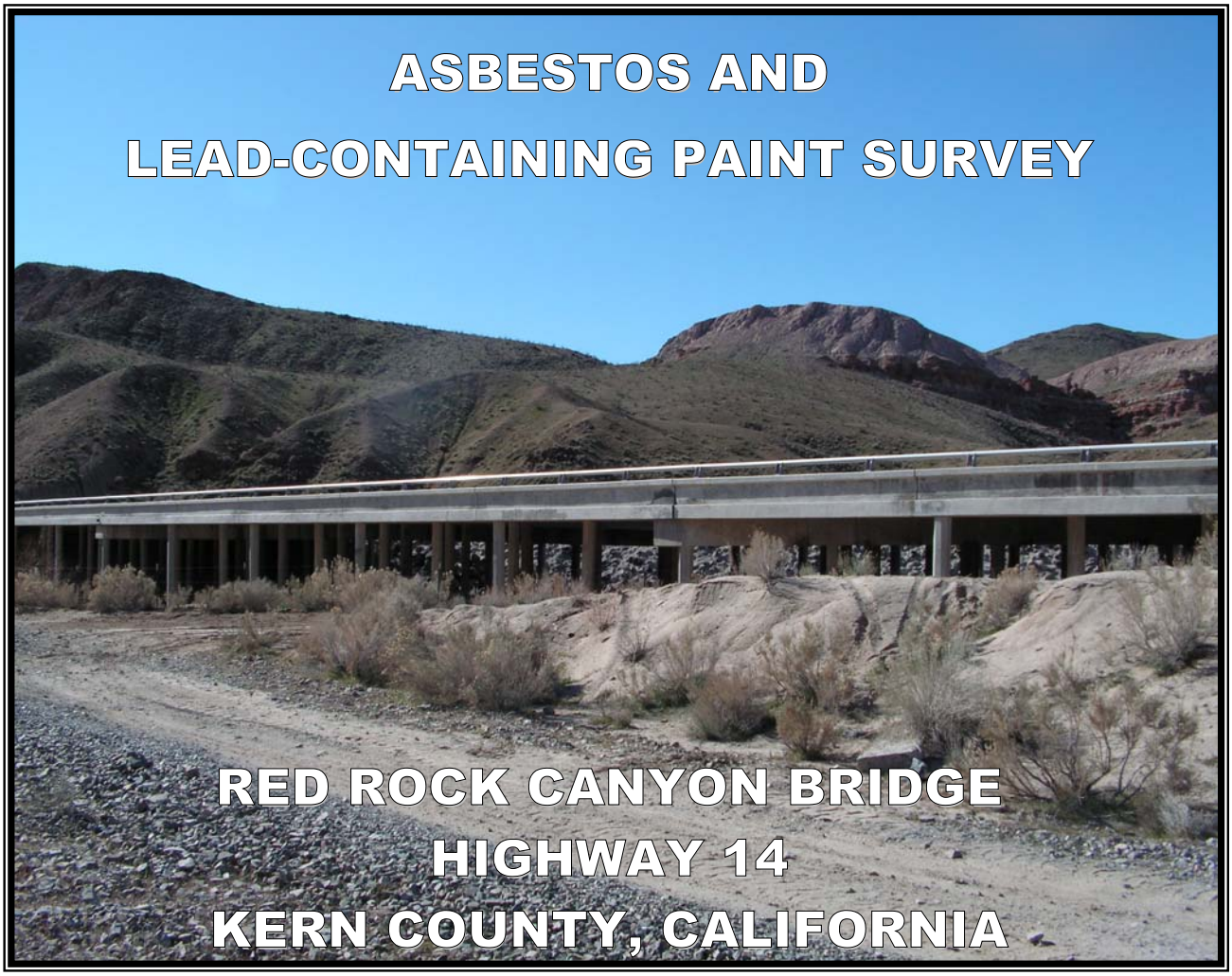

ASBESTOS AND LEAD-CONTAINING PAINT SURVEY

RED ROCK CANYON BRIDGE
HIGHWAY 14
KERN COUNTY, CALIFORNIA

PREPARED FOR:
CALIFORNIA DEPARTMENT OF TRANSPORTATION
DISTRICT 6
2015 EAST SHIELDS AVENUE, SUITE 100
FRESNO, CALIFORNIA

PREPARED BY:
GEOCON CONSULTANTS, INC.
3160 GOLD VALLEY DRIVE, SUITE 800
RANCHO CORDOVA, CALIFORNIA

CALTRANS CONTRACT 06A1141
TASK ORDER NO. 67
EA No. 06-0H1800

GEOCON PROJECT NO. S9200-06-67

MARCH 2009

DRAFT

Project No. S9200-06-67
March 23, 2009

Mr. Ken Doran, Task Order Manager
Caltrans District 6
2015 E. Shields Avenue, Suite 100
Fresno, California 93726

Subject: RED ROCK CANYON BRIDGE
KERN COUNTY, CALIFORNIA
CONTRACT NO. 06A1141
TASK ORDER NO. 67, EA NO. 06-0H1800
ASBESTOS AND LEAD-CONTAINING PAINT SURVEY

Dear Mr. Doran:

In accordance with California Department of Transportation Contract No. 06A1141 and Task Order No. 67, we have performed an asbestos and lead-containing paint (LCP) survey of the subject bridge in Kern County, California. The scope of services included surveying the bridge for suspect asbestos-containing materials and LCP, collecting bulk samples, and submitting the samples to a laboratory for analyses.

The accompanying report summarizes the services performed and laboratory analysis.

The contents of this report reflect the views of Geocon Consultants, Inc., who are responsible for the facts and accuracy of the data presented herein. The contents do not necessarily reflect the official views or policies of the State of California or the Federal Highway Administration. This report does not constitute a standard, specification, or regulation.

Please contact us if you have questions concerning the contents of this report or if we may be of further service.

Sincerely,

GEOCON CONSULTANTS, INC.

Chris Giuntoli, CAC
Senior Project Scientist

John E. Juhrend, PE, CEG
Project Manager

CGG:JEJ:jaj

(2 + 2 CD) Addressee

TABLE OF CONTENTS

ASBESTOS AND LEAD-CONTAINING PAINT SURVEY REPORT Page

1.0 INTRODUCTION 1
1.1 Project Description 1
1.2 General Objectives 1

2.0 BACKGROUND 1
2.1 Asbestos 1
2.2 Lead Paint 3
2.3 Architectural Drawings and Previous Survey Activities 4

3.0 SCOPE OF SERVICES 4
3.1 Asbestos 4
3.2 Lead Paint 5

4.0 INVESTIGATIVE RESULTS 5
4.1 Asbestos 5

5.0 RECOMMENDATIONS 6
5.1 Asbestos 6
5.2 Lead Paint 6

6.0 REPORT LIMITATIONS 7

FIGURES
1. Vicinity Map
2. Site Plan

PHOTOGRAPHS (1 through 6)

TABLE
1. Summary of Asbestos Analytical Results

APPENDIX
A. Analytical Laboratory Report and Chain-of-custody Documentation

ASBESTOS AND LEAD-CONTAINING PAINT SURVEY REPORT

1.0 INTRODUCTION

This asbestos and lead-containing paint (LCP) survey report was prepared by Geocon Consultants, Inc. under Caltrans Contract No. 06A1141, Task Order No. 67 (TO-67).

1.1 Project Description

The project consists of the Red Rock Canyon Bridge (Bridge No. 50-0178), on Highway 14 at Post Mile (PM) Kern (KER)-14 39.9 located in Kern County, California. We performed asbestos and LCP survey activities at the project location. The project location is depicted on the Vicinity Map, Figure 1, and Site Plan, Figure 2.

1.2 General Objectives

The primary purpose of the scope of services outlined in TO-67 was to determine the presence and quantity of asbestos and deteriorated LCP at the project location prior to bridge widening or replacement activities. Caltrans will use the information obtained from this investigation for waste profiling, determining California Occupational Safety and Health Administration (Cal/OSHA) applicability, and coordinating asbestos and LCP disturbance activities.

> *It was <u>not</u> Geocon's intent during this inspection to conduct an evaluation of lead-based paint hazards in accordance with U.S. Department of Housing and Urban Development (HUD) guidelines. HUD protocol generally requires a very extensive sampling strategy that includes sampling of paint on each surface type (e.g., wall, ceiling, window sill, window frame, door frame, molding, etc.) in each room.*

2.0 BACKGROUND

2.1 Asbestos

The *Code of Federal Regulations (CFR)*, 40 CFR 61, Subpart M, National Emissions Standards for Hazardous Air Pollutants (NESHAP) and Federal Occupational Safety and Health Administration (FED OSHA) classify asbestos-containing material (ACM) as any material or product that contains *greater than* 1% asbestos. Nonfriable ACM is classified by NESHAP as either Category I or Category II material defined as follows:

- **Category I** – asbestos-containing packings, gaskets, resilient floor coverings, and asphalt roofing products.

- **Category II** – all remaining types of nonfriable asbestos-containing material not included in Category I that when dry, cannot be crumbled, pulverized, or reduced to powder by hand pressure.

Regulated asbestos-containing material (RACM), a hazardous waste when friable, is classified as any manufactured material that contains *greater than* 1% asbestos by dry weight *and* is:

- Friable (can be crumbled, pulverized, or reduced to powder by hand pressure); or
- Category I material that has become friable; or
- Category I material that has been subjected to sanding grinding, cutting or abrading; or
- Category II nonfriable material that has a high probability of becoming crumbled, pulverized, or reduced to a powder during demolition or renovation activities.

Activities that disturb materials containing *any* amount of asbestos are subject to certain requirements of the Cal/OSHA asbestos standard contained in Title 8, CCR Section 1529. Typically, removal or disturbance of more than 100 square feet of material containing more than 0.1% asbestos must be performed by a registered asbestos abatement contractor, but associated waste labeling is not required if the material contains 1% or less asbestos. When the asbestos content of a material exceeds 1%, virtually all requirements of the standard become effective.

Materials containing more than 1% asbestos are also subject to NESHAP regulations (40 CFR Part 61, Subpart M). RACM (friable ACM and nonfriable ACM that will become friable during demolition operations) must be removed from structures prior to demolition. Certain nonfriable ACM and materials containing 1% or less asbestos may remain in structures during demolition; however, there are waste handling/disposal issues and Cal/OSHA work requirements that must be followed. Contractors are responsible for segregating and characterizing waste streams prior to disposal.

With respect to potential worker exposure, notification, and registration requirements, Cal/OSHA defines asbestos-containing construction material (ACCM) as construction material that contains more than 0.1% asbestos (Title 8, CCR 341.6).

2.2 Lead Paint

Construction activities (including renovation and demolition) that disturb materials or paints containing *any* amount of lead are subject to certain requirements of the Cal/OSHA lead standard contained in Title 8, CCR, Section 1532.1. Deteriorated paint is defined by Title 17, CCR, Division 1, Chapter 8, §35022 as a surface coating that is cracking, chalking, flaking, chipping, peeling, non-intact, failed, or otherwise separating from a component. Renovation or demolition of a deteriorated LCP component would require waste characterization and appropriate disposal. Intact LCP on a component is currently accepted by most landfill facilities; however, contractors are responsible for segregating and characterizing waste streams prior to disposal.

For a solid waste containing lead, the waste is classified as California hazardous when: 1) the total lead content equals or exceeds the respective Total Threshold Limit Concentration (TTLC) of 1,000 milligrams per kilogram (mg/kg); or 2) the soluble lead content equals or exceeds the respective Soluble Threshold Limit Concentration (STLC) of 5 milligrams per liter (mg/l) based on the standard Waste Extraction Test (WET). A waste has the potential for exceeding the lead STLC when the waste's total lead content is greater than or equal to ten times the respective STLC value since the WET uses a 1:10 dilution ratio. Hence, when total lead is detected at a concentration greater than or equal to 50 mg/kg, and assuming that 100 percent of the total lead is soluble, soluble lead analysis is required. Lead-containing waste is classified as "Resource, Conservation, and Recovery Act" (RCRA) hazardous, or Federal hazardous, when the soluble lead content equals or exceeds the Federal regulatory level of 5 mg/l based on the Toxicity Characteristic Leaching Procedure (TCLP).

The above regulatory criteria are based on chemical concentrations. Wastes may also be classified as hazardous based on other criteria such as ignitability; however, for the purposes of this investigation, toxicity (i.e., lead concentrations) is the primary factor considered for waste classification since waste generated during the construction activities would not likely warrant testing for ignitability or other criteria. Waste that is classified as either California hazardous or RCRA hazardous requires management as a hazardous waste.

Potential hazards exist to workers who remove or cut through LCP coatings during demolition. Dust containing hazardous concentrations of lead may be generated during scraping or cutting materials coated with lead-containing paint. Torching of these materials may produce lead oxide fumes. Therefore, air monitoring and/or respiratory protection may be required during the demolition of materials coated with LCP. Guidelines regarding regulatory provisions for construction work where workers may be exposed to lead are presented in the Title 8, CCR, Section 1532.1.

2.3 Architectural Drawings and Previous Survey Activities

Caltrans provided bridge architectural drawings for our review. Construction drawings indicated two layers of 1/16-inch asbestos sheet packing were used in the bridge span at the bridge bents and at the expansion joints. Previous survey reports of the subject bridge were not available for our review.

3.0 SCOPE OF SERVICES

Mr. Chris Giuntoli, a California-Certified Asbestos Consultant (CAC), certification No. 02-3163 (expiration June 19, 2009), and Certified Lead Paint Inspector/Assessor with the California Department of Public Health (DPH), certification numbers I-5502 (expiration June 14, 2009), performed the asbestos and LCP surveys at the project location on February 12, 2009.

3.1 Asbestos

Suspect ACM were grouped into homogeneous areas with representative samples randomly collected from each. In addition, each potential ACM was evaluated for condition (evidence of deterioration, physical damage, and water damage) and friability. A total of eight bulk asbestos samples of suspect materials were collected.

Our procedures for inspection and sampling in accordance with TO-67 are discussed below:

- Collected bulk asbestos samples after first wetting friable material with a light mist of water. The samples were then cut from the substrate and transferred to a labeled container. Note that when multiple samples were collected, the sampling locations were distributed throughout the homogeneous area (spaces where the material was observed).
- Relinquished bulk asbestos samples to EMSL Analytical, Inc., a California-licensed and Caltrans-approved subcontractor, for asbestos analysis in accordance with United States Environmental Protection Agency (EPA) Test Method 600/R-93/116 using polarized light microscopy (PLM) under chain-of-custody protocol. EMSL Analytical, Inc. is a laboratory accredited by the National Institute of Standards and Technology National Voluntary Laboratory Accreditation Program (NIST-NVLAP) for bulk asbestos fiber analysis. The laboratory analyses were requested on a 5-day turn-around-time.

Sample identification numbers, material descriptions, approximate quantities, friability assessments, and photo references are summarized in Table 1. Approximate sample locations are presented on Figure 2.

3.2 Lead Paint

Suspect LCP was not observed on building surfaces at the project location. Consequently, we did not collect samples of LCP.

4.0 INVESTIGATIVE RESULTS

4.1 Asbestos

Chrysotile asbestos at concentrations of 40% and 50% was detected in samples representing approximately 100 square feet of multi-layered, nonfriable asbestos sheet packing used as barrier rail shims.

Chrysotile asbestos at a concentration of 2% was detected in samples representing approximately 10 square feet of nonfriable barrier rail bolt thread sealant.

We observed no sheet packing on the span at the bridge bents or expansion joints as indicated on the construction drawings (see Section 2.3). Sheet packing encountered on the span at the bridge bents or expansion joints during renovation or demolition activities should be considered an asbestos-containing material unless/until sampled and laboratory analysis indicates otherwise.

No asbestos was detected in samples of the remaining suspect materials collected.

5.0 RECOMMENDATIONS

Based on our findings, we recommend the following:

5.1 Asbestos

NESHAP regulations do not require that asbestos-containing sheet packing or guard rail bolt thread sealant (Category I nonfriable/nonhazardous materials) identified during our survey be removed prior to renovation activities or treated as hazardous waste. However, the disturbance of the material is still covered by the Cal/OSHA asbestos standard (Title 8, CCR Section 1529). We recommend that a licensed contractor registered with Cal/OSHA for asbestos-related work (or a licensed and certified asbestos abatement contractor) perform renovation activities if the asbestos-containing sheet packing and bolt thread sealant identified during our survey is left in-place during renovation or demolition activities.

Activities that disturb the materials must be performed by a licensed contractor registered with Cal/OSHA for asbestos-related work. Contractors are responsible for segregating and characterizing waste streams prior to disposal and for informing the landfill of the contractor's intent to dispose of asbestos-containing waste.

Geocon also recommends the notification of other contractors (that will be conducting bridge widening or replacement activities) of the presence of asbestos at the project location. Contractors not licensed or registered to perform asbestos activities should be instructed not to disturb asbestos during their work.

In accordance with Kern County Air Pollution Control District (KCAPCD) Rule 423, written notification to KCAPCD is required ten working days prior to commencement of *any* demolition activity (whether asbestos is present or not).

5.2 Lead Paint

We recommend that all paints at the project location be treated as lead-containing for purposes of determining the applicability of the Cal/OSHA lead standard during any future maintenance, renovation, and demolition activities. This recommendation is based on the fact that lead was a common ingredient of paints manufactured before 1978 and is still an ingredient of some industrial paints. Construction activities (including demolition) that disturb materials containing *any* amount of lead are subject to certain requirements of the Cal/OSHA lead standard contained in Title 8, CCR Section 1532.1. In accordance with Title 8, CCR, Section 1532.1(p), written notification to the nearest Cal/OSHA district office is required at least 24 hours prior to certain lead-related work.

6.0 REPORT LIMITATIONS

This asbestos and LCP survey was conducted in conformance with generally accepted standards of practice for identifying and evaluating asbestos and LCP in structures. The survey addressed only the structure identified in Section 1.1. Due to the nature of structure surveys, asbestos and LCP use, and laboratory analytical limitations, some ACM or LCP at the project location may not have been identified. Spaces such as cavities, voids, crawlspaces, and pipe chases, may have been concealed to Geocon's investigator. Previous renovation work may have concealed or covered spaces or materials, or may have partially demolished materials and left debris in inaccessible areas. Additionally, renovation activities may have partially replaced ACM with indistinguishable non-ACM. Asbestos and/or LCP may exist in areas that were not accessible or sampled in conjunction with this TO.

During renovation or demolition operations, suspect materials may be uncovered which are different from those accessible for sampling during this assessment. Personnel in charge of renovation/demolition should be alerted to note materials uncovered during such activities that differ substantially from those included in this or previous assessment reports. If suspect ACM and/or LCP are found, additional sampling and analysis should be performed to determine if the materials contain asbestos or lead.

This report has been prepared exclusively for Caltrans. The information contained herein is only valid as of the date of the report, and will require an update to reflect additional information obtained.

This report is not a comprehensive site characterization and should not be construed as such. The findings as presented in this report are predicated on the results of the limited sampling and laboratory testing performed. In addition, the information obtained is not intended to address potential impacts related to sources other than those specified herein. Therefore, the report should be deemed conclusive with respect to only the information obtained. We make no warranty, express or implied, with respect to the content of this report or any subsequent reports, correspondence or consultation. Geocon strived to perform the services summarized herein in accordance with the local standard of care in the geographic region at the time the services were rendered.

The contents of this report reflect the views of the author who is responsible for the facts and accuracy of the data presented herein. The contents do not necessarily reflect the official views or policies of the State of California or the Federal Highway Administration. This report does not constitute a standard, specification, or regulation.

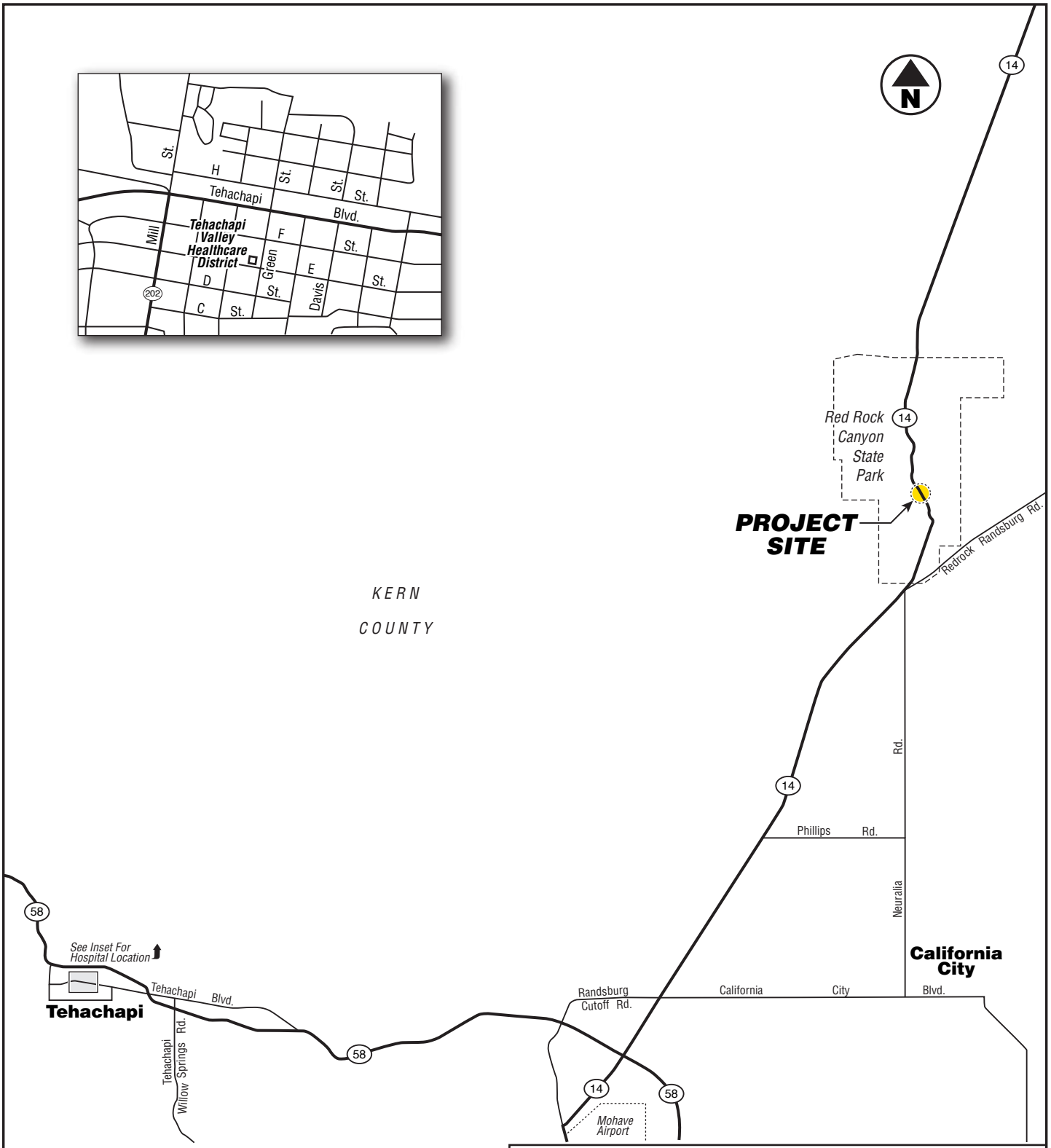

0 5
Scale in Miles

GEOCON
CONSULTANTS, INC.
3160 GOLD VALLEY DR. – SUITE 800 - RANCHO CORDOVA, CA. 95742
PHONE 916 852-9118 – FAX 916 852-9132

Red Rock Canyon Bridge		
Kern County, California	**VICINITY MAP**	
GEOCON Proj. No. S9200-06-67		
Task Order No. 67, EA 06-0H1800	March 2009	Figure 1

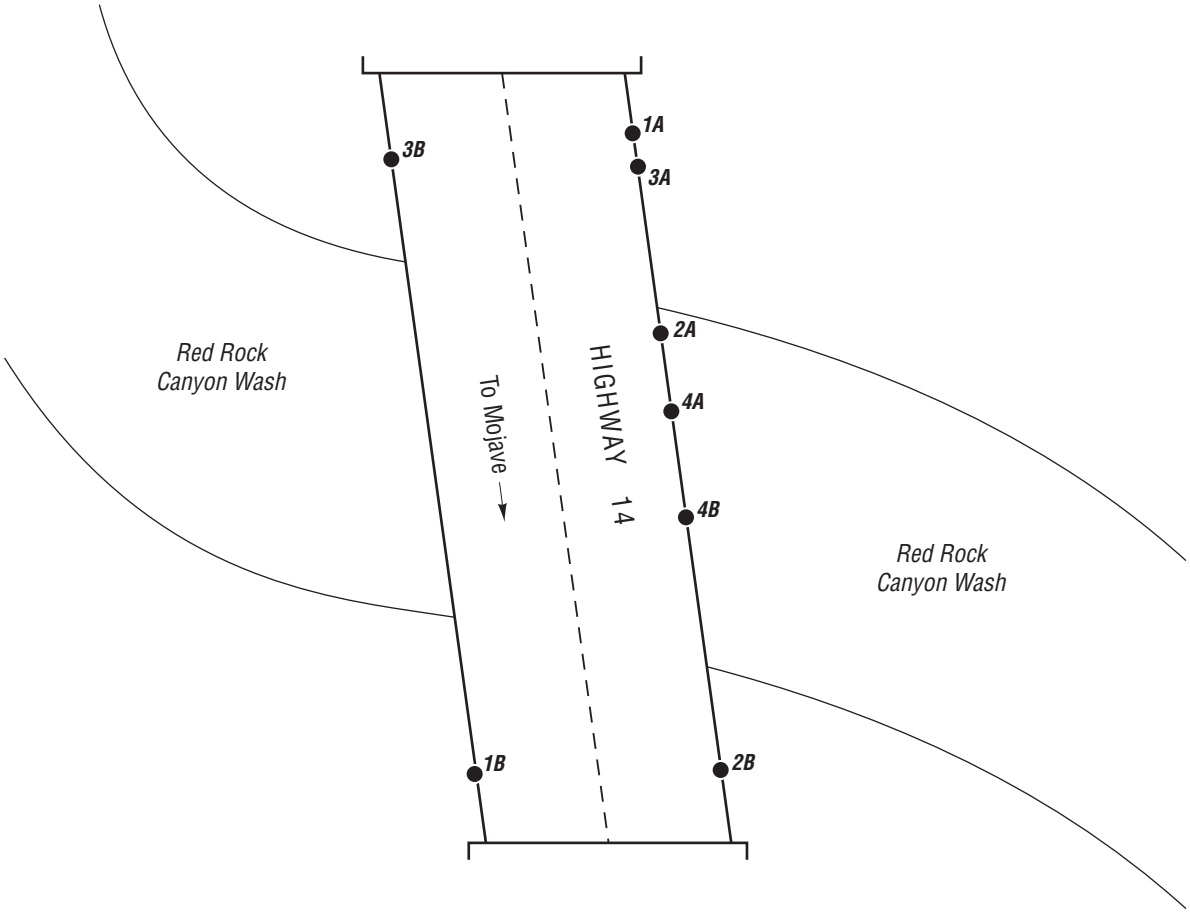

RED ROCK CANYON BRIDGE
(BRIDGE NO. 50-0178)

N

NOT TO SCALE

LEGEND:

- Approximate Asbestos Sample Location

GEOCON
CONSULTANTS, INC.
3160 GOLD VALLEY DR. – SUITE 800 - RANCHO CORDOVA, CA. 95742
PHONE 916 852-9118 – FAX 916 852-9132

Red Rock Canyon Bridge		
Kern County, California	**SITE PLAN**	
GEOCON Proj. No. S9200-06-67		
Task Order No. 67, EA 06-0H1800	March 2009	Figure 2

Photo 1 – Red Rock Canyon Bridge (No. 50-0178)

Photo 2 – Typical Bridge 50-0178 deck joint (no suspect materials)

Photo 3 – Non friable asbestos-containing guard rail shim

GEOCON
CONSULTANTS, INC.
3160 Gold Valley Drive, Suite 800
Rancho Cordova, California 95742
PHONE (916) 852-9118 – FAX (916) 852-9132

PHOTOGRAPHS 1, 2, & 3		
Red Rock Canyon Bridge Kern County, California		
S9200-06-67	Task Order No. 67	March 2009

Photo 4 – Nonfriable asbestos-containing bolt thread sealant used on the guard rail system

Photo 5 – Brown fiberboard

Photo 6 – Leveling compound used on the guard rail system

TABLE 1
SUMMARY OF ASBESTOS ANALYTICAL RESULTS
RED ROCK CANYON BRIDGE (No. 50-0178)
CALTRANS CONTRACT 06A1141, TASK ORDER NO. 67, EA 06-OH1800
KERN COUNTY, CALIFORNIA

Polarized Light Microscopy (PLM) - EPA Test Method 600/R-93/116

Bridge No.	Sample Group No.	Description of Material	Approximate Quantity	Friable	Site Photo	Asbestos Content*
50-0178	**178-1**	**Guard rail shim**	**100 square feet**	**No**	**X**	**40-50%**
	178-2	**Bolt thread sealant**	**10 square feet**	**No**	**X**	**2%**
	178-3	Brown fiberboard	NA	NA	X	ND
	178-4	Guard rail leveling compound	NA	NA	X	ND

Notes:

NA = Not applicable (no asbestos detected)

ND = Not detected

* Identified asbestos is of the chrysotile variety unless otherwise indicated.

EMSL Analytical, Inc
2235 Polvorosa Ave , Suite 230, San Leandro, CA 94577
Phone: (510) 895-3675 Fax: (510) 895-3680 Email: milpitaslab@emsl.com

Attn: **Chris Giuntoli**
Geocon Consultants
6671 Brisa Street
Livermore, CA 94550

Fax: (925) 371-5915 Phone: (925) 371-5900
Project: **S9200-06-67**

Customer ID: GECN21
Customer PO: S9200-06-67
Received: 02/14/09 9:20 AM
EMSL Order: 090901081

EMSL Proj:
Analysis Date: 2/17/2009
Report Date: 2/17/2009

Asbestos Analysis of Bulk Materials via EPA 600/R-93/116 Method using Polarized Light Microscopy

Sample	Location	Appearance	Non-Asbestos %	Fibrous	Non-Asbestos %	Non-Fibrous	Asbestos %	Type
178-1A, Rail shim *090901081-0001*		Gray Fibrous Homogeneous			60%	Non-fibrous (other)	**40%**	**Chrysotile**
178-1B, Rail shim *090901081-0002*		Gray Fibrous Homogeneous			50%	Non-fibrous (other)	**50%**	**Chrysotile**
178-2A, Bolt thread sealant *090901081-0003*		Gray Non-Fibrous Homogeneous			98%	Non-fibrous (other)	**2%**	**Chrysotile**
178-2B, Bolt thread sealant *090901081-0004*		Gray Non-Fibrous Homogeneous			98%	Non-fibrous (other)	**2%**	**Chrysotile**
178-3A, Fiber board *090901081-0005*		Brown Fibrous Homogeneous	70%	Cellulose	30%	Non-fibrous (other)	**None Detected**	
178-3B, Fiber board *090901081-0006*		Brown Fibrous Homogeneous	70%	Cellulose	30%	Non-fibrous (other)	**None Detected**	
178-4A, Level compound *090901081-0007*		White Non-Fibrous Homogeneous			100%	Non-fibrous (other)	**None Detected**	

Analyst(s)

Nathee Dummai (8)

Baojia Ke, Laboratory Manager
or other approved signatory

Due to magnification limitations inherent in PLM, asbestos fibers in dimensions below the resolution capability of PLM may not be detected. Samples reported as <1% or none detected may require additional testing by TEM to confirm asbestos quantities. The above test report relates only to the items tested and may not be reproduced in any form without the express written approval of EMSL Analytical, Inc. EMSL's liability is limited to the cost of analysis. EMSL bears no responsibility for sample collection activities or analytical method limitations. Interpretation and use of test results are the responsibility of the client.Samples received in good condition unless otherwise noted.
NVLAP Lab Code 101048-3

EMSL Analytical, Inc
2235 Polvorosa Ave , Suite 230, San Leandro, CA 94577
Phone: (510) 895-3675 Fax: (510) 895-3680 Email: milpitaslab@emsl.com

Attn: **Chris Giuntoli**
Geocon Consultants
6671 Brisa Street
Livermore, CA 94550

Fax: (925) 371-5915 Phone: (925) 371-5900
Project: **S9200-06-67**

Customer ID: GECN21
Customer PO: S9200-06-67
Received: 02/14/09 9:20 AM
EMSL Order: 090901081

EMSL Proj:
Analysis Date: 2/17/2009
Report Date: 2/17/2009

Asbestos Analysis of Bulk Materials via EPA 600/R-93/116 Method using Polarized Light Microscopy

			Non-Asbestos			Asbestos
Sample	**Location**	**Appearance**	**% Fibrous**	**% Non-Fibrous**		**% Type**
178-4B, Level compound *090901081-0008*		White Non-Fibrous Homogeneous		100%	Non-fibrous (other)	**None Detected**

Analyst(s)

Nathee Dummai (8)

Baojia Ke, Laboratory Manager
or other approved signatory

Due to magnification limitations inherent in PLM, asbestos fibers in dimensions below the resolution capability of PLM may not be detected. Samples reported as <1% or none detected may require additional testing by TEM to confirm asbestos quantities. The above test report relates only to the items tested and may not be reproduced in any form without the express written approval of EMSL Analytical, Inc. EMSL's liability is limited to the cost of analysis. EMSL bears no responsibility for sample collection activities or analytical method limitations. Interpretation and use of test results are the responsibility of the client.Samples received in good condition unless otherwise noted.
NVLAP Lab Code 101048-3

THIS IS THE LAST PAGE OF THE REPORT.

090901081

90901081

EMSL ANALYTICAL, INC.

EMSL – San Leandro ◆ 2235 Polvorosa Ave, Suite 230, San Leandro, CA 94577

(888) 455-3675 ◆ Phone (510) 895-3675 ◆ Fax (510) 895-3680 ◆ sanleandrolab@emsl.com

EMSL Rep:	DAN KOCHER	*Third Party Billing*	**requires written authorization from third party*
Company:	GEOCON	**EMSL-Bill to:**	
Contact:	CHRIS GIUNTOLI	**Contact:**	
Address:	6671 BRISA ST	**Address:**	
City & State:	LIVERMORE, CA **Zip** 94550	**City & State:**	**Zip**
Phone:	925-371-5900	**Fax:**	
☒ **Email Results**	GIUNTOLI@GEOCONINC.COM	☐ **Fax results**	
Project Name or Number:	S9200-06-67	**Purchase Order Number:**	

TURNAROUND TIME

☐ 3 Hours	☐ 6 Hours	☐ 24 Hours	☐ 48 Hours	☐ 72 Hours	☒ 5 Days	☐ 10 Days

SAMPLE MATRIX

☐ Air	☒ Bulk	☐ Soil	☐ Wipe	☐ Micro-Vac	☐ Drinking Water	☐ Wastewater	☐ Chips	☐ Other

ASBESTOS ANALYSIS

PCM - Air
- ☐ NIOSH 7400 (A) Issue 2: August 1994
- ☐ OSHA w/ Time Weighted Average

TEM AIR
- ☐ AHERA 40 CFR, Part 763 Subpart E
- ☐ NIOSH 7402 Issue 2
- ☐ EPA Level II

PLM - Bulk
- ☒ EPA 600/R-93/116
- ☐ **+ Add Gravimetric Reduction (EPA NOB)**

PLM CARB 435 Level: ☐ A (0.25%) ☐ B (0.1%)
- ☐ NIOSH 9002
- ☐ EPA Point Count (400 Points)
- ☐ **+ Add Gravimetric Reduction (EPA NOB)**
- ☐ EPA Point Count (1,000 Points)
- ☐ **+ Add Gravimetric Reduction (EPA NOB)**
- ☐ Standard Addition Point Count

SOILS

PLM CARB 435 Level: ☐ A (0.25%) ☐ B (0.1%)
TEM CARB 435 Level: ☐ B (0.1%) ☐ C (0.01%) ☐ D (0.001%) ☐ E (0.0005%) ☐ F (0.0001%)
- ☐ EMSL MSD 9000 Method fibers/gram
- ☐ Superfund EPA 540-R097-028 (dust generation)

EPA Protocol ☐ Qualitative ☐ Quantitative

TEM BULK
- ☐ TEM EPA NOB, EPA 600/R-93/116 Section 2.5.5.1 (TEM % by VAE)
- ☐ Chatfield SOP-1988-02
- ☐ TEM EPA 600/R-93/116 Section 2.5.5.2 (TEM % by Mass)

TEM MICROVAC
- ☐ ASTM D 5755 (Quantitative)

TEM WIPE
- ☐ ASTM D-6480 (Quantitative)

TEM WATER
- ☐ EPA 100.2 (≥ 10 microns)
- ☐ Modified EPA 100.2 (≥ 0.5 microns)

OTHER:

LEAD ANALYSIS

Flame Atomic Absorption
- ☐ Wipe, SW846-7420 ☐ ASTM ☐ non ASTM
- ☐ Soil, SW846-7420
- ☐ Air, NIOSH 7082
- ☐ Chips, SW846-7420 or AOAC 5.009 (974.02)
- ☐ Wastewater, SW 846-7420

- ☐ TCLP LEAD SW846-1311/7420

Graphite Furnace Atomic Absorption
- ☐ Air, NIOSH 7105
- ☐ Wastewater, SW846-7421
- ☐ Soil, SW846-7421
- ☐ Drinking Water, EPA 239.2

ICP – Inductively Coupled Plasma
- ☐ Wipe, SW846-6010 ☐ ASTM ☐ non ASTM
- ☐ Soil, SW846-6010
- ☐ Air, NIOSH 7300

MATERIALS ANALYSIS
- ☐ Particle Identification
- ☐ Full Particle Identification
- ☐ Dust Mites and Insect Fragments
- ☐ Particle Size & Distribution
- ☐ Product Comparison
- ☐ Paint Characterization
- ☐ Failure Analysis
- ☐ Corrosion Analysis
- ☐ Glove Box Containment Study
- ☐ Petrographic Examination of Concrete
- ☐ Portland Cement in Workplace Atmospheres (OSHA ID-143)
- ☐ Man Made Vitrous Fibers – MMVF's
- ☐ Synthetic Fiber Identification
- ☐ Other:

MICROBIAL ANALYSIS

Air Samples
- ☐ Mold & Fungi by Air O Cell
- ☐ Mold & Fungi by Agar Plate count & id
- ☐ Bacterial Count and Gram Stain
- ☐ Bacterial Count and Identification

Water Samples
- ☐ Total Coliforms, Fecal Coliforms
- ☐ Escherichia Coli, Fecal Streptococcus
- ☐ Legionella
- ☐ Salmonella
- ☐ Giardia and Cryptosporidium

Wipe and Bulk Samples
- ☐ Mold & Fungi – Direct Examination
- ☐ Mold & Fungi – (Culture follow up to direct examination if necessary)
- ☐ Mold & Fungi – Culture (Count & ID)
- ☐ Mold & Fungi – Culture (Count only)
- ☐ Bacterial Count & Gram Stain
- ☐ Bacterial Count & Identification (3 most prominent types)
- ☐ Other:

IAQ ANALYSIS
- ☐ Nuisance Dust (NIOSH 0500 & 0600)
- ☐ Airborne Dust (PM10, TSP)
- ☐ Silica Analysis by XRD ☐ NIOSH 7500
- ☐ HVAC Efficiency
- ☐ Carbon Black
- ☐ Airborne Oil Mist
- ☐ Other:

Relinquished:	[signature]	**Date:**	2/13/09	**Time:**	1600
Received:	[signature]	**Date:**	2/14/09	**Time:**	8:20 am
Relinquished:		**Date:**		**Time:**	
Received:		**Date:**		**Time:**	

090901081

90901081

EMSL ANALYTICAL, INC.

EMSL – San Leandro ◆ 2235 Polvorosa Ave, Suite 230, San Leandro, CA 94577

	SAMPLE NUMBER	SAMPLE DESCRIPTION	LOCATION	VOLUME Air (L) Area (Inches sq.)
1	178-1A	RAIL SHIM		
2	178-1B	↓		
3	178-2A	BOLT THREAD SEALANT		
4	178-2B	↓		
5	178-3A	BROWN FIBER BOARD		
6	178-3B	↓		
7	178-4A	RAIL POST LEVELING COMPOUND		
8	178-4B	↓		
9				
10				
11				
12				
13				
14				
15				
16				
17				
18				
19				
20				
21				
22				
23				
24				
25				

Client Sample # (S) _____ - _____ TOTAL SAMPLE # 8

Relinquished:		Date:		Time:	
Received:	[illegible]	Date:	2/14/09	Time:	9:20am
Relinquished:		Date:		Time:	
Received:		Date:		Time:	

ALTERNATIVE FLARED TERMINAL SYSTEM DETAILS

Dist	COUNTY	ROUTE	POST MILES TOTAL PROJECT	SHEET No.	TOTAL SHEETS
06	Ker	14	39.3/40.3		

REGISTERED CIVIL ENGINEER DATE

PLANS APPROVAL DATE

REGISTERED PROFESSIONAL ENGINEER No. Exp. CIVIL STATE OF CALIFORNIA

THE STATE OF CALIFORNIA OR ITS OFFICERS OR AGENTS SHALL NOT BE RESPONSIBLE FOR THE ACCURACY OR COMPLETENESS OF SCANNED COPIES OF THIS PLAN SHEET.

TABLE A

POST OFFSET DIMENSIONS		
Post No.	3'-0" System End Offset	3'-6" System End Offset
1	36"	42"
2	22¼"	27¾"
3	11¾"	16¼"
4	6¾"	10⅝"
5	3"	6"
6	¾"	2¾"
7	0"	¾"
8	0"	0"

See Note 12

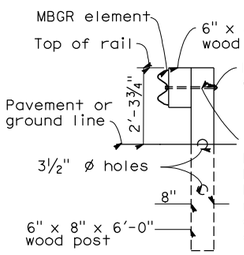

SECTION A-A

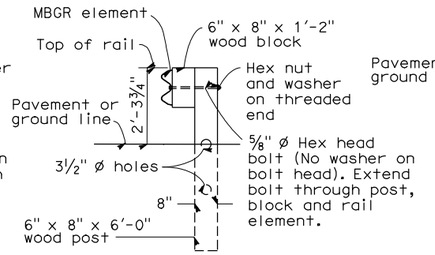

SECTION B-B

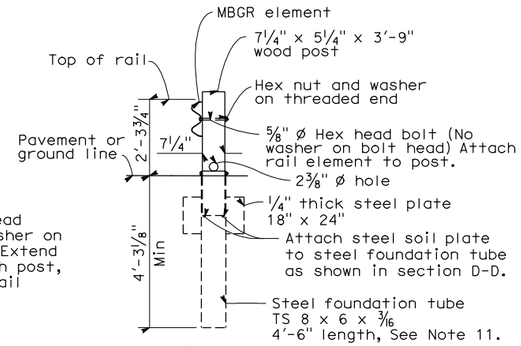

SECTION C-C

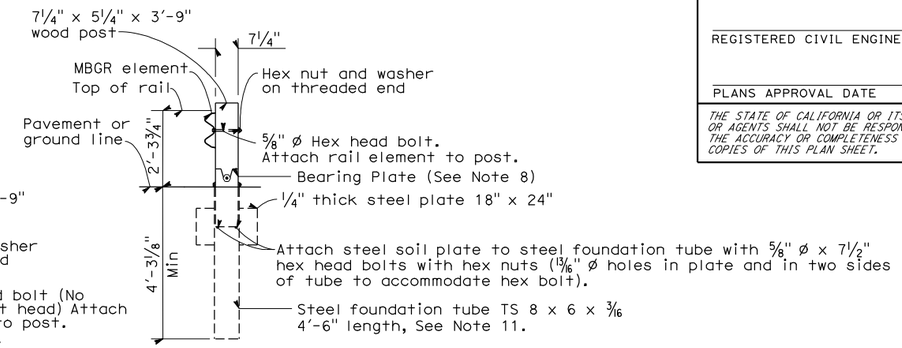

SECTION D-D

(Terminal Section not shown)

NOTES:

1. For additional details of Terminal System (Type SRT), refer to the manufacturer's installation instructions.
2. The post offset dimensions are given to the center of the traffic face of the block, except at the first two posts, where the dimension is to the center of the traffic face of the post. Offset points are to be located by chord measurements at the back of the rail equal to the nominal post spacings shown. Posts are to be set approximately radial to the railing at each post locations.
3. Do not attach rail elements to posts 7 and 8.
4. Attach strut to Post Nos. 1 and 2 foundation tubes with ⅝" ø hex head bolts, washers and hex nuts. Bolts extend through the strut, steel foundation tube, and wood posts.
5. For the length and type of metal beam guard railing or metal barrier railing the terminal system is attached to, see the Project Plans.
6. Attach rail element to this post and block. Payment for this post, block and hardware is included in payment for the type of railing or barrier the terminal system is attached to, not part of payment for Terminal System (Type SRT).
7. The deflector angle of the slot guard is to be positioned immediatley downstream of the slots.
8. For bearing plate orientation, refer to the manufacturer's installation instructions.
9. For typical use of this terminal system with guard railing, see the A77E, A77F and A77G Series of Standard Plans. See Standard Plan A78E for typical use of this terminal system with single thrie beam barrier.
10. A complete wrap around end section may continued to be used in existing installations. New installations shall be constructed with the ¾ wrap end section shown.
11. A 6'-0" length steel foundation tube, TS 8 x 6 x 3/16 without a soil plate, may be furnished and installed in place of the 4'-6" length steel foundation tube and soil plate shown. Minimum embedment of the 6'-0" length tube shall be 5'-9". A ⅝" ø hex head bolt and nut shall be installed in the hole in 6'-0" length tube to keep the wood post from dropping into the tube.
12. Where site conditions will not accommodate use of the standard 4'-0" system end offset, 3'-6" or 3'-0" system end offsets, as applicable, may be used. See Table A for post offset dimensions for 3'-6" and 3'-0" system end offsets.

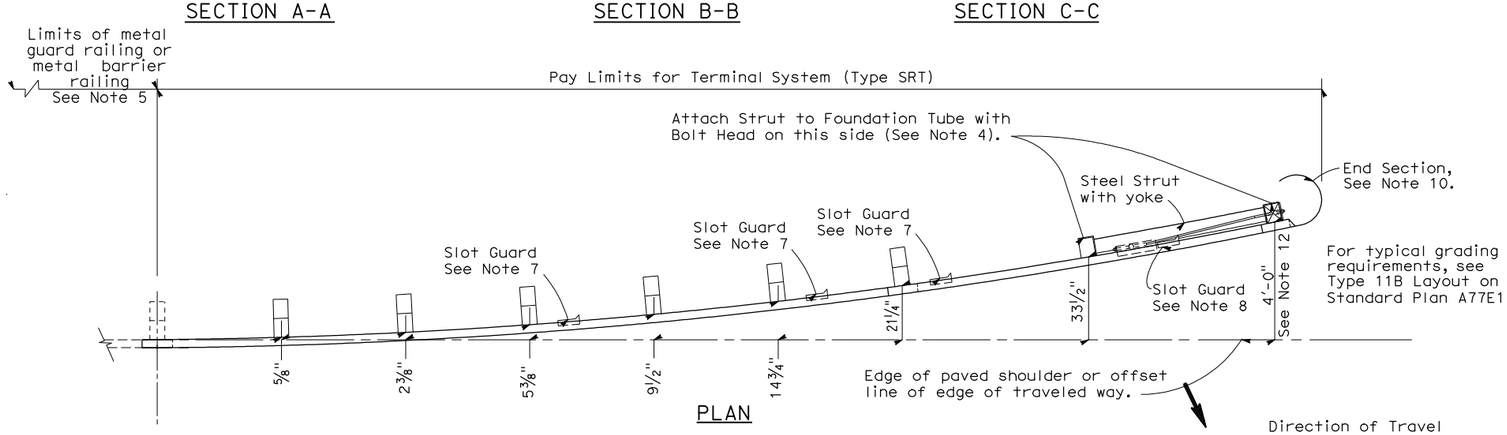

PLAN

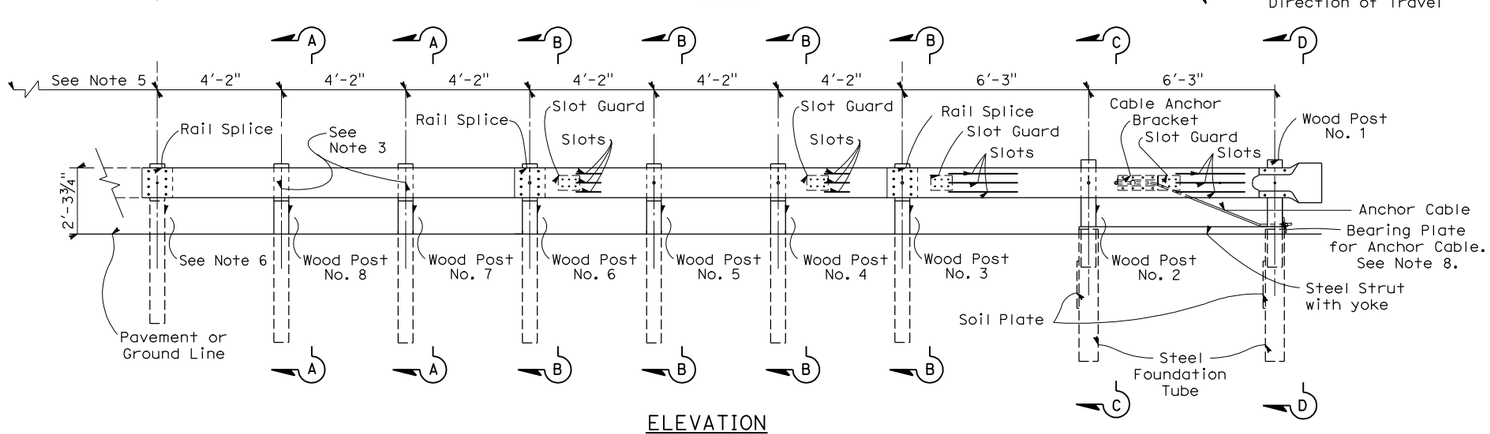

ELEVATION

TERMINAL SYSTEM (TYPE SRT)

(8 Post System)
See Note 9

STATE OF CALIFORNIA
DEPARTMENT OF TRANSPORTATION

METAL BEAM RAILING TERMINAL SYSTEM (TYPE SRT)

CONSTRUCTION DETAILS

NO SCALE

STATE OF CALIFORNIA - DEPARTMENT OF TRANSPORTATION

Caltrans

09-DESIGN

FUNCTIONAL SUPERVISOR

CALCULATED-DESIGNED BY

CHECKED BY

REVISED BY

DATE REVISED

LAST REVISION

DATE PLOTTED => 26-APR-2012

TIME PLOTTED => 12:04

Dist	COUNTY	ROUTE	POST MILES TOTAL PROJECT	SHEET No.	TOTAL SHEETS
06	Ker	14	39.3/40.3		

REGISTERED CIVIL ENGINEER DATE

PLANS APPROVAL DATE

REGISTERED PROFESSIONAL ENGINEER No. Exp. CIVIL STATE OF CALIFORNIA

THE STATE OF CALIFORNIA OR ITS OFFICERS OR AGENTS SHALL NOT BE RESPONSIBLE FOR THE ACCURACY OR COMPLETENESS OF SCANNED COPIES OF THIS PLAN SHEET.

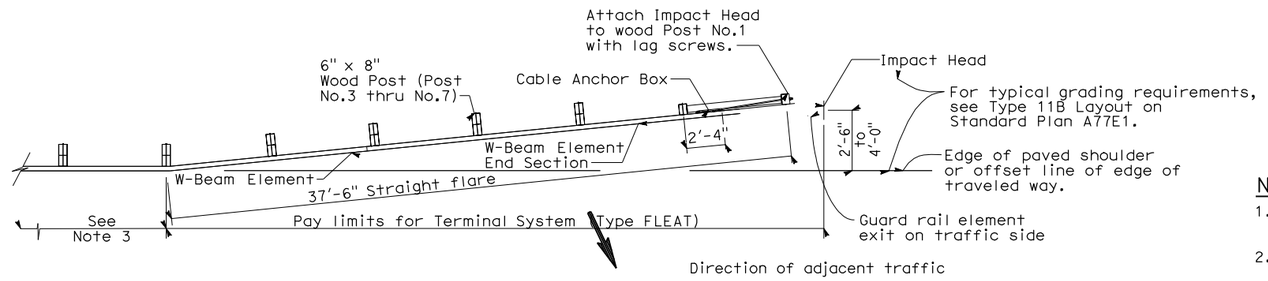

PLAN

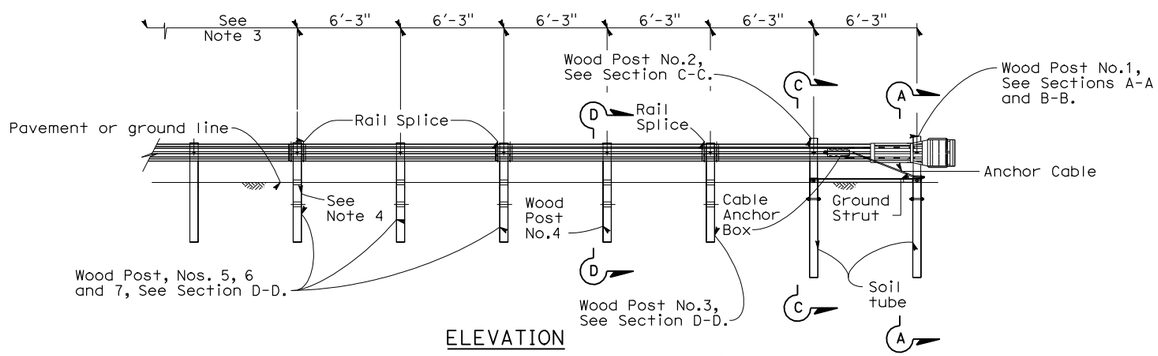

ELEVATION

TERMINAL SYSTEM (TYPE FLEAT)

NOTES:

1. For additional details of Terminal System (Type FLEAT), refer to the manufacturer's installation instructions.
2. Terminal System (Type FLEAT) not to be used where extrusion of the rail on the front side of the installation would be in the path of pedestrian traffic.
3. For the length and type of metal beam guard railing or metal barrier railing the terminal system is attached to, see Project Plans. For typical use of this terminal system with guard railing, see the A77E, A77F and A77G Series of the Standard Plans.
4. Attach rail element to this post and block. Payment for this post, block and attaching hardware is included in payment for Terminal System (Type FLEAT).

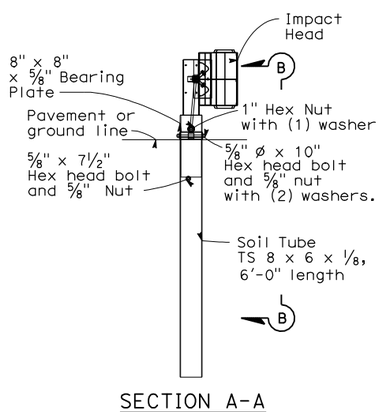

SECTION A-A

Post No.1

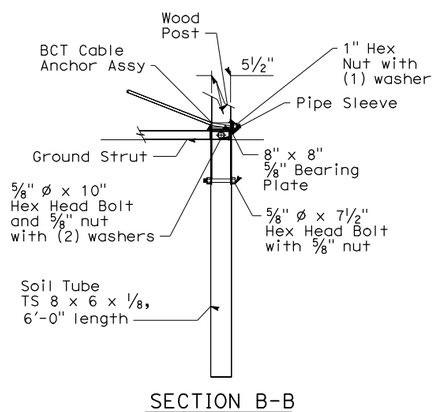

SECTION B-B

Partial view Post No.1

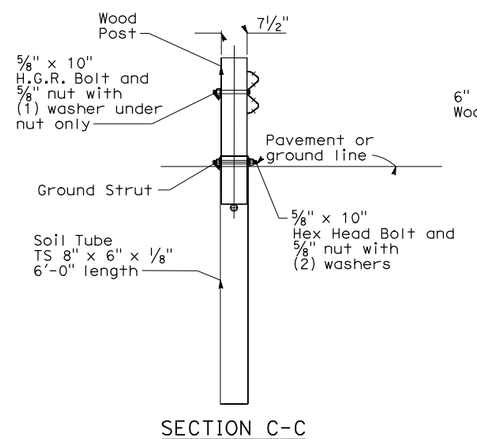

SECTION C-C

at Post No.2

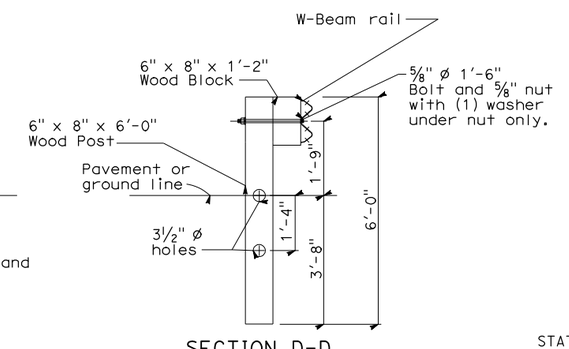

SECTION D-D

Post No.3 through No.7.

STATE OF CALIFORNIA
DEPARTMENT OF TRANSPORTATION

METAL BEAM RAILING TERMINAL SYSTEM (TYPE FLEAT)

NO SCALE

CONSTRUCTION DETAILS

NO SCALE

REVISED BY | DATE REVISED

CALCULATED-DESIGNED BY | CHECKED BY

FUNCTIONAL SUPERVISOR

STATE OF CALIFORNIA - DEPARTMENT OF TRANSPORTATION

Caltrans®

09-DESIGN

LAST REVISION | DATE PLOTTED

Dist	COUNTY	ROUTE	POST MILES TOTAL PROJECT	SHEET No.	TOTAL SHEETS
06	Ker	14	39.3/40.3		

REGISTERED CIVIL ENGINEER DATE

PLANS APPROVAL DATE

REGISTERED PROFESSIONAL ENGINEER No. Exp. CIVIL STATE OF CALIFORNIA

THE STATE OF CALIFORNIA OR ITS OFFICERS OR AGENTS SHALL NOT BE RESPONSIBLE FOR THE ACCURACY OR COMPLETENESS OF SCANNED COPIES OF THIS PLAN SHEET.

NOTES:
1. SEE MANUFACTURER PLANS FOR ADDITIONAL DETAILS AND DIMENSIONS NOT SHOWN ON PLANS.
2. SYSTEM TO BE INSTALLED PER MANUFACTURER SPECIFICATIONS.
3. ONLY TIGHTEN THE CABLE ASSEMBLIES USING THE NUTS AT THE CABLE BRACKET (SEE DETAIL D). DO NOT TIGHTEN THE CABLES AT THE FRONT OF THE GROUND ANCHOR.
4. WHEN DRIVING STEEL POST, ENSURE THAT A DRIVING CAP WITH TIMBER OR PLASTIC INSERT IS USED TO PREVENT DAMAGE TO THE GALVANIZING TO THE TOP OF THE STEEL POST.

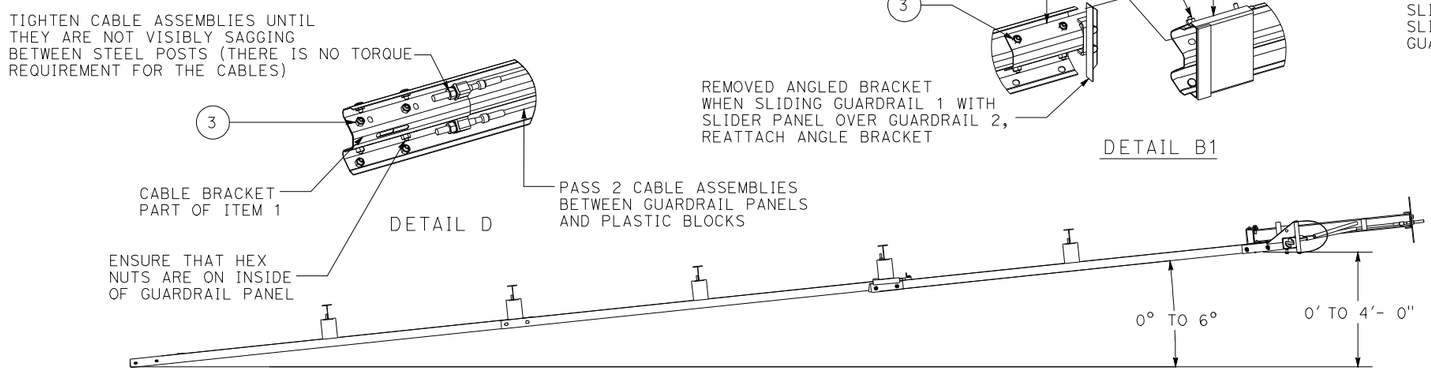

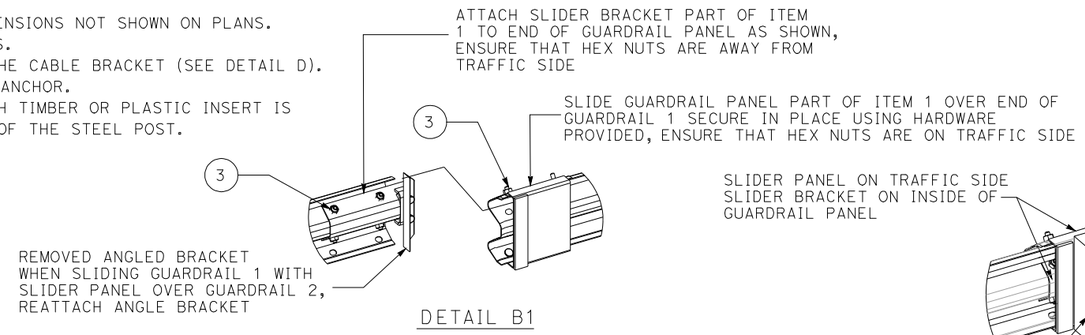

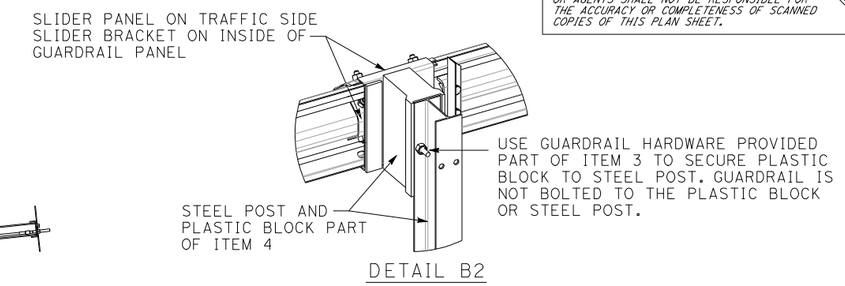

FLARED TERMINAL SYSTEM DETAIL

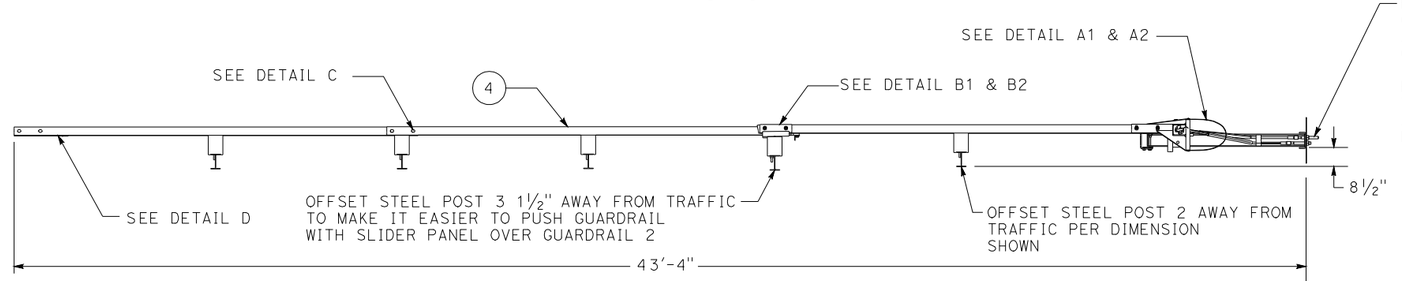

IN-LINE TERMINAL SYSTEM DETAIL

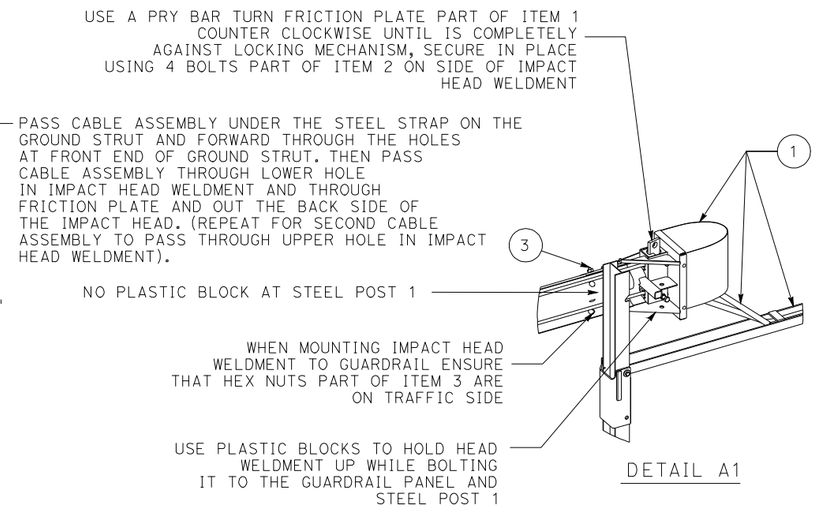

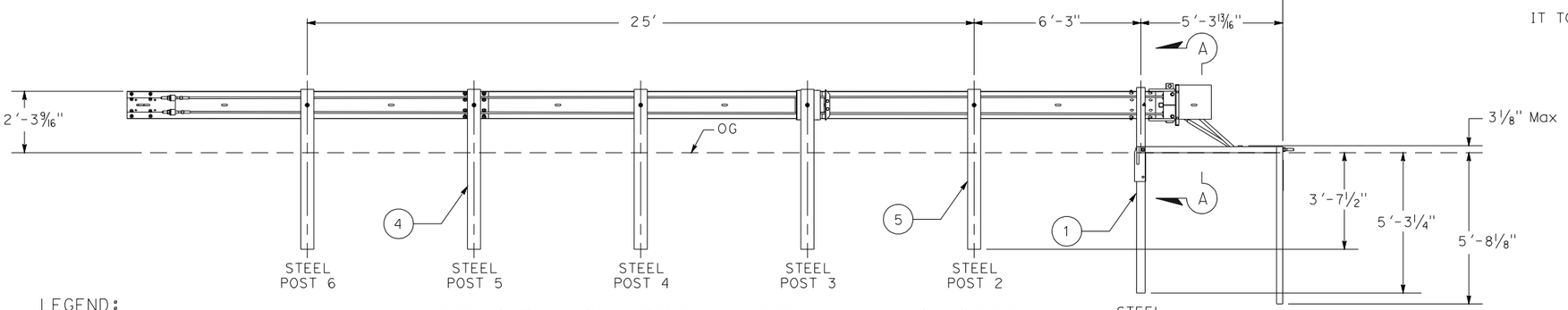

X-TENSION GUARDRAIL TERMINAL SYSTEM
MODEL No. XTGTSS3

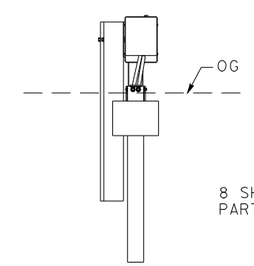

SECTION A-A

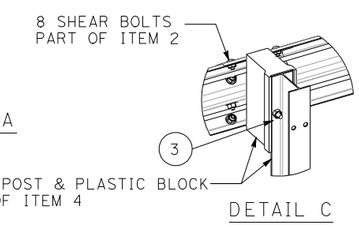

LEGEND:

ITEM	DESCRIPTION
1	X-TENSION TERMINAL COMPONENT KIT
2	X-TENSION HARDWARE KIT
3	X-TENSION SYSTEM HARDWARE KIT
4	X-TENSION GUARDRAIL COMPONENT KIT 3
5	I-BEAM POST, MIDDLE, X350

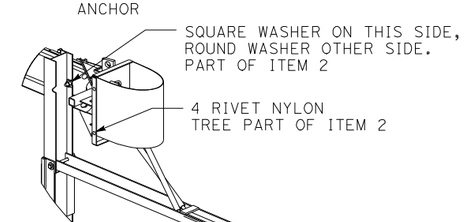

GUARDRAIL TERMINAL SYSTEMS

CONSTRUCTION DETAILS

NO SCALE

REVISED BY | DATE REVISED | CALCULATED-DESIGNED BY | CHECKED BY | FUNCTIONAL SUPERVISOR

STATE OF CALIFORNIA - DEPARTMENT OF TRANSPORTATION **06-DESIGN** Caltrans

LAST REVISION 04-02-12 | DATE PLOTTED => $DATE | TIME PLOTTED => $TIME

FOUNDATION REPORT FOR RED ROCK CANYON BRIDGE
BRIDGE NO. 50-0178

M e m o r a n d u m

Flex your power!
Be energy efficient!

To: GARY JOE, CHIEF
Design Branch, Branch 17
Structure Design
Division of Engineering Services MS 9-DES. 17

Attention: Tham Bui

Date: April 11, 2012

File: 06-KER-14-PM 39.88
EA: 06-0H1801
EFIS 0600000119
Red Rock Canyon Bridge
Br. No. 50-0178

From: DEPARTMENT OF TRANSPORTATION
DIVISION OF ENGINEERING SERVICES
GEOTECHNICAL SERVICES – MS 5

Subject: Foundation Report (FR)

Introduction

The Office of Geotechnical Design – North has prepared this Foundation Report for the Red Rock Canyon Bridge replacement project located on Route 14 located at post mile (PM) 39.88 in unincorporated Kern County, California. The project proposes to replace the existing 13 span, continuous RC Slab Bridge due to column / foundation scour damage and reactive aggregates induced damage to the super structure generally. The bridge has been deemed scour critical according to the Final Hydraulic Report, dated August 2, 2011. The existing bridge was built in 1959 and is approximately 393.7 feet. Long.

A CIP/PS Voided Concrete Slab 7- Continuous Spans bridge structure with three alternative foundation types was proposed in the Request for Final Foundation Report, dated November 12, 2010. They included 24-in CISS piles, 30-in CISS piles and 30-in CIDH piles. The foundation investigation discussed subsequently found bedrock at relatively shallow depth (46 to 80 feet below the existing ground surface). Therefore, based on this information combined with the proposed design loading and potential liquefaction and scour, it is recommended that the foundations shall consist of pile extensions, each consisting of a permanent 30-in diameter steel shell casing driven to bedrock followed by a 24- in diameter drilled rock socket. The permanent casing shall extend up to the pile cut off elevation. Details will be discussed under the Foundation Recommendations section that follows.

Field Exploration

Our subsurface investigation was performed in November and December of 2011 and in April of 2012. A total of five mud rotary borings were drilled to depths ranging from 70 ft to 130 ft below existing ground surface. Soil and rock was retrieved in each boring using a split spoon Standard Penetration Testing (SPT) sampler for soil collection and a wire-line retrieval core

barrel system for rock collection. The SPT samples were taken at approximately 5-foot intervals and the rock coring was continuous. In the case of the two borings drilled in April, SPT sampling was not done. The purpose of these two borings was to get more depth to bedrock and rock quality information. The uniformity of the alluvial soils based on the SPT data from the initial three borings was sufficient to adequately characterize the soils under the site. Testing results of rock core samples taken during the April investigation will be provided when completed.

In addition to the drilling program a seismic refraction survey (SRS) was performed by the Geophysical Branch in January 2012. The SRS provided a continuous interpretive record of depth to bedrock which helped fill the data gap between the borings. The results of the SRS have been incorporated in this report. A separated SRS report will be provided when completed.

Full-sized Logs sheets of the Test Borings (LOTB) were prepared by the Geotechnical Services, Office of Geotechnical Support, Branch D – Contracts, Graphics & Records. Irma Gamarra-Remmen of the Contracts, Graphics & Records branch may be contacted directly for information on the LOTB(s).

Regional Geologic Setting

The Red Rock Canyon Bridge located in the State Park of the same name is situated within the Mojave Desert Geologic Provence (MDGP) near its boundary with the Sierra Nevada Geologic Province located to the north. Geologic events within both provinces have influenced the geology and landscape of the project site.

The MDGP is a relatively topographically low relief gigantic fault- bound block that includes scattered low hills, small mountain ranges and intervening valleys with dry lake beds. The province is bound by the Sierra Fault on the north, The El Paso and Garlock Faults to the south and the San Andreas Fault on the southwest. Structurally the interior of the province contains mainly northwest trending folds, and steeply dipping faults some of which are of Cenozoic age. Rocks found in this province include basement Precambrian igneous and metamorphic rocks and Mesozoic Plutonic, hypabyssal intrusive rocks and volcanic rocks overlaid by Cenozoic volcanic, hypabyssal intrusive rocks and alluvial and lake bed sediments.

Local and site Geologic and Physiographic Setting

The Red Rock Wash bridge site is located at the southwest end of the El Paso Mountain range within Indian Wells Valley at the upstream end of a deep gorge that cuts through the range and empties on to the floor of Fremont Valley located to the south. The surface relief of the site and surrounding area exhibits a typical “Bad Lands” topography, that is characterized by terrain that includes deeply incised canyons, steep craggy ridges and loose, dry soils in the washes and

predominately soft erodible sedimentary bedrock although hard volcanic, metamorphic and granitic intrusive rocks are also present. The part of the El Paso Range that generally surrounds the site ranges up to elevations above 2800 feet. At the bridge site elevations range from about 2370 feet to 2390 feet.

The site area is underlain by the Miocene age Ricardo formation consisting of sedimentary lake deposits interbedded with felsic tuffs and basaltic flows which are underlain by Mesozoic age metamorphic and hypabyssal rocks (small scale igneous intrusion). Within the Red Rock Canyon Wash these formations are over laid by deposits of recent and older alluvium. Also, at the bridge site embankment fill consisting of sand and gravel underlie the existing abutments. The alluvial soils underlying the bridge site consists primarily of medium dense and dense well-graded sand, scattered gravel, and a lesser amount of silty sand. Although, based on surface observations cobbles and boulders may be present.

The bedrock underlying the alluvial soils encountered during the present investigation consists generally of slightly metamorphosed (Meta) felsic hypabyssal rock, (a small scale igneous intrusion). The rock specifically consisted of a massive fine and medium crystalline Meta Granite. The rock condition ranges widely in degree of weathering, from fresh to intensely weathered with local decomposed zones; in hardness, soft to hard, and intensely fractured with localized crushed zones (RQD 0 to 40 %). The four unconfined compressive tests (qu) that have been completed to date ranged from 614 psi to 8,759 psi (very weak to strong rock). Typically, the rock becomes less weathered, harder and less fractured with increasing depth but there are some exceptions. See Log of Test Borings (LOTB) for details of soil and rock conditions. An estimated of the alluvium-bedrock surface elevation is presented in the table below.

Table 1- Estimated alluvium-bedrock surface elevations.

Bridge Support	Estimated Alluvial-Bedrock surface Elevation @ C/L (ft)	Estimated range in elevation from east end to west end of structure (ft)
Abutment 1	2312	2309 to 2314
Pier 2	2320	2315 to 2321
Pier 3	2326	2325 to 2328
Pier 4	2330	2325 to 2334
Pier 5	2322	2320 to 2327
Pier 6	2320	2315 to 2325
Pier 7	2327	2322 to 2335
Abutment 8	2332	2330 to 2335

Note: The elevations shown were estimated using the subsurface information available. The actual elevations may be higher or lower than shown.

Groundwater

A piezometer was installed in boring R-11-001 on November 30, 2011. After repeated measurements over a period of two weeks the ground water level stabilized at a depth of 22.1 ft (elevation 2366.9 ft.). At the other two open borings, groundwater was measured after several weeks, the depth measured was 1.5 feet at both borings, elevation 2371.1 (Boring R-11-002) and elevation 2377.0 (Boring R-11-003). Actual surface flows in the wash and related groundwater levels will seasonally fluctuate. For foundation design purposes it will be assumed that the ground water surface will be at the new bridge 50 year (flood) Design elevation of 2386.03 feet.

Laboratory Testing

Laboratory testing of selected soil and rock core samples have been completed. The tests include soil gradation, moisture content, corrosion and rock unconfined compressive strength.

Corrosion

The results of the Corrosion Test Summary Report indicates the site is not corrosive to foundation elements.

Scour Potential

A summary of the Final Hydraulic Report (Neal Alie, August 2, 2011), is presented in the reports table (applicable to 30-inch diameter pile extensions) and is provided below.

Table 2- Proposed Scour Conditions

Pier No.	Degradation Scour (ft)	Contraction Scour (ft)	Local Pier Scour (ft)	Total Scour (ft)	Total Scour Elevation (ft)
2	4	2	11.4	17.4	2354.3
3	4	2	11.5	17.5	2354.5
4	4	2	10.8	16.8	2356.8
5	4	2	10	16	2359.3
6	4	2	9.1	15.1	2362.0
7	4	2	6	12.0	2370.2

Note: No stream migration was assumed.

Seismic Study

Based on the Caltrans Seismic, Design Procedure, the nearest active fault to the site is the Garlock fault zone (Central section) (Fault ID No. 254) with Mmax of 7.7. The fault is located southwest of the bridge site, and the rupture distance to the fault plan from the bridge site is estimated to be 2.7 miles.

Based on the recent Log of Test Borings (LOTB), a Vs_{30} (the weighted average shear wave velocity for the top approximate 100 feet of soil/rock) was estimated using the correlation formulas to be 985 feet/second.

Using the above shear wave velocity, the design Acceleration Response Spectrum (ARS) curve is based on an envelope of the deterministic and probabilistic methods. Please note that the probabilistic spectral acceleration is based on the USGS 5% probability of exceedance in 50 years with a return period of 975 years, and it was obtained from the USGS web site at hhttps://geohazardes.usgs.gov/deaggint/2008/. The design ARS curve is attached, and the peak ground acceleration is estimated to be 0.49g.

The potential for soil liquefaction based on the seasonal high ground water table during a seismic event is considered high. The table below shows the layers indentified as potentially liquefiable.

Support Location	OG Elevation (ft)	Liquefiable Layers Elevation (ft)
Abut. 1	2389	2379 to 2312
Pier 2	2370	2370 to 2320
Pier 3	2372	2372 to 2360
Pier 4	2374	2374 to 2363
Pier 5	2375	2375 to 2365 2326 to 2322
Pier 6	2377	2377 to 2352 2347 to 2342 2332 to 2327
Pier 7	2381	2381 to 2366 2346 to 2351 2346 to 2341 2331 to 2327
Abut. 8	2395	2389 to 2373 2368 to 2358 2353 to 2348 2338 to 2332

The potential for surface rupture at the site due to fault movement is considered insignificant since there are no know faults projecting towards or passing directly through the project site. The recommended Acceleration Response Spectrum curve for design is attached as Figure 1.

Foundation Recommendations

The foundation recommendations are based on the field investigations in conjunction with the General Plan, dated October 13, 2011, Foundation Plan, dated October 28, 2011, loads sent by email (Design Data Sheet) dated, January 9, 2012 and Final Hydraulic Report previously sited. Based on the known Lithology and wash channel hydraulics we recommend that the new bridge be supported on driven permanent cast-in- steel shell casings, within the alluvium and drilled Rock Socket piles within the bedrock. Foundation Design Recommendations and Pile Data are presented in Table 3 through 5 below.

Table 3- Abutment Foundations Design Recommendations for the proposed bridge replacement

Abutment Foundation Design Recommendations									
Support Location	Pile Type	Cut-off Elevation (ft)	LRFD Service-I Limit State Load (kips) per Support		LRFD Service-I Limit State Total Load (kips) per Pile (Compression)	Nominal Resistance (kips)	Rock Socket Design Tip Elevations (ft)	Rock Socket Specified Tip Elevation (ft)	Steel Shell Casing Specified Tip Elevation (ft)
			Total	Permanent					
Abut. 1	30x0.625" Steel Shell Casing/ 24" Rock Socket	2380.5	1400	930	215	430	2287 (a1)	2287	2310
Abut. 8	30x0.625" Steel Shell Casing/ 24" Rock Socket	2387.4	1400	930	215	430	2310 (a1)	2310	2330

Notes:

1) *Design tip elevations are controlled by: (a1) Compression (Strength Limit).*
2) *Steel shell casing specified tip elevation is based on 2 feet embedment into rock. If top of rock is deeper then estimated and/or casing penetration is deeper than assumed then the specified pile tip elevation will be lowered proportionally by the amount difference between the casing STE and the as-built casing tip elevation.*
3) *The Rock Socket specified tip elevation shall not be raised.*
4) *There is no design tip elevation for Settlement.*
5) *Design tip elevations for Lateral Load are typically provided by Structure Design.*
6) *Scour and liquefaction affects have been taken considered in determining the Design pile tip elevation.*

Table 4- Pier foundation Recommendations for the bridge replacement

Pier Foundation Design Recommendations											
Support Location	Pile Type	Cut-off Elevation (ft)	Service-I Limit State Load per Support (kips)	Total Permissible Support Settlement (inches)	Required Factored Nominal Resistance (kips)				Rock Socket Design Tip Elevations (ft)	Rock Socket Specified Tip Elevation (ft)	Steel shell Casing Specified Tip Elevation (ft)
					CIDH Strength limit		CIDH Extreme				
					Comp. (φ=0.7)	Tension (φ=0.7)	Comp. (φ=1)	Tension (φ=1)			
Pier 2	30x0.625" Steel Shell Casing/ 24" Rock Socket	2365	1320	1"	650	N/A	TBD	TBD	2285 (aI)	2285	2318
Pier 3	30x0..625" Steel Shell Casing/ 24" Rock Socket	2366	1315	1"	650	N/A	TBD	TBD	2294 (aI)	2294	2324
Pier 4	30x0.625" Steel Shell Casing/ 24" Rock Socket	2367	1315	1"	650	N/A	TBD	TBD	2300 (aI)	2300	2328
Pier 5	30x0.625" Steel Shell Casing/ 24" Rock Socket	2370	1315	1"	650	N/A	TBD	TBD	2287 (aI)	2287	2320
Pier 6	30x0.625" Steel Shell Casing/ 24" Rock Socket	2374	1315	1"	650	N/A	TBD	TBD	2279 (aI)	2279	2318
Pier 7	30x0..625" Steel Shell Casing/ 24" Rock Socket	2375	1320	1"	650	N/A	TBD	TBD	2294 (aI)	2294	2325

Notes:

Notes:

1) *Design tip elevations are controlled by: (aI) Compression (Strength Limit).*
2) *Steel shell casing specified tip elevation is based on 2 feet embedment into rock. If top of rock is deeper or shallower then estimated and/or casing penetration is deeper then estimated then the specified pile tip elevation will be lowered or raised proportionally by the difference between the estimated casing STE and the actual casing tip elevation..The Rock Rocket length will not be changed.*
3) *The Rock Socket specified tip elevation shall not be raised.*
4) *There is no design tip elevation for Settlement.*
5) *Design tip elevations for Lateral Load are typically provided by Structure Design.*
6) *Scour and liquefaction affects have been considered in determining the Design pile Tip elevation.*

Table 5- Pile Data Table for the proposed bridge replacement

Pile Data Table						
Support Location	Pile Type	Nominal Resistance (kips)		Steel shell Casing Specified Tip Elevation (ft)	Rock Socket Design Tip Elevation (ft)	Rock Socket Specified Tip Elevation (ft)
		Compression	Tension			
Abutment 1	30x0.625" Steel Shell Casing/ 24" Rock Socket	430	N/A	2310	2287 (a)	2287
Pier 2	30x0.625" Steel Shell Casing/ 24" Rock Socket	930	N/A	2318	2285 (a)	2285
Pier 3	30x0.625" Steel Shell Casing/ 24" Rock Socket	930	N/A	2324	2294 (a)	2294
Pier 4	30x0.625" Steel Shell Casing/ 24" Rock Socket	930	N/A	2328	2300 (a)	2300
Pier 5	30x0.625" Steel Shell Casing/ 24" Rock Socket	930	N/A	2320	2287 (a)	2287
Pier 6	30x0.625" Steel Shell Casing/ 24" Rock Socket	930	N/A	2318	2279 (a)	2279
Pier 7	30x0.625" Steel Shell Casing/ 24" Rock Socket	930	N/A	2325	2294 (a)	2294
Abutment 8	30x0.625" Steel Shell Casing/ 24" Rock Socket	430	N/A	2330	2310 (a)	2310

Notes:

1) *Design tip elevations for Abutments and Bents are controlled by: (a) Compression.*
2) *The Rock Socket specified tip elevation may be raised or lowered but the Rock socket length will not change (see note number 2 on page 7).*

General Notes to Designer

1. The structure engineer shall show on the plans, in the pile data table, the minimum pile tip elevation required to meet the lateral load demands.

2. Should the specified pile tip elevation required to meet lateral load demands exceed the specified pile tip elevation given within this report, the Office of Geotechnical Design North should be contacted for further recommendations.

3. Support locations are to be plotted on the Log of Test Borings, in plan view, as stated in "Memos to Designers" 4-2. The plotting of the support locations should be made prior to the foundation review.

Pile Settlement

Vertical movement of piles will be less than the 0.25-inches under service limit state.

Construction Considerations

1. Difficult pile installation is anticipated due to the presence of groundwater, caving soils/bedrock and the presence of hard and fractured rock. The contractor should be prepared to drill all Rock Sockets under "Guidelines for CIDH Piles Cast in Wet Conditions."

2. Prior to placement of concrete, the interior surface of the Steel Shell Casing and Rock Socket portions of the piles including the pile bottom shall be cleaned of residue from drilling operations. An engineering geologist from our office shall check a sufficient number of the pile excavation material during construction including the drilling operations to confirm the anticipated depth to bedrock and rock conditions. If the bedrock conditions are not as expected the pile tips may be raised or lowered depending the observed conditions.

3. The contractor shall drive the Steel Shell Casing to refusal into bedrock without damaging the casing. The depth to bedrock may vary from pile to pile within a pier. The casing tip elevation shall be determined and the top of the Rock Sockets will be at the casing tip elevation achieved. The Rock Sockets will be deepened proportional to any

increased depth of the Steel Shell Casing tip. The Rock Socket lengths will not be shortened.

4. The contractor shall perform a Steel Shell Casing drivability study and provide pile driving acceptance criteria. There is no minimum required driving resistance for the casing, the required nominal resistance will be provided by the Rock Sockets. The purpose of the driving acceptance criteria is to set criteria to determine when the driving should to be stopped without damaging the Steel Shell casings. The Pile Driving analyzer (PDA) testing should be performed at four (4) locations to set up the acceptance criteria. The PDA tested piles should be sufficiently spaced to best characterize the soil /bed rock conditions under the proposed bridge.

5. The drilling of the CIDH piles, the placement of the rebar cage, and concrete pour shall be completed in a continuous operation.

6. The contractor shall submit the drilling logs for the piles for review after the completion of drilling. The drilling log shall include penetration rate, material descriptions, estimated volume of cuttings (poor, good, excessive) and other information pertaining to the drilling process (loss of circulation, zones of caving, down pressure, etc.).

7. Excavated materials and drilling fluids shall be handled and disposed of in accordance with the contract plans.

Disclaimer and Contract Information

The recommendations contained in this report are based on specific project information regarding design loads and structure location provided by the OBDN. If any conceptual changes are made during final project design, the Office of Geotechnical Design – North should review those changes to determine if these foundation recommendations are still applicable.

Project Information

Standard Special Provision (SSP) S5-280, “Project Information”, discloses to bidders and contractors a list of pertinent information available for their inspection prior to bid opening. The Following is an excerpt from SSP S5-280 disclosing information originating from Geotechnical Services. Items listed to be included in the information Handout will be provided in Acrobat (pdf) format to the addressee(s) of this report via electronic mail.

Data and information attached with the project plans are:

A. Log of Test Borings for Red Rock Canyon Bridge Replacement, new Bridge No. 50-0178 (present investigation).

B. Log of Test Borings for Red Rock Canyon Bridge, Bridge No. 50-178 (1958 Investigation).

C. Acceleration Response Spectrum Curve (present investigation).

Data and information included in the Information Handout provided to the bidders and Contractor are:

A. Foundation Report for Red Rock Canyon Bridge Replacement, Bridge No. 50-0178, dated April 11, 2012.

Data and Information available for inspection at the District Office:

A. None.

Data and information available for inspection at the Transportation Laboratory:

A. Existing Red Rock Canyon Bridge file, Bridge No. 50-178.

B. Soil samples and rock cores taken during the present investigation.

If you have any questions, please call William Bertucci at (916) 203-7992 or John Huang at (916) 227-1037.

WILLIAM BERTUCCI
Associate Engineering Geologist
Office of Geotechnical Design - North
Geotechnical Services
Division of Engineering Services

JOHN HUANG, PE
Senior materials and Research Engineer
Office of Geotechnical Design- North
Geotechnical Services
Division of Engineering Services

REZA MAHALLATI, PE
Senior materials and Research Engineer
Office of Geotechnical Design - North
Geotechnical Services
Division of Engineering Services

REGISTERED PROFESSIONAL ENGINEER
REZA MAHALLATI
No. 49374
Exp. 9/30/12
CIVIL
STATE OF CALIFORNIA

REGISTERED PROFESSIONAL ENGINEER
QIANG HUANG
No. C055671
Exp. 12/31/12
CIVIL
STATE OF CALIFORNIA

ARS curve attached

cc: RBibbens, JStayton, SRajendra, R.E. Pending, District PM Frank Momen, District Materials Engineer Ted Mooradian,

Red Canyon Ck Br.

Bridge No. 50-0178

EFIS 06 00000119

Latitude 35.3564

Longitude -117.9762

Control **Envelope**

Period (s)	Sa(g)
0.010	0.488
0.050	0.725
0.100	0.861
0.150	0.961
0.200	1.039
0.250	1.029
0.300	1.021
0.400	0.943
0.500	0.889
0.600	0.871
0.700	0.857
0.850	0.832
1.000	0.806
1.200	0.720
1.500	0.617
2.000	0.481
3.000	0.315
4.000	0.228
5.000	0.178

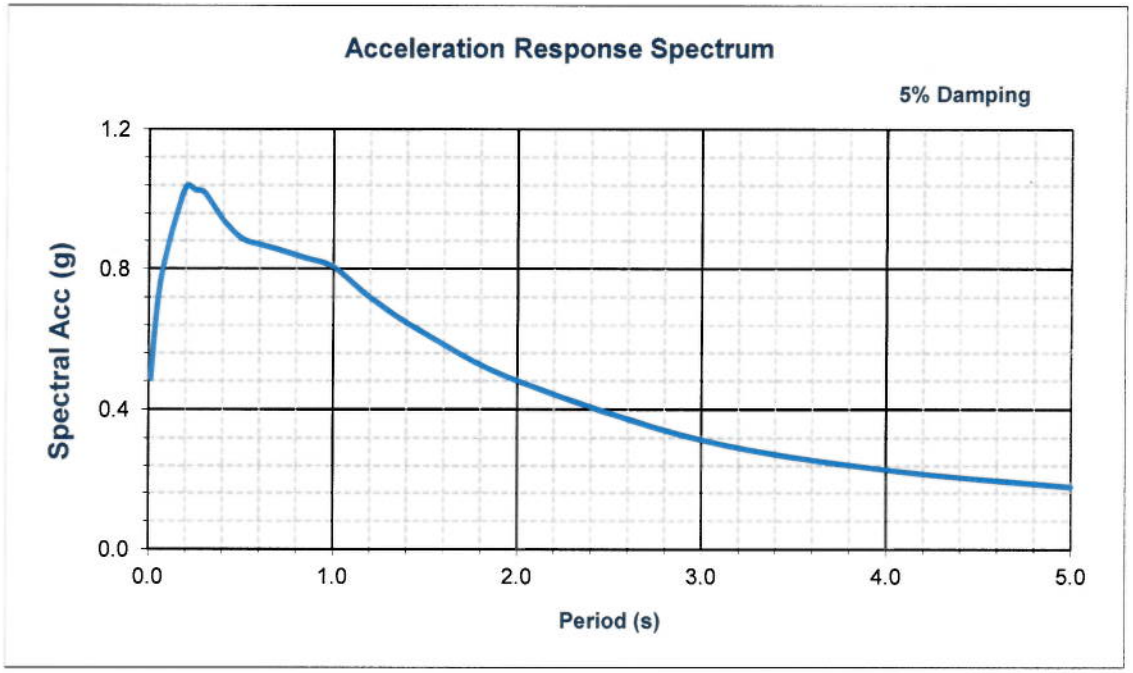

Deterministic Procedure Data

Fault	Garlock fault zone (Central section)	
Fault ID	254	
Style	SS	
Mmax	7.7	
Dip	90	deg
Z_{TOR}	0	km

R_{rup}	4.4	km
R_{jb}	4.4	km
R_x	4.4	km
V_{S30}	300	m/s

Notes

Please note the Design ARS curve is an envelope of the deterministic and probabilitic spectrum.

Final

Design Response Spectrum

FINAL HYDRAULIC REPORT FOR RED ROCK CANYON BRIDGE
BRIDGE NO. 50-0178

DIVISION OF STRUCTURES
Supplemental Final Hydraulic Report

Red Rock Canyon Bridge

Located in Kern County

JOB:
Bridge No. 50-0178 Bridge Replacement

LOCATION:
06-Ker-14-PM 39.88

DATE:
August 2, 2011

WRITTEN BY:
Neal Alie

REVIEWED BY:
Steve Ng

Hydrology/Hydraulic Report

General

The Red Rock Canyon Bridge, (Br. No. 50-0178) is located on State Route 14 in Kern County. The Bridge was constructed in 1959 and is approximately 393.7 feet long and 65.9 feet wide. The existing bridge is a 13 span, continuous RC slab on RC pile bents and RC pile abutments with cut off walls.

The bridge is located at a 30 degree skew reducing its hydraulic capacity and has a long history of degradation and scour problems. A check dam was built in 1979 at the east end of the south abutment but was washed out in 2000.

On August 8, 2000, The Bridge's scour potential was assessed in accordance with FHWA Technical Advisory T5140.23, "Evaluating Scour at Bridges", and within current Caltrans guidelines. The bridge was determined to be scour critical. The item 113 code is 3, "Bridge foundations determined to be unstable for calculated scour conditions, scour below spread-footing base or piles". The Geotechnical Branch and Ratings Branch both concurred that the existing bridge was unstable based on the potential scour submitted by Structure Hydraulics.

The existing bridge also has structural problems. There are reactive aggregates in the concrete causing damage to the superstructure. There are moderate to severe transverse, longitudinal, diagonal and map cracks throughout the deck. There are also moderate horizontal cracks on the edge of the slab. The soffit also has severe cracks, scaling and spalls along the entire length of the longitudinal center line construction joint. Several of the columns were replaced and repaired due to storm damage in 1997.

Due to both structural and hydraulic problems it was determined to replace the existing structure.

Structure Design has proposed three alternatives to replace the existing structure. All three alternatives being proposed is a 7-span continuous concrete slab structure at a 53 degree skew, but will differ in the proposed foundation types. One alternative will have 30 inch CISS, one will have 24 inch CISS and one alternative will have 30 inch CIDH. The proposed structure will be 406.00 feet long, 74.83 feet wide, with a 2 foot structural section. The new structure will be raised 2.0 feet higher than the existing profile.

This report makes extensive reference to the (1) Caltrans Bridge Maintenance Reports, (2) General plans and profiles submitted by structures, (3) Caltrans As-Built Plans (4) Hydrology/Hydraulics Report, Structure Hydraulics, May 31, 2007.

All elevations indicated in this report are referenced to the 1988 vertical datum

Drainage Basin

Red Rock Canyon flows from northeast to southeast from the Sierra Nevada Mountain Range, from a peak elevation of 6000 feet to elevation 2400 feet at the bridge site. Red rock drains a watershed of approximately **55.0 square miles.** The project is located on the central northwest side of Fremont Valley in the Mojave Desert, characterized as a low relief alluvium plain. The ground cover is typically creosote bush scrub with an occasional Joshua tree.

State Route 14 traverses the Red Rock Canyon Wash at PM 39.88, approximately 1 mile upstream from its alluvial fan emanating from the mouth of the Red rock Canyon. There are no perennial surface flows within this project area. All flows in recent history have been storm related. The average annual precipitation is approximately **6 inches**, 85% of which occurs between November and March. However, intense thunderstorms in mid to late summer with localized intensive rainfall can result in flash flooding.

Discharge

The arid location of this project makes it challenging to determine an appropriate 50 and 100-year discharge. Some of the problems we have are:

1. The basin has a low mean annual precipitation.
2. We do not have a long period of stream flow records.
3. The stream flow records at the gages have many years of zero flow due to the nature of intermittent or ephemeral streams.
4. Summer thunderstorms often occur over small and isolated basins Flood events from these thunderstorms are often unrepresented by the few gages that do have a long flow record.
5. Flood frequency relations with limited data cannot be reliably fitted with a theoretical distribution such as Log Person Type III.

With the limited information we have it was necessary to research old documents, past hydraulic studies, historical data and use some engineering judgment in

determining an appropriate discharge.

In April, 1998 the Kern Water District used data from a stream gage located 0.6 miles downstream of the project on State Route 14, 4 miles north of Cantil. They calculated a 50-year and 100-year discharge of 31,210 and 37,500 cfs respectively.

District Hydraulics using stream gages, USGS regression equations, Index Flood equations and historical records calculated a 50-year and 100-year discharge of 28,000 and 50,000 cfs respectively.

The Watershed Modeling System, "WMS" program was used to calculate a 50-year discharge of 12,155 cfs and a 100-year discharge of 20,722 for Red Rock Canyon.

In September 1997, a flash flood caused significant damage to the bridge and the downstream highway adjacent to the channel. This was considered a flood of record and was calculated to be approximately **62,000 cubic feet per second.**

For the purpose of this project Structure Hydraulics will use the District Hydraulics 50-year and 100-year discharge of **28,000 and 50,000 cubic feet per second** respectively.

Stage and Velocity

The Hydrologic Engineering Center's River Analysis System (HEC-RAS) was used to perform a one-dimensional hydraulic analysis to calculate the water surface elevation and velocity for the existing bridge and for the replacement alternatives. A roughness coefficient of 0.035 and a gradient of 0.026 were used for the existing bridge.

The average velocity and the stage for the 50-year and 100-year discharges at the upstream face of the bridges are given below.

Red Rock Canyon, Existing Bridge, Br. No. 50-0178

	WSEL	Average Velocity	Available Freeboard
50-year Design 28,000cfs	2386.13 ft	7.84 fps	**0 to 5.4 ft**
100-year Base Flood 50,000cfs	2392.01 ft	7.81 fps	**0 ft**

The minimum soffit elevation for the existing structure is 2385.1 feet at the beginning of the bridge to 2392.1 feet at the end. For the 50-year discharge this would provide 0 freeboard at the beginning of the bridge to 5.4 feet at the end. For the 100-year discharge the existing bridge would be submerged.

The flood of record in September, 1997 of 62,000 cubic feet per second overtopped the existing bridge causing major damage to both the bridge and the roadway.

Red Rock Canyon, New Bridge alternatives, Br. No. 50-0178

	WSEL	Average Velocity	Available Freeboard from beginning to end Bridge
50-year Design 28,000cfs	2386.03 ft	7.9 fps	**0.7 to 7.6 ft**
100-year Base Flood 50,000cfs	2391.99 ft	7.8 fps	**0 to 1.6 ft**

The minimum soffit elevation for the proposed structure is 2386.7 feet at the beginning of the bridge to 2393.6 feet at the end. For the 50-year discharge this would provide a .70 feet freeboard at the beginning of the bridge to 7.02 feet at the end. For the 100-year discharge this would provide a 0 freeboard at the beginning of the bridge to 1.6 feet at the end. The proposed bridge would be able to pass the 50-year flood event but will be mostly submerged for a 100-year event. All three proposed alternatives were modeled resulting with the same water surface elevations. The proposed alternatives are a slight improvement compared to the existing structure providing a larger waterway capacity. The proposed alternatives do not meet the standard freeboard requirements for the 50-year and 100-year flood events.

Streambed and Scour

Existing Condition

According to the Caltrans Bridge Maintenance Records, Red Rock Canyon Bridge has a history of hydraulic and scour problems.

1. The channel has degraded 8.0 feet between 1959 and 1997 from elevation 2378.26 to 2370.72 feet, and then appears to have stabilized.

2. The structure is located at a stream bend, creating a 30 degree hydraulic skew at the bridge opening, reducing the hydraulic capacity.

3. The streambed consists of very soft silt clay and sand which is highly susceptible to scour.

4. The stream is laterally unstable and contracted with a history of wash out problems at the north and south abutments. The rock slope protection at both abutments has experienced scour. The channel bed has experienced more degradation beneath the southerly spans of the bridge than beneath the northerly spans. The grouted RSP upstream of Abutment 14 is partially undercut and has experienced 18 to 24 inches of scour.

5. The channel slope is .02, causing high velocities and high lateral forces on the structure piers. In previous storms, abrasion and cracking has occurred at the upstream piers.

6. Debris caught up in the earthquake retainer cables and soil residues at the soffit are signs of high flows reaching the soffit level or possible pressure flow.

7. There is rock outcropping upstream of abutment 1 restricting the bridge opening.

8. In September, 1997 a major storm event caused damage to a number of columns at Pier 4, 5, 6, 7, 9 and 10. Many of the columns were cracked, spalled or fractured and required repair or replacement. It was at this storm event that a muddy soffit was noted indicating pressure flow. The channel bed in the westerly portions of spans 7, 8, and 9 was approximately 3.5 feet lower than the easterly portions of spans 7, 8 and 9.

In August, 2000 Structure Hydraulics calculated the potential total scour to be 6.35 feet, elevation of 2365.7 feet for the existing structure. The Ratings Branch determined that the structure is potentially unstable at the predicted scour elevation of 2365.7 feet at Piers 3, 4, 5, 6, 7 and 8. The Office of Geotechnical Support determined that the piles at Piers 7 to 10 would not be axially stable in compression for the maximum predicted scour conditions. The Geotechnical Branch advised that the channel elevation at Piers 7 to 10 should not be allowed to extend below elevation 2373.0 feet, assuming 4 feet of local scour to elevation 2369.0 feet. The Bridge's scour potential was assessed in accordance with FHWA Technical Advisory T5140.23, "Evaluating Scour at Bridges", and within current Caltrans

guidelines. The bridge was determined to be scour critical. The NBIS code 113 was changed to 3, "Bridge foundations determined to be unstable for calculated scour conditions".

Proposed Condition

A scour evaluation was conducted for the proposed alternatives using a 100-year discharge of 50,000 cubic feet per second.

The total scour was calculated based on the cumulative effects of long term degradation, contraction scour, and local pier scour. The table below shows the calculated scour for each pier. No stream migration was assumed.

2.5 ft CISS and 2.5 ft CIDH alternative

Pier	Degradation	Contraction Scour	Local Pier Scour	Total Scour	Total Scour Elevation
2	4 ft	2 ft	11.4 ft	**17.4 ft**	**2354.3 ft**
3	4 ft	2 ft	11.5 ft	**17.5 ft**	**2354.5 ft**
4	4 ft	2 ft	10.8 ft	**16.8 ft**	**2356.8 ft**
5	4 ft	2 ft	10.0 ft	**16.0 ft**	**2359.3 ft**
6	4 ft	2 ft	9.1 ft	**15. 1 ft**	**2362.0 ft**
7	4 ft	2 ft	6.0 ft	**12.0 ft**	**2370.2 ft**

In addition to the total scour above design should account for several feet of additional pressure scour that may occur if any portion of the bridge is submerged. Structure Hydraulics recommends placing the top of the Abutment 1 footing at elevation 2370.0 feet and Abutment 8 footing at elevation 2380 feet. Structure Hydraulics recommends that for all new foundations to be designed assuming no ground support (lateral or vertical) as a result of soil loss due to possible scour or lateral stream migration.

2.0 ft CISSalternative

Pier	Degradation	Contraction Scour	Local Pier Scour	Total Scour	Total Scour Elevation
2	4 ft	2 ft	9.8 ft	**15.8 ft**	**2355.8 ft**
3	4 ft	2 ft	9.9 ft	**15.9 ft**	**2356.0 ft**
4	4 ft	2 ft	9.3 ft	**15.3 ft**	**2358.3 ft**
5	4 ft	2 ft	8.6 ft	**14.6 ft**	**2360.7 ft**
6	4 ft	2 ft	7.9 ft	**13.9 ft**	**2363.2 ft**

7	4 ft	2 ft	4.8 ft	**10.8 ft**	**2371.0 ft**

In addition to the total scour above design should account for several feet of additional pressure scour that may occur if any portion of the bridge is submerged. Structure Hydraulics recommends placing the top of the Abutment 1 footing at elevation 2370.0 feet and Abutment 8 footing at elevation 2380 feet. Structure Hydraulics recommends that for all new foundations to be designed assuming no ground support (lateral or vertical) as a result of soil loss due to possible scour or lateral stream migration.

Drift

According to Structure Maintenance Records there has been some minor drift caught up in the earthquake retainer cables during major flows. Being this is a desert area, Structure Hydraulics has minor concerns with drift.

Bank Protection

The existing structure has concrete slope protection at both Abutments 1 and 14. There is grouted rock slope protection along the banks on the upstream and downstream sides of the existing bridge. The grouted rock slope protection has experienced some undermining in the past, but is in general good condition.

Summary Information for the Bridge Designer

HYDROLOGIC SUMMARY FOR RED ROCK CANYON BRIDGE Br. No. 50-0178			
Drainage Area: 55 sqmi			
	Design Flood	**Base Flood**	**Overtopping Flood/Flood of Record?**
Frequency	50-yr	100-yr	N/A
Discharge	28,000 cfs	50,000 cfs	N/A
Water Surface Elevation at Bridge	2386.03 ft	2391.99 ft	N/A
Flood plain data are based upon information available when the plans were prepared and are shown to meet federal requirements. The accuracy of said information is not warranted by the State and interested or affected parties should make their own investigation.			

Red Rock Canyon Bridge
Br. No. 50-0178
06-Ker-14-PM 39.88
EA 06-0H1800

This report has been prepared under my direction as the professional engineer in responsible charge of the work, in accordance with the provisions of the professional Engineers Act of the State of California.

REGISTERED CIVIL ENGINEER (SIGNATURE)

REGISTRATION NUMBER: C056398 DATE: 8/2/2011

REGISTERED PROFESSIONAL ENGINEER
NEAL ALIE
C 56398
EXP. 06/30/2015
CIVIL
STATE OF CALIFORNIA

PRELIMINARY SEISMIC AND GEOLOGY REPORT

State of California
DEPARTMENT OF TRANSPORTATION

Business, Transportation and Housing Agency

Memorandum

Flex your power!
Be energy efficient!

To: MR. KEVIN KEADY
Bridge Design Branch 17
Office of Bridge Design Central

Date: May 18, 2007

Attention: Mr Rihui Yang

File: 06-KER-14-PM 39.88
EA: 06-0H180K
Red Rock Canyon Bridge
Bridge No. 50-0178

Stephen Winzer
Dist a Backup.

From: JOHN BOWMAN
Engineering Geologist
Office of Geotechnical Design – North
Geotechnical Services
Division of Engineering Services

Subject: Preliminary Geology and Seismic Report

The following recommendations are based on "As-Built" plans from 1959, a site visit, and available geologic literature.

GEOLOGY

The bridge site is underlain by granular alluvium about 60' deep, underlain by sandstone and volcanic rocks of the Miocene Dove Spring Formation.

Groundwater was reported to be at elevation 2375 feet in 1956, however this apparently corresponds to the level of surface water in the canyon, and may not represent the static groundwater elevation. In May 2007, there was a trace of water under the bridge.

Liquefaction may be possible. The potential will be evaluated during the foundation investigation.

The site is not expected to be corrosive.

SEISMICITY

The site is about 3.6 miles NW of the Garlock Fault, Mw=7.75, type = left-lateral strike-slip. Based on this fault, PHBA would be about 0.5 g. ARS curve Figure B.9 for soil profile D would be appropriate for all supports. The curve should be modified for fault proximity by increasing the spectral accelerations for T>1 second by 20%, no change for

T<0.5 seconds, and a linear interpolation between 0.5 and 1.0 seconds.

The El Paso fault is nearer to the site than the Garlock Fault, and may be active according to Caltrans' faulting criteria. It is not expected that the El Paso Fault would control the seismic recommendations if active.

AS-BUILT FOUNDATIONS

The existing bridge is founded on 45 ton design load 16" octagonal concrete pile extensions. The piles have inadequate embedment due to ongoing scour and degradation.

PRELIMINARY FOUNDAION RECOMMENDATIONS

The bridge may be supported by deep foundations. Spread footings are not recommended due to the potential for scour and degradation and presumed high groundwater elevation. Pile groups with pile cap are possible, but would require possible excavation below the groundwater elevation.

Abutments may be supported by driven concrete piles, presumably 70 ton alt X concrete piles. The following pile types are possible at the bents :

Driven concrete pile extensions. 100 ton 16" or larger diameter octagonal piles may be expected to be about 60' long. Due to the potential for abrasion of the piles, pile diameter may need to be increased to provide sacrificial concrete.

CIDH piles are possible but would probably require wet methods of installation, and could be difficult to construct because of the potential for caving.

CISS piles are possible and would achieve high capacities in bedrock at depths of about 60 feet at abutment 1, and deeper elsewhere.

FOUNDATION INVESTIGATION

The existing LOTB is not adequate for the expected foundations for this project. Several mud rotary borings will be required to determine the soil parameters and to identify the bedrock elevations. Numerous dynamic penetrometer borings would be used to interpolate the geology between the rotary borings.

The site is in a State Park and may require special permits for the foundation investigation. The need for such permits should be determined early so the foundation investigation is not delayed.

If you have any questions or need additional information, please call John Bowman at 916-227-6980.

c: RBibbens, QHuang, repending file, GDNFile, GSFileRoom