ACBRNH-P014(072)E

Dist	COUNTY	ROUTE	POST MILES TOTAL PROJECT	SHEET No.	TOTAL SHEETS
06	Ker	14	39.3/40.3	1	71

STATE OF CALIFORNIA
DEPARTMENT OF TRANSPORTATION

PROJECT PLANS FOR CONSTRUCTION ON
STATE HIGHWAY

IN KERN COUNTY
ABOUT 24 MILES NORTH OF MOJAVE
FROM 1.3 MILES TO 0.3 MILE SOUTH OF ABBOTT DRIVE

TO BE SUPPLEMENTED BY STANDARD PLANS DATED 2010

INDEX OF PLANS

SHEET No.	DESCRIPTION
1	TITLE AND LOCATION MAP
2-4	TYPICAL CROSS SECTIONS
5-8	LAYOUTS
9	SUPERELEVATION DIAGRAM
10	PROFILES
11-17	CONSTRUCTION DETAILS
18	TEMPORARY WATER POLLUTION CONTROL PLAN
19-20	EROSION CONTROL PLAN AND LEGEND
21	DRAINAGE PROFILE
22-24	STAGE CONSTRUCTION PLANS
25-38	TRAFFIC HANDLING PLANS, DETAILS AND QUANTITIES
39	CONSTRUCTION AREA SIGNS
40-46	PAVEMENT DELINEATION PLANS, DETAILS AND QUANTITIES
47-48	SUMMARY OF QUANTITIES
49-50	REVISED AND NEW STANDARD PLANS

STRUCTURE PLANS

51-71	RED ROCK CANYON BRIDGE (REPLACE)

THE STANDARD PLANS LIST APPLICABLE TO THIS CONTRACT IS INCLUDED IN THE NOTICE TO BIDDERS AND SPECIAL PROVISIONS BOOK.

LOCATION MAP

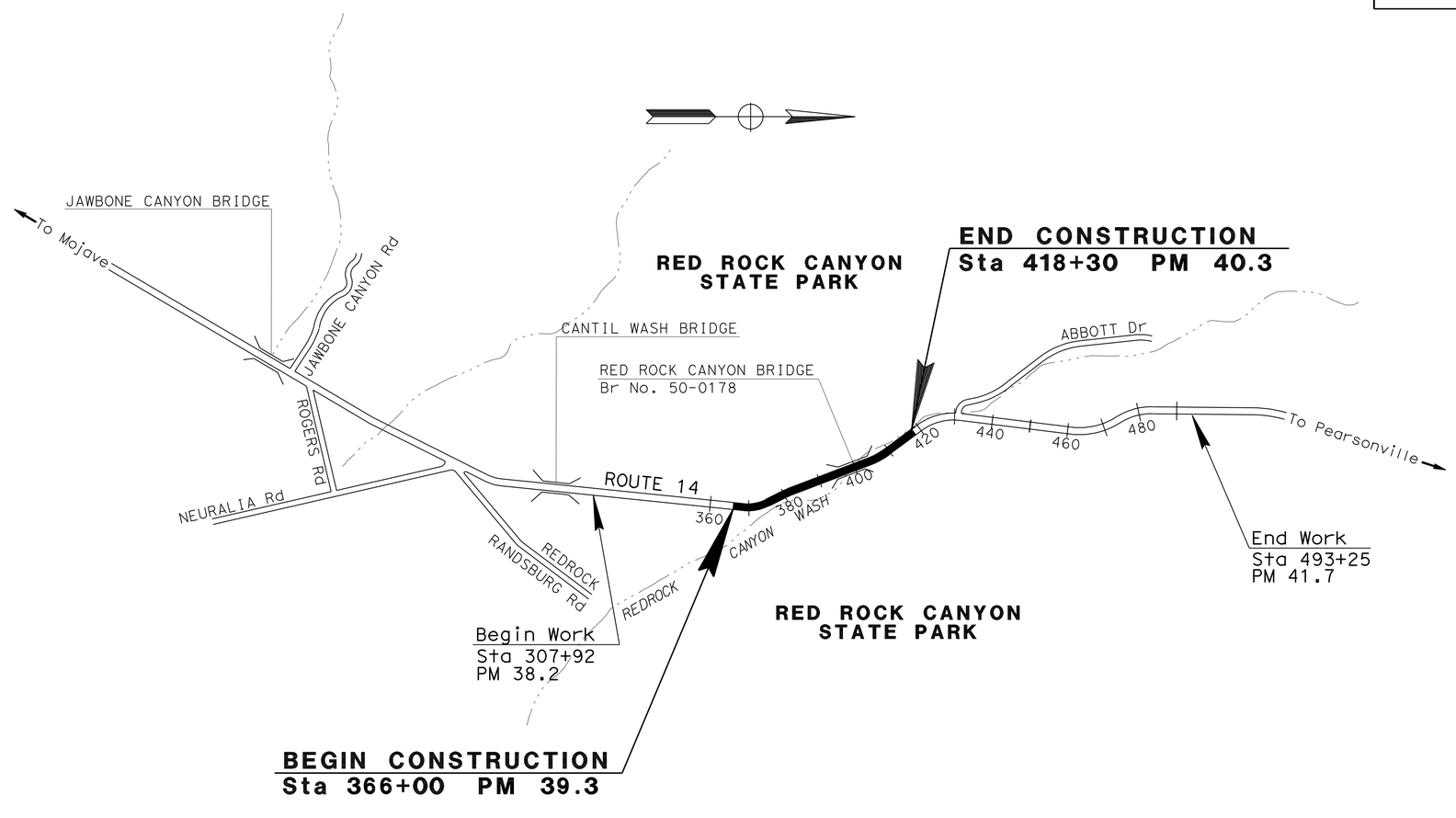

NO SCALE

THE CONTRACTOR SHALL POSSESS THE CLASS (OR CLASSES) OF LICENSE AS SPECIFIED IN THE "NOTICE TO BIDDERS."

PROJECT MANAGER FRANK MOMEN

DESIGN ENGINEER STEPHEN WINZENREAD

PROJECT ENGINEER REGISTERED CIVIL ENGINEER — DATE 4-18-12

September 24, 2012
PLANS APPROVAL DATE

REGISTERED PROFESSIONAL ENGINEER ANTON SYMANOVICH No. 78419 Exp. 9-30-13 CIVIL STATE OF CALIFORNIA

THE STATE OF CALIFORNIA OR ITS OFFICERS OR AGENTS SHALL NOT BE RESPONSIBLE FOR THE ACCURACY OR COMPLETENESS OF SCANNED COPIES OF THIS PLAN SHEET.

CONTRACT No.	06-0H1804
PROJECT ID	0600000119

LAST REVISION 04-18-12 DATE PLOTTED => 06-MAR-2013 TIME PLOTTED => 05:36

Dist	COUNTY	ROUTE	POST MILES TOTAL PROJECT	SHEET No.	TOTAL SHEETS
06	Ker	14	39.3/40.3	2	71

REGISTERED CIVIL ENGINEER 4-18-12 DATE

9-24-12
PLANS APPROVAL DATE

REGISTERED PROFESSIONAL ENGINEER ANTON SYMANOVICH No. 78419 Exp. 9-30-13 CIVIL STATE OF CALIFORNIA

THE STATE OF CALIFORNIA OR ITS OFFICERS OR AGENTS SHALL NOT BE RESPONSIBLE FOR THE ACCURACY OR COMPLETENESS OF SCANNED COPIES OF THIS PLAN SHEET.

NOTES:

1. DIMENSIONS OF THE PAVEMENT STRUCTURES (STRUCTURAL SECTIONS) ARE SUBJECT TO TOLERANCES SPECIFIED IN THE STANDARD SPECIFICATIONS.
2. SUPERELEVATIONS ARE SHOWN ON THE SUPERELEVATION DIAGRAMS.
3. EXACT LOCATIONS AND TYPES OF DIKE ARE SHOWN ON THE LAYOUTS AND IN THE SUMMARY OF QUANTITIES.

ABBREVIATIONS:

TL - TRIM LINE

DESIGN DESIGNATION

ADT (2013) = 6500	D = 79.40%
ADT (2023) = 6830	TI_{20} = 11.5
DHV (2013) = 1360	V = 65 mph
DHV (2033) = 1510	T = 18.1%

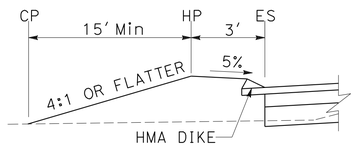

Sta 396+04 TO 396+75

*FOR STA 395+60 TO 396+27.19
SEE SLOPE PROTECTION CONSTRUCTION DETAIL

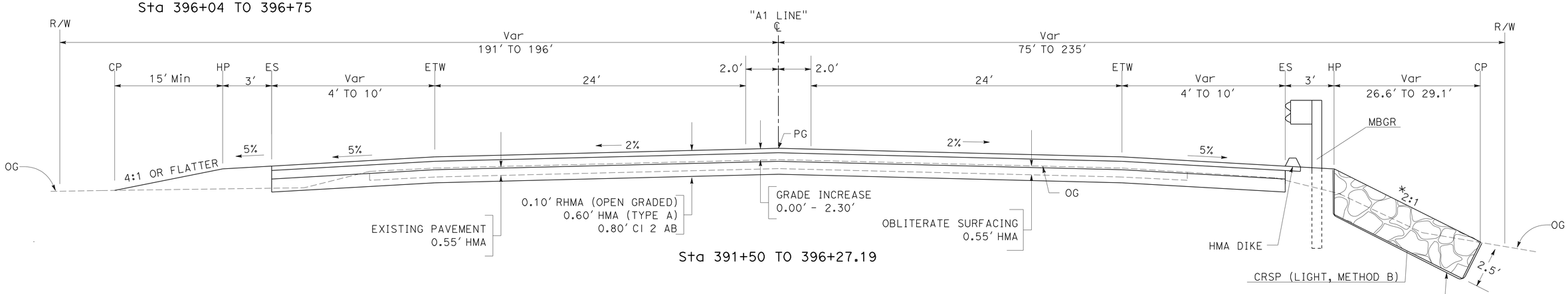

Sta 391+50 TO 396+27.19

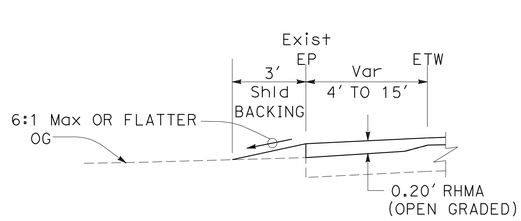

Sta 376+40 TO 383+90

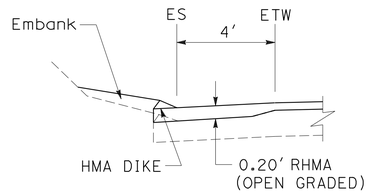

Sta 389+56 TO 391+50
Sta 368+84 TO 373+60

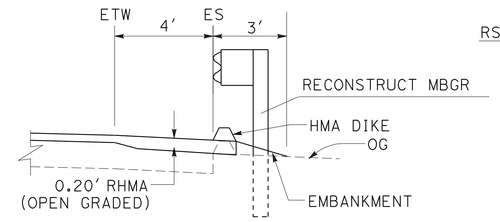

Sta 378+37 TO 391+50

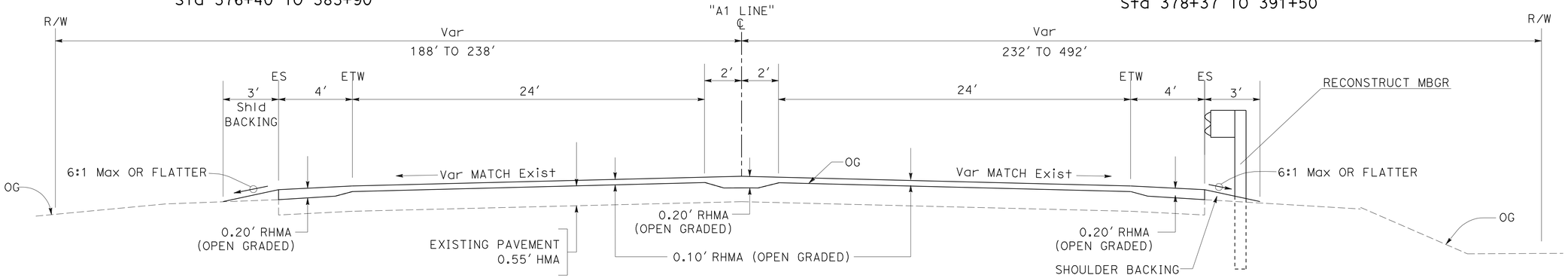

Sta 366+00 TO 391+50
ROUTE 14

TYPICAL CROSS SECTIONS
NO SCALE

X-1

STATE OF CALIFORNIA - DEPARTMENT OF TRANSPORTATION
Caltrans
09-DESIGN

FUNCTIONAL SUPERVISOR: STEPHEN WINZENREAD
CALCULATED-DESIGNED BY: TONY SYMANOVICH
CHECKED BY: STEPHEN WINZENREAD
REVISED BY
DATE REVISED

LAST REVISION 04-24-12
DATE PLOTTED => 26-SEP-2012
TIME PLOTTED => 13:06

Dist	COUNTY	ROUTE	POST MILES TOTAL PROJECT	SHEET No.	TOTAL SHEETS
06	Ker	14	39.3/40.3	3	71

REGISTERED CIVIL ENGINEER 4-18-12 DATE

9-24-12
PLANS APPROVAL DATE

REGISTERED PROFESSIONAL ENGINEER ANTON SYMANOVICH No. 78419 Exp. 9-30-13 CIVIL STATE OF CALIFORNIA

THE STATE OF CALIFORNIA OR ITS OFFICERS OR AGENTS SHALL NOT BE RESPONSIBLE FOR THE ACCURACY OR COMPLETENESS OF SCANNED COPIES OF THIS PLAN SHEET.

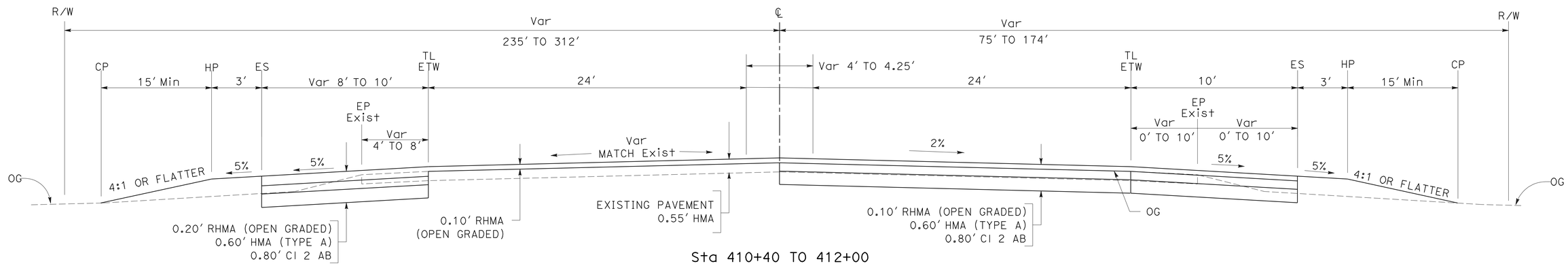

Sta 410+40 TO 412+00

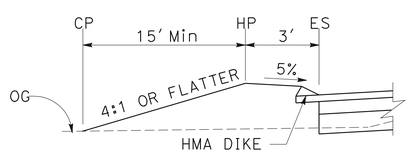

Sta 402+02 TO 407+03

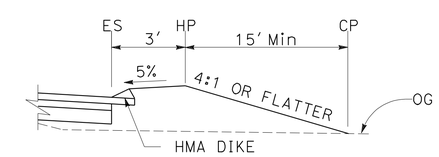

Sta 399+85.4 TO 400+05.4

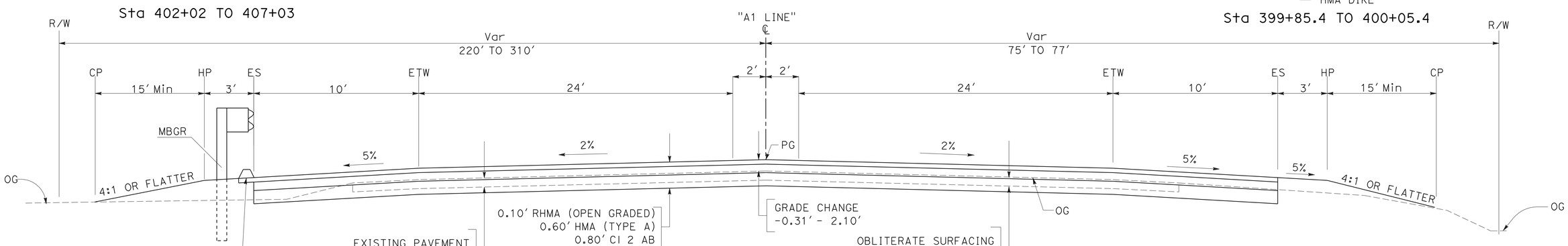

Sta 400+33.19 TO 410+40

ROUTE 14

TYPICAL CROSS SECTIONS X-2

NO SCALE

STATE OF CALIFORNIA - DEPARTMENT OF TRANSPORTATION
Caltrans
09-DESIGN

FUNCTIONAL SUPERVISOR: STEPHEN WINZENREAD
CALCULATED-DESIGNED BY: TONY SYMANOVICH
CHECKED BY: STEPHEN WINZENREAD
REVISED BY
DATE REVISED

LAST REVISION 07-09-12
DATE PLOTTED => 28-SEP-2012
TIME PLOTTED => 13:07

Dist	COUNTY	ROUTE	POST MILES TOTAL PROJECT	SHEET No.	TOTAL SHEETS
06	Ker	14	39.3/40.3	4	71

REGISTERED CIVIL ENGINEER 4-18-12 DATE

9-24-12
PLANS APPROVAL DATE

REGISTERED PROFESSIONAL ENGINEER ANTON SYMANOVICH No. 78419 Exp. 9-30-13 CIVIL STATE OF CALIFORNIA

THE STATE OF CALIFORNIA OR ITS OFFICERS OR AGENTS SHALL NOT BE RESPONSIBLE FOR THE ACCURACY OR COMPLETENESS OF SCANNED COPIES OF THIS PLAN SHEET.

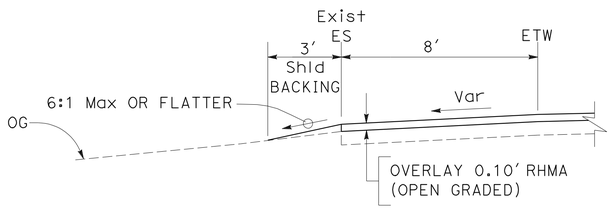

Sta 416+30 TO 418+30 Lt

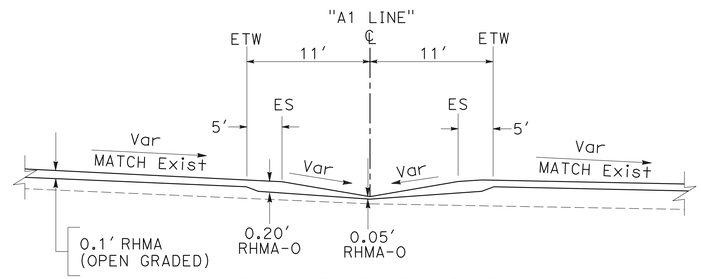

Sta 417+78 TO 418+30

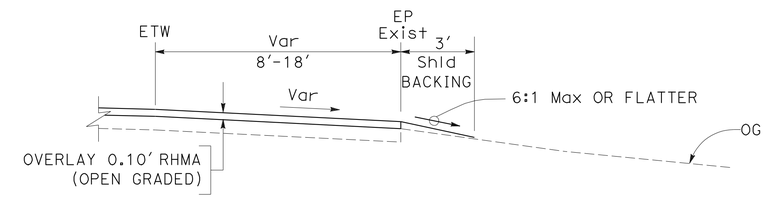

Sta 416+30.32 TO 418+30 Rt
Sta 414+38.20 TO 415+70.05 Rt

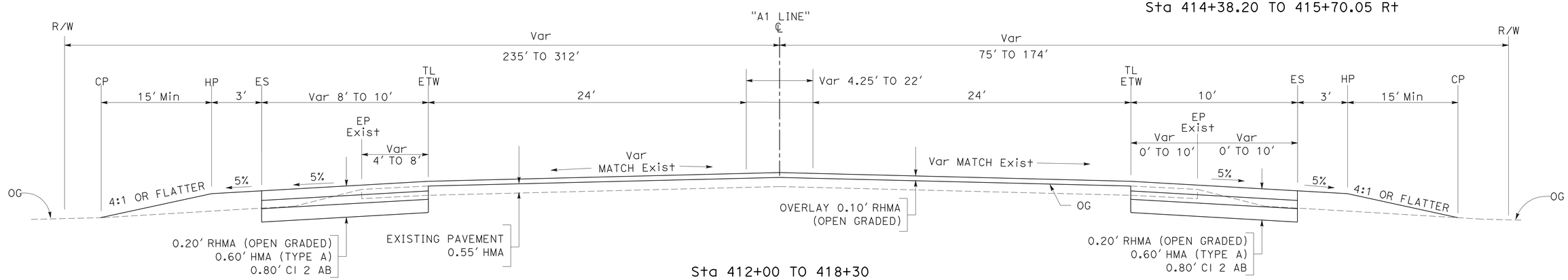

Sta 412+00 TO 418+30

ROUTE 14

TYPICAL CROSS SECTIONS

NO SCALE

X-3

STATE OF CALIFORNIA - DEPARTMENT OF TRANSPORTATION
Caltrans
09-DESIGN

FUNCTIONAL SUPERVISOR: STEPHEN WINZENREAD
CALCULATED-DESIGNED BY: TONY SYMANOVICH
CHECKED BY: STEPHEN WINZENREAD
REVISED BY
DATE REVISED

LAST REVISION 07-09-12
DATE PLOTTED => 28-SEP-2012
TIME PLOTTED => 13:07

Dist	COUNTY	ROUTE	POST MILES TOTAL PROJECT	SHEET No.	TOTAL SHEETS
06	Ker	14	39.3/40.3	5	71

REGISTERED CIVIL ENGINEER 4-18-12 DATE

9-24-12
PLANS APPROVAL DATE

REGISTERED PROFESSIONAL ENGINEER ANTON SYMANOVICH No. 78419 Exp. 9-30-13 CIVIL STATE OF CALIFORNIA

THE STATE OF CALIFORNIA OR ITS OFFICERS OR AGENTS SHALL NOT BE RESPONSIBLE FOR THE ACCURACY OR COMPLETENESS OF SCANNED COPIES OF THIS PLAN SHEET.

NOTE:

FOR ACCURATE RIGHT OF WAY DATA, CONTACT RIGHT OF WAY ENGINEERING AT THE DISTRICT OFFICE.

LEGEND:

- (No.) - DRAINAGE SYSTEM No.
- (X) - DRAINAGE UNIT No.
- CONCRETED ROCK SLOPE PROTECTION
- CONTRACTOR STAGING AREA

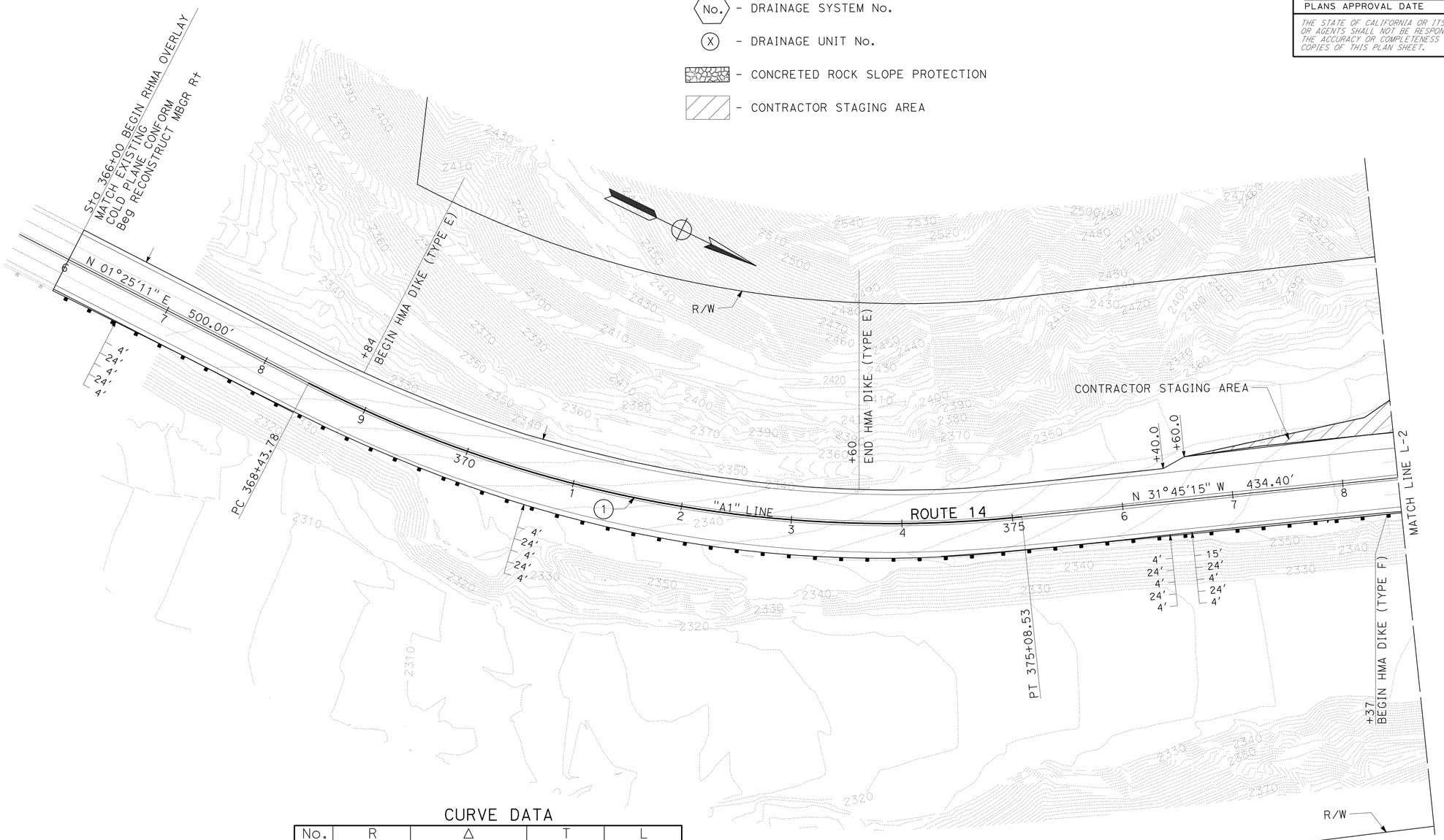

CURVE DATA

No.	R	Δ	T	L
1	1150.00'	33°10'24.76"	342.54'	664.75'

LAYOUT

SCALE: 1" = 50' **L-1**

STATE OF CALIFORNIA - DEPARTMENT OF TRANSPORTATION
Caltrans® **09-DESIGN**

FUNCTIONAL SUPERVISOR: STEPHEN WINZENREAD
CALCULATED-DESIGNED BY: TONY SYMANOVICH
CHECKED BY: STEPHEN WINZENREAD
REVISED BY
DATE REVISED

LAST REVISION 04-24-12 | DATE PLOTTED => 28-SEP-2012 | TIME PLOTTED => 13:07

Dist	COUNTY	ROUTE	POST MILES TOTAL PROJECT	SHEET No.	TOTAL SHEETS
06	Ker	14	39.3/40.3	6	71

REGISTERED CIVIL ENGINEER 4-18-12 DATE

9-24-12
PLANS APPROVAL DATE

REGISTERED PROFESSIONAL ENGINEER ANTON SYMANOVICH No. 78419 Exp. 9-30-13 CIVIL STATE OF CALIFORNIA

THE STATE OF CALIFORNIA OR ITS OFFICERS OR AGENTS SHALL NOT BE RESPONSIBLE FOR THE ACCURACY OR COMPLETENESS OF SCANNED COPIES OF THIS PLAN SHEET.

NOTE:

FOR ACCURATE RIGHT OF WAY DATA,
CONTACT RIGHT OF WAY ENGINEERING AT THE DISTRICT OFFICE.

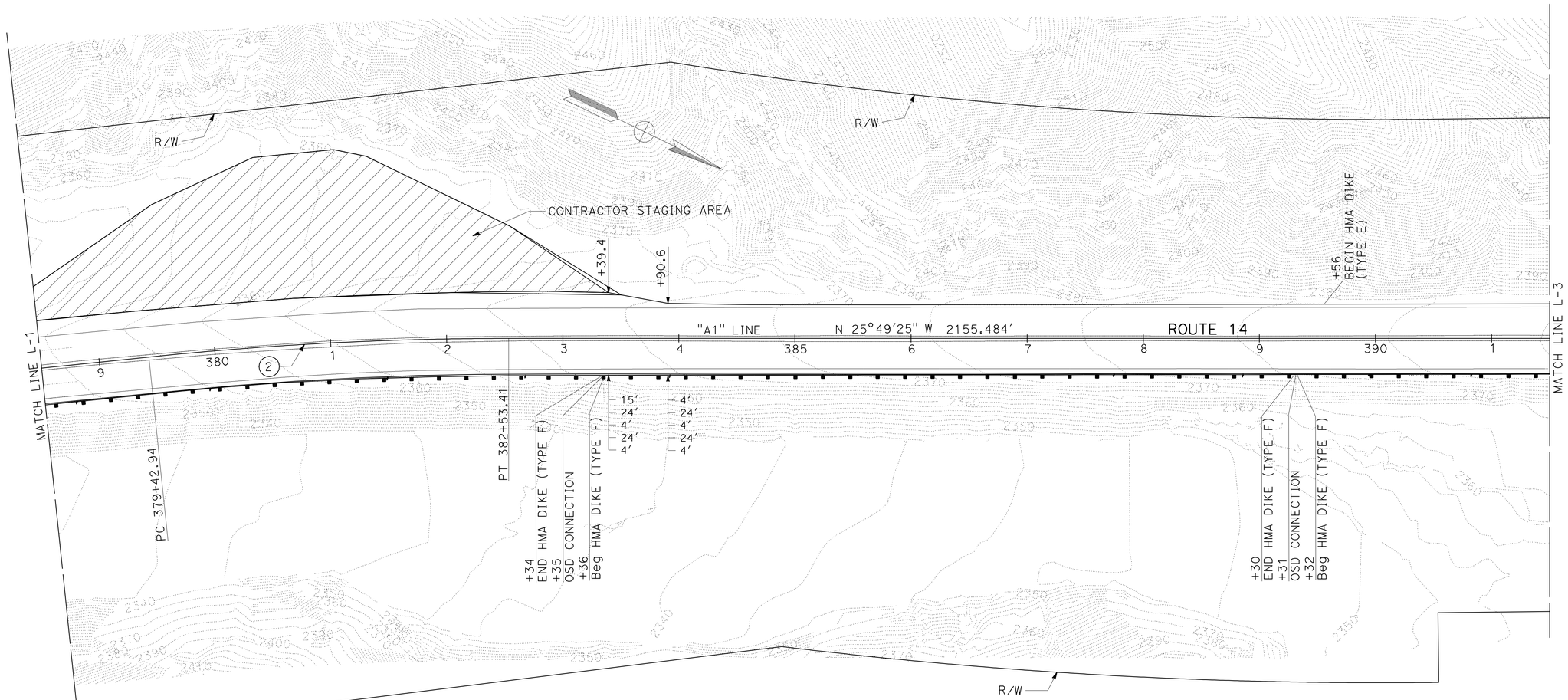

CURVE DATA

No.	R	Δ	T	L
2	2999.56'	5°55'50"	155.38'	310.48'

LAYOUT
SCALE: 1" = 50' **L-2**

STATE OF CALIFORNIA - DEPARTMENT OF TRANSPORTATION
Caltrans
09-DESIGN

FUNCTIONAL SUPERVISOR: STEPHEN WINZENREAD
CALCULATED-DESIGNED BY: TONY SYMANOVICH
CHECKED BY: STEPHEN WINZENREAD
REVISED BY
DATE REVISED

LAST REVISION 04-24-12
DATE PLOTTED => 28-SEP-2012
TIME PLOTTED => 13:07

Dist	COUNTY	ROUTE	POST MILES TOTAL PROJECT	SHEET No.	TOTAL SHEETS
06	Ker	14	39.3/40.3	7	71

REGISTERED CIVIL ENGINEER 4-18-12 DATE

9-24-12
PLANS APPROVAL DATE

REGISTERED PROFESSIONAL ENGINEER ANTON SYMANOVICH No. 78419 Exp. 9-30-13 CIVIL STATE OF CALIFORNIA

THE STATE OF CALIFORNIA OR ITS OFFICERS OR AGENTS SHALL NOT BE RESPONSIBLE FOR THE ACCURACY OR COMPLETENESS OF SCANNED COPIES OF THIS PLAN SHEET.

NOTE:

FOR ACCURATE RIGHT OF WAY DATA,
CONTACT RIGHT OF WAY ENGINEERING AT THE DISTRICT OFFICE.

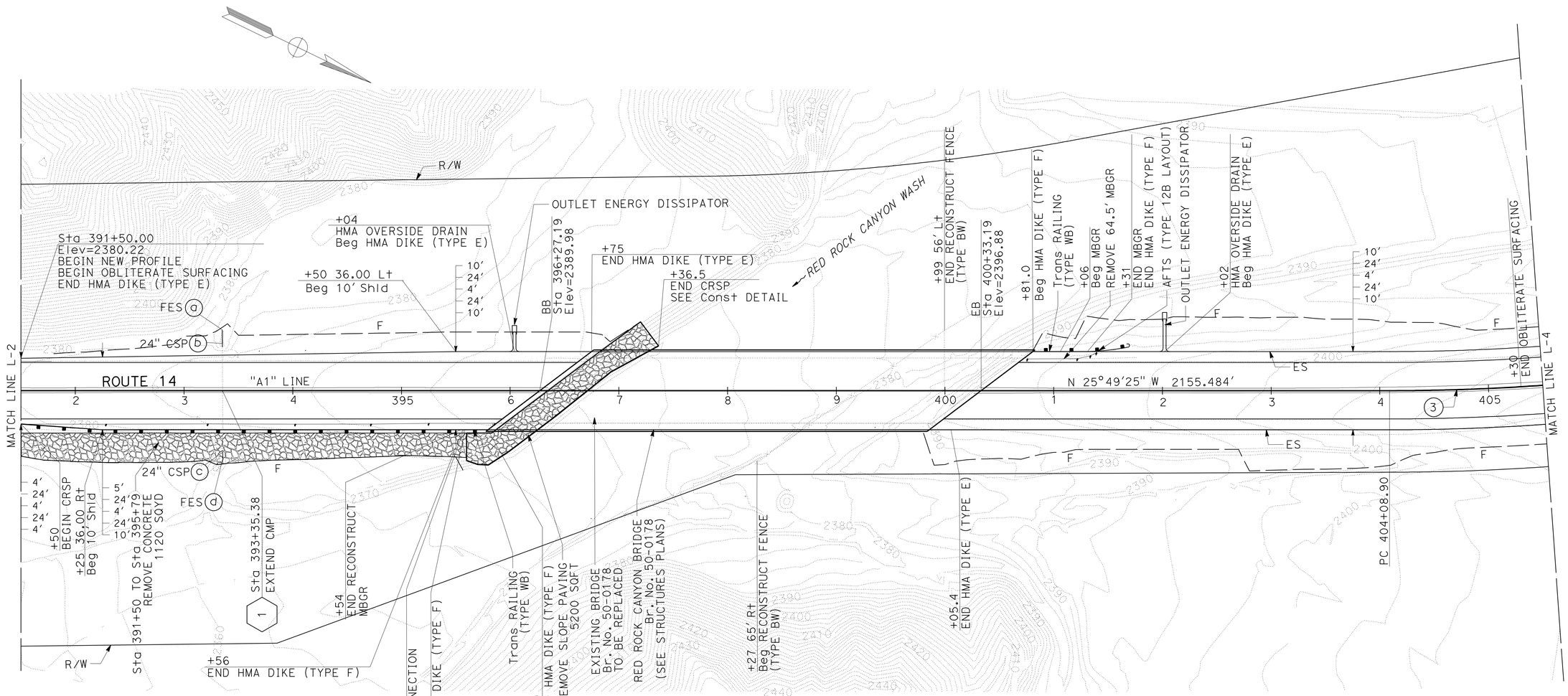

CURVE DATA

No.	R	Δ	T	L
3	1999.71'	15°48'13"	277.55'	551.57'

LAYOUT
SCALE: 1" = 50' **L-3**

STATE OF CALIFORNIA - DEPARTMENT OF TRANSPORTATION
Caltrans
09-DESIGN

FUNCTIONAL SUPERVISOR: STEPHEN WINZENREAD
CALCULATED-DESIGNED BY: TONY SYMANOVICH
CHECKED BY: STEPHEN WINZENREAD
REVISED BY
DATE REVISED

LAST REVISION 04-25-12
DATE PLOTTED => 28-SEP-2012
TIME PLOTTED => 13:07

Dist	COUNTY	ROUTE	POST MILES TOTAL PROJECT	SHEET No.	TOTAL SHEETS
06	Ker	14	39.3/40.3	8	71

REGISTERED CIVIL ENGINEER 4-18-12 DATE

9-24-12
PLANS APPROVAL DATE

REGISTERED PROFESSIONAL ENGINEER ANTON SYMANOVICH No. 78419 Exp. 9-30-13 CIVIL STATE OF CALIFORNIA

THE STATE OF CALIFORNIA OR ITS OFFICERS OR AGENTS SHALL NOT BE RESPONSIBLE FOR THE ACCURACY OR COMPLETENESS OF SCANNED COPIES OF THIS PLAN SHEET.

NOTE:

FOR ACCURATE RIGHT OF WAY AND ACCESS DATA,
CONTACT RIGHT OF WAY ENGINEERING AT THE DISTRICT OFFICE.

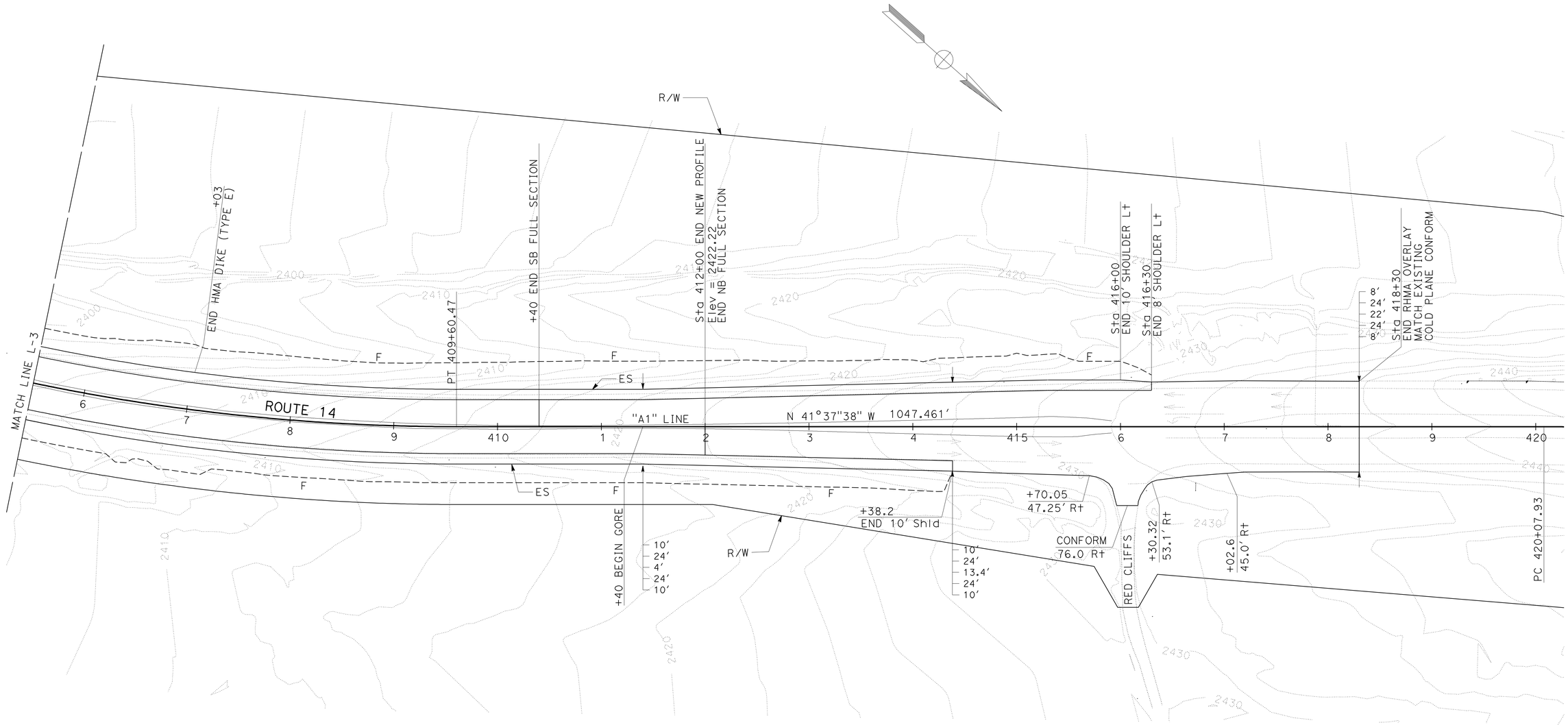

LAYOUT

SCALE: 1" = 50' **L-4**

STATE OF CALIFORNIA - DEPARTMENT OF TRANSPORTATION

Caltrans

09-DESIGN

FUNCTIONAL SUPERVISOR: STEPHEN WINZENREAD

CALCULATED-DESIGNED BY: TONY SYMANOVICH

CHECKED BY: STEPHEN WINZENREAD

REVISED BY

DATE REVISED

LAST REVISION 07-02-12

DATE PLOTTED => 28-SEP-2012
TIME PLOTTED => 13:07

Dist	COUNTY	ROUTE	POST MILES TOTAL PROJECT	SHEET No.	TOTAL SHEETS
06	Ker	14	39.3/40.3	9	71

REGISTERED CIVIL ENGINEER 4-18-12 DATE

9-24-12
PLANS APPROVAL DATE

REGISTERED PROFESSIONAL ENGINEER ANTON SYMANOVICH No. 78419 Exp. 9-30-13 CIVIL STATE OF CALIFORNIA

THE STATE OF CALIFORNIA OR ITS OFFICERS OR AGENTS SHALL NOT BE RESPONSIBLE FOR THE ACCURACY OR COMPLETENESS OF SCANNED COPIES OF THIS PLAN SHEET.

REVISED BY | DATE REVISED
TONY SYMANOVICH | STEPHEN WINZENREAD
CALCULATED-DESIGNED BY | CHECKED BY
FUNCTIONAL SUPERVISOR: STEPHEN WINZENREAD

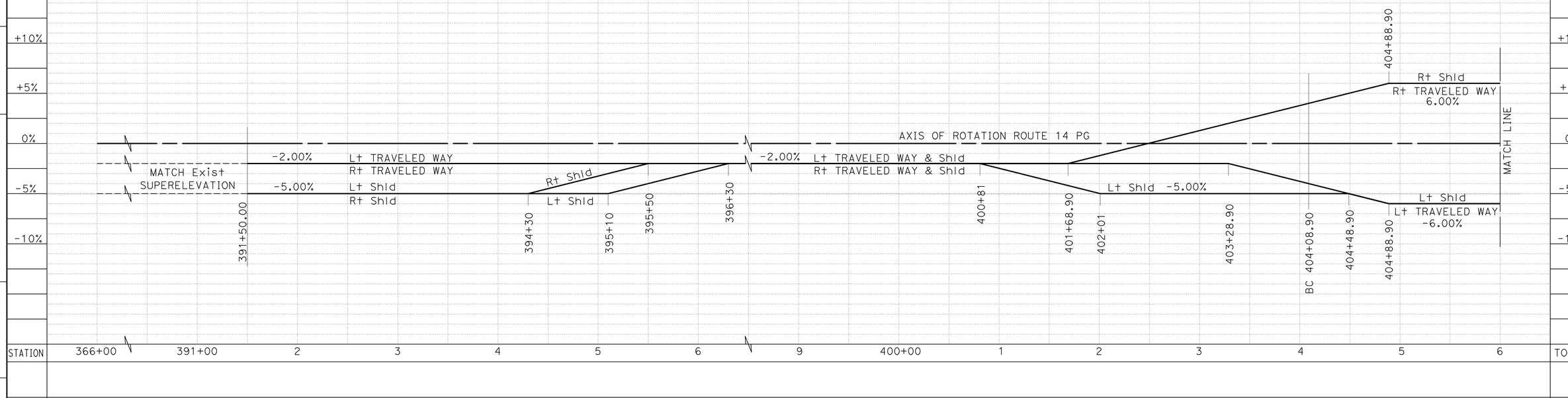

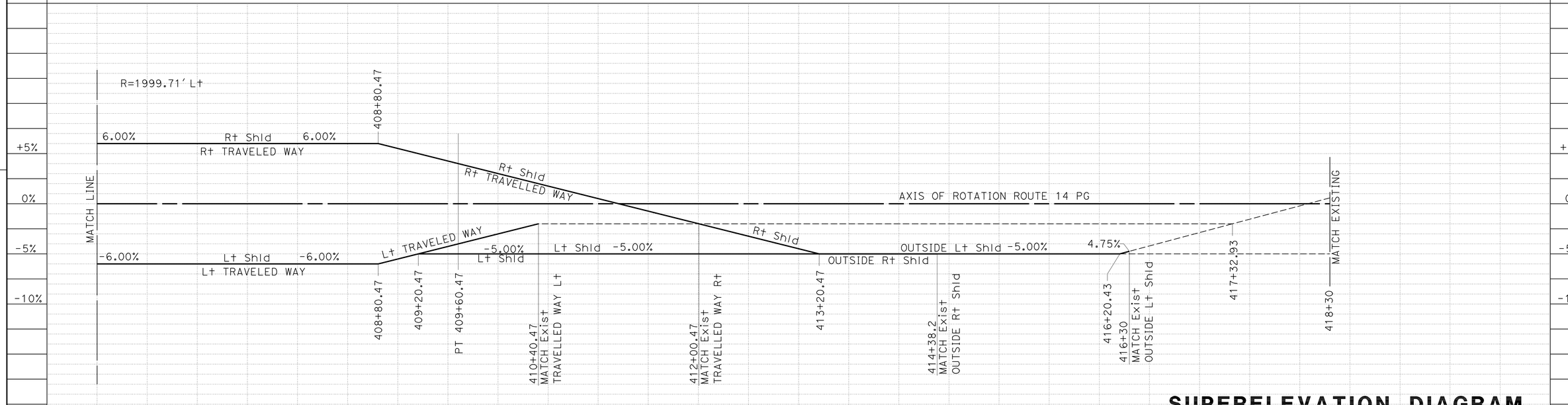

SUPERELEVATION DIAGRAM
SCALE:1" = 20'
SE-1

STATE OF CALIFORNIA - DEPARTMENT OF TRANSPORTATION
Caltrans
09-DESIGN

LAST REVISION 06-13-12 | DATE PLOTTED => 28-SEP-2012 | TIME PLOTTED => 13:07

Dist	COUNTY	ROUTE	POST MILES TOTAL PROJECT	SHEET No.	TOTAL SHEETS
06	Ker	14	39.3/40.3	10	71

REGISTERED CIVIL ENGINEER 4-18-12 DATE

9-24-12
PLANS APPROVAL DATE

REGISTERED PROFESSIONAL ENGINEER ANTON SYMANOVICH No. 78419 Exp. 9-30-13 CIVIL STATE OF CALIFORNIA

THE STATE OF CALIFORNIA OR ITS OFFICERS OR AGENTS SHALL NOT BE RESPONSIBLE FOR THE ACCURACY OR COMPLETENESS OF SCANNED COPIES OF THIS PLAN SHEET.

NOTE:

1. ALL ELEVATIONS ARE BASED ON NAVD 88.

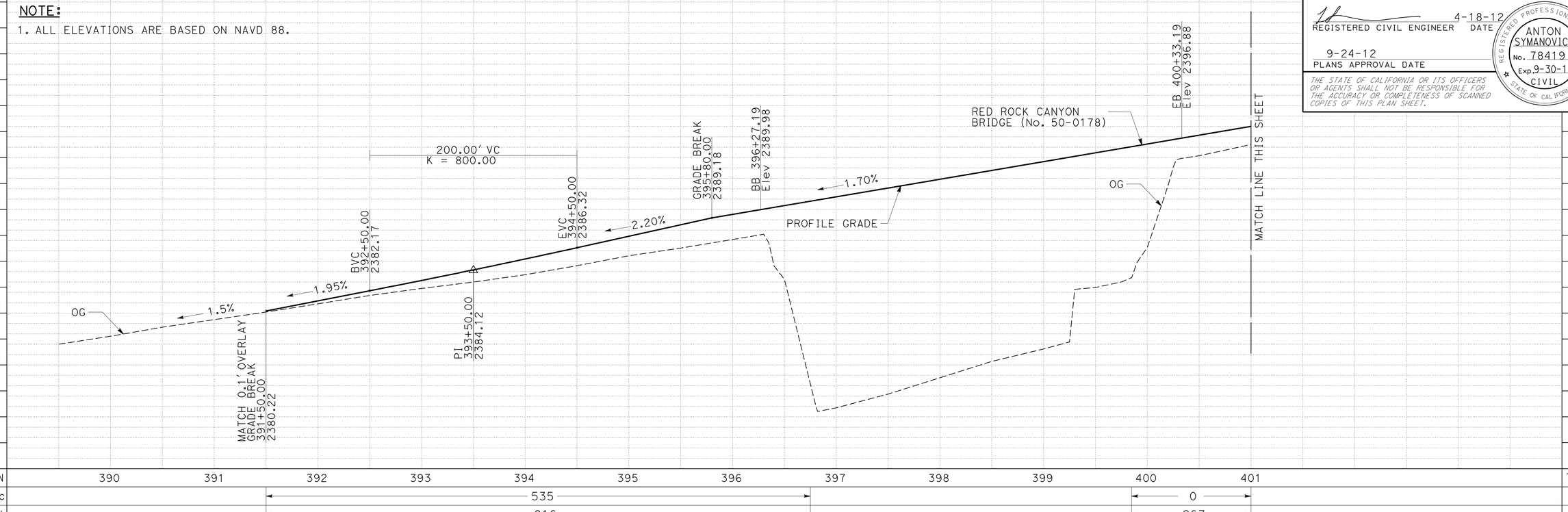

STATION	390	391	392	393	394	395	396	397	398	399	400	401	TOTAL
CY Exc			535								0		535
CY Emb			916								267		1188

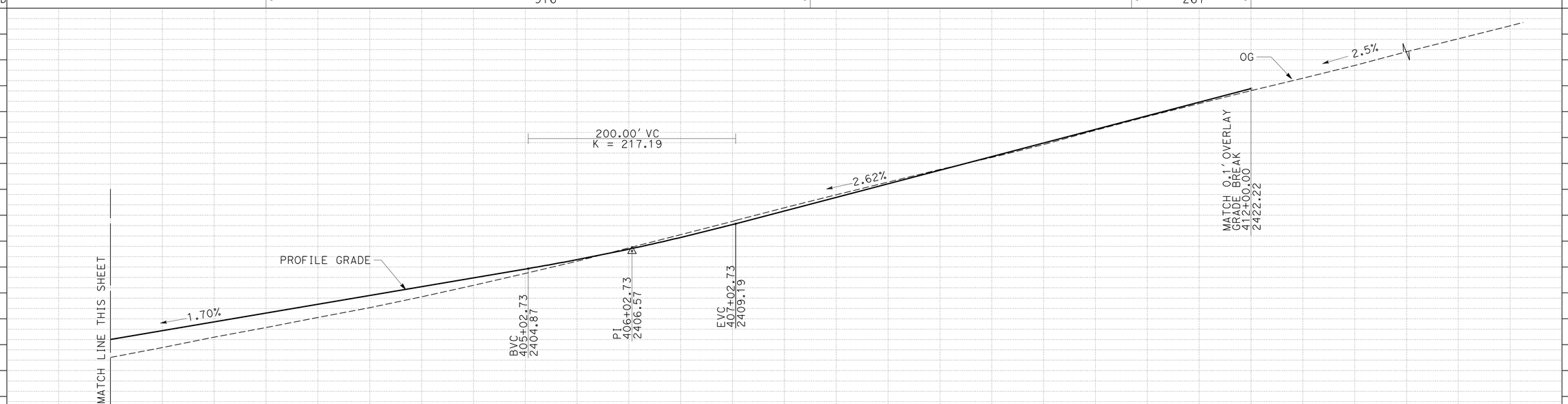

SCALE: Horiz 1" = 50'
Vert 1" = 5'

PROFILE
P-1

STATION	401	402	403	404	405	406	407	408	409	410	411	412	413	418	TOTAL
CY Exc						2765					305		341		3915
CY Emb						2005					278		500		3971

REVISED BY | DATE REVISED
TONY SYMANOVICH | STEPHEN WINZENREAD
CALCULATED-DESIGNED BY | CHECKED BY
FUNCTIONAL SUPERVISOR | STEPHEN WINZENREAD

STATE OF CALIFORNIA - DEPARTMENT OF TRANSPORTATION
Caltrans
09-DESIGN

LAST REVISION 07-10-12
DATE PLOTTED => 06-MAR-2013
TIME PLOTTED => 05:41

Dist	COUNTY	ROUTE	POST MILES TOTAL PROJECT	SHEET No.	TOTAL SHEETS
06	Ker	14	39.3/40.3	11	71

REGISTERED CIVIL ENGINEER 4-18-12 DATE

9-24-12
PLANS APPROVAL DATE

REGISTERED PROFESSIONAL ENGINEER ANTON SYMANOVICH No. 78419 Exp. 9-30-13 CIVIL STATE OF CALIFORNIA

THE STATE OF CALIFORNIA OR ITS OFFICERS OR AGENTS SHALL NOT BE RESPONSIBLE FOR THE ACCURACY OR COMPLETENESS OF SCANNED COPIES OF THIS PLAN SHEET.

LEGEND:

- COLD PLANE AC Pvmt

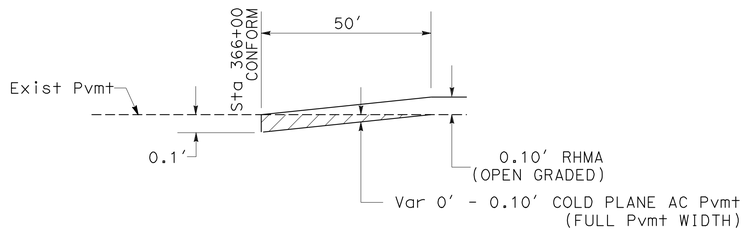

LONGITUDINAL PAVEMENT TRANSITION TAPER
Sta 366+00 (BEGIN CONSTRUCTION)

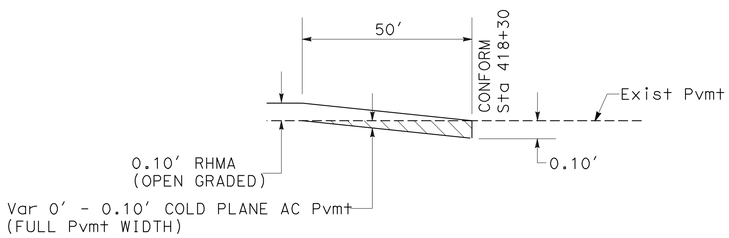

LONGITUDINAL PAVEMENT TRANSITION TAPER
Sta 418+30 (END CONSTRUCTION)

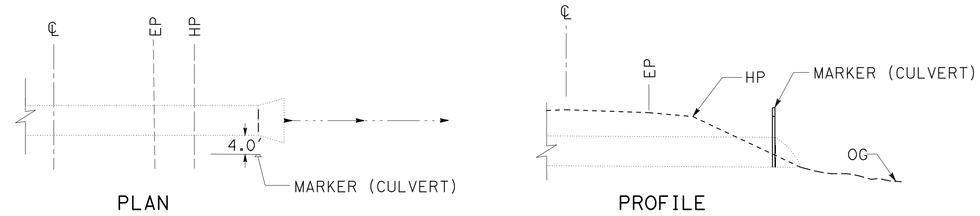

TYPICAL MARKER (CULVERT) PLACEMENT

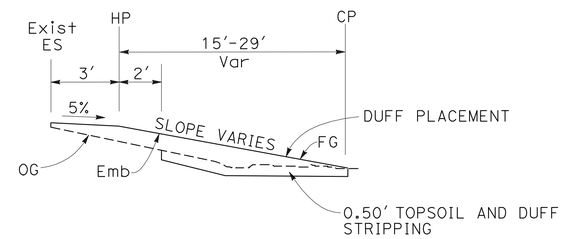

TYPICAL
LOCAL TOPSOIL AND DUFF STRIPPING DETAIL

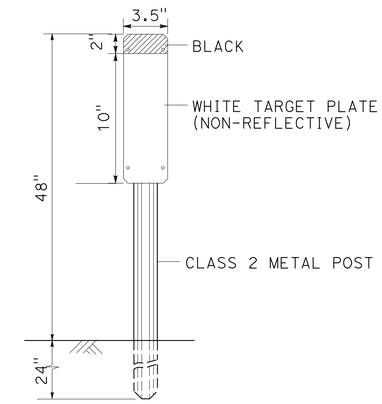

MARKER (CULVERT) PLATE AND POST DETAIL

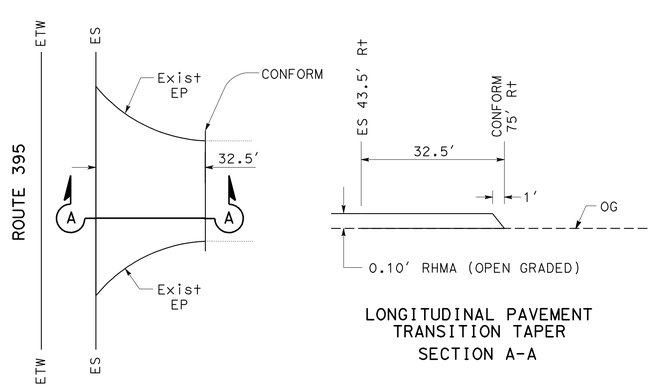

PAVING LIMITS
ROAD CONNECTION AREA
RED CLIFFS ROAD
Sta 416+07

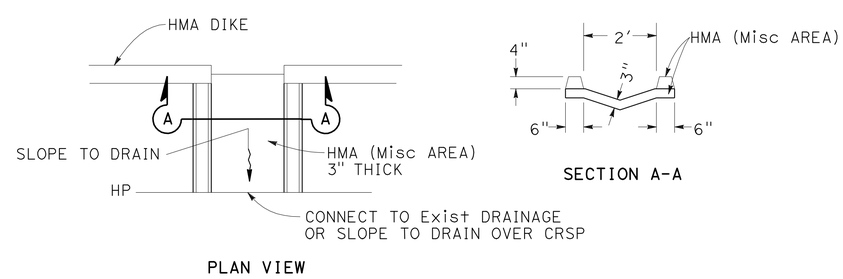

OVERSIDE DRAIN CONNECTION

CONSTRUCTION DETAILS
NO SCALE

C-1

STATE OF CALIFORNIA - DEPARTMENT OF TRANSPORTATION
Caltrans
09-DESIGN

REVISED BY	DATE REVISED
TONY SYMANOVICH	STEPHEN WINZENREAD
CALCULATED-DESIGNED BY	CHECKED BY
FUNCTIONAL SUPERVISOR	STEPHEN WINZENREAD

LAST REVISION 04-23-12 | DATE PLOTTED => 28-SEP-2012 | TIME PLOTTED => 13:07

Dist	COUNTY	ROUTE	POST MILES TOTAL PROJECT	SHEET No.	TOTAL SHEETS
06	Ker	14	39.3/40.3	12	71

4-18-12
REGISTERED CIVIL ENGINEER DATE

9-24-12
PLANS APPROVAL DATE

REGISTERED PROFESSIONAL ENGINEER
ANTON SYMANOVICH
No. 78419
Exp. 9-30-13
CIVIL
STATE OF CALIFORNIA

THE STATE OF CALIFORNIA OR ITS OFFICERS OR AGENTS SHALL NOT BE RESPONSIBLE FOR THE ACCURACY OR COMPLETENESS OF SCANNED COPIES OF THIS PLAN SHEET.

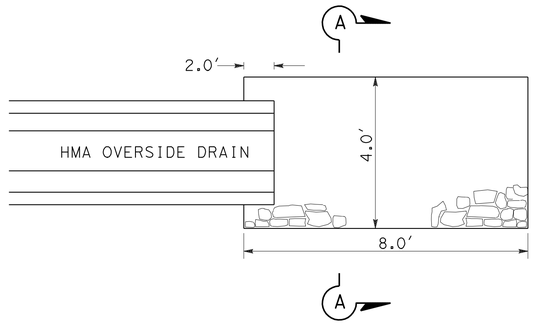

PLAN
TYPICAL OUTLET ENERGY DISSIPATOR

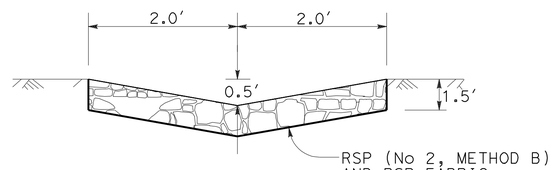

SECTION A-A
TYPICAL OUTLET ENERGY DISSIPATOR

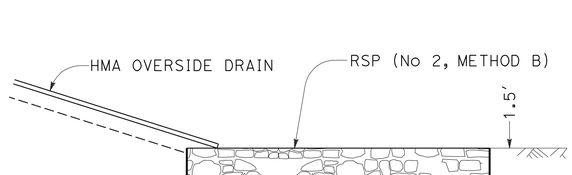

PROFILE
TYPICAL OUTLET ENERGY DISSIPATOR

CONSTRUCTION DETAILS
NO SCALE
C-2

STATE OF CALIFORNIA - DEPARTMENT OF TRANSPORTATION
Caltrans
09-DESIGN

FUNCTIONAL SUPERVISOR: STEPHEN WINZENREAD
CALCULATED-DESIGNED BY: TONY SYMANOVICH
CHECKED BY: STEPHEN WINZENREAD
REVISED BY
DATE REVISED

LAST REVISION 04-23-12
DATE PLOTTED => 28-SEP-2012
TIME PLOTTED => 13:07

Dist	COUNTY	ROUTE	POST MILES TOTAL PROJECT	SHEET No.	TOTAL SHEETS
06	Ker	14	39.3/40.3	13	71

REGISTERED CIVIL ENGINEER 4-18-12 DATE

9-24-12
PLANS APPROVAL DATE

REGISTERED PROFESSIONAL ENGINEER ANTON SYMANOVICH No. 78419 Exp. 9-30-13 CIVIL STATE OF CALIFORNIA

THE STATE OF CALIFORNIA OR ITS OFFICERS OR AGENTS SHALL NOT BE RESPONSIBLE FOR THE ACCURACY OR COMPLETENESS OF SCANNED COPIES OF THIS PLAN SHEET.

NOTES:

1. FOR ADDITIONAL RUMBLE STRIP DETAILS SEE A40B OF THE STANDARD PLANS.
2. FOG SEAL COAT APPLIED TO THE GROUND AREAS SHALL NOT COVER THE EXISTING TRAFFIC STRIPE.
3. PLACE FIRST COAT OF PAINT FOR DETAIL 29 PRIOR TO GRINDING THE CENTERLINE RUMBLESTRIP.

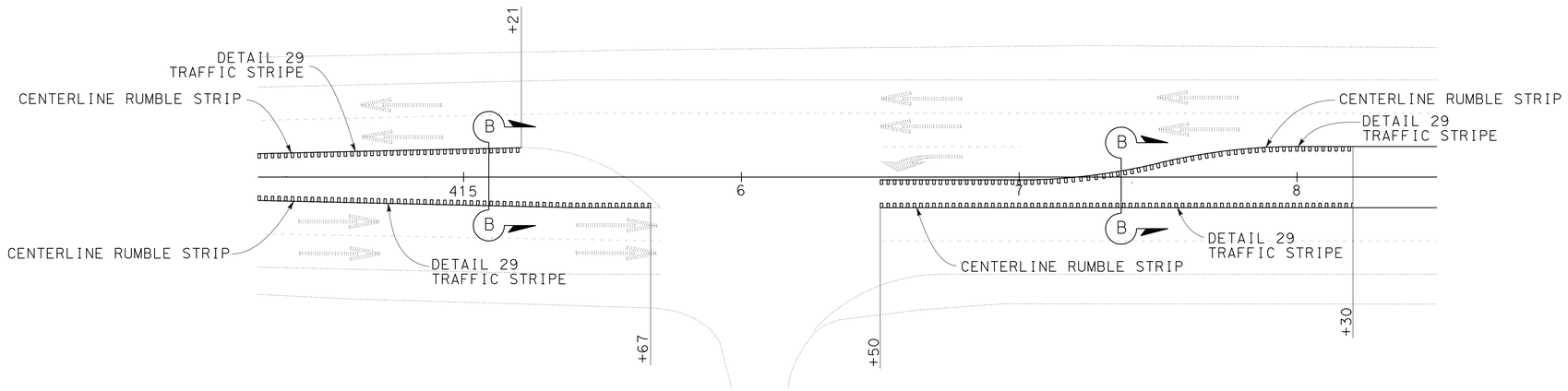

MINOR ROAD CONNECTION DETAIL

RED CLIFFS ROAD
Sta 415+21 TO 416+50

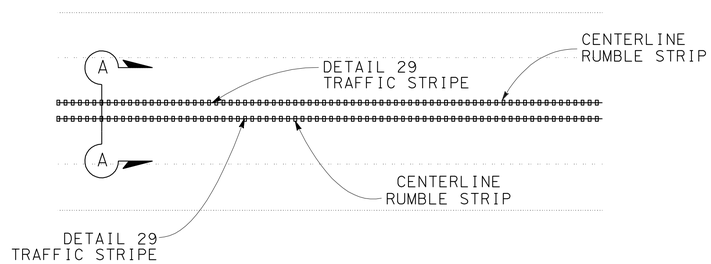

CENTERLINE RUMBLE STRIP

Sta 400+34 TO 411+40
Sta 366+00 TO 396+27

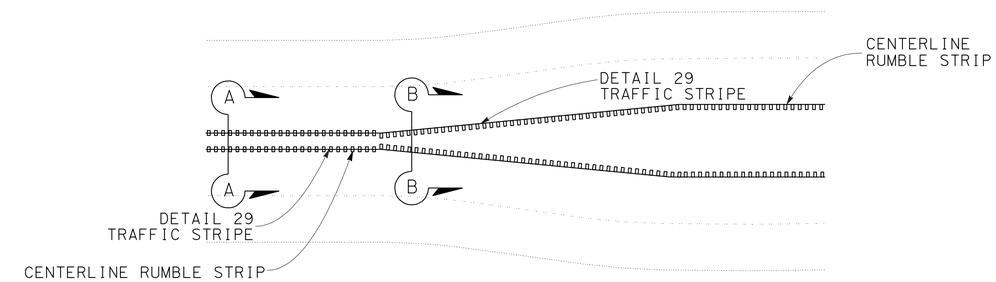

CENTERLINE RUMBLE STRIP AT TRANSITION TO DIVIDED HIGHWAY

Sta 416+50 TO 418+30
Sta 411+40 TO 415+21

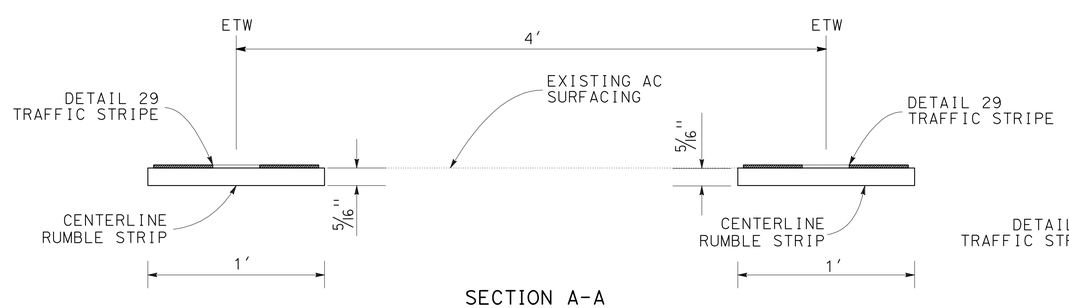

SECTION A-A

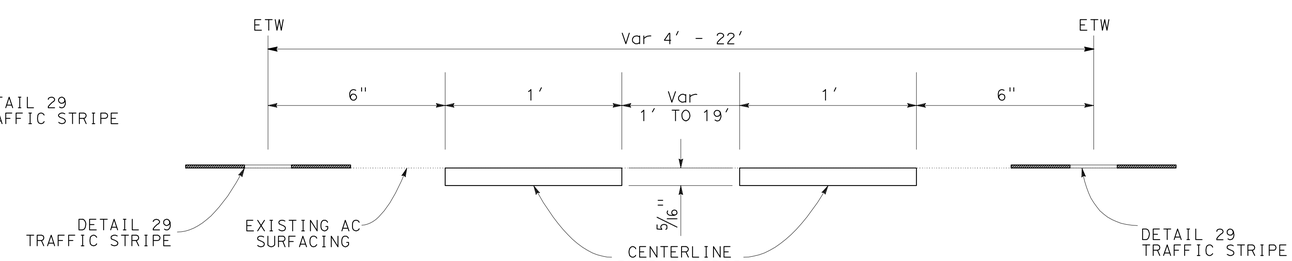

SECTION B-B

CONSTRUCTION DETAILS

NO SCALE

C-3

STATE OF CALIFORNIA - DEPARTMENT OF TRANSPORTATION
Caltrans
09-DESIGN

FUNCTIONAL SUPERVISOR: STEPHEN WINZENREAD
CALCULATED-DESIGNED BY: TONY SYMANOVICH
CHECKED BY: STEPHEN WINZENREAD
REVISED BY
DATE REVISED

LAST REVISION 04-23-12
DATE PLOTTED => 26-SEP-2012
TIME PLOTTED => 13:07

Dist	COUNTY	ROUTE	POST MILES TOTAL PROJECT	SHEET No.	TOTAL SHEETS
06	Ker	14	39.3/40.3	14	71

4-18-12
REGISTERED CIVIL ENGINEER DATE

9-24-12
PLANS APPROVAL DATE

REGISTERED PROFESSIONAL ENGINEER
ANTON SYMANOVICH
No. 78419
Exp. 9-30-13
CIVIL
STATE OF CALIFORNIA

THE STATE OF CALIFORNIA OR ITS OFFICERS OR AGENTS SHALL NOT BE RESPONSIBLE FOR THE ACCURACY OR COMPLETENESS OF SCANNED COPIES OF THIS PLAN SHEET.

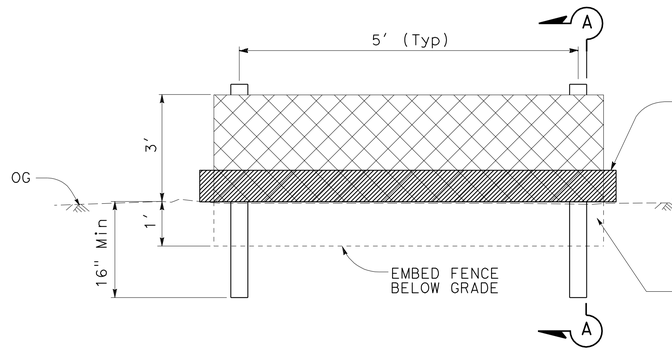

TEMPORARY FENCE (TYPE ESA) DETAIL (TYPICAL)

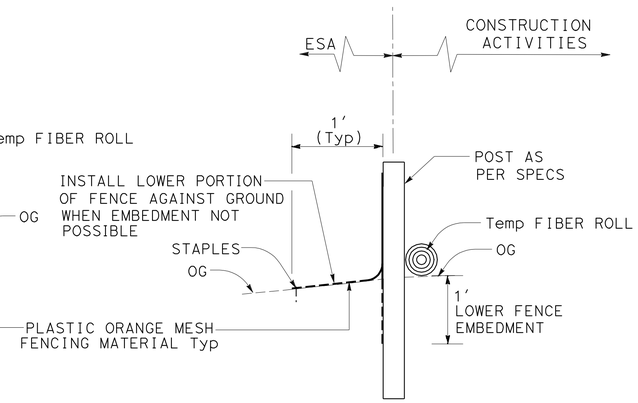

SECTION A-A

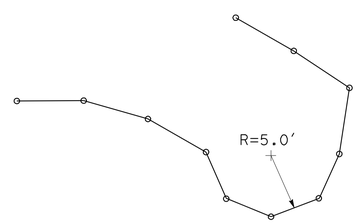

POSTS TO SUPPORT TEMPORARY FENCE FABRIC
Max 5.0' SPACING

TEMPORARY FENCE (TYPE ESA)
TORTOISE TURN-AROUND DETAIL (TYPICAL)
NO SCALE

CONSTRUCTION DETAILS
NO SCALE

C-4

STATE OF CALIFORNIA - DEPARTMENT OF TRANSPORTATION
Caltrans
09-DESIGN

FUNCTIONAL SUPERVISOR: STEPHEN WINZENREAD
CALCULATED-DESIGNED BY: TONY SYMANOVICH
CHECKED BY: STEPHEN WINZENREAD
REVISED BY
DATE REVISED

LAST REVISION 04-27-12
DATE PLOTTED => 28-SEP-2012
TIME PLOTTED => 13:07

Dist	COUNTY	ROUTE	POST MILES TOTAL PROJECT	SHEET No.	TOTAL SHEETS
06	Ker	14	39.3/40.3	15	71

4-18-12
REGISTERED CIVIL ENGINEER DATE

9-24-12
PLANS APPROVAL DATE

REGISTERED PROFESSIONAL ENGINEER
ANTON SYMANOVICH
No. 78419
Exp. 9-30-13
CIVIL
STATE OF CALIFORNIA

THE STATE OF CALIFORNIA OR ITS OFFICERS OR AGENTS SHALL NOT BE RESPONSIBLE FOR THE ACCURACY OR COMPLETENESS OF SCANNED COPIES OF THIS PLAN SHEET.

LEGEND:

- CONCRETE ROCK SLOPE PROTECTION (LIGHT, METHOD B)

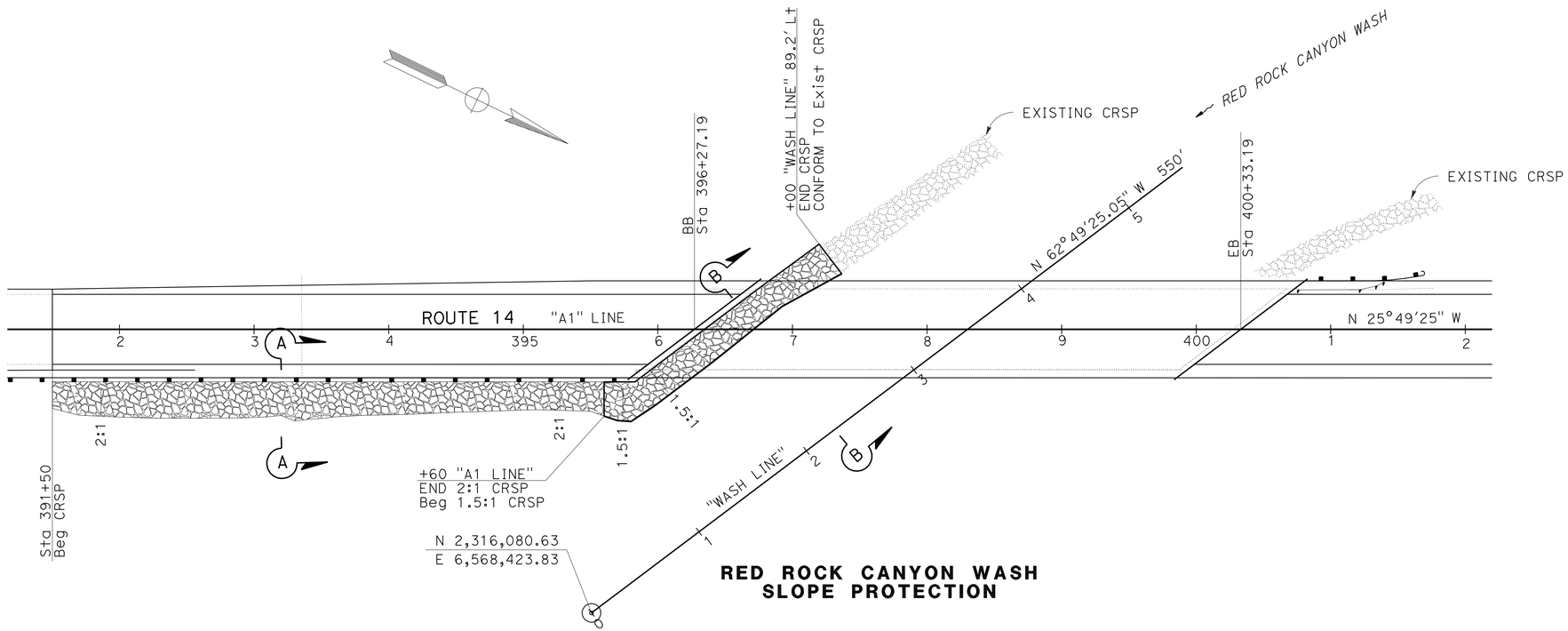

RED ROCK CANYON WASH SLOPE PROTECTION

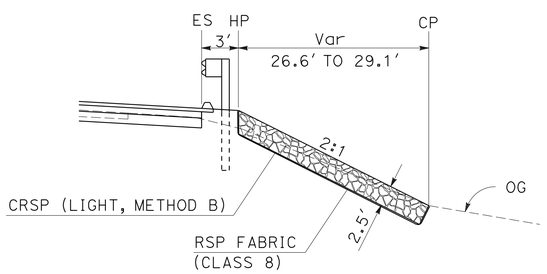

SECTION A-A
Sta 391+50 TO 395+60 "A1 LINE"

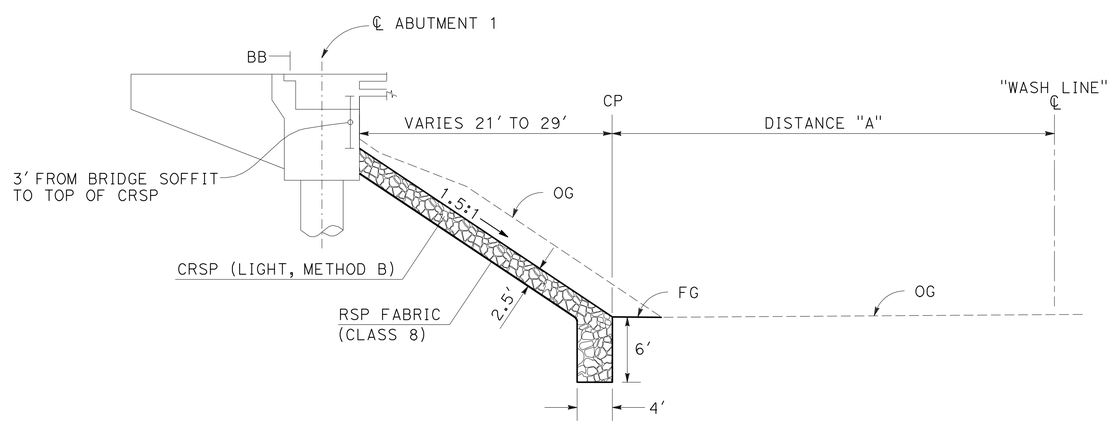

SECTION B-B
Sta 395+60 "A1 LINE" TO 3+00 "WASH LINE"

"WASH LINE" STATION	DISTANCE "A" (FT)
1+00	104.5
1+20	95.2
1+40	94.6
1+60	94.6
1+80	94.6
2+00	94.9
2+20	95.6
2+40	96.2
2+60	95.1
2+80	92.1
3+00	89.2

CONSTRUCTION DETAILS
NO SCALE

C-5

STATE OF CALIFORNIA - DEPARTMENT OF TRANSPORTATION
Caltrans
09-DESIGN

FUNCTIONAL SUPERVISOR: STEPHEN WINZENREAD
CALCULATED-DESIGNED BY: TONY SYMANOVICH
CHECKED BY: STEPHEN WINZENREAD
REVISED BY
DATE REVISED

LAST REVISION 04-25-12
DATE PLOTTED => 26-SEP-2012
TIME PLOTTED => 13:08

Dist	COUNTY	ROUTE	POST MILES TOTAL PROJECT	SHEET No.	TOTAL SHEETS
06	Ker	14	39.3/40.3	16	71

REGISTERED CIVIL ENGINEER 4-18-12 DATE

9-24-12
PLANS APPROVAL DATE

REGISTERED PROFESSIONAL ENGINEER ANTON SYMANOVICH No. 78419 Exp. 9-30-13 CIVIL STATE OF CALIFORNIA

THE STATE OF CALIFORNIA OR ITS OFFICERS OR AGENTS SHALL NOT BE RESPONSIBLE FOR THE ACCURACY OR COMPLETENESS OF SCANNED COPIES OF THIS PLAN SHEET.

LEGEND:

- COLD PLANE AC Pvmt
X.XX - COLD PLANE DEPTH
XXXX.XX - COLD PLANE FINISH ELEVATION

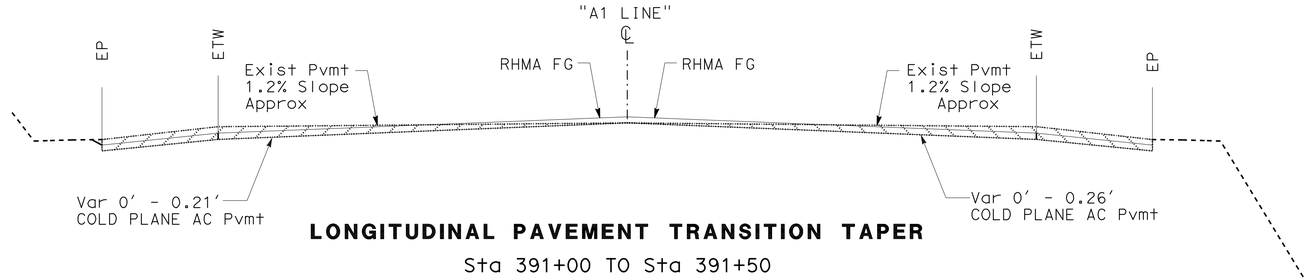

LONGITUDINAL PAVEMENT TRANSITION TAPER

Sta 391+00 TO Sta 391+50

TYPICAL

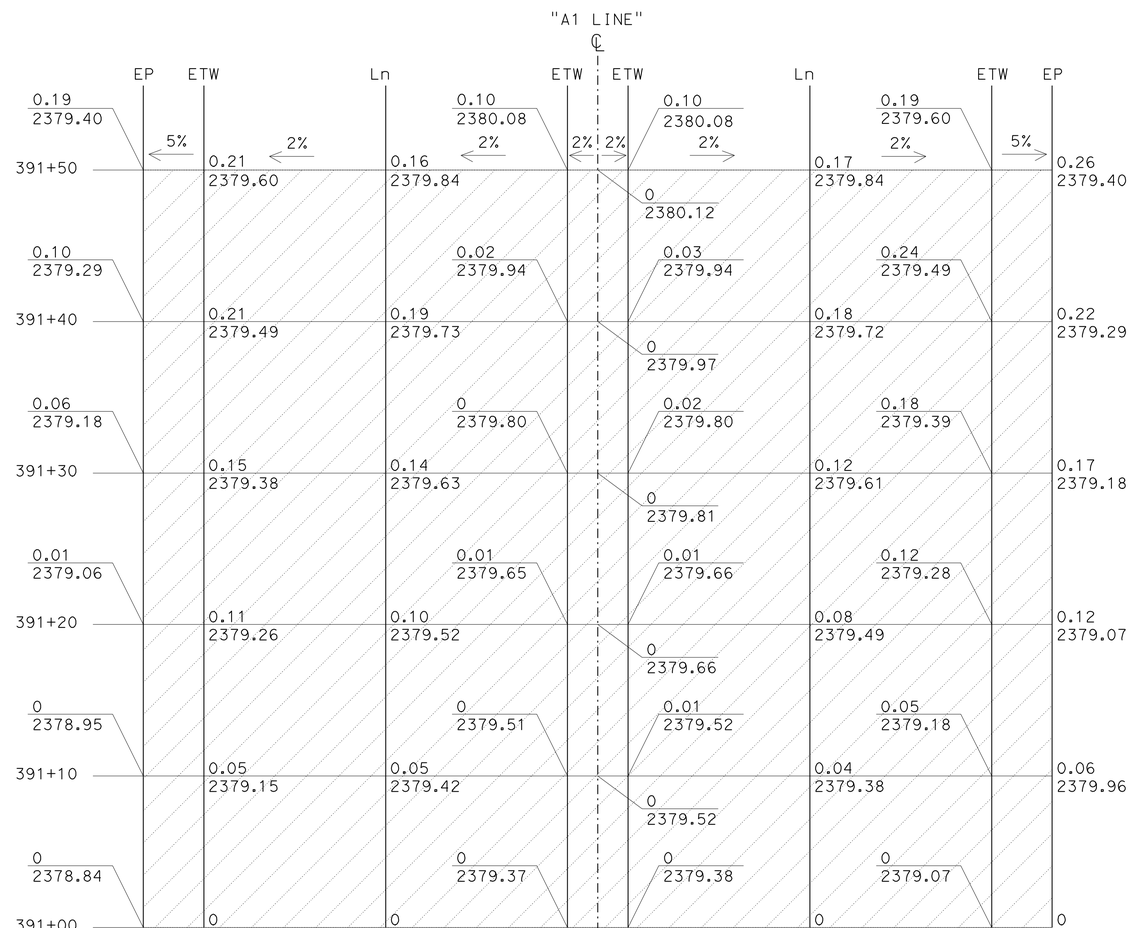

LONGITUDINAL PAVEMENT TRANSITION TAPER

Sta 391+00 TO Sta 391+50

PLAN

CONSTRUCTION DETAILS

NO SCALE

C-6

STATE OF CALIFORNIA - DEPARTMENT OF TRANSPORTATION
Caltrans
09-DESIGN

FUNCTIONAL SUPERVISOR: STEPHEN WINZENREAD
CALCULATED-DESIGNED BY: TONY SYMANOVICH
CHECKED BY: STEPHEN WINZENREAD
REVISED BY
DATE REVISED

LAST REVISION 06-12-12
DATE PLOTTED => 28-SEP-2012
TIME PLOTTED => 13:08

Dist	COUNTY	ROUTE	POST MILES TOTAL PROJECT	SHEET No.	TOTAL SHEETS
06	Ker	14	39.3/40.3	17	71

REGISTERED CIVIL ENGINEER 4-18-12 DATE

9-24-12
PLANS APPROVAL DATE

REGISTERED PROFESSIONAL ENGINEER ANTON SYMANOVICH No. 78419 Exp. 9-30-13 CIVIL STATE OF CALIFORNIA

THE STATE OF CALIFORNIA OR ITS OFFICERS OR AGENTS SHALL NOT BE RESPONSIBLE FOR THE ACCURACY OR COMPLETENESS OF SCANNED COPIES OF THIS PLAN SHEET.

LEGEND:

- COLD PLANE AC Pvmt
X.XX - COLD PLANE DEPTH

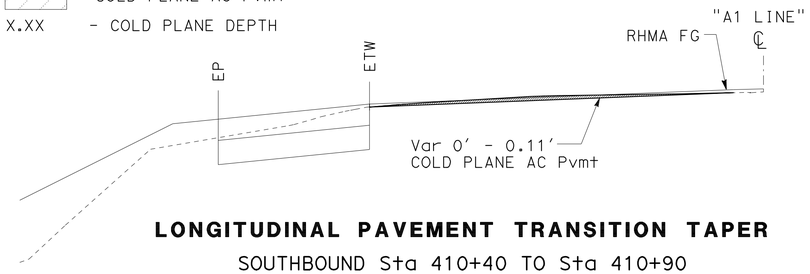

LONGITUDINAL PAVEMENT TRANSITION TAPER
SOUTHBOUND Sta 410+40 TO Sta 410+90
TYPICAL

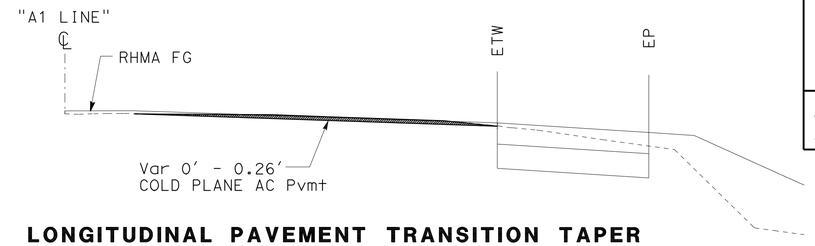

LONGITUDINAL PAVEMENT TRANSITION TAPER
NORTHBOUND Sta 412+00TO Sta 412+50
TYPICAL

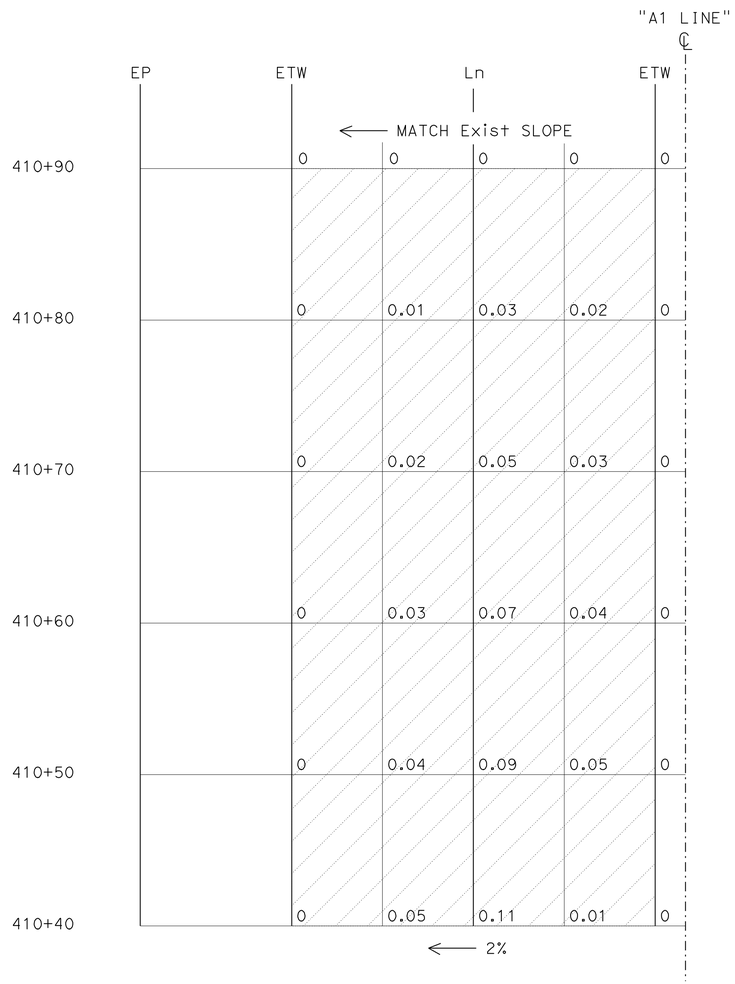

LONGITUDINAL PAVEMENT TRANSITION TAPER
SOUTHBOUND Sta 410+40 TO Sta 410+90
PLAN

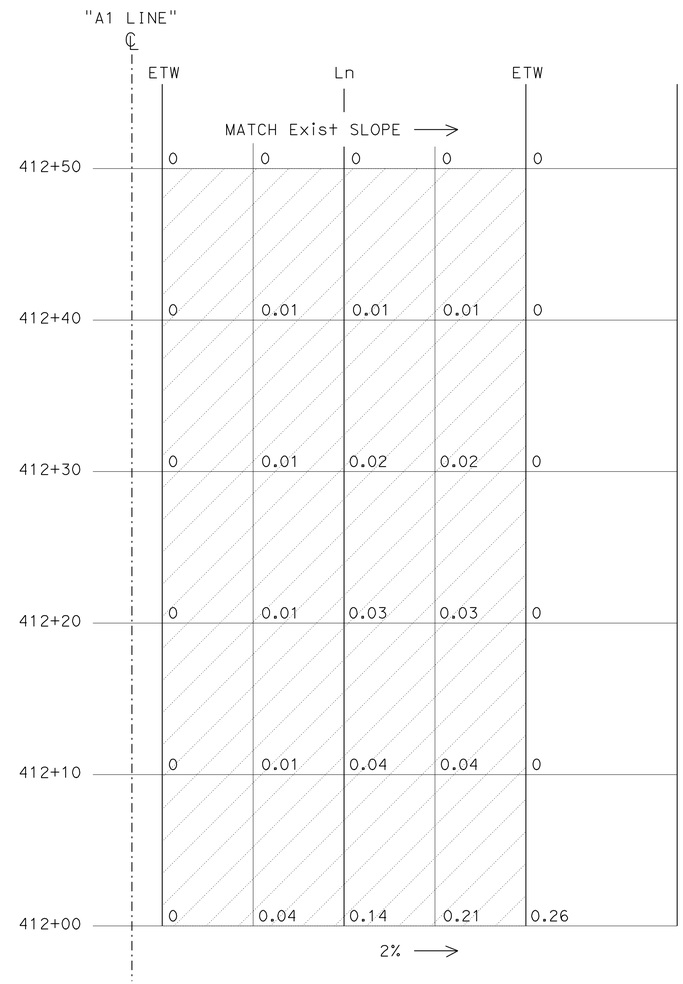

LONGITUDINAL PAVEMENT TRANSITION TAPER
NORTHBOUND Sta 412+00TO Sta 412+50
PLAN

CONSTRUCTION DETAILS
NO SCALE

C-7

STATE OF CALIFORNIA - DEPARTMENT OF TRANSPORTATION
Caltrans
09-DESIGN

FUNCTIONAL SUPERVISOR: STEPHEN WINZENREAD
CALCULATED-DESIGNED BY: TONY SYMANOVICH
CHECKED BY: STEPHEN WINZENREAD
REVISED BY
DATE REVISED

LAST REVISION 06-15-12
DATE PLOTTED => 28-SEP-2012
TIME PLOTTED => 13:08

Dist	COUNTY	ROUTE	POST MILES TOTAL PROJECT	SHEET No.	TOTAL SHEETS
06	Ker	14	39.3/40.3	18	71

REGISTERED CIVIL ENGINEER 4-18-12 DATE

9-24-12
PLANS APPROVAL DATE

REGISTERED PROFESSIONAL ENGINEER ANTON SYMANOVICH No. 78419 Exp. 9-30-13 CIVIL STATE OF CALIFORNIA

THE STATE OF CALIFORNIA OR ITS OFFICERS OR AGENTS SHALL NOT BE RESPONSIBLE FOR THE ACCURACY OR COMPLETENESS OF SCANNED COPIES OF THIS PLAN SHEET.

NOTES:

1. EXACT LOCATION OF TEMPORARY WATER POLLUTION CONTROL TO BE DETERMINED BY THE ENGINEER.
2. FOR TEMPORARY EROSION CONTROL QUANTITIES SEE SHEET Q-2.
3. FOR TEMPORARY FENCE (TYPE ESA) DETAIL, SEE SHEET C-4.

LEGEND:

TFESA — TEMPORARY FENCE (TYPE ESA) WITH TEMPORARY FIBER ROLL

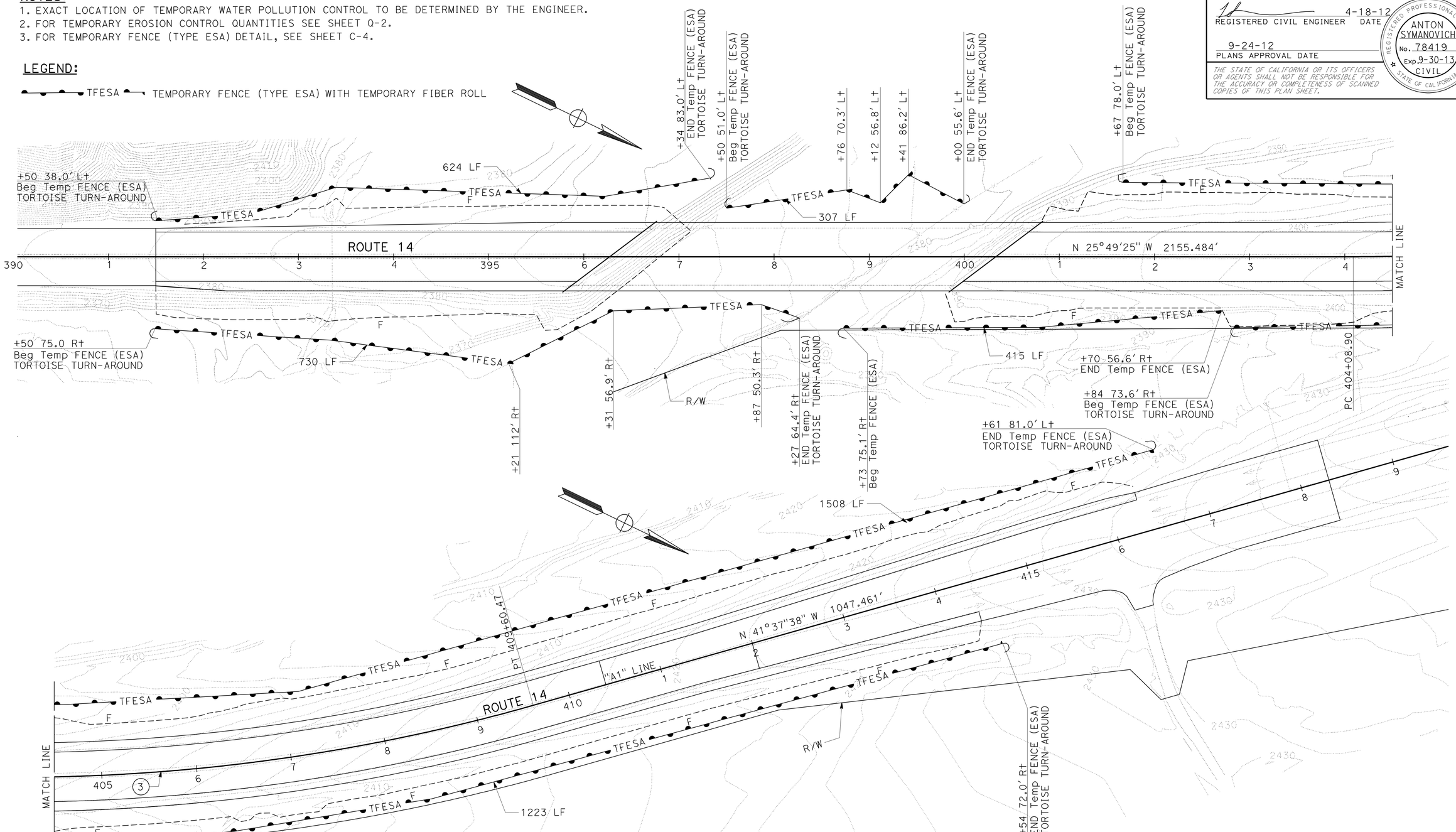

APPROVED FOR TEMPORARY WATER POLLUTION CONTROL WORK ONLY

TEMPORARY WATER POLLUTION CONTROL PLAN

SCALE 1" = 50' **WPC-1**

STATE OF CALIFORNIA - DEPARTMENT OF TRANSPORTATION
Caltrans® **09-DESIGN**

FUNCTIONAL SUPERVISOR: STEPHEN WINZENREAD
CALCULATED-DESIGNED BY: TONY SYMANOVICH
CHECKED BY: STEPHEN WINZENREAD
REVISED BY
DATE REVISED

LAST REVISION 07-09-12
DATE PLOTTED => 28-SEP-2012
TIME PLOTTED => 13:08

Dist	COUNTY	ROUTE	POST MILES TOTAL PROJECT	SHEET No.	TOTAL SHEETS
06	Ker	14	39.3/40.3	19	71

R Steve Miller
LICENSED LANDSCAPE ARCHITECT

9-24-12
PLANS APPROVAL DATE

LICENSED LANDSCAPE ARCHITECT
R. STEVE MILLER 2083
Expiration Date 4-30-13
Renewal Date 04-19-12
DATE
STATE OF CALIFORNIA

THE STATE OF CALIFORNIA OR ITS OFFICERS OR AGENTS SHALL NOT BE RESPONSIBLE FOR THE ACCURACY OR COMPLETENESS OF SCANNED COPIES OF THIS PLAN SHEET.

LEGEND:

STAGE 1
EROSION CONTROL TYPE 1

STAGE 2
EROSION CONTROL TYPE 1

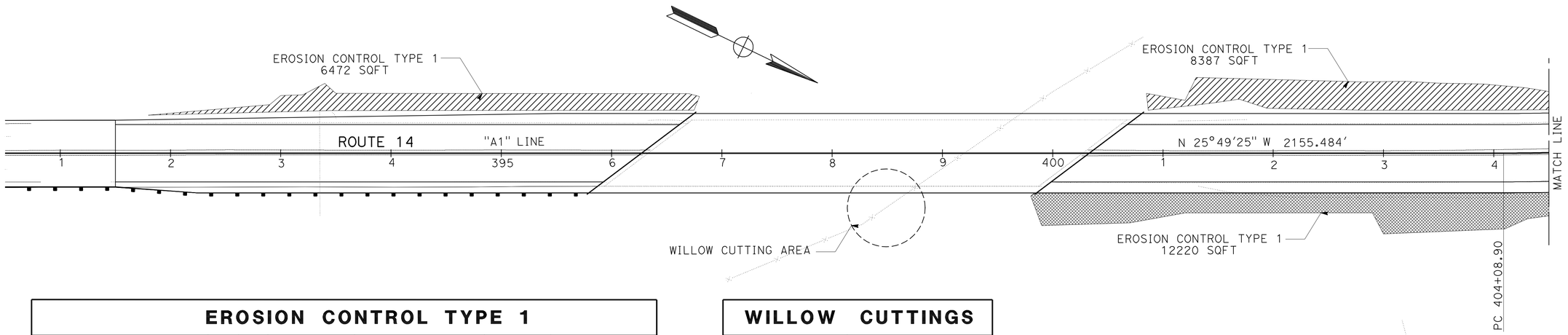

EROSION CONTROL TYPE 1

STATION TO STATION	L†	R†	STRAW	EROSION CONTROL (DRY SEED)	DUFF	INCORPORATE MATERIALS
			SQFT	SQFT	ACRE	SQFT
391+50 TO 397+00	X		12944	6472	0.15	12944
400+85 TO 416+00	X		54650	27325	0.63	54650
399+80 TO 414+38		X	53444	26722	0.61	53444
TOTAL			121038	60519	1.39	121038

WILLOW CUTTINGS

AREA	PLANT (GROUP W)
	EA
398+50 R†	25
TOTAL	25

NOTE: EXACT LOCATION OF PLANT (GROUP W) TO BE DETERMINED BY THE ENGINEER

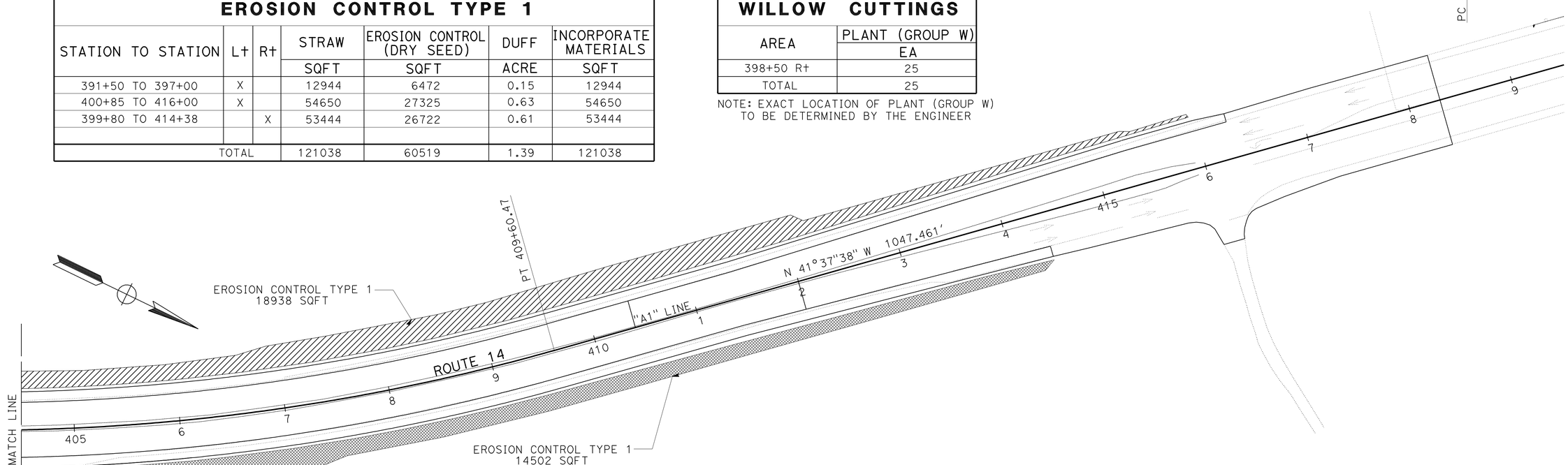

APPROVED FOR EROSION CONTROL WORK ONLY

EROSION CONTROL PLAN
SCALE 1" = 50'
EC-1

STATE OF CALIFORNIA - DEPARTMENT OF TRANSPORTATION
Caltrans LANDSCAPE ARCHITECTURE

SENIOR LANDSCAPE ARCHITECT: BRAD COLE
CALCULATED-DESIGNED BY: STEPHEN WINZENREAD
CHECKED BY: R STEVE MILLER
REVISED BY
DATE REVISED

LAST REVISION 04-19-12
DATE PLOTTED => 28-SEP-2012
TIME PLOTTED => 13:08

Dist	COUNTY	ROUTE	POST MILES TOTAL PROJECT	SHEET No.	TOTAL SHEETS
06	Ker	14	39.3/40.3	20	71

R Steve Miller
LICENSED LANDSCAPE ARCHITECT

9-24-12
PLANS APPROVAL DATE

LICENSED LANDSCAPE ARCHITECT R. STEVE MILLER 2686 STATE OF CALIFORNIA
Expiration Date 4-30-13
Renewal Date 04-19-12
DATE

THE STATE OF CALIFORNIA OR ITS OFFICERS OR AGENTS SHALL NOT BE RESPONSIBLE FOR THE ACCURACY OR COMPLETENESS OF SCANNED COPIES OF THIS PLAN SHEET.

WILLOW CUTTINGS

SEQUENCE	ITEM	MATERIAL		REMARKS
		DESCRIPTION	TYPE	
INSTALL WHEN AREA IS READY	PLANT GROUP W	TAKE CUTTINGS AS DESIGNATED BY ENGINEER		TO BE TAKEN FROM EXISTING WILLOWS ON SITE

EROSION CONTROL TYPE 1

SEQUENCE	ITEM	MATERIAL		APPLICATION RATE	DEPTH
		DESCRIPTION	TYPE		
STEP 1	LOCAL TOPSOIL*				
STEP 2	DUFF				
STEP 3	STRAW		WHEAT	1 TON/ACRE	
STEP 4	INCORPORATE MATERIALS	TOPSOIL/DUFF/ STRAW			6"
STEP 5	SEED (APPLY BY DRY METHOD)			12 LB/ACRE	
STEP 6	STRAW		WHEAT	1 TON/ACRE	
STEP 7	INCORPORATE MATERIALS	SEED/ STRAW			6"

EROSION CONTROL NOTES:

PRIOR TO APPLYING EROSION CONTROL, THE AREA SHALL BE SCARIFIED TO A DEPTH OF 8".

INCORPORATE MATERIALS IMMEDIATELY AFTER PLACEMENT.

STRAW TOTAL IS 2 TONS/ACRE

HYRDROSEEDING IS NOT ALLOWED

* LOCAL TOPSOIL IS PAID FOR AS ROADWAY EXCAVATION

SEED MIX

SEED	BOTANICAL NAME (COMMON NAME)	PERCENT GERMINATION (MINIMUM)	POUNDS PURE LIVE SEED PER ACRE (SLOPE MEASUREMENT)
	ATRIPLEX CANESCENS (SHADSCALE)	50	4
	CHRYSOTHAMNUS NAUSEOSUS (RABBIT BRUSH)	45	1
	ERICARMERIA LINEARFOLIA (NARROW LEAF GOLDENBUSH)	70	2
	ERIOGONUM FASICULATUM (CALIFORNIA BUCKWHEAT)	60	1
	ENCELIA FARINOSA (BRITTLEBUSH)	60	1
	MALACOTHRIX GLABRATA (DESERT DANDELION)	60	1
	SPHAERALCEA AMBIGUA (APRICOT MALLOW)	70	2

APPROVED FOR EROSION CONTROL WORK ONLY

EROSION CONTROL LEGEND ECL-1

REVISED BY	DATE REVISED
00/00/00	00/00/00

R STEVE MILLER — STEPHEN WINZENREAD
CALCULATED-DESIGNED BY — CHECKED BY
SENIOR LANDSCAPE ARCHITECT — BRAD COLE

STATE OF CALIFORNIA - DEPARTMENT OF TRANSPORTATION
Caltrans LANDSCAPE ARCHITECTURE

LAST REVISION 07-10-12 — DATE PLOTTED => 28-SEP-2012 — TIME PLOTTED => 13:08

Dist	COUNTY	ROUTE	POST MILES TOTAL PROJECT	SHEET No.	TOTAL SHEETS
06	Ker	14	39.3/40.3	21	71

REGISTERED CIVIL ENGINEER 4-18-12 DATE

9-24-12
PLANS APPROVAL DATE

REGISTERED PROFESSIONAL ENGINEER
ANTON SYMANOVICH
No. 78419
Exp. 9-30-13
CIVIL
STATE OF CALIFORNIA

THE STATE OF CALIFORNIA OR ITS OFFICERS OR AGENTS SHALL NOT BE RESPONSIBLE FOR THE ACCURACY OR COMPLETENESS OF SCANNED COPIES OF THIS PLAN SHEET.

NOTES:

1. ALL ELEVATIONS ARE BASED ON NAVD 88.

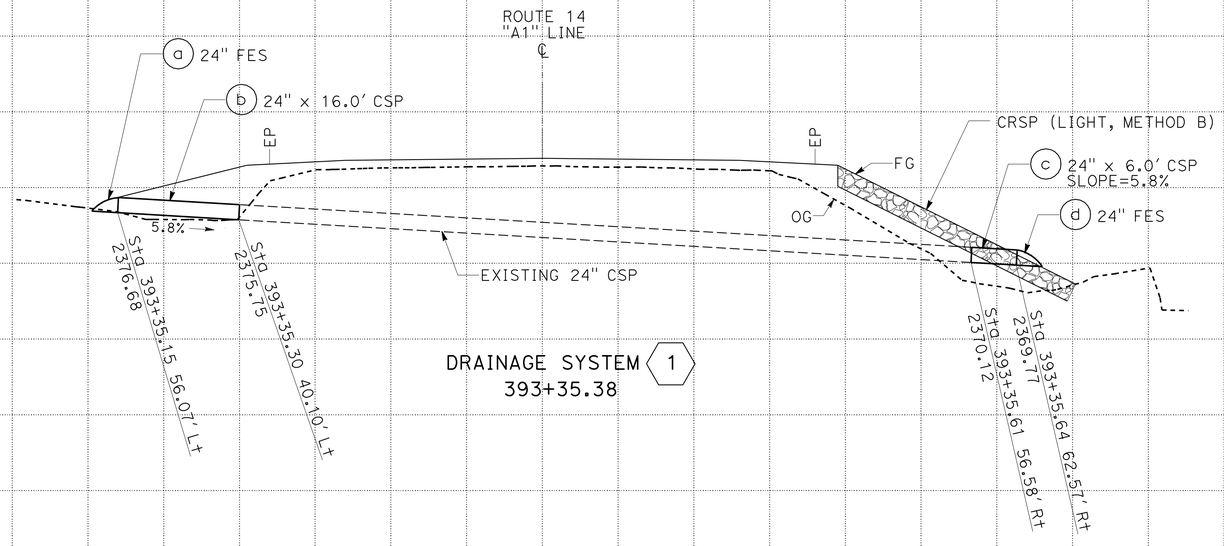

APPROVED FOR DRAINAGE WORK ONLY

DRAINAGE PROFILE

SCALE : Horiz 1" = 50'
Vert 1" = 50'

DP-1

STATE OF CALIFORNIA - DEPARTMENT OF TRANSPORTATION
Caltrans
09-DESIGN

FUNCTIONAL SUPERVISOR: STEPHEN WINZENREAD
CALCULATED-DESIGNED BY: TONY SYMANOVICH
CHECKED BY: STEPHEN WINZENREAD
REVISED BY
DATE REVISED

LAST REVISION 04-23-12
DATE PLOTTED => 28-SEP-2012
TIME PLOTTED => 13:08

Dist	COUNTY	ROUTE	POST MILES TOTAL PROJECT	SHEET No.	TOTAL SHEETS
06	Ker	14	39.3/40.3	22	71

REGISTERED CIVIL ENGINEER 4-18-12 DATE

9-24-12
PLANS APPROVAL DATE

REGISTERED PROFESSIONAL ENGINEER ANTON SYMANOVICH No. 78419 Exp. 9-30-13 CIVIL STATE OF CALIFORNIA

THE STATE OF CALIFORNIA OR ITS OFFICERS OR AGENTS SHALL NOT BE RESPONSIBLE FOR THE ACCURACY OR COMPLETENESS OF SCANNED COPIES OF THIS PLAN SHEET.

LEGEND:

- CONSTRUCTION THIS STAGE
- BRIDGE CONSTRUCTION THIS STAGE
- AREA PREVIOUSLY CONSTRUCTED

STAGE 1

1. REMOVE EXISTING CENTERLINE RUMBLE STRIP FROM Sta 383+91 TO Sta 391+50 AND FROM Sta 410+40 TO Sta 415+90.
2. PLACE STAGE 1 TRAFFIC HANDLING.
3. REMOVE EXISTING SOUTHBOUND PORTION OF EXISTING BRIDGE.
4. CONSTRUCT SOUTHBOUND PORTION OF BRIDGE.
5. CONSTRUCT SOUTHBOUND ROADWAY AND SHOULDERS TO BOTTOM OF FINAL LAYER OF HOT MIX ASPHALT.
6. INSTALL SOUTHBOUND TRANSITION RAILING, GUARD RAILING, BIKE RAILING, AND ALTERNATIVE FLARED TERMINAL SYSTEM.
7. PLACE STAGE 1 EROSION CONTROL.
8. REMOVE STAGE 1 TRAFFIC HANDLING.

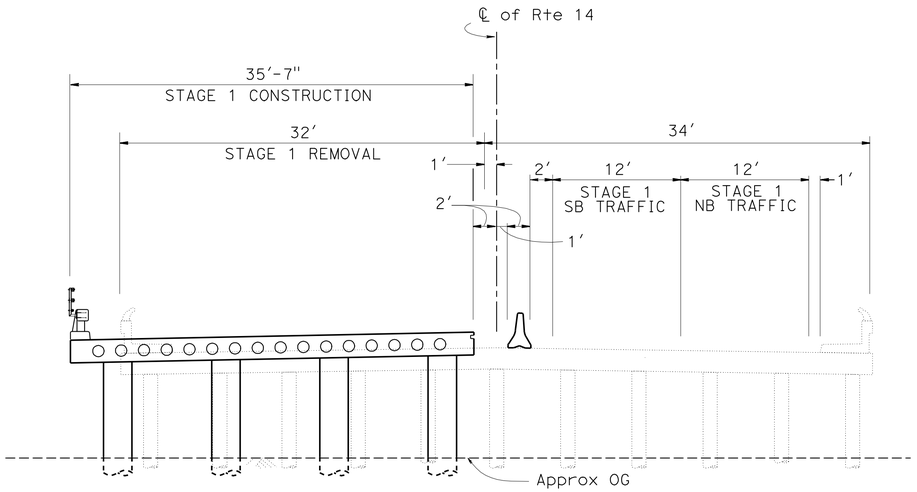

NO SCALE

STAGE 1 TYPICAL SECTION
RED ROCK CANYON BRIDGE
Sta 396+27.19 TO 400+33.19

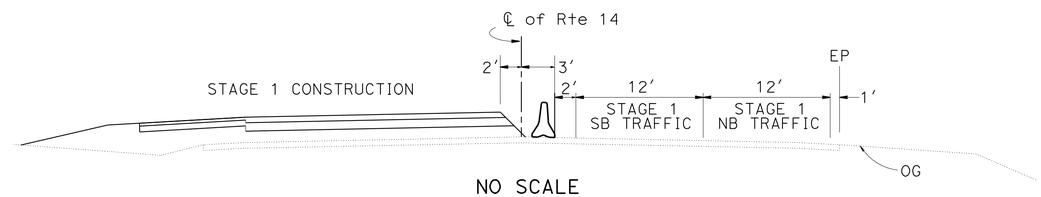

NO SCALE

STAGE 1 TYPICAL SECTION
Sta 391+50 TO 396+27.19
Sta 400+33.19 TO 410+40

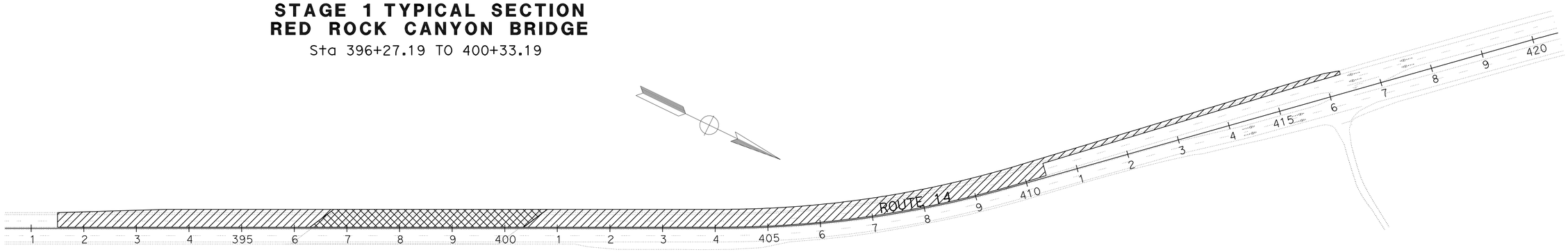

APPROVED FOR STAGE CONSTRUCTION WORK ONLY

STAGE 1
STAGE CONSTRUCTION PLAN
SCALE 1" = 100'
SC-1

STATE OF CALIFORNIA - DEPARTMENT OF TRANSPORTATION
Caltrans
09-DESIGN

FUNCTIONAL SUPERVISOR: STEPHEN WINZENREAD
CALCULATED-DESIGNED BY: STEPHEN WINZENREAD
CHECKED BY: TONY SYMANOVICH
REVISED BY
DATE REVISED

LAST REVISION 06-14-12
DATE PLOTTED => 28-SEP-2012
TIME PLOTTED => 13:08

Dist	COUNTY	ROUTE	POST MILES TOTAL PROJECT	SHEET No.	TOTAL SHEETS
06	Ker	14	39.3/40.3	23	71

REGISTERED CIVIL ENGINEER 4-18-12 DATE

9-24-12
PLANS APPROVAL DATE

REGISTERED PROFESSIONAL ENGINEER ANTON SYMANOVICH No. 78419 Exp. 9-30-13 CIVIL STATE OF CALIFORNIA

THE STATE OF CALIFORNIA OR ITS OFFICERS OR AGENTS SHALL NOT BE RESPONSIBLE FOR THE ACCURACY OR COMPLETENESS OF SCANNED COPIES OF THIS PLAN SHEET.

STAGE 2

1. PLACE STAGE 2 TRAFFIC HANDLING.
2. REMOVE EXISTING NORTHBOUND PORTION OF EXISTING BRIDGE.
3. CONSTRUCT NORTHBOUND PORTION OF BRIDGE.
4. CONSTRUCT NORTHBOUND ROADWAY AND SHOULDERS TO BOTTOM OF FINAL LAYER OF HOT MIX ASPHALT.
5. INSTALL NORTHBOUND TRANSITION RAILING, GUARD RAILING, AND BIKE RAILING.
6. PLACE STAGE 2 EROSION CONTROL.
7. REMOVE STAGE 2 TRAFFIC HANDLING.

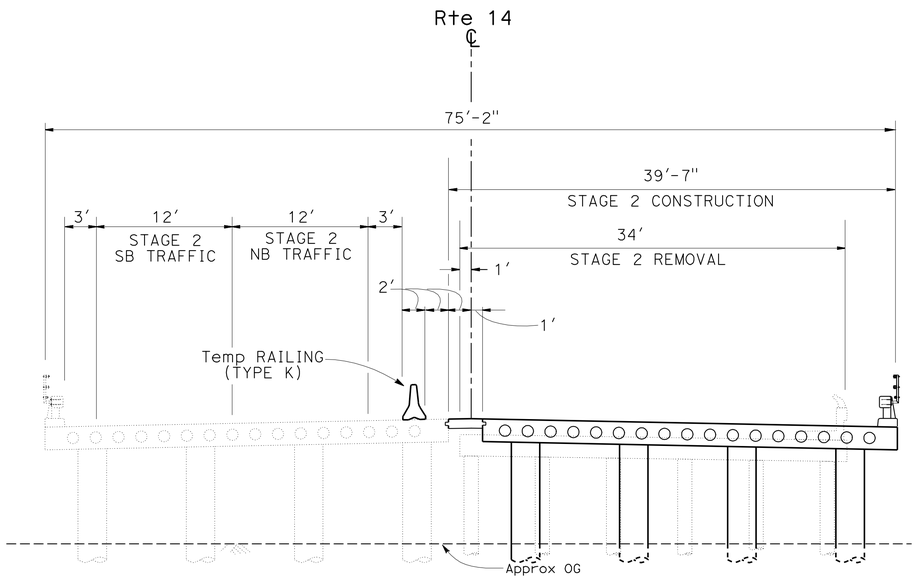

NO SCALE

STAGE 2 TYPICAL SECTION
RED ROCK CANYON BRIDGE

Sta 396+27.19 TO 400+33.19

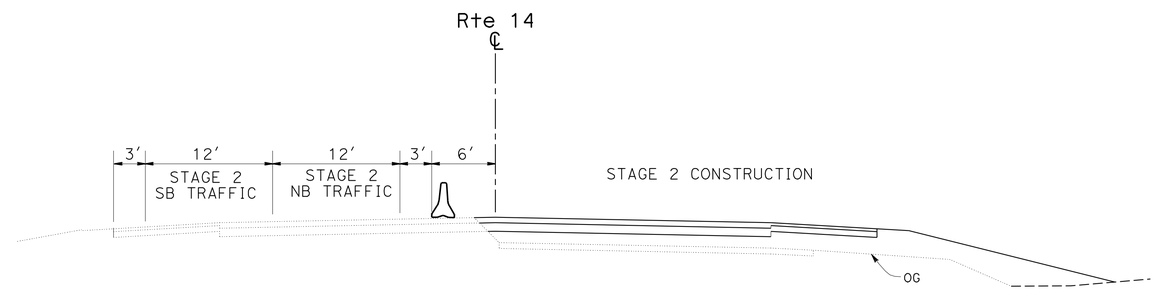

NO SCALE

STAGE 2 TYPICAL SECTION

Sta 391+50 TO 396+27.19
Sta 400+33.19 TO 412+00

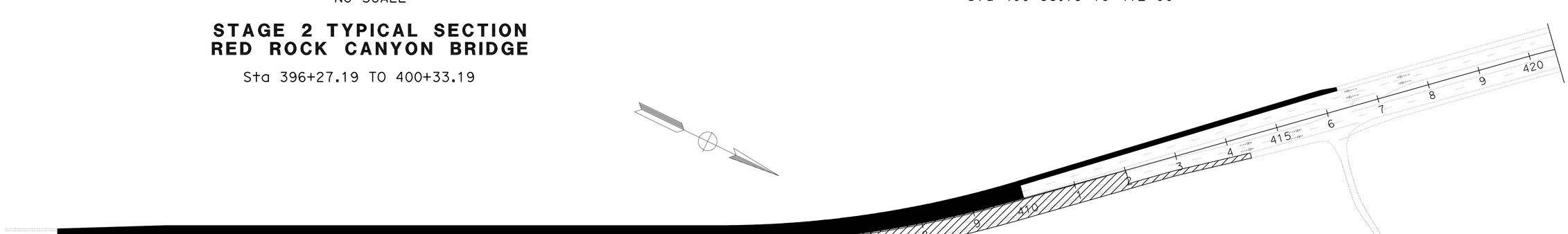

APPROVED FOR STATE CONSTRUCTION WORK ONLY

STAGE 2
STAGE CONSTRUCTION PLAN
SCALE 1" = 100'
SC-2

STATE OF CALIFORNIA - DEPARTMENT OF TRANSPORTATION
Caltrans
09-DESIGN
FUNCTIONAL SUPERVISOR: STEPHEN WINZENREAD
CALCULATED-DESIGNED BY: STEPHEN WINZENREAD
CHECKED BY: TONY SYMANOVICH
REVISED BY
DATE REVISED

LAST REVISION 06-14-12
DATE PLOTTED => 28-SEP-2012
TIME PLOTTED => 13:08

Dist	COUNTY	ROUTE	POST MILES TOTAL PROJECT	SHEET No.	TOTAL SHEETS
06	Ker	14	39.3/40.3	24	71

4-18-12
REGISTERED CIVIL ENGINEER DATE

9-24-12
PLANS APPROVAL DATE

REGISTERED PROFESSIONAL ENGINEER
ANTON SYMANOVICH
No. 78419
Exp. 9-30-13
CIVIL
STATE OF CALIFORNIA

THE STATE OF CALIFORNIA OR ITS OFFICERS OR AGENTS SHALL NOT BE RESPONSIBLE FOR THE ACCURACY OR COMPLETENESS OF SCANNED COPIES OF THIS PLAN SHEET.

STAGE 3

1. CONSTRUCT ROADWAY AND SHOULDERS TO FINISHED GRADE.
2. RECONSTRUCT METAL BEAM GUARD RAILING.
3. PLACE SIGNS AND STRIPING.

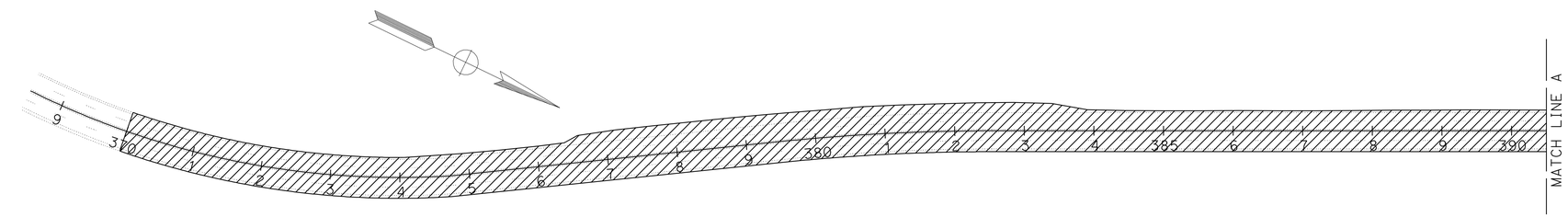

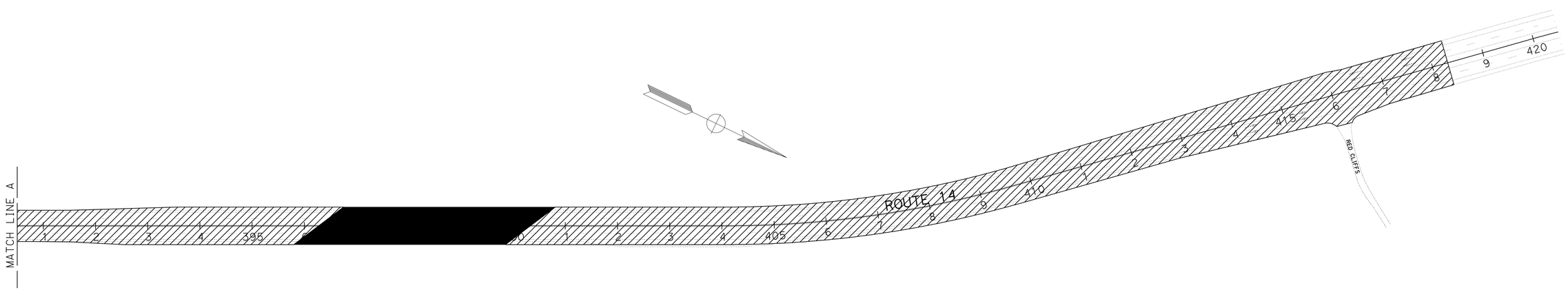

STAGE 3

APPROVED FOR STAGE CONSTRUCTION WORK ONLY

STAGE CONSTRUCTION PLAN
SCALE 1" = 100'
SC-3

STATE OF CALIFORNIA - DEPARTMENT OF TRANSPORTATION
Caltrans
09-DESIGN

FUNCTIONAL SUPERVISOR: STEPHEN WINZENREAD
CALCULATED-DESIGNED BY: TONY SYMANOVICH
CHECKED BY: STEPHEN WINZENREAD
REVISED BY
DATE REVISED

LAST REVISION 04-24-12
DATE PLOTTED => 28-SEP-2012
TIME PLOTTED => 13:08

Dist	COUNTY	ROUTE	POST MILES TOTAL PROJECT	SHEET No.	TOTAL SHEETS
06	Ker	14	39.3/40.3	25	71

REGISTERED CIVIL ENGINEER 4-18-12 DATE

9-24-12
PLANS APPROVAL DATE

REGISTERED PROFESSIONAL ENGINEER ANTON SYMANOVICH No. 78419 Exp. 9-30-13 CIVIL STATE OF CALIFORNIA

THE STATE OF CALIFORNIA OR ITS OFFICERS OR AGENTS SHALL NOT BE RESPONSIBLE FOR THE ACCURACY OR COMPLETENESS OF SCANNED COPIES OF THIS PLAN SHEET.

NOTES:

1. SIGN NUMBERS 1, 2, 3, 4, 6, 18, 19, 22, 23, 24, 25, 26, 27, AND 28 SHALL REMAIN IN PLACE FOR BOTH STAGE 1 AND STAGE 2 TRAFFIC HANDLING.
2. FOR ADDITIONAL CONSTRUCTION AREA SIGNS SEE SHEET CS-1.

LEGEND:

- XX Temp - TEMPORARY TRAFFIC STRIPE DETAIL
- BEGIN/END TRAFFIC STRIPE DETAIL
- CONSTRUCTION AREA SIGN
- EXISTING ROADSIDE SIGN
- DIRECTION OF TRAFFIC
- TYPE VI ARROW
- TYPE V ARROW
- FLASHING ARROW SIGN
- CHANNELIZER
- TEMPORARY RAILING (TYPE K)
- TEMPORARY CRASH CUSHION

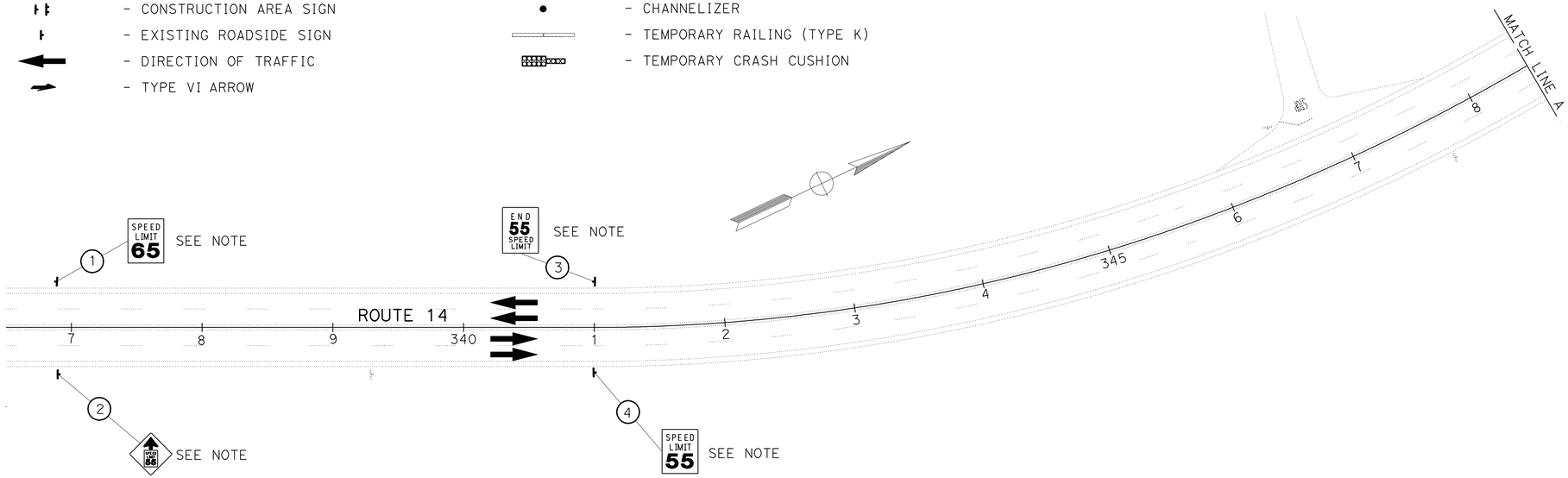

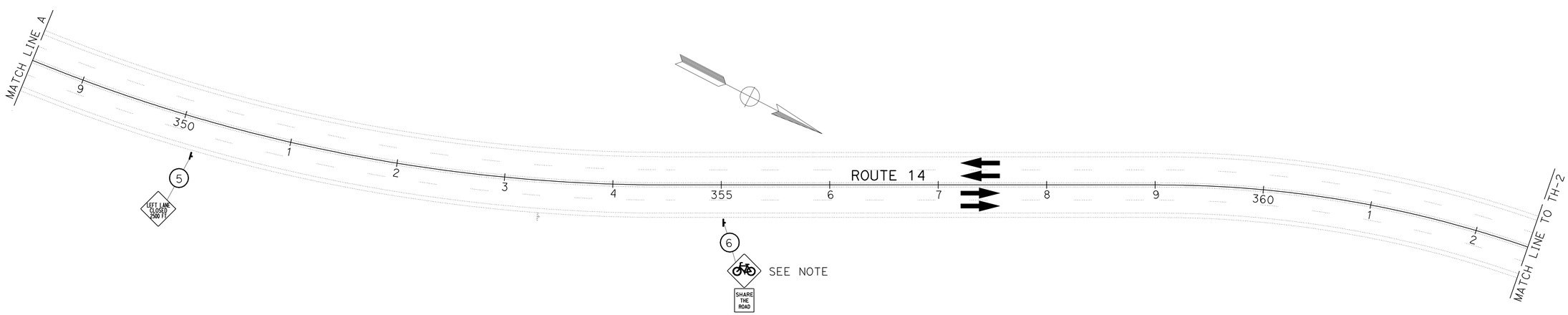

APPROVED FOR TRAFFIC HANDLING WORK ONLY

STAGE 1
TRAFFIC HANDLING PLAN
SCALE 1′ = 50′ **TH-1**

STATE OF CALIFORNIA - DEPARTMENT OF TRANSPORTATION
Caltrans
09-DESIGN

FUNCTIONAL SUPERVISOR: STEPHEN WINZENREAD
CALCULATED-DESIGNED BY: TONY SYMANOVICH
CHECKED BY: STEPHEN WINZENREAD
REVISED BY
DATE REVISED

LAST REVISION 04-23-12
DATE PLOTTED => 28-SEP-2012
TIME PLOTTED => 13:08

Dist	COUNTY	ROUTE	POST MILES TOTAL PROJECT	SHEET No.	TOTAL SHEETS
06	Ker	14	39.3/40.3	26	71

4-18-12
REGISTERED CIVIL ENGINEER DATE

9-24-12
PLANS APPROVAL DATE

REGISTERED PROFESSIONAL ENGINEER
ANTON SYMANOVICH
No. 78419
Exp. 9-30-13
CIVIL
STATE OF CALIFORNIA

THE STATE OF CALIFORNIA OR ITS OFFICERS OR AGENTS SHALL NOT BE RESPONSIBLE FOR THE ACCURACY OR COMPLETENESS OF SCANNED COPIES OF THIS PLAN SHEET.

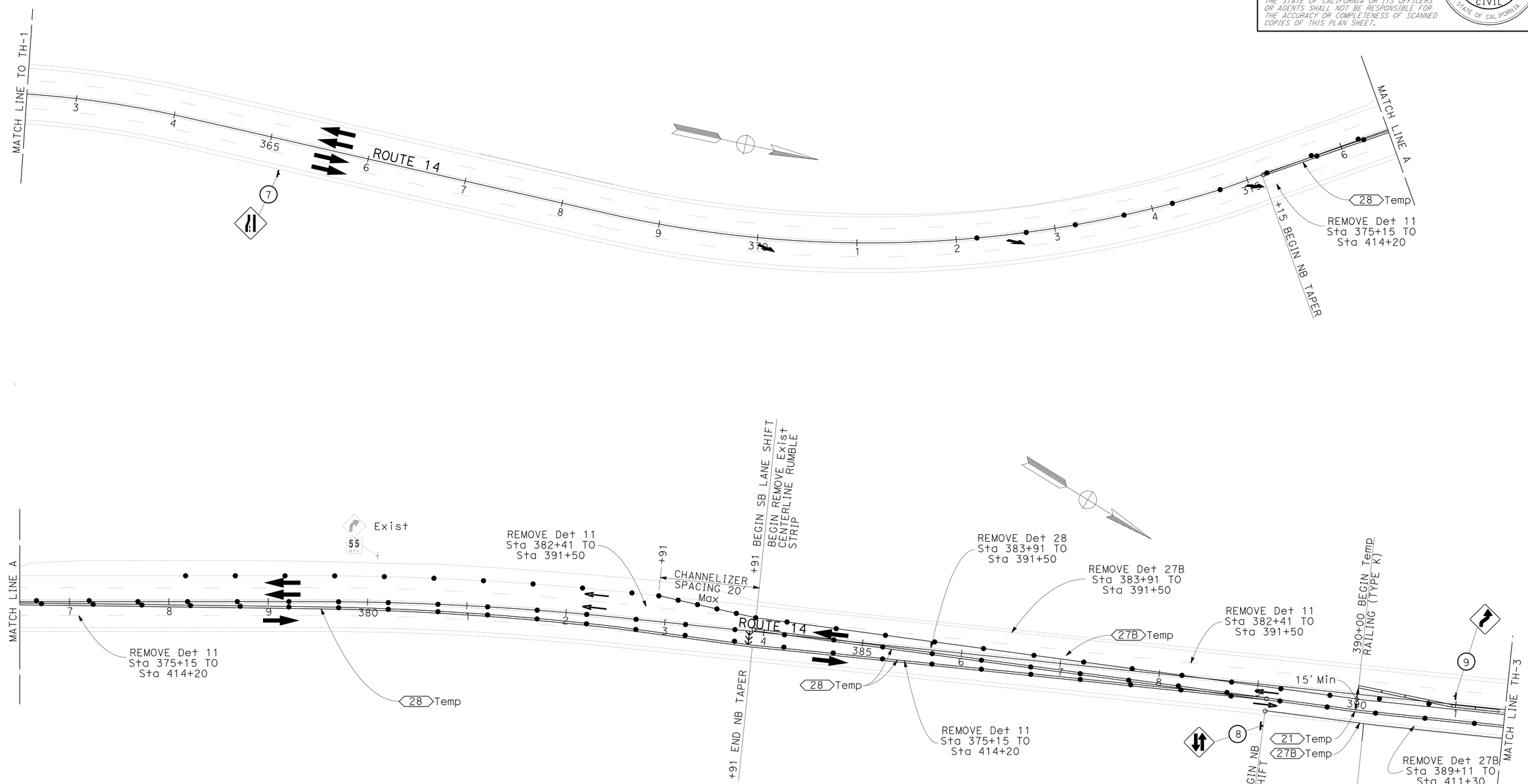

APPROVED FOR TRAFFIC HANDLING WORK ONLY

STAGE 1
TRAFFIC HANDLING PLAN

SCALE 1' = 50'

TH-2

STATE OF CALIFORNIA - DEPARTMENT OF TRANSPORTATION
Caltrans
09-DESIGN

FUNCTIONAL SUPERVISOR: STEPHEN WINZENREAD
CALCULATED-DESIGNED BY: STEPHEN WINZENREAD
CHECKED BY: TONY SYMANOVICH
REVISED BY
DATE REVISED

LAST REVISION 07-05-12
DATE PLOTTED => 28-SEP-2012
TIME PLOTTED => 13:09

Dist	COUNTY	ROUTE	POST MILES TOTAL PROJECT	SHEET No.	TOTAL SHEETS
06	Ker	14	39.3/40.3	27	71

4-18-12
REGISTERED CIVIL ENGINEER DATE

9-24-12
PLANS APPROVAL DATE

REGISTERED PROFESSIONAL ENGINEER
ANTON SYMANOVICH
No. 78419
Exp. 9-30-13
CIVIL
STATE OF CALIFORNIA

THE STATE OF CALIFORNIA OR ITS OFFICERS OR AGENTS SHALL NOT BE RESPONSIBLE FOR THE ACCURACY OR COMPLETENESS OF SCANNED COPIES OF THIS PLAN SHEET.

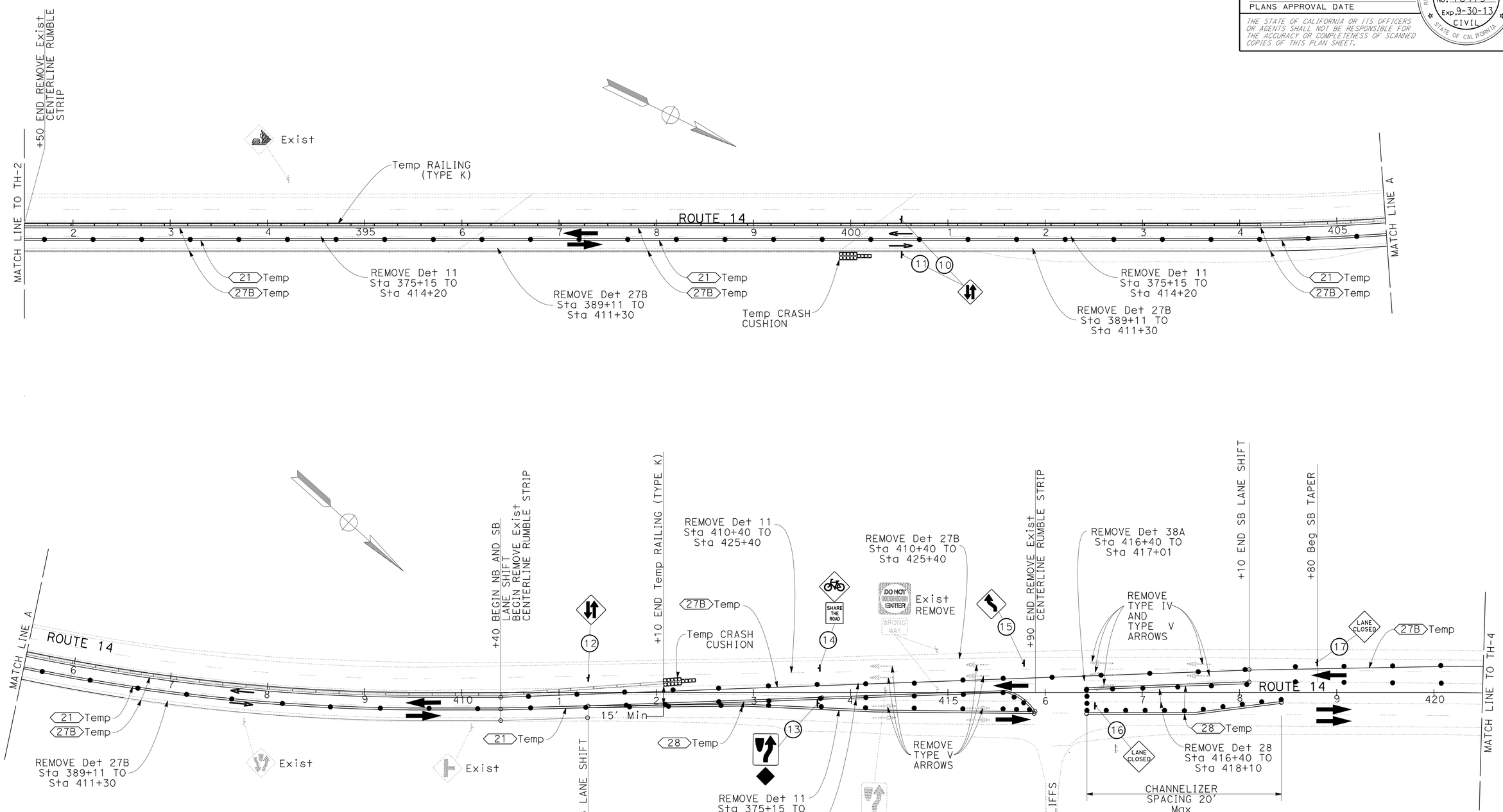

APPROVED FOR TRAFFIC HANDLING WORK ONLY

STAGE 1 TRAFFIC HANDLING PLAN

SCALE 1' = 50'

TH-3

STATE OF CALIFORNIA - DEPARTMENT OF TRANSPORTATION
Caltrans
09-DESIGN

FUNCTIONAL SUPERVISOR: STEPHEN WINZENREAD
CALCULATED-DESIGNED BY: STEPHEN WINZENREAD
CHECKED BY: TONY SYMANOVICH
REVISED BY
DATE REVISED

LAST REVISION 07-02-12
DATE PLOTTED => 28-SEP-2012
TIME PLOTTED => 13:09

Dist	COUNTY	ROUTE	POST MILES TOTAL PROJECT	SHEET No.	TOTAL SHEETS
06	Ker	14	39.3/40.3	28	71

REGISTERED CIVIL ENGINEER 4-18-12 DATE

9-24-12
PLANS APPROVAL DATE

REGISTERED PROFESSIONAL ENGINEER
ANTON SYMANOVICH
No. 78419
Exp. 9-30-13
CIVIL
STATE OF CALIFORNIA

THE STATE OF CALIFORNIA OR ITS OFFICERS OR AGENTS SHALL NOT BE RESPONSIBLE FOR THE ACCURACY OR COMPLETENESS OF SCANNED COPIES OF THIS PLAN SHEET.

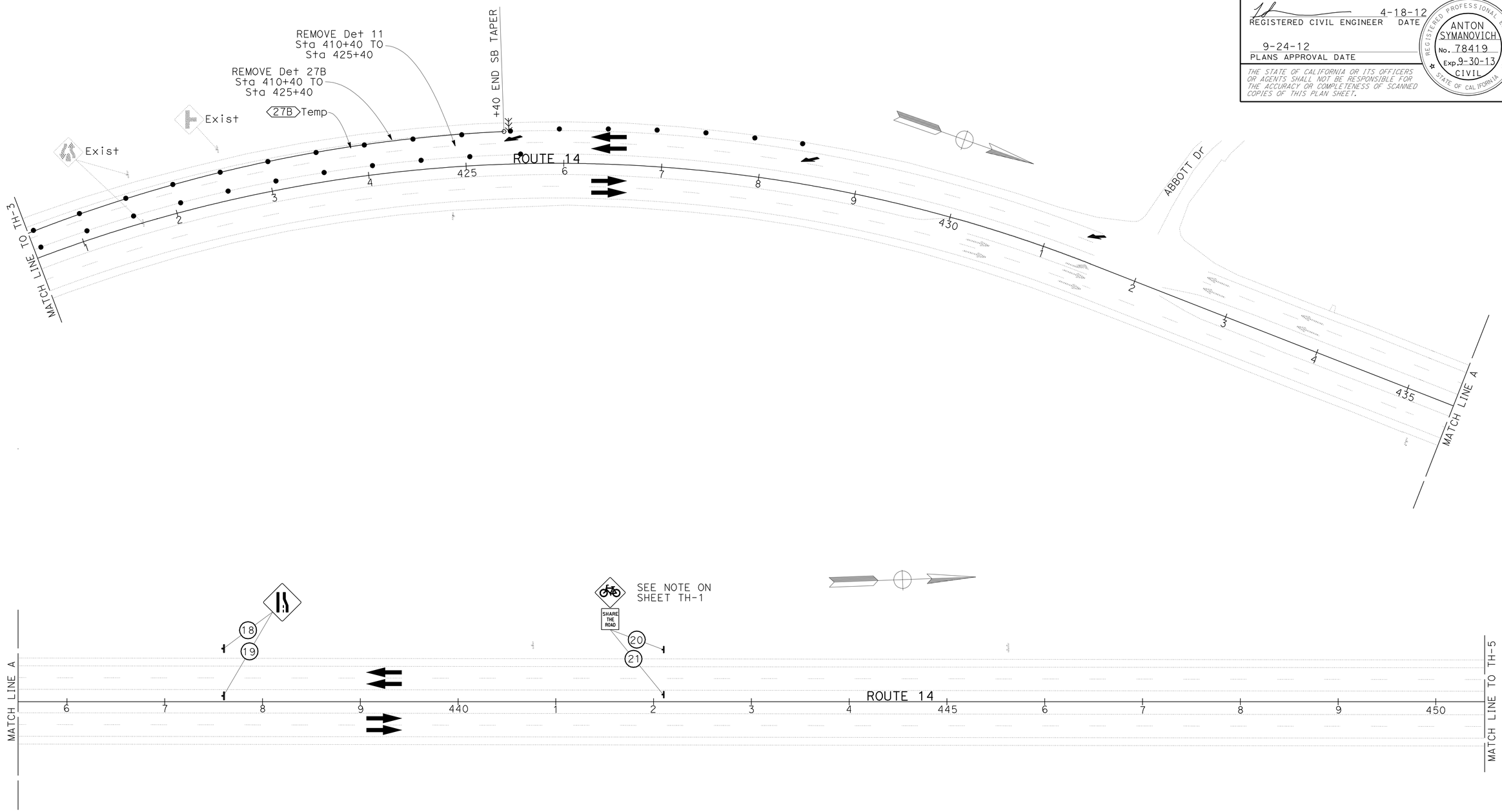

APPROVED FOR TRAFFIC HANDLING WORK ONLY

STAGE 1
TRAFFIC HANDLING PLAN
SCALE 1′ = 50′ **TH-4**

STATE OF CALIFORNIA - DEPARTMENT OF TRANSPORTATION
Caltrans
09-DESIGN

FUNCTIONAL SUPERVISOR: STEPHEN WINZENREAD
CALCULATED-DESIGNED BY: STEPHEN WINZENREAD
CHECKED BY: TONY SYMANOVICH
REVISED BY
DATE REVISED

LAST REVISION 07-05-12
DATE PLOTTED => 28-SEP-2012
TIME PLOTTED => 13:09

Dist	COUNTY	ROUTE	POST MILES TOTAL PROJECT	SHEET No.	TOTAL SHEETS
06	Ker	14	39.3/40.3	29	71

4-18-12
REGISTERED CIVIL ENGINEER DATE

9-24-12
PLANS APPROVAL DATE

REGISTERED PROFESSIONAL ENGINEER
ANTON SYMANOVICH
No. 78419
Exp. 9-30-13
CIVIL
STATE OF CALIFORNIA

THE STATE OF CALIFORNIA OR ITS OFFICERS OR AGENTS SHALL NOT BE RESPONSIBLE FOR THE ACCURACY OR COMPLETENESS OF SCANNED COPIES OF THIS PLAN SHEET.

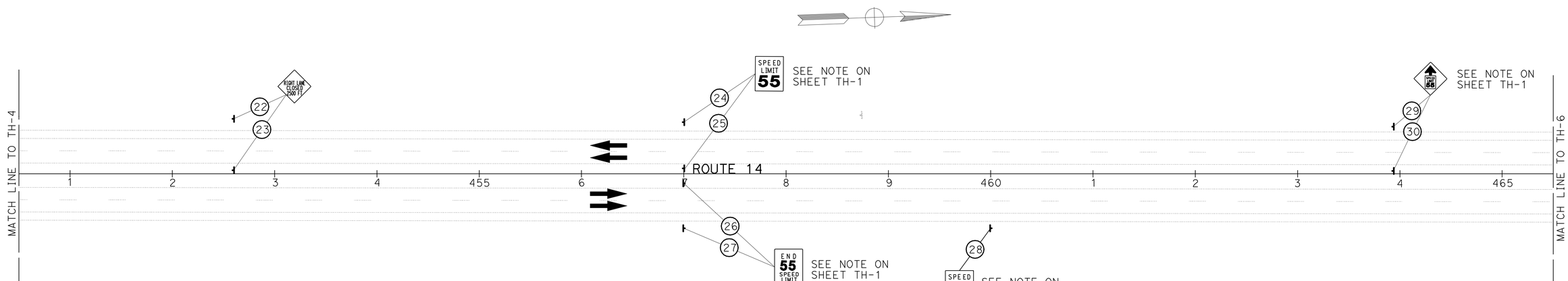

APPROVED FOR TRAFFIC HANDLING WORK ONLY

STAGE 1
TRAFFIC HANDLING PLAN
SCALE 1' = 50'

TH-5

STATE OF CALIFORNIA - DEPARTMENT OF TRANSPORTATION
Caltrans
09-DESIGN

FUNCTIONAL SUPERVISOR: STEPHEN WINZENREAD
CALCULATED-DESIGNED BY: STEPHEN WINZENREAD
CHECKED BY: TONY SYMANOVICH
REVISED BY
DATE REVISED

LAST REVISION 04-23-12
DATE PLOTTED => 28-SEP-2012
TIME PLOTTED => 13:09

Dist	COUNTY	ROUTE	POST MILES TOTAL PROJECT	SHEET No.	TOTAL SHEETS
06	Ker	14	39.3/40.3	30	71

4-18-12
REGISTERED CIVIL ENGINEER DATE

9-24-12
PLANS APPROVAL DATE

REGISTERED PROFESSIONAL ENGINEER
ANTON SYMANOVICH
No. 78419
Exp. 9-30-13
CIVIL
STATE OF CALIFORNIA

THE STATE OF CALIFORNIA OR ITS OFFICERS OR AGENTS SHALL NOT BE RESPONSIBLE FOR THE ACCURACY OR COMPLETENESS OF SCANNED COPIES OF THIS PLAN SHEET.

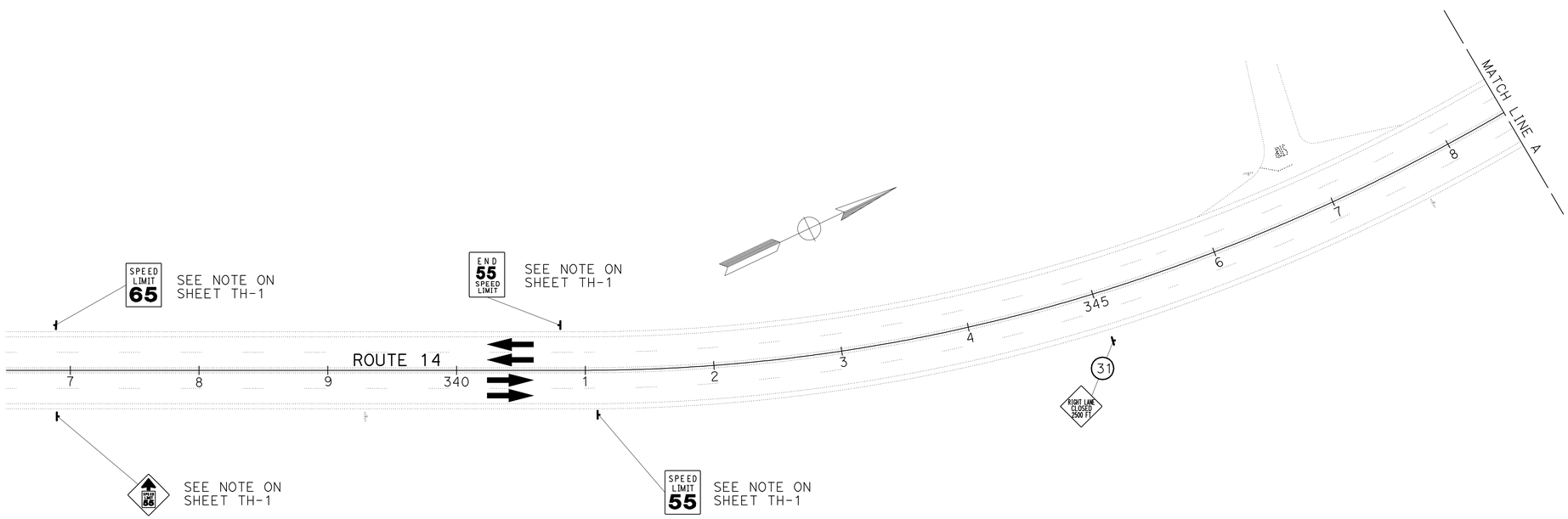

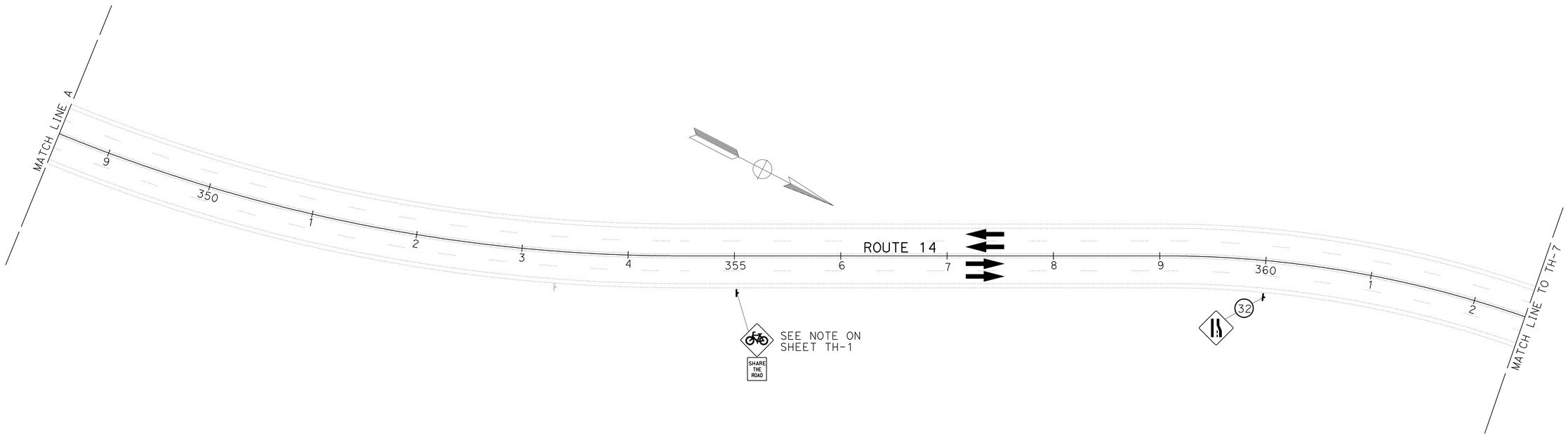

APPROVED FOR TRAFFIC HANDLING WORK ONLY

STAGE 2 TRAFFIC HANDLING PLAN

SCALE 1' = 50'

TH-6

STATE OF CALIFORNIA - DEPARTMENT OF TRANSPORTATION
Caltrans
09-DESIGN

FUNCTIONAL SUPERVISOR: STEPHEN WINZENREAD
CALCULATED-DESIGNED BY: STEPHEN WINZENREAD
CHECKED BY: TONY SYMANOVICH
REVISED BY
DATE REVISED

LAST REVISION 04-23-12
DATE PLOTTED => 28-SEP-2012
TIME PLOTTED => 13:09

Dist	COUNTY	ROUTE	POST MILES TOTAL PROJECT	SHEET No.	TOTAL SHEETS
06	Ker	14	39.3/40.3	31	71

4-18-12
REGISTERED CIVIL ENGINEER DATE

9-24-12
PLANS APPROVAL DATE

REGISTERED PROFESSIONAL ENGINEER
ANTON SYMANOVICH
No. 78419
Exp. 9-30-13
CIVIL
STATE OF CALIFORNIA

THE STATE OF CALIFORNIA OR ITS OFFICERS OR AGENTS SHALL NOT BE RESPONSIBLE FOR THE ACCURACY OR COMPLETENESS OF SCANNED COPIES OF THIS PLAN SHEET.

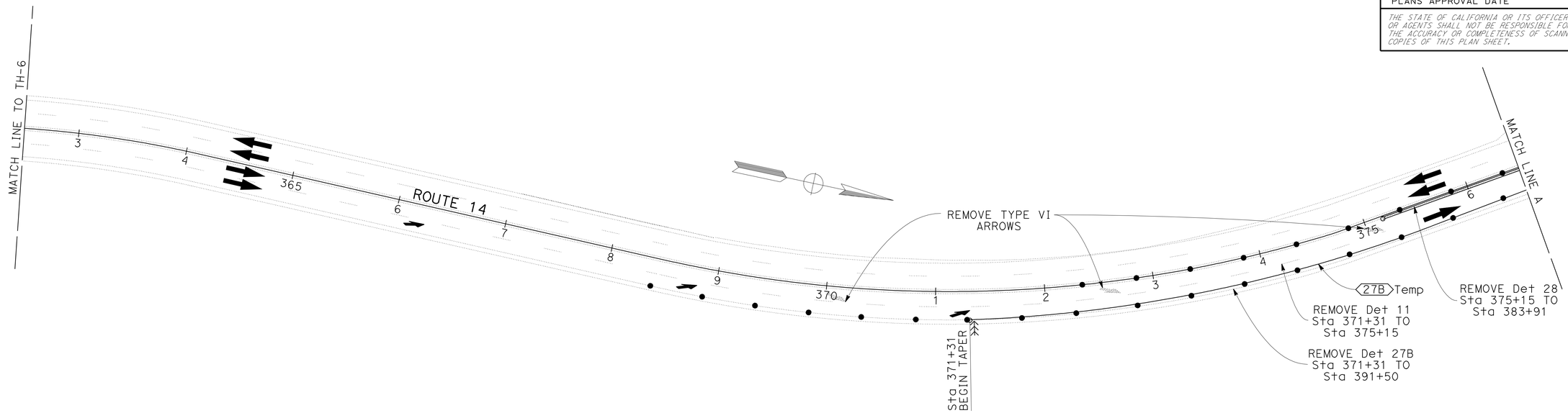

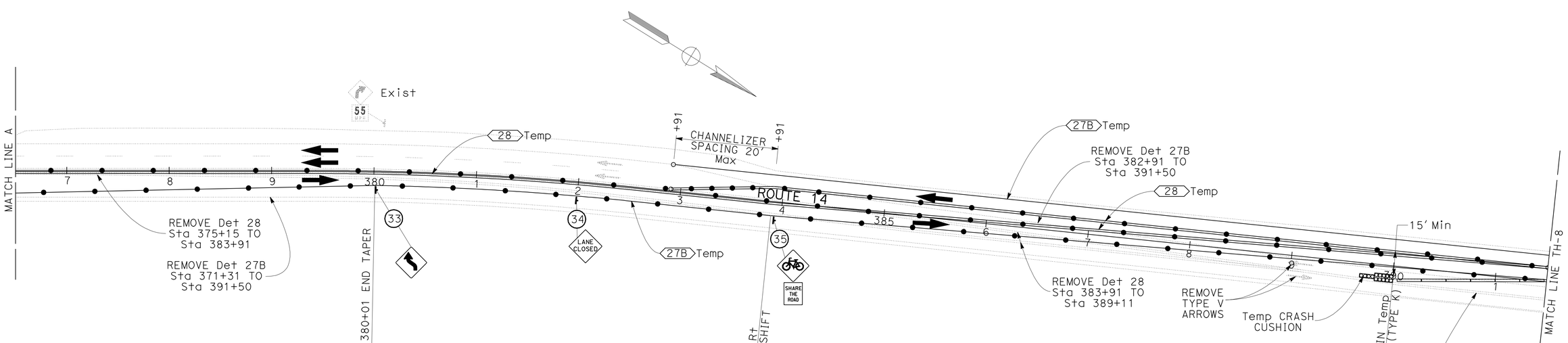

APPROVED FOR TRAFFIC HANDLING WORK ONLY

STAGE 2 TRAFFIC HANDLING PLAN TH-7

SCALE 1' = 50'

STATE OF CALIFORNIA - DEPARTMENT OF TRANSPORTATION
Caltrans®
09-DESIGN

FUNCTIONAL SUPERVISOR: STEPHEN WINZENREAD
CALCULATED-DESIGNED BY: STEPHEN WINZENREAD
CHECKED BY: TONY SYMANOVICH
REVISED BY
DATE REVISED

LAST REVISION 04-23-12
DATE PLOTTED => 28-SEP-2012
TIME PLOTTED => 13:09

Dist	COUNTY	ROUTE	POST MILES TOTAL PROJECT	SHEET No.	TOTAL SHEETS
06	Ker	14	39.3/40.3	32	71

4-18-12
REGISTERED CIVIL ENGINEER DATE

9-24-12
PLANS APPROVAL DATE

REGISTERED PROFESSIONAL ENGINEER
ANTON SYMANOVICH
No. 78419
Exp. 9-30-13
CIVIL
STATE OF CALIFORNIA

THE STATE OF CALIFORNIA OR ITS OFFICERS OR AGENTS SHALL NOT BE RESPONSIBLE FOR THE ACCURACY OR COMPLETENESS OF SCANNED COPIES OF THIS PLAN SHEET.

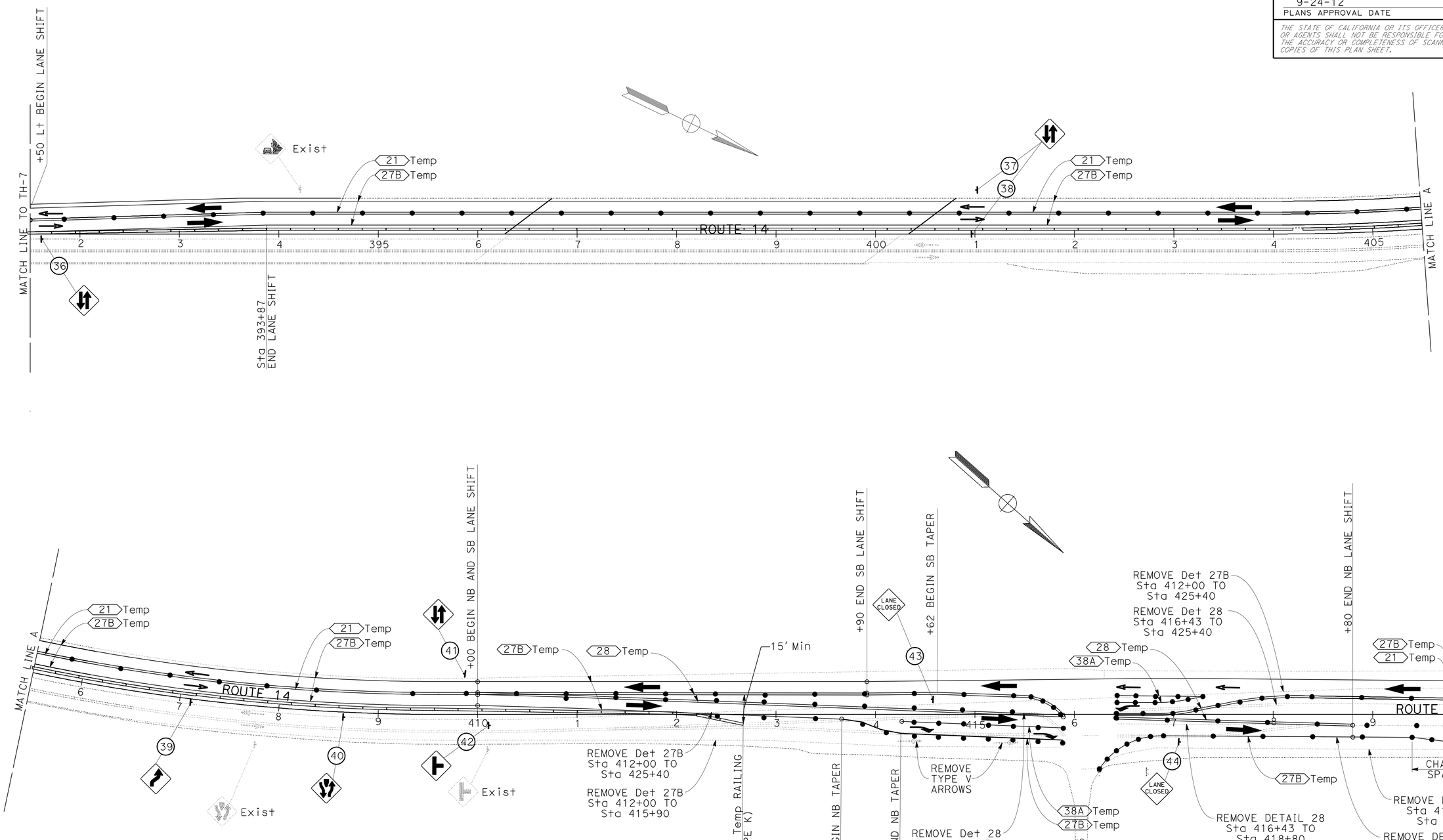

APPROVED FOR TRAFFIC HANDLING WORK ONLY

STAGE 2
TRAFFIC HANDLING PLAN
SCALE 1' = 50'

TH-8

STATE OF CALIFORNIA - DEPARTMENT OF TRANSPORTATION
Caltrans
09-DESIGN

FUNCTIONAL SUPERVISOR: STEPHEN WINZENREAD
CALCULATED-DESIGNED BY: STEPHEN WINZENREAD
CHECKED BY: TONY SYMANOVICH
REVISED BY
DATE REVISED

LAST REVISION 07-02-12
DATE PLOTTED => 28-SEP-2012
TIME PLOTTED => 13:09

Dist	COUNTY	ROUTE	POST MILES TOTAL PROJECT	SHEET No.	TOTAL SHEETS
06	Ker	14	39.3/40.3	33	71

4-18-12
REGISTERED CIVIL ENGINEER DATE

9-24-12
PLANS APPROVAL DATE

REGISTERED PROFESSIONAL ENGINEER
ANTON SYMANOVICH
No. 78419
Exp. 9-30-13
CIVIL
STATE OF CALIFORNIA

THE STATE OF CALIFORNIA OR ITS OFFICERS OR AGENTS SHALL NOT BE RESPONSIBLE FOR THE ACCURACY OR COMPLETENESS OF SCANNED COPIES OF THIS PLAN SHEET.

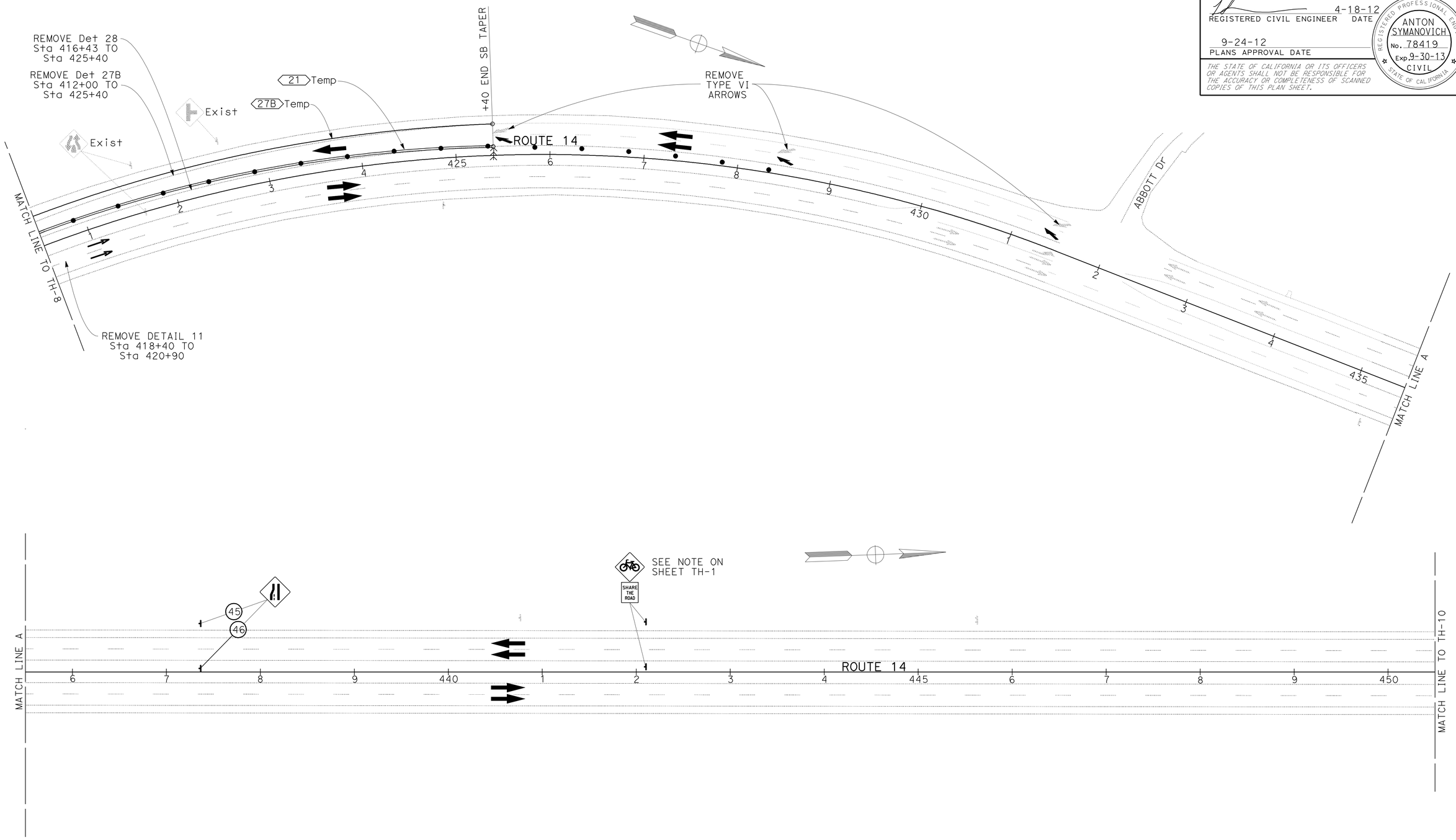

APPROVED FOR TRAFFIC HANDLING WORK ONLY

STAGE 2
TRAFFIC HANDLING PLAN
SCALE 1' = 50'

TH-9

STATE OF CALIFORNIA - DEPARTMENT OF TRANSPORTATION
Caltrans
09-DESIGN

FUNCTIONAL SUPERVISOR: STEPHEN WINZENREAD
CALCULATED-DESIGNED BY: STEPHEN WINZENREAD
CHECKED BY: TONY SYMANOVICH
REVISED BY
DATE REVISED

LAST REVISION 07-05-12
DATE PLOTTED => 28-SEP-2012
TIME PLOTTED => 13:09

Dist	COUNTY	ROUTE	POST MILES TOTAL PROJECT	SHEET No.	TOTAL SHEETS
06	Ker	14	39.3/40.3	34	71

4-18-12
REGISTERED CIVIL ENGINEER DATE

9-24-12
PLANS APPROVAL DATE

REGISTERED PROFESSIONAL ENGINEER
ANTON SYMANOVICH
No. 78419
Exp. 9-30-13
CIVIL
STATE OF CALIFORNIA

THE STATE OF CALIFORNIA OR ITS OFFICERS OR AGENTS SHALL NOT BE RESPONSIBLE FOR THE ACCURACY OR COMPLETENESS OF SCANNED COPIES OF THIS PLAN SHEET.

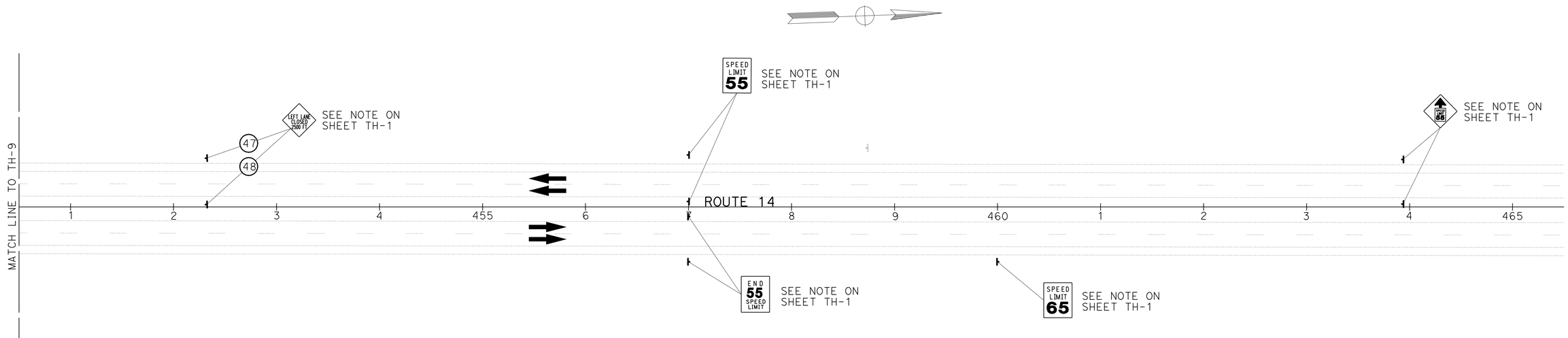

APPROVED FOR TRAFFIC HANDLING WORK ONLY

STAGE 2
TRAFFIC HANDLING PLAN
SCALE 1′ = 50′ **TH-10**

STATE OF CALIFORNIA - DEPARTMENT OF TRANSPORTATION
Caltrans
09-DESIGN

FUNCTIONAL SUPERVISOR: STEPHEN WINZENREAD
CALCULATED-DESIGNED BY: STEPHEN WINZENREAD
CHECKED BY: TONY SYMANOVICH
REVISED BY
DATE REVISED

LAST REVISION 07-05-12
DATE PLOTTED => 28-SEP-2012
TIME PLOTTED => 13:09

Dist	COUNTY	ROUTE	POST MILES TOTAL PROJECT	SHEET No.	TOTAL SHEETS
06	Ker	14	39.3/40.3	35	71

4-18-12
REGISTERED CIVIL ENGINEER DATE

9-24-12
PLANS APPROVAL DATE

REGISTERED PROFESSIONAL ENGINEER
ANTON SYMANOVICH
No. 78419
Exp. 9-30-13
CIVIL
STATE OF CALIFORNIA

THE STATE OF CALIFORNIA OR ITS OFFICERS OR AGENTS SHALL NOT BE RESPONSIBLE FOR THE ACCURACY OR COMPLETENESS OF SCANNED COPIES OF THIS PLAN SHEET.

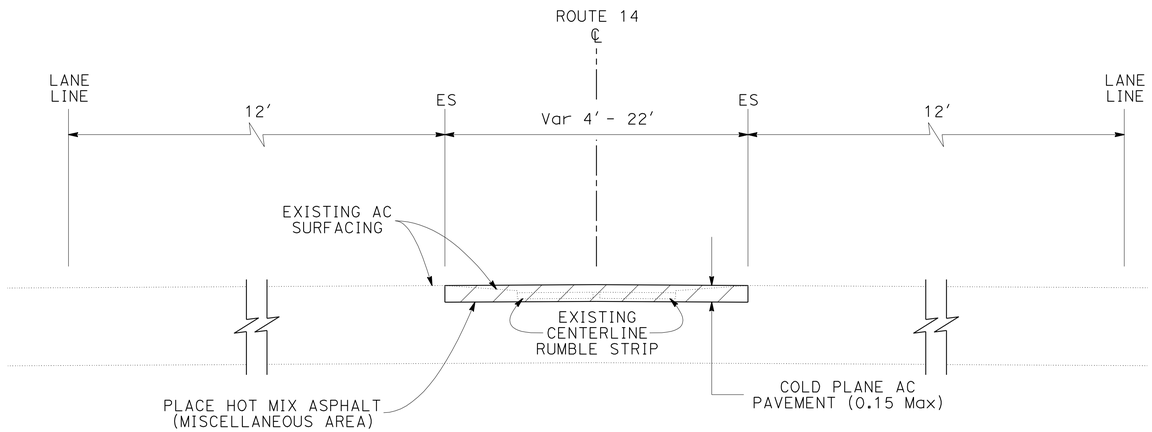

REMOVE EXISTING CENTERLINE RUMBLE STRIP

Sta 383+91 TO Sta 391+50
Sta 410+40 TO Sta 415+90

APPROVED FOR TRAFFIC HANDLING WORK ONLY

TRAFFIC HANDLING DETAILS
NO SCALE

THD-1

STATE OF CALIFORNIA - DEPARTMENT OF TRANSPORTATION
Caltrans
09-DESIGN

FUNCTIONAL SUPERVISOR: STEPHEN WINZENREAD
CALCULATED-DESIGNED BY: STEPHEN WINZENREAD
CHECKED BY: TONY SYMANOVICH
REVISED BY
DATE REVISED

LAST REVISION 06-14-12
DATE PLOTTED => 28-SEP-2012
TIME PLOTTED => 13:09

Dist	COUNTY	ROUTE	POST MILES TOTAL PROJECT	SHEET No.	TOTAL SHEETS
06	Ker	14	39.3/40.3	36	71

REGISTERED CIVIL ENGINEER 4-18-12 DATE

9-24-12
PLANS APPROVAL DATE

REGISTERED PROFESSIONAL ENGINEER ANTON SYMANOVICH No. 78419 Exp. 9-30-13 CIVIL STATE OF CALIFORNIA

THE STATE OF CALIFORNIA OR ITS OFFICERS OR AGENTS SHALL NOT BE RESPONSIBLE FOR THE ACCURACY OR COMPLETENESS OF SCANNED COPIES OF THIS PLAN SHEET.

NOTE: (N) - NOT A SEPARATE PAY ITEM. FOR INFORMATION ONLY.

REMOVE PAINTED TRAFFIC STRIPE

STAGE	STATION TO STATION	LENGTH (N)	DETAIL 11	DETAIL 21	DETAIL 27B	DETAIL 28	DETAIL 38A
		FT	LF	LF	LF	LF	LF
1	375+15 - 382+41	726	300				
	382+41 - 383+91	150	120				
	383+91 - 389+11	520	420		520	3120	
	389+11 - 391+50	239	192		478	1434	
	391+50 - 410+40	1890	756		1890		
	410+40 - 411+30	90	72		180	540	
	411+30 - 414+20	290	240		290	1740	
	414+20 - 415+90	170	144		170	1020	
	415+90 - 416+40	50	48		50		
	416+40 - 417+01	61	72		61		122
	417+01 - 418+10	109	96		109	366	
	418+10 - 425+40	730	300		730	654	
2	371+31 - 375+15	384	156		384		
	375+15 - 382+91	776			776	2328	
	382+91 - 383+91	100			200	600	
	383+91 - 389+11	520			1040	3120	
	389+11 - 391+50	239		717	478		
	391+50 - 412+00	2050					
	412+00 - 414+20	220			440	1320	
	414+20 - 415+90	170			340	1020	
	415+90 - 416+25	35			35		
	416+25 - 416+43	18			36		
	416+43 - 418+40	197			474	1182	
	418+40 - 418+80	40	24			240	
	418+80 - 420+40	160	72		320	480	
	420+40 - 420+90	50	24		50	150	
	420+90 - 425+40	450			450	1350	
3	371+31 - 382+91	1160			1160		
	382+91 - 383+91	100			200	300	
	383+91 - 391+50	759			1518	4554	
	396+27 - 400+33	406		1218	812		
	418+30 - 418+80	50			100	300	
	418+80 - 420+40	160			320	480	
	420+40 - 425+40	500			500	1500	
SUBTOTAL			3036	1935	14111	27798	122
TOTAL			47002				

REMOVE PAINTED PAVEMENT MARKING

STAGE	STATION	L†	R†	ARROWS TYPE III No. (N)	TYPE III SQFT	TYPE V No. (N)	TYPE V SQFT	TYPE VI No. (N)	TYPE VI SQFT
2	370+00		X					1	42
	372+50		X					1	42
	375+00							1	42
	389+11		X			2	66		
	407+75		X			2	66		
	425+40	X						1	42
	428+40	X						1	42
	431+40	X						1	42
3	366+10		X					1	42
	368+60		X					1	42
	371+10		X					1	42
	382+16	X				2	66		
	391+60	X				2	66		
	400+90	X				2	66		
	407+16	X				2	66		
	414+36		X	1	42				
	415+60		X	1	42				
	416+43	X		1	42	1	66		
	417+43	X				1	66		
	420+90		X			2	66		
	425+40	X						1	42
	428+40	X						1	42
	431+40	X						1	42
SUBTOTAL					126		594		504
TOTAL				1224					

TEMPORARY PAVEMENT MARKING (PAINT)

STAGE	STATION	L†	R†	ARROWS TYPE III No. (N)	TYPE III SQFT	TYPE V No. (N)	TYPE V SQFT	TYPE VI (L†) No. (N)	TYPE VI (L†) SQFT	TYPE VI (R†) No. (N)	TYPE VI (R†) SQFT
1	370+00		X					1	42		
	372+50		X					1	42		
	375+00		X					1	42		
	382+16	X				2	66				
	389+11		X			2	66				
	400+40		X			2	66				
	407+75		X			2	66				
	425+40	X								1	42
	428+40	X								1	42
	431+40	X								1	42
2	366+10		X							1	42
	368+60		X							1	42
	371+10		X							1	42
	391+60	X				2	66				
	400+90	X				2	66				
	407+16	X				2	66				
	414+36		X	1	42						
	415+60		X	1	42						
	416+43	X		1	42	1	33				
	417+43	X				1	33				
	420+90		X			2	66				
	425+40	X						1	42		
	428+40	X						1	42		
	431+40	X						1	42		
SUBTOTAL					126		594		252		252
TOTAL				1224							

TEMPORARY TRAFFIC STRIPE (PAINT)

STAGE	STATION TO STATION	LENGTH	DETAIL 21	DETAIL 27B	DETAIL 28	DETAIL 38A
		FT	LF	LF	LF	LF
1	375+15 - 382+91	776			776	
	382+91 - 383+91	100		100	100	
	383+91 - 389+11	520		520	1040	
	389+11 - 411+30	2219	2219	4438		
	411+30 - 415+90	460		460	920	
	415+90 - 416+43	53		53		
	416+43 - 418+10	167		167	334	
	418+10 - 418+43	33		33	33	
	418+43 - 425+40	697		697		
2	371+31 - 375+15	384		384		
	375+15 - 382+91	776		776	776	
	382+91 - 383+91	100		200	200	
	383+91 - 391+50	759		1518	1518	
	391+50 - 410+00	1850	1850	3700		
	410+00 - 414+26	426		852	852	
	414+26 - 415+90	164		328	328	164
	415+90 - 416+25	35		35		
	416+25 - 416+43	18		36		
	416+43 - 417+29	86		172	172	172
	417+29 - 418+80	151		302	302	
	418+80 - 420+40	160	160	320		
	420+40 - 425+40	500	500	500		
SUBTOTAL			4729	15591	7351	336
TOTAL			28007			

REMOVE THERMOPLASTIC PAVEMENT MARKINGS

STAGE	STATION	L†	R†	ARROWS TYPE III No. (N)	TYPE III SQFT	TYPE V No. (N)	TYPE V SQFT	TYPE VI No. (N)	TYPE VI SQFT
1	414+20	X	X			3	99		
	415+20	X	X			3	99		
	416+42	X				2	66	1	42
	417+42	X				2	66		
2	414+20		X			1	33		
	415+20		X			1	33		
SUBTOTAL							396		42
TOTAL				438					

APPROVED FOR TRAFFIC HANDLING WORK ONLY

TRAFFIC HANDLING QUANTITIES THQ-1

STATE OF CALIFORNIA - DEPARTMENT OF TRANSPORTATION
Caltrans 09-DESIGN

FUNCTIONAL SUPERVISOR: STEPHEN WINZENREAD
CALCULATED-DESIGNED BY: STEPHEN WINZENREAD
CHECKED BY: TONY SYMANOVICH
REVISED BY / DATE REVISED

LAST REVISION 07-02-12 | DATE PLOTTED => 28-SEP-2012 | TIME PLOTTED => 13:09

Dist	COUNTY	ROUTE	POST MILES TOTAL PROJECT	SHEET No.	TOTAL SHEETS
06	Ker	14	39.3/40.3	37	71

REGISTERED CIVIL ENGINEER 4-18-12 DATE

9-24-12
PLANS APPROVAL DATE

REGISTERED PROFESSIONAL ENGINEER ANTON SYMANOVICH No. 78419 Exp. 9-30-13 CIVIL STATE OF CALIFORNIA

THE STATE OF CALIFORNIA OR ITS OFFICERS OR AGENTS SHALL NOT BE RESPONSIBLE FOR THE ACCURACY OR COMPLETENESS OF SCANNED COPIES OF THIS PLAN SHEET.

NOTE: (N) - NOT A SEPARATE PAY ITEM. FOR INFORMATION ONLY.

REMOVE EXISTING CENTERLINE RUMBLE STRIP

STAGE	STATION TO STATION	* COLD PLANE ASPHALT CONCRETE PAVEMENT	* PLACE HOT MIX ASPHALT (MISCELLANEOUS AREA)	* HMA (TYPE A)
		SQYD	SQYD	TON
1	383+91 - 391+50	337	337	34
	410+40 - 415+90	673	673	68
TOTAL		1010	1010	102

* THIS ITEM INCLUDED IN TOTAL SHOWN ON SHEET Q-1.

TEMPORARY CRASH CUSHION MODULE

STAGE	STATION	L†	R†	TEMPORARY CRASH CUSHION, SAND FILLED (ARRAY 'TS14')	TEMPORARY CRASH CUSHION MODULE
				No. (N)	EA
1	400+00		X	1	14
	412+10	X		1	14
2	390+00		X	1	14
TOTAL					42

CHANNELIZER (SURFACE MOUNTED)

STAGE	STATION TO STATION	L†	R†	CHANNELIZER (SURFACE MOUNTED)
				EA
1	372+15 - 428+40	X	X	229
2	368+40 - 428+40	X	X	258
TOTAL				487

FLASHING ARROW SIGN

STAGE	STATION	L†	R†	FLASHING ARROW SIGN
				EA
1	380+90		X	1
	425+40	X		1
2	371+31		X	1
	425+40	X		1
TOTAL				4

TEMPORARY RAILING (TYPE K)

STAGE	STATION TO STATION	TEMPORARY RAILING (TYPE K)
		LF
1	390+00 - 412+10	2210
2	390+00 - 412+70	2270
TOTAL		4480

APPROVED FOR TRAFFIC HANDLING WORK ONLY

TRAFFIC HANDLING QUANTITIES THQ-2

STATE OF CALIFORNIA - DEPARTMENT OF TRANSPORTATION
Caltrans
09-DESIGN

FUNCTIONAL SUPERVISOR: STEPHEN WINZENREAD
CALCULATED-DESIGNED BY: STEPHEN WINZENREAD
CHECKED BY: TONY SYMANOVICH
REVISED BY
DATE REVISED

LAST REVISION 07-02-12 | DATE PLOTTED => 28-SEP-2012 | TIME PLOTTED => 13:09

Dist	COUNTY	ROUTE	POST MILES TOTAL PROJECT	SHEET No.	TOTAL SHEETS
06	Ker	14	39.3/40.3	38	71

REGISTERED CIVIL ENGINEER 4-18-12 DATE

9-24-12
PLANS APPROVAL DATE

REGISTERED PROFESSIONAL ENGINEER ANTON SYMANOVICH No. 78419 Exp. 9-30-13 CIVIL STATE OF CALIFORNIA

THE STATE OF CALIFORNIA OR ITS OFFICERS OR AGENTS SHALL NOT BE RESPONSIBLE FOR THE ACCURACY OR COMPLETENESS OF SCANNED COPIES OF THIS PLAN SHEET.

TRAFFIC HANDLING SIGN SUMMARY

STAGE	SHEET NUMBER	SIGN NUMBER	STATION/PM	LEFT	RIGHT	SIGN PANEL CODE	SIGN PANEL MESSAGE	SIGN PANEL SIZE (L x D)	SIGN PANEL BACKGROUND SHEETING COLOR	SIGN PANEL LEGEND SHEETING COLOR	POSTS ONE POST	POSTS SIZE (L x D)	FNBT	FSBT	COMMENTS
1	TH-1	1	336+88	X		R2-1 (65)	SPEED LIMIT 65	48" x 60"	WHITE	BLACK	X	4" x 6"		X	TO REMAIN IN PLACE FOR BOTH STAGE 1 AND STAGE 2 TRAFFIC HANDLING
	TH-1	2	336+88		X	W3-5	SPEED LIMIT 55 AHEAD	48" x 48"	FLORESCENT ORANGE	BLACK	X	4" x 6"	X		TO REMAIN IN PLACE FOR BOTH STAGE 1 AND STAGE 2 TRAFFIC HANDLING
	TH-1	3	341+00	X		R3 (CA)	END 55 SPEED LIMIT	48" x 60"	WHITE	BLACK	X	4" x 6"		X	TO REMAIN IN PLACE FOR BOTH STAGE 1 AND STAGE 2 TRAFFIC HANDLING
	TH-1	4	341+00		X	R2-1 (55)	SPEED LIMIT 55	48" x 60"	WHITE	BLACK	X	4" x 6"	X		TO REMAIN IN PLACE FOR BOTH STAGE 1 AND STAGE 2 TRAFFIC HANDLING
	TH-1	5	350+15		X	W21-5b	LEFT LANE CLOSED 2500 FT	48" x 48"	FLORESCENT ORANGE	BLACK	X	4" x 6"	X		
	TH-1	6	355+00		X	W11-1	BICYCLE SYMBOL	48" x 48"	FLORESCENT ORANGE	BLACK	X	4" x 6"	X		TO REMAIN IN PLACE FOR BOTH STAGE 1 AND STAGE 2 TRAFFIC HANDLING
						W16-1	SHARE THE ROAD	24" x 30"	FLORESCENT ORANGE	BLACK			X		
	TH-2	7	365+15		X	W4-2	LEFT LANE ENDS SYMBOL	48" x 48"	FLORESCENT ORANGE	BLACK	X	4" x 6"	X		
	TH-2	8	389+11		X	W6-3	TWO-WAY TRAFFIC SYMBOL	48" x 48"	FLORESCENT ORANGE	BLACK	X	4" x 6"	X		
	TH-2	9	391+00	X		W1-4	REVERSE CURVE SYMBOL	48" x 48"	FLORESCENT ORANGE	BLACK	X	4" x 6"		X	
	TH-3	10	400+50	X		W6-3	TWO-WAY TRAFFIC SYMBOL	48" x 48"	FLORESCENT ORANGE	BLACK	X	4" x 6"		X	
	TH-3	11	400+50		X	W6-3	TWO-WAY TRAFFIC SYMBOL	48" x 48"	FLORESCENT ORANGE	BLACK	X	4" x 6"	X		
	TH-3	12	411+30	X		W6-3	TWO-WAY TRAFFIC SYMBOL	48" x 48"	FLORESCENT ORANGE	BLACK	X	4" x 6"		X	
	TH-3	13	413+70		X	R4-7	KEEP RIGHT SYMBOL	36" x 48"	WHITE	BLACK	X	4" x 6"	X		
						N-3 (CA)	OBJECT MARKER SYMBOL	18" x 18"	FLORESCENT ORANGE				X		
	TH-3	14	413+70	X		W11-1	BICYCLE SYMBOL	48" x 48"	FLORESCENT ORANGE	BLACK	X	4" x 6"		X	
						W16-1	SHARE THE ROAD	24" x 30"	FLORESCENT ORANGE	BLACK					
	TH-3	15	415+78	X		W1-4	REVERSE CURVE SYMBOL	48" x 48"	FLORESCENT ORANGE	BLACK	X	4" x 6"		X	
	TH-3	16	416+50		X	C30 (CA)	LANE CLOSED	48" x 48"	FLORESCENT ORANGE	BLACK	X	4" x 6"	X		
	TH-3	17	418+80		X	C30 (CA)	LANE CLOSED	48" x 48"	FLORESCENT ORANGE	BLACK	X	4" x 6"		X	
	TH-4	18	437+60	X		W4-2	RIGHT LANE ENDS SYMBOL	48" x 48"	FLORESCENT ORANGE	BLACK	X	4" x 6"		X	
	TH-4	19	437+60	X		W4-2	RIGHT LANE ENDS SYMBOL	48" x 48"	FLORESCENT ORANGE	BLACK	X	4" x 6"		X	
	TH-4	20	442+10	X		W11-1	BICYCLE SYMBOL	48" x 48"	FLORESCENT ORANGE	BLACK	X	4" x 6"		X	TO REMAIN IN PLACE FOR BOTH STAGE 1 AND STAGE 2 TRAFFIC HANDLING
						W16-1	SHARE THE ROAD	24" x 30"	FLORESCENT ORANGE	BLACK					
	TH-4	21	442+10	X		W11-1	BICYCLE SYMBOL	48" x 48"	FLORESCENT ORANGE	BLACK	X	4" x 6"		X	TO REMAIN IN PLACE FOR BOTH STAGE 1 AND STAGE 2 TRAFFIC HANDLING
						W16-1	SHARE THE ROAD	24" x 30"	FLORESCENT ORANGE	BLACK					
	TH-5	22	452+60	X		W21-5b	RIGHT LANE CLOSED 2500 FT	48" x 48"	FLORESCENT ORANGE	BLACK	X	4" x 6"		X	
	TH-5	23	452+60	X		W21-5b	RIGHT LANE CLOSED 2500 FT	48" x 48"	FLORESCENT ORANGE	BLACK	X	4" x 6"		X	
	TH-5	24	457+00	X		R2-1 (55)	SPEED LIMIT 55	48" x 60"	WHITE	BLACK	X	4" x 6"		X	TO REMAIN IN PLACE FOR BOTH STAGE 1 AND STAGE 2 TRAFFIC HANDLING
	TH-5	25	457+00	X		R2-1 (55)	SPEED LIMIT 55	48" x 60"	WHITE	BLACK	X	4" x 6"		X	TO REMAIN IN PLACE FOR BOTH STAGE 1 AND STAGE 2 TRAFFIC HANDLING
	TH-5	26	457+00		X	R3 (CA)	END 55 SPEED LIMIT	48" x 60"	WHITE	BLACK	X	4" x 6"	X		TO REMAIN IN PLACE FOR BOTH STAGE 1 AND STAGE 2 TRAFFIC HANDLING
	TH-5	27	457+00		X	R3 (CA)	END 55 SPEED LIMIT	48" x 60"	WHITE	BLACK	X	4" x 6"	X		TO REMAIN IN PLACE FOR BOTH STAGE 1 AND STAGE 2 TRAFFIC HANDLING
	TH-5	28	460+00		X	R2-1 (65)	SPEED LIMIT 65	48" x 60"	WHITE	BLACK	X	4" x 6"	X		TO REMAIN IN PLACE FOR BOTH STAGE 1 AND STAGE 2 TRAFFIC HANDLING
	TH-5	29	464+00	X		W3-5	SPEED LIMIT 55 AHEAD	48" x 48"	FLORESCENT ORANGE	BLACK	X	4" x 6"		X	TO REMAIN IN PLACE FOR BOTH STAGE 1 AND STAGE 2 TRAFFIC HANDLING
	TH-5	30	464+00	X		W3-5	SPEED LIMIT 55 AHEAD	48" x 48"	FLORESCENT ORANGE	BLACK	X	4" x 6"		X	TO REMAIN IN PLACE FOR BOTH STAGE 1 AND STAGE 2 TRAFFIC HANDLING
2	TH-6	31	345+00		X	W21-5b	RIGHT LANE CLOSED 2500 FT	48" x 48"	FLORESCENT ORANGE	BLACK	X	4" x 6"	X		
	TH-6	32	360+00		X	W4-2	RIGHT LANE ENDS SYMBOL	48" x 48"	FLORESCENT ORANGE	BLACK	X	4" x 6"	X		
	TH-7	33	380+01		X	W1-4	REVERSE CURVE SYMBOL	48" x 48"	FLORESCENT ORANGE	BLACK	X	4" x 6"	X		
	TH-7	34	382+00		X	C30 (CA)	LANE CLOSED	48" x 48"	FLORESCENT ORANGE	BLACK	X	4" x 6"	X		
	TH-7	35	383+91		X	W11-1	BICYCLE SYMBOL	48" x 48"	FLORESCENT ORANGE	BLACK	X	4" x 6"	X		
						W16-1	SHARE THE ROAD	24" x 30"	FLORESCENT ORANGE	BLACK					
	TH-8	36	391+60		X	W6-3	TWO-WAY TRAFFIC SYMBOL	48" x 48"	FLORESCENT ORANGE	BLACK	X	4" x 6"	X		
	TH-8	37	401+00	X		W6-3	TWO-WAY TRAFFIC SYMBOL	48" x 48"	FLORESCENT ORANGE	BLACK	X	4" x 6"		X	
	TH-8	38	401+00		X	W6-3	TWO-WAY TRAFFIC SYMBOL	48" x 48"	FLORESCENT ORANGE	BLACK	X	4" x 6"	X		
	TH-8	39	407+10		X	W1-4	REVERSE CURVE SYMBOL	48" x 48"	FLORESCENT ORANGE	BLACK	X	4" x 6"	X		
	TH-8	40	408+60		X	W6-1	DIVIDED HIGHWAY SYMBOL	48" x 48"	FLORESCENT ORANGE	BLACK	X	4" x 6"	X		
	TH-8	41	410+00	X		W6-3	TWO-WAY TRAFFIC SYMBOL	48" x 48"	FLORESCENT ORANGE	BLACK	X	4" x 6"		X	
	TH-8	42	410+10		X	W2-2	INTERSECTION SYMBOL	48" x 48"	FLORESCENT ORANGE	BLACK	X	4" x 6"	X		
	TH-8	43	414+60	X		C30 (CA)	LANE CLOSED	48" x 48"	FLORESCENT ORANGE	BLACK	X	4" x 6"		X	
	TH-8	44	417+00		X	C30 (CA)	LANE CLOSED	48" x 48"	FLORESCENT ORANGE	BLACK	X	4" x 6"	X		
	TH-9	45	437+36	X		W4-2	LEFT LANE ENDS SYMBOL	48" x 48"	FLORESCENT ORANGE	BLACK	X	4" x 6"		X	
	TH-9	46	437+36	X		W4-2	LEFT LANE ENDS SYMBOL	48" x 48"	FLORESCENT ORANGE	BLACK	X	4" x 6"		X	
	TH-10	47	452+36	X		W21-5b	LEFT LANE CLOSED 2500 FT	48" x 48"	FLORESCENT ORANGE	BLACK	X	4" x 6"		X	
	TH-10	48	452+36	X		W21-5b	LEFT LANE CLOSED 2500 FT	48" x 48"	FLORESCENT ORANGE	BLACK	X	4" x 6"		X	

APPROVED FOR TRAFFIC HANDLING WORK ONLY

TRAFFIC HANDLING QUANTITIES
THQ-3

STATE OF CALIFORNIA - DEPARTMENT OF TRANSPORTATION
Caltrans® 09-DESIGN

FUNCTIONAL SUPERVISOR: STEPHEN WINZENREAD
CALCULATED-DESIGNED BY: STEPHEN WINZENREAD
CHECKED BY: TONY SYMANOVICH
REVISED BY:
DATE REVISED:

LAST REVISION 07-05-12 | DATE PLOTTED => 28-SEP-2012 | TIME PLOTTED => 13:10

Dist	COUNTY	ROUTE	POST MILES TOTAL PROJECT	SHEET No.	TOTAL SHEETS
06	Ker	14	39.3/40.3	39	71

REGISTERED CIVIL ENGINEER 4-18-12 DATE

9-24-12
PLANS APPROVAL DATE

REGISTERED PROFESSIONAL ENGINEER ANTON SYMANOVICH No. 78419 Exp. 9-30-13 CIVIL STATE OF CALIFORNIA

THE STATE OF CALIFORNIA OR ITS OFFICERS OR AGENTS SHALL NOT BE RESPONSIBLE FOR THE ACCURACY OR COMPLETENESS OF SCANNED COPIES OF THIS PLAN SHEET.

NOTES:

1. LOCATION AND POSITION OF CONSTRUCTION AREA SIGNS AND PORTABLE CHANGEABLE MESSAGE SIGNS ARE APPROXIMATE. EXACT LOCATION TO BE DETERMINED BY THE ENGINEER.
2. SEE TRAFFIC HANDLING PLANS FOR ADDITIONAL CONSTRUCTION AREA SIGNS.
3. SIGNS LOCATED ALONG OFF HIGHWAY VEHICLE TRAIL SHALL BE PLACED WITHIN STATE RIGHT-OF-WAY.

LEGEND:

(X) - PLACEMENT TYPE

- CONSTRUCTION AREA SIGNS (ONE POST)

- PORTABLE CHANGEABLE MESSAGE SIGN (CMS)

- FLASHING BEACON (PORTABLE)

(A) ROAD WORK AHEAD — W20-1, 48" x 48", ON 6" x 6" POST

(B) END ROAD WORK — G20-2, 36" x 18", 4" x 4" POSTS

(C) ROAD WORK AHEAD — W20-1, 36" x 36", ON 6" x 6" POST

PORTABLE CHANGEABLE MESSAGE SIGNS

STAGE 1			
SOUTHBOUND TRAFFIC		NORTHBOUND TRAFFIC	
FIRST FRAME	SECOND FRAME	FIRST FRAME	SECOND FRAME
DETOUR AHEAD	REDUCE SPEED	REDUCE SPEED	LEFT LANE CLOSED AHEAD
STAGE 2			
SOUTHBOUND TRAFFIC		NORTHBOUND TRAFFIC	
FIRST FRAME	SECOND FRAME	FIRST FRAME	SECOND FRAME
REDUCE SPEED	LEFT LANE CLOSED AHEAD	DETOUR AHEAD	REDUCE SPEED

NOTES:

1. PORTABLE CHANGEABLE MESSAGE SIGN LOCATIONS TO BE CONFIRMED BY THE ENGINEER BEFORE ACTUAL DETOUR.
2. ALTERNATE MESSAGES MUST BE APPROVED BY THE ENGINEER.
3. MESSAGE MAY BE ALTERED BY THE ENGINEER.
4. WHEN CONSTRUCTION OPERATIONS ARE NOT ACTIVELY IN PROGRESS, PORTABLE CHANGEABLE MESSAGE SIGNS SHALL NOT DISPLAY A MESSAGE UNLESS DIRECTED BY THE ENGINEER.

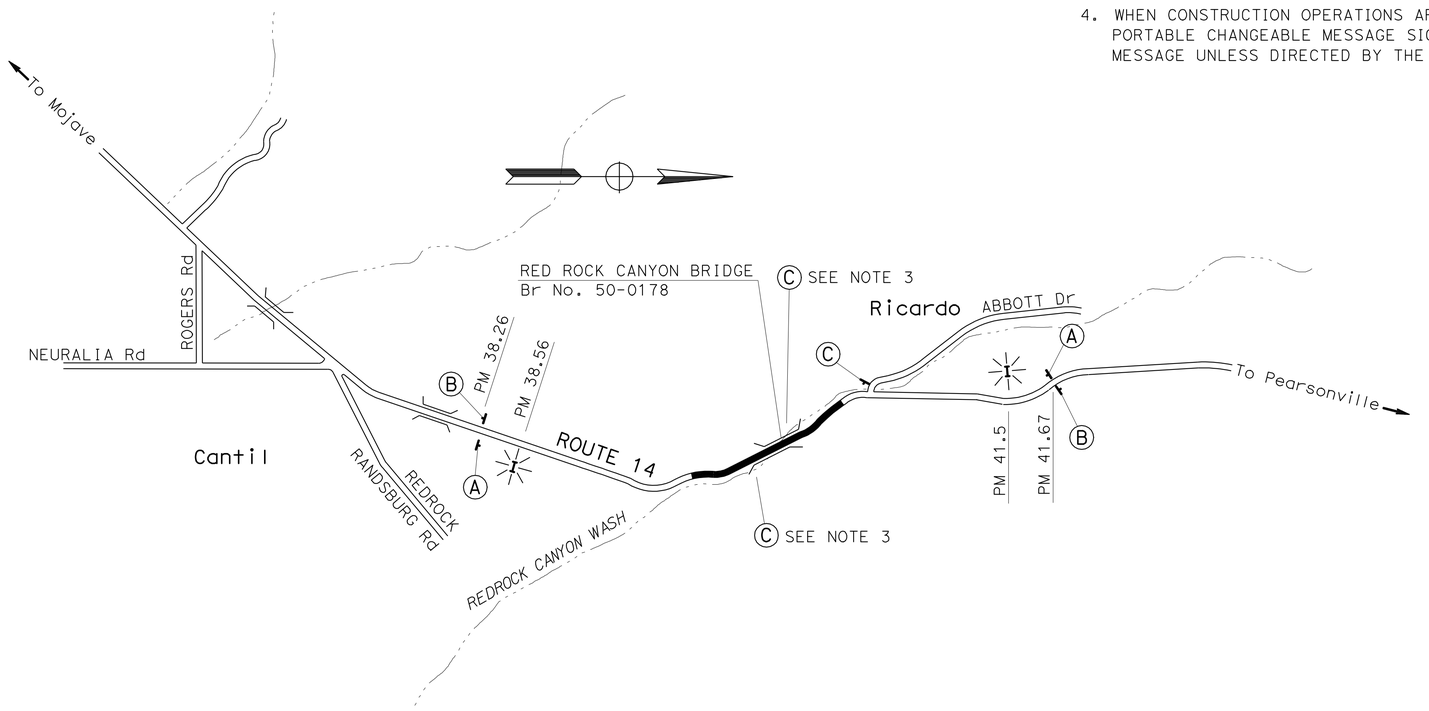

PORTABLE CHANGEABLE MESSAGE SIGN

EA
2

STATIONARY MOUNTED CONSTRUCTION AREA SIGNS

PLACEMENT TYPE	NUMBER OF POSTS AND SIZE	NUMBER OF SIGNS
(A)	1 - 6" x 6"	2
(B)	1 - 4" x 4"	2
(C)	1 - 6" x 6"	1

FLASHING BEACON (PORTABLE)

EA
2

APPROVED FOR CONSTRUCTION AREA SIGN WORK ONLY

CONSTRUCTION AREA SIGNS
NO SCALE

CS-1

STATE OF CALIFORNIA - DEPARTMENT OF TRANSPORTATION
Caltrans
09-DESIGN

FUNCTIONAL SUPERVISOR: STEPHEN WINZENREAD
CALCULATED-DESIGNED BY: TONY SYMANOVICH
CHECKED BY: STEPHEN WINZENREAD
REVISED BY
DATE REVISED

LAST REVISION 04-23-12
DATE PLOTTED => 28-SEP-2012
TIME PLOTTED => 13:10

Dist	COUNTY	ROUTE	POST MILES TOTAL PROJECT	SHEET No.	TOTAL SHEETS
06	Ker	14	39.3/40.3	40	71

Teresa Erlwein PE 4-18-12
REGISTERED CIVIL ENGINEER DATE

9-24-12
PLANS APPROVAL DATE

REGISTERED PROFESSIONAL ENGINEER TERESA ERLWEIN No. 61355 Exp. 6-30-13 CIVIL STATE OF CALIFORNIA

THE STATE OF CALIFORNIA OR ITS OFFICERS OR AGENTS SHALL NOT BE RESPONSIBLE FOR THE ACCURACY OR COMPLETENESS OF SCANNED COPIES OF THIS PLAN SHEET.

NOTE:

1. FOR ACCURATE RIGHT OF WAY CONTACT RIGHT OF WAY ENGINEERING AT THE DISTRICT OFFICE.
2. EXACT LOCATION OF SIGNS TO BE DETERMINED BY THE ENGINEER.

LEGEND:

- TYPE III
- TYPE V
- TYPE VI
- LIMIT LINE , RED CURB
- IE - DELINEATOR (TYPE E SHOWN)
- IL - OBJECT MARKER (TYPE L SHOWN)
- X
- I - HIGHWAY POST MARKER
- HP
- XX - STRIPING DETAIL NUMBER
- BEGIN/END STRIPING DETAIL
- BEGIN/END PAINT CURB
- ROADSIDE SIGNS
- XX - SIGN NUMBER

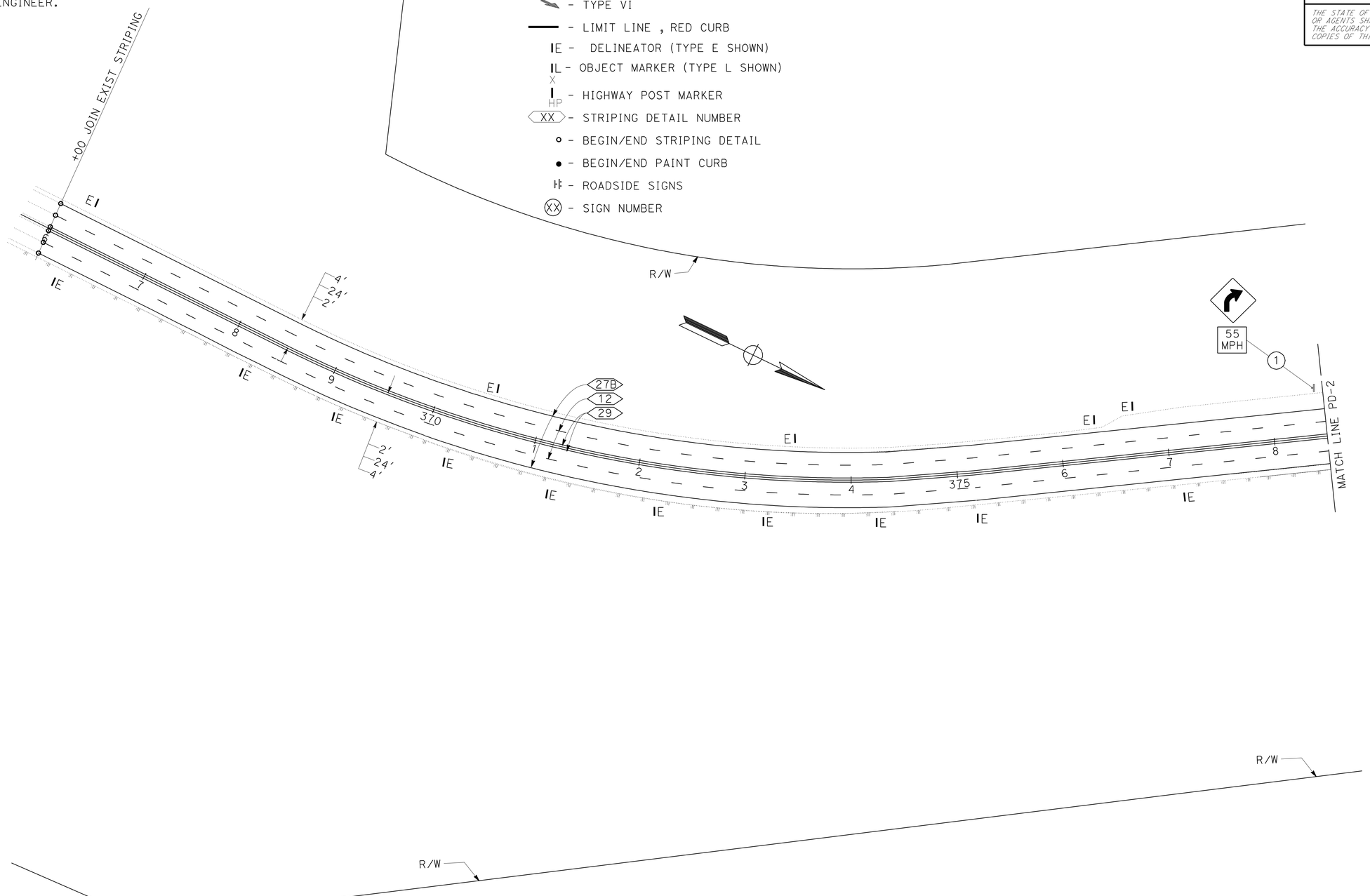

APPROVED FOR PAVEMENT DELINEATION AND SIGN WORK ONLY

PAVEMENT DELINEATION AND SIGN PLAN
SCALE 1" = 50'

PD-1

STATE OF CALIFORNIA - DEPARTMENT OF TRANSPORTATION
Caltrans TRAFFIC OPERATIONS

FUNCTIONAL SUPERVISOR: CRAIG HOLSTE
CALCULATED-DESIGNED BY: JOEL NASH
CHECKED BY: TERRY ERLWEIN
REVISED BY
DATE REVISED

LAST REVISION 04-20-12
DATE PLOTTED => 28-SEP-2012
TIME PLOTTED => 13:10

Dist	COUNTY	ROUTE	POST MILES TOTAL PROJECT	SHEET No.	TOTAL SHEETS
06	Ker	14	39.3/40.3	41	71

Teresa Erlwein PE 4-18-12
REGISTERED CIVIL ENGINEER DATE

9-24-12
PLANS APPROVAL DATE

REGISTERED PROFESSIONAL ENGINEER
TERESA ERLWEIN
No. 61355
Exp. 6-30-13
CIVIL
STATE OF CALIFORNIA

THE STATE OF CALIFORNIA OR ITS OFFICERS OR AGENTS SHALL NOT BE RESPONSIBLE FOR THE ACCURACY OR COMPLETENESS OF SCANNED COPIES OF THIS PLAN SHEET.

NOTE:

FOR ACCURATE RIGHT OF WAY CONTACT RIGHT OF WAY ENGINEERING AT THE DISTRICT OFFICE.

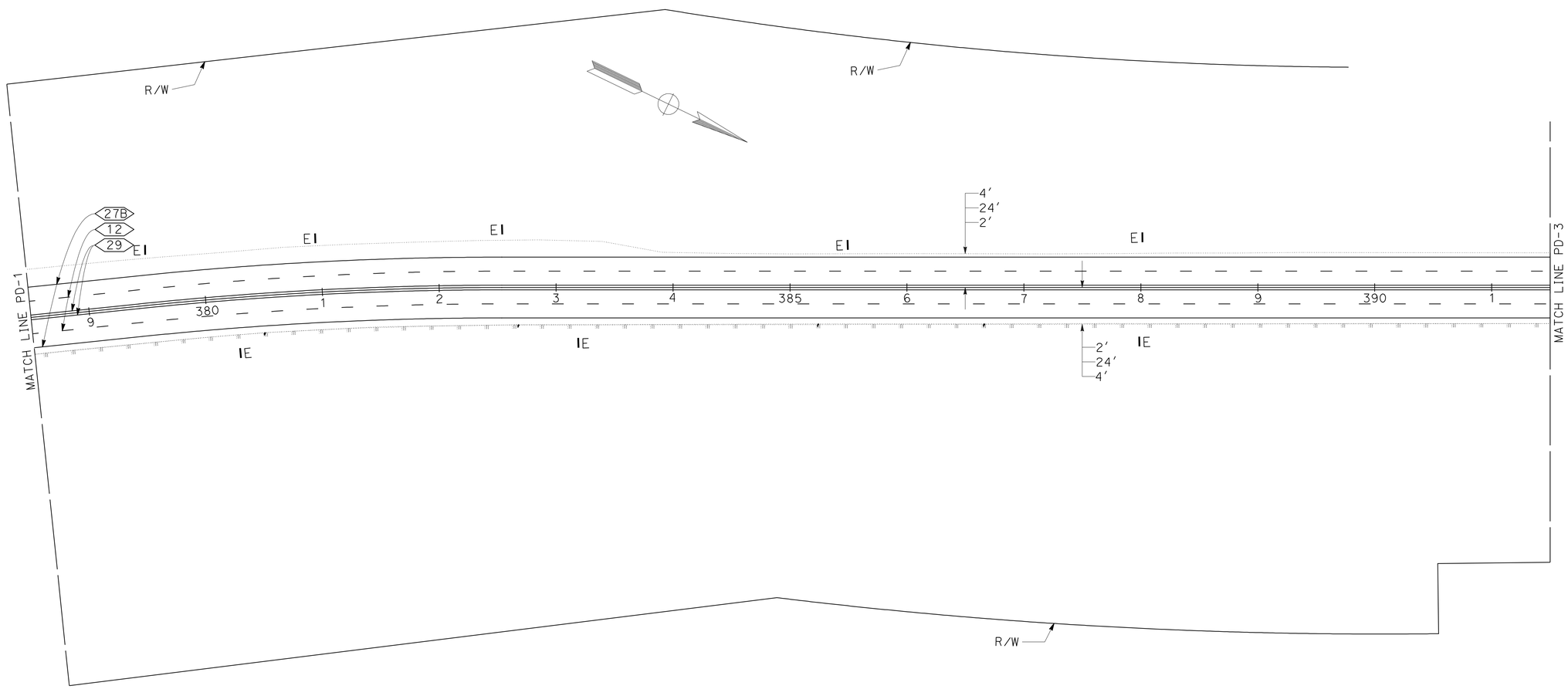

APPROVED FOR PAVEMENT DELINEATION AND SIGN WORK ONLY

PAVEMENT DELINEATION AND SIGN PLAN

SCALE 1" = 50′

PD-2

STATE OF CALIFORNIA - DEPARTMENT OF TRANSPORTATION
Caltrans TRAFFIC OPERATIONS

FUNCTIONAL SUPERVISOR: CRAIG HOLSTE
CALCULATED-DESIGNED BY: JOEL NASH
CHECKED BY: TERRY ERLWEIN
REVISED BY
DATE REVISED

LAST REVISION 04-24-12
DATE PLOTTED => 28-SEP-2012
TIME PLOTTED => 13:10

Dist	COUNTY	ROUTE	POST MILES TOTAL PROJECT	SHEET No.	TOTAL SHEETS
06	Ker	14	39.3/40.3	42	71

Teresa Erlwein PE 4-18-12
REGISTERED CIVIL ENGINEER DATE

9-24-12
PLANS APPROVAL DATE

REGISTERED PROFESSIONAL ENGINEER TERESA ERLWEIN No. 61355 Exp. 6-30-13 CIVIL STATE OF CALIFORNIA

THE STATE OF CALIFORNIA OR ITS OFFICERS OR AGENTS SHALL NOT BE RESPONSIBLE FOR THE ACCURACY OR COMPLETENESS OF SCANNED COPIES OF THIS PLAN SHEET.

NOTE:

FOR ACCURATE RIGHT OF WAY CONTACT RIGHT OF WAY ENGINEERING AT THE DISTRICT OFFICE.

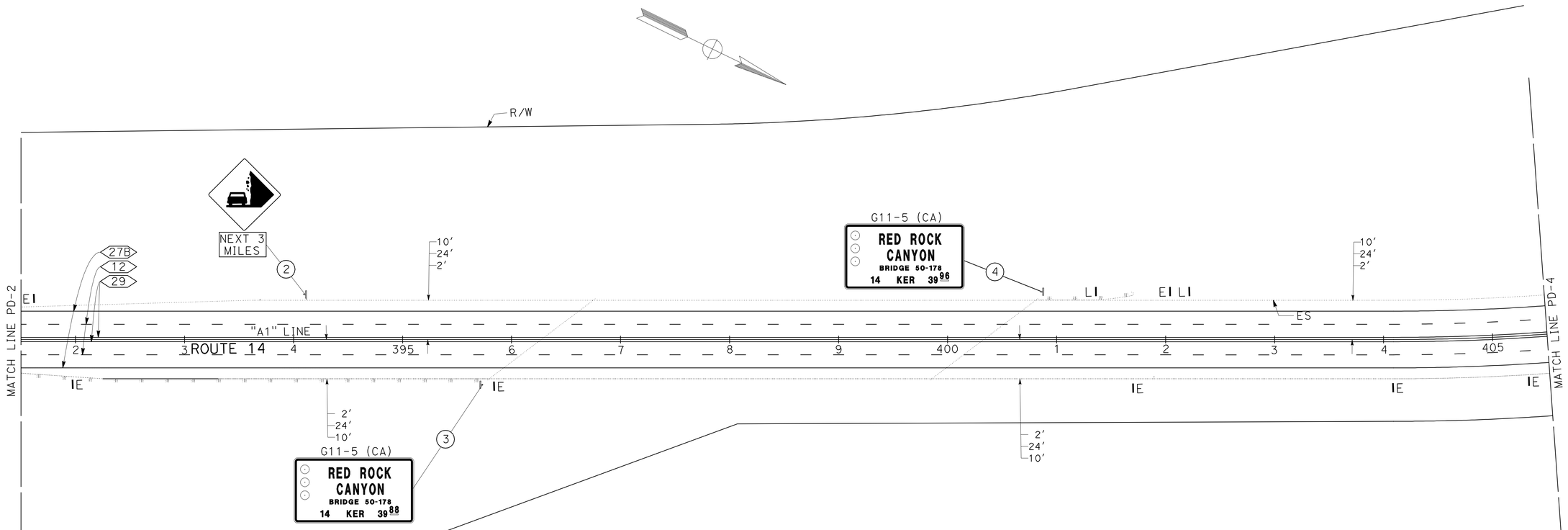

APPROVED FOR PAVEMENT DELINEATION AND SIGN WORK ONLY

PAVEMENT DELINEATION AND SIGN PLAN

SCALE 1" = 50′

PD-3

STATE OF CALIFORNIA - DEPARTMENT OF TRANSPORTATION
Caltrans® TRAFFIC OPERATIONS

FUNCTIONAL SUPERVISOR: CRAIG HOLSTE
CALCULATED-DESIGNED BY: JOEL NASH
CHECKED BY: TERRY ERLWEIN
REVISED BY
DATE REVISED

LAST REVISION 04-19-12
DATE PLOTTED => 28-SEP-2012
TIME PLOTTED => 13:10

Dist	COUNTY	ROUTE	POST MILES TOTAL PROJECT	SHEET No.	TOTAL SHEETS
06	Ker	14	39.3/40.3	43	71

Teresa Erlwein PE 4-18-12
REGISTERED CIVIL ENGINEER DATE

9-24-12
PLANS APPROVAL DATE

REGISTERED PROFESSIONAL ENGINEER TERESA ERLWEIN No. 61355 Exp. 6-30-13 CIVIL STATE OF CALIFORNIA

THE STATE OF CALIFORNIA OR ITS OFFICERS OR AGENTS SHALL NOT BE RESPONSIBLE FOR THE ACCURACY OR COMPLETENESS OF SCANNED COPIES OF THIS PLAN SHEET.

NOTE:

FOR ACCURATE RIGHT OF WAY CONTACT RIGHT OF WAY ENGINEERING AT THE DISTRICT OFFICE.

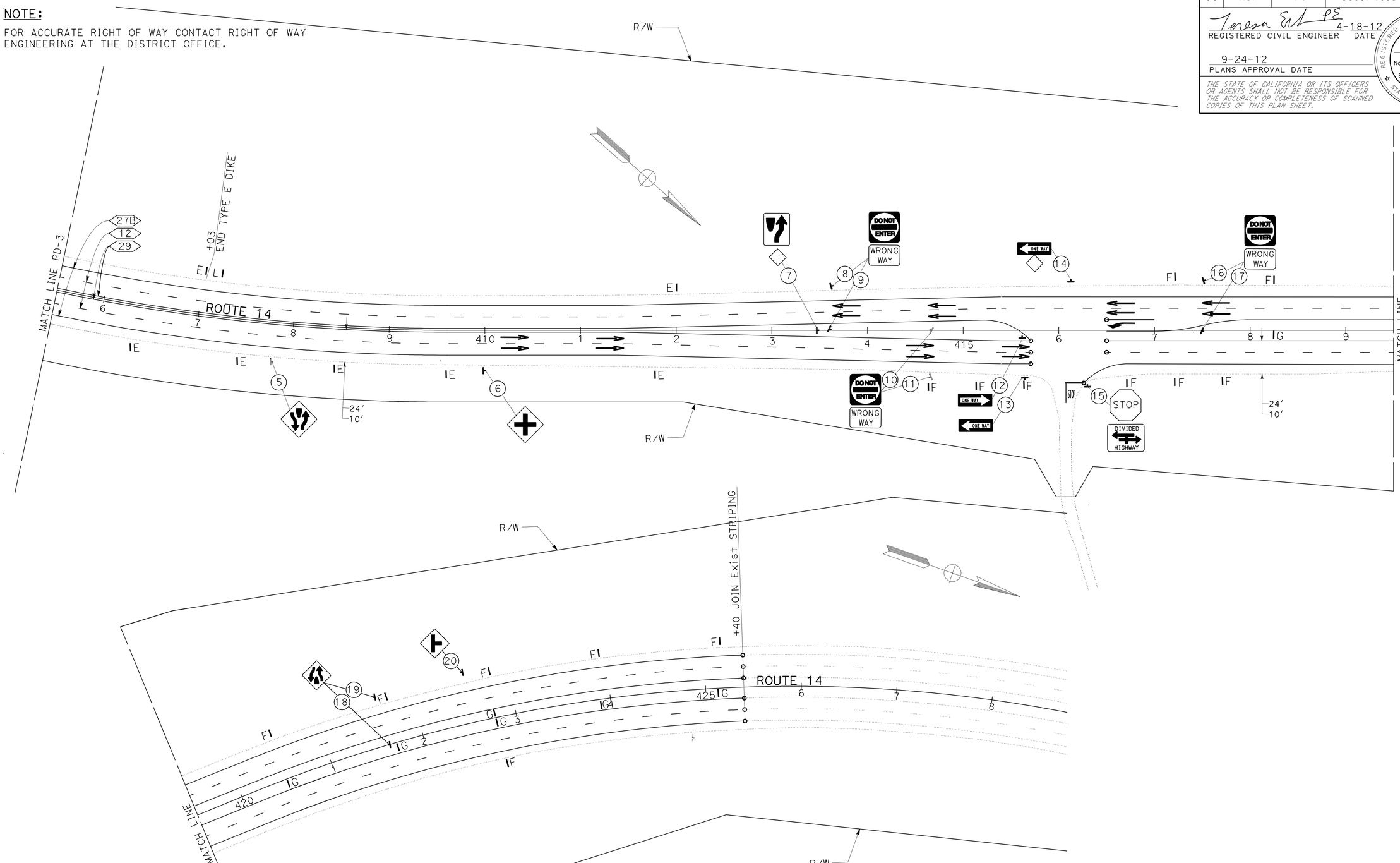

APPROVED FOR PAVEMENT DELINEATION AND SIGN WORK ONLY

PAVEMENT DELINEATION AND SIGN PLAN

SCALE 1" = 50'

PD-4

STATE OF CALIFORNIA - DEPARTMENT OF TRANSPORTATION
Caltrans® TRAFFIC OPERATIONS

FUNCTIONAL SUPERVISOR: CRAIG HOLSTE
CALCULATED-DESIGNED BY: JOEL NASH
CHECKED BY: TERRY ERLWEIN
REVISED BY
DATE REVISED

LAST REVISION 04-20-12
DATE PLOTTED => 28-SEP-2012
TIME PLOTTED => 13:10

Dist	COUNTY	ROUTE	POST MILES TOTAL PROJECT	SHEET No.	TOTAL SHEETS
06	Ker	14	39.3/40.3	44	71

Teresa Erlwein PE 4-18-12
REGISTERED CIVIL ENGINEER DATE

9-24-12
PLANS APPROVAL DATE

REGISTERED PROFESSIONAL ENGINEER TERESA ERLWEIN No. 61355 Exp. 6-30-13 CIVIL STATE OF CALIFORNIA

THE STATE OF CALIFORNIA OR ITS OFFICERS OR AGENTS SHALL NOT BE RESPONSIBLE FOR THE ACCURACY OR COMPLETENESS OF SCANNED COPIES OF THIS PLAN SHEET.

NOTES:
1. THIS PLAN ACCURATE FOR PAVEMENT DELINATION WORK ONLY
2. (N) NOT A SEPARATE ITEM, FOR INFORMATION ONLY.

PAINT TRAFFIC STRIPE (2-COAT) AND PAVEMENT MARKERS (RETROREFLECTIVE-RECESSED)

STATION TO STATION (LOCATION)			LENGTH (N)	DETAIL No. 12	29	38	27B	PAVEMENT MARKERS (RETROREFLECTIVE-RECESSED) TYPE D	TYPE G
			LF	LF	LF	LF	LF	EA	EA
366+00	-	415+70	4970	9940	9940		9940	416	208
415+70	-	416+50	80	80			80		2
416+50	-	417+00	50	100	100	50	100	4	5
417+00	-	425+40	840	1680	1680		1680	72	36
SUBTOTAL				11800	11720	50	11800	492	251
TOTAL				35370				743	

OBJECT MARKERS (TYPE L-1)

STA	L†	R†	OBJECT MARKER (CLASS 2) TYPE L-1 EA	REMARKS
401+30	X		1	
402+03	X		1	
407+03	X		1	
SUBTOTAL				
TOTAL			3	

(N) - NOT A SEPARATE PAY ITEM - FOR INFORMATION PURPOSES ONLY.

THERMOPLASTIC PAVEMENT MARKINGS

STATION	SIDE L†	SIDE R†	12" WHITE LIMIT LINE SQ FT	WORDS "STOP" EA (N)	WORDS "STOP" SQ FT	ARROWS TYPE III (L) EA (N)	ARROWS TYPE III (L) SQ FT	ARROWS TYPE V EA (N)	ARROWS TYPE V SQ FT
410+45		X						2	66
411+45		X						2	66
413+65	X							2	66
414+65	X	X						4	122
415+65		X						2	66
416+03		X	19	1	22				
416+50	X					1	42	2	66
417+50	X							2	66
SUBTOTALS			19		22		42		396
TOTAL					479				

(N)- NOT A SEPARATE PAY ITEM, FOR INFORMATION ONLY.

REMOVE DELINEATOR

Sta TO Sta	REMOVE DELINEATOR EA
370+00 TO 419+32	47
TOTAL	47

DELINEATORS (CLASS 2)

STA	L†	R†	DELINEATOR (CLASS 2) TYPE E EA	TYPE F EA	TYPE G EA
366+15	X	X	2		
368+15		X	1		
369+15		X	1		
370+15		X	1		
370+43	X		1		
371+15		X	1		
372+15		X	1		
373+15		X	1		
373+43	X		1		
374+15		X	1		
375+15		X	1		
376+30	X		1		
376+59	X		1		
377+15		X	1		
379+43	X		1		
380+15		X	1		
380+99	X		1		
382+53	X		1		
383+15		X	1		
385+53	X		1		
388+00	X	X	2		
391+53	X		1		
342+00		X	1		
395+88		X	1		
401+88		X	1		
402+00	X		1		
404+08		X	1		
405+18		X	1		
406+28		X	1		
407+00	X		1		
407+38		X	1		
408+48		X	1		
409+60		X	1		
411+80		X	1		
407+00	X		1		
414+80		X		1	
415+30		X		1	
415+80		X		1	
416+80		X		1	
417+30	X	X		2	
417+80		X		1	
418+20	X	X		1	1
420+50	X	X		1	1
421+65	X	X		1	1
422+80	X	X		2	2
423+95	X	X		1	1
425+10	X	X		1	1
SUBTOTAL			37	14	7
TOTAL			58		

(N) - NOT A SEPARATE PAY ITEM - FOR INFORMATION PURPOSES ONLY.

PAVEMENT DELINEATION QUANTITIES

NO SCALE

PDQ-1

REVISED BY | DATE REVISED
JOEL NASH | TERRY ERLWEIN
CALCULATED-DESIGNED BY | CHECKED BY
FUNCTIONAL SUPERVISOR: CRAIG HOLSTE
STATE OF CALIFORNIA - DEPARTMENT OF TRANSPORTATION
Caltrans TRAFFIC OPERATIONS

LAST REVISION 04-23-12 | DATE PLOTTED => 28-SEP-2012 | TIME PLOTTED => 13:10

Dist	COUNTY	ROUTE	POST MILES TOTAL PROJECT	SHEET No.	TOTAL SHEETS
06	Ker	14	39.3/40.3	45	71

Teresa Erlwein PE 4-18-12
REGISTERED CIVIL ENGINEER DATE

9-24-12
PLANS APPROVAL DATE

REGISTERED PROFESSIONAL ENGINEER
TERESA ERLWEIN
No. 61355
Exp. 6-30-13
CIVIL
STATE OF CALIFORNIA

THE STATE OF CALIFORNIA OR ITS OFFICERS OR AGENTS SHALL NOT BE RESPONSIBLE FOR THE ACCURACY OR COMPLETENESS OF SCANNED COPIES OF THIS PLAN SHEET.

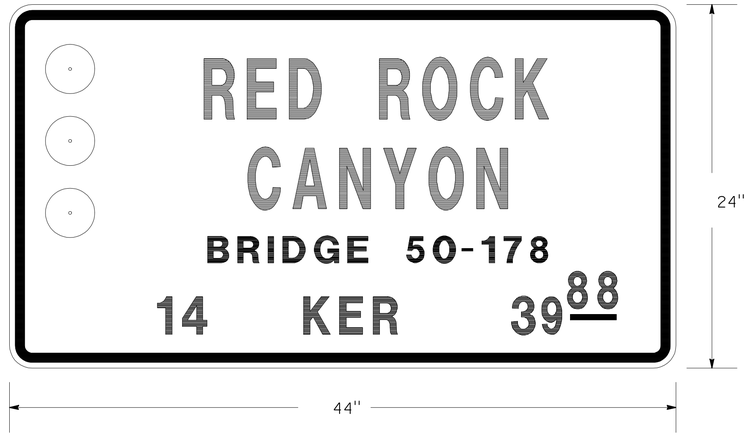

SIGN 3

NOTES FOR G11-5 (CA):
REFER TO THE PUBLISHED, APPROVED SIGN DESIGN FOR DETAILS NOT SHOWN

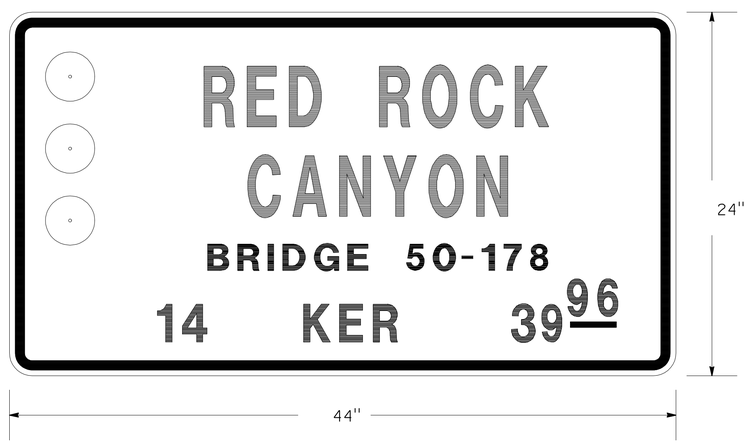

SIGN 4

NOTES FOR G11-5 (CA):
REFER TO THE PUBLISHED, APPROVED SIGN DESIGN FOR DETAILS NOT SHOWN

SIGN DETAILS

NO SCALE **SD-1**

STATE OF CALIFORNIA - DEPARTMENT OF TRANSPORTATION
Caltrans® TRAFFIC OPERATIONS

FUNCTIONAL SUPERVISOR: CRAIG HOLSTE
CALCULATED-DESIGNED BY: JOEL NASH
CHECKED BY: TERRY ERLWEIN
REVISED BY
DATE REVISED

LAST REVISION 04-23-12
DATE PLOTTED => 28-SEP-2012
TIME PLOTTED => 13:10

Dist	COUNTY	ROUTE	POST MILES TOTAL PROJECT	SHEET No.	TOTAL SHEETS
06	Ker	14	39.3/40.3	46	71

REGISTERED CIVIL ENGINEER 4-18-12 DATE

9-24-12
PLANS APPROVAL DATE

REGISTERED PROFESSIONAL ENGINEER TERESA ERLWEIN No. 61355 Exp. 6-30-13 CIVIL STATE OF CALIFORNIA

THE STATE OF CALIFORNIA OR ITS OFFICERS OR AGENTS SHALL NOT BE RESPONSIBLE FOR THE ACCURACY OR COMPLETENESS OF SCANNED COPIES OF THIS PLAN SHEET.

NOTES:
1. EXACT LOCATION OF ROADSIDE SIGNS TO BE DETERMINED BY THE ENGINEER.
2. EXISTING SIGN PANELS AND TURNABLE SIGN MASTS AND STEEL PORTION OF FOUNDATION TO BE REMOVED SHALL BE SALVAGED.

SIGN SUMMARY

SIGN NUMBER	STATION	LEFT	RIGHT	CODE	MESSAGE	SIZE (L x D) in x in	REMOVE ROADSIDE SIGN EA	ROADSIDE SIGN-ONE POST EA	SIGN MATERIALS: FURNISH SINGLE SHEET ALUMINUM SIGN (0.063"-UNFRAMED) SQFT	SINGLE FACED	DOUBLE FACED	BACKGROUND: SHEETING COLOR	BACKGROUND: RETROREFLECTIVE ASTM TYPE	LEGEND: SHEETING COLOR	LEGEND: RETROREFLECTIVE ASTM TYPE	GRAFFITI FILM: STANDARD	GRAFFITI FILM: PREMIUM	POSTS SIZE in x in	FNBT	FSBT	FEBT	FWBT	REMARKS
1	378+45	X		W1-2 R†	CURVE RIGHT	36" x 36"	1	1	9.00	X		YELLOW	III	BLACK		X		6" x 6"		X			TAPE 3 -3" YELLOW REFLECTIVE
				W13-1 (55)	55 MPH	24" x 24"			4.00	X		YELLOW	III	BLACK		X				X			BANDS ON POST 3' FROM BASE
2	394+20	X		W50-1(CA)	FALLING ROCK SYMBOL	36" x 36"	1	1	9.00	X		YELLOW	III	BLACK		X		6" x 6"		X			
				W7-3A	NEXT 3 MILES	24" x 18"			3.00	X		YELLOW	III	BLACK		X				X			
3	395+66		X	G11-5 (CA)	RED ROCK BR	44" x 24"		1	7.33	X		WHITE	III	BLACK		X		4" x 6"	X				
4	401+94	X		G11-5 (CA)	RED ROCK BR	44" x 24"		1	7.33	X		WHITE	III	BLACK		X		4" x 6"		X			
5	407+75		X	W6-1	DIVIDED HIGHWAY	48" x 48"	1	1	16.00	X		YELLOW	III	BLACK		X		6" x 6"	X				
6	410+00		X	W2-1	INTERSECTION SYMBOL	36" x 36"	1	1	9.00	X		YELLOW	III	BLACK		X		6" x 6"	X				
7	413+47		X	R4-7	KEEP RIGHT SYMBOL	36" x 48"	1	1	12.00	X		WHITE	III	BLACK		X		6" x 6"	X				
				N-1 (CA)	YELLOW DIAMOND	18" x 18"			2.25	X		YELLOW	III	BLACK		X			X				
8	413+67	X		R5-1	DO NOT ENTER	36" x 36"	1	1	9.00	X		RED	VII	WHITE	VII	X		6" x 6"	X				
				R5-1A	WRONG WAY	36" x 18"			4.50	X		RED	VII	WHITE	VII	X			X				
9	413+67	X		R5-1	DO NOT ENTER	36" x 36"	1	1	9.00	X		RED	VII	WHITE	VII	X		6" x 6"	X				
				R5-1A	WRONG WAY	36" x 18"			4.50	X		RED	VII	WHITE	VII	X			X				
10	414+67		X	R5-1	DO NOT ENTER	36" x 36"		1	9.00	X		RED	VII	WHITE	VII	X		6" x 6"		X			
				R5-1A	WRONG WAY	36" x 18"			4.50	X		RED	VII	WHITE	VII	X				X			
11	414+67		X	R5-1	DO NOT ENTER	36" x 36"		1	9.00	X		RED	VII	WHITE	VII	X		6" x 6"		X			
				R5-1A	WRONG WAY	36" x 18"			4.50	X		RED	VII	WHITE	VII	X				X			
12	415+65		X	R6-1 R†	ONE WAY RIGHT	54" x 18"	1	1	6.75	X		WHITE	III	BLACK		X		4" x 6"			X		
13	415+65		X	R6-1 L†	ONE WAY LEFT	54" x 18"	1	1	6.75	X		WHITE	III	BLACK		X		4" x 6"				X	
14	415+65	X		R6-1 L†	ONE WAY LEFT	54" x 18"	1	1	6.75	X		WHITE	III	BLACK		X		4" x 6"				X	
				N-1 (CA)	YELLOW DIAMOND	18" x 18"			2.25	X		YELLOW	III	BLACK		X						X	
15	416+26	X		R1-1	STOP	36" x 36"	1	1	9.00	X		RED	VII	WHITE	VII	X		4" x 6"				X	
				R6-3A	DIVIDED HIGHWAY	24" x 18"			2.25	X		WHITE	III	BLACK		X						X	
16	417+52	X		R5-1	DO NOT ENTER	36" x 36"		1	9.00	X		RED	VII	WHITE	VII	X		6" x 6"	X				
				R5-1A	WRONG WAY	36" x 18"			4.50	X		RED	VII	WHITE	VII	X			X				
17	417+52	X		R5-1	DO NOT ENTER	36" x 36"		1	9.00	X		RED	VII	WHITE	VII	X		6" x 6"	X				
				R5-1A	WRONG WAY	36" x 18"			4.50	X		RED	VII	WHITE	VII	X			X				
18	421+62		X	W6-2	END DIVIDED HIGHWAY	48" x 48"	1	1	16.00	X		YELLOW	III	BLACK		X		6" x 6"		X			
19	421+62	X		W6-2	END DIVIDED HIGHWAY	48" x 48"	1	1	16.00	X		YELLOW	III	BLACK		X		6" x 6"		X			
20	422+62	X		W2-2 L†	TEE INTERSECTION SYMBOL	36" x 36"	1	1	9.00	X		YELLOW	III	BLACK		X		6" x 6"		X			
						TOTAL	14	20	234.66														

REVISED BY | DATE REVISED
JOEL NASH | TERRY ERLWEIN
CALCULATED-DESIGNED BY | CHECKED BY
FUNCTIONAL SUPERVISOR | CRAIG HOLSTE

STATE OF CALIFORNIA - DEPARTMENT OF TRANSPORTATION
Caltrans® TRAFFIC OPERATIONS

SIGN QUANTITIES
NO SCALE **SQ-1**

LAST REVISION 04-19-12 | DATE PLOTTED => 28-SEP-2012 | TIME PLOTTED => 13:10

Dist	COUNTY	ROUTE	POST MILES TOTAL PROJECT	SHEET No.	TOTAL SHEETS
06	Ker	14	39.3/40.3	47	71

REGISTERED CIVIL ENGINEER 4-18-12 DATE

9-24-12
PLANS APPROVAL DATE

REGISTERED PROFESSIONAL ENGINEER ANTON SYMANOVICH No. 78419 Exp. 9-30-13 CIVIL STATE OF CALIFORNIA

THE STATE OF CALIFORNIA OR ITS OFFICERS OR AGENTS SHALL NOT BE RESPONSIBLE FOR THE ACCURACY OR COMPLETENESS OF SCANNED COPIES OF THIS PLAN SHEET.

NOTE: (N) - NOT A SEPARATE PAY ITEM, FOR INFORMATION ONLY

ROADWAY QUANTITIES

	STATION TO STATION LOCATION	*ROADWAY EXCAVATION	CLASS 2 AB	HMA (TYPE A)	RHMA (OPEN GRADED)	EMBANKMENT (N)	RECONSTRUCT MBGR	REMOVE MBGR	MBGR (WOOD POST)	TRANSITION RAILING (TYPE WB)	ALTERNATIVE FLARED TERMINAL SYSTEM
		CY	CY	TON	TON	CY	LF	LF	LF	EA	EA
STAGE 1	366+00 TO 391+50 L+										
	391+50 TO 396+75 L+	274	498	731		443					
	399+85 TO 410+40 L+	1411	1049	1539		1112		64.5	25	1	1
	410+40 TO 416+30 L+	301	174	255		526					
STAGE 2	366+00 TO 391+50 R+						2550				
	391+50 TO 396+75 R+	261	478	701		509	404			1	
	399+85 TO 412+00 R+	1555	1270	1865		1304					
	412+00 TO 414+38 R+	144	71	104		163					
STAGE 3	366+00 TO 391+50				1408						
	391+50 TO 396+75				232						
	399+85 TO 418+30				1198						
SLOPE PROTECTION SHEET C-5											
HMA DIKE				55							
HMA (Misc AREAS)				106							
TOTAL		3946	3540	5356	2838	4057	2954	64.5	25	2	1

* - ROADWAY EXCAVATION CAN BE USED AS EMBANKMENT

IMPORTED BORROW

	LOCATION	** MASS HAUL (N)	CY
STAGE 1	391+50 TO 396+75 L+	186 CY	195
	399+85 TO 416+30 L+	-8 CY	
STAGE 2	391+50 TO 396+75 R+	227 CY	114
	399+85 TO 414+38 R+	-187 CY	
		TOTAL	309

** MASS HAUL =
Embank - (ROADWAY Exc * 0.95 GRADING FACTOR)

OBLITERATE SURFACING

	LOCATION	SQYD
STAGE 1	391+50 TO 396+75 L+	1656
	399+85 TO 405+30 L+	1525
STAGE 2	391+50 TO 396+75 R+	1576
	399+85 TO 405+30 R+	1981
	TOTAL	6738

COLD PLANE ASPHALT CONCRETE PAVEMENT

STATION TO STATION	LENGTH (N)	WIDTH (N)	AREA
	LF	LF	SQYD
366+00 TO 366+40	50	60	333
391+00 TO 391+50	50	60	333
410+40 TO 410+90 L+	50	24	133
412+00 TO 412+50 R+	50	24	133
417+90 TO 418+30	50	86	478
SUBTOTAL SHEET THQ-2			1010
TOTAL			2420

TACK COAT

	SQYD (N)	TON
HMA BETWEEN LIFTS	13267	1.1
UNDER RHMA-O	37092	6.8
TOTAL		7.9

REMOVE ASPHALT CONCRETE DIKE

STATION TO STATION	SIDE		TYPE E	TYPE F
	L+	R+	LF	LF
368+84 TO 373+60	X		476	
378+37 TO 391+50		X		1313
389+56 TO 391+50	X		194	
SUBTOTAL			670	1313
TOTAL			1983	

PLACE HMA (Misc AREA)

LOCATION	HMA (TYPE A) **	PLACE HMA (Misc AREA)	REMARKS
STATION	TON	SQYD	
396+04 L+	1.1	6.0	HMA OVERSIDE DRAIN x 18'
402+02 L+	1.8	9.7	HMA OVERSIDE DRAIN x 30'
383+35 R+	0.2	1.0	CONNECT TO Exist OSD
389+31 R+	0.2	1.0	CONNECT TO Exist OSD
395+57 R+	0.2	1.0	SLOPE TO DRAIN OVER CRSP
	102	1010	SUBTOTAL FROM SHEET THQ-2
TOTAL	105.5	1028.7	

** - TOTAL QUANTITY OF HMA (TYPE A) IS SHOWN IN ROADWAY QUANTITIES TABLE.

SHOULDER BACKING

STATION TO STATION	SIDE		TON
	L+	R+	
366+00 TO 391+50	X		52.4
366+00 TO 391+50		X	52.4
416+30 TO 418+30	X		4.1
414+38 TO 418+30		X	8.1
TOTAL			117

PLACE HMA DIKE

STATION TO STATION	SIDE		(TYPE E)	(TYPE F)	HMA * (TYPE A)
	L+	R+	LF	LF	TON
368+84 TO 373+60	X		476		12.1
378+37 TO 383+34		X		497	6.5
383+36 TO 389+30		X		594	7.7
389+32 TO 395+56		X		624	8.1
395+58 TO 395+79		X		21	0.3
399+85 TO 400+05		X	20		0.5
389+56 TO 391+50	X		194		5.0
396+04 TO 396+75	X			71	0.9
400+81 TO 401+31	X			50	0.7
402+02 TO 407+03	X		501		12.8
TOTAL			1191	1857	54.6

* THIS ITEM IS INCLUDED IN HMA (TYPE A) QUANTITY IN ROADWAY QUANTITES SUMMARY.

SHOULDER RUMBLE STRIP (HMA, GROUND-IN INDENTATIONS)

LOCATION	SIDE	SHOULDER RUMBLE STRIP
STATION TO STATION		STA
392+25 TO 395+79	R+	3.5
395+50 TO 396+60	L+	1.1
400+00 TO 414+38	R+	14.4
400+70 TO 416+00	L+	15.3
TOTAL		34.3

CENTERLINE RUMBLE STRIP (HMA, GROUND-IN INDENTATIONS)

LOCATION	CENTERLINE RUMBLE STRIP
STATION TO STATION	STA
366+00 TO 396+27	60.5
400+34 TO 415+67	30.0
416+50 TO 418+30	3.6
TOTAL	94.1

SUMMARY OF QUANTITIES
Q-1

STATE OF CALIFORNIA - DEPARTMENT OF TRANSPORTATION
Caltrans 09-DESIGN
FUNCTIONAL SUPERVISOR: STEPHEN WINZENREAD
CALCULATED-DESIGNED BY: ANTON SYMANOVICH
CHECKED BY: STEPHEN WINZENREAD
REVISED BY / DATE REVISED

LAST REVISION 07-11-12 | DATE PLOTTED => 01-OCT-2012 | TIME PLOTTED => 13:20

Dist	COUNTY	ROUTE	POST MILES TOTAL PROJECT	SHEET No.	TOTAL SHEETS
06	Ker	14	39.3/40.3	48	71

4-18-12
REGISTERED CIVIL ENGINEER DATE

9-24-12
PLANS APPROVAL DATE

REGISTERED PROFESSIONAL ENGINEER
ANTON SYMANOVICH
No. 78419
Exp. 9-30-13
CIVIL
STATE OF CALIFORNIA

THE STATE OF CALIFORNIA OR ITS OFFICERS OR AGENTS SHALL NOT BE RESPONSIBLE FOR THE ACCURACY OR COMPLETENESS OF SCANNED COPIES OF THIS PLAN SHEET.

SLOPE PROTECTION QUANTITIES

LOCATION	CRSP (LIGHT, METHOD B)	RSP (No. 2, METHOD B)	RSP FABRIC (CLASS 8)
	CY	CY	SQFT
391+50 "A1 LINE" TO 395+60 "A1 LINE"	1045		11283
395+60 "A1 LINE" TO 3+00 "WASH LINE"	608		6600
395+04 L+ "A1 LINE"		1.8	32
400+02 L+ "A1 LINE"		1.8	32
TOTAL	1653	3.6	17947

⬡ - DRAINAGE SYSTEM No.
○ - DRAINAGE UNIT No.

DRAINAGE QUANTITIES

LOCATION	⬡	○	24" CSP (0.138" THICK)	24" FLARED END SECTION
STATION			LF	EA
393+35.15 L+	1	a		1
393+35.30 L+	1	b	16	
393+35.61 R+	1	c	6	
393+35.64 R+	1	d		1
TOTAL			22	2

NOTE: ALL JOINTS ARE STANDARD JOINT TYPE.

MARKER (CULVERT)

STATION	L+	R+	EA
393+35	X		1
393+36		X	1
TOTAL			2

RECONSTRUCT FENCE (TYPE BW)

LOCATION	LF
398+27 R+ TO 399+56 L+	210
TOTAL	210

REMOVE CONCRETE AND REMOVE SLOPE PAVING

STATION TO STATION	SIDE		REMOVE CONCRETE	REMOVE SLOPE PAVING
	L+	R+	SQYD	SQYD
391+50 TO 395+79 "A1 LINE"		X	986	
0+89.5 TO 3+00 "WASH LINE"	X			578
TOTAL			986	578

TEMPORARY WATER POLLUTION CONTROL

STAGE	TEMPORARY CONSTRUCTION ENTRANCE	TEMPORARY CONSTRUCTION ROADWAY	MOVE-IN/ MOVE-OUT
	EA	EA	EA
1	1	1	1
2	1	1	1
TOTAL	2	2	2

TEMPORARY FENCE (TYPE ESA) AND TEMPORARY FIBER ROLL

STATION TO STATION	L+	R+	TEMPORARY FENCE (TYPE ESA)	TEMPORARY FIBER ROLL
			LF	LF
391+50 TO 397+34	X		624	624
391+50 TO 398+27		X	730	730
397+50 TO 400+00	X		307	307
398+73 TO 402+70		X	415	415
402+84 TO 414+54		X	1223	1223
401+67 TO 416+61	X		1508	1508
TOTAL			4807	4807

TEMPORARY DRAINAGE INLET PROTECTION

LOCATION	DRAINAGE INLET PROTECTION	REMARKS
STATION	EA	
383+35 R+	1	OVERSIDE DRAIN
389+31 R+	1	OVERSIDE DRAIN
395+57 R+	1	OVERSIDE DRAIN
417+93	1	MEDIAN SLOT DRAIN
TOTAL	4	

SUMMARY OF QUANTITIES
Q-2

STATE OF CALIFORNIA - DEPARTMENT OF TRANSPORTATION
Caltrans 09-DESIGN

FUNCTIONAL SUPERVISOR: STEPHEN WINZENREAD
CALCULATED-DESIGNED BY: ANTON SYMANOVICH
CHECKED BY: STEPHEN WINZENREAD
REVISED BY
DATE REVISED

LAST REVISION 04-19-12
DATE PLOTTED => 28-SEP-2012
TIME PLOTTED => 13:11

Dist	COUNTY	ROUTE	POST MILES TOTAL PROJECT	SHEET No.	TOTAL SHEETS
06	Ker	14	39.3/40.3	49	71

REGISTERED CIVIL ENGINEER

April 20, 2012
PLANS APPROVAL DATE

REGISTERED PROFESSIONAL ENGINEER
Roberta L. McLaughlin
No. C40375
Exp. 3-31-13
CIVIL
STATE OF CALIFORNIA

THE STATE OF CALIFORNIA OR ITS OFFICERS OR AGENTS SHALL NOT BE RESPONSIBLE FOR THE ACCURACY OR COMPLETENESS OF SCANNED COPIES OF THIS PLAN SHEET.

TO ACCOMPANY PLANS DATED 9-24-12

2010 REVISED STANDARD PLAN RSP A24A

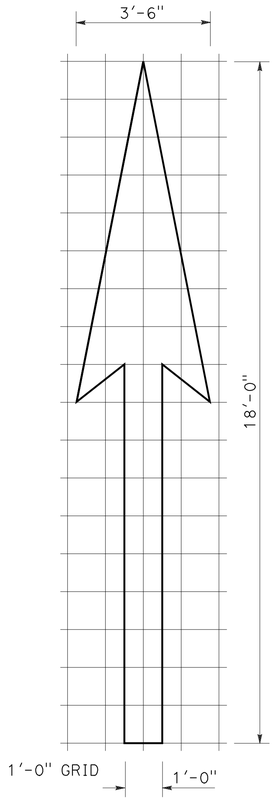

A=25 ft^2

TYPE I 18'-0" ARROW

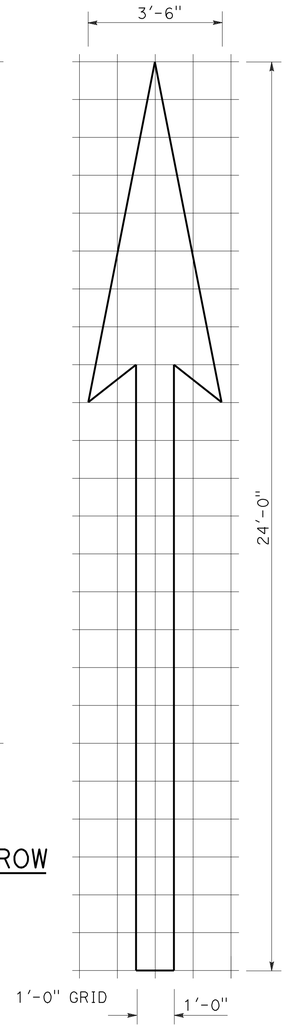

A=31 ft^2

TYPE I 24'-0" ARROW

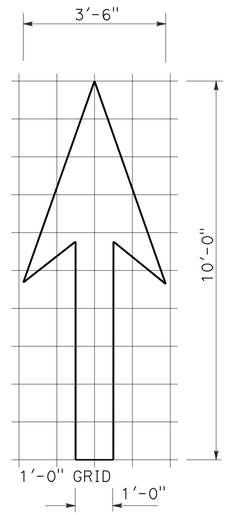

A=14 ft^2

TYPE I 10'-0" ARROW

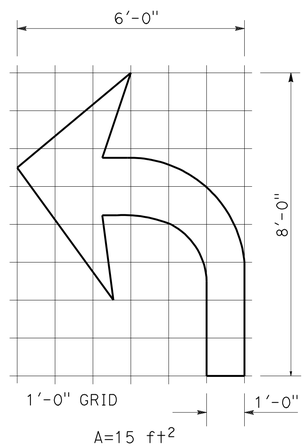

A=15 ft^2

TYPE IV (L) ARROW

(For Type IV (R) arrow, use mirror image)

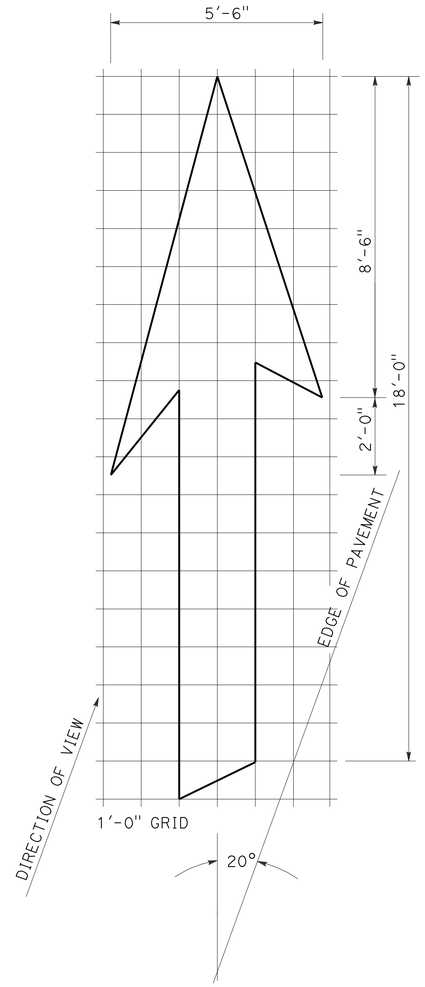

A=42 ft^2

TYPE VI ARROW

Right lane drop arrow
(For left lane, use mirror image)

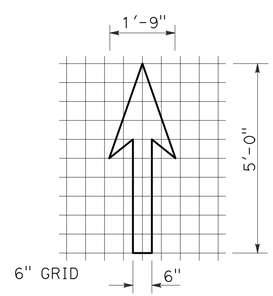

A=3.5 ft^2

BIKE LANE ARROW

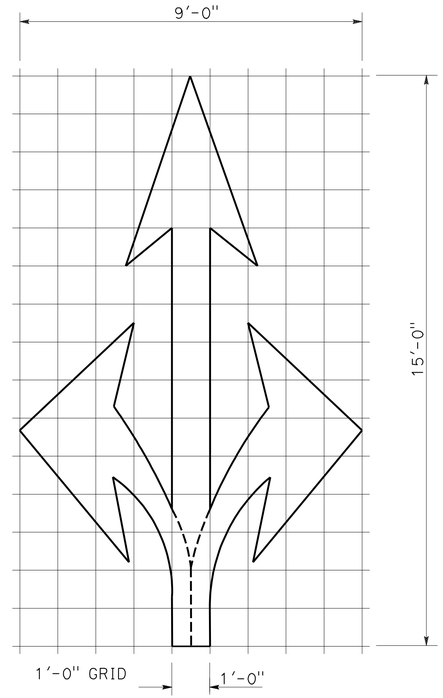

A=36 ft^2

TYPE VIII ARROW

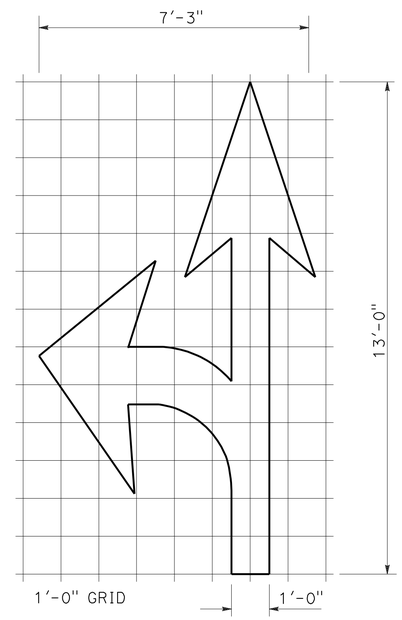

A=27 ft^2

TYPE VII (L) ARROW

(For Type VII (R) arrow, use mirror image)

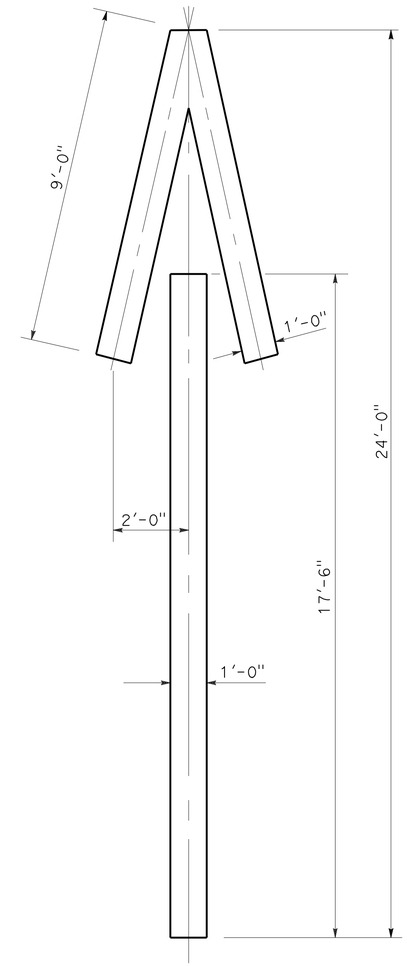

A=33 ft^2

TYPE V ARROW

NOTE:
Minor variations in dimensions may be accepted by the Engineer.

STATE OF CALIFORNIA
DEPARTMENT OF TRANSPORTATION

PAVEMENT MARKINGS ARROWS

NO SCALE

RSP A24A DATED APRIL 20, 2012 SUPERSEDES STANDARD PLAN A24A DATED MAY 20, 2011 - PAGE 13 OF THE STANDARD PLANS BOOK DATED 2010.

REVISED STANDARD PLAN RSP A24A

3-14-12

Dist	COUNTY	ROUTE	POST MILES TOTAL PROJECT	SHEET No.	TOTAL SHEETS
06	Ker	14	39.3/40.3	50	71

REGISTERED CIVIL ENGINEER

April 20, 2012
PLANS APPROVAL DATE

REGISTERED PROFESSIONAL ENGINEER
Tillat Satter
No. C42892
Exp. 3-31-14
CIVIL
STATE OF CALIFORNIA

THE STATE OF CALIFORNIA OR ITS OFFICERS OR AGENTS SHALL NOT BE RESPONSIBLE FOR THE ACCURACY OR COMPLETENESS OF SCANNED COPIES OF THIS PLAN SHEET.

TO ACCOMPANY PLANS DATED 9-24-12

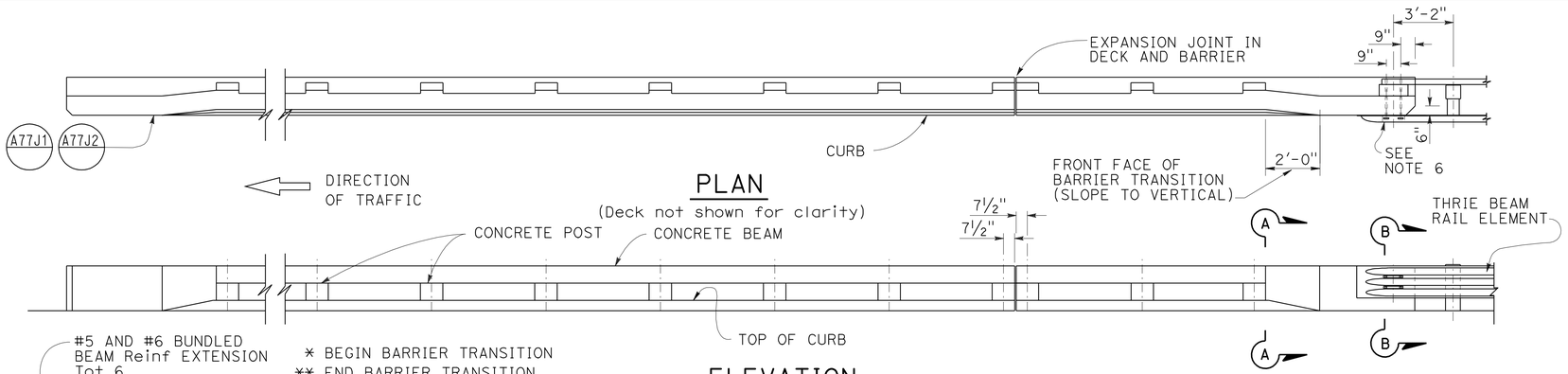

PLAN

(Deck not shown for clarity)

ELEVATION

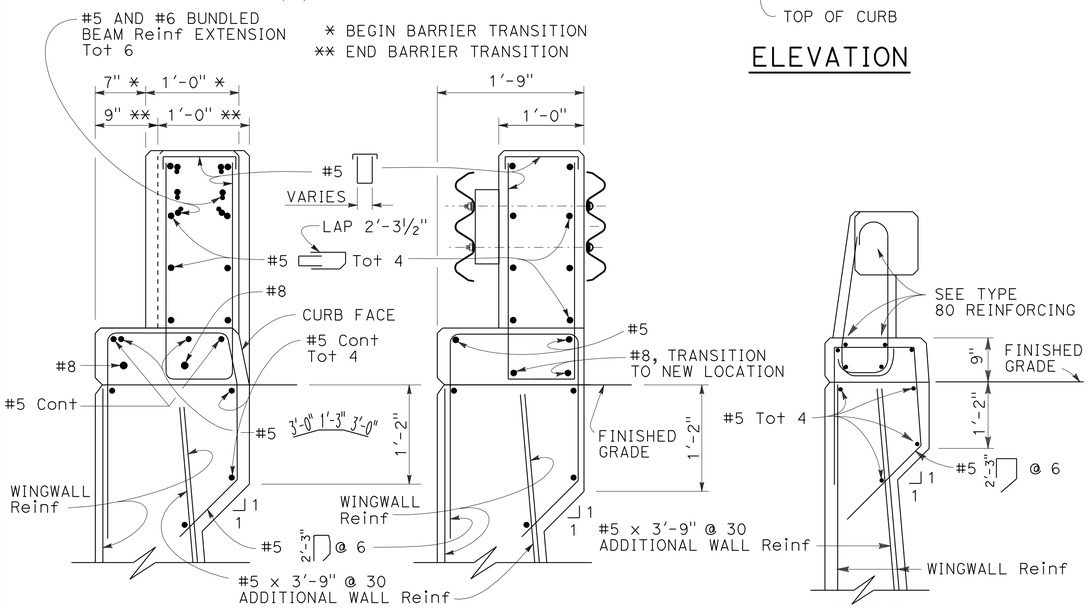

SECTION A-A

SECTION B-B

TYPE 80A

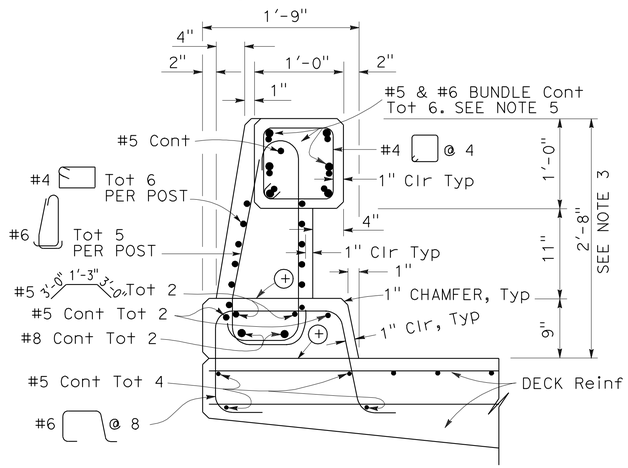

TYPE 80

⊕ Construction joint

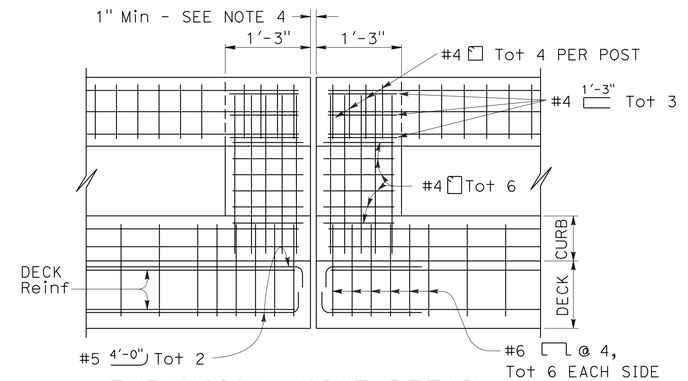

EXPANSION JOINT DETAIL

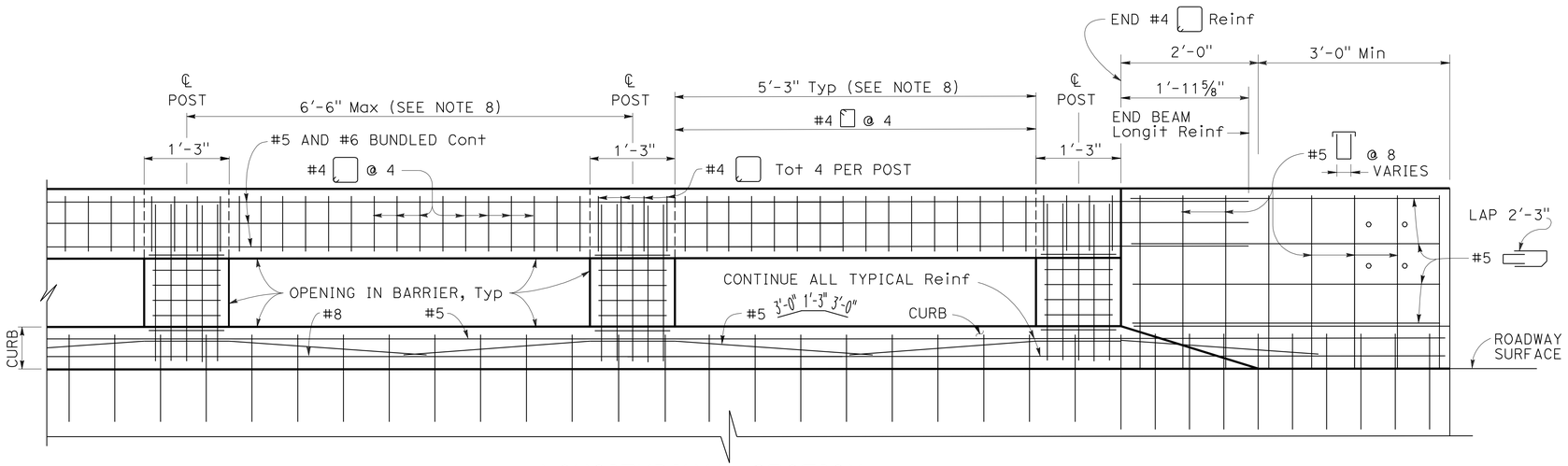

LONGITUDINAL SECTION

(Deck or wingwall reinforcing not shown)

NOTES:

1. Walls are to be backfilled before the barrier is placed.
2. Longitudinal reinforcing steel to stop at all expansion joints.
3. The front face dimensions are to be constant above the finish roadway profile, but the overall height will vary with certain thicknesses of surfacing and roadway slopes.
4. Expansion joint to match deck joint.
5. No lap splicing allowed on the longitudinal rail reinforcing. Splicing shall be staggered.
6. For typical metal railing connection details not shown, see Standard Plans A77J1 and A77J2.
7. Chain link railing is not allowed on Type 80 Barriers.
8. Post to be spaced equally, typically 6'-6" spacing. Post spacing may be reduced where location of hinges or expansion joints or the length of wingwalls will not accommodate the 6'-6" spacing. Maximum see-through availability is to be strived for, where 6'-6" post spacing can not be achieved.

STATE OF CALIFORNIA
DEPARTMENT OF TRANSPORTATION

CONCRETE BARRIER TYPE 80 (SHEET 1 OF 2)

NO SCALE

RSP B11-60 DATED APRIL 20, 2012 SUPERSEDES STANDARD PLAN B11-60 DATED MAY 20, 2011 - PAGE 300 OF THE STANDARD PLANS BOOK DATED 2010.

REVISED STANDARD PLAN RSP B11-60

2010 REVISED STANDARD PLAN RSP B11-60

4-5-12

DIST	COUNTY	ROUTE	POST MILES TOTAL PROJECT	SHEET No.	TOTAL SHEETS
06	Ker	14	39.3/40.3	51	71

REGISTERED CIVIL ENGINEER 04-06-12 DATE

9-24-12
PLANS APPROVAL DATE

REGISTERED PROFESSIONAL ENGINEER Tham V. Bui No. C64713 Exp. 06-30-13 CIVIL STATE OF CALIFORNIA

The State of California or its officers or agents shall not be responsible for the accuracy or completeness of electronic copies of this plan sheet.

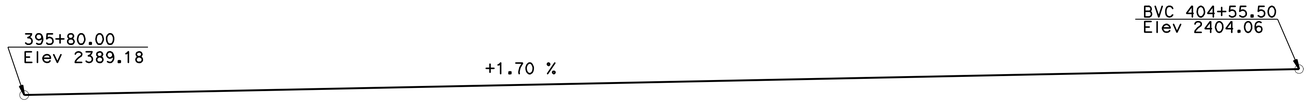

PROFILE GRADE
NO SCALE

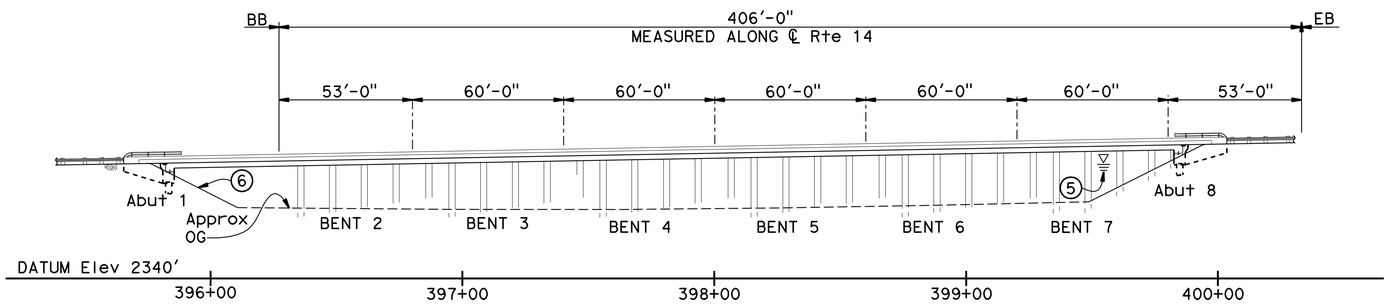

ELEVATION
1" = 30'

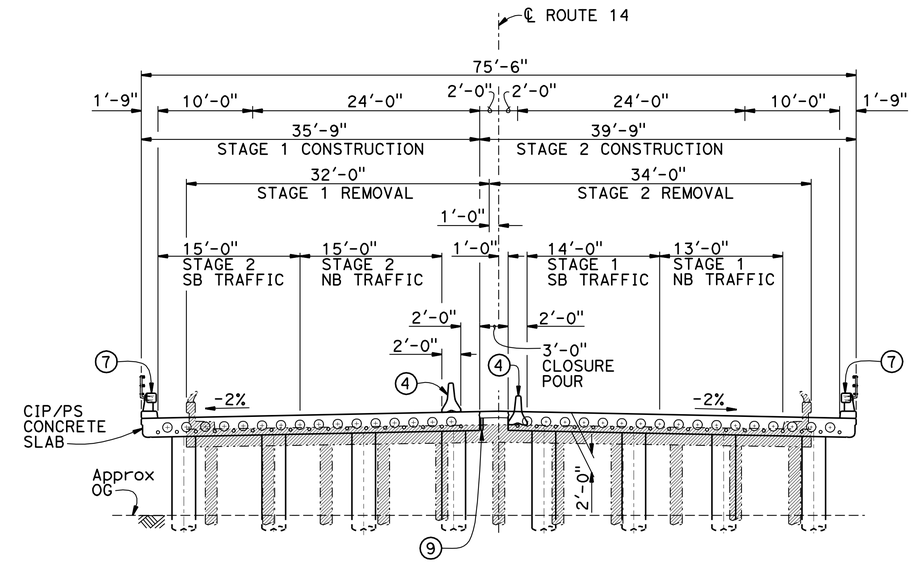

TYPICAL SECTION
1/8" = 1'-0"

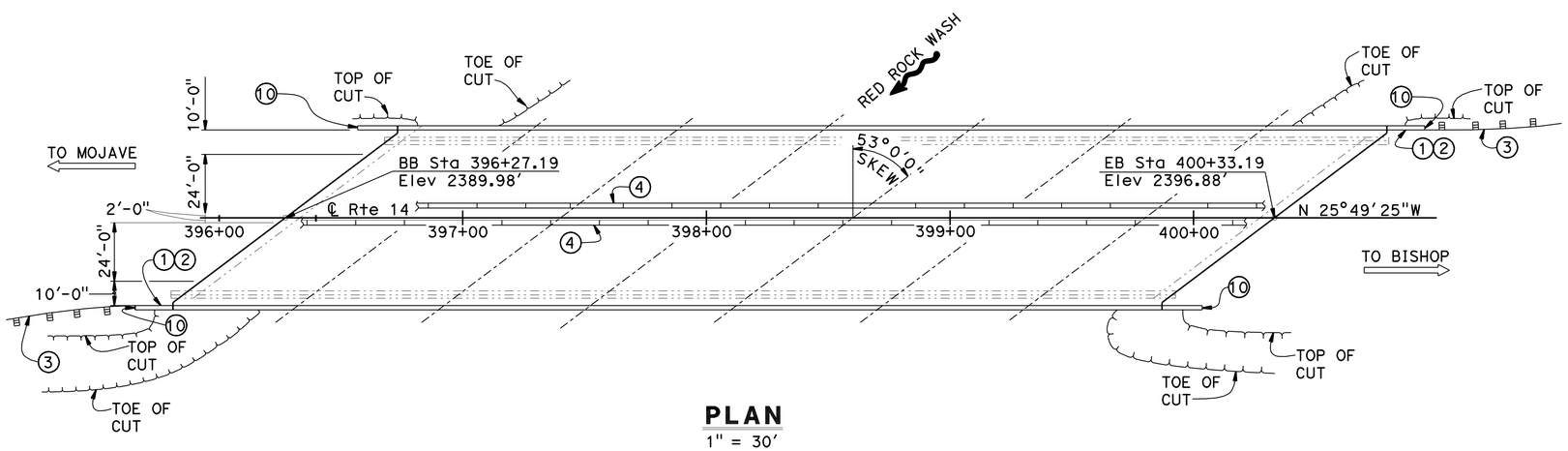

PLAN
1" = 30'

NOTES:

1. Paint "Bridge No. 50-0178"
2. Paint "RED ROCK CANYON BRIDGE"
3. Metal Beam Guard Rail, see "ROAD PLANS"
4. Temporary Rail Type K, see "ROAD PLANS"
5. Highwater elevation is for Q50
6. Concreted Rock Slope Protection, see "ROAD PLANS"
7. Concrete Barrier Type 80 (Mod) with Tubular Bicycle Railing
8. See "INDEX TO PLANS" sheet for Quantities
9. For Bat Habitat Details, see "ARCHITECTURAL TREATMENT" sheet
10. Begin/End of Wingwall = Begin/End of Barrier = Begin/End of Tubular Bicycle Railing

Indicates Existing Structure

Denotes removal of existing "Bridge No. 50-0178"

Gary Joe
DESIGN ENGINEER

	BY	CHECKED
DESIGN	A. Tern	T. Bui
DETAILS	L. Wang	T. Bui
QUANTITIES	R. Coria	T. Bui

LOAD & RESISTANCE FACTOR DESIGN — LIVE LOADING: HL93 W/"LOW-BOY": PERMIT DESIGN VEHICLE

	BY	CHECKED
LAYOUT	T. Bui	A. Tern
SPECIFICATIONS	S. Nelapatla	PLANS AND SPECS COMPARED S. Nelapatla

ORIGINAL SCALE IN INCHES FOR REDUCED PLANS 0 1 2 3

STATE OF CALIFORNIA
DEPARTMENT OF TRANSPORTATION

DIVISION OF ENGINEERING SERVICES
STRUCTURE DESIGN
DESIGN BRANCH 17

BRIDGE NO. 50-0178
POST MILE 39.9

RED ROCK CANYON BRIDGE (REPLACE)
GENERAL PLAN

UNIT: 3586
PROJECT NUMBER & PHASE: 06000001191
CONTRACT NO.: 06-0H1801

DISREGARD PRINTS BEARING EARLIER REVISION DATES

REVISION DATES 11-19-10 07-22-12 08-07-12

SHEET 1 OF 21

STRUCTURES DESIGN GENERAL PLAN SHEET (ENGLISH) (REV.09-01-10)

FILE => 50-0178-a-gp.dgn

USERNAME => s123631 DATE PLOTTED => 28-SEP-2012 TIME PLOTTED => 13:28

DIST	COUNTY	ROUTE	POST MILES TOTAL PROJECT	SHEET No.	TOTAL SHEETS
06	Ker	14	39.3/40.3	52	71

REGISTERED CIVIL ENGINEER 04-06-12 DATE

9-24-12
PLANS APPROVAL DATE

REGISTERED PROFESSIONAL ENGINEER Tham V. Bui No. C64713 Exp. 06-30-13 CIVIL STATE OF CALIFORNIA

The State of California or its officers or agents shall not be responsible for the accuracy or completeness of electronic copies of this plan sheet.

INDEX TO PLANS

1. GENERAL PLAN
2. INDEX TO PLANS
3. DECK CONTOURS
4. FOUNDATION PLAN
5. ABUTMENT LAYOUT
6. ABUTMENT DETAILS NO. 1
7. ABUTMENT DETAILS NO. 2
8. ABUTMENT DETAILS NO. 3
9. BENT LAYOUT
10. BENT DETAILS
11. TYPICAL SECTION
12. LONGITUDINAL SECTION
13. SLAB DETAILS
14. PILE DETAILS
15. ARCHITECTURAL TREATMENT
16. JOINT SEAL ASSEMBLY
17. CONCRETE BARRIER TYPE 80
18. LOG OF TEST BORINGS 1 OF 4
19. LOG OF TEST BORINGS 2 OF 4
20. LOG OF TEST BORINGS 3 OF 4
21. LOG OF TEST BORINGS 4 OF 4

STANDARD PLANS DATED MAY 2010

A10A	ACRONYMS AND ABBREVIATIONS (1 of 2)
A10B	ACRONYMS AND ABBREVIATIONS (2 of 2)
A10C	SYMBOLS 1 OF 3
A10D	SYMBOLS 2 OF 3
A10E	SYMBOLS 3 OF 3
A62C	LIMITS OF PAYMENT FOR EXCAVATION AND BACKFILL-BRIDGE
BO-1	BRIDGE DETAILS
BO-3	BRIDGE DETAILS
BO-5	BRIDGE DETAILS
BO-13	BRIDGE DETAILS
B2-9	LOAD TEST PILE DETAILS (1)
B2-10	LOAD TEST PILE DETAILS (2)
B2-11	LOAD TEST PILE DETAILS (3)
B8-5	CAST-IN-PLACE PRESTRESSED GIRDER DETAILS
B11-60	CONCRETE BARRIER TYPE 80 (SHEET 1 OF 2)
B11-61	CONCRETE BARRIER TYPE 80 (SHEET 2 OF 2)

STANDARD PLAN SHEET NO.

DETAIL NO.

QUANTITIES

BRIDGE REMOVAL	LUMP	SUM
STRUCTURE EXCAVATION (BRIDGE)	248	CY
STRUCTURE BACKFILL (BRIDGE)	114	CY
30" PERMANENT STEEL CASING	4,347	LF
30" CAST-IN-DRILLED-HOLE CONCRETE PILING	3,311	LF
24" CAST-IN-DRILLED-HOLE CONCRETE PILING (ROCK SOCKET)	1,896	LF
PRESTRESSING CAST-IN-PLACE CONCRETE	LUMP	SUM
STRUCTURAL CONCRETE, BRIDGE	2,351	CY
BAT HABITAT	1	EA
ARCHITECTURAL TREATMENT	670	SQFT
JOINT SEAL ASSEMBLY (MR 3")	250	LF
BAR REINFORCING STEEL (BRIDGE)	827,776	LB
PREPARE AND STAIN CONCRETE	670	SQFT
MISCELLANEOUS METAL (COLUMN PIN)	4,186	LB
CONCRETE BARRIER TYPE 80 (MOD)	869	LF
TUBULAR BICYCLE RAILING	869	LF

PILE DATA TABLE

LOCATION	PILE TYPE	NOMINAL RESISTANCE (kips)		CUT-OFF ELEVATION (ft)	CIDH WITH STEEL CASING TIP ELEVATION (ft)	24" ø CIDH ROCK SOCKET SPECIFIED TIP ELEVATION (ft)
		COMPRESSION	TENSION			
Abut 1	30" ø CIDH with Permanent Steel Casing and 24" ø CIDH Rock Socket	430	NA	2380.5	2310	2287 (1)
Bent 2	30" ø CIDH with Permanent Steel Casing and 24" ø CIDH Rock Socket	930	0	2365	2318	2285 (1)
Bent 3	30" ø CIDH with Permanent Steel Casing and 24" ø CIDH Rock Socket	930	0	2366	2324	2294 (1)
Bent 4	30" ø CIDH with Permanent Steel Casing and 24" ø CIDH Rock Socket	930	0	2367	2328	2300 (1)
Bent 5	30" ø CIDH with Permanent Steel Casing and 24" ø CIDH Rock Socket	930	0	2370	2320	2287 (1)
Bent 6	30" ø CIDH with Permanent Steel Casing and 24" ø CIDH Rock Socket	930	0	2374	2318	2279 (1)
Bent 7	30" ø CIDH with Permanent Steel Casing and 24" ø CIDH Rock Socket	930	0	2377	2325	2294 (1)
Abut 8	30" ø CIDH with Permanent Steel Casing and 24" ø CIDH Rock Socket	430	NA	2387.4	2330	2310 (1)

Notes:
(1) Design tip elevation is controlled by Compression
(2) Design tip elevation is controlled by Scour
(3) The specified tip elevation shall not be raised above the design tip elevations for Lateral Load

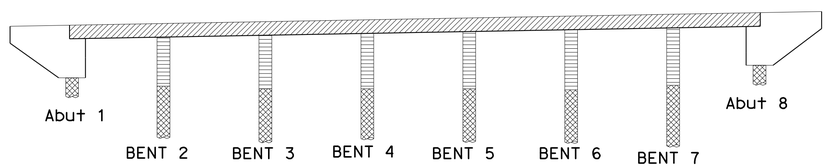

LEGEND

- Structural concrete, bridge
- Structural concrete, bridge (5,000 psi at 28 days)
- CIDH Pile (3,600 psi at 28 days)
- Structural concrete, bridge (3,600 psi at 28 days)

CONCRETE STRENGTH AND TYPE LIMITS

No Scale

GENERAL NOTES (LOAD AND RESISTANCE FACTOR DESIGN)

DESIGN:
AASHTO LRFD Bridge Design Specifications, 4th edition with California Amendments, preface dated December 2008.

SEISMIC DESIGN:
Caltrans Seismic Design Criteria (SDC), Version 1.6, dated November 2010.

DEAD LOAD:
Includes 35 psf for future wearing surface.

LIVE LOADING:
HL93 and permit design load.

SEISMIC LOADING:
Soil profile type D
Magnitude group 7.70 ± 0.25
Peak Rock Acceleration 0.49 g

See ARS Curve on "DECK CONTOURS"sheet

REINFORCED CONCRETE:
fy = 60 ksi
f'c = 5 ksi
n = 8

PRESTRESSED CONCRETE:
See "Prestressing Notes" on "LONGITUDINAL SECTION" sheet.

	BY	CHECKED
DESIGN	A. Tern	T. Bui
DETAILS	L. Wang	T. Bui
QUANTITIES	R. Coria	T. Bui

STATE OF CALIFORNIA
DEPARTMENT OF TRANSPORTATION

DIVISION OF ENGINEERING SERVICES
STRUCTURE DESIGN
DESIGN BRANCH 17

BRIDGE NO. 50-0178
POST MILE 39.9

RED ROCK CANYON BRIDGE (REPLACE)
INDEX TO PLANS

STRUCTURES DESIGN DETAIL SHEET (ENGLISH) (REV. 09-01-10)

ORIGINAL SCALE IN INCHES FOR REDUCED PLANS 0 1 2 3

UNIT: 3586
PROJECT NUMBER & PHASE: 06000001191
CONTRACT NO.: 06-0H1801

DISREGARD PRINTS BEARING EARLIER REVISION DATES

REVISION DATES 12-01-10 04-26-12 07-27-12

SHEET 2 OF 21

FILE => 50-0178-b-itp.dgn

USERNAME => s123631 DATE PLOTTED => 28-SEP-2012 TIME PLOTTED => 13:29

DIST	COUNTY	ROUTE	POST MILES TOTAL PROJECT	SHEET No.	TOTAL SHEETS
06	Ker	14	39.3/40.3	53	71

REGISTERED CIVIL ENGINEER 04-06-12 DATE

9-24-12
PLANS APPROVAL DATE

REGISTERED PROFESSIONAL ENGINEER
Tham V. Bui
No. C64713
Exp. 06-30-13
CIVIL
STATE OF CALIFORNIA

The State of California or its officers or agents shall not be responsible for the accuracy or completeness of electronic copies of this plan sheet.

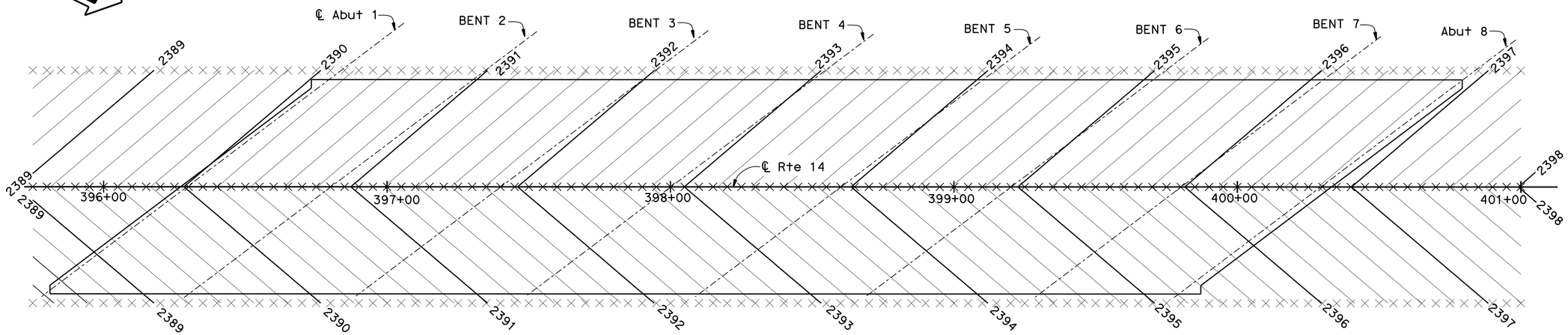

DECK CONTOURS

1" = 20'-0"

NOTES:

1. Contour interval = 0.2 ft
2. x = 5 ft intervals along station line
3. Contours do not include camber

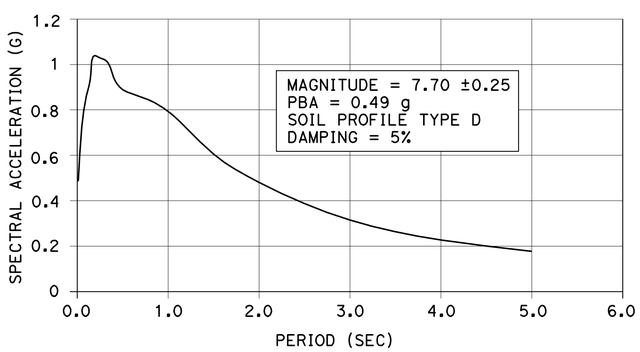

ARS CURVE

DESIGN	BY A. Tern	CHECKED T. Bui
DETAILS	BY L. Wang	CHECKED T. Bui
QUANTITIES	BY R. Coria	CHECKED T. Bui

STATE OF CALIFORNIA
DEPARTMENT OF TRANSPORTATION

DIVISION OF ENGINEERING SERVICES
STRUCTURE DESIGN
DESIGN BRANCH 17

BRIDGE NO. 50-0178
POST MILE 39.9

RED ROCK CANYON BRIDGE (REPLACE)
DECK CONTOURS

STRUCTURES DESIGN DETAIL SHEET (ENGLISH) (REV. 09-01-10)

ORIGINAL SCALE IN INCHES FOR REDUCED PLANS 0 1 2 3

UNIT: 3586
PROJECT NUMBER & PHASE: 06000001191
CONTRACT NO.: 06-0H1801

DISREGARD PRINTS BEARING EARLIER REVISION DATES

REVISION DATES: 12-01-10 07-27-12 09-04-12

SHEET 3 OF 21

FILE => 50-0178-c-dc.dgn

USERNAME => s123631 DATE PLOTTED => 28-SEP-2012 TIME PLOTTED => 13:29

HYDROLOGIC SUMMARY			
Drainage Area: 55.0 square miles			
	Design Flood	Base Flood	Overtopping Flood/Flood of Record
Frequency	50-yr	100-yr	N/A
Discharge	28,000 cfs	50,000 cfs	62,000
Water Surface Elevation at bridge	2,386.03 ft	2,391.99 ft	N/A

Flood plain data are based upon information available when the plans were prepared and are shown to meet federal requirements. The accuracy of said information is not warranted by the State and interested or affected parties should make their own investigation.

DIST	COUNTY	ROUTE	POST MILES TOTAL PROJECT	SHEET No.	TOTAL SHEETS
06	Ker	14	39.3/40.3	54	71

REGISTERED CIVIL ENGINEER 04-06-12 DATE

9-24-12
PLANS APPROVAL DATE

REGISTERED PROFESSIONAL ENGINEER Tham V. Bui No. C64713 Exp. 06-30-13 CIVIL STATE OF CALIFORNIA

The State of California or its officers or agents shall not be responsible for the accuracy or completeness of scanned copies of this plan sheet.

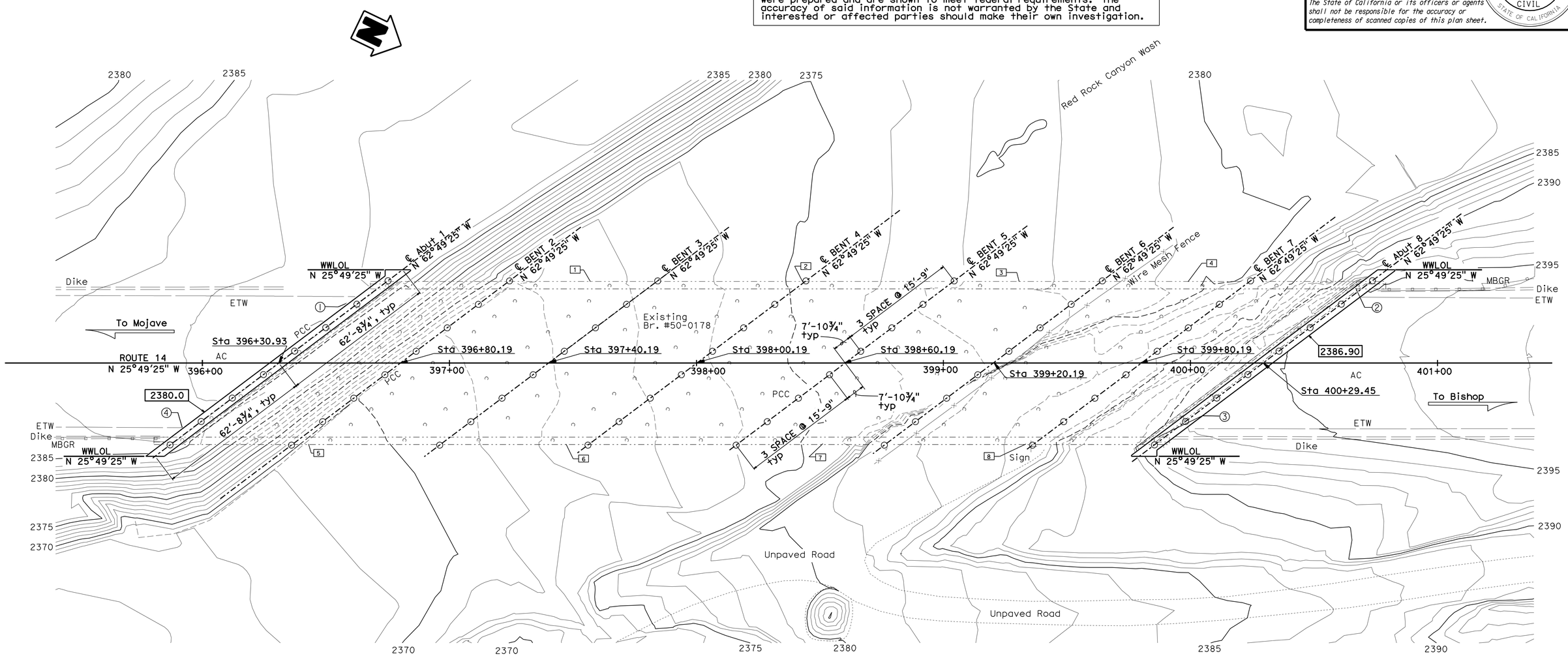

SURVEY CONTROL

PM39.85 (Not Shown)

Fnd CT Alum Cap On Rebar
36.40 Lt. "A1" Line, Rte 14
Sta. 389+41.85
N 2,315,809.760
E 6,568,846.270
EL.=2382.13

PM40.25 2008 (Not Shown)

Fnd CT Alum Cap On Rebar
120.54 Rt. "A1" Line, Rte 14
Sta. 410+31.06
N 2,317,671.040
E 6,567,880.180
EL.=2428.87

Bridge Location #50-0178 (PN Points)

① 30.15 Lt. "A1" Line, Sta 392+45.34, EL.=2387.92±
② 30.29 Lt. "A1" Line, Sta 396+39.74, EL.=2395.04±
③ 29.80 Rt. "A1" Line, Sta 395+60.03, EL.=2393.63±
④ 30.07 Rt. "A1" Line, Sta 391+65.86, EL.=2386.56±

Soffit El

1	2388.10	2	2389.71
3	2391.27	4	2392.50
5	2386.08	6	2388.00
7	2389.87	8	2391.27

NOTES:

○ Indicates 30" ø CIDH Pile with permanent steel casing

Indicates bottom of footing elevation

PRELIMINARY INVESTIGATION SECTION

SCALE 1"=20'	VERT.DATUM NAVD 88	PHOTOGRAMMETRY AS OF: X			
	HORZ.DATUM NAD83	SURVEYED	BY District	CHECKED	BY Lawrence Lew 05/2011
ALIGNMENT TIES Dist. Traverse Sheet		DRAFTED	BY Sharon Zheng 05/2011	CHECKED	BY Jim Pallares 05/2011

DESIGN	BY A. Tern	CHECKED	T. Bui
DETAILS	BY L. Wang	CHECKED	A. Tern
QUANTITIES	BY A. Tern	CHECKED	T. Bui

STATE OF CALIFORNIA
DEPARTMENT OF TRANSPORTATION

DIVISION OF ENGINEERING SERVICES
STRUCTURE DESIGN
DESIGN BRANCH 17

BRIDGE NO. 50-0178
POST MILE 39.9

RED ROCK CANYON BRIDGE (REPLACE)
FOUNDATION PLAN

STRUCTURES FOUNDATION PLAN SHEET (ENGLISH) (REV. 09-01-10)

ORIGINAL SCALE IN INCHES FOR REDUCED PLANS 0 1 2 3

UNIT: 3646
PROJECT NUMBER & PHASE: 06000001191
CONTRACT NO.: 06-oh1801

DISREGARD PRINTS BEARING EARLIER REVISION DATES

REVISION DATES 10-28-11 07-02-12 08-07-12

SHEET 4 OF 21

FILE => 50-0178-e-fp.dgn

DIST	COUNTY	ROUTE	POST MILES TOTAL PROJECT	SHEET No.	TOTAL SHEETS
06	Ker	14	39.3/40.3	55	71

REGISTERED CIVIL ENGINEER 04-06-12 DATE

9-24-12
PLANS APPROVAL DATE

REGISTERED PROFESSIONAL ENGINEER Tham V. Bui No. C64713 Exp. 06-30-13 CIVIL STATE OF CALIFORNIA

The State of California or its officers or agents shall not be responsible for the accuracy or completeness of electronic copies of this plan sheet.

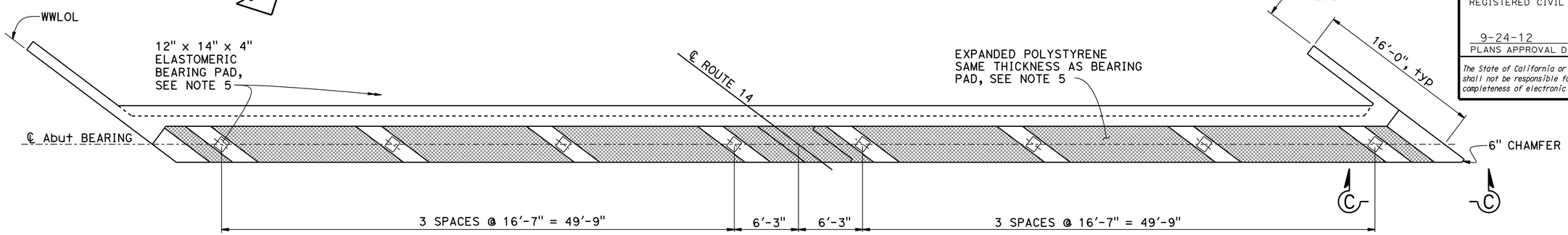

PLAN
3/16" = 1'-0"

NOTES:
1. Abutment 1 shown, Abutment 8 similar
2. For Section A-A, see "ABUTMENT DETAILS NO. 2" sheet
3. For Section D-D and E-E, see "ABUTMENT DETAILS NO. 3"sheet
4. For Section C-C Elevation, see "ABUTMENT DETAILS NO. 1" sheet
5. For Bearing Pad detail, see "ABUTMENT DETAILS NO. 3" sheet

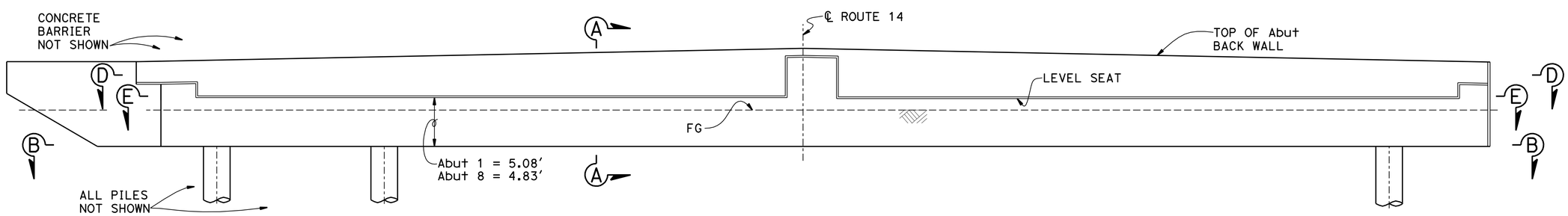

ELEVATION
3/16" = 1'-0"

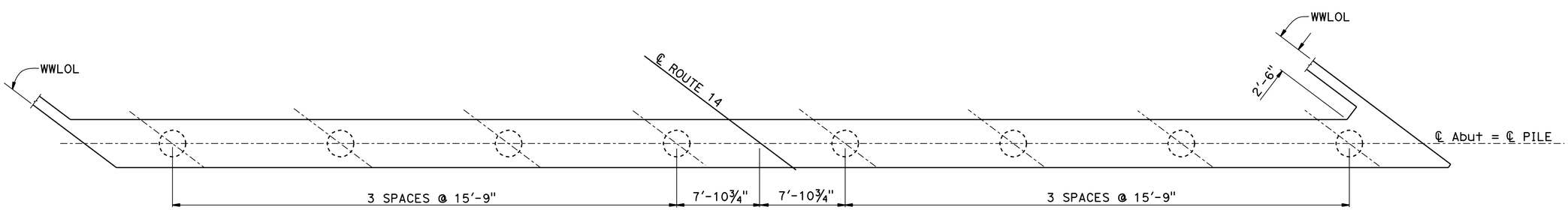

SECTION B-B
3/16" = 1'-0"

DESIGN	BY A. Tern	CHECKED T. Bui	
DETAILS	BY L. Wang	CHECKED T. Bui	
QUANTITIES	BY R. Coria	CHECKED T. Bui	

STATE OF CALIFORNIA
DEPARTMENT OF TRANSPORTATION

DIVISION OF ENGINEERING SERVICES
STRUCTURE DESIGN
DESIGN BRANCH 17

BRIDGE NO. 50-0178
POST MILE 39.9

RED ROCK CANYON BRIDGE (REPLACE)
ABUTMENT LAYOUT

STRUCTURES DESIGN DETAIL SHEET (ENGLISH) (REV. 09-01-10)

ORIGINAL SCALE IN INCHES FOR REDUCED PLANS 0 1 2 3

UNIT: 3586
PROJECT NUMBER & PHASE: 06000001191
CONTRACT NO.: 06-0H1801

DISREGARD PRINTS BEARING EARLIER REVISION DATES

REVISION DATES: 10-04-11 05-02-12 07-27-12

SHEET 5 OF 21

FILE => 50-0178-f_a-lol.dgn

USERNAME => s123631 DATE PLOTTED => 28-SEP-2012 TIME PLOTTED => 13:29

DIST	COUNTY	ROUTE	POST MILES TOTAL PROJECT	SHEET No.	TOTAL SHEETS
06	Ker	14	39.3/40.3	56	71

REGISTERED CIVIL ENGINEER 04-06-12 DATE

9-24-12
PLANS APPROVAL DATE

REGISTERED PROFESSIONAL ENGINEER Tham V. Bui No. C64713 Exp. 06-30-13 CIVIL STATE OF CALIFORNIA

The State of California or its officers or agents shall not be responsible for the accuracy or completeness of electronic copies of this plan sheet.

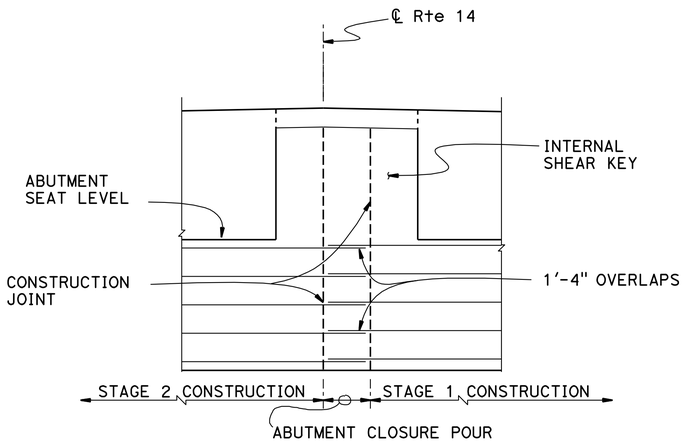

ELEVATION
3/8" = 1'-0"

Note:

Roughen construction joint to 1/4" amplitude.

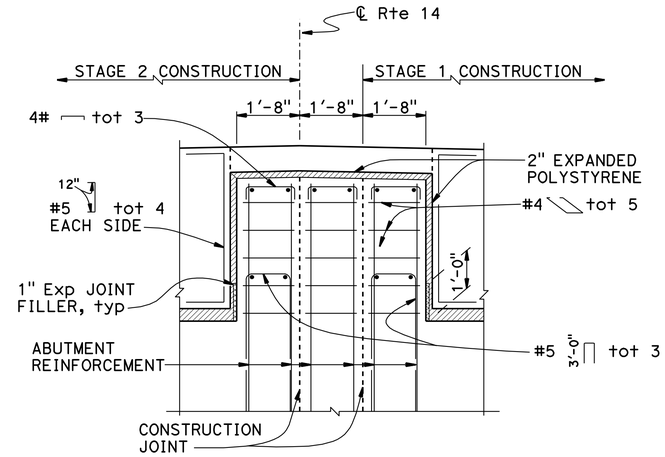

INTERNAL SHEAR KEY ELEVATION
B0-13

1/2" = 1'-0"

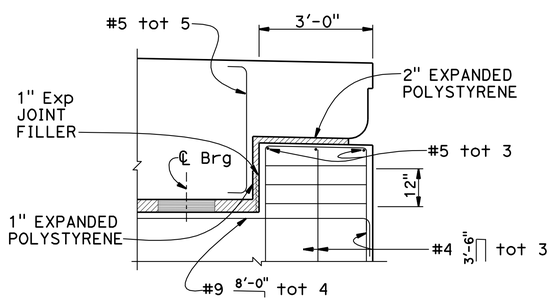

SECTION C-C ELEVATION
B0-13

1/2" = 1'-0"

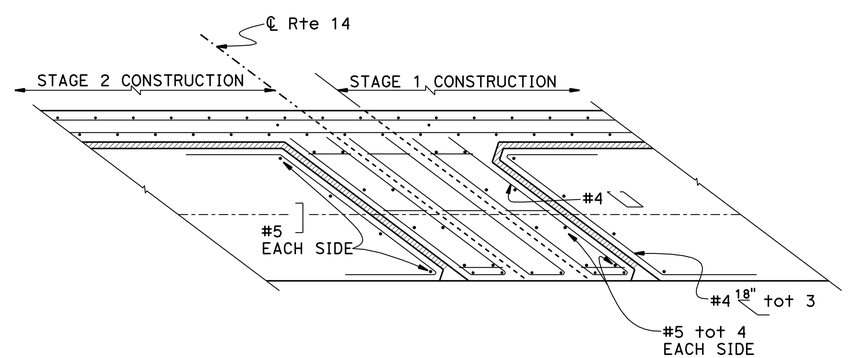

INTERNAL SHEAR KEY PLAN

1/2" = 1'-0"

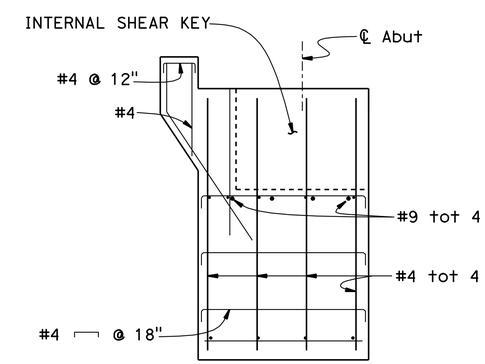

SIDE REINFORCEMENT & CONSTRUCTION JOINT

1/2" = 1'-0"

DESIGN	BY A. Tern	CHECKED T. Bui
DETAILS	BY L. Wang	CHECKED T. Bui
QUANTITIES	BY R. Coria	CHECKED T. Bui

STATE OF CALIFORNIA DEPARTMENT OF TRANSPORTATION

DIVISION OF ENGINEERING SERVICES STRUCTURE DESIGN DESIGN BRANCH 17

BRIDGE NO. 50-0178
POST MILE 39.9

RED ROCK CANYON BRIDGE (REPLACE)
ABUTMENT DETAILS NO. 1

STRUCTURES DESIGN DETAIL SHEET (ENGLISH) (REV. 09-01-10)

ORIGINAL SCALE IN INCHES FOR REDUCED PLANS 0 1 2 3

UNIT: 3586
PROJECT NUMBER & PHASE: 06000001191 CONTRACT NO.: 06-0H1801

DISREGARD PRINTS BEARING EARLIER REVISION DATES

REVISION DATES 10-06-11 07-27-12 05-02-12

SHEET 6 OF 21

FILE => 50-0178-f-a-dt01.dgn

USERNAME => s123631 DATE PLOTTED => 28-SEP-2012 TIME PLOTTED => 13:29

DIST	COUNTY	ROUTE	POST MILES TOTAL PROJECT	SHEET No.	TOTAL SHEETS
06	Ker	14	39.3/40.3	57	71

REGISTERED CIVIL ENGINEER 04-06-12 DATE

9-24-12
PLANS APPROVAL DATE

REGISTERED PROFESSIONAL ENGINEER Tham V. Bui No. C64713 Exp. 06-30-13 CIVIL STATE OF CALIFORNIA

The State of California or its officers or agents shall not be responsible for the accuracy or completeness of electronic copies of this plan sheet.

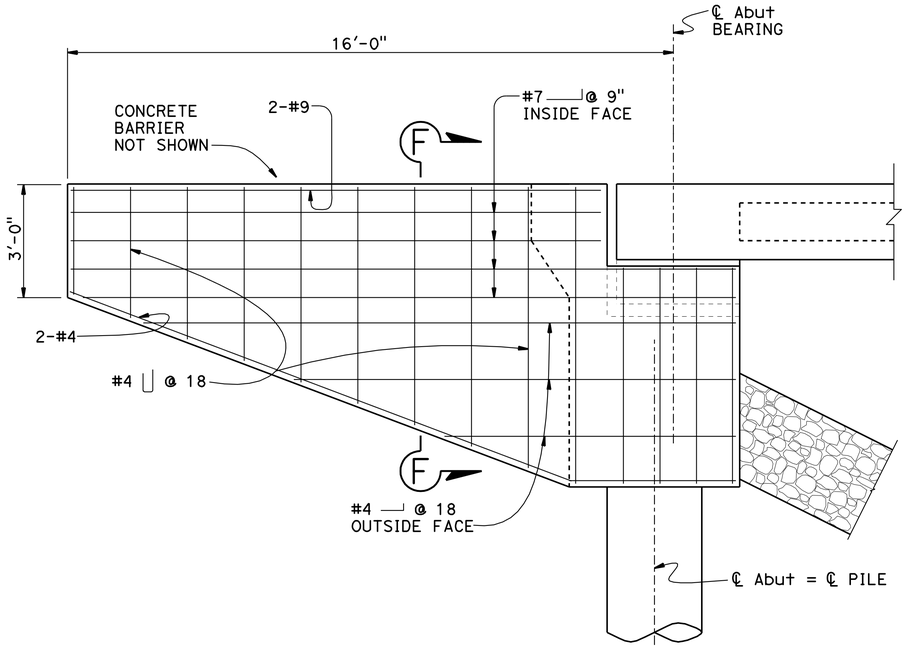

WINGWALL ELEVATION
3/8" = 1'-0"

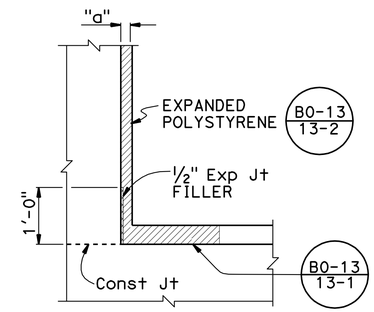

DETAIL "A"
3/4" = 1'-0"

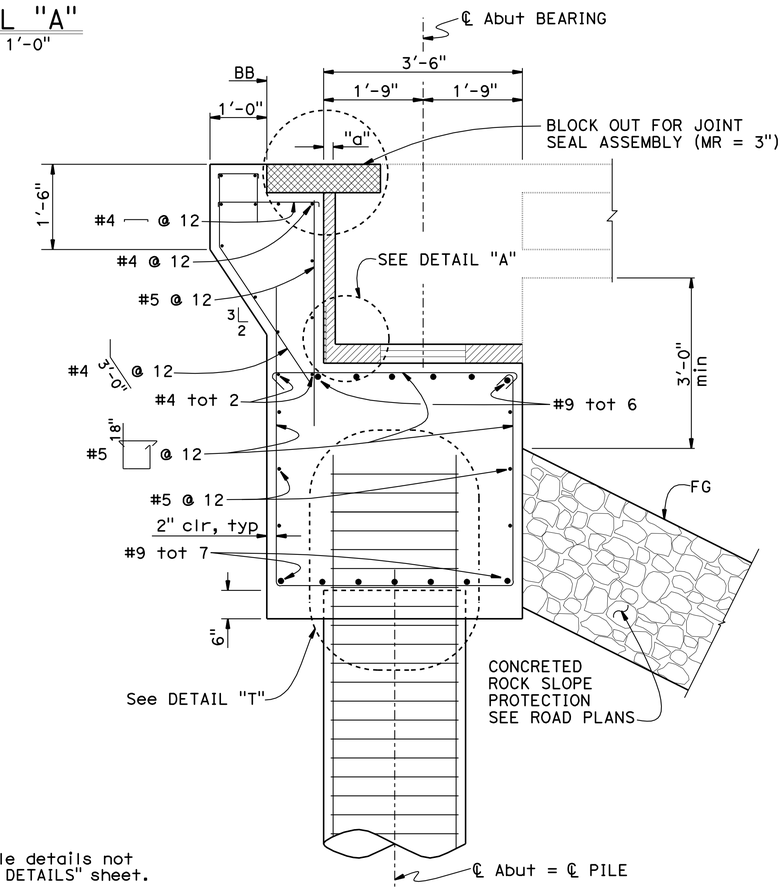

SECTION A-A
3/4" = 1'-0"

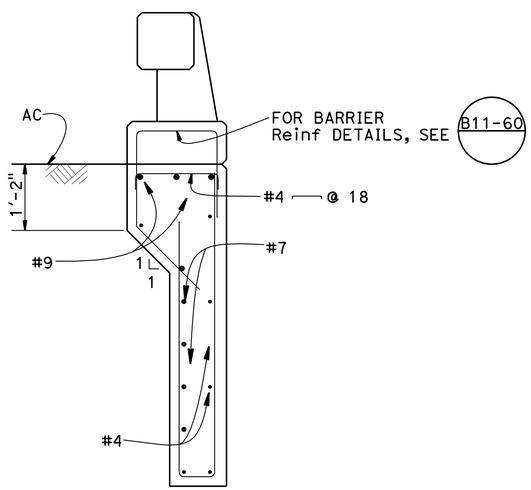

SECTION F-F
3/4" = 1'-0"

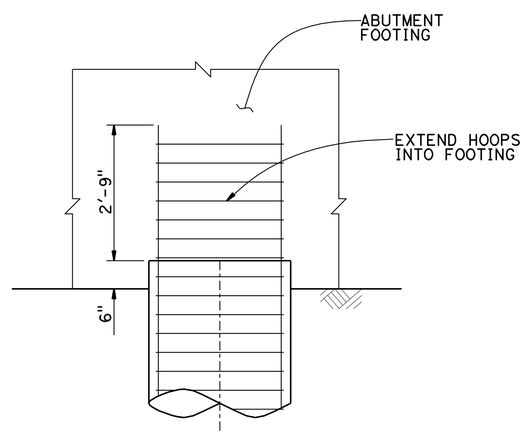

DETAIL "T"
No Scale

NOTES:

1. For abutment pile details not shown, see "PILE DETAILS" sheet.
2. For location of Section A-A, see "ABUTMENT LAYOUT" sheet.
3. Adjust the stirrup hoops to facilitate placement of abutment reinforcement.

DESIGN	BY A. Tern	CHECKED T. Bui	
DETAILS	BY L. Wang	CHECKED T. Bui	
QUANTITIES	BY R. Coria	CHECKED T. Bui	

STATE OF CALIFORNIA
DEPARTMENT OF TRANSPORTATION

DIVISION OF ENGINEERING SERVICES
STRUCTURE DESIGN
DESIGN BRANCH 17

BRIDGE NO. 50-0178
POST MILE 39.9

RED ROCK CANYON BRIDGE (REPLACE)
ABUTMENT DETAILS NO. 2

STRUCTURES DESIGN DETAIL SHEET (ENGLISH) (REV. 09-01-10)

ORIGINAL SCALE IN INCHES FOR REDUCED PLANS 0 1 2 3

UNIT: 3586
PROJECT NUMBER & PHASE: 06000001191
CONTRACT NO.: 06-0H1801

DISREGARD PRINTS BEARING EARLIER REVISION DATES

REVISION DATES 11-08-11 08-03-12 08-13-12

SHEET 7 OF 21

FILE => 50-0178-f-a-dt02.dgn

USERNAME => s123631 DATE PLOTTED => 28-SEP-2012 TIME PLOTTED => 13:29

DIST	COUNTY	ROUTE	POST MILES TOTAL PROJECT	SHEET No.	TOTAL SHEETS
06	Ker	14	39.3/40.3	58	71

REGISTERED CIVIL ENGINEER 04-06-12 DATE

9-24-12
PLANS APPROVAL DATE

REGISTERED PROFESSIONAL ENGINEER
Tham V. Bui
No. C64713
Exp. 06-30-13
CIVIL
STATE OF CALIFORNIA

The State of California or its officers or agents shall not be responsible for the accuracy or completeness of electronic copies of this plan sheet.

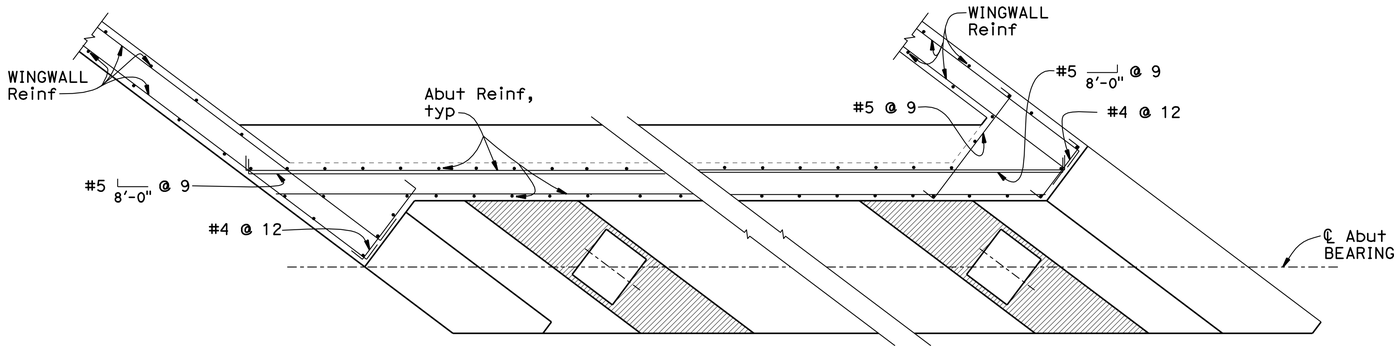

SECTION D-D (B0-13) (B0-1)
½" = 1'-0"

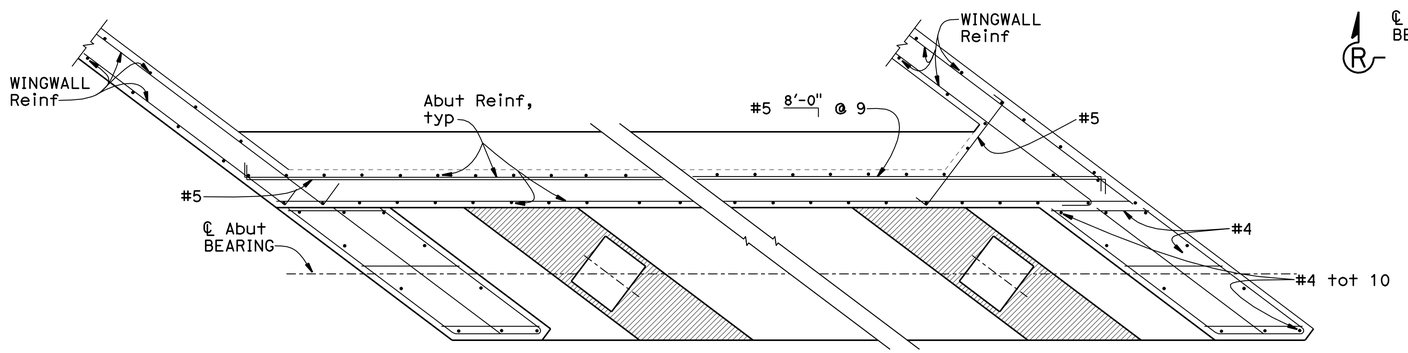

SECTION E-E (B0-13) (B0-1)
½" = 1'-0"

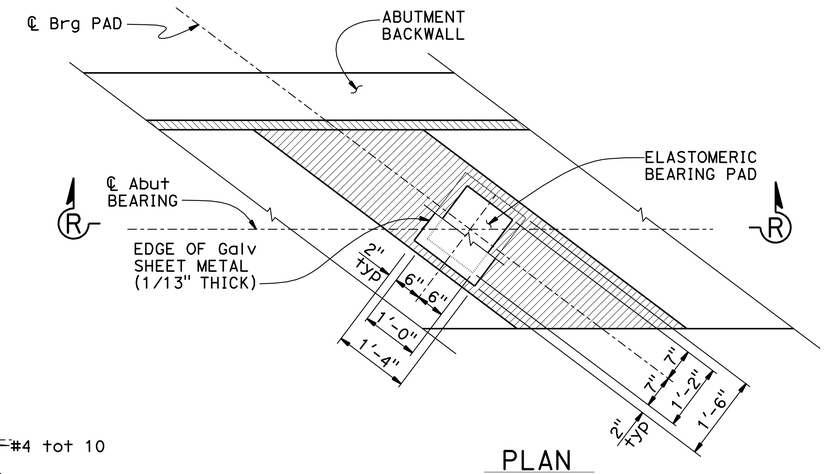

PLAN
¾" = 1'-0"

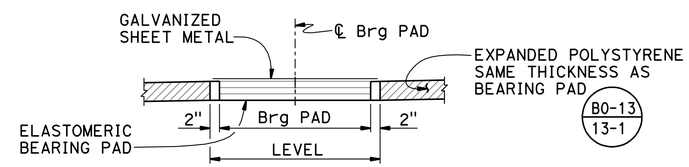

SECTION R-R
BEARING PAD DETAIL
¾" = 1'-0"

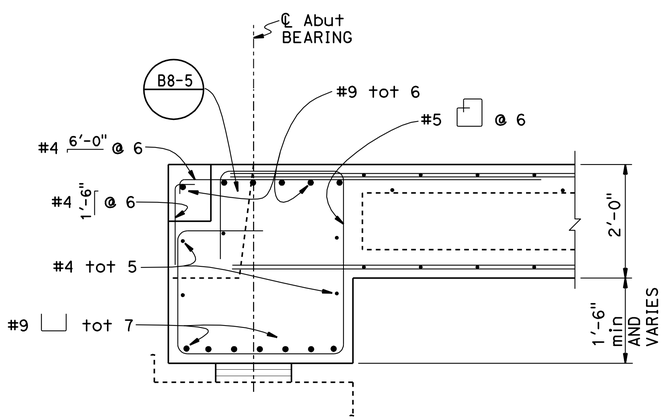

END DIAPHRAGM (B8-5)
¾" = 1'-0"

NOTES:

1. Coat top of bearing pad with silicone grease before placing sheet metal.
2. Details typical at all abutment bearing pads.
3. For locations of Section D-D and E-E, see "ABUTMENT LAYOUT" sheet.

	BY	CHECKED
DESIGN	A. Tern	T. Bui
DETAILS	L. Wang	T. Bui
QUANTITIES	R. Coria	T. Bui

STATE OF CALIFORNIA
DEPARTMENT OF TRANSPORTATION

DIVISION OF ENGINEERING SERVICES
STRUCTURE DESIGN
DESIGN BRANCH 17

BRIDGE NO. 50-0178
POST MILE 39.9

RED ROCK CANYON BRIDGE (REPLACE)
ABUTMENT DETAILS NO. 3

STRUCTURES DESIGN DETAIL SHEET (ENGLISH) (REV. 09-01-10)

ORIGINAL SCALE IN INCHES FOR REDUCED PLANS 0 1 2 3

UNIT: 3586
PROJECT NUMBER & PHASE: 06000001191
CONTRACT NO.: 06-0H1801

DISREGARD PRINTS BEARING EARLIER REVISION DATES

REVISION DATES 01-13-12 07-27-12 09-24-12

SHEET 8 OF 21

FILE => 50-0178-f-a-dt03.dgn

USERNAME => s123631 DATE PLOTTED => 28-SEP-2012 TIME PLOTTED => 13:29

DIST	COUNTY	ROUTE	POST MILES TOTAL PROJECT	SHEET No.	TOTAL SHEETS
06	Ker	14	39.3/40.3	59	71

REGISTERED CIVIL ENGINEER 04-06-12 DATE

9-24-12
PLANS APPROVAL DATE

REGISTERED PROFESSIONAL ENGINEER Tham V. Bui No. C64713 Exp. 06-30-13 CIVIL STATE OF CALIFORNIA

The State of California or its officers or agents shall not be responsible for the accuracy or completeness of electronic copies of this plan sheet.

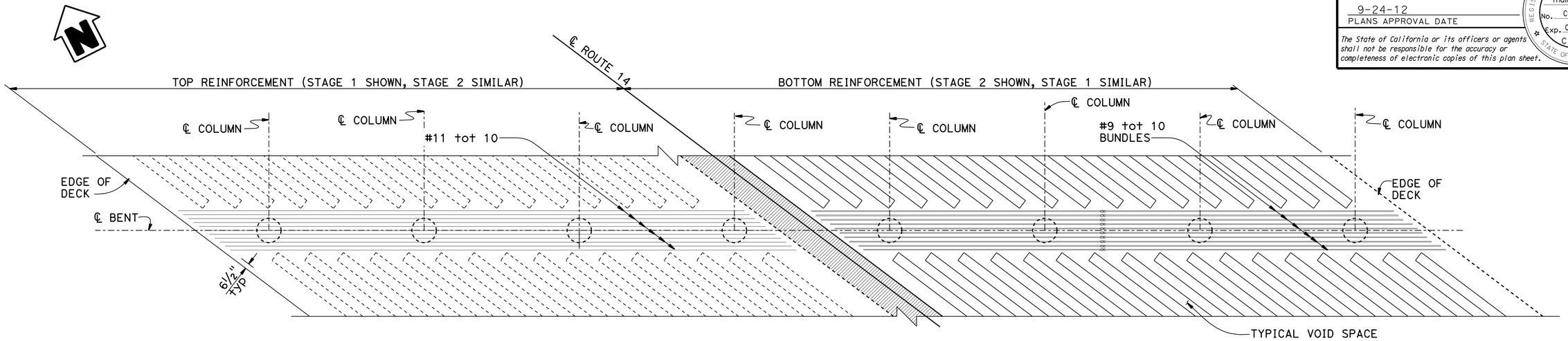

PLAN
3/16" = 1'-0"

NOTES:

1. For "SECTION H-H & J-J, see "BENT DETAILS" sheet.
2. No splices allowed in the top and bottom main Bent Cap reinforcement.
3. Details shown apply to all columns at all Bents.

Indicates Limits of Closure Pour

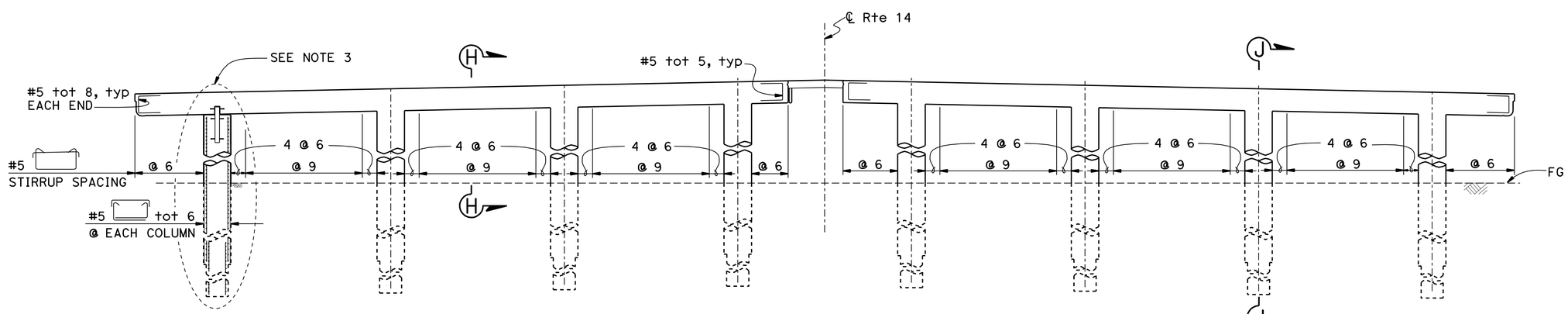

ELEVATION
3/16" = 1'-0"

DESIGN	BY A. Tern	CHECKED T. Bui	
DETAILS	BY L. Wang	CHECKED T. Bui	
QUANTITIES	BY R. Coria	CHECKED T. Bui	

STATE OF CALIFORNIA
DEPARTMENT OF TRANSPORTATION

DIVISION OF ENGINEERING SERVICES
STRUCTURE DESIGN
DESIGN BRANCH 17

BRIDGE NO. 50-0178
POST MILE 39.9

RED ROCK CANYON BRIDGE (REPLACE)
BENT LAYOUT

STRUCTURES DESIGN DETAIL SHEET (ENGLISH) (REV. 09-01-10)

ORIGINAL SCALE IN INCHES FOR REDUCED PLANS 0 1 2 3

UNIT: 3586
PROJECT NUMBER & PHASE: 06000001191
CONTRACT NO.: 06-0H1801

DISREGARD PRINTS BEARING EARLIER REVISION DATES

REVISION DATES: 10-25-11 07-25-12 08-07-12

SHEET 9 OF 21

FILE => 50-0178-h_b-lol.dgn

USERNAME => s123631 DATE PLOTTED => 28-SEP-2012 TIME PLOTTED => 13:29

DIST	COUNTY	ROUTE	POST MILES TOTAL PROJECT	SHEET No.	TOTAL SHEETS
06	Ker	14	39.3/40.3	60	71

REGISTERED CIVIL ENGINEER 04-06-12 DATE

9-24-12
PLANS APPROVAL DATE

REGISTERED PROFESSIONAL ENGINEER Tham V. Bui No. C64713 Exp. 06-30-13 CIVIL STATE OF CALIFORNIA

The State of California or its officers or agents shall not be responsible for the accuracy or completeness of electronic copies of this plan sheet.

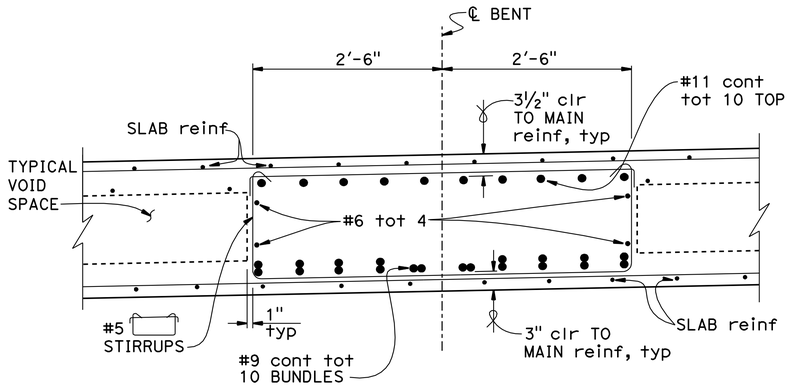

SECTION H-H
1" = 1'-0"

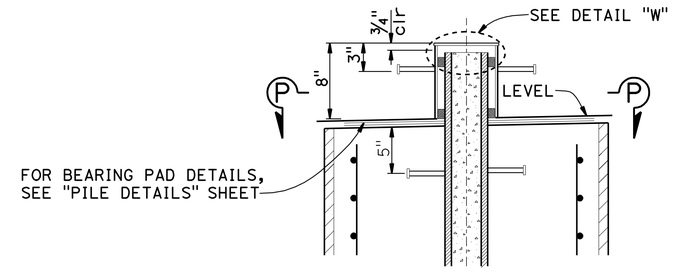

COLUMN PIN DETAIL
1½" = 1'-0"

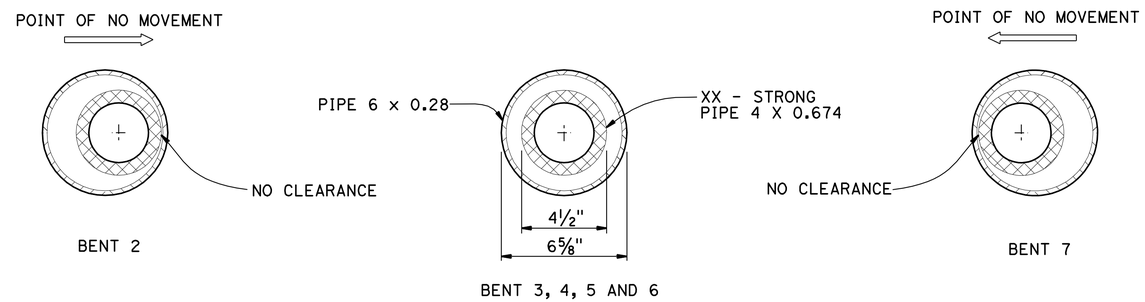

SECTION P-P
3" = 1'-0"

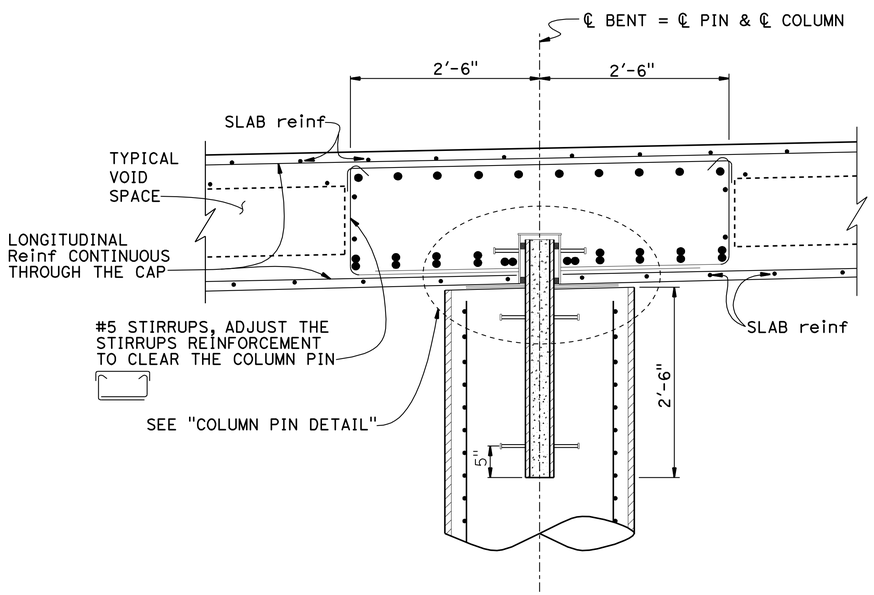

SECTION J-J
1" = 1'-0"

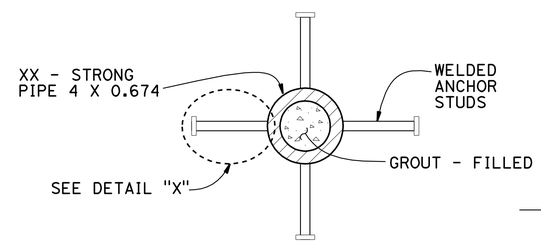

PLAN
3" = 1'-0"

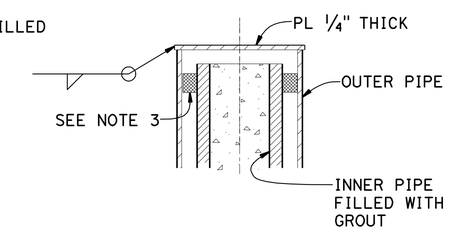

DETAIL "W"
3" = 1'-0"

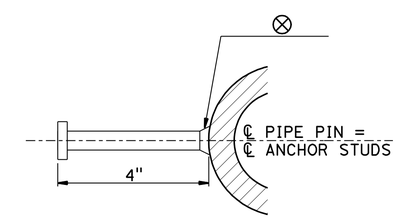

DETAIL "X"
6" = 1'-0"

Notes:

1. Adjust spacing of main Bent Cap and Slab reinforcement to allow placement of Column Pin.
2. Place Bent Cap stirrups parallel to main Slab reinforcement and space along ℄ Bent.
3. Place ¾" styrofoam spacer around the inner pipe to facilitate the placement of outer pipe at Bents, 3, 4, 5, and 6.
4. For locations of Section H-H and J-J, see "BENT LAYOUT" sheet.

	BY	CHECKED
DESIGN	A. Tern	T. Bui
DETAILS	L. Wang	T. Bui
QUANTITIES	R. Coria	T. Bui

STATE OF CALIFORNIA
DEPARTMENT OF TRANSPORTATION

DIVISION OF ENGINEERING SERVICES
STRUCTURE DESIGN
DESIGN BRANCH 17

BRIDGE NO. 50-0178
POST MILE 39.9

RED ROCK CANYON BRIDGE (REPLACE)
BENT DETAILS

STRUCTURES DESIGN DETAIL SHEET (ENGLISH) (REV. 09-01-10)

ORIGINAL SCALE IN INCHES FOR REDUCED PLANS 0 1 2 3

UNIT: 3586
PROJECT NUMBER & PHASE: 06000001191
CONTRACT NO.: 06-0H1801

DISREGARD PRINTS BEARING EARLIER REVISION DATES

REVISION DATES 10-06-11 08-05-12 08-13-12

SHEET 10 OF 21

FILE => 50-0178-h-b-dt.dgn

USERNAME => s123631 DATE PLOTTED => 28-SEP-2012 TIME PLOTTED => 13:30

DIST	COUNTY	ROUTE	POST MILES TOTAL PROJECT	SHEET No.	TOTAL SHEETS
06	Ker	14	39.3/40.3	61	71

REGISTERED CIVIL ENGINEER 04-06-12 DATE

9-24-12
PLANS APPROVAL DATE

REGISTERED PROFESSIONAL ENGINEER Tham V. Bui No. C64713 Exp. 06-30-13 CIVIL STATE OF CALIFORNIA

The State of California or its officers or agents shall not be responsible for the accuracy or completeness of electronic copies of this plan sheet.

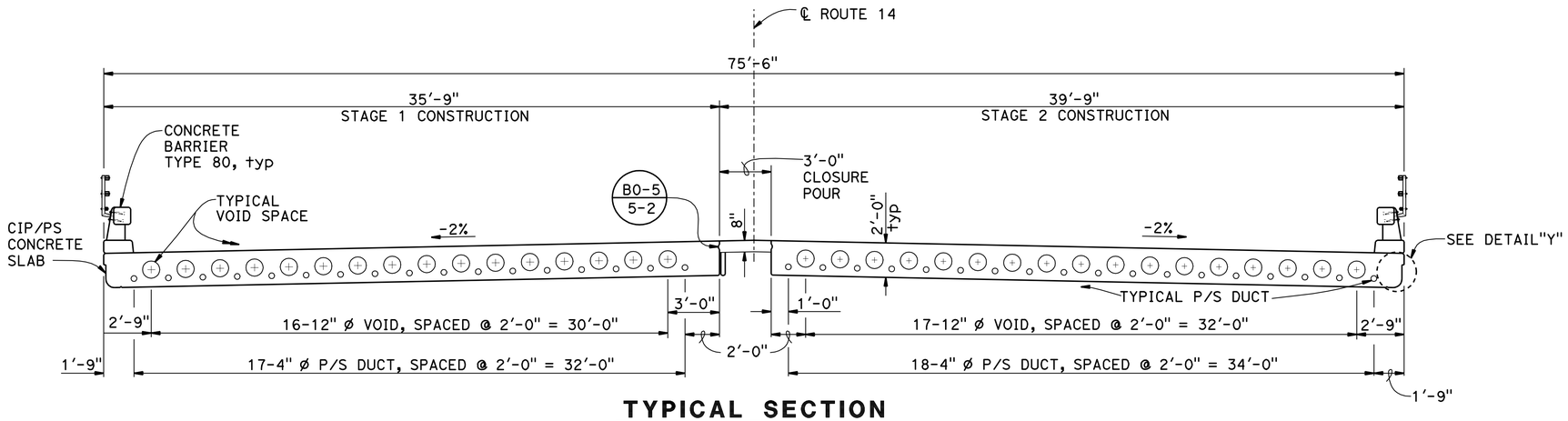

TYPICAL SECTION

1/4" = 1'-0"

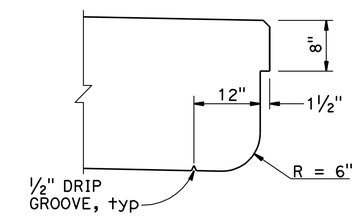

DETAIL "Y"

1" = 1'-0"

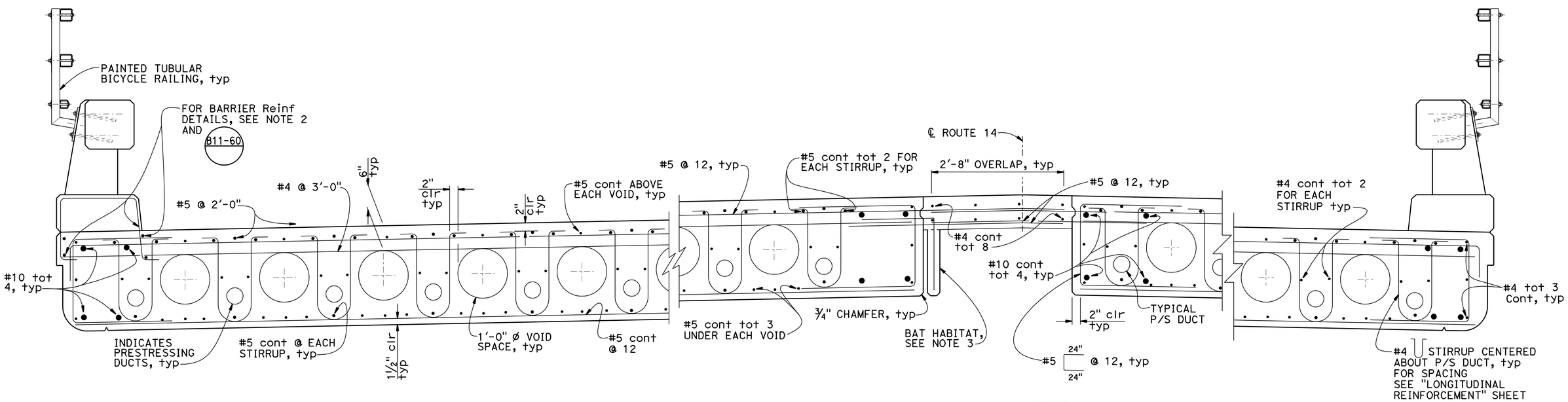

PART TYPICAL SECTION B0-5 B8-5

1" = 1'-0"

NOTES:

1. Closure pour reinforcement extend 1'-6" into the bridge deck. Adjust closure pour reinforcement to miss prestressing duct.
2. Adjust barrier rail reinforcement to miss prestressing ducts.
3. See "ARCHITECTURAL TREATMENT" sheet for "BAT HABITAT DETAILS."

	BY	CHECKED
DESIGN	A. Tern	T. Bui
DETAILS	L. Wang	T. Bui
QUANTITIES	R. Coria	T. Bui

STATE OF CALIFORNIA
DEPARTMENT OF TRANSPORTATION

DIVISION OF ENGINEERING SERVICES
STRUCTURE DESIGN
DESIGN BRANCH 17

BRIDGE NO. 50-0178
POST MILE 39.9

RED ROCK CANYON BRIDGE (REPLACE)
TYPICAL SECTION

STRUCTURES DESIGN DETAIL SHEET (ENGLISH) (REV. 09-01-10)

ORIGINAL SCALE IN INCHES FOR REDUCED PLANS 0 1 2 3

UNIT: 3586
PROJECT NUMBER & PHASE: 06000001191
CONTRACT NO.: 06-0H1801

DISREGARD PRINTS BEARING EARLIER REVISION DATES

REVISION DATES 01-21-11 05-08-12 07-27-12

SHEET 11 OF 21

FILE => 50-0178-k-ts.dgn

USERNAME => s123631 DATE PLOTTED => 28-SEP-2012 TIME PLOTTED => 13:30

DIST	COUNTY	ROUTE	POST MILES TOTAL PROJECT	SHEET No.	TOTAL SHEETS
06	Ker	14	39.3/40.3	62	71

REGISTERED CIVIL ENGINEER 04-06-12 DATE

9-24-12
PLANS APPROVAL DATE

REGISTERED PROFESSIONAL ENGINEER Tham V. Bui No. C64713 Exp. 06-30-13 CIVIL STATE OF CALIFORNIA

The State of California or its officers or agents shall not be responsible for the accuracy or completeness of electronic copies of this plan sheet.

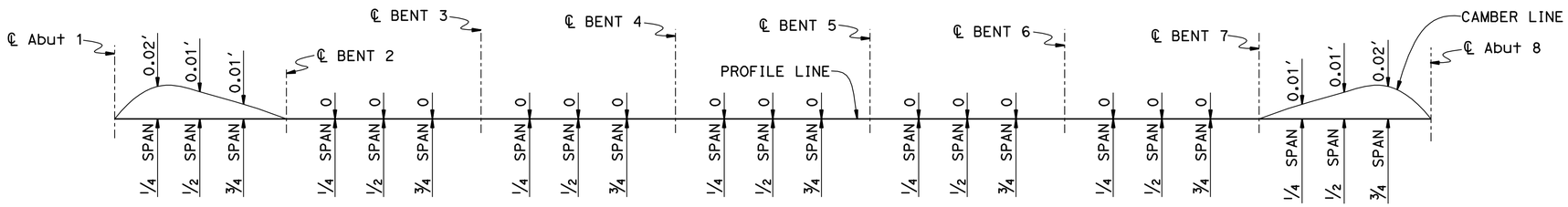

CAMBER DIAGRAM

NO SCALE

Does not include allowance for falsework settlement.

NOTES:

1. Stage 1 "GIRDER REINFORCEMENT" shown, Stage 2 "GIRDER REINFORCEMENT" similar.

☒ Indicates theoretical point of no movement for stressing at both ends.

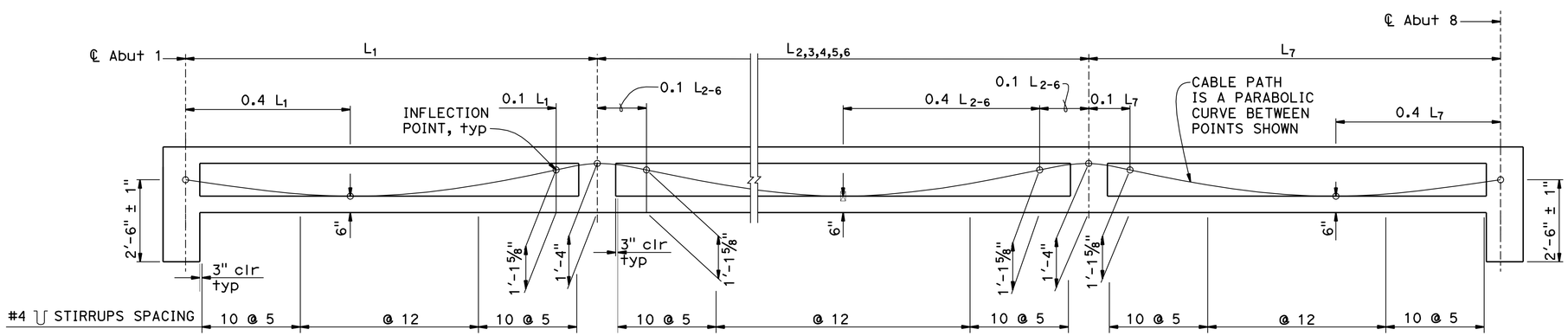

LONGITUDINAL SECTION

NO SCALE

PRESTRESSING NOTES

270 ksi Low Relaxation Strand

STAGE 1 CONSTRUCTION:

P_{jack} = 5520 kips

Anchor Set = 3/8 in

Total Number of Ducts = 17

STAGE 2 CONSTRUCTION:

P_{jack} = 6475 kips

Anchor Set = 3/8 in

Total Number of Ducts = 18

Distribution of prestress force (Pjack) between girders must not exceed the ratio of 3:2.

Concrete: f'_c = 5000 psi @ 28 days

f'_{ci} = 3500 psi @ time of stressing

Contractor must submit elongation calculations based on initial stress at both ends.

☒ = 0.850 times jacking stress.

For stage 1 and stage 2 construction the maximum imbalance of prestress force about the ℄ of bridge for that stage must not exceed the force in tendon

The stressing sequence must be symmetrical about the centerline of the bridge for that stage

FALSEWORK RELEASE

Alternative 1:
Falsework must be released as soon as permitted by the specifications. Closure pour must not be placed sooner than 60 days after the false work had been released.

Alternative 2:
Falsework must not be released less than 28 days after the last concrete has been placed Closure pour must not be placed sooner than 14 days after the false work had released.

When falsework release Alternative 2 is used camber values are 0.75 times those shown.

	BY	CHECKED
DESIGN	A. Tern	T. Bui
DETAILS	L. Wang	T. Bui
QUANTITIES	R. Coria	T. Bui

STATE OF CALIFORNIA DEPARTMENT OF TRANSPORTATION

DIVISION OF ENGINEERING SERVICES STRUCTURE DESIGN DESIGN BRANCH 17

BRIDGE NO. 50-0178
POST MILE 39.9

RED ROCK CANYON BRIDGE (REPLACE)
LONGITUDINAL SECTION

STRUCTURES DESIGN DETAIL SHEET (ENGLISH) (REV. 09-01-10)

ORIGINAL SCALE IN INCHES FOR REDUCED PLANS 0 1 2 3

UNIT: 3586
PROJECT NUMBER & PHASE: 06000001191 CONTRACT NO.: 06-0H1801

DISREGARD PRINTS BEARING EARLIER REVISION DATES

REVISION DATES 11-04-11 08-07-12 07-24-12

SHEET 12 OF 21

FILE => 50-0178-m-lsec.dgn

USERNAME => s123631 DATE PLOTTED => 28-SEP-2012 TIME PLOTTED => 13:30

DIST	COUNTY	ROUTE	POST MILES TOTAL PROJECT	SHEET No.	TOTAL SHEETS
06	Ker	14	39.3/40.3	63	71

REGISTERED CIVIL ENGINEER 04-06-12 DATE

9-24-12
PLANS APPROVAL DATE

REGISTERED PROFESSIONAL ENGINEER
Tham V. Bui
No. C64713
Exp. 06-30-13
CIVIL
STATE OF CALIFORNIA

The State of California or its officers or agents shall not be responsible for the accuracy or completeness of electronic copies of this plan sheet.

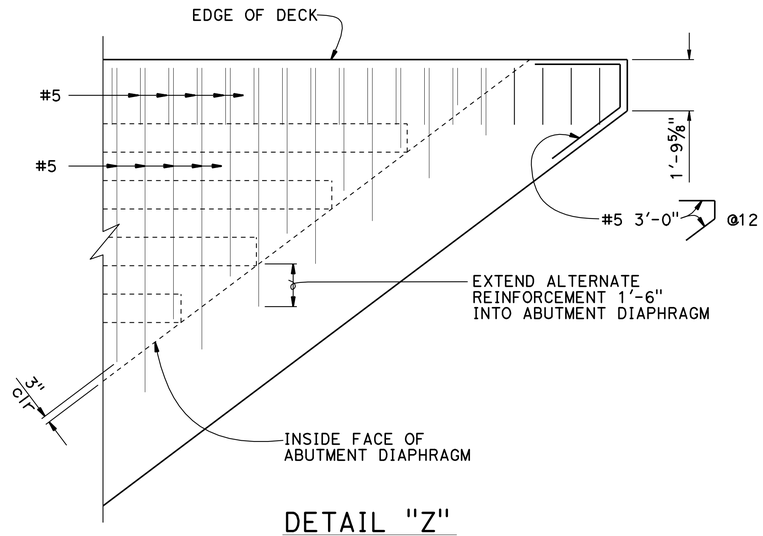

DETAIL "Z"
⅜" = 1'-0"

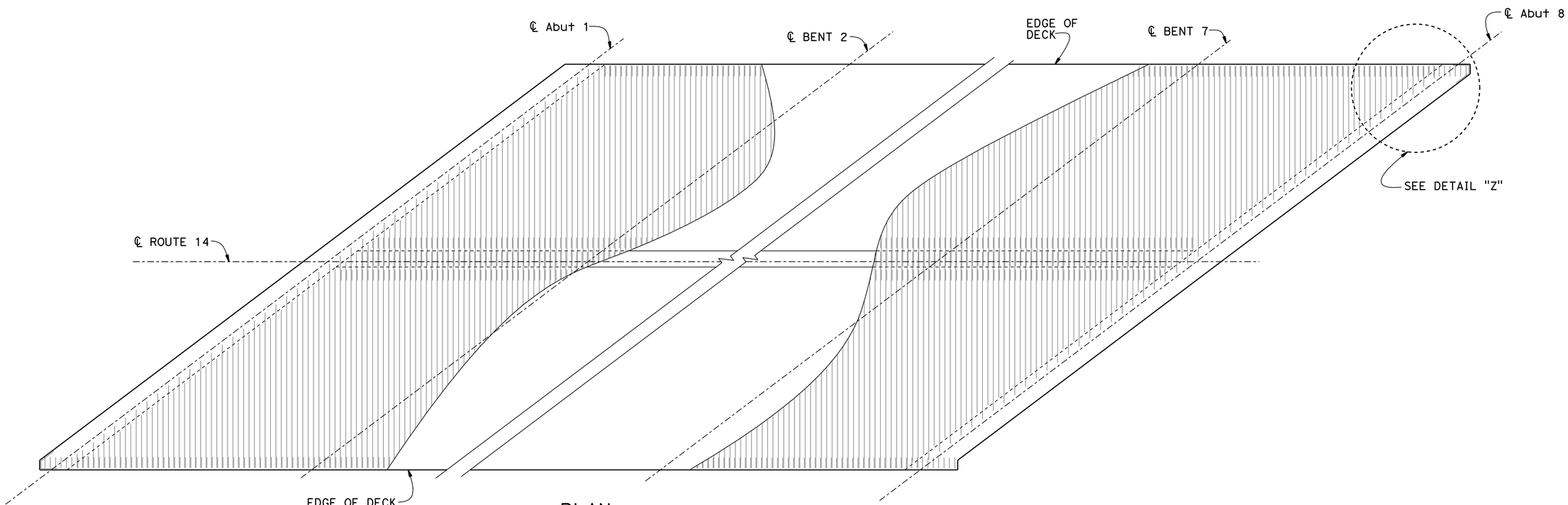

PLAN
1"=10'-0"

DESIGN	BY A. Tern	CHECKED T. Bui	
DETAILS	BY L. Wang	CHECKED T. Bui	
QUANTITIES	BY R. Coria	CHECKED T. Bui	

STATE OF CALIFORNIA
DEPARTMENT OF TRANSPORTATION

DIVISION OF ENGINEERING SERVICES
STRUCTURE DESIGN
DESIGN BRANCH 17

BRIDGE NO. 50-0178
POST MILE 39.9

RED ROCK CANYON BRIDGE (REPLACE)
SLAB DETAILS

STRUCTURES DESIGN DETAIL SHEET (ENGLISH) (REV. 09-01-10)

ORIGINAL SCALE IN INCHES FOR REDUCED PLANS 0 1 2 3

UNIT: 3586
PROJECT NUMBER & PHASE: 06000001191
CONTRACT NO.: 06-0H1801

DISREGARD PRINTS BEARING EARLIER REVISION DATES

REVISION DATES 01-24-12 07-27-12 09-04-12

SHEET 13 OF 21

FILE => 50-0178-n-sl-dt.dgn

USERNAME => s123631 DATE PLOTTED => 28-SEP-2012 TIME PLOTTED => 13:30

DIST	COUNTY	ROUTE	POST MILES TOTAL PROJECT	SHEET No.	TOTAL SHEETS
06	Ker	14	39.3/40.3	64	71

REGISTERED CIVIL ENGINEER 04-06-12 DATE

9-24-12
PLANS APPROVAL DATE

REGISTERED PROFESSIONAL ENGINEER
Tham V. Bui
No. C64713
Exp. 06-30-13
CIVIL
STATE OF CALIFORNIA

The State of California or its officers or agents shall not be responsible for the accuracy or completeness of electronic copies of this plan sheet.

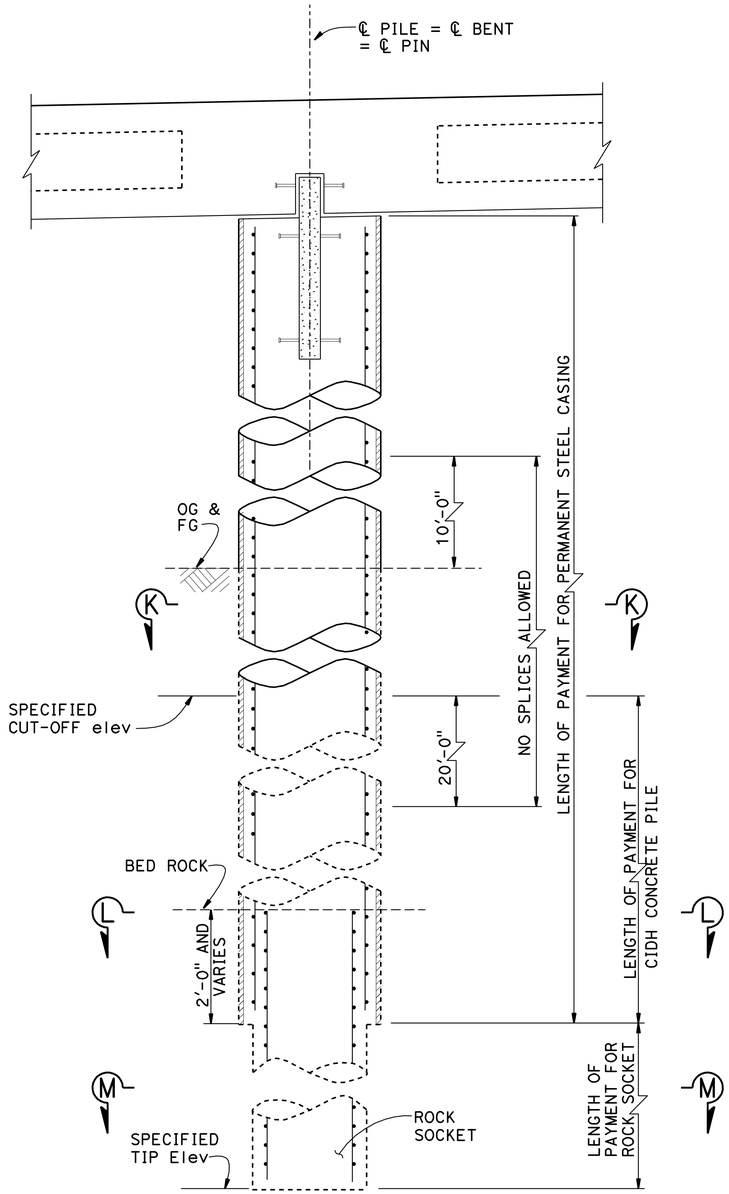

BENT PILE 2'-6" Ø CAST-IN-DRILLED HOLE CONCRETE PILE

3/4" = 1'-0"

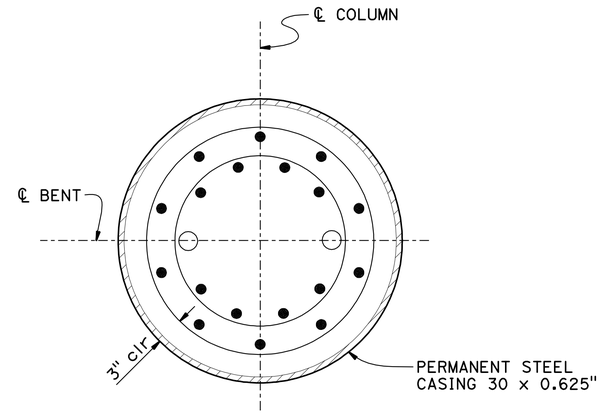

SECTION L-L

1 1/2" = 1'-0"

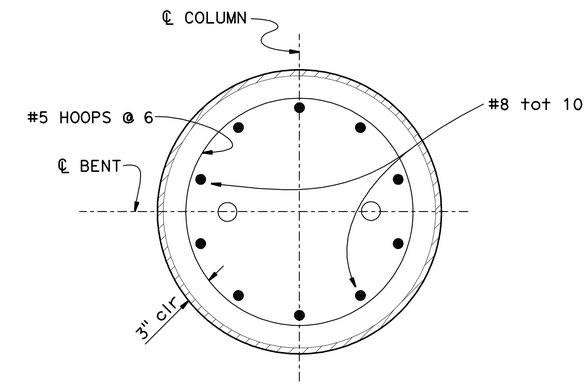

SECTION K-K

1 1/2" = 1'-0"

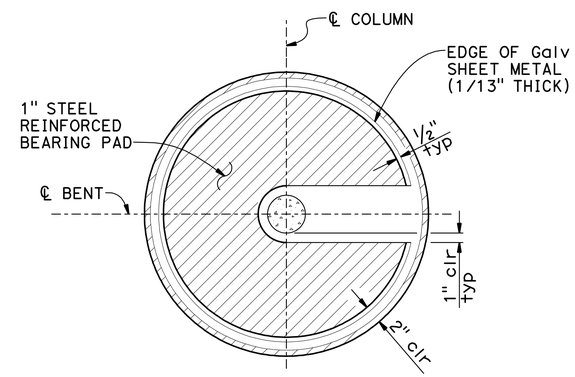

BEARING PAD DETAIL

1 1/2" = 1'-0"

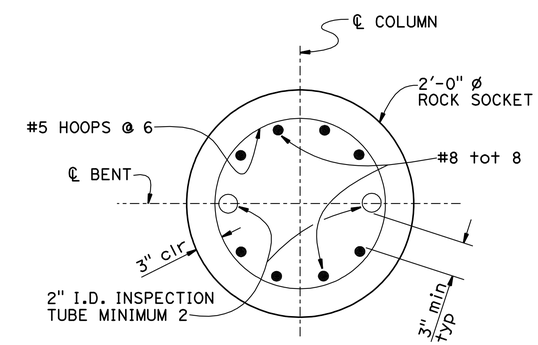

SECTION M-M

1 1/2" = 1'-0"

NOTES:

1. Galvanized sheet metal must be placed on top of steel reinforced bearing pads at Bent 2 and Bent 7.
2. Coat top of steel reinforced bearing pads with silicone grease before placing galvanized sheet metal.
3. Splices in the main column reinforcement must be Ultimate butt splices.

	BY	CHECKED
DESIGN	A. Tern	T. Bui
DETAILS	L. Wang	T. Bui
QUANTITIES	R. Coria	T. Bui

STATE OF CALIFORNIA
DEPARTMENT OF TRANSPORTATION

DIVISION OF ENGINEERING SERVICES
STRUCTURE DESIGN
DESIGN BRANCH 17

BRIDGE NO. 50-0178
POST MILE 39.9

RED ROCK CANYON BRIDGE (REPLACE)
PILE DETAILS

STRUCTURES DESIGN DETAIL SHEET (ENGLISH) (REV. 09-01-10)

ORIGINAL SCALE IN INCHES FOR REDUCED PLANS 0 1 2 3

UNIT: 3586
PROJECT NUMBER & PHASE: 06000001191
CONTRACT NO.: 06-0H1801

DISREGARD PRINTS BEARING EARLIER REVISION DATES
REVISION DATES 10-05-11 07-25-12 08-07-12

SHEET 14 OF 21

FILE => 50-0178-p-pdt.dgn

USERNAME => s123631 DATE PLOTTED => 28-SEP-2012 TIME PLOTTED => 13:30

DIST	COUNTY	ROUTE	POST MILES TOTAL PROJECT	SHEET No.	TOTAL SHEETS
06	Ker	14	39.3/40.3	65	71

REGISTERED CIVIL ENGINEER 04-06-12 DATE

9-24-12
PLANS APPROVAL DATE

REGISTERED PROFESSIONAL ENGINEER
Tham V. Bui
No. C64713
Exp. 06-30-13
CIVIL
STATE OF CALIFORNIA

The State of California or its officers or agents shall not be responsible for the accuracy or completeness of electronic copies of this plan sheet.

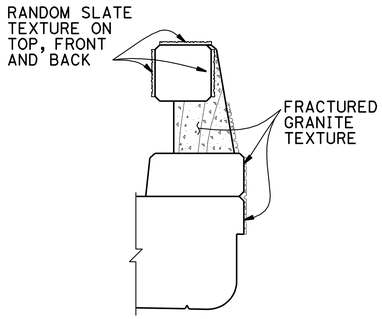

SECTION R-R

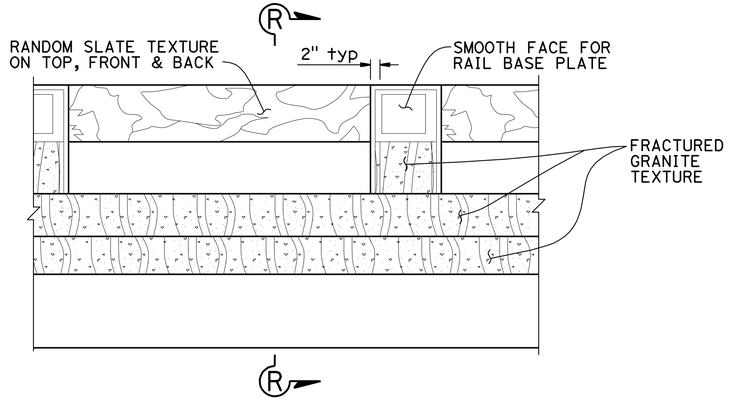

ELEVATION

ARCHITECTURAL TREATMENT
3/4" = 1'-0"

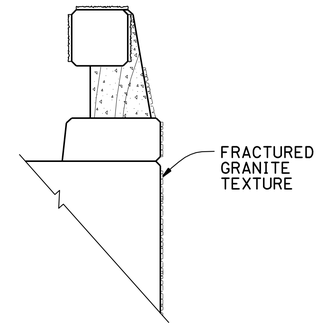

SECTION Q-Q
3/4" = 1'-0"

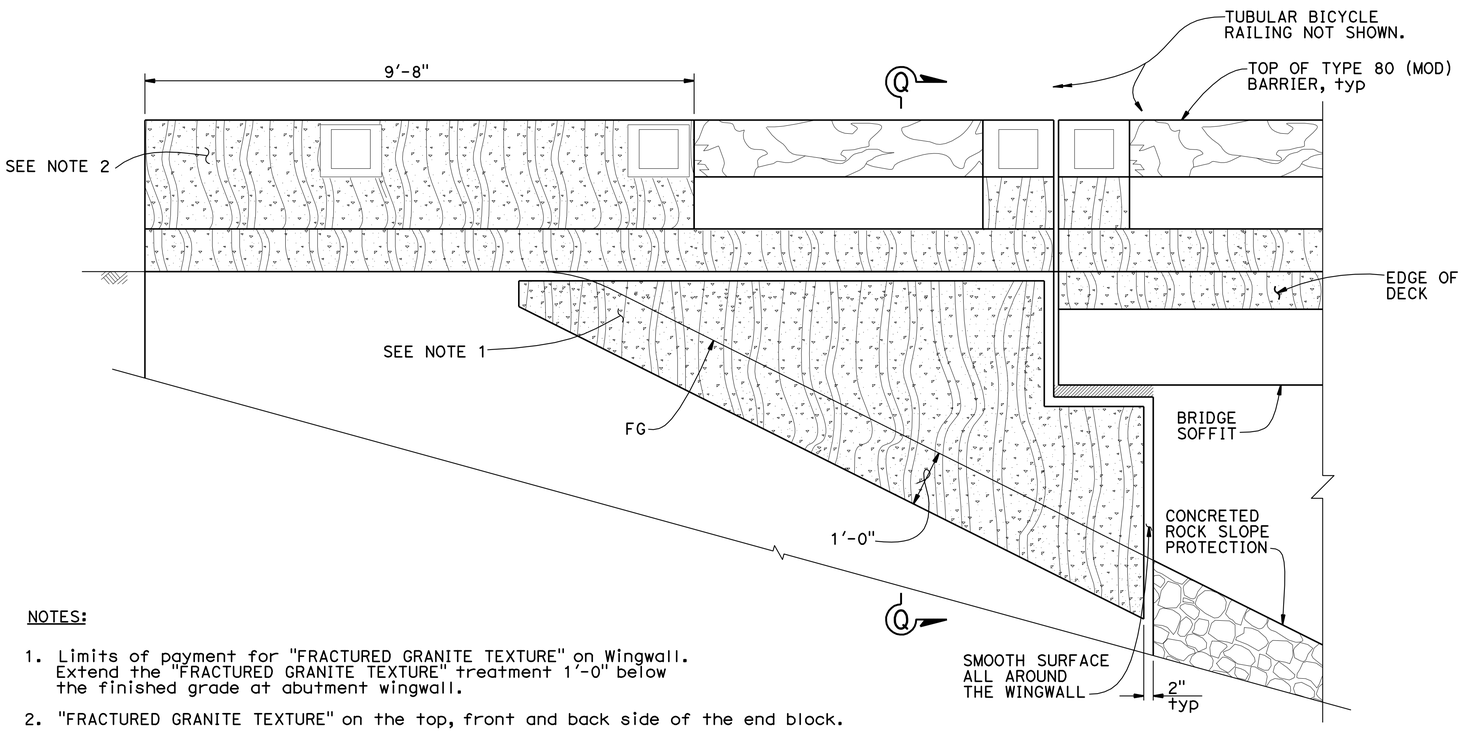

NOTES:

1. Limits of payment for "FRACTURED GRANITE TEXTURE" on Wingwall. Extend the "FRACTURED GRANITE TEXTURE" treatment 1'-0" below the finished grade at abutment wingwall.
2. "FRACTURED GRANITE TEXTURE" on the top, front and back side of the end block.
3. For concreted rock slope protection detail, see "ROAD PLAN".

WINGWALL ARCHITECTURAL TREATMENT
3/4" = 1'-0"

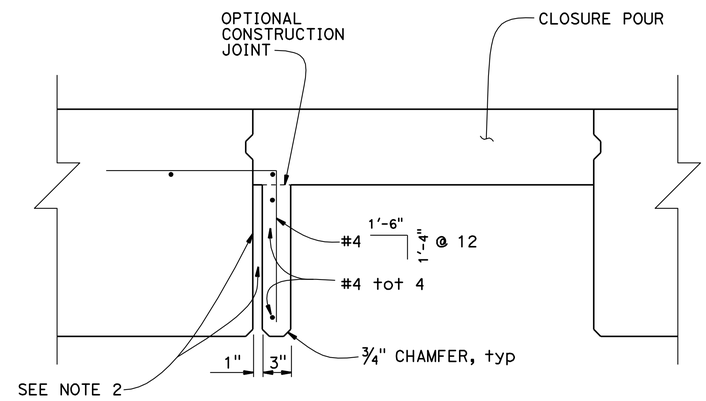

BAT HABITAT DETAIL
1 1/2" = 1'-0"

NOTES:

1. Bat habitat is limited to Span 3, Span 4 and Span 5.
2. Roughen the surface to 1/8" amplitude within the habitat.

	BY	CHECKED
DESIGN	A. Tern	T. Bui
DETAILS	L. Wang	T. Bui
QUANTITIES	R. Coria	T. Bui

STATE OF CALIFORNIA
DEPARTMENT OF TRANSPORTATION

DIVISION OF ENGINEERING SERVICES
STRUCTURE DESIGN
DESIGN BRANCH 17

BRIDGE NO. 50-0178
POST MILE 39.9

RED ROCK CANYON BRIDGE (REPLACE)
ARCHITECTURAL TREATMENT

STRUCTURES DESIGN DETAIL SHEET (ENGLISH) (REV. 09-01-10)

ORIGINAL SCALE IN INCHES FOR REDUCED PLANS 0 1 2 3

UNIT: 3586
PROJECT NUMBER & PHASE: 06000001191
CONTRACT NO.: 06-0H1801

DISREGARD PRINTS BEARING EARLIER REVISION DATES

REVISION DATES: 02-16-12 07-23-12 08-14-12

SHEET 15 OF 21

FILE => 50-0178-r-arch.dgn

USERNAME => s123631 DATE PLOTTED => 28-SEP-2012 TIME PLOTTED => 13:30

DIST	COUNTY	ROUTE	POST MILES TOTAL PROJECT	SHEET No.	TOTAL SHEETS
06	Ker	14	39.3/40.3	66	71

REGISTERED CIVIL ENGINEER 04-06-12 DATE

9-24-12
PLANS APPROVAL DATE

REGISTERED PROFESSIONAL ENGINEER Tham V. Bui No. C64713 Exp. 06-30-13 CIVIL STATE OF CALIFORNIA

The State of California or its officers or agents shall not be responsible for the accuracy or completeness of scanned copies of this plan sheet.

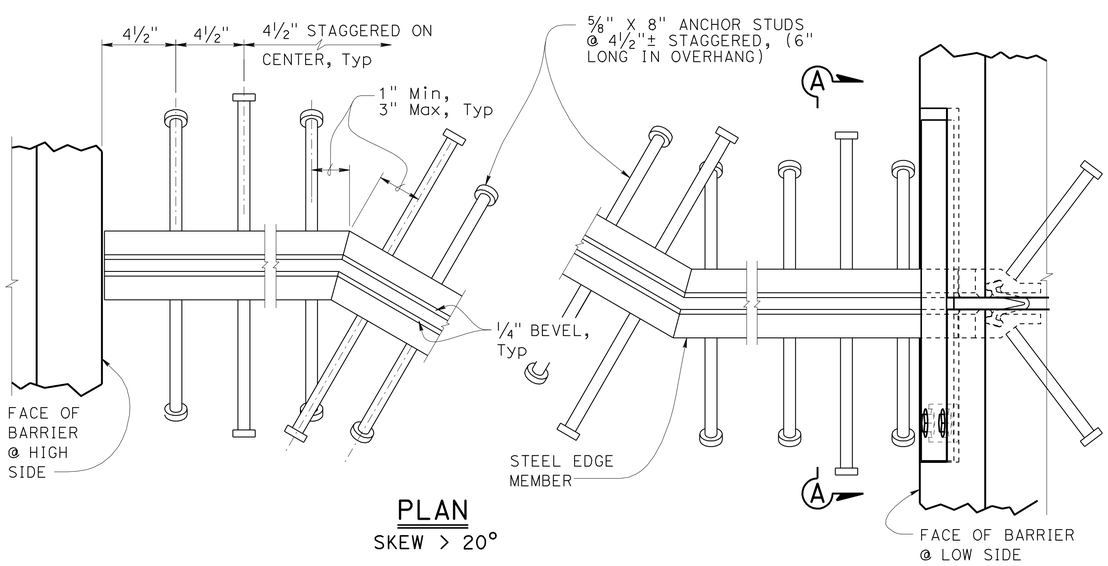

PLAN
SKEW > 20°

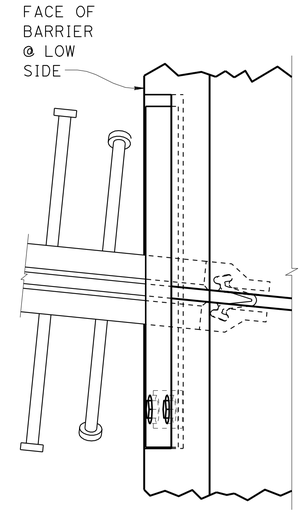

PLAN
SKEW ≤ 20°

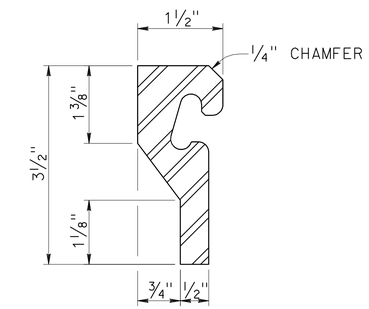

STEEL EDGE MEMBER

NOTES:

1. Full penetration butt welds may be substituted for fillet welds on all anchor studs
2. Alternate types of anchor studs may be permitted subject to the approval by the Engineer
3. Joint seal assembly to be used in conjunction with closure pour. (See other sheets for limits). Closure pour shall not be placed until final deck surface is within the tolerances specified
4. Use joint at crown of roadway, at any change in traverse slope in deck and at changes in horizontal direction. Place other joints at or near lanes. All metal parts to be painted or galvanized after fabrication
5. Sheet Neoprene shall be fabricated in one continuous piece and shall be fabricated to bend around corners
6. Insert assembly or expansion anchorage for ⅝" x 1¾" bolts. Use installation bolts extended ½" minimum past nut and coat with bond breaker, after concrete has cured, remove installation bolts, install A325 bolts and sheet neoprene
7. Sidewalk Detail similar to Barrier Detail on low side at both sides if the roadway is crowned or if the difference in elevation between the ends of the seal is 0.5′ or less
8. a_C, a_S, are the thermal expansion coefficients for concrete and steel respectfully.

JOINT INFORMATION			"a" DIMENSIONS		
LOCATION	MOVEMENT RATING (MR)	SKEW	WINTER	SPRING & FALL	SUMMER
Abut 1	3.0"	53°	1.5"	1.0"	1.0"
Abut 8	3.0"	53°	1.5"	1.0"	1.0"

✳ TO SET MINIMUM JOINT OPENING "W"

$$"W" = \begin{cases} \tfrac{1}{2}" + [(\text{Max Str temperature in F°}) - (\text{actual Str temperature in F°})] * (a_C \text{ or } a_S)(12)(\text{contributory L in feet}) \\ \tfrac{1}{2}" \text{ Minimum} \\ a_C = 0.0000060 \\ a_S = 0.0000065 \end{cases}$$

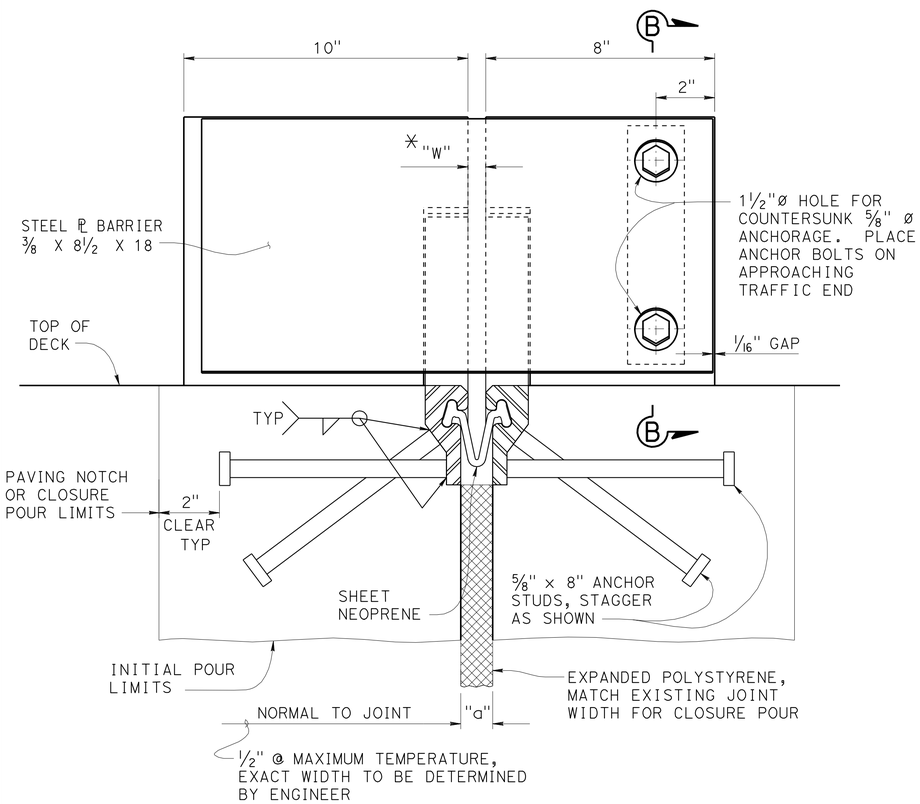

SECTION A-A

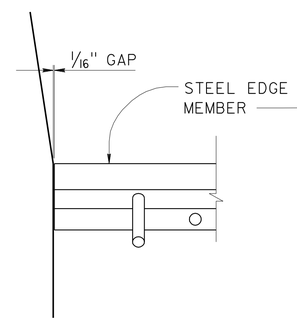

BARRIER DETAIL
HIGH SIDE

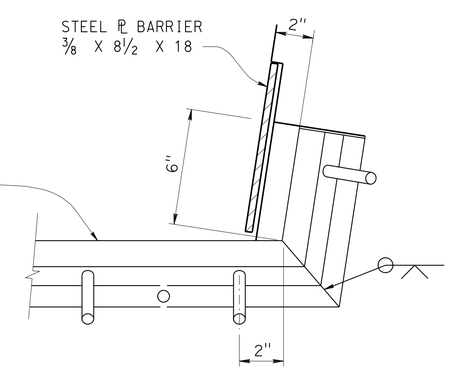

BARRIER DETAIL
LOW SIDE

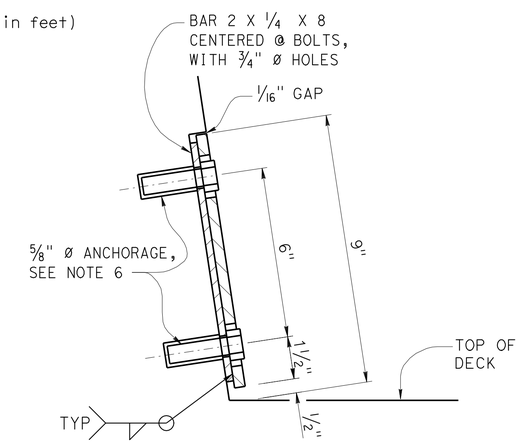

SECTION B-B

NO SCALE

RED ROCK CANYON BRIDGE (REPLACE)

JOINT SEAL ASSEMBLY

MAXIMUM MOVEMENT RATING = 4"

STANDARD DRAWING

FILE NO. **xs8-010**

APPROVAL DATE October 2011

STATE OF **CALIFORNIA** DEPARTMENT OF TRANSPORTATION

DIVISION OF ENGINEERING SERVICES

BRIDGE NO. 50-0178

POST MILE 39.9

DS OSD 2147A (ENGLISH STANDARD DRAWING "XS" BORDER REV. (02-02-11)

ORIGINAL SCALE IN INCHES FOR REDUCED PLANS 0 1 2 3

UNIT: 3586
PROJECT NUMBER & PHASE: 060000001191 CONTRACT NO.: 06-0H1801

DISREGARD PRINTS BEARING EARLIER REVISION DATES

REVISION DATES 03-06-12 03-06-12 04-24-12 07-27-12

SHEET 16 OF 21

USERNAME => s123631 DATE PLOTTED => 28-SEP-2012 TIME PLOTTED => 13:30

FILE => 50-0178-xs_8-010.dgn

DIST	COUNTY	ROUTE	POST MILES TOTAL PROJECT	SHEET No.	TOTAL SHEETS
06	Ker	14	39.3/40.3	67	71

REGISTERED CIVIL ENGINEER 04-06-12 DATE

9-24-12
PLANS APPROVAL DATE

REGISTERED PROFESSIONAL ENGINEER Tham V. Bui No. C64713 Exp. 06-30-12 CIVIL STATE OF CALIFORNIA

The State of California or its officers or agents shall not be responsible for the accuracy or completeness of scanned copies of this plan sheet.

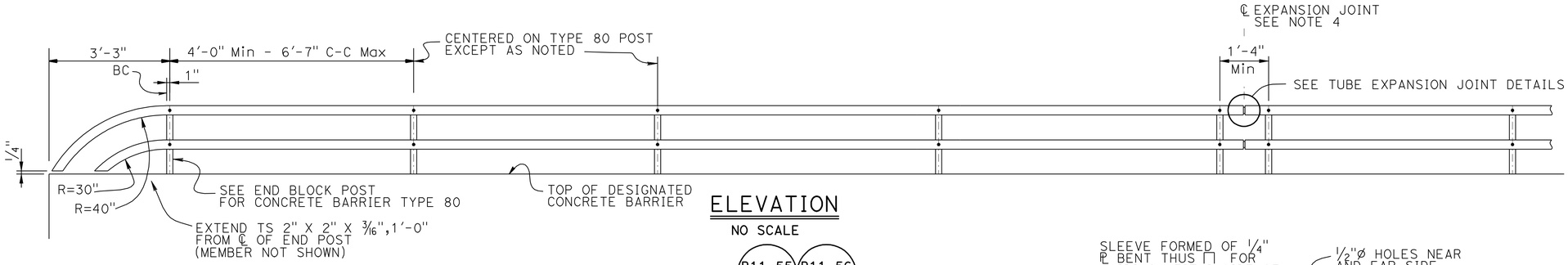

ELEVATION

NO SCALE

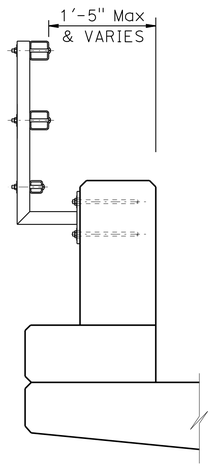

NOTE:
For details not shown, see "TYPE 732 OR 736"

TYPE 80 END BLOCK POST

1" = 1'-0"

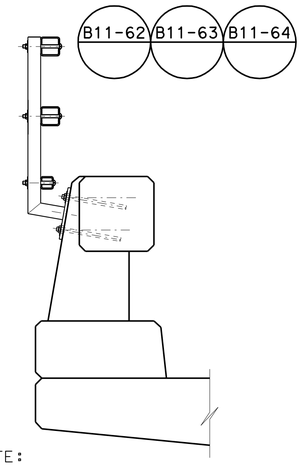

NOTE:
For details not shown, see "TYPE 732 OR 736"

TYPE 80

1" = 1'-0"

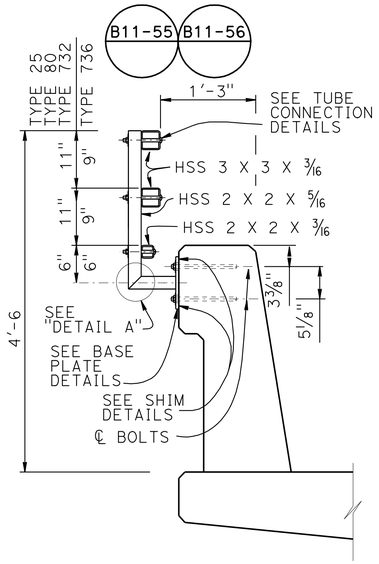

TYPE 732 OR 736

1" = 1'-0"

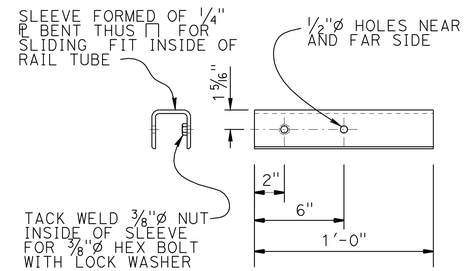

SLEEVE DETAIL

NO SCALE

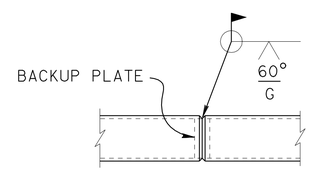

WELDED SPLICE DETAIL

NO SCALE

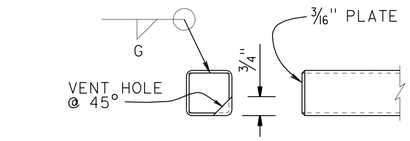

RAIL CAP DETAIL

NO SCALE

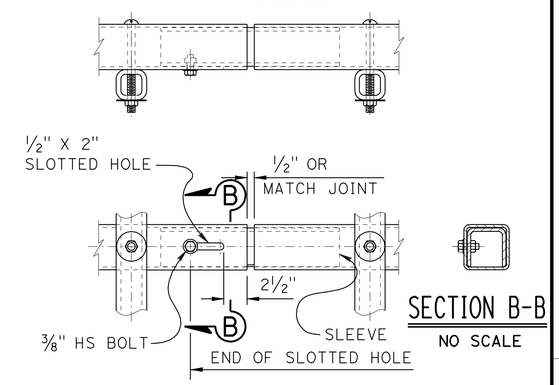

SECTION B-B

NO SCALE

TUBE EXPANSION JOINT DETAILS

NO SCALE

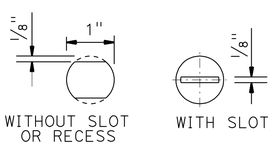

VIEW C-C

NO SCALE

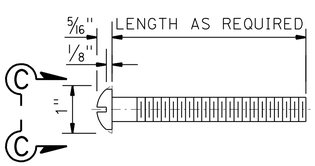

ROUND HEAD BOLT DETAIL

NO SCALE

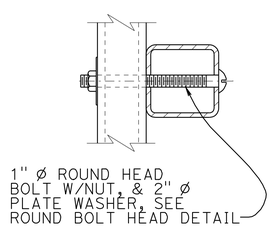

TUBE CONNECTION DETAIL

NO SCALE

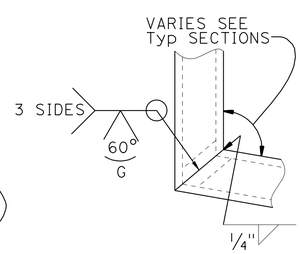

DETAIL A

NO SCALE

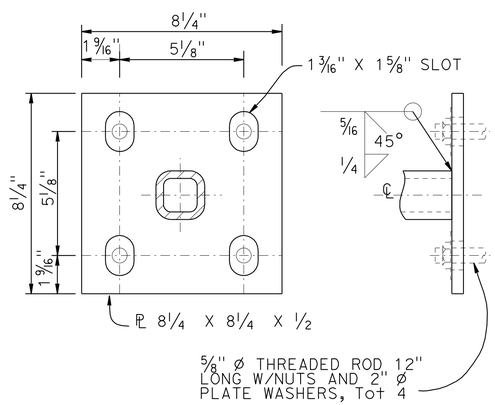

BASE PLATE DETAIL

NO SCALE

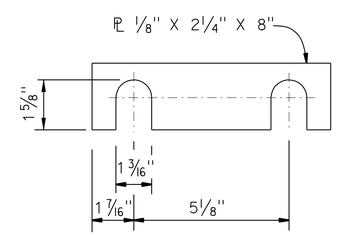

SHIM DETAILS

NO SCALE

NOTES:

1. Post shall be normal to railing.
2. Rail tubes shall be shop bent or fabricated to fit horizontal curve when radius is less than 12".
3. Tube splices shall be located in the tubes spanning deck or wall joints. Increase joint width in tubes to match expansion joint width and increase sleeve length correspondingly.
4. Top rail tube shall be continuous over not less than two posts except a short post spacing is permitted near deck or wall joints, electroliers, or other rail discontinuities as noted.
5. See Project Plans for limits of tubular bicycle railing.

RED ROCK CANYON BRIDGE (REPLACE)

CONCRETE BARRIER TYPE 80, 732 & 736

TUBULAR BICYCLE RAILING DETAILS

STANDARD DRAWING

FILE NO. xs16-035

APPROVAL DATE July 2011

STATE OF CALIFORNIA DEPARTMENT OF TRANSPORTATION

DIVISION OF ENGINEERING SERVICES

BRIDGE NO. 50-0178

POST MILE 39.9

DS OSD 2147A (ENGLISH STANDARD DRAWING "XS" BORDER REV. (02-02-11)

ORIGINAL SCALE IN INCHES FOR REDUCED PLANS 0 1 2 3

UNIT: 3586
PROJECT NUMBER & PHASE: 060000001191
CONTRACT NO.: 06-0H1801

DISREGARD PRINTS BEARING EARLIER REVISION DATES

REVISION DATES 03-06-12 07-27-12 04-24-12

SHEET 17 OF 21

FILE => 50-0178-xs-16-035.dgn

USERNAME => s123631 DATE PLOTTED => 28-SEP-2012 TIME PLOTTED => 13:30

BENCH MARK

Fd 3" brass cap, Dept of Interior
SE corner of Bridge
31.5' Rt Sta 395+81 "A1 Line", Rte 14
Elev 2387.14 (corrected)
Vertical Datum NGVD 88

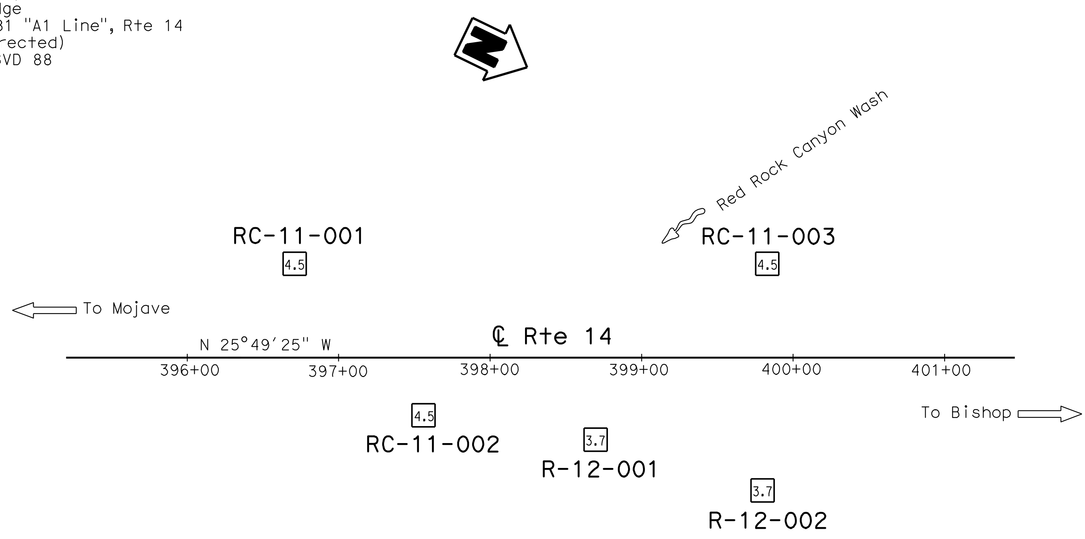

PLAN
1" = 50'

Note : UC* = Unconfined compression test L/D ratio is not in ASTM compliance. Use with caution.

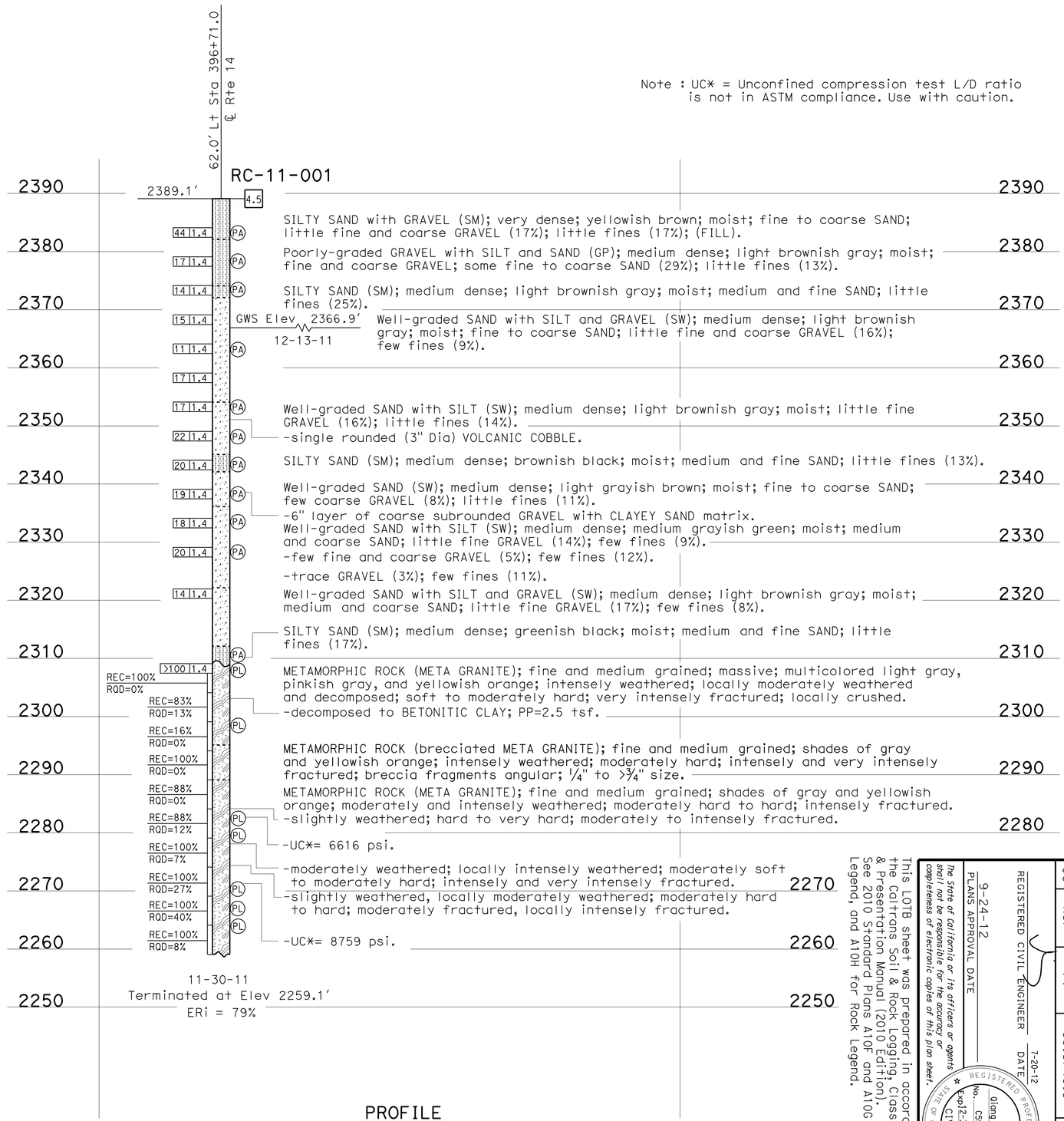

PROFILE
Horiz: 1" = 10'
Vert: 1" = 10'

This LOTB sheet was prepared in accordance with the Caltrans Soil & Rock Logging, Classification, & Presentation Manual (2010 Edition). See 2010 Standard Plans A10F and A10G for Soil Legend, and A10H for Rock Legend.

REGISTERED CIVIL ENGINEER 7-20-12 DATE
9-24-12
PLANS APPROVAL DATE
Qiang Huang No. C35671 Exp. 12-31-12 CIVIL STATE OF CALIFORNIA REGISTERED PROFESSIONAL ENGINEER
The state of California or its officers or agents shall not be responsible for the accuracy or completeness of electronic copies of this plan sheet.

DIST	COUNTY	ROUTE	POST MILES TOTAL PROJECT	SHEET NO.	TOTAL SHEETS
06	Ker	14	39.3/40.3	68	71

FUNCTIONAL SUPERVISOR
NAME: Q. Huang
DRAWN BY: F. Nguyen
CHECKED BY: B. Barnes
FIELD INVESTIGATION BY: W. Bertucci

ENGINEERING SERVICES
MATERIALS AND GEOTECHNICAL SERVICES

STATE OF CALIFORNIA
DEPARTMENT OF TRANSPORTATION
DIVISION OF ENGINEERING SERVICES
STRUCTURE DESIGN
DESIGN BRANCH 17

BRIDGE NO. 50-0178
POST MILE 39.88

RED ROCK CANYON BRIDGE (REPLACE)
LOG OF TEST BORINGS 1 OF 4

DGS CIVIL LOG OF TEST BORINGS SHEET
ORIGINAL SCALE IN INCHES FOR REDUCED PLANS 0 1 2 3
UNIT: 3643
PROJECT NUMBER & PHASE: 0600000191
CONTRACT NO.: 06-0H1801
DISREGARD PRINTS BEARING EARLIER REVISION DATES
REVISION DATES 03-29-12 03-29-12 03-29-12 07-11-12
SHEET 18 OF 21
FILE => 50-0178-2-rtb1 of 4.dgn

USERNAME => s123631 DATE PLOTTED => 28-SEP-2012 TIME PLOTTED => 13:31

DIST	COUNTY	ROUTE	POST MILES TOTAL PROJECT	SHEET No.	TOTAL SHEETS
06	Ker	14	39.3/40.3	69	71

REGISTERED CIVIL ENGINEER 7-20-12 DATE

9-24-12
PLANS APPROVAL DATE

REGISTERED PROFESSIONAL ENGINEER Qiang Huang No. C55671 Exp 12-31-12 CIVIL STATE OF CALIFORNIA

The State of California or its officers or agents shall not be responsible for the accuracy or completeness of electronic copies of this plan sheet.

This LOTB sheet was prepared in accordance with the Caltrans Soil & Rock Logging, Classification, & Presentation Manual (2010 Edition).
See 2010 Standard Plans A10F and A10G for Soil Legend, and A10H for Rock Legend.

NOTES:

1. Groundwater was encountered but not measured in Boring RC-11-003. Groundwater elevation assumed to be the same as the elevation in Boring RC-11-002.
2. UC* = Unconfined compression test L/D ratio is not in ASTM compliance. Use with caution.

FOR PLAN VIEW, SEE
"LOG OF TEST BORINGS 1 OF 4"

PROFILE
Horiz: 1" = 20'
Vert: 1" = 10'

ENGINEERING SERVICES	MATERIALS AND GEOTECHNICAL SERVICES	STATE OF CALIFORNIA DEPARTMENT OF TRANSPORTATION	DIVISION OF ENGINEERING SERVICES STRUCTURE DESIGN DESIGN BRANCH 17	BRIDGE NO. 50-0178 POST MILE 39.88	RED ROCK CANYON BRIDGE (REPLACE) LOG OF TEST BORINGS 2 OF 4
FUNCTIONAL SUPERVISOR NAME: Q. Huang	DRAWN BY: F. Nguyen CHECKED BY: B. Barnes	FIELD INVESTIGATION BY: W. Bertucci			

OGS CIVIL LOG OF TEST BORINGS SHEET

ORIGINAL SCALE IN INCHES FOR REDUCED PLANS 0 1 2 3

UNIT: 3643
PROJECT NUMBER & PHASE: 06000001191 CONTRACT NO.: 06-0H1801

DISREGARD PRINTS BEARING EARLIER REVISION DATES → REVISION DATES 02-15-12 03-06-12 03-23-12 07-11-12 SHEET 19 OF 21

FILE => 50-0178-z-ltb2 of 4.dgn

USERNAME => s123631 DATE PLOTTED => 28-SEP-2012 TIME PLOTTED => 13:31

DIST	COUNTY	ROUTE	POST MILES TOTAL PROJECT	SHEET No.	TOTAL SHEETS
06	Ker	14	39.3/40.3	70	71

REGISTERED CIVIL ENGINEER 7-20-12 DATE

9-24-12
PLANS APPROVAL DATE

REGISTERED PROFESSIONAL ENGINEER
Qiang Huang
No. C55671
Exp 12-31-12
CIVIL
STATE OF CALIFORNIA

The State of California or its officers or agents shall not be responsible for the accuracy or completeness of electronic copies of this plan sheet.

This LOTB sheet was prepared in accordance with the Caltrans Soil & Rock Logging, Classification, & Presentation Manual (2010 Edition).
See 2010 Standard Plans A10F and A10G for Soil Legend, and A10H for Rock Legend.

FOR PLAN VIEW, SEE
"LOG OF TEST BORINGS 1 OF 4"

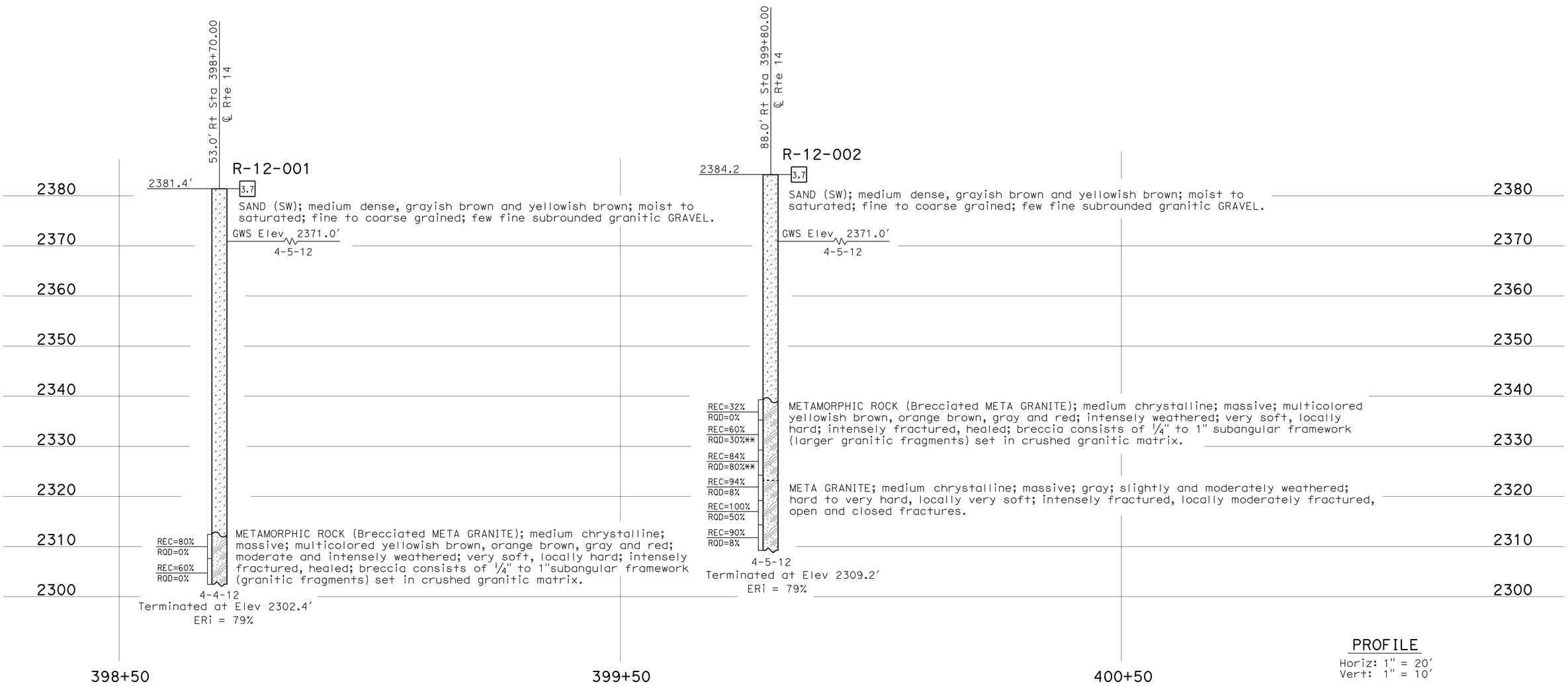

PROFILE
Horiz: 1" = 20'
Vert: 1" = 10'

ENGINEERING SERVICES	MATERIALS AND GEOTECHNICAL SERVICES	STATE OF CALIFORNIA DEPARTMENT OF TRANSPORTATION	DIVISION OF ENGINEERING SERVICES STRUCTURE DESIGN DESIGN BRANCH 17	BRIDGE NO. 50-0178 POST MILE 39.88	RED ROCK CANYON BRIDGE (REPLACE)
FUNCTIONAL SUPERVISOR NAME: Q. Huang	DRAWN BY: W. Tang 07/12 CHECKED BY: B. Barnes	FIELD INVESTIGATION BY: W. Bertucci			LOG OF TEST BORINGS 3 OF 4

OGS CIVIL LOG OF TEST BORINGS SHEET

ORIGINAL SCALE IN INCHES FOR REDUCED PLANS 0 1 2 3

UNIT: 3643
PROJECT NUMBER & PHASE: 06000001191 CONTRACT NO.: 06-0H1801

DISREGARD PRINTS BEARING EARLIER REVISION DATES

REVISION DATES | SHEET 20 OF 21

FILE => 50-0178-z-ltb3 of 4.dgn

USERNAME => s123631

F-187(8)

FED ROAD DIV NO	STATE	PROJ NO	FISCAL YEAR	SHEET NO	TOTAL SHEETS
7	CAL.			24	24

DIST	COUNTY	ROUTE	SECTION	SHEET NO	TOTAL SHEETS
IX	Ker	23	C	6	6

DATE APPROVED January 26, 1969

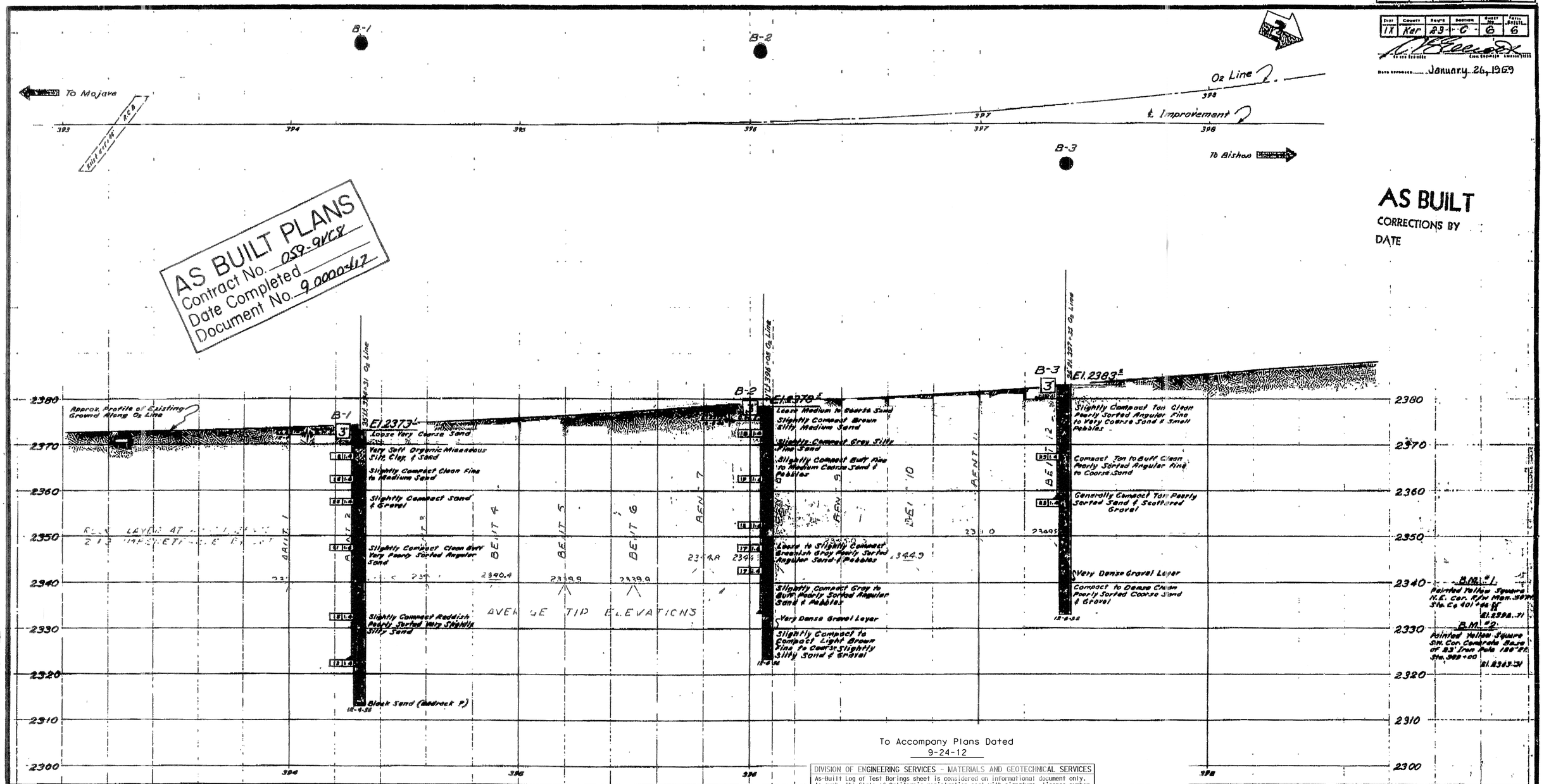

To Accompany Plans Dated
9-24-12

Classification of Material Based on Standard Grade Size Limits

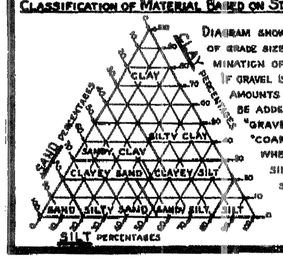

Diagram showing the basis for estimates of grade size distribution used in determination of class names.

If gravel is present in appreciable amounts the term "gravelly" may be added to the class name, viz. "gravelly sand". The terms "coarse", "medium" and "fine" when used to describe sand, silt and gravel refer to standard grade size limits.

Legend of Earth Materials

- Gravel
- Sand
- Silt
- Clay
- Sandy Clay or Clayey Sand
- Sandy Silt or Silty Sand
- Silty Clay or Clayey Silt
- Peat and/or Organic Matter
- Fill Material
- Igneous Rock
- Sedimentary Rock
- Metamorphic Rock

Legend of

- Plan of Any Boring
- Penetrometer
- 2½" Cone Penetrometer
- Sampler Boring (Dry)
- Rotary Boring (Wet)
- Auger Boring (Dry)
- Jet Boring
- Core Boring
- Test Pit

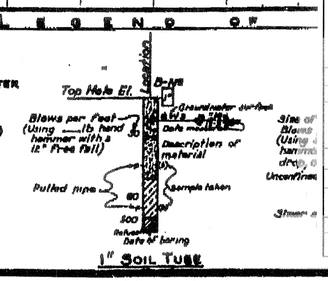

DIVISION OF ENGINEERING SERVICES - MATERIALS AND GEOTECHNICAL SERVICES

As-Built Log of Test Borings sheet is considered an informational document only. As such, the State of California registration seal with signature, license number and registration certificate expiration date confirm that this is a true and accurate copy of the original document. It does not attest to the accuracy or validity of the information contained in the original document. This drawing is available and presented only for the convenience of any bidder, contractor or other interested party.

DIST.	COUNTY	ROUTE	POST MILE-TOTAL PROJECT	Sheet No.	Total Sheets
06	Ker	14	39.3/40.3	71	71

REGISTERED CIVIL ENGINEER — DATE 03/27/12

REGISTERED PROFESSIONAL ENGINEER
Qiang Huang
No. C55671
Exp. 12-31-12
CIVIL
STATE OF CALIFORNIA

RED ROCK CANYON BRIDGE (REPLACEMENT)

LOG OF TEST BORINGS 6 OF 6

UNIT: 3643	CONTRACT No.	BRIDGE No.
PROJ. No. & PHASE: 0600000119 1	06-0H1801	50-0178

AS-BUILT VERT. DATUM: DATUM CONVERSION: Sheet 23 of 23

NOTE: A COPY OF THIS LOG OF TEST BORINGS IS AVAILABLE AT OFFICE OF STRUCTURE MAINTENANCE AND INVESTIGATIONS, SACRAMENTO, CALIFORNIA

NOTES

The contractor's attention is directed to Section 2, Article (c) of the Standard Specifications and to the Special Provisions accompanying this set of plans.

Classification of earth material as shown on this sheet is based upon field inspection and is not to be construed to imply mechanical analysis.

STATE OF CALIFORNIA
DEPARTMENT OF PUBLIC WORKS
DIVISION OF HIGHWAYS

RED ROCK CANYON

LOG OF TEST BORINGS

SCALE Horiz. 1"=20' Vert. 1"=10' | BRIDGE 50-178 | FILE | DRAWING C-5346-5

BRIDGE DEPARTMENT

FIELD REVIEW	1. Spinelli	12-6-58
DRAWN	2. Ed Clark	12-26-58
CHECKED	3. Jim Ng	1-8-59

Approval Recommended by: C.P. Bergstrom, Bridge Engineer
Chief Bridge Engineer

50-0178-z-ltb4 of 4.tif

PREL. DRAWING NO. P. 10