FOR CONTRACT No.: 06-0H1704

INFORMATION HANDOUT

MATERIALS INFORMATION

1. Foundation Report - Kings River Overflow Bridge (Bridge No. 42-0074)
dated February 23, 2012

2. Final Hydraulic Report - Kings River Overflow Bridge Br. No. 42-0074
dated July 19, 2011

3. Supplementary Hydraulic Report - Kings River Overflow Br. No. 42-0437
dated April 4, 2012

4. Asbestos and Lead-Containing Paint Survey - Kings River Overflow Bridge
(Bridge No. 42-0074), Fresno County, California
dated March 26, 2009

5. California Regional Water Quality Control Board Certification

6. Department of Fish and Game Agreement

7. United States Army Corps of Engineers Permit

8. Central Valley Flood Protection Board Permit

9. Alternative Flared Terminal System

10. Alternative Crash Cushion System

Dist-Co-Rte-PM: 06-Fre-180-77.2

Memorandum

Flex your power!
Be energy efficient!

To: MR. MICHAEL POPE
Chief, Design Branch 18
Structure Design
Division of Engineering Services

Date: February 23, 2012

File: 06-FRE-180-
PM76.8/77.6
EA: 06-0H1701
Kings River Overflow
Bridge
Br. # 42-0074

Attention: Prem Rimal

From: DEPARTMENT OF TRANSPORTATION
DIVISION OF ENGINEERING SERVICES
GEOTECHNICAL SERVICES – MS 5

Subject: Foundation Report

Introduction

The Office of Geotechnical Design – North has prepared this Foundation Report for the Kings River Overflow Bridge replacement project on Route 180 located in unincorporated Minkler, Fresno County, California. The project proposes to replace the existing bridge because of its structural deficiency caused by chloride corrosion. This report is based on data obtained from the Kings River Overflow Log of Test Borings (LOTB) dated September 20, 2011, original LOTB(s) dated 9-16-1971, General Plan, revision date 2-11-2011, Foundation Loads, Final Hydraulics Report (FHR) dated July, 19, 2007 and the nearby Kings River and Bird Slough Bridge LOTB(s).

The existing structure is a 159.3 ft, 9 span continuous RC slab bridge and concrete wall piers and seat type abutments supported on spread footings. The existing bridge was built in 1921 and widened in 1954 utilizing the existing pier walls. A wider 160 ft, 5 span continuous CIP R/C slab bridge with wall piers and diaphragm type abutments was chosen as the replacement. Like the original bridge, the foundation recommendations for the new structure include strip type spread footings under the piers and abutments.

Elevations used in this report are referenced to the National Geodetic Vertical Datum of 1929 (NGVD20).

Geology and Subsurface Conditions

The Kings River Overflow Creek Bridge is situated at the eastern edge of Kings River drainage basin near where it merges with the San Joaquin Valley located to the west. At the bridge site this basin is bound on the east by Jesse Morrow Mountain (JMM) and Campbell Mountain (CM) and to the northwest generally by the Sierra Nevada Mountain Range. The JMM and CM rise to elevations of approximately 1400 to 1600 feet and are composed of predominately Mesozoic Age basic intrusive rocks. The bulk of the Sierra Nevada in the local region is composed of Mesozoic granite, granodiorite, tonalite and diorite. The valley floor is covered in Pleistocene alluvium composed of sand, gravel, cobbles and boulders (Geologic Map of California, Fresno Sheet, Divisions of Mines and Geology 1966) and recent alluvium of similar material within the active river and stream channels. At the bridge site the elevation of the roadway is approximately 398 feet and in the overflow channel the lowest elevation is approximately 386 feet.

Based on the 1953 boring logs bedrock may have been encountered very near the bottom of one boring (boring depth 24 ft. Elev. 372 ft.). However, bedrock was not encountered in the recent borings; the deepest boring (R-11-003) was 55 ft. (Elev. 343 ft). The soil deposits that were logged adjacent the proposed Abutment 1 (Boring R-11-003) consisted of Pleistocene Age medium dense SILTY GRAVEL with a small amount (5% or less) of 3 to 4 inch size hard Granitic COBBLES to a depth of approximately 7 feet (Elev. 391ft) followed by dense SILTY GRAVEL with SAND and more COBBLES from elevation 391ft to 373 ft. Below to the bottom of the boring the soils became predominately hard granitic cobbles with interstitial Sand and GRAVEL. At Abutment 6 (Boring R-11-001) the soils in the upper 8 ft. (to Elev. 390 ft.) consisted of very dense, poorly graded SAND with GRAVEL and a trace of fines. Below to the bottom of the boring (Elev. 360 ft.) the soils were predominately hard granitic 3-6 inch diameter COBBLES with interstitial SAND and GRAVEL.

The existing bridge mid-span boring (R-11-002) sampled the recent active channel deposits as well as the older Pleistocene Age deposits below. At the time of the drilling the water flow was confined to the east side of the channel (Pier 8) and extended west to about Pier 5; the boring was west of Pier 5 and not within the water flow. The existing

flow swept away the recent alluvium and exposed underlying older GRAVEL and COBBLES. At the boring location an approximately 5 feet thick layer of recent alluvium remained. This layer consists of loose fine to medium grained SILTY SAND and extended from elevation 392 ft. (channel elevation) to elevation 387 ft. Below to maximum depth explored 34 feet (Elev. 364 ft.) the soils consisted of predominately 3.5 to 8 inch diameter hard granitic COBBLES with interstitial poorly graded GRAVEL and SAND.

It is noted that although boulders (size greater that 12-inches) were not encountered during the present drilling phase of the project, it is likely that some boulders may be encountered during the construction phase. See the attachments, present investigation LOTB and As Built LOTB for details of subsurface conditions. It should be noted that although boulders were not encountered during drilling it should be assumed that some boulders will be present.

Groundwater

Ground water depth was not measured during the present investigations due to the use of the mud rotary drilling method and drilling on an active traffic lane. The soils that were observed are considered highly permeable because they were primarily coarse grain soils. Therefore, the level of water in the river should correlate fairly closely with the groundwater level at the bridge site. Based the Preliminary Hydraulics Report (FHR, July 19, 2011) actual river surface flow and assumed groundwater levels may change significantly due to flow releases at Pine Flat Dam, snowpack runoff, additional localized runoff, and the variable effects of the complex system of small dams, weirs, and irrigation diversion located between the Pine Flat Dam and bridge site. For design purposes it will be assumed that surface water will be present in the overflow channel (estimated thalweg elevation 387 ft.) and its level will be higher than the proposed abutment and pier footing elevations.

Laboratory Testing

Laboratory testing was limited to corrosion testing. Due to the predominate coarseness of the soil samples, field classification that included size measurements was considerate adequate.

Corrosion

Based on the corrosion report the site is considered corrosive. The controlling corrosion parameter test results are as follows:

pH	= 6.2	(Falls within noncorrosive range (5.5 to 10.0).
Chloride	= 3747 ppm	(Falls within the corrosive range (>500 ppm).
Sulfate	= 5463 ppm	(Falls within the corrosive range (>2000 ppm).
Resistivity	= 127.05 ohm-cm	(Falls within the corrosive range (< 1000 ohm-cm).

Scour Potential

Selected Potential scour and channel conditions at the bridge site, provided by Juan Jauregui of Structure Hydraulics & Scour Mitigation (Final Hydraulics Report date July 19, 2011) are summarized in Table 1 below.

Table 1 Scour Summary

Estimated Current Thalweg Elevation	387.0 feet
Long – Term Channel bed Degradation depth	1.0 feet
Long – Term Channel bed Elevation (based on thalweg elevation)	386.0 feet
Local Pier Scour at all Pier Locations (Piers 2-5) depth	4.0 feet
Long-Term Degradation & Local Pier Scour Elev. (piers 2-5)	382.0 feet
Long – Term Channel Bed Elevation at Abutments 1& 6	386.0 feet

Seismic Study

Based on the Caltrans 2009 Seismic Design Procedure (SPD) the nearest active fault to the site is the Great Valley 13 (Fault ID No. 36) with a Mmax of 6.5. The rupture distance to the fault plane is estimated to be 60 miles southwest of the bridge. The fault is referred to as a reverse fault with a 15 degree dip angle.
Please note that since the as-built log of test borings are considered inadequate, we based our shear wave velocity (Vs30) of the foundation materials on the subsurface investigation dated November 1989 of the nearest bridge site (Kings River Bridge, Br. Based on the September 2011 foundation investigation, a shear wave velocity (Vs30) of the foundation materials was estimated using the SPT blow counts and correlation formulas for the granular soil to be 1500 feet / second.

Using the above shear wave velocity, the spectral acceleration (SA) generated from the fault is less than both the statewide minimum and the probabilistic spectral acceleration. Therefore, the recommended preliminary design Acceleration Response Spectrum (ARS) curve is based on the enveloped of the latter two approaches. Pleased note that the SA for the probabilistic method was obtained from the "USGS 2008 Interactive Deaggregation (Beta) web site; the probabilistic methods is based on a 5 % probability of exceedance in 50 years which corresponds to a return period of 975 years. The design ARS curve with an estimated peak ground acceleration of 0.22g is attached in Appendix A.

Our office also performed a preliminary liquefaction analysis. The results indicate very low potential for liquefaction during a strong ground shaking.

Furthermore, the potential for surface rupture at the site due to fault movement is considered insignificant since there are no known faults projecting towards or passing directly through the project site. We will re-evaluate our seismic design recommendations, when additional soil data becomes available.

As-Built Foundation Data

According to the As Built Plan dated September 16, 1971 (General Plan for original bridge), the existing bridge is founded on spread footings at the abutments and piers. No

information regarding the loads was available. The following table shows the locations and approximate elevations of the original spread footings.

Table 1. As Built Foundations

Location	Foundation Type	Estimated Bottom of footing Elev (ft)
Abutment 1	Spread Footing	384
Pier Walls 2 - 9	Spread Footing	384
Abutment 10	Spread Footing	384

(*) Elevations are approximate.

Foundation Recommendations

Foundation selection will be based on several factors such as soil conditions including soil strength, soil type, groundwater, footing loads, seismic environment, scour and construction costs. Based on the information available to us at this time it is recommended to support the replacement bridge on spread footings.

The nominal bearing resistance of the soil underlying the footings was calculated using the formulation provided by AASHTO Bridge Design Specification, Section 10.6.3.1.2a.

Table 2. Foundation Design Recommendations for Spread Footings

Support Location	Footing Size (ft)		Bottom of Footing Elevation (ft)	Minimum Footing Embedment Depth (ft)	WSD (LRFD Service-I Limit State Load)		LRFD		
							Service	Strength $\varphi = 0.45$	Extreme Event $\varphi = 1.0$
	B	L			Permissible Gross Contact Stress (ksf)	Allowable Gross Bearing Capacity (ksf)	Net Permissible Contact Stress, (ksf)	Factored Gross Nominal Bearing Resistance, (ksf)	Factored Gross Nominal Bearing Resistance, (ksf)
Abut 1	4.0	47.5	384.0[3]	12.0	4.9	5.4	N/A	N/A	N/A

Pier 2- 5	5.0	45.5	380.0	6.0	N/A	N/A	4.4	6.6	14.6
Abut 6	4.0	47.5	384.0[3]	12.0	4.9	5.4	N/A	N/A	N/A

Notes:
1) Recommendations are based on the foundation geometry and the load data provided by Structure Design in the Foundation Design Data Sheet. The footing contact area is taken as equal to the effective footing area, where applicable.
2) See MTD 4-1 for definitions and applications of the recommended design parameters.

Table 3. Spread Footing Data

Support Location	Working Stress Design (WSD)		Load and Resistance Design (LRFD)		
	Permissible Gross Bearing Capacity (ksf)	Allowable Gross Bearing Capacity (ksf)	**Service** Permissible Net Contact stress (Settlement) (ksf)	**Strength** Factored Gross Nominal Bearing Resistance $\varphi = 0.45$ (ksf)	**Extreme Event** Factored Gross Nominal Bearing Resistance $\varphi = 1.0$ (ksf)
Abutment 1	4.9	5.4	N/A	N/A	N/A
Piers 2-5	N/A	N/A	4.4	6.6	14.6
Abutment 6	4.9	5.4	N/A	N/A	N/A

Construction Considerations

1. If excavations for spread footings expose unsuitable materials for support of the proposed structure foundations and/ or the soils are disturbed, these soils then shall be re-compacted and/or removed and replaced with structural backfill compacted in either case to at least 95% relative compaction or replaced with lean concrete. Alternatively, the bottom of footing elevation shall be lowered to undisturbed competent material.

2. Shallow groundwater and difficult excavation conditions that include cobbles, boulders and caving may be encountered during footing excavation. In order to safely construct the footings a Class "A" excavation (with seal course) and shoring most likely will be required.

3. Spread footings shall be placed neat against competent materials. All loose materials shall be removed prior to placement of concrete.

4. All footing excavations are to be inspected and approved by this Office or a representative of the Office of Structure Construction, when excavations are completed to the bottom of footing and prior to placement of concrete.

Disclaimer and Contract Information

The recommendations contained in this report are based on specific project information regarding design loads and structure location provided by the OBDN. If any conceptual changes are made during final project design, the Office of Geotechnical Design – North should review those changes to determine if these foundation recommendations are still applicable.

Project Information

Standard Special Provision (SSP) S5-280, "Project Information", discloses to bidders and contractors a list of pertinent information available for their inspection prior to bid opening. The Following is an excerpt form SSP S5-280 disclosing information originating from Geotechnical Services. Items listed to be included in the information Handout will be provided in Acrobat (.pdf) format to the addressee(s) of this report via electronic mail.

Data and information attached with the project plan are:

A. *Log of Test Borings for Bridge No. 42-0074 (As-built Drawings dated September 16, 1971).*
B. *Acceleration Response Spectrum Curve (present investigation).*

If you have any questions, please call William Bertucci at (916) 227-1045 or John Huang at (916) 227-1037.

for Bill

WILLIAM BERTUCCI
Associate Engineering Geologist
Office of Geotechnical Design - North
Geotechnical Services
Division of Engineering Services

JOHN HUANG, PE
Senior Materials and Research Engineer
Office of Geotechnical Design- North
Geotechnical Services
Division of Engineering Services

for Reza

REZA MAHALLATI, PE
Senior Materials and Research Engineer
Office of Geotechnical Design - North
Geotechnical Services
Division of Engineering Services

REGISTERED PROFESSIONAL ENGINEER
QIANG HUANG
No. C055671
Exp. 12/31/12
CIVIL
STATE OF CALIFORNIA

C: RBibbens, JStayton, R.E. Pending, District PM Hussein Senan, Shira Rajendra@dot.gov, RE_PendingFile@dot.ca.gov, Dist. Materials Engineer Ted Mooradian

Kings River Overflow Bridge (Replace)

Bridge No. 42-0074

EA No. 06-0H1700

Latitude 36.7239

Longitude -119.4579

Control **Envelope**

Period (s)	Sa(g)
0.010	0.219
0.020	0.223
0.030	0.237
0.050	0.283
0.075	0.359
0.100	0.428
0.120	0.467
0.150	0.508
0.200	0.520
0.250	0.493
0.300	0.464
0.400	0.406
0.500	0.347
0.750	0.233
1.000	0.176
1.500	0.128
2.000	0.102
3.000	0.066
4.000	0.046
5.000	0.038

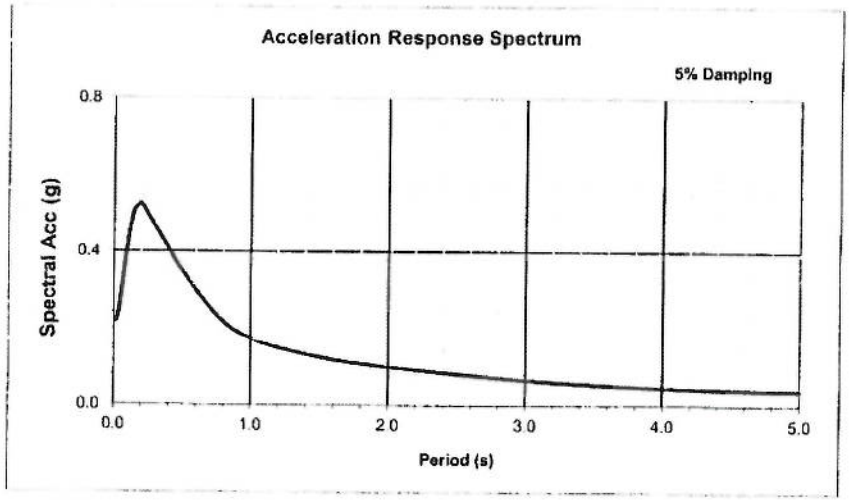

Deterministic Procedure Data

Fault	Great Valley fault 13	
Fault ID	36	
Style	R	
Mmax	6.5	
Dip	15	deg
Z_{TOR}	9	km

R_{rup}	90	km
R_{jb}	89	km
R_x	89	km
V_{S30}	450	m/s
$Z_{1.0}$	N/A	m
$Z_{2.5}$	N/A	km

Notes

Please note the Design ARS curve is an envelope of minimum and probabilitic spectrum

Final

Design Response Spectrum

State of California - Department of Transportation
Division of Engineering Services
Structure Hydraulics & Hydrology Branch

FINAL HYDRAULIC REPORT

Kings River Overflow Bridge

Br. No. 42-0074

06 - FRE - 180 - PM 77.1

Located in Minkler, California

PROJECT DESCRIPTION:
Proposed Replacement of Existing Bridge Structure
(EA 06-0H1701_EFIS: 0600000118)

Prepared by:

Jose J. Vargas, P.E.
Transportation Engineer (Civil)
Structure Hydraulics & Hydrology Branch
July 19, 2011

REGISTERED PROFESSIONAL ENGINEER
JOSE J. VARGAS
No. 65612
Exp. 9/30/11
CIVIL
STATE OF CALIFORNIA

TABLE OF CONTENTS

Page Number

1) GENERAL INFORMATION 1

2) DESCRIPTION OF WATERSHED 2

3) PEAK DISCHARGES . . . . . 2 - 3

4) WATER SURFACE ELEVATIONS . . . . . 3 - 4

5) PEAK VELOCITY 4

6) WATERWAY CAPACITY & MINIMUM SOFFIT ELEVATION . . . . . 4 - 5

- *Waterway Capacity* *4*
- *Minimum Soffit Elevation* *5*

7) DRIFT POTENTIAL . . . . . 5 - 6

8) POTENTIAL SCOUR & LONG-TERM CHANNELBED CHANGES . . . . 6 - 7

- *General / Contraction Scour* *6*
- *Local Scour - Piers & Abutments* . . . . . *6 - 7*
- *Long-Term Channelbed Degradation* *7*
- *Lateral Thalweg Migration* *7*

9) ADDITIONAL CONSIDERATIONS 7

10) SUMMARY INFORMATION FOR THE BRIDGE DESIGNER 8

11) LIST OF ACRONYMS USED IN THE REPORT 9

12) REFERENCES 10

13) ATTACHMENTS 11-12

- *FIGURE 1A - Schematic of Byrd Slough* *11*
- *FIGURE 1B - XYZ Perspective Plot of HEC-RAS Model (looking U/S)* *11*
- *FIGURE 2A - XYZ Perspective Plot of HEC-RAS Model (looking D/S)* *12*
- *FIGURE 2B - Cross-Section Plot of HEC-RAS Model (Existing)* *12*
- *FIGURE 2C - Cross-Section Plot of HEC-RAS Model (Proposed)* *12*

General Notes:

1) *Unless otherwise indicated, elevations shown in this report are based on the National Geodetic Vertical Datum of 1929 (NGVD29). The HEC-RAS hydraulic model was based on field survey data obtained in April/May 2011 by Preliminary Investigations (P.I.) - North Survey Branch (survey data referenced to District 6 survey control points).*

2) *Actual flows observed in the main channel at the bridge site may vary significantly due to many site-specific factors. For the purpose of this study, the hydraulic results and potential scour depths are based on an assumed conservative maximum discharge based on information currently available. Additional hydraulic analysis may be necessary if different design/maximum discharge values are required for encroachment permit purposes.*

GENERAL INFORMATION

It is proposed to replace the existing bridge structure, Kings River Overflow (Br. No. 42-0074) due to structural deficiency. The structural deficiency is due to high chloride deck core test results and the deteriorated state of the superstructure. The bridge site is located just west of Minkler, California, on State Highway 180 (also known as "Kings Canyon Road" in this area). The existing structure currently has a National Bridge Inspection Standards (NBIS) Item 113 Code rating of "8", which indicates, "*Bridge foundations determined to be stable for the assessed or calculated scour condition. Scour is determined to be above top of footing...*"

It is proposed to replace the existing bridge with a bridge of similar design and length along the existing roadway alignment/profile. The existing structure was built in 1921 by Fresno County and widened in 1954. It is a 9-span structure with 17-foot spans, has a total length of 153 feet (159 feet-3 inches with the "end slab" at End of Bridge, EB), and a total width of 28.5 feet. The existing structure depth is roughly 1 foot-10.5 inches. Based on the proposed plans provided at the Type Selection Meeting (April 13, 2011), the proposed design is a 5-span (26.8 feet, 3 spans at 35.5 feet, 26.8 feet), Cast-In-Place (CIP), Reinforced Concrete (RC) slab bridge structure. The proposed structure depth is 1 foot-6.5 inches and the total bridge length and width is 160 feet and 42 feet-10 inches, respectively.

The proposed replacement bridge has four pier walls with an approximate thickness of 16 inches with rounded ends at the upstream and downstream faces (rounded pier noses). Due to the historical structure (Minkler Cash Store) located next to the bridge site and other local geotechnical considerations, no pile driving is allowed in the vicinity of the bridge (due to potential damage to structure from nearby pile-driving activity). Therefore, spread-footing foundations at both abutments and all pier locations are currently proposed.

It should be noted that a route re-alignment for a section of the existing State Route 180 has been proposed along this area. The proposed re-alignment project would construct new Byrd Slough and Kings River Overflow bridges (in conjunction with other new structures) along a new northern alignment located upstream of the existing bridge sites. The existing structures (including this proposed bridge replacement) located along the replaced section of State Route 180 would be relinquished to a local agency. It is possible the route re-alignment (including new bridge waterway crossings) may affect the local bridge hydraulics of this proposed replacement bridge.

DESCRIPTION OF WATERSHED

NOTE: For the purpose of this study only (to avoid confusion), "Byrd Slough (Main Channel)" refers to the section of Byrd Slough upstream of the flow division/split location. "Byrd Slough (Minor Channel)" refers to the western, low-flow channel downstream of the flow division/split which crosses "Byrd Slough, Br. No. 42-0073).
(Refer to Page 11, "**Attachment 1, FIGURE 1A - Schematic of Byrd Slough**")

"Byrd Slough" is owned/operated by the Alta Irrigation District (AID) and is part of a complex water distribution system which includes a series of diversions, weirs, control gates, and other water-related structures. Actual flows observed in the channel (at the bridge site) at any time may vary significantly due to many variable factors, including Pine Flat Dam releases, snowpack runoff, additional localized surface runoff, and the daily operations of local irrigation districts.

During more typical low-flow conditions, Byrd Slough (Main Channel) divides into two smaller "low-flow" canals roughly 1,600 feet upstream of State Highway 180. The two "low-flow" canals eventually cross the highway through two adjacent bridge sites: Kings River Overflow (Br. No. 42-0074) and Byrd Slough (Br. No. 42-0073). Based on the State bridge names, the corresponding low-flow canals may be referred to as "Kings River Overflow" and "Byrd Slough (Minor Channel)". *(It should be noted that the naming convention used in this report for the low-flow canals may not match other available sources/documentation.)* During higher flow conditions and based on current FEMA floodplain maps, both "low-flow" canals share a common floodplain upstream of State Highway 180 and flow separately downstream of the highway.

From available information, the two principal sources of flow entering Byrd Slough (Main Channel) are the Alta Wastegate Weir (or "Alta Wasteway") and the "old" Byrd Slough channel, both of which divert water from the Alta Canal. *(The flow in the "old" Byrd Slough channel bypasses the Alta Wastegate/Wasteway.)* The Alta Canal Headgate (located on Alta Canal at North Frankwood Avenue and just south of the Alta Wastegate) controls discharges entering Alta (Main) Canal to the south.

The two main sources of flow entering Alta Canal are the Cobbles (Alta) Weir and Dennis Cut, both of which divert water from the Kings River. Further upstream of these two diversions, the main source of discharge in the Kings River are controlled releases from Pine Flat Dam, which was completed in 1954 by the U.S. Army Corps of Engineers (USACOE). The dam has an approximate capacity of 1,000,000 acre-feet and was built primarily for flood control, with secondary purposes for irrigation and recreational use. Prior to the construction of Pine Flat Dam, periodic major flooding from the Kings River occurred in the area.

PEAK DISCHARGES

Calculating flood frequency discharges using typical hydrology methods for natural streams and drainage basins is not applicable to this bridge site because typical flows in the channel are controlled water diversions. Accurately determining a peak discharge at the bridge site is difficult due to the many complex series of local diversions, control gates, weirs, and other factors which may significantly affect the actual amount of flow in the channel at any time. For hydraulic evaluation purposes, an assumed maximum discharge value for Byrd Slough (Main Channel) was determined based on current information available and assumptions.

The maximum flow which may reasonably be expected in Byrd Slough (Main Channel) is 2,000 cubic feet per second (cfs). This estimated discharge is based on a 1976 (Caltrans) Preliminary Investigation (P.I.) Report for Byrd Slough (Br. No. 42-0073) and considers a relatively conservative assumption that the Alta Canal Headgate is fully closed and all the water from Alta Canal enters Byrd Slough (Main Channel) through the Alta Wastegate. The estimated discharge of 2,000 cfs was provided by AID and represented the maximum operating capacity of Alta Canal noted in the 1976 report. Alta Irrigation District was contacted in June 2011 in order to determine the availability of any updated design/maximum discharge information for these channels. However, no updated discharge information was provided prior to the completion of this report.

Based on calculated results from the HEC-RAS model for the proposed conditions, individual bridge waterway (flow) conveyance at Kings River Overflow (Br. No. 42-0074) and the adjacent Byrd Slough (Br. No. 42-0073) bridges were calculated as 1,160 cfs (58%) and 840 cfs (42%), respectively. The calculated individual conveyance (provided in units of "cfs" and as a percentage of the total discharge) for each bridge waterway is based on the upstream bridge cross-sections and assumes a total discharge of 2,000 cfs for Byrd Slough (Main Channel). *(Calculated individual bridge conveyance values will vary based on assumed discharges, changes in cross-section geometry, and other factors.)*

It should be noted that other water-related agencies (i.e. Alta Irrigation District, Central Valley Flood Protection Board (CVFPB), USACOE, CA Department of Fish & Game (CDFG), etc.) may define or consider different "design" or maximum discharges and/or water surface elevations (WSEL's) for their own specific purposes, which may potentially differ from the assumptions used for this study. It is possible that additional hydraulic analysis based on the agencies' specific "requirements" may be necessary during the encroachment permit phase of the project.

WATER SURFACE ELEVATIONS

For the purpose of evaluating potential hydraulic impacts due directly to the proposed bridge replacement project, existing and proposed conditions were evaluated using HEC-RAS (Version 4.0) hydraulic modeling software. The Hydrologic Engineering Center - River Analysis System (HEC-RAS) is a one-dimensional hydraulic analysis program developed by the U.S. Army Corps of Engineers (USACOE). A hydraulic model of the bridge site was created using HEC-RAS software based on geometric data provided by field surveys, proposed bridge/channel design details, and other necessary assumptions required to run the model.

Field survey data was obtained by the (Caltrans) Preliminary Investigations (P.I.) - North Survey Branch during April/May of 2011. Surveyed elevations were referenced to District 6 survey control points based on the NGVD29 vertical datum. The field survey data consisted of a series of consecutive and representative cross-sections taken across the channel and floodplain areas within the study reach. Since current FEMA floodplain maps indicate a common floodplain between Kings River Overflow and Byrd Slough (Minor Channel) upstream of State Highway 180, the horizontal limits of each cross-section were extended to include both "low-flow" channels and the intermediate floodplain areas. For information purposes, the upstream and downstream survey limits extended roughly 2,000 feet and 1,000 feet away from State Highway 180, respectively.

Representative Manning's roughness coefficients ("n") for the hydraulic model were estimated to account for relative differences in roughness (due to surface/material/vegetation cover) for areas located within each cross-section. Based on aerial photos of the site and engineering judgment, values of 0.035 for the main channel area and 0.045 and 0.055 were selected for the overbank/floodplain areas.

Based on site-specific factors and considering water may connect both "low-flow" channels via the common floodplain area during high flow conditions, the HEC-RAS hydraulic model considered both low-flow channels and the intermediate floodplain area as a "single channel system". It is reasonably assumed the total maximum flow for Byrd Slough (Main Channel) may be distributed across both low-flow channels and the common floodplain area; therefore, the calculated WSEL applies at all locations within any single cross-section.

It may be noted that some model sensitivity analysis was performed to evaluate different modeling methods for this specific channel system. At the proposed bridge site, there was very little change (if any) in calculated hydraulic design data results (WSEL's, velocities, etc.) between the different methods evaluated. Considering the site-specific details and other assumptions, the "single channel system" was assumed to provide the most representative results of actual site conditions.

Based on the assumed maximum discharge of 2,000 cfs for Byrd Slough (Main Channel), the HEC-RAS model calculated a water surface elevation at the bridge site of 392.0 feet (at the upstream face of proposed bridge). Based on HEC-RAS results, the calculated local WSEL's (values rounded off to the nearest 0.1 feet) at the upstream side of the bridge did not change between the existing and proposed conditions.

PEAK VELOCITY

Based on the assumed maximum discharge for Byrd Slough (Main Channel), a local (water) peak velocity of 5.0 feet per second was calculated at the proposed bridge site.

WATERWAY CAPACITY & MINIMUM SOFFIT ELEVATION

Waterway Capacity

Highwater records were located for the years of 1937, 1945, and 1952 - some indicating overtopping of the existing bridge deck. However, no high-water elevations or reports of overtopping were located for years after 1954, when the Pine Flat Dam on the Kings River was completed.

The total length and existing highway profile for the proposed replacement bridge will match or be very similar to the existing bridge structure. There are currently no plans to re-grade or make other changes to the existing channelbed or bridge waterway. However, the reduction of the number of total piers (from 8 to 4) in the waterway, the reduced pier thickness, and the proposed alignment of the new piers (generally aligned in the direction of main flow) will provide more overall efficient hydraulic conditions (and increased hydraulic capacity) as compared to the existing conditions.

Minimum Soffit Elevation

"*Byrd Slough*" in Fresno County is currently a regulated waterway within the jurisdiction of the Central Valley Flood Protection Board. Per Title 23 of the California Code of Regulations (CCR), new bridge structures located within designated floodways are generally required to satisfy minimum freeboard requirements above the "*design flood plane*". For regulated streams within jurisdiction of the CVFPB, "*The bottom members (soffit) of a proposed bridge must be at least three (3) feet above the design flood plane. The required clearance may be reduced to two (2) feet on minor streams at sites where significant amounts of stream debris are unlikely.*"

Based on site-specific characteristics and assumptions, the Kings River Overflow channel appears to satisfy CVFPB's general criteria for allowing the "reduced" required clearance of 2 feet; however, CVFPB will determine the actual freeboard requirements for the bridge site. At the Bridge Type Selection Meeting (April 2011), District 6 staff mentioned that preliminary discussions with CVFPB regarding this project indicated the reduced clearance requirement of 2 feet would be acceptable at this bridge site. In order to confirm the tentative freeboard assumption and to also minimize potential issues during the permit review process, it is recommended that written documentation regarding the "reduced freeboard requirement" is requested from CVFPB.

Based on preliminary indications from CVFPB, 2.0 feet of minimum clearance was tentatively assumed for hydraulic evaluation purposes. The recommended minimum soffit elevation at the proposed bridge site is 394.0 feet, which is the local calculated WSEL of 392.0 feet plus 2.0 feet of assumed freeboard. If changes to the design/maximum discharge or freeboard requirements are necessary for this bridge site, the recommended minimum soffit elevation will change accordingly.

The proposed General Plan Sheet (dated 2-11-11) indicates Beginning of Bridge (BB) and End of Bridge (EB) elevations of 395.97 feet and 396.17 feet, respectively. Based on the lower elevation at the BB and applying elevation adjustments to account for the proposed bridge width/deck cross-slope and the proposed structure depth, the calculated minimum soffit elevation for the proposed bridge structure is 394.0 feet. The proposed minimum soffit elevation provides 2.0 feet of available clearance above the local calculated WSEL.

DRIFT POTENTIAL

Available historical records for the existing bridge indicate some history of minor drift/debris retention at the existing piers. The existing structure has a total of 8 piers, open-span lengths (horizontal open spacing between piers) of roughly 17 feet, and the pier walls are not aligned in the direction of high flow (roughly 15-20 degrees of hydraulic skew). These factors may have contributed to the historical drift/debris accumulation noted at the existing piers.

The proposed bridge will have 4 piers, pier wall thickness/width of 16 inches (narrower piers than existing), open-span lengths of 35.5 feet for the 3 middle spans (26.8 feet at the end spans), and the new pier walls will be generally aligned in the direction of high flow (i.e. negligible hydraulic skew effects). Compared to the existing conditions, the proposed hydraulic-related bridge improvements should significantly reduce the overall tendency for potential drift/debris accumulation at the new bridge

piers. In addition, it is generally anticipated that any significant amounts of drift which may accumulate at the proposed piers during higher flow events will be removed periodically by Caltrans Maintenance or others, as needed, to help prevent significant long-term accumulation of drift/debris at the bridge piers.

Assuming a significant reduction in future drift accumulation at the new piers and considering the local water depths/velocities calculated in the HEC-RAS model, floating drift was not included in the model for WSEL calculation purposes. However, the potential local pier scour calculations did conservatively assume a small amount of potential drift accumulation at the new piers in order to provide long-term, foundation design recommendations.

POTENTIAL SCOUR & LONG-TERM CHANNELBED CHANGES

Potential scour for the proposed bridge site was evaluated based on the Hydraulic Engineering Circular No. 18 (HEC-18) Manual, "*Evaluating Scour at Bridges*" (4th Edition, March 2001). Total scour at a highway crossing generally consists of three main components: general/contraction scour, local scour at piers/abutments, and long-term channelbed aggradation/degradation. Potential lateral stream/thalweg migration to the pier locations and abutments is also evaluated as part of the scour analysis procedure.

General / Contraction Scour

Based on the HEC-RAS model for the proposed conditions, no general or contraction scour is expected at the bridge site.

Local Scour - Piers & Abutments

The proposed bridge will have 4 pier walls (Piers 2 through 5) located in the main waterway. The proposed pier walls will be 16-inches thick, have rounded edges (rounded pier noses) at both the upstream and downstream pier faces, and will be founded on spread-footing foundations. Hydraulic skew effects are assumed negligible since the new pier walls will be generally aligned with the direction of high flow. For scour evaluation purposes, a minor amount of drift (0.5 feet drift width on each side of pier = 1.0 foot total at pier) was considered.

The HEC-RAS (Version 4.0) software includes a "Hydraulic Design - Bridge Scour" component based on HEC-18, 4th Edition, March 2001 which uses direct hydraulic results from the HEC-RAS model to provide scour estimates. Based on the proposed bridge details (pier walls) and current assumptions used for scour evaluation purposes, the calculated local pier scour (depth) was 4.0 feet.

Based on current HEC-RAS model results for the assumed maximum flow conditions, both proposed abutments appear to be generally located outside and above the local calculated WSEL and are not expected to be subject to significant local abutment scour. No localized abutment scour was assumed for this study. However, there is an unknown amount of risk of potential long-term lateral thalweg migration toward either abutment location. *(Refer to "**Lateral Thalweg Migration**")*

Long-Term Channelbed Degradation

Historical cross-section data for the existing bridge was located for the following years: 1935, 1972, 1992, 2004, and 2011 (recent survey data). The limited cross-section data suggests the channel area at the existing bridge site has been fairly stable overall (vertically and horizontally). However, some minor variations between the historical cross-sections may indicate some potential for future, long-term channelbed changes at the bridge site. For this study, potential long-term channelbed degradation of 1.0 foot (depth) was assumed for a 75-year design period at the bridge site.

Lateral Thalweg Migration

In general, long-term channelbed/migration stability is a complex and dynamic process which may involve many site-specific (either natural and/or man-made) factors. Accurately forecasting long-term channelbed changes at this bridge site is difficult due to many unknown and/or unpredictable variables. Many site-specific factors at this bridge site may directly or indirectly influence both future channelbed and lateral migration trends in the future. For the purpose of providing long-term foundation design recommendations, potential full lateral thalweg migration to any pier location or either abutment (face) was conservatively assumed.

Based on a current thalweg elevation of roughly 387.0 feet (based on April/May 2011 survey data) and considering a total channelbed degradation and local pier scour depth of 5.0 feet (1.0 foot degradation plus 4.0 feet local pier scour), a potential local channelbed elevation of 382.0 feet is assumed at any pier location (Piers 2 - 5). For either abutment face, the potential local channelbed elevation of 386.0 feet is assumed, which considers the current thalweg elevation and 1 foot of long-term degradation. In the event that significant lateral thalweg migration toward the abutments does become an issue in the future, it may be a relatively gradual process that would likely allow adequate time to detect (during scheduled bridge inspections or site visits) and address any concerns as required.

ADDITIONAL CONSIDERATIONS

The proposed bridge will provide several hydraulic-related improvements to the existing waterway conditions: longer open spans, fewer and narrower piers in the waterway, piers aligned with the main flow direction, and slightly more freeboard (due to a slightly thinner superstructure than existing). However, due to site-specific channel characteristics (i.e. relatively low longitudinal channel slopes, lower velocities, channel geometry, Manning's "n" roughness values, etc.), the overall hydraulic improvements may not significantly affect the calculated water surface elevations at the bridge site when comparing the existing and proposed conditions.

Based on available site information, the local channelbed material is assumed to be scourable. The Caltrans Geotechnical Branch may better determine potential scourability of local channelbed material and local geotechnical site conditions, which may possibly limit the estimated scour depths and/or lateral thalweg migration assumptions made for this study.

Due to local restrictions regarding the use of pile foundations for the new bridge, pier walls on spread-footing foundations are proposed. Using rounded pier noses (versus square noses) on both the upstream and downstream ends of the piers would improve the hydraulic-related flow characteristics and may help reduce drift accumulation potential.

SUMMARY INFORMATION FOR THE BRIDGE DESIGNER

NOTE: Unless otherwise specified, elevations in this report are referenced to the National Geodetic Vertical Datum of 1929 (NGVD29).

Estimated Current Thalweg Elevation [1] *(at proposed bridge site)*	387.0 feet
Long-Term Channelbed Degradation [2] *(depth)*	1.0 feet
Long-Term Channelbed Elevation *(based on thalweg elevation)*	386.0 feet
Local Pier Scour at All Pier Locations (Piers 2 - 5) [3,4] *(depth)*	4.0 feet
Long-Term Degradation & Local Pier Scour Elevation (Piers 2 - 5) [3,4]	382.0 feet
Long-Term "Channelbed Elevation" at Abutments 1 & 6 [2,4] *(at abutment face)*	386.0 feet
Local Peak (Water) Velocity at Proposed Bridge	5.0 ft./sec.
Recommended Minimum Soffit Elevation *(assumes **2.0 feet** of freeboard for drift passage)*	394.0 feet

NOTES:

[1] *Based on HEC-RAS model cross-section (April/May 2011 survey data).*
[2] *Assumed potential long-term channelbed degradation of 1.0 feet over a 75-year design period.*
[3] *Local pier scour assumes a conservative 1.0 feet of total drift/debris width (0.5 feet on each side of upstream piers).*
[4] *Potential lateral thalweg migration to any pier or abutment location was conservatively assumed.*

Hydrologic / Hydraulic Summary			
Total Drainage Basin Area: N/A *(controlled flow channel)*			
	Design Flood	**Base Flood**	**Overtopping Flood**
Frequency, years	N/A	N/A	N/A
Discharge, cfs	1,160*	N/A	N/A
Water Surface Elevation at Bridge, feet	392.0**	N/A	N/A
Flood plain data are based upon information available when the plans were prepared and are shown to meet federal requirements. The accuracy of said information is not warranted by the State and interested or affected parties should make their own investigation.			

NOTE: Calculating flood frequency discharge estimates using typical hydrology methods for natural streams and drainage basins is not applicable to this channel because it is considered to be a controlled flow channel.

N/A = Not Applicable
** The "Design Flood" discharge is based on HEC-RAS model results and represents an estimate of the individual (flow) conveyance for the proposed Kings River Overflow bridge waterway assuming a total maximum discharge of 2,000 cfs for Byrd Slough (Main Channel) - upstream of the flow division/split.*
*** Calculated WSEL at the upstream face of the proposed bridge.*

LIST OF ACRONYMS USED IN THE REPORT

AID	Alta Irrigation District
BB	Beginning of Bridge
CAiCE	Computer-Aided Civil Engineering *(software program)*
Caltrans	California Department of Transportation
CCR	California Code of Regulations
CDFG	California Department of Fish & Game (or also "DFG")
cfs	cubic feet per second
CIP	Cast-In-Place
CVFPB	Central Valley Flood Protection Board
DHIPP	Digital Highway Inventory Photography Program (Caltrans)
EB	End of Bridge
FEMA	Federal Emergency Management Agency
FIRM	Flood Insurance Rate Map (FEMA)
FIS	Flood Insurance Study (FEMA)
FHR	Final Hydraulic Report
GP	General Plan
HEC-18	Hydraulic Engineering Circular No. 18 "*Evaluating Scour at Bridges*"
HEC-RAS	Hydrologic Engineering Center - River Analysis System *(software program)*
NBIS	National Bridge Inspection Standards
NFIP	National Flood Insurance Program (FEMA)
NGVD29	National Geodetic Vertical Datum of 1929
P.I. - North	Preliminary Investigations - North *(Caltrans Survey Branch)*
RC	Reinforced Concrete
USACOE	United States Army Corps of Engineers
USGS	United States Geological Survey
WSEL	Water Surface Elevation

REFERENCES

1) California Department of Transportation (Caltrans) - Bridge Inspection Reports (BIR's), Supplemental Bridge Reports (SBR's), Bridge File, As-Built Plans, Site Photos, Digital Highway Inventory Photography Program (DHIPP) - aerial photos, Final Hydraulic Report (FHR) request letter from Bridge Design Branch 18 *(dated 4/12/10)*, proposed General Plan sheet *(dated 2/11/11)*

2) Federal Emergency Management Agency (FEMA) Flood Insurance Study (FIS)
Fresno County, California (and Incorporated Areas)
Flood Insurance Study Number: 06019CV001B & 06019CV002B (2 Volumes)
(Last Revised: February 18, 2009)

3) FEMA National Flood Insurance Program (NFIP)
Flood Insurance Rate Map (FIRM)
Fresno County, California (and Incorporated Areas)
Map Number: 06019C2180H (Panel 2180 of 3525)
(Map Revised: February 18, 2009)

4) United States Geological Survey (USGS), 7.5-Minute Series (Topographic) Quadrangle Map: *Wahtoke, California (dated 2009)*

5) Additional References:

- Google (search engine)	*http://www.google.com/*
- Google Maps	*http://maps.google.com/*
- Google Earth (Version 6.0)	*http://www.google.com/earth*
- Alta Irrigation District (AID)	*http://altaid.org/*

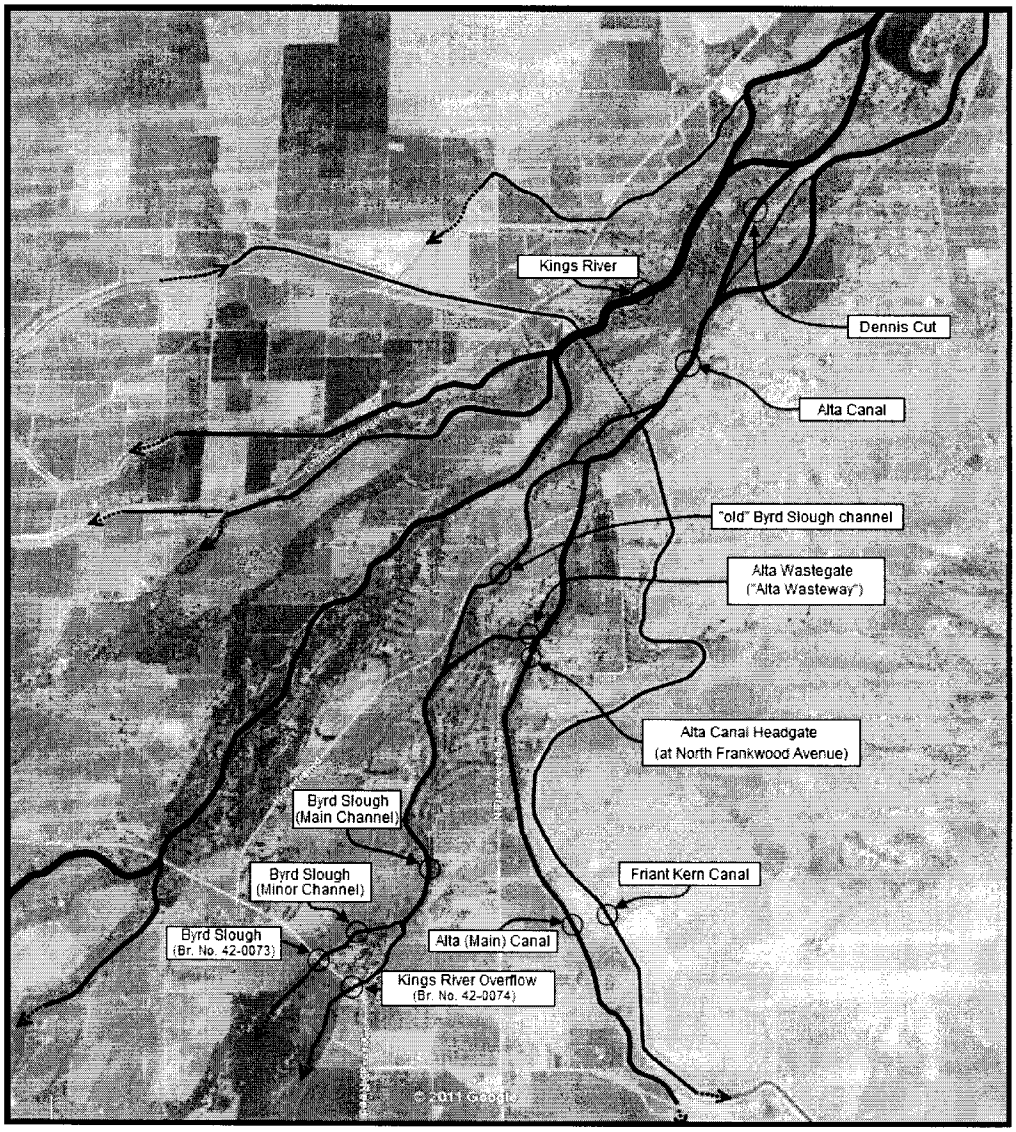

FIGURE 1A - Schematic of Byrd Slough *(Aerial Image Source: Google Earth)*

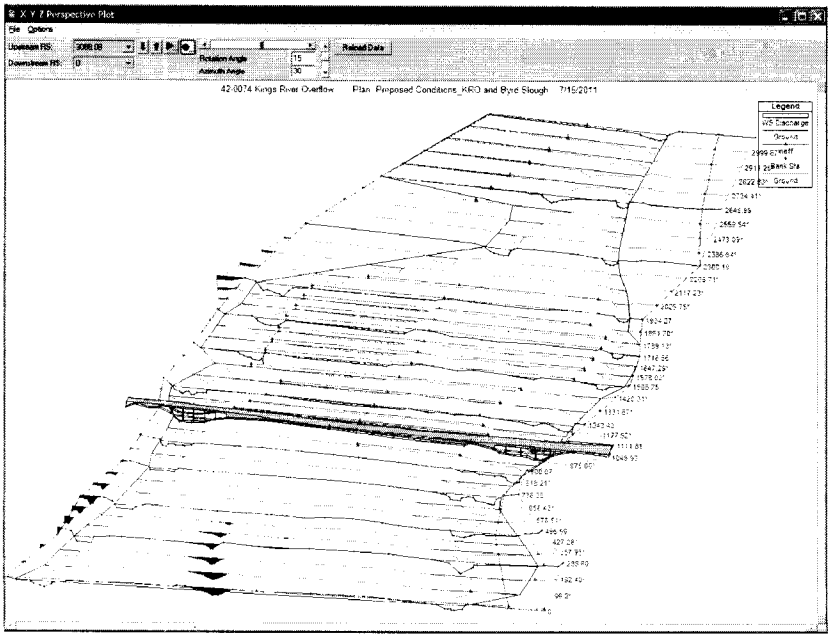

FIGURE 1B - "X-Y-Z Perspective Plot" of HEC-RAS Model (looking upstream, U/S)

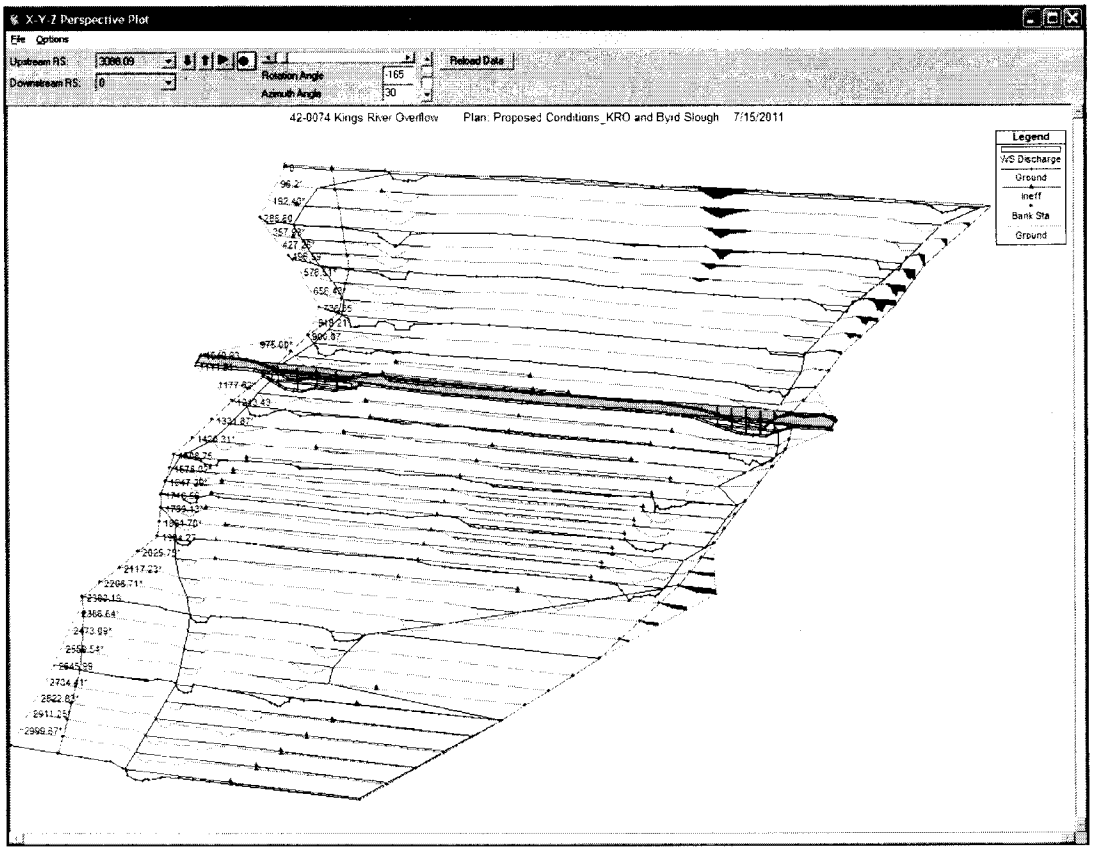

FIGURE 2A - "X-Y-Z Perspective Plot" of HEC-RAS Model (looking downstream, D/S)

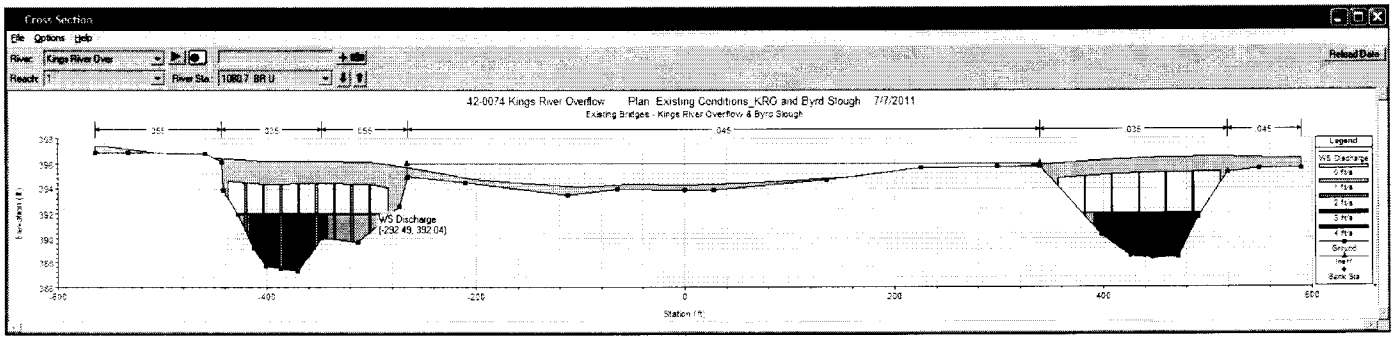

FIGURE 2B - "Cross-Section" Plot of HEC-RAS Model (Existing Conditions)

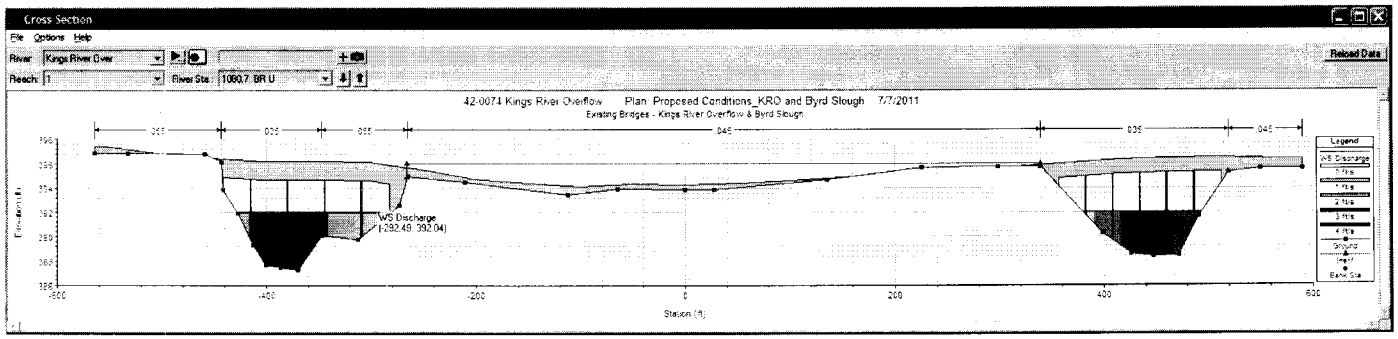

FIGURE 2C - "Cross-Section" Plot of HEC-RAS Model (Proposed Conditions)

State of California **Business, Transportation and Housing Agency**

Memorandum

To: MICHAEL POPE
Branch Chief
Bridge Design Branch 18
Office of Bridge Design South
Division of Engineering Services

Date: April 4, 2012

File: Kings River Overflow
Br. No. 42-0437
06-FRE-180-PM 77.2
EA: 06-0H1701
(EFIS: 0600000118)

From: JOSE VARGAS
Hydraulic Engineer
Structure Hydraulics & Hydrology Branch
Office of Design & Technical Services
Division of Engineering Services

Subject: Hydrology & Hydraulics Report for Kings River Overflow, Br. No. 42-0437

The "Supplementary Hydraulic Report" for the above referenced project is attached for your records. This report is supplementary to the Final Hydraulic Report (FHR) completed on July 19, 2011 (2011 FHR) - which is also included for reference purposes. This hydraulic study is being provided as additional hydraulic documentation for the Central Valley Flood Protection Board (CVFPB) encroachment permit application for this project and is based on the official design discharges provided by CVFPB in late January 2012.

It should be noted that the 2011 FHR referred to both the existing and proposed bridges as, "Kings River Overflow, Br. No. 42-0074". Subsequently, the bridge number designation for the proposed bridge was revised to "42-0437" (the proposed bridge name did not change) and the bridge Post mile (PM) was revised to "77.2". This study/report and corresponding HEC-RAS model reference the revised bridge number and Post mile for the project.

If you have any questions, please contact Jose Vargas at (916) 227-9856 or the Structure Hydraulics & Hydrology Branch Chief, Steve Ng, at (916) 227-8018.

Attachments

State of California - Department of Transportation
Division of Engineering Services
Structure Hydraulics & Hydrology Branch

SUPPLEMENTARY HYDRAULIC REPORT

Kings River Overflow

Br. No. 42-0437

06 - FRE - 180 - PM 77.2

Located in Minkler, California

PROJECT DESCRIPTION:
Proposed Replacement of Existing Bridge *(Kings River Overflow, Br. No. 42-0074)*
(EA 06-0H1701_EFIS: 0600000118)

Prepared by:

Jose J. Vargas, P.E.
Transportation Engineer (Civil)
Structure Hydraulics & Hydrology Branch
April 4, 2012

REGISTERED PROFESSIONAL ENGINEER
JOSE J. VARGAS
No. 65612
Exp. 9/30/13
CIVIL
STATE OF CALIFORNIA

TABLE OF CONTENTS

Page Number

1) GENERAL INFORMATION 1

2) DESCRIPTION OF WATERSHED 1

3) CVFPB DESIGN DISCHARGE 1

4) HEC-RAS MODELING APPROACH 2

5) WATER SURFACE ELEVATIONS . . . . . 3 - 4

6) PEAK VELOCITY 4

7) WATERWAY CAPACITY & MINIMUM SOFFIT ELEVATION . . . . . 4 - 5

8) DRIFT POTENTIAL 5

9) POTENTIAL SCOUR & LONG-TERM CHANNELBED CHANGES 5

10) ADDITIONAL CONSIDERATIONS 5

11) CVFPB SUMMARY TABLE OF HYDRAULIC RESULTS 6

12) SUMMARY INFORMATION FOR THE BRIDGE DESIGNER 6

13) LIST OF ACRONYMS USED IN THE REPORT 7

14) REFERENCES 8

15) ATTACHMENTS 9-16

- *REFERENCE 1 - Additional HEC-RAS Model Assumptions & Notes 9*
- *FIGURE 1 - HEC-RAS Schematic Diagram of Entire Hydraulic Model 10*
- *FIGURE 2 - HEC-RAS XYZ Perspective Plot of Entire Hydraulic Model 10*
- *FIGURE 3 - HEC-RAS XYZ Perspective Plot of Kings River Overflow Model . . . 11*
- *FIGURE 4A & 4B - HEC-RAS Cross-Section (Existing & Proposed) 11*
- *FIGURE 5A & 5B - HEC-RAS XYZ Perspective Plot (Existing & Proposed) 12*
- *FIGURE 6A & 6B - HEC-RAS (WSEL) Profile Plot (Existing & Proposed) 13*
- *FIGURE 7 - (WSEL) Profile Plot Comparison (Existing & Proposed Bridges) . . . 14*
- *FIGURE 8 - HEC-RAS Hydraulic Design - Bridge Scour (Estimated Scour) 14*
- *HEC-RAS Output 1 - Standard Table 1 (Existing & Proposed Comparison) 15*
- *HEC-RAS Output 2 - Six XS Bridge (Existing & Proposed Comparison) 16*

General Notes:

1) *The Final Hydraulic Report (FHR) completed on July 19, 2011 (2011 FHR) for Caltrans Bridge Design Branch 18 referred to both the existing and proposed bridges as, "Kings River Overflow, Br. No. 42-0074". Subsequently, the bridge number designation for the proposed bridge was revised to "42-0437" and the bridge Post mile (PM) was revised to "77.2". This study/report and corresponding HEC-RAS model reference the revised information.*

2) *This study/report is intended to supplement the 2011 FHR and was completed to provide additional hydraulic analysis and documentation based on the design discharges recently provided for this site by the CVFPB. In order to minimize the length of this report, only portions of the 2011 FHR text/information are included within this report. Please refer to the 2011 FHR for general study assumptions and other detailed information.*

3) *Unless otherwise indicated, elevations shown in this report are based on the National Geodetic Vertical Datum of 1929 (NGVD29). The HEC-RAS hydraulic model was based on field survey data obtained in April/May 2011 by Preliminary Investigations (P.I.) - North Survey Branch (survey data referenced to District 6 survey control points).*

4) *For general WSEL comparison and evaluation purposes only, calculated WSEL's (as obtained directly from HEC-RAS output) rounded off to 0.01 feet were considered and are included on TABLE 1 (Page 4); however, due to many factors affecting WSEL values, the estimated WSEL's reported in this study are rounded off to 0.1 feet.*

GENERAL INFORMATION *(Refer to the 2011 FHR)*

It is proposed to replace the existing State Bridge, *Kings River Overflow (Br. No. 42-0074)*, with a new bridge structure at the same location. The proposed bridge would maintain the same bridge name but would have a new bridge number designation *(Br. No. 42-0437)*. The existing bridge crosses over a channel which may be referred to as "*Kings River Overflow*" based on the official State Bridge name. The Kings River Overflow waterway is currently within the jurisdiction of the Central Valley Flood Protection Board (CVFPB) and will require an encroachment permit.

In late January 2012, the CVFPB provided their official design discharges for these waterways: 2,500 cubic feet per second (cfs) for the main Byrd Slough (upstream of the flow split) and individual discharges of 1,250 cfs for Kings River Overflow and Byrd Slough (downstream of the flow split location). The main purpose of this supplemental study is to provide additional hydraulic analysis and results based on CVFPB's design discharges for the encroachment permit application.

It should be noted the two adjacent low-flow channels are referred to by various names by different agencies and sources. Based on the official State Bridge names that cross these waterways, these two channels are known as "*Kings River Overflow*" (Br. No. 42-0074) and "*Byrd Slough*" (Br. No. 42-0073). The CVFPB refers to the low-flow channels as "*Byrd Slough*" and "*East Branch*", respectively. To help avoid confusion, the 2011 FHR and this study use the State Bridge naming convention for identifying these channels. The "*Byrd Slough (Main Channel)*" term used in the 2011 FHR and this study refers to the main channel just upstream of the flow split location.

DESCRIPTION OF WATERSHED *(Refer to the 2011 FHR)*

CVFPB DESIGN DISCHARGE

As noted above, the CVFPB recently provided official design discharges for the main Byrd Slough channel of 2,500 cfs and also individual design discharges of 1,250 cfs for each low-flow channel (half of the total discharge was assumed for each low-flow channel).

HEC-RAS MODELING APPROACH

HEC-RAS Modeling Approach for 2011 FHR

A Final Hydraulic Report (FHR) for this project was completed on July 19, 2011 for Bridge Design Branch 18. The study assumed a maximum discharge of 2,000 cfs for the "*Byrd Slough (Main Channel)*". The Federal Emergency Management Agency (FEMA) Flood Insurance Rate Map (FIRM) for this area indicates a common floodplain area between the two adjacent low-flow channels upstream of State Route 180 and two separate low-flow channels downstream of State Route 180. Based on this assumed flood condition, the modeling approach for the 2011 HEC-RAS (hydraulic) model considered the two low-flow channels and common (intermediate) floodplain as a "single channel system".

This simplified modeling approach generally assumes the adjacent low-flow channels are connected along the common floodplain area (during flood conditions) and a specified discharge is able to freely flow (distribute itself) between both channels. The "single channel system" modeling approach does have some limitations. Since a single total discharge value is specified for the entire channel system, the program calculates the flow distribution across each cross-section (including the distribution of flow at each bridge opening) and calculates a single common water surface elevation (WSEL) for each cross-section (i.e. same WSEL at both bridge sites). This method also assumes a single set of representative main channel/overbank reach lengths for the entire "system", rather than considering individual channel/overbank reach lengths along each low-flow channel.

Revised HEC-RAS Modeling Approach

The "single channel system" modeling approach used for the 2011 FHR study is valid and applicable under certain assumptions and conditions. Additional sensitivity analysis with the original hydraulic model was completed based on the recently-provided CVFPB design discharge criteria to help determine the most appropriate modeling approach for this study. Based on CVFPB's total discharge of 2,500 cfs, the "single channel system" model indicated an area of "high ground" located near the middle of the common floodplain area (aerial photos indicate a residential area) which appears to form a natural division of flow between the adjacent low-flow channels.

Based on the additional HEC-RAS model sensitivity analysis, other current considerations, and to also meet CVFPB's design discharge criteria (based on both total and individual discharges), an alternate modeling approach was selected for this study which may provide some overall improvements and refinements to the previous hydraulic model. A "junction or separate reach" modeling approach assumes the two adjacent low-flow channels (and corresponding portion of the common floodplain area) flow "independently" of each other at the CVFPB total design discharge. Using the "Junction/Split" feature in HEC-RAS to model the flow split allows specifying a total discharge of 2,500 cfs above the flow split (junction point) and 1,250 cfs for each low-flow channel downstream of the flow split.

Due to modeling each reach independently downstream of the junction point, this method generally results in calculated WSEL's which are different along each individual reach and at each bridge site. This method may help improve the estimated WSEL's along the most upstream portion of the study reach (upstream of the flow split location) and also considers the channel/overbank reach lengths for each low-flow channel individually.

WATER SURFACE ELEVATIONS *(Refer to the 2011 FHR)*

For the purpose of evaluating potential hydraulic impacts due directly to the proposed bridge replacement project, the existing and proposed conditions were evaluated using HEC-RAS (Version 4.1) hydraulic modeling software using CVFPB's design discharge criteria. The Hydrologic Engineering Center - River Analysis System (HEC-RAS) is a one-dimensional hydraulic analysis program developed by the U.S. Army Corps of Engineers (USACOE). A hydraulic model of the bridge site for both existing and proposed conditions was created using HEC-RAS software based on geometric data provided by field surveys, bridge/channel design details from As-Built and proposed Plan Sheets, and other necessary assumptions required to run the model.

As discussed in the 2011 FHR, the HEC-RAS model was created based on field survey data obtained by the Caltrans Preliminary Investigations (P.I.) - North Survey Branch during April/May 2011. The survey data was referenced to the NGVD29 vertical datum and consisted of a series of representative cross-sections taken across the channel and floodplain areas within the study reach area. The overall upstream and downstream survey limits extended roughly 2,000 feet and 1,000 feet away from State Highway 180, respectively. For this study, the original "full-length" cross-sections used for the 2011 FHR hydraulic model were separated into two main channel reaches (Kings River Overflow and Byrd Slough) downstream of the flow split location. The cross-sections for the two individual reaches were divided along the "high ground" areas located between the channels. The channel/overbank reach lengths were also measured for each individual low-flow channel.

The existing and proposed condition models include the roadway/bridge structure and piers in the waterway. It should be noted that the 2011 FHR model considered the proposed pier width (wall thickness) of 16 inches as provided by Bridge Design Branch 18. Based on the most updated proposed plan sheets available, the proposed pier width has been increased to 18 inches. Additionally, the Beginning of Bridge (BB) and the End of Bridge (EB) elevations for the proposed bridge structure have also been recently revised (the BB and EB elevations were increased by 0.17 feet) - all other previously-proposed (hydraulic-related) bridge details appear to remain unchanged. The current HEC-RAS model was updated to incorporate the revised pier width of 18 inches (1.5 feet) for the proposed bridge. ***(Refer to "REFERENCE 1 - Additional HEC-RAS Model Assumptions & Notes" on Page 10)***

WSEL Results

The calculated WSEL's at the upstream side of the bridge were higher than at the downstream side; therefore, the more conservative upstream side WSEL's were considered for this evaluation as the controlling WSEL for the entire bridge site. For general comparison and evaluation purposes only, calculated WSEL's (as obtained directly from HEC-RAS output) rounded off to 0.01 feet were considered and are included in TABLE 1 (Page 4); however, due to many factors affecting WSEL values, the estimated WSEL's reported in this study are rounded off to 0.1 feet.

Based on the CVFPB design discharge of 1,250 cfs for Kings River Overflow, the HEC-RAS model calculated WSEL's at the existing and proposed upstream bridge faces as 392.06 feet and 392.12 feet, respectively. Strictly comparing the calculated WSEL's at the existing and proposed bridge faces (without considering the corresponding River Stations in HEC-RAS or the increase in total bridge width), there appears to be an increase of 0.06 feet from the existing to proposed conditions. However, a direct comparison between the calculated WSEL's at the same River Stations in HEC-RAS (at either the proposed or existing upstream bridge face locations), the calculated WSEL's for the proposed condition are actually slightly lower (0.01 feet and 0.03 feet, respectively) than for existing conditions.

TABLE 1 - Bridge WSEL Comparison

HEC-RAS River Station	River Station Reference Location	Condition	WSEL *(feet, NGVD29)*	WSEL Difference *(feet)*
1031.31 *(feet)*	**Upstream Face of Proposed Bridge**	Existing	392.13	0.01
		Proposed	**392.12**	
1024.40 *(feet)*	**Upstream Face of Existing Bridge**	**Existing**	**392.06**	0.03
		Proposed	392.03	

NOTE: The WSEL's on this table are calculated values obtained from HEC-RAS output and are included for general comparison and evaluation purposes only; all estimated WSEL's reported in this study are rounded off to 0.1 feet.

It should be noted that the proposed bridge is significantly wider than the existing bridge (42 feet-10 inches versus 28.0 feet, respectively). Based on the difference in bridge widths, the proposed bridge faces are assumed to be roughly 7.4 feet further upstream and downstream than the existing bridge face locations. Considering that WSEL's generally increase in the upstream direction, the WSEL at the proposed upstream bridge face location would be expected to be slightly higher than at the existing upstream bridge face location. ***(Refer to "FIGURE 7 - (WSEL) Profile Plot Comparison of Existing & Proposed Bridges" on Page 15)***

For WSEL reporting purposes, the estimated water surface elevation at both the existing and proposed upstream bridge faces is 392.1 feet (rounded off to 0.1 feet). Based on the reported WSEL values, there is no observed change in WSEL between the existing and proposed conditions.

PEAK VELOCITY

Based on the CVFPB design discharge of 1,250 cfs, the HEC-RAS velocity distribution plot indicated a local peak (water) velocity of roughly 5.0 feet per second (ft/sec) at the proposed bridge site, which matches the 2011 FHR results. Overall, there were no significant changes to the calculated main channel (average) velocities along the entire study reach when comparing the model results between the existing and proposed conditions. ***(Refer to "HEC-RAS Output 1 & 2" on Pages 16 & 17)***

WATERWAY CAPACITY & MINIMUM SOFFIT ELEVATION *(Refer to the 2011 FHR)*

Minimum Bridge Soffit Elevation

The most updated General Plan sheet (dated 4/2/12) for the proposed bridge (Br. No. 42-0437) indicates Beginning of Bridge (BB) and End of Bridge (EB) elevations of 396.14 feet and 396.34 feet, respectively. As noted previously, the BB and EB elevations for the proposed bridge were both recently revised (increased by 0.17 feet due to a proposed increase in the local roadway/deck profile). Earlier versions of the proposed General Plan sheet had indicated BB and EB elevations of 395.97 feet and 396.17 feet, respectively. The previous BB/EB elevations were considered applicable for both the existing and proposed bridges based on the assumption that the BB/EB locations and elevations would match. The previous BB/EB elevations are considered applicable only to the existing bridge.

For minimum soffit elevation and freeboard evaluation purposes, the BB/EB locations for the existing bridge are assumed to roughly match the BB/EB locations for the proposed bridge. Based on the corresponding BB elevation *(BB elevation is lower than EB elevation)*, the minimum bridge soffit elevations for the existing and proposed bridges were estimated by applying elevation adjustments to account for the proposed bridge width/deck cross-slope, the structure depth indicated on the plans, and the longitudinal roadway profile slope at the edge of deck (due to bridge skew) - if applicable.

Based on the "As-Built" General Plan sheet (dated 4/16/53) and proposed General Plan sheet (dated 4/2/12), the minimum bridge soffit elevation of the existing bridge was estimated as 393.8 feet and the minimum bridge soffit elevation of the proposed bridge was estimated as 394.2 feet (values rounded off to 0.1 feet). Based on these estimated elevations, the proposed minimum bridge soffit will be located roughly 0.4 feet higher than the existing minimum bridge soffit. Based on the CVFPB design discharge of 1,250 cfs for Kings River Overflow, the estimated WSEL at both the existing and proposed upstream bridge faces is 392.1 feet. Based on the estimated WSEL and minimum bridge soffit elevations, there is roughly 1.7 feet of freeboard for the existing conditions and roughly 2.1 feet of freeboard for the proposed conditions. ***(Refer to TABLE 2 on Page 6)***

DRIFT POTENTIAL *(Refer to the 2011 FHR)*

POTENTIAL SCOUR & LONG-TERM CHANNELBED CHANGES

Refer to the 2011 FHR for the following:

- General/Contraction Scour
- Local Scour - Piers & Abutments
- Long-Term Channelbed Degradation
- Lateral Thalweg Migration

The 2011 FHR submitted to Caltrans Bridge Design Branch 18 provided estimates for maximum potential scour and foundation design recommendations for the proposed bridge. For comparison purposes, scour estimates based on CVFPB's design discharges and revised proposed bridge details were evaluated using the HEC-RAS program. The HEC-RAS (Version 4.1) software program includes a "Hydraulic Design - Bridge Scour" component which uses direct hydraulic output results from the HEC-RAS models to provide scour estimates. The scour calculation method is based on the Hydraulic Engineering Circular No. 18 (HEC-18) Manual, "*Evaluating Scour at Bridges*" (4th Edition, March 2001). The calculated scour depths were similar to previous scour estimates. Therefore, the scour values and foundation recommendations provided in the 2011 FHR are considered applicable. ***(Refer to "FIGURE 8 - HEC-RAS Hydraulic Design - Bridge Scour (Estimated Scour)" on Page 15)***

ADDITIONAL CONSIDERATIONS *(Refer to the 2011 FHR)*

Although the HEC-RAS model results do not seem to indicate any significant hydraulic-related improvements between the existing and proposed conditions, the proposed replacement bridge would be expected to improve the overall hydraulic conditions of the existing bridge waterway and provide several hydraulic-related improvements and benefits. From a qualitative perspective, the proposed bridge would: provide a slightly longer "bridge waterway opening" width, significantly reduce the total number of piers in the waterway (from 8 to 4), increase available "open-span" lengths for drift passage between the piers, significantly reduce or eliminate hydraulic skew effects at the piers by more closely aligning the piers in the direction of high flow, and slightly raise the minimum bridge soffit elevation (i.e. provide additional freeboard).

CVFPB SUMMARY TABLE OF HYDRAULIC RESULTS

Based on a table format provided by CVFPB in August 2011, the following table summarizes expected changes between the existing and proposed conditions with respect to the proposed project.

- Existing Bridge: *Kings River Overflow (Br. No. 42-0074)*
- Proposed Bridge: *Kings River Overflow (Br. No. 42-0437)*

TABLE 2 - CVFPB Existing and Proposed Hydraulic Results Comparison

Design Discharge	Existing (Pre-Construction)				Proposed (Post-Construction)				Change, Δ *(Existing to Future)*	
	Soffit Elevation	WSEL	Velocity	Freeboard	Soffit Elevation	WSEL	Velocity	Freeboard	Δ WSEL	Δ Velocity
(cfs)	*(feet)*	*(feet)*	*(ft/sec)*	*(feet)*	*(feet)*	*(feet)*	*(ft/sec)*	*(feet)*	*(feet)*	*(ft/sec)*
1,250	393.8	392.1	4.3	1.7	394.2	392.1	4.1	2.1	0.0	-0.2

NOTES:

(1) Elevations are rounded off to 0.1 feet and are referenced to the NGVD29 vertical datum.

(2) The "Velocity" shown in the table represents the "average velocity of flow in main channel".

SUMMARY INFORMATION FOR THE BRIDGE DESIGNER

The information shown on the "***SUMMARY INFORMATION FOR THE BRIDGE DESIGNER***" *(Page 8 of the 2011 FHR)* has not changed except for the following changes noted below:

Recommended Minimum Soffit Elevation *(assumes **2.0 feet** of freeboard)*	394.1 feet
"Design Flood" Discharge	**1,250 cfs**
Water Surface Elevation at Bridge	**392.1 feet**

If footnotes for the "*Hydrologic/Hydraulic Summary*" table are included with the table on the Foundation Plan sheet, the revised table footnotes may read:

NOTES:

(1) The "Design Flood" Discharge is based on the design discharge provided by the Central Valley Flood Protection Board (CVFPB) in late January 2012.

(2) Calculated WSEL at the upstream face of the proposed bridge.

LIST OF ACRONYMS USED IN THE REPORT

AID	Alta Irrigation District
BB	Beginning of Bridge
CAiCE	Computer-Aided Civil Engineering *(software program)*
Caltrans	California Department of Transportation
CCR	California Code of Regulations
CDFG	California Department of Fish & Game (or also "DFG")
cfs	cubic feet per second
CIP	Cast-In-Place
CVFPB	Central Valley Flood Protection Board
DHIPP	Digital Highway Inventory Photography Program (Caltrans)
EB	End of Bridge
FEMA	Federal Emergency Management Agency
FIRM	Flood Insurance Rate Map (FEMA)
FIS	Flood Insurance Study (FEMA)
FHR	Final Hydraulic Report
GP	General Plan
HEC-18	Hydraulic Engineering Circular No. 18 "*Evaluating Scour at Bridges*"
HEC-RAS	Hydrologic Engineering Center - River Analysis System *(software program)*
NBIS	National Bridge Inspection Standards
NFIP	National Flood Insurance Program (FEMA)
NGVD29	National Geodetic Vertical Datum of 1929
P.I. - North	Preliminary Investigations - North *(Caltrans Survey Branch)*
PM	Post mile
RC	Reinforced Concrete
USACOE	United States Army Corps of Engineers
USGS	United States Geological Survey
WSEL	Water Surface Elevation

REFERENCES

1) California Department of Transportation (Caltrans) - Bridge Inspection Reports (BIR's), Supplemental Bridge Reports (SBR's), Bridge File, As-Built Plans, Site Photos, Digital Highway Inventory Photography Program (DHIPP) - aerial photos, Final Hydraulic Report (FHR) request letter from Bridge Design Branch 18 *(dated 4/12/10)*, proposed General Plan sheet *(print date 4/2/12),* proposed Foundation Plan sheet *(revision date 9/1/11),* proposed Pier Layout & Details sheet *(print date 3/28/12),* Final Hydraulic Report (FHR) *(dated 7/19/11)*

2) Federal Emergency Management Agency (FEMA) Flood Insurance Study (FIS)
Fresno County, California (and Incorporated Areas)
Flood Insurance Study Number: 06019CV001B & 06019CV002B (2 Volumes)
(Last Revised: February 18, 2009)

3) FEMA National Flood Insurance Program (NFIP)
Flood Insurance Rate Map (FIRM)
Fresno County, California (and Incorporated Areas)
Map Number: 06019C2180H (Panel 2180 of 3525)
(Map Revised: February 18, 2009)

4) United States Geological Survey (USGS), 7.5-Minute Series (Topographic) Quadrangle Map: *Wahtoke, California (dated 2009)*

5) Additional References:

- Google (search engine)	*http://www.google.com/*
- Google Maps	*http://maps.google.com/*
- Google Earth (Version 6.0)	*http://www.google.com/earth*
- Alta Irrigation District (AID)	*http://altaid.org/*

REFERENCE 1 - Additional HEC-RAS Model Assumptions & Notes

HEC-RAS Program - Steady Flow Data

- Subcritical Flow Regime - Downstream (D/S) Boundary Conditions:
  - *Kings River Overflow, Normal Depth (assumed D/S channel slope = 0.00251)*
  - *Byrd Slough, Normal Depth (assumed D/S channel slope = 0.00428)*
- Program was allowed to consider both the energy and momentum (low-flow) calculation methods for WSEL's (higher value was reported).
- HEC-RAS interpolated cross-sections were added near the bridges to improve local hydraulic calculations.

HEC-RAS Program - River Schematic Diagram

- Based on CAiCE survey data points, the geometry data was geo-referenced in the HEC-RAS Geometry Data schematic diagram. For reference purposes only, a geo-referenced aerial photo (Source: Caltrans - Digital Highway Inventory Photography Program, DHIPP) was added as a background image for the schematic. Due to many factors, geo-referenced images typically have some varying amounts of error (horizontal/vertical fit, scaling, rotation, etc.) which may affect how closely the image matches actual world coordinates. However, it should be noted that geo-referencing points and/or images in the HEC-RAS schematic diagram are for visual presentation purposes only and do not affect the hydraulic calculations.

- In the HEC-RAS schematic diagram, the location of the "flow split point" (Junction 1) does not visually coincide with the apparent flow split location based on the aerial photo (aerial photo was taken during more typical low-flow conditions). The estimated location of "Junction 1" was based on hydraulic model sensitivity analysis using CVFPB design discharge criteria and other considerations. The flow split point is located sufficiently upstream of both bridge sites that hydraulic calculations at the bridges are not affected by the assumed location on the schematic diagram.

Manning's Roughness Coefficients, "n"

- Manning's "n" values vary significantly within the study reach area. For hydraulic modeling purposes, the roughness coefficients assumed for the channel and overbank/floodplain areas were simplified to three representative Manning's "n" values (0.035, 0.045, and 0.055). The estimated values were based on available aerial photos of the site and engineering judgment. The HEC-RAS program was allowed to automatically composite "n" values where appropriate.

Local Pier Scour (Proposed Bridge)

- Rounded nose pier walls, wall thickness = 18 inches (1.5 feet), proposed General Plan sheet (4/2/12) *(NOTE: For the 2011 FHR study, proposed pier wall width was 16 inches.)*
- No hydraulic skew effect assumed *(new pier walls are generally aligned with flow direction)*
- Conservatively assumed 0.5 foot drift/debris width on each side of pier wall
- Conservatively assumed fully-scourable material *(no channelbed armoring/geotechnical considerations)*
- Estimated scour was evaluated using HEC-RAS scour evaluation feature, Hydraulic Design Computations *(based on HEC-18, Evaluating Scour at Bridges, 4th Edition - 2001)*

Drift Assumptions

- Drift at the piers was not included for WSEL purposes *(due to fewer piers/longer open spans/minimal amount & size of potential drift was assumed)*
- Drift at the piers was conservatively assumed for pier scour calculations *(assumed 0.5 feet of drift width on each side of pier)*

FIGURE 1 - HEC-RAS Schematic Diagram of Entire Hydraulic Model

(Aerial Image Source: Caltrans DHIPP)

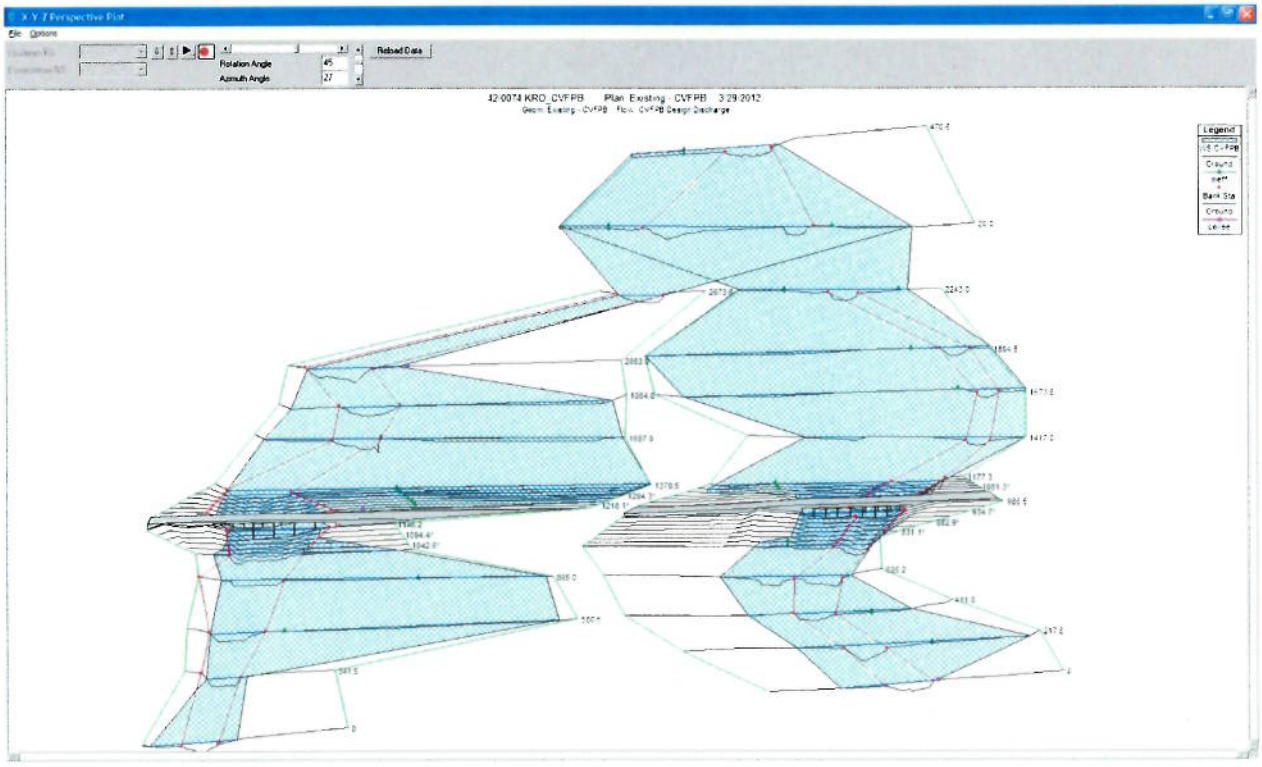

FIGURE 2 - HEC-RAS XYZ Perspective Plot of Entire Hydraulic Model

Looking upstream (U/S) direction at Existing Conditions (Kings River Overflow, Br. No. 42-0074)

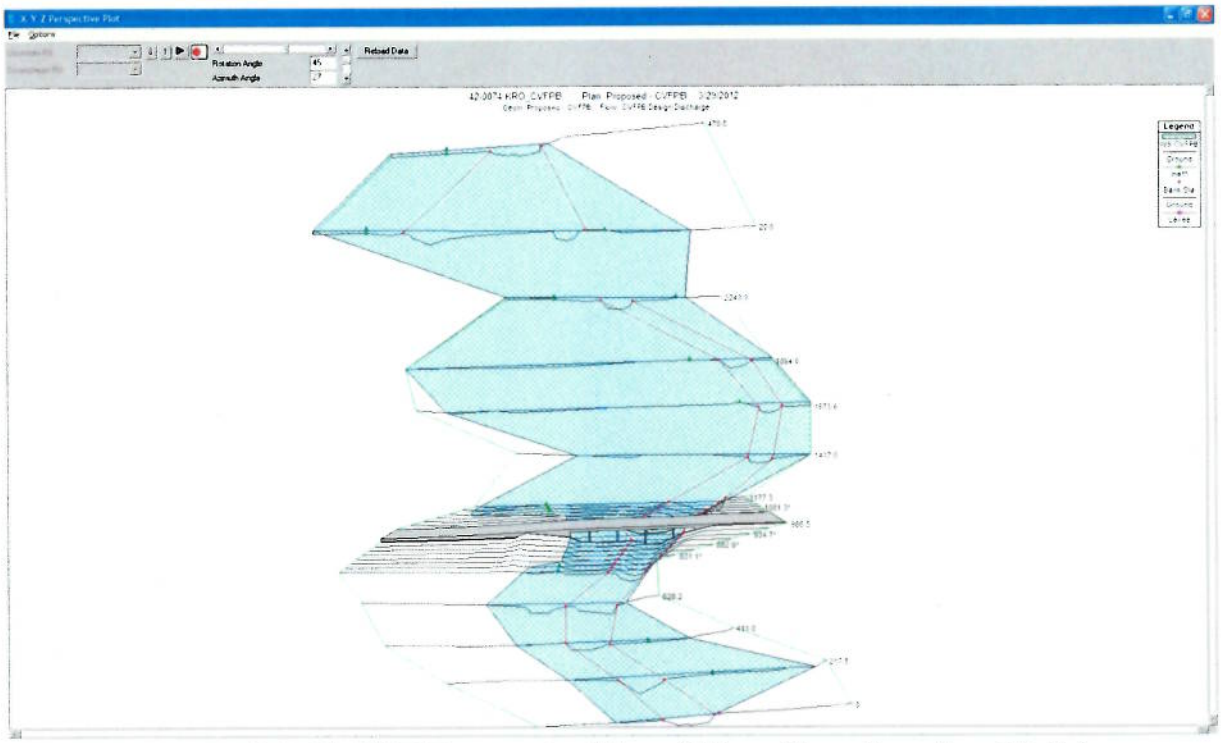

FIGURE 3 - HEC-RAS XYZ Perspective Plot of Kings River Overflow Model

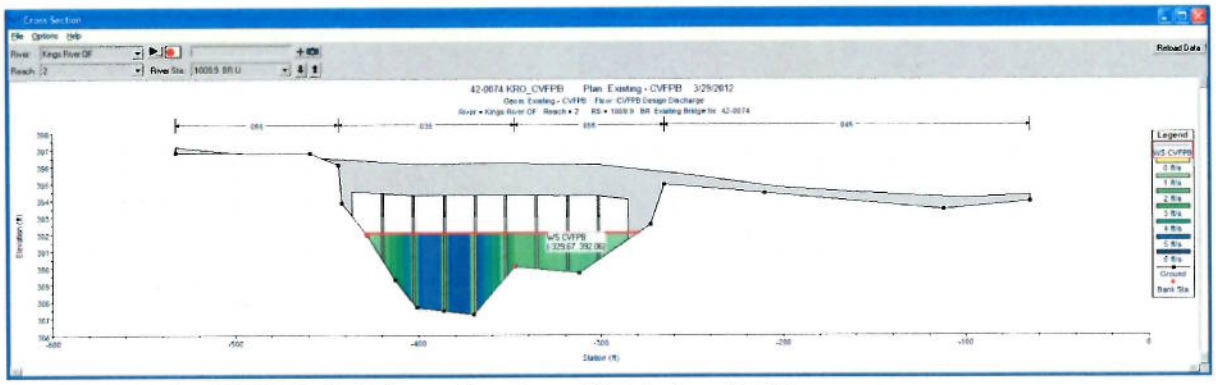

FIGURE 4A - HEC-RAS Cross-Section of Existing Bridge
Looking downstream (D/S) direction at U/S face of Kings River Overflow, Br. No. 42-0074

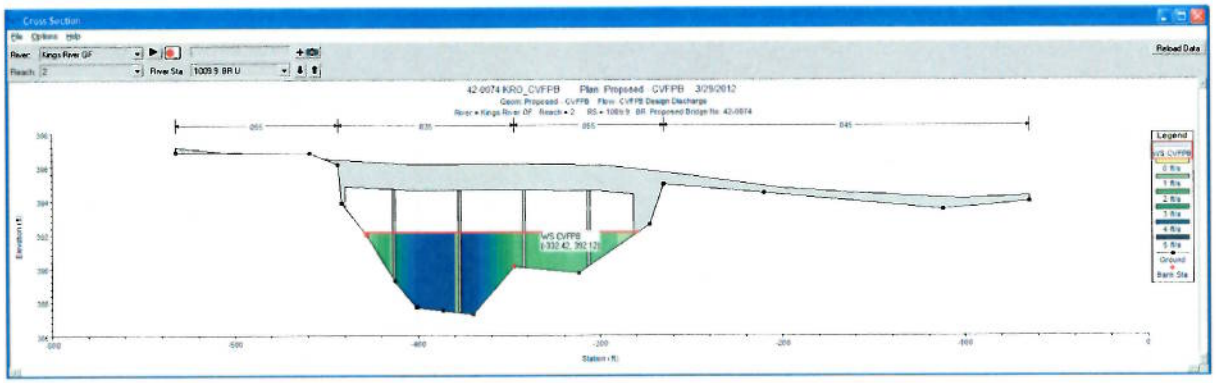

FIGURE 4B - HEC-RAS Cross-Section of Proposed Bridge
Looking D/S direction at U/S face of Kings River Overflow, Br. No. 42-0437

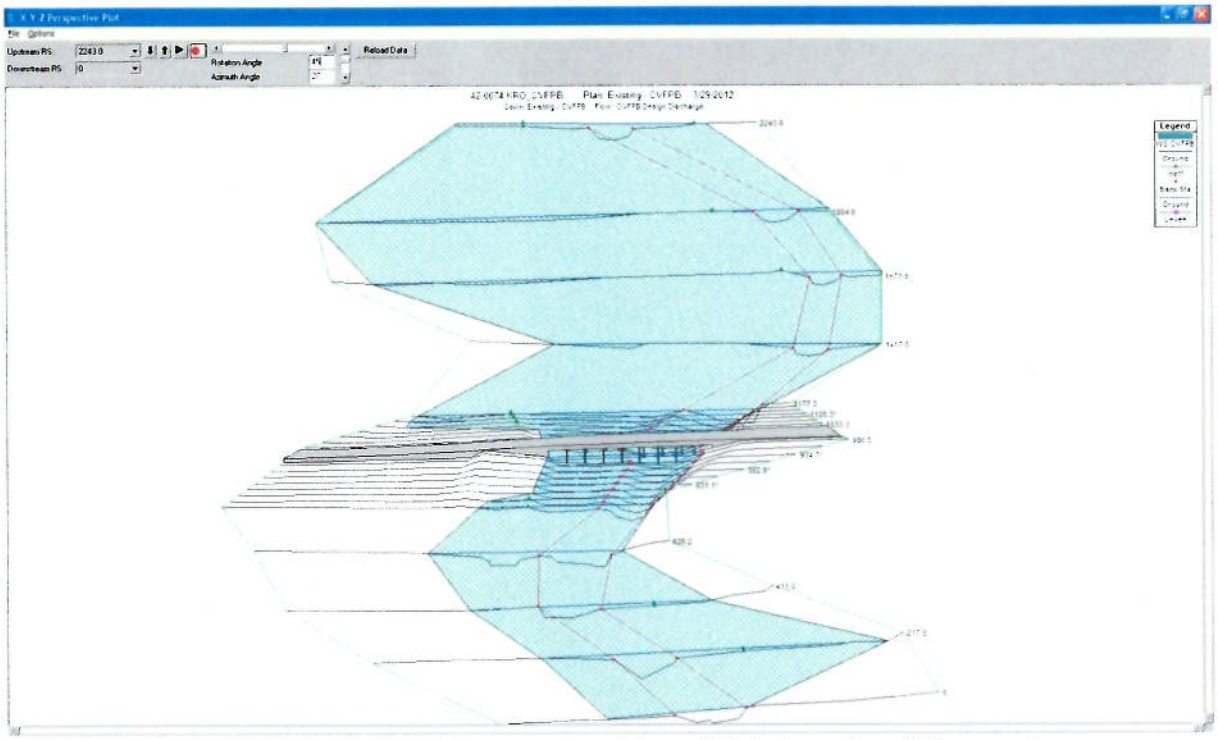

FIGURE 5A - HEC-RAS XYZ Perspective Plot of Existing Conditions
Looking U/S direction at D/S face of Kings River Overflow, Br. No. 42-0074

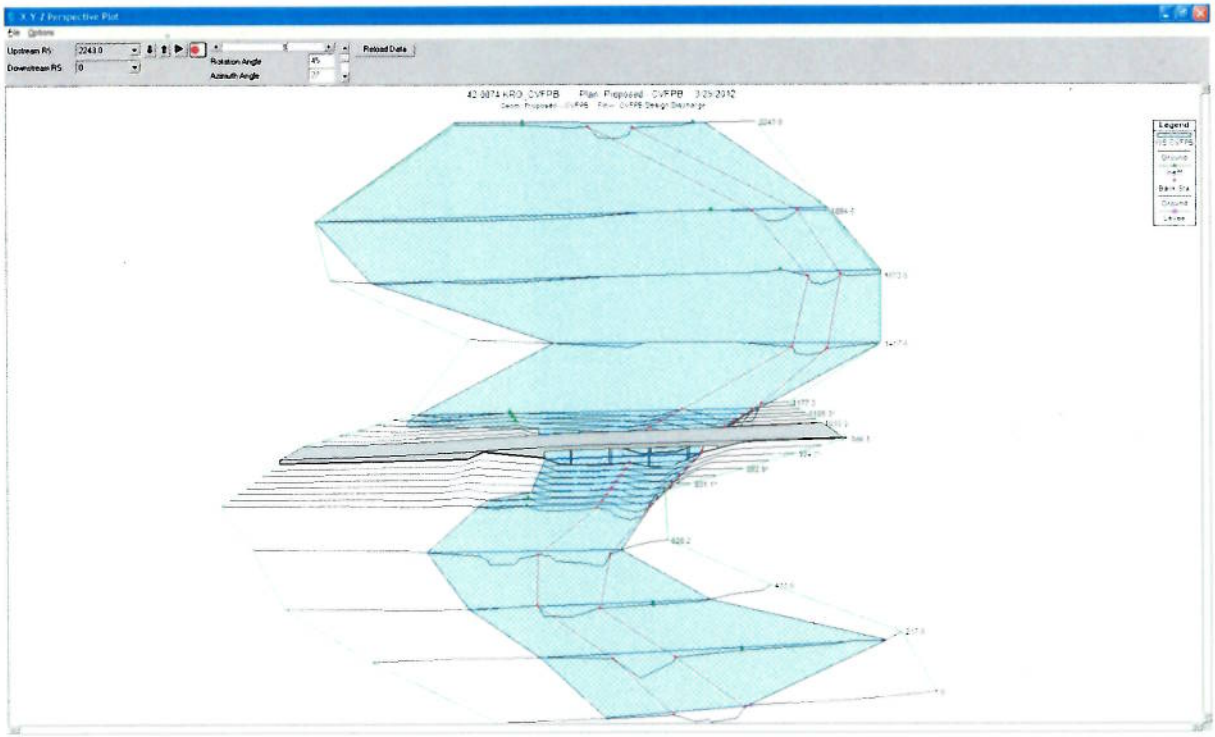

FIGURE 5B - HEC-RAS XYZ Perspective Plot of Proposed Conditions
Looking U/S direction at D/S face of Kings River Overflow, Br. No. 42-0437

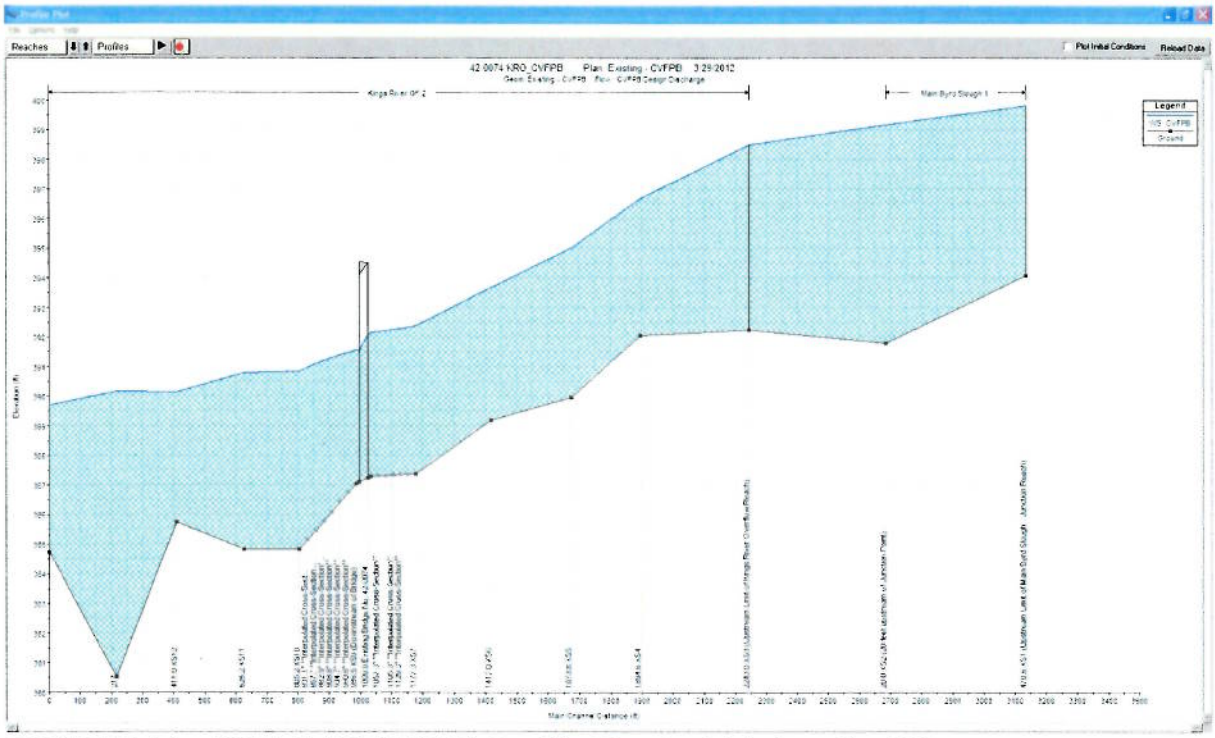

FIGURE 6A - HEC-RAS (WSEL) Profile Plot for Existing Conditions
Kings River Overflow, Br. No. 42-0074

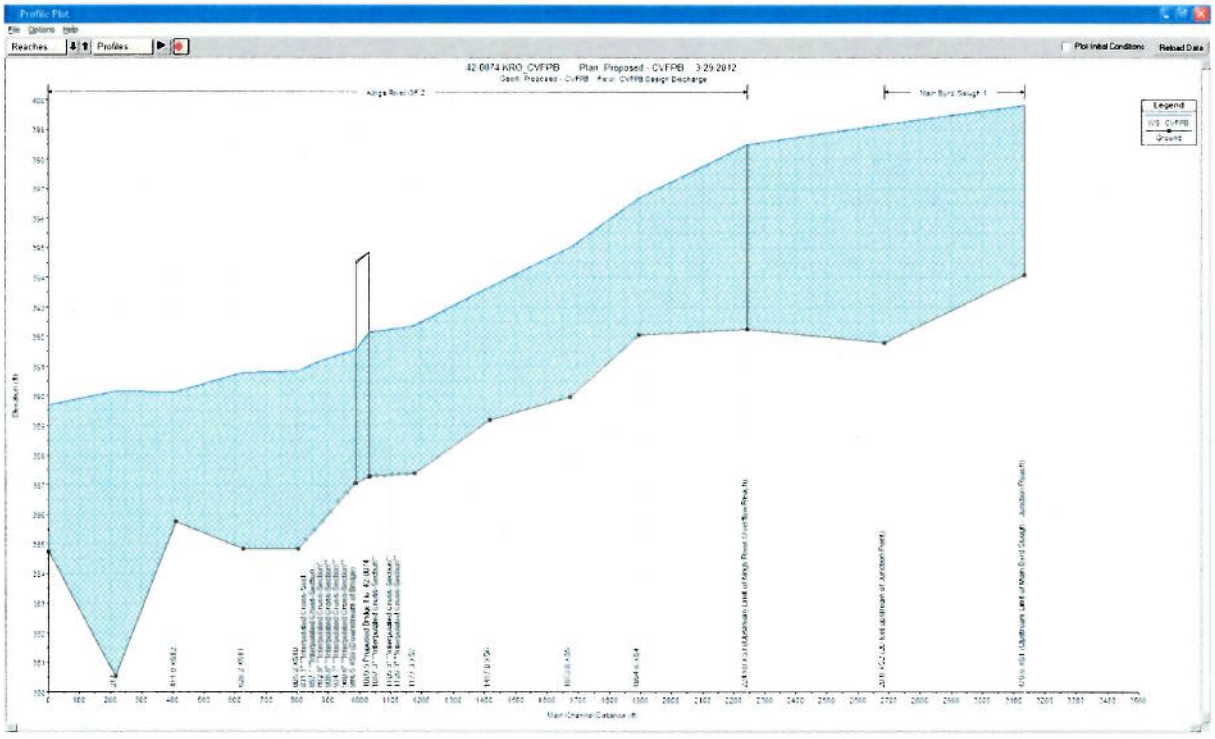

FIGURE 6B - HEC-RAS (WSEL) Profile Plot for Proposed Conditions
Kings River Overflow, Br. No. 42-0437

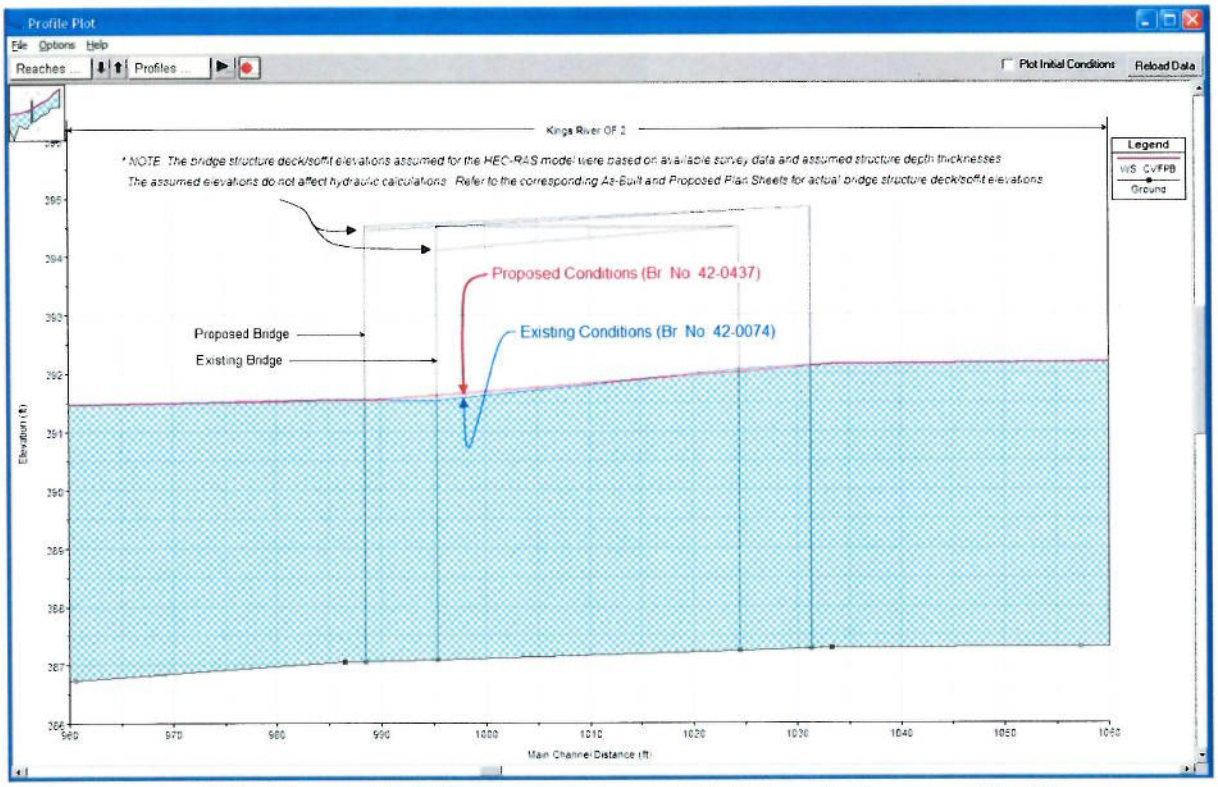

FIGURE 7 - (WSEL) Profile Plot Comparison of Existing & Proposed Bridges

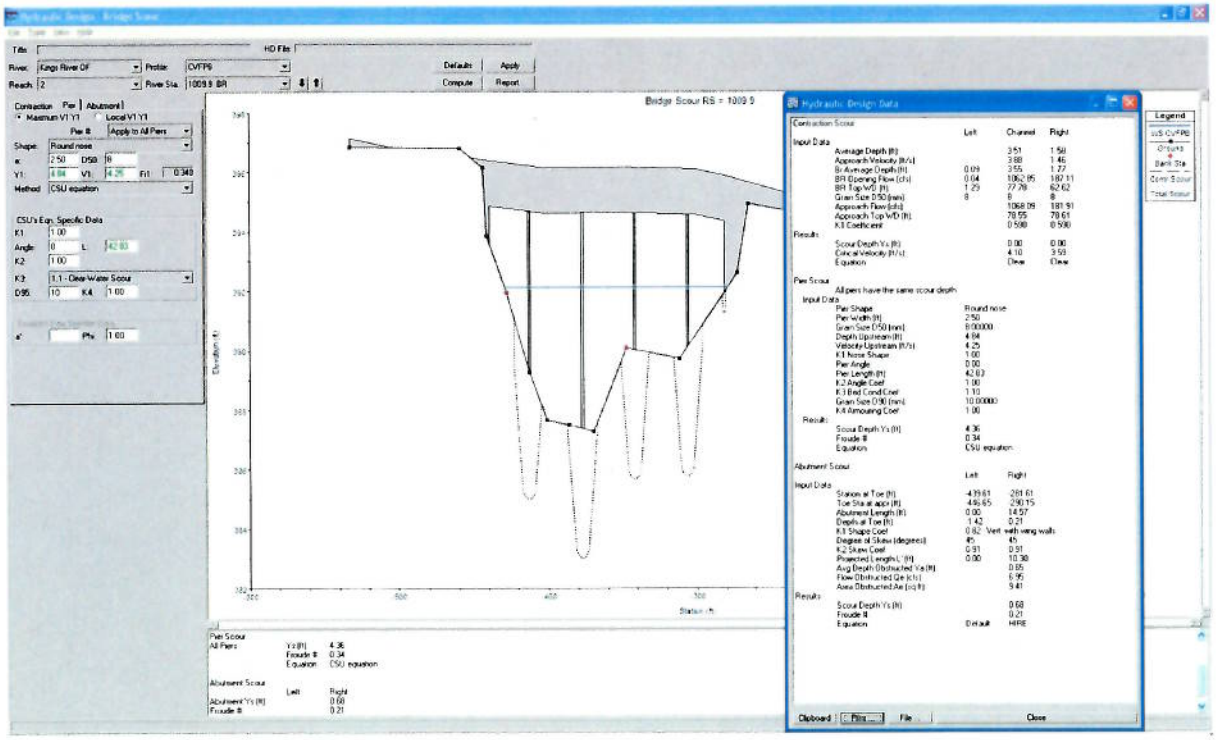

FIGURE 8 - HEC-RAS Hydraulic Design - Bridge Scour (Estimated Scour)

(Scour Calculation Method: Hydraulic Engineering Circular No. 18 (HEC-18) Manual, "Evaluating Scour at Bridges" (4th Edition, March 2001).)

HEC-RAS Output 1 - Standard Table 1
(Comparison of Existing & Proposed Conditions)

HEC-RAS Model Output (text)
Project: Kings River Overflow, 420437KRO_CVFPB
Run Date: 4/2/12

Profile Output Table - Standard Table 1
REACH: Main Byrd Slough & Kings River Overflow

River	Reach	River Sta	Profile	Plan	Q Total	Min Ch El	W.S. Elev	Crit W.S.	E.G. Elev	E.G. Slope	Vel Chnl	Flow Area	Top Width	Froude # Chl
					(cfs)	(ft)	(ft)	(ft)	(ft)	(ft/ft)	(ft/s)	(sq ft)	(ft)	
Main Byrd Slough	1	470.6	CVFPB	Existing - CVFPB	2500	394.09	399.81	398.81	400.42	0.003364	6.77	434.28	202.06	0.55
Main Byrd Slough	1	470.6	CVFPB	Proposed - CVFPB	2500	394.09	399.81	398.81	400.42	0.003364	6.77	434.28	202.06	0.55
Main Byrd Slough	1	20	CVFPB	Existing - CVFPB	2500	391.79	399.16	397.24	399.35	0.001444	3.57	750.3	438.64	0.37
Main Byrd Slough	1	20	CVFPB	Proposed - CVFPB	2500	391.79	399.16	397.24	399.35	0.001444	3.57	750.3	438.64	0.37
Kings River OF	2	2243	CVFPB	Existing - CVFPB	1250	392.24	398.49	396.44	398.73	0.001279	4.4	375.48	224.33	0.34
Kings River OF	2	2243	CVFPB	Proposed - CVFPB	1250	392.24	398.49	396.44	398.73	0.001279	4.4	375.48	224.33	0.34
Kings River OF	2	1894.6	CVFPB	Existing - CVFPB	1250	392.06	396.69	396.69	397.73	0.0083	8.46	167.99	384.47	0.82
Kings River OF	2	1894.6	CVFPB	Proposed - CVFPB	1250	392.06	396.69	396.69	397.73	0.0083	8.46	167.99	384.47	0.82
Kings River OF	2	1673.8	CVFPB	Existing - CVFPB	1250	389.97	394.99	394.66	395.76	0.005702	7.78	196.35	279.54	0.69
Kings River OF	2	1673.8	CVFPB	Proposed - CVFPB	1250	389.97	394.99	394.66	395.76	0.005702	7.78	196.35	279.54	0.69
Kings River OF	2	1417	CVFPB	Existing - CVFPB	1250	389.2	393.67	393.67	394.31	0.005305	7.39	260.42	203.93	0.67
Kings River OF	2	1417	CVFPB	Proposed - CVFPB	1250	389.2	393.67	393.67	394.31	0.005305	7.39	260.42	203.93	0.67
Kings River OF	2	1177.3	CVFPB	Existing - CVFPB	1250	387.39	392.37	391.31	392.69	0.003094	4.92	356.49	286.74	0.49
Kings River OF	2	1177.3	CVFPB	Proposed - CVFPB	1250	387.39	392.37	391.31	392.69	0.003095	4.92	356.43	286.69	0.49
Kings River OF	2	1153.3*	CVFPB	Existing - CVFPB	1250	387.37	392.32	391.16	392.61	0.002718	4.67	364.12	253.58	0.47
Kings River OF	2	1153.3*	CVFPB	Proposed - CVFPB	1250	387.37	392.32	391.16	392.61	0.002719	4.68	364.06	253.54	0.47
Kings River OF	2	1129.3*	CVFPB	Existing - CVFPB	1250	387.36	392.28	391.01	392.54	0.002321	4.45	372.88	209.68	0.43
Kings River OF	2	1129.3*	CVFPB	Proposed - CVFPB	1250	387.36	392.28	391.01	392.54	0.002321	4.45	372.83	209.64	0.43
Kings River OF	2	1105.3*	CVFPB	Existing - CVFPB	1250	387.34	392.24		392.48	0.002011	4.25	382.19	174.18	0.41
Kings River OF	2	1105.3*	CVFPB	Proposed - CVFPB	1250	387.34	392.24		392.48	0.002012	4.25	382.14	174.18	0.41
Kings River OF	2	1081.3*	CVFPB	Existing - CVFPB	1250	387.32	392.21		392.43	0.001769	4.05	391.46	164.96	0.38
Kings River OF	2	1081.3*	CVFPB	Proposed - CVFPB	1250	387.32	392.21		392.43	0.001769	4.05	391.41	164.95	0.38
Kings River OF	2	1057.3*	CVFPB	Existing - CVFPB	1250	387.31	392.18		392.38	0.001583	3.88	399.98	157.16	0.36
Kings River OF	2	1057.3*	CVFPB	Proposed - CVFPB	1250	387.31	392.18		392.38	0.001584	3.88	399.93	157.15	0.37
Kings River OF	2	1033.3	CVFPB	Existing - CVFPB	1250	387.29	392.15	390.44	392.34	0.001411	3.72	408.4	150.65	0.35
Kings River OF	2	1033.3	CVFPB	Proposed - CVFPB	1250	387.29	392.15	390.44	392.34	0.001411	3.72	408.35	150.64	0.35
Kings River OF	2	1009.9			Bridge									
Kings River OF	2	986.5	CVFPB	Existing - CVFPB	1250	387.05	391.54		391.73	0.001804	3.98	404.53	140.57	0.39
Kings River OF	2	986.5	CVFPB	Proposed - CVFPB	1250	387.05	391.54		391.73	0.001804	3.98	404.53	140.57	0.39
Kings River OF	2	960.6*	CVFPB	Existing - CVFPB	1250	386.73	391.47		391.67	0.001953	4.15	388.85	137.54	0.4
Kings River OF	2	960.6*	CVFPB	Proposed - CVFPB	1250	386.73	391.47		391.67	0.001953	4.15	388.85	137.54	0.4
Kings River OF	2	934.7*	CVFPB	Existing - CVFPB	1250	386.42	391.39		391.61	0.00211	4.34	372.88	134.5	0.42
Kings River OF	2	934.7*	CVFPB	Proposed - CVFPB	1250	386.42	391.39		391.61	0.00211	4.34	372.88	134.5	0.42
Kings River OF	2	908.8*	CVFPB	Existing - CVFPB	1250	386.1	391.3		391.55	0.002254	4.56	356.97	131.19	0.43
Kings River OF	2	908.8*	CVFPB	Proposed - CVFPB	1250	386.1	391.3		391.55	0.002254	4.56	356.97	131.19	0.43
Kings River OF	2	882.9*	CVFPB	Existing - CVFPB	1250	385.78	391.19		391.48	0.00242	4.79	340.55	127.33	0.45
Kings River OF	2	882.9*	CVFPB	Proposed - CVFPB	1250	385.78	391.19		391.48	0.00242	4.79	340.55	127.33	0.45
Kings River OF	2	857.*	CVFPB	Existing - CVFPB	1250	385.46	391.08		391.4	0.002588	5.03	324.76	123.12	0.46
Kings River OF	2	857.*	CVFPB	Proposed - CVFPB	1250	385.46	391.08		391.4	0.002588	5.03	324.76	123.12	0.46
Kings River OF	2	831.1*	CVFPB	Existing - CVFPB	1250	385.15	390.96	389.94	391.32	0.002794	5.29	308.12	153.66	0.48
Kings River OF	2	831.1*	CVFPB	Proposed - CVFPB	1250	385.15	390.96	389.94	391.32	0.002794	5.29	308.12	153.66	0.48
Kings River OF	2	805.2	CVFPB	Existing - CVFPB	1250	384.83	390.83	389.87	391.23	0.002996	5.55	292.15	157.31	0.5
Kings River OF	2	805.2	CVFPB	Proposed - CVFPB	1250	384.83	390.83	389.87	391.23	0.002996	5.55	292.15	157.31	0.5
Kings River OF	2	626.2	CVFPB	Existing - CVFPB	1250	384.84	390.78		390.9	0.00079	3.09	496.17	173.98	0.27
Kings River OF	2	626.2	CVFPB	Proposed - CVFPB	1250	384.84	390.78		390.9	0.00079	3.09	496.17	173.98	0.27
Kings River OF	2	411	CVFPB	Existing - CVFPB	1250	385.76	390.14	389.37	390.56	0.003497	5.57	304.31	185.99	0.53
Kings River OF	2	411	CVFPB	Proposed - CVFPB	1250	385.76	390.14	389.37	390.56	0.003497	5.57	304.31	185.99	0.53
Kings River OF	2	217.8	CVFPB	Existing - CVFPB	1250	380.52	390.16	385.88	390.28	0.000442	2.99	604.57	289.53	0.21
Kings River OF	2	217.8	CVFPB	Proposed - CVFPB	1250	380.52	390.16	385.88	390.28	0.000442	2.99	604.57	289.53	0.21
Kings River OF	2	0	CVFPB	Existing - CVFPB	1250	384.73	389.7	388.17	390.07	0.002511	4.95	280.21	134.63	0.46
Kings River OF	2	0	CVFPB	Proposed - CVFPB	1250	384.73	389.7	388.17	390.07	0.002511	4.95	280.21	134.63	0.46

HEC-RAS Output 2 - Six XS Bridge
(Comparison of Existing & Proposed Conditions)

Profile Output Table - Six XS Bridge
REACH: Kings River Overflow
4/2/12

River	Reach	River Sta	Profile	Plan	E.G. Elev	W.S. Elev	Crit W.S.	Frctn Loss	C & E Loss	Top Width	Q Left	Q Channel	Q Right	Vel Chnl
					(ft)	(ft)	(ft)	(ft)	(ft)	(ft)	(cfs)	(cfs)	(cfs)	(ft/s)
Kings River OF	2	1057.3*	CVFPB	Existing - CVFPB	392.38	392.18		0.04	0	157.16		1068.07	181.93	3.88
Kings River OF	2	1057.3*	CVFPB	Proposed - CVFPB	392.38	392.18		0.04	0	157.15		1068.09	181.91	3.88
Kings River OF	2	1033.3	CVFPB	Existing - CVFPB	392.34	392.15	390.44			150.65	0.05	1075.79	174.16	3.72
Kings River OF	2	1033.3	CVFPB	Proposed - CVFPB	392.34	392.15	390.44			150.64	0.05	1075.81	174.14	3.72
Kings River OF	2	1009.9 BR U	CVFPB	Existing - CVFPB	392.27	392.06	390.53			133.98	0.03	1044.49	205.48	3.97
Kings River OF	2	1009.9 BR U	CVFPB	Proposed - CVFPB	392.32	392.12	390.5			141.69	0.04	1062.85	187.11	3.85
Kings River OF	2	1009.9 BR D	CVFPB	Existing - CVFPB	391.75	391.53	390.14			128.05		820.33	429.67	4.28
Kings River OF	2	1009.9 BR D	CVFPB	Proposed - CVFPB	391.73	391.53	390.07			134.35		823.56	426.44	4.12
Kings River OF	2	986.5	CVFPB	Existing - CVFPB	391.73	391.54		0.05	0.01	140.57		837.57	412.43	3.98
Kings River OF	2	986.5	CVFPB	Proposed - CVFPB	391.73	391.54		0.05	0.01	140.57		837.57	412.43	3.98
Kings River OF	2	960.6*	CVFPB	Existing - CVFPB	391.67	391.47		0.05	0.01	137.54		859.7	390.3	4.15
Kings River OF	2	960.6*	CVFPB	Proposed - CVFPB	391.67	391.47		0.05	0.01	137.54		859.7	390.3	4.15

ASBESTOS AND LEAD-CONTAINING PAINT SURVEY

Kings River Overflow Bridge (Bridge No. 42-0074) Fresno County, California

PREPARED FOR:

CALIFORNIA DEPARTMENT OF TRANSPORTATION – DISTRICT 6
HAZARDOUS WASTE BRANCH
2015 E. SHIELDS AVENUE, SUITE 100
FRESNO, CALIFORNIA 93726

PREPARED BY:

GEOCON CONSULTANTS, INC.
3160 GOLD VALLEY DRIVE, SUITE 800
RANCHO CORDOVA, CALIFORNIA 95742

GEOCON PROJECT NO. S9200-06-68
CONTRACT NO. 06A1141
TASK ORDER NO. 68, EA NO. 06-0H1700

MARCH 2009

GEOCON
CONSULTANTS, INC.
GEOTECHNICAL ■ ENVIRONMENTAL ■ MATERIALS

Project No. S9200-06-68
March 26, 2009

Ms. Susan Greenwood, Task Order Manager
Caltrans District 6
2015 E. Shields Avenue, Suite 100
Fresno, California 93726

Subject: KINGS RIVER OVERFLOW BRIDGE (BRIDGE 42-0074)
HIGHWAY 180 IN FRESNO COUNTY, CALIFORNIA
CONTRACT NO. 06A1141
TASK ORDER NO. 68, EA NO. 06-0H1700
ASBESTOS AND LEAD-CONTAINING PAINT SURVEY

Dear Ms. Greenwood:

In accordance with California Department of Transportation Contract No. 06A1141 and Task Order No. 68, we have performed an asbestos and lead-containing paint (LCP) survey of the subject bridge in Fresno County, California. The scope of services included surveying the bridge for suspect asbestos-containing materials and LCP.

The accompanying report summarizes the services performed and laboratory analysis.

The contents of this report reflect the views of Geocon Consultants, Inc., who are responsible for the facts and accuracy of the data presented herein. The contents do not necessarily reflect the official views or policies of the State of California or the Federal Highway Administration. This report does not constitute a standard, specification, or regulation.

Please contact us if you have questions concerning the contents of this report or if we may be of further service.

Sincerely,

GEOCON CONSULTANTS, INC.

David A. Watts, CAC
Senior Project Scientist

John E. Juhrend, PE, CEG
Project Manager

DAW:JEJ:jaj

(1 + 1 CD) Addressee

TABLE OF CONTENTS

ASBESTOS AND LEAD-CONTAINING PAINT SURVEY REPORT Page

1.0 INTRODUCTION 1
1.1 Project Description 1
1.2 General Objectives 1

2.0 BACKGROUND 1
2.1 Asbestos 1
2.2 Lead Paint 2
2.3 Architectural Drawings and Previous Survey Activities 3

3.0 SCOPE OF SERVICES 3
3.1 Asbestos 4
3.2 Lead Paint 4

4.0 INVESTIGATIVE RESULTS 4

5.0 RECOMMENDATIONS 5
5.1 Asbestos 5
5.2 Lead Paint 5

6.0 REPORT LIMITATIONS 6

FIGURES
1. Vicinity Map
2. Site Plan

PHOTOGRAPHS (1 through 6)

TABLE
1. Summary of Asbestos Analytical Results

APPENDIX
A. Analytical Laboratory Reports and Chain-of-custody Documentation

ASBESTOS AND LEAD-CONTAINING PAINT SURVEY REPORT

1.0 INTRODUCTION

This asbestos and lead-containing paint (LCP) survey report was prepared by Geocon Consultants, Inc. under Caltrans Contract No. 06A1141, Task Order No. 68 (TO-68).

1.1 Project Description

The project consists of the Kings River Overflow Bridge (Bridge 42-0074) located at Post Mile (PM) 77.21 on Highway 180 in Fresno County, California. We performed asbestos and LCP survey activities at the project location. The project location is depicted on the Vicinity Map, Figure 1, and Site Plan, Figure 2.

1.2 General Objectives

The primary purpose of the scope of services outlined in TO-68 was to determine the presence and quantity of asbestos and deteriorated LCP at the project location prior to bridge improvement activities. Caltrans will use the information obtained from this investigation for waste profiling, determining California Occupational Safety and Health Administration (Cal/OSHA) applicability, and coordinating asbestos and LCP disturbance activities.

> *It was <u>not</u> Geocon's intent during this inspection to conduct an evaluation of lead-based paint hazards in accordance with U.S. Department of Housing and Urban Development (HUD) guidelines. HUD protocol generally requires a very extensive sampling strategy that includes sampling of paint on each surface type (e.g., wall, ceiling, window sill, window frame, door frame, molding, etc.) in each room.*

2.0 BACKGROUND

2.1 Asbestos

The *Code of Federal Regulations (CFR)*, 40 CFR 61, Subpart M, National Emissions Standards for Hazardous Air Pollutants (NESHAP) and Federal Occupational Safety and Health Administration (FED OSHA) classify asbestos-containing material (ACM) as any material or product that contains *greater than* 1% asbestos. Nonfriable ACM is classified by NESHAP as either Category I or Category II material defined as follows:

- **Category I** – asbestos-containing packings, gaskets, resilient floor coverings, and asphalt roofing products.
- **Category II** – all remaining types of nonfriable asbestos-containing material not included in Category I that when dry, cannot be crumbled, pulverized, or reduced to powder by hand pressure.

Regulated asbestos-containing material (RACM), a hazardous waste when friable, is classified as any manufactured material that contains *greater than* 1% asbestos by dry weight *and* is:

- Friable (can be crumbled, pulverized, or reduced to powder by hand pressure); or
- Category I material that has become friable; or
- Category I material that has been subjected to sanding grinding, cutting or abrading; or
- Category II nonfriable material that has a high probability of becoming crumbled, pulverized, or reduced to a powder during demolition or renovation activities.

Activities that disturb materials containing *any* amount of asbestos are subject to certain requirements of the Cal/OSHA asbestos standard contained in Title 8, CCR Section 1529. Typically, removal or disturbance of more than 100 square feet of material containing more than 0.1% asbestos must be performed by a registered asbestos abatement contractor, but associated waste labeling is not required if the material contains 1% or less asbestos. When the asbestos content of a material exceeds 1%, virtually all requirements of the standard become effective.

Materials containing more than 1% asbestos are also subject to NESHAP regulations (40 CFR Part 61, Subpart M). RACM (friable ACM and nonfriable ACM that will become friable during demolition operations) must be removed from structures prior to demolition. Certain nonfriable ACM and materials containing 1% or less asbestos may remain in structures during demolition; however, there are waste handling/disposal issues and Cal/OSHA work requirements that must be followed. Contractors are responsible for segregating and characterizing waste streams prior to disposal.

With respect to potential worker exposure, notification, and registration requirements, Cal/OSHA defines asbestos-containing construction material (ACCM) as construction material that contains more than 0.1% asbestos (Title 8, CCR 341.6).

2.2 Lead Paint

Construction activities (including renovation and demolition) that disturb materials or paints containing *any* amount of lead are subject to certain requirements of the Cal/OSHA lead standard contained in Title 8, CCR, Section 1532.1. Deteriorated paint is defined by Title 17, CCR, Division 1, Chapter 8, §35022 as a surface coating that is cracking, chalking, flaking, chipping, peeling, non-intact, failed, or otherwise separating from a component. Renovation or demolition of a deteriorated LCP component would require waste characterization and appropriate disposal. Intact LCP on a component is currently accepted by most landfill facilities; however, contractors are responsible for segregating and characterizing waste streams prior to disposal.

For a solid waste containing lead, the waste is classified as California hazardous when: 1) the total lead content equals or exceeds the respective Total Threshold Limit Concentration (TTLC) of 1,000 milligrams per kilogram (mg/kg); or 2) the soluble lead content equals or exceeds the respective Soluble Threshold Limit Concentration (STLC) of 5 milligrams per liter (mg/l) based on the standard Waste Extraction Test (WET). A waste has the potential for exceeding the lead STLC when the waste's total lead content is greater than or equal to ten times the respective STLC value since the WET uses a 1:10 dilution ratio. Hence, when total lead is detected at a concentration greater than or equal to 50 mg/kg, and assuming that 100 percent of the total lead is soluble, soluble lead analysis is required. Lead-containing waste is classified as "Resource, Conservation, and Recovery Act" (RCRA) hazardous, or Federal hazardous, when the soluble lead content equals or exceeds the Federal regulatory level of 5 mg/l based on the Toxicity Characteristic Leaching Procedure (TCLP).

The above regulatory criteria are based on chemical concentrations. Wastes may also be classified as hazardous based on other criteria such as ignitability; however, for the purposes of this investigation, toxicity (i.e., lead concentrations) is the primary factor considered for waste classification since waste generated during the construction activities would not likely warrant testing for ignitability or other criteria. Waste that is classified as either California hazardous or RCRA hazardous requires management as a hazardous waste.

Potential hazards exist to workers who remove or cut through LCP coatings during demolition. Dust containing hazardous concentrations of lead may be generated during scraping or cutting materials coated with lead-containing paint. Torching of these materials may produce lead oxide fumes. Therefore, air monitoring and/or respiratory protection may be required during the demolition of materials coated with LCP. Guidelines regarding regulatory provisions for construction work where workers may be exposed to lead are presented in the Title 8, CCR, Section 1532.1.

2.3 Architectural Drawings and Previous Survey Activities

Caltrans provided bridge architectural drawings for our review. We observed no evidence of asbestos-containing products or lead-containing paints on the drawings we reviewed. Previous survey reports of the subject bridge were not available for our review.

3.0 SCOPE OF SERVICES

Mr. David Watts, a California-Certified Asbestos Consultant (CAC), certification No. 98-2404 (expiration September 16, 2009), and Certified Lead Paint Inspector/Assessor and Project Monitor with the California Department of Public Health (DPH), certification numbers I-1734 and M-1734 (expiration December 4, 2009), performed the asbestos and LCP survey at the project location on March 3, 2009.

3.1 Asbestos

Suspect ACM were grouped into homogeneous areas with representative samples randomly collected from each. In addition, each potential ACM was evaluated for condition (evidence of deterioration, physical damage, and water damage) and friability. A total of four bulk asbestos samples representing two suspect materials were collected.

Our procedures for inspection and sampling in accordance with TO-68 are discussed below:

- Collected bulk asbestos samples after first wetting friable material with a light mist of water. The samples were then cut from the substrate and transferred to a labeled container. Note that when multiple samples were collected, the sampling locations were distributed throughout the homogeneous area (spaces where the material was observed).
- Relinquished bulk asbestos samples to EMSL Analytical, Inc., a California-licensed and Caltrans-approved subcontractor, for asbestos analysis in accordance with United States Environmental Protection Agency (EPA) Test Method 600/R-93/116 using polarized light microscopy (PLM) under chain-of-custody protocol. EMSL Analytical, Inc. is a laboratory accredited by the National Institute of Standards and Technology National Voluntary Laboratory Accreditation Program (NIST-NVLAP) for bulk asbestos fiber analysis. The laboratory analyses were requested on a 2-day turn-around-time.

Sample identification numbers, material descriptions, approximate quantities, friability assessments, and photo references are summarized on Table 1. Approximate sample locations are presented on Figure 2.

3.2 Lead Paint

We observed no suspect LCP on the Kings River Overflow Bridge. Consequently, we collected no LCP samples during our survey.

4.0 INVESTIGATIVE RESULTS

Chrysotile asbestos at a concentration of 80% was detected in samples representing approximately 450 square feet of nonfriable sheet packing used on the bridge span joints.

Asbestos was not detected in the remaining samples collected during our survey. A summary of the analytical laboratory test results for asbestos is presented on Table 1. Reproductions of the laboratory report and chain-of-custody documentation are presented in Appendix A.

5.0 RECOMMENDATIONS

Based on our findings, we recommend the following:

5.1 Asbestos

NESHAP regulations do not require that asbestos-containing sheet packing (a Category I nonfriable material) identified during our survey be removed prior to renovation/demolition or be treated as a hazardous waste. However, the disturbance of the material is still covered by the Cal/OSHA asbestos standard (Title 8, CCR Section 1529). We recommend that a licensed contractor registered with Cal/OSHA for asbestos-related work perform any activities that would disturb the sheet packing. Contractors are responsible for informing the landfill of the contractor's intent to dispose of asbestos waste. Some landfills may require additional waste characterization. Contractors are responsible for segregating and characterizing waste streams prior to disposal.

We also recommend the notification of contractors (that will be conducting demolition, improvements, or related activities) of the presence of asbestos in their work areas (i.e., provide the contractors and employees with a copy of this report and a list of asbestos removed by during subsequent activities). Contractors and/or employees should be instructed not to disturb asbestos during their work.

In accordance with San Joaquin Valley Air Pollution Control District (SJVAPCD) Regulation IV, Rule 4002, written notification to SJVAPCD is required ten working days prior to commencement of *any* demolition activity (whether asbestos is present or not).

5.2 Lead Paint

Since no suspect LCP was observed during our survey, the Cal/OSHA lead standard does not apply for planned bridge improvement activities at the site. In addition, debris from planned improvement activities would not be considered as a California hazardous waste based on lead content.

6.0 REPORT LIMITATIONS

This asbestos and LCP survey was conducted in conformance with generally accepted standards of practice for identifying and evaluating asbestos and LCP in structures. The survey addressed only the structure identified in Section 1.1. Due to the nature of structure surveys, asbestos and LCP use, and laboratory analytical limitations, some ACM or LCP at the project location may not have been identified. Spaces such as cavities, voids, crawlspaces, and pipe chases, may have been concealed to our investigator. Previous renovation work may have concealed or covered spaces or materials, or may have partially demolished materials and left debris in inaccessible areas. Additionally, renovation activities may have partially replaced ACM with indistinguishable non-ACM. Asbestos and/or LCP may exist in areas that were not accessible or sampled in conjunction with this TO.

During renovation or demolition operations, suspect materials may be uncovered which are different from those accessible for sampling during this assessment. Personnel in charge of renovation/demolition should be alerted to note materials uncovered during such activities that differ substantially from those included in this or previous assessment reports. If suspect ACM and/or LCP are found, additional sampling and analysis should be performed to determine if the materials contain asbestos or lead.

This report has been prepared exclusively for Caltrans. The information contained herein is only valid as of the date of the report, and will require an update to reflect additional information obtained.

This report is not a comprehensive site characterization and should not be construed as such. The findings as presented in this report are predicated on the results of the limited sampling and laboratory testing performed. In addition, the information obtained is not intended to address potential impacts related to sources other than those specified herein. Therefore, the report should be deemed conclusive with respect to only the information obtained. We make no warranty, express or implied, with respect to the content of this report or any subsequent reports, correspondence or consultation. Geocon strived to perform the services summarized herein in accordance with the local standard of care in the geographic region at the time the services were rendered.

The contents of this report reflect the views of the author who is responsible for the facts and accuracy of the data presented herein. The contents do not necessarily reflect the official views or policies of the State of California or the Federal Highway Administration. This report does not constitute a standard, specification, or regulation.

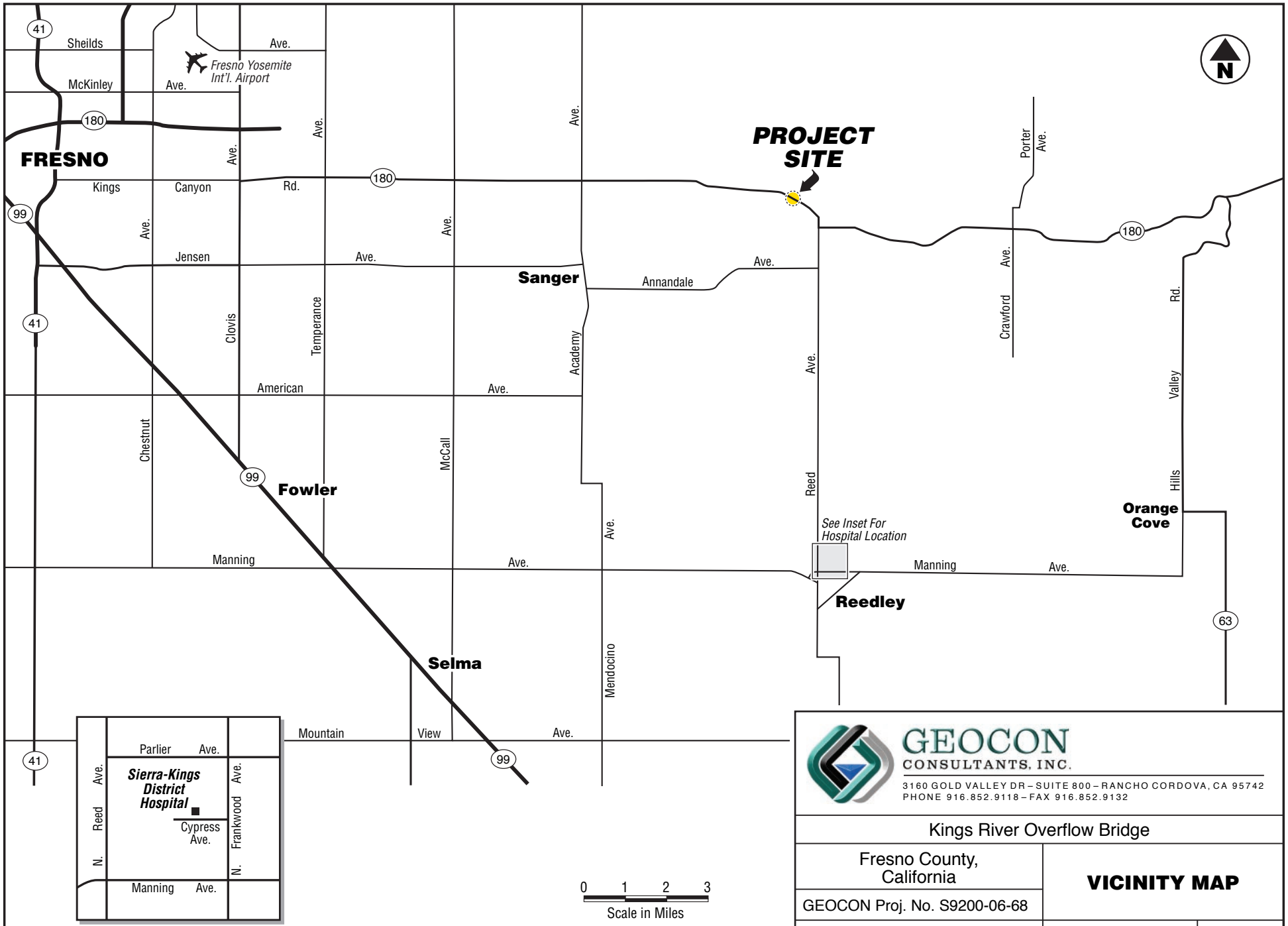

GEOCON CONSULTANTS, INC.
3160 GOLD VALLEY DR – SUITE 800 – RANCHO CORDOVA, CA 95742
PHONE 916.852.9118 – FAX 916.852.9132

Kings River Overflow Bridge

Fresno County, California

VICINITY MAP

GEOCON Proj. No. S9200-06-68

Task Order No. 68, EA 06-0H1700 | March 2009 | Figure 1

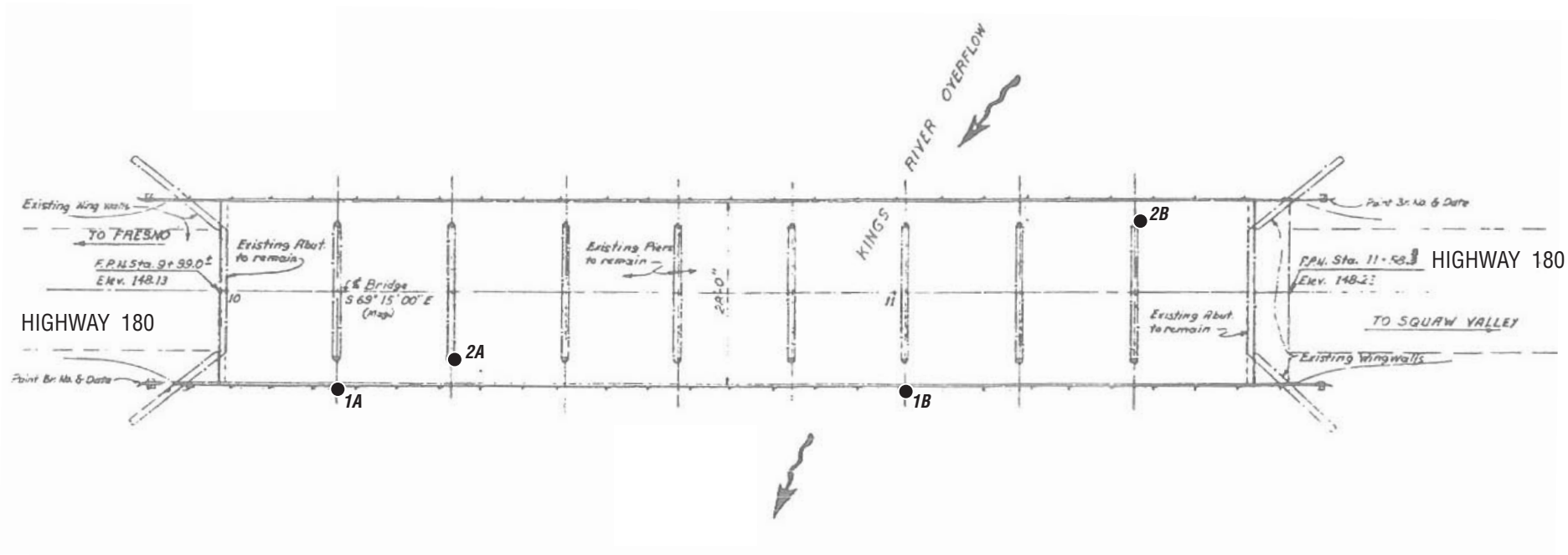

BRIDGE 42-0074

LEGEND:

- Approximate Asbestos Sample Location

GEOCON
CONSULTANTS, INC.
3160 GOLD VALLEY DR – SUITE 800 – RANCHO CORDOVA, CA 95742
PHONE 916.852.9118 – FAX 916.852.9132

Kings River Overflow Bridge		
Fresno County, California	**SITE PLAN**	
GEOCON Proj. No. S9200-06-68		
Task Order No. 68, EA 06-0H1700	March 2009	Figure 2

Photo 1 – Kings River Overflow Bridge (Bridge 42-0074)

Photo 2 – Asbestos sheet packing in span joints

Photo 3 – Support piers

GEOCON
CONSULTANTS, INC.
3160 GOLD VALLEY DR – SUITE 800 – RANCHO CORDOVA, CA 95742
PHONE 916.852.9118 – FAX 916.852.9132

PHOTOGRAPHS 1, 2, & 3		
King River Overflow Bridge Fresno County, California		
S9200-06-68	Task Order No. 68	March 2009

Photo 4 – Abutment joint (non-suspect)

Photo 5 – Support piers

Photo 6 – Abutment

TABLE 1
SUMMARY OF ASBESTOS ANALYTICAL RESULTS
KINGS RIVER OVERFLOW BRIDGE (BRIDGE 42-0074)
CALTRANS CONTRACT 06A1141, TASK ORDER NO. 68, EA 06-0H1700
FRESNO COUNTY, CALIFORNIA

Polarized Light Microscopy (PLM) - EPA Test Method 600/R-93/116

Asbestos Sample No.	Description of Material	Approximate Quantity	Friable	Site Photos	Asbestos Content
0074-1A **0074-1B**	**Sheet packing**	**450 square feet**	**No**	**2**	**80%** **80%**
0074-2A 0074-2B	Joint fill material	NA	NA	3 & 4	ND ND

Notes:

NA = Not applicable (no asbestos detected)

ND = Not detected

APPENDIX A

EMSL Analytical, Inc
2235 Polvorosa Ave , Suite 230, San Leandro, CA 94577
Phone: (510) 895-3675 Fax: (510) 895-3680 Email: milpitaslab@emsl.com

Attn: **David Watts**
Geocon Consultants
6671 Brisa Street
Livermore, CA 94550

Fax: (925) 371-5915 Phone: (925) 371-5900
Project: **S9200-06-68**

Customer ID: GECN21
Customer PO: S9200-06-68
Received: 03/04/09 1:04 PM
EMSL Order: 090901590

EMSL Proj:
Analysis Date: 3/5/2009
Report Date: 3/5/2009

Asbestos Analysis of Bulk Materials via EPA 600/R-93/116 Method using Polarized Light Microscopy

			Non-Asbestos				Asbestos
Sample	**Location**	**Appearance**	**%**	**Fibrous**	**%**	**Non-Fibrous**	**% Type**
0074-1A, Sheet packing *090901590-0001*		Gray Fibrous Homogeneous			20%	Non-fibrous (other)	**80% Chrysotile**
0074-1B, Sheet packing *090901590-0002*		Gray Fibrous Homogeneous			20%	Non-fibrous (other)	**80% Chrysotile**
0074-2A, Expansion joint fill *090901590-0003*		Black, Brown Fibrous Homogeneous	60%	Cellulose	40%	Non-fibrous (other)	**None Detected**
0074-2B, Expansion joint fill *090901590-0004*		Brown Fibrous Homogeneous	60%	Cellulose	40%	Non-fibrous (other)	**None Detected**

Analyst(s)

Jorge Leon (4)

Baojia Ke, Laboratory Manager
or other approved signatory

Due to magnification limitations inherent in PLM, asbestos fibers in dimensions below the resolution capability of PLM may not be detected. Samples reported as <1% or none detected may require additional testing by TEM to confirm asbestos quantities. The above test report relates only to the items tested and may not be reproduced in any form without the express written approval of EMSL Analytical, Inc. EMSL's liability is limited to the cost of analysis. EMSL bears no responsibility for sample collection activities or analytical method limitations. Interpretation and use of test results are the responsibility of the client.Samples received in good condition unless otherwise noted.
NVLAP Lab Code 101048-3

THIS IS THE LAST PAGE OF THE REPORT.

090901590

90901590

EMSL ANALYTICAL, INC.

EMSL – San Leandro ◆ 2235 Polvorosa Ave, Suite 230, San Leandro, CA 94577

(888) 455-3675 ◆ Phone (510) 895-3675 ◆ Fax (510) 895-3680 ◆ sanleandrolab@emsl.com

EMSL Rep: D. KOCHER
Company: GEOCON
Contact: D. WATTS
Address: 6671 BRISA ST.
City & State: LIVERMORE, CA **Zip** 94550
Phone: 925-371-5900
☒ **Email Results** WATTS@GEOCONINC.COM
Project Name or Number: $9200-06-68

Third Party Billing — *requires written authorization from third party*
EMSL-Bill to:
Contact:
Address:
City & State: **Zip**
Fax:
☐ **Fax results**
Purchase Order Number:

TURNAROUND TIME

☐ 3 Hours	☐ 6 Hours	☐ 24 Hours	☒ 48 Hours	☐ 72 Hours	☐ 5 Days	☐ 10 Days

SAMPLE MATRIX

☐ Air	☒ Bulk	☐ Soil	☐ Wipe	☐ Micro-Vac	☐ Drinking Water	☐ Wastewater	☐ Chips	☐ Other

ASBESTOS ANALYSIS

PCM - Air
☐ NIOSH 7400 (A) Issue 2: August 1994
☐ OSHA w/ Time Weighted Average

TEM AIR
☐ AHERA 40 CFR, Part 763 Subpart E
☐ NIOSH 7402 Issue 2
☐ EPA Level II

PLM - Bulk
☒ EPA 600/R-93/116
☐ + **Add Gravimetric Reduction (EPA NOB)**
PLM CARB 435 Level: ☐ A (0.25%) ☐ B (0.1%)
☐ NIOSH 9002
☐ EPA Point Count (400 Points)
☐ + **Add Gravimetric Reduction (EPA NOB)**
☐ EPA Point Count (1,000 Points)
☐ + **Add Gravimetric Reduction (EPA NOB)**
☐ Standard Addition Point Count

SOILS

PLM CARB 435 Level: ☐ A (0.25%) ☐ B (0.1%)
TEM CARB 435 Level: ☐ B (0.1%) ☐ C (0.01%) ☐ D (0.001%) ☐ E (0.0005%) ☐ F (0.0001%)
☐ EMSL MSD 9000 Method fibers/gram
☐ Superfund EPA 540-R097-028 (dust generation)
EPA Protocol ☐ Qualitative ☐ Quantitative

TEM BULK
☐ TEM EPA NOB, EPA 600/R-93/116 Section 2.5.5.1 (TEM % by VAE)
☐ Chatfield SOP-1988-02
☐ TEM EPA 600/R-93/116 Section 2.5.5.2 (TEM % by Mass)

TEM MICROVAC
☐ ASTM D 5755 (Quantitative)

TEM WIPE
☐ ASTM D-6480 (Quantitative)

TEM WATER
☐ EPA 100.2 (≥ 10 microns)
☐ Modified EPA 100.2 (≥ 0.5 microns)
OTHER:

LEAD ANALYSIS

Flame Atomic Absorption
☐ Wipe, SW846-7420 ☐ ASTM ☐ non ASTM
☐ Soil, SW846-7420
☐ Air, NIOSH 7082
☐ Chips, SW846-7420 or AOAC 5.009 (974.02)
☐ Wastewater, SW 846-7420

☐ TCLP LEAD SW846-1311/7420

Graphite Furnace Atomic Absorption
☐ Air, NIOSH 7105
☐ Wastewater, SW846-7421
☐ Soil, SW846-7421
☐ Drinking Water, EPA 239.2

ICP – Inductively Coupled Plasma

☐ Wipe, SW846-6010 ☐ ASTM ☐ non ASTM
☐ Soil, SW846-6010
☐ Air, NIOSH 7300

MATERIALS ANALYSIS

☐ Particle Identification
☐ Full Particle Identification
☐ Dust Mites and Insect Fragments
☐ Particle Size & Distribution
☐ Product Comparison
☐ Paint Characterization
☐ Failure Analysis
☐ Corrosion Analysis
☐ Glove Box Containment Study
☐ Petrographic Examination of Concrete
☐ Portland Cement in Workplace Atmospheres (OSHA ID-143)
☐ Man Made Vitrous Fibers – MMVF's
☐ Synthetic Fiber Identification
☐ Other:

MICROBIAL ANALYSIS

Air Samples
☐ Mold & Fungi by Air O Cell
☐ Mold & Fungi by Agar Plate count & id
☐ Bacterial Count and Gram Stain
☐ Bacterial Count and Identification

Water Samples

☐ Total Coliforms, Fecal Coliforms
☐ Escherichia Coli, Fecal Streptococcus
☐ Legionella
☐ Salmonella
☐ Giardia and Cryptosporidium

Wipe and Bulk Samples

☐ Mold & Fungi – Direct Examination

☐ Mold & Fungi – (Culture follow up to direct examination if necessary)
☐ Mold & Fungi – Culture (Count & ID)
☐ Mold & Fungi – Culture (Count only)
☐ Bacterial Count & Gram Stain
☐ Bacterial Count & Identification (3 most prominent types)
☐ Other:

IAQ ANALYSIS

☐ Nuisance Dust (NIOSH 0500 & 0600)
☐ Airborne Dust (PM10, TSP)
☐ Silica Analysis by XRD ☐ NIOSH 7500
☐ HVAC Efficiency
☐ Carbon Black
☐ Airborne Oil Mist
☐ Other:

Relinquished:		**Date:**		**Time:**	
Received:		**Date:**		**Time:**	
Relinquished:		**Date:**		**Time:**	
Received:		**Date:**		**Time:**	

090901590

90901590

EMSL ANALYTICAL, INC.

EMSL – San Leandro ◆ 2235 Polvorosa Ave, Suite 230, San Leandro, CA 94577

	SAMPLE NUMBER	SAMPLE DESCRIPTION	LOCATION	VOLUME Air (L) Area (Inches sq.)
1	0074 -1A	SHEET PACKING		NA
2	-1B	" "		
3	-2A	EXPANSION JOINT FILL		
4	-2B	" " "		
5				
6				
7				
8				
9				
10				
11				
12				
13				
14				
15				
16				
17				
18				
19				
20				
21				
22				
23				
24				
25				

Client Sample # (S) - TOTAL SAMPLE # 4

Relinquished:	[illegible]	Date:	3/4/2009	Time:	1304
Received:	M. Edwards	Date:	3/4/09	Time:	13:02 D/O
Relinquished:		Date:		Time:	
Received:		Date:		Time:	

13 April 2012

Virginia Strohl
California Department of Transportation
855 M St., Ste. 200
Fresno, CA 93721

CLEAN WATER ACT §401 TECHNICALLY CONDITIONED WATER QUALITY CERTIFICATION FOR DISCHARGE OF DREDGED AND/OR FILL MATERIALS FOR THE KINGS RIVER OVERFLOW BRIDGE REPLACEMENT PROJECT, WDID#5C10CR00021, FRESNO COUNTY

WATER QUALITY CERTIFICATION STANDARD CONDITIONS:

1. This Certification is subject to modification or revocation upon administrative or judicial review, including review and amendment pursuant to § 13330 of the California Water Code and § 3867 of Title 23 of the California Code of Regulations (23 CCR).

2. This Certification is not intended and shall not be construed to apply to any discharge from any activity involving a hydroelectric facility requiring a Federal Energy Regulatory Commission (FERC) license or an amendment to a FERC license unless the pertinent certification application was filed pursuant to 23 CCR § 3855(b) and the application specifically identified that a FERC license or amendment to a FERC license for a hydroelectric facility was being sought.

3. The validity of any non-denial certification action shall be conditioned upon total payment of the full fee required under 23 CCR § 3833, unless otherwise stated in writing by the certifying agency.

4. Certification is valid for the duration of the Kings River Overflow Bridge Replacement Project (Project) described in the attached "Project Information Sheet." This Certification is no longer valid if the Project (as summarized in the "Project Information Sheet" and described in the water quality certification application) is modified, or coverage under the Project permit issued by the U.S. Army Corps of Engineers pursuant to § 404 of the Clean Water Act has expired. The California Department of Transportation (Discharger) shall notify the Central Valley Regional Water Quality Control Board (Central Valley Water Board) in writing within seven days of Project completion.

5. All reports, notices, or other documents required by this Certification or requested by the Central Valley Water Board shall be signed by a person described below or by a duly authorized representative of that person.

   a. For a corporation: by a responsible corporate officer such as (1) a president, secretary, treasurer, or vice president of the corporation in charge of a principal business function; (2) any other person who performs similar policy or decision-making functions for the corporation;

or (3) the manager of one or more manufacturing, production, or operating facilities if authority to sign documents has been assigned or delegated to the manager in accordance with corporate procedures.

b. For a partnership or sole proprietorship: by a general partner or the proprietor.

c. For a municipality, State, federal, or other public agency: by either a principal executive officer or ranking elected official.

6. Any person signing a document under Standard Condition No. 5 shall make the following certification, whether written or implied:

"I certify under penalty of law that this document and all attachments were prepared under my direction or supervision in accordance with a system designed to assure that qualified personnel properly gathered and evaluated the information submitted. Based on my inquiry of the person or persons who manage the system, or those persons directly responsible for gathering the information, the information submitted is, to the best of my knowledge and belief, true, accurate, and complete. I am aware there are significant penalties for submitting false information, including the possibility of fine and imprisonment for knowing violations."

ADDITIONAL TECHNICALLY CONDITIONED CERTIFICATION CONDITIONS:

In addition to the six standard conditions, the Discharger shall satisfy the following:

1. The Discharger shall notify the Central Valley Water Board in writing seven days prior to beginning any in-water activities.

2. Except for activities permitted by the U.S. Army Corps of Engineers under § 404 of the Clean Water Act, soil, silt, or other organic materials shall not be placed where such materials could pass into surface water or surface water drainage courses.

3. All areas disturbed by Project activities shall be protected from washout or erosion.

4. The Discharger shall maintain a copy of this Certification and supporting documentation (Project Information Sheet) at the Project site during construction for review by site personnel and agencies. All personnel (employees, contractors, and subcontractors) performing work on the proposed Project shall be adequately informed and trained regarding the conditions of this Certification.

5. An effective combination of erosion and sediment control Best Management Practices (BMPs) shall be implemented and adequately working during all phases of construction.

6. All temporarily affected areas shall be restored to pre-construction contours and conditions upon completion of construction activities.

7. The Discharger shall perform surface water sampling: 1) When performing any in-water work; 2) In the event that Project activities result in any materials reaching surface waters or; 3) When any activities result in the creation of a visible plume in surface waters. The following monitoring shall be conducted immediately upstream out of the influence of the Project and approximately

300 feet downstream of the active work area. Sampling results shall be submitted to this office by the first day of the second month following sampling. The sampling frequency and monitoring locations may be modified for certain projects with written permission from the Central Valley Water Board Executive Officer.

Parameter	Unit	Type of Sample	Frequency of Sample
Turbidity	NTU	Grab	Every 4 hours during in-water work
Settleable Material	ml/L	Grab	Same as above
Visible construction related pollutants	Observation	Visible Inspections	Continuous throughout the construction period

8. Activities shall not cause:

   (a) where natural turbidity is between 0 and 5 Nephelometric Turbidity Units (NTUs), increases exceeding 1 NTU;

   (b) where natural turbidity is between 5 and 50 NTUs, increases exceeding 20 percent;

   (c) where natural turbidity is between 50 and 100 NTUs, increases exceeding 10 NTUs;

   (d) where natural turbidity is greater than 100 NTUs, increases exceeding 10 percent.

   In determining compliance with the above limits, appropriate averaging periods may be applied provided that beneficial uses will be fully protected. Averaging periods may only be used with prior permission of the Central Valley Water Board Executive Officer.

9. Activities shall not cause settleable material to exceed 0.1 ml/L in surface waters as measured in surface waters downstream from the Project.

10. The discharge of petroleum products or other excavated materials to surface water is prohibited. Activities shall not cause visible oil, grease, or foam in the work area or downstream. The Discharger shall notify the Central Valley Water Board immediately of any spill of petroleum products or other organic or earthen materials.

11. The Discharger shall notify the Central Valley Water Board immediately if any of the above conditions are violated, along with a description of measures it is taking to remedy the violation.

12. The Discharger shall comply with all California Department of Fish and Game Code § 1600 requirements for the Project.

13. The Discharger must obtain coverage under the NPDES General Permit for Storm Water Discharges Associated with Construction Activities issued by the State Water Resources Control Board for any project disturbing an area of one acre or greater.

14. In the event of any violation or threatened violation of the conditions of this Certification, the violation or threatened violation shall be subject to any remedies, penalties, process, or sanctions

as provided for under State law and § 401(d) of the federal Clean Water Act. The applicability of any State law authorizing remedies, penalties, process, or sanctions for the violation or threatened violation constitutes a limitation necessary to ensure compliance with this Certification.

15. If the Discharger or a duly authorized representative of the Discharger fails or refuses to furnish technical or monitoring reports, as required under this Certification, or falsifies any information provided in the monitoring reports, the Discharger will be subject to civil liability, for each day of violation, or criminal liability.

16. In response to a suspected violation of any condition of this Certification, the Central Valley Water Board may require the Discharger to furnish, under penalty of perjury, any technical or monitoring reports the Central Valley Water Board deems appropriate, provided that the burden, including cost of the reports, shall be in reasonable relationship to the need for the reports and the benefits to be obtained from them.

17. The Discharger shall allow staff of the Central Valley Water Board, or an authorized representative(s), upon the presentation of credentials and other documents, as may be required by law, to enter the Project premises for inspection, including taking photographs and securing copies of project-related records, for the purpose of assuring compliance with this Certification and determining the ecological success of the Project.

CENTRAL VALLEY WATER BOARD CONTACT PERSON:

Debra Mahnke, Water Resource Control Engineer
1685 E Street
Fresno, CA 93706
(559) 445-6281
dmahnke@waterboards.ca.gov

WATER QUALITY CERTIFICATION:

I hereby issue an order certifying that the proposed discharge from the California Department of Transportation Kings River Overflow Bridge Replacement Project, WDID# 5C10CR00021, will comply with the applicable provisions of § 301 ("Effluent Limitations"), § 302 ("Water Quality Related Effluent Limitations"), § 303 ("Water Quality Standards and Implementation Plans"), § 306 ("National Standards of Performance"), and § 307 ("Toxic and Pretreatment Effluent Standards") of the Clean Water Act. This discharge is also regulated under State Water Resources Control Board Water Quality Order No. 2003-0017 DWQ "Statewide General Waste Discharge Requirements For Dredged Or Fill Discharges That Have Received State Water Quality Certification."

Except insofar as may be modified by any preceding conditions, all certification actions are contingent on (a) the discharge being limited to and all proposed mitigation being completed in strict compliance with the Discharger's project description, the attached "Project Information Sheet," and the Discharger's water quality certification application; and (b) compliance with all applicable requirements of the Central Valley Water Board's *Water Quality Control Plan for the Tulare Lake Basin*, Second Edition, revised January 2004.

Any person aggrieved by this action may petition the State Water Board to review the action in accordance with California Water Code § 13320 and California Code of Regulations, title 23, § 2050 and following. The State Water Board must receive the petition by 5:00 p.m., 30 days after the date

of this action, except that if the thirtieth day following the date of this action falls on a Saturday, Sunday, or state holiday, the petition must be received by the State Water Board by 5:00 p.m. on the next business day. Copies of the law and regulations applicable to filing petitions may be found on the Internet at: http://www.waterboards.ca.gov/public_notices/petitions/water_quality or will be provided upon request.

Clay L. Rodgers

for Pamela C. Creedon
Executive Officer

Enclosure: Water Quality Order No. 2003-0017 DWQ
Attachment: Project Information Sheet

cc: Jason Brush, Supervisor, Wetlands Regulatory Office, U.S. Environmental Protection Agency, Region 9, San Francisco (email)
Paul Maniccia, Chief, Sacramento South Branch, Regulatory Unit, Department of the Army, Corps of Engineers, Sacramento
Bill Orme, Water Quality Certification Unit Chief, Division of Water Quality, State Water Resources Control Board, Sacramento (email)
Jeffrey Single, Regional Manager, San Joaquin Valley-Southern Sierra Region, California Department of Fish and Game, Fresno

PROJECT INFORMATION SHEET

Application Date: 17 January 2012

Applicant: California Department of Transportation

Applicant Representative: Virginia Strohl, Biology Senior

Project Name: Kings River Overflow Bridge Replacement Project

Application Number: WDID# 5C10CR00021

Type of Project: Bridge replacement

Project Location: Section 10, Township 14 South, Range 23 East, MDB&M.
Latitude: 36.724167° and Longitude: -119.45809°

Project Duration: Duration of Project will take 290 days. Construction is tentatively scheduled between September 2012 and October 2014.

County: Fresno

Receiving Water: Byrd Slough, tributary to Kings River, Tulare Lake Hydrologic Basin, South Valley Floor Hydrologic Unit, Consolidated Hydrologic Area (# 551.70)

Water Body Type: Streambed

Designated Beneficial Uses: The *Water Quality Control Plan for the Tulare Lake Basin*, Second Edition, revised January 2004 designates beneficial uses for surface and ground waters within the region. Beneficial uses that could be impacted by the Project include: Municipal and Domestic Water Supply; Agricultural Supply; Industrial Process Supply, Groundwater Recharge, Water Contact Recreation; Non-Contact Water Recreation; Warm Freshwater Habitat; and Wildlife Habitat.

Project Description: The Project consists of removal of the existing bridge and replacement with a new structure that includes upgraded 8-foot wide shoulders and approaches. The total width of the bridge will increase from 28 feet to 44 feet.

Preliminary Water Quality Concerns: Increased turbidity and potential discharge of construction materials may result.

Proposed Mitigation to Address Concerns: Environmentally sensitive areas will be protected by mesh fencing to avoid accidental construction-related impacts to wetlands and water. Best management practices and erosion control methods, including revegetation of all bare soil prior to the rain season, will be implemented. No portions of the old bridge structure will be left in the channel.

Fill/Excavation Area: Approximately 12.74 cubic yards of concrete will be placed into 0.003 acres of jurisdictional wetland and 0.012 acres of riparian waters (for a total of 0.015 acres of fill). The Project will temporarily impact an additional 0.05 acres of jurisdictional wetlands and 0.10 acres of riparian waters which will be restored to pre-Project condition.

Dredge Volume: None

U.S. Army Corps of Engineers Permit Number: Nationwide Permit # 14

Department of Fish and Game Streambed Alteration Agreement: The Discharger applied for a Streambed Alteration Agreement on 12 January 2012.

Status of CEQA Compliance: The California Department of Transportation approved a Mitigated Negative Declaration and filed a Notice of Determination on 31 December 2009 (State Clearinghouse Number SCH 2009091121).

As a Responsible Agency under California Environmental Quality Act (CEQA), the Central Valley Water Board reviewed the Mitigated Negative Declaration and found that impacts to water quality were adequately addressed. Mitigation for impacts to water quality is discussed in the "Proposed Mitigation to Address Concerns" section above, and the "Compensatory Mitigation" section below.

Compensatory Mitigation: The Discharger will pay in-lieu fees required by the U.S. Army Corps of Engineers to enhance 0.015 acres of streambed/ jurisdictional wetlands.

Application Fee Provided: Total fees of $1,614 have been submitted as required by 23 CCR § 3833(b)(3)(A) and by 23 CCR § 2200(e).

STATE WATER RESOURCES CONTROL BOARD

WATER QUALITY ORDER NO. 2003 - 0017 - DWQ

STATEWIDE GENERAL WASTE DISCHARGE REQUIREMENTS FOR DREDGED OR FILL DISCHARGES THAT HAVE RECEIVED STATE WATER QUALITY CERTIFICATION (GENERAL WDRs)

The State Water Resources Control Board (SWRCB) finds that:

1. Discharges eligible for coverage under these General WDRs are discharges of dredged or fill material that have received State Water Quality Certification (Certification) pursuant to federal Clean Water Act (CWA) section 401.

2. Discharges of dredged or fill material are commonly associated with port development, stream channelization, utility crossing land development, transportation water resource, and flood control projects. Other activities, such as land clearing, may also involve discharges of dredged or fill materials (e.g., soil) into waters of the United States.

3. CWA section 404 establishes a permit program under which the U.S. Army Corps of Engineers (ACOE) regulates the discharge of dredged or fill material into waters of the United States.

4. CWA section 401 requires every applicant for a federal permit or license for an activity that may result in a discharge of pollutants to a water of the United States (including permits under section 404) to obtain Certification that the proposed activity will comply with State water quality standards. In California, Certifications are issued by the Regional Water Quality Control Boards (RWQCB) or for multi-Region discharges, the SWRCB, in accordance with the requirements of California Code of Regulations (CCR) section 3830 et seq. The SWRCB's water quality regulations do not authorize the SWRCB or RWQCBs to waive certification, and therefore, these General WDRs do not apply to any discharge authorized by federal license or permit that was issued based on a determination by the issuing agency that certification has been waived. Certifications are issued by the RWQCB or SWRCB before the ACOE may issue CWA section 404 permits. Any conditions set forth in a Certification become conditions of the federal permit or license if and when it is ultimately issued.

5. Article 4, of Chapter 4 of Division 7 of the California Water Code (CWC), commencing with section 13260(a), requires that any person discharging or proposing to discharge waste, other than to a community sewer system, that could affect the quality of the waters of the State,[1] file a report of waste discharge (ROWD). Pursuant to Article 4, the RWQCBs are required to prescribe waste discharge requirements (WDRs) for any proposed or existing discharge unless WDRs are waived pursuant to CWC section 13269. These General WDRs fulfill the requirements of Article 4 for proposed dredge or fill discharges to waters of the United States that are regulated under the State's CWA section 401 authority.

[1] "Waters of the State" as defined in CWC Section 13050(e)

6. These General WDRs require compliance with all conditions of Certification orders to ensure that water quality standards are met.

7. The U.S. Supreme Court decision of *Solid Waste Agency of Northern Cook County v. U.S. Army Corps of Engineers*, 531 U.S. 159 (2001) (the *SWANCC* decision) called into question the extent to which certain "isolated" waters are subject to federal jurisdiction. The SWRCB believes that a Certification is a valid and enforceable order of the SWRCB or RWQCBs irrespective of whether the water body in question is subsequently determined not to be federally jurisdictional. Nonetheless, it is the intent of the SWRCB that all Certification conditions be incorporated into these General WDRs and enforceable hereunder even if the federal permit is subsequently deemed invalid because the water is not deemed subject to federal jurisdiction.

8. The beneficial uses for the waters of the State include, but are not limited to, domestic and municipal supply, agricultural and industrial supply, power generation, recreation, aesthetic enjoyment, navigation, and preservation and enhancement of fish, wildlife, and other aquatic resources.

9. Projects covered by these General WDRs shall be assessed a fee pursuant to Title 23, CCR section 3833.

10. These General WDRs are exempt from the California Environmental Quality Act (CEQA) because (a) they are not a "project" within the meaning of CEQA, since a "project" results in a direct or indirect physical change in the environment (Title 14, CCR section 15378); and (b) the term "project" does not mean each separate governmental approval (Title 14, CCR section 15378(c)). These WDRs do not authorize any specific project. They recognize that dredge and fill discharges that need a federal license or permit must be regulated under CWA section 401 Certification, pursuant to CWA section 401 and Title 23, CCR section 3855, et seq. Certification and issuance of waste discharge requirements are overlapping regulatory processes, which are both administered by the SWRCB and RWQCBs. Each project subject to Certification requires independent compliance with CEQA and is regulated through the Certification process in the context of its specific characteristics. Any effects on the environment will therefore be as a result of the certification process, not from these General WDRs. (Title 14, CCR section 15061(b)(3)).

11. Potential dischargers and other known interested parties have been notified of the intent to adopt these General WDRs by public hearing notice.

12. All comments pertaining to the proposed discharges have been heard and considered at the November 4, 2003 SWRCB Workshop Session.

13. The RWQCBs retain discretion to impose individual or General WDRs or waivers of WDRs in lieu of these General WDRs whenever they deem it appropriate. Furthermore, these General WDRs are not intended to supersede any existing WDRs or waivers of WDRs issued by a RWQCB.

IT IS HEREBY ORDERED that WDRs are issued to all persons proposing to discharge dredged or fill material to waters of the United States where such discharge is also subject to the water quality certification requirements of CWA section 401 of the federal Clean Water Act (Title 33 United States Code section 1341), and such certification has been issued by the applicable RWQCB or the SWRCB, unless the applicable RWQCB notifies the applicant that its discharge will be regulated through WDRs or waivers of WDRs issued by the RWQCB. In order to meet the provisions contained in Division 7 of CWC and regulations adopted thereunder, dischargers shall comply with the following:

1. Dischargers shall implement all the terms and conditions of the applicable CWA section 401 Certification issued for the discharge. This provision shall apply irrespective of whether the federal license or permit for which the Certification was obtained is subsequently deemed invalid because the water body subject to the discharge has been deemed outside of federal jurisdiction.

2. Dischargers are prohibited from discharging dredged of fill material to waters of the United States without first obtaining Certification from the applicable RWQCB or SWRCB.

CERTIFICATION

The undersigned, Clerk to the Board, does hereby certify that the foregoing is a full, true, and correct copy of an order duly and regularly adopted at a meeting of the State Water Resources Control Board held on November 19, 2003.

AYE: Arthur G. Baggett, Jr.
Peter S. Silva
Richard Katz
Gary M. Carlton
Nancy H. Sutley

NO: None.

ABSENT: None.

ABSTAIN: None.

Debbie Irvin
Clerk to the Board

State of California – The Natural Resources Agency
DEPARTMENT OF FISH AND GAME
Central Region
1234 East Shaw Avenue
Fresno, California 93710
(559) 243-4005
http://www.dfg.ca.gov

EDMUND G. BROWN JR., Governor
CHARLTON H. BONHAM, Director

April 19, 2012

Frank Meraz
California Department of Transportation
855 M Street, Suite 200
Fresno, California 93721

Subject: Final Lake or Streambed Alteration Agreement
Notification No. 1600-2012-0007-R4
Kings River Overflow aka Byrd Slough, Fresno County
SR 180 Minkler Bridge Replacement Project
06-FRE-180 PM 77.1-77.2 EA 06-0H1700

Dear Mr. Meraz:

Enclosed is the final Streambed Alteration Agreement (Agreement) for the SR 180 Minkler Bridge Replacement Project (Project). Before the Department of Fish and Game (DFG) may issue an Agreement, it must comply with the California Environmental Quality Act (CEQA). In this case, DFG, acting as a Responsible Agency, filed a Notice of Determination (NOD) on the same date it signed the Agreement. The NOD was based on information contained in the Mitigated Negative Declaration the Lead Agency prepared for the Project.

Under CEQA, filing an NOD starts a 30-day period within which a party may challenge the filing agency's approval of the Project. You may begin your Project before the 30-day period expires if you have obtained all necessary local, State, and Federal permits or other authorizations. However, if you elect to do so, it will be at your own risk.

If you have any questions regarding this matter, please contact Laura Peterson-Diaz, Environmental Scientist, at (559) 243-4014, extension 225, or lpdiaz@dfg.ca.gov.

Sincerely,

Jeffrey R. Single, Ph.D.
Regional Manager

Enclosures

cc: Laura Peterson-Diaz
Department of Fish and Game

NOTICE OF DETERMINATION

TO: Office of Planning and Research
Post Office Box 3044
Sacramento, California 95814

FROM: California Department of Fish and Game
Central Region
1234 East Shaw Avenue
Fresno, California 93710

SUBJECT: Filing of Notice of Determination in compliance with Section 21108 or 21152 of the Public Resources Code

PROJECT TITLE: State Route 180 King River Overflow Bridge Project - Agreement 2012-0007-R4

STATE CLEARINGHOUSE NUMBER: 2009091121

LEAD AGENCY: California Department of Transportation
CONTACT: Virginia Strohl (559) 445-6456

RESPONSIBLE AGENCY: California Department of Fish and Game
CONTACT: Laura Peterson-Diaz (559) 243-4017, extension 225

PROJECT LOCATION: The Project is located on State Route (SR) 180 where it crosses the Kings River Overflow, in Fresno County, State of California; Township 14 South, Range 23 East, Section 10, United States Geological Survey (USGS) map Wahtoke, Mount Diablo meridian.

PROJECT DESCRIPTION: The California Department of Fish and Game is executing a Lake and Streambed Alteration Agreement, pursuant to Section 1602 of the Fish and Game Code, to the Project applicant. Caltrans proposes to replace existing Bridge (Br No 42-0074) with a new structure which will include upgraded 8 foot wide shoulders and approaches. The total width of the bridge will increase to 44 feet and includes one 12 foot lane in each direction. The existing 8 small piers and 2 abutments will be replaced by 4 larger piers and 2 abutments that are aligned parallel to the stream-flow. The demolition and construction will be completed in two stages in order to maintain one lane for traffic during construction. Temporary access will be provided by the removal of 13 trees. No fill or excavation is proposed for the temporary access. A water diversion will be required. For bridge removal, no portions of the old structure will be left in the channel, and where abutments are removed, no depression will be left, but will be filled with clean gravel of an appropriate size (0.5 to 4 inches). The Project will also relocate utilities.

This is to advise that the California Department of Fish and Game as a Responsible Agency approved the Project described above and has made the following determinations regarding the above described Project.

1. The Project will not have a significant effect on the environment.
2. A Mitigated Negative Declaration was prepared for this Project pursuant to the provisions of CEQA.
3. Mitigation measures were made a condition of the approval of the Project.
4. A Statement of Overriding Considerations was not adopted for this Project.
5. Findings were not made by DFG pursuant to Public Resources Code § 21081(a). DFG did, however, adopt findings to document its compliance with CEQA.

This is to certify that a copy of the Mitigated Negative Declaration prepared for this Project is available to the general public and may be reviewed at: Caltrans - District 6 Environmental Planning, 855 M Street, Suite 200, Fresno, California 93721. Please contact the person specified above.

Date: 4/26/12

Jeffrey R. Single, Ph.D., Regional Manager
Central Region
California Department of Fish and Game

Date received for filing at OPR: _____

CALIFORNIA DEPARTMENT OF FISH AND GAME
REGION 4 - CENTRAL REGION
1234 East Shaw Avenue
Fresno, California 93710

STREAMBED ALTERATION AGREEMENT
NOTIFICATION NO. 1600-2012-0007-R4
Kings River Overflow aka Byrd Slough, Fresno County

CALIFORNIA DEPARTMENT OF TRANSPORTATION
CALTRANS DISTRICT 6
Frank Meraz
855 M Street, Suite 200
Fresno, California 93721

SR 180 MINKLER BRIDGE REPLACEMENT PROJECT
06-FRE-180 PM 77.1-77.2 EA 06-0H1700

This Streambed Alteration Agreement (Agreement) is entered into between the California Department of Fish and Game (DFG) and California Department of Transportation Caltrans District 6 (Permittee) as represented by Frank Meraz acting on behalf of Permittee.

RECITALS

WHEREAS, pursuant to Fish and Game Code (FGC) Section 1602, Permittee notified DFG on January 18, 2012, that Permittee intends to complete the Project described herein.

WHEREAS, pursuant to FGC section 1603, DFG has determined that the Project could substantially adversely affect existing fish or wildlife resources and has included measures in the Agreement necessary to protect those resources.

WHEREAS, Permittee has reviewed the Agreement and accepts its terms and conditions, including the measures to protect fish and wildlife resources.

NOW THEREFORE, Permittee agrees to complete the Project in accordance with the Agreement.

PROJECT LOCATION

The Project is located on State Route (SR) 180 where it crosses the Kings River Overflow (also known as Byrd Slough) in the community of Minkler, in Fresno County, State of California; Township 14 South, Range 23 East, Section 10, United States Geological Survey (USGS) map Wahtoke, Mount Diablo meridian.

PROJECT DESCRIPTION

The Project is limited to:

- The existing Bridge (Br No 42-0074) will be removed and replaced with a new structure which will include upgraded 8 foot wide shoulders and approaches. The total width of the bridge will increase from the current 28 feet to 44 feet. The width includes one 12 foot lane with an 8 foot shoulder in each direction and 2 foot thick Type 25 concrete barriers on each side. The length will remain 160 feet, the same as the existing bridge. The existing 8 small piers and 2 abutments will be replaced by 4 larger piers and 2 abutments that are aligned parallel to the stream-flow.

- The demolition and construction will be completed in two stages in order to maintain one lane for traffic during construction. This one lane will be used for alternating directions during construction. Traffic control will be by one-way stop control using electrical signals.

- Temporary access will be provided by the removal of 13 trees within the State right-of-way on either side of the bridge. No fill or excavation is proposed for the temporary access roads within the easement, minor blading only as needed.

- For bridge removal, no portions of the old structure will be left in the channel, and where abutments are removed, no depression will be left, but will be filled with clean gravel of an appropriate size (0.5 to 4 inches).

- Currently, storm water run-off from the existing bridge and nearby roadway, discharges directly into the channel via storm drain holes in the existing bridge. The new bridge scuppers will be raised 1 ¾ inches above the bridge deck, so initial rain water and all non-storm water will run off the ends of the bridge deck and the scupper-down drains would only allow water flow out the sides if the water level exceeds 1 ¾ inches.

- Utility relocation within the temporary construction easement will extend approximately 120 feet (ft) to the west and 55 ft to the east of the existing bridge deck.

- Equipment to be used include a backhoe, Bidwell and roller screeds, bobcat, bulldozer/ loader, chain saw, compressor, concrete mixer and pump, crane, dump truck, excavator, flatbed, fork lift, front-end loader, genie man lift, grader, haul truck, pile driver/drill rig, pump truck, roller/compactor, scraper, and water truck. Construction equipment will need to enter the waterway, and water will be present when work is done in the Kings River Overflow channel so a water diversion will be required.

- Access will cause temporary impacts to 0.15 acres of riparian habitat. The bridge widening will cause permanent impacts to 0.015 acres of riparian habitat.

- The Project will require the removal of riparian trees including the following species: 1 western sycamore (Platanus racemosa) less then 25 inches in diameter at breast height (DBH); 5 Fremont's cottonwood (*Populus fremontii*), 2 less then 25 inches DBH and 3 over 25 inches DBH; 5 Valley oak (Quercus lobata) over 25 inches DBH; and 2 Gooddings black willow (*Salix gooddingii*) over 25 inches DBH.

- No elderberry shrubs were found within the Biological Study Area (BSA). The closest shrub found is 330 feet outside the BSA.

- A temporary bat box will be installed near the construction area to mitigate the temporary loss of bat roosting habitat resulting from the demolition of the old bridge structure. The new bridge structure will incorporate design features to provide bat roosting habitat equivalent to that of the replaced structure.

PROJECT IMPACTS

This Agreement is intended to avoid, minimize, and mitigate adverse impacts to the fish and wildlife resources that occupy the area of the Kings River Overflow aka Byrd Slough, and the immediate adjacent riparian habitat. Absent implementation of the protective measures required by this Agreement, the following species and habitat types could potentially be impacted within the area covered by this Agreement: Federal Endangered Valley elderberry longhorn beetle (*Desmocerus californicus dimorphus*), CNPS 2.1 California satintail (*Imperata brevifolia*), Species of Special Concern Kern brook lamprey (*Lametra hubbsi*), Species of Special Concern western pond turtle (*Actinemys* marmorata), Species of Special Concern Yuma myotis (*Myotis yumanensis*), and Species of Special Concern pallid bat (*Antrozous pallidus*), as well as birds, mammals, fish, reptiles, amphibians, invertebrates and plants that comprise the local riparian ecosystem.

MEASURES TO PROTECT FISH AND WILDLIFE RESOURCES

1. Administrative Measures

Permittee shall meet each administrative requirement described below.

1.1. Documentation at Project Site: Permittee shall make the Agreement, any extensions and amendments to the Agreement, and all related notification materials and California Environmental Quality Act (CEQA) documents, readily available at the Project site at all times and shall be presented to DFG personnel or personnel from another State, Federal, or local agency upon request.

1.2. Providing Agreement to Persons at Project Site: Permittee shall provide copies of the Agreement and any extensions and amendments to the

Agreement to all persons who will be working on the Project at the Project site on behalf of Permittee; including but not limited to contractors, subcontractors, inspectors, and monitors.

1.3. Notification of Conflicting Provisions: Permittee shall notify DFG if Permittee determines or learns that a provision in the Agreement might conflict with a provision imposed on the Project by another local, State, or Federal agency. In that event, DFG shall contact Permittee to resolve any conflict.

1.4. Project Site Entry: Permittee agrees that DFG personnel may enter the Project site at any time to verify compliance with the Agreement.

1.5. Legal Obligations: This Agreement does not exempt the Permittee from complying with all other applicable local, State and Federal law, or other legal obligations.

1.6. Unauthorized "Take": This Agreement does not authorize the "take" (defined in FGC Section 86 as to hunt, pursue, catch, capture, or kill; or attempt to hunt, pursue, catch, capture, or kill) of State- or Federal-listed threatened or endangered species. Any such "take" shall require separate permitting as may be required.

1.7. Water Diversion: To the extent that the Provisions of this Agreement provide for the diversion of water, they are agreed to with the understanding that the Permittee possesses the legal right to so divert such water.

1.8. Trespass: To the extent that the Provisions of this Agreement provide for activities that require the Permittee to trespass on another owner's property, they are agreed to with the understanding that the Permittee possesses the legal right to so trespass.

1.9. Construction/Work Schedule: The Permittee shall submit a **construction/work schedule** to DFG (lpdiaz@dfg.ca.gov with reference to Agreement 1600-2012-0007-R4) prior to beginning any activities covered by this Agreement. The Permittee shall also notify DFG upon the completion of the activities covered by this Agreement.

1.10. Training: Prior to starting any construction activity, all employees, contractors, and visitors who will be present during Project activities shall have received training from a qualified individual on the contents of this Agreement, the resources at stake, and the legal consequences of non-compliance. A **training sign-in sheet** for the employees and contractors shall be provided to DFG and shall include the date of the training and who gave the training.

2. Avoidance and Minimization Measures

To avoid or minimize adverse impacts to fish and wildlife resources identified above, Permittee shall implement each measure listed below.

2.1. Flagging/Fencing: Prior to any activity within the stream, the Permittee shall identify the limits of the required access routes and encroachment into the stream. These "work area" limits shall be identified with brightly colored flagging/fencing. Work completed under this Agreement shall be limited to this defined area only. Flagging/fencing shall be maintained in good repair for the duration of the Project. All areas beyond the identified work area limits shall be considered Environmentally Sensitive Areas (ESA) and shall not be disturbed.

2.2. Listed Species: This Agreement does not allow for the "take," or "incidental take," of any State- or Federal-listed threatened or endangered species.

2.2.1. The Permittee affirms that no "take" of listed species will occur as a result of this Project and will take prudent measures to ensure that all "take" is avoided. The Permittee acknowledges that they fully understand that they do not have "incidental take" authority. If any State- or Federal-listed threatened or endangered species occur within the proposed work area or could be impacted by the work proposed, and thus "taken" as a result of Project activities, the Permittee is responsible for obtaining and complying with required State and Federal threatened and endangered species permits or other written authorization before proceeding with this Project.

2.2.2. Liability for any "take," or "incidental take," of such listed species remains the separate responsibility of the Permittee for the duration of the Project.

2.2.3. The Permittee shall immediately (the same day) notify DFG of the discovery of any such rare, threatened, or endangered species prior to and/or during construction.

2.3. Valley Elderberry Longhorn Beetle (VELB) Specific Measures:

2.3.1. Elderberry bushes near the Project shall be completely avoided or mitigated according to United States Fish and Wildlife Service regulations.

2.4. Fish and Wildlife: If any fish or wildlife is encountered during the course of construction, said fish and wildlife shall be allowed to leave the construction area unharmed.

2.4.1. An approved biologist shall perform **general wildlife surveys** of the Project area (including access routes and storage areas) prior

to Project construction start with particular attention to evidence of the presence of the species listed above and shall report any possible adverse affect to fish and wildlife resources not originally reported. If the survey shows presence of any wildlife species which could be impacted, Permittee shall contact DFG and mitigation, specific to each incident, shall be developed. If any State- or Federal-listed threatened or endangered species are found within the proposed work area or could be impacted by the work proposed, a new Agreement and/or a 2081(b) State Incidental Take Permit may be necessary and a new CEQA analysis may need to be conducted, before work can begin.

2.4.2. Western Pond Turtle: Preconstruction surveys shall be conducted to determine the presence of the western pond turtle. Any of these species that are found in the area prior to construction shall be relocated to a suitable habitat area outside of the construction site by a qualified biologist with all required permits. The results of the survey shall be sent to DFG within one week of survey completion. The biologist hired by Permittee shall provide Permittee a list of exclusion measures that construction staff shall use to minimize risk of take or injury to any individual animals in the vicinity of the project site. Permittee shall ensure that these exclusion measures are in place prior to construction.

2.4.3. Bats: Prior to work commencing at any bridge, the bridge shall be surveyed for bats by a qualified bat biologist. Bats shall not be disturbed without specific notice to and consultation with DFG. Impact minimization measures shall be implemented prior to Project activities. Exclusion devices, if required, would not be installed during the maternity season and would be removed once construction is completed. If the bridge is being replaced, new bat habitat shall be incorporated in the new bridge design.

2.5. Birds: Migratory nongame native bird species are protected by international treaty under the Federal Migratory Bird Treaty Act (MBTA) of 1918 (50 C.F.R. Section 10.13). Sections 3503, 3503.5 and 3513 of the California Fish and Game Code prohibits take of all birds and their active nests including raptors and other migratory nongame birds, and prohibits the needless destruction of nests.

2.5.1. To protect nesting birds, no construction shall be completed from February 15 through August 31 unless the following **avian surveys** are completed by a qualified biologist:

- Raptors: Survey for nesting activity of raptors within a 0.25-mile radius of the construction site. Surveys shall be conducted at appropriate nesting times and concentrate on

trees with the potential to support raptor nests. If any active nests are observed, these nests and nest trees shall be designated an ESA and protected (until the young have fledged and are no longer dependent on the nest or parents for survival) with a minimum 500-foot buffer during Project construction unless otherwise agreed upon and approved in writing by DFG.

- Other Avian Species: Survey riparian areas for nesting activity within a 500-foot radius of the defined work area two (2) to three (3) weeks before construction begins. If any nesting activity is found, these nests and nest trees shall be designated an ESA and protected (until the young have fledged and are no longer dependent on the nest or parents for survival) with a minimum 250-foot buffer during Project construction unless otherwise agreed upon and approved in writing by DFG.

2.5.2. Swallows: If Permittee cannot avoid work on the bridges where there is the potential for disturbance of nesting swallows (February 15 through August 15), then prior to February 1 of each year, Permittee shall remove all existing nest remnants which would be destroyed by the Project. Permittee shall continue to discourage new nest building in places where swallows would be disturbed by the Project, using methods developed in consultation between the Permittee Biologist and DFG. Prior to nesting season, a swallow exclusion device, with visual warnings for the birds to prevent entanglement must be installed. Where disturbance shall occur, nesting must be discouraged throughout the nesting season.

2.6. Removal of Trees/Shrubs during Fall/Winter Months: To avoid potential impacts to nesting birds, trees and shrubs designated for removal should be cut down during the time period of September 16 to January 31. Trees/shrubs may be removed between February 1 and September 15 provided the Permittee has received written approval from DFG. A qualified biologist shall survey the proposed work area to verify the presence or absence of nesting birds and submit a detailed survey report including mapping for any nests found. DFG will review the report and at the discretion of DFG, tree/shrub removal may be authorized between February 1 and September 15.

2.7. Vegetation: The disturbance or removal of vegetation shall not exceed the minimum necessary to complete operations and shall only occur within the defined work area. Precautions shall be taken to avoid other damage to vegetation by people or equipment. Vegetation or material removed from the riparian area shall not be stockpiled in the streambed or on its banks

without measures to ensure its stability, preventing accidental discharge into the stream.

2.7.1. The Permittee shall document the number and species of all riparian woody-stemmed plants greater than four (4) inches DBH that are removed or are damaged during construction. Riparian trees and shrubs with a DBH of four (4) inches or greater that are damaged or removed shall be replaced by replanting like species at a 3:1 ratio (replaced to lost). Mitigation for heritage trees 24-inches or greater shall require replanting of like species at a 10:1 ratio. This documentation shall be used as the basis for replacement mitigation. (See Revegetation under Compensation below.)

2.8. Vehicles and Equipment: Any equipment or vehicles driven and/or operated within or adjacent to the stream shall be checked and maintained daily to prevent leaks of materials that, if introduced to water, could be deleterious to aquatic and terrestrial life.

2.8.1. Construction vehicle access to the stream's banks and bed shall be limited to predetermined ingress and egress corridors on existing roads. All other areas adjacent to the work site shall be considered an ESA and shall remain off-limits to construction equipment. Vehicle corridors and the ESA shall be identified by the Permittee's resident engineer in consultation with the Designated Biologist.

2.9. Staging and Storage Areas: Staging and storage areas for equipment, materials, fuels, lubricants, and solvents shall be located outside of the stream channel and banks, and to the extent possible, on previously disturbed ground. Stationary equipment such as motors, pumps, generators, compressors and welders, located within or adjacent to the stream, shall be positioned over drip-pans. Vehicles shall be moved away from the stream prior to refueling and lubrication.

2.10. Pollution: The Permittee and all contractors shall be subject to the water pollution regulations found in the Department of Fish and Game Code sections 5650 and 12015.

2.10.1. Raw cement, concrete or washings thereof, asphalt, drilling fluids or lubricants, paint or other coating material, oil or other petroleum products, or any other substances which could be hazardous to fish or wildlife resulting from or disturbed by Project-related activities, shall be prevented from contaminating the soil and/or entering the "Waters of the State."

2.10.2. All Project-generated debris, building materials, and rubbish shall be removed from the stream and from areas where such materials could be washed into the stream.

2.10.3. In the event that a spill occurs, all Project activities shall immediately cease until cleanup of the spilled materials is completed. DFG shall be notified immediately by the Permittee of any spills and shall be consulted regarding cleanup procedures.

2.11. Structures: The Permittee shall confirm that all structures are designed (i.e., size and alignment), constructed, and maintained such that they shall not cause long-term changes in water flows that adversely modify the existing upstream or downstream stream bed/bank contours or increase sediment deposition or cause significant new erosion.

2.12. Fill: Rock, gravel, and/or other materials shall not be imported into or moved within the stream, except as otherwise addressed in this Agreement. Only on-site materials and clean imported fill shall be used to complete the Project. Fill shall be limited to the minimal amount necessary to accomplish the agreed activities. Excess and temporary fill material shall be moved off-site at Project completion.

2.13. Spoil: Spoil storage sites shall not be located within the stream, where spoil will be washed into the stream, or where it will cover aquatic or riparian vegetation. Rock, gravel, and/or other materials shall not be imported into or moved within the bed or banks of the stream, except as otherwise addressed in this Agreement.

2.14. Erosion: No work within the banks of the stream will be conducted during or immediately following large rainfall events, or when there is water flowing within the channel. All disturbed soils within the Project site shall be stabilized to reduce erosion potential, both during and following construction. Temporary erosion control devices may be used as appropriate to prevent siltation of the stream. Any installation of permanent non-erodible materials not described in the original Project description shall be coordinated with DFG. Coordination may include the negotiation of additional Agreement Provisions for this activity.

2.15. Turbidity: Turbid water shall not be discharged into the stream, or created within the stream. The Permittee's ability to minimize siltation shall be the subject of preconstruction planning and feature implementation. Precautions to minimize siltation may require that the work site be isolated so that silt or other deleterious materials are not allowed to pass to downstream reaches. The placement of any structure or materials in the stream for this purpose, not included in the original Project description, shall be coordinated with DFG. If it is determined that silt levels resulting from Project-related activities constitute a threat to aquatic life, activities associated with the siltation shall be halted until effective DFG-approved control devices are installed, or abatement procedures are initiated.

2.16. Stream Diversion: If work cannot be completed when the stream is dry and work must occur within the wetted portion of the channel, the Permittee shall develop a **Stream Diversion Plan**. This Stream Diversion Plan shall be completed and submitted to DFG for approval prior to commencement of any proposed diversion or activities within the wetted portion of the stream. The Plan shall include, at a minimum, the following: flow diversion shall be done in a manner that shall prevent pollution and/or siltation, and which shall provide flows to downstream reaches; flows to downstream reaches shall be provided during all times that the natural flow would have supported aquatic life; said flows shall be of sufficient quality and quantity, and of appropriate temperature to support aquatic life, both above and below the diversion; and normal flows shall be restored to the affected stream immediately upon completion of work at that location.

2.17. Restoration: Excess material must be removed from the Project site, pursuant to Department of Transportation Standard Specifications Section 7-1.13. All disturbed soils and new fill, including recontoured slopes and all other cleared areas, shall be revegetated with riparian vegetation or other plants, as appropriate to prevent erosion. If the Project causes any exposed slopes or exposed areas on the stream banks, these areas shall be seeded with a blend of a minimum of three (3) locally native grass species and covered with a protective layer of weed-free straw or mulch. One (1) or two (2) sterile non-native perennial grass species may be added to the seed mix provided that amount does not exceed 25 percent of the total seed mix by count. Locally native wildflower and/or shrub seeds may also be included in the seed mix. The seeding shall be completed as soon as possible, but no later than November 15 of the year construction ends. A **seed mixture** shall be submitted to DFG for approval prior to application. At the discretion of DFG, all exposed areas where seeding is considered unsuccessful after 90 days shall receive appropriate soil preparation and a second application of seeding, straw, or mulch as soon as is practical on a date mutually agreed upon.

3. Compensatory Measures

To compensate for adverse impacts to fish and wildlife resources identified above that cannot be avoided or minimized, Permittee shall implement each measure listed below.

3.1. Revegetation: As indicated in the Project description, 1 western sycamore less then 25 inches DBH; 5 Fremont's cottonwood, 2 less then 25 inches DBH and 3 over 25 inches DBH; 5 Valley oak over 25 inches DBH; and 2 Gooddings black willow over 25 inches DBH will be removed from the Project area, the Permittee therefore shall develop a **Revegetation Plan** for the site and submit it to DFG for approval prior to commencement of the proposed work. All Plans shall specifically address what, where, when and how replacement shrubs and trees will be planted.

3.1.1. What species and the number of trees both removed and to be planted should be identified. Native riparian trees and shrubs (e.g., cottonwood, willow, sycamore, valley oak, etc.) between four (4) to 25-inches DBH shall be replaced in-kind at a ratio of 3:1, and trees greater then 25-inches DBH shall be replaced at a ratio of 10:1.

3.1.2. Where should be on-site whenever possible.

3.1.3. When should be the first suitable season after construction is complete.

3.1.4. How should include layout, monitoring, and maintenance to ensure a minimum of 70 percent survival for the plantings after five (5) years.

4. Monitoring and Reporting Measures

Permittee shall meet each reporting and monitoring requirement described below.

4.1. Monitoring Obligations of the Permittee:

4.1.1. The Permittee shall have primary responsibility for monitoring compliance with all protective measures included as "Measures" in this Agreement. Protective measures must be implemented within the time periods indicated in the Agreement. DFG shall be notified immediately if monitoring reveals that any of the protective measures were not implemented during the period indicated in this Agreement, or if it anticipates that measures will not be implemented within the time period specified.

4.1.2. The Permittee (or the Permittee's designee) shall ensure the implementation of the Measures of the Agreement, and shall monitor the effectiveness of these Measures. DFG shall be notified immediately if any of the protective measures are not providing the level of protection that is appropriate for the impact that is occurring, and recommendations, if any, for alternative protective measures.

4.2. Reporting Obligations of the Permittee:

4.2.1. The Permittee shall submit the following Reports described in the Measures above to DFG:

- Construction/work schedule (Measure 1.9).
- Employees and contractors training sign-in sheet (Measure 1.10).

- Results of general wildlife surveys (Measure 2.4.1).
- Results of avian surveys if construction is scheduled during the nesting season (Measure 2.5.1) or for tree removal Measure 2.6)
- Stream Diversion Plan if diversion is required (Measure 2.16).
- The seed mixture to be used post Project for erosion control (Measure 2.17).
- If required, a Revegetation Plan (Measure 3.1).

4.2.2. A Final Project Report shall be submitted to DFG within 30 days after the Project is completed. The final report shall summarize the Project construction, including any problems relating to the protective measures of this Agreement and how the problems were resolved. "Before and after" photo documentation of the Project site shall be included.

VERIFICATION OF COMPLIANCE:

DFG may verify compliance with protective measures to ensure the accuracy of Permittee's monitoring and reporting efforts at any point in time it is deemed necessary. DFG may, at its sole discretion, review relevant Project documents maintained by the Permittee, interview Permittee employees and agents, inspect the Project area, and take other actions to assess compliance with or effectiveness of protective measures for the Project.

CONTACT INFORMATION

Any communication that Permittee or DFG submits to the other shall be in writing and any communication or documentation shall be delivered to the address below by United States mail, fax, or e-mail, or to such other address as Permittee or DFG specifies by written notice to the other.

To Permittee:

California Department of Transportation (Caltrans)
District 6
Virginia Strohl
855 M Street, Suite 200
Fresno, California 93721
(559) 445-6456
Fax: (559) 445-6236
Virginia_Strohl@dot.ca.gov

To DFG:

Department of Fish and Game
Region 4 - Central Region
1234 East Shaw Avenue
Fresno, California 93710
Attn: Lake and Streambed Alteration Program – Laura Peterson-Diaz
Notification No. 1600-2011-0146-R4
Phone: (559) 243-4017, extension 225
Fax: (559) 243-4020
lpdiaz@dfg.ca.gov

LIABILITY

Permittee shall be solely liable for any violations of the Agreement, whether committed by Permittee or any person acting on behalf of Permittee, including its officers, employees, representatives, agents or contractors and subcontractors, to complete the Project or any activity related to it that the Agreement authorizes.

This Agreement does not constitute DFG's endorsement of, or require Permittee to proceed with the Project. The decision to proceed with the Project is Permittee's alone.

SUSPENSION AND REVOCATION

DFG may suspend or revoke in its entirety the Agreement if it determines that Permittee or any person acting on behalf of Permittee, including its officers, employees, representatives, agents, or contractors and subcontractors, is not in compliance with the Agreement.

Before DFG suspends or revokes the Agreement, it shall provide Permittee written notice by certified or registered mail that it intends to suspend or revoke. The notice shall state the reason(s) for the proposed suspension or revocation, provide Permittee an opportunity to correct any deficiency before DFG suspends or revokes the Agreement, and include instructions to Permittee, if necessary, including but not limited to a directive to immediately cease the specific activity or activities that caused DFG to issue the notice.

ENFORCEMENT

Nothing in the Agreement precludes DFG from pursuing an enforcement action against Permittee instead of, or in addition to, suspending or revoking the Agreement.

Nothing in the Agreement limits or otherwise affects DFG's enforcement authority or that of its enforcement personnel.

OTHER LEGAL OBLIGATIONS

This Agreement does not relieve Permittee or any person acting on behalf of Permittee, including its officers, employees, representatives, agents, or contractors and subcontractors, from obtaining any other permits or authorizations that might be required under other Federal, State, or local laws or regulations before beginning the Project or an activity related to it.

This Agreement does not relieve Permittee or any person acting on behalf of Permittee, including its officers, employees, representatives, agents, or contractors and subcontractors, from complying with other applicable statutes in the FGC including, but not limited to, FGC sections 2050 et seq. (threatened and endangered species), 3503 (bird nests and eggs), 3503.5 (birds of prey), 5650 (water pollution), 5652 (refuse disposal into water), 5901 (fish passage), 5937 (sufficient water for fish), and 5948 (obstruction of stream).

Nothing in the Agreement authorizes Permittee or any person acting on behalf of Permittee, including its officers, employees, representatives, agents, or contractors and subcontractors, to trespass.

AMENDMENT

DFG may amend the Agreement at any time during its term if DFG determines the amendment is necessary to protect an existing fish or wildlife resource.

Permittee may amend the Agreement at any time during its term, provided the amendment is mutually agreed to in writing by DFG and Permittee. To request an amendment, Permittee shall submit to DFG a completed DFG "Request to Amend Lake or Streambed Alteration" form and include with the completed form payment of the corresponding amendment fee identified in DFG's current fee schedule (see Cal. Code Regs., tit. 14, § 699.5).

TRANSFER AND ASSIGNMENT

This Agreement may not be transferred or assigned to another entity, and any purported transfer or assignment of the Agreement to another entity shall not be valid or effective, unless the transfer or assignment is requested by Permittee in writing, as specified below, and thereafter DFG approves the transfer or assignment in writing.

The transfer or assignment of the Agreement to another entity shall constitute a minor amendment, and therefore to request a transfer or assignment, Permittee shall submit to DFG a completed DFG "Request to Amend Lake or Streambed Alteration" form and include with the completed form payment of the minor amendment fee identified in DFG's current fee schedule (see Cal. Code Regs., tit. 14, § 699.5).

EXTENSIONS

In accordance with FGC section 1605(b), Permittee may request one extension of the Agreement, provided the request is made prior to the expiration of the Agreement's term. To request an extension, Permittee shall submit to DFG a completed DFG "Request to Extend Lake or Streambed Alteration" form and include with the completed form payment of the extension fee identified in DFG's current fee schedule (see Cal. Code Regs., tit. 14, § 699.5). DFG shall process the extension request in accordance with FGC 1605(b) through (e).

If Permittee fails to submit a request to extend the Agreement prior to its expiration, Permittee must submit a new notification and notification fee before beginning or continuing the Project the Agreement covers (Fish & G. Code, § 1605, subd. (f)).

EFFECTIVE DATE

The Agreement becomes effective on the date of DFG's signature, which shall be: 1) after Permittee's signature; 2) after DFG complies with all applicable requirements under CEQA; and 3) after payment of the applicable FGC section 711.4 filing fee listed at http://www.dfg.ca.gov/habcon/ceqa/ceqa_changes.html.

TERM

This Agreement shall remain in effect for five (5) years beginning on the date signed by DFG, unless it is terminated or extended before then. All provisions in the Agreement shall remain in force throughout its term. Permittee shall remain responsible for implementing any provisions specified herein to protect fish and wildlife resources after the Agreement expires or is terminated, as FGC section 1605(a)(2) requires.

CEQA COMPLIANCE

In approving this Agreement, DFG is independently required to assess the applicability of CEQA. The features of this Agreement shall be considered as part of the overall Project description. The Permittee's concurrence signature on this Agreement serves as confirmation to DFG that the activities that shall be conducted under the terms of this Agreement are consistent with the Project described in Notification No. 2012-0007-R4. Caltrans, as CEQA Lead agency submitted an Initial Study with Proposed Mitigated Negative Declaration on December 31, 2009, State Clearinghouse No. 2009091121, for the SR 180 Kings River Overflow Bridge Replacement Project. A copy of the Notice of Determination for the Project was provided with the Section 1602 Notification. DFG, as a CEQA Responsible Agency, shall make findings and submit a Notice of Determination to the State Clearinghouse upon signing this Agreement.

EXHIBITS

The document(s) listed below is included as an exhibit to the Agreement and incorporated herein by reference.

A. Figure 1. Project Location USGS Quad Map.

AUTHORITY

If the person signing the Agreement (signatory) is doing so as a representative of Permittee, the signatory hereby acknowledges that he or she is doing so on Permittee's behalf and represents and warrants that he or she has the authority to legally bind Permittee to the provisions herein.

AUTHORIZATION

This Agreement authorizes only the Project described herein. If Permittee begins or completes a Project different from the Project the Agreement authorizes, Permittee may be subject to civil or criminal prosecution for failing to notify DFG in accordance with FGC section 1602.

CONCURRENCE

The undersigned accepts and agrees to comply with all provisions contained herein.

FOR CALIFORNIA DEPARTMENT OF TRANSPORTATION

Carin Swanberg for — 4-16-12

Frank Meraz
Acting Biology Branch Chief
Caltrans Central Region (Districts 5, 6, 9 and 10)

Date

FOR DEPARTMENT OF FISH AND GAME

4/24/12

Jeffrey R. Single, Ph.D.
Regional Manager

Date

Prepared by: Laura Peterson-Diaz
Environmental Scientist

Figure 1

Exhibit A

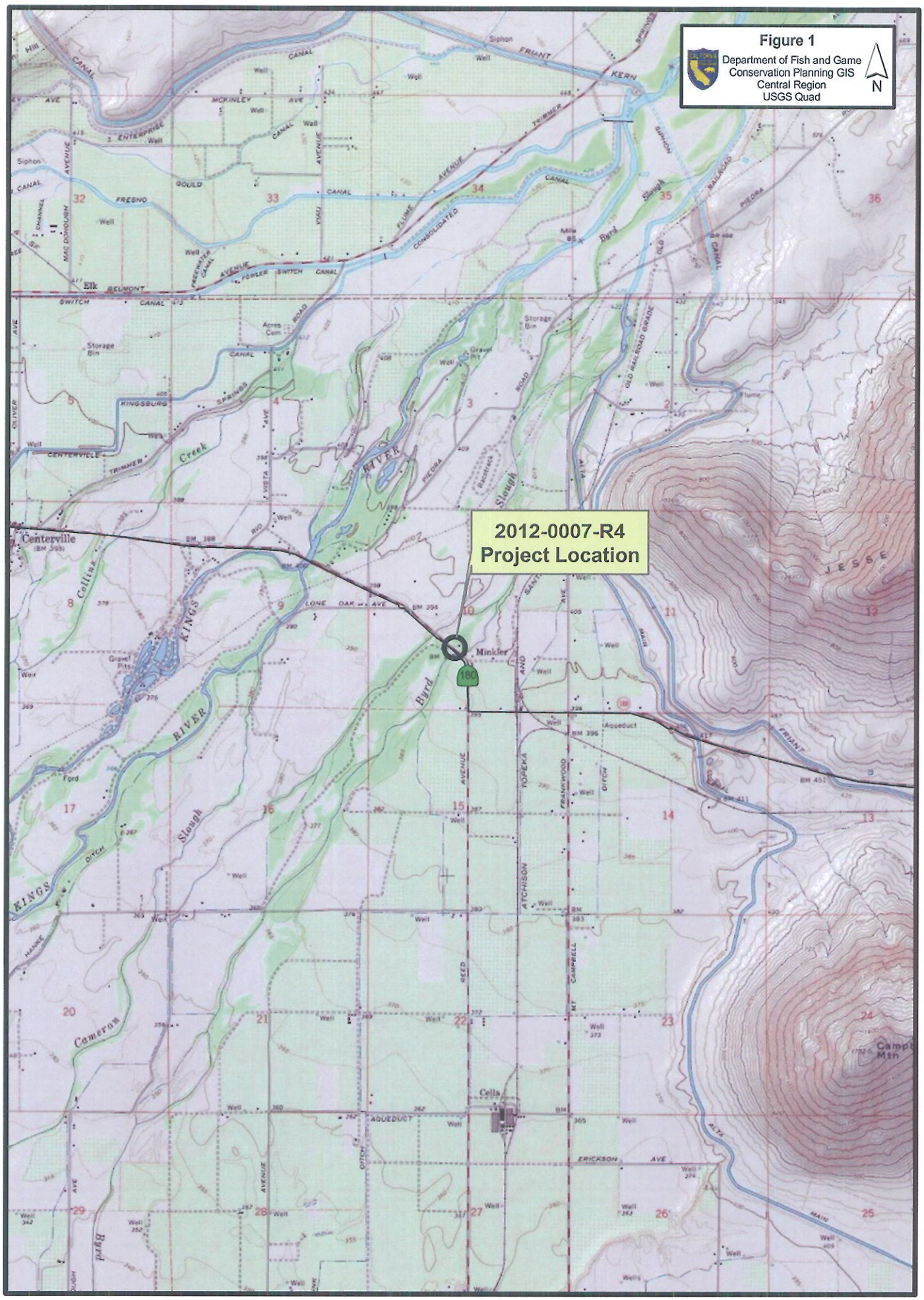
Figure 1
Department of Fish and Game
Conservation Planning GIS
Central Region
USGS Quad
N
2012-0007-R4
Project Location
Centerville
Minkler
Cella
KINGS RIVER
Byrd Slough
Cameron Creek
JESSE
180

DEPARTMENT OF THE ARMY
U.S. ARMY ENGINEER DISTRICT, SACRAMENTO
CORPS OF ENGINEERS
1325 J STREET
SACRAMENTO CA 95814-2922

REPLY TO
ATTENTION OF

April 9, 2012

Regulatory Division (SPK-2009-01567)

State of California
Department of Transportation, District 6
Attn: Mr. Frank Meraz
855 M Street, Suite 200
Fresno, California 93721

Dear Mr. Meraz:

We are responding to your, January 24, 2012, request for verification of the use of a Department of the Army Nationwide Permit (NWP) for the State Route180 Kings River Overflow Bridge Replacement project. On February 3, 2012, we determined your Pre-construction Notification (PCN) was incomplete and requested additional information. On February 21, 2012, as requested, we received additional information to complete your PCN. We reviewed the additional information and determined your PCN was complete on February 27, 2012.

This approximately 2.4-acre project involves activities, including discharges of dredged or fill material, in waters of the United States to remove and replace the existing Kings River Overflow Bridge on State Route 180. The project is located on State Route 180 as it passes over Byrd Slough, Section 10, Township 14 South, Range 23 East, Mount Diablo Meridian, Latitude 36.724236°, Longitude -119.458173°, Fresno County, California.

Based on the information you provided, the proposed activity, resulting in the permanent loss of approximately 0.003 acre of wetlands and 0.012 acre of open waters, and temporary impacts to approximately 0.05 acre of wetlands and 0.10 acre of open waters, is authorized by Nationwide Permit Number 14. However, until Section 401 Water Quality Certification for the activity has been issued or waived, our authorization is denied without prejudice. Once you have provided us evidence of water quality certification, the activity is authorized and the work may proceed subject to the conditions of certification and the Nationwide Permit.

Furthermore, we understand that the State of California, Department of Transportation (Caltrans) is the National Environmental Policy Act (NEPA) lead Federal agency for this project, and as such, will ensure the authorized work complies with the National Environmental Policy Act, the Endangered Species Act, the National Historic Preservation Act, and any other applicable federal laws. Your work must comply with the general terms and conditions listed on the enclosed 2012 NWP information sheets, Sacramento District Nationwide Permit Regional Conditions for California, excluding the Lake Tahoe Basin, and the following special conditions:

Special Conditions

1. To mitigate for the permanent loss of approximately 0.003 acre of wetlands and 0.012 acre of open waters, you shall submit a check in the amount of $2,250.00 ($150,000 per acre x 0.003 acre of wetlands + $150,000 per acre x 0.012 acre of open waters) payable to the National Fish and Wildlife Foundation (NFWF). The *Tulare-Buena Vista Lakes,* Hydrologic Unit Code #18030012, must be indicated in the in-lieu fee agreement in order to insure the proper location of future mitigation. Within fourteen (14) days of receiving a receipt that your fees have been deposited, you shall submit a copy (typically Exhibit B) to this office for recordation.

2. Prior to commencing work in waters of the U.S., you shall submit to this office; 1). a final grading plan, 2). a storm water management plan or water pollution control plan, and 3). a site plan which includes site limits, access roads, disposal, staging, and borrow (DSB) sites. Documentation shall demonstrate that the usage of the site(s) complies with all local, state, and federal environmental and permitted use regulations and must be approved by the Corps prior to commencing work authorized herein.

3. Within 30 days prior to initiation of construction activities within waters of the United States, you shall submit to the Corps pre-construction photographs of the project site, including all DSB site(s), which have been taken no more than 1 year prior to initiation of construction activities. Within 30 days following construction activities, you shall submit post-construction photographs of the project site, including DSB site(s), showing the work conducted, to this office. The camera positions and view angles of pre and post-construction photographs shall be identified on a map, aerial photo, or project drawing. Construction locations shall include all major project features and waters of the United States.

4. Between construction seasons, all equipment and materials, with the exception of ESA fencing, any falsework, and/or water quality BMP's, shall be removed from waters of the U.S. and all disturbed areas shall be stabilized to prevent erosion and sedimentation.

5. You shall notify this office of any proposed modifications to the project, including revisions to any of the work plans or documents cited in this authorization, for review and approval prior to construction work associated with the proposed modification(s).

6. If any of the above conditions are violated or unauthorized activities occur, you shall stop work immediately and notify this office. You shall provide us with a detailed description of the unauthorized activity(s), photo documentation, and any measures taken to remedy the violation.

7. Within 30 days after completion of the authorized work, you must sign the enclosed *Compliance Certification* form and return it to this office, along with the items required in special condition #3.

This verification is valid for two years or until the NWP is modified, reissued, or revoked, whichever comes first. All of the existing NWPs are scheduled to be modified, reissued, or revoked on March 18, 2017. It is incumbent upon you to remain informed of changes to the NWPs. We will issue a public notice when the NWPs are reissued. Furthermore, if you commence or are under contract to commence this activity before the date that the relevant NWP is modified or revoked, you will have twelve (12) months from the date of the modification or revocation of the NWP to complete the activity under the present terms and conditions of this nationwide permit.

We appreciate your feedback. At your earliest convenience, please tell us how we are doing by completing the customer survey on our website under *Customer Service Survey.*

Please refer to identification number SPK-2009-01567 in any correspondence concerning this project. If you have any questions, please contact Mr. Jason Deters at our California South Branch Office, 1325 J Street, Room 1350, Sacramento, California 95814-2922, email *Jason.Deters@usace.army.mil*, or telephone 916-557-7152. For more information regarding our program, please visit our website at *www.spk.usace.army.mil/regulatory.html*.

Sincerely,

Paul Maniccia
Chief, California South Branch

Copies Furnished:

California Regional Water Quality Control Board, Central Valley Region, 11020 Sun Center Drive, Suite 200, Rancho Cordova, California, 95670
California Department of Fish and Game, Central Region, 1234 East Shaw Avenue, Fresno, California 93710
U. S. Fish and Wildlife Service, San Joaquin Valley Division, 2800 Cottage Way, Sacramento, California 95825
Mr. Robert Leidy, U.S. Environmental Protection Agency, Wetlands Office, WTR9, 75 Hawthorne Street, San Francisco, California 94105-3920

COMPLIANCE CERTIFICATION

Permit File Number: SPK-2009-01567

Nationwide Permit Number: 14

Permittee: Mr. Frank Meraz
California Department of Transportation
855 M Street, Suite 200
Fresno, California 93721

County: Fresno

Date of Verification: April 5, 2012

Within 30 days after completion of the activity authorized by this permit, sign this certification and return it to the following address:

U.S. Army Corps of Engineers
Sacramento District
1325 J Street, Room 1350
Sacramento, California 95814-2922
DLL-CESPK-RD-Compliance@usace.army.mil

Please note that your permitted activity is subject to a compliance inspection by a U.S. Army Corps of Engineers representative. If you fail to comply with the terms and conditions of the permit your authorization may be suspended, modified, or revoked. If you have any questions about this certification, please contact the Corps of Engineers.

* * * * * * * * *

I hereby certify that the work authorized by the above-referenced permit, including all the required mitigation, was completed in accordance with the terms and conditions of the permit verification.

_____ _____
Signature of Permittee Date

14. Linear Transportation Projects. Activities required for the construction, expansion, modification, or improvement of linear transportation projects (e.g., roads, highways, railways, trails, airport runways, and taxiways) in waters of the United States. For linear transportation projects in non-tidal waters, the discharge cannot cause the loss of greater than 1/2-acre of waters of the United States. For linear transportation projects in tidal waters, the discharge cannot cause the loss of greater than 1/3-acre of waters of the United States. Any stream channel modification, including bank stabilization, is limited to the minimum necessary to construct or protect the linear transportation project; such modifications must be in the immediate vicinity of the project.

This NWP also authorizes temporary structures, fills, and work necessary to construct the linear transportation project. Appropriate measures must be taken to maintain normal downstream flows and minimize flooding to the maximum extent practicable, when temporary structures, work, and discharges, including cofferdams, are necessary for construction activities, access fills, or dewatering of construction sites. Temporary fills must consist of materials, and be placed in a manner, that will not be eroded by expected high flows. Temporary fills must be removed in their entirety and the affected areas returned to pre-construction elevations. The areas affected by temporary fills must be revegetated, as appropriate.

This NWP cannot be used to authorize non-linear features commonly associated with transportation projects, such as vehicle maintenance or storage buildings, parking lots, train stations, or aircraft hangars.

Notification: The permittee must submit a pre-construction notification to the district engineer prior to commencing the activity if: (1) the loss of waters of the United States exceeds 1/10-acre; or (2) there is a discharge in a special aquatic site, including wetlands. (See general condition 31.) (Sections 10 and 404)

Note: Some discharges for the construction of farm roads or forest roads, or temporary roads for moving mining equipment, may qualify for an exemption under Section 404(f) of the Clean Water Act (see 33 CFR 323.4).

A. **Regional Conditions**

1. **Regional Conditions for California, excluding the Tahoe Basin**

http://www.spk.usace.army.mil/organizations/cespk-co/regulatory/nwp/2012-nwps/2012-NWP-RC-CA.pdf

2. **Regional Conditions for Nevada, including the Tahoe Basin**

hsttp://www.spk.usace.army.mil/organizations/cespk-co/regulatory/nwp/2012-nwps/2012-NWP-RC-NV.pdf

3. **Regional Conditions for Utah**

http://www.spk.usace.army.mil/organizations/cespk-co/regulatory/nwp/2012-nwps/2012-NWP-RC-UT.pdf

4. **Regional Conditions for Colorado.**

http://www.spk.usace.army.mil/organizations/cespk-co/regulatory/nwp/2012-nwps/2012-NWP-RC-CO.pdf

B. **Nationwide Permit General Conditions**

Note: To qualify for NWP authorization, the prospective permittee must comply with the following general conditions, as applicable, in addition to any regional or case-specific conditions imposed by the division engineer or district engineer. Prospective permittees should contact the appropriate Corps district office to determine if regional conditions have been imposed on an NWP. Prospective permittees should also contact the appropriate Corps district office to determine the status of Clean Water Act Section 401 water quality certification and/or Coastal Zone Management Act consistency for an NWP. Every person who may wish to obtain permit authorization under one or more NWPs, or who is currently relying on an existing or prior permit authorization under one or more NWPs, has been and is on notice that all of the provisions of 33 CFR §§ 330.1 through 330.6 apply to every NWP authorization. Note especially 33 CFR § 330.5 relating to the modification, suspension, or revocation of any NWP authorization.

☐ 1. **Navigation.**

☐ (a) No activity may cause more than a minimal adverse effect on navigation.

☐ (b) Any safety lights and signals prescribed by the U.S. Coast Guard, through regulations or otherwise, must be installed and maintained at the permittee's expense on authorized facilities in navigable waters of the United States.

☐ (c) The permittee understands and agrees that, if future operations by the United States require the removal, relocation, or other alteration, of the structure or work herein authorized, or if, in the opinion of the Secretary of the Army or his authorized representative, said structure or work shall cause unreasonable obstruction to the free navigation of the navigable waters,

the permittee will be required, upon due notice from the Corps of Engineers, to remove, relocate, or alter the structural work or obstructions caused thereby, without expense to the United States. No claim shall be made against the United States on account of any such removal or alteration.

☐ 2. **Aquatic Life Movements.** No activity may substantially disrupt the necessary life cycle movements of those species of aquatic life indigenous to the waterbody, including those species that normally migrate through the area, unless the activity's primary purpose is to impound water. All permanent and temporary crossings of waterbodies shall be suitably culverted, bridged, or otherwise designed and constructed to maintain low flows to sustain the movement of those aquatic species.

☐ 3. **Spawning Areas**. Activities in spawning areas during spawning seasons must be avoided to the maximum extent practicable. Activities that result in the physical destruction (e.g., through excavation, fill, or downstream smothering by substantial turbidity) of an important spawning area are not authorized.

☐ 4. **Migratory Bird Breeding Areas.** Activities in waters of the United States that serve as breeding areas for migratory birds must be avoided to the maximum extent practicable.

☐ 5. **Shellfish Beds**. No activity may occur in areas of concentrated shellfish populations, unless the activity is directly related to a shellfish harvesting activity authorized by NWPs 4 and 48, or is a shellfish seeding or habitat restoration activity authorized by NWP 27.

☐ 6. **Suitable Material**. No activity may use unsuitable material (e.g., trash, debris, car bodies, asphalt, etc.). Material used for construction or discharged must be free from toxic pollutants in toxic amounts (see Section 307 of the Clean Water Act).

☐ 7. **Water Supply Intakes**. No activity may occur in the proximity of a public water supply intake, except where the activity is for the repair or improvement of public water supply intake structures or adjacent bank stabilization.

☐ 8. **Adverse Effects From Impoundments**. If the activity creates an impoundment of water, adverse effects to the aquatic system due to accelerating the passage of water, and/or restricting its flow must be minimized to the maximum extent practicable.

☐ 9. **Management of Water Flows**. To the maximum extent practicable, the pre-construction course, condition, capacity, and location of open waters must be maintained for each activity, including stream channelization and storm water management activities, except as provided below. The activity must be constructed to withstand expected high flows. The activity must not restrict or impede the passage of normal or high flows, unless the primary purpose of the activity is to impound water or manage high flows. The activity may alter the pre-construction course, condition, capacity, and location of open waters if it benefits the aquatic environment (e.g., stream restoration or relocation activities).

☐ 10. **Fills Within 100-Year Floodplains**. The activity must comply with applicable FEMA-approved state or local floodplain management requirements.

☐ 11. **Equipment**. Heavy equipment working in wetlands or mudflats must be placed on mats, or other measures must be taken to minimize soil disturbance.

☐ 12. **Soil Erosion and Sediment Controls**. Appropriate soil erosion and sediment controls must be used and maintained in effective operating condition during construction, and all exposed soil and other fills, as well as any work below the ordinary high water mark or high tide line, must be permanently stabilized at the earliest practicable date. Permittees are encouraged to perform work within waters of the United States during periods of low-flow or no-flow.

☐ 13. **Removal of Temporary Fills**. Temporary fills must be removed in their entirety and the affected areas returned to pre-construction elevations. The affected areas must be revegetated, as appropriate.

☐ 14. **Proper Maintenance**. Any authorized structure or fill shall be properly maintained, including maintenance to ensure public safety and compliance with applicable NWP general conditions, as well as any activity-specific conditions added by the district engineer to an NWP authorization.

☐ 15. **Single and Complete Project**. The activity must be a single and complete project. The same NWP cannot be used more than once for the same single and complete project.

☐ 16. **Wild and Scenic Rivers**. No activity may occur in a component of the National Wild and Scenic River System, or in a river officially designated by Congress as a "study river" for possible inclusion in the system while the river is in an official study status, unless the appropriate Federal agency with direct management responsibility for such river, has determined in writing that the proposed activity will not adversely affect the Wild and Scenic River designation or study status. Information on Wild and Scenic Rivers may be obtained from the appropriate Federal land management agency responsible for the designated Wild and Scenic River or study river (e.g., National Park Service, U.S. Forest Service, Bureau of Land Management, U.S. Fish and Wildlife Service).

☐ 17. **Tribal Rights**. No activity or its operation may impair reserved tribal rights, including, but not limited to, reserved water rights and treaty fishing and hunting rights.

☐ 18. **Endangered Species**.

☐ (a) No activity is authorized under any NWP which is likely to directly or indirectly jeopardize the continued existence of a threatened or endangered species or a species proposed for such designation, as identified under the Federal Endangered Species Act (ESA), or which will directly or indirectly destroy or adversely modify the critical habitat of such species. No activity is authorized under any NWP which "may affect" a listed species or critical habitat, unless Section 7 consultation addressing the effects of the proposed activity has been completed.

☐ (b) Federal agencies should follow their own procedures for complying with the requirements of the ESA. Federal permittees must provide the district engineer with the appropriate documentation to

demonstrate compliance with those requirements. The district engineer will review the documentation and determine whether it is sufficient to address ESA compliance for the NWP activity, or whether additional ESA consultation is necessary.

☐ (c) Non-federal permittees must submit a pre-construction notification to the district engineer if any listed species or designated critical habitat might be affected or is in the vicinity of the project, or if the project is located in designated critical habitat, and shall not begin work on the activity until notified by the district engineer that the requirements of the ESA have been satisfied and that the activity is authorized. For activities that might affect Federally-listed endangered or threatened species or designated critical habitat, the pre-construction notification must include the name(s) of the endangered or threatened species that might be affected by the proposed work or that utilize the designated critical habitat that might be affected by the proposed work. The district engineer will determine whether the proposed activity "may affect" or will have "no effect" to listed species and designated critical habitat and will notify the non-Federal applicant of the Corps' determination within 45 days of receipt of a complete pre-construction notification. In cases where the non-Federal applicant has identified listed species or critical habitat that might be affected or is in the vicinity of the project, and has so notified the Corps, the applicant shall not begin work until the Corps has provided notification the proposed activities will have "no effect" on listed species or critical habitat, or until Section 7 consultation has been completed. If the non-Federal applicant has not heard back from the Corps within 45 days, the applicant must still wait for notification from the Corps.

☐ (d) As a result of formal or informal consultation with the FWS or NMFS the district engineer may add species-specific regional endangered species conditions to the NWPs.

☐ (e) Authorization of an activity by a NWP does not authorize the "take" of a threatened or endangered species as defined under the ESA. In the absence of separate authorization (e.g., an ESA Section 10 Permit, a Biological Opinion with "incidental take" provisions, etc.) from the U.S. FWS or the NMFS, The Endangered Species Act prohibits any person subject to the jurisdiction of the United States to take a listed species, where "take" means to harass, harm, pursue, hunt, shoot, wound, kill, trap, capture, or collect, or to attempt to engage in any such conduct. The word "harm" in the definition of "take" means an act which actually kills or injures wildlife. Such an act may include significant habitat modification or degradation where it actually kills or injures wildlife by significantly impairing essential behavioral patterns, including breeding, feeding or sheltering.

☐ (f) Information on the location of threatened and endangered species and their critical habitat can be obtained directly from the offices of the U.S. FWS and NMFS or their world wide web pages at http://www.fws.gov/ or http://www.fws.gov/ipac and http://www.noaa.gov/fisheries.html respectively.

☐ 19. **Migratory Birds and Bald and Golden Eagles**. The permittee is responsible for obtaining any "take" permits required under the U.S. Fish and Wildlife Service's regulations governing compliance with the Migratory Bird Treaty Act or the Bald and Golden Eagle Protection Act. The permittee should contact the appropriate local office of the U.S. Fish and Wildlife Service to determine if such "take" permits are required for a particular activity.

☐ 20. **Historic Properties**.

☐ (a) In cases where the district engineer determines that the activity may affect properties listed, or eligible for listing, in the National Register of Historic Places, the activity is not authorized, until the requirements of Section 106 of the National Historic Preservation Act (NHPA) have been satisfied.

☐ (b) Federal permittees should follow their own procedures for complying with the requirements of Section 106 of the National Historic Preservation Act. Federal permittees must provide the district engineer with the appropriate documentation to demonstrate compliance with those requirements. The district engineer will review the documentation and determine whether it is sufficient to address section 106 compliance for the NWP activity, or whether additional section 106 consultation is necessary.

☐ (c) Non-federal permittees must submit a pre-construction notification to the district engineer if the authorized activity may have the potential to cause effects to any historic properties listed on, determined to be eligible for listing on, or potentially eligible for listing on the National Register of Historic Places, including previously unidentified properties. For such activities, the pre-construction notification must state which historic properties may be affected by the proposed work or include a vicinity map indicating the location of the historic properties or the potential for the presence of historic properties. Assistance regarding information on the location of or potential for the presence of historic resources can be sought from the State Historic Preservation Officer or Tribal Historic Preservation Officer, as appropriate, and the National Register of Historic Places (see 33 CFR 330.4(g)). When reviewing pre-construction notifications, district engineers will comply with the current procedures for addressing the requirements of Section 106 of the National Historic Preservation Act. The district engineer shall make a reasonable and good faith effort to carry out appropriate identification efforts, which may include background research, consultation, oral history interviews, sample field investigation, and field survey. Based on the information submitted and these efforts, the district engineer shall determine whether the proposed activity has the potential to cause an effect on the historic properties. Where the non-Federal applicant has identified

historic properties on which the activity may have the potential to cause effects and so notified the Corps, the non-Federal applicant shall not begin the activity until notified by the district engineer either that the activity has no potential to cause effects or that consultation under Section 106 of the NHPA has been completed.

☐ (d) The district engineer will notify the prospective permittee within 45 days of receipt of a complete pre-construction notification whether NHPA Section 106 consultation is required. Section 106 consultation is not required when the Corps determines that the activity does not have the potential to cause effects on historic properties (see 36 CFR §800.3(a)). If NHPA section 106 consultation is required and will occur, the district engineer will notify the non- Federal applicant that he or she cannot begin work until Section 106 consultation is completed. If the non-Federal applicant has not heard back from the Corps within 45 days, the applicant must still wait for notification from the Corps.

☐ (e) Prospective permittees should be aware that section 110k of the NHPA (16 U.S.C. 470h-2(k)) prevents the Corps from granting a permit or other assistance to an applicant who, with intent to avoid the requirements of Section 106 of the NHPA, has intentionally significantly adversely affected a historic property to which the permit would relate, or having legal power to prevent it, allowed such significant adverse effect to occur, unless the Corps, after consultation with the Advisory Council on Historic Preservation (ACHP), determines that circumstances justify granting such assistance despite the adverse effect created or permitted by the applicant. If circumstances justify granting the assistance, the Corps is required to notify the ACHP and provide documentation specifying the circumstances, the degree of damage to the integrity of any historic properties affected, and proposed mitigation. This documentation must include any views obtained from the applicant, SHPO/THPO, appropriate Indian tribes if the undertaking occurs on or affects historic properties on tribal lands or affects properties of interest to those tribes, and other parties known to have a legitimate interest in the impacts to the permitted activity on historic properties.

☐ 21. **Discovery of Previously Unknown Remains and Artifacts**. If you discover any previously unknown historic, cultural or archeological remains and artifacts while accomplishing the activity authorized by this permit, you must immediately notify the district engineer of what you have found, and to the maximum extent practicable, avoid construction activities that may affect the remains and artifacts until the required coordination has been completed. The district engineer will initiate the Federal, Tribal and state coordination required to determine if the items or remains warrant a recovery effort or if the site is eligible for listing in the National Register of Historic Places.

☐ 22. **Designated Critical Resource Waters**. Critical resource waters include, NOAA-managed marine sanctuaries and marine monuments, and National Estuarine Research Reserves. The district engineer may designate, after notice and opportunity for public comment, additional waters officially designated by a state as having particular environmental or ecological significance, such as outstanding national resource waters or state natural heritage sites. The district engineer may also designate additional critical resource waters after notice and opportunity for public comment.

☐ (a) Discharges of dredged or fill material into waters of the United States are not authorized by NWPs 7, 12, 14, 16, 17, 21, 29, 31, 35, 39, 40, 42, 43, 44, 49, 50, 51, and 52 for any activity within, or directly affecting, critical resource waters, including wetlands adjacent to such waters.

☐ (b) For NWPs 3, 8, 10, 13, 15, 18, 19, 22, 23, 25, 27, 28, 30, 33, 34, 36, 37, and 38, notification is required in accordance with general condition 31, for any activity proposed in the designated critical resource waters including wetlands adjacent to those waters. The district engineer may authorize activities under these NWPs only after it is determined that the impacts to the critical resource waters will be no more than minimal.

☐ 23. **Mitigation**. The district engineer will consider the following factors when determining appropriate and practicable mitigation necessary to ensure that adverse effects on the aquatic environment are minimal:

☐ (a) The activity must be designed and constructed to avoid and minimize adverse effects, both temporary and permanent, to waters of the United States to the maximum extent practicable at the project site (i.e., on site).

☐ (b) Mitigation in all its forms (avoiding, minimizing, rectifying, reducing, or compensating for resource losses) will be required to the extent necessary to ensure that the adverse effects to the aquatic environment are minimal.

☐ (c) Compensatory mitigation at a minimum one-for-one ratio will be required for all wetland losses that exceed 1/10-acre and require pre-construction notification, unless the district engineer determines in writing that either some other form of mitigation would be more environmentally appropriate or the adverse effects of the proposed activity are minimal, and provides a project-specific waiver of this requirement. For wetland losses of 1/10-acre or less that require pre-construction notification, the district engineer may determine on a case-by-case basis that compensatory mitigation is required to ensure that the activity results in minimal adverse effects on the aquatic environment. Compensatory mitigation projects provided to offset losses of aquatic resources must comply with the applicable provisions of 33 CFR part 332.

☐ (1) The prospective permittee is responsible for proposing an appropriate compensatory mitigation option if compensatory mitigation is necessary to ensure that the activity results in minimal adverse effects on the aquatic environment.

☐ (2) Since the likelihood of success is greater and the impacts to potentially valuable uplands are reduced, wetland restoration should be the first compensatory mitigation option considered.

☐ (3) If permittee-responsible mitigation is the proposed option, the prospective permittee is responsible for submitting a mitigation plan. A conceptual or detailed mitigation plan may be used by the district engineer to make the decision on the NWP verification request, but a final mitigation plan that addresses the applicable requirements of 33 CFR 332.4(c)(2) – (14) must be approved by the district engineer before the permittee begins work in waters of the United States, unless the district engineer determines that prior approval of the final mitigation plan is not practicable or not necessary to ensure timely completion of the required compensatory mitigation (see 33 CFR 332.3(k)(3)).

☐ (4) If mitigation bank or in-lieu fee program credits are the proposed option, the mitigation plan only needs to address the baseline conditions at the impact site and the number of credits to be provided.

☐ (5) Compensatory mitigation requirements (e.g., resource type and amount to be provided as compensatory mitigation, site protection, ecological performance standards, monitoring requirements) may be addressed through conditions added to the NWP authorization, instead of components of a compensatory mitigation plan.

☐ (d) For losses of streams or other open waters that require pre-construction notification, the district engineer may require compensatory mitigation, such as stream rehabilitation, enhancement, or preservation, to ensure that the activity results in minimal adverse effects on the aquatic environment.

☐ (e) Compensatory mitigation will not be used to increase the acreage losses allowed by the acreage limits of the NWPs. For example, if an NWP has an acreage limit of 1/2-acre, it cannot be used to authorize any project resulting in the loss of greater than 1/2-acre of waters of the United States, even if compensatory mitigation is provided that replaces or restores some of the lost waters. However, compensatory mitigation can and should be used, as necessary, to ensure that a project already meeting the established acreage limits also satisfies the minimal impact requirement associated with the NWPs.

☐ (f) Compensatory mitigation plans for projects in or near streams or other open waters will normally include a requirement for the restoration or establishment, maintenance, and legal protection (e.g., conservation easements) of riparian areas next to open waters. In some cases, riparian areas may be the only compensatory mitigation required. Riparian areas should consist of native species. The width of the required riparian area will address documented water quality or aquatic habitat loss concerns. Normally, the riparian area will be 25 to 50 feet wide on each side of the stream, but the district engineer may require slightly wider riparian areas to address documented water quality or habitat loss concerns. If it is not possible to establish a riparian area on both sides of a stream, or if the waterbody is a lake or coastal waters, then restoring or establishing a riparian area along a single bank or shoreline may be sufficient. Where both wetlands and open waters exist on the project site, the district engineer will determine the appropriate compensatory mitigation (e.g., riparian areas and/or wetlands compensation) based on what is best for the aquatic environment on a watershed basis. In cases where riparian areas are determined to be the most appropriate form of compensatory mitigation, the district engineer may waive or reduce the requirement to provide wetland compensatory mitigation for wetland losses.

☐ (g) Permittees may propose the use of mitigation banks, in-lieu fee programs, or separate permittee-responsible mitigation. For activities resulting in the loss of marine or estuarine resources, permittee-responsible compensatory mitigation may be environmentally preferable if there are no mitigation banks or in-lieu fee programs in the area that have marine or estuarine credits available for sale or transfer to the permittee. For permittee-responsible mitigation, the special conditions of the NWP verification must clearly indicate the party or parties responsible for the implementation and performance of the compensatory mitigation project, and, if required, its long-term management.

(h) Where certain functions and services of waters of the United States are permanently adversely affected, such as the conversion of a forested or scrub-shrub wetland to a herbaceous wetland in a permanently maintained utility line right-of-way, mitigation may be required to reduce the adverse effects of the project to the minimal level.

☐ **24. Safety of Impoundment Structures**. To ensure that all impoundment structures are safely designed, the district engineer may require non-Federal applicants to demonstrate that the structures comply with established state dam safety criteria or have been designed by qualified persons. The district engineer may also require documentation that the design has been independently reviewed by similarly qualified persons, and appropriate modifications made to ensure safety.

☐ **25. Water Quality**. Where States and authorized Tribes, or EPA where applicable, have not previously certified compliance of an NWP with CWA Section 401, individual 401 Water Quality Certification must be obtained or waived (see 33 CFR 330.4(c)). The district engineer or State or Tribe may require additional water quality management measures to ensure that the authorized activity does not result in more than minimal degradation of water quality.

☐ **26. Coastal Zone Management**. In coastal states where an NWP has not previously received a state coastal zone management consistency concurrence, an individual state coastal zone management consistency concurrence must be obtained, or a presumption of concurrence must occur (see 33 CFR 330.4(d)). The district engineer or a State may require additional measures to ensure that the authorized activity is consistent with state coastal zone management requirements.

☐ **27. Regional and Case-By-Case Conditions**. The activity must comply with any regional conditions that may have been added by the Division Engineer (see 33 CFR 330.4(e)) and with any case specific conditions added by the Corps or by the state, Indian Tribe, or U.S. EPA in its section 401 Water Quality Certification, or by the state in its Coastal Zone Management Act consistency determination.

☐ **28. Use of Multiple Nationwide Permits**. The use of more than one NWP for a single and complete project is prohibited, except when the acreage loss of waters of the United States authorized by the NWPs does not exceed the acreage limit of the NWP with the highest specified acreage limit. For example, if a road crossing over tidal waters is constructed under NWP 14, with associated bank stabilization authorized by NWP 13, the maximum acreage loss of waters of the United States for the total project cannot exceed 1/3-acre.

☐ **29. Transfer of Nationwide Permit Verifications**. If the permittee sells the property associated with a nationwide permit verification, the permittee may transfer the nationwide permit verification to the new owner by submitting a letter to the appropriate Corps district office to validate the transfer. A copy of the nationwide permit verification must be attached to the letter, and the letter must contain the following statement and signature:

> "When the structures or work authorized by this nationwide permit are still in existence at the time the property is transferred, the terms and conditions of this nationwide permit, including any special conditions, will continue to be binding on the new owner(s) of the property. To validate the transfer of this nationwide permit and the associated liabilities associated with compliance with its terms and conditions, have the transferee sign and date below."
>
> ---
>
> (Transferee)
>
> ---
>
> (Date)

☐ **30. Compliance Certification**. Each permittee who receives an NWP verification letter from the Corps must provide a signed certification documenting completion of the authorized activity and any required compensatory mitigation. The success of any required permittee responsible mitigation, including the achievement of ecological performance standards, will be addressed separately by the district engineer. The Corps will provide the permittee the certification document with the NWP verification letter. The certification document will include:

> ☐ (a) A statement that the authorized work was done in accordance with the NWP authorization, including any general, regional, or activity-specific conditions;
>
> ☐ (b) A statement that the implementation of any required compensatory mitigation was completed in accordance with the permit conditions. If credits from a mitigation bank or in-lieu fee program are used to satisfy the compensatory mitigation requirements, the certification must include the documentation required by 33 CFR 332.3(l)(3) to confirm that the permittee secured the appropriate number and resource type of credits; and
>
> ☐ (c) The signature of the permittee certifying the completion of the work and mitigation.

☐ **31. Pre-Construction Notification.**

> ☐ (a) **Timing**. Where required by the terms of the NWP, the prospective permittee must notify the district engineer by submitting a pre-construction notification (PCN) as early as possible. The district engineer must determine if the PCN is complete within 30 calendar days of the date of receipt and, if the PCN is determined to be incomplete, notify the prospective permittee within that 30 day period to request the additional information necessary to make the PCN complete. The request must specify the information needed to make the PCN complete. As a general rule, district engineers will request additional information necessary to make the PCN complete only once. However, if the prospective permittee does not provide all of the requested information, then the district engineer will notify the prospective permittee that the PCN is still incomplete and the PCN review process will not commence until all of the requested information has been received by the district engineer. The prospective permittee shall not begin the activity until either:
>
> > ☐ (1) He or she is notified in writing by the district engineer that the activity may proceed under the NWP with any special conditions imposed by the district or division engineer; or
> >
> > ☐ (2) 45 calendar days have passed from the district engineer's receipt of the complete PCN and the prospective permittee has not received written notice from the district or division engineer. However, if the permittee was required to notify the Corps pursuant to general condition 18 that listed species or critical habitat might be affected or in the vicinity of the project, or to notify the Corps pursuant to general condition 20 that the activity may have the potential to cause effects to historic properties, the permittee cannot begin the activity until receiving written notification from the Corps that there is "no effect" on listed species or "no potential to cause effects" on historic properties, or that any consultation required under Section 7 of the Endangered Species Act (see 33 CFR 330.4(f)) and/or Section 106 of the National Historic Preservation (see 33 CFR 330.4(g)) has been completed. Also, work cannot begin under NWPs 21, 49, or 50 until the permittee has received written approval from the Corps. If the proposed activity requires a written waiver to exceed specified limits of an NWP, the permittee may not begin the activity until the district engineer issues the waiver. If the district or division engineer notifies the permittee in writing that an individual permit is required within 45 calendar days of receipt of a complete PCN, the permittee cannot begin the activity until an individual permit has been obtained. Subsequently, the permittee's right to proceed under the NWP may be modified, suspended, or revoked only in accordance with the procedure set forth in 33 CFR 330.5(d)(2)..
>
> ☐ (b) <u>Contents of Pre-Construction Notification</u>: The PCN must be in writing and include the following information:
>
> > ☐ (1) Name, address and telephone numbers of the prospective permittee;
> >
> > ☐ (2) Location of the proposed project;

☐ (3) A description of the proposed project; the project's purpose; direct and indirect adverse environmental effects the project would cause, including the anticipated amount of loss of water of the United States expected to result from the NWP activity, in acres, linear feet, or other appropriate unit of measure; any other NWP(s), regional general permit(s), or individual permit(s) used or intended to be used to authorize any part of the proposed project or any related activity. The description should be sufficiently detailed to allow the district engineer to determine that the adverse effects of the project will be minimal and to determine the need for compensatory mitigation. Sketches should be provided when necessary to show that the activity complies with the terms of the NWP. (Sketches usually clarify the project and when provided results in a quicker decision. Sketches should contain sufficient detail to provide an illustrative description of the proposed activity (e.g., a conceptual plan), but do not need to be detailed engineering plans);

☐ (4) The PCN must include a delineation of wetlands, other special aquatic sites, and other waters, such as lakes and ponds, and perennial, intermittent, and ephemeral streams, on the project site. Wetland delineations must be prepared in accordance with the current method required by the Corps. The permittee may ask the Corps to delineate the special aquatic sites and other waters on the project site, but there may be a delay if the Corps does the delineation, especially if the project site is large or contains many waters of the United States. Furthermore, the 45 day period will not start until the delineation has been submitted to or completed by the Corps, as appropriate;

☐ (5) If the proposed activity will result in the loss of greater than 1/10-acre of wetlands and a PCN is required, the prospective permittee must submit a statement describing how the mitigation requirement will be satisfied, or explaining why the adverse effects are minimal and why compensatory mitigation should not be required. As an alternative, the prospective permittee may submit a conceptual or detailed mitigation plan.

☐ (6) If any listed species or designated critical habitat might be affected or is in the vicinity of the project, or if the project is located in designated critical habitat, for non-Federal applicants the PCN must include the name(s) of those endangered or threatened species that might be affected by the proposed work or utilize the designated critical habitat that may be affected by the proposed work. Federal applicants must provide documentation demonstrating compliance with the Endangered Species Act; and

☐ (7) For an activity that may affect a historic property listed on, determined to be eligible for listing on, or potentially eligible for listing on, the National Register of Historic Places, for non-Federal applicants the PCN must state which historic property may be affected by the proposed work or include a vicinity map indicating the location of the historic property. Federal applicants must provide documentation demonstrating compliance with Section 106 of the National Historic Preservation Act.

☐ (c) Form of Pre-Construction Notification: he standard individual permit application form (Form ENG 4345) may be used, but the completed application form must clearly indicate that it is a PCN and must include all of the information required in paragraphs (b)(1) through (7) of this general condition. A letter containing the required information may also be used.

☐ (d) Agency Coordination:

☐ (1) The district engineer will consider any comments from Federal and state agencies concerning the proposed activity's compliance with the terms and conditions of the NWPs and the need for mitigation to reduce the project's adverse environmental effects to a minimal level.

☐ (2) For all NWP activities that require pre-construction notification and result in the loss of greater than 1/2-acre of waters of the United States, for NWP 21, 29, 39, 40, 42, 43, 44, 50, 51, and 52 activities that require pre-construction notification and will result in the loss of greater than 300 linear feet of intermittent and ephemeral stream bed, and for all NWP 48 activities that require pre-construction notification, the district engineer will immediately provide (e.g., via email, facsimile transmission, overnight mail, or other expeditious manner) a copy of the complete PCN to the appropriate Federal or state offices (U.S. FWS, state natural resource or water quality agency, EPA, State Historic Preservation Officer (SHPO) or Tribal Historic Preservation Office (THPO), and, if appropriate, the NMFS). With the exception of NWP 37, these agencies will have 10 calendar days from the date the material is transmitted to telephone or fax the district engineer notice that they intend to provide substantive, site-specific comments. The comments must explain why the agency believes the adverse effects will be more than minimal. If so contacted by an agency, the district engineer will wait an additional 15 calendar days before making a decision on the pre-construction notification. The district engineer will fully consider agency comments received within the specified time frame concerning the proposed activity's compliance with the terms and conditions of the NWPs, including the need for mitigation to ensure the net adverse environmental effects to the aquatic environment of the proposed activity are minimal. The district engineer will provide no response to the resource agency, except as provided below. The district engineer will indicate in the administrative record associated with each pre-construction notification that the resource agencies' concerns were considered. For NWP 37, the emergency watershed protection and rehabilitation activity may proceed immediately in cases where

there is an unacceptable hazard to life or a significant loss of property or economic hardship will occur. The district engineer will consider any comments received to decide whether the NWP 37 authorization should be modified, suspended, or revoked in accordance with the procedures at 33 CFR 330.5.

☐ (3) In cases of where the prospective permittee is not a Federal agency, the district engineer will provide a response to NMFS within 30 calendar days of receipt of any Essential Fish Habitat conservation recommendations, as required by Section 305(b)(4)(B) of the Magnuson-Stevens Fishery Conservation and Management Act.

☐ (4) Applicants are encouraged to provide the Corps with either electronic files or multiple copies of pre-construction notifications to expedite agency coordination.

C. District Engineer's Decision

☐ 1. In reviewing the PCN for the proposed activity, the district engineer will determine whether the activity authorized by the NWP will result in more than minimal individual or cumulative adverse environmental effects or may be contrary to the public interest. For a linear project, this determination will include an evaluation of the individual crossings to determine whether they individually satisfy the terms and conditions of the NWP(s), as well as the cumulative effects caused by all of the crossings authorized by NWP. If an applicant requests a waiver of the 300 linear foot limit on impacts to intermittent or ephemeral streams or of an otherwise applicable limit, as provided for in NWPs 13, 21, 29, 36, 39, 40, 42, 43, 44, 50, 51 or 52, the district engineer will only grant the waiver upon a written determination that the NWP activity will result in minimal adverse effects. When making minimal effects determinations the district engineer will consider the direct and indirect effects caused by the NWP activity. The district engineer will also consider site specific factors, such as the environmental setting in the vicinity of the NWP activity, the type of resource that will be affected by the NWP activity, the functions provided by the aquatic resources that will be affected by the NWP activity, the degree or magnitude to which the aquatic resources perform those functions, the extent that aquatic resource functions will be lost as a result of the NWP activity (e.g., partial or complete loss), the duration of the adverse effects (temporary or permanent), the importance of the aquatic resource functions to the region (e.g., watershed or ecoregion), and mitigation required by the district engineer. If an appropriate functional assessment method is available and practicable to use, that assessment method may be used by the district engineer to assist in the minimal adverse effects determination. The district engineer may add case-specific special conditions to the NWP authorization to address site-specific environmental concerns.

☐ 2. If the proposed activity requires a PCN and will result in a loss of greater than 1/10- acre of wetlands, the prospective permittee should submit a mitigation proposal with the PCN. Applicants may also propose compensatory mitigation for projects with smaller impacts. The district engineer will consider any proposed compensatory mitigation the applicant has included in the proposal in determining whether the net adverse environmental effects to the aquatic environment of the proposed activity are minimal. The compensatory mitigation proposal may be either conceptual or detailed. If the district engineer determines that the activity complies with the terms and conditions of the NWP and that the adverse effects on the aquatic environment are minimal, after considering mitigation, the district engineer will notify the permittee and include any activity-specific conditions in the NWP verification the district engineer deems necessary. Conditions for compensatory mitigation requirements must comply with the appropriate provisions at 33 CFR 332.3(k). The district engineer must approve the final mitigation plan before the permittee commences work in waters of the United States, unless the district engineer determines that prior approval of the final mitigation plan is not practicable or not necessary to ensure timely completion of the required compensatory mitigation. If the prospective permittee elects to submit a compensatory mitigation plan with the PCN, the district engineer will expeditiously review the proposed compensatory mitigation plan. The district engineer must review the proposed compensatory mitigation plan within 45 calendar days of receiving a complete PCN and determine whether the proposed mitigation would ensure no more than minimal adverse effects on the aquatic environment. If the net adverse effects of the project on the aquatic environment (after consideration of the compensatory mitigation proposal) are determined by the district engineer to be minimal, the district engineer will provide a timely written response to the applicant. The response will state that the project can proceed under the terms and conditions of the NWP, including any activity-specific conditions added to the NWP authorization by the district engineer.

☐ 3. If the district engineer determines that the adverse effects of the proposed work are more than minimal, then the district engineer will notify the applicant either: (a) That the project does not qualify for authorization under the NWP and instruct the applicant on the procedures to seek authorization under an individual permit; (b) that the project is authorized under the NWP subject to the applicant's submission of a mitigation plan that would reduce the adverse effects on the aquatic environment to the minimal level; or (c) that the project is authorized under the NWP with specific modifications or conditions. Where the district engineer determines that mitigation is required to ensure no more than minimal adverse effects occur to the aquatic environment, the activity will be authorized within the 45-day PCN period, with activity-specific conditions that state the mitigation requirements. The authorization will include the necessary conceptual or detailed mitigation or a requirement that the applicant submit a mitigation plan that would reduce the adverse effects on the aquatic environment to the minimal level. When mitigation is required, no work in waters of the United States may occur until the district engineer has approved a specific mitigation plan or has determined that prior approval of a final mitigation plan is not practicable or not necessary to ensure timely completion of the required compensatory mitigation.

D. Further Information

1. District Engineers have authority to determine if an activity complies with the terms and conditions of an NWP.

2. NWPs do not obviate the need to obtain other federal, state, or local permits, approvals, or authorizations required by law.

3. NWPs do not grant any property rights or exclusive privileges.

4. NWPs do not authorize any injury to the property or rights of others.

5. NWPs do not authorize interference with any existing or proposed Federal project.

E. **Definitions**

Best management practices (BMPs): Policies, practices, procedures, or structures implemented to mitigate the adverse environmental effects on surface water quality resulting from development. BMPs are categorized as structural or non-structural.

Compensatory mitigation: The restoration (re-establishment or rehabilitation), establishment (creation), enhancement, and/or in certain circumstances preservation of aquatic resources for the purposes of offsetting unavoidable adverse impacts which remain after all appropriate and practicable avoidance and minimization has been achieved. Currently serviceable: Useable as is or with some maintenance, but not so degraded as to essentially require reconstruction.

Direct effects: Effects that are caused by the activity and occur at the same time and place.

Discharge: The term "discharge" means any discharge of dredged or fill material.

Enhancement: The manipulation of the physical, chemical, or biological characteristics of an aquatic resource to heighten, intensify, or improve a specific aquatic resource function(s). Enhancement results in the gain of selected aquatic resource function(s), but may also lead to a decline in other aquatic resource function(s). Enhancement does not result in a gain in aquatic resource area.

Ephemeral stream: An ephemeral stream has flowing water only during, and for a short duration after, precipitation events in a typical year. Ephemeral stream beds are located above the water table year-round. Groundwater is not a source of water for the stream. Runoff from rainfall is the primary source of water for stream flow.

Establishment (creation): The manipulation of the physical, chemical, or biological characteristics present to develop an aquatic resource that did not previously exist at an upland site. Establishment results in a gain in aquatic resource area.

High Tide Line: The line of intersection of the land with the water's surface at the maximum height reached by a rising tide. The high tide line may be determined, in the absence of actual data, by a line of oil or scum along shore objects, a more or less continuous deposit of fine shell or debris on the foreshore or berm, other physical markings or characteristics, vegetation lines, tidal gages, or other suitable means that delineate the general height reached by a rising tide. The line encompasses spring high tides and other high tides that occur with periodic frequency but does not include storm surges in which there is a departure from the normal or predicted reach of the tide due to the piling up of water against a coast by strong winds such as those accompanying a hurricane or other intense storm.

Historic Property: Any prehistoric or historic district, site (including archaeological site), building, structure, or other object included in, or eligible for inclusion in, the National Register of Historic Places maintained by the Secretary of the Interior. This term includes artifacts, records, and remains that are related to and located within such properties. The term includes properties of traditional religious and cultural importance to an Indian tribe or Native Hawaiian organization and that meet the National Register criteria (36 CFR part 60).

Independent utility: A test to determine what constitutes a single and complete non-linear project in the Corps regulatory program. A project is considered to have independent utility if it would be constructed absent the construction of other projects in the project area. Portions of a multi-phase project that depend upon other phases of the project do not have independent utility. Phases of a project that would be constructed even if the other phases were not built can be considered as separate single and complete projects with independent utility.

Indirect effects: Effects that are caused by the activity and are later in time or farther removed in distance, but are still reasonably foreseeable.

Intermittent stream: An intermittent stream has flowing water during certain times of the year, when groundwater provides water for stream flow. During dry periods, intermittent streams may not have flowing water. Runoff from rainfall is a supplemental source of water for stream flow.

Loss of waters of the United States: Waters of the United States that are permanently adversely affected by filling, flooding, excavation, or drainage because of the regulated activity. Permanent adverse effects include permanent discharges of dredged or fill material that change an aquatic area to dry land, increase the bottom elevation of a waterbody, or change the use of a waterbody. The acreage of loss of waters of the United States is a threshold measurement of the impact to jurisdictional waters for determining whether a project may qualify for an NWP; it is not a net threshold that is calculated after considering compensatory mitigation that may be used to offset losses of aquatic functions and services. The loss of stream bed includes the linear feet of stream bed that is filled or excavated. Waters of the United States temporarily filled, flooded, excavated, or drained, but restored to pre-construction contours and elevations after construction, are not included in the measurement of loss of waters of the United States. Impacts resulting from activities eligible for exemptions under Section 404(f) of the Clean Water Act are not considered when calculating the loss of waters of the United States.

Non-tidal wetland: A non-tidal wetland is a wetland that is not subject to the ebb and flow of tidal waters. The definition of a wetland can be found at 33 CFR 328.3(b). Non-tidal wetlands contiguous to tidal waters are located landward of the high tide line (i.e., spring high tide line).

Open water: For purposes of the NWPs, an open water is any area that in a year with normal patterns of precipitation has water flowing or standing above ground to the extent that an ordinary high water mark can be determined. Aquatic vegetation within the area of standing or flowing water is either non-emergent, sparse, or absent. Vegetated shallows are considered to be open waters. Examples of "open waters" include rivers, streams, lakes, and ponds.

Ordinary High Water Mark: An ordinary high water mark is a line on the shore established by the fluctuations of water and indicated by physical characteristics, or by other appropriate means that consider the characteristics of the surrounding areas (see 33 CFR 328.3(e)).

Perennial stream: A perennial stream has flowing water year-round during a typical year. The water table is located above the stream bed for most of the year. Groundwater is the primary source of water for stream flow. Runoff from rainfall is a supplemental source of water for stream flow.

Practicable: Available and capable of being done after taking into consideration cost, existing technology, and logistics in light of overall project purposes.

Pre-construction notification: A request submitted by the project proponent to the Corps for confirmation that a particular activity is authorized by nationwide permit. The request may be a permit application, letter, or similar document that includes information about the proposed work and its anticipated environmental effects. Pre-construction notification may be required by the terms and conditions of a nationwide permit, or by regional conditions. A pre-construction notification may be voluntarily submitted in cases where pre-construction notification is not required and the project proponent wants confirmation that the activity is authorized by nationwide permit.

Preservation: The removal of a threat to, or preventing the decline of, aquatic resources by an action in or near those aquatic resources. This term includes activities commonly associated with the protection and maintenance of aquatic resources through the implementation of appropriate legal and physical mechanisms. Preservation does not result in a gain of aquatic resource area or functions.

Re-establishment: The manipulation of the physical, chemical, or biological characteristics of a site with the goal of returning natural/historic functions to a former aquatic resource. Re-establishment results in rebuilding a former aquatic resource and results in a gain in aquatic resource area and functions.

Rehabilitation: The manipulation of the physical, chemical, or biological characteristics of a site with the goal of repairing natural/historic functions to a degraded aquatic resource. Rehabilitation results in a gain in aquatic resource function, but does not result in a gain in aquatic resource area.

Restoration: The manipulation of the physical, chemical, or biological characteristics of a site with the goal of returning natural/historic functions to a former or degraded aquatic resource. For the purpose of tracking net gains in aquatic resource area, restoration is divided into two categories: re-establishment and rehabilitation.

Riffle and pool complex: Riffle and pool complexes are special aquatic sites under the 404(b)(1) Guidelines. Riffle and pool complexes sometimes characterize steep gradient sections of streams. Such stream sections are recognizable by their hydraulic characteristics. The rapid movement of water over a course substrate in riffles results in a rough flow, a turbulent surface, and high dissolved oxygen levels in the water. Pools are deeper areas associated with riffles. A slower stream velocity, a streaming flow, a smooth surface, and a finer substrate characterize pools.

Riparian areas: Riparian areas are lands adjacent to streams, lakes, and estuarine-marine shorelines. Riparian areas are transitional between terrestrial and aquatic ecosystems, through which surface and subsurface hydrology connects riverine, lacustrine, estuarine, and marine waters with their adjacent wetlands, non-wetland waters, or uplands. Riparian areas provide a variety of ecological functions and services and help improve or maintain local water quality. (See general condition 23.)

Shellfish seeding: The placement of shellfish seed and/or suitable substrate to increase shellfish production. Shellfish seed consists of immature individual shellfish or individual shellfish attached to shells or shell fragments (i.e., spat on shell). Suitable substrate may consist of shellfish shells, shell fragments, or other appropriate materials placed into waters for shellfish habitat.

Single and complete linear project: A linear project is a project constructed for the purpose of getting people, goods, or services from a point of origin to a terminal point, which often involves multiple crossings of one or more waterbodies at separate and distant locations. The term "single and complete project" is defined as that portion of the total linear project proposed or accomplished by one owner/developer or partnership or other association of owners/developers that includes all crossings of a single water of the United States (i.e., a single waterbody) at a specific location. For linear projects crossing a single or multiple waterbodies several times at separate and distant locations, each crossing is considered a single and complete project for purposes of NWP authorization. However, individual channels in a braided stream or river, or individual arms of a large, irregularly shaped wetland or lake, etc., are not separate waterbodies, and crossings of such features cannot be considered separately.

Single and complete non-linear project: For non-linear projects, the term "single and complete project" is defined at 33 CFR 330.2(i) as the total project proposed or accomplished by one owner/developer or partnership or other association of owners/developers. A single and complete non-linear project must have independent utility (see definition of "independent utility"). Single and complete non-linear projects may not be "piecemealed" to avoid the limits in an NWP authorization.

Stormwater management: Stormwater management is the mechanism for controlling stormwater runoff for the purposes of reducing downstream erosion, water quality degradation, and flooding and mitigating the adverse effects of changes in land use on the aquatic environment.

Stormwater management facilities: Stormwater management facilities are those facilities, including but not limited to, stormwater retention and detention ponds and best management practices, which retain water for a period of time to control runoff and/or improve the quality (i.e., by reducing the concentration of nutrients, sediments, hazardous substances and other pollutants) of stormwater runoff.

Stream bed: The substrate of the stream channel between the ordinary high water marks. The substrate may be bedrock or inorganic particles that range in size from clay to boulders. Wetlands contiguous to the stream bed, but outside of the ordinary high water marks, are not considered part of the stream bed.

Stream channelization: The manipulation of a stream's course, condition, capacity, or location that causes more than minimal interruption of normal stream processes. A channelized stream remains a water of the United States. Structure: An object that is arranged in a definite pattern of organization. Examples of structures include, without limitation, any pier, boat dock, boat ramp, wharf, dolphin, weir, boom, breakwater, bulkhead, revetment, riprap, jetty, artificial island, artificial reef, permanent mooring structure, power transmission line, permanently moored floating vessel, piling, aid to navigation, or any other manmade obstacle or obstruction.

Tidal wetland: A tidal wetland is a wetland (i.e., water of the United States) that is inundated by tidal waters. The definitions of a wetland and tidal waters can be found at 33 CFR 328.3(b) and 33 CFR 328.3(f), respectively. Tidal waters rise and fall in a predictable and measurable rhythm or cycle due to the gravitational pulls of the moon and sun. Tidal waters end where the rise and fall of the water surface can no longer be practically measured in a predictable rhythm due to masking by other waters, wind, or other effects. Tidal wetlands are located channelward of the high tide line, which is defined at 33 CFR 328.3(d).

Vegetated shallows: Vegetated shallows are special aquatic sites under the 404(b)(1) Guidelines. They are areas that are permanently inundated and under normal circumstances have rooted aquatic vegetation, such as seagrasses in marine and estuarine systems and a variety of vascular rooted plants in freshwater systems.

Waterbody: For purposes of the NWPs, a waterbody is a jurisdictional water of the United States. If a jurisdictional wetland is adjacent – meaning bordering, contiguous, or neighboring – to a waterbody determined to be a water of the United States under 33 CFR 328.3(a)(1)-(6), that waterbody and its adjacent wetlands are considered together as a single aquatic unit (see 33 CFR 328.4(c)(2)). Examples of "waterbodies" include streams, rivers, lakes, ponds, and wetlands.

Sacramento District Nationwide Permit Regional Conditions for California, excluding the Lake Tahoe Basin

1.* When pre-construction notification (PCN) is required, the permittee shall notify the U.S. Army Corps of Engineers, Sacramento District (Corps) in accordance with General Condition 31 using either the South Pacific Division Preconstruction Notification (PCN) Checklist or a signed application form (ENG Form 4345) with an attachment providing information on compliance with all of the General and Regional Conditions. In addition, the PCN shall include:

a. A written statement describing how the activity has been designed to avoid and minimize adverse effects, both temporary and permanent, to waters of the United States;

b. Drawings, including plan and cross-section views, clearly depicting the location, size and dimensions of the proposed activity, as well as the location of delineated waters of the U.S. on the site. The drawings shall contain a title block, legend and scale, amount (in cubic yards) and area (in acres) of fill in Corps jurisdiction, including both permanent and temporary fills/structures. The ordinary high water mark or, if tidal waters, the mean high water mark and high tide line, should be shown (in feet), based on National Geodetic Vertical Datum (NGVD) or other appropriate referenced elevation. All drawings for activities located within the boundaries of the Los Angeles District shall comply with the September 15, 2010 Special Public Notice: *Map and Drawing Standards for the Los Angeles District Regulatory Division*, (available on the Los Angeles District Regulatory Division website at: www.spl.usace.army.mil/regulatory/); and

c. Numbered and dated pre-project color photographs showing a representative sample of waters proposed to be impacted on the site, and all waters of the U.S. proposed to be avoided on and immediately adjacent to the activities site. The compass angle and position of each photograph shall be identified on the plan-view drawing(s) required in subpart b of this Regional Condition.

2. For all Nationwide Permits (NWPs), the permittee shall submit a PCN in accordance with General Condition 31 and Regional Condition 1, in the following circumstances:

a. For all activities that would result in the discharge of fill material into any vernal pool;

b. For any activity in the Primary and Secondary Zones of the Legal Delta, the Sacramento River, the San Joaquin River, and the immediate tributaries of these waters;

c. For all crossings of perennial waters and intermittent waters;

d. For all activities proposed within 100 feet of the point of discharge of a known natural spring source, which is any location where ground water emanates from a point in the ground excluding seeps or other discharges which lack a defined channel; and

e.* For all activities located in areas designated as Essential Fish Habitat (EFH) by the Pacific Fishery Management Council (i.e., all tidally influenced areas - Federal Register dated March 12, 2007 (72 FR 11092)), in which case the PCN shall include an EFH assessment and extent of proposed impacts to EFH. Examples of EFH habitat assessments can be found at: http://www.swr.noaa.gov/efh.htm.

3. The permittee shall record the NWP verification with the Registrar of Deeds or other appropriate official charged with the responsibility for maintaining records of title to or interest in real property for areas (1) designated to be preserved as part of compensatory mitigation for authorized impacts, including any associated covenants or restrictions, or (2) where boat ramps or docks, marinas, piers, and permanently moored vessels will be constructed or placed in or adjacent to navigable waters. The recordation shall also include a map showing the surveyed location of the preserved area or authorized structure.

4. For all waters of the U.S. proposed to be avoided on a site, unless determined to be impracticable by the Corps, the permittee shall:

a. Establish and maintain, in perpetuity, a preserve containing all avoided waters of the U.S. to ensure that the functions of the aquatic environment are protected;

b. Place all avoided waters of the U.S. and any upland buffers into a separate parcel prior to discharging dredge or fill material into waters of the U.S., and

c. Establish permanent legal protection for all preserve parcels, following Corps approval of the legal instrument;

If the Corps determines that it is impracticable to require permanent preservation of the avoided waters, additional mitigation may be required in order to compensate for indirect impacts to the waters of the U.S.

5. For all temporary fills, the PCN shall include a description of the proposed temporary fill, including the type and amount of material to be placed, the area proposed to be impacted, and the proposed plan for restoration of the temporary fill area to pre-activities contours and conditions, including a plan for the re-vegetation of the temporary fill area, if necessary. In addition, the PCN shall include the reason(s) why avoidance of temporary impacts is not practicable.

In addition, for all activities resulting in temporary fill within waters of the U.S., the permittee shall:

a. Utilize material consisting of clean and washed gravel. For temporary fills within waters of the U.S. supporting anadromous fisheries, spawning quality gravel shall be used, where practicable, as determined by the Corps, after consultation with appropriate Federal and state fish and wildlife agencies;

b. Place a horizontal marker (e.g. fabric, certified weed free straw, etc.) to delineate the existing ground elevation of the waters temporarily filled during construction; and

c. Remove all temporary fill within 30 days following completion of construction activities.

6. In addition to the requirements of General Condition 2, unless determined to be impracticable by the Corps, the following criteria shall apply to all road crossings:

a.* For all activities in waters of the U.S. that are suitable habitat for Federally-listed fish species, the permittee shall design all road crossings to ensure that the passage and/or spawning of fish is not hindered. In these areas, the permittee shall employ bridge designs that span the stream or river, including pier- or pile-supported spans, or designs that use a bottomless arch culvert with a natural stream bed;

b. Road crossings shall be designed to ensure that no more than minor impacts would occur to fish and wildlife passage or expected high flows, following the criteria listed in Regional Condition 6(a). Culverted crossings that do not utilize a bottomless arch culvert with a natural stream bed may be authorized for waters that do not contain suitable habitat for Federally listed fish species, if it can be demonstrated and is specifically determined by the Corps, that such crossing will result in no more than minor impacts to fish and wildlife passage or expected high flows;

c. No construction activities shall occur within standing or flowing waters. For ephemeral or intermittent streams, this may be accomplished through construction during the dry season. In perennial

* Regional Condition developed jointly between Sacramento District, Los Angeles District, and San Francisco District.

streams, this may be accomplished through dewatering of the work area. Any proposed dewatering plans must be approved, in writing, by the Corps prior to commencement of construction activities; and

d. All bank stabilization activities associated with a road crossing shall comply with Regional Condition 19.

In no case shall stream crossings result in a reduction in the pre-construction bankfull width or depth of perennial streams or negatively alter the flood control capacity of perennial streams.

7.* For activities in which the Corps designates another Federal agency as the lead for compliance with Section 7 of the Endangered Species Act (ESA) of 1973 as amended, pursuant to 50 CFR Part 402.07, Section 305(b)(4)(B) of the Magnuson-Stevens Fishery Conservation and Management Act (EFH), pursuant to 50 CFR 600.920(b) and/or Section 106 of the National Historic Preservation Act (NHPA) of 1966, as amended, pursuant to 36 CFR 800.2(a)(2), the lead Federal agency shall provide all relevant documentation to the Corps demonstrating any previous consultation efforts, as it pertains to the Corps Regulatory permit area (for Section 7 and EFH compliance) and the Corps Regulatory area of potential effect (APE) (for Section 106 compliance). For activities requiring a PCN, this information shall be submitted with the PCN. If the Corps does not designate another Federal agency as the lead for ESA, EFH and/or NHPA, the Corps will initiate consultation for compliance, as appropriate.

8. For all NWPs which require a PCN, the permittee shall submit the following additional information with the compliance certificate required under General Condition 30:

a. As-built drawings of the work conducted on the project site and any on-site and/or off-site compensatory mitigation, preservation, and/or avoidance area(s). The as-builts shall include a plan-view drawing of the location of the authorized work footprint (as shown on the permit drawings), with an overlay of the work as constructed in the same scale as the permit drawings. The drawing shall show all areas of ground disturbance, wetland impacts, structures, and the boundaries of any on-site and/or off-site mitigation or avoidance areas. Please note that any deviations from the work as authorized, which result in additional impacts to waters of the U.S., must be coordinated with the appropriate Corps office prior to impacts; and

b. Numbered and dated post-construction color photographs of the work conducted within a representative sample of the impacted waters of the U.S., and within all avoided waters of the U.S. on and immediately adjacent to the proposed activities area. The compass angle and position of all photographs shall be similar to the pre-construction color photographs required in Regional Condition 1(c) and shall be identified on the plan-view drawing(s) required in subpart a of this Regional Condition.

9. For all activities requiring permittee responsible mitigation, the permittee shall develop and submit to the Corps for review and approval, a final comprehensive mitigation and monitoring plan for all permittee responsible mitigation prior to commencement of construction activities within waters of the U.S. The plan shall include the mitigation location and design drawings, vegetation plans, including target species to be planted, and final success criteria, presented in the format of the *Sacramento District's Habitat Mitigation and Monitoring Proposal Guidelines*, dated December 30, 2004, and in compliance with the requirements of 33 CFR 332.

10.* The permittee shall complete the construction of any compensatory mitigation required by special condition(s) of the NWP verification before or concurrent with commencement of construction of the authorized activity, except when specifically determined to be impracticable by the Corps. When mitigation involves use of a mitigation bank or in-lieu fee program, the permittee shall submit proof of payment to the Corps prior to commencement of construction of the authorized activity.

* Regional Condition developed jointly between Sacramento District, Los Angeles District, and San Francisco District.

11. The permittee is responsible for all authorized work and ensuring that all contractors and workers are made aware and adhere to the terms and conditions of the permit authorization. The permittee shall ensure that a copy of the permit authorization and associated drawings are available and visible for quick reference at the site until all construction activities are completed.

12. The permittee shall clearly identify the limits of disturbance in the field with highly visible markers (e.g. construction fencing, flagging, silt barriers, etc.) prior to commencement of construction activities within waters of the U.S. The permittee shall maintain such identification properly until construction is completed and the soils have been stabilized. The permittee is prohibited from any activity (e.g. equipment usage or materials storage) that impacts waters of the U.S. outside of the permit limits (as shown on the permit drawings).

13. For all activities in which a PCN is required, the permittee shall notify the appropriate district office of the start date for the authorized work within 10 days prior to initiation of construction activities.

14. The permittee shall allow Corps representatives to inspect the authorized activity and any mitigation areas at any time deemed necessary to determine compliance with the terms and conditions of the NWP verification. The permittee will be notified in advance of an inspection.

15. For all activities located in the Mather Core Recovery Area in Sacramento County, as identified in the U.S. Fish and Wildlife Service's *Recovery Plan for Vernal Pool Ecosystems of California and Southern Oregon* dated December 15, 2005, NWPs 14, 18, 23, 29, 39, 40, 42, 43 and 44 are revoked from use in vernal pools that may contain habitat for Federally-listed threatened and/or endangered vernal pool species.

16. For activities located in the Primary or Secondary Zone of the Legal Delta, NWPs 29 and 39 are revoked.

17. For all activities within the Secondary Zone of the Legal Delta, the permittee shall conduct compensatory mitigation for unavoidable impacts within the Secondary Zone of the Legal Delta.

18. For NWP 12: Permittees shall ensure the construction of utility lines does not result in the draining of any water of the U.S., including wetlands. This may be accomplished through the use of clay blocks, bentonite, or other suitable material (as approved by the Corps) to seal the trench. For utility line trenches, during construction, the permittee shall remove and stockpile, separately, the top 6 – 12 inches of topsoil. Following installation of the utility line(s), the permittee shall replace the stockpiled topsoil on top and seed the area with native vegetation. The permittee shall submit a PCN for utility line activities in the following circumstances:

a. The utility line crossing would result in a discharge of dredged and/or fill material into perennial waters, intermittent waters, wetlands, mudflats, vegetated shallows, riffle and pool complexes, sanctuaries and refuges or coral reefs;

b. The utility line activity would result in a discharge of dredged and/or fill material into greater than 100 linear feet of ephemeral waters of the U.S.;

c. The utility line installation would include the construction of a temporary or permanent access road, substation or foundation within waters of the U.S.; or

* Regional Condition developed jointly between Sacramento District, Los Angeles District, and San Francisco District.

d. The proposed activity would not involve the restoration of all utility line trenches to pre-project contours and conditions within 30 days following completion of construction activities.

19. For NWP 13 and 14: All bank stabilization activities shall involve either the sole use of native vegetation or other bioengineered design techniques (e.g. willow plantings, root wads, large woody debris, etc.), or a combination of hard-armoring (e.g. rip-rap) and native vegetation or bioengineered design techniques, unless specifically determined to be impracticable by the Corps. The permittee shall submit a PCN for any bank stabilization activity that involves hard-armoring or the placement of any non-vegetated or non-bioengineered technique below the ordinary high water mark or, if tidal waters, the high tide line of waters of the U.S. The request to utilize non-vegetated techniques must include information on why the sole use of vegetated techniques is not practicable.

20. For NWP 23: The permittee shall submit a PCN for all activities proposed for this NWP, in accordance with General Condition 31 and Regional Condition 1. The PCN shall include a copy of the signed Categorical Exclusion document and final agency determinations regarding compliance with ESA, EFH and NHPA, in accordance with General Conditions 18 and 20 and Regional Condition 7.

21. For NWP 27: The permittee shall submit a PCN for aquatic habitat restoration, establishment, and enhancement activities in the following circumstances:

a. The restoration, establishment or enhancement activity would result in a discharge of dredged and/or fill material into perennial waters, intermittent waters, wetlands, mudflats, vegetated shallows, riffle and pool complexes, sanctuaries and refuges or coral reefs; or

b. The restoration, establishment or enhancement activity would result in a discharge of dredged and/or fill material into greater than 100 linear feet of ephemeral waters of the U.S.

22. For NWPs 29 and 39: The channelization or relocation of intermittent or perennial drainages is not authorized, except when, as determined by the Corps, the relocation would result in a net increase in functions of the aquatic ecosystem within the watershed.

23.* Any requests to waive the 300 linear foot limitation for intermittent and ephemeral streams for NWPs 21, 29, 39, 40, 42, 43, 44, 50, 51 and 52, or to waive the 500 linear foot limitation along the bank for NWP 13, must include the following:

a. A narrative description of the stream. This should include known information on: volume and duration of flow; the approximate length, width, and depth of the waterbody and characteristics observed associated with an Ordinary High Water Mark (e.g. bed and bank, wrack line or scour marks); a description of the adjacent vegetation community and a statement regarding the wetland status of the adjacent areas (i.e. wetland, non-wetland); surrounding land use; water quality; issues related to cumulative impacts in the watershed, and; any other relevant information;

b. An analysis of the proposed impacts to the waterbody, in accordance with General Condition 31 and Regional Condition 1;

c. Measures taken to avoid and minimize losses to waters of the U.S., including other methods of constructing the proposed activity(s); and

d. A compensatory mitigation plan describing how the unavoidable losses are proposed to be offset, in accordance with 33 CFR 332.

* Regional Condition developed jointly between Sacramento District, Los Angeles District, and San Francisco District.

24. For NWPs 29, 39, 40, 42, and 43: The permittee shall establish and maintain upland vegetated buffers in perpetuity, unless specifically determined to be impracticable by the Corps, next to all preserved open waters, streams and wetlands including created, restored, enhanced or preserved waters of the U.S., consistent with General Condition 23(f). Except in unusual circumstances, as determined by the Corps, vegetated buffers shall be at least 50 feet in width.

25. For NWP 46: The discharge shall not cause the loss of greater than 0.5 acres of waters of the United States or the loss of more than 300 linear feet of ditch, unless specifically waived in writing by the Corps.

26. All NWPs except 3, 6, 20, 27, 32, and 38 are revoked for activities in histosols, fens, bogs and peatlands and in wetlands contiguous with fens. Fens are defined as slope wetlands with a histic epipedon that are hydrologically supported by groundwater. Fens are normally saturated throughout the growing season, although they may not be during drought conditions. For NWPs 3, 6, 20, 27, 32, and 38, the permittee shall submit a PCN to the Corps in accordance with General Condition 31 and Regional Condition 1. This condition does not apply to NWPs 1, 2, 8, 9, 10, 11, 24, 28, 35 or 36, as these NWPs either apply to Section 10 only activities or do not authorize impacts to special aquatic sites.

* Regional Condition developed jointly between Sacramento District, Los Angeles District, and San Francisco District.

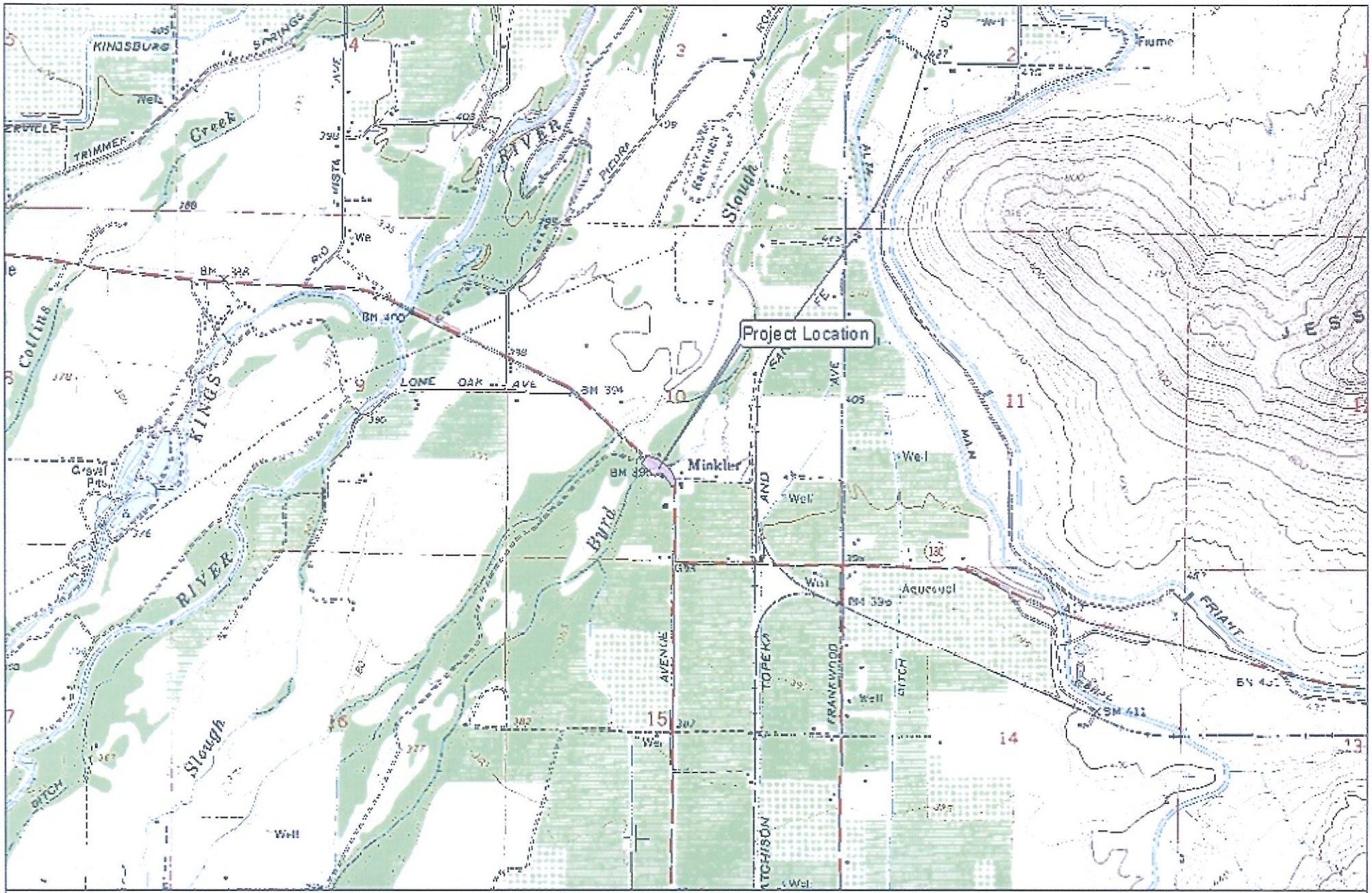

Kings River Overflow Bridge Replacement EA 06-0H1700, State Route 180, Fresno County, PM 77.1-77.2
Wahtoke USGS 7.5 Minute Quadrangle, T14S, R 23E, Section 10
WGS 84 Latitude 36.724452 Longitude -119.458977

0 0.25 0.5 1 Miles

1 inch = 2,000 feet
Absolute Scale 1:24,000

Legend
Study Area

Caltrans

Kings River Overflow Bridge Replacement
Wetland and Waters Impacts

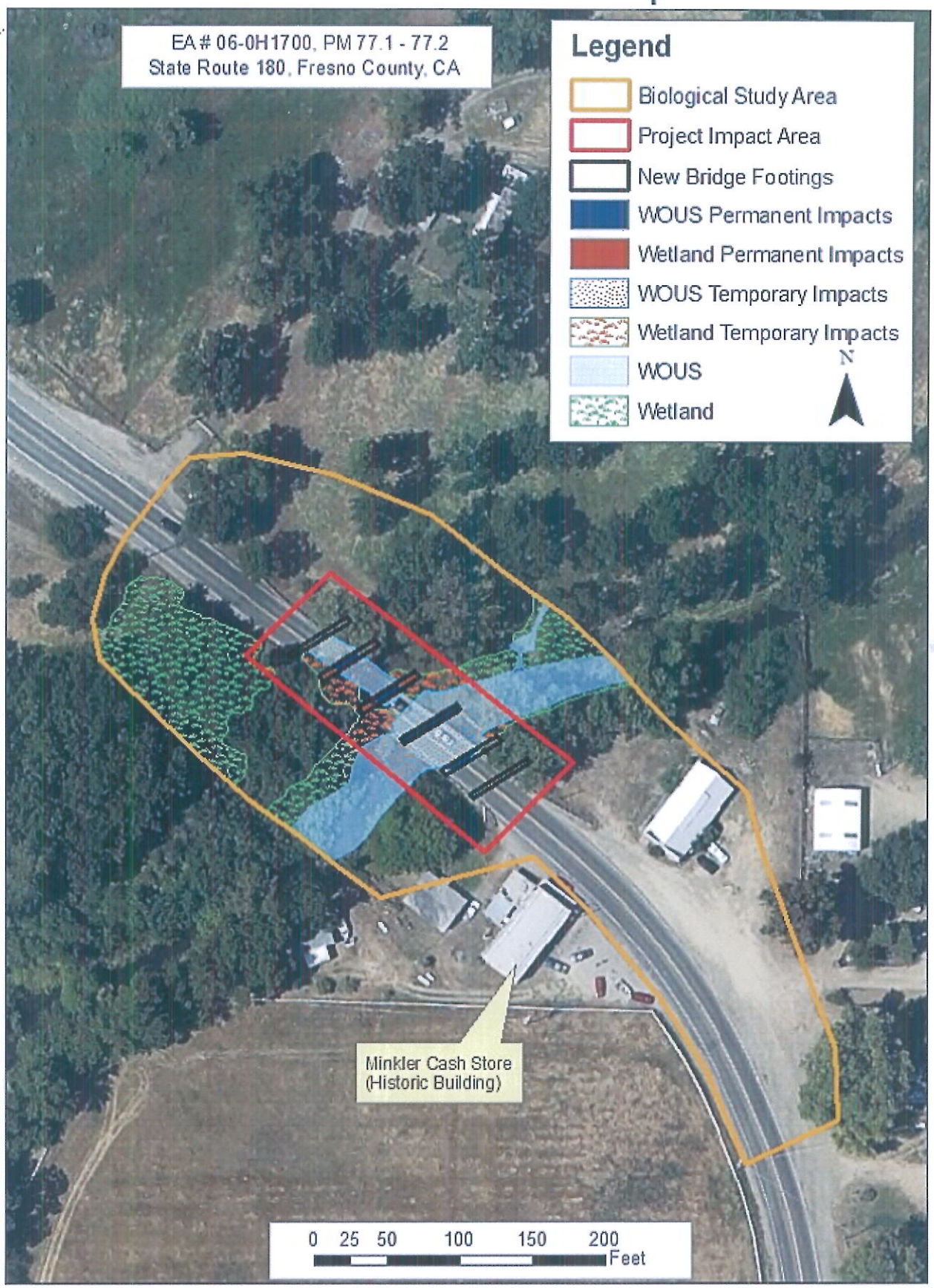

DIST	COUNTY	ROUTE	POST MILES TOTAL PROJECT	SHEET No.	TOTAL SHEETS
06	FRE	180	77.1/77.2		

REGISTERED CIVIL ENGINEER DATE

PLANS APPROVAL DATE

The State of California or its officers or agents shall not be responsible for the accuracy or completeness of electronic copies of this plan sheet.

REGISTERED PROFESSIONAL ENGINEER PREM P. RIMAL No. C61422 Exp. 6/30/13 CIVIL STATE OF CALIFORNIA

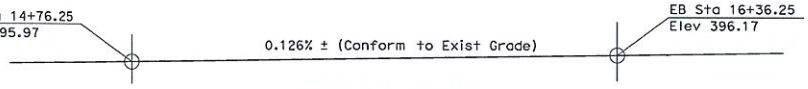

PROFILE GRADE
No Scale

LEGEND

- New Structure
- Existing Structure
- Bridge Removal
- Closure Pour
- Direction of Flow
- Direction of Travel

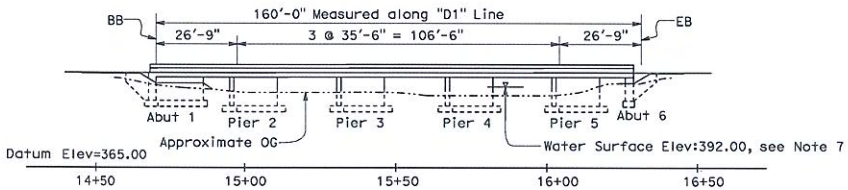

ELEVATION
1" = 20'

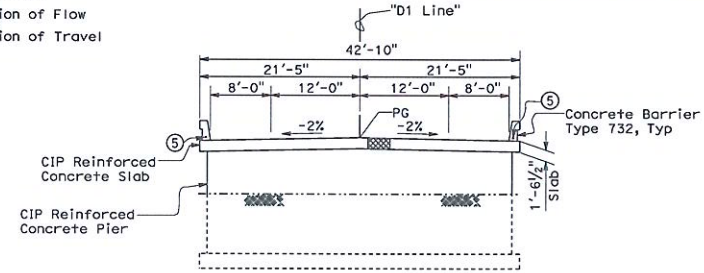

TYPICAL SECTION
⅛" = 1'

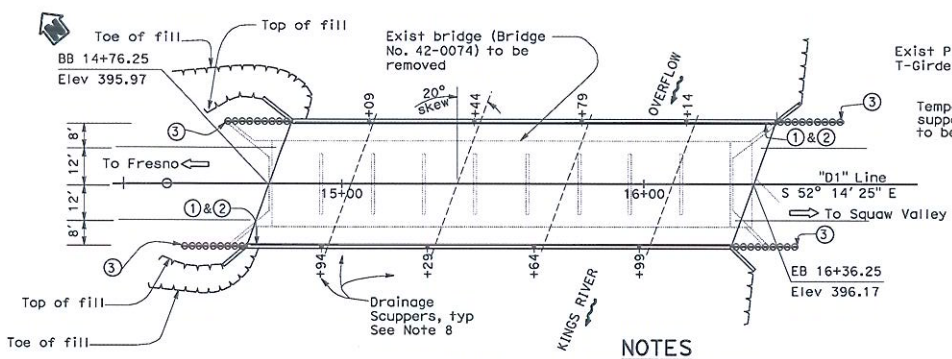

PLAN
1" = 20'

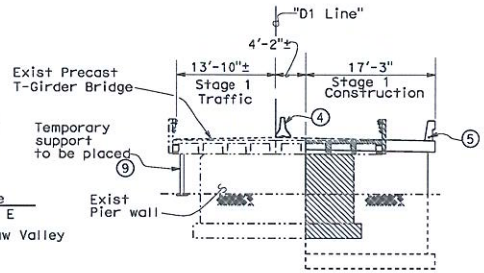

STAGE 1 CONSTRUCTION
⅛" = 1'

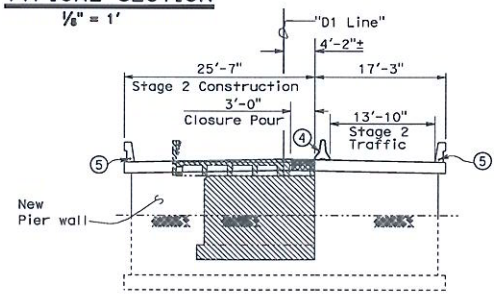

STAGE 2 CONSTRUCTION
⅛" = 1'

NOTES

1. Paint "Br. No. 42-0437"
2. Paint " KINGS RIVER OVERFLOW BRIDGE"
3. Crash Cushion, See "ROAD PLANS"
4. Temporary Raling (Type K) anchored to bridge deck, see "ROAD PLANS"
5. 2" Dia Electrical Conduit
6. For "GENERAL NOTES", and "FOOTING DATA TABLE", see "DECK CONTOURS" sheet.
7. For "HYDROLOGIC SUMMARY", see "FOUNDATION PLAN" sheet.
8. For Scuppers, see "SLAB REINFORCEMENT DETAILS" sheet.
9. For Temporary Support & Design Loads, see "MISCELLANEOUS DETAILS" sheet.

INDEX TO PLANS

Sheet No.	Title
1	GENERAL PLAN
2	DECK CONTOURS
3	FOUNDATION PLAN
4	ABUTMENT DETAILS NO. 1
5	MISCELLANEOUS DETAILS
6	PIER LAYOUT & DETAILS
7	TYPICAL SECTION & DECK REINFORCEMENT
8	SLAB REINFORCEMENT DETAILS
9	LOG OF TEST BORINGS 1
10	LOG OF TEST BORINGS 2

STANDARD PLANS DATED MAY 2006

A10A	ACRONYMS AND ABBREVIATIONS (SHEET 1 OF 2)
A10B	ACRONYMS AND ABBREVIATIONS (SHEET 2 OF 2)
A10C	SYMBOLS (SHEET 1 OF 2)
A10D	SYMBOLS (SHEET 2 OF 2)
A62C	LIMITS OF PAYMENT FOR EXCAVATION AND BACKFILL BRIDGE
B0-1	BRIDGE DETAILS
B0-3	BRIDGE DETAILS
B11-55	CONCRETE BARRIER TYPE 732
B14-3	COMMUNICATION AND SPRINKLER CONTROL CONDUITS (CONDUIT LESS THAN 4")

STANDARD PLAN SHEET NO.
DETAIL NO.

NOTE:
THE CONTRACTOR SHALL VERIFY ALL CONTROLLING FIELD DIMENSIONS BEFORE ORDERING OR FABRICATING ANY MATERIAL.

MIKE POPE
DESIGN ENGINEER

	BY	CHECKED
DESIGN	PREM RIMAL	Igor Chernioglo
DETAILS	PREM RIMAL	Igor Chernioglo
QUANTITIES	PREM RIMAL	RUPERD WILSON

LOAD & RESISTANCE FACTOR DESIGN — LIVE LOADING: HL93 W/"LOW-BOY", PERMIT DESIGN VEHICLE
LAYOUT — BY PREM RIMAL — CHECKED Igor Chernioglo
SPECIFICATIONS — BY MARY KOPSA — PLANS AND SPECS COMPARED Y

ORIGINAL SCALE IN INCHES FOR REDUCED PLANS 0 1 2 3

STATE OF CALIFORNIA
DEPARTMENT OF TRANSPORTATION

DIVISION OF ENGINEERING SERVICES
STRUCTURE DESIGN
DESIGN BRANCH 18

UNIT: 3603
PROJECT NUMBER & PHASE: 06 0000 0118 1 CONTRACT NO.: 06-0H1701

BRIDGE NO. 42-0437
POST MILE 77.19

KINGS RIVER OVERFLOW BRIDGE (REPLACE)
GENERAL PLAN

DISREGARD PRINTS BEARING EARLIER REVISION DATES → 2-13-11 6-16-11

SHEET	OF
1	X

USERNAME => s13670 DATE PLOTTED => 15-NOV-2011 TIME PLOTTED => 14:24

STRUCTURES DESIGN GENERAL PLAN SHEET (ENGLISH) (REV.09-01-10)

FILE => 1-47-0074.dgn

DIST	COUNTY	ROUTE	POST MILES TOTAL PROJECT	SHEET No.	TOTAL SHEETS
06	FRE	180	77.1/77.2		

REGISTERED CIVIL ENGINEER DATE

PLANS APPROVAL DATE

The State of California or its officers or agents shall not be responsible for the accuracy or completeness of electronic copies of this plan sheet.

REGISTERED PROFESSIONAL ENGINEER PREM P. RIMAL No. C61422 Exp. 06/30/13 CIVIL STATE OF CALIFORNIA

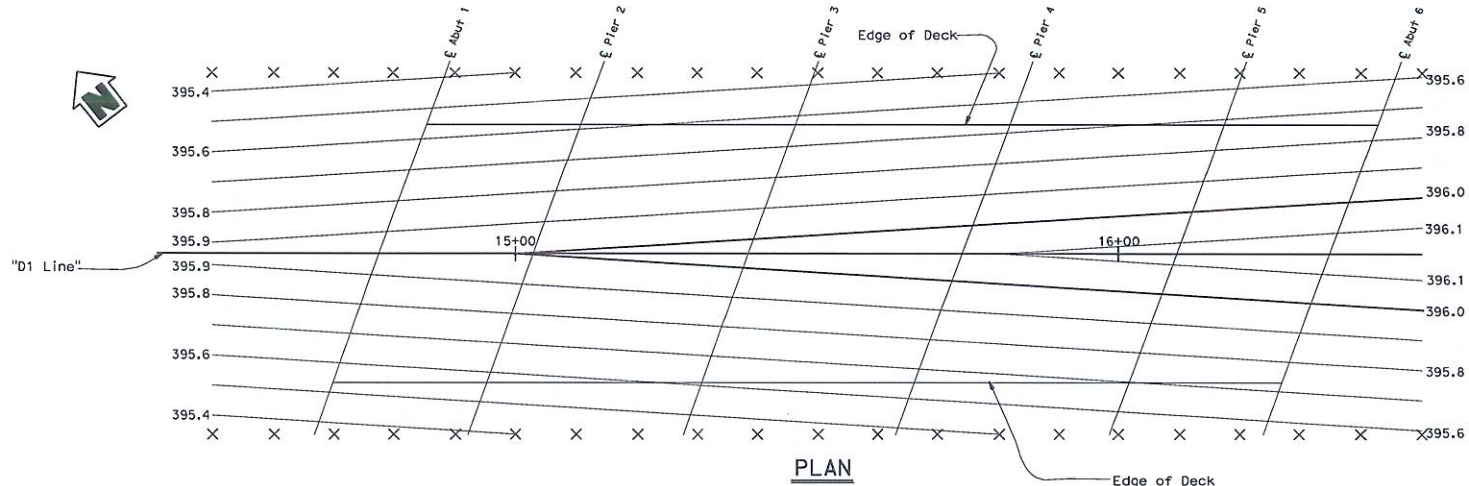

PLAN
1"=10'

NOTES:
1. Contour Interval is 0.10'
2. Contours do not include camber.

X = 10' Intervals

Structural Concrete, Bridge (3.60 ksi at 28 days)

Structural Concrete, Bridge Footing (3.60 ksi at 28 days)

CONCRETE STRENGTH AND TYPE LIMITS
No Scale

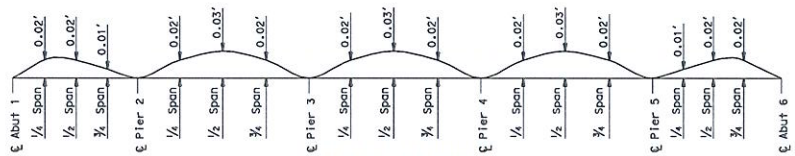

CAMBER DIAGRAM
No Scale

Camber values shown do not include allowance for falsework settlement.

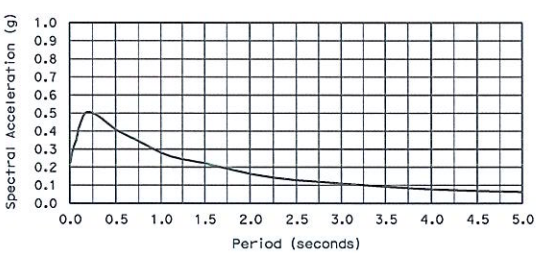

ACCELERATION RESPONSE SPECTRA CURVE

FOOTING DATA TABLE

Support Location	Working Stress Design (WSD)		Load and Resistance Design (LRFD)		
	Permissible Gross Bearing Capacity (ksf)	Allowable Gross Bearing Capacity (ksf)	Service Permissible Net Contact stress (Settlement) (ksf)	Strength Factored Gross Nominal Bearing Resistance $\varphi = 0.45$ (ksf)	Extreme Event Factored Gross Nominal Bearing Resistance $\varphi = 1.0$ (ksf)
Abut 1	4.9	5.4	N/A	N/A	N/A
Piers 2-5	N/A	N/A	4.4	6.6	14.6
Abut 6	4.9	5.4	N/A	N/A	N/A

GENERAL NOTES
LOAD AND RESISTANCE FACTOR DESIGN

DESIGN:
AASHTO LRFD Bridge Design Specifications, 4th edition and the Caltrans Amendments, preface dated December 2008

SEISMIC DESIGN:
Caltrans Seismic Design Criteria (SDC), Version 1.6, November 2010

DEAD LOAD:
Includes 35 psf for future wearing surface

LIVE LOADING:
HL93 and permit design load

SEISMIC LOADING:
See "ACCELERATION RESPONSE SPECTRA CURVE"
Soil Profile: Vs30 = 1770 ft/sec for the top 100 ft of soil
Moment Magnitude: Mmax = 6.5
Peak Ground Acceleration = 0.22 g

CONCRETE:
f_y = 60 ksi
$f'c$ = See "CONCRETE STRENGTH AND TYPE LIMITS".

DESIGN	BY PREM RIMAL	CHECKED Igor Cherniogio	
DETAILS	BY PREM RIMAL / JINLI GUO	CHECKED Igor Cherniogio	
QUANTITIES	BY PREM RIMAL	CHECKED RUPERD WILSON	

STATE OF CALIFORNIA DEPARTMENT OF TRANSPORTATION

DIVISION OF ENGINEERING SERVICES STRUCTURE DESIGN DESIGN BRANCH 18

BRIDGE NO. 42-0437 POST MILE 77.19

KINGS RIVER OVERFLOW BRIDGE (REPLACE)

DECK CONTOURS

STRUCTURES DESIGN DETAIL SHEET (ENGLISH) (REV. 09-01-10)

ORIGINAL SCALE IN INCHES FOR REDUCED PLANS 0 1 2 3

UNIT: 3603
PROJECT NUMBER & PHASE: 06 0000 0118 1 CONTRACT NO.: 06-0H1701

DISREGARD PRINTS BEARING EARLIER REVISION DATES

REVISION DATES 3/24/11 05/01/11 SHEET 2 OF

FILE => 2-42-0074-a-ltp.dgn.dgn

USERNAME => s133870 DATE PLOTTED => 15-NOV-2011 TIME PLOTTED => 14:24

DIST	COUNTY	ROUTE	POST MILES TOTAL PROJECT	SHEET No.	TOTAL SHEETS
06	Fre	180			

REGISTERED CIVIL ENGINEER DATE

PLANS APPROVAL DATE

The State of California or its officers or agents shall not be responsible for the accuracy or completeness of electronic copies of this plan sheet.

REGISTERED PROFESSIONAL ENGINEER — PREM P. RIMAL No. C61422 Exp. 06/30/13 CIVIL — STATE OF CALIFORNIA

CURVE DATA

No.	R	Δ	T	L
Ⓐ	13966.22	1°48'38"	220.69	441.33
Ⓑ	493.11	28°18'58"	124.39	243.70

HYDROLOGIC SUMMARY

DRAINAGE AREA: N/A (Controlled Flow Channel)

	DESIGN FLOOD	BASE FLOOD	OVERTOPPING FLOOD
FREQUENCY (YEARS)	N/A	N/A	N/A
DISCHARGE (CUBIC FEET PER SECOND)	1,160	N/A	N/A
WATER SURFACE ELEV. AT BRIDGE (FEET)	392.0	N/A	N/A

FLOOD PLAIN DATA ARE BASED UPON INFORMATION AVAILABLE WHEN THE PLANS WERE PREPARED AND ARE SHOWN TO MEET FEDERAL REQUIREMENTS. THE ACCURACY OF SAID INFORMATION IS NOT WARRANTED BY THE STATE AND INTERESTED OR AFFECTED PARTIES SHOULD MAKE THEIR OWN INVESTIGATIONS.

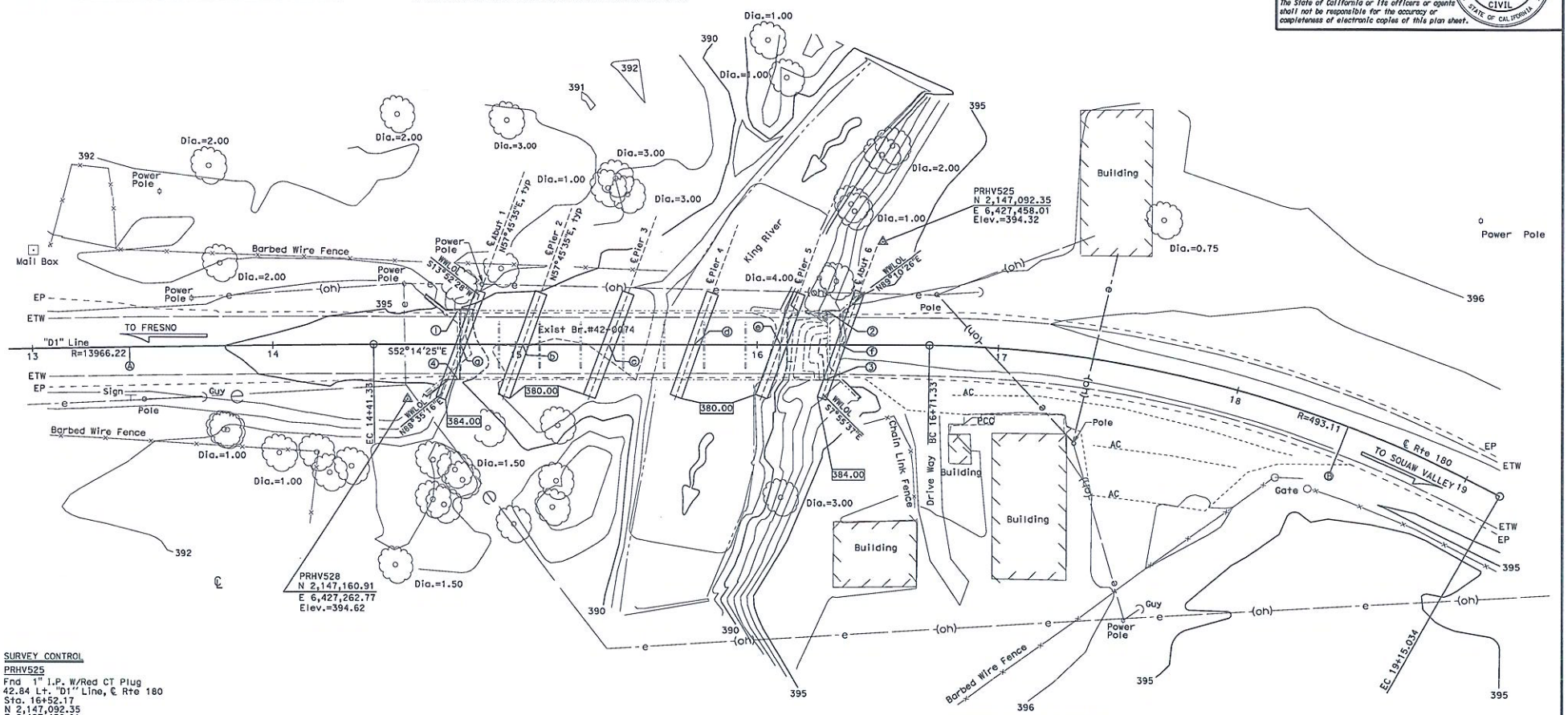

SURVEY CONTROL

PRHV525
Fnd 1" I.P. W/Red CT Plug
42.84 Lt. "D1" Line, ℄ Rte 180
Sta. 16+52.17
N 2,147,092.35
E 6,427,458.01
Elev.=394.32

PRHV528
Fnd 1" I.P. W/Red CT Plug
22.51 Rt. "D1" Line, ℄ Rte 180
Sta. 14+55.84
N 2,147,160.91
E 6,427,262.77
Elev.=394.62

Bridge Location #42-0074 (PN Points)

① - 13.70 Lt. "D1" Line ℄ Rte 180, Sta.14+76.22, EL.=395.29±
② - 14.07 Lt. "D1" Line ℄ Rte 180, Sta.16+29.26, EL.=395.28±
③ - 14.04 Rt. "D1" Line ℄ Rte 180, Sta.16+29.37, EL.=395.36±
④ - 14.38 Rt. "D1" Line ℄ Rte 180, Sta.14+76.35, EL.=395.23±

Note:
Elec. line (OH) per District Utility Map

Abutments and Piers Stations

ⓐ - 14+77.58
ⓑ - 15+03.00
ⓒ - 15+38.50
ⓓ - 15+74.00
ⓔ - 16+09.50
ⓕ - 16+34.92

LEGEND:

384.00 indicates bottom of footing elevation

N/A = Not Applicable

NOTE:
THE CONTRACTOR SHALL VERIFY ALL CONTROLLING FIELD DIMENSIONS BEFORE ORDERING OR FABRICATING ANY MATERIAL.

PRELIMINARY INVESTIGATION SECTION											
SCALE 1"=20'	VERT.DATUM NGVD 29	PHOTOGRAMMETRY AS OF: X				DESIGN	BY PREM RIMAL	CHECKED X	STATE OF CALIFORNIA DEPARTMENT OF TRANSPORTATION	DIVISION OF ENGINEERING SERVICES STRUCTURE DESIGN DESIGN BRANCH 07	BRIDGE NO. 42-0437
	HORZ.DATUM NAD 83 (91.35)	SURVEYED	BY District	CHECKED	BY Don Ivy 11/2010	DETAILS	BY PREM RIMAL	CHECKED X			POST MILE 77.19
	ALIGNMENT TIES Dist. Traverse Sheet	DRAFTED	BY Sharon Zheng 11/2010	CHECKED	BY T.Zolnikov 11/2010	QUANTITIES	BY PREM RIMAL	CHECKED RUPERD WILSON			

KINGS RIVER OVERFLOW BRIDGE (REPLACE)

FOUNDATION PLAN

STRUCTURES FOUNDATION PLAN SHEET (ENGLISH) (REV. 09-01-10)

ORIGINAL SCALE IN INCHES FOR REDUCED PLANS 0 1 2 3

UNIT: 3646
PROJECT NUMBER & PHASE: 06 0000 0118-1 CONTRACT NO.: 06-0H1701

DISREGARD PRINTS BEARING EARLIER REVISION DATES 12/20/11 12/21/11 03/01/12

REVISION DATES

SHEET 3 OF 8

FILE => 3-42-0074.dgn

DIST	COUNTY	ROUTE	POST MILES TOTAL PROJECT	SHEET No.	TOTAL SHEETS
X	X	X			

REGISTERED CIVIL ENGINEER — DATE X

PLANS APPROVAL DATE

REGISTERED PROFESSIONAL ENGINEER — PREM P. RIMAL No. C61422 Exp. 06/30/13 CIVIL STATE OF CALIFORNIA

The State of California or its officers or agents shall not be responsible for the accuracy or completeness of electronic copies of this plan sheet.

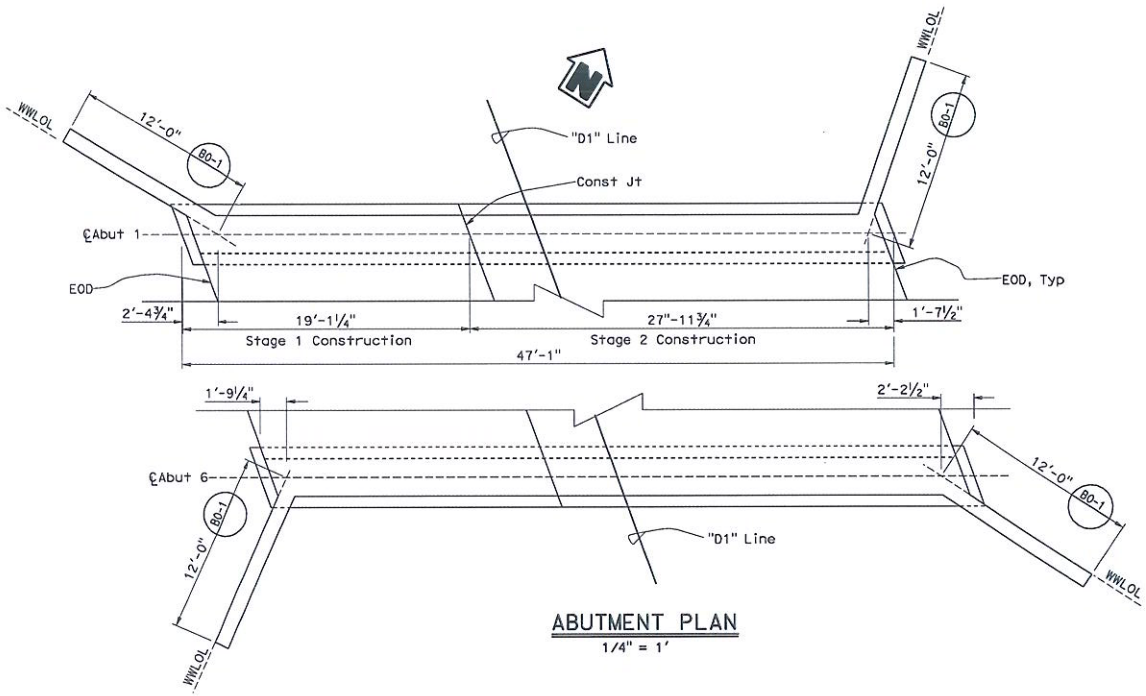

ABUTMENT PLAN

1/4" = 1'

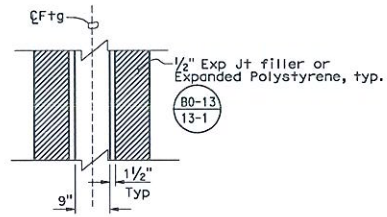

KEY DETAIL

3/4" = 1'

Note:

The Contractor may use mechanical butt splice for horiz abut and ftg reinf at construction joint.

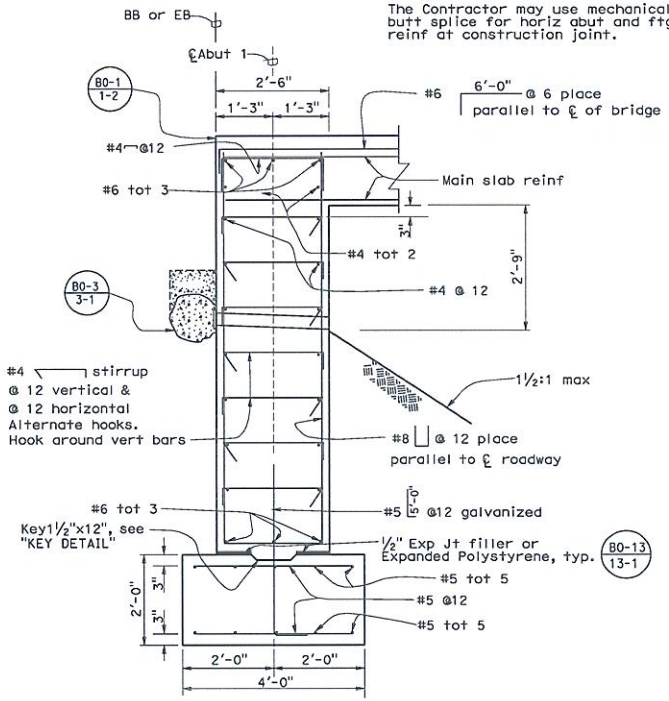

ABUTMENT SECTION

3/4" = 1'

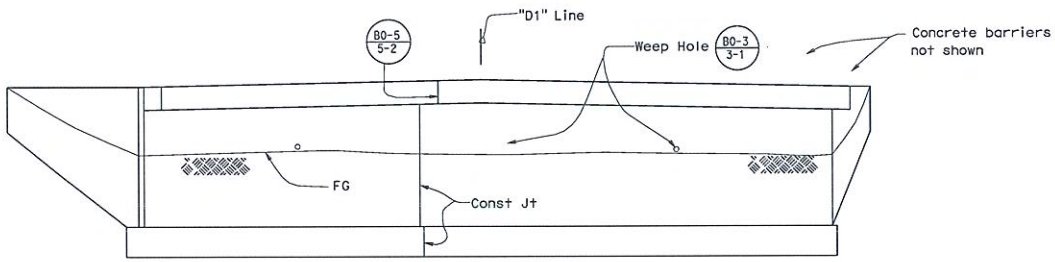

ABUTMENT ELEVATION

1/4" = 1'

(Abutment 1 shown, Abutment 6 similar)

NOTE:

THE CONTRACTOR SHALL VERIFY ALL CONTROLLING FIELD DIMENSIONS BEFORE ORDERING OR FABRICATING ANY MATERIAL.

Note: For "LIMIT OF STRUCTURE EXCAVATION" see, "ABUTMENT DETAILS NO. 2 " Sheet.

	BY	CHECKED
DESIGN	PREM RIMAL	Igor Cherniogio
DETAILS	PREM RIMAL	Igor Cherniogio
QUANTITIES	PREM RIMAL	RUPERD WILSON

STATE OF CALIFORNIA DEPARTMENT OF TRANSPORTATION

DIVISION OF ENGINEERING SERVICES STRUCTURE DESIGN DESIGN BRANCH X

BRIDGE NO. 42-0437 POST MILE 77.19

KINGS RIVER OVERFLOW BRIDGE (REPLACE)

ABUTMENT DETAILS NO. 1

STRUCTURES DESIGN DETAIL SHEET (ENGLISH) (REV. 09-01-10)

ORIGINAL SCALE IN INCHES FOR REDUCED PLANS 0 1 2 3

UNIT: 3603

PROJECT NUMBER & PHASE: 06 0000 0118 1 CONTRACT NO.: 06-0H1701

DISREGARD PRINTS BEARING EARLIER REVISION DATES 01/20/11 05/01/11

REVISION DATES | SHEET 4 | OF X

FILE => 4-42-0074.dgn

USERNAME => s133870 DATE PLOTTED => 15-NOV-2011 TIME PLOTTED => 14:24

DIST	COUNTY	ROUTE	POST MILES TOTAL PROJECT	SHEET No.	TOTAL SHEETS
06	FRE	180			

REGISTERED CIVIL ENGINEER DATE

PLANS APPROVAL DATE

The State of California or its officers or agents shall not be responsible for the accuracy or completeness of electronic copies of this plan sheet.

REGISTERED PROFESSIONAL ENGINEER PREM P. RIMAL No. C61422 Exp. 06/30/13 CIVIL STATE OF CALIFORNIA

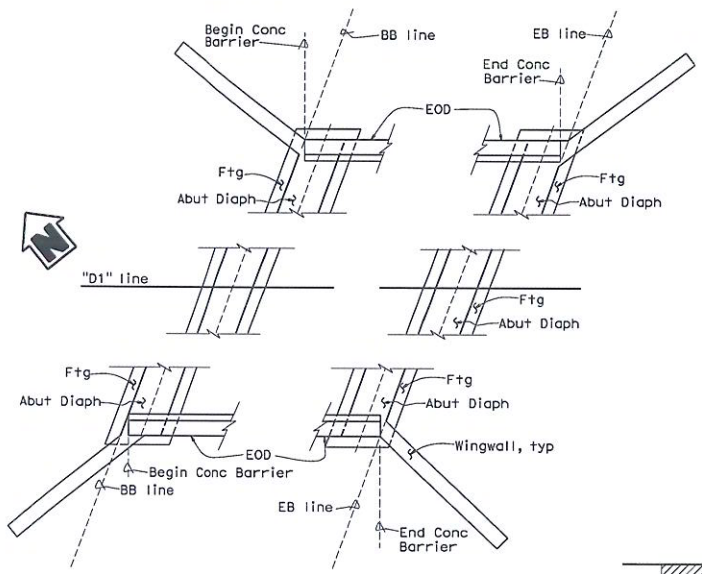

BARRIER ENDS DETAIL

No Scale

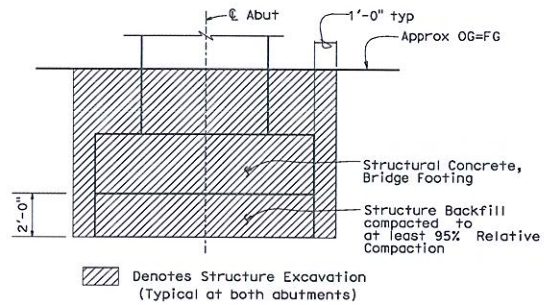

LIMIT OF STRUCTURE EXCAVATION

No Scale

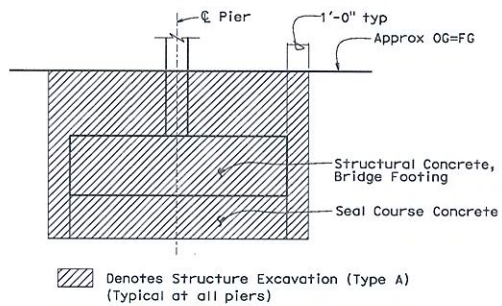

LIMIT OF STRUCTURE EXCAVATION TYPE A

No Scale

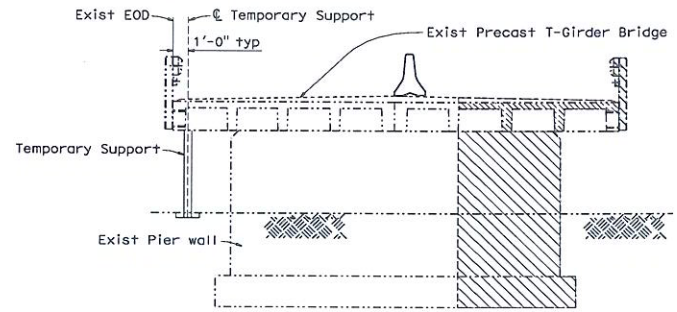

TEMPORARY SUPPORT

1/4" =1'

FALSEWORK RELEASE

Alternative 1:

Falsework shall be released as soon as permitted by the specifications. Deck closure pour shall not be placed sooner than 60 days after the falsework has been released.

Alternative 2:

Falsework shall not be released less than 28 days after the last concrete has been placed. Deck closure pour shall not be placed sooner than 14 days after the falsework has been released.

NOTE:

THE CONTRACTOR SHALL VERIFY ALL CONTROLLING FIELD DIMENSIONS BEFORE ORDERING OR FABRICATING ANY MATERIAL.

MINIMUM TEMPORARY SUPPORT DESIGN LOADS

Location	Vertical Unfactored Load			Lateral Design Load (Kips)
	DL (Kips)	LL+I (Kips)		
		HL-93	Permit	
All Exist Piers	11.0	42.0	31.4	1.5

NOTES:

1. ℄ Temporary Support shall be located at ℄ Existing pier.
2. The Temporary Support shall be placed prior to bridge removal for Stage 1 Construction.
3. The Temporary Support and its lateral restraint shall be designed by the Contractor.

	BY	CHECKED
DESIGN	PREM RIMAL	Igor Cherniogio
DETAILS	PREM RIMAL	Igor Cherniogio
QUANTITIES	PREM RIMAL	RUPERO WILSON

STATE OF CALIFORNIA DEPARTMENT OF TRANSPORTATION

DIVISION OF ENGINEERING SERVICES STRUCTURE DESIGN DESIGN BRANCH 18

BRIDGE NO. 42-0437 POST MILE 77.19

KINGS RIVER OVERFLOW BRIDGE (REPLACE)

MISCELLANEOUS DETAILS

STRUCTURES DESIGN DETAIL SHEET (ENGLISH) (REV. 09-01-10)

ORIGINAL SCALE IN INCHES FOR REDUCED PLANS 0 1 2 3

UNIT: 3603

PROJECT NUMBER & PHASE: 06 0000 0118 1 CONTRACT NO.: 06-0H1701

DISREGARD PRINTS BEARING EARLIER REVISION DATES 07/20/11 05/01/11

REVISION DATES

SHEET 5 OF X

FILE => 5-42-0074.dgn

USERNAME => s133670 DATE PLOTTED => 15-NOV-2011 TIME PLOTTED => 14:24

DIST	COUNTY	ROUTE	POST MILES TOTAL PROJECT	SHEET No.	TOTAL SHEETS
06	FRE	180			

REGISTERED CIVIL ENGINEER DATE

PLANS APPROVAL DATE

The State of California or its officers or agents shall not be responsible for the accuracy or completeness of electronic copies of this plan sheet.

REGISTERED PROFESSIONAL ENGINEER PREM P. RIMAL No. C61422 Exp. 06/30/13 CIVIL STATE OF CALIFORNIA

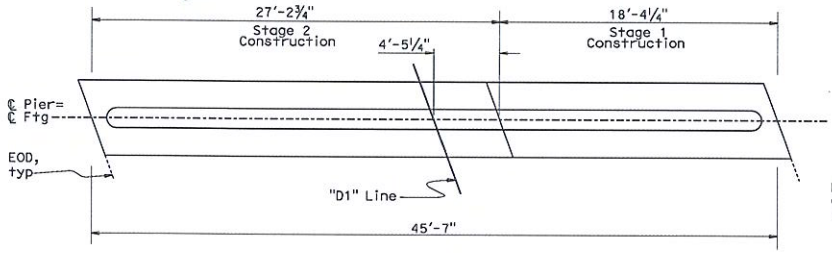

PLAN
¼" = 1'-0"

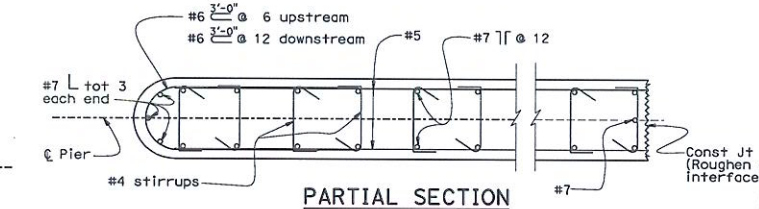

PARTIAL SECTION
1" = 1'-0"

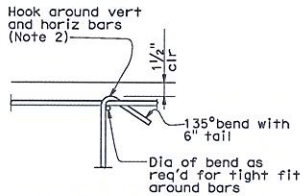

STIRRUP BEND DETAIL
No Scale

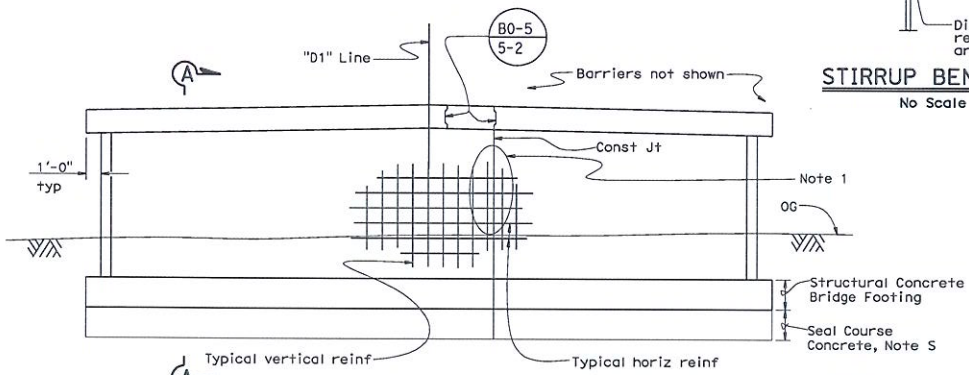

ELEVATION
¼" = 1'-0"

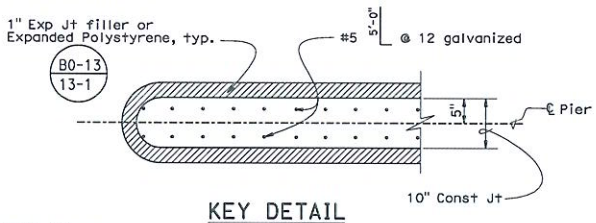

KEY DETAIL
1"=1'-0"

NOTE:
THE CONTRACTOR SHALL VERIFY ALL CONTROLLING FIELD DIMENSIONS BEFORE ORDERING OR FABRICATING ANY MATERIAL.

Notes:
1. The Contractor may use mechanical butt splice for all horiz reinf at Const Jt
2. Alternate stirrup hooks horizontally and vertically.
3. No splices allowed in pier wall vertical reinforcements.

Note A:
For "LIMIT OF STRUCTURE EXCAVATION TYPE A", see "ABUTMENT DETAILS NO. 2" sheet.

Note S:
Seal Course to be placed only when ordered by the Engineer. Estimated quantities involved are based on the seal thickness shown. The thickness to be used will be determined in the field by the Engineer. When seal is not used, the bottom of the reinforced footing shall remain at the elevation shown.

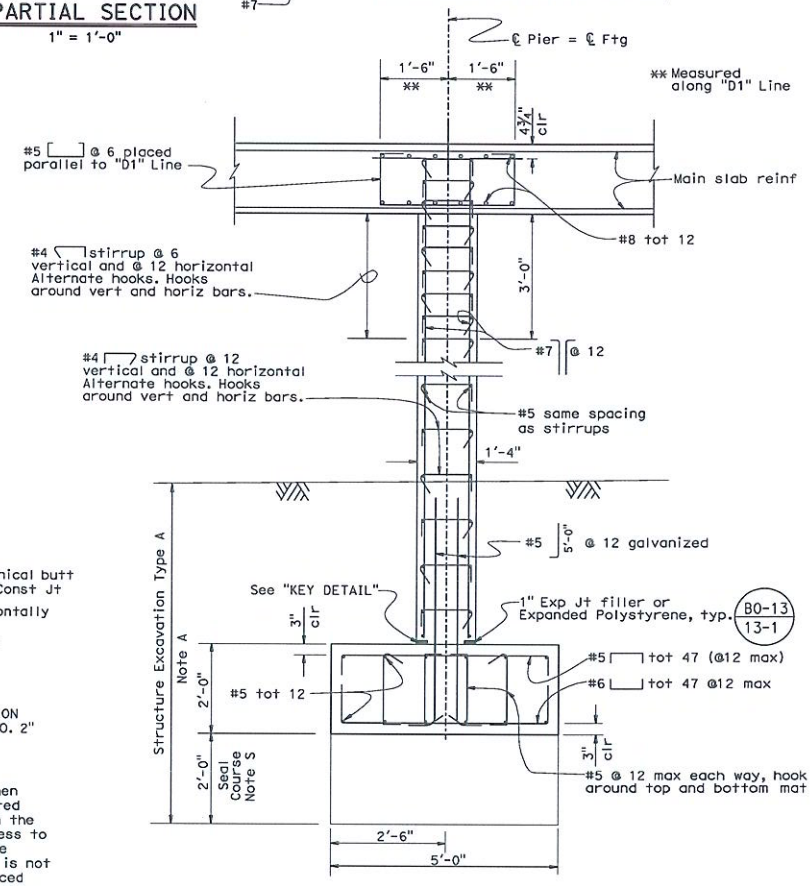

SECTION A-A
¾" = 1'-0"

DESIGN	BY PREM RIMAL	CHECKED Igor Cherniogio	
DETAILS	BY PREM RIMAL / JINLI GUO	CHECKED Igor Cherniogio	
QUANTITIES	BY PREM RIMAL	CHECKED RUPERD WILSON	

STATE OF CALIFORNIA
DEPARTMENT OF TRANSPORTATION

DIVISION OF ENGINEERING SERVICES
STRUCTURE DESIGN
DESIGN BRANCH 18

BRIDGE NO. 42-0437
POST MILE 77.19

KINGS RIVER OVERFLOW BRIDGE (REPLACE)
PIER LAYOUT & DETAILS

STRUCTURES DESIGN DETAIL SHEET (ENGLISH) (REV. 09-01-10)

ORIGINAL SCALE IN INCHES FOR REDUCED PLANS 0 1 2 3

UNIT: 3603
PROJECT NUMBER & PHASE: 06 0000 0118 1 CONTRACT NO.:06-0H1701

DISREGARD PRINTS BEARING EARLIER REVISION DATES → REVISION DATES 05/09/11 05/01/11

SHEET 6 OF X

FILE => 6-42-0074.dgn

USERNAME => s133670 DATE PLOTTED => 15-NOV-2011 TIME PLOTTED => 14:24

DIST	COUNTY	ROUTE	POST MILES TOTAL PROJECT	SHEET No.	TOTAL SHEETS
06	FRE	180			

REGISTERED CIVIL ENGINEER X DATE

PLANS APPROVAL DATE

REGISTERED PROFESSIONAL ENGINEER PREM P. RIMAL No. C61422 Exp. 06/30/13 CIVIL STATE OF CALIFORNIA

The State of California or its officers or agents shall not be responsible for the accuracy or completeness of electronic copies of this plan sheet.

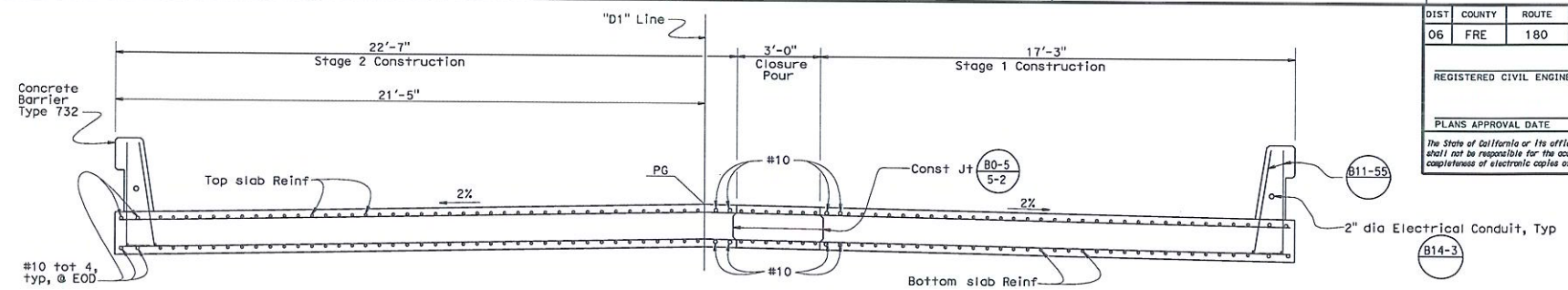

TYPICAL SECTION

½" = 1'-0"

Note: For "FALSEWORK RELEASE", see " MISCALLENEOUS DETAILS" sheet.

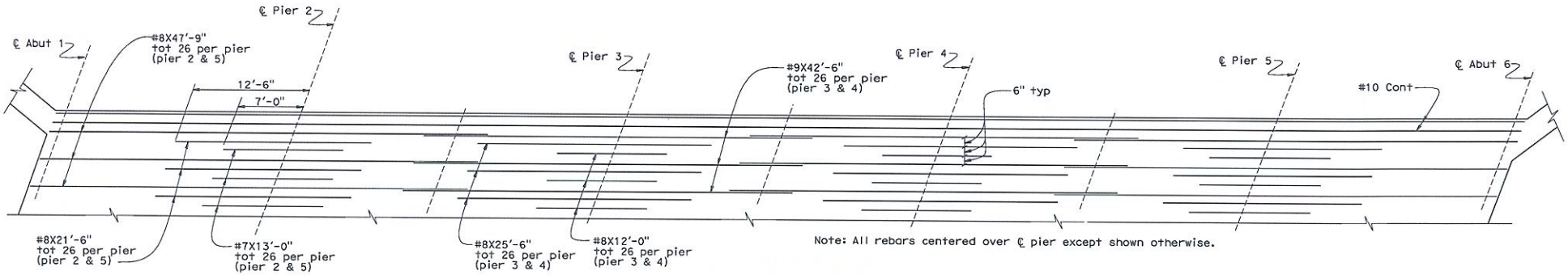

Note: All rebars centered over ℄ pier except shown otherwise.

TOP SLAB REINFORCEMENT

No Scale

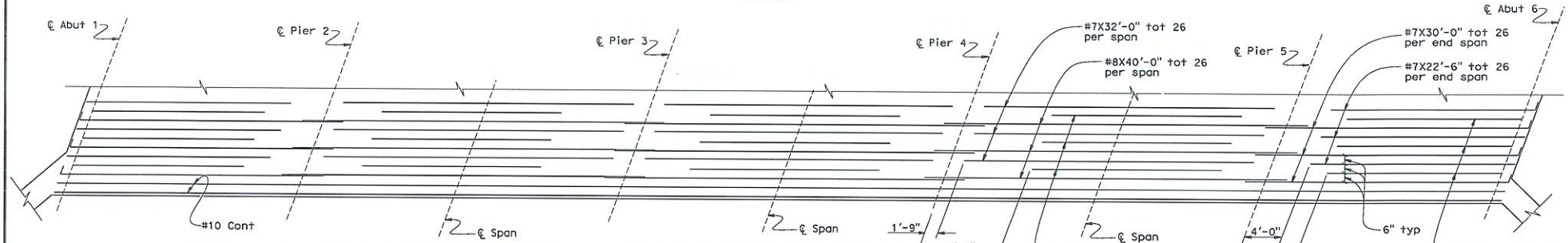

Note: All rebars centered over ℄ span except shown otherwise.

BOTTOM SLAB REINFORCEMENT

No Scale

DESIGN	BY PREM RIMAL	CHECKED Igor Cherniogio	
DETAILS	BY PREM RIMAL / JINLI GUO	CHECKED Igor Cherniogio	
QUANTITIES	BY PREM RIMAL	CHECKED RUPERD WILSON	

STATE OF CALIFORNIA DEPARTMENT OF TRANSPORTATION

DIVISION OF ENGINEERING SERVICES STRUCTURE DESIGN DESIGN BRANCH 18

BRIDGE NO. 42-0437 POST MILE 77.19

KINGS RIVER OVERFLOW BRIDGE (REPLACE)
TYPICAL SECTION AND DECK REINFORCEMENT

STRUCTURES DESIGN DETAIL SHEET (ENGLISH) (REV. 09-01-10)

ORIGINAL SCALE IN INCHES FOR REDUCED PLANS 0 1 2 3

UNIT: 3603
PROJECT NUMBER & PHASE: 06 0000 0118 1 CONTRACT NO.: 06-0H1701

DISREGARD PRINTS BEARING EARLIER REVISION DATES

REVISION DATES 5/26/11 09/01/11

SHEET 7 OF X

FILE => 7-42-0074.dgn

USERNAME => s133870 DATE PLOTTED => 15-NOV-2011 TIME PLOTTED => 14:24

DIST	COUNTY	ROUTE	POST MILES TOTAL PROJECT	SHEET No.	TOTAL SHEETS
06	FRE	180			

REGISTERED CIVIL ENGINEER DATE

PLANS APPROVAL DATE

REGISTERED PROFESSIONAL ENGINEER PREM P. RIMAL No. C61422 Exp. 06/30/13 CIVIL STATE OF CALIFORNIA

The State of California or its officers or agents shall not be responsible for the accuracy or completeness of electronic copies of this plan sheet.

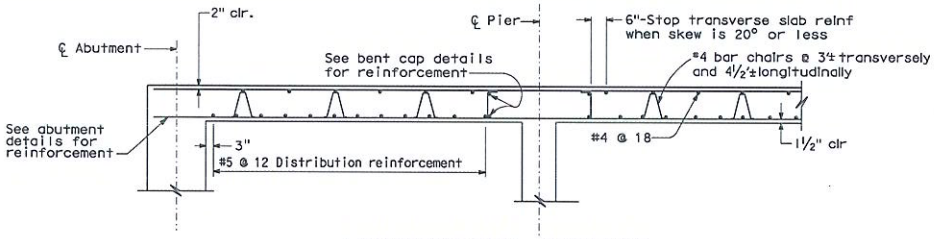

LONGITUDINAL SECTION

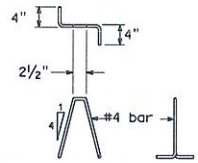

BAR CHAIR DETAIL

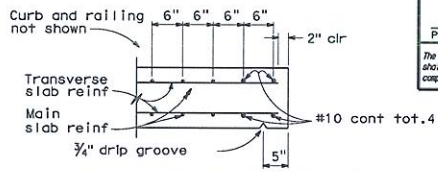

EDGE OF SLAB DETAILS

BAR SPLICE LENGTH								
Bar size	#4	#5	#6	#7	#8	#9	#10	#11
All bars, except top bars in spans over 24'	23"	28"	34"	39"	45"	68"	76"	85"
Top bars in spans over 24'	23"	28"	34"	53"	60"	77"	97"	120"

REINFORCEMENT NOTES:

Splices in top main bars to be located near center of span.
Splices in bottom main bars to be located near bent.
Spacing of all transverse bars is measured along ℄ roadway.
Skew 0° to 20°: Place all transverse bars parallel to bent.

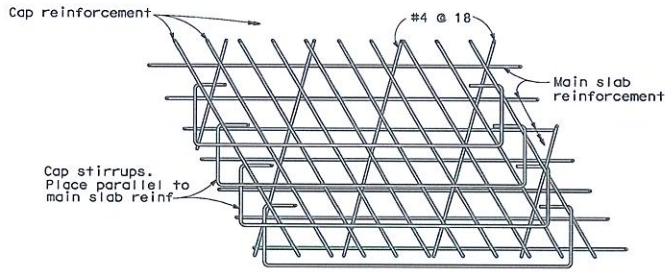

TOP SLAB REINFORCEMENT AT PIER

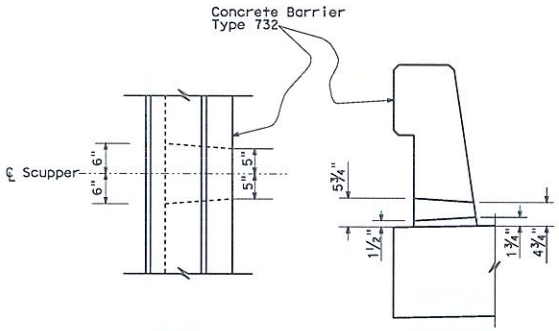

PLAN SECTION

SCUPPER DETAIL

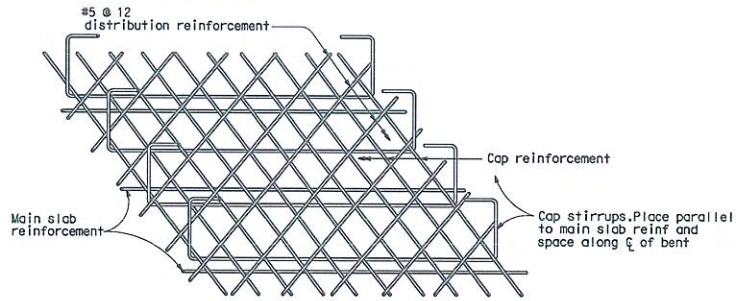

FLUSH CAP

BOTTOM SLAB REINFORCEMENT AT PIER

NOTE:

THE CONTRACTOR SHALL VERIFY ALL CONTROLLING FIELD DIMENSIONS BEFORE ORDERING OR FABRICATING ANY MATERIAL.

	BY	CHECKED
DESIGN	PREM RIMAL	Igor Chernioglo
DETAILS	PREM RIMAL	Igor Chernioglo
QUANTITIES	PREM RIMAL	RUPERD WILSON

STATE OF CALIFORNIA DEPARTMENT OF TRANSPORTATION

DIVISION OF ENGINEERING SERVICES STRUCTURE DESIGN DESIGN BRANCH 18

BRIDGE NO. 42-0437 POST MILE 77.19

KINGS RIVER OVERFLOW BRIDGE (REPLACE)

SLAB REINFORCEMENT DETAILS

STRUCTURES DESIGN DETAIL SHEET (ENGLISH) (REV. 09-01-10)

ORIGINAL SCALE IN INCHES FOR REDUCED PLANS 0 1 2 3

UNIT: 3603
PROJECT NUMBER & PHASE: 06 0000 0118 1 CONTRACT NO.: X

DISREGARD PRINTS BEARING EARLIER REVISION DATES 07/07/11 08/01/11

REVISION DATES SHEET 8 OF X

FILE => 8-42-0074.dgn

USERNAME => s133670 DATE PLOTTED => 15-NOV-2011 TIME PLOTTED => 14:25

STATE OF CALIFORNIA – CALIFORNIA NATURAL RESOURCES AGENCY EDMUND G. BROWN JR., GOVERNOR

CENTRAL VALLEY FLOOD PROTECTION BOARD
3310 El Camino Ave., Rm. 151
SACRAMENTO, CA 95821
(916) 574-0609 FAX: (916) 574-0682
PERMITS: (916) 574-0685 FAX: (916) 574-0682

Permit No. 18761 BD

CALTRANS
2015 East Shields Avenue
Suite 100
Fresno, California 93726

Enclosed is your approved Central Valley Flood Protection Board Encroachment Permit Conditions.

Under the Standard General Condition Four (4) of the permit, you are required to accomplish the work under direction and supervision of the Department of Water Resources; therefore, you must advise the Department at 3310 El Camino Avenue, Sacramento, California 95821, attention Lorraine Pendlebury, telephone (916) 574-0609, at least ten days prior to starting your project. An addressed postcard is enclosed for your convenience.

Please note that the permit grants the work proposed in your application. This permit, in addition to the twelve (12) standard conditions, includes special conditions, which may place limitations on or require modifications to your project. You are advised to read all conditions prior to starting the project. Commencing any work under this permit shall constitute an acceptance of the provisions of the permit and an agreement to perform accordingly. This permit does not relieve you from the responsibility for obtaining authorization from any State, local, or federal agencies for your proposed project.

Please refer to your permit number when communicating with this office. For further information, contact Ashley Cousin at (916) 574-2380.

Sincerely,

David Williams, Senior Engineer, WR
Flood System Improvement Section
Central Valley Flood Protection Board

Enclosure

STATE OF CALIFORNIA
THE RESOURCES AGENCY

THE CENTRAL VALLEY FLOOD PROTECTION BOARD

PERMIT NO. 18761 BD

This Permit is issued to:

CALTRANS
2015 East Shields Avenue
Suite 100
Fresno, California 93726

Removal of the State Route 180 (East Kings Canyon Road) bridge (No. 42-0074) over the Kings River Overflow canal and replacement with a wider, concrete slab bridge (No. 42-0437). The project is located near the town of Minkler on State Route 180 between post miles 77.1 and 77.2, in Fresno County. (Section 10, T14S, R23E, MDB&M, Kings River Conservation District, Byrd Slough, Fresno County).

NOTE: Special Conditions have been incorporated herein which may place limitations on and/or require modification of your proposed project as described above.

(SEAL)

Dated SEP - 4 2012

Executive Officer

GENERAL CONDITIONS:

ONE: This permit is issued under the provisions of Sections 8700 – 8723 of the Water Code.

TWO: Only work described in the subject application is authorized hereby.

THREE: This permit does not grant a right to use or construct works on land owned by the Sacramento and San Joaquin Drainage District or on any other land.

FOUR: The approved work shall be accomplished under the direction and supervision of the State Department of Water Resources, and the permittee shall conform to all requirements of the Department and The Central Valley Flood Protection Board.

FIVE: Unless the work herein contemplated shall have been commenced within one year after issuance of this permit, the Board reserves the right to change any conditions in this permit as may be consistent with current flood control standards and policies of The Central Valley Flood Protection

DWR 3784 (Rev. 9/85)

Board.

SIX: This permit shall remain in effect until revoked. In the event any conditions in this permit are not complied with, it may be revoked on 15 days' notice.

SEVEN: It is understood and agreed to by the permittee that the start of any work under this permit shall constitute an acceptance of the conditions in this permit and an agreement to perform work in accordance therewith.

EIGHT: This permit does not establish any precedent with respect to any other application received by The Central Valley Flood Protection Board.

NINE: The permittee shall, when required by law, secure the written order or consent from all other public agencies having jurisdiction.

TEN: The permittee is responsible for all personal liability and property damage which may arise out of failure on the permittee's part to perform the obligations under this permit. If any claim of liability is made against the State of California, or any departments thereof, the United States of America, a local district or other maintaining agencies and the officers, agents or employees thereof, the permittee shall defend and shall hold each of them harmless from each claim.

ELEVEN: The permittee shall exercise reasonable care to operate and maintain any work authorized herein to preclude injury to or damage to any works necessary to any plan of flood control adopted by the Board or the Legislature, or interfere with the successful execution, functioning or operation of any plan of flood control adopted by the Board or the Legislature.

TWELVE: Should any of the work not conform to the conditions of this permit, the permittee, upon order of The Central Valley Flood Protection Board, shall in the manner prescribed by the Board be responsible for the cost and expense to remove, alter, relocate, or reconstruct all or any part of the work herein approved.

SPECIAL CONDITIONS FOR PERMIT NO. 18761 BD

THIRTEEN: No work authorized by this permit shall be performed until the Department of Water Resources has received, reviewed, and approved in writing, a complete set of final submitted plans, drawings, and specifications for the project. The Central Valley Flood Protection Board shall have up to 30 days after receipt of plans, drawings, and specifications for the review process. The Central Valley Flood Protection Board and/or the Department of Water Resources may extend this review period up to 15 days by written notification.

FOURTEEN: All addendums or other changes made to the submitted documents by the permittee after issuance of this permit are subject to submittal and review for approval by the Central Valley Flood Protection Board prior to incorporation into the permitted project. Upon review and approval of any new submitted documents the permit shall be revised, if needed, prior to construction related to the proposed changes. The Central Valley Flood Protection Board shall have up to 90 days after receipt of any documents, plans, drawings, and specifications for the review process. The Central Valley Flood Protection Board and/or the Department of Water Resources may extend this review period by written notification.

FIFTEEN: The permittee shall defend, indemnify, and hold the Central Valley Flood Protection Board and the State of California, including its agencies, departments, boards, commissions, and their respective officers, agents, employees, successors and assigns (collectively, the "State"), safe and harmless, of and from all claims and damages related to the Central Valley Flood Protection Board's approval of this permit, including but not limited to claims filed pursuant to the California Environmental Quality Act. The State expressly reserves the right to supplement or take over its defense, in its sole discretion.

SIXTEEN: The permittee is responsible for all liability associated with construction, operation, and maintenance of the permitted facilities and shall defend, indemnify, and hold the Central Valley Flood

Protection Board and the State of California; including its agencies, departments, boards, commissions, and their respective officers, agents, employees, successors and assigns (collectively, the "State"), safe and harmless, of and from all claims and damages arising from the project undertaken pursuant to this permit, all to the extent allowed by law. The State expressly reserves the right to supplement or take over its defense, in its sole discretion.

SEVENTEEN: The Central Valley Flood Protection Board, Department of Water Resources, and Fresno County shall not be held liable for damages to the permitted encroachment(s) resulting from releases of water from reservoirs, flood fight, operation, maintenance, inspection, or emergency repair.

EIGHTEEN: The mitigation measures approved by the CEQA lead agency and the permittee are found in its Mitigation and Monitoring Reporting Program (MMRP) adopted by the CEQA lead agency. The permittee shall implement all such mitigation measures.

NINETEEN: A temporary bench mark, set to a known datum, shall be placed at the project site prior to the beginning of construction and shall be maintained through the construction of the project.

TWENTY: No construction work of any kind shall be done during the flood season from November 1st to July 15th without prior approval of the Central Valley Flood Protection Board.

TWENTY-ONE: No excavation shall be made or remain in the channel section during the flood season from November 1st to July 15th.

TWENTY-TWO: Temporary staging, formwork, stockpiled material, equipment, and temporary buildings shall not remain in the floodway during the flood season from November 1st to July 15th.

TWENTY-THREE: Prior to commencement of excavation, the permittee shall create a photo record, including associated descriptions, of the channel conditions. The photo record shall be certified (signed and stamped) by a licensed land surveyor or professional engineer registered in the State of California and submitted to the Central Valley Flood Protection Board within 30 days of beginning the project.

TWENTY-FOUR: A civil engineer registered in the State of California representing the permittee shall provide periodic reports and records to the Department of Water Resources that are acceptable to the Central Valley Flood Protection Board which certifies that all work accomplished by contract to the permittee was thoroughly inspected and performed in accordance with submitted drawings, specifications, and permit conditions.

TWENTY-FIVE: Fill material shall be placed only within the area indicated on the approved plans.

TWENTY-SIX: Fill material placed within 2 feet of a structure shall be compacted with appropriate hand-operated compaction equipment.

TWENTY-SEVEN: The proposed bridge site general project work area shall be restored to at least the condition that existed prior to commencement of work.

TWENTY-EIGHT: The soffit of the new bridge shall be a minimum of 2 feet above the flood plane

elevation of 392 feet, NGVD29.

TWENTY-NINE: The method and schedule of removing the existing SR 180 Kings River Overflow bridge shall be approved by the Central Valley Flood Protection Board prior to start of work.

THIRTY: Piers, bents, and abutments being dismantled shall be removed to at least 1 foot below the natural ground line and at least 3 feet below the bottom of the low-water channel.

THIRTY-ONE: Drainage from the new bridge and/or highway shall not be discharged onto the streambanks.

THIRTY-TWO: If erosion occurs adjacent to the permitted encroachment(s), the permittee shall repair the eroded areas and place adequate revetment on the affected areas to prevent further erosion.

THIRTY-THREE: Trees, brush, sediment, and other debris shall be kept cleared from the bridge site and disposed of outside the floodway to maintain the design flow capacity and flowage area.

THIRTY-FOUR: If the bridge is damaged to the extent that it may impair the channel or floodway capacity, it shall be repaired or removed prior to the next flood season.

THIRTY-FIVE: All debris generated by this project shall be disposed of outside the Kings River Overflow channel and floodplain area.

THIRTY-SIX: The permittee shall assume all responsibility for the protection, relocation, or removal of the permitted project works if required by the Central Valley Flood Protection Board.

THIRTY-SEVEN: In the event that bank erosion injurious to the adopted plan of flood control occurs at or adjacent to the permitted encroachment(s), the permittee shall repair the eroded area and propose measures, to be approved by the Central Valley Flood Protection Board, to prevent further erosion.

THIRTY-EIGHT: The permittee shall maintain the permitted encroachment(s) and the project works within the utilized area in the manner required and as requested by the authorized representative of the Department of Water Resources, or any other agency responsible for maintenance.

THIRTY-NINE: Any vegetative material, living or dead, that interferes with the successful execution, functioning, maintenance, or operation of the adopted plan of flood control must be removed by the permittee at permittee's expense upon request by the Central Valley Flood Protection Board, Department of Water Resources, or local maintaining agency. If the permittee does not remove such vegetation or trees upon request, the Central Valley Flood Protection Board reserves the right to remove such at the permittee's expense.

FORTY: The permitted encroachment(s) shall not interfere with operation and maintenance of the flood control project. If the permitted encroachment(s) are determined by any agency responsible for operation or maintenance of the flood control project to interfere, the permittee shall be required, at permittee's cost and expense, to modify or remove the permitted encroachment(s) under direction of the Central Valley Flood Protection Board or Department of Water Resources. If the permittee does not comply, the Central Valley Flood Protection Board may modify or remove the encroachment(s) at

the permittee's expense.

FORTY-ONE: The permittee may be required, at permittee's cost and expense, to remove, alter, relocate, or reconstruct all or any part of the permitted encroachment(s) if removal, alteration, relocation, or reconstruction is necessary as part of or in conjunction with any present or future flood control plan or project or if damaged by any cause. If the permittee does not comply, the Central Valley Flood Protection Board may remove the encroachment(s) at the permittee's expense.

FORTY-TWO: If the project, or any portion thereof, is to be abandoned in the future, the permittee or successor shall abandon the project under direction of the Central Valley Flood Protection Board and Department of Water Resources, at the permittee's or successor's cost and expense.

FORTY-THREE: Upon completion of the project, the permittee shall submit copies of compaction test results, all permit related inspection reports, construction documentation and a complete set of as-constructed drawings to: Department of Water Resources, Flood Project Inspection Section, P.O. Box 219000, Sacramento, California 95821-9000.

FORTY-FOUR: Within 120 days of completion of the project, the permittee shall submit to the Central Valley Flood Protection Board a certification report, stamped and signed by a professional engineer registered in the State of California, certifying the work was performed and inspected in accordance with the Central Valley Flood Protection Board permit conditions and submitted drawings and specifications.

FORTY-FIVE: The letter from the Department of the Army (U.S. Army Corps of Engineer, Sacramento District) dated August, 17, 2012 is attached to this permit as Exhibit A in reference to this project.

FORTY-SIX: The permittee shall comply with all conditions set forth in the letter from Kings River Conservation District dated May 1, 2012, which is attached to this permit as Exhibit B and is incorporated by reference.

Exhibit A

DEPARTMENT OF THE ARMY
U.S. Army Engineer District, Sacramento
Corps of Engineers
1325 J Street
Sacramento, California 95814-2922

REPLY TO
ATTENTION OF

Flood Protection and Navigation Section (18761)

AUG 17 2012

Mr. Jay Punia, Executive Officer
Central Valley Flood Protection Board
3310 El Camino Avenue, Room 151
Sacramento, California 95821

Dear Mr. Punia:

We have reviewed a permit application by Caltrans (application number 18761). This project includes removing and replacing the Kings River Overflow Bridge. The project is located near the town of Minkler, on State Route 180 between mile posts 77.1 and 77.2, at 36.7242°N 119.4581°W NAD83, Fresno County, California.

The District Engineer has no comments or recommendations regarding flood control because the proposed work does not affect a federally constructed project.

A Section 10 and/or Section 404 permit (SPK-2009-01567) has been issued for this work.

A copy of this letter is being furnished to Mr. Don Rasmussen, Chief, Flood Project Integrity and Inspection Branch, 3310 El Camino Avenue, Suite LL30, Sacramento, CA 95821.

Sincerely,

for Ryan T. Larson

Meegan G. Nagy, P.E.
Chief, Flood Protection and Navigation Section

Exhibit B

KRCD
Kings River Conservation District

4886 East Jensen Avenue
Fresno, California 93725

Tel: 559-237-5567
Fax: 559-237-5560

www.krcd.org

May 1, 2012

Mr. Ashley Cousins
Central Valley Flood Protection Board
P.O. Box 942836
Sacramento, CA 94236

Re: Kings River Designated Floodway - Encroachment Permit Application
KRCD No. 800.05-256 California Department of Transportation
Kings River Overflow Bridge Replacement

Dear Mr. Cousins:

The Kings River Conservation District is in receipt of application and accompanying drawings submitted by the California Department of Transportation to replace a bridge on the existing Highway 180 crossing of Byrd Slough. The project is located on the Byrd Slough Floodway (adopted June 25, 1971), C.M. 1.7 in Section 10, T.14S., R.23E., M.D.B. & M. of Fresno County.

The Kings River Conservation District has no objection to the approval of this Application subject to the following conditions:

1. The Kings River Conservation District and the Kings River Water Association shall not be held liable for damages to the permitted encroachment resulting from releases of water, flood fight activities, operation, maintenance, inspection, or emergency repair.
2. The permittee is responsible for all liability associated with construction, operation, and maintenance of the permitted facilities and shall defend and hold harmless the Kings River Conservation District and Kings River Water Association from any liability or claims of liability associated therewith.
3. The permittee shall be responsible for the repair of any damages to the Kings River Designated Floodway due to construction, operation, and/or maintenance of the herein permitted project.
4. The permittee shall be responsible for the removal and clearance of all debris which lodges or collects against any portion of the bridge structure during periods of high water. Cleared trees and brush shall be properly disposed outside the limits of the designated floodway.
5. In the event erosion of the banks occurs at the project site, the permittee shall repair the eroded areas with adequate protection to prevent future erosion.
6. The permittee shall submit a water diversion plan to the Central Valley Flood Protection Board for any temporary staging and form work allowed to remain in the floodway during the flood season (November 15th through July 20th). The

BOARD OF DIRECTORS
Division I, NORMAN B. WALDNER, Dinuba • Division II, MASARU YOSHIMOTO, Fowler • Division III, GILDO NONINI, Fresno • Division IV, MARK McKEAN, Riverdale
Division V, D. PAUL STANFIELD, Hanford • Division VI, CEIL W. HOWE, JR., Stratford • At Large, DR. DAVID CEHRS, Sanger
OFFICERS
MARK MCKEAN, President • DR. DAVID CEHRS, Vice President • DAVID ORTH, General Manager-Secretary • RANDY SHILLINGS, Auditor

plan shall contain all elements required by the Board including: (a) proposed methods to monitor current and predicted flood flow conditions; (b) proposed actions for all flow conditions up to 100-year conditions; and (c) analysis of impacts for failure to take planned action of for the occurrence of unanticipated conditions. The permittee is solely responsible for monitoring existing and predicted flow conditions and taking appropriate actions throughout construction. A copy of the plan shall be provided to the Kings River Conservation District at least sixty (60) days prior to the commencement of work.

7. The permittee shall provide to the Kings River Conservation District a design report, design memorandum, or other written documentation of the engineering analysis used to determine the hydraulic design flow rate of this reach of the floodway.
8. In the event that ownership, operation, or maintenance responsibilities for the project facilities are transferred or delegated to the County of Fresno or any other entity, the California Department of Transportation shall provide the Kings River Conservation District with evidence acknowledging acceptance of all permit conditions.
9. The permittee shall contact the Kings River Conservation District by telephone, (559) 237-5567, at least ten (10) days prior to the commencement of work.

The applicant has been directed to submit four (4) copies of the application with the Kings River Conservation District's endorsement and accompanying data to the Central Valley Flood Protection Board.

If you have any questions, please contact Keith Seligman, Manager of Flood Operations & Maintenance, at (559) 237-5567 extension 120 (office phone). Please provide the Kings River Conservation District with a copy of any pertinent correspondence and Board action concerning this application.

Sincerely,

Steven P. Stadler

Steven Stadler, P.E.,
Deputy General Manager of
Flood Control and Environmental Resources/Chief Engineer

SPS/sjs

L12-0077
File: 800.05.256

ALTERNATIVE FLARED TERMINAL SYSTEM

FLEAT
SRT
X-TENSION

FLEAT

NEW!
FLEAT-SP Standard Post System

The same FLEAT already in use all across America

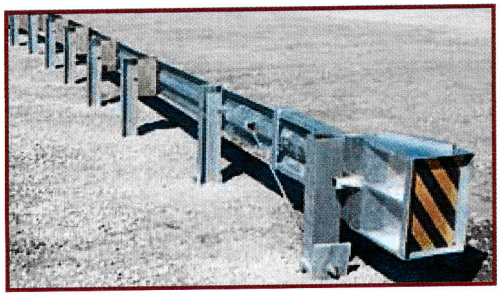

Enhanced upper and lower hinged Post #1
Hinged W6 Post #2, no ground strut
Cost savings for Post #3 and beyond:
- Generic standard W6 steel guardrail posts
- Standard W-Beam rail sections

Simplified installation and maintenance

About 10 seconds of small car end-on impact.

How the FLEAT Functions

The FLEAT 350 (FLared Energy Absorbing Terminal) is an energy-absorbing flared terminal. The flare is straight and the offset is

Design Options for FLEAT

According to U.S. national statistics, 77% of all fatal accidents occur on two-lane roads, and 60% of all crashes occur on roadways with 40 mph or less speed limits.

variable anywhere between 2'-6" and 4'-0". The FLEAT is 37'-6" long and has 7 breakaway posts. NCHRP 350 APPROVED!

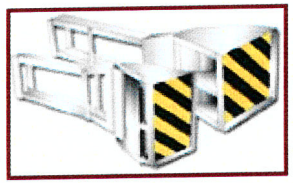

The FLEAT combines the superior performance of the energy absorbing tangent terminals with the advantage of flared terminals in reducing nuisance impacts. During head-on impacts, the FLEAT head slides over the W-beam guardrail. The rail is sequentially kinked or bent as it moves through the head. The kinked guardrail exits the head safely and the vehicle is brought to a controlled stop. When impacted along the side within the length-of-need, the FLEAT functions like guardrail. The errant vehicle is safely redirected back toward its original travel path.

The FHWA has recommended that all non-energy-absorbing flared terminals have 200 feet or more of barrier proper in advance of the fixed object to allow for the vehicle to travel behind and beyond the end of the terminal.

Benefits and Features

The only component different from the SKT is the impact head. This greatly reduces inventory requirements.

When impacted end-on, the kinetic energy is able to be absorbed. With non-energy absorbing terminals, the errant vehicle may travel nearly the length of a football field behind and beyond the end of the terminal.

Only 7 posts are required.

The FLEAT has significantly fewer small components than any other flared terminal. This substantially reduces the installation and maintenance time.

The flare is straight, not a parabolic curve. This greatly

The BCT Failed the TL-2 Crash Testing

The FLEAT meets NCHRP 350 Test Level 2 criteria. All of the components are the same as the Test Level 3 (100 km/hr) design. The length is simply reduced.

	Test Level 2	Test Level 3
Speed	70 km/hr	100 km/hr
Length	25'-0"	37'-6"
Flare Offset	1'-8" to 2'-8"	2'-6" to 4'-0"
Flare Rate	3.8 to 6.1 degrees	3.8 to 6.1 degrees
Posts	5	7

These Test Level 2 designs will cost less to supply, install and maintain.

Downloads

FLEAT Wood Post Installation Manual

SKT / FLEAT Test Level 2 Supplemental Installation Manual

SKT-SP and FLEAT-SP Steel Post Installation Manual

FLEAT Drawing

FLEAT-SP Drawing

simplifies the installation and improves the performance for traffic face redirection impacts.

The flare can be optimized to fit the site conditions. The flare is variable anywhere between 2'-6" and 4'-0". This may reduce the need for costly site grading.

The FLEAT is available from multiple distributors. This means the end of sole source supply.

Fits a wide range of applications:

- Flared
- Variable Offset
- Wood or Steel Posts
- Test Level 2 and 3 Speed

April 2, 1998 FLEAT Approval

August 27, 1998 FLEAT Variable offset Approval

May 21, 1999 FLEAT Test Level 2 Approval

August 27, 1999 SKT & FLEAT Steel Post Approval

June 1, 2001 FLEAT With All 6'-3" Post Spacing

August 20, 2004 SKT & FLEAT
Steel Post Hinged With Single 3/4" Bolt.

June 1, 2008 FLEAT Universal Posts

September 17, 2008 FLEAT-SP Standard Post System

Hinged Steel Post FLEAT Drawing

3616 Howard County Airport Rd. | Big Spring, TX 79720

Sales: (432) 263-2435 | (432) 267-4039 [fax] | Technical Support and Marketing: (330) 346-0721 | (330) 346-0722 [fax]

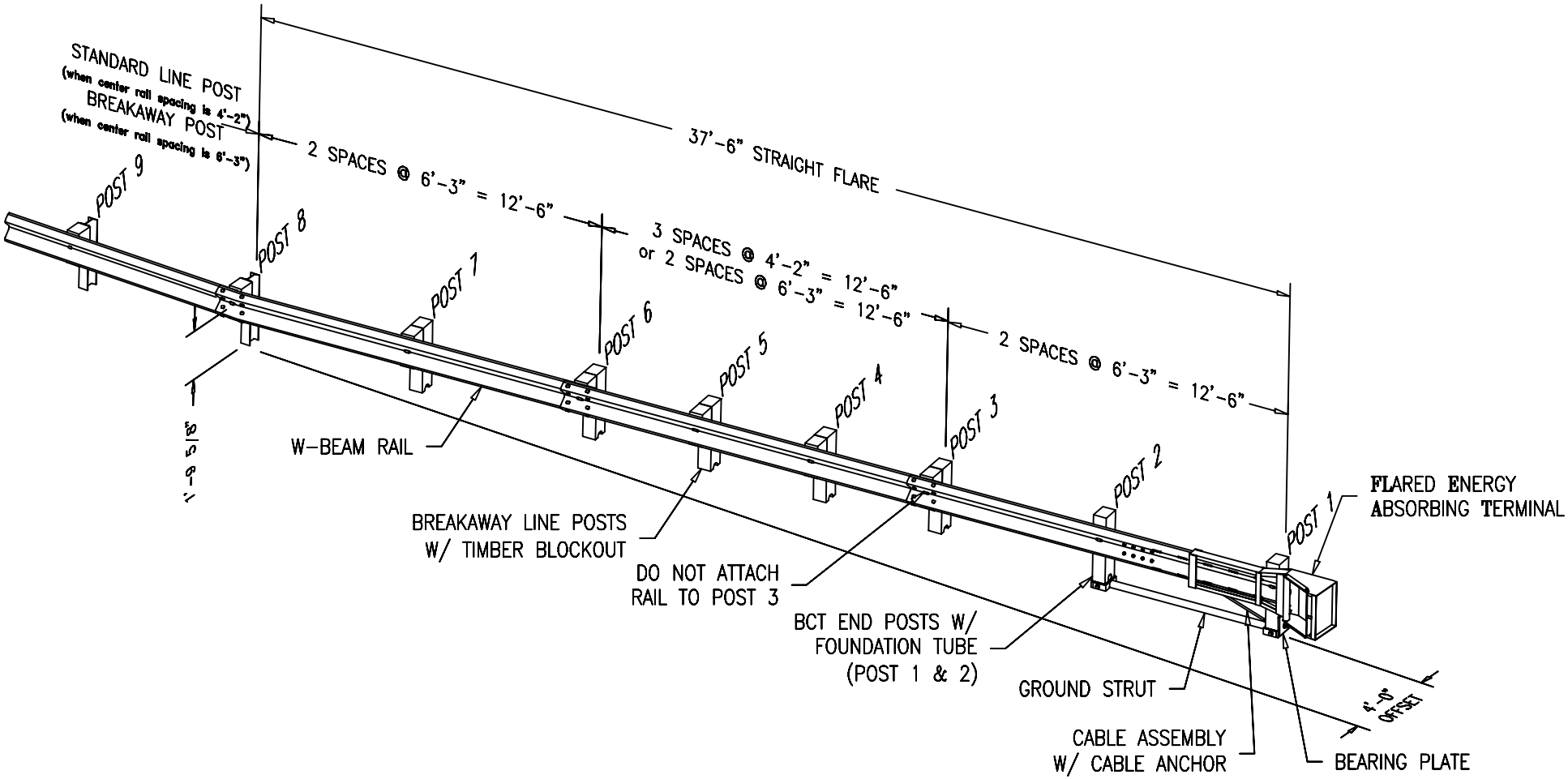

NOTES:

1. OFFSET DIMENSIONS ARE SHOWN TO BLOCKOUTS, EXCEPT FOR POSTS 1 & 2
2. CAN BE INSTALLED AT 2'-6" TO 4'-0" OFFSET.
3. WOOD OR STEEL BREAKAWAY POSTS MAY BE USED FOR THIS SYSTEM.
4. NCHRP 350 TEST LEVEL 3 (37'-6" LONG) SYSTEM IS SHOWN. A REDUCED SPEED TEST LEVEL 2 (25'-0" LONG) SYSTEM IS ALSO AVAILABLE.

TRINITY HIGHWAY PRODUCTS

ABOUT | PRODUCTS | CONTACT

SRT-350™ Family

The Slotted Rail Terminal (SRT-350™) is a gating, flared end terminal and is available in a 6-Post and 8-Post System.

SRT-350™ FAMILY

The Slotted Rail Terminal (SRT-350™) is a gating, flared end terminal and is available in a 6-Post and 8-Post System. The SRT/HBA 6-Post System has 2 steel breakaway posts, 4 wood CRT posts, and is installed in a straight-line flare. The straight-line flare offers a simple layout on new installations. The 6-Post System also has steel breakaway posts that are typically reusable after NCHRP Report 350 criteria impacts. The SRT 8-Post System has 2 tube sleeves/wood posts, 6 wood CRT posts, and installs on a parabolic flare. The parabolic flare has a "footprint" similar to the previously used BCTs and MELTs, making replacement easier. Strategically located slots in the W-beam rail enhance SRT-350™ performance.

Installation and Repair Advantages:

- 3'0"- 4'0" (915 mm-1220 mm) offset results in reduced installation costs.
- Two steel breakaway posts are typically reusable after an impact within NCHRP Report 350 criteria.
- Improved angle struts allow for easier installation.
- Fewer posts and a straight layout provide cost savings in construction, making replacement easier.

END TERMINAL USAGE

- HIGHWAY
- PERMANENT
- UNIDIRECTIONAL TRAFFIC
- BI-DIRECTIONAL TRAFFIC
- BRIDGES/TUNNELS
- MUNICIPAL/CITY

SRT-350 6 POST™

CHOOSE ANOTHER PRODUCT

- CRASH CUSHIONS
- TRUCK MOUNTED ATTENUATORS
- END TERMINALS
- POSTS
- CABLE BARRIERS
- OFFSET BLOCKS
- GUARDRAIL
- EN 1317 PRODUCTS

TECHNICAL INFORMATION

SRT-350™

- Assembly Instructions
  SRT-350 6 Post™
  SRT-350 8 Post™
- Specifications
- Drawings
  SRT-350 6 Post™
  SRT-350 8 Post™
  SRT-27 Post™
  SRT-31 Post™

- Assembly Instructions
  SRT-27 Post™
  SRT-31 Post™

You will need the free Adobe Reader to view information.

Get Adobe Reader

All information, illustrations, documentation, and specifications on this website are based on the latest information available

at the time of posting. We reserve the right to make changes at any time. When printing documents from this website, please verify the revision by contacting us.

BUILDING TOMORROW'S HIGHWAY SAFETY SOLUTIONS TODAY

HELPFUL WEB SITES

Trinity Highway Products © 2007

SPECIFICATIONS

SRT-350™

- Offset: 3'0" to 4'0" (915-1220 mm)
- Length: 37' 6" (11.43 m)
- Length of need: 12'6" (3.81 m) from the end of the terminal (at the 3rd post)
- Parabolic or straight flare options

POST OFFSET DIMENSION TABLE			
POST No	* SYSTEM END OFFSET		
	3'-0"	3'-6"	4'-0"
1	36"	42"	48"
2	22 1/4"	27 3/4"	33 1/2"
3	11 3/4"	16 1/2"	21 1/4"
4	6 3/4"	10 5/8"	14 3/4"
5	3"	6"	9 1/2"
6	3/4"	2 3/4"	5 3/8"
7	0	3/4"	2 3/8"
8	0	0	5/8"
9	0	0	0

OFFSET NOTE:

THE POST OFFSET DIMENSIONS ARE GIVEN TO THE CENTER OF THE TRAFFIC FACE OF THE BLOCKOUTS., EXCEPT AT THE FIRST TWO POSTS, WHERE THE DIMENSION IS TO THE CENTER OF THE TRAFFIC FACE OF THE POST. OFFSET POINTS ARE TO BE LOCATED BY CHORD MEASUREMENTS AT THE BACK OF THE RAIL EQUAL TO THE NOMINAL POST SPACINGS SHOWN. POSTS ARE TO BE SET APPROXIMATELY RADIAL TO THE RAILING AT EACH POST LOCATION.

1 * REFER TO STATE DEPARTMENT OF TRANSPORTATION SPECIFICATIONS, STANDARD DRAWINGS AND/OR PROPOSAL DOCUMENTS FOR ALLOWABLE SYSTEM END OFFSET.

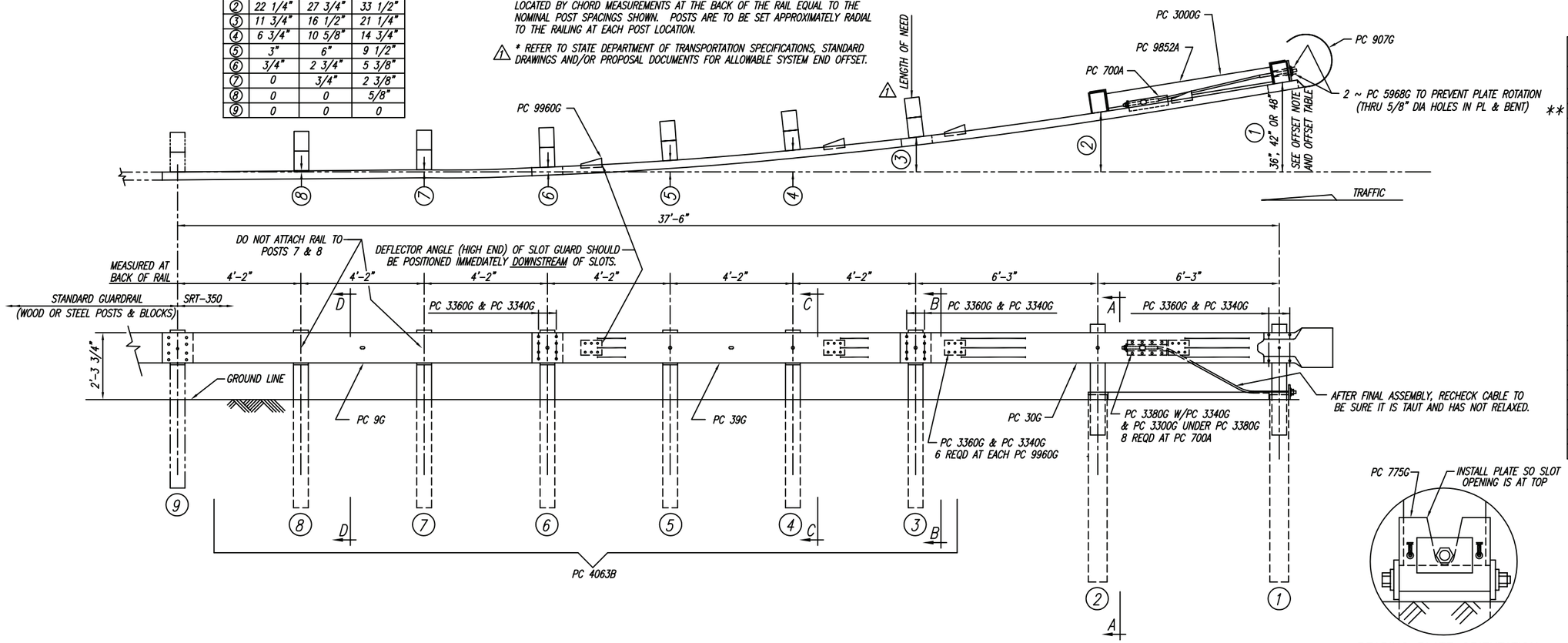

BILL OF MATERIAL		
PC	QTY	DESCRIPTION
9G	1	12/12'6/6'3/S (GUARDRAIL)
30G	1	12/12'6/6'3/S SRT-1 (GUARDRAIL)
39G	1	12/12'6/S SRT-2 (GUARDRAIL)
700A	1	CABLE ANCHOR BRACKET
705G	1	2"ø x 5 1/2" PIPE
742G	2	6'0 TUBE SLEEVE
775G	1	5/8 x 6 x 8 BEARING PLATE
907G	1	12/BUFFER/ROLLED (TERMINAL)
3000G	1	3/4 x 6'6 CABLE
3300G	20	5/8" WASHER
3340G	62	5/8" HEX NUT
3360G	44	5/8"ø x 1 1/4" SPLICE BOLT
3380G	8	5/8"ø x 1 1/2" HEX HD BOLT
3497G	2	5/8"ø x 9 1/2" HEX HD BOLT
3500G	2	5/8"ø x 10" POST BOLT
3580G	6	5/8"ø x 18" POST BOLT
3900G	1	1" WASHER
3910G	2	1" HEX NUT
4063B	6	6'0 POST 6 x 8
4075B	6	14" BLOCK 6 x 8
6058B	2	3' 9 POST 5 1/2 x 7 1/2
5968G	2	16d NAIL SRT
9852A	1	STRUT ASSEMBLY
9960G	4	SLOT GUARD
9961G	1	3/8 x 3 x 4 PLATE WASHER

** GUARDRAIL PANEL PC 30G IS SHOWN PC 34G IS AN ACCEPTABLE ALTERNATE.

BEARING PLATE ORIENTATION

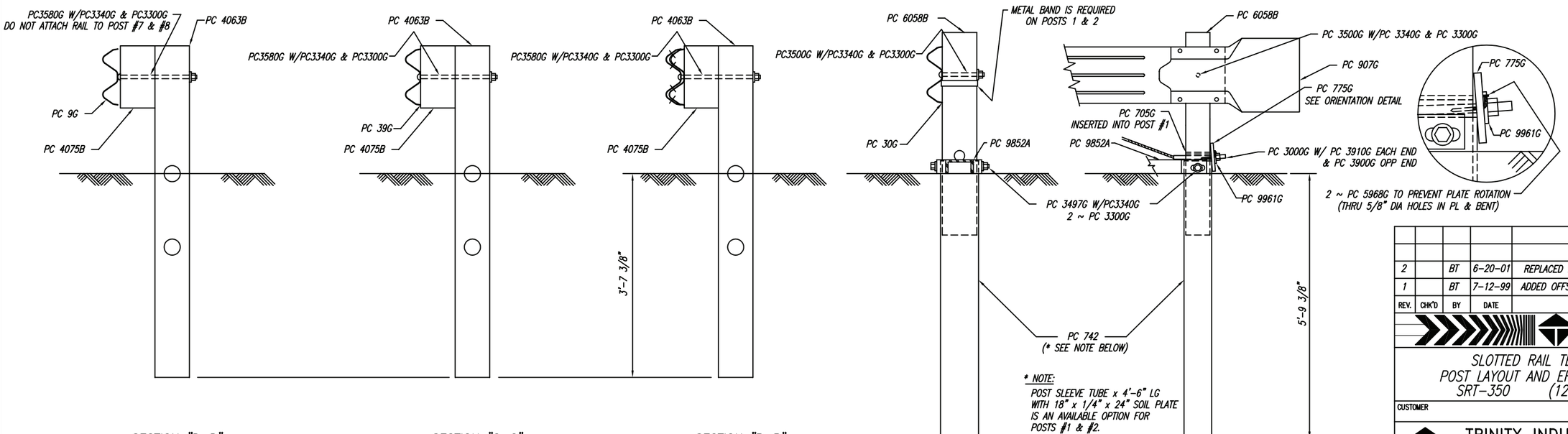

* NOTE:
POST SLEEVE TUBE x 4'-6" LG WITH 18" x 1/4" x 24" SOIL PLATE IS AN AVAILABLE OPTION FOR POSTS #1 & #2.

SECTION "D-D" (@ POST #7 & #8)

SECTION "C-C" (@ POSTS #4, & #5)

SECTION "B-B" (@ POSTS #3 & #6)

SECTION "A-A" (@ POST #2)

ENLARGED VIEW @ POST #1

This drawing and the information shown thereon is the sole property of TRINITY INDUSTRIES, INC. Neither the drawing nor such information is to be used for any purpose other than that for which it was specifically furnished by TRINITY INDUSTRIES, INC., nor is any reproduction authorized without written permission.

REV.	CHK'D	BY	DATE	REMARKS
2		BT	6-20-01	REPLACED PC 34G WITH PC 30G
1		BT	7-12-99	ADDED OFFSET NOTE & LENGTH OF NEED

SRT-350

SLOTTED RAIL TERMINAL
POST LAYOUT AND ERECTION DETAILS
SRT-350 (12.5, 8 POST)

CUSTOMER | P.O. No.

TRINITY INDUSTRIES, INC.
HIGHWAY SAFETY PRODUCTS
2525 STEMMONS FREEWAY, DALLAS TX 75207

DRAWN	B. TAKACH
CHECKED	
APPROVED	
DATE	5-21-99
ENG. FILE #	SS444-01E
SHT.No.	E1 OF 1
DRAWING No.	SS 444
REV.	2

X-TENSION™

Tangent / Flared Redirective, Non-Gating Guardrail Terminal

- Superior Non-Gating Performance
- Contractor Friendly
- Simple Installation
- Meets NCHRP 350 Criteria

LINDSAY™ TRANSPORTATION SOLUTIONS | BARRIER SYSTEMS®

X-TENSION™ TANGENT / FLARED REDIRECTIVE, NON-GATING TERMINAL

1. Impact Head
2. Soil Anchor
3. Cables
4. X-Tension Posts
5. Standard Posts
6. Standard Guardrail

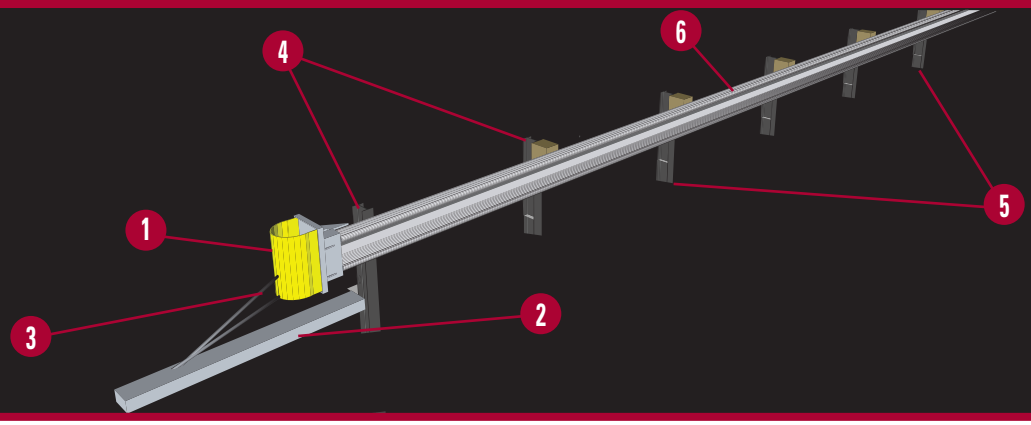

FEATURES

- Only NCHRP 350 tested Redirective Non-Gating Guardrail Terminal available
- Maximum interchangeability between tangent and flared applications
- Available as a kit or system
- 710 or 790 mm (27 5/8 or 31″) height option
- Easy to install
- Utilizes many standard guardrail components

WHERE TO USE

Side of road where limited clear zone or excessive slope restricts the use of Redirective Gating terminals.

The X-Tension Redirective, Non-Gating Terminal provides maximum interchangeability between tangent and flared applications.

THE ONLY REDIRECTIVE, NON-GATING END TERMINAL

The X-Tension Terminal has been engineered for easy installation and maintenance cost savings. Superior redirective, non-gating performance means clear zone grading begins at post one rather than post three like on conventional gating terminals. The System design consists of a high percentage of common guardrail components and a lightweight impact head. These features combined with interchangeability between tangent and flared systems helps keep inventory costs low, results in less installation hours, less grading hours and repair cost savings. The X-Tension Terminal is available with either wood or steel posts and with either wood or composite blockouts.

PHYSICAL SPECIFICATIONS

Imp. Head Weight	25 kg	(56 lb.)
Length	12 m	(40′)
Width	Tangent or Flared	
Height	710/790 mm	(27 5/8/31″)
Straight / Variable Flare	1.2 m	(4′)
Test Level	NCHRP 350 TL-3	

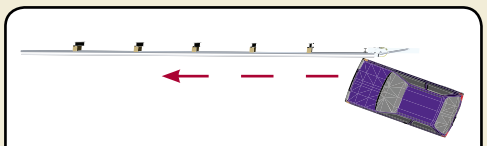

REDIRECTIVE, NON-GATING

What makes the X-Tension Terminal different from the other redirective, gating terminals on the market?

The X-Tension Terminal is tested to NCHRP 350 as a Redirective Non-Gating System. All other terminals are tested as Redirective Gating Systems, meaning they will only start to redirect at the third post.

Can the X-Tension Terminal be attached to concrete barrier?

Yes, The X-Tension Terminal can be attached to concrete barrier with the addition of standard transitions.

Can the X-Tension Terminal be installed using composite blockouts?

The X-Tension Terminal can be used with either wood or composite blockouts.

Distributed By:

LINDSAY™ TRANSPORTATION SOLUTIONS | BARRIER SYSTEMS® | RAILROAD PRODUCTS | SNOLINE™

Barrier Systems Sales & Service • 3333 Vaca Valley Pkwy. • Vacaville, CA 95688 • +1 707.374.6800, U.S. Toll free 888.800.3691 • www.barriersystemsinc.com

General details for the X-Tension Terminal are subject to change without notice to reflect improvements and upgrades.

Additional information is available from Barrier Systems, Inc. © Lindsay Transportation Solutions

PT # XT-051512

ALTERNATIVE CRASH CUSHION SYSTEM

SMART CUSHION
QUADGUARD II
TAU II

SMART CUSHION®

Home

About Us

Products

Arrowboards
Attenuators
Barrel / Drums
Barricades
Channelizers
Manhole Cover Removers
Manhole Protector Rings
Pole Light Brackets
Rescue Devices
Signs & Stands
Strobe Lights
Traffic Cones
Vehicle Mounted Arrowboards
Warning Lights

Careers

Contact Us

Crash / Impact Attenuator

Documents and Videos

SCI SMART CUSHION®

NCHRP 350 APPROVED

The SCI100GM is a fully redirective, non-gating, bidirectional Impact Attenuator. It was designed for safety and reusability. All required NCHRP 350 tests were performed with the same unit with no required replacement parts. Safety comes first with the SCI100GM as it provides lower average ridedown G forces due to the fact that it is a speed dependent system instead of fixed force. It requires minimal spare parts inventories due to the new side panel design which minimizes damage and snag potential on side impacts. During our testing, it produced very low angles of exit which reduces the potential of the vehicle rebounding back into traffic. Quick resetting due to minimal damage reduces worker exposure, repair part costs and repair labor costs.

Features:

- Variable force not fixed force
- Severe Duty Performance
- Lower average ridedown G forces
- Low angle of exit on side impacts
- Reduced snag potential on side impacts
- Minimal spare parts required
- Outstanding resetability

CABLE AND CYLINDER ARRANGEMENT - allows smaller vehicles longer ridedown distances, is reusable and usually only requires two shear bolts replaced after a frontal impact

SIDE PANEL DESIGN - reduces crushing and snag potential while smoothly redirecting on side impacts

SUPPORT GUSSETS - reduces gap formation and panel deformation to prevent snagging on side impacts

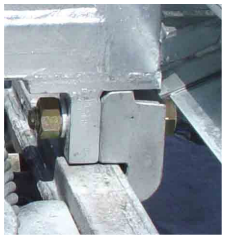

SIDE GUIDE DESIGN - withstands side impacts with no damage

FRONT ROLLERS - enhance smooth, aligned collapse by reducing friction and binding

To find factory certified trainers, installers and repair personnel, please call 800-327-4417.

Documents

Brochure

Specifications
(Updated 7/14/06)

Design, Installation & Repair Manual
(Updated 4/2011)

FHWA Approval Letter -Test Level III

FHWA Approval Letter - Test Level II

FHWA Two Year In-Service Memo & Reported Findings

Impact History

Cylinder Oil MSDS

Videos

Test #3-31 Low Res(2.3meg) High Res(5.5 meg)

Test #3-32 Low Res (4.3 meg) High Res (10.4 meg)

Test #3-33 Low Res (4.2 meg) High Res (10.1 meg)

Test #3-37 Low Res (3.4 meg) High Res (8.1 meg)

Test #3-39 Low Res(3.2 meg) High Res (7.7 meg)

Test Level II Videos High Res (8 Meg)

Test #3-30 Full Size Windows Media File (1.8 meg)

SMART CUSHION®
CalTrans Repair - July 2007
QuickTime (23 meg) AVI (55 meg) Windows Media (24 meg)

INSTALLATION VIDEO
Windows Media (13 meg) **4:35 min**

RESETTING, INSPECTION & REPAIR VIDEO
Windows Media (19.9 meg) **8:30 min**

NEW!!!

NHI-TIG SEVERE DUTY CRASH ATTENUATOR WEBINAR
Quicktime - .mov (361 meg)
Windows Media - wmv (252 meg)

NHI-TIG Severe Duty Crash Attenuator Webinar PowerPoint

You need Acrobat Reader (FREE) to view PDFs

CONTACT INFORMATION

Work Area Protection Corporation has been an ATSSA member for over 30 years.

Work Area Protection Corporation© is copyrighted - All rights are reserved.

SMART CUSHION INNOVATIONS
SCI70GM
General Specifications

DESCRIPTION:

The SCI70GM is a redirective, non-gating crash attenuator that consists of a base, supporting frames, a sled, side panels, a wire rope cable, sheaves and a shock arresting cylinder. The base is anchored to the mounting surface and provides support for the frames that are mounted on it. The support frames hold the side panels that provide an outer flat redirective surface for side impacts. The sled provides redirective support for side impacts and deceleration force for frontal impacts. It is designed for various width applications. The SCI70GM telescopes rearward upon frontal impact and can be reset with minimal repair parts. It is NCHRP 350 Test Level II approved.

MATERIALS:

SCI70GM Impact Attenuator component parts shall meet the following requirements:

A. **Shock Arresting Cylinder.** The cylinder shall be specially designed for different Test Levels and filled with an environmentally friendly, fire-resistant hydraulic fluid that will perform to a minimum saturated pour point temperature of -37 degrees C. (-35 degrees F.). The Shock Arresting Cylinder shall be a metered hydraulic cylinder that has internal ports engineered to reduce the speed of the vehicle to a predefined rate that is dependent on a combination of speed and mass. It translates its resistance (force) to the cable that is attached to the sled.

B. **Cable.** The wire rope cable shall be a 28.6mm (1.125”) 6 x 3 IWRC galvanized wire rope cable with a breaking strength of 58.96 metric tons (65 tons). It shall be attached to the sled with an Open Spelter Socket that has a 100% efficiency rating. It shall be reaved around the Shock Arresting Cylinder and terminated to the base with 4 wire rope clips.

C. **Base.** The base shall be manufactured from 20.5kg/m (13.8lb/ft) steel channel. It shall include all cross bracing necessary to sustain its design criteria impacts without damage.

D. **Side Panels**. The side panels shall be manufactured from ASTM A1011 Grade 60 Steel with an ASTM653 galvanized coating. The outer surface shall have four flat flutes to provide a substantial redirective bearing surface for side impacts. The outer trailing edge overlaps shall be formed to create a bend toward the inner panel to reduce snag potential on reverse side impacts. The angle of the outer flat surface to the flat side return wall shall be 19 – 22 degrees which provides an optimized angle for maximum rigidity to minimize damage and snag potential on side impacts. The outside trailing edge shall be longitudinally shorter than the inside trailing edge to produce a minimum of a 23 degree taper giving the attachment bolts more surface to hold the panels on the support frames with no overlap past the rear edge of the support frames to reduce snagging on reverse impacts.

E. **Support Frames.** The support frames shall be fabricated out of 63.5mm x 63.5mm x 4.7mm (2.5” x 2.5” x .187”) tubular steel. The support frames provide a structure to mount and support the side panels. They will include outboard gussets to support the top and bottom panel flute to eliminate panel fold over at both locations caused by side impacts. They shall be attached to the base by the side guides using a 1” diameter Grade 8 bolt which allows the frames to slide longitudinally upon frontal impacts. The frames shall be designed to be individually replaced without removing other frames.

F. **Front Sled.** The front sled shall be fabricated out of 63.5mm x 63.5mm x 4.7mm (2.5” x 2.5” x .187”) tubular steel. It shall have diagonal bracing to minimize distortion on angled hits, support impact of different vehicle heights, and transfer stopping force to the Spelter Socket attachment. The sled shall have four guide rollers to eliminate wedging on angled front impacts.

G. **Transition Panels.** The transition panels shall be manufactured from ASTM A1011 Grade 60 Steel with an ASTM123 galvanized coating. Three standard transition panels shall be available. These shall be: SCI70GM to Jersey Barrier, SCI70GM to Thrie Beam, and SCI70GM Concrete Transition (for vertical surfaces). Drawings are available for the Thrie Beam transition to be used with Thrie and W Beam Guardrail.

H. **Delineator Plate and Reflectorization.** The front delineator plate shall be supplied in the color specified by the state or, if no color is specified, it shall be yellow. Reflectorization shall be in accordance with state requirements.

I. **Metal Work**. All metal work, except side and transition panels, shall be fabricated from ASTM A36 steel. After fabrication, all metal work shall be hot dip galvanized in accordance with ASTM A123. Welding shall be performed by welders certified per AWS3G.

J. **Fasteners**. All bolts shall be American-made Standard Regular Bolts, unless indicated otherwise in the specification. Anchor bolts shall be anchored using an epoxy with an ultimate pullout load rating of 14,695kg (32,397 lbs) and ultimate shear load rating of 10,644 kg (23,467 lbs).

CONSTRUCTION DETAILS:

The SCI70GM shall be built either on existing concrete pad minimum 150 mm (6”) deep or existing 150 mm (6”) minimum asphalt (type 6 or 7) over 150 mm (6”) minimum compacted subbase (minimum 95% of maximum theoretical density) or existing 150 mm (6”) minimum asphalt (type 6 or 7) over 76 mm (3”) minimum concrete . If new installation is necessary, then the preferred foundation would be a 150 mm (6”) reinforced concrete pad per manufacturer’s instructions.

Anchors shall be set into holes drilled with rotary impact drills, approved by the Engineer, of the sizes recommended by the manufacturer of the attenuator.

The SCI70GM shall be bolted in place in accordance with the attenuator manufacturer’s instructions, but no sooner than seven days after placement of fresh concrete, without accelerators, and no sooner than three days after placement of concrete which has been batched with an approved accelerator.

If a transition is required, the appropriate manufacturer’s standard transition shall be used.

Traffic protection devices, such as cones, drums, lights, signs, barricades, or other articles directed by the Engineer, shall be provided and maintained under their respective items. Those

devices shall not be removed until the SCI70GM Impact Attenuator is fully operational and, in lighted areas or areas to be lighted, these articles shall also be maintained until the lighting system is operational.

QUALITY CONTROL:

1. All steel shall be fabricated from the specified material that is called out on the fabrication drawings.
2. All welding shall be performed by welders certified per AWS3G.
3. Material certifications shall be required from all vendors.
4. All attenuators shall be fabricated from the drawings of the NCHRP 350 tested unit.

TESTING AND CERTIFICATION:

The SCI70GM has passed all required tests and is certified for NCHRP 350 Test Level III. The letter of approval from the Federal Highway Administration is dated February 9, 2005 and has a designation of HSA-10/CC-85A.

PERFORMANCE:

1. The SCI70GM is designed to meet the Test Level 3 performance criteria of the NCHRP 350 for redirective, non-gating crash cushions including, but not limited to, Occupant Risk Criteria and Redirective Criteria.
2. After impacts that are within the design parameters of vehicle mass and speed, the SCI70GM should not require the replacement of parts except for the Nose Plate and Mobile Sheave Shear Bolts. Side impacts may only require an inspection with no repair parts necessary.
3. Upon side impacts, vehicle exit angles should be <1 degree.

DIMENSIONS:

Width (Effective) ----------	24” (610mm)
Length ----------	13.5’ (4.1m)
Height ----------	33” (838mm)
Weight ----------	2464 lb (1118kg)

SMART CUSHION®

The World's Only

Speed-Dependent

Crash Attenuators

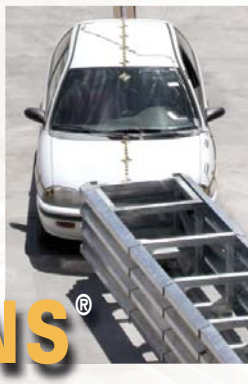

SMART CUSHION INNOVATIONS®

NCHRP 350 Approved

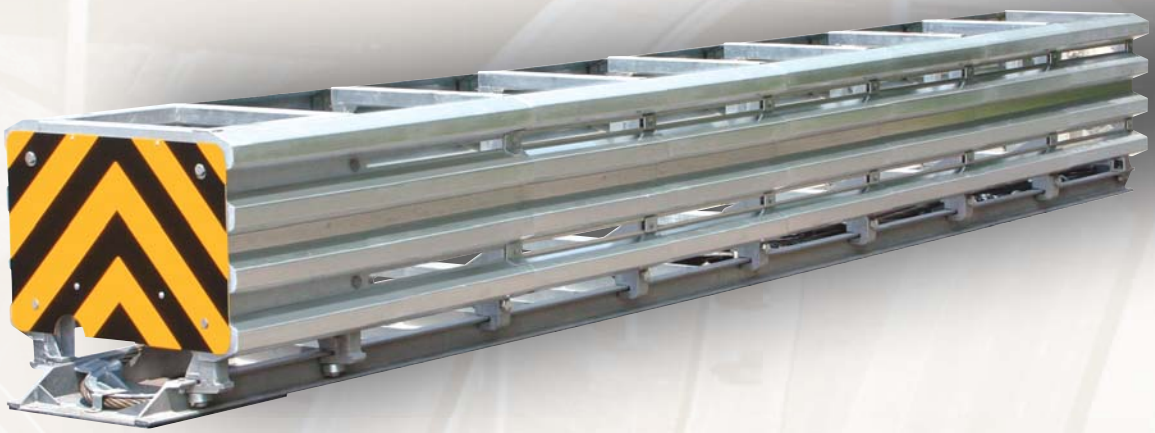

Marketed and Distributed by

Work Area Protection Corp.

SMART CUSHION INNOVATIONS®

The World's Only Speed-Dependent Crash Attenuators

The Smart Cushion® crash attenuator is a revolutionary, speed-dependent product that varies stopping resistance during an impact. The Smart Cushion® crash attenuator allows lighter and slower-moving vehicles to have longer ridedown distances and lower ridedown g-forces.

Unlike fixed-resistance attenuators, the Smart Cushion® attenuator does not reach maximum stopping resistance unless a vehicle is traveling at the maximum design speed. This fully re-directive, non-gating, bidirectional, impact attenuator was designed for maximum safety and reusability, as well as outstanding durability before, during and after an impact.

The Smart Cushion® is the only attenuator with a reverse-tapered design to eliminate side panel stress during a collapse. It also has an extremely low angle of exit on side impacts (<1°) to keep vehicles from rebounding back into traffic and causing secondary accidents. This is the lowest angle of exit for any re-directive attenuator on the market.

How It Works

The hydraulic porting of the attenuator ensures that the proper resistance is used to stop the vehicle before it reaches the end of the cushion's usable length. The Smart Cushion® was specifically designed for durability and resetability to enable resets to be performed in less than 30 minutes. Side impacts within NCHRP 350 specifications do not damage the attenuator.

After an impact, the cushion requires a dual-stage pull-out with the replacement of two 1/4" shear bolts. The crash attenuator requires a minimal inventory of spare parts because of the new side panels' durability and the normal requirement of only two shear bolts on the frontal impact reset. Minimal damage means quick resetting and reduced worker exposure to traffic, as well as lower costs for traffic control, replacement parts and labor.

Ready To Install

Smart Cushion® attenuators come fully assembled for a pick-and-set install. A typical installation can be performed in less than 90 minutes. The Smart Cushion® is self-supporting and requires no additional support for permanent or temporary construction applications.

NCHRP 350 Test Results

All NCHRP 350 tests were performed on the same unit over four consecutive days. All tests showed outstanding results for ridedown g-forces and low angle of exit. There were no replacement parts required prior to the next test except for shear bolts.

Repair Costs

Based on NCHRP 350 test results, the SCI100GM required the following parts and labor:

NCHRP 350 TEST LEVEL 3 REPAIR RESULTS	Part Names	Cost	Repair Hrs.	Cost	Total Cost
#3-31 2000 kg vehicle 0 degree frontal impact at 102 km/h	2 - Shear Bolts	$1	2 man hours	$80	$81
#3-32 820 kg vehicle 15 degree frontal impact at 101 km/h	2 - Shear Bolts	$1	2 man hours	$80	$81
#3-33 2000 kg vehicle 15 degree frontal impact at 101 km/h	2 - Shear Bolts	$1	2 man hours	$80	$81
#3-37 2000 kg vehicle 20 degree side impact at 99 km/h	0	$0	0	$0	$0
#3-39 2000 kg vehicle 20 degree rev. side impact at 99 km/h	0	$0	0	$0	$0

Test Levels Available

The SCI70GM is a Test Level 2 (45 MPH) attenuator and the SCI100GM is a Test Level 3 (62 MPH) attenuator.

Both attenuators can protect a wide range of hazards including but not limited to bridges, median barriers and highway signs.

reusability.

The first speed-dependent, variable-resistance attenuator that can ramp resistance up or down to provide the smoothest ridedown of any system on the market.

Features

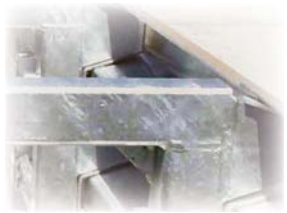

Support Gussets
Gussets located behind the panels reduce gap formation and deformation to prevent snagging on reverse side impacts.

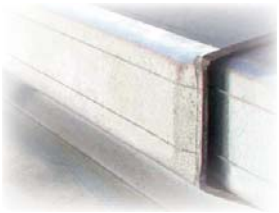

Stronger Side Panel
The panel is over 90% stronger than curved profiles. The profile allows the edges to be beveled, reducing the potential for snagging and damage on reverse-direction impacts. The panel also smoothly redirects vehicles on side impacts. The side panel is fabricated from 10-gauge, 60-ksi, minimum-yield steel with an ASTM A123 galvanized coating.

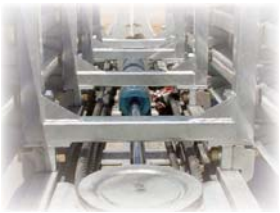

Cable & Cylinder System
This system allows longer ridedown distances for smaller vehicles, as well as smoother ridedown with lower g-forces for all vehicles. The cylinder's hydraulic porting assures a controlled ridedown by applying the necessary resistance required based on the speed and mass of the vehicle.

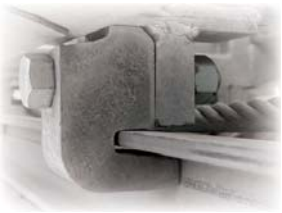

Side Guide Design
This revolutionary design withstands side impacts with no damage.

Front Rollers
The roller guide design on the front sled produces a smooth, aligned collapse by reducing friction and binding.

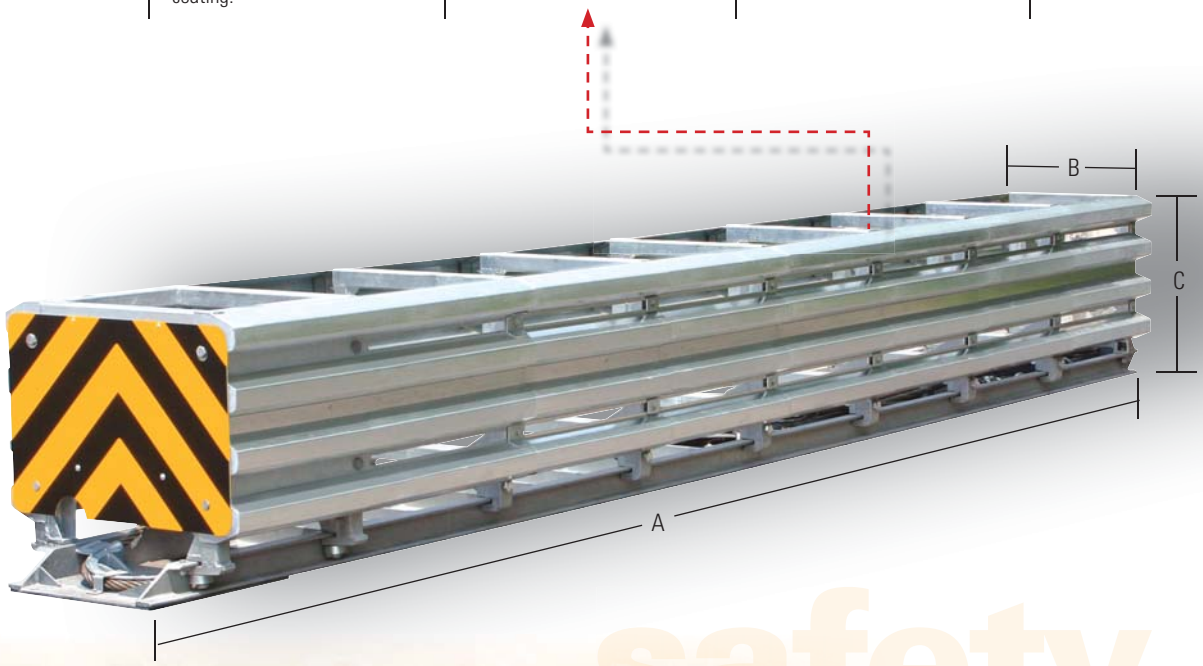

SCI Dimensions	Test Level 2	Test Level 3
A	13' 6"	21' 6"
B	24"	24"
C	34"	34"
Weight	2470 lbs.	3450 lbs.

Weights are for attenuators only

SMART CUSHION INNOVATIONS®

Highlights

Safety Benefits

- Variable resistance (speed-dependent), not fixed resistance, provides consistent deceleration during ridedown.
- Longer ridedown distances and lower sustained g-forces for lighter or slower-moving vehicles.
- Quick and easy resets for reduced worker exposure to traffic.
- Low angle of exit on side impacts (<1°) to keep vehicle from rebounding back into traffic.
- No mobilization required after side impacts reduces public and worker exposure.

Cost Benefits

- Few replacement parts requirement virtually eliminates spare parts inventory and parts costs.
- Thirty minute resets reduces labor and traffic control costs.
- The reverse-tapered design eliminates side panel stress on frontal impacts to reduce damage and system fatigue from multiple impacts.
- Life cycle cost savings increase dramatically as additional impacts occur.
- No damage on side impacts can save up to 75% on repair costs.
- Systems shipped from factory fully assembled reduce on-site labor.

About Work Area Protection Corporation

Work Area Protection Corporation is the international leader in traffic control devices and work zone safety products. Since 1969, we have been meeting customer needs and exceeding quality standards with a wide range of highway and construction safety products. We back these products with knowledgeable, personalized customer service and strong distributor support.

Part No.	Description	Weight
Attenuators		
9400	SCI100GM Attenuator 24" wide w/Concrete Anchors Test Level 3	3500 lbs.
9450	SCI100GM Attenuator 24" wide w/Asphalt Anchors Test Level 3	3575 lbs.
9451	SCI70GM Attenuator 24" wide w/Concrete Anchors Test Level 2	2500 lbs.
9452	SCI70GM Attenuator 24" wide w/Asphalt Anchors Test Level 2	2550 lbs.
Anchor Kits		
9401	Concrete Anchor Kit for SCI100GM - requires #9515 Epoxy Kit	
9402	Asphalt Anchor Kit for SCI100GM - requires #9516 Epoxy Kit	
9453	Concrete Anchor Kit for SCI70GM - requires #9517 Epoxy Kit	
9454	Asphalt Anchor Kit for SCI70GM - requires #9518 Epoxy Kit	
Accessories		
9406	Shear Bolt	
9424	Delineator Panel Yellow Test Level 3	
9456	Delineator Panel Yellow Test Level 2	
9488	Reset Parts Kit Test Level 3	
9489	Reset Parts Kit Test Level 2	
Transitions		
9431	Transition 24" Jersey Barrier - Right (viewed from front)	
9432	Transition 24" Jersey Barrier - Left (viewed from front)	
9433	Transition 24" Concrete - Left & Right	
Transitions available for 30", 36", wide gores, various shaped barriers and guardrails		

Transition 24" Jersey Barrier

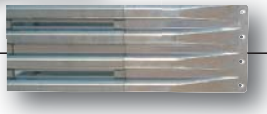

Transition 24" Concrete

Disclaimer
This product is only intended for use as a re-directive impact attenuator. Installations must be performed strictly according to manufacturer's specifications. Improper installation, modification, or unintended use may create a hazardous condition that can cause personal injury, property damage or death. Any modification or unintended use of this product shall immediately void all manufacturer's warranties. SCI Products Inc. disclaims all liability for injuries to persons or property resulting from any modifications to, unintended use of, or installation of, this product other than in strict accordance with the manufacturer's specifications.

Designs are subject to change without notice.

SMART CUSHION INNOVATIONS® and SMART CUSHION® are registered trademarks of SCI Products Inc.
US Patent No. 6,962,459
US Patent No. 7,018,130
US Patent No. 7,070,031
US Patent No. 7,086,805

Cones • Barrels • Channelizers • ITS Products • Arrow Boards • Solar Message Centers

Work Area Protection Corporation
P.O. Box 4087 • 2500 Production Drive • St. Charles, IL 60174-9081
Phone: 630.377.9100 • **Orders: 800.327.4417** • Fax: 630.377.9270
Web: www.workareaprotection.com

Member ATSSA

Distributed by:

©2011 Work Area Protection Corp.

NOTES:

1. INSTALLATION TO COMPLY WITH MANUFACTURER'S INSTRUCTIONS.
2. FOR MORE INFORMATION, SEE MANUFACTURER'S DETAILS.

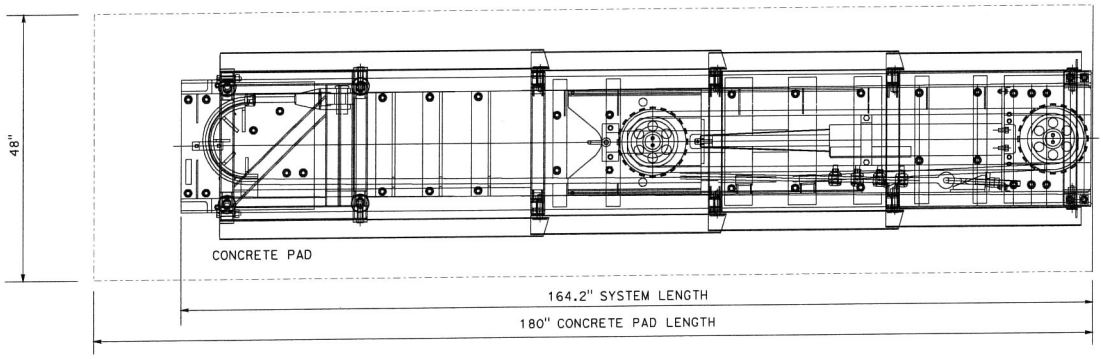

PLAN VIEW

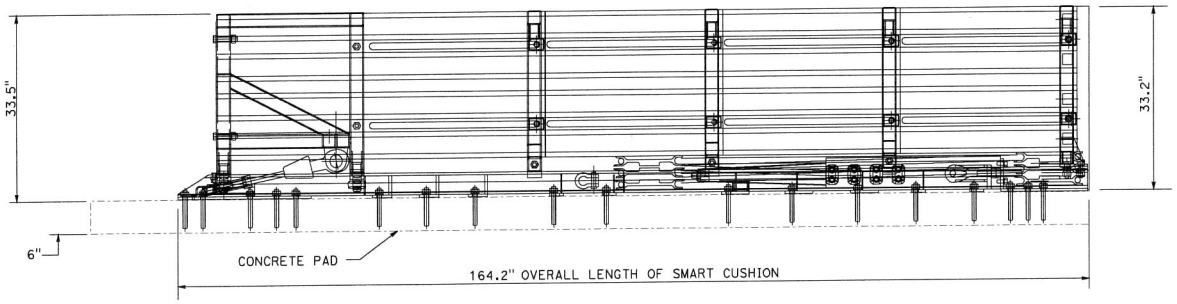

ELEVATION

CRASH CUSHION SYSTEM

SMART CUSHION (MODEL No. SCI70GM)

QuadGuard® II

The New Standard in Crash Cushions

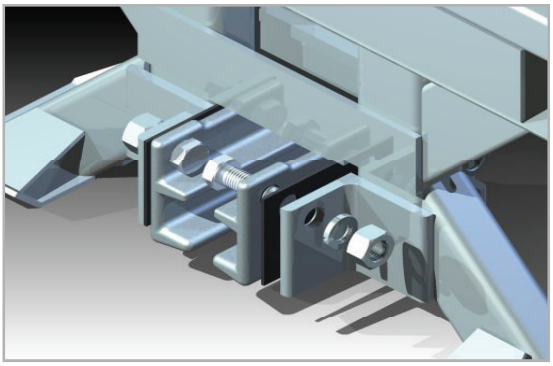

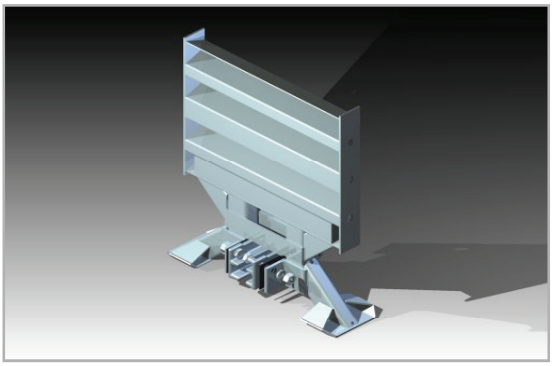

OVERVIEW

The QuadGuard family has evolved again! Using the existing framework of the QuadGuard, the QuadGuard II provides TL-2 and TL-3 protection using less length. The TL-2 QuadGuard II is 25% shorter than the original QuadGuard measuring less than 3m (10'). The TL-3 model is also nearly a meter, 3 feet, shorter than its predecessor.

The only modifications are the addition of the revolutionary Steel Nose, and the monorail Guide Stabilizers. The remaining components are identical to the existing NCHRP 350 systems that have been installed globally since the mid 1990's.

The QuadGuard II will telescope rearward on head-on impacts by both the light car and the high center-of-gravity pickup truck at speeds up to 100 km/h (62 mph) and safely redirect errant vehicles on impact up to 20 angles into the side of the unit without gating.

POST IMPACT DEBRIS

The design of the QuadGuard II does an excellent job of minimizing debris affecting other vehicles in the roadway.

FEATURES AND BENEFITS

- More is LESS!
- QuadGuard II has up to 25% less footprint reducing installation cost
- Steel Nose provides excellent visibly
- Majority of system is identical to QuadGuard- reduced inventory requirements
- Shorter Systems are less likely to be impacted
- Offers hazard protection from 40 km/h (25mph) to 115 km/h to (70mph)

QUADGUARD ® II

ENERGY ABSORPTION SYSTEMS, INC.

SAVING LIVES BY DESIGN®

www.energyabsorption.com

QuadGuard® II

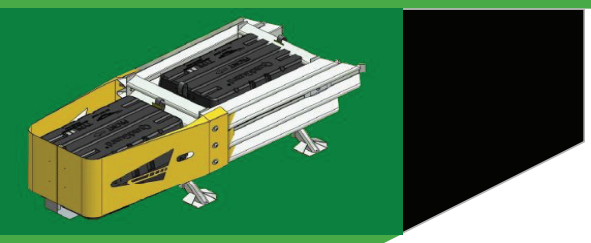

SPECIFICATIONS

Minimum Width at Backup	610 mm	(2′)
Maximum Width at Backup	2.3 m	(8′)
TL-2 Effective Length	2.6 m	(8′8″)
TL-3 Effective Length	5.4 m	(8′8″)

1 ENGINEERED STEEL NOSE
2 MONORAIL
3 STEEL BACKUP
4 FENDER PANEL

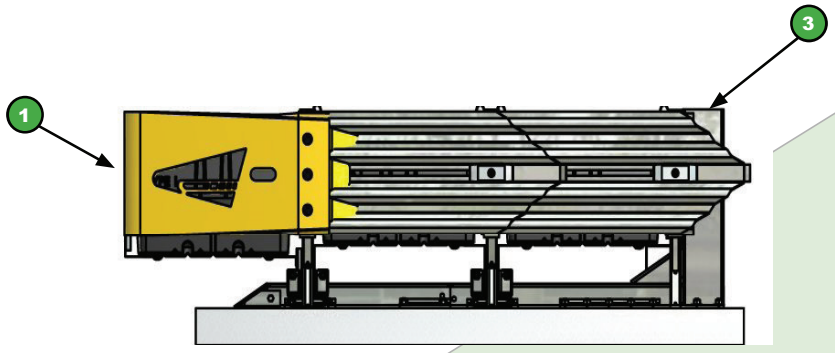

TL-2

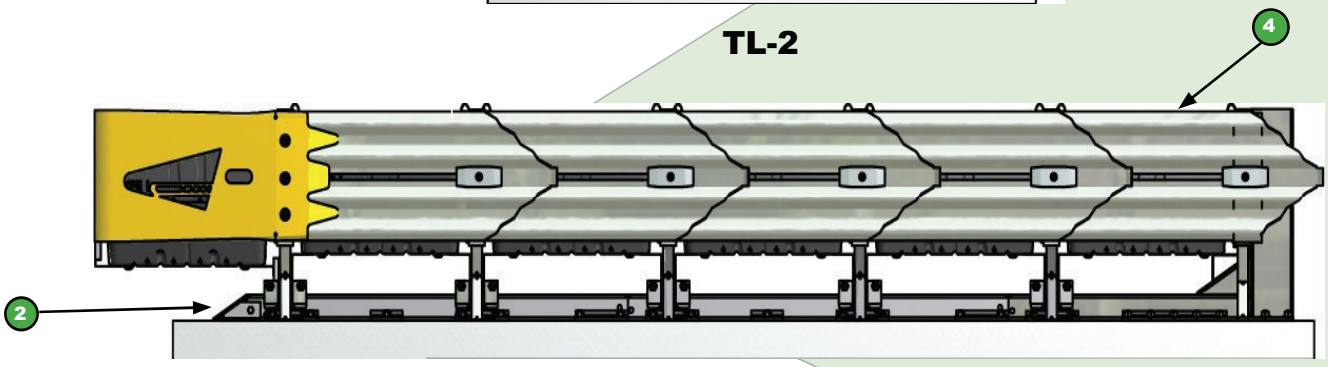

TL-3

DISTRIBUTED BY:

Quixote Transportation Safety

35 E. Wacker Drive • Chicago, IL 60601
Tel: (312) 467-6750 • Fax: (312) 467-9625

Crown House, Crown Street • Ipswich, 1P1 3HS
Tel: 44-1473-221-105 • Fax: 44-1473-221-106

www.energyabsorption.com

ENERGY ABSORPTION SYSTEMS, INC.

www.quixtrans.com

ENERGY ABSORPTION SYSTEMS, INC.
A TRINITY INDUSTRIES,INC. COMPANY

QuadGuard®II CRASH CUSHION SYSTEM

QUADGUARD®II CRASH CUSHION

QUADGUARD®II CRASH CUSHION family has evolved again! Using the existing framework of the QuadGuard, the QuadGuard II provides TL-2 and TL-3 protection using less length.

The TL-2 QuadGuard II is 25% shorter than the original QuadGuard measuring less than 3m (10'). The TL-3 model is also nearly a meter, 3 feet, shorter than its predecessor.

The only modifications are the addition of the revolutionary Steel Nose, and the monorail Guide Stabilizers. The remaining components are identical to the existing NCHRP 350 systems that have been installed globally since the mid 1990's.

The QuadGuard II will telescope rearward on head-on impacts by both the light car and the high center-of-gravity pickup truck at speeds up to 100 km/h (62 mph) and safely redirect errant vehicles on impact up to 20 angles into the side of the unit without gating.

FEATURES AND BENEFITS

- LESS is MORE!
- QuadGuard II has up to 25% less footprint reducing installation cost
- Steel Nose provides excellent visibly
- Majority of system is identical to QuadGuard reduced inventory requirements
- Shorter Systems are less likely to be impacted
- Offers hazard protection from 40 km/h (25mph)to 115 km/h to (70mph)

Post Impact Debris

The design of the QuadGuard II does an excellent job of minimizing debris affecting other vehicles in the roadway.

European Standard EN-1317-3

The QuadGuard® Family also includes systems to meet Europe's EN-1317-3 Criteria
- QuadGuard CEN Crash Cushion Family

Head-On Impacts

During head-on impacts, the QuadGuard® System telescopes rearward and crushes the cartridges to absorb the energy of impact.

Redirective Capability

When impacted from the side, the QuadGuard® System redirects the errant vehicle back toward its original travel path without allowing gating.

Quad-Beam™ Panels

Quad-Beam panels provide 30% higher beam strength than thrie beam panels.

Monorail Base

Monorail base eliminates the need for chains and cables providing excellent redirective capability.

Self-Supporting Nosee

Self-supporting nose means no legs to complicate installation and maintenance. Optional Flex-Belt Nose available.

Easy Refurbishment of Crash Cushions

Self-supporting nose means no legs to complicate installation and maintenance. Optional Flex-Belt Nose available.

Replaceable Cartridge

Replaceable cartridge contains impact debris, avoiding loose parts that may cause secondary accidents.

Energy Absorption Systems, Inc.

Copyright 2013

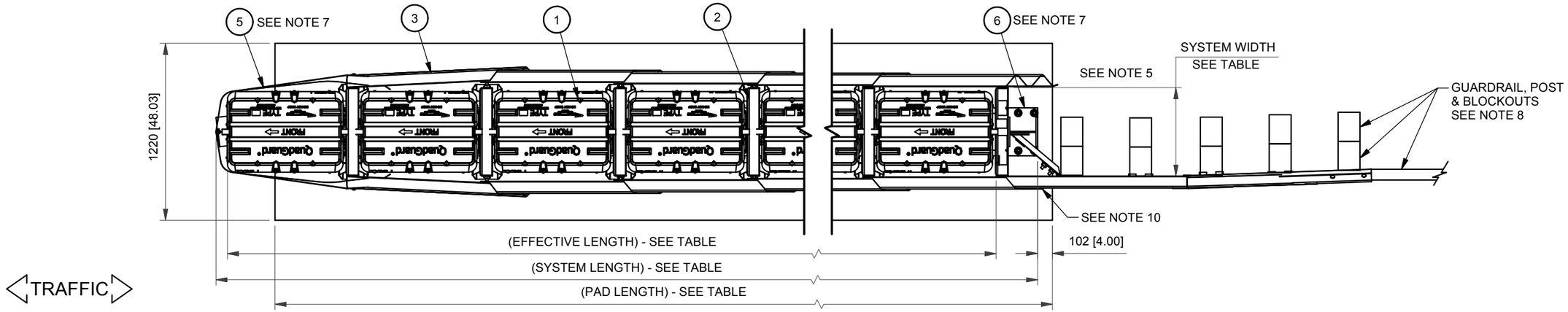

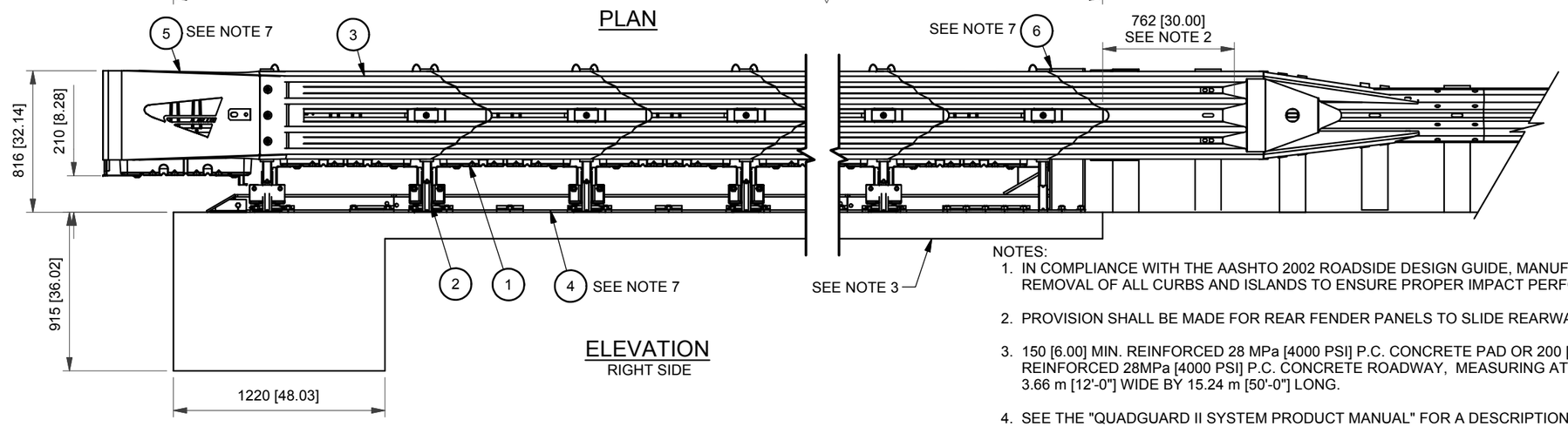

NOTES:

1. IN COMPLIANCE WITH THE AASHTO 2002 ROADSIDE DESIGN GUIDE, MANUFACTURER RECOMMENDS REMOVAL OF ALL CURBS AND ISLANDS TO ENSURE PROPER IMPACT PERFORMANCE.
2. PROVISION SHALL BE MADE FOR REAR FENDER PANELS TO SLIDE REARWARD UPON IMPACT 762 [30.00] MIN.
3. 150 [6.00] MIN. REINFORCED 28 MPa [4000 PSI] P.C. CONCRETE PAD OR 200 [8.00] MIN. NON-REINFORCED 28MPa [4000 PSI] P.C. CONCRETE ROADWAY, MEASURING AT LEAST 3.66 m [12'-0"] WIDE BY 15.24 m [50'-0"] LONG.
4. SEE THE "QUADGUARD II SYSTEM PRODUCT MANUAL" FOR A DESCRIPTION OF ITS IMPACT PERFORMANCE CHARACTERISTICS AND DESIGN LIMITATIONS BEFORE PLACING A SYSTEM AT A GIVEN SITE. INFORMATION AND COPIES OF ABOVE MANUAL ARE AVAILABLE BY CALLING CUSTOMER SERVICE DEPARTMENT AT (888) 323-6374.
5. WHERE NECESSARY, THE CUSTOMER SHALL SUPPLY AN ADEQUATE TRANSITION FROM THE QUADGUARD II SYSTEM TO THE OBJECT BEING SHIELDED.
6. UNITS OF MEASUREMENT ARE MILLIMETERS [INCHES] UNLESS OTHERWISE NOTED.
7. BACKUP, TRANSITION, MONORAIL, AND NOSE ASSEMBLIES ARE NOT INCLUDED IN MODEL NUMBER, ORDER SEPARATELY. TRANSITION ASSEMBLIES AND RELATED FASTENERS ARE ACCESSORY ITEMS.
8. W-BEAM QUARDRAIL, POST, BLOCKOUTS AND RELATED FASTENERS TO BE SUPPLIED BY OTHERS.
9. THE QUADGUARD II SYSTEM HAS BEEN TESTED TO NCHRP 350.
10. TRANSITION PANEL SHALL BE ANGLED SUCH THAT MAXIMUM GAP FROM FENDER PANEL OVERLAP DOES NOT EXCEED 20 [.78].

ROADSIDE / BIDIRECTIONAL

BAYS	610 [24"] WIDTH MODEL NO.	762 [30"] WIDTH MODEL NO.	914 [36"] WIDTH MODEL NO.	1220 [48"] WIDTH MODEL NO.	SYSTEM LENGTH m	ft-in	EFFECTIVE LENGTH m	ft-in	PAD LENGTH m	ft-in	MAX DESIGN SPEED Km/h	[MPH]	NO. OF CARTRIDGES TYPE I	TYPE II
1	QG24024	QG24030	QG24036	QG24048	2.13	[7'-0"]	1.73	[5'-8"]	2.74	[9'-0"]	40	[25]	2	0
2	QG27024	QG27030	QG27036	QG27048	3.05	[10'-0"]	2.64	[8'-8"]	2.74	[9'-0"]	70	[43]	2	1
3	QG28024	QG28030	QG28036	QG28048	3.96	[13'-0"]	3.56	[11'-8"]	3.66	[12'-0"]	80	[50]	2	2
4	QG29024	QG29030	QG29036	QG29048	4.87	[16'-0"]	4.47	[14'-8"]	4.57	[15'-0"]	90	[56]	3	2
5	QG210024	QG210030	QG210036	QG210048	5.79	[19'-0"]	5.38	[17'-8"]	5.49	[18'-0"]	100	[62]	3	3
6	QG210524	QG210530	QG210536	QG210548	6.71	[22'-0"]	6.30	[20'-8"]	6.40	[21'-0"]	105	[65]	4	3
7	QG211024	QG211030	QG211036	QG211048	7.63	[25'-0"]	7.21	[23'-8"]	7.32	[24'-0"]	110	[68]	4	4
8	QG211524	QG211530	QG211536	QG211548	8.53	[28'-0"]	8.13	[26'-8"]	8.23	[27'-0"]	115	[71]	4	5
9	QG212024	QG212030	QG212036	QG212048	9.45	[31'-0"]	9.04	[29'-8"]	9.14	[30'-0"]	120	[75]	4	6

KEY

1. CARTRIDGE
2. DIAPHRAGM
3. FENDER PANEL
4. MONORAIL
5. NOSE ASSEMBLY
6. BACKUP

Revision	Date	Rev	By	Chk.	App.

REFERENCES

	DIAPHRAGM ASSY.	607113
	SHIM KIT, DIAPHRAGM	614050
SERIAL NO.	NOSE ASSY.	611580
SALES ORDER	FENDER PANEL ASSY.	608236
EH PROJECT	BACKUP ASSY.	35-40-03
NOSE COLOR	MONORAIL ASSY.	35-40-75
NO. OF UNITS	CONCRETE PAD	35-40-76
	TRANSITION ASSY.	35-40-21

DRAWN: W. Leddington	DATE: 2/4/2010		
DESIGNED: ---	DATE:		
CHECKED: S. Trageser	DATE: 7/22/2010		
APPROVED: F.J. Powell	DATE: 7/23/2010		
FILE: QG2TSCVR-TWR.idw			
NEXT ASSEMBLY:			

ENERGY ABSORPTION SYSTEMS
ENGINEERING AND RESEARCH DEPARTMENT

QUADGUARD®II SYSTEM

WITH TENSION STRUT BACKUP AND QUAD TO W-BEAM TRANSITION

SCALE:	DRAWING:	SHEET:	REV
N.T.S.	QG2TSCVR-TWR	1 of 1	

PARTS LIST			
ITEM	STOCK NO.	DESCRIPTION	QTY.
1	607821G	DIAPHRAGM,QB,24,QG,G	1
8	611368G	MONORAIL GUIDE,QG,G	2
9	115954G	NUT,HX,3/4",GR DH	4
10	113555G	BOLT,HX,3/4X2,G8,G	4
11	118089G	WASHER,LOCK,3/4,G	4
12	605446G	BRACKET,CARTRIDGE SUPT,DIA,FOLDED,QG,G	2

ASSY. NO.	ITEM 1	DESCRIPTION	WIDTH
607113B	607821B	DIAPHRAGM,QB,24,QG,G	610 [24.00]
607114B	607827B	DIAPHRAGM,QB,30,QG,G	760 [30.00]
607115B	607834B	DIAPHRAGM,QB,36,QG,G	915 [36.00]
607117B	607838B	DIAPHRAGM,QB,48,QG,G	1219 [48.00]

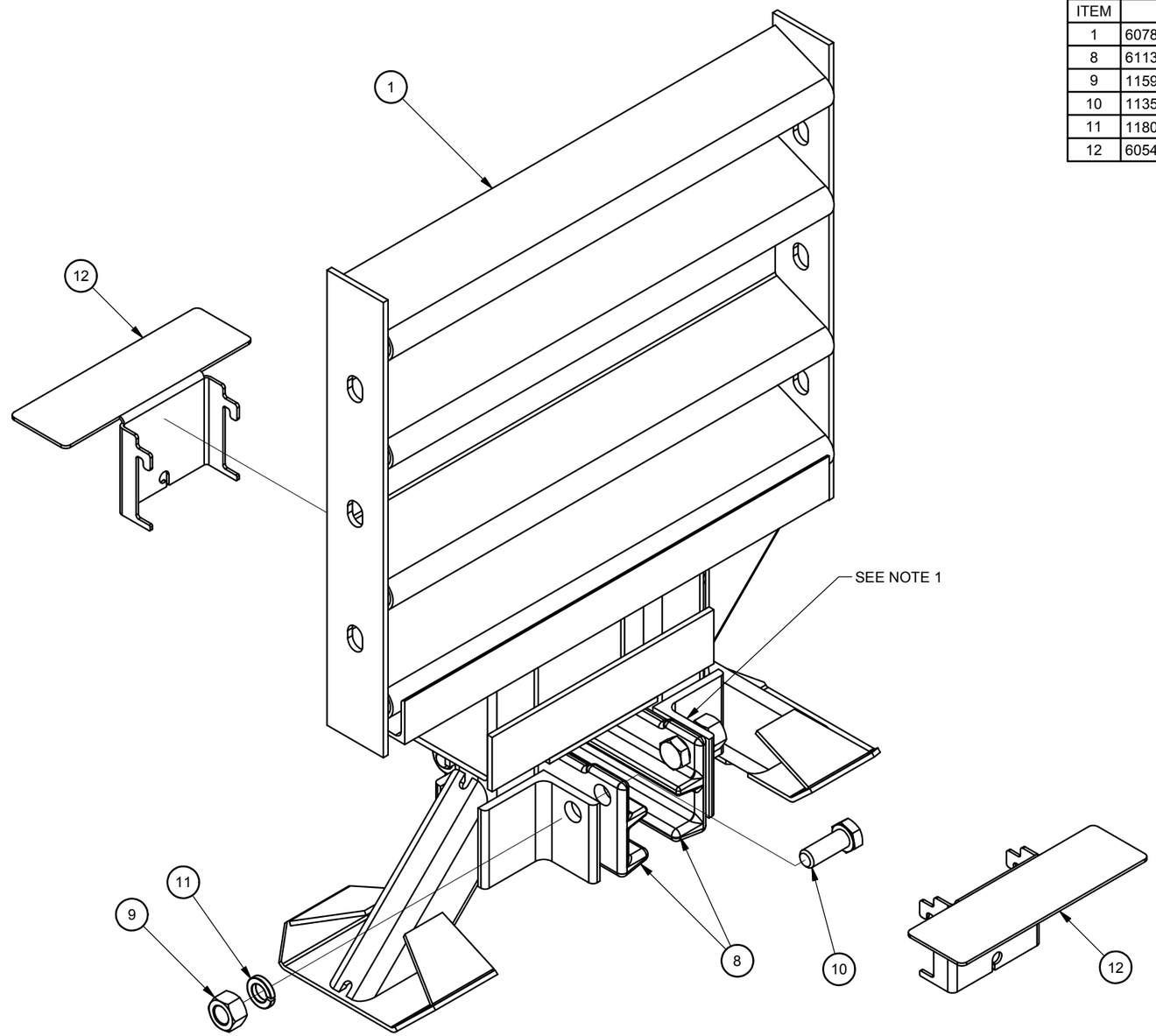

PART NO. SEE TABLE

NOTE:
1. QUADGUARD II AND QGM10 REQUIRE THE SHIM KIT, SEE 614050.

Revision	Date	Rev	By	Chk.	App.
ADDED 48" ASSY INFO INTO TABLE A.	6/4/09	G	RJV	STT	RCB
PART NO. WAS 3540071-0000.	4/21/11	-	DK	/	/
ECO 3145: ADDED LEADER TEXT & QGM10 REF. TO NOTE 1	8/9/11	H	DDS	JME	ST

DRAWN: J. Espinoza	DATE: 5/2/1996
DESIGNED:	DATE:
CHECKED: S. Trageser	DATE: 5/17/1996
APPROVED: J. Machado	DATE: 5/17/1996
FILE: 607113.idw	

ENERGY ABSORPTION SYSTEMS, INC.
ENGINEERING AND RESEARCH DEPARTMENT

DIAPHRAGM ASSY,QB

SCALE:	DRAWING:	SHEET:	REV
	607113	1 of 1	H

FM0037 Rev -, 7/22/10

PARTS LIST			
ITEM	STOCK NO.	DESCRIPTION	QTY.
1	614062G	SHIM,1/8X3 5.8X8,G	2

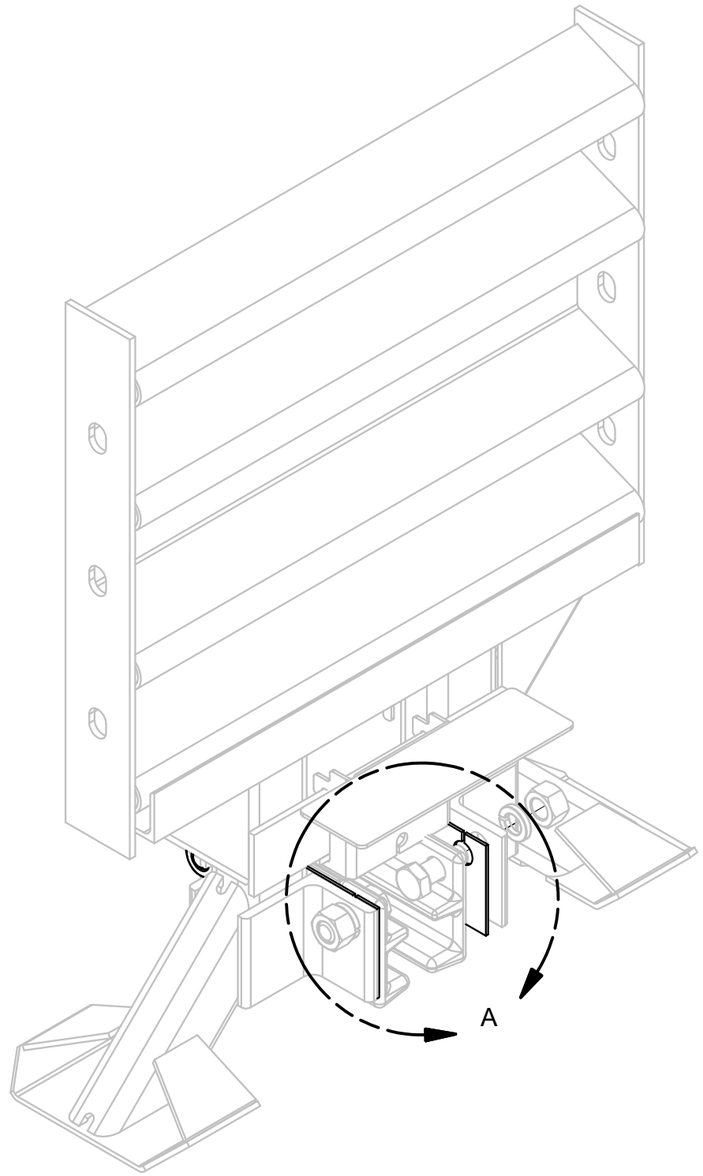

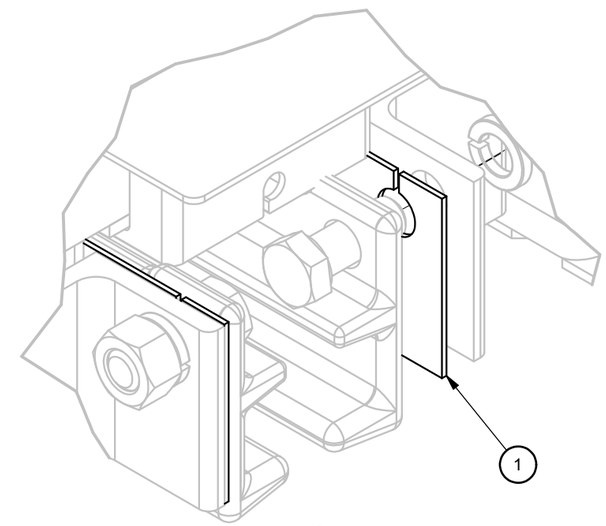

DETAIL A
TYPICAL BOTH SIDES

ASSEMBLY NO. 614050B

Revision	Date	Rev	By	Chk.	App.
UPDATED ITEM 1.	7/14/09	B	DK	JME	RCB
UPDATED ITEM 1.	8/14/09	C	WWL	KRM	AJC
PART NO. WAS 3540078-0000.	4/12/11	-	DK	/	/

DRAWN: D. Kohfeld	DATE: 2/27/2009
DESIGNED: M. Buehler	DATE: 12/30/2008
CHECKED: JME	DATE: 3/4/2009
APPROVED: MJB	DATE: 3/19/2009
FILE: 614050.idw	
NEXT ASSEMBLY:	

ENERGY ABSORPTION SYSTEMS, INC.
ENGINEERING AND RESEARCH DEPARTMENT

SHIM KIT,DIAPHRAGM,RAIL GUIDE,QG II

SCALE:	DRAWING:	SHEET:	REV
	614050	1 of 1	C

PARTS LIST			
ITEM	STOCK NO.	DESCRIPTION	QTY.
1	611669G	NOSE,L,NARROW,QGII,W/LOGO,G	1
2	611680G	NOSE,R,NARROW,QGII,W/LOGO,G	1
3	605430G	BRACKET,CART SUPPORT,NOSE,QGII,G	1
4	605420G	BRACKET,CART SUPPORT,NOSE BAY,QGII,G	1
5	113518G	BOLT,HX,1/4X3/4,G5,G	6
8	115946G	NUT,HX,1/4,G	6
9	003340G	NUT,HX,5/8,G,RAIL	30
11	118085G	WASHER,LOCK,1/4,G	6
12	003300G	WASHER,FLAT,5/8 X 1 3/4, G	18
13	605535G	BRACKET,PULL-OUT,QG,G	2
15	116810G	ROD,THREADED,5/8X7,G5,G	6

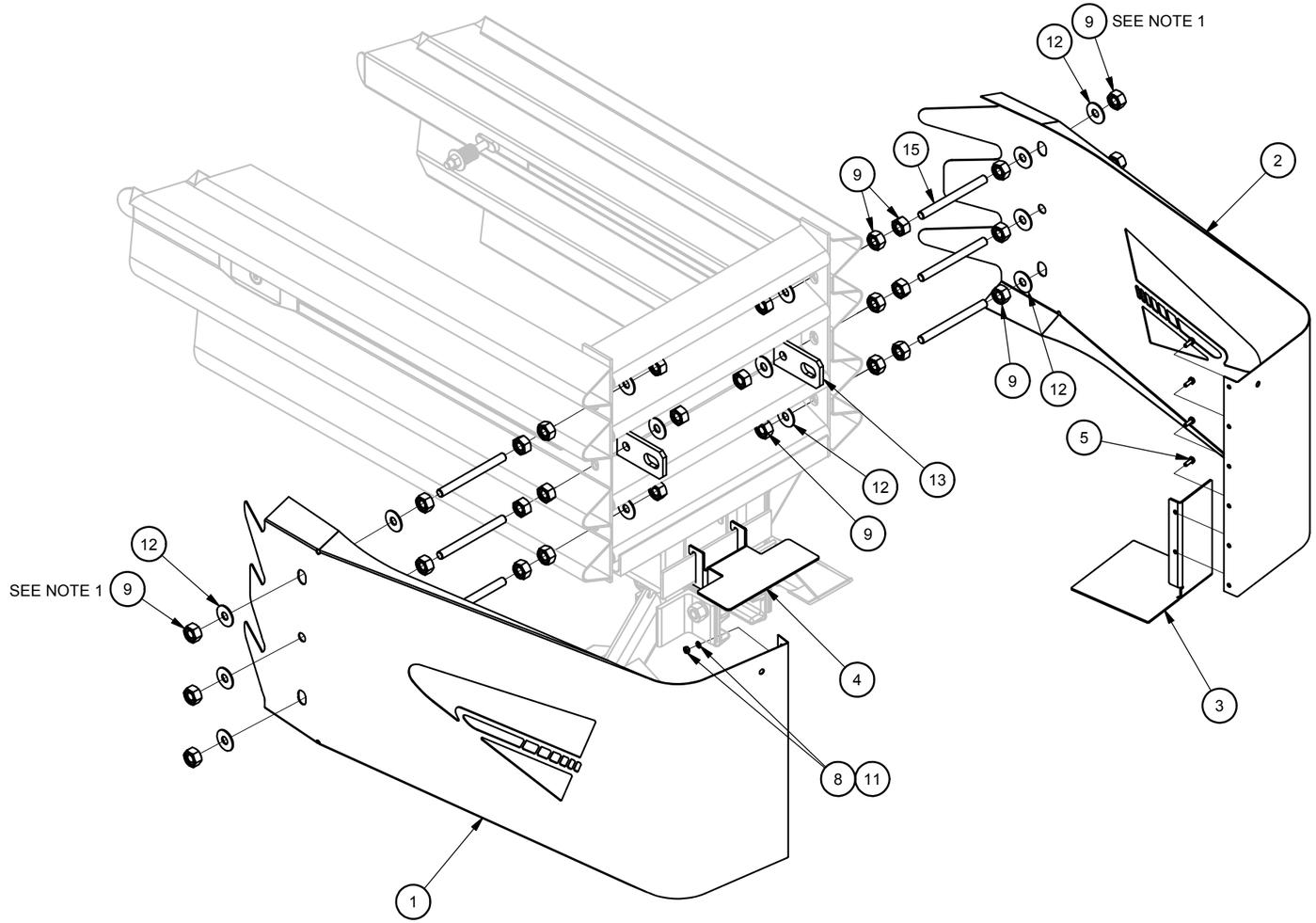

TABLE			
ITEM 1	ITEM 2	ITEM 3	FINISH
611669G	611680G	605430G	GALV
611669Y	611680Y	605430W	YELLOW
611669W	611680W	605430W	BLACK

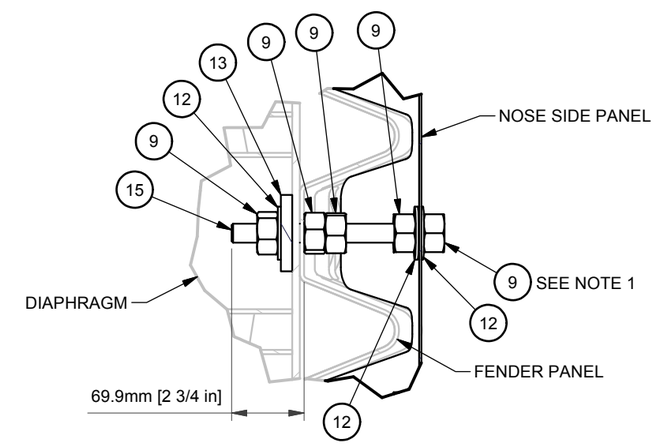

FASTENER DETAIL

PART NO. 611581B (YELLOW)
PART NO. 611579B (BLACK)
PART NO. 611580B (GALV)

NOTES:

1. THREADED ROD END SHOULD BE FLUSH ± 1/8" TO END OF NUT.

Revision	Date	Rev	By	Chk.	App.
SEE SHEET 2	3/30/12	F	DDW	/	/
ECO 3371; UPDATED ITEMS 5&14 DESCRIPTIONS, ITEM 6 WAS 113404G(ECO 3401), 7 WAS 113659G	5/22/12	G	DDW	JME	AJC
ECO 2601;ADD:#15,"FASTENER DETAIL",NOTES; DEL: #6,7,10 & 14;QTY:#9 WAS 6,#12 WAS 12;CHG:12(118052G)	10/22/12	H	DPH	JME	BRE

DRAWN: D. Kohfeld	DATE: 2/26/2009
DESIGNED: M. Buehler	DATE: 12/30/2008
CHECKED: JME	DATE: 3/4/2009
APPROVED: MJB	DATE: 3/19/2009
FILE: 611580.idw	

ENERGY ABSORPTION SYSTEMS
ENGINEERING AND RESEARCH DEPARTMENT

NOSE ASSY,QGII,NARROW

SCALE:	DRAWING:	SHEET:	REV
	611580	1 of 2	H

FM0037 Rev -, 7/22/10

PARTS LIST			
ITEM	STOCK NO.	DESCRIPTION	QTY.
1	SEE TABLE	NOSE,L,NARROW,QGII,W/LOGO,COLOR	1
2	SEE TABLE	NOSE,R,NARROW,QGII,W/LOGO,COLOR	1
3	SEE TABLE	SPACER,12,NOSE ASSY,QGII,COLOR	1
4	605420G	BRACKET,CART SUPPORT,NOSE BAY,QGII,G	1
5	113518G	BOLT,HX,1/4X3/4,G5,G	12
8	115946G	NUT,HX,1/4,G	12
9	003340G	NUT,HX,5/8,G,RAIL	30
11	118085G	WASHER,LOCK,1/4,G	12
12	003300G	WASHER,FLAT,5/8 X 1 3/4, G	18
13	605535G	BRACKET,PULL-OUT,QG,G	2
15	116810G	ROD,THREADED,5/8X7,G5,G	6

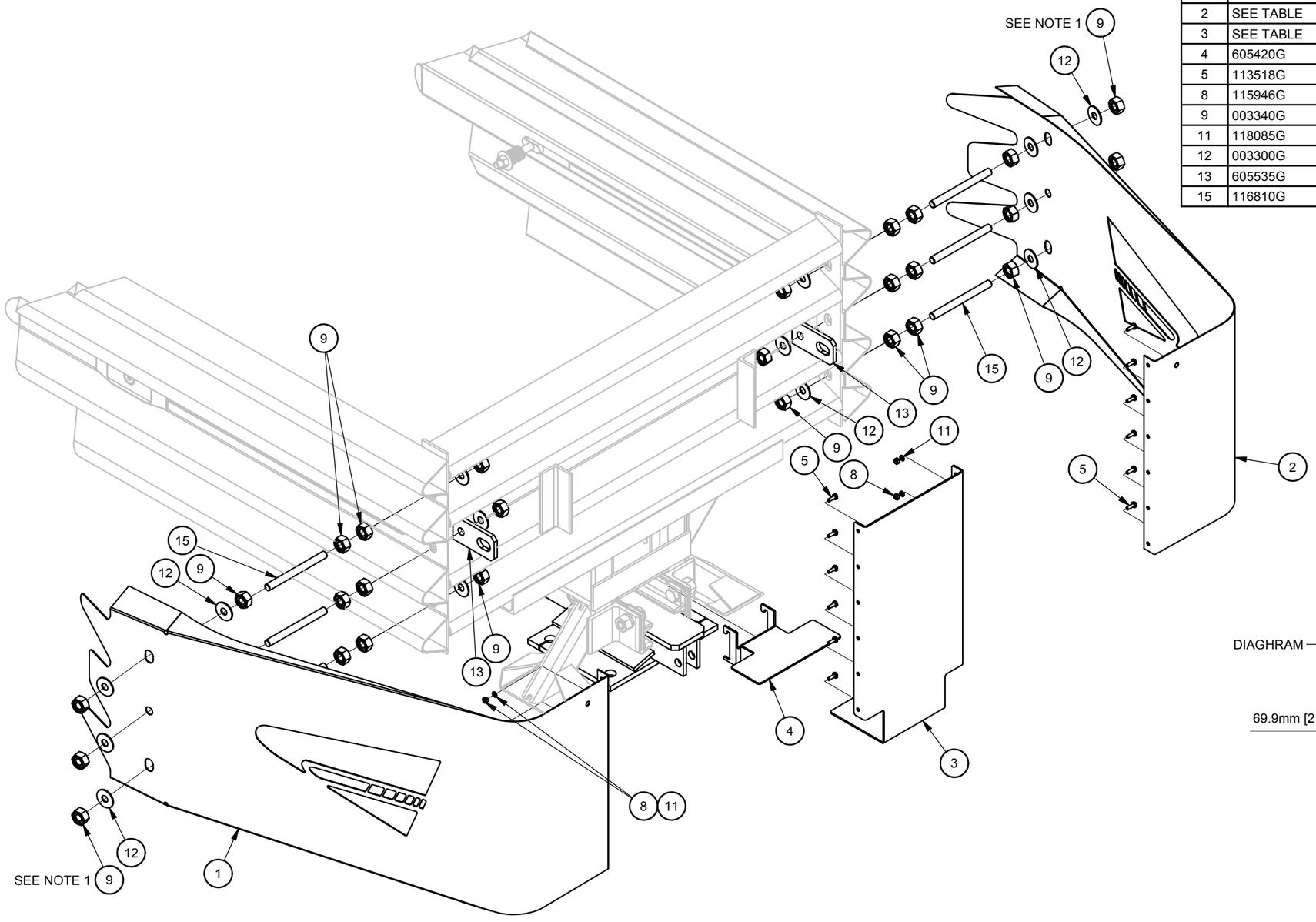

TABLE			
ITEM 1	ITEM 2	ITEM 3	FINISH
611669G	611680G	618901G	GALV
611669Y	611680Y	614497Y	YELLOW
611669W	611680W	614497W	BLACK

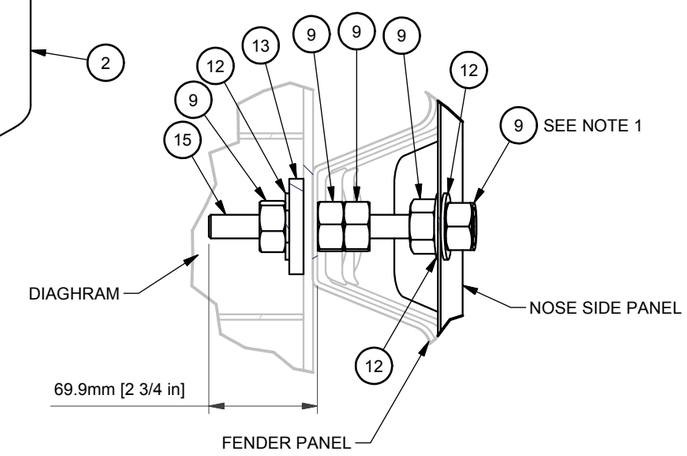

FASTENER DETAIL

PART NO. 611578B (YELLOW)
PART NO. 611576B (BLACK
PART NO. 611577B (GALV)

NOTES:

1. THREADED ROD END SHOULD BE FLUSH ± 1/8" TO END OF NUT.

Revision	Date	Rev	By	Chk.	App.
GALVANIZED ITEM 3 IN TABLE WAS 614497G	3/30/12	F	DDW	JME	RCB
ECO 3371; UPDATED ITEMS 5&14 DESCRIPTIONS, ITEM 6 WAS 113404G(ECO 3401), 7 WAS 113659G	5/22/12	G	DDW	JME	AJC
ECO 2601;ADD:#15,"FASTENER DETAIL",NOTES; DEL: #6,7,10 & 14;QTY:#9 WAS 6,#12 WAS 12;CHG:12(118052G)	10/22/12	H	DPH	JME	BRE

DRAWN: D. Kohfeld	DATE: 2/26/2009
DESIGNED: M. Buehler	DATE: 12/30/2008
CHECKED: JME	DATE: 3/4/2009
APPROVED: MJB	DATE: 3/19/2009
FILE: 611580.idw	

ENERGY ABSORPTION SYSTEMS
ENGINEERING AND RESEARCH DEPARTMENT

NOSE ASSY,QGII,48

SCALE:	DRAWING:	SHEET:	REV
	611580	2 of 2	H

FM0037 Rev -, 7/22/10

PARTS LIST			
ITEM	STOCK NO.	DESCRIPTION	QTY.
1	611832B	PANEL,FENDER,QG	1
2	003400G	BOLT,RAIL,5/8X2,G	2
3	003340G	NUT,HX,5/8,G,RAIL	2
4	617045G	WASHER,MUSHROOM,FORGED,QG,G	1
5	116878G	SCREW,FL,5/8X5,G8,G,HEX SOCKET	1
6	115970G	NUT,HX,5/8,G	1
7	118052G	WASHER,FLAT,5/8 X 1 3/4, G	1
8	117459B	SPRING,DIE,1 1/4 ODX9/16X1 1/2,B	1

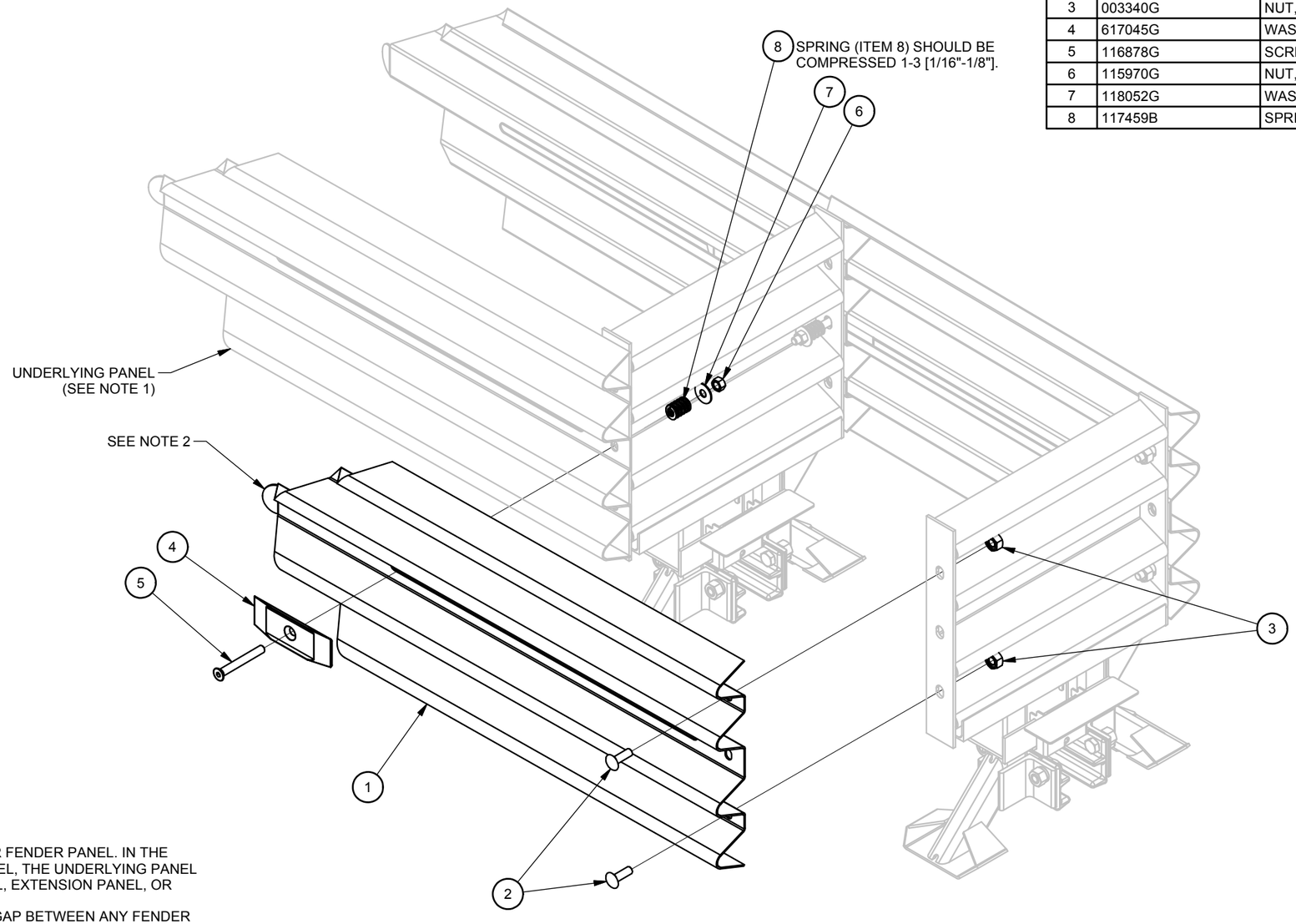

NOTES:
1. UNDERLYING PANEL IS ANOTHER FENDER PANEL. IN THE CASE OF THE LAST FENDER PANEL, THE UNDERLYING PANEL COULD BE A BACKUP SIDE PANEL, EXTENSION PANEL, OR TRANSITION PANEL.
2. THERE IS TO BE A 20 [.78"] MAX. GAP BETWEEN ANY FENDER PANEL AND THE UNDERLYING PANEL.

PART NO. 608236B

Revision	Date	Rev	By	Chk.	App.
DIAPHRAGM SPACING WAS FRONT TO FRONT.	11/26/01	H	DDW	JME	DMO
8 WAS 2021611-0000, 7 QTY WAS 4.0	4/22/04	I	DK	JME	AC
REDRAWN, PART NO. WAS 3540040-0000.	5/4/11	-	DK	/	/

DRAWN: J. Espinoza	DATE: 5/21/1996		
DESIGNED: JVM/MHO	DATE: 3/1/1996		
CHECKED: S. Trageser	DATE: 5/4/2011		
APPROVED: J. Machado	DATE: 5/21/1996		
FILE: 608236.idw			

ENERGY ABSORPTION SYSTEMS, INC.
ENGINEERING AND RESEARCH DEPARTMENT

FENDER PANEL ASSY,QG

SCALE:	DRAWING:	SHEET:	REV
	608236	1 of 1	I

FM0037 Rev -, 7/22/10

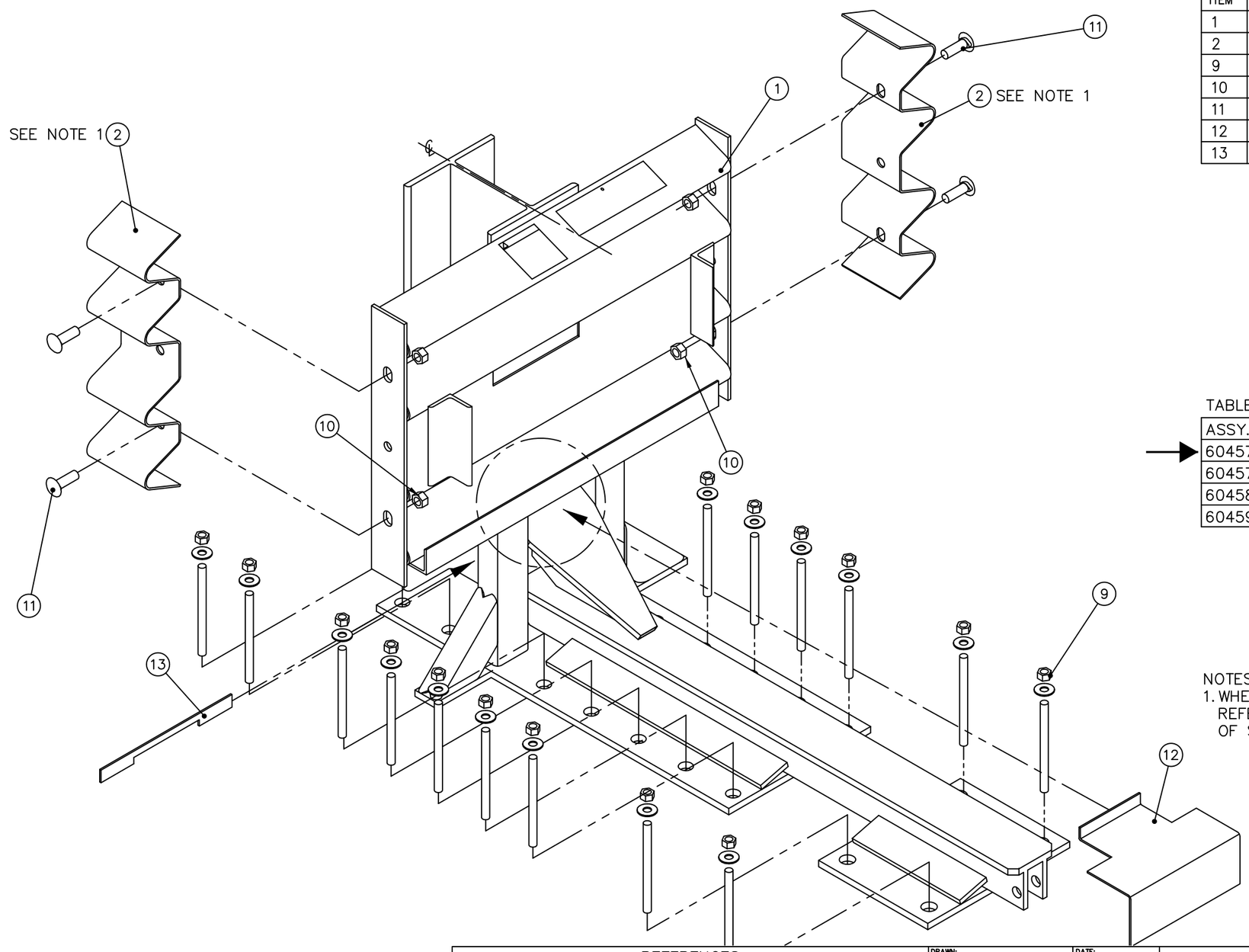

PARTS LIST			
ITEM	STOCK NO.	DESCRIPTION	REQ'D
1	SEE TABLE A	BACKUP,TS,QG,G	1.00
2	611898G	PANEL,SIDE,QG,G	2.00
9	603673B	ANCHOR,MP-3,PT-KIT,3/4X7,VT	3.00
10	003340G	NUT,HX,5/8,G,RAIL	4.00
11	003400G	BOLT,RAIL,5/8X2,G	4.00
12	605447B	BRACKET,CARTRIDGE SUPPORT,TS B/U	1.00
13	611266B	LOCKING BAR,CARTRIDGE SUPPORT	1.00

TABLE A

ASSY. NO.	STOCK NO.	DESCRIPTION	WIDTH
604570B	604741B	BACKUP,TS,24,QG,G	610 [24.00]
604574B	604748B	BACKUP,TS,30,QG,G	760 [30.00]
604584B	604762B	BACKUP,TS,36,QG,G	915 [36.00]
604590B	604770B	BACKUP,TS,48,QG,G	1219 [48.00]

NOTES:
1. WHEN TRANSITIONING QUADGUARD SYSTEM TO EXISTING BARRIER REFER TO THE TRANSITION ASSEMBLY DRAWINGS FOR PROPER USE OF SIDE PANEL PART NO. 611898G.

ASSEMBLY NO. SEE TABLE A

REFERENCES

DRAWN: S. LEWIS	DATE: 4-22-96		
DESIGNED: JVM/MHO	DATE: 3-1-96		
CHECKED: S. Trageser	DATE: 5/16/96		
APPROVED: J. Machado	DATE: 5/16/96		
CAD FILE: 354003.dwg			
NEXT ASSEMBLY:			

ENERGY ABSORPTION SYSTEMS, INC.
ENGINEERING AND RESEARCH DEPARTMENT

QUADGUARD® SYSTEM

BACKUP ASSY, TS, QG

SCALE	DWG.	SHEET	REV
N.T.S.	35-40-03	1 of 1	G

Revisions	Date	Rev.	By	Ckd.	App.
REMOVED 1 ANCHOR BOLT & ADDED NOTE	03/19/99	F	LWC	KM	SPT
ADDED 48" ASSY INFO INTO TABLE A	06/04/09	G	RJV	STT	RCB
PART NOS WERE 3540031,32,33 & 30-0000	9/26/11	/	DDS	/	/

TABLE "L"						
ASSEMBLY NO.	TOTAL RAIL LENGTH	*ITEM 1	*ITEM 2	*ITEM 3	*ITEM 5	NO. OF BAYS
3540060-0100	0	0	0	0	0	1
3540060-0200	915 [36.0]	1	0	0	2	2
3540060-0300	1830 [72.0]	0	1	0	3	3
3540060-0400	2745 [108.1]	0	0	1	4	4
3540060-0500	3660 [144.1]	1	0	1	5	5
3540060-0600	4575 [180.1]	0	1	1	6	6
3540060-0700	5490 [216.1]	0	0	2	7	7
3540060-0800	6405 [252.1]	1	0	2	8	8
3540060-0900	7320 [288.2]	0	1	2	9	9

NOT APPLICABLE FOR 69" & 90" OR CZ QG SYSTEMS

PARTS LIST			
ITEM	STOCK NO.	DESCRIPTION	REQ'D
1	2760051-0000	MONORAIL,ONE BAY,QG,G	*
2	2760061-0000	MONORAIL,TWO BAYS,QG,G	*
3	2760071-0000	MONORAIL,THREE BAYS,QG,G	*
4	2760041-0000	END CAP,MONORAIL,QG,G	1.00
5	3525300-0000	ANCHOR,MP-3,PT-KIT,3/4X7,VT	*
6	2699571-0000	BOLT,HX,5/8X3 1/2,G5,G	1.00
7	2704141-0000	NUT,HX,5/8,G	1.00
8	2708231-0000	WASHER,LOCK,5/8,G	1.00

* SEE TABLE

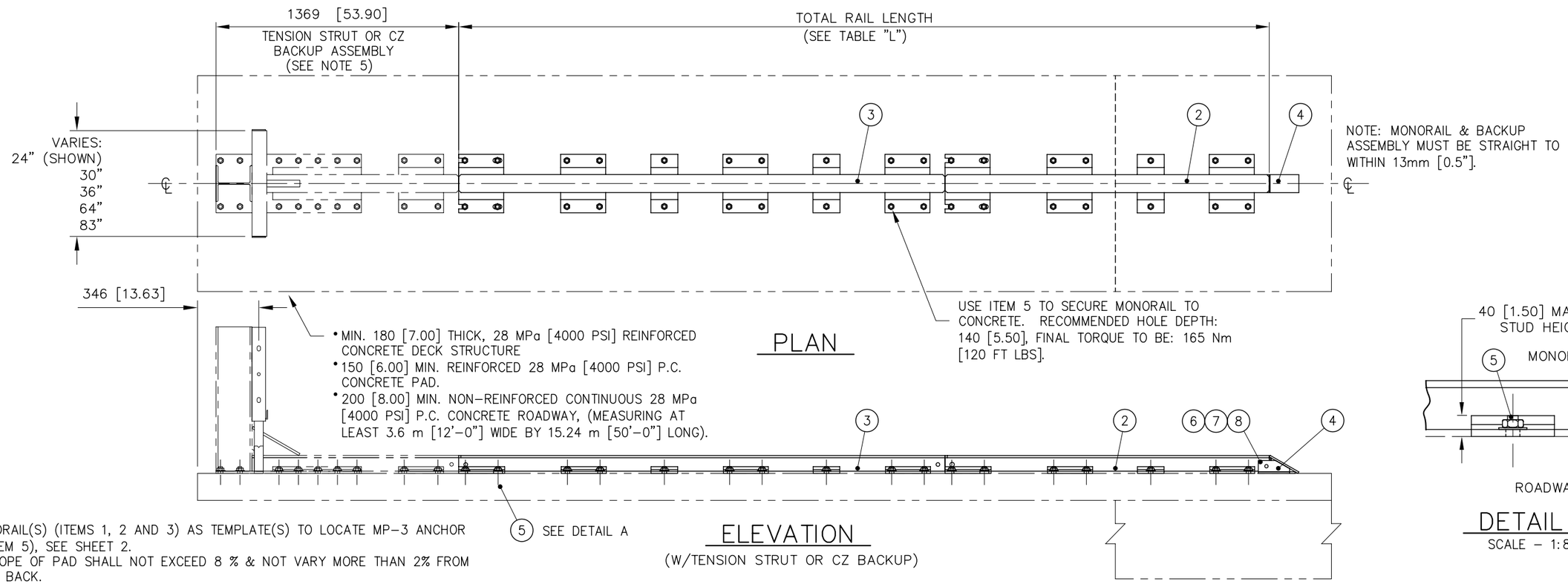

NOTES:
1. USE MONORAIL(S) (ITEMS 1, 2 AND 3) AS TEMPLATE(S) TO LOCATE MP-3 ANCHOR BOLTS (ITEM 5), SEE SHEET 2.
2. CROSS SLOPE OF PAD SHALL NOT EXCEED 8 % & NOT VARY MORE THAN 2% FROM FRONT TO BACK.
3. UNITS OF MEASUREMENT ARE MILLIMETERS [INCHES] UNLESS OTHERWISE NOTED.
4. EVERY STUD MUST BE EMBEDDED TO A DEPTH OF 140 [5.5]. IF REBAR IS ENCOUNTERED IN A P.C. CONCRETE PAD, DRILL THROUGH IT. IF REBAR IS ENCOUNTERED ON A DECK STRUCTURE, ASK PROJECT ENGINEER FOR DIRECTION.
5. FOR CZ SYSTEMS, SEE DRAWING 35-40-24 ALSO.

ASSEMBLY NO. SEE TABLE L

Revisions	Date	Rev.	By	Ckd.	App.

REFERENCES

DRAWN: W. Leddington	DATE: 5/27/09
DESIGNED: ---	DATE: ---
CHECKED: S. Trageser	DATE: 5/28/09
APPROVED M.J. Buehler	DATE: 5/28/09
CAD FILE: 354075.dwg	
NEXT ASSEMBLY:	

ENERGY ABSORPTION SYSTEMS, INC.
ENGINEERING AND RESEARCH DEPARTMENT

QUADGUARD® SYSTEM

MONORAIL ASSY, QG II

SCALE	DWG.	SHEET	REV
N.T.S.	35-40-75	1 of 3	-

PARTS LIST			
ITEM	STOCK NO.	DESCRIPTION	REQ'D

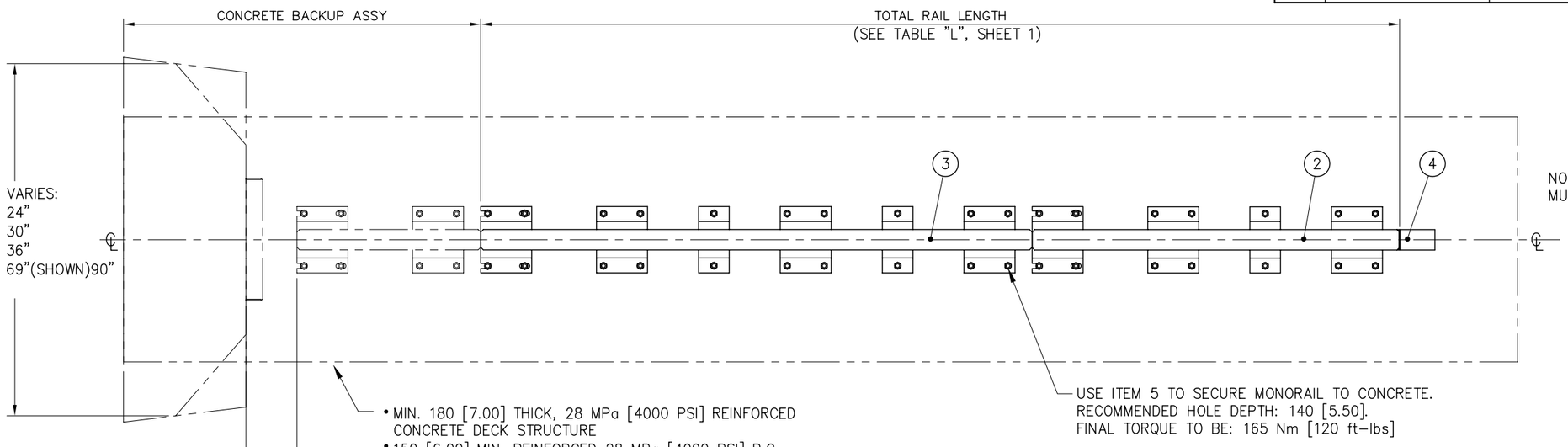

NOTE: MONORAIL & BACKUP ASSEMBLY MUST BE STRAIGHT TO WITHIN 13 [0.50].

- MIN. 180 [7.00] THICK, 28 MPa [4000 PSI] REINFORCED CONCRETE DECK STRUCTURE
- 150 [6.00] MIN. REINFORCED 28 MPa [4000 PSI] P.C. CONCRETE PAD.
- 200 [8.00] MIN. NON-REINFORCED CONTINUOUS 28 MPa [4000 PSI] P.C. CONCRETE ROADWAY, (MEASURING AT LEAST 3.6 m [12'-0"] WIDE BY 15.24 m [50'-0"] LONG).

USE ITEM 5 TO SECURE MONORAIL TO CONCRETE.
RECOMMENDED HOLE DEPTH: 140 [5.50].
FINAL TORQUE TO BE: 165 Nm [120 ft-lbs]

PLAN
TYPICAL 6 BAY ASSEMBLY

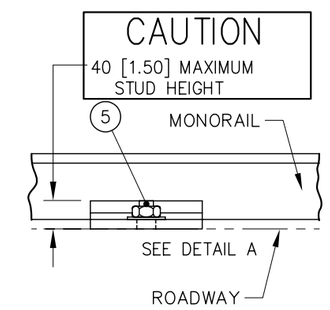

DETAIL A

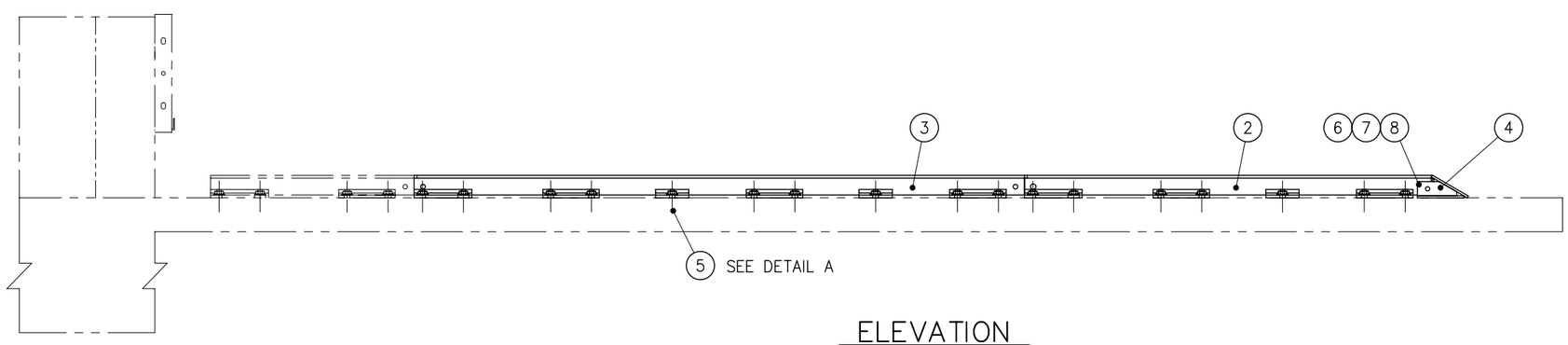

ELEVATION
(W/CONCRETE BACKUP)

ASSEMBLY NO. SEE TABLE L ON SHEET 1

Revisions	Date	Rev.	By	Ckd.	App.

REFERENCES

DRAWN: W. Leddington	DATE: 5/27/09		
DESIGNED: ---	DATE: ---		
CHECKED: S. Trageser	DATE: 5/28/09		
APPROVED: M.J. Buehler	DATE: 5/28/09		
CAD FILE: 354075-02.dwg			
NEXT ASSEMBLY:			

ENERGY ABSORPTION SYSTEMS, INC.
ENGINEERING AND RESEARCH DEPARTMENT

QUADGUARD® SYSTEM

MONORAIL ASSY, QG II

SCALE	DWG.	SHEET	REV
N.T.S.	35-40-75	2 of 3	

PARTS LIST			
ITEM	STOCK NO.	DESCRIPTION	REQ'D

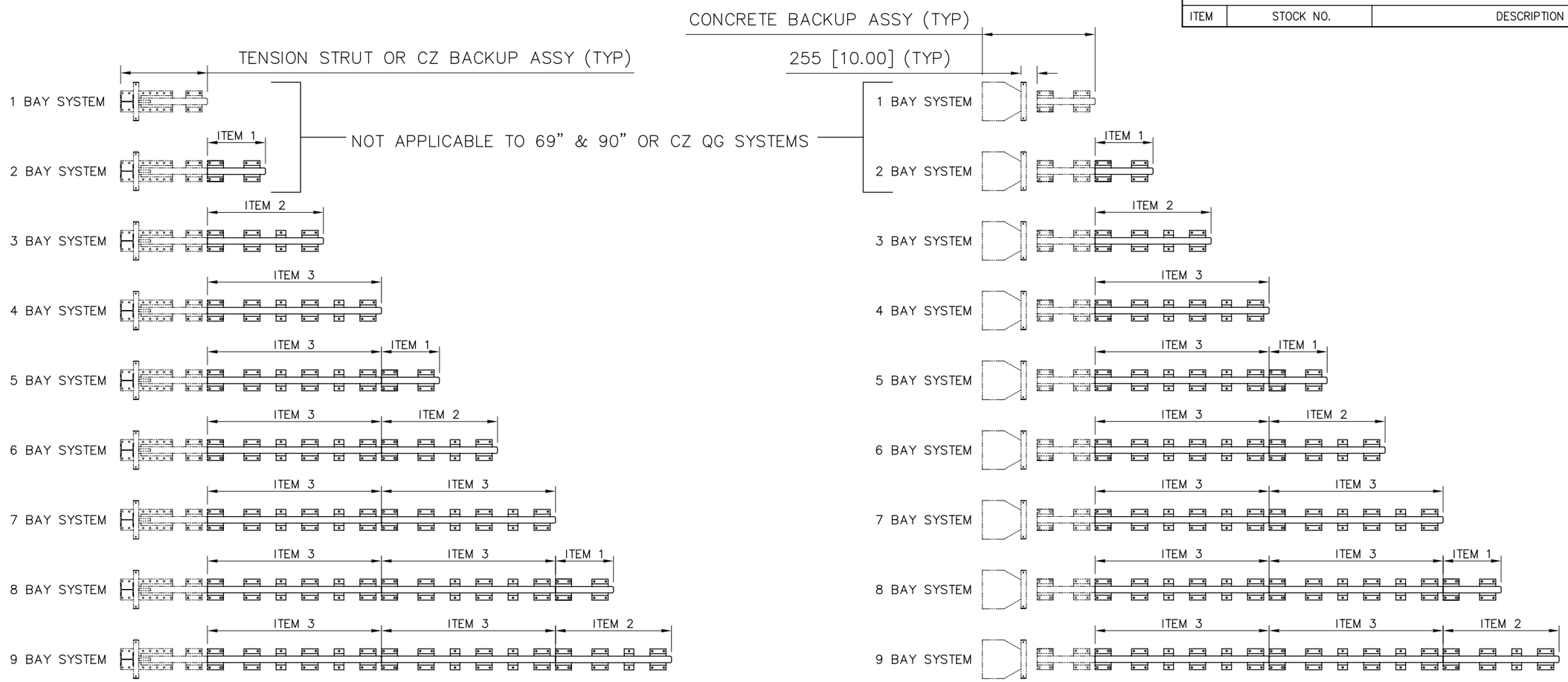

ASSEMBLY NO. (SEE TABLE "L" ON SHEET 1)

Revisions	Date	Rev.	By	Ckd.	App.

REFERENCES

DRAWN: W. Leddington	DATE: 5/27/09		
DESIGNED: ---	DATE: ---		
CHECKED: S. Trageser	DATE: 5/28/09		
APPROVED: M.J. Buehler	DATE: 5/28/09		
CAD FILE: 354075-03.dwg			
NEXT ASSEMBLY:			

ENERGY ABSORPTION SYSTEMS, INC.
ENGINEERING AND RESEARCH DEPARTMENT

QUADGUARD® SYSTEM

MONORAIL ASSY, QG II

SCALE	DWG.	SHEET	REV
N.T.S.	35-40-75	3 of 3	

TABLE					YARDS OF CONCRETE IN PAD	
NO. OF BAYS	"L" (PAD LENGTH)		REBAR REQUIRED			
	[m]	[ft-in]	[m]	[ft-in]	m^3	[$YARDS^3$]
1	2.74	[9′-0″]	14.83	[48′-8″]	1.65	[2.2]
2	2.74	[9′-0″]	14.83	[48′-8″]	1.65	[2.2]
3	3.66	[12′-0″]	20.73	[68′-0″]	1.82	[2.4]
4	4.57	[15′-0″]	25.50	[83′-8″]	1.98	[2.6]
5	5.49	[18′-0″]	31.39	[103′-0″]	2.15	[2.8]
6	6.40	[21′-0″]	36.17	[118′-8″]	2.32	[3.1]
7	7.32	[24′-0″]	42.06	[138′-0″]	2.50	[3.3]
8	8.23	[27′-0″]	46.84	[153′-8″]	2.66	[3.5]
9	9.14	[30′-0″]	52.73	[173′-0″]	2.83	[3.7]

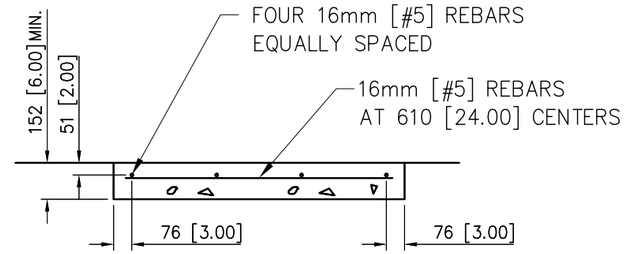

SECTION A–A

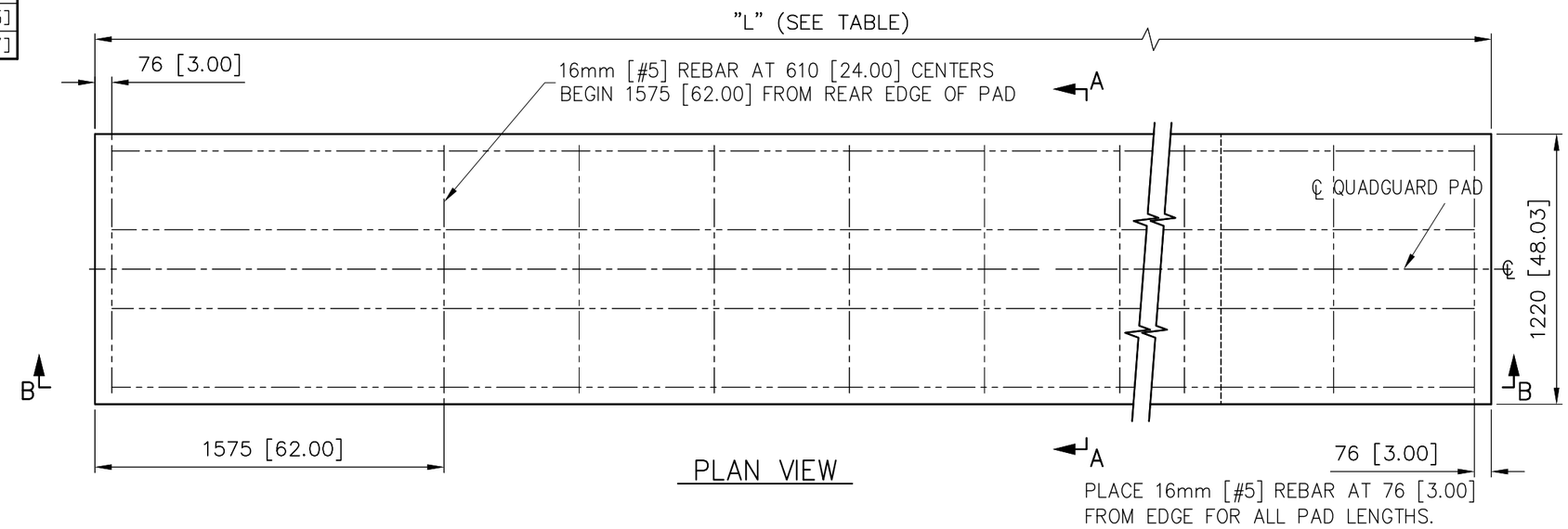

PLAN VIEW

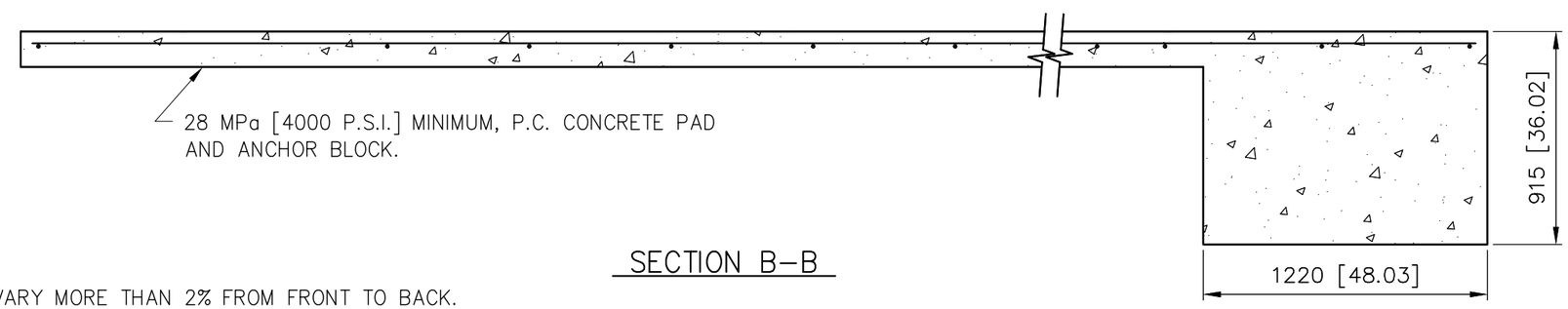

SECTION B–B

NOTES:

1. CROSS SLOPE OF PAD SHALL NOT EXCEED 8%, AND NOT VARY MORE THAN 2% FROM FRONT TO BACK.
2. UNITS OF MEASUREMENT ARE MILLIMETERS [INCHES] UNLESS OTHERWISE NOTED.

REFERENCES

Revisions	Date	Rev.	By	Ckd.	App.
SEE SHEET 2	6/15/2010	A	STT		

DRAWN: W. Leddington	DATE: 5/27/09		
DESIGNED: ---	DATE: ---		
CHECKED: S. Trageser	DATE: 5/28/09		
APPROVED: M.J. Buehler	DATE: 5/28/09		
CAD FILE: 354076.DWG			
NEXT ASSEMBLY:			

ENERGY ABSORPTION SYSTEMS, INC.
ENGINEERING AND RESEARCH DEPARTMENT

QUADGUARD ® II SYSTEM
CONCRETE PAD FOR
TENSION STRUT BACKUP

SCALE	DWG.	SHEET	REV
NTS	35–40–76	1 of 2	A

TABLE					YARDS OF CONCRETE IN PAD	
NO. OF BAYS	"L" (PAD LENGTH)		REBAR REQUIRED			
	[m]	[ft-in]	[m]	[ft-in]	m^3	[$YARDS^3$]
1	2.74	[9'-0"]	14.83	[48'-8"]	0.7	[0.9]
2	2.74	[9'-0"]	14.83	[48'-8"]	0.7	[0.9]
3	3.66	[12'-0"]	20.73	[68'-0"]	0.9	[1.2]
4	4.57	[15'-0"]	25.50	[83'-8"]	1.2	[1.5]
5	5.49	[18'-0"]	31.39	[103'-0"]	1.4	[1.8]
6	6.40	[21'-0"]	36.17	[118'-8"]	1.6	[2.1]
7	7.32	[24'-0"]	42.06	[138'-0"]	1.8	[2.4]
8	8.23	[27'-0"]	46.84	[153'-8"]	2.1	[2.7]
9	9.14	[30'-0"]	52.73	[173'-0"]	2.3	[3.0]

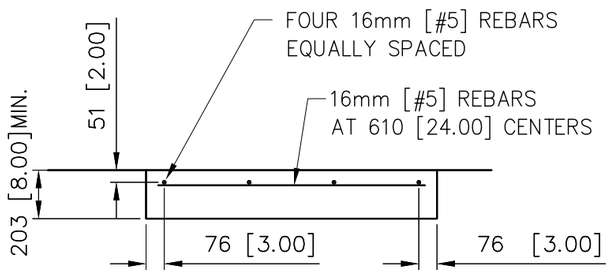

SECTION C–C

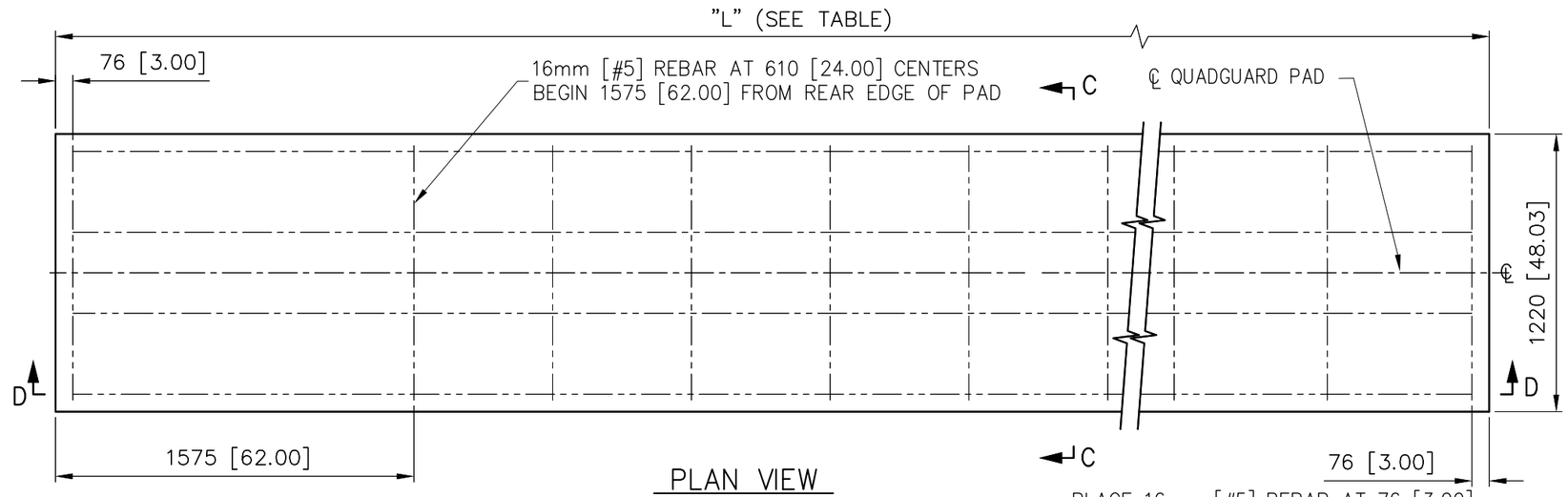

PLAN VIEW

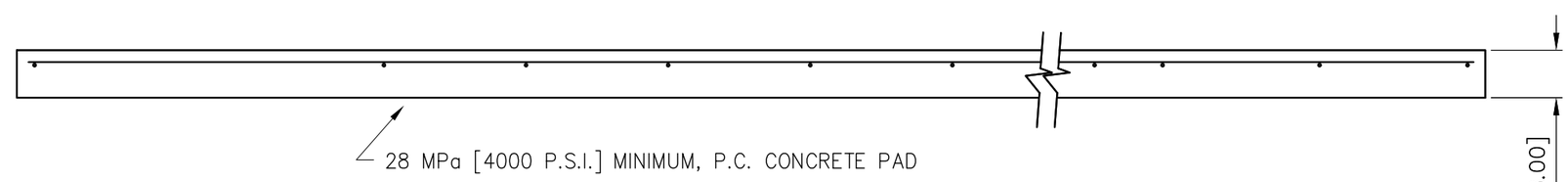

SECTION D–D

NOTES:

1. CROSS SLOPE OF PAD SHALL NOT EXCEED 8%, AND NOT VARY MORE THAN 2% FROM FRONT TO BACK.
2. TO PREVENT SLIDING DURING AN IMPACT, PAD MUST BE INSTALLED AGAINST OR TIED TO AN EXISTING STRUCTURE. OTHERWISE ADDITIONAL BELOW GRADE SUPPORTS MUST BE ADDED AS DETERMINED NECESSARY BY THE PROJECT ENGINEER.
3. UNITS OF MEASUREMENT ARE MILLIMETERS [INCHES] UNLESS OTHERWISE NOTED.

Revisions	Date	Rev.	By	Ckd.	App.
REMOVED ANCHOR BLOCK REFERENCE	6/15/2010	A	STT	KRM	FJP

REFERENCES

DRAWN: W. Leddington	DATE: 5/27/09		
DESIGNED: ---	DATE: ---		
CHECKED: S. Trageser	DATE: 5/28/09		
APPROVED: M.J. Buehler	DATE: 5/28/09		
CAD FILE: 354076.dwg			
NEXT ASSEMBLY:			

ENERGY ABSORPTION SYSTEMS, INC.
ENGINEERING AND RESEARCH DEPARTMENT

QUADGUARD ® II SYSTEM
OPTIONAL 8" CONCRETE PAD
FOR TENSION STRUT BACKUP

SCALE	DWG.	SHEET	REV
NTS	35–40–76	2 of 2	A

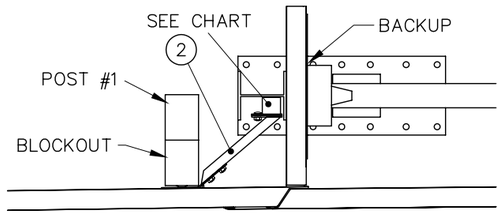

DETAIL A

FINAL CONFIGURATION OF DIAGONAL BRACE
FOR MEDIUM OR WIDE (762[30.00] OR 914[36.00]) SYSTEMS

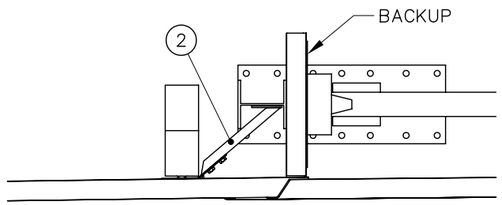

DETAIL A

FINAL CONFIGURATION OF DIAGONAL BRACE
FOR NARROW (610[24.00]) SYSTEMS

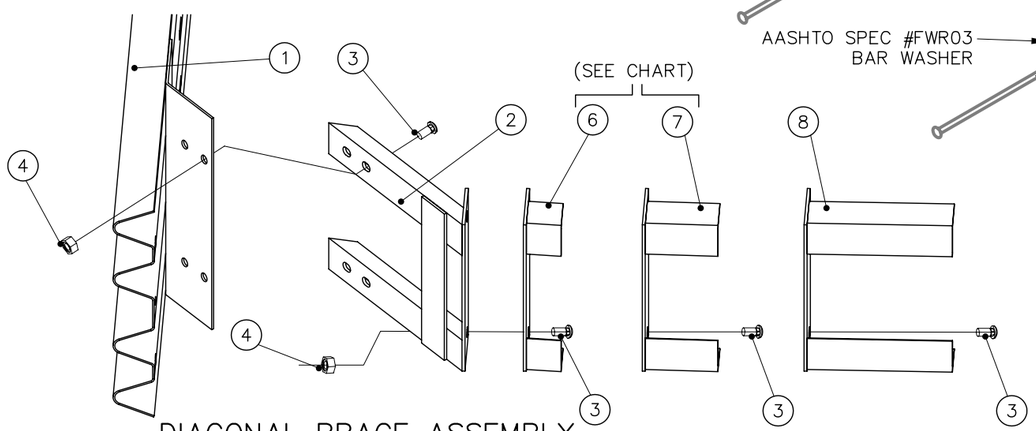

DIAGONAL BRACE ASSEMBLY

PARTS LIST			REQ'D			
ITEM	STOCK NO.	DESCRIPTION	N	M	W	48
1	2760321-0000	QUADGUARD TO W-BEAM TRANS. PANEL	1	1	1	1
2	2760341-0000	DIAGONAL BRACE	1	1	1	1
3	2699341-0000	BOLT,RAIL,5/8X2,G	4	6	6	6
4	2704191-0000	NUT,HX,5/8,G	4	6	6	6
5	2708871-0000	WASHER,BAR,1/8X1 1/4X2,W/HOLE	2	2	2	2
6	2760342-0000	DIAGONAL BRACE BLOCKOUT, 3"	0	1	0	0
7	2760343-0000	DIAGONAL BRACE BLOCKOUT, 6"	0	0	1	0
8	2760344-0000	DIAGONAL BRACE BLOCKOUT, 12"	0	0	0	1

SYSTEM WIDTH		ASSEMBLY #	BLOCKOUT
610 [24.00]	N	354021N-0000	NOT REQ'D
762 [30.00]	M	354021M-0000	ITEM #6*
914 [36.00]	W	354021W-0000	ITEM #7*
1219 [48.00]	48	354021W-0048	ITEM #8*

*SEE PARTS LIST ABOVE FOR QTY REQ'D

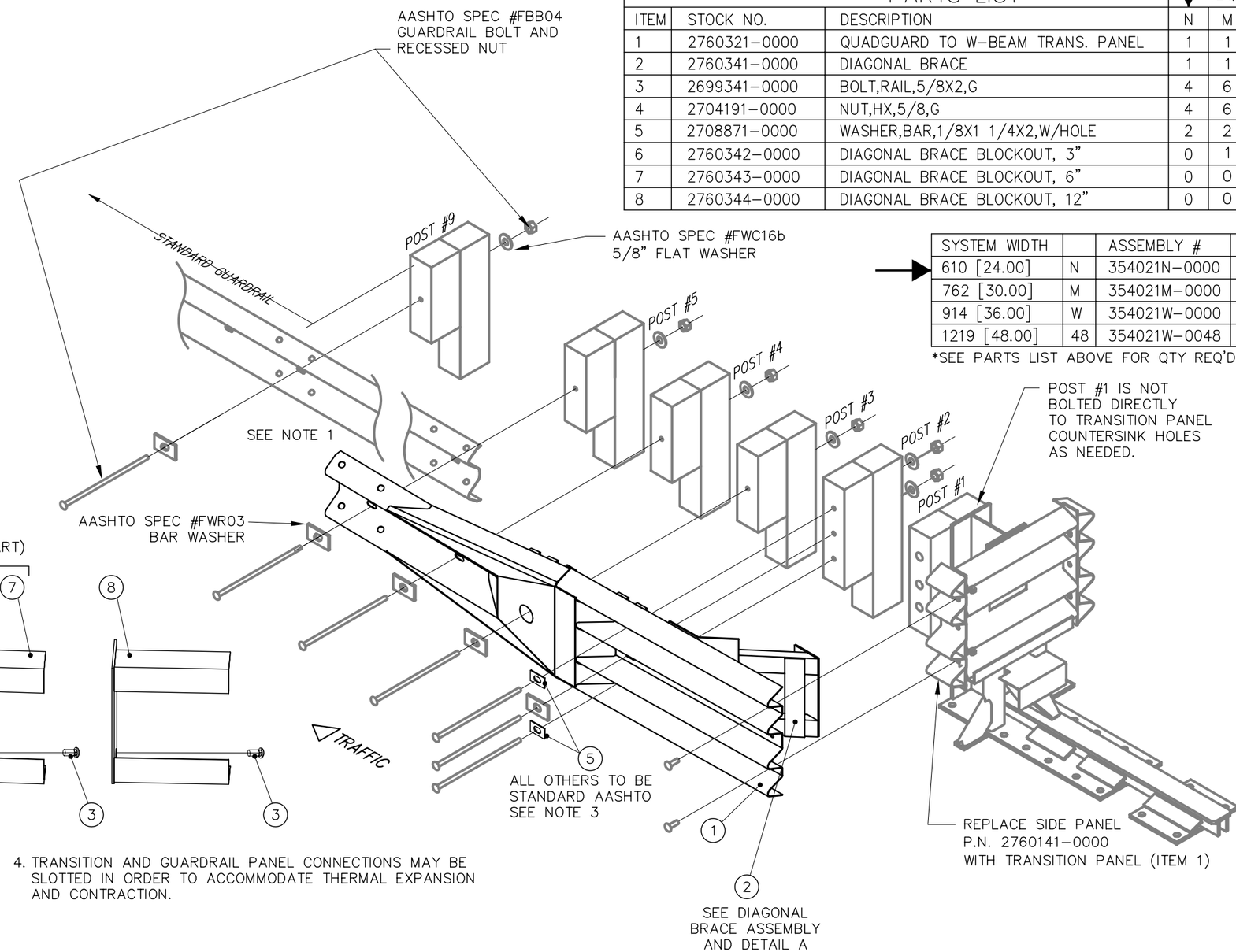

NOTES:

1. PANEL OVERLAP SHOWN IS FOR TRAFFIC DIRECTION SHOWN. ACTUAL OVERLAP SHALL BE DETERMINED BY THE SITE CONDITIONS AND PROJECT ENGINEER PER TRAFFIC DIRECTION. USE STANDARD GUARDRAIL CONNECTION.
2. RIGHT SIDE OF ROAD APPLICATION SHOWN. ASSEMBLY MAY BE USED ON EITHER OR BOTH SIDES FOR LEFT, RIGHT, MEDIAN OR GORE APPLICATIONS. SEE NOTE 1.
   THIS ASSEMBLY IS NOT INCLUDED IN THE MODEL NUMBER AND MUST BE ORDERED SEPARATELY.
3. ENERGY ABSORPTION SYSTEMS, INC. SUPPLIES THE STOCK ITEMS SHOWN IN THE PARTS LIST. ALL OTHER COMPONENTS OF THE DOWNSTREAM GUARDRAIL ARE STANDARD HIGHWAY MATERIALS AND MAY BE OBTAINED FROM YOUR LOCAL HIGHWAY SUPPLY VENDORS.
4. TRANSITION AND GUARDRAIL PANEL CONNECTIONS MAY BE SLOTTED IN ORDER TO ACCOMMODATE THERMAL EXPANSION AND CONTRACTION.

Revisions	Date	Rev.	By	Ckd.	App.
ADDED ITEM 8	10/-7/09	G	STT	KRM	PAS
CHANGED TO MATCH SHEET 2	3/26/02	E	DDW	DMO	SPT
ADDED NOTE 4	8/19/05	F	WWL	JME	ACF

REFERENCES

DRAWN: T. Busse	DATE: 09/20/96		
DESIGNED: JVM	DATE: 8/21/96		
CHECKED: SML	DATE: 10/14/96		
APPROVED: J. Machado	DATE: 10/14/96		
CAD FILE: 354021N-0000.dwg			
NEXT ASSEMBLY:			

ENERGY ABSORPTION SYSTEMS, INC.
ENGINEERING AND RESEARCH DEPARTMENT

TRANSITION ASSEMBLY,
QUAD-BEAM TO W-BEAM

SCALE	DWG.	SHEET	REV
N.T.S.	35-40-21	1 of 2	G

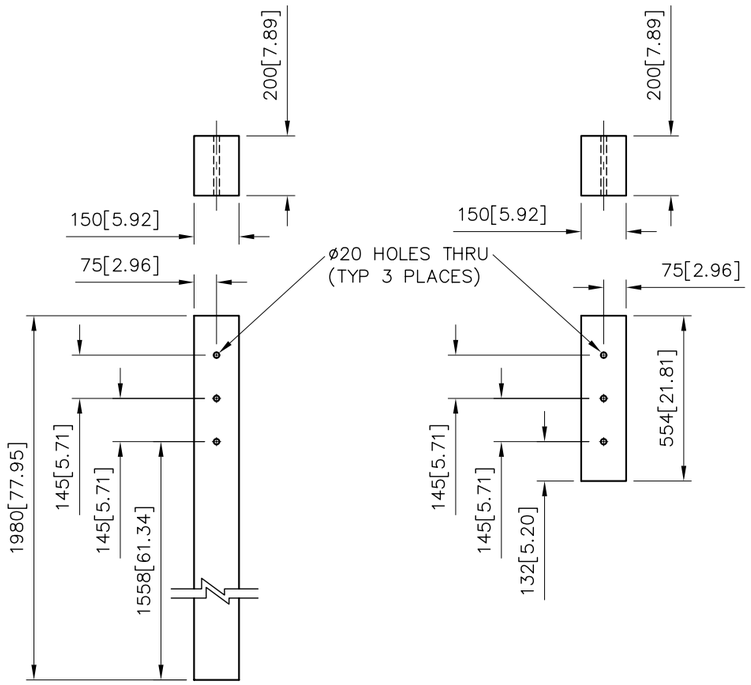

DETAIL A

POSTS & BLOCKOUTS #1 & #2 (NON-STANDARD)
(SEE NOTES 2 & 3)

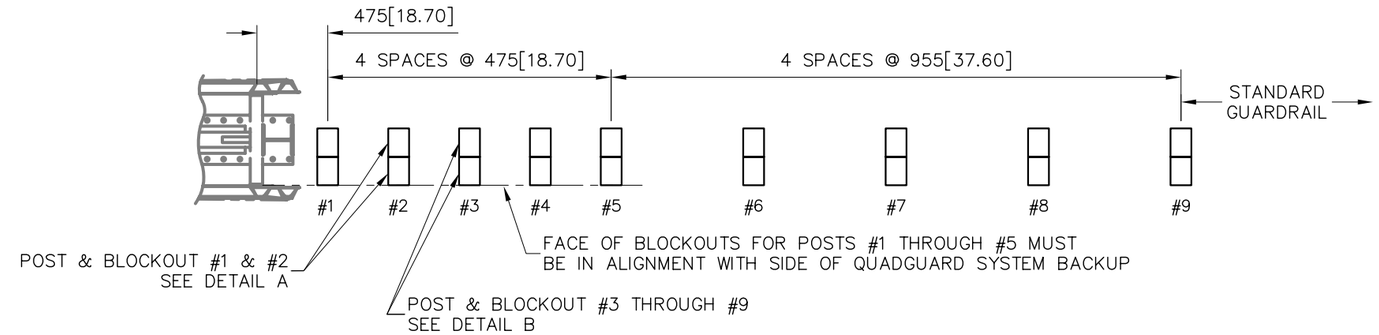

PLAN

(SEE NOTE 4)

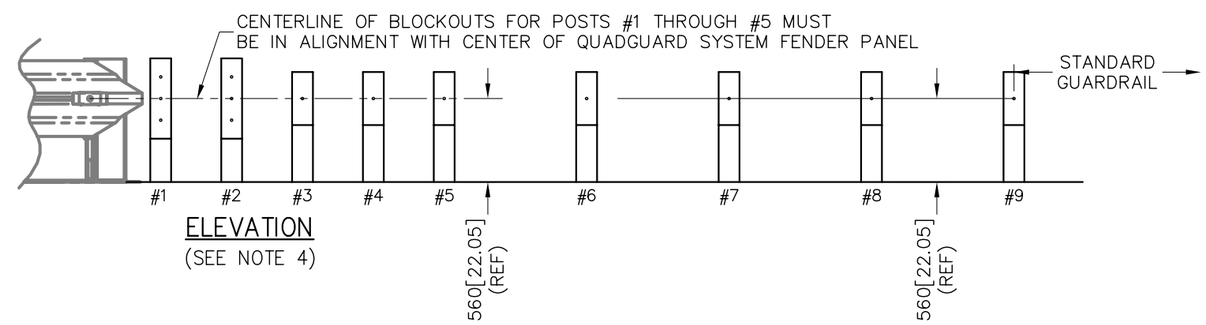

ELEVATION

(SEE NOTE 4)

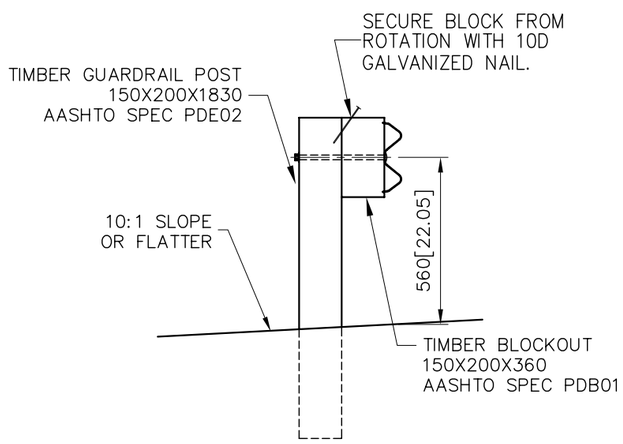

DETAIL B

POSTS & BLOCKOUTS #3 THRU #9
SEE NOTE 3

NOTES:

1. DIMENSIONS ARE IN MILLIMETERS [INCHES], UNLESS OTHERWISE NOTED.
2. POSTS & BLOCKOUTS SHALL BE MADE OF TIMBER WITH A STRESS GRADE OF AT LEAST 8 MPa. STRESS GRADING SHALL BE IN ACCORDANCE WITH THE RULES OF THE WEST COAST LUMBER INSPECTION BUREAU, SOUTHERN PINE INSPECTION BUREAU OR OTHER APPROPRIATE TIMBER ASSOCIATION. TIMBER FOR POSTS SHALL BE EITHER ROUGH SAWN (UNPLANED) OR S4S (SURFACED FOUR SIDES) WITH NOMINAL DIMENSIONS INDICATED. THE SIZE TOLERANCE OF POSTS IN THE DIRECTION PARALLEL TO THE AXIS OF THE BOLT HOLES SHALL NOT BE MORE THAN ± 6mm. ALL TIMBER SHALL RECEIVE A PRESERVATION TREATMENT IN ACCORDANCE WITH AASHTO M133 AFTER ALL END CUTS ARE MADE AND ALL HOLES ARE DRILLED.
3. TRANSITION SECTION SHOWN ON SHEET 1 WAS TESTED AND IS IN COMPLIANCE WITH NCHRP 350. STEEL POSTS MAY BE SUBSTITUTED FOR WOOD POSTS PER PROJECT ENGINEER'S DISCRETION.
4. GUARDRAIL & TRANSITION PANEL NOT SHOWN FOR CLARITY.

Revisions	Date	Rev.	By	Ckd.	App.
SEE SHEET 1	10/07/09	G	STT		
REVISED NOTE 3	3/26/02	E	DDW	DMO	SPT
SEE SHEET 1	8/19/05	F	WWL	JME	ACF

REFERENCES

DRAWN: R. Cummins	DATE: 09/20/96
DESIGNED: JVM	DATE: 8/21/96
CHECKED: SML	DATE: 10/14/96
APPROVED: J. Machado	DATE: 10/14/96
CAD FILE: 354021N-0000 SH02.dwg	
NEXT ASSEMBLY:	

ENERGY ABSORPTION SYSTEMS, INC.
ENGINEERING AND RESEARCH DEPARTMENT

TRANSITION ASSEMBLY,
QUAD-BEAM TO W-BEAM

SCALE	DWG.	SHEET	REV
N.T.S.	35-40-21	2 of 2	G

TAU-II®

Redirective Non-Gating Crash Cushions

- Shields Multiple Width Hazards
- Partially Reusable Design
- Quick and Easy to Install
- NCHRP 350 Accepted

LINDSAY™ TRANSPORTATION SOLUTIONS | BARRIER SYSTEMS™

TAU-II® REDIRECTIVE, NON-GATING CRASH CUSHIONS

1 Nose Cover
2 Energy Absorbing Cartridge
3 Backstop
4. Diaphragm
5. Thrie-Beam Slider Panel

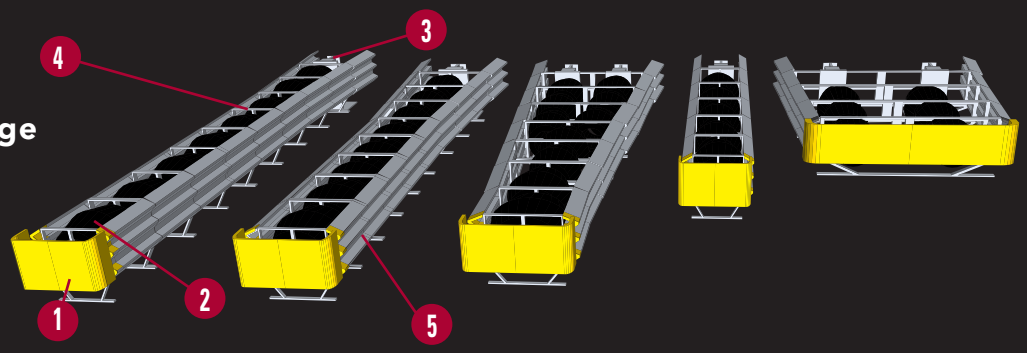

FEATURES

- Minimum number of anchors needed to secure system
- Can be installed over expansion joints
- Low profile foundation ideal for deployment on bridge decks
- Numerous transition options
- Low priced replacement components
- Reusable nose standard
- Uses standard, non-proprietary transitions

The TAU-II System uses disposable, inexpensive cartridges and telescoping panels making the System easy to reset after a design impact.

DESIGNED TO SHIELD MULTIPLE WIDTH HAZARDS

The Redirective, Non-Gating, (R-NG) TAU-II Crash Cushion Family consists of a full line of Systems designed to meet the requirements of NCHRP Report 350, TL-2 & TL-3. The system is available in lengths and capacities for both low and high speed applications (50-113 km/h, 30-70 mph). The TAU-II System can shield hazards with widths up to 2.6 m (102″). The TAU-II System is ideally suited for roadway hazards such as the ends of rigid concrete barriers, steel barrier, bridge piers, signs, etc. Ease of installation, low profile foundation, numerous transition options, and low priced replacement components after an impact make the TAU-II System ideal to shield most roadside hazards.

PHYSICAL SPECIFICATIONS

Classification	R-NG	
TL-3 Length	7 m	(23′ 1″)
Width	0.7 - 3 m	(27 - 102″)
Height	800 mm	(31 1/2″)
TL-3 Weight	1129 kg	(2489 lb.)
Test Level	NCHRP 350 TL 2 / 3	

What needs to be replaced after a design impact?

Typically only the damaged cartridges will need to be replaced. The Nose and slider panels are designed to withstand multiple design impacts.

What type of foundation is needed for the Universal TAU-II System?

A 152 mm (6″) reinforced concrete pad is required. The TAU System can also be ordered to be installed on asphalt.

What transitions are available?

Since TAU-II transitions are non-proprietary, any approved thrie beam barrier transition will fit.

Can the TAU-II System be used for low and high speeds?

The TAU-II System is designed for speeds from 50 to 113 km/h (31 to 70 mph)

Distributed By:

LINDSAY™ TRANSPORTATION SOLUTIONS | BARRIER SYSTEMS™ | RAILROAD PRODUCTS | SNOLINE™

Barrier Systems Sales & Service • 3333 Vaca Valley Pkwy. • Vacaville, CA 95688 • +1 707.374.6800, U.S. Toll free 888.800.3691 • www.barriersystemsinc.com

General details for the TAU-II System are subject to change without notice to reflect improvements and upgrades.
Additional information is available from Barrier Systems, Inc. © Lindsay Transportation Solutions

PT # TAU04-100111

Product Specification

Redirective, Non-Gating, Crash Cushion

I. General

The system is a Redirective, Non-Gating Crash Cushion in accordance with the definitions in the National Cooperative Highway Research Program Report 350 (NCHRP 350). The system shall have been tested and perform in an acceptable manner in accordance with the guidelines of NCHRP 350 at Test Level 3.

II. Performance

The TL-3 system when attached properly in accordance with the manufacturer's instructions, shall be capable of safely redirecting or stopping a 2000 kg (4400 lb) pick-up truck and an 820 kg (1800 lb) car impacting the system at 100 km/hr (62.1 mph).

A. An eight bay narrow or seven bay wide system shall be able to meet the recommended criteria set forth in NCHRP 350 for Test Level 3, Redirective, Non-Gating Crash Cushions.

III Performance Requirements

1. Products shall meet the following criteria to assure effectiveness, safety, reliability, and maintenance.

A. A benefit cost analysis shall be performed by the agency. Manufacture to supply test data from NCHRP 350 testing. This data shall include parts damaged and approximate cost for replacement parts in each test.
B. Units must be repairable on site from any NCHRP 350, Test Level 3 impact conditions in less than two hours.
C. Units shall be capable of on site modifications to accommodate future changes to the design speed of the road.
D. Units shall have an open architecture to prevent the accumulation of debris that could reduce performance. In colder climates closed architecture could render units inoperable.
E. Systems shall be designed so the parts are interchangeable on different size units.
F. Manufacture must be approved and supply all of the different widths and lengths used system wide so as to reduce parts inventory.
G. Units shall be designed to use friction and energy absorbing cartridges to decelerate vehicles. No mechanical moving parts that may be affected by, wear, damage, weather or roadside debris.

IV. Description of System

A. The crash cushion is made up of independent collapsible bays that are guided and supported by high strength galvanized steel cables. The system's energy capacity is provided by an array of Energy Absorbing Cartridges. The systems shall be made up of the following components and shall be fabricated from materials conforming to the following specifications:

1. The Base of the system consists of two cables, a Back Support and Front Cable Anchor. The Front Cable anchor has (8) anchoring points. The Compact Back Support is secured with (13) anchor points and the PCB Back Support and Rear Cable Anchors are also secured with 13 anchor bolt when anchored into PCC..

    a. All steel structural components of the Front Cable Anchor and Backstop assemblies shall be fabricated from mild steel in conformance with ASTM A-36 specifications. These components are hot dipped galvanized per ASTM A-123.

    b. The steel cables shall be at least 25 mm (1 in) diameter and galvanized in accordance with ASTM A-603.

2. Front and Middle Supports separate each independent collapsible bay. Cable Guides bolt to the Middle Supports, capturing the cables and connecting the bays to the Base.

    a. All steel supports and cable guides shall be fabricated from mild steel in conformance with ASTM A-36 specifications. These components are hot dipped galvanized per ASTM A-123.

3. Each Bay is enclosed on the sides with Sliding Panels. Sliding Bolts fasten the panels to the Front and Middle supports. End Panels are attached to the Back Support and the last bay's Sliding Panels through Pipe Panel Mounts and provide transition mounting points. The Pipe Panel Mounts are bolted to the back support.

    a. Steel panels are to be fabricated from steel that conforms to the requirements of AASHTO M180 Class B.

    b. Sliding Bolts are to be cast iron and galvanized per ASTM A-123.

c. Steel Pipe Panel Mounts shall be fabricated from mild steel in conformance with ASTM A-36 specifications.

4. Flexible Front Support Legs and a Nose Piece. The Nose Piece utilizes a bushing to provide proper clamping characteristics.

   a. The front support legs shall be fabricated from synthetic or natural rubber or polyurethane.

   b. The Nose Piece shall be fabricated from polyurethane.

5. Two types of Energy Absorbing Cartridges provide the systems energy absorbing capacity.

   a All plastic parts shall be molded from High Density Cross-linked Polyethylene with a Brittle Temperature of less than –40 degrees C, as per ASTM testing methods.

6. All fasteners.

   a. All fasteners shall be Class 5.8 (Grade2) or greater and Galvanized in accordance with ASTM 153. Washers shall be hardened and galvanized. All Stainless steel fasteners are class A2-50 or greater in accordance with ASTM F-738M.

B. The system should be available in various capacities, each requiring a specific configuration of Energy Absorbing Cartridges (Types A and B).

C. The system shall require attachment to a foundation. Anchoring of the system will require attachment in accordance with the manufacturer's drawings and instructions. Anchor capacity will require 12000 kg (25000 lb) pull out and 8500 kg (19000 lb) shear strength.

D. The system shall be assembled, installed, and refurbished in accordance with the manufacturers instructions.

E. Ensure that restoration and or repair from impacts falling within the range described in NCHRP 350, Test Level 3, can be accomplished without removing the unit from the original location.

F. The attenuator supplied must be designed in a way that will take no longer than two hours to repair (including any traffic control) when damaged by a front end impact of a full sized vehicle or pick up truck as per NCHRP 350 Test Lever 3. Furthermore, all repairs must be made on site without the use of specialized heavy equipment nor normally found at a standard maintenance yard.

G. A minimum of two complete spare parts kits will be supplied for each system installed. The spare parts kit shall be recommended by the manufacture to restore the system to it's original condition after any NCHRP 350, Test Level 3 impact conditions.

H. After side impacts, within the NCHRP 350 Test Level 3 design parameters, the unit must remain capable of sustaining an additional side impact or a head-on impact at full design velocity.

NOTES:

1. INSTALLATION TO COMPLY WITH MANUFACTURER'S INSTRUCTIONS.
2. FOR MORE INFORMATION, SEE MANUFACTURER'S DETAILS.

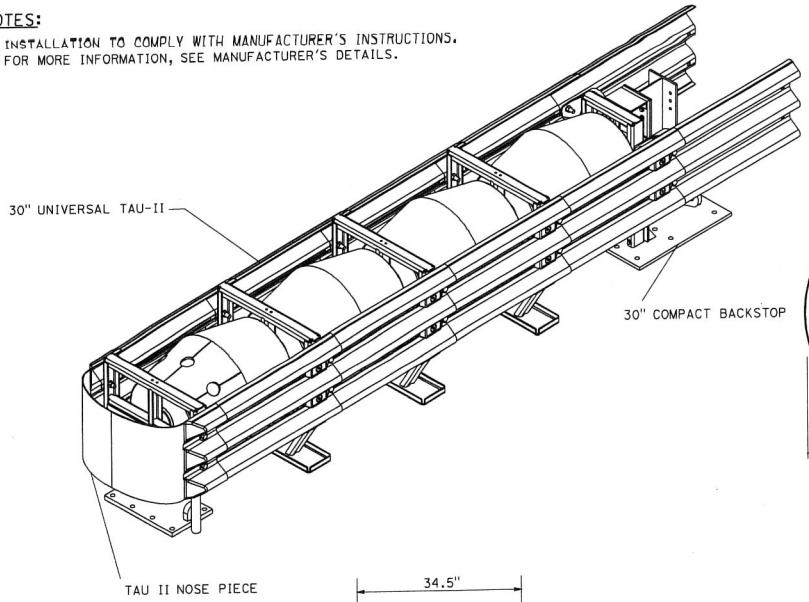

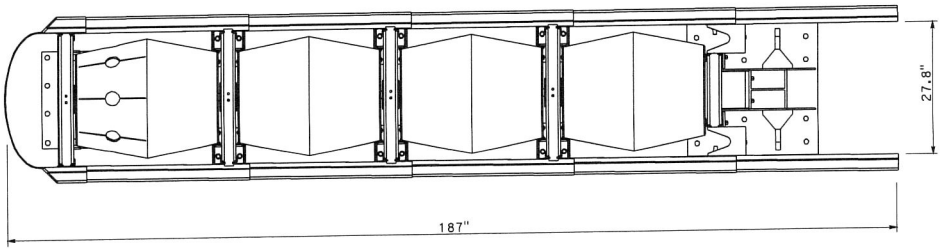

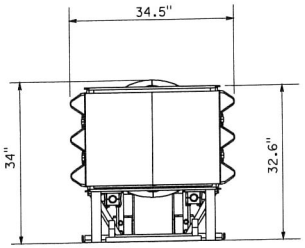

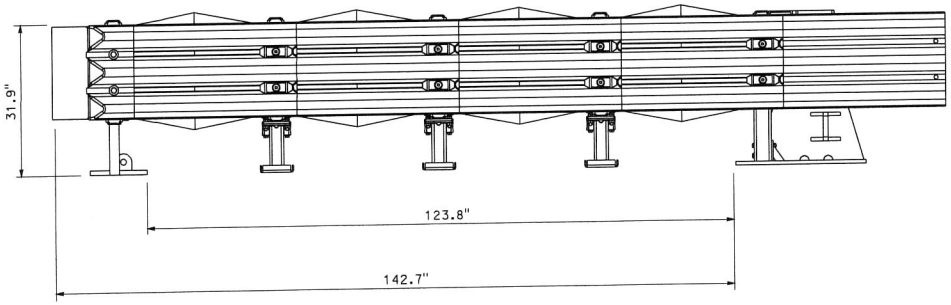

CRASH CUSHION SYSTEM

TAU II (MODEL No. 30T070CBC)