Dist	COUNTY	ROUTE	POST MILES TOTAL PROJECT	SHEET No.	TOTAL SHEETS
06	Fre	168	T25.5/R32.9	1	48

ACSTP-P168(057)E

STATE OF CALIFORNIA
DEPARTMENT OF TRANSPORTATION

PROJECT PLANS FOR CONSTRUCTION ON
STATE HIGHWAY
IN FRESNO COUNTY
AT AND NEAR PRATHER
FROM 0.1 MILE NORTH OF OAK CREEK ROAD
TO 0.1 MILE NORTH OF SJ AND E ROAD

TO BE SUPPLEMENTED BY STANDARD PLANS DATED MAY 2006

INDEX OF PLANS

SHEET No.	DESCRIPTION
1	TITLE AND LOCATION MAP
2-3	TYPICAL CROSS SECTIONS
4-13	CONSTRUCTION DETAILS
14	DRAINAGE QUANTITIES
15	CONSTRUCTION AREA SIGNS
16	PAVEMENT DELINEATION DETAILS
17	PAVEMENT DELINEATION QUANTITIES
18	SIGN QUANTITIES
19-23	SUMMARY OF QUANTITIES
24-48	REVISED AND NEW STANDARD PLANS

THE STANDARD PLANS LIST APPLICABLE TO THIS CONTRACT IS INCLUDED IN THE NOTICE TO BIDDERS AND SPECIAL PROVISIONS BOOK.

LOCATION MAP

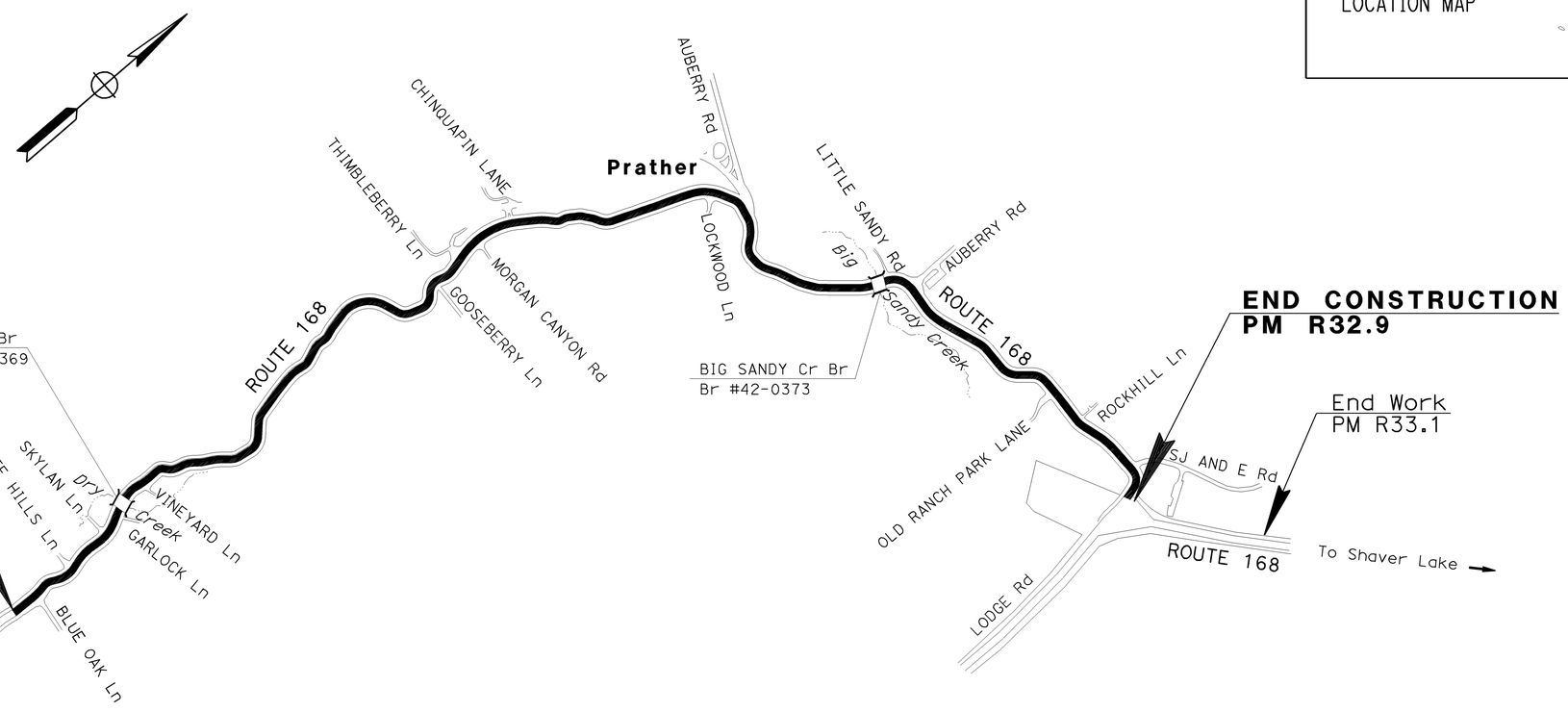

NO SCALE

THE CONTRACTOR SHALL POSSESS THE CLASS (OR CLASSES) OF LICENSE AS SPECIFIED IN THE "NOTICE TO BIDDERS."

PROJECT MANAGER: EARLE JONES
DESIGN ENGINEER: ABDUL BAKER

PROJECT ENGINEER REGISTERED CIVIL ENGINEER — DATE 06-12-12

June 25, 2012
PLANS APPROVAL DATE

REGISTERED PROFESSIONAL ENGINEER — MICHAEL W. DENNISON No. 68346 Exp. 9/30/13 CIVIL — STATE OF CALIFORNIA

THE STATE OF CALIFORNIA OR ITS OFFICERS OR AGENTS SHALL NOT BE RESPONSIBLE FOR THE ACCURACY OR COMPLETENESS OF SCANNED COPIES OF THIS PLAN SHEET.

CONTRACT No.	06-0H1004
PROJECT ID	0600020366

LAST REVISION 06-21-12 — DATE PLOTTED => 05-OCT-2012 TIME PLOTTED => 12:43

Dist	COUNTY	ROUTE	POST MILES TOTAL PROJECT	SHEET No.	TOTAL SHEETS
06	Fre	168	T25.5/R32.9	2	48

REGISTERED CIVIL ENGINEER 06-12-12 DATE

6-25-12
PLANS APPROVAL DATE

REGISTERED PROFESSIONAL ENGINEER MICHAEL W. DENNISON No. 68346 Exp. 9/30/13 CIVIL STATE OF CALIFORNIA

THE STATE OF CALIFORNIA OR ITS OFFICERS OR AGENTS SHALL NOT BE RESPONSIBLE FOR THE ACCURACY OR COMPLETENESS OF SCANNED COPIES OF THIS PLAN SHEET.

NOTES:

1. DIMENSIONS OF THE PAVEMENT STRUCTURES (STRUCTURAL SECTIONS) ARE SUBJECT TO TOLERANCES SPECIFIED IN THE STANDARD SPECIFICATIONS.
2. LOCATIONS AND TYPES OF HMA DIKES ARE SHOWN ON THE SUMMARY OF QUANTITIES SHEETS.
3. SEE SUMMARY OF QUANTITY SHEETS FOR COLD PLANE, SHOULDER BACKING, AC PAVEMENT AND HMA QUANTITIES.
4. FOR ACCURATE RIGHT OF WAY AND ACCESS DATA, CONTACT RIGHT OF WAY ENGINEERING AT THE DISTRICT OFFICE.
5. EXISTING UTILITY FACILITIES ARE NOT SHOWN ON THE PLANS.

ABBREVATION:

RHMA-G - RUBBERIZED HOT MIX ASPHALT (GAP GRADED)

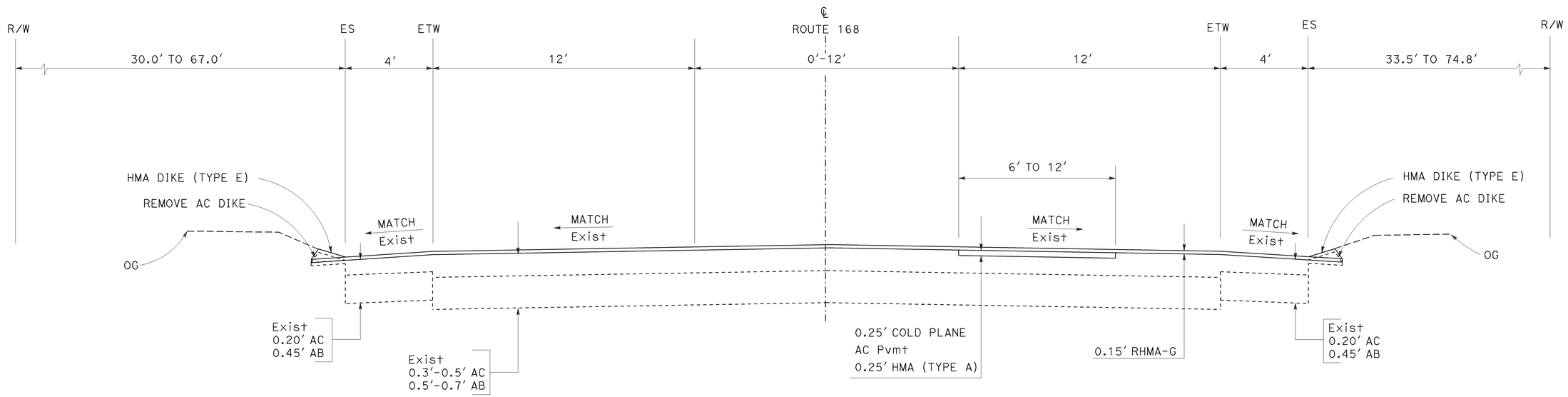

ROUTE 168

PM R29.955 TO R30.126

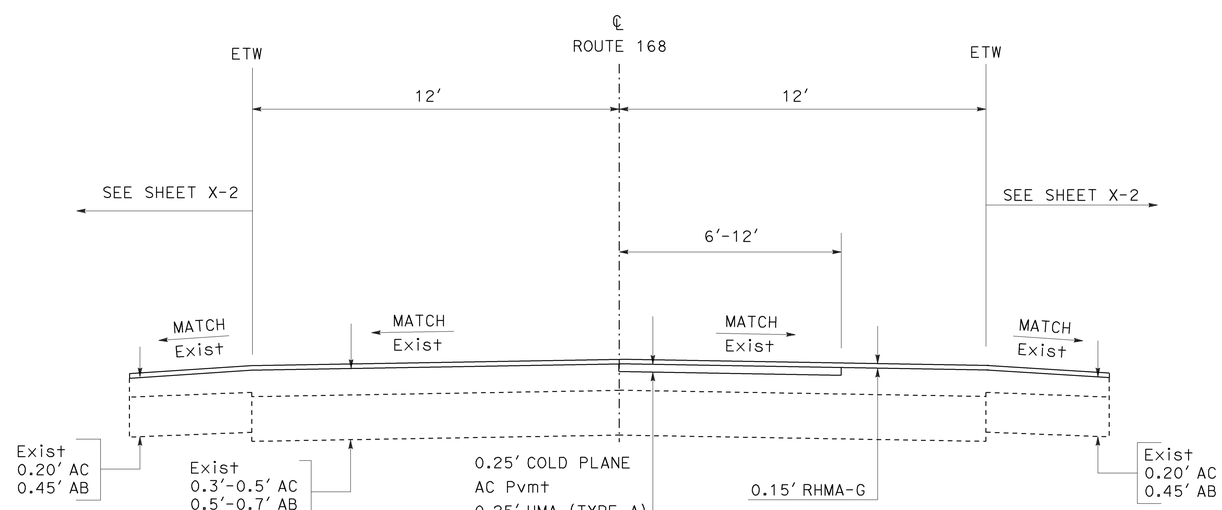

ROUTE 168

PM T25.531 TO R29.955

PM R30.126 TO T30.204

TYPICAL CROSS SECTIONS

NO SCALE

X-1

STATE OF CALIFORNIA - DEPARTMENT OF TRANSPORTATION

Caltrans® DESIGN

FUNCTIONAL SUPERVISOR: ABDUL BAKER

CALCULATED-DESIGNED BY: MARCO NABAVI

CHECKED BY: MICHAEL DENNISON

REVISED BY / DATE REVISED

LAST REVISION 06-21-12

DATE PLOTTED => 05-OCT-2012
TIME PLOTTED => 12:43

Dist	COUNTY	ROUTE	POST MILES TOTAL PROJECT	SHEET No.	TOTAL SHEETS
06	Fre	168	T25.5/R32.9	3	48

REGISTERED CIVIL ENGINEER 06-12-12 DATE

6-25-12
PLANS APPROVAL DATE

REGISTERED PROFESSIONAL ENGINEER MICHAEL W. DENNISON No. 68346 Exp. 9/30/13 CIVIL STATE OF CALIFORNIA

THE STATE OF CALIFORNIA OR ITS OFFICERS OR AGENTS SHALL NOT BE RESPONSIBLE FOR THE ACCURACY OR COMPLETENESS OF SCANNED COPIES OF THIS PLAN SHEET.

LOCATION		HP TYPE
PM TO PM	DIRECTION	
T25.531-T25.548	EASTBOUND	HP-5
T25.548-T25.635	EASTBOUND	HP-3
T25.635-T25.697	EASTBOUND	HP-5
T25.697-R26.211	EASTBOUND	HP-1
R26.211-R26.287	EASTBOUND	HP-2
R26.287-R26.333	EASTBOUND	HP-4
T26.333-T26.586	EASTBOUND	HP-1
T26.586-T26.630	EASTBOUND	HP-5
T26.630-T27.310	EASTBOUND	HP-1
T27.310-T27.351	EASTBOUND	HP-2
T27.351-T27.722	EASTBOUND	HP-1
T27.722-T28.065	EASTBOUND	HP-2
T28.065-T28.109	EASTBOUND	HP-1
T28.109-T28.226	EASTBOUND	HP-2
T28.226-T28.500	EASTBOUND	HP-1
T28.500-R28.535	EASTBOUND	HP-2
R28.535-R28.695	EASTBOUND	HP-4
R28.695-R28.840	EASTBOUND	HP-3
R28.840-R28.876	EASTBOUND	HP-4
R28.876-R28.905	EASTBOUND	HP-2
R28.905-R28.917	EASTBOUND	HP-1
R28.917-R29.191	EASTBOUND	HP-2
T29.191-T29.200	EASTBOUND	HP-1
T29.200-T29.282	EASTBOUND	HP-5
T29.421-T29.500	EASTBOUND	HP-1
T29.500-T29.583	EASTBOUND	HP-3
T29.583-T29.638	EASTBOUND	HP-1
T29.638-R29.669	EASTBOUND	HP-4
R29.669-R29.749	EASTBOUND	HP-3
R29.749-R29.810	EASTBOUND	HP-4
R29.810-R29.828	EASTBOUND	HP-3
R29.828-R29.851	EASTBOUND	HP-2
R29.851-R29.955	EASTBOUND	HP-3
R30.126-T30.204	EASTBOUND	HP-1

LOCATION		HP TYPE
PM TO PM	DIRECTION	
T25.531-T25.548	WESTBOUND	HP-5
T25.548-T25.659	WESTBOUND	HP-3
T25.659-T25.697	WESTBOUND	HP-2
T25.697-T26.036	WESTBOUND	HP-1
R26.036-R26.159	WESTBOUND	HP-2
R26.159-T27.722	WESTBOUND	HP-1
T27.722-T27.796	WESTBOUND	HP-3
T27.796-T27.832	WESTBOUND	HP-1
T27.832-T27.885	WESTBOUND	HP-2
T27.885-T28.043	WESTBOUND	HP-1
T28.043-T28.091	WESTBOUND	HP-2
T28.091-R28.553	WESTBOUND	HP-1
R28.553-R28.617	WESTBOUND	HP-6
R28.617-R28.835	WESTBOUND	HP-3
R28.835-R28.888	WESTBOUND	HP-1
R28.888-R28.915	WESTBOUND	HP-3
R28.915-T29.293	WESTBOUND	HP-1
T29.293-T29.617	WESTBOUND	HP-2
T29.617-T29.669	WESTBOUND	HP-4
R29.669-R29.955	WESTBOUND	HP-3
R30.126-T30.204	WESTBOUND	HP-1

WB Lanes NEW CONSTRUCTION

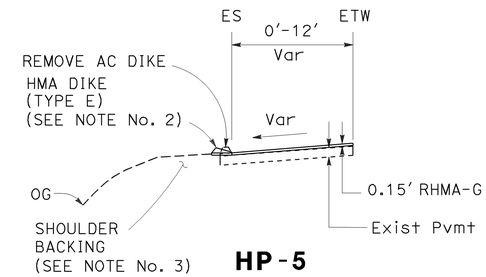

HP-5

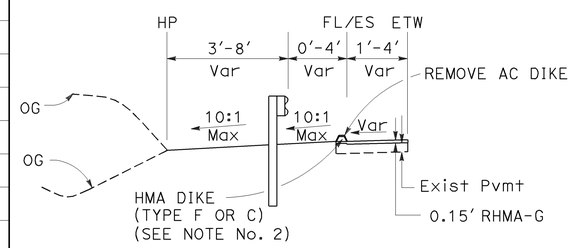

HP-4

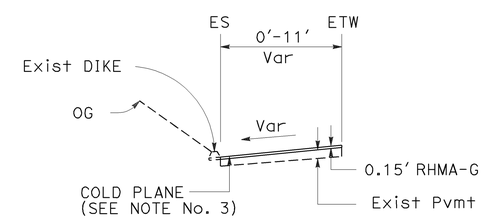

HP-3

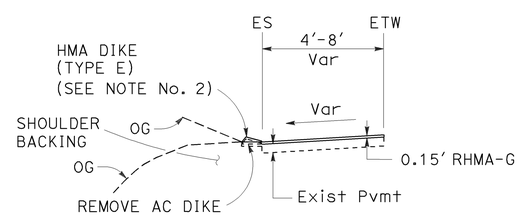

HP-2

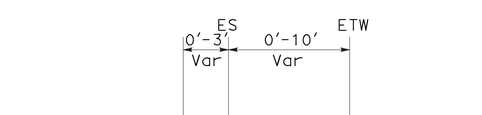

HP-1

EB Lanes NEW CONSTRUCTION

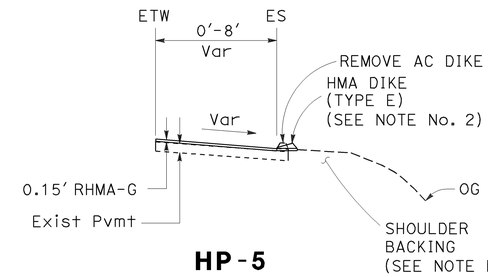

HP-5

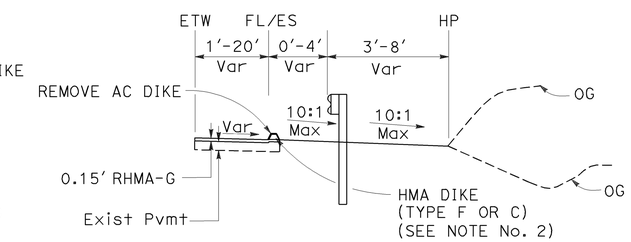

HP-4

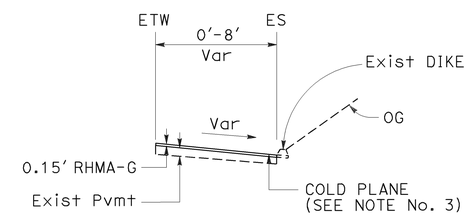

HP-3

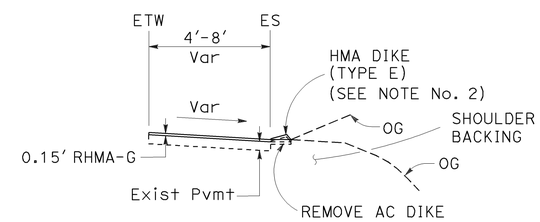

HP-2

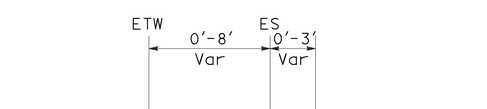

HP-1

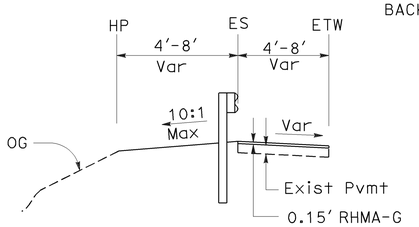

HP-6

TYPICAL CROSS SECTIONS

NO SCALE

X-2

STATE OF CALIFORNIA - DEPARTMENT OF TRANSPORTATION

Caltrans® DESIGN

FUNCTIONAL SUPERVISOR: ABDUL BAKER

CALCULATED-DESIGNED BY: MARCO NABAVI

CHECKED BY: MICHAEL DENNISON

REVISED BY / DATE REVISED

LAST REVISION 06-21-12

DATE PLOTTED => 05-OCT-2012
TIME PLOTTED => 12:43

Dist	COUNTY	ROUTE	POST MILES TOTAL PROJECT	SHEET No.	TOTAL SHEETS
06	Fre	168	T25.5/R32.9	4	48

REGISTERED CIVIL ENGINEER 06-12-12 DATE

6-25-12
PLANS APPROVAL DATE

REGISTERED PROFESSIONAL ENGINEER MICHAEL W. DENNISON No. 68346 Exp. 9/30/13 CIVIL STATE OF CALIFORNIA

THE STATE OF CALIFORNIA OR ITS OFFICERS OR AGENTS SHALL NOT BE RESPONSIBLE FOR THE ACCURACY OR COMPLETENESS OF SCANNED COPIES OF THIS PLAN SHEET.

NOTES: (THIS SHEET)

1. FOR ACCURATE RIGHT OF WAY AND ACCESS DATA, CONTACT RIGHT OF WAY ENGINEERING AT THE DISTRICT OFFICE.
2. EXISTING UTILITY FACILITIES ARE NOT SHOWN ON THE PLANS.

LEGEND:

- 0.15' HMA (TYPE A)
- RHMA-G
- TEMPORARY FENCE (TYPE ESA)

ABBREVIATION:

RHMA-G RUBBERIZED HOT MIX ASPHALT (GAP GRADED)

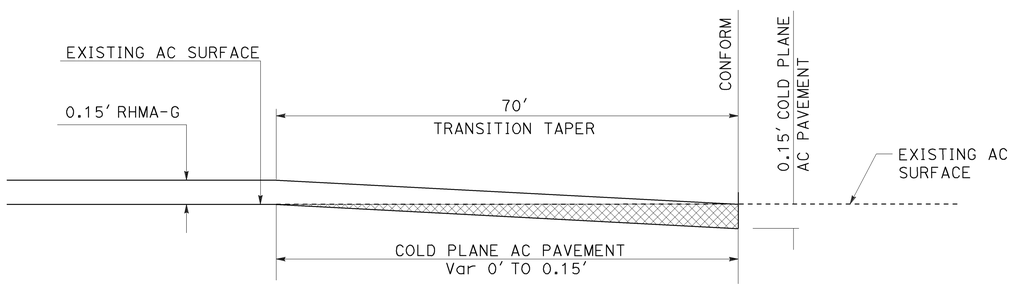

TYPICAL TRANSITION TO CONFORM HMA PAVEMENT

ROUTE 168 PM T25.518 TO PM T25.531 (CONFORM TO ROUTE 168)
ROUTE 168 PM R26.286 TO PM R26.299 (CONFORM TO Br APPROACH SLAB/EASTBOUND)
ROUTE 168 PM T26.311 TO PM T26.324 (CONFORM TO Br APPROACH SLAB/WESTBOUND)
ROUTE 168 PM T30.204 TO PM T30.217 CONFORM TO ROUTE 168)

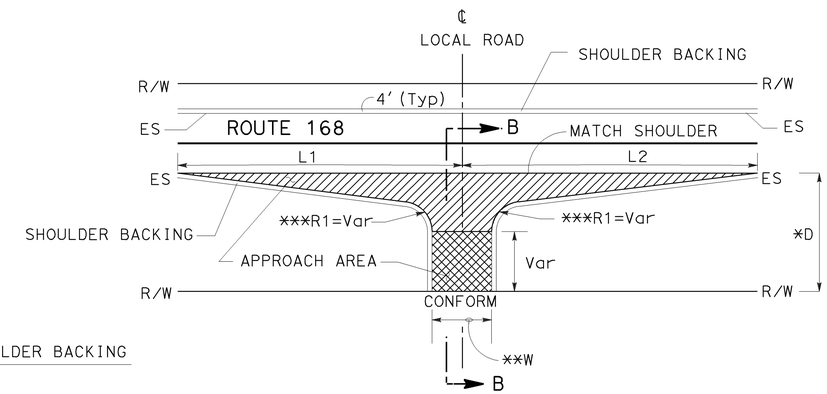

TYPICAL LOCAL ROAD INTERSECTION

* D MEASURED ALONG CENTER LINE OF LOCAL ROAD
** W MEASURED PARALLEL TO ROUTE 168
*** SEE SUMMARY OF QUANTITIES, LOCAL ROAD TABLE

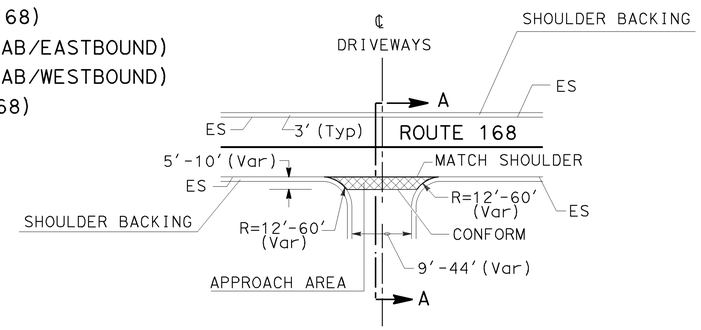

TYPICAL PAVED DRIVEWAY APPROACH

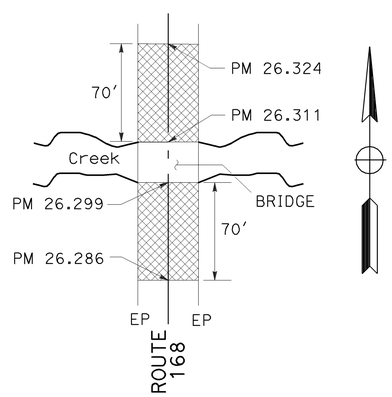

LONGITUDINAL TRANSITION AT THE BRIDGE

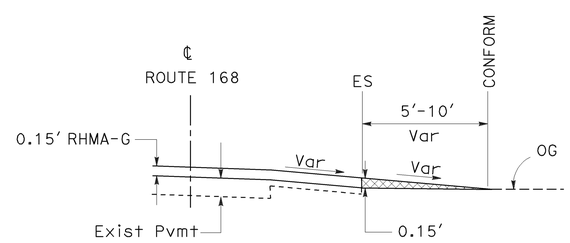

SECTION A-A

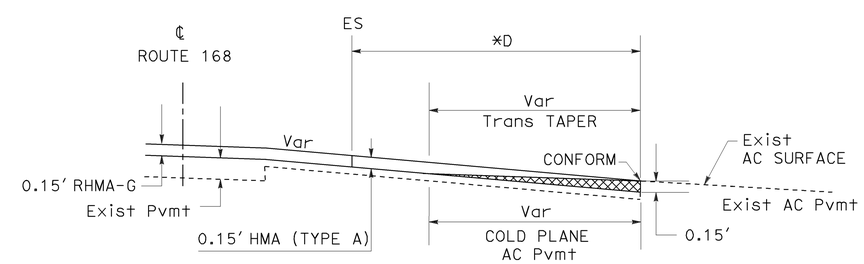

SECTION B-B

CONSTRUCTION DETAILS

NO SCALE

C-1

STATE OF CALIFORNIA - DEPARTMENT OF TRANSPORTATION
Caltrans DESIGN
FUNCTIONAL SUPERVISOR ABDUL BAKER
CALCULATED-DESIGNED BY MARCO NABAVI
CHECKED BY MICHAEL DENNISON
REVISED BY
DATE REVISED

LAST REVISION 06-21-12
DATE PLOTTED => 05-OCT-2012
TIME PLOTTED => 12:43

Dist	COUNTY	ROUTE	POST MILES TOTAL PROJECT	SHEET No.	TOTAL SHEETS
06	Fre	168	T25.5/R32.9	5	48

REGISTERED CIVIL ENGINEER 06-12-12 DATE

6-25-12
PLANS APPROVAL DATE

REGISTERED PROFESSIONAL ENGINEER MICHAEL W. DENNISON No. 68346 Exp. 9/30/13 CIVIL STATE OF CALIFORNIA

THE STATE OF CALIFORNIA OR ITS OFFICERS OR AGENTS SHALL NOT BE RESPONSIBLE FOR THE ACCURACY OR COMPLETENESS OF SCANNED COPIES OF THIS PLAN SHEET.

NOTES: (THIS SHEET)

1. FOR ACCURATE RIGHT OF WAY AND ACCESS DATA, CONTACT RIGHT OF WAY ENGINEERING AT THE DISTRICT OFFICE.
2. EXISTING UTILITY FACILITIES ARE NOT SHOWN ON THE PLANS.

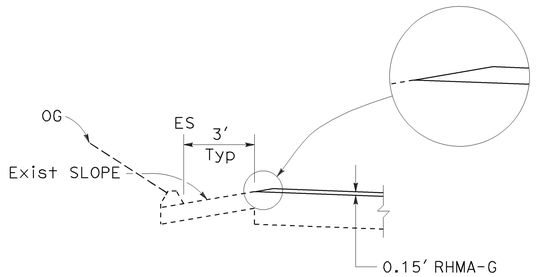

TYPICAL SUPERELEVATED SHOULDER SECTIONS IN EXCAVATION DETAIL

PM R28.634 TO PM R28.835
WESTBOUND

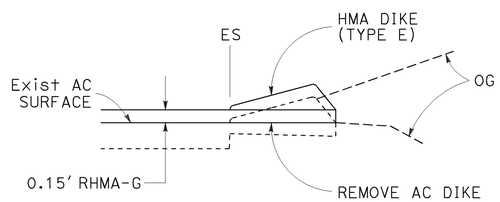

TYPICAL PLACE HMA DIKE

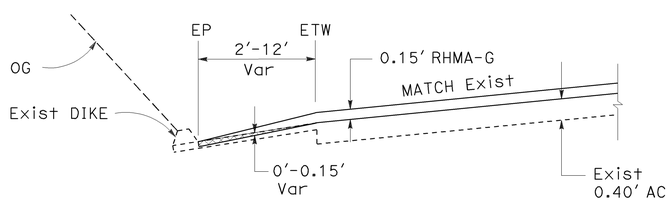

TYPICAL COLD PLANE TAPER

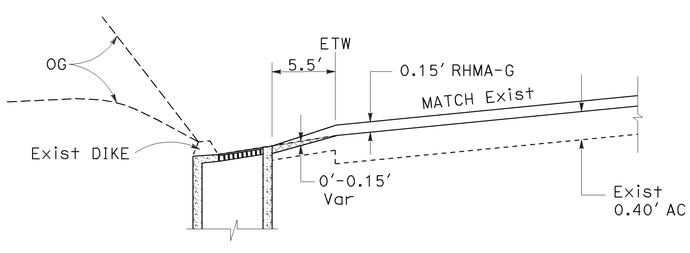

TYPICAL TRANSITION AT DI

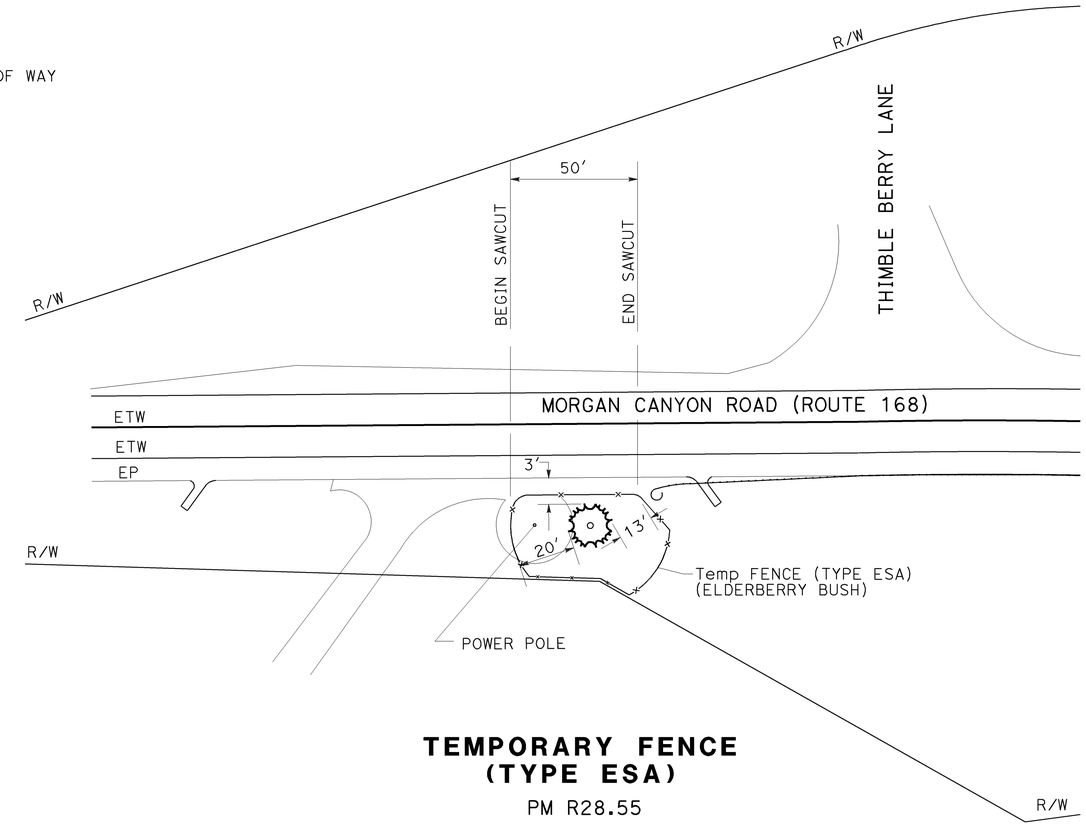

TEMPORARY FENCE (TYPE ESA)

PM R28.55

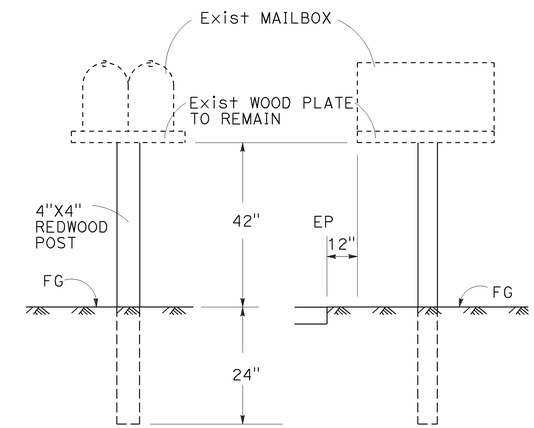

RESET MAILBOX DETAIL

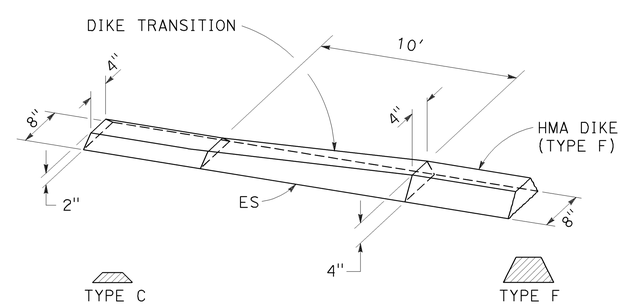

HMA DIKE (TYPE C) TO HMA DIKE (TYPE F)

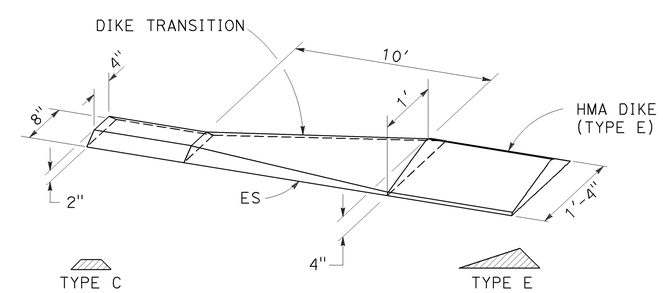

HMA DIKE (TYPE C) TO HMA DIKE (TYPE E)

HMA DIKE TRANSITION

CONSTRUCTION DETAILS

NO SCALE

C-2

STATE OF CALIFORNIA - DEPARTMENT OF TRANSPORTATION
DESIGN

FUNCTIONAL SUPERVISOR: ABDUL BAKER
CALCULATED-DESIGNED BY: MARCO NABAVI
CHECKED BY: MICHAEL DENNISON
REVISED BY
DATE REVISED

LAST REVISION 06-21-12
DATE PLOTTED => 05-OCT-2012
TIME PLOTTED => 12:43

Dist	COUNTY	ROUTE	POST MILES TOTAL PROJECT	SHEET No.	TOTAL SHEETS
06	Fre	168	T25.5/R32.9	6	48

REGISTERED CIVIL ENGINEER 06-12-12 DATE

6-25-12
PLANS APPROVAL DATE

REGISTERED PROFESSIONAL ENGINEER MICHAEL W. DENNISON No. 68346 Exp. 9/30/13 CIVIL STATE OF CALIFORNIA

THE STATE OF CALIFORNIA OR ITS OFFICERS OR AGENTS SHALL NOT BE RESPONSIBLE FOR THE ACCURACY OR COMPLETENESS OF SCANNED COPIES OF THIS PLAN SHEET.

NOTES: (THIS SHEET)

1. THE CONTRACTOR SHALL VERIFY ALL CONTROLLING FIELD DIMENSIONS BEFORE ORDERING OR FABRICATING ANY MATERIAL.
2. EXISTING UTILITY FACILITIES ARE NOT SHOWN ON THE PLANS.
3. FOR LOCATIONS, SEE Q-SHEETS.

LEGEND:

-·-·-·- Indicates Existing Structure

——— Indicates New Construction

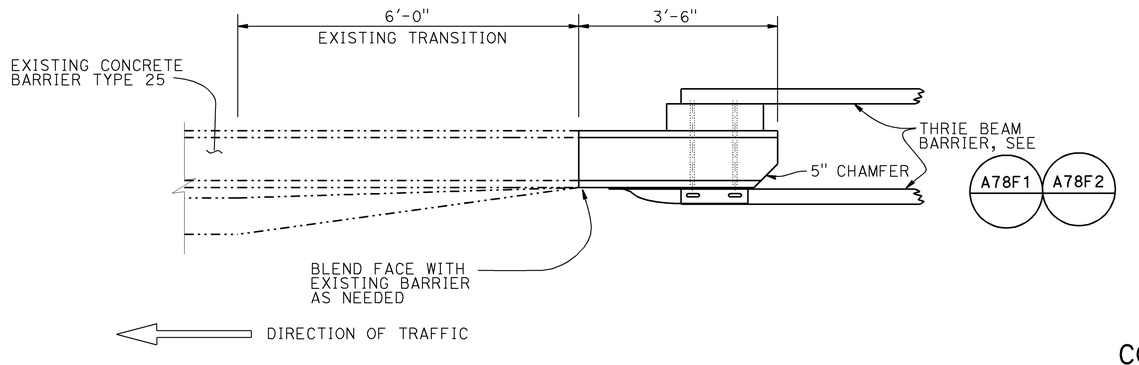

PLAN
3/4" = 1'-0"

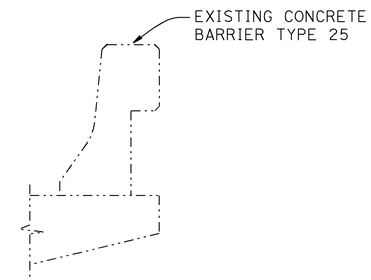

CONCRETE BARRIER TYPE 25
3/4" = 1'-0"

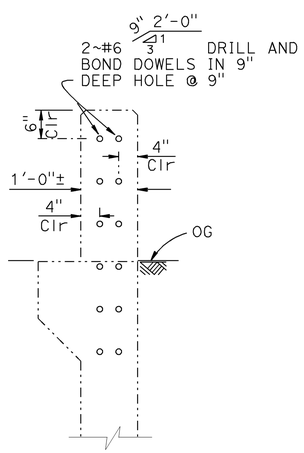

SECTION A-A
3/4" = 1'-0"

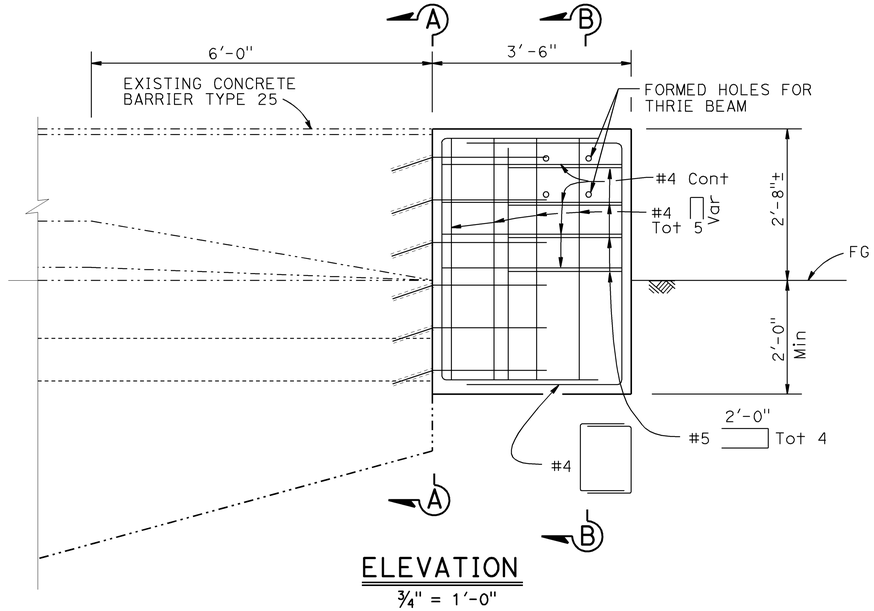

ELEVATION
3/4" = 1'-0"

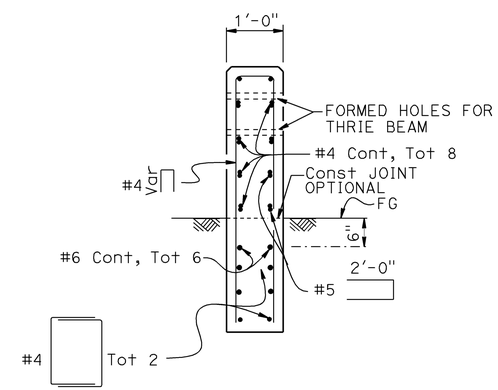

NOTE:
Thrie Beam not shown

SECTION B-B
3/4" = 1'-0"

BRIDGE RAILING CONNECTION - ANCHOR BLOCK TO TYPE 25 CONCRETE BARRIER

CONSTRUCTION DETAILS
SCALE AS SHOWN
C-3

STATE OF CALIFORNIA - DEPARTMENT OF TRANSPORTATION
Caltrans
DESIGN
FUNCTIONAL SUPERVISOR: ABDUL BAKER
CALCULATED-DESIGNED BY: MARCO NABAVI
CHECKED BY: MICHAEL DENNISON
REVISED BY
DATE REVISED

LAST REVISION 06-21-12
DATE PLOTTED => 05-OCT-2012
TIME PLOTTED => 12:43

Dist	COUNTY	ROUTE	POST MILES TOTAL PROJECT	SHEET No.	TOTAL SHEETS
06	Fre	168	T25.5/R32.9	7	48

REGISTERED CIVIL ENGINEER 06-12-12 DATE

6-25-12
PLANS APPROVAL DATE

REGISTERED PROFESSIONAL ENGINEER MICHAEL W. DENNISON No. 68346 Exp. 9/30/13 CIVIL STATE OF CALIFORNIA

THE STATE OF CALIFORNIA OR ITS OFFICERS OR AGENTS SHALL NOT BE RESPONSIBLE FOR THE ACCURACY OR COMPLETENESS OF SCANNED COPIES OF THIS PLAN SHEET.

NOTES: (THIS SHEET)

1. THE CONTRACTOR SHALL VERIFY ALL CONTROLLING FIELD DIMENSIONS BEFORE ORDERING OR FABRICATING ANY MATERIAL.
2. REMOVE THE PORTION OF CONCRETE BARRIER TYPE 25 AS REQUIRED. EXISTING REINFORCEMENT TO REMAIN.
3. WINGWALL REINFORCEMENT TO REMAIN.
4. EXISTING UTILITY FACILITIES ARE NOT SHOWN ON THE PLANS.
5. FOR LOCATIONS, SEE Q-SHEETS.
6. CONTRACTOR SHALL COORDINATE BOLT HOLE LOCATIONS WITH ALTERNATIVE CRASH CUSHION MANUFACTURE'S PLANS.

LEGEND:

- INDICATES EXISTING STRUCTURE
- INDICATES NEW CONSTRUCTION
- CONCRETE REMOVAL
- INDICATES EXISTING REINFORCEMENT

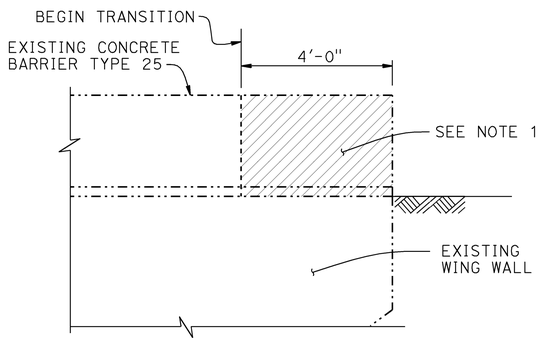

CONCRETE REMOVAL
½" = 1'-0"

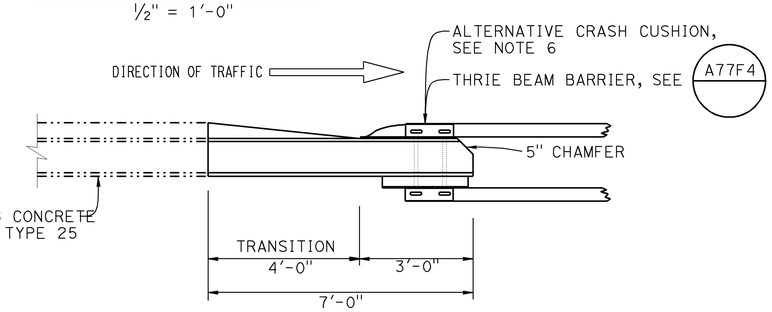

PLAN
½" = 1'-0"

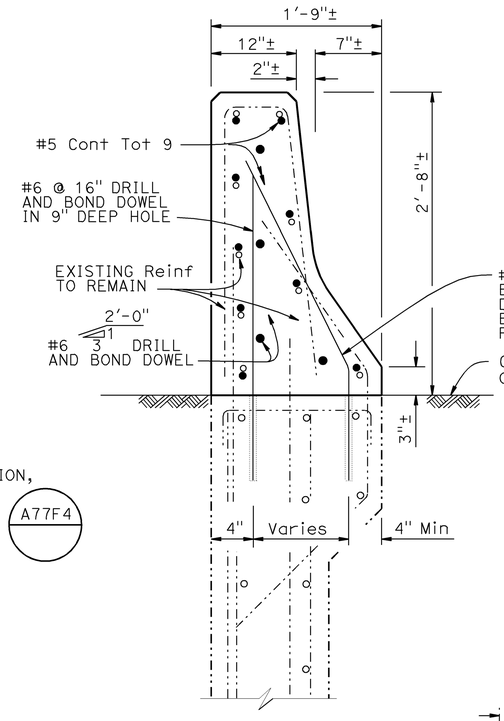

SECTION B-B
1½" = 1'-0"

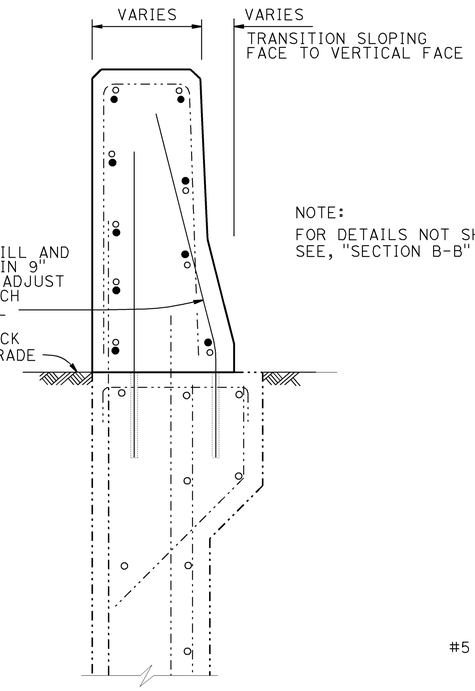

NOTE:
FOR DETAILS NOT SHOWN SEE, "SECTION B-B"

SECTION C-C
1½" = 1'-0"

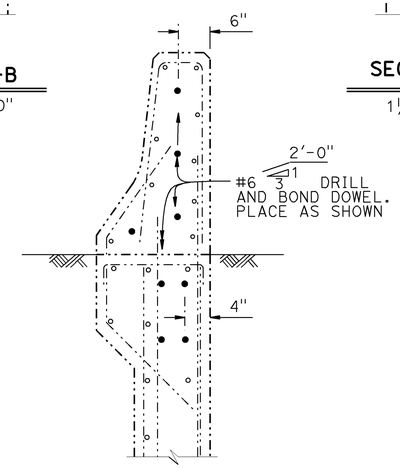

SECTION A-A
1" = 1'-0"

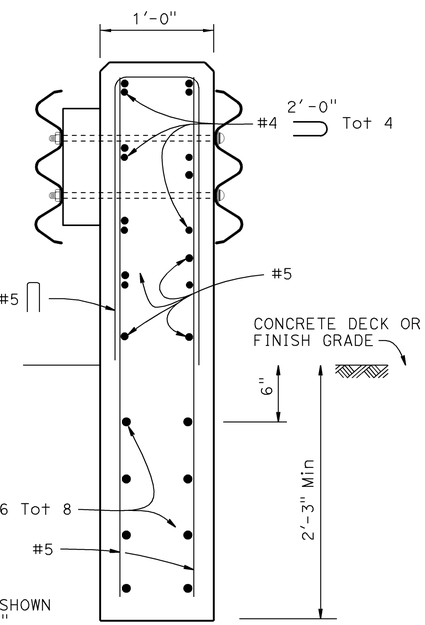

NOTE:
FOR DETAILS NOT SHOWN SEE, "SECTION B-B" AND "SECTION C-C"

SECTION D-D
1½" = 1'-0"

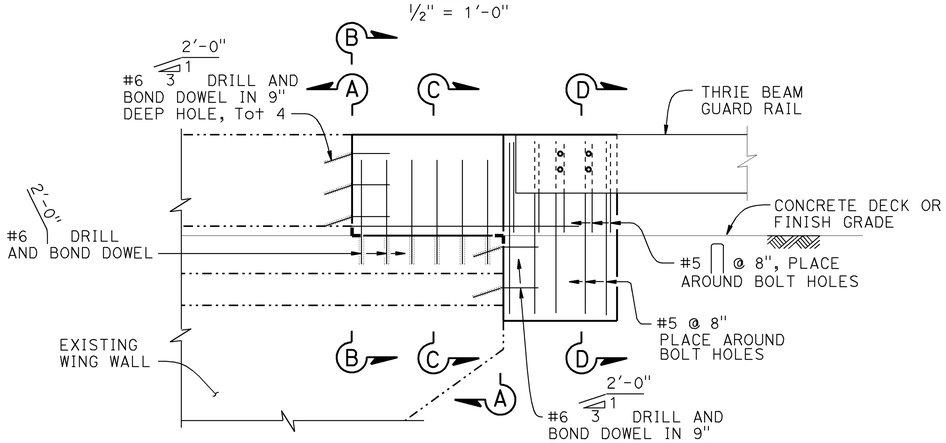

NOTE:
All REINF NOT SHOWN

ELEVATION
½" = 1'-0"

BRIDGE RAILING CONNECTION
ANCHOR BLOCK TO TYPE 25 CONCRETE BARRIER

CONSTRUCTION DETAILS
SCALE AS SHOWN

C-4

STATE OF CALIFORNIA - DEPARTMENT OF TRANSPORTATION
DESIGN
Caltrans
FUNCTIONAL SUPERVISOR: ABDUL BAKER
CALCULATED-DESIGNED BY: MARCO NABAVI
CHECKED BY: MICHAEL DENNISON
REVISED BY
DATE REVISED

LAST REVISION 06-21-12
DATE PLOTTED => 05-OCT-2012
TIME PLOTTED => 12:43

Dist	COUNTY	ROUTE	POST MILES TOTAL PROJECT	SHEET No.	TOTAL SHEETS
06	Fre	168	T25.5/R32.9	8	48

REGISTERED CIVIL ENGINEER 06-12-12 DATE

6-25-12
PLANS APPROVAL DATE

REGISTERED PROFESSIONAL ENGINEER MICHAEL W. DENNISON No. 68346 Exp. 9/30/13 CIVIL STATE OF CALIFORNIA

THE STATE OF CALIFORNIA OR ITS OFFICERS OR AGENTS SHALL NOT BE RESPONSIBLE FOR THE ACCURACY OR COMPLETENESS OF SCANNED COPIES OF THIS PLAN SHEET.

NOTES: (THIS SHEET)

1. THE CONTRACTOR SHALL VERIFY ALL CONTROLLING FIELD DIMENSIONS BEFORE ORDERING OR FABRICATING ANY MATERIAL.
2. REMOVE THE PORTION OF CONCRETE BARRIER TYPE 25M AS REQUIRED. EXISTING REINFORCEMENT TO REMAIN.
3. WINGWALL REINFORCEMENT TO REMAIN.
4. EXISTING UTILITY FACILITIES ARE NOT SHOWN ON THE PLANS.
5. FOR LOCATIONS, SEE Q-SHEETS.

LEGEND:

- INDICATES EXISTING STRUCTURE
- INDICATES NEW CONSTRUCTION
- CONCRETE REMOVAL
- INDICATES EXISTING REINFORCEMENT

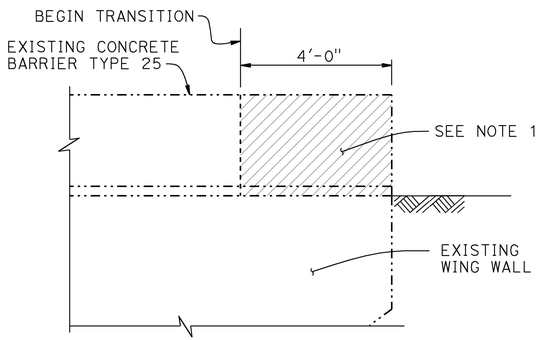

CONCRETE REMOVAL
1/2" = 1'-0"

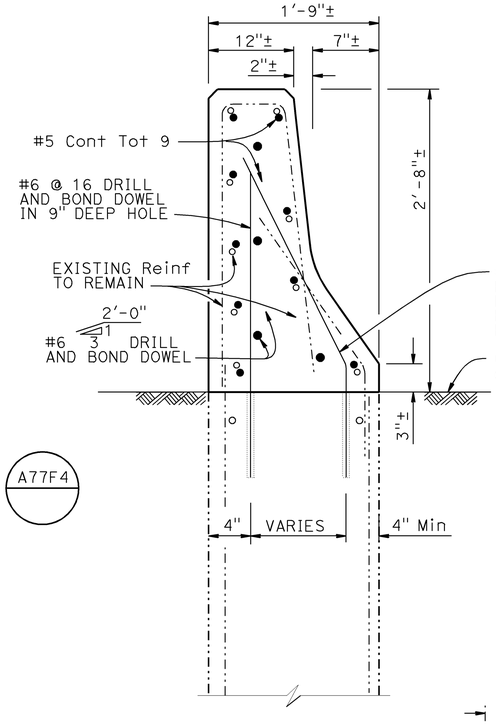

SECTION B-B
1 1/2" = 1'-0"

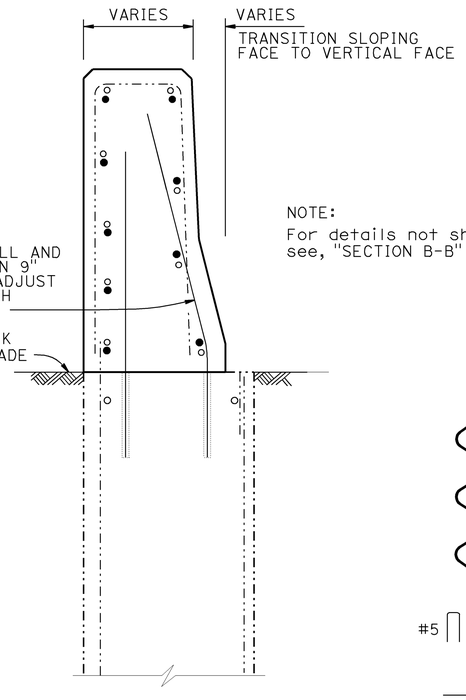

NOTE:
For details not shown see, "SECTION B-B"

SECTION C-C
1 1/2" = 1'-0"

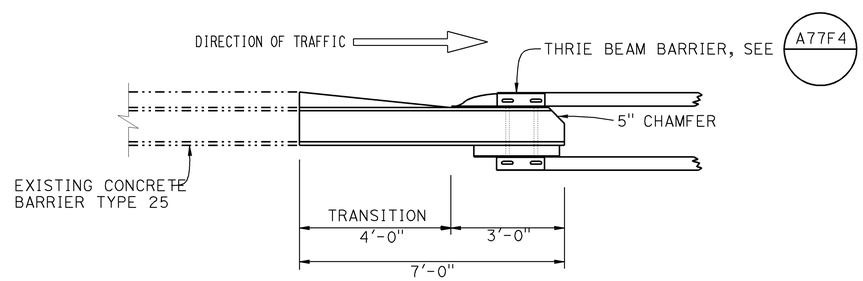

PLAN
1/2" = 1'-0"

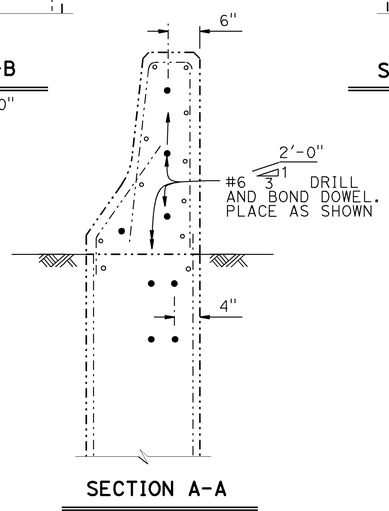

SECTION A-A
1" = 1'-0"

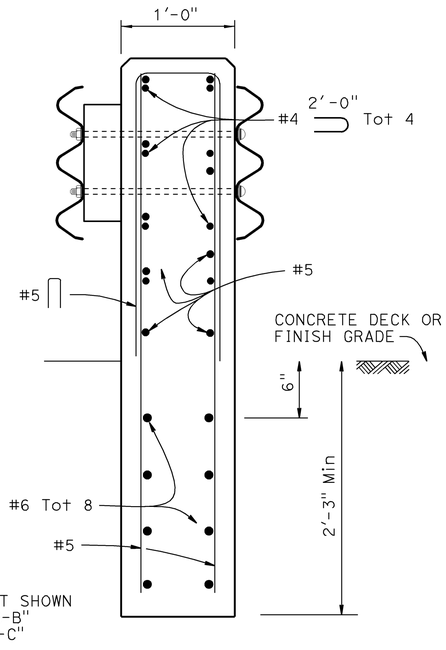

NOTE:
FOR DETAILS NOT SHOWN SEE, "SECTION B-B" AND "SECTION C-C"

SECTION D-D
1 1/2" = 1'-0"

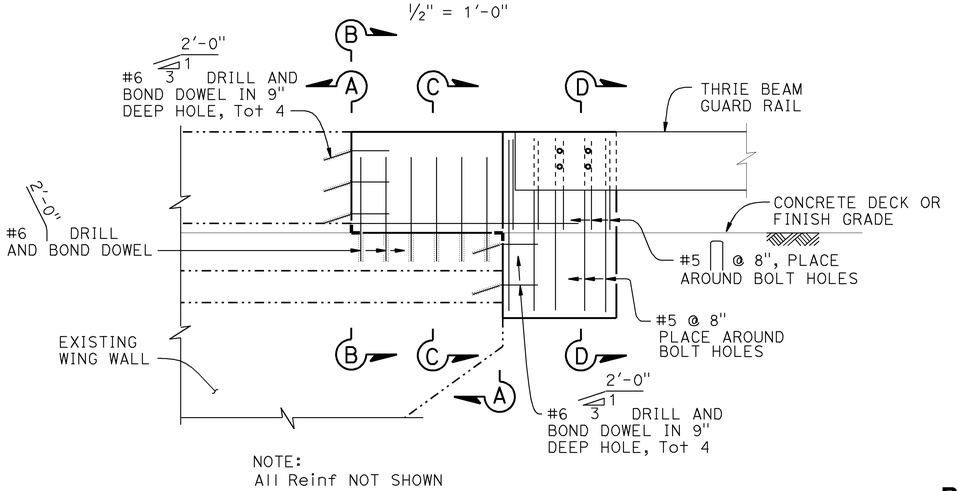

NOTE:
All Reinf NOT SHOWN

ELEVATION
1/2" = 1'-0"

BRIDGE RAILING CONNECTION
ANCHOR BLOCK TO TYPE 25M CONCRETE BARRIER

CONSTRUCTION DETAILS
SCALE AS SHOWN
C-5

STATE OF CALIFORNIA - DEPARTMENT OF TRANSPORTATION
DESIGN
FUNCTIONAL SUPERVISOR: ABDUL BAKER
CALCULATED-DESIGNED BY: MARCO NABAVI
CHECKED BY: MICHAEL DENNISON
REVISED BY / DATE REVISED

LAST REVISION 06-21-12
DATE PLOTTED => 05-OCT-2012
TIME PLOTTED => 12:43

Dist	COUNTY	ROUTE	POST MILES TOTAL PROJECT	SHEET No.	TOTAL SHEETS
06	Fre	168	T25.5/R32.9	9	48

REGISTERED CIVIL ENGINEER 06-12-12 DATE

6-25-12
PLANS APPROVAL DATE

REGISTERED PROFESSIONAL ENGINEER MICHAEL W. DENNISON No. 68346 Exp. 9/30/13 CIVIL STATE OF CALIFORNIA

THE STATE OF CALIFORNIA OR ITS OFFICERS OR AGENTS SHALL NOT BE RESPONSIBLE FOR THE ACCURACY OR COMPLETENESS OF SCANNED COPIES OF THIS PLAN SHEET.

NOTES: (THIS SHEET)

1. LOCATIONS OF NESTED MBGR AS DIRECTED BY THE ENGINEER.
2. OFFSET THE ADDITIONAL METAL BEAM GUARD RAILING SPLICES 6'-3" FROM THE BASE METAL BEAM GUARD RAILING SPLICES.
3. EXISTING UTILITY FACILITIES ARE NOT SHOWN ON THE PLANS.

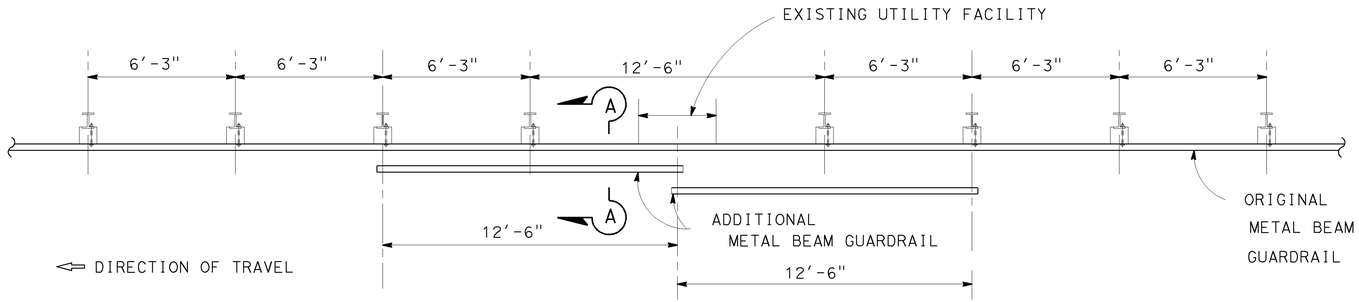

CASE 1
ONE POST OMITTED (SPLICE IN CENTER)

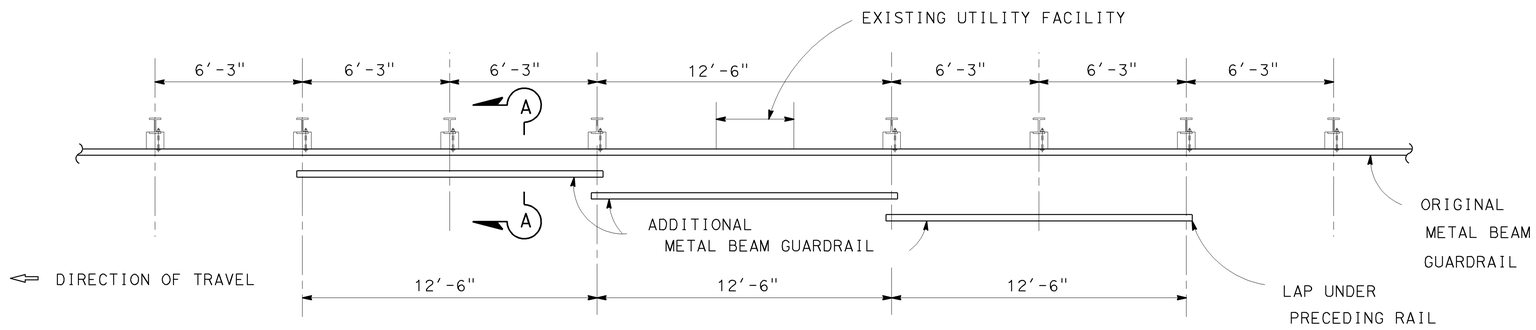

CASE 2
ONE POST OMITTED (SPLICE AT POSTS)

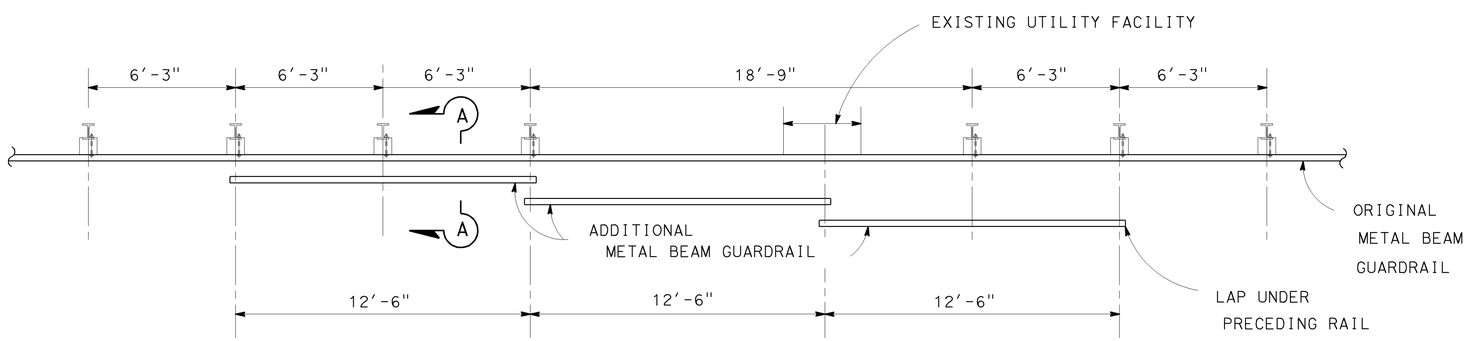

CASE 3
TWO POSTS OMITTED

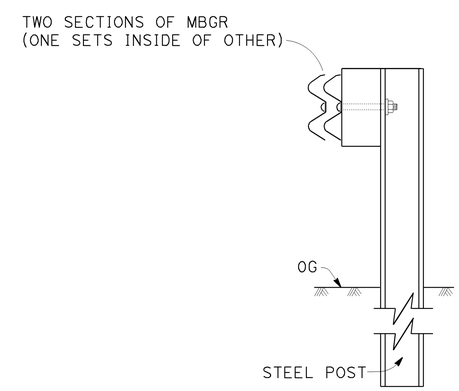

SECTION A-A

NESTED METAL BEAM GUARDRAIL WITH STEEL POST

CONSTRUCTION DETAILS

NO SCALE

C-6

STATE OF CALIFORNIA - DEPARTMENT OF TRANSPORTATION
Caltrans
DESIGN
FUNCTIONAL SUPERVISOR: ABDUL BAKER
CALCULATED-DESIGNED BY: MARCO NABAVI
CHECKED BY: MICHAEL DENNISON
REVISED BY
DATE REVISED

LAST REVISION 06-21-12
DATE PLOTTED => 05-OCT-2012
TIME PLOTTED => 12:44

Dist	COUNTY	ROUTE	POST MILES TOTAL PROJECT	SHEET No.	TOTAL SHEETS
06	Fre	168	T25.5/R32.9	10	48

REGISTERED CIVIL ENGINEER 06-12-12 DATE

6-25-12
PLANS APPROVAL DATE

REGISTERED PROFESSIONAL ENGINEER MICHAEL W. DENNISON No. 68346 Exp. 9/30/13 CIVIL STATE OF CALIFORNIA

THE STATE OF CALIFORNIA OR ITS OFFICERS OR AGENTS SHALL NOT BE RESPONSIBLE FOR THE ACCURACY OR COMPLETENESS OF SCANNED COPIES OF THIS PLAN SHEET.

NOTES: (THIS SHEET)

1. BRIDGE RAILING CONNECTION - ANCHOR BLOCK TO TYPE 25M CONCRETE BARRIER SEE C-5 SHEET.
2. FOR ACCURATE RIGHT OF WAY AND ACCESS DATA, CONTACT RIGHT OF WAY ENGINEERING AT THE DISTRICT OFFICE.
3. EXISTING UTILITY FACILITIES ARE NOT SHOWN ON THE PLANS.
4. GUARD RAILING POST SPACING TO BE 6'-3" CENTER TO CENTER, EXCEPT AS OTHERWISE NOTED.
5. EXCEPT AS NOTED, LINE POSTS ARE 6" x 8" x 6'-0" WOOD WITH 6" x 8" x 1'-2" WOOD BLOCKS. W6 x 9 STEEL POSTS, 6'-0" IN LENGTH, WITH 8" x 8" x 1'-2" NOTCHED WOOD BLOCKS OR NOTCHED RECYCLED PLASTIC BLOCKS MAY BE USED FOR 6" x 8" x 6'-0" WOOD POSTS WITH 6" x 8" x 1'-2" WOOD BLOCKS WHERE APPLICABLE AND WHEN SPECIFIED.
6. A 4'-0" MINIMUM CLEARANCE IS REQUIRED BETWEEN THE FACE OF THE RAILING AND THE FACE OF A FIXED OBJECT LOCATED DIRECTLY BEHIND STANDARD GUARD RAILING SECTIONS WITH POST SPACING AT 6'-3". CONSTRUCT GUARD RAILING AS SHOWN IN THE DETAIL "STRENGTHENED RAILING SECTIONS FOR FIXED OBJECTS" ON THIS PLANE, WHERE THE CLEARANCE BETWEEN THE FACE OF THE RAILING AND THE FACE OF A FIXED OBJECT IS LESS THAN 4'-0", BUT NOT LESS THAN 2'-3". WHERE THE CLEARANCE IS LESS THAN 2'-3", A CONCRETE WALL OR BARRIER SHOULD BE CONSTRUCTED TO SHIELD THE FIXED OBJECT(S).
7. AS SITE CONDITIONS DICTATE, CONSTRUCT ADDITIONAL GUARD RAILING TO SHIELD FIXED OBJECT(S). ADDITIONAL GUARD RAILING LENGTH EQUAL TO MULTIPLES OF 12'-6". POST SPACING AT 6'-3", EXCEPT AS SPECIFIED IN NOTE 6.
8. W6 x 15 STEEL POST, 8'-0" IN LENGTH, WITH 8" x 8" x 1'-2" NOTCHED WOOD BLOCK OR NOTCHED RECYCLED PLASTIC BLOCKS MAY BE USED IN PLACE OF THE 10" x 10" x 8'-0" WOOD POST WITH 8" x 8" x 1'-2" WOOD BLOCK SHOWN IN THE "STRENGTHENED RAILING SECTIONS DETAIL".

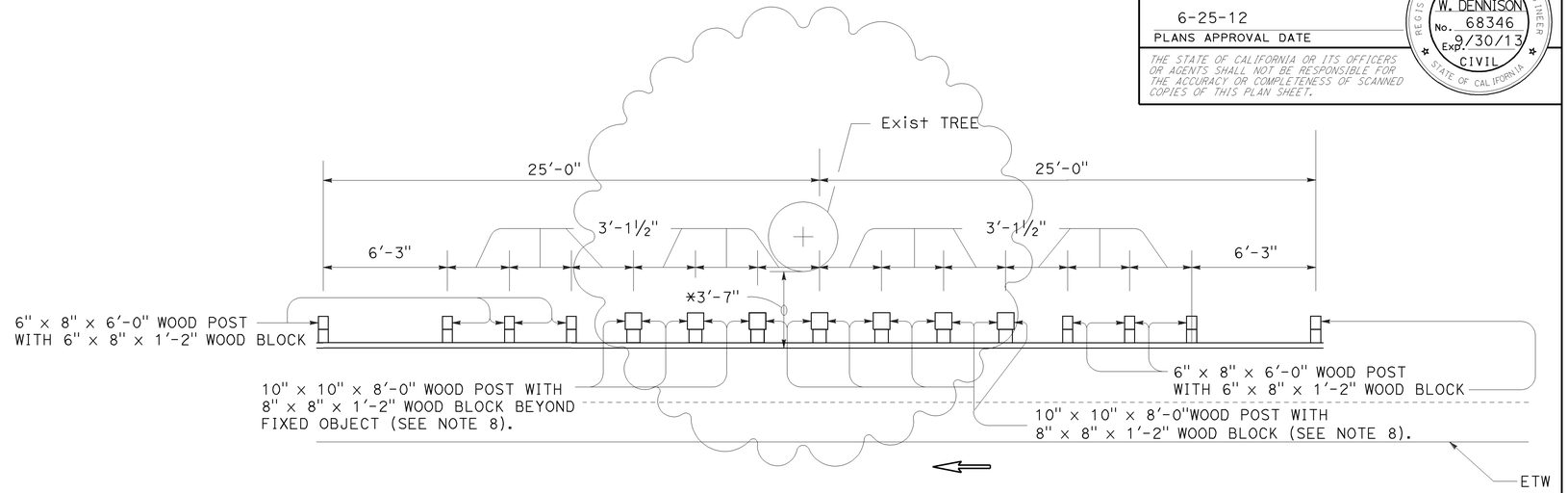

STRENGTHENED RAILING SECTIONS FOR FIXED OBJECT

* LESS THAN 4'-0", BUT NOT LESS THAN 2'-3" (SEE NOTE 6).

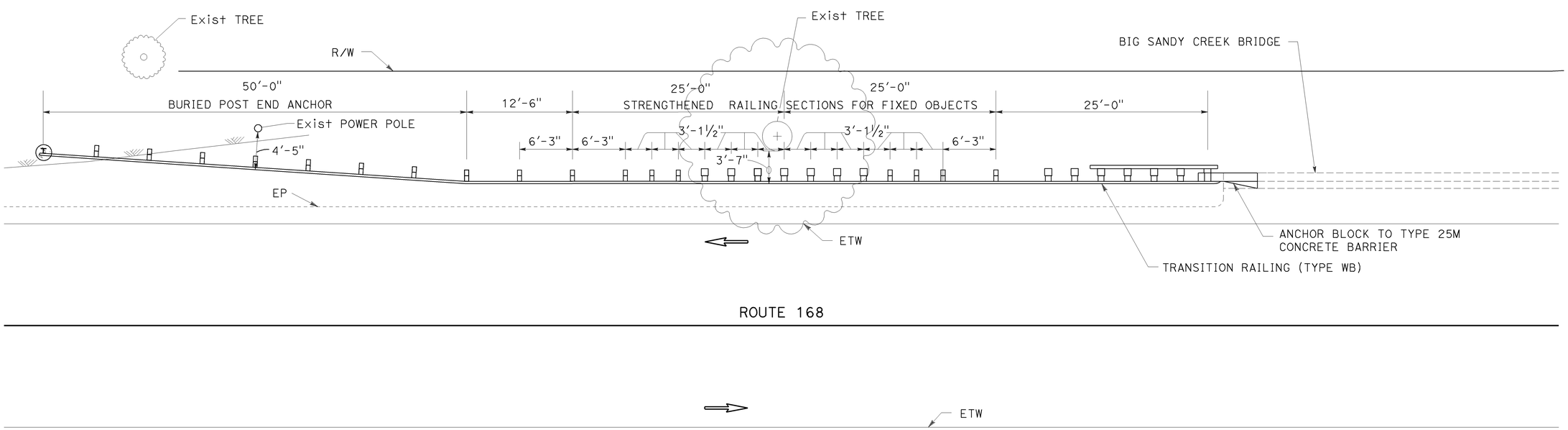

WESTBOUND DEPARTURE END - BIG SANDY CREEK BRIDGE (PM 31.15)

CONSTRUCTION DETAILS

NO SCALE

C-7

STATE OF CALIFORNIA - DEPARTMENT OF TRANSPORTATION
Caltrans DESIGN
FUNCTIONAL SUPERVISOR ABDUL BAKER
CALCULATED-DESIGNED BY MARCO NABAVI
CHECKED BY MICHAEL DENNISON
REVISED BY
DATE REVISED

LAST REVISION 06-21-12
DATE PLOTTED => 05-OCT-2012
TIME PLOTTED => 12:44

Dist	COUNTY	ROUTE	POST MILES TOTAL PROJECT	SHEET No.	TOTAL SHEETS
06	Fre	168	T25.5/R32.9	11	48

Gloria Ramirez
LICENSED LANDSCAPE ARCHITECT

6-25-12
PLANS APPROVAL DATE

LICENSED LANDSCAPE ARCHITECT
GLORIA RAMIREZ No. 5069
Gloria Ramirez
Signature
04/30/14
Renewal Date
06/21/12
Date
STATE OF CALIFORNIA

THE STATE OF CALIFORNIA OR ITS OFFICERS OR AGENTS SHALL NOT BE RESPONSIBLE FOR THE ACCURACY OR COMPLETENESS OF SCANNED COPIES OF THIS PLAN SHEET.

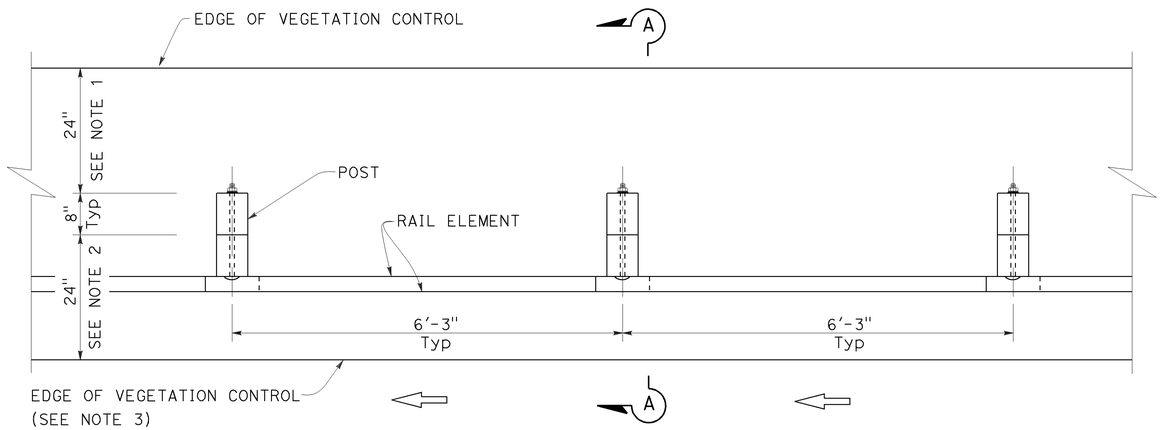

PLAN

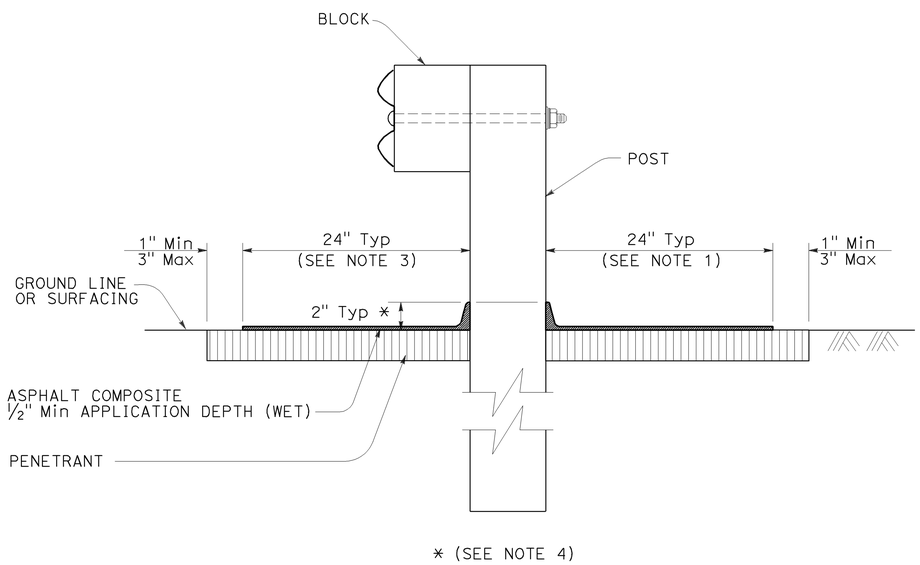

SECTION A-A

NOTES: (THIS SHEET)

1. WHERE THE DISTANCE BETWEEN BACK OF POST AND HINGE POINT IS LESS THAN 24", VEGETATION CONTROL TO BE CONSTRUCTED 6" BEYOND THE HINGE POINT WITH THE KEY EDGE.
2. WHERE DIKE IS CONSTRUCTED UNDER RAILING, CONSTRUCT VEGETATION CONTROL TO BACK EDGE OF CURB OR DIKE.
3. WHERE PAVED SHOULDER IS CONSTRUCTED WITHIN 24" IN FRONT OF THE POST, CONSTRUCT VEGETATION CONTROL TO THE EDGE OF PAVED SHOULDER.
4. FEATHER EDGE OF ASPHALT COMPOSITE TRANSITION UP POSTS AND BACK OF CURBS AND DIKES. TRANSITION LINE SHALL FORM A REASONABLY STRAIGHT LINE, HORIZONTALLY FROM POST TO POST OR ALONG TOP EDGE OF CURB OR DIKE.
5. EXISTING UTILITY FACILITIES ARE NOT SHOWN ON THE PLANS.

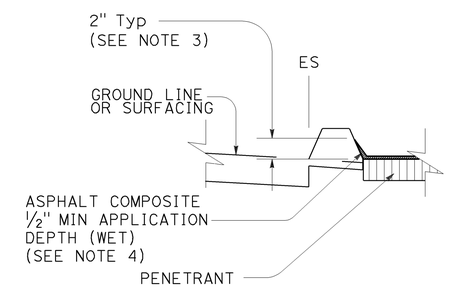

VEGETATION CONTROL AT DIKE

(SEE NOTE 2)

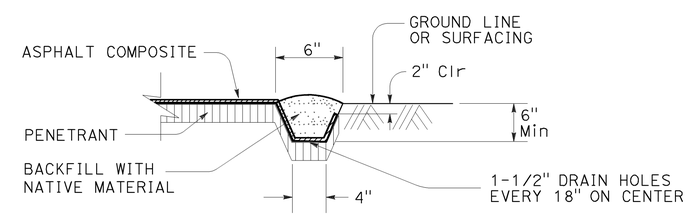

KEY EDGE

METAL BEAM GUARD RAILING
VEGETATION CONTROL (ASPHALT COMPOSITE)
STANDARD RAILING SECTION

CONSTRUCTION DETAILS

NO SCALE

C-8

STATE OF CALIFORNIA - DEPARTMENT OF TRANSPORTATION
Caltrans LANDSCAPE ARCHITECTURE

SENIOR LANDSCAPE ARCHITECT: BRAD COLE
CALCULATED-DESIGNED BY: GLORIA RAMIREZ
CHECKED BY: KEVIN GALLO
REVISED BY
DATE REVISED

LAST REVISION 06-21-12
DATE PLOTTED => 05-OCT-2012
TIME PLOTTED => 12:44

Dist	COUNTY	ROUTE	POST MILES TOTAL PROJECT	SHEET No.	TOTAL SHEETS
06	Fre	168	T25.5/R32.9	12	48

Gloria Ramirez
LICENSED LANDSCAPE ARCHITECT

6-25-12
PLANS APPROVAL DATE

LICENSED LANDSCAPE ARCHITECT
GLORIA RAMIREZ No. 5069
Gloria Ramirez
Signature
04/30/14
Renewal Date
06/21/12
Date
STATE OF CALIFORNIA

THE STATE OF CALIFORNIA OR ITS OFFICERS OR AGENTS SHALL NOT BE RESPONSIBLE FOR THE ACCURACY OR COMPLETENESS OF SCANNED COPIES OF THIS PLAN SHEET.

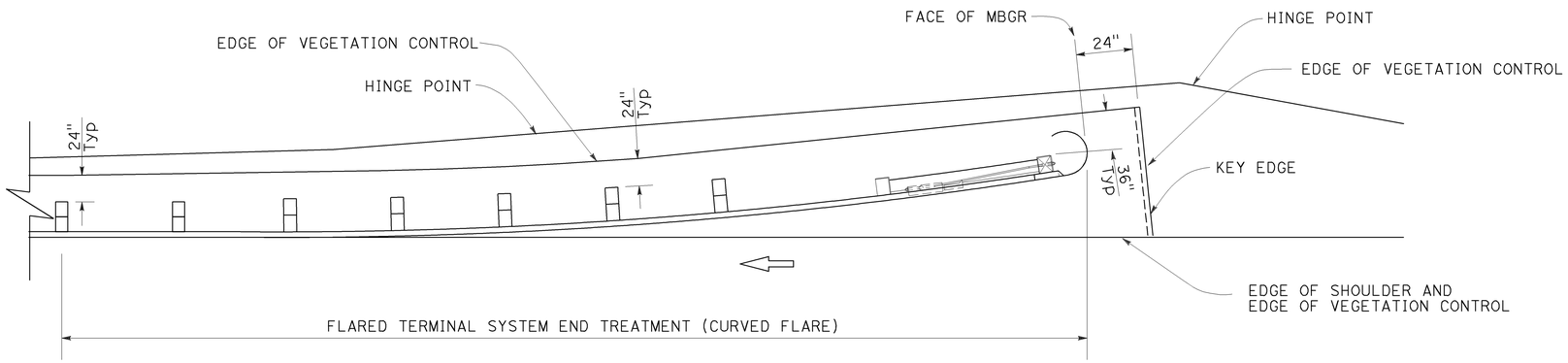

PLAN

NOTES: (THIS SHEET)

1. SEE SHEET C-8 FOR ADDITIONAL VEGETATION CONTROL DETAILS AND NOTES.
2. EXISTING UTILITY FACILITIES ARE NOT SHOWN ON THE PLANS.

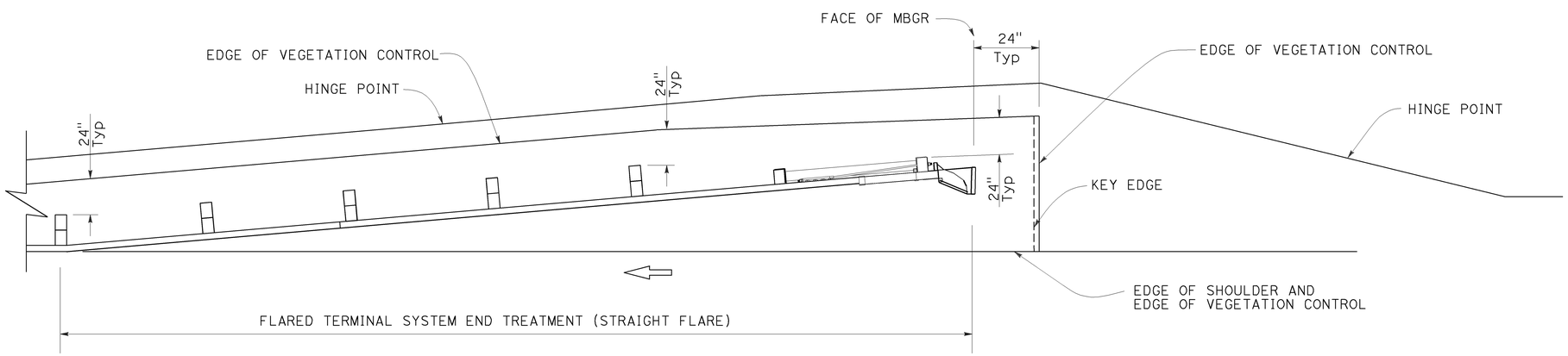

PLAN

METAL BEAM GUARD RAILING
VEGETATION CONTROL (ASPHALT COMPOSITE)
FOR TERMINAL SYSTEM END TREATMENTS

CONSTRUCTION DETAILS

NO SCALE

C-9

REVISED BY | DATE REVISED
GLORIA RAMIREZ | KEVIN GALLO
CALCULATED-DESIGNED BY | CHECKED BY
SENIOR LANDSCAPE ARCHITECT | BRAD COLE
STATE OF CALIFORNIA - DEPARTMENT OF TRANSPORTATION
Caltrans® LANDSCAPE ARCHITECTURE

LAST REVISION 06-21-12
DATE PLOTTED => 05-OCT-2012
TIME PLOTTED => 12:44

Dist	COUNTY	ROUTE	POST MILES TOTAL PROJECT	SHEET No.	TOTAL SHEETS
06	Fre	168	T25.5/R32.9	13	48

Gloria Ramirez
LICENSED LANDSCAPE ARCHITECT

6-25-12
PLANS APPROVAL DATE

LICENSED LANDSCAPE ARCHITECT
GLORIA RAMIREZ No. 5069
Gloria Ramirez
Signature
04/30/14
Renewal Date
06/21/12
Date
STATE OF CALIFORNIA

THE STATE OF CALIFORNIA OR ITS OFFICERS OR AGENTS SHALL NOT BE RESPONSIBLE FOR THE ACCURACY OR COMPLETENESS OF SCANNED COPIES OF THIS PLAN SHEET.

NOTES: (THIS SHEET)

1. SEE SHEET C-8 FOR ADDITIONAL VEGETATION CONTROL DETAILS AND NOTES.
2. EXISTING UTILITY FACILITIES ARE NOT SHOWN ON THE PLANS.

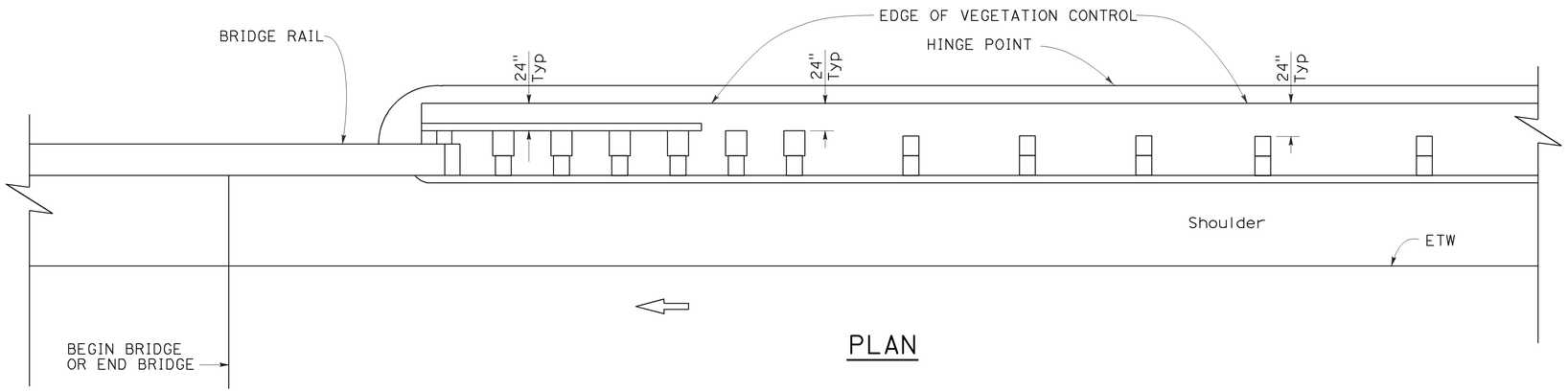

PLAN

METAL BEAM GUARD RAILING
VEGETATION CONTROL (ASPHALT COMPOSITE)
AT STRUCTURE APPROACH AND DEPARTURE

CONSTRUCTION DETAILS

NO SCALE

C-10

STATE OF CALIFORNIA - DEPARTMENT OF TRANSPORTATION
Caltrans® LANDSCAPE ARCHITECTURE

SENIOR LANDSCAPE ARCHITECT: BRAD COLE
CALCULATED-DESIGNED BY: GLORIA RAMIREZ
CHECKED BY: KEVIN GALLO
REVISED BY
DATE REVISED

LAST REVISION DATE PLOTTED => 05-OCT-2012
06-21-12 TIME PLOTTED => 12:44

Dist	COUNTY	ROUTE	POST MILES TOTAL PROJECT	SHEET No.	TOTAL SHEETS
06	Fre	168	T25.5/R32.9	14	48

REGISTERED CIVIL ENGINEER 06-12-12 DATE

6-25-12
PLANS APPROVAL DATE

REGISTERED PROFESSIONAL ENGINEER MICHAEL W. DENNISON No. 68346 Exp. 9/30/13 CIVIL STATE OF CALIFORNIA

THE STATE OF CALIFORNIA OR ITS OFFICERS OR AGENTS SHALL NOT BE RESPONSIBLE FOR THE ACCURACY OR COMPLETENESS OF SCANNED COPIES OF THIS PLAN SHEET.

HMA OVERSIDE DRAIN, FLUME, AND PIPE DOWNDRAINS

	POSTMILE	REMOVE AC OVERSIDE DRAIN	HMA OVERSIDE DRAIN * HMA (TYPE A)	HMA OVERSIDE DRAIN PLACE HMA (MISC) AREA	REMOVE ENTRANCE TAPER (N)	REMOVE FLUME DOWNDRIAN (N)	REMOVE TAPERED INLET (N)	REMOVE PIPE DOWNDRAIN (N)	10" TAPERED INLET	10" FLUME DOWNDRAIN	12" ENTRANCE TAPER	12" CSP DOWNDRAIN	ANCHOR ASSEMBLY
		EA	TON	SQYD	EA	LF	EA	LF	EA	LF	EA	LF	EA
EASTBOUND	T25.60	1	0.15	0.92									
	R26.25	1	0.08	0.46									
	R26.28		0.08	0.46									
	T26.61					6	1		1	10			2
	T27.31	1	0.08	0.46									
	T27.75					20	1		1	20			3
	T27.81					6	1		1	10			2
	T27.88	1	0.08	0.46									
	T27.92	1	0.08	0.46									
	T28.11					6	1		1	10			2
	T28.15					6	1		1	10			2
	T28.50	1	0.08	0.46									
	R28.53	1	0.08	0.46									
	R28.57				1			20			1	20	3
	R28.62				1		1	20			1	20	3
	R28.65				1		1	20			1	20	3
	R28.85	1	0.08	0.46									
	R28.98	1	0.08	0.46									
	R28.92	1	0.08	0.46									
	T29.10	1	0.08	0.46									
	R29.64				1			20			1	20	3
	R29.75	1	0.08	0.46									
	R29.77				1			20			1	20	3
	R29.85	1	0.08	0.46									
	R30.05	1	0.08	0.46									
	T31.21	1	0.15	0.92									
	T31.31	1	0.08	0.46									
	SUB TOTAL 1	16	1.50	8.8					5	60	5	100	26

(N) NOT A SEPARATE PAY ITEM, FOR INFORMATION ONLY.
* QUANTITIES INCLUDED IN ROADWAY'S QUANTITIES SUMMARY TABLE ON SHEET Q-5.

HMA OVERSIDE DRAIN, FLUME, AND PIPE DOWNDRAINS

	POSTMILE	REMOVE AC OVERSIDE DRAIN	HMA OVERSIDE DRAIN * HMA (TYPE A)	HMA OVERSIDE DRAIN PLACE HMA (MISC) AREA	REMOVE ENTRANCE TAPER (N)	REMOVE FLUME DOWNDRIAN (N)	REMOVE TAPERED INLET (N)	REMOVE PIPE DOWNDRAIN (N)	10" TAPERED INLET	10" FLUME DOWNDRAIN	12" ENTRANCE TAPER	12" CSP DOWNDRAIN	ANCHOR ASSEMBLY
		EA	TON	SQYD	EA	LF	EA	LF	EA	LF	EA	LF	EA
WESTBOUND	T25.67		0.08	0.46									
	T25.68					5	1		1	5			1
	R26.03	1	0.08	0.46									
	R26.07	1	0.08	0.46									
	R26.10	1	0.08	0.46									
	R26.16	1	0.08	0.46									
	T27.75					10	1		1	10			2
	T27.80	1	0.08	0.46									
	T27.88	1	0.08	0.46									
	R28.62	1	0.15	0.92									
	R28.89	1	0.08	0.46									
	R28.94	1	0.08	0.46									
	T29.29	1	0.08	0.46									
	T29.49	1	0.15	0.92									
	T29.62	1	0.31	1.84									
	R29.67	1	0.15	0.92									
	R29.70	1	0.15	0.92									
	R29.80	1	0.23	1.38									
	R29.85	1	0.31	1.84									
	T30.27					20	1		1	20			3
	T31.41	1	0.15	0.92									
	SUB TOTAL 1	16	1.50	8.8					5	60	5	100	26
	SUB TOTAL 2	17	2.40	14.3					3	35			6
	TOTAL	33	3.9	23.1					8	95	5	100	32

DRAINAGE QUANTITIES
DQ-1

STATE OF CALIFORNIA - DEPARTMENT OF TRANSPORTATION
Caltrans DESIGN

FUNCTIONAL SUPERVISOR: ABDUL BAKER
CALCULATED-DESIGNED BY: MARCO NABAVI
CHECKED BY: MICHAEL DENNISON
REVISED BY
DATE REVISED

LAST REVISION 06-21-12
DATE PLOTTED => 05-OCT-2012
TIME PLOTTED => 12:44

Dist	COUNTY	ROUTE	POST MILES TOTAL PROJECT	SHEET No.	TOTAL SHEETS
06	Fre	168	T25.5/R32.9	15	48

REGISTERED CIVIL ENGINEER 05-11-12 DATE

6-25-12
PLANS APPROVAL DATE

REGISTERED PROFESSIONAL ENGINEER
ANDREY CHEVYCHALOV
No. 68378
Exp. 9-30-13
CIVIL
STATE OF CALIFORNIA

THE STATE OF CALIFORNIA OR ITS OFFICERS OR AGENTS SHALL NOT BE RESPONSIBLE FOR THE ACCURACY OR COMPLETENESS OF SCANNED COPIES OF THIS PLAN SHEET.

STATIONARY MOUNTED CONSTRUCTION AREA SIGNS

SIGN No.	SIGN CODE	PANEL SIZE	SIGN MESSAGE	No. OF POSTS	POST SIZE	No. OF SIGNS
A	W20-1	48" x 48"	ROAD WORK AHEAD	1	6" x 6"	2
B	G20-2	36" x 18"	END ROAD WORK	1	4" x 4"	4
C	W20-1	36" x 36"	ROAD WORK AHEAD	1	4" x 6"	19

NOTES: (THIS SHEET)

1. ALL TEMPORARY WARNING SIGNS SHALL HAVE BLACK LEGEND ON FLUORESCENT ORANGE BACKGROUND.
2. EXACT SIGN LOCATIONS TO BE DETERMINED BY THE ENGINEER.
3. EXISTING UTILITIES ARE NOT SHOWN ON THE PLANS.

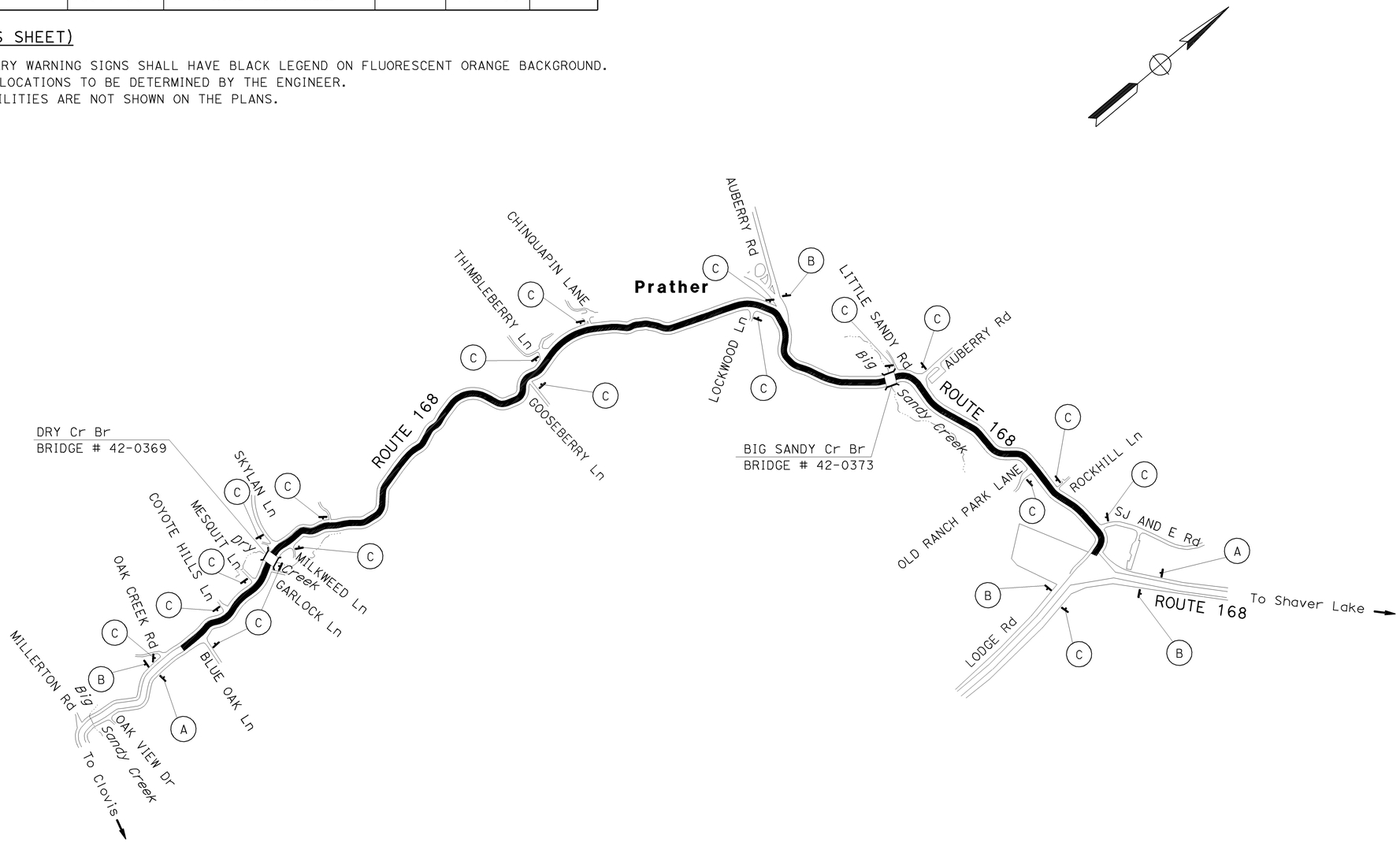

APPROVED FOR CONSTRUCTION AREA SIGN WORK ONLY

CONSTRUCTION AREA SIGNS

NO SCALE **CS-1**

STATE OF CALIFORNIA - DEPARTMENT OF TRANSPORTATION
Caltrans® TRAFFIC DESIGN

FUNCTIONAL SUPERVISOR: MOHAMMED QATAMI
CALCULATED-DESIGNED BY: ALICIA RODRIGUEZ
CHECKED BY: ANDREY CHEVYCHALOV
REVISED BY / DATE REVISED

LAST REVISION 05-11-12 | DATE PLOTTED => 05-OCT-2012 | TIME PLOTTED => 12:44

Dist	COUNTY	ROUTE	POST MILES TOTAL PROJECT	SHEET No.	TOTAL SHEETS
06	Fre	168	T25.5/R32.9	16	48

REGISTERED CIVIL ENGINEER 06-24-12 DATE

6-25-12
PLANS APPROVAL DATE

REGISTERED PROFESSIONAL ENGINEER ANDREY CHEVYCHALOV No. 68378 Exp. 9-30-13 CIVIL STATE OF CALIFORNIA

THE STATE OF CALIFORNIA OR ITS OFFICERS OR AGENTS SHALL NOT BE RESPONSIBLE FOR THE ACCURACY OR COMPLETENESS OF SCANNED COPIES OF THIS PLAN SHEET.

LEGEND:

- XX TRAFFIC STRIPE DETAIL No.
- LIMITS OF DESIGNATED TRAFFIC STRIPING DETAIL
- PAVEMENT MARKING TYPE III ARROW
- PAVEMENT MARKING TYPE VI ARROW
- S "STOP" PAVEMENT MARKING
- HF DELINEATOR (TYPE F)
- HE DELINEATOR (TYPE E)

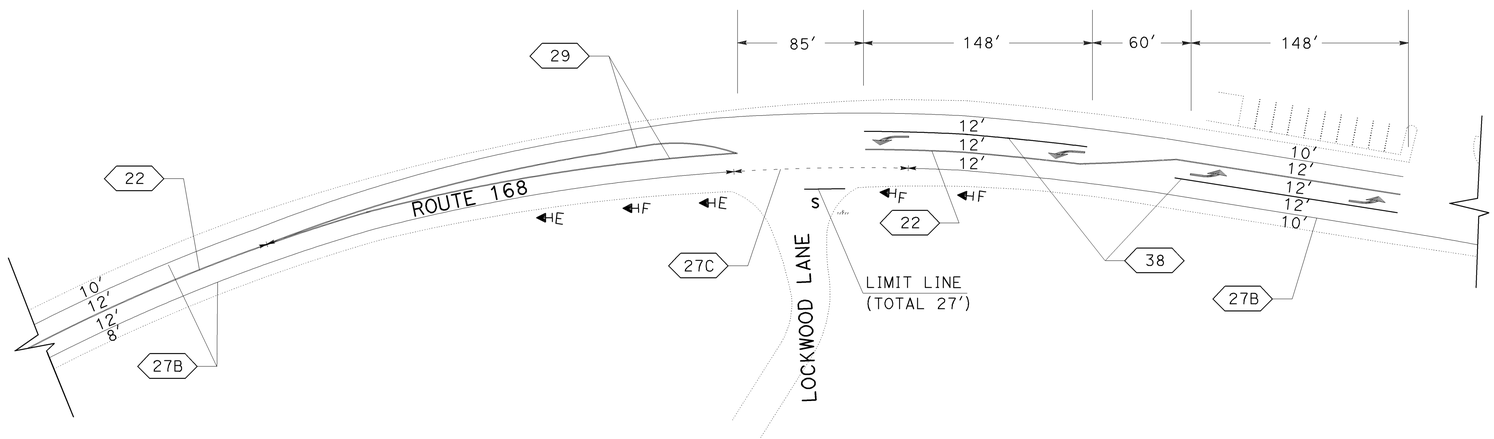

PM R30.060

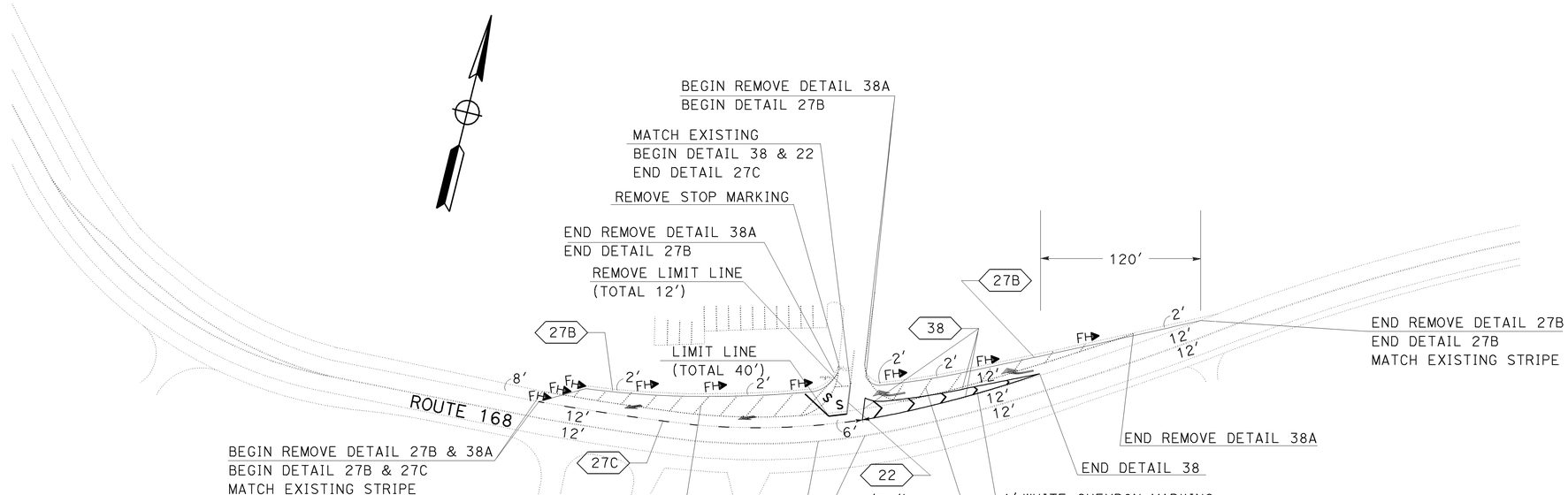

PM T30.510

NOTE: (THIS SHEET)

1. EXISTING UTILITY FACILITIES ARE NOT SHOWN ON THE PLANS.

APPROVED FOR PAVEMENT DELINEATION WORK ONLY

PAVEMENT DELINEATION DETAILS

SCALE: 1"=50′

PDD-1

STATE OF CALIFORNIA - DEPARTMENT OF TRANSPORTATION
Caltrans®
TRAFFIC DESIGN

FUNCTIONAL SUPERVISOR: MOHAMMED QATAMI
CALCULATED-DESIGNED BY: ALICIA RODRIGUEZ
CHECKED BY: ANDREY CHEVYCHALOV
REVISED BY / DATE REVISED

LAST REVISION 06-24-12 | DATE PLOTTED => 05-OCT-2012 | TIME PLOTTED => 12:44

Dist	COUNTY	ROUTE	POST MILES TOTAL PROJECT	SHEET No.	TOTAL SHEETS
06	Fre	168	T25.5/R32.9	17	48

REGISTERED CIVIL ENGINEER 06-24-12 DATE

6-25-12
PLANS APPROVAL DATE

REGISTERED PROFESSIONAL ENGINEER ANDREY CHEVYCHALOV No. 68378 Exp. 9-30-13 CIVIL STATE OF CALIFORNIA

THE STATE OF CALIFORNIA OR ITS OFFICERS OR AGENTS SHALL NOT BE RESPONSIBLE FOR THE ACCURACY OR COMPLETENESS OF SCANNED COPIES OF THIS PLAN SHEET.

PAVEMENT DELINEATION QUANTITIES

PM LOCATION FROM	PM LOCATION TO		INSTALL/REMOVE	DETAIL No.	PAVEMENT MARKERS (RETROREFLECTIVE) TYPE D YELLOW (TWO-WAY)	PAVEMENT MARKERS (RETROREFLECTIVE) TYPE H YELLOW (ONE-WAY)	PAVEMENT MARKERS (RETROREFLECTIVE) TYPE G CLEAR (ONE-WAY)	THERMOPLASTIC TRAFFIC STRIPE 4" SOLID	THERMOPLASTIC TRAFFIC STRIPE 8" SOLID	THERMOPLASTIC TRAFFIC STRIPE 4" BROKEN 12'-3'	THERMOPLASTIC TRAFFIC STRIPE 4" BROKEN 36'-12'	REMOVE THERMOPLASTIC STRIPE YELLOW/WHITE	REMOVE PAVEMENT MARKER (N)	THERMOPLASTIC PAVEMENT MARKING DESCRIPTION	THERMOPLASTIC PAVEMENT MARKING SQFT	REMOVE THERMOPLASTIC PAVEMENT MARKING SQFT
					EA	EA	EA	LF	LF	LF	LF		EA			
T25.645		BLUE OAK Ln												1 - STOP	22	
T25.500	R28.849	ROUTE 168	I	27B				17,683								
T25.500	T25.650	ROUTE 168	I	22	68			1,584					68			
T25.500	T25.600	ROUTE 168	I	27B				528								
T25.600	T25.68	ROUTE 168	I	27C						423						
T25.680	T28.350	ROUTE 168	I	27B				14,098								
T25.660	T28.358	ROUTE 168	I	22	1190			28,491					1190			
T28.373	R28.620	ROUTE 168	I	22	112			2,608					112			
T28.350	T28.383	ROUTE 168	I	27C						175				2 - STOP	44	
T28.383	T28.410	ROUTE 168	I	27B				158						LIMIT LINE (33')	33	
T28.420	T28.450	ROUTE 168	I/R	38A					158			316				
T28.470	R28.610	ROUTE 168	I	27B				739								
R28.565		THIMBLEBERRY Ln												LIMIT LINE (15')	15	
R28.610	R28.650	ROUTE 168	I	27C						211						
R28.650	R28.660	ROUTE 168	I	27B				53								
R28.640	R28.845	ROUTE 168	I	22	92			2,260					92			
R28.680	R28.740	ROUTE 168	I/R	38A					317			634				
R28.760	T29.690	ROUTE 168	I	27B				4,910								
R28.849	R28.870	ROUTE 168	I	27C						111				LIMIT LINE (27')	27	
R28.870	T30.200	ROUTE 168	I	27B				7,022								
R28.870	T29.600	ROUTE 168	I	22	324			7,709					324			
T29.600	R29.820	ROUTE 168	I	6	25						1162		25			
R29.700	R29.750	ROUTE 168	I/R	38A					264			528				
R29.770	R30.000	ROUTE 168	I	27B				1,214								
R29.740		OLD HIGHWAY												LIMIT LINE (15')	15	
R29.820	R29.930	ROUTE 168	I	19	16	25		581			581		41			
R29.930	R30.052	ROUTE 168	I	22	56			1,288					56	LIMIT LINE (27')	27	
R30.000	R30.020	ROUTE 168	I	27C						106				1 - STOP	22	
R30.068	R30.096	ROUTE 168	I/R	38			7		148			296	7			
R30.068	T30.135	ROUTE 168	I	22	32			708					32	6 - TYPE III ARROWS	252	
R30.020	T30.200	ROUTE 168	I	27B				950								
R30.108	T30.135	ROUTE 168	I/R	38			7		143			286	7			
T30.475	T30.570	ROUTE 168	R	27B								475				
T30.475	T30.518	ROUTE 168	R	38A								454		2 - TYPE VI ARROWS	84	
T30.475	T30.518	ROUTE 168	I	27B				227						2 - STOP	44	
T30.475	T30.518	ROUTE 168	I	27C						227				LIMIT LINE (40')	40	
T30.518	T30.546	ROUTE 168	I	38			7		148				7	CHEVRON (56')	56	
T30.518	T30.546	ROUTE 168	I	38			7		148				7			
		ROUTE 168	I	38					17							
		CHURCH Dwy	I	22	6			63					6			
T30.522	T30.559	ROUTE 168	R	38A								391				
T30.522	T30.570	ROUTE 168	I	27B				253						1 - STOP		22
T30.510		ROUTE 168	R	38A								270		LIMIT LINE (12')		12
T30.510		ROUTE 168	R	22								70	4			
T32.610		PRATHER POND Rd												LIMIT LINE (15')	15	
SUBTOTAL					1921	25	28	93,127	1343	1253	1743	3720			696	34
TOTAL					1974			93,127	1343	1253	1743	3720			696	34

(N) NOT A SEPARATE PAY ITEM, FOR INFORMATION ONLY

PAVEMENT DELINEATION QUANTITIES
PDQ-1

STATE OF CALIFORNIA - DEPARTMENT OF TRANSPORTATION
Caltrans TRAFFIC DESIGN

FUNCTIONAL SUPERVISOR: MOHAMMED QATAMI
CALCULATED-DESIGNED BY: ALICIA RODRIGUEZ
CHECKED BY: ANDREY CHEVYCHALOV
REVISED BY / DATE REVISED

LAST REVISION DATE PLOTTED => 05-OCT-2012
06-24-12 TIME PLOTTED => 12:44

Dist	COUNTY	ROUTE	POST MILES TOTAL PROJECT	SHEET No.	TOTAL SHEETS
06	Fre	168	T25.5/R32.9	18	48

REGISTERED CIVIL ENGINEER 06-24-12 DATE

6-25-12
PLANS APPROVAL DATE

REGISTERED PROFESSIONAL ENGINEER
ANDREY CHEVYCHALOV
No. 68378
Exp. 9-30-13
CIVIL
STATE OF CALIFORNIA

THE STATE OF CALIFORNIA OR ITS OFFICERS OR AGENTS SHALL NOT BE RESPONSIBLE FOR THE ACCURACY OR COMPLETENESS OF SCANNED COPIES OF THIS PLAN SHEET.

ROADSIDE SIGN QUANTITIES

SIGN LOCATION	SIGN CODE	SIGN MESSAGE	POST SIZE	PANEL SIZE	SINGLE FACED	BACKGROUND		LEGEND		GRAFFITI FLOW	FURNISH SINGLE SHEET ALUMINUM SIGN (0.063" - UNFRAMED)	ROADSIDE SIGN - ONE POST	RESET ROADSIDE SIGN
						SHEETING COLOR	RETROREFLECTIVITY ASTM TYPE	SHEETING COLOR	RETROREFLECTIVITY ASTM TYPE	PREMIUM			
			INCH x INCH	INCH x INCH							SQFT	EA	EA
SKYLAN LANE (Lt)	R1-1	STOP											1
GOOSEBERRY LANE (Rt)	R1-1	STOP	4 x 6	30 x 30	X	RED	VII	WHITE	VII	X	6.25	1	
THIMBLEBERRY LANE (Lt)	R1-1	STOP	4 x 6	30 x 30	X	RED	VII	WHITE	VII	X	6.25	1	
CHINQUAPIN LANE (Lt)	R1-1	STOP	4 x 6	30 x 30	X	RED	VII	WHITE	VII	X	6.25	1	
OLD HIGHWAY (Rt)	R1-1	STOP	4 x 6	30 x 30	X	RED	VII	WHITE	VII	X	6.25	1	
PRATHER POND ROAD (Lt)	R1-1	STOP	4 x 6	30 x 30	X	RED	VII	WHITE	VII	X	6.25	1	
HIGHWAY TURNS TO NEW ROUTE (PM T32.87/L27.368)	R1-1	STOP											1
										TOTAL	31.25	5	2

OBJECT MARKER

PM LOCATION		DIRECTION	OBJECT MARKER	
			(TYPE P)	(TYPE L)
FROM	TO		EA	EA
R26.28	R26.29	EB	1	
R26.29	R26.30	EB		1
R28.55	R28.66			1
R28.62	R28.71	EB		1
R31.10	R31.11	EB	1	
R26.33	R26.34	WB	1	
R28.57	R28.63	WB		1
R29.78	R29.80	WB		1
TOTAL			3	5

DELINEATOR

PM	LOCATION	DIRECTION	DELINEATOR (CLASS 1)	
			(TYPE F)	(TYPE E)
			EA	EA
T25.645	BLUE OAK LANE		3	2
R26.100	SKYLAN LANE		3	2
T28.363	GOOSEBERRY LANE	EB	3	2
R28.565	THIMBLEBERRY LANE		3	2
R28.620	OLD ROUTE 168		3	2
R28.860	CHINQUAPIN LANE	WB	3	2
R29.740	OLD HIGHWAY		3	2
R30.060	LOCKWOOD LANE	EB	3	2
T30.201	AUBERRY/MORGAN CANYON		3	2
T31.238	LODGE/AUBERRY ROADS		3	2
T32.610	PRATHER POND ROAD		3	2
T30.510	CHURCH DRIVEWAY	NB	9	
SUBTOTAL			42	22
TOTAL			64	

SIGN QUANTITIES

SDQ-1

REVISED BY | DATE REVISED
ALICIA RODRIGUEZ | ANDREY CHEVYCHALOV
CALCULATED-DESIGNED BY | CHECKED BY
FUNCTIONAL SUPERVISOR: MOHAMMED QATAMI

STATE OF CALIFORNIA - DEPARTMENT OF TRANSPORTATION
Caltrans
TRAFFIC DESIGN

LAST REVISION 06-24-12 | DATE PLOTTED => 05-OCT-2012 | TIME PLOTTED => 12:44

Dist	COUNTY	ROUTE	POST MILES TOTAL PROJECT	SHEET No.	TOTAL SHEETS
06	Fre	168	T25.5/R32.9	19	48

REGISTERED CIVIL ENGINEER 06-12-12 DATE

6-25-12
PLANS APPROVAL DATE

REGISTERED PROFESSIONAL ENGINEER MICHAEL W. DENNISON No. 68346 Exp. 9/30/13 CIVIL STATE OF CALIFORNIA

THE STATE OF CALIFORNIA OR ITS OFFICERS OR AGENTS SHALL NOT BE RESPONSIBLE FOR THE ACCURACY OR COMPLETENESS OF SCANNED COPIES OF THIS PLAN SHEET.

NOTE: (THIS SHEET)

FOR LANE PORTION DEFINITION SEE LANE DESCRIPTION CHART.

COLD PLANE AC PAVEMENT AND HMA QUANTITIES

WESTBOUND					COLD PLANE AC Pvmt	HOT MIX ASPHALT (TYPE A)	TACK COAT
POST MILE		LENGTH	WIDTH	LANE-1			
FROM	TO	FT	FT	PORTION	*SQYD	*TON	*TON
T25.701	T25.740	205.92	12	FULL	275	46.3	0.28
T25.862	T25.892	158.40	6	INSIDE	106	17.8	0.11
T25.892	T25.906	73.92	12	FULL	99	16.6	0.10
T25.906	T25.913	36.96	6	INSIDE	25	4.2	0.03
R26.242	R26.244	10.56	6	INSIDE	7	1.2	0.01
R26.252	R26.258	31.68	6	INSIDE	21	3.6	0.02
T26.308	T26.322	73.92	6	INSIDE	49	8.3	0.05
T26.349	T26.353	21.12	6	OUTSIDE	14	2.4	0.01
T26.397	T26.449	274.56	6	INSIDE	183	30.9	0.19
T26.456	T26.474	95.04	6	INSIDE	63	10.7	0.06
T26.481	T26.486	26.40	6	OUTSIDE	18	3.0	0.02
T26.661	T26.675	73.92	6	INSIDE	49	8.3	0.05
T26.900	T26.916	84.48	6	INSIDE	56	9.5	0.06
T27.155	T27.168	68.64	6	INSIDE	46	7.7	0.05
T27.313	T27.323	52.80	6	INSIDE	35	5.9	0.04
T27.344	T27.356	63.36	6	INSIDE	42	7.1	0.04
T28.409	T28.426	89.76	6	INSIDE	60	10.1	0.06
T28.473	T28.482	47.52	6	INSIDE	32	5.4	0.03
T28.482	T28.492	52.80	12	FULL	70	11.9	0.07
R28.645	R28.649	21.12	6	OUTSIDE	14	2.4	0.01
R28.813	R28.816	15.84	6	OUTSIDE	11	1.8	0.01
R28.863	R28.866	15.84	6	OUTSIDE	11	1.8	0.01
T29.087	T29.096	47.52	6	INSIDE	32	5.4	0.03
T29.110	T29.118	42.24	6	INSIDE	28	4.8	0.03
T29.149	T29.157	42.24	6	OUTSIDE	28	4.8	0.03
T29.267	T29.278	58.08	12	FULL	77	13.1	0.08
T29.607	T29.620	68.64	12	FULL	92	15.4	0.09
R29.827	R29.839	63.36	6	INSIDE	42	7.1	0.04
R29.858	R29.877	100.32	12	FULL	134	22.6	0.14
R30.099	T30.168	364.32	12	FULL	486	82.0	0.49
SUBTOTAL 1					2205	372.1	2.24

* QUANTITIES ARE INCLUDED IN THE ROADWAY QUANTITIES SUMMARY TABLE ON SHEET Q-5

COLD PLANE AC PAVEMENT AND HMA QUANTITIES

EASTBOUND					COLD PLANE AC Pvmt	HOT MIX ASPHALT (TYPE A)	TACK COAT
POST MILE		LENGTH	WIDTH	LANE-1			
FROM	TO	FT	FT	PORTION	*SQYD	*TON	*TON
T25.631	T25.654	121.44	12	FULL	162	27.3	0.16
T25.703	T25.733	158.40	12	FULL	211	35.6	0.21
T25.915	T25.963	253.44	6	INSIDE	169	28.5	0.17
R26.139	R26.151	63.36	6	INSIDE	42	7.1	0.04
R26.259	R26.289	158.40	6	INSIDE	106	17.8	0.11
R26.294	R26.301	36.96	6	OUTSIDE	25	4.2	0.03
T26.349	T26.377	147.84	6	OUTSIDE	99	16.6	0.10
T26.391	T26.409	95.04	6	OUTSIDE	127	21.4	0.13
T26.418	T26.437	100.32	6	OUTSIDE	67	11.3	0.07
T26.589	T26.612	121.44	6	OUTSIDE	81	13.7	0.08
T26.633	T26.639	31.68	6	INSIDE	21	3.6	0.02
T26.675	T26.689	73.92	6	INSIDE	49	8.3	0.05
T26.889	T26.916	142.56	12	FULL	190	32.1	0.19
T26.932	T26.939	36.96	6	OUTSIDE	25	4.2	0.03
T27.032	T27.040	42.24	12	FULL	56	9.5	0.06
T27.049	T27.055	31.68	12	FULL	42	7.1	0.04
T27.218	T27.232	73.92	6	OUTSIDE	49	8.3	0.05
T27.503	T27.525	116.16	12	FULL	155	26.1	0.16
T28.392	T28.401	47.52	6	OUTSIDE	32	5.4	0.03
T28.359	T28.376	89.76	6	OUTSIDE	60	10.1	0.06
T28.420	R28.509	469.92	12	FULL	627	105.7	0.63
T28.419	T28.507	464.64	12	FULL	620	104.5	0.63
R28.521	R28.543	116.16	6	INSIDE	77	13.1	0.08
R28.543	R28.549	31.68	6	OUTSIDE	21	3.6	0.02
R28.566	R28.572	31.68	6	OUTSIDE	21	3.6	0.02
R28.608	R28.633	132.00	6	OUTSIDE	88	14.9	0.09
R28.654	R28.633	84.48	6	OUTSIDE	56	9.5	0.06
R28.743	R28.746	15.84	12	FULL	21	3.6	0.02
R28.751	R28.780	153.12	6	OUTSIDE	102	17.2	0.10
R28.789	R28.796	36.96	6	OUTSIDE	25	4.2	0.03
R28.867	R28.872	26.40	12	FULL	35	5.9	0.04
R28.892	R28.897	26.40	12	FULL	35	5.9	0.04
T29.090	T29.104	73.92	6	INSIDE	49	8.3	0.05
T29.111	T29.116	26.40	6	INSIDE	18	3.0	0.02
T29.375	T29.430	290.40	12	FULL	387	65.3	0.39
T29.533	T29.541	42.24	12	FULL	56	9.5	0.06
T29.559	T29.604	237.60	12	FULL	317	53.5	0.32
T29.619	T29.629	52.80	6	OUTSIDE	35	6.0	0.04
R29.832	R29.870	200.64	6	INSIDE	134	22.6	0.14
R29.882	R29.903	110.88	12	FULL	148	25.0	0.15
R29.919	R29.948	153.12	6	INSIDE	102	17.2	0.10
R29.948	R29.963	79.20	6	INSIDE	53	8.9	0.05
R29.973	R29.979	31.68	6	INSIDE	21	3.6	0.02
R30.004	R30.019	79.20	6	INSIDE	53	8.9	0.05
R30.037	R30.049	63.36	6	INSIDE	42	7.1	0.04
R30.066	R30.074	42.24	6	INSIDE	28	4.8	0.03
R30.087	R30.105	95.04	6	INSIDE	63	10.7	0.06
T30.177	T30.185	42.24	12	FULL	56	9.5	0.06
SUBTOTAL 2					5058	853.8	5.13
SUBTOTAL 1					2205	372.1	2.24
TOTAL					7263	1225.9	7.37

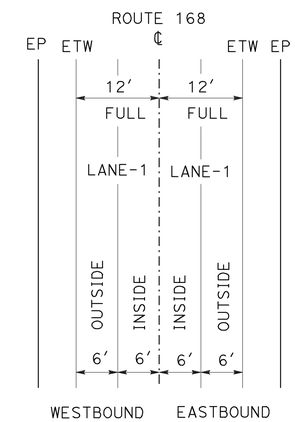

LANE DESCRIPTION CHART

SUMMARY OF QUANTITIES
Q-1

STATE OF CALIFORNIA - DEPARTMENT OF TRANSPORTATION
Caltrans
DESIGN

FUNCTIONAL SUPERVISOR: ABDUL BAKER
CALCULATED-DESIGNED BY: MARCO NABAVI
CHECKED BY: MICHAEL DENNISON
REVISED BY
DATE REVISED

LAST REVISION 06-21-12
DATE PLOTTED => 05-OCT-2012
TIME PLOTTED => 12:44

Dist	COUNTY	ROUTE	POST MILES TOTAL PROJECT	SHEET No.	TOTAL SHEETS
06	Fre	168	T25.5/R32.9	20	48

REGISTERED CIVIL ENGINEER 06-12-12 DATE

6-25-12
PLANS APPROVAL DATE

REGISTERED PROFESSIONAL ENGINEER MICHAEL W. DENNISON No. 68346 Exp. 9/30/13 CIVIL STATE OF CALIFORNIA

THE STATE OF CALIFORNIA OR ITS OFFICERS OR AGENTS SHALL NOT BE RESPONSIBLE FOR THE ACCURACY OR COMPLETENESS OF SCANNED COPIES OF THIS PLAN SHEET.

METAL BEAM GUARD RAILING

	LOCATION FROM	LOCATION TO	LAYOUT TYPE	REMOVE MBGR	RECONSTRUCT MBGR	MBGR (STEEL POST)	(N) BURIED POST END ANCHOR	TRANSITION RAILING (TYPE WB)	END ANCHOR ASSEMBLY (TYPE SFT)	ALTERNATIVE FLARED TERMINAL SYSTEM	ALTERNATIVE CRASH CUSHION SYSTEM	VEGETATION CONTROL (ASPHALT COMPOSITE)	REMOVE Conc	MINOR Conc (MINOR STRUCTURE)	TREATED WOOD WASTE	REMARKS
	FROM	TO		LF	LF	LF	EA	EA	EA	EA	EA	SQFT	CY	CY	LB	
EASTBOUND	PM R26.28	PM R26.29	12B	67				1		1		129		0.6	705	EASTBOUND APPROACH, DRY CREEK BRIDGE SEE SHEET C-3.
EASTBOUND	PM R26.29	PM T26.30	12BB	67				1		1		179	0.5	1.1	762	EASTBOUND DEPARTURE, DRY CREEK BRIDGE SEE SHEET C-4.
EASTBOUND	PM R28.53	PM R28.60	11E	75	495					2		1148			5,066	
EASTBOUND	PM R28.61	PM R28.70	11E		433					2		1099			3,866	
EASTBOUND	PM R28.86	PM R28.89	11E	75	105					2		418			1,581	
EASTBOUND	PM R29.62	PM R29.69	11L	85	258		1			1		795			3,162	
EASTBOUND	PM R29.74	PM R29.78	11F		215		2					680			1,771	
EASTBOUND	PM T31.10	PM T31.11	12BB	66				1		1		179		0.6	819	EASTBOUND APPROACH, BIG SANDY CREEK BRIDGE SEE SHEET C-3.
EASTBOUND	PM T31.11	PM T31.12	12B	66				1		1		129	0.5	1.1	705	EASTBOUND DEPARTURE, BIG SANDY CREEK BRIDGE SEE SHEET C-4.
WESTBOUND	PM R26.28	PM R26.29	12B	65				1		1		179		0.6	762	WESTBOUND APPROACH, DRY CREEK BRIDGE SEE SHEET C-3.
WESTBOUND	PM R26.29	PM R26.30	12BB	66				1		1		179	0.5	1.1	647	WESTBOUND DEPARTURE, DRY CREEK BRIDGE SEE SHEET C-4.
WESTBOUND	PM R28.55	PM R28.62	11B	63	357				1	1		948			3,352	
WESTBOUND	PM T29.62	PM T29.64	11G	38	80		1			1		314			895	
WESTBOUND	PM T31.13	PM T31.14	12CC	65		113	1	1				208	0.5	1.1	819	WESTBOUND DEPARTURE, BIG SANDY CREEK BRIDGE SEE SHEET C-5 AND C-7.
WESTBOUND	PM T31.14	PM T31.16	12BB	34							1		0.5	1.1	419	WESTBOUND APPROACH, BIG SANDY CREEK BRIDGE SEE SHEET C-4.
	TOTAL			832	1943	113		7	1	15	1	6584	2.5	7.3	25,331	

(N) - NOT A SEPARATE PAY ITEM, FOR INFORMATION ONLY.

TEMPORARY FENCE (TYPE ESA)

LOCATION PM	LOCATION DIRECTION	LF
T28.00	WB	264
T28.05	WB	150
R28.53	EB	154
T31.14	EB AND WB	255
R32.43	EB	350
TOTAL		1173

TEMPORARY FIBER ROLL

LOCATION PM	LOCATION DIRECTION	LF
R26.28	EB AND WB	191
T29.62	EB	261
TOTAL		452

SURVEY MONUMENT

LOCATION PM	LOCATION DIRECTION	TYPE A	TYPE B
		EACH	
R30.04	EASTBOUND	1	
R32.88	EASTBOUND		1

RESET MAILBOX

LOCATION PM	LOCATION DIRECTION	EACH	REMARKS
R28.54	WESTBOUND	11	FINAL POSITION-25' OFFSET FROM WESTBOUND ETW

SUMMARY OF QUANTITIES
Q-2

STATE OF CALIFORNIA - DEPARTMENT OF TRANSPORTATION
DESIGN
FUNCTIONAL SUPERVISOR: ABDUL BAKER
CALCULATED-DESIGNED BY: MARCO NABAVI
CHECKED BY: MICHAEL DENNISON
REVISED BY / DATE REVISED

LAST REVISION 06-21-12 DATE PLOTTED => 05-OCT-2012 TIME PLOTTED => 12:44

Dist	COUNTY	ROUTE	POST MILES TOTAL PROJECT	SHEET No.	TOTAL SHEETS
06	Fre	168	T25.5/R32.9	21	48

REGISTERED CIVIL ENGINEER 06-12-12 DATE

6-25-12
PLANS APPROVAL DATE

REGISTERED PROFESSIONAL ENGINEER MICHAEL W. DENNISON No. 68346 Exp. 9/30/13 CIVIL STATE OF CALIFORNIA

THE STATE OF CALIFORNIA OR ITS OFFICERS OR AGENTS SHALL NOT BE RESPONSIBLE FOR THE ACCURACY OR COMPLETENESS OF SCANNED COPIES OF THIS PLAN SHEET.

DIKE QUANTITIES

PM LOCATION (ROUTE 168) FROM	TO	DIRECTION	DESCRIPTION	REMOVE AC DIKE LF	PLACE HMA DIKE (TYPE E) LF	PLACE HMA DIKE (TYPE C) LF	PLACE HMA DIKE (TYPE F) LF	HOT MIX ASPHALT (TYPE A) *TON
T25.531	T25.548	EB	REMOVE AC DIKE (TYPE A), PLACE HMA DIKE (TYPE E)	90	90			2.37
T25.654	T25.697	EB	REMOVE AC DIKE (TYPE A), PLACE HMA DIKE (TYPE E)	227	227			5.98
R26.211	R26.287	EB	REMOVE AC DIKE (TYPE E), PLACE HMA DIKE (TYPE E)	401	401			10.56
R26.287	R26.299	EB	REMOVE AC DIKE (TYPE E), PLACE HMA DIKE (TYPE C)	63		63		0.48
R26.299	R26.304	EB	REMOVE AC DIKE (TYPE E), PLACE HMA DIKE (TYPE F)	25			25	0.33
T26.586	T26.630	EB	REMOVE AC DIKE (TYPE A), PLACE HMA DIKE (TYPE E)	232	232			6.11
T27.310	T27.351	EB	REMOVE AC DIKE (TYPE A), PLACE HMA DIKE (TYPE E)	217	217			5.71
T27.722	T27.837	EB	REMOVE AC DIKE (TYPE E), PLACE HMA DIKE (TYPE E)	607	607			15.98
T27.849	T28.049	EB	REMOVE AC DIKE (TYPE E), PLACE HMA DIKE (TYPE E)	1056	1056			27.80
T28.054	T28.065	EB	REMOVE AC DIKE (TYPE E), PLACE HMA DIKE (TYPE E)	58	58			1.53
T28.109	T28.142	EB	REMOVE AC DIKE (TYPE E), PLACE HMA DIKE (TYPE E)	174	174			4.58
T28.154	T28.226	EB	REMOVE AC DIKE (TYPE E), PLACE HMA DIKE (TYPE E)	380	380			10.00
R28.500	R28.528	EB	REMOVE AC DIKE (TYPE E), PLACE HMA DIKE (TYPE E)	148	148			3.90
R28.528	R28.540	EB	REMOVE AC DIKE (TYPE E), PLACE HMA DIKE (TYPE C)	63		63		0.48
R28.540	R28.594	EB	REMOVE AC DIKE (TYPE A), PLACE HMA DIKE (TYPE F)	490			490	12.90
R28.602	R28.614	EB	REMOVE AC DIKE (TYPE E), PLACE HMA DIKE (TYPE C)	63		63		0.48
R28.614	R28.687	EB	REMOVE AC DIKE (TYPE A), PLACE HMA DIKE (TYPE E)	385	385			10.14
R28.687	R28.700	EB	REMOVE AC DIKE (TYPE A), PLACE HMA DIKE (TYPE C)	63		63		0.48
R28.835	R28.847	EB	REMOVE AC DIKE (TYPE A), PLACE HMA DIKE (TYPE C)	63		63		0.48
R28.847	R28.869	EB	REMOVE AC DIKE (TYPE A), PLACE HMA DIKE (TYPE F)	116			116	1.55
R28.869	R28.881	EB	REMOVE AC DIKE (TYPE A), PLACE HMA DIKE (TYPE C)	63		63		0.48
R28.881	R28.905	EB	REMOVE AC DIKE (TYPE A), PLACE HMA DIKE (TYPE E)	131	131			3.45
R28.917	R28.938	EB	REMOVE AC DIKE (TYPE E), PLACE HMA DIKE (TYPE E)	111	111			2.92
R28.976	T29.191	EB	REMOVE AC DIKE (TYPE E), PLACE HMA DIKE (TYPE E)	1135	1135			29.90
T29.200	T29.282	EB	REMOVE AC DIKE (TYPE A), PLACE HMA DIKE (TYPE E)	433	433			11.40
T29.638	R29.662	EB	REMOVE AC DIKE (TYPE E), PLACE HMA DIKE (TYPE F)	129			129	1.72
R29.662	R29.669	EB	REMOVE AC DIKE (TYPE E), PLACE HMA DIKE (TYPE C)	38		38		0.29
R29.749	R29.756	EB	REMOVE AC DIKE (TYPE E), PLACE HMA DIKE (TYPE C)	38		38		0.29
R29.756	R29.810	EB	REMOVE AC DIKE (TYPE A), PLACE HMA DIKE (TYPE F)	286			286	3.82
R29.810	R29.817	EB	REMOVE AC DIKE (TYPE A), PLACE HMA DIKE (TYPE C)	38		38		0.29
R29.817	R29.851	EB	REMOVE AC DIKE (TYPE E), PLACE HMA DIKE (TYPE E)	179	179			4.71
R29.955	R30.126	EB	REMOVE AC DIKE (TYPE E), PLACE HMA DIKE (TYPE E)	903	903			23.77
T30.137	T30.142	EB	REMOVE AC DIKE (TYPE A), PLACE HMA DIKE (TYPE F)	25			25	0.33
T30.158	T30.171	EB	REMOVE AC DIKE (TYPE A), PLACE HMA DIKE (TYPE F)	66			63	0.84
T31.244	T31.394	EB	REMOVE AC DIKE (TYPE A), PLACE HMA DIKE (TYPE E)	794	794			20.91
SUBTOTAL 1				9290	7661	492	1134	227.0

* QUANTITY IS INCLUDED IN THE ROADWAY QUANTITIES SUMMARY TABLE ON SHEET Q-5

DIKE QUANTITIES

PM LOCATION (ROUTE 168) FROM	TO	DIRECTION	DESCRIPTION	REMOVE AC DIKE LF	PLACE HMA DIKE (TYPE E) LF	PLACE HMA DIKE (TYPE C) LF	PLACE HMA DIKE (TYPE F) LF	HOT MIX ASPHALT (TYPE A) *TON
T25.531	T25.548	WB	REMOVE AC DIKE (TYPE A), PLACE HMA DIKE (TYPE E)	90	90			2.37
T25.659	T25.697	WB	REMOVE AC DIKE (TYPE E), PLACE HMA DIKE (TYPE E)	201	201			5.29
R26.036	R26.159	WB	REMOVE AC DIKE (TYPE E), PLACE HMA DIKE (TYPE E)	649	649			17.10
T27.832	T27.885	WB	REMOVE AC DIKE (TYPE E), PLACE HMA DIKE (TYPE E)	280	280			7.37
T28.043	T28.091	WB	REMOVE AC DIKE (TYPE E), PLACE HMA DIKE (TYPE E)	253	253			6.70
R29.293	R29.611	WB	REMOVE AC DIKE (TYPE E), PLACE HMA DIKE (TYPE E)	1,679	1,679			44.20
R29.617	R29.629	WB	REMOVE AC DIKE (TYPE E), PLACE HMA DIKE (TYPE F)	63			63	0.85
R29.629	R29.641	WB	REMOVE AC DIKE (TYPE E), PLACE HMA DIKE (TYPE C)	63		63		0.48
R29.641	R29.670	WB	REMOVE AC DIKE (TYPE E), PLACE HMA DIKE (TYPE E)	153	153			4.03
R30.065	R30.126	WB	REMOVE AC DIKE (TYPE E), PLACE HMA DIKE (TYPE E)	322	322			8.48
T31.352	T31.443	WB	REMOVE AC DIKE (TYPE A), PLACE HMA DIKE (TYPE E)	478	478			12.58
SUBTOTAL 2				4,231	4,105	63	63	109.5
SUBTOTAL 1				9,290	7,661	492	1134	227.0
TOTAL				13,521	11,766	555	1197	336.4

SUMMARY OF QUANTITIES
Q-3

STATE OF CALIFORNIA - DEPARTMENT OF TRANSPORTATION
Caltrans® DESIGN

FUNCTIONAL SUPERVISOR: ABDUL BAKER
CALCULATED-DESIGNED BY: MARCO NABAVI
CHECKED BY: MICHAEL DENNISON
REVISED BY
DATE REVISED

LAST REVISION 06-21-12
DATE PLOTTED => 05-OCT-2012
TIME PLOTTED => 12:44

Dist	COUNTY	ROUTE	POST MILES TOTAL PROJECT	SHEET No.	TOTAL SHEETS
06	Fre	168	T25.5/R32.9	22	48

REGISTERED CIVIL ENGINEER 06-12-12 DATE

6-25-12
PLANS APPROVAL DATE

REGISTERED PROFESSIONAL ENGINEER MICHAEL W. DENNISON No. 68346 Exp. 9/30/13 CIVIL STATE OF CALIFORNIA

THE STATE OF CALIFORNIA OR ITS OFFICERS OR AGENTS SHALL NOT BE RESPONSIBLE FOR THE ACCURACY OR COMPLETENESS OF SCANNED COPIES OF THIS PLAN SHEET.

ROADWAY QUANTITIES

	PM LOCATION (ROUTE 168) FROM	TO	SEGMENT LENGHT (N) LF	ROADWAY WIDTH (N) LF	AREA (N) SQYD	RUBBERIZED HMA (GAP GRADED) *TON	Shld BACKING *TON	TACK COAT *TON	COLD PLANE AC Pvmt ** *SQYD
EASTBOUND	T25.518	T25.531	70.0	16	124.4	6.3	7.6	0.05	124.4
	T25.531	T25.611	422.4	16	750.9	76.1	9.8	0.31	147.8
	T25.611	T25.673	327.4	12	436.5	44.2		0.18	
	T25.673	R26.009	1774.1	13	2562.6	259.5	192.9	1.07	
	R26.009	R26.287	1467.8	18	2935.6	297.2	159.6	1.22	
	R26.287	T26.333	242.9	16	375.8	25.5	23.0	0.16	248.8
	T26.333	T26.586	1335.8	13	1929.5	195.5	145.3	0.80	
	T26.586	T26.643	301.0	24	802.7	81.3	32.7	0.33	
	T26.643	T27.722	5697.1	13	8229.1	833.2	619.6	3.43	
	T27.722	T28.094	1964.2	20	4364.9	441.9	213.6	1.82	
	T28.094	T28.287	1019.0	13	1471.9	149.0	110.8	0.61	
	T28.287	T28.430	755.0	24	2013.3	203.9	82.1	0.84	
	T28.430	T28.500	369.6	13	533.9	54.1	40.2	0.22	
	T28.500	T28.631	691.7	20	1537.1	155.7		0.64	
	T28.631	T28.716	448.8	32	1595.7	161.6		0.66	
	T28.716	R28.905	997.9	20	2117.5	224.5	108.5	0.88	518.0
	R28.905	T29.421	2724.5	13	3935.4	398.5	296.3	1.64	
	T29.421	T29.488	353.8	22	864.8	87.6	38.5	0.36	
	T29.488	R29.669	955.7	18	1911.4	193.5		0.80	292.2
	R29.669	R29.753	443.5	23	1133.4	114.8		0.47	457.6
	R29.753	R29.955	1066.6	20	2370.2	240.0		0.99	787.4
	R29.955	R29.995	211.2	25	586.7	59.4	23.0	0.24	
	R29.995	R30.020	132.0	28	410.7	41.6	14.3	0.17	
	R30.020	R30.099	417.1	26	1205.0	122.0	45.4	0.50	
	R30.099	R30.126	142.6	23	364.4	36.9		0.15	
	R30.126	T30.204	411.8	16	732.1	74.1	44.8	0.31	
	T31.244	T31.394	792.0				86.1		
SUBTOTAL 1						4577.9	2394.1	18.85	2576.2

* QUANTITY IS INCLUDED IN THE ROADWAY QUANTITIES SUMMARY TABLE ON SHEET Q-5
** SEE TYPICAL COLD PLANE TAPER DETAIL SHEET C-2

ROADWAY QUANTITIES

	PM LOCATION (ROUTE 168) FROM	TO	TOTAL SEGMENT LENGHT (N) LF	TOTAL ROADWAY WIDTH (N) LF	AREA (N) SQYD	RUBBERIZED HMA (GAP GRADED) *TON	Shld BACKING *TON	TACK COAT *TON	COLD PLANE AC Pvmt ** *SQYD
WESTBOUND	T25.518	T25.531	70.0	16	124.4	6.3	7.6	0.05	124.4
	T25.531	T25.697	876.5	16	1558.2	157.8	31.6	0.64	260.5
	T25.697	R26.036	1789.9	13	2585.4	261.8	194.6	1.08	
	R26.036	R26.287	1325.3	18	2650.6	268.4	144.1	1.10	
	R26.287	T26.333	242.9	16	431.8	43.7	26.4	0.18	248.8
	T26.333	T27.722	7333.9	13	10,593.4	1072.6	797.6	4.41	
	T27.722	T28.091	1948.3	20	4329.6	438.4	167.2	1.80	322.4
	T28.091	R28.500	2159.5	13	3119.3	315.8	234.8	1.30	
	R28.500	R28.905	2138.4	20	4752.0	481.1	30.4	1.98	
	R28.905	T29.378	2497.4	13	3607.4	365.2	271.6	1.50	
	T29.378	T29.606	1203.8	14	1872.6	189.6	130.9	0.78	
	T29.606	R29.757	797.3	22	1949.0	197.3		0.81	612.5
	R29.757	R29.955	1045.4	20	2323.1	235.2	31.6	0.97	993.8
	R29.955	R29.995	211.2	23	539.7	54.7	23.0	0.22	
	R29.995	R30.020	132.0	22	322.7	32.7	14.4	0.13	
	R30.020	R30.099	417.1	26	1205.0	122.0	45.4	0.50	
	R30.099	R30.126	142.6	23	364.3	36.9		0.15	
	R30.126	T30.204	411.8	20	915.2	92.7	16.3	0.41	
	T31.352	T31.443	478.0				52.0		
SUBTOTAL 2						4372.2	2219.5	18.01	2562.4
SUBTOTAL 1						4577.9	2394.1	18.85	2576.2
TOTAL						8950.1	4613.6	36.86	5138.6

SUMMARY OF QUANTITIES
Q-4

STATE OF CALIFORNIA - DEPARTMENT OF TRANSPORTATION
Caltrans DESIGN
FUNCTIONAL SUPERVISOR: ABDUL BAKER
CALCULATED-DESIGNED BY: MARCO NABAVI
CHECKED BY: MICHAEL DENNISON
REVISED BY / DATE REVISED

LAST REVISION 06-21-12 | DATE PLOTTED => 05-OCT-2012 | TIME PLOTTED => 12:44

Dist	COUNTY	ROUTE	POST MILES TOTAL PROJECT	SHEET No.	TOTAL SHEETS
06	Fre	168	T25.5/R32.9	23	48

REGISTERED CIVIL ENGINEER 06-12-12 DATE

6-25-12
PLANS APPROVAL DATE

REGISTERED PROFESSIONAL ENGINEER MICHAEL W. DENNISON No. 68346 Exp. 9/30/13 CIVIL STATE OF CALIFORNIA

THE STATE OF CALIFORNIA OR ITS OFFICERS OR AGENTS SHALL NOT BE RESPONSIBLE FOR THE ACCURACY OR COMPLETENESS OF SCANNED COPIES OF THIS PLAN SHEET.

ABBREVIATIONS:

EB - EASTBOUND
WB - WESTBOUND
PM - POSTMILE

LOCAL ROAD QUANTITIES

PM	DESCRIPTION	DIRECTION	L1 LF	L2 LF	R1 LF	R2 LF	W LF	D LF	COLD PLANE AC Pvmt *SQYD	TOTAL APPROACH AREA (N) SQYD	HOT MIX ASPHALT (TYPE A) *TON	TACK COAT *TON
T25.65	BLUE OAK LANE	EASTBOUND	245	126	—	12	28	18	—	303	30.7	0.13
R26.20	GARLOCK LANE	EASTBOUND	—	—	16	15	26	7	—	45	4.5	0.02
T26.63	VINYARD LANE	EASTBOUND	—	—	28	15	20	19	—	52	5.3	0.02
T26.90	WILD FLOWER	EASTBOUND	132	154	—	12	18	19	—	279	28.2	0.11
R28.60	MORGAN CANYON	EASTBOUND	—	—	60	50	32	28	—	241	24.4	0.10
R30.02	LOCKWOOD LANE	EASTBOUND	—	106	40	37	28	42	10.2	227	23.0	0.09
R26.09	SKYLAN LANE	WESTBOUND	—	—	17	22	24	8		42	4.3	0.02
R28.55	THIMBLEBERRY	WESTBOUND	—	—	54	75	33	8		102	10.3	0.04
R28.84	CHINQUAPIN	WESTBOUND	—	—	30	37	24	26	20.1	121	12.3	0.05
TOTAL									30.3		143.0	0.58

* QUANTITY IS INCLUDED IN THE ROADWAY QUANTITIES SUMMARY TABLE.

DRIVEWAY QUANTITIES

PAVED DRIVEWAYS WITH ACCESS TO ROUTE 168

PM	DESCRIPTION	DIRECTION	COLD PALNE AC Pvmt *SQYD	TOTAL APPROACH AREA (N) SQYD	HOT MIX ASPHALT (TYPE A) *TON	TACK COAT *TON
T25.74	PRIVATE	EASTBOUND	—	127	12.9	0.05
T27.36	PRIVATE	EASTBOUND	—	97	9.8	0.04
T27.84	PRIVATE	EASTBOUND	—	158	16.0	0.07
R28.98	PRIVATE	EASTBOUND	18.0	152	15.4	0.06
R28.84	PRIVATE	EASTBOUND	—	130	13.1	0.05
T28.04	PRIVATE	EASTBOUND	—	128	12.9	0.05
T29.41	PRIVATE	EASTBOUND	37.4	113	11.4	0.05
R29.68	PRIVATE	EASTBOUND	98.3	273	27.6	0.11
T25.60	PRIVATE	WESTBOUND	—	44	4.4	0.02
T27.26	COMMERCIAL	WESTBOUND	208.7	91	9.2	0.04
T27.40	PRIVATE	WESTBOUND	79.5	55	5.6	0.03
T28.03	PRIVATE	WESTBOUND	69.1	21	2.1	0.03
T28.05	PRIVATE	WESTBOUND	93.7	34	3.4	0.04
T28.24	PRIVATE	WESTBOUND	—	100	10.1	0.04
T28.31	PRIVATE	WESTBOUND	75.0	19	1.9	0.03
T28.41	PRIVATE	WESTBOUND	46.5	22	2.2	0.02
R29.13	PRIVATE	WESTBOUND	32.7	207	21.0	0.09
T29.65	PRIVATE	WESTBOUND	114.9	29	2.9	0.05
R29.81	PRIVATE	WESTBOUND	58.9	35	3.5	0.02
R30.10	COMMERCIAL	WESTBOUND	61.7	62	6.3	0.03
T30.13	COMMERCIAL	WESTBOUND	55.1	52	5.3	0.02
T30.19	COMMERCIAL	WESTBOUND	93.7	93	9.4	0.04
TOTAL			1143.2		206.4	0.98

* QUANTITY IS INCLUDED IN THE ROADWAY QUANTITIES SUMMARY TABLE.

ROADWAY QUANTITIES SUMMARY

DESCRIPTION	COLD PLANE AC PAVEMENT SQYD	HOT MIX ASPHALT (TYPE A) TON	TACK COAT TON
ROADWAY QUANTITIES (SHEET Q-4)	5138.6		36.86
COLD PLANE AC Pvmt (SHEET Q-1)	7263.0	1225.9	7.37
LOGITUDINAL TRANSITION	746.8	38.0	0.32
DRIVEWAY QUANTITIES TABLE	1143.2	206.4	0.98
LOCAL ROAD QUANTITIES TABLE	30.3	143.0	0.58
DIKE QUANTITIES (SHEET Q-3)		336.4	
DRAINAGE QUANTITIES (SHEET DQ-1)		3.9	
TOTAL	14,321.9	1953.6	46.11

LONGITUDINAL TRANSITION

LONGITUDINAL CONFORM ROUTE 168

POST MILE FROM	POST MILE TO	LENGTH LF	Avg WIDTH LF	DESCRIPTION	COLD PLANE AC Pvmt *SQYD	HOT MIX ASPHALT (TYPE A) *TON	TACK COAT *TON
T25.50	T25.51	70	24	CONFORM TO ROUTE 168	186.7	9.5	0.08
R26.29	R26.30	70	24	CONFORM TO BRIDGE APPROACH SLAB	186.7	9.5	0.08
R26.30	R26.31	70	24	CONFORM TO BRIDGE APPROACH SLAB	186.7	9.5	0.08
T30.19	T30.20	70	24	CONFORM TO ROUTE 168	186.7	9.5	0.08
TOTAL					746.8	38	0.32

* QUANTITY IS INCLUDED IN THE ROADWAY QUANTITIES SUMMARY TABLE.

SUMMARY OF QUANTITIES
Q-5

REVISED BY | DATE REVISED
MARCO NABAVI | MICHAEL DENNISON
CALCULATED-DESIGNED BY | CHECKED BY
FUNCTIONAL SUPERVISOR | ABDUL BAKER

STATE OF CALIFORNIA - DEPARTMENT OF TRANSPORTATION
Caltrans DESIGN

LAST REVISION 06-21-12 | DATE PLOTTED => 05-OCT-2012 | TIME PLOTTED => 12:44

DIST	COUNTY	ROUTE	POST MILES TOTAL PROJECT	SHEET NO.	TOTAL SHEETS
06	Fre	168	T25.5/R32.9	24	48

REGISTERED CIVIL ENGINEER

April 20, 2012
PLANS APPROVAL DATE

REGISTERED PROFESSIONAL ENGINEER
Roberta L. McLaughlin
No. C40375
Exp. 3-31-13
CIVIL
STATE OF CALIFORNIA

The State of California or its officers or agents shall not be responsible for the accuracy or completeness of electronic copies of this plan sheet.

To accompany plans dated 6-25-12

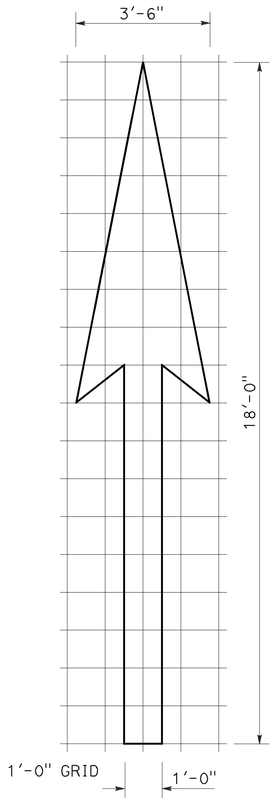

A=25 sq ft

TYPE I 18'-0" ARROW

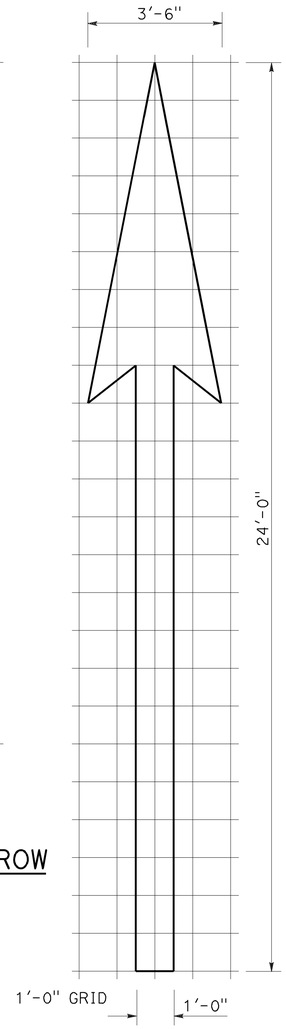

A=31 sq ft

TYPE I 24'-0" ARROW

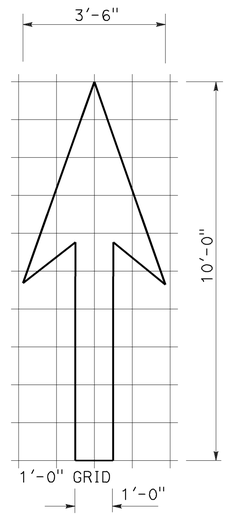

A=14 sq ft

TYPE I 10'-0" ARROW

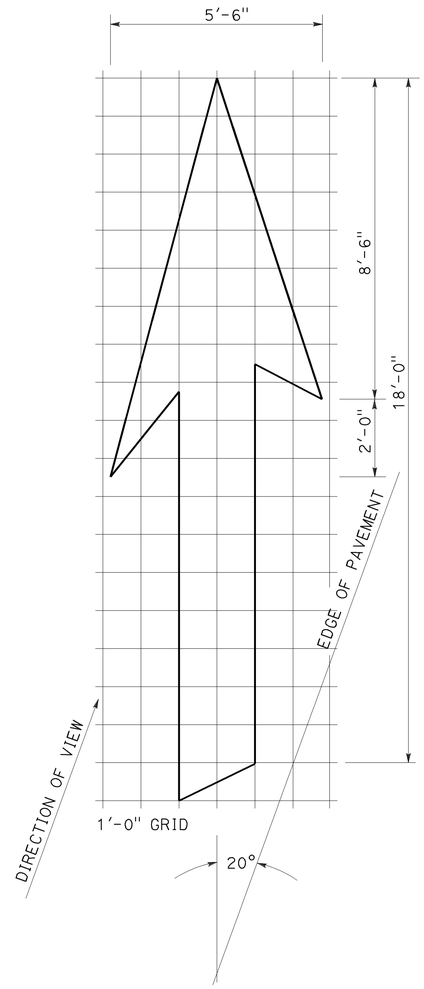

A=42 sq ft

TYPE VI ARROW

RIGHT LANE DROP ARROW
(FOR LEFT LANE,
USE MIRROR IMAGE)

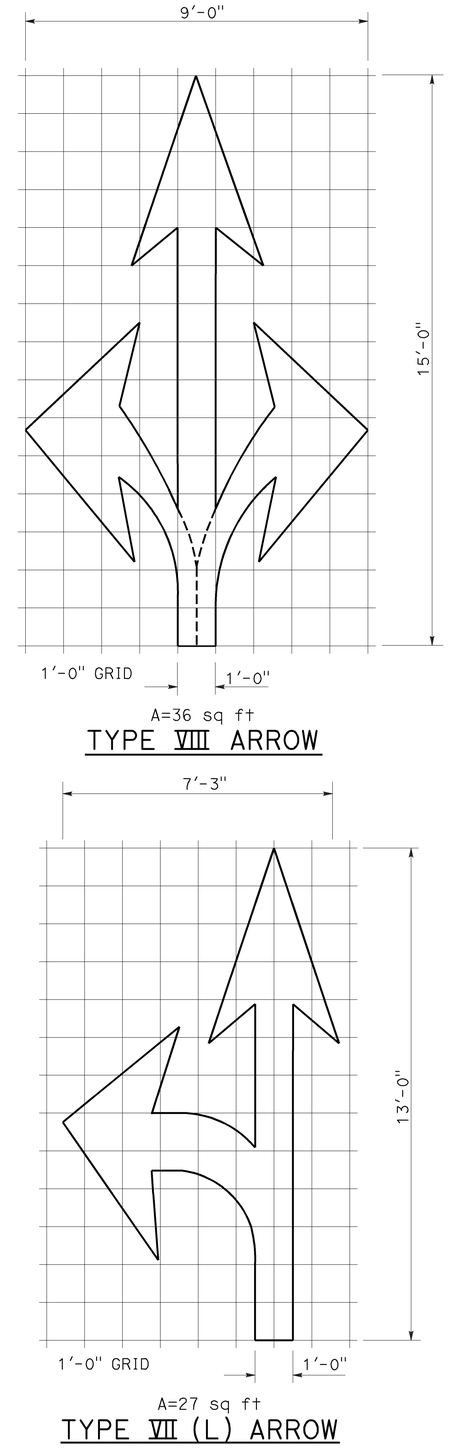

A=36 sq ft

TYPE VIII ARROW

A=27 sq ft

TYPE VII (L) ARROW

(FOR TYPE VII (R) ARROW,
USE MIRROR IMAGE)

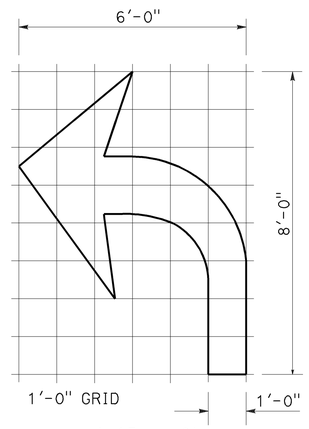

A=15 sq ft

TYPE IV (L) ARROW

(FOR TYPE IV (R) ARROW,
USE MIRROR IMAGE)

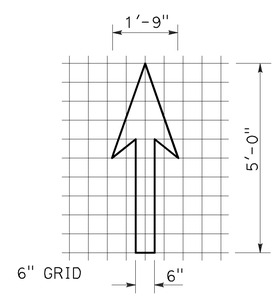

A=3.5 sq ft

BIKE LANE ARROW

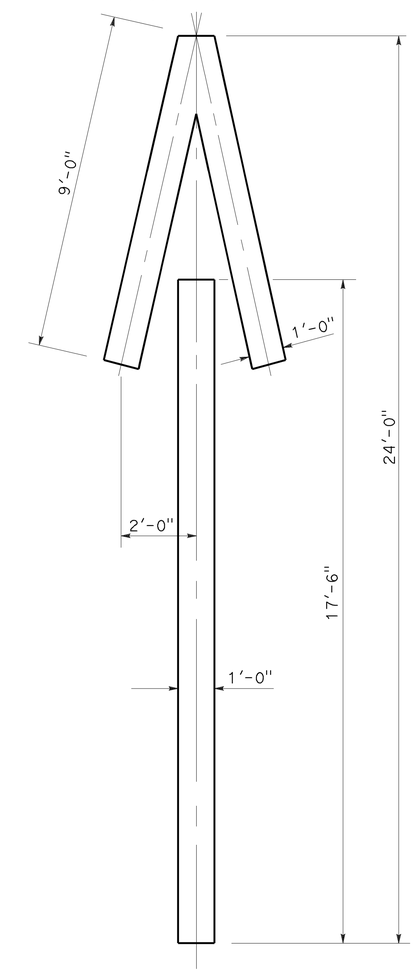

A=33 sq ft

TYPE V ARROW

NOTE:

MINOR VARIATIONS IN DIMENSIONS
MAY BE ACCEPTED BY THE ENGINEER.

STATE OF CALIFORNIA
DEPARTMENT OF TRANSPORTATION

PAVEMENT MARKINGS ARROWS

NO SCALE

RSP A24A DATED APRIL 20, 2012 SUPERSEDES STANDARD PLAN A24A
DATED MAY 1, 2006 - PAGE 9 OF THE STANDARD PLANS BOOK DATED MAY 2006.

REVISED STANDARD PLAN RSP A24A

2006 REVISED STANDARD PLAN RSP A24A

3-14-12

DIST	COUNTY	ROUTE	POST MILES TOTAL PROJECT	SHEET NO.	TOTAL SHEETS
06	Fre	168	T25.5/R32.9	25	48

REGISTERED CIVIL ENGINEER

July 20, 2012
PLANS APPROVAL DATE

REGISTERED PROFESSIONAL ENGINEER
Roberta L. McLaughlin
No. C40375
Exp. 3-31-13
CIVIL
STATE OF CALIFORNIA

The State of California or its officers or agents shall not be responsible for the accuracy or completeness of electronic copies of this plan sheet.

To accompany plans dated 6-25-12

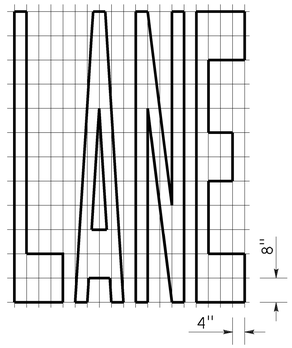

A=24 ft²

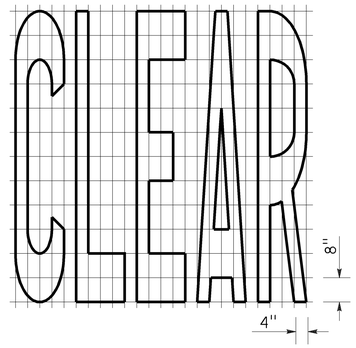

A=27 ft²

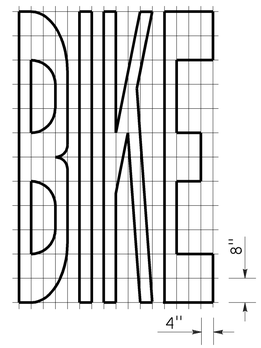

A=21 ft²

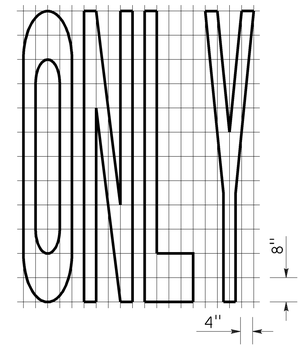

A=22 ft²

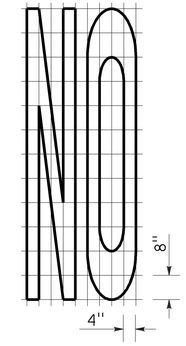

A=14 ft²

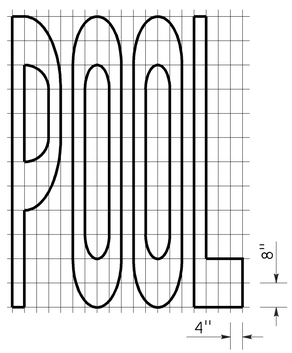

A=23 ft²

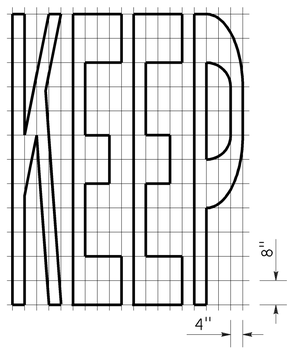

A=24 ft²

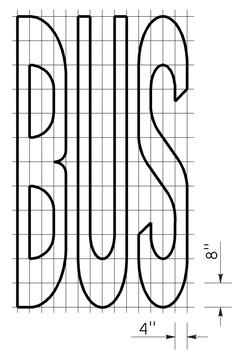

A=20 ft²

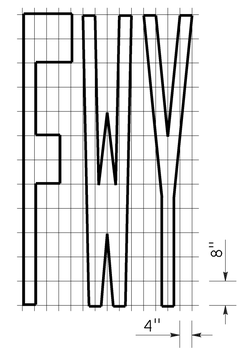

A=16 ft²

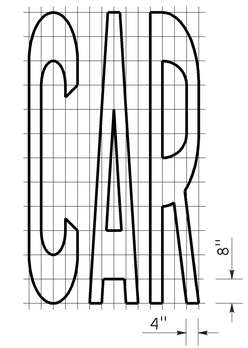

A=17 ft²

WORD MARKINGS			
ITEM	ft²	ITEM	ft²
LANE	24	NO	14
POOL	23	BIKE	21
CAR	17	BUS	20
CLEAR	27	ONLY	22
KEEP	24	FWY	16

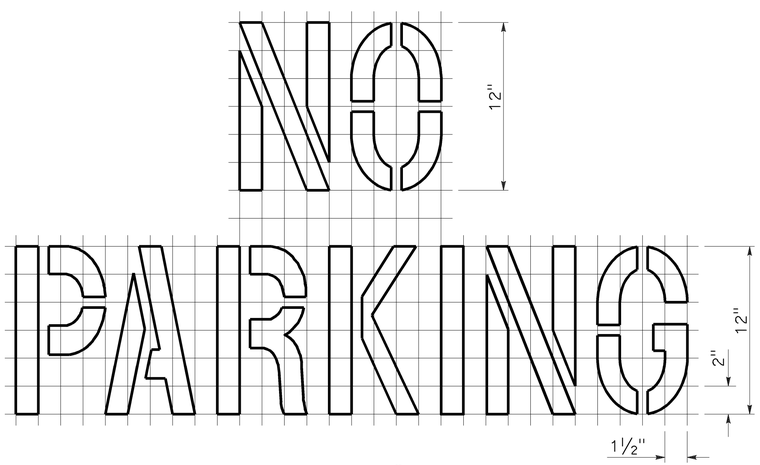

A=2 ft²
See Notes 6 and 7

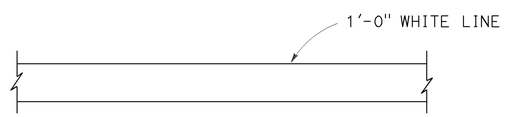

LIMIT LINE (STOP LINE)

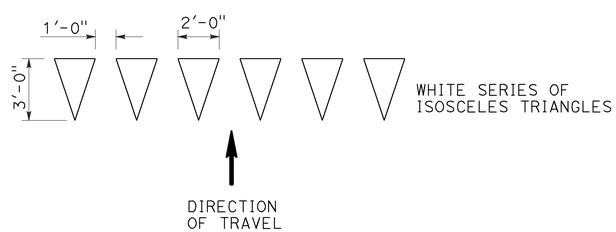

YIELD LINE

1. If a message consists of more than one word, it should read "UP", i.e., the first word should be nearest the driver.
2. The space between words should be at least four times the height of the characters for low speed roads, but not more than ten times the height of the characters. The space may be reduced appropriately where there is limited space because of local conditions.
3. Minor variations in dimensions may be accepted by the Engineer.
4. Portions of a letter, number or symbol may be separated by connecting segments not to exceed 2" in width.
5. The words "NO PARKING" pavement marking is to be used for parking facilities. For typical locations of markings, see Standard Plans A90A and A90B.
6. The words "NO PARKING", shall be painted in white letters no less than 1'-0" high on a contrasting background and located so that it is visible to traffic enforcement officials.

STATE OF CALIFORNIA
DEPARTMENT OF TRANSPORTATION

PAVEMENT MARKINGS WORDS, LIMIT AND YIELD LINES

NO SCALE

RSP A24E DATED JULY 20, 2012 SUPERSEDES STANDARD PLAN A24E
DATED MAY 1, 2006 - PAGE 13 OF THE STANDARD PLANS BOOK DATED MAY 2006.

REVISED STANDARD PLAN RSP A24E

2006 REVISED STANDARD PLAN RSP A24E

6-12-12

DIST	COUNTY	ROUTE	POST MILES TOTAL PROJECT	SHEET NO.	TOTAL SHEETS
06	Fre	168	T25.5/R32.9	26	48

Mark S. Turner
PROFESSIONAL LAND SURVEYOR

June 30, 2006
PLANS APPROVAL DATE

LICENSED LAND SURVEYOR
Mark S. Turner
No. 6228
Exp. 3-31-08
STATE OF CALIFORNIA

The State of California or its officers or agents shall not be responsible for the accuracy or completeness of electronic copies of this plan sheet.

To accompany plans dated 6-25-12

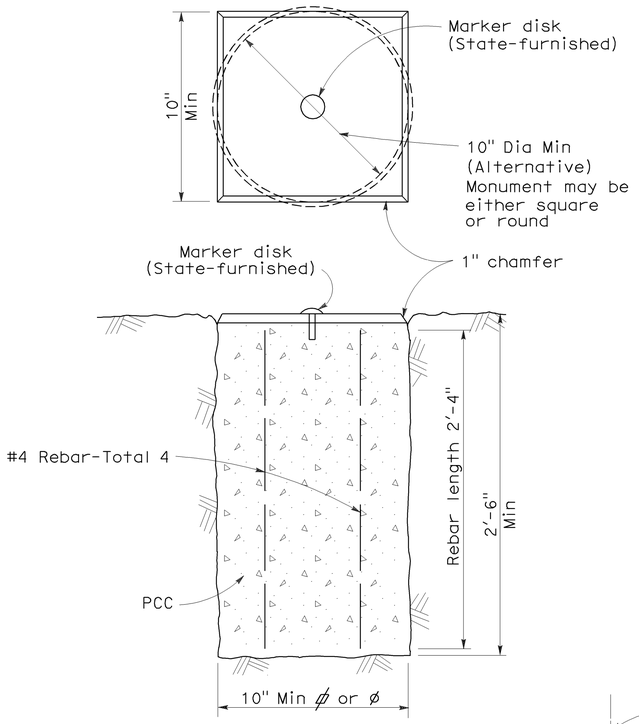

TYPE A

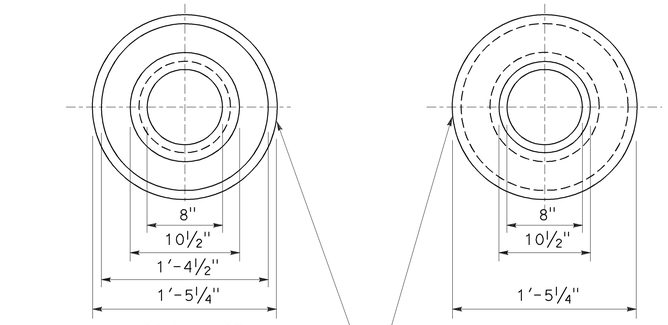

TOP VIEW OF MONUMENT OF WELL RING

BOTTOM VIEW OF MONUMENT OF WELL RING

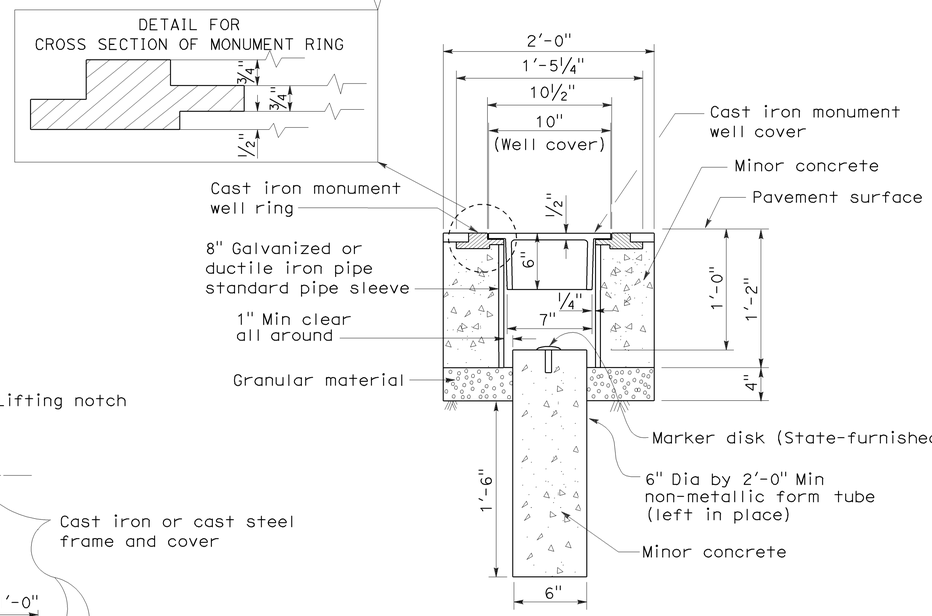

TYPE B

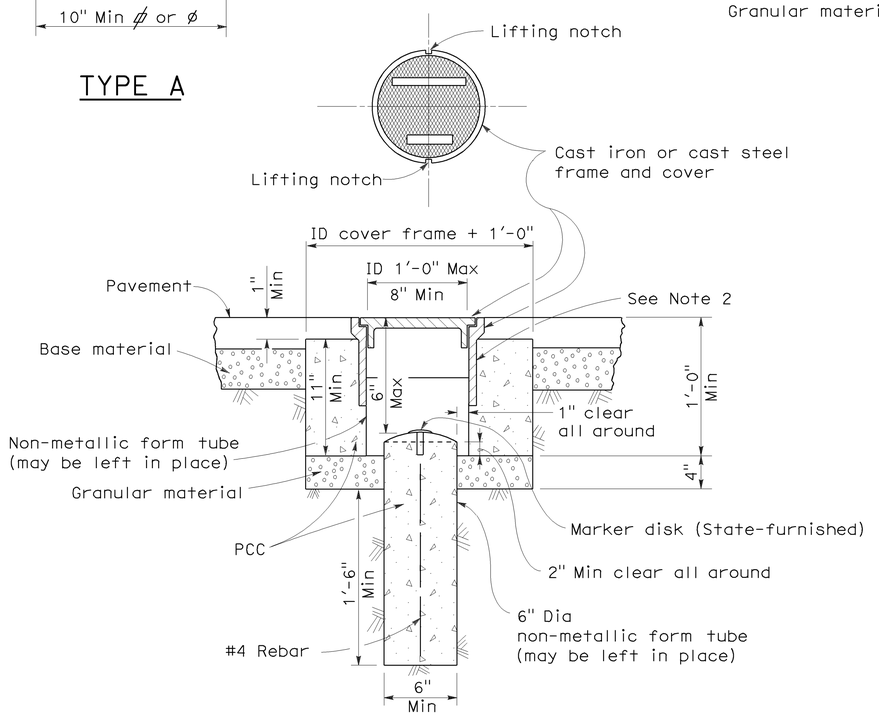

TYPE D
Alternative No. 1

NOTES:

1. The configuration of the cast iron or cast steel frame and cover may vary from that shown.
2. Frame shall be embedded in the concrete a minimum of 3".
3. Type D monument shall be either Alternative No. 1 or Alternative No. 2 at the contractor's option.
4. All portland cement concrete shall be Class 2 or minor concrete with 1" maximum aggregate.

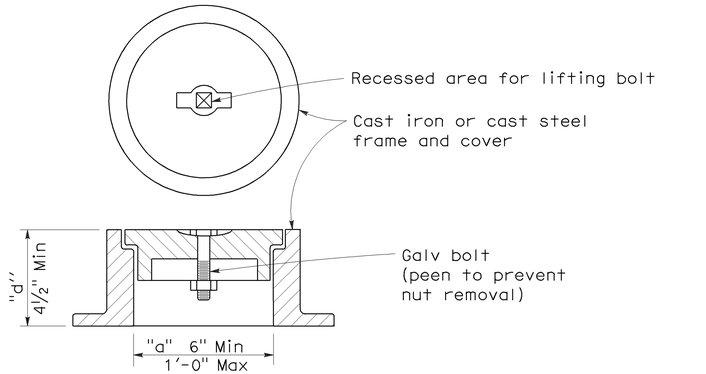

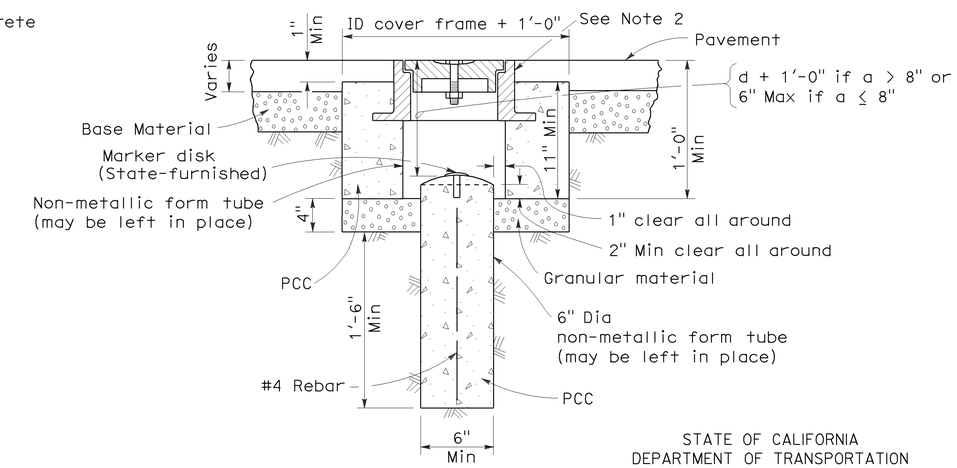

TYPE D
Alternative No. 2

STATE OF CALIFORNIA
DEPARTMENT OF TRANSPORTATION

SURVEY MONUMENTS

NO SCALE

RSP A74 DATED JUNE 30, 2006 SUPERSEDES STANDARD PLAN DATED MAY 1, 2006 - PAGE 28 OF THE STANDARD PLANS BOOK DATED MAY 2006.

REVISED STANDARD PLAN RSP A74

2006 REVISED STANDARD PLAN RSP A74

5-24-06

Dist	COUNTY	ROUTE	POST MILES TOTAL PROJECT	SHEET No.	TOTAL SHEETS
06	Fre	168	T25.5/R32.9	27	48

Randell D. Hiatt
REGISTERED CIVIL ENGINEER

May 20, 2011
PLANS APPROVAL DATE

REGISTERED PROFESSIONAL ENGINEER
Randell D. Hiatt
No. C50200
Exp. 6-30-11
CIVIL
STATE OF CALIFORNIA

The State of California or its officers or agents shall not be responsible for the accuracy or completeness of electronic copies of this plan sheet.

To accompany plans dated 6-25-12

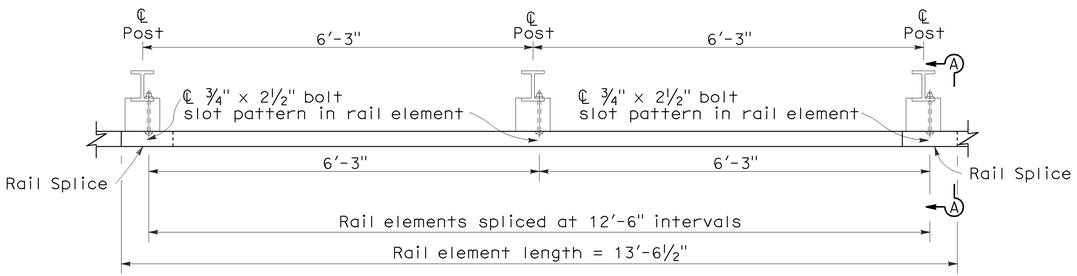

PLAN

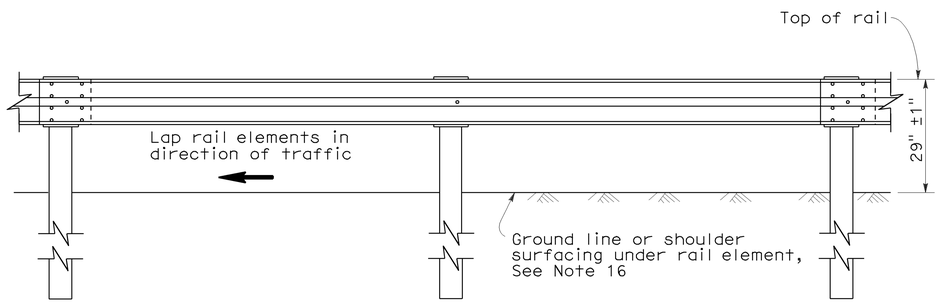

ELEVATION

METAL BEAM GUARD RAILING WITH STEEL POSTS AND NOTCHED WOOD OR NOTCHED RECYCLED PLASTIC BLOCKS

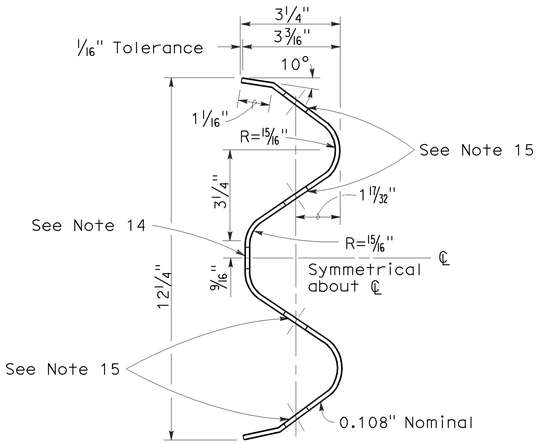

SECTION THRU RAIL ELEMENT

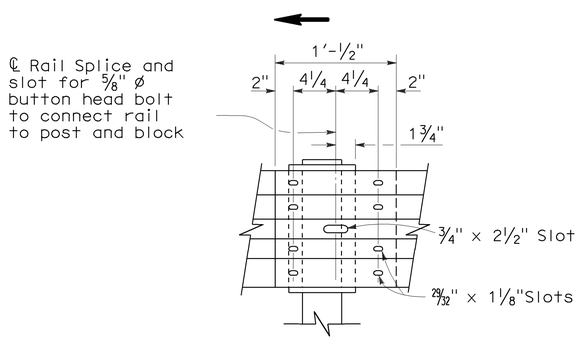

ELEVATION

RAIL ELEMENT SPLICE DETAIL

a) Connect the over lapped end of the rail elements with ⅝" ø x 1⅜" button head oval shoulder splice bolts inserted into the 29/32" x 1⅛" slots and bolted together with ⅝" ø recessed hex nuts. Recess of hex nut points toward rail element. A total of 8 bolts and nuts are to be used at each rail splice connection.

b) The ends of the rail elements are to be overlapped in the direction of traffic (see details).

c) Where end cap is to be attached to the end of a rail element, a total of 4 of the above described splice bolts and nuts are to be used.

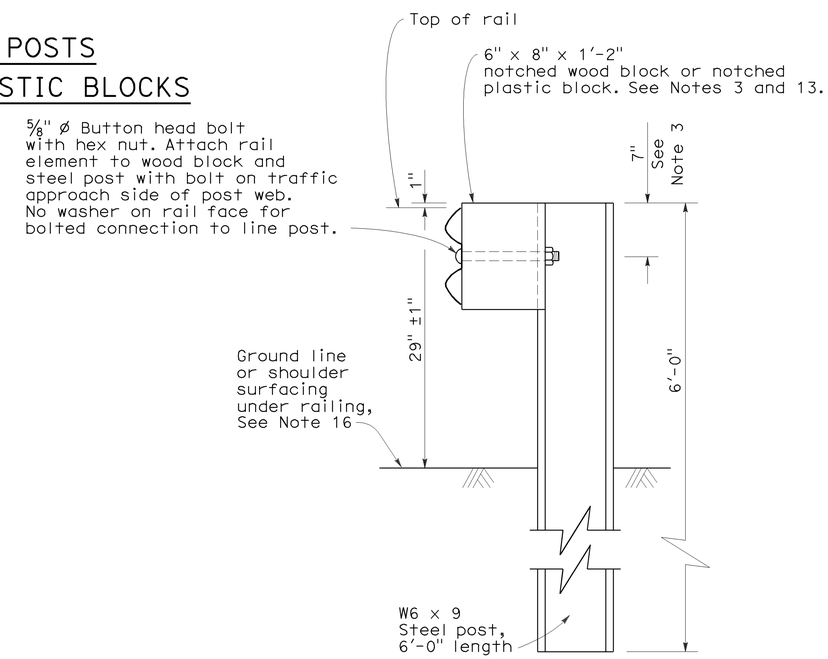

SECTION A-A

TYPICAL STEEL LINE POST INSTALLATION

See Note 4

NOTES:

1. For details of wood post installations, see Standard Plan A77A1.
2. For details of standard hardware used to construct guard railing, see Standard Plan A77B1.
3. For details of steel posts and notched wood blocks used to construct guard railing, see Standard Plan A77C2.
4. For additional installation details, see Standard Plan A77C3.
5. Guard railing post spacing to be 6'-3" center to center, except as otherwise noted.
6. For guard railing typical layouts, see the A77E, A77F and A77G Series of Standard Plans.
7. For terminal system end treatment details, see the A77L Series of Standard Plans. To connect railing to terminal system end treatment, transition the top of railing height at a ratio of 120:1 to terminal system end treatment height plus one 12'-6" standard railing section at the transitioned height for a horizontal connection to the end treatment.
8. For guard railing end anchor details, see Standard Plans A77H1 and A77I2.
9. For details of guard railing transition to bridge railing, see Standard Plan A77J4.
10. For additional details of guard railing connection to bridge railings, see Standard Plans A77J1, A77J2 and A77K1.
11. For dike positioning and guard railing delineation details, see Standard Plan A77C4.
12. Direction of adjacent traffic indicated by → .
13. Notched face of block faces steel post.
14. Slotted hole for bolted connection of rail element to block and post. See "Section Thru Rail Element".
15. Slotted holes for splice bolts to overlap ends of rail element. See "Section Thru Rail Element".
16. Install posts in soil.

STATE OF CALIFORNIA
DEPARTMENT OF TRANSPORTATION

METAL BEAM GUARD RAILING STANDARD RAILING SECTION (STEEL POST WITH NOTCHED WOOD OR NOTCHED RECYCLED PLASTIC BLOCK)

NO SCALE

RSP A77A2 DATED MAY 20, 2011 SUPERSEDES STANDARD PLAN A77A2 DATED MAY 1, 2006 - PAGE 42 OF THE STANDARD PLANS BOOK DATED MAY 2006.

REVISED STANDARD PLAN RSP A77A2

2006 REVISED STANDARD PLAN RSP A77A2

5-4-11

To accompany plans dated 6-25-12

Dist	COUNTY	ROUTE	POST MILES TOTAL PROJECT	SHEET No.	TOTAL SHEETS
06	Fre	168	T25.5/R32.9	28	48

Randell D. Hiatt
REGISTERED CIVIL ENGINEER

May 20, 2011
PLANS APPROVAL DATE

REGISTERED PROFESSIONAL ENGINEER
Randell D. Hiatt
No. C50200
Exp. 6-30-11
CIVIL
STATE OF CALIFORNIA

The State of California or its officers or agents shall not be responsible for the accuracy or completeness of electronic copies of this plan sheet.

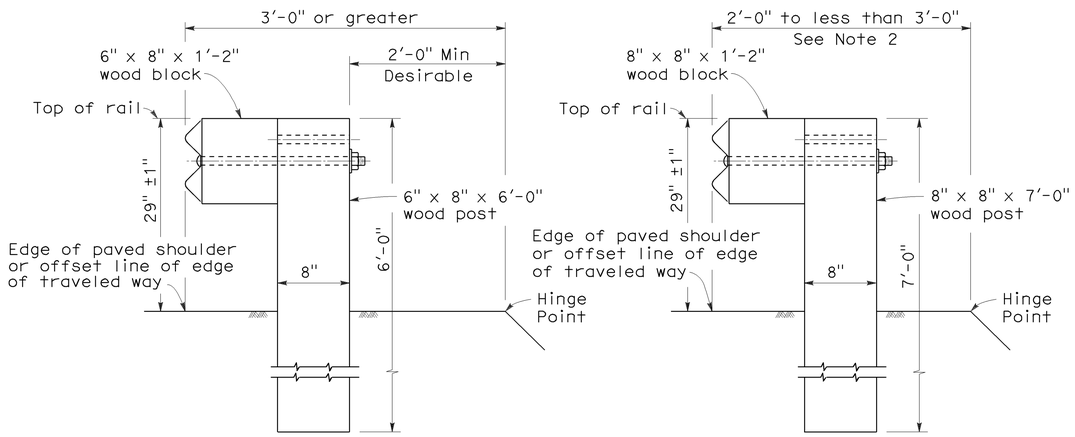

DETAIL A
TYPICAL ROADWAY INSTALLATION
See Note 1

DETAIL B
NARROW ROADWAY INSTALLATION
See Note 1

POST EMBEDMENT

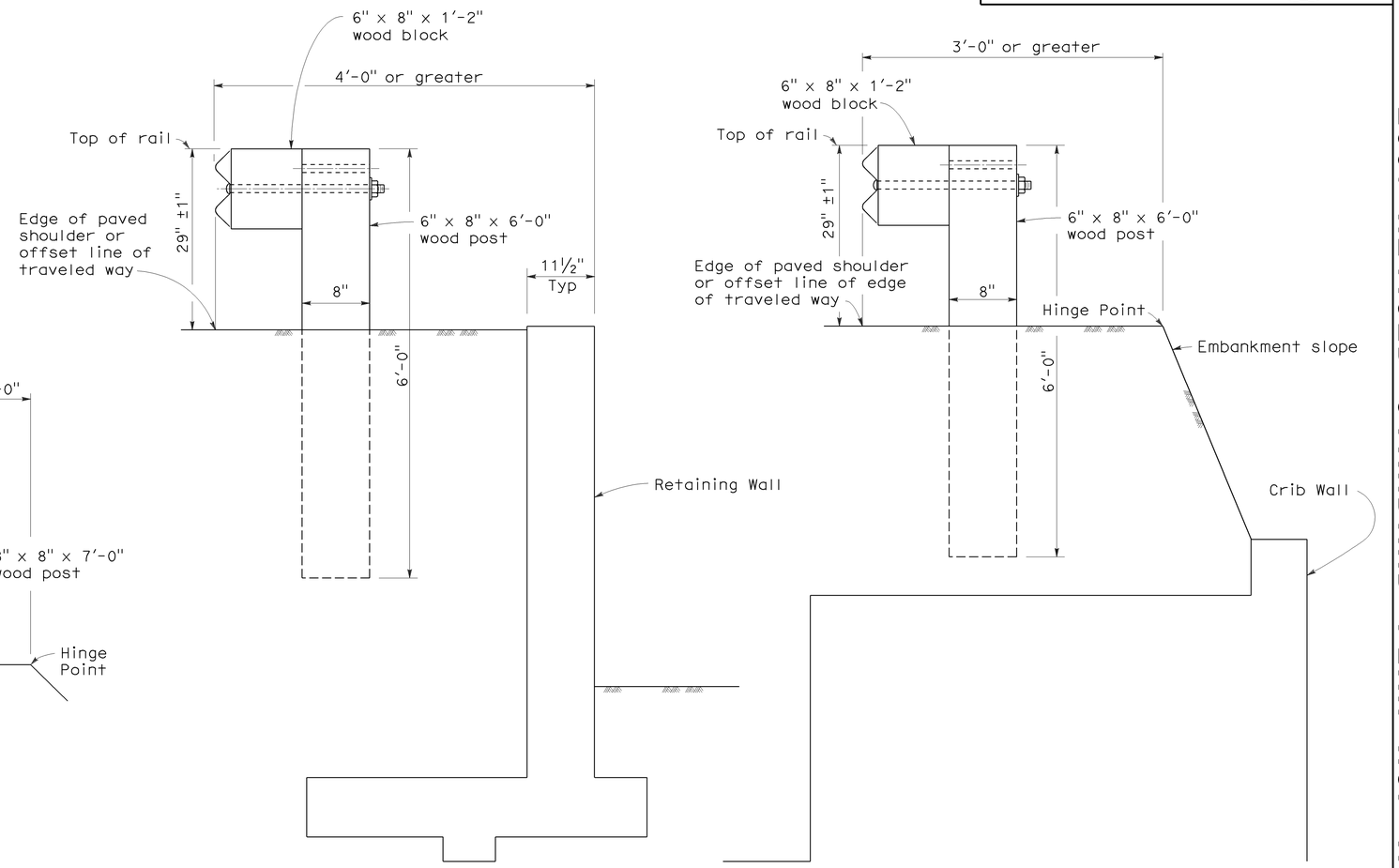

DETAIL C

DETAIL D

INSTALLATION AT EARTH RETAINING WALLS

NOTES:

1. These installation details also applicable to steel line post installations. For Detail A, C, and D, where steel line post installations are constructed, W6 x 9 steel post, 6'-0" in length, with 6" x 8" x 1'-2" notched wood blocks or notched recycled plastic blocks are to be used in place of the size of wood post and wood block shown. For Detail B, where steel line post installations are constructed, W6 x 9 steel post, 7'-0" in length, with 6" x 8" x 1'-2" notched wood blocks or notched recycled plastic blocks are to be used in place of the size of wood post and wood block shown. For additional installation details, see Standard Plans A77A1 and A77A2.
2. Where the distance between the face of the rail and the hinge point is less than 2'-0", see the Project Plans for special details.
3. For dike positioning with guard railing installations, see Standard Plan A77C4.

STATE OF CALIFORNIA
DEPARTMENT OF TRANSPORTATION

METAL BEAM GUARD RAILING TYPICAL LINE POST EMBEDMENT AND HINGE POINT OFFSET DETAILS

NO SCALE

RSP A77C3 DATED MAY 20, 2011 SUPERSEDES STANDARD PLAN A77C3
DATED MAY 1, 2006 - PAGE 46 OF THE STANDARD PLANS BOOK DATED MAY 2006.

REVISED STANDARD PLAN RSP A77C3

2006 REVISED STANDARD PLAN RSP A77C3

3-10-11

Dist	COUNTY	ROUTE	POST MILES TOTAL PROJECT	SHEET No.	TOTAL SHEETS
06	Fre	168	T25.5/R32.9	29	48

Randell D. Hiatt
REGISTERED CIVIL ENGINEER

May 20, 2011
PLANS APPROVAL DATE

REGISTERED PROFESSIONAL ENGINEER
Randell D. Hiatt
No. C50200
Exp. 6-30-11
CIVIL
STATE OF CALIFORNIA

The State of California or its officers or agents shall not be responsible for the accuracy or completeness of electronic copies of this plan sheet.

To accompany plans dated 6-25-12

NOTES:

1. When necessary to place dike in front of face of guard railing, only Type C dike may be used. For dike details, see Standard Plan A87B.
2. For standard railing post embedment, see Standard Plans A77C3.
3. Guard railing delineation to be used where shown on the Project Plans.
4. When dike or curb is placed under guard railing, the maximum height of the dike or curb shall be 4". Mountable dike should not be used. For dike and curb details, see Standard Plans A87A and A87B.
5. For details of typical distance between the face of rail and hinge point, see Standard Plan A77C3.
6. For steel line posts, use ¼ - 20 self-tapping screws in 0.22" diameter holes or ¼" bolts in 9/32" diameter holes.

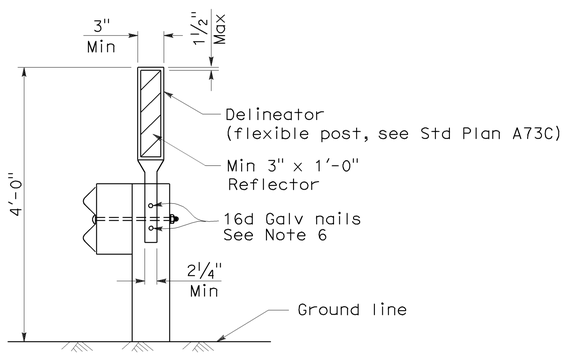

GUARD RAILING DELINEATION

See Note 3

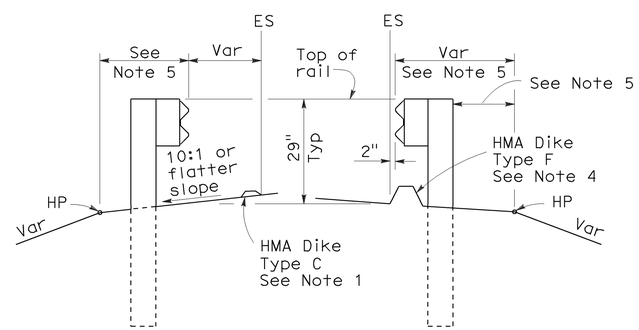

DIKE POSITIONING

See Note 1

STATE OF CALIFORNIA
DEPARTMENT OF TRANSPORTATION

METAL BEAM GUARD RAILING TYPICAL RAILING DELINEATION AND DIKE POSITIONING DETAILS

NO SCALE

RSP A77C4 DATED MAY 20, 2011 SUPERSEDES RSP A77C4 DATED JUNE 6, 2008 AND STANDARD PLAN A77C4 DATED MAY 1, 2006 - PAGE 47 OF THE STANDARD PLANS BOOK DATED MAY 2006.

REVISED STANDARD PLAN RSP A77C4

2006 REVISED STANDARD PLAN RSP A77C4

3-10-11

DIST	COUNTY	ROUTE	POST MILES TOTAL PROJECT	SHEET NO.	TOTAL SHEETS
06	Fre	168	T25.5/R32.9	30	48

Randell D. Hiatt
REGISTERED CIVIL ENGINEER

June 6, 2008
PLANS APPROVAL DATE

REGISTERED PROFESSIONAL ENGINEER Randell D. Hiatt No. C50200 Exp. 6-30-09 CIVIL STATE OF CALIFORNIA

The State of California or its officers or agents shall not be responsible for the accuracy or completeness of electronic copies of this plan sheet.

To accompany plans dated 6-25-12

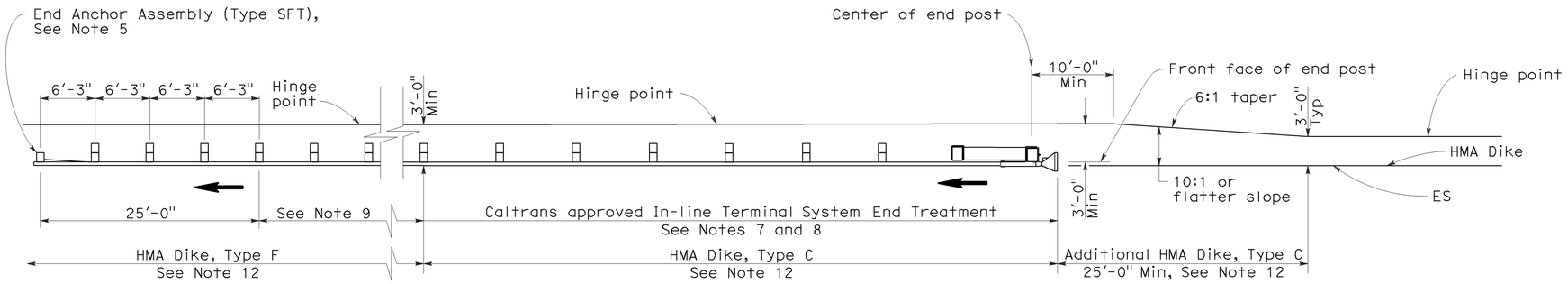

TYPE 11A LAYOUT

(EMBANKMENT GUARD INSTALLATION WITH IN-LINE END TREATMENT AT TRAFFIC APPROACH END OF RAILING)
See Note 6

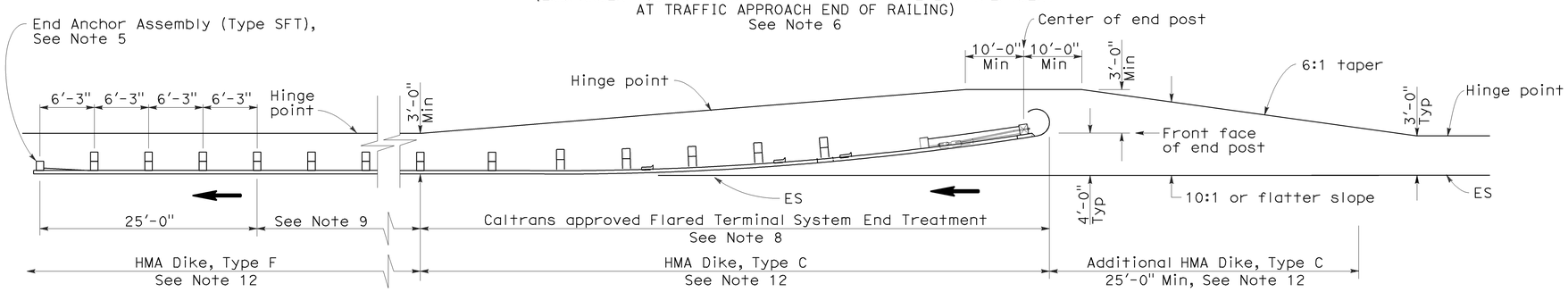

TYPE 11B LAYOUT

(EMBANKMENT GUARD RAILING INSTALLATION WITH FLARED END TREATMENT AT TRAFFIC APPROACH END OF RAILING)
See Note 6

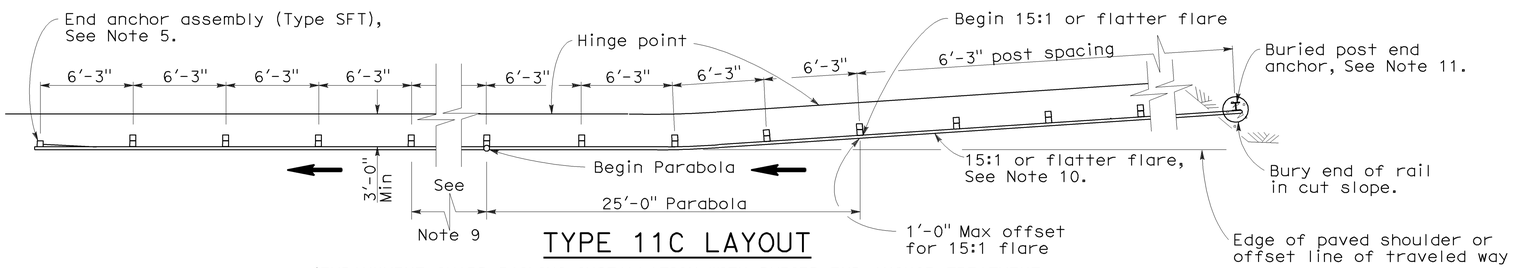

TYPE 11C LAYOUT

(EMBANKMENT GUARD RAILING INSTALLATION WITH BURIED END ANCHOR TREATMENT AT TRAFFIC APPROACH END OF RAILING)
See Notes 6 and 12

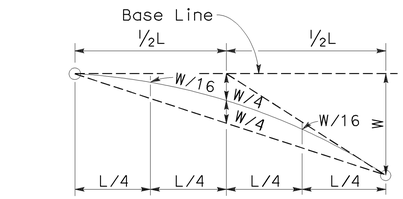

TYPICAL PARABOLIC LAYOUT

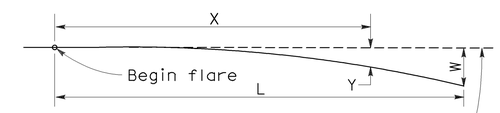

Base Line (Edge of paved shoulder or offset line of edge of traveled way)

$$Y = \frac{WX^2}{L^2}$$

Y = Offset from base line
W = Maximum offset
X = Distance along base line
L = Length of flare

PARABOLIC FLARE OFFSETS

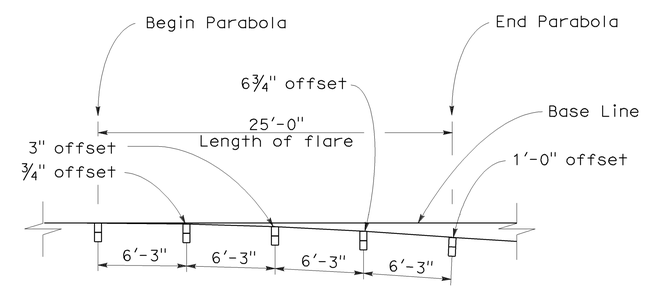

TYPICAL FLARE OFFSETS FOR 1 FOOT MAX END OFFSET

NOTES:

1. Line post, blocks and hardware to be used are shown on Standard Plans A77A1, A77A2, A77B1, A77C1, and A77C2.
2. Guard rail post spacing to be 6'-3" center to center, except as otherwise noted.
3. Except as noted, line posts are 6" x 8" x 6'-0" wood with 6" x 8" x 1'-2" wood blocks. W6 x 9 steel posts, 6'-0" in length, with 6" x 8" x 1'-2" notched wood blocks or recycled plastic blocks may be used for 6" x 8" x 6'-0" wood post with 6" x 8" x 1'-2" wood blocks where applicable and when specified.
4. Direction of adjacent traffic indicated by ⟶.
5. For End Anchor Assembly (Type SFT) details, see Standard Plan A77H1.
6. Layout Types 11A, 11B or 11C are typically used where guard railing is recommended to shield embankment slopes and a crashworthy end treatment is required for only one direction of traffic.
7. In-line Terminal System End Treatments are used where site conditions will not accommodate a flared end treatment.
8. The type of terminal system end treatment to be used will be shown on the Project Plans.
9. Dependent on site conditions (embankment height and side slope), construction of additional guard railing (length equal to multiples of 12'-6" with 6'-3" post spacing) may be advisable.
10. The 15:1 or flatter flare used with buried end anchors is based on the edge of the paved shoulder or offset line of edge of the traveled way. The length of guard railing within the 15:1 or flatter flare is based on site conditions and should be a length equal to multiples of 12'-6".
11. For details of the buried post end anchor used with Type 11C Layout, see Standard Plan A77I2.
12. Where placement of dike is required with guard railing installations, see Revised Standard Plan RSP A77C4 for dike positioning details.

STATE OF CALIFORNIA
DEPARTMENT OF TRANSPORTATION

METAL BEAM GUARD RAILING TYPICAL LAYOUTS FOR EMBANKMENTS

NO SCALE

RSP A77E1 DATED JUNE 6, 2008 SUPERSEDES STANDARD PLAN A77E1
DATED MAY 1, 2006 - PAGE 48 OF THE STANDARD PLANS BOOK DATED MAY 2006.

REVISED STANDARD PLAN RSP A77E1

2006 REVISED STANDARD PLAN RSP A77E1

12-10-07

DIST	COUNTY	ROUTE	POST MILES TOTAL PROJECT	SHEET NO.	TOTAL SHEETS
06	Fre	168	T25.5/R32.9	31	48

Randell D. Hiatt
REGISTERED CIVIL ENGINEER

June 6, 2008
PLANS APPROVAL DATE

REGISTERED PROFESSIONAL ENGINEER
Randell D. Hiatt
No. C50200
Exp. 6-30-09
CIVIL
STATE OF CALIFORNIA

The State of California or its officers or agents shall not be responsible for the accuracy or completeness of electronic copies of this plan sheet.

To accompany plans dated 6-25-12

2006 REVISED STANDARD PLAN RSP A77E2

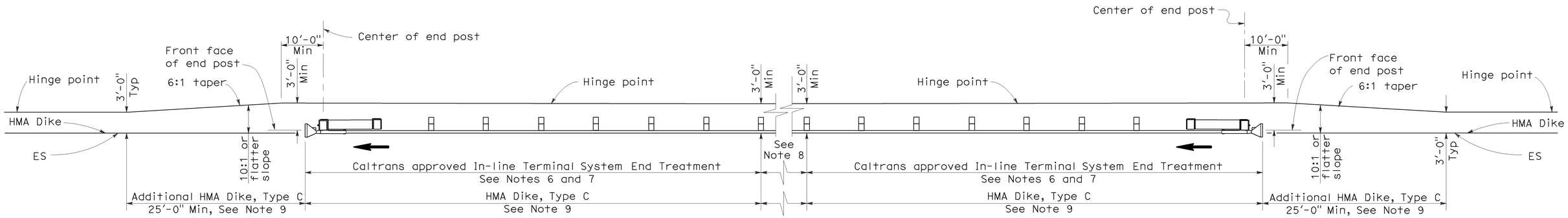

TYPE 11D LAYOUT

(EMBANKMENT GUARD RAILING INSTALLATION WITH IN-LINE END TREATMENT AT EACH END OF RAILING)
See Note 5

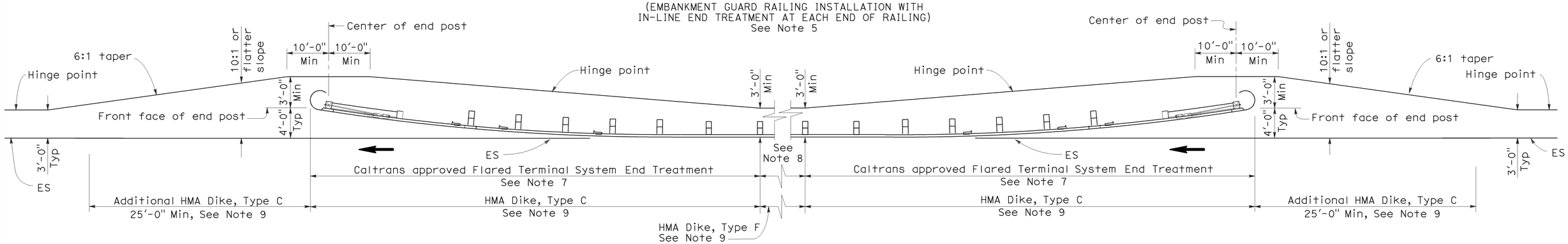

TYPE 11E LAYOUT

(EMBANKMENT GUARD RAILING INSTALLATION WITH FLARED END TREATMENT AT EACH END OF RAILING)
See Note 5

NOTES:

1. Line post, blocks and hardware to be used are shown on Standard Plans A77A1, A77A2, A77B1, A77C1 and A77C2.
2. Guard rail post spacing to be 6'-3" center to center, except as otherwise noted.
3. Except as noted, line posts are 6" x 8" x 6'-0" wood with 6" x 8" x 1'-2" wood blocks, W6 x 9 steel posts, 6'-0" in length, with 6" x 8" x 1'-2" notched wood blocks or plastic blocks may be used for 6" x 8" x 6'-0" wood post with 6" x 8" x 1'-2" wood blocks where applicable and when specified.
4. Direction of adjacent traffic indicated by ⟶.
5. Layout Types 11D through 11L, shown on the A77E Series of Revised Standard Plans, are typically used where guard railing is recommended to shield embankment slopes and a crashworthy end treatment is required for both directions of traffic.
6. In-line Terminal System End Treatments are used where site conditions will not accommodate a flared end treatment.
7. The type of terminal system end treatment to be used will be shown on the Project Plans.
8. Dependent on site conditions (embankment height and side slope), construction of additional guard railing (length equal to multiples of 12'-6" with 6'-3" post spacing) may be advisable.
9. Where placement of dike is required with guard railing installations, see Revised Standard Plan RSP A77C4 for dike positioning details.

STATE OF CALIFORNIA
DEPARTMENT OF TRANSPORTATION

METAL BEAM GUARD RAILING TYPICAL LAYOUTS FOR EMBANKMENTS

NO SCALE

RSP A77E2 DATED JUNE 6, 2008 SUPERSEDES STANDARD PLAN A77E2
DATED MAY 1, 2006 - PAGE 49 OF THE STANDARD PLANS BOOK DATED MAY 2006.

REVISED STANDARD PLAN RSP A77E2

DIST	COUNTY	ROUTE	POST MILES TOTAL PROJECT	SHEET NO.	TOTAL SHEETS
06	Fre	168	T25.5/R32.9	32	48

Randell D. Hiatt
REGISTERED CIVIL ENGINEER

June 6, 2008
PLANS APPROVAL DATE

REGISTERED PROFESSIONAL ENGINEER
Randell D. Hiatt
No. C50200
Exp. 6-30-09
CIVIL
STATE OF CALIFORNIA

The State of California or its officers or agents shall not be responsible for the accuracy or completeness of electronic copies of this plan sheet.

To accompany plans dated 6-25-12

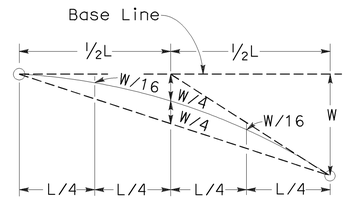

TYPICAL PARABOLIC LAYOUT

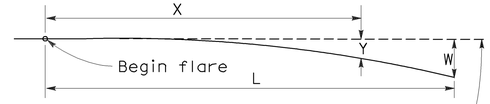

Base Line (Edge of paved shoulder or offset line of edge of traveled way)

$$Y = \frac{WX^2}{L^2}$$

Y = Offset from base line
W = Maximum offset
X = Distance along base line
L = Length of flare

PARABOLIC FLARE OFFSETS

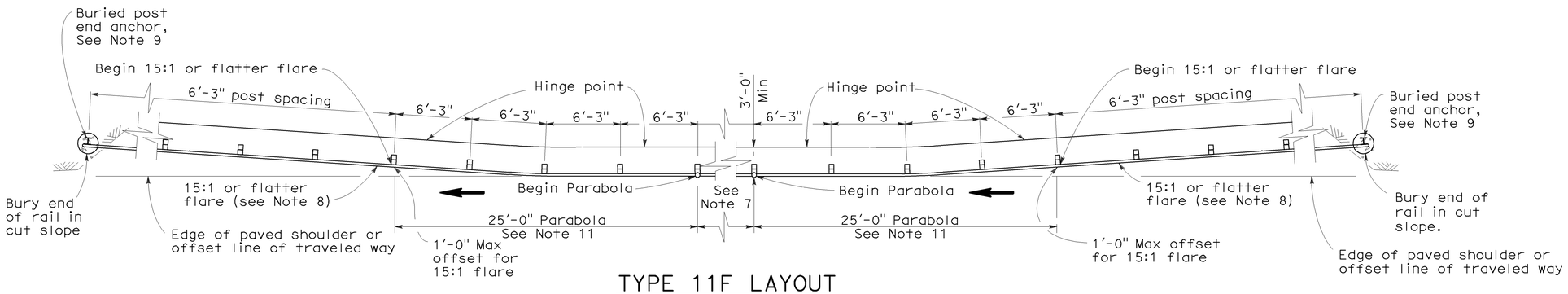

TYPE 11F LAYOUT

(EMBANKMENT GUARD RAILING INSTALLATION WITH A BURIED END ANCHOR TREATMENT AT EACH END OF RAILING)
See Notes 5 and 10

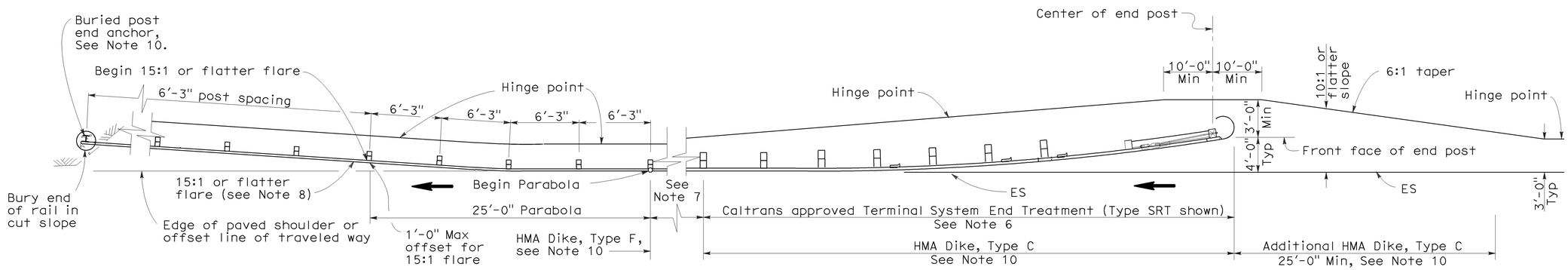

TYPE 11G LAYOUT

(EMBANKMENT GUARD RAILING INSTALLATION WITH FLARED END TREATMENT AND A BURIED END ANCHOR TREATMENT AT THE ENDS OF RAILING)
See Notes 5 and 10

NOTES:

1. Line post, blocks and hardware to be used are shown on Standard Plans A77A1, A77A2, A77B1, A77C1 and A77C2.
2. Guard rail post spacing to be 6'-3" center to center, except as otherwise noted.
3. Except as noted, line posts are 6" x 8" x 6'-0" wood with 6" x 8" x 1'-2" wood blocks. W6 x 9 steel posts, 6'-0" in length, with 6" x 8" x 1'-2" notched wood blocks or plastic blocks may be used for 6" x 8" x 6'-0" wood post with 6" x 8" x 1'-2" wood blocks where applicable and when specified.
4. Direction of adjacent traffic indicated by ⟶.
5. Layout Types 11D through 11L, shown on the A77E Series of Revised Standard Plans, are typically used where guard railing is recommended to shield embankment slopes and a crashworthy end treatment is required for both directions of traffic.
6. The type of terminal system end treatment to be used will be shown on the Project Plans.
7. Dependent on site conditions (embankment height and side slope), construction of additional guard railing (length equal to multiples of 12'-6" with 6'-3" post spacing) may be advisable.
8. The 15:1 or flatter flare used with buried end anchors is based on the edge of the paved shoulder or offset line of edge of the traveled way. The length of guard railing within the 15:1 or flatter flare is based on site conditions and should be a length equal to multiples of 12'-6".
9. For details of the buried post end anchor used with Type 11F and 11G Layouts, see Standard Plan A77I2.
10. Where placement of dike is required with guard railing installations, see Revised Standard Plan RSP A77C4 for dike positioning details.
11. For typical flare offsets for 25'-0" length parabola with maximum offset of 1'-0", see Revised Standard Plan RSP A77E1.

STATE OF CALIFORNIA
DEPARTMENT OF TRANSPORTATION

METAL BEAM GUARD RAILING TYPICAL LAYOUTS FOR EMBANKMENTS

NO SCALE

RSP A77E3 DATED JUNE 6, 2008 SUPERSEDES STANDARD PLAN A77E3
DATED MAY 1, 2006 - PAGE 50 OF THE STANDARD PLANS BOOK DATED MAY 2006.

REVISED STANDARD PLAN RSP A77E3

2006 REVISED STANDARD PLAN RSP A77E3

12-10-07

DIST	COUNTY	ROUTE	POST MILES TOTAL PROJECT	SHEET NO.	TOTAL SHEETS
06	Fre	168	T25.5/R32.9	33	48

Randell D. Hiatt
REGISTERED CIVIL ENGINEER

June 6, 2008
PLANS APPROVAL DATE

REGISTERED PROFESSIONAL ENGINEER
Randell D. Hiatt
No. C50200
Exp. 6-30-09
CIVIL
STATE OF CALIFORNIA

The State of California or its officers or agents shall not be responsible for the accuracy or completeness of electronic copies of this plan sheet.

To accompany plans dated 6-25-12

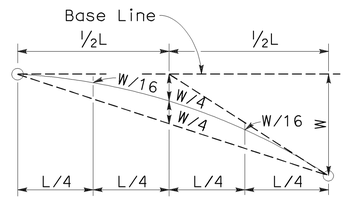

TYPICAL PARABOLIC LAYOUT

Base Line (Edge of paved shoulder or offset line of edge of traveled way)

$$Y = \frac{WX^2}{L^2}$$

Y = Offset from base line
W = Maximum offset
X = Distance along base line
L = Length of flare

PARABOLIC FLARE OFFSETS

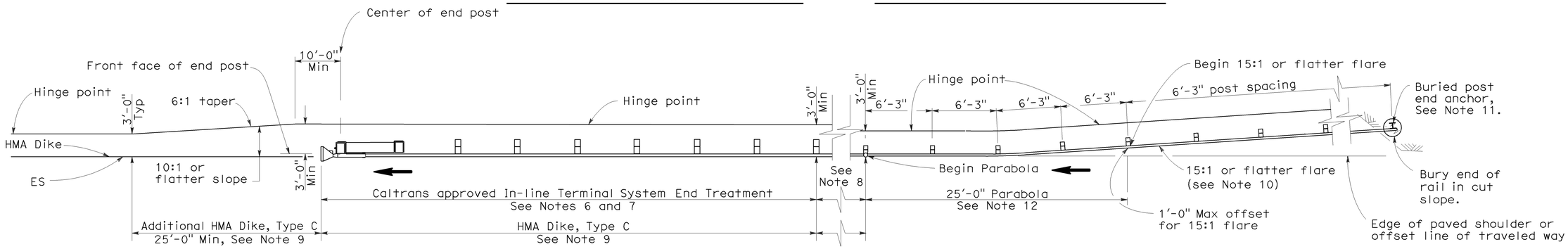

TYPE 11K LAYOUT

(EMBANKMENT GUARD RAILING INSTALLATION WITH A BURIED END ANCHOR TREATMENT AND AN IN-LINE END TREATMENT AT THE ENDS OF RAILING)
See Note 5

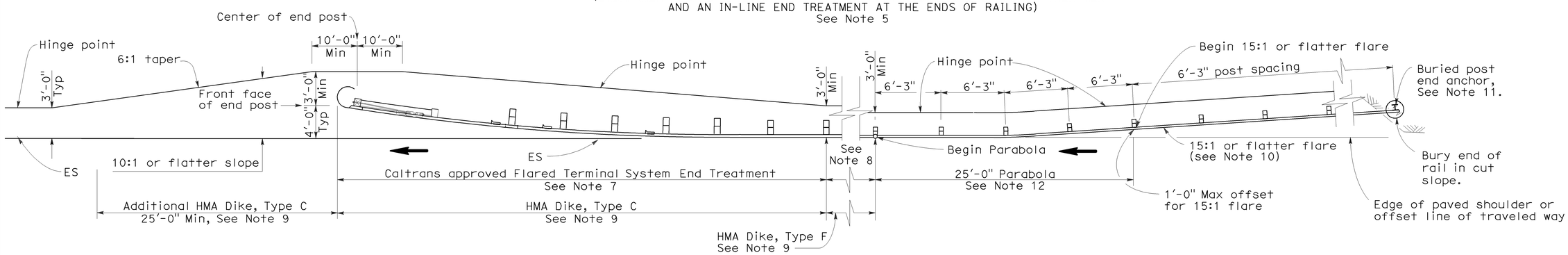

TYPE 11L LAYOUT

(EMBANKMENT GUARD RAILING INSTALLATION WITH A BURIED END ANCHOR TREATMENT AND A FLARED END TREATMENT AT THE ENDS OF RAILING)
See Note 5

NOTES:

1. Line post, blocks and hardware to be used are shown on Standard Plans A77A1, A77A2, A77B1, A77C1 and A77C2.
2. Guard rail post spacing to be 6'-3" center to center, except as otherwise noted.
3. Except as noted, line posts are 6" x 8" x 6'-0" wood with 6" x 8" x 1'-2" wood blocks. W6 x 9 steel posts, 6'-0" in length, with 6" x 8" x 1'-2" notched wood blocks or plastic blocks may be used for 6" x 8" x 6'-0" wood post with 6" x 8" x 1'-2" wood blocks where applicable and when specified.
4. Direction of adjacent traffic indicated by ⟶.
5. Layout Types 11D through 11L, shown on the A77E Series of Revised Standard Plans, are typically used where guard railing is recommended to shield embamkment slopes and a crashworthy end treatment is required for both directions of traffic.
6. In-line Terminal System End Treatments are used where site conditions will not accommodate a flared end treatment.
7. The type of terminal system end treatment to be used will be shown on the Project Plans.
8. Dependent on site conditions (embankment height and side slope), construction of additional guard railing (length equal to multiples of 12'-6" with 6'-3" post spacing) may be advisable.
9. Where placement of dike is required with guard railing installations, see Revised Standard Plan RSP A77C4 for dike positioning details.
10. The 15:1 or flatter flare used with buried end anchors is based on the edge of the paved shoulder or offset line of edge of the traveled way. The length of guard railing within the 15:1 or flatter flare is based on site conditions and should be a length equal to multiples of 12'-6".
11. For details of the buried post end anchor used with Type 11K and 11L Layouts, see Standard Plan A77I2.
12. For typical flare offsets for 25'-0" length parabola with maximum offset of 1'-0", see Revised Standard Plan RSP A77E1.

STATE OF CALIFORNIA
DEPARTMENT OF TRANSPORTATION

METAL BEAM GUARD RAILING TYPICAL LAYOUTS FOR EMBANKMENTS

NO SCALE

RSP A77E6 DATED JUNE 6, 2008 SUPERSEDES STANDARD PLAN A77E6
DATED MAY 1, 2006 - PAGE 53 OF THE STANDARD PLANS BOOK DATED MAY 2006.

REVISED STANDARD PLAN RSP A77E6

2006 REVISED STANDARD PLAN RSP A77E6

12-10-07

DIST	COUNTY	ROUTE	POST MILES TOTAL PROJECT	SHEET NO.	TOTAL SHEETS
06	Fre	168	T25.5/R32.9	34	48

Randell D. Hiatt
REGISTERED CIVIL ENGINEER

June 6, 2008
PLANS APPROVAL DATE

REGISTERED PROFESSIONAL ENGINEER
Randell D. Hiatt
No. C50200
Exp. 6-30-09
CIVIL
STATE OF CALIFORNIA

The State of California or its officers or agents shall not be responsible for the accuracy or completeness of electronic copies of this plan sheet.

To accompany plans dated 6-25-12

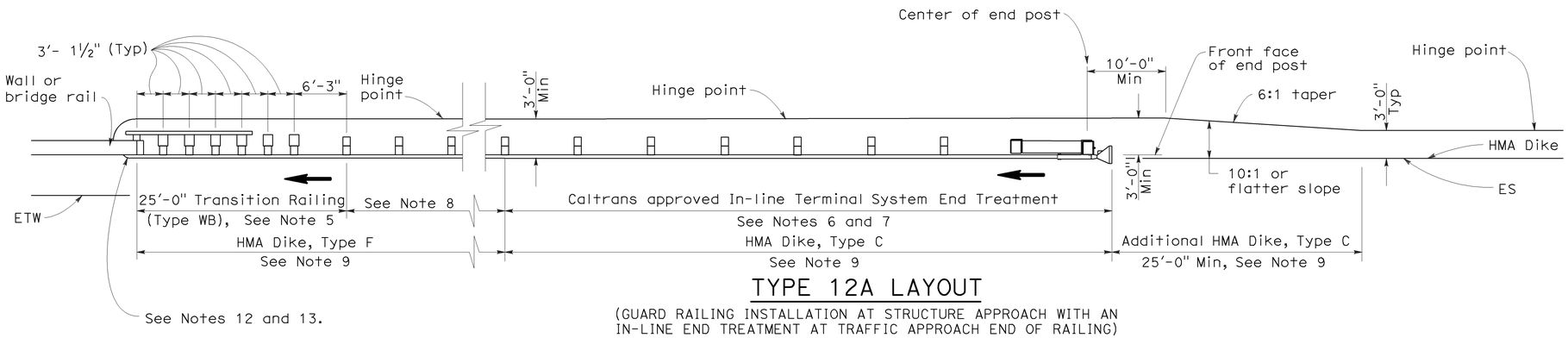

TYPE 12A LAYOUT

(GUARD RAILING INSTALLATION AT STRUCTURE APPROACH WITH AN IN-LINE END TREATMENT AT TRAFFIC APPROACH END OF RAILING)
See Notes 10

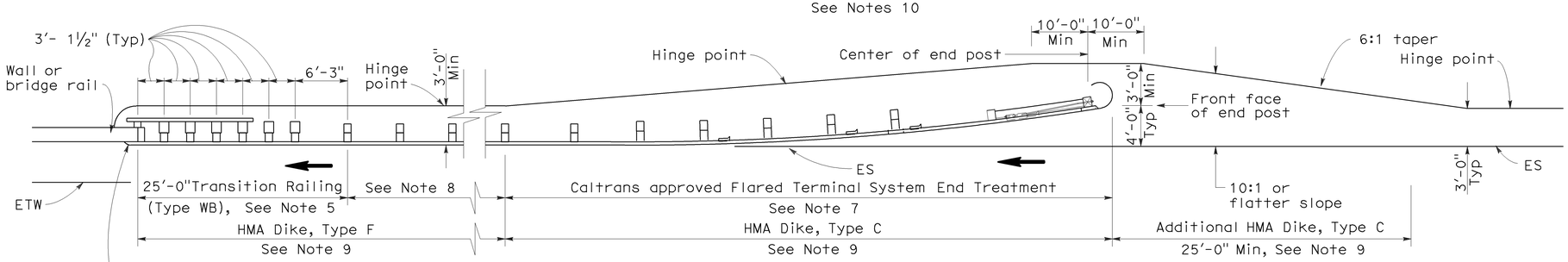

TYPE 12B LAYOUT

(GUARD RAILING INSTALLATION AT STRUCTURE APPROACH WITH A FLARED END TREATMENT AT TRAFFIC APPROACH END OF RAILING)
See Notes 10

NOTES:

1. Line post, blocks and hardware to be used are shown on Standard Plans A77A1, A77A2, A77B1, A77C1 and A77C2.
2. Guard rail post spacing to be 6'-3" center to center, except as otherwise noted.
3. Except as noted, line posts are 6" x 8" x 6'-0" wood with 6" x 8" x 1'-2" wood blocks. W6 x 9 steel posts, 6'-0" in length, with 6" x 8" x 1'-2" notched wood blocks or plastic blocks may be used for 6" x 8" x 6'-0" wood posts with 6" x 8" x 1'-2" wood blocks where applicable and when specified.
4. Direction of adjacent traffic indicated by ➡.
5. For Transition Railing (Type WB) details for Types 12A and 12B Layouts, see Standard Plan A77J4.
6. In-line Terminal System End Treatments are used where site conditions will not accommodate a flared end treatment.
7. The type of terminal system end treatment to be used will be shown on the Project Plans.
8. Dependent on site conditions (embankment height, side slopes, or other fixed objects), it may be advisable to construct additional guard railing (a length equal to multiples of 12'-6" with 6'-3" post spacing) between the transition railing and end treatment.
9. Where placement of dike is required with guard railing installations, see Revised Standard Plan RSP A77C4 for dike positioning details.
10. Type 12A or Type 12B Layouts are typically used:
    a. To the right of approaching traffic, at the end of a structure, on two-lane conventional highway where the roadbed width across the structure is less than 40 feet.
    b. To the left of approaching traffic, at the end of a structure, on two-lane conventional highway where the roadbed width across the structure is less than 40 feet.
    c. To the right of approaching traffic at the end of each structure on multilane freeways or expressways with separate adjacent or parallel bridges.
    d. To the right of approaching traffic at the end of the structure on multilane freeways or expressways with decked median on the bridge.
11. See Revised Standard Plan RSP A77F3 for typical layout used left of approaching traffic at the ends of each structure on multilane freeways or expressways with separate adjacent or parallel bridges.
12. For additional details of typical connections to bridge rail, see Connection Detail AA on Revised Standard Plans RSP A77J1 and RSP A77J2 and Connection Detail FF on Standard Plans A77K1 and A77K2.
13. For additional details of a typical connection to walls or abutments, see Standard Plan A77J3.

STATE OF CALIFORNIA
DEPARTMENT OF TRANSPORTATION

METAL BEAM GUARD RAILING TYPICAL LAYOUTS FOR STRUCTURE APPROACH

NO SCALE

RSP A77F1 DATED JUNE 6, 2008 SUPERSEDES STANDARD PLAN A77F1
DATED MAY 1, 2006 - PAGE 54 OF THE STANDARD PLANS BOOK DATED MAY 2006.

REVISED STANDARD PLAN RSP A77F1

2006 REVISED STANDARD PLAN RSP A77F1

12-10-07

DIST	COUNTY	ROUTE	POST MILES TOTAL PROJECT	SHEET NO.	TOTAL SHEETS
06	Fre	168	T25.5/R32.9	35	48

Randell D. Hiatt
REGISTERED CIVIL ENGINEER

June 6, 2008
PLANS APPROVAL DATE

REGISTERED PROFESSIONAL ENGINEER
Randell D. Hiatt
No. C50200
Exp. 6-30-09
CIVIL
STATE OF CALIFORNIA

The State of California or its officers or agents shall not be responsible for the accuracy or completeness of electronic copies of this plan sheet.

To accompany plans dated 6-25-12

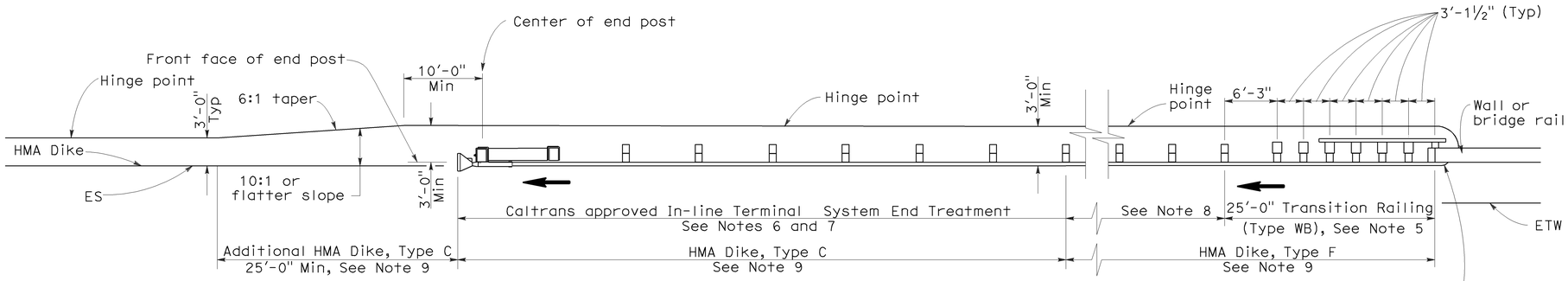

TYPE 12AA LAYOUT

(GUARD RAILING INSTALLATION AT STRUCTURE DEPARTURE WITH AN IN-LINE END TREATMENT AT TRAILING END OF RAILING)
See Notes 9 and 10

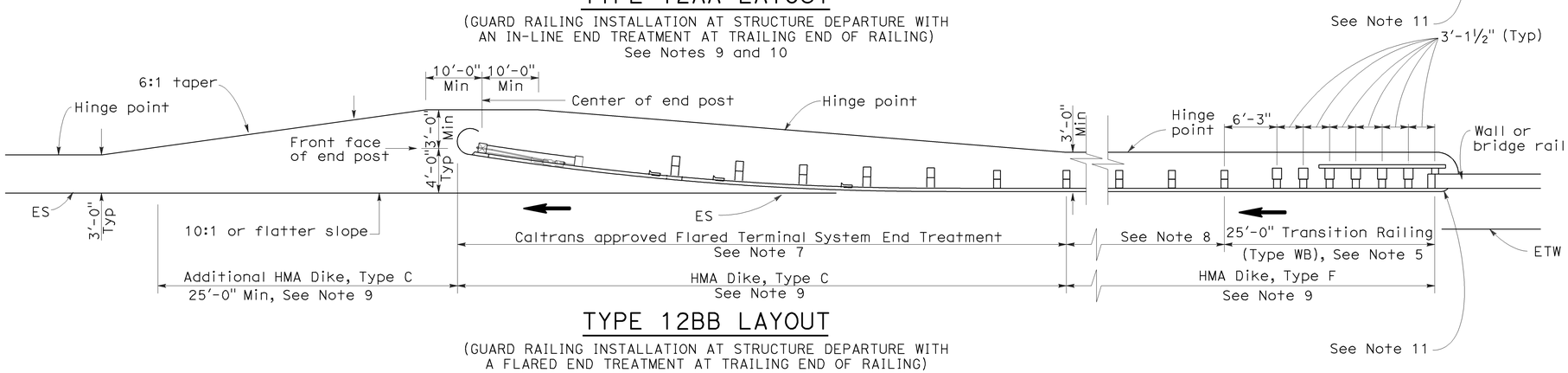

TYPE 12BB LAYOUT

(GUARD RAILING INSTALLATION AT STRUCTURE DEPARTURE WITH A FLARED END TREATMENT AT TRAILING END OF RAILING)
See Notes 9 and 10

NOTES:

1. Line post, blocks and hardware to be used are shown on Standard Plans A77A1, A77A2, A77B1, A77C1 and A77C2.
2. Guard rail post spacing to be 6'-3" center to center, except as otherwise noted.
3. Except as noted, line posts are 6" x 8" x 6'-0" wood with 6" x 8" x 1'-2" wood blocks. W6 x 9 steel posts, 6'-0" in length, with 6" x 8" x 1-2" notched wood blocks or notched recycled plastic blocks may be used for 6" x 8" x 6'-0" wood posts with 6" x 8" x 1'-2" wood blocks where applicable and when specified.
4. Direction of adjacent traffic indicated by ⟶.
5. For Transition Railing (Type WB) details for Types 12AA and 12BB Layouts, see Standard Plan A77J4.
6. In-line Terminal System Treatments are used where site conditions will not accommodate a flared end treatment.
7. The type of terminal system to be used will be shown on the Project Plans.
8. Dependent on site conditions (embankment height, side slopes, other fixed objects), it may be advisable to construct additional guard railing (a length equal to multiples of 12'-6" with 6'-3" post spacing) between the transition railing and end treatments.
9. Where placement of dike is required with guard railing installations, see Revised Standard Plan RSP A77C4 for dike positioning details.
10. Type 12AA or Type 12BB Layouts are typically used to the right of traffic departing a structure on two-way conventional highways where the roadbed width across the structure is less than 40 feet.
11. For additional details of typical connections to bridge rail, see Connection Detail CC on Revised Standard Plan RSP A77J2 and Connection Detail HH on Standard Plans A77k2.

STATE OF CALIFORNIA
DEPARTMENT OF TRANSPORTATION

METAL BEAM GUARD RAILING TYPICAL LAYOUTS FOR STRUCTURE DEPARTURE

NO SCALE

RSP A77F4 DATED JUNE 6, 2008 SUPERSEDES STANDARD PLAN A77F4
DATED MAY 1, 2006 - PAGE 57 OF THE STANDARD PLANS BOOK DATED MAY 2006.

REVISED STANDARD PLAN RSP A77F4

2006 REVISED STANDARD PLAN RSP A77F4

12-10-07

DIST	COUNTY	ROUTE	POST MILES TOTAL PROJECT	SHEET NO.	TOTAL SHEETS
06	Fre	168	T25.5/R32.9	36	48

Randell D. Hiatt
REGISTERED CIVIL ENGINEER

June 6, 2008
PLANS APPROVAL DATE

REGISTERED PROFESSIONAL ENGINEER Randell D. Hiatt No. C50200 Exp. 6-30-09 CIVIL STATE OF CALIFORNIA

The State of California or its officers or agents shall not be responsible for the accuracy or completeness of electronic copies of this plan sheet.

To accompany plans dated 6-25-12

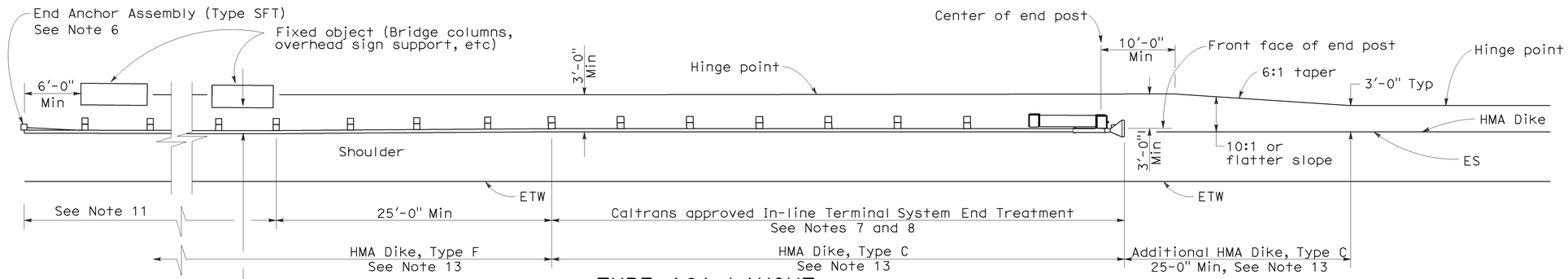

TYPE 16A LAYOUT

(GUARD RAILING INSTALLATION AT ROADSIDE FIXED OBJECT OR OBJECTS WITH AN IN-LINE END TREATMENT AT TRAFFIC APPROACH END OF RAILING)
See Notes 12 and 13

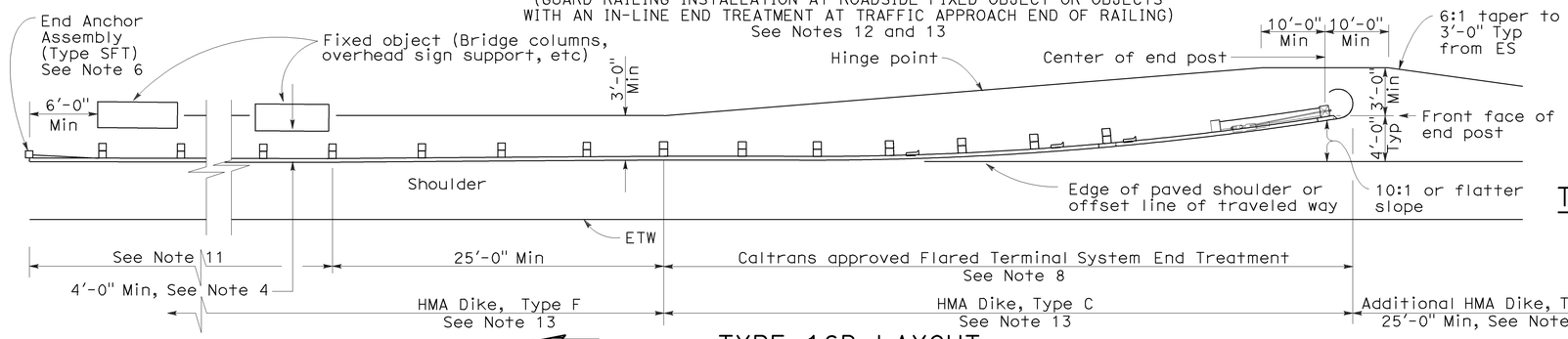

TYPE 16B LAYOUT

(GUARD RAILING INSTALLATION AT ROADSIDE FIXED OBJECT OR OBJECTS WITH A FLARED END TREATMENT AT TRAFFIC APPROACH END OF RAILING)
See Notes 12 and 13

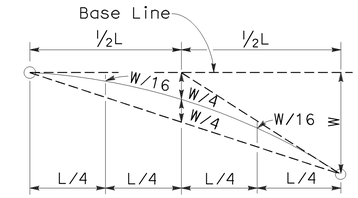

TYPICAL PARABOLIC LAYOUT

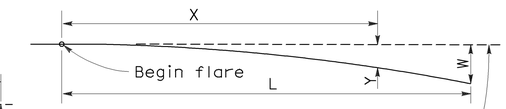

Base Line (Edge of paved shoulder or offset line of edge of traveled way)

$$Y = \frac{WX^2}{L^2}$$

Y = Offset from base line
W = Maximum offset
X = Distance along base line
L = Length of flare

PARABOLIC FLARE OFFSETS

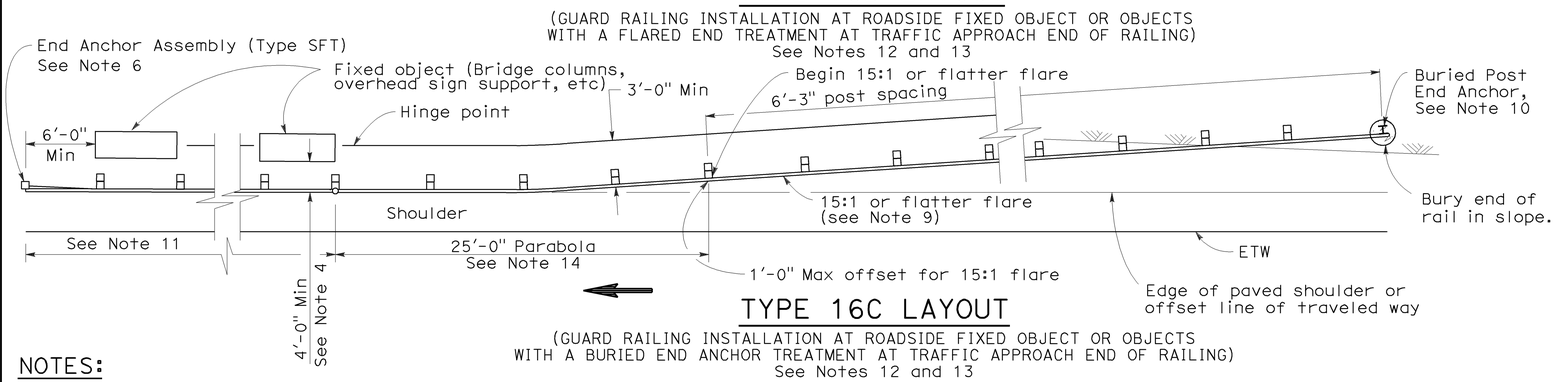

TYPE 16C LAYOUT

(GUARD RAILING INSTALLATION AT ROADSIDE FIXED OBJECT OR OBJECTS WITH A BURIED END ANCHOR TREATMENT AT TRAFFIC APPROACH END OF RAILING)
See Notes 12 and 13

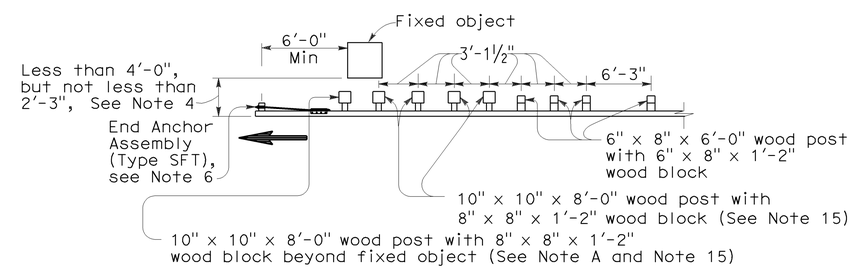

NOTE A: For a series of fixed objects (bridge columns, overhead sign supports, etc.) additional 10" x 10" x 8'-0" wood post with 8" x 8" x 1'-2" wood blocks at 3'-1½" center to center spacing are to be used between fixed objects.

STRENGTHENED RAILING SECTIONS FOR FIXED OBJECT

Use strengthened railing sections with Types 16A, 16B or 16C Layouts where minimum clearance between the face of the guard railing and fixed object(s) is less than 4'-0", but not less than 2'-3". See Note 4

NOTES:

1. Line post, blocks and hardware to be used are shown on Revised Standard Plans A77A1, A77A2, A77B1, A77C1 and A77C2.
2. Guard railing post spacing to be 6'-3" center to center, except as otherwise noted.
3. Except as noted, line posts are 6" x 8" x 6'-0" wood with 6" x 8" x 1'-2" wood blocks. W6 x 9 steel posts, 6'-0" in length, with 6" x 8" x 1'-2" notched wood blocks or notched recycled plastic blocks may be used for 6" x 8" x 6'-0" wood line posts with 6" x 8" x 1'-2" wood blocks where applicable and when specified.
4. A 4'-0" minimum clearance is required between the face of the railing and the face of a fixed object located directly behind standard guard railing sections with post spacing of 6'-3". Construct guard railing as shown in the detail "Strengthened Railing Sections for Fixed Objects" on this plan, where the clearance between the face of the railing and the face of a fixed object is less than 4'-0", but not less than 2'-3". Where the clearance is less than 2'-3", a concrete wall or barrier should be constructed to shield the fixed object(s).
5. Direction of adjacent traffic indicated by ⟶.
6. For End Anchor Assembly (Type SFT) details, see Standard Plan A77H1.
7. In-line Terminal System End Treatments are used where site conditions will not accommodate a flared end treatment.
8. The type of terminal system to be used will be shown on the Project Plans.
9. The 15:1 or flatter flare used with Type 16C Layout is based on the edge of the paved shoulder or offset line of edge of the traveled way. The length of guard railing within the 15:1 or flatter flare is based on site conditions and should be a length equal to multiples of 12'-6".
10. For details of the Buried Post End Anchor used with Type 16C Layout, see Standard Plan A77I2.
11. As site conditions dictate, construct additional guard railing to shield fixed object(s). Additional guard railing length equal to multiples of 12'-6". Post spacing at 6'-3" except as specified in Note 4.
12. Layout Types 16A, 16B or 16C are typically used where guard railing is recommended to shield roadside fixed object(s) and a crashworthy end treatment is required for only one direction of traffic.
13. Where placement of dike is required with guard railing, see Revised Standard Plan RSP A77C4 for dike positioning details.
14. For typical flare offsets for 25'-0" length parabola with maximum offset of 1'-0", see Revised Standard Plan RSP A77E1.
15. W6 x 15 steel post, 8'-0" in length, with 8" x 8" x 1'-2" notched wood block or notched recycled plastic blocks may be used in place of the 10" x 10" x 8'-0" wood post with 8" x 8" x 1'-2" wood block shown in the "Strengthened Railing Sections Detail".

STATE OF CALIFORNIA
DEPARTMENT OF TRANSPORTATION

METAL BEAM GUARD RAILING TYPICAL LAYOUTS FOR ROADSIDE FIXED OBJECTS

NO SCALE

RSP A77G3 DATED JUNE 6, 2008 SUPERSEDES STANDARD PLAN A77G3 DATED MAY 1, 2006 - PAGE 61 OF THE STANDARD PLANS BOOK DATED MAY 2006.

REVISED STANDARD PLAN RSP A77G3

2006 REVISED STANDARD PLAN RSP A77G3

12-10-07

DIST	COUNTY	ROUTE	POST MILES TOTAL PROJECT	SHEET NO.	TOTAL SHEETS
06	Fre	168	T25.5/R32.9	37	48

Randell D. Hiatt
REGISTERED CIVIL ENGINEER

June 6, 2008
PLANS APPROVAL DATE

REGISTERED PROFESSIONAL ENGINEER
Randell D. Hiatt
No. C50200
Exp. 6-30-09
CIVIL
STATE OF CALIFORNIA

The State of California or its officers or agents shall not be responsible for the accuracy or completeness of electronic copies of this plan sheet.

To accompany plans dated 6-25-12

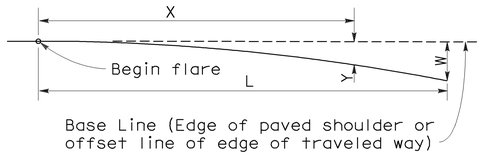

$$Y = \frac{WX^2}{L^2}$$

Y = Offset from base line
W = Maximum offset
X = Distance along base line
L = Length of flare

PARABOLIC FLARE OFFSETS

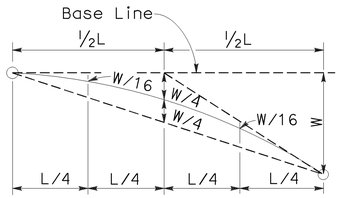

TYPICAL PARABOLIC LAYOUT

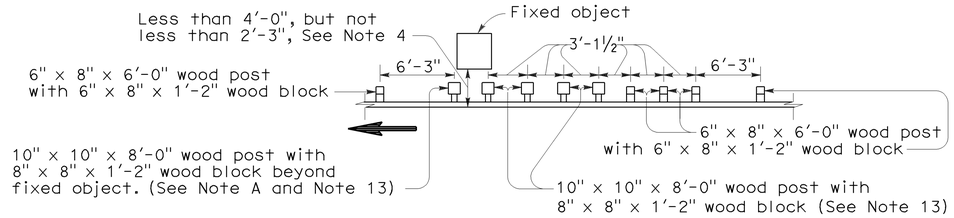

NOTE A: For a series of fixed objects (bridge columns, overhead sign supports, etc.) additional 10" x 10" x 8'-0" wood post with 8" x 8" x 1'-2" wood blocks at 3'-1½" center to center spacing are to be used between fixed object(s).

STRENGTHENED RAILING SECTIONS FOR FIXED OBJECT

Use strengthened railing sections with Layout Types 16F or 16G where minimum clearance between the face of the guard railing and fixed object(s) is less than 4'-0", but not less than 2'-3". See Note 4.

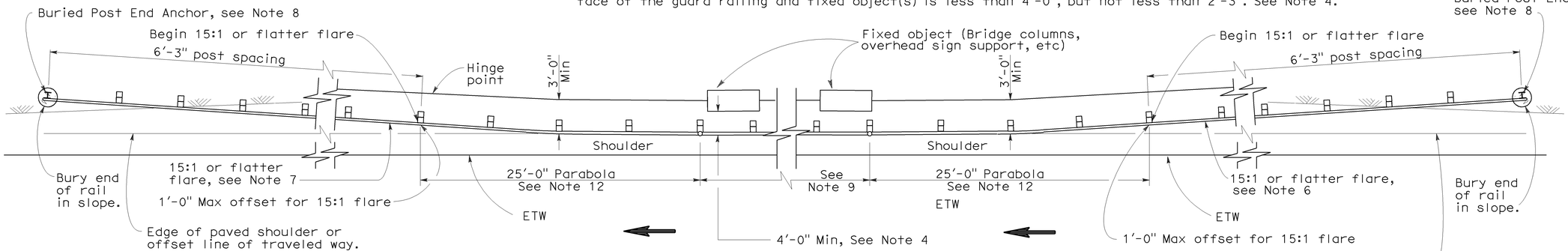

TYPE 16F LAYOUT

(GUARD RAILING INSTALLATION AT ROADSIDE FIXED OBJECT OR OBJECTS WITH A BURIED END ANCHOR TREATMENT AT EACH END OF RAILING)
See Notes 10 and 11

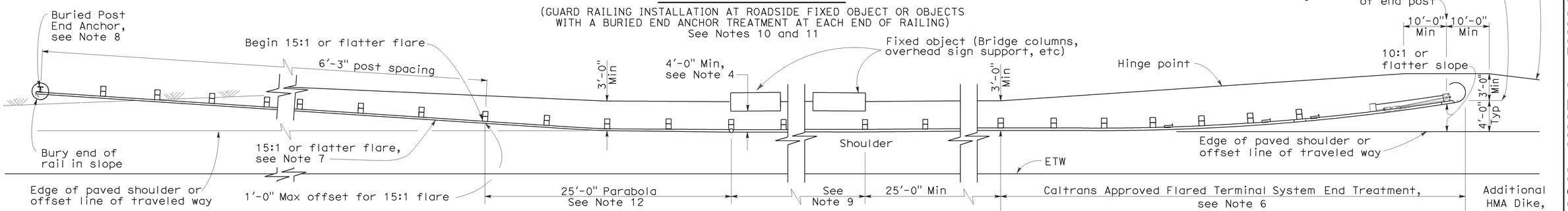

TYPE 16G LAYOUT

(GUARD RAILING INSTALLATION AT ROADSIDE FIXED OBJECT OR OBJECTS WITH A FLARED END TREATMENT AND A BURIED END ANCHOR TREATMENT AT THE ENDS OF RAILING)
See Notes 10 and 11

NOTES:

1. Line post, blocks and hardware to be used are shown on Standard Plans A77A1, A77A2, A77B1, A77C1 and A77C2.
2. Guard railing post spacing to be 6'-3" center to center, except as otherwise noted.
3. Except as noted, line posts are 6" x 8" x 6'-0" wood with 6" x 8" x 1'-2" wood blocks. W6 x 9 steel posts, 6'-0" in length, with 8" x 8" x 1'-2" notched wood blocks or notched recycled plastic blocks may be used for 6" x 8" x 6'-0" wood posts with 6" x 8" x 1'-2" wood blocks where applicable and when specified.
4. A 4'-0" minimum clearance is required between the face of the railing and the face of a fixed object located directly behind standard guard railing sections with post spacing at 6'-3". Construct guard railing as shown in the detail "Strengthened Railing Sections for Fixed Objects" on this plan, where the clearance between the face of the railing and the face of a fixed object is less than 4'-0", but not less than 2'-3". Where the clearance is less than 2'-3", a concrete wall or barrier should be constructed to shield the fixed object(s).
5. Direction of adjacent traffic indicated by ⟶.
6. The type of terminal system to be used will be shown on the Project Plans.
7. The 15:1 or flatter flare for the buried post anchor is based on the edge of the paved shoulder or offset line of edge of the traveled way. The length of guard railing within the 15:1 or flatter flare is based on site conditions and should be a length equal to multiples of 12'-6".
8. For details of the Buried Post End Anchor details, see Standard Plan A77I2.
9. As site conditions dictate, construct additional guard railing to shield fixed object(s). Additional guard railing length equal to multiples of 12'-6". Post spacing at 6'-3", except as specified in Note 4.
10. Layout Types 16D through 16L, shown on the A77G Series of Revised Standard Plans, are typically used on highways where guard railing is recommended to shield roadside fixed object(s) and a crashworthy end treatment is required for both directions of traffic.
11. Where placement of dike is required with guard railing, see Revised Standard Plan RSP A77C4 for dike positioning details.
12. For typical flare offsets for 25'-0" length parabola with maximum offset of 1'-0", see Revised Standard Plan RSP A77E1.
13. W6 x 15 steel post, 8'-0" in length, with 8" x 8" x 1'-2" notched wood block or notched recycled plastic blocks may be used in place of the 10" x 10" x 8'-0" wood post with 8" x 8" x 1'-2" wood block shown in the "Strengthened Railing Sections Detail".

STATE OF CALIFORNIA
DEPARTMENT OF TRANSPORTATION

METAL BEAM GUARD RAILING TYPICAL LAYOUTS FOR ROADSIDE FIXED OBJECTS

NO SCALE

RSP A77G5 DATED JUNE 6, 2008 SUPERSEDES STANDARD PLAN A77G5 DATED MAY 1, 2006 - PAGE 63 OF THE STANDARD PLANS BOOK DATED MAY 2006.

REVISED STANDARD PLAN RSP A77G5

2006 REVISED STANDARD PLAN RSP A77G5

12-10-07

Dist	COUNTY	ROUTE	POST MILES TOTAL PROJECT	SHEET No.	TOTAL SHEETS
06	Fre	168	T25.5/R32.9	38	48

Randell D. Hiatt
REGISTERED CIVIL ENGINEER

May 20, 2011
PLANS APPROVAL DATE

REGISTERED PROFESSIONAL ENGINEER
Randell D. Hiatt
No. C50200
Exp. 6-30-11
CIVIL
STATE OF CALIFORNIA

The State of California or its officers or agents shall not be responsible for the accuracy or completeness of electronic copies of this plan sheet.

To accompany plans dated 6-25-12

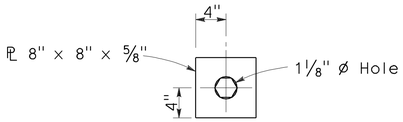

DETAIL A
CABLE CONNECTION
END PLATE

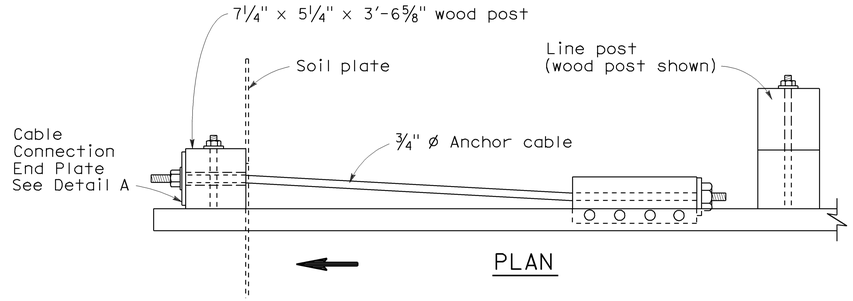

PLAN

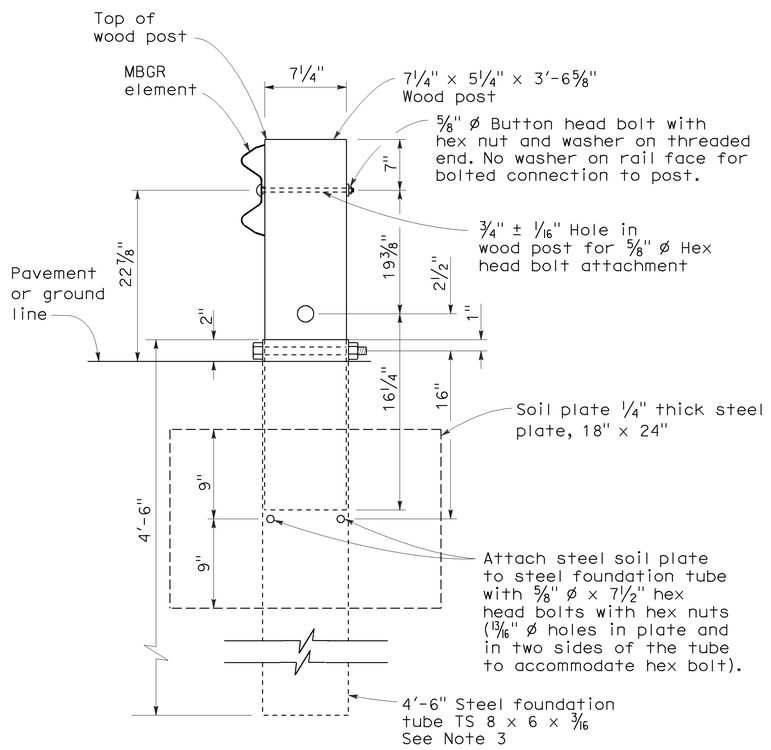

SECTION A-A

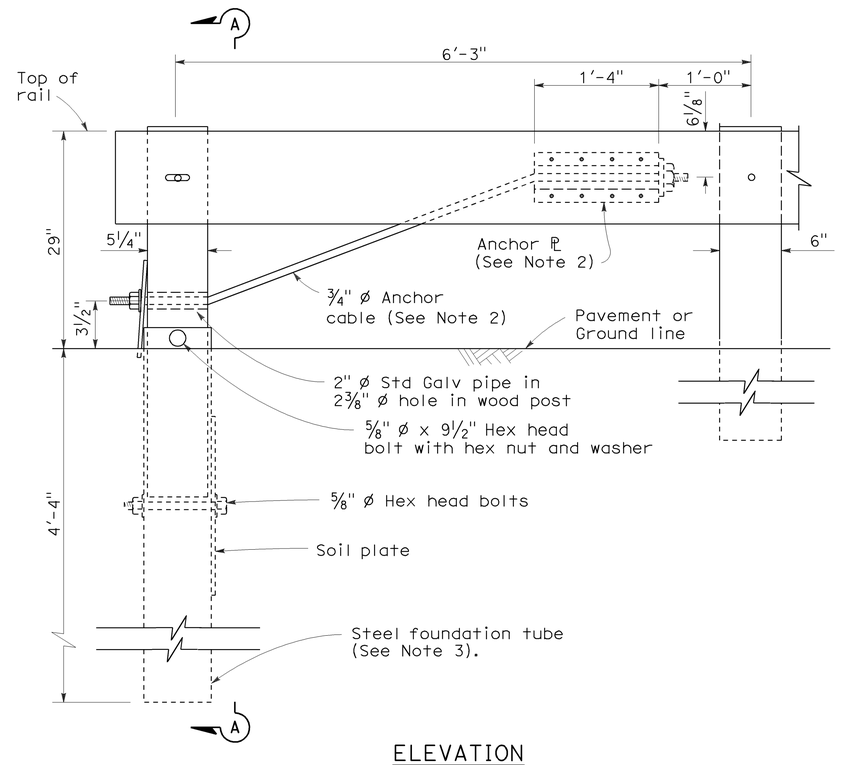

ELEVATION
END ANCHOR
ASSEMBLY (TYPE SFT)
See Note 1

NOTES:

1. See the A77E, A77F and A77G series of Standard Plans for typical use of End Anchor Assembly (Type SFT).
2. For details of the anchor plate and 3/4" cable, see Standard Plan A77H3.
3. A 6'-0" length steel foundation tube, TS 8 x 6 x 3/16, without a soil plate, may be furnished and installed in place of the 4'-6" length steel foundation tube and soil plate shown. Minimum embedment of the 6'-0" length tube shall be 5'-9". A 5/8" ø hex head bolt and nut shall be installed in the hole in the 6'-0" length tube to keep the wood post from dropping into the tube.
4. Direction of traffic indicated by ⟶.
5. Install line post, steel foundation tube and soil plate in soil.

STATE OF CALIFORNIA
DEPARTMENT OF TRANSPORTATION

METAL RAILING END ANCHOR ASSEMBLY (TYPE SFT)

NO SCALE

RSP A77H1 DATED MAY 20, 2011 SUPERSEDES STANDARD PLAN A77H1
DATED MAY 1, 2006 - PAGE 67 OF THE STANDARD PLANS BOOK DATED MAY 2006.

REVISED STANDARD PLAN RSP A77H1

2006 REVISED STANDARD PLAN RSP A77H1

DIST	COUNTY	ROUTE	POST MILES TOTAL PROJECT	SHEET NO.	TOTAL SHEETS
06	Fre	168	T25.5/R32.9	39	48

Randell D. Hiatt
REGISTERED CIVIL ENGINEER

June 6, 2008
PLANS APPROVAL DATE

REGISTERED PROFESSIONAL ENGINEER
Randell D. Hiatt
No. C50200
Exp. 6-30-09
CIVIL
STATE OF CALIFORNIA

The State of California or its officers or agents shall not be responsible for the accuracy or completeness of electronic copies of this plan sheet.

To accompany plans dated 6-25-12

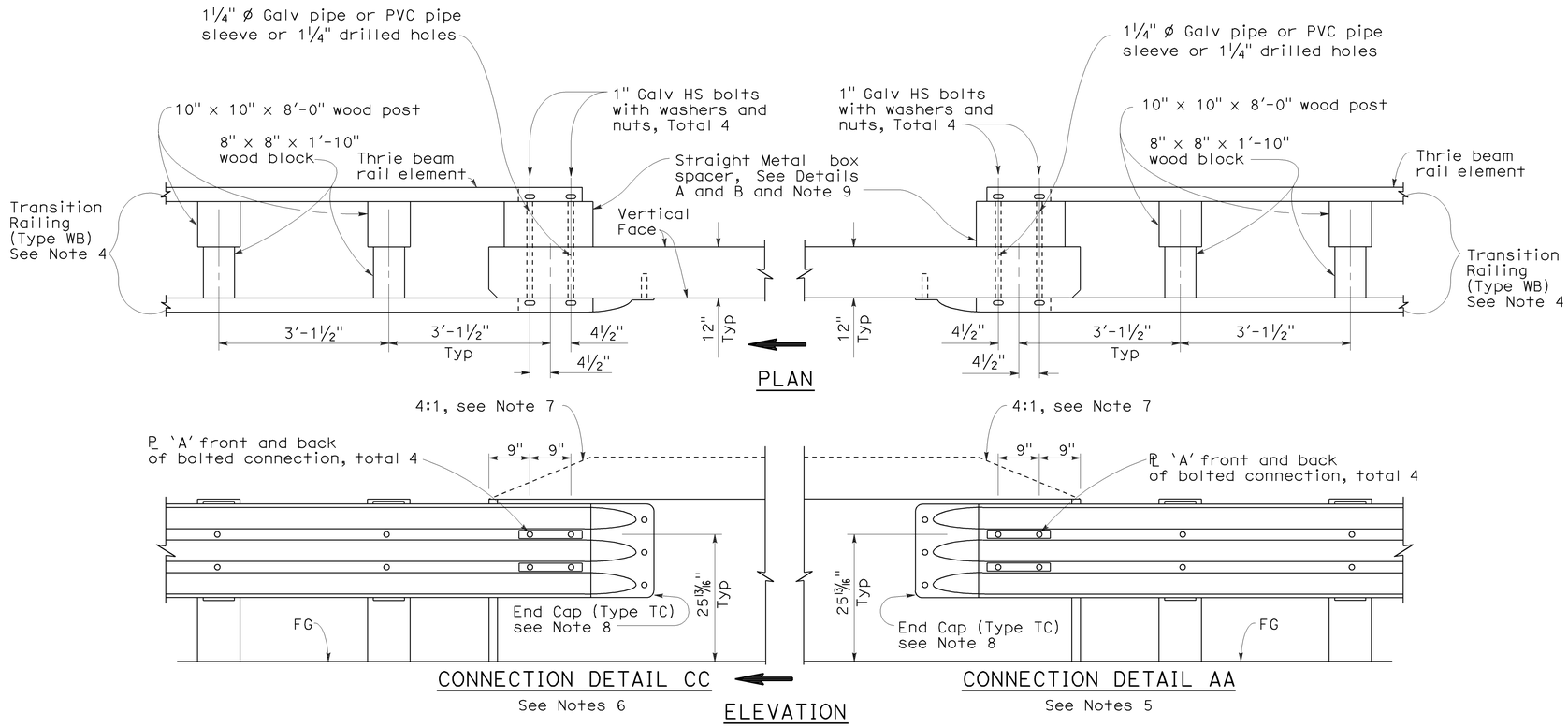

GUARD RAILING CONNECTION TO BRIDGE RAILING WITHOUT SIDEWALK

NOTES:

1. See Revised Standard Plan RSP A77J1 for additional connection details to bridges without sidewalks.
2. Additional details of posts, blocks and hardware are shown on Standard Plan A77B1, A77C1 and A77C2.
3. Direction of adjacent traffic indicated by ⟹.
4. For additional details of Transition Railing (Type WB), see Standard Plan A77J4. Transition Railing (Type WB) transitions the 12 gage w-beam standard railing section of guard railing to a heavier gage nested thrie beam railing section which is connected to the concrete bridge railing.
5. For typical use of Connection Detail AA, see Layout Types 12A and 12B on Revised Standard Plan RSP A77F1, Layout Types 12C and 12D on Standard Plan A77F2, and Layout Type 12E on Revised Standard Plan RSP A77F3.
6. For typical use of Connection Detail CC, see Layout Types 12AA and 12BB on Standard Plan A77F4 and Layout Type 12CC on Standard Plan A77F5.
7. Where the height of the bridge railing exceeds the height of the thrie beam railing by more than 1" at Connection Detail AA and connection Detail CC, taper the top of the end of the bridge railing at 4:1 to match the top elevation of the thrie beam railing.
8. For details of End Cap (Type TC), see Standard Plans A77J4.
9. See Standard Plans A77J4 for additional details regarding depth dimension for straight metal box spacer.

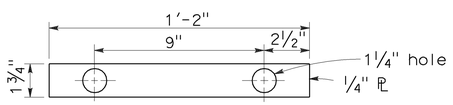

PLATE 'A'

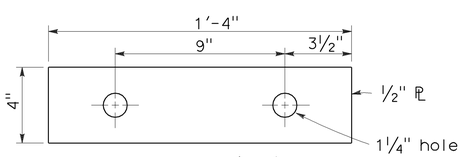

PLATE 'B'
(For backside of connection BB)

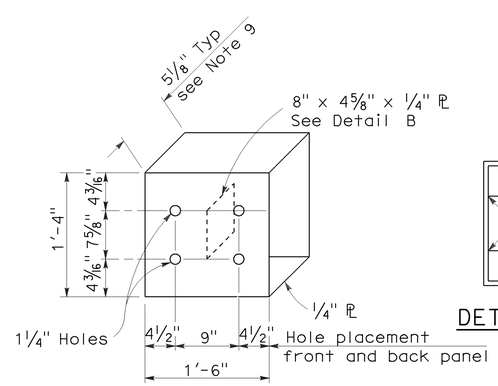

DETAIL A

STRAIGHT METAL BOX SPACER

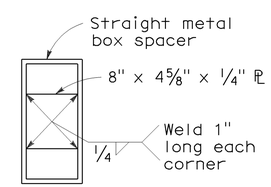

DETAIL B

STATE OF CALIFORNIA
DEPARTMENT OF TRANSPORTATION

METAL BEAM GUARD RAILING CONNECTIONS TO BRIDGE RAILINGS WITHOUT SIDEWALKS DETAILS No.2

NO SCALE

RSP A77J2 DATED JUNE 6, 2008 SUPERSEDES STANDARD PLAN A77J2 DATED MAY 1, 2006 - PAGE 73 OF THE STANDARD PLANS BOOK DATED MAY 2006.

REVISED STANDARD PLAN RSP A77J2

2006 REVISED STANDARD PLAN RSP A77J2

12-10-07

Dist	COUNTY	ROUTE	POST MILES TOTAL PROJECT	SHEET No.	TOTAL SHEETS
06	Fre	168	T25.5/R32.9	40	48

Randell D. Hiatt
REGISTERED CIVIL ENGINEER

May 20, 2011
PLANS APPROVAL DATE

REGISTERED PROFESSIONAL ENGINEER
Randell D. Hiatt
No. C50200
Exp. 6-30-11
CIVIL
STATE OF CALIFORNIA

To accompany plans dated 6-25-12

The State of California or its officers or agents shall not be responsible for the accuracy or completeness of electronic copies of this plan sheet.

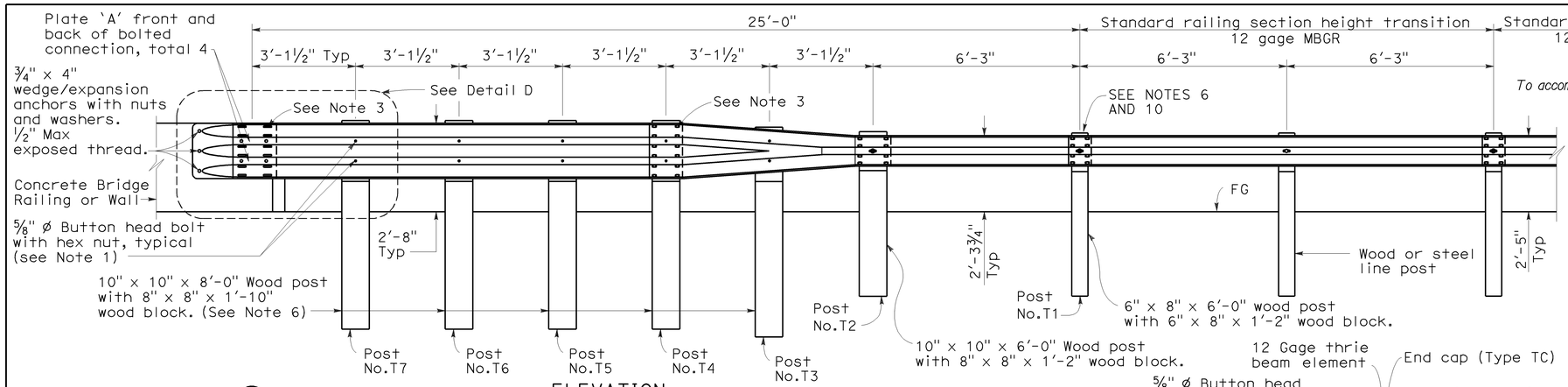

ELEVATION

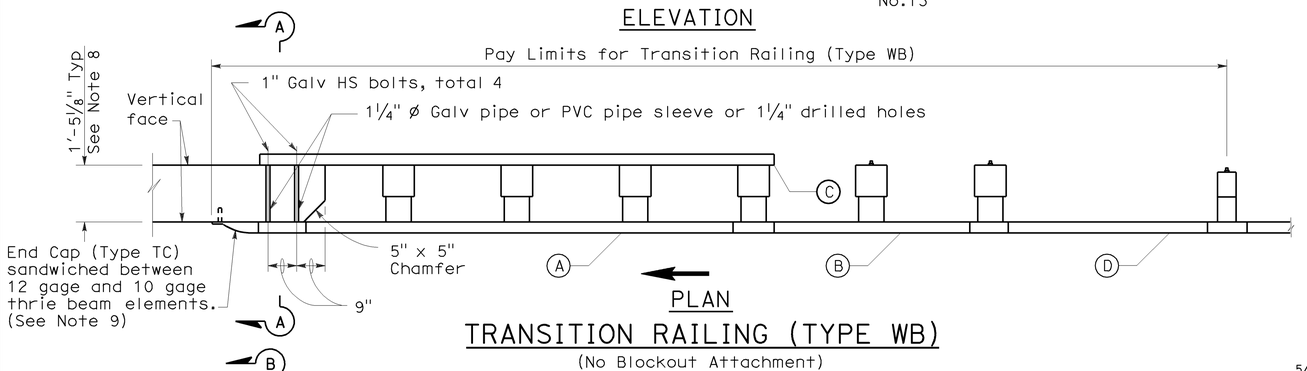

PLAN

TRANSITION RAILING (TYPE WB)

(No Blockout Attachment)

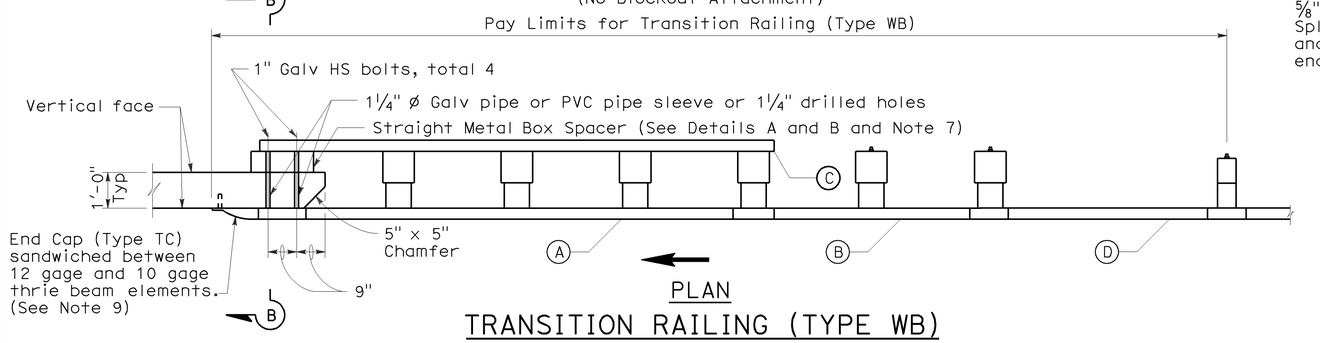

PLAN

TRANSITION RAILING (TYPE WB)

(Blockout Attachment)

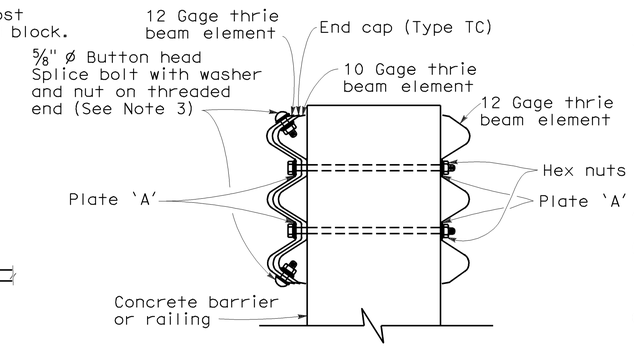

SECTION A-A

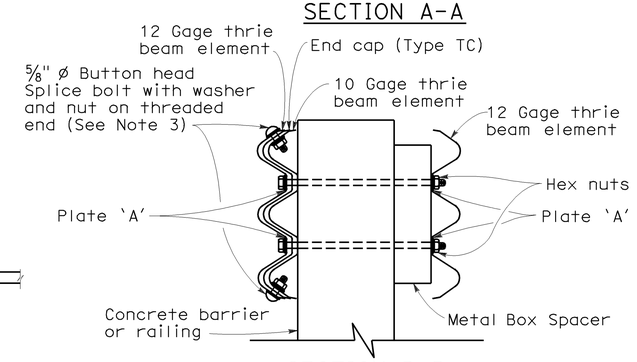

SECTION B-B

NOTES:

1. Use ⅝" ø Button head bolts and hex nuts for connections to posts. No washer on rail face for bolted connections to post.
2. The nested rail elements, end cap, and 'W' beam to thrie beam element may be spliced together prior to bolting the elements to the wood post and concrete barrier or railing.
3. Exterior splice bolt holes for rail element splices at Post No. T4 and the connection to the concrete barrier or railing shall be the standard 29/32" x 1⅛" slot size. Interior splice bolt holes at these locations may be increased up to 1¼" ø. Only the top 2 and the bottom 2 splice bolts with washers and nuts are required for rail splices at Post No. T4 and the connection to the concrete barrier or railing.
4. Direction of adjacent traffic indicated by ⟶ .
5. The top elevation of Posts No. T2 through No. T7 shall not project more than 1" above the top elevation of the rail element.
6. Typically, the railing connected to Transition Railing (Type WB) will be either standard railing section of metal beam guard railing with height transition ratio of 120:1 or an approved Caltrans end treatment attached to Post No. T1.
7. The depth of the metal box spacer varies from the 5⅛" to 1½" and is dependent on the width of the concrete railing or wall. The combined dimension for the depth of the metal box spacer plus the width of railing or wall is typically 17⅛". Where the space between the backside of the concrete railing or wall and the rear thrie beam element is less than 1½", metal plates similar to Plate 'A' are to be used as spacers.
8. Where the width of the concrete railing or wall is greater than 17⅛", wood blocks are to be used to fill the space created between the backside of Posts No. T4 through No. T7 and the rear thrie beam element. These wood blocks shall be 8" in width and 1'-2" in length. The dimension between the front thrie beam element and the rear thrie beam element is to match the width of the concrete railing or wall.
9. End cap may be installed over 12 gage and 10 gage thrie beam elements where transition railing is installed on the departure end of bridge railing.
10. Conform standard railing section height to 2'-3¾" at Post No. T1 using height transition ratio of 120:1.

LEGEND

(A) Nested thrie beam elements (one 12 gage element nested over one 10 gage element).

(B) One 10 gage "W" beam to thrie beam element.

(C) One 12 gage thrie beam element.

(D) One 10 gage "W" beam rail element (7'-3½" length)

10 gage = 0.135" thick

12 gage = 0.108" thick

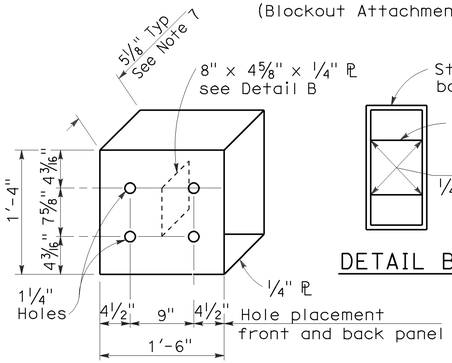

DETAIL A

STRAIGHT METAL BOX SPACER

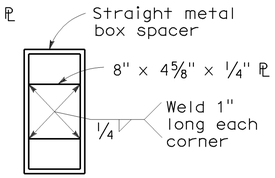

DETAIL B

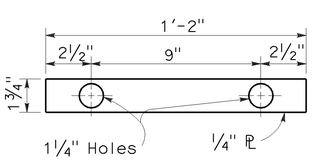

DETAIL C

PLATE 'A'

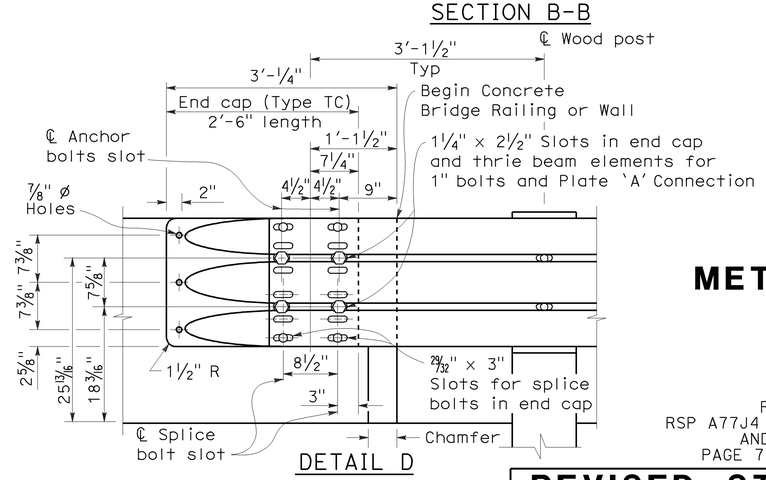

DETAIL D

STATE OF CALIFORNIA
DEPARTMENT OF TRANSPORTATION

METAL BEAM GUARD RAILING TRANSITION RAILING (TYPE WB)

NO SCALE

RSP A77J4 DATED MAY 20, 2011 SUPERSEDES
RSP A77J4 DATED JUNE 5, 2009, RSP A77J4 DATED JUNE 6, 2008
AND STANDARD PLAN A77J4 DATED MAY 1, 2006 -
PAGE 75 OF THE STANDARD PLANS BOOK DATED MAY 2006.

REVISED STANDARD PLAN RSP A77J4

2006 REVISED STANDARD PLAN RSP A77J4

5-14-09

DIST	COUNTY	ROUTE	POST MILES TOTAL PROJECT	SHEET NO.	TOTAL SHEETS
06	Fre	168	T25.5/R32.9	41	48

Raymond Don Tsztoo
REGISTERED CIVIL ENGINEER

June 6, 2008
PLANS APPROVAL DATE

REGISTERED PROFESSIONAL ENGINEER
Raymond Don Tsztoo
No. C37332
Exp. 6-30-08
CIVIL
STATE OF CALIFORNIA

The State of California or its officers or agents shall not be responsible for the accuracy or completeness of electronic copies of this plan sheet.

To accompany plans dated 6-25-12

ANNULAR AND HELICAL PROFILE

COUPLING TYPE	PIPE CORRUGATION	PIPE SIZE	W OR A	PIPE WALL THICKNESS		BAND THICKNESS		BAR AND STRAP (CSP ONLY)			ANGLE						
											DIMENSIONS		BOLTS (No.- Dia)		RIVETS ANGLE TO BAND		SPOT WELDS ANGLE TO BAND
				CSP	CAP	CSP	CAP	STRAP THICKNESS	BOLTS Dia	BAR Dia	CSP	CAP	CSP	CAP	CSP	CAP	CSP
TWO PIECE INTEGRAL FLANGE	1½′ × ¼″	6″	7″	0.064″-0.168″		0.052″							3-⅜″				
	1½′ × ¼″	8″-10″	7″	0.064″-0.168″	0.060″-0.164″	0.064″	0.060″						3-⅜″	3-⅜″			
ANNULAR	2⅔″ × ½″	THROUGH 24″	12″	0.064″-0.168″	0.060″-0.164″	0.064″	0.060″				2″ × 2″ × 3⁄16″	2″ × 2″ × 3⁄16″	3-½″	3-½″	3-⅜″	3-⅜″	3-½″
HUGGER	2⅔″ × ½″ REROLLED END	THROUGH 24″	10½″	0.064″-0.168″		0.064″		0.079″	½″	⅞″							

SPIRAL RIB PROFILE

COUPLING TYPE	PIPE CORRUGATION	PIPE SIZE	W	PIPE WALL THICKNESS		BAND THICKNESS		BAR AND STRAP (SSRP ONLY)			ANGLE						
											DIMENSIONS		BOLTS (No.- Dia)		RIVETS ANGLE TO BAND		SPOT WELDS ANGLE TO BAND
				SSRP	ASRP	SSRP	ASRP	STRAP THICKNESS	BOLTS Dia	BAR Dia	SSRP	ASRP	SSRP	ASRP	SSRP	ASRP	SSRP
ANNULAR	2⅔″ × ½″ * REROLLED END	24″	12″	0.064″-0.168″	0.060″-0.164″	0.064″	0.060″				2″ × 2″ × 3⁄16″	2″ × 2″ × 3⁄16″	3-½″	3-½″	3-⅜″	3-⅜″	3-½″
HUGGER	2⅔″ × ½″ * REROLLED END	24″	10½″	0.064″-0.168″		0.064″		0.079″	½″	⅞″							

* See Note 12.

12. All profiles of Spiral Rib Pipe (¾″ × ¾″ ribs at 7½″ pitch and ¾″ × 1″ ribs at 11½″ pitch in both steel and aluminum and ¾″ × 1″ ribs at 8½″ pitch in steel only) shall be manufactured with rerolled ends. Corrugation profile of the rerolled ends shall be 2⅔″ × ½″ annual corrugations with a minimum of two full corrugations at each end.

NOTES:

1. All ferrous metal coupling band connection hardware shall be galvanized or electro-plated in accordance with the Standard Specifications.
2. For helically corrugated coupling bands, the connection angles may be oriented parallel to the pipe axis, provided connecting holes are slotted lengthwise sufficiently to allow adjustment for the helix angle.
3. Tension strap may be connected to band with either spot welds or fillet welds that develop minimum required strength of strap.
4. Use 1¼″ gage line dimension on attached angle leg for rivets and spot welds.
5. Band thickness shall not be less than:
   a. 3 standard thicknesses lighter than the thickness of the pipe for Corrugated Steel Pipe.
   b. 2 standard thicknesses lighter than the thickness of the pipe and in no case lighter than 0.060″ for Corrugated Aluminum Pipe.
6. Dimensions, thicknesses and strengths shown are minimum.
7. For pipe arches use same width band as for round pipe of equal periphery.
8. Fillet welds of equivalent strenght may be substituted for spot welds or rivets.
9. Spot welds shall develop minimum required strength of strap.
10. Pipe with rerolled ends having at least two 2⅔″ × ½″ annular corrugations at each end with or without an upturned flange may be connected with any of the annular coupling bands shown for pipe of the same diameter and wall thickness and having 2⅔″ × ½″ corrugations.
11. For downdrain applications, two piece integral flange couplers shall have factory applied sleeve type rubber gaskets with a minimum length of 7″ measured along the length of the pipe.

STATE OF CALIFORNIA
DEPARTMENT OF TRANSPORTATION

CORRUGATED METAL PIPE COUPLING DETAILS No. 7 DOWNDRAIN

NO SCALE

RSP D97G DATED JUNE 6, 2008 SUPERSEDES STANDARD PLAN D97G
DATED MAY 1, 2006 - PAGE 189 OF THE STANDARD PLANS BOOK DATED MAY 2006.

REVISED STANDARD PLAN RSP D97G

2006 REVISED STANDARD PLAN RSP D97G

4-4-08

DIST	COUNTY	ROUTE	POST MILES TOTAL PROJECT	SHEET NO.	TOTAL SHEETS
06	Fre	168	T25.5/R32.9	42	48

Randell D. Hiatt
REGISTERED CIVIL ENGINEER

June 6, 2008
PLANS APPROVAL DATE

REGISTERED PROFESSIONAL ENGINEER
Randell D. Hiatt
No. C50200
Exp. 6-30-09
CIVIL
STATE OF CALIFORNIA

The State of California or its officers or agents shall not be responsible for the accuracy or completeness of electronic copies of this plan sheet.

To accompany plans dated 6-25-12

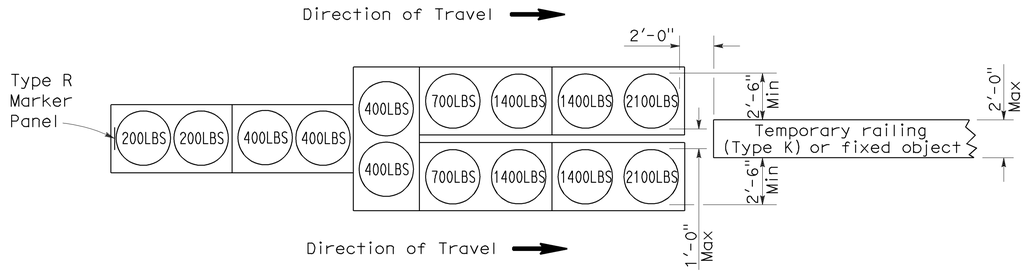

ARRAY 'TU14'

Approach speed 45 mph or more

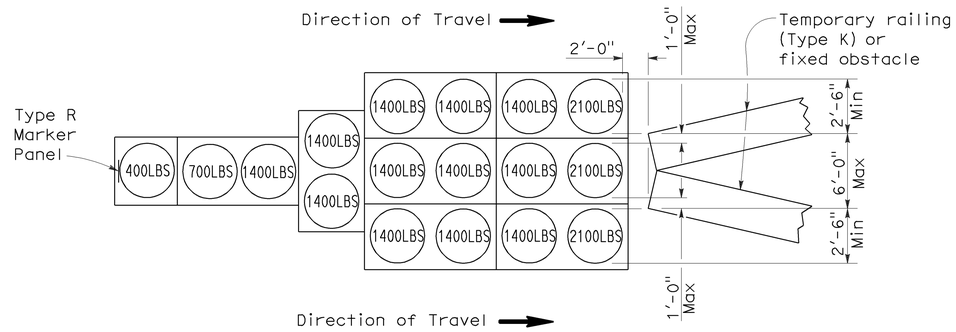

ARRAY 'TU17'

Approach speed less than 45 mph

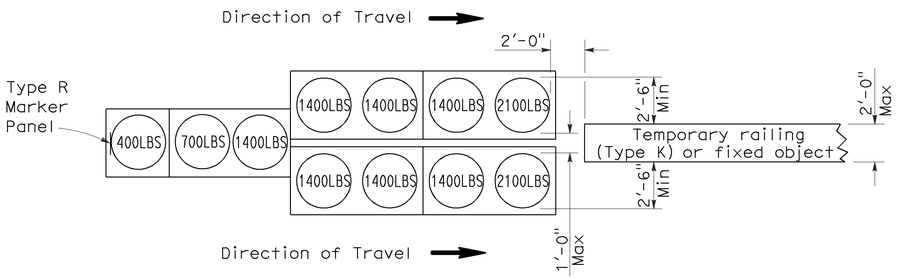

ARRAY 'TU11'

Approach speed less than 45 mph

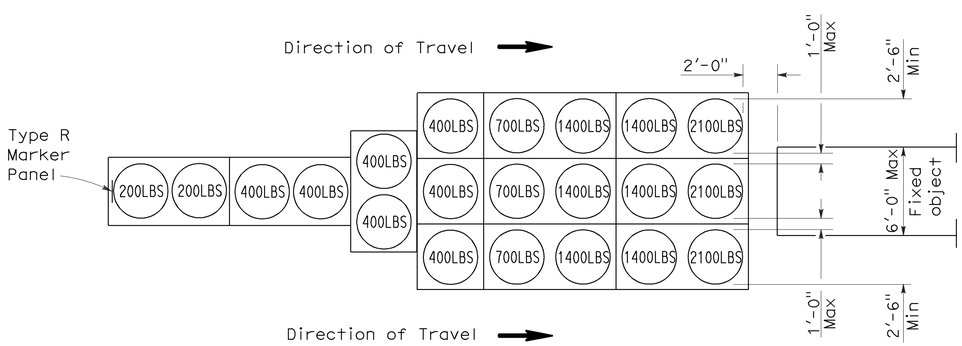

ARRAY 'TU21'

Approach speed 45 mph or more

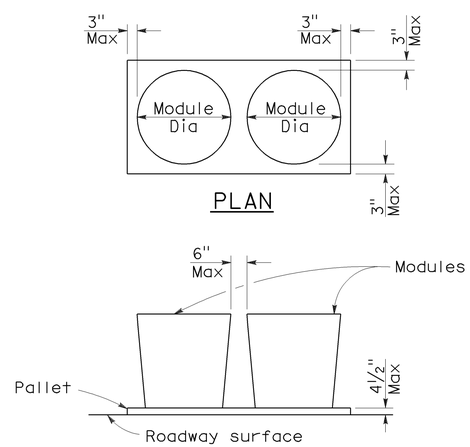

CRASH CUSHION PALLET DETAIL

See Note 7

NOTES:

1. (XXX) Indicates sand filled module location and weight of sand in pounds for each module. Module spacing is based on the greater diameter of the module.
2. All sand weights are nominal.
3. Temporary crash cushion arrays shall not encroach on the traveled way.
4. Place the top of Type R marker panel 1" below the module lid.
5. Refer to Standard Plan A73B for marker details.
6. Approach speeds indicated conform to NCHRP 350 Report criteria.
7. Use of pallets is optional.

STATE OF CALIFORNIA
DEPARTMENT OF TRANSPORTATION

TEMPORARY CRASH CUSHION, SAND FILLED (UNIDIRECTIONAL)

NO SCALE

RSP T1A DATED JUNE 6, 2008 SUPERSEDES STANDARD PLAN T1A
DATED MAY 1, 2006 - PAGE 211 OF THE STANDARD PLANS BOOK DATED MAY 2006.

REVISED STANDARD PLAN RSP T1A

2006 REVISED STANDARD PLAN RSP T1A

5-15-08

DIST	COUNTY	ROUTE	POST MILES TOTAL PROJECT	SHEET NO.	TOTAL SHEETS
06	Fre	168	T25.5/R32.9	43	48

Randell D. Hiatt
REGISTERED CIVIL ENGINEER

June 6, 2008
PLANS APPROVAL DATE

REGISTERED PROFESSIONAL ENGINEER
Randell D. Hiatt
No. C50200
Exp. 6-30-09
CIVIL
STATE OF CALIFORNIA

The State of California or its officers or agents shall not be responsible for the accuracy or completeness of electronic copies of this plan sheet.

To accompany plans dated 6-25-12

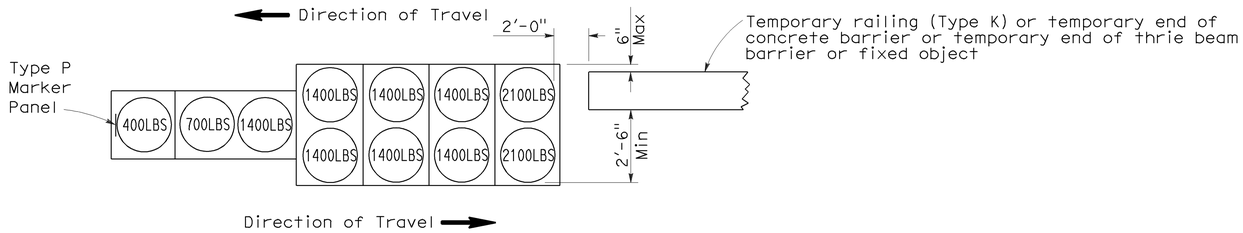

ARRAY 'TB11'

Approach speed less than 45 mph

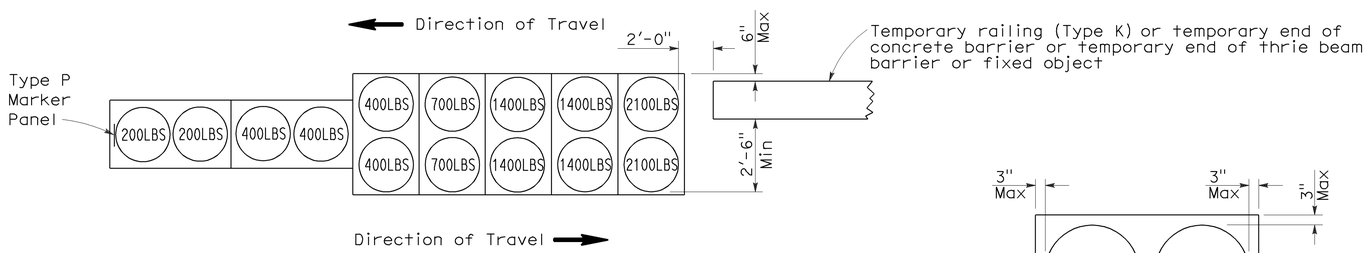

ARRAY 'TB14'

Approach speed 45 mph or more

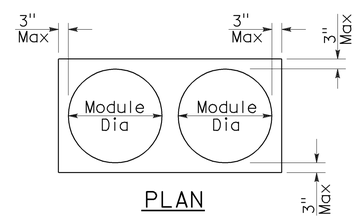

PLAN

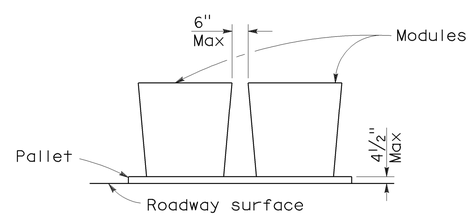

ELEVATION

CRASH CUSHION PALLET DETAIL

See Note 7

NOTES:

1. (XXX) Indicates sand filled module location and weight of sand in pounds for each module. Module spacing is based on the greater diameter of the module.
2. All sand weights are nominal.
3. Temporary crash cushion arrays shall not encroach on the traveled way.
4. Place the Type P marker panel so that the bottom of the panel rests upon the pallet.
5. Refer to Standard Plan A73B for marker details.
6. Approach speeds indicated conform to NCHRP 350 Report criteria.
7. Use of pallets is optional.

STATE OF CALIFORNIA
DEPARTMENT OF TRANSPORTATION

TEMPORARY CRASH CUSHION, SAND FILLED (BIDIRECTIONAL)

NO SCALE

RSP T1B DATED JUNE 6, 2008 SUPERSEDES STANDARD PLAN T1B
DATED MAY 1, 2006 - PAGE 212 OF THE STANDARD PLANS BOOK DATED MAY 2006.

REVISED STANDARD PLAN RSP T1B

2006 REVISED STANDARD PLAN RSP T1B

5-15-08

DIST	COUNTY	ROUTE	POST MILES TOTAL PROJECT	SHEET NO.	TOTAL SHEETS
06	Fre	168	T25.5/R32.9	44	48

Randell D. Hiatt
REGISTERED CIVIL ENGINEER

June 6, 2008
PLANS APPROVAL DATE

REGISTERED PROFESSIONAL ENGINEER
Randell D. Hiatt
No. C50200
Exp. 6-30-09
CIVIL
STATE OF CALIFORNIA

The State of California or its officers or agents shall not be responsible for the accuracy or completeness of electronic copies of this plan sheet.

To accompany plans dated 6-25-12

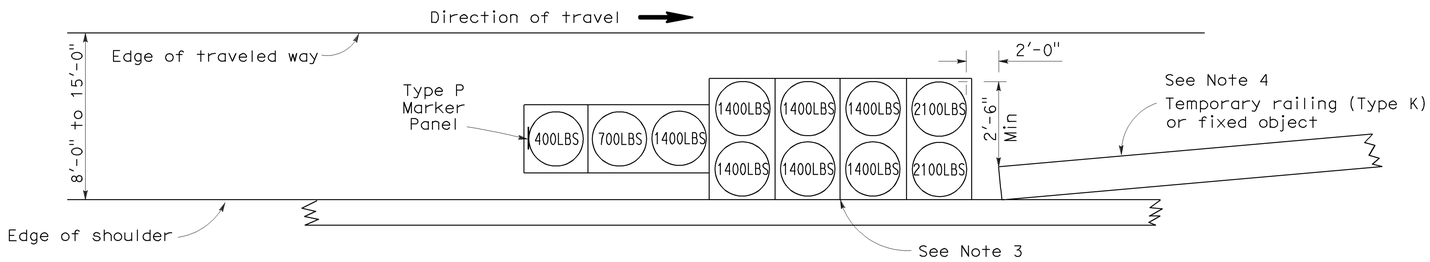

ARRAY 'TS11'

Approach speed less than 45 mph
See Note 9

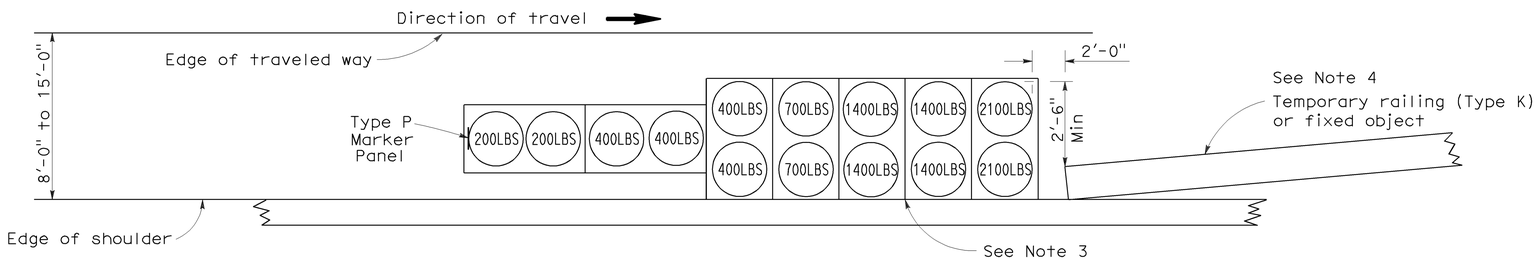

ARRAY 'TS14'

Approach speed 45 mph or more
See Note 9

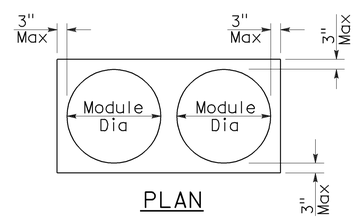

PLAN

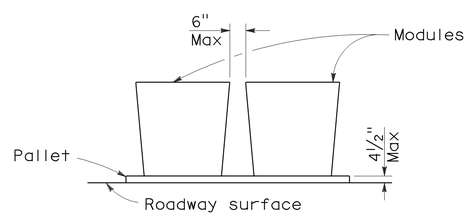

ELEVATION

CRASH CUSHION PALLET DETAIL

See Note 11

NOTES:

1. (XXX) Indicates sand filled module location and weight of sand in pounds for each module. Module spacing is based on the greater diameter of the module.
2. All sand weights are nominal.
3. The temporary crash cushion arrays shown on this plan shall be used only in locations where there will be traffic on one side of the temporary crash cushion array.
4. If the fixed object or approach end of the temporary railing is less than 15'-0" from the edge of traveled way, a temporary crash cushion is required in a construction or work zone.
5. Temporary crash cushion arrays shall not encroach on the traveled way.
6. Arrays for median shoulders shall conform to details shown on this plan for outside shoulders.
7. Place the Type P marker panel so that the bottom of the panel rests upon the pallet and faces traffic.
8. Refer to Standard Plan A73B for marker details.
9. For shoulder widths less than 8'-0", appropriate approved crash cushion protection, other than sand filled modules, shall be provided at fixed objects and at approach ends of temporary railing. The specific type of crash cushion shall be as shown on the project plans or as specified in the Special Provisions, or if not shown on the project plans or specified in the Special Provisions, shall be as approved by the Engineer.
10. Approach speeds indicated conform to NCHRP 350 Report criteria.
11. Use of pallets is optional.

STATE OF CALIFORNIA
DEPARTMENT OF TRANSPORTATION

TEMPORARY CRASH CUSHION, SAND FILLED (SHOULDER INSTALLATIONS)

NO SCALE

RSP T2 DATED JUNE 6, 2008 SUPERSEDES STANDARD PLAN T2
DATED MAY 1, 2006 - PAGE 213 OF THE STANDARD PLANS BOOK DATED MAY 2006.

REVISED STANDARD PLAN RSP T2

2006 REVISED STANDARD PLAN RSP T2

5-15-08

Dist	COUNTY	ROUTE	POST MILES TOTAL PROJECT	SHEET No.	TOTAL SHEETS
06	Fre	168	T25.5/R32.9	45	48

Randell D. Hiatt
REGISTERED CIVIL ENGINEER

May 20, 2011
PLANS APPROVAL DATE

REGISTERED PROFESSIONAL ENGINEER
Randell D. Hiatt
No. C50200
Exp. 6-30-11
CIVIL
STATE OF CALIFORNIA

The State of California or its officers or agents shall not be responsible for the accuracy or completeness of electronic copies of this plan sheet.

To accompany plans dated 6-25-12

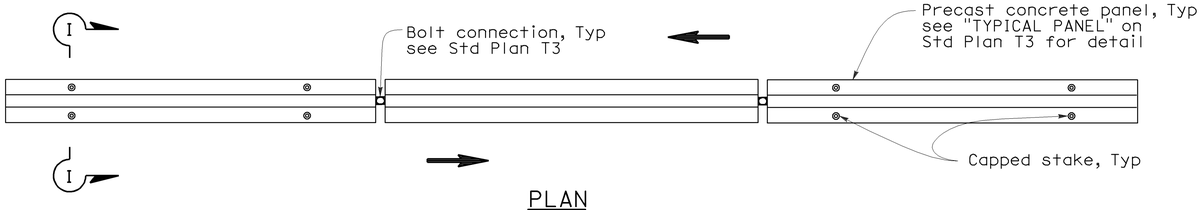

PLAN

RAILING STAKING CONFIGURATION FOR TWO-WAY TRAFFIC

See Note 1

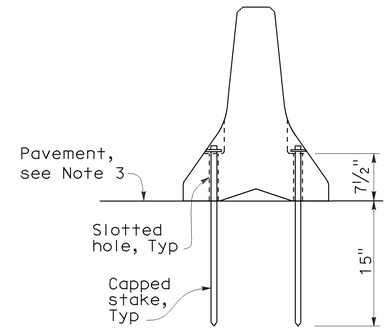

SECTION I-I

NOTES:

1. Where Type K Temporary Railing is placed as a temporary or long term barrier in two-way traffic on highways with less than 24" from the edge of traveled way, use four capped stakes per every other panel with end panels staked.
2. Where Type K Temporary Railing is placed 3" to 24" from the edge of an excavation on highways, use two capped stakes per panel along the traffic side.
3. Staked Type K Temporary Railing must be supported by at least 4" thick concrete, hot mix asphalt or existing asphalt concrete pavement.
4. The minimum yield strength for the washer must be 60,000 psi.
5. Direction of adjacent traffic indicated by ⟶.

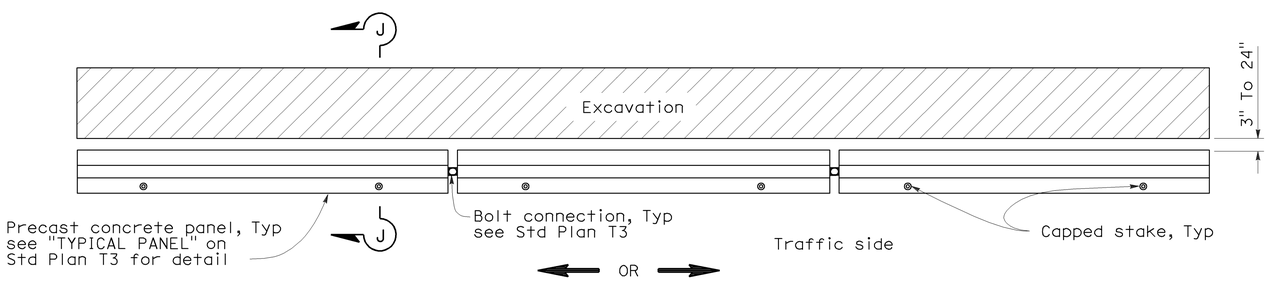

PLAN

RAILING STAKING CONFIGURATION ADJACENT TO AN EXCAVATION

See Note 2

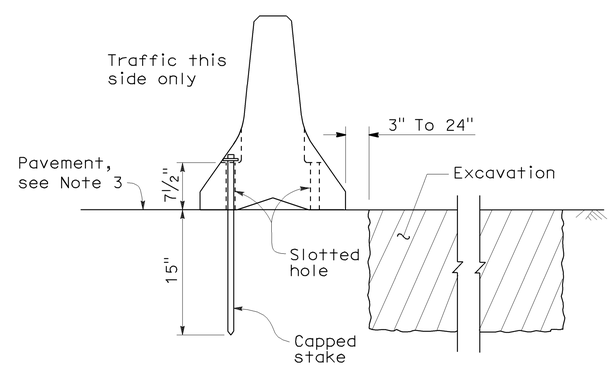

SECTION J-J

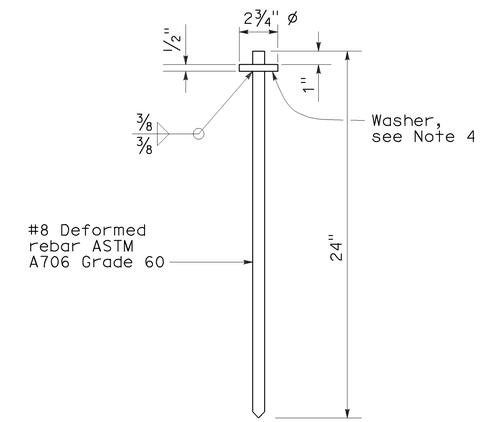

CAPPED STAKE DETAIL

STATE OF CALIFORNIA
DEPARTMENT OF TRANSPORTATION

TEMPORARY RAILING (TYPE K)

NO SCALE

NSP T3A DATED MAY 20, 2011 SUPPLEMENTS
THE STANDARD PLANS BOOK DATED MAY 2006.

NEW STANDARD PLAN NSP T3A

2006 NEW STANDARD PLAN NSP T3A

DIST	COUNTY	ROUTE	POST MILES TOTAL PROJECT	SHEET NO.	TOTAL SHEETS
06	Fre	168	T25.5/R32.9	46	48

REGISTERED CIVIL ENGINEER

November 17, 2006
PLANS APPROVAL DATE

REGISTERED PROFESSIONAL ENGINEER — Greg W. Edwards — No. C36386 — Exp. 6-30-08 — CIVIL — STATE OF CALIFORNIA

The State of California or its officers or agents shall not be responsible for the accuracy or completeness of electronic copies of this plan sheet.

To accompany plans dated 6-25-12

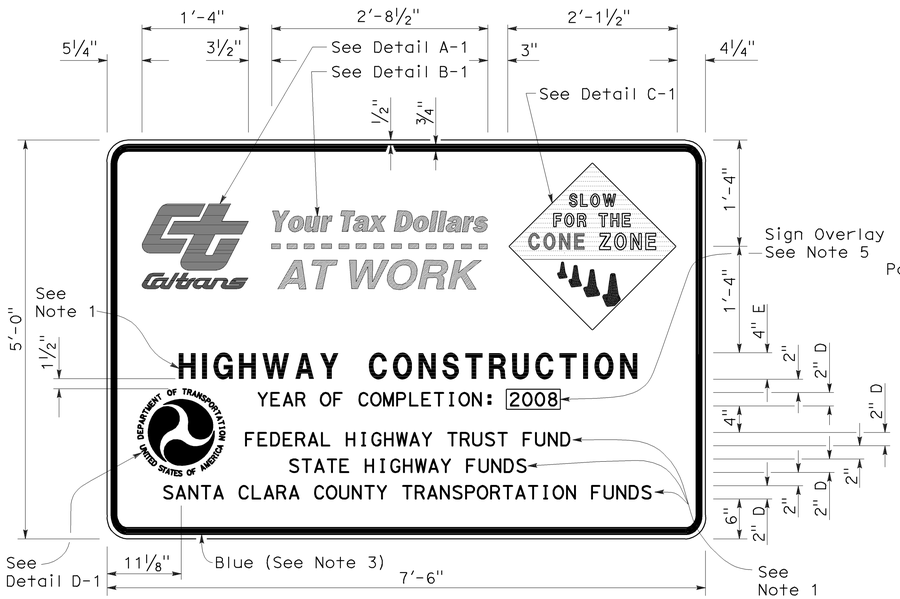

TYPE 1

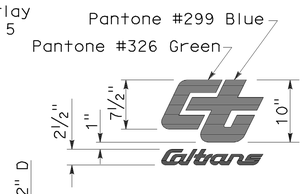

DETAIL A-1

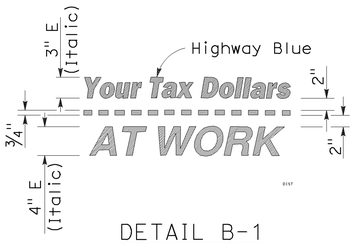

DETAIL B-1
(See Note 3)

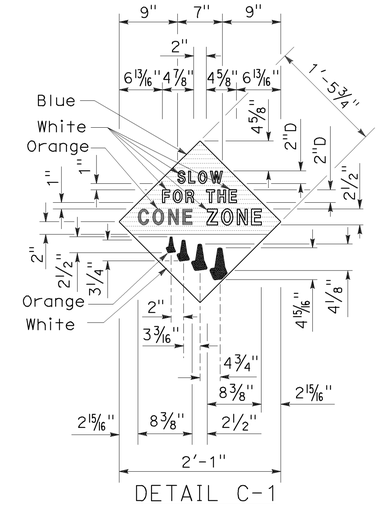

DETAIL C-1
(See Note 4)

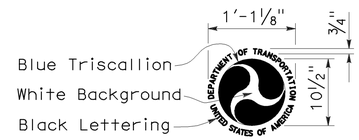

DETAIL D-1
(See Note 6)

NOTES:

1. The sign messages shown for type of project and fund types are examples only. See the Special Provisions for the applicable type of project and fund type messages to be used.
2. Except as otherwise shown, the legend of sign shall be black on a white background (non-reflective).
3. The border of the signs and details "B-1" and "B-2" shall be blue (non-reflective).
4. The diamond in details "C-1" and "C-2" shall be blue for the background of message, " SLOW FOR THE CONE ZONE", and white background for the orange cones. The color and type of font for the "SLOW FOR THE CONE ZONE" message shall be: "SLOW" white D; "FOR THE" white D; "CONE" orange Arial font; "ZONE" white Arial font.
5. Year of completion of project construction shown on the overlay is an example only. See the Special Provisions.
6. Use when the Project involves Federal Highway Trust Fund.

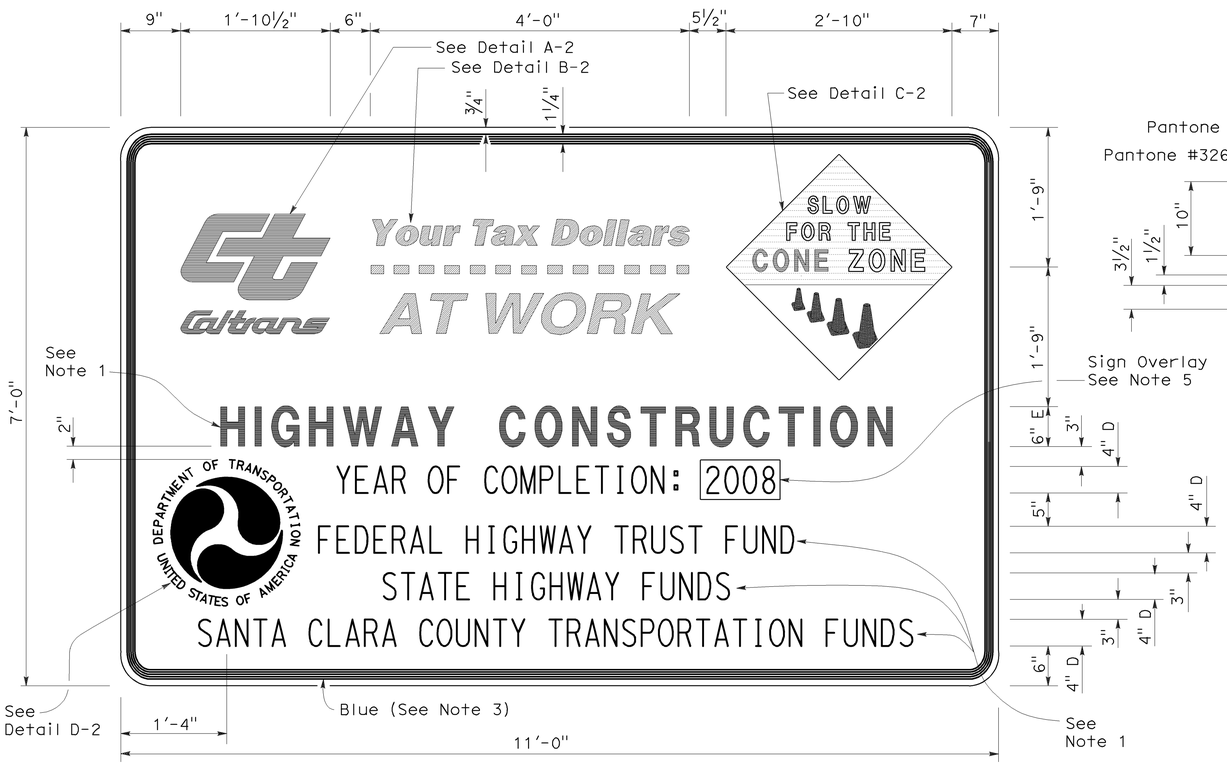

TYPE 2

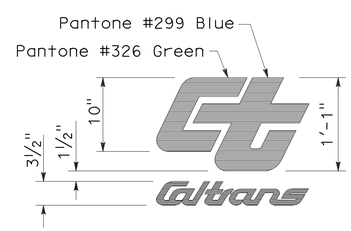

DETAIL A-2

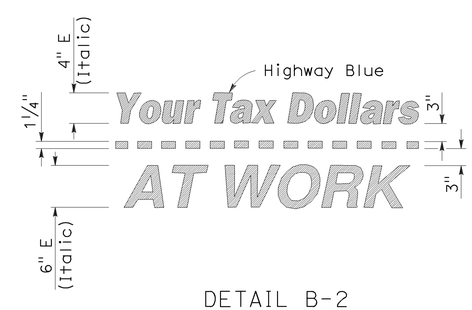

DETAIL B-2
(See Note 3)

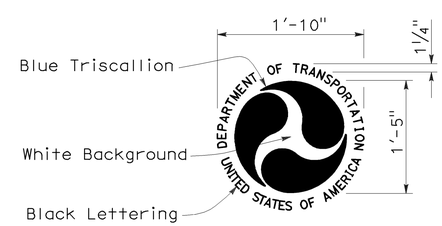

DETAIL D-2
(See Note 6)

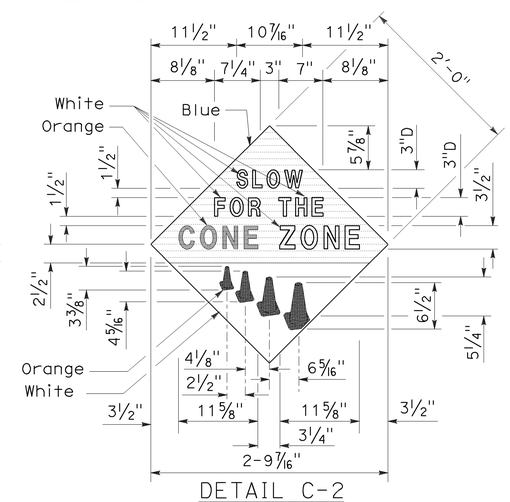

DETAIL C-2
(See Note 4)

STATE OF CALIFORNIA
DEPARTMENT OF TRANSPORTATION

CONSTRUCTION PROJECT FUNDING IDENTIFICATION SIGNS

NO SCALE

RSP T7 DATED NOVEMBER 17, 2006 SUPERSEDES STANDARD PLAN T7
DATED MAY 1, 2006 - PAGE 217 OF THE STANDARD PLANS BOOK DATED MAY 2006.

REVISED STANDARD PLAN RSP T7

2006 REVISED STANDARD PLAN RSP T7

9-7-06

DIST	COUNTY	ROUTE	POST MILES TOTAL PROJECT	SHEET NO.	TOTAL SHEETS
06	Fre	168	T25.5/R32.9	47	48

LICENSED LANDSCAPE ARCHITECT

April 3, 2009
PLANS APPROVAL DATE

LICENSED LANDSCAPE ARCHITECT — Robert B. Schott 3635 — Registration Expiration 11-30-10 — Renewal Date 2-25-09 — Date — STATE OF CALIFORNIA

The State of California or its officers or agents shall not be responsible for the accuracy or completeness of electronic copies of this plan sheet.

To accompany plans dated 6-25-12

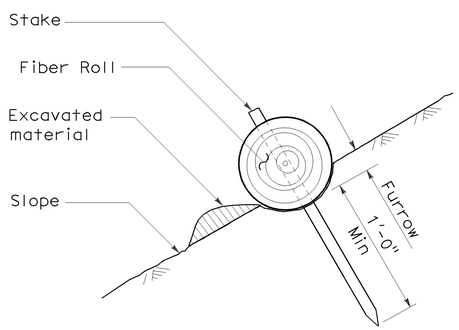

SECTION

TEMPORARY FIBER ROLL (TYPE 1)

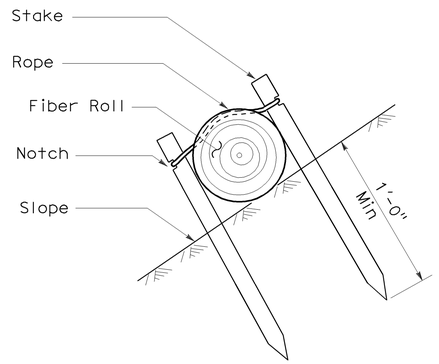

SECTION

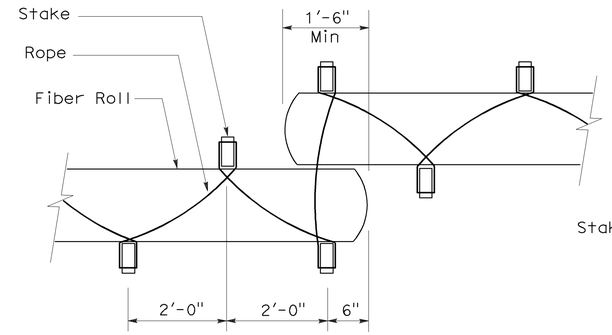

PLAN

TEMPORARY FIBER ROLL (TYPE 2)

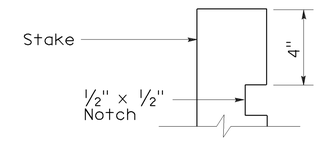

ELEVATION

STAKE NOTCH DETAIL

NOTES:

1. Temporary fiber roll spacing varies depending upon slope inclination.
2. Installations shown in the perspectives are for slope inclination of 10:1 and steeper.

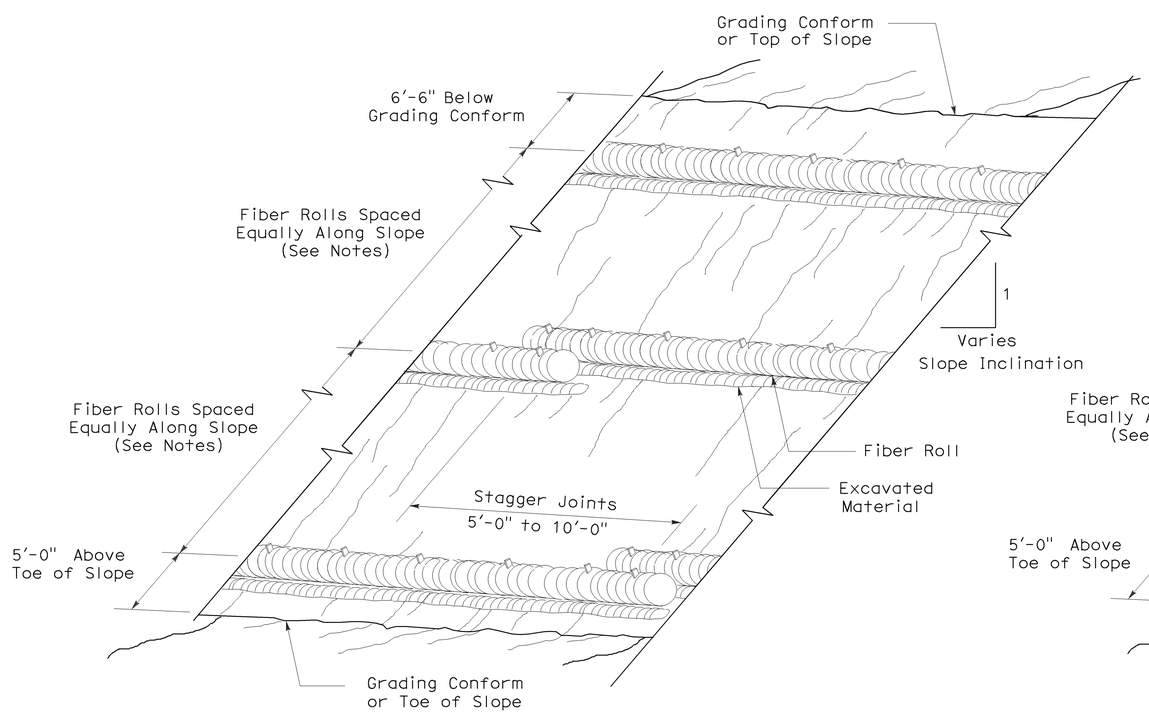

PERSPECTIVE

TEMPORARY FIBER ROLL (TYPE 1)

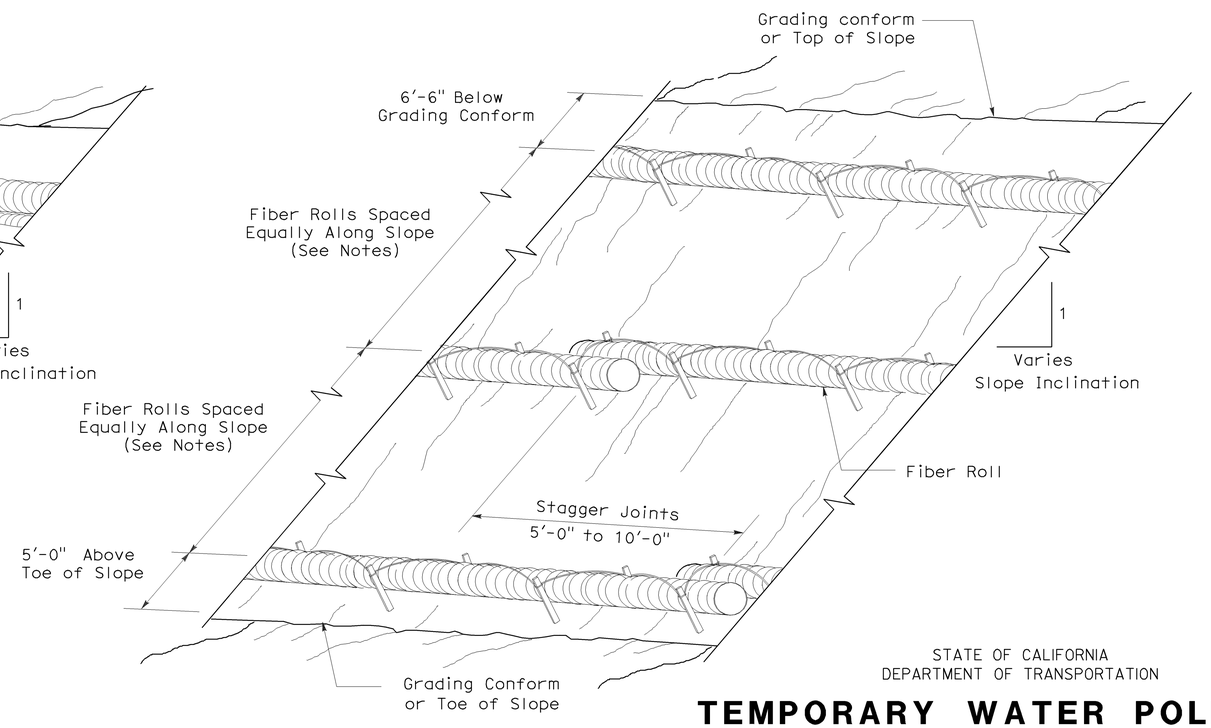

PERSPECTIVE

TEMPORARY FIBER ROLL (TYPE 2)

STATE OF CALIFORNIA
DEPARTMENT OF TRANSPORTATION

TEMPORARY WATER POLLUTION CONTROL DETAILS (TEMPORARY FIBER ROLL)

NO SCALE

RSP T56 DATED APRIL 3, 2009 SUPERSEDES STANDARD PLAN T56
DATED MAY 1, 2006 - PAGE 232 OF THE STANDARD PLANS BOOK DATED MAY 2006.

REVISED STANDARD PLAN RSP T56

2006 REVISED STANDARD PLAN RSP T56

2-23-09

DIST	COUNTY	ROUTE	POST MILES TOTAL PROJECT	SHEET NO.	TOTAL SHEETS
06	Fre	168	T25.5/R32.9	48	48

LICENSED LANDSCAPE ARCHITECT

April 3, 2009
PLANS APPROVAL DATE

LICENSED LANDSCAPE ARCHITECT
Robert B. Schott 3625
Signature
11-30-10
Renewal Date
2-25-09
Date
STATE OF CALIFORNIA

The State of California or its officers or agents shall not be responsible for the accuracy or completeness of electronic copies of this plan sheet.

To accompany plans dated 6-25-12

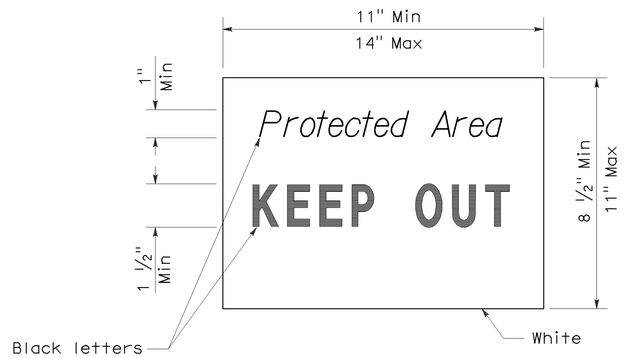

SIGN DETAIL

NOTE:

1. Temporary silt fence and temporary straw bale barrier shown for reference purposes only.

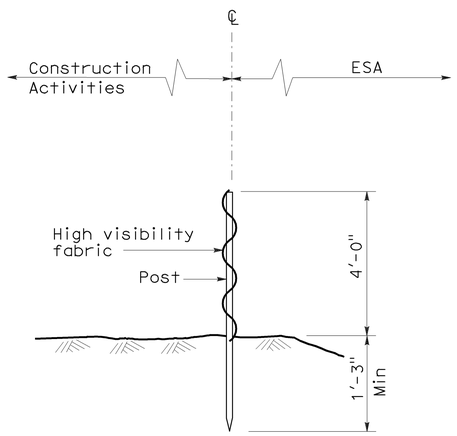

SECTION
TEMPORARY FENCE (TYPE ESA)

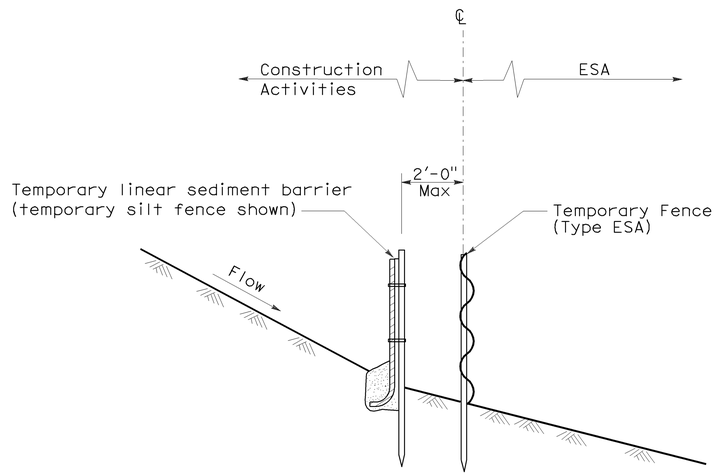

SECTION
PLACEMENT DETAIL
FOR TEMPORARY LINEAR SEDIMENT BARRIER
USED WITH TEMPORARY
FENCE (TYPE ESA)
(See Note 1)

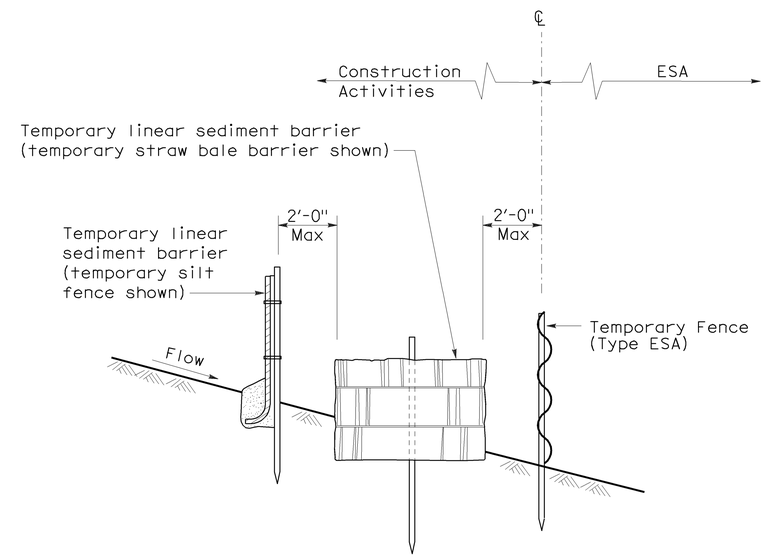

SECTION
PLACEMENT DETAIL
FOR TEMPORARY SILT FENCE
AND TEMPORARY STRAW BALE BARRIER
USED WITH TEMPORARY FENCE (TYPE ESA)
(See Note 1)

STATE OF CALIFORNIA
DEPARTMENT OF TRANSPORTATION

TEMPORARY WATER POLLUTION CONTROL DETAILS [TEMPORARY FENCE (TYPE ESA)]

NO SCALE

NSP T65 DATED APRIL 3, 2009 SUPPLEMENTS
THE STANDARD PLANS BOOK DATED MAY 2006.

NEW STANDARD PLAN NSP T65

2006 NEW STANDARD PLAN NSP T65

1-7-09