Dist	COUNTY	ROUTE	POST MILES TOTAL PROJECT	SHEET No.	TOTAL SHEETS
06	Ker	99	17.0/22.1	1	201

INDEX OF PLANS

SHEET No.	DESCRIPTION
1	TITLE AND LOCATION MAP
2	TYPICAL CROSS SECTIONS
3	KEY MAP AND LINE INDEX
4-22	LAYOUTS
23-41	PROFILES AND SUPERELEVATION DIAGRAM
42-43	CONSTRUCTION DETAILS
44-75	DRAINAGE PLANS, PROFILES, DETAILS AND QUANTITIES
76	UTILITY PLANS
77	CONSTRUCTION AREA SIGNS
78-80	STAGE CONSTRUCTION PLANS
81-108	TRAFFIC HANDLING PLANS AND QUANTITIES
109-118	PAVEMENT DELINEATION AND SIGN PLANS
119	PAVEMENT DELINEATION QUANTITIES
120-122	SIGN DETAILS AND QUANTITIES
123-123A	SUMMARY OF QUANTITIES
124-132	ELECTRICAL PLANS
133-177	REVISED AND NEW STANDARD PLANS

STRUCTURE PLANS

179-189	PACHECO ROAD UNDERCROSSING Br No. 50-0241R/L
190-201	SOUTH BAKERSFIELD OVERHEAD Br No. 50-0242R/L

THE STANDARD PLANS LIST APPLICABLE TO THIS CONTRACT IS INCLUDED IN THE NOTICE TO BIDDERS AND SPECIAL PROVISIONS BOOK.

STATE OF CALIFORNIA

DEPARTMENT OF TRANSPORTATION

PROJECT PLANS FOR CONSTRUCTION ON

STATE HIGHWAY

IN KERN COUNTY
IN BAKERSFIELD
FROM 0.5 MILE SOUTH OF ROUTE 119
TO WILSON ROAD

TO BE SUPPLEMENTED BY STANDARD PLANS DATED MAY 2006

LOCATION MAP

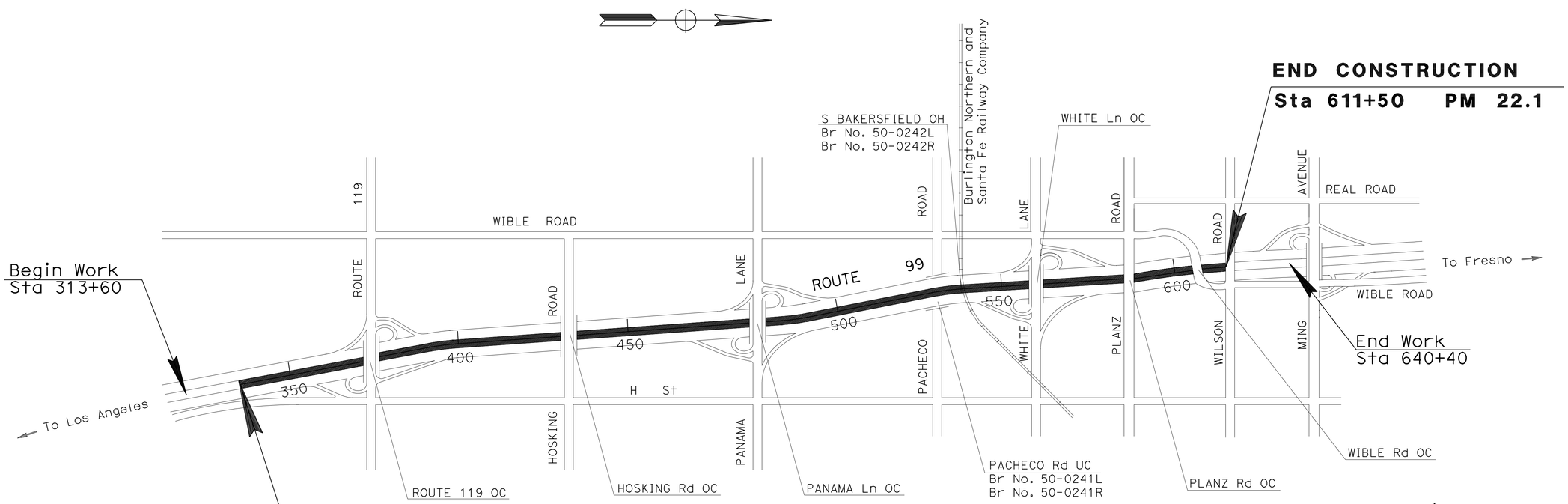

1 REVISED PER ADDENDUM No. 1 DATED SEPTEMBER 7, 2012

NO SCALE

THE CONTRACTOR SHALL POSSESS THE CLASS (OR CLASSES) OF LICENSE AS SPECIFIED IN THE "NOTICE TO BIDDERS."

PROJECT MANAGER: PAUL PINEDA

DESIGN ENGINEER: RICHARD HELGESON

12/05/11
PROJECT ENGINEER REGISTERED CIVIL ENGINEER — DATE

REGISTERED PROFESSIONAL ENGINEER — JAFAR RAVANBAKHSH — No. 76341 — Exp. 12/31/12 — CIVIL — STATE OF CALIFORNIA

May 14, 2012
PLANS APPROVAL DATE

THE STATE OF CALIFORNIA OR ITS OFFICERS OR AGENTS SHALL NOT BE RESPONSIBLE FOR THE ACCURACY OR COMPLETENESS OF SCANNED COPIES OF THIS PLAN SHEET.

CONTRACT No.	06-0G8304
PROJECT ID	0600020165

LAST REVISION 02-08-12 — DATE PLOTTED => 07-SEP-2012 — TIME PLOTTED => 11:11

Dist	COUNTY	ROUTE	POST MILES TOTAL PROJECT	SHEET No.	TOTAL SHEETS
06	Ker	99	17.0/22.1	2	201

REGISTERED CIVIL ENGINEER DATE 12/05/11

5-14-12
PLANS APPROVAL DATE

REGISTERED PROFESSIONAL ENGINEER JAFAR RAVANBAKHSH No. 76341 Exp. 12/31/12 CIVIL STATE OF CALIFORNIA

THE STATE OF CALIFORNIA OR ITS OFFICERS OR AGENTS SHALL NOT BE RESPONSIBLE FOR THE ACCURACY OR COMPLETENESS OF SCANNED COPIES OF THIS PLAN SHEET.

NOTES:

1. DIMENSIONS OF PAVEMENT STRUCTURES (STRUCTURAL SECTIONS) ARE SUBJECT TO TOLERANCES SPECIFIED IN THE STANDARD SPECIFICATIONS.
2. SUPERELEVATION AS SHOWN OR AS DIRECTED BY THE ENGINEER.
3. FOR LIMITS OF RUMBLE STRIPS ON MEDIAN AND OUTSIDE SHOULDERS SEE LAYOUT SHEETS
4. FOR LIMITS AND TYPE OF CONCRETE BARRIERS, SEE LAYOUT SHEETS
5. FOR LIMITS OF OUTSIDE Shld CONSTRUCTION SEE LAYOUT SHEETS
6. CONTRACTOR RESPONSIBLE TO PROTECT THE CROSSING PIPES SHOWN IN THE PLANS IN PLACE AND ANY DAMAGE TO EXISTING PIPES DUE TO CONTRACTOR OPERATIONS WILL BE THE CONTRACTOR RESPONSIBILITY TO REPAIR THE DAMAGE AT HIS OWN COST.
7. FOR DIKE TYPE AND POSITIONING SEE LAYOUT SHEETS.

DESIGN DESIGNATION (ROUTE 99)

2015 ADT	95,740 (SOUTH END) TO 157,509 (NORTH END)
2035 ADT	124,678 (SOUTH END) TO 211,496 (NORTH END)
D	60%
T	24%
TI	18
V	70 MPH

1

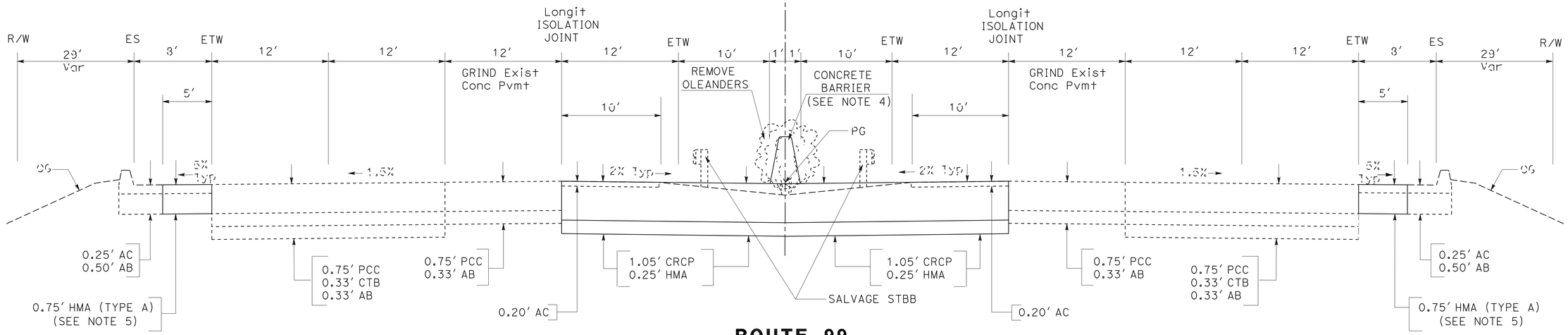

SOUTHBOUND

NORTHBOUND

ROUTE 99

STA 342+00.00 TO STA 529+78.19
STA 532+43.09 TO STA 534+58.98
STA 537+21.88 TO STA 611+50.00 (NB)
STA 611+44.00 (SB)

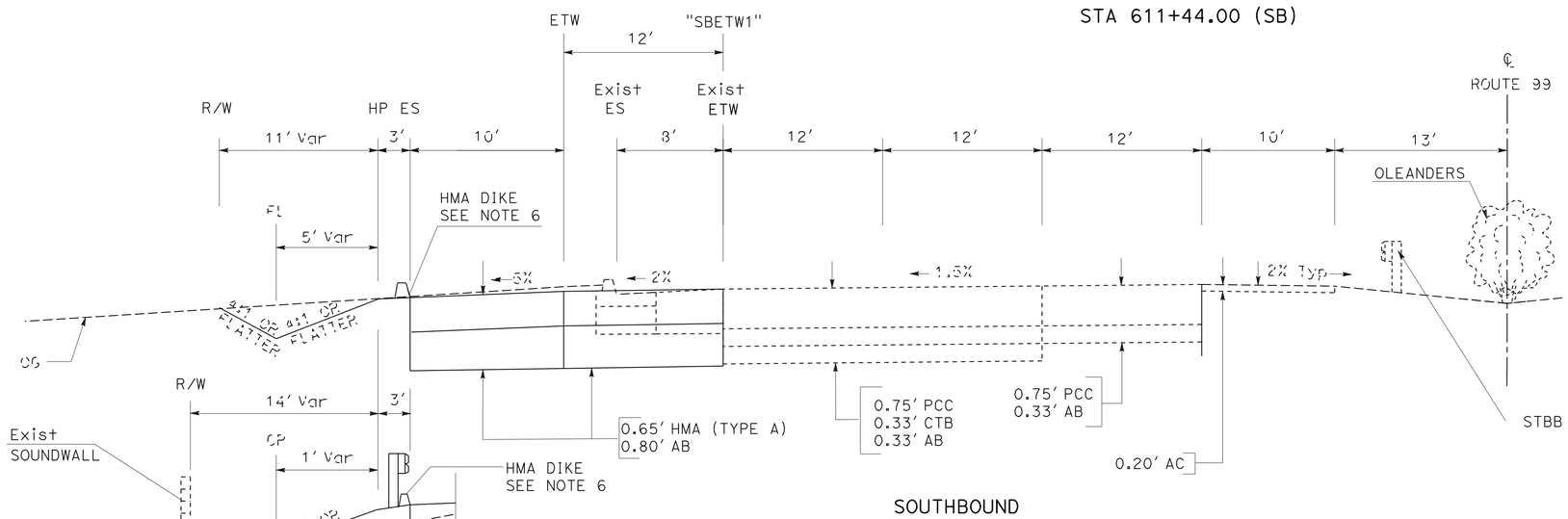

SOUTHBOUND
STA 490+74 TO STA 506+20.00 "SBETW1"

SOUTHBOUND
STA 487+89 TO STA 490+74.00 "SBETW1"

1 **REVISED PER ADDENDUM No. 1 DATED SEPTEMBER 7, 2012**

TYPICAL CROSS SECTIONS

NO SCALE **X-1**

STATE OF CALIFORNIA - DEPARTMENT OF TRANSPORTATION
Caltrans
DESIGN
FUNCTIONAL SUPERVISOR: RICHARD HELGESON
CALCULATED-DESIGNED BY: JAFAR RAVANBAKHSH
CHECKED BY: SCOTT FRIESEN
REVISED BY
DATE REVISED

LAST REVISION 08-08-12 | DATE PLOTTED => 07-SEP-2012 | TIME PLOTTED => 10:38

Dist	COUNTY	ROUTE	POST MILES TOTAL PROJECT	SHEET No.	TOTAL SHEETS
06	Ker	99	17.0/22.1	14	201

REGISTERED CIVIL ENGINEER 12/05/11 DATE

5-14-12
PLANS APPROVAL DATE

REGISTERED PROFESSIONAL ENGINEER JAFAR RAVANBAKHSH No. 76341 Exp. 12/31/12 CIVIL STATE OF CALIFORNIA

THE STATE OF CALIFORNIA OR ITS OFFICERS OR AGENTS SHALL NOT BE RESPONSIBLE FOR THE ACCURACY OR COMPLETENESS OF SCANNED COPIES OF THIS PLAN SHEET.

NOTE:

FOR ACCURATE RIGHT OF WAY DATA, CONTACT RIGHT OF WAY ENGINEERING AT THE DISTRICT OFFICE.

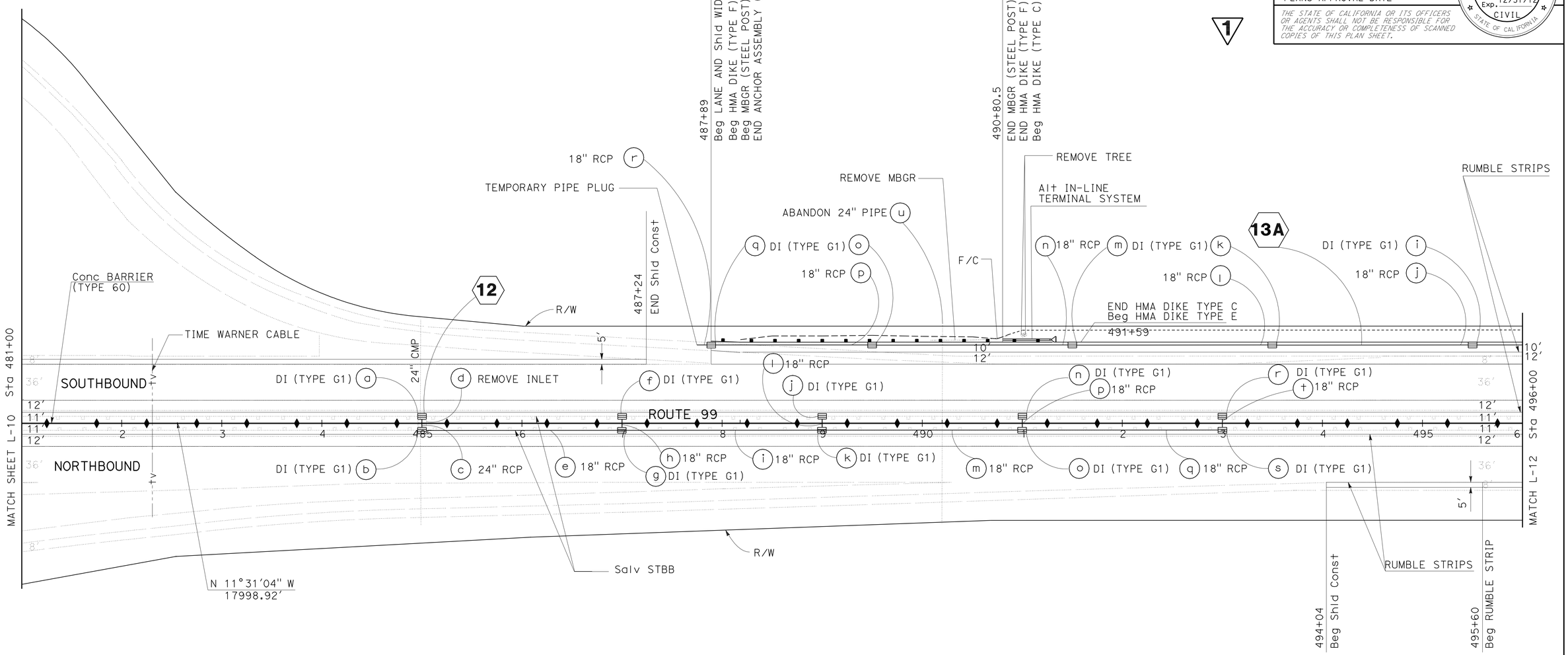

1 REVISED PER ADDENDUM No. 1 DATED SEPTEMBER 7, 2012

SCALE: 1"=50'

LAYOUT L-11

STATE OF CALIFORNIA - DEPARTMENT OF TRANSPORTATION
Caltrans
DESIGN

FUNCTIONAL SUPERVISOR: RICHARD HELGESON
CALCULATED-DESIGNED BY: JAFAR RAVANBAKHSH
CHECKED BY: SCOTT FRIESEN
REVISED BY
DATE REVISED

LAST REVISION 08-08-12
DATE PLOTTED => 07-SEP-2012
TIME PLOTTED => 10:38

Dist	COUNTY	ROUTE	POST MILES TOTAL PROJECT	SHEET No.	TOTAL SHEETS
06	Ker	99	17.0/22.1	15	201

REGISTERED CIVIL ENGINEER 12/05/11 DATE

5-14-12
PLANS APPROVAL DATE

REGISTERED PROFESSIONAL ENGINEER JAFAR RAVANBAKHSH No. 76341 Exp. 12/31/12 CIVIL STATE OF CALIFORNIA

THE STATE OF CALIFORNIA OR ITS OFFICERS OR AGENTS SHALL NOT BE RESPONSIBLE FOR THE ACCURACY OR COMPLETENESS OF SCANNED COPIES OF THIS PLAN SHEET.

1

NOTE:

FOR ACCURATE RIGHT OF WAY DATA, CONTACT RIGHT OF WAY ENGINEERING AT THE DISTRICT OFFICE.

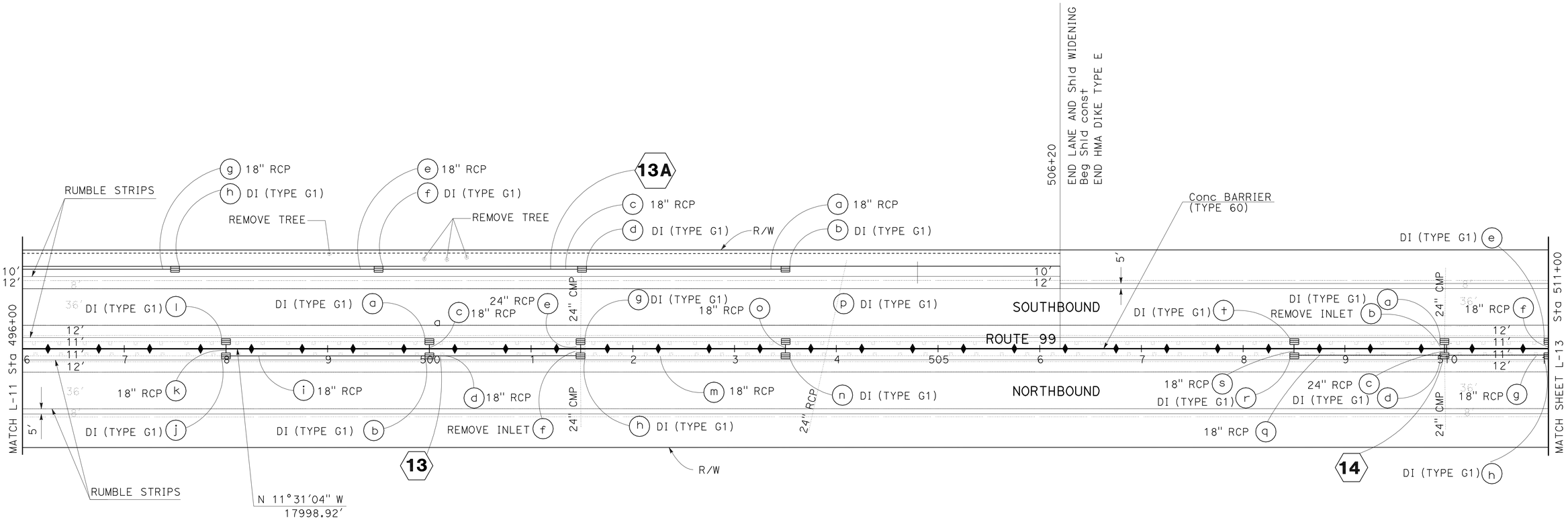

1 REVISED PER ADDENDUM No. 1 DATED SEPTEMBER 7, 2012

SCALE: 1"=50'

LAYOUT
L-12

STATE OF CALIFORNIA - DEPARTMENT OF TRANSPORTATION
Caltrans DESIGN

FUNCTIONAL SUPERVISOR: RICHARD HELGESON
CALCULATED-DESIGNED BY: JAFAR RAVANBAKHSH
CHECKED BY: SCOTT FRIESEN
REVISED BY
DATE REVISED

LAST REVISION 08-08-12
DATE PLOTTED => 07-SEP-2012
TIME PLOTTED => 10:38

Dist	COUNTY	ROUTE	POST MILES TOTAL PROJECT	SHEET No.	TOTAL SHEETS
06	Ker	99	17.0/22.1	52A	201

REGISTERED CIVIL ENGINEER DATE 12/05/11

5-14-12
PLANS APPROVAL DATE

REGISTERED PROFESSIONAL ENGINEER JAFAR RAVANBAKHSH No. 76341 Exp. 12/31/12 CIVIL STATE OF CALIFORNIA

THE STATE OF CALIFORNIA OR ITS OFFICERS OR AGENTS SHALL NOT BE RESPONSIBLE FOR THE ACCURACY OR COMPLETENESS OF SCANNED COPIES OF THIS PLAN SHEET.

1

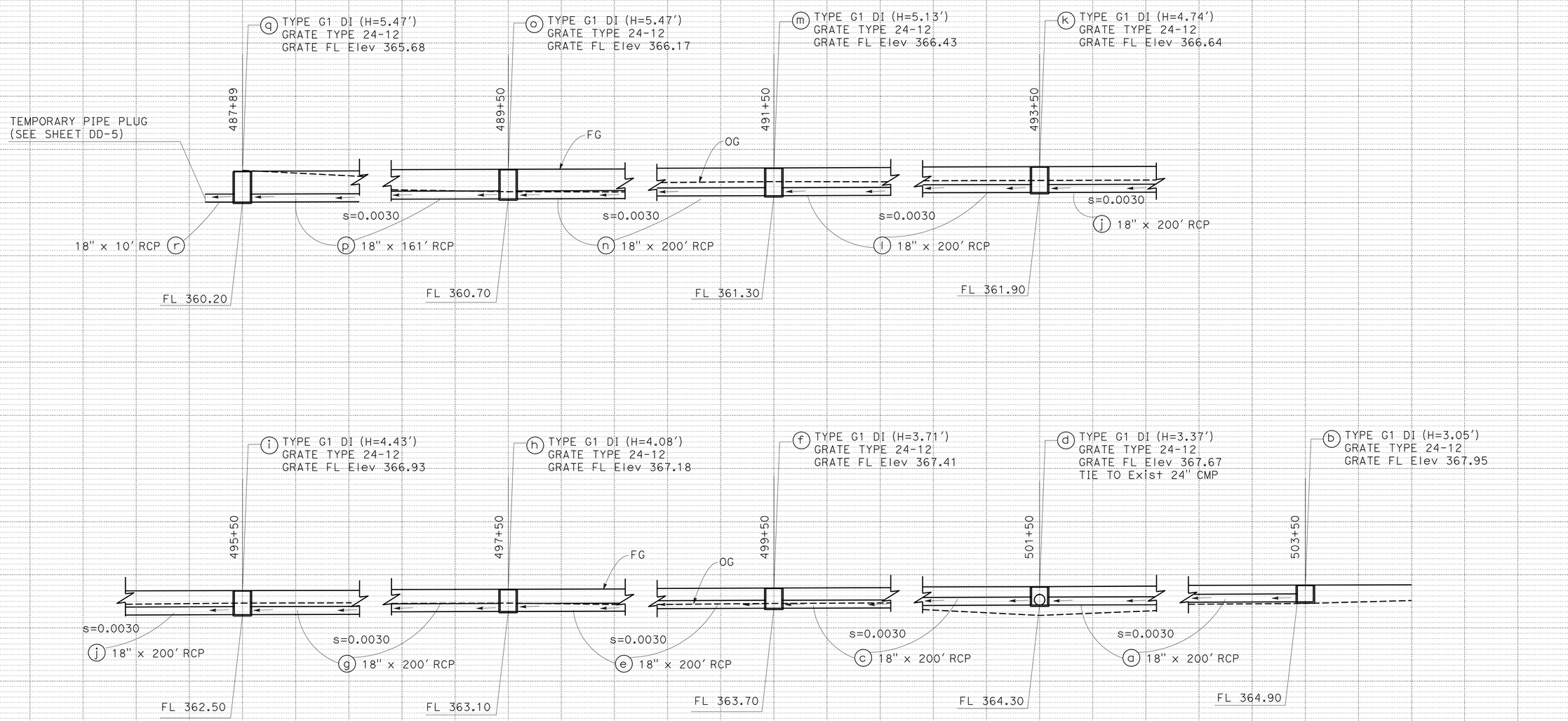

DRAINAGE SYSTEM No. 13A

1 **ADDED PER ADDENDUM No. 1 DATED SEPTEMBER 7, 2012**

DRAINAGE PROFILE

SCALE: Horiz 1"= 10'
Vert 1"= 10'

DP-9A

STATE OF CALIFORNIA - DEPARTMENT OF TRANSPORTATION
Caltrans
DESIGN
FUNCTIONAL SUPERVISOR: RICHARD HELGESON
CALCULATED-DESIGNED BY: JAFAR RAVANBAKHSH
CHECKED BY: SCOTT FRIESEN
REVISED BY
DATE REVISED

LAST REVISION 08-08-12
DATE PLOTTED => 07-SEP-2012
TIME PLOTTED => 10:38

Dist	COUNTY	ROUTE	POST MILES TOTAL PROJECT	SHEET No.	TOTAL SHEETS
06	Ker	99	17.0/22.1	61	201

REGISTERED CIVIL ENGINEER 12/05/11 DATE

5-14-12
PLANS APPROVAL DATE

REGISTERED PROFESSIONAL ENGINEER JAFAR RAVANBAKHSH No. 76341 Exp. 12/31/12 CIVIL STATE OF CALIFORNIA

THE STATE OF CALIFORNIA OR ITS OFFICERS OR AGENTS SHALL NOT BE RESPONSIBLE FOR THE ACCURACY OR COMPLETENESS OF SCANNED COPIES OF THIS PLAN SHEET.

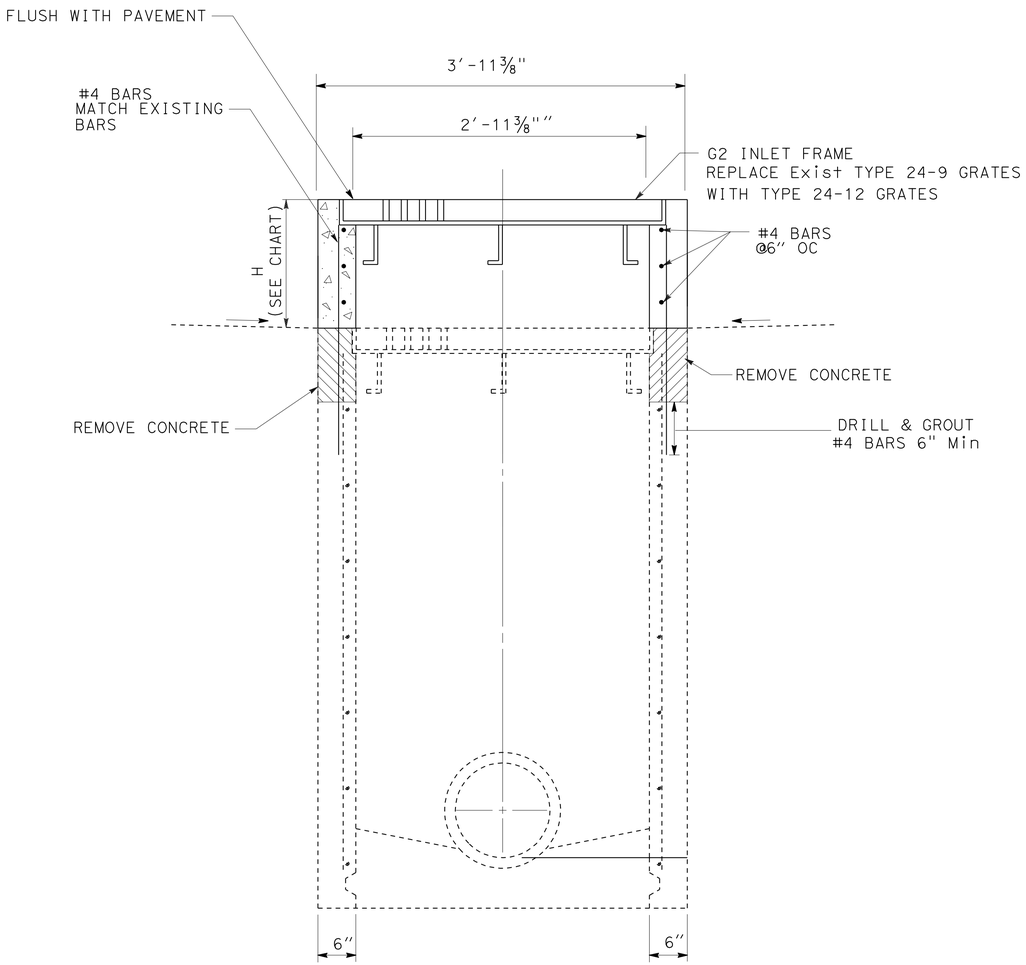

ADJUST G2 INLET TO GRADE

ADJUST INLET TO GRADE

DRAINAGE SYSTEM/UNIT	ROUTE 99 STATION	H (LF)
2a	ROUTE 357+00	1.33
2b	ROUTE 360+82	1.32
2c	ROUTE 363+98	1.32
2d	ROUTE 366+00	1.36
2e	ROUTE 368+30	1.37
2m	ROUTE 372+46	1.43
2n	ROUTE 377+03	1.28
2o	ROUTE 381+00	1.34
23a	ROUTE 580+99	0.40
23j	ROUTE 594+93	0.30
23k	ROUTE 595+18	0.04
23l	ROUTE 598+98	0.41
23n	ROUTE 602+29	0.28
23v	ROUTE 606+98	0.25
23x	ROUTE 610+99	0.23

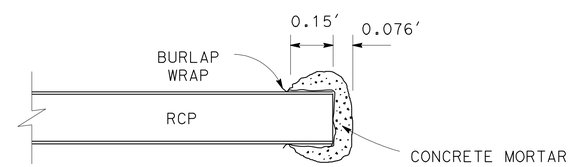

TEMPORARY PIPE PLUG 1

1 REVISED PER ADDENDUM No. 1 DATED SEPTEMBER 7, 2012

DRAINAGE DETAILS
(ADJUST INLET)
DD-5

STATE OF CALIFORNIA - DEPARTMENT OF TRANSPORTATION
Caltrans
DESIGN
FUNCTIONAL SUPERVISOR: RICHARD HELGESON
CALCULATED-DESIGNED BY: JAFAR RAVANBAKHSH
CHECKED BY: SCOTT FRIESEN
REVISED BY
DATE REVISED

LAST REVISION 08-08-12
DATE PLOTTED => 07-SEP-2012
TIME PLOTTED => 10:38

Dist	COUNTY	ROUTE	POST MILES TOTAL PROJECT	SHEET No.	TOTAL SHEETS
06	Ker	99	17.0/22.1	65A	201

REGISTERED CIVIL ENGINEER DATE 12/05/11

5-14-12
PLANS APPROVAL DATE

REGISTERED PROFESSIONAL ENGINEER JAFAR RAVANBAKHSH No. 76341 Exp. 12/31/12 CIVIL STATE OF CALIFORNIA

THE STATE OF CALIFORNIA OR ITS OFFICERS OR AGENTS SHALL NOT BE RESPONSIBLE FOR THE ACCURACY OR COMPLETENESS OF SCANNED COPIES OF THIS PLAN SHEET.

1

DRAINAGE QUANTITIES

DRAINAGE SYSTEM No.	DRAINAGE UNIT	LAYOUT SHEET No.	DRAINAGE INLET: DI TYPE G1(N) EA	DI TYPE G2 Mod (N) EA	MINOR CONCRETE (MINOR STRUCTURE) CY	HEIGHT OF INLET (N) LF	ADJUST INLET EA	CAP INLET EA	FRAME AND GRATE TYPE 24-12 EA	REMOVE INLET EA	ABANDON INLET EA	INLET DEPRESSION EA	ABANDON CULVERT LF	TEMPORARY PIPE PLUG EA	18" RCP LF	24" RCP LF	36" RCP LF	DESCRIPTION	STATION	DRAINAGE SYSTEM No.	DRAINAGE UNIT	LAYOUT SHEET No.
13A	a	L-12													200			18" RCP	503+50 to 501+50	13A	a	L-12
	b		1		2.90	3.05			1									G1 DI w/ 24-12 GRATE	503+50		b	
	c														200			18" RCP	501+50 TO 499+50		c	
	d		1		3.20	3.37			1									G1 DI w/ 24-12 GRATE	501+50		d	
	e														200			18" RCP	499+50 TO 497+50		e	
	f		1		3.52	3.71			1									G1 DI w/ 24-12 GRATE	499+50		f	
	g														200			18" RCP	497+50 TO 495+50		g	
	h		1		3.87	4.08			1									G1 DI w/ 24-12 GRATE	497+50		h	
	i	L-11	1		4.20	4.43			1									G1 DI w/ 24-12 GRATE	495+50		i	L-11
	j														200			18" RCP	495+50 TO 493+50		j	
	k		1		4.50	4.74			1									G1 DI w/ 24-12 GRATE	493+50		k	
	l														200			18" RCP	493+50 TO 491+50		l	
	m		1		4.87	5.13			1									G1 DI w/ 24-12 GRATE	491+50		m	
	n														200			18" RCP	491+50 TO 489+50		n	
	o		1		5.19	5.47			1									G1 DI w/ 24-12 GRATE	489+50		o	
	p														161			18" RCP	489+50 TO 487+89		p	
	q		1		5.19	5.47			1									G1 DI w/ 24-12 GRATE	487+89		q	
	r														10			TEMPORARY PIPE PLUG	487+89 TO 487+79		r	
SHEET TOTAL					37.44				9						1571							

(N) - NOT A separate PAY ITEM; FOR INFORMATION ONLY

1 ADDED PER ADDENDUM No. 1 DATED SEPTEMBER 7, 2012

DRAINAGE QUANTITIES
DQ-9A

REVISED BY | DATE REVISED
JAFAR RAVANBAKHSH | SCOTT FRIESEN
CALCULATED-DESIGNED BY | CHECKED BY
FUNCTIONAL SUPERVISOR: RICHARD HELGESON

STATE OF CALIFORNIA - DEPARTMENT OF TRANSPORTATION
Caltrans
DESIGN

LAST REVISION 08-08-12 | DATE PLOTTED => 07-SEP-2012 | TIME PLOTTED => 10:38

Dist	COUNTY	ROUTE	POST MILES TOTAL PROJECT	SHEET No.	TOTAL SHEETS
06	Ker	99	17.0/22.1	75	201

REGISTERED CIVIL ENGINEER DATE 12/05/11

5-14-12
PLANS APPROVAL DATE

REGISTERED PROFESSIONAL ENGINEER JAFAR RAVANBAKHSH No. 76341 Exp. 12/31/12 CIVIL STATE OF CALIFORNIA

THE STATE OF CALIFORNIA OR ITS OFFICERS OR AGENTS SHALL NOT BE RESPONSIBLE FOR THE ACCURACY OR COMPLETENESS OF SCANNED COPIES OF THIS PLAN SHEET.

1

DRAINAGE QUANTITIES SUMMARY

SHEET No.	DRAINAGE INLET									ABANDON CULVERT	18" RCP	24" RCP	36" RCP	DESCRIPTION
	DI TYPE G1(N)	DI TYPE G2 Mod (N)	MINOR CONCRETE (MINOR STRUCTURE)	ADJUST INLET	CAP INLET	FRAME AND GRATE TYPE 24-12	REMOVE INLET	ABANDON INLET	INLET DEPRESSION					
	EA	EA	CY	EA	EA	EA	EA	EA	EA	LF	LF	LF	LF	
DQ-1			14.09	8	1	9	1		8		467			
DQ-2			13.92			12	2				845	4		
DQ-3			15.54			14	1				640			
DQ-4			15.67			14	1				896	2		
DQ-5			15.10			14	1				1053	2		
DQ-6			15.44			14	2				876	4		
DQ-7			15.66			14	1				766	4		
DQ-8			18.42			16	1			196	1163	2		
DQ-9			17.70			16	2				1064	4		
DQ-9A			37.44			9					1571			
DQ-10			15.38			13	3	2		132	318	6		
DQ-11			24.37			15	1				850		4	
DQ-12			29.22	7	1	13	1		7		489	2		
TOTAL			247.95	15	2	173	17	2	15	328	10998	30	4	

1 REVISED PER ADDENDUM No. 1 DATED SEPTEMBER 7, 2012

DRAINAGE QUANTITIES
DQ-13

STATE OF CALIFORNIA - DEPARTMENT OF TRANSPORTATION
Caltrans DESIGN
FUNCTIONAL SUPERVISOR RICHARD HELGESON
CALCULATED-DESIGNED BY JAFAR RAVANBAKHSH
CHECKED BY SCOTT FRIESEN
REVISED BY
DATE REVISED

LAST REVISION 08-08-12
DATE PLOTTED => 07-SEP-2012
TIME PLOTTED => 10:39

Dist	COUNTY	ROUTE	POST MILES TOTAL PROJECT	SHEET No.	TOTAL SHEETS
06	Ker	99	17.0/22.1	123	201

12/05/11
REGISTERED CIVIL ENGINEER DATE

5-14-12
PLANS APPROVAL DATE

REGISTERED PROFESSIONAL ENGINEER JAFAR RAVANBAKHSH No. 76341 Exp. 12/31/12 CIVIL STATE OF CALIFORNIA

THE STATE OF CALIFORNIA OR ITS OFFICERS OR AGENTS SHALL NOT BE RESPONSIBLE FOR THE ACCURACY OR COMPLETENESS OF SCANNED COPIES OF THIS PLAN SHEET.

1 PAVEMENT STRUCTURE QUANTITIES TABLE IS REMOVED FROM THIS SHEET ALL ITEMS IN PAVEMENT STRUCTURE QUANTITIES TABLE ARE IN ROADWAY QUANTITIES TABLE ON Q-2 SHEET.

CONCRETE BARRIER

STATION	TYPE 60	TYPE 60A	TYPE 60F	TYPE 60G
	LF	LF	LF	LF
ROUTE 99 342+00 TO 357+63	1,563			
ROUTE 99 357+63 TO 358+37				74
ROUTE 99 358+37 TO 363+63	526			
ROUTE 99 363+63 TO 364+37				74
ROUTE 99 364+37 TO 368+41	404			
ROUTE 99 368+41 TO 369+44			103	
ROUTE 99 369+44 TO 412+80	4,336			
ROUTE 99 412+80 TO 413+20			40	
ROUTE 99 413+20 TO 421+63	843			
ROUTE 99 421+63 TO 422+37				74
ROUTE 99 422+37 TO 422+75	38			
ROUTE 99 422+75 TO 423+64			89	
ROUTE 99 423+64 TO 435+80	1,216			
ROUTE 99 435+80 TO 436+20			40	
ROUTE 99 436+20 TO 450+53	1,433			
ROUTE 99 450+53 TO 451+27				74
ROUTE 99 451+27 TO 459+59	832			
ROUTE 99 459+59 TO 460+33				74
ROUTE 99 460+33 TO 469+46	913			
ROUTE 99 469+46 TO 470+20				74
ROUTE 99 470+20 TO 476+22	602			
ROUTE 99 476+22 TO 477+83			161	
ROUTE 99 477+83 TO 529+78	5,195			
ROUTE 99 529+78 TO 532+43		265		
ROUTE 99 532+43 TO 533+41	99			
ROUTE 99 533+41 TO 534+15				74
ROUTE 99 534+15 TO 534+59	45			
ROUTE 99 534+59 TO 537+22		263		
ROUTE 99 537+22 TO 552+35	1,513			
ROUTE 99 552+35 TO 553+09				74
ROUTE 99 553+09 TO 557+18	409			
ROUTE 99 557+18 TO 559+07			189	
ROUTE 99 559+07 TO 576+13	1,706			
ROUTE 99 576+13 TO 576+87				74
ROUTE 99 576+87 TO 584+54	767			
ROUTE 99 584+54 TO 585+80			126	
ROUTE 99 585+80 TO 594+28	848			
ROUTE 99 594+28 TO 594+68			40	
ROUTE 99 594+68 TO 603+49	881			
ROUTE 99 603+49 TO 606+08			259	
ROUTE 99 606+08 TO 611+50	542			
TOTAL	24,711	528	1047	666

Temp WATER POLLUTION CONTROL QUANTITIES

LOCATION	Temp Const ENTRANCE	Temp DRAINAGE INLET PROTECTION	Temp FIBER ROLL
	EA	EA	
ROUTE 99 MEDIAN		176	
ROUTE 99 SHOULDERS/RAMPS		44	
ROUTE 99 MEDIAN - STAGE 2	4		
ROUTE 99 MEDIAN - STAGE 3	4		
ROUTE 99 MEDIAN - STAGE 3			
PACHECO ROAD UC, Sta 19+73 TO 20+03 Lt (53' offset)			30
PACHECO ROAD UC, Sta 19+96 TO 20+26 Rt (51' offset)			30
TOTAL	8	220	60

THRIE BEAM BARRIER (STEEL POST)

STATION	SINGLE	DOUBLE
	LF	LF
ROUTE 99 340+90 TO 341+82	184	
ROUTE 99 341+82 TO 342+00		18

SALVAGE THRIE BEAM BARRIER

STATION (STBB ON BOTH SIDES)	Salv STBB
	LF
ROUTE 99 340+90 TO 530+29	37,878
ROUTE 99 531+92 TO 535+08	632
ROUTE 99 536+73 TO 611+50	14,594
TOTAL	53,104

CONTINUOUSLY REINFORCED CONCRETE PAVEMENT QUANTITIES

LOCATION	STATION	CONTINUOUSLY REINFORCED CONCRETE PAVEMENT					JOINT SEAL (MR 1½")
		TERMINAL JOINT (TYPE B)	TERMINAL JOINT (TYPE D)	TERMINAL JOINT (TYPE E)	PAVEMENT ANCHOR	(EXPANSION JOINT TYPE AN)	
		LF	LF	LF	LF	LF	LF
BEGIN PROJECT	ROUTE 99 342+00.00	46			92	46	
PACHECO ROAD UC BB	ROUTE 99 529+78.19			46	92	46	46
PACHECO ROAD UC EB	ROUTE 99 532+43.09			46		46	46
S BAKERSFIELD OH BB	ROUTE 99 534+58.98			46			46
S BAKERSFIELD OH EB	ROUTE 99 537+21.18			46	46	46	46
END PROJECT	ROUTE 99 611+44.00 Lt		23		23	23	23
END PROJECT	ROUTE 99 611+50.00 Rt		23		23	23	23
TOTAL		46	46	184	276	230	230

1 REVISED PER ADDENDUM No. 1 DATED SEPTEMBER 7, 2012 SUMMARY OF QUANTITIES

Q-1

STATE OF CALIFORNIA - DEPARTMENT OF TRANSPORTATION
Caltrans DESIGN
FUNCTIONAL SUPERVISOR RICHARD HELGESON
CALCULATED-DESIGNED BY JAFAR RAVANBAKHSH
CHECKED BY SCOTT FRIESEN
REVISED BY
DATE REVISED

LAST REVISION 08-08-12 DATE PLOTTED => 07-SEP-2012 TIME PLOTTED => 10:39

Dist	COUNTY	ROUTE	POST MILES TOTAL PROJECT	SHEET No.	TOTAL SHEETS
06	Ker	99	17.0/22.1	123A	201

REGISTERED CIVIL ENGINEER DATE 12/05/11

5-14-12
PLANS APPROVAL DATE

REGISTERED PROFESSIONAL ENGINEER JAFAR RAVANBAKHSH No. 76341 Exp. 12/31/12 CIVIL STATE OF CALIFORNIA

THE STATE OF CALIFORNIA OR ITS OFFICERS OR AGENTS SHALL NOT BE RESPONSIBLE FOR THE ACCURACY OR COMPLETENESS OF SCANNED COPIES OF THIS PLAN SHEET.

1

ROADWAY QUANTITIES

LOCATION (ROUTE 99)	ROADWAY EXCAVATION	HMA (TYPE A)	AGGREGATE BASE (CLASS 2)	RUMBLE STRIP	TACK COAT	CONTINUOUSLY REINFORCED CONCRETE PAVEMENT	Shld RUMBLE STRIP (Conc Pvmt, GROUND-IN INDENTATIONS)	SEAL PAVEMENT JOINT	SEAL ISOLATION JOINT	GRIND EXISTING CONCRETE PAVEMENT
	CY	TON	CY	STA	TON	CY	STA	LF	LF	SQYD
MEDIAN LANES/SHOULDERS	52074	22786			9	47461	528	53366	83780	70451
NB OUTSIDE SHOULDER	3113	5997.6		188	20					
SB OUTSIDE SHOULDER	2661	5202		147	20					
SB LANE AND SHOULDER	2360	1963.8	1194	19	2					
SB DITCH	300									
SB HMA DIKE		43.1								
TOTAL	60508	35992.5	1194	354	51	47461	528	53366	83780	70451

HMA DIKE

LOCATION (ROUTE 99)	PLACE HMA DIKE (TYPE F)	PLACE HMA DIKE (TYPE C)	PLACE HMA DIKE (TYPE E)	HMA * (TYPE A)
	LF	LF	LF	TON
SB 487+89 - 490+80.5	291.5			3.9
SB 490+80.5 - 491+59		78.5		0.6
SB 491+59 - 506+20			1461	38.6
TOTAL	291.5	78.5	1461	43.1

* QUANTITIY INCLUDED IN ROADWAY QUANTITIES TABLE.

METAL BEAM GUARD RAILING

LOCATION (ROUTE 99)	METAL BEAM GUARD RAILING (STELL POST)	REMOVE METAL BEAM GUARD RAILING	END ANCHOR ASSEMBLY (TYPE SFT)	ALTERNATIVE IN-LINE TERMINAL SYSTEM
	LF	LF	EA	EA
SB LANE AND SHOULDER	292	77	1	1
TOTAL	292	77	1	1

EROSION CONTROL (TYPE 1)

LOCATION	COMPOST INCORPORATE	COMPOST BLANKET
	SQYD	CY
ROUTE 99 SB 488+18 TO 506+20	2800	78

1 ADDED PER ADDENDUM No. 1 DATED SEPTEMBER 7, 2012

SUMMARY OF QUANTITIES
Q-2

STATE OF CALIFORNIA - DEPARTMENT OF TRANSPORTATION
Caltrans DESIGN

FUNCTIONAL SUPERVISOR: RICHARD HELGESON
CALCULATED-DESIGNED BY: JAFAR RAVANBAKHSH
CHECKED BY: SCOTT FRIESEN
REVISED BY
DATE REVISED

LAST REVISION 08-08-12 | DATE PLOTTED => 07-SEP-2012 | TIME PLOTTED => 10:39

Dist	COUNTY	ROUTE	POST MILES TOTAL PROJECT	SHEET No.	TOTAL SHEETS
06	Ker	99	17.0/22.1	126	201

REGISTERED ELECTRICAL ENGINEER 2-10-12 DATE

5-14-12
PLANS APPROVAL DATE

REGISTERED PROFESSIONAL ENGINEER DANIEL THANH VO No. 17408 Exp. 9/30/12 ELECTRICAL STATE OF CALIFORNIA

THE STATE OF CALIFORNIA OR ITS OFFICERS OR AGENTS SHALL NOT BE RESPONSIBLE FOR THE ACCURACY OR COMPLETENESS OF SCANNED COPIES OF THIS PLAN SHEET.

1

LEGEND: (FOR SHEETS E-3 AND E-4)

1 120/240 V, 1Ø, 3-WIRE, TYPE III-CF SERVICE EQUIPMENT ENCLOSURE WITH THE FOLLOWING CIRCUIT BREAKERS:

CTID No. 06500990019540L

AMPERES	VOLTS	POLES	NAMEPLATE	METER	PHOTOELECTRIC CONTROL TYPE
100	240	2	MAIN BREAKER	YES	——
40	240	2	HIGHWAY LIGHTING	YES	V
20	120	1	LIGHTING CONTROL	YES	——
40	240	2	SIGN ILLUMINATION	YES	V
20	120	1	SIGN CONTROL	YES	——
——	——	3	SPACE	——	——

CTID No. 06500990019540T

AMPERES	VOLTS	POLES	NAMEPLATE	METER	PHOTOELECTRIC CONTROL TYPE
100	240	2	MAIN BREAKER	YES	——
40	120	1	334-CCTV CABINET	YES	——
20	120	1	TDC	YES	——
20	120	1	MVDS	YES	——
20	120	1	SPARE	YES	——
——	——	5	SPACE	——	——

2 RS Exist TYPE III-D SERVICE EQUIPMENT ENCLOSURE.

3 MODEL 334 CABINET FOR CCTV SYSTEM.

4 TYPE CCTV 40 POLE WITH CAMERA ASSEMBLY.

5 PULL BOX PER PG&E REQUIREMENTS.

6 Exist SERVICE EQUIPMENT ENCLOSURE FOR SIGNAL.

7 Exist MODEL 334 CABINET FOR SIGNAL.

8 CONNECTED TO 120/240 V, NB OFF-RAMP SIGNAL SERVICE EQUIPMENT ENCLOSURE.

9 RS EXISTING 480 V LUMINAIRE, INSTALL 240 V, 235 W LED LUMINAIRE.

10 THE CONTRACTOR SHALL COORDINATE WITH ATT TO INSTALL CONDUIT INSIDE THE MANHOLE FOR TELEPHONE SERVICE CONNECTION.

11 TYPE B TELEPHONE DEMARCATION CABINET.

12 SEE DETAILS A AND B ON SHEET E-9 FOR MODIFY MICROWAVE VEHICLE DETECTION SYSTEM.

13 RS EXISTING 480 V SIGN LIGHTING FIXTURES AND SIGN CONTROL. INSTALL 240 V 2-ISL AND SC1A SIGN CONTROL.

NOTES:

1. TRAFFIC SIGNAL CONDUITS ARE NOT SHOWN.
2. ALL PULL BOXES SHALL BE No. 5 WITH EXTENSION UNLESS OTHERWISE NOTED.
3. FOR ACCURATE RIGHT OF WAY DATA, CONTACT RIGHT OF WAY ENGINEERING AT THE DISTRICT OFFICE.

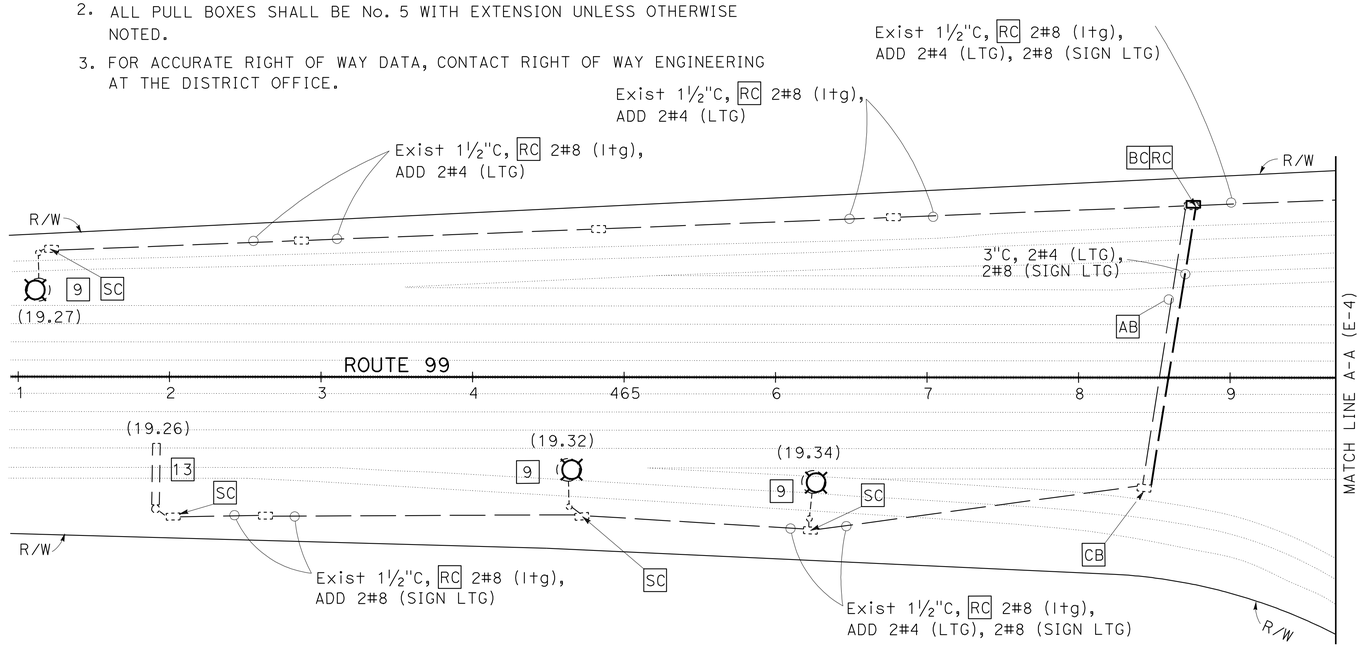

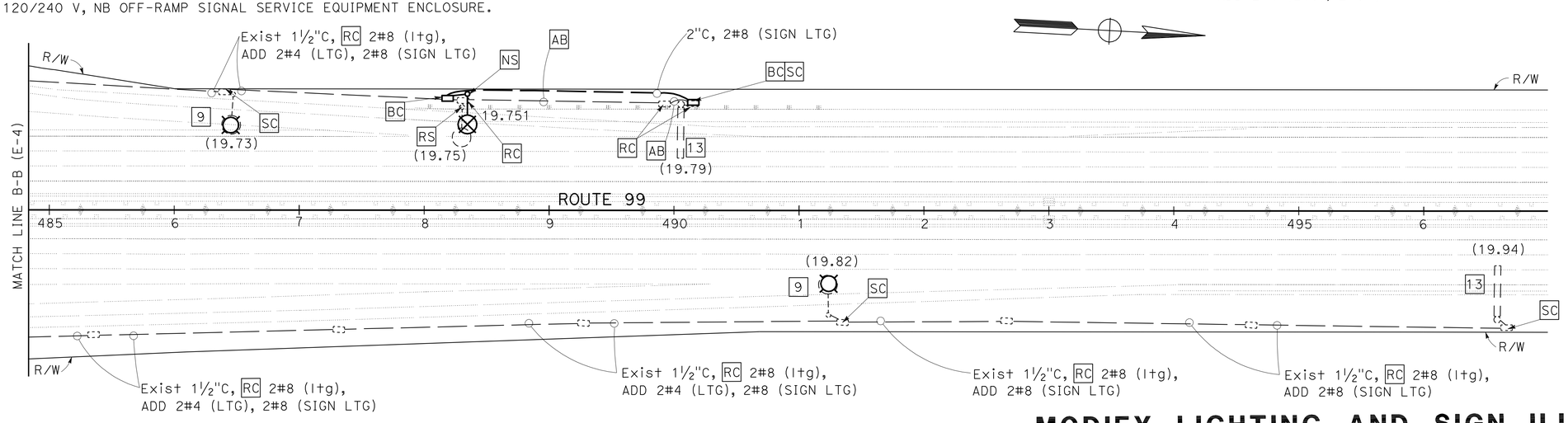

MODIFY LIGHTING AND SIGN ILLUMINATION
CLOSED CIRCUIT TELEVISION SYSTEM
MODIFY MICROWAVE VEHICLE DETECTION SYSTEM

1 **REVISED PER ADDENDUM No. 1 DATED SEPTEMBER 7, 2012**

SCALE: 1" = 50'

E-3

APPROVED FOR ELECTRICAL WORK ONLY

STATE OF CALIFORNIA - DEPARTMENT OF TRANSPORTATION
Caltrans ELECTRICAL DESIGN

FUNCTIONAL SUPERVISOR: ALI BAKHDOUD
CALCULATED-DESIGNED BY: KARIM ABDOLLAHIAN
CHECKED BY: DANIEL T. VO
REVISED BY
DATE REVISED

LAST REVISION 08-08-12
DATE PLOTTED => 07-SEP-2012
TIME PLOTTED => 10:39

DIST	COUNTY	ROUTE	POST MILES TOTAL PROJECT	SHEET NO.	TOTAL SHEETS
06	Ker	99	17.0/22.1	176A	201

1

Jeffery G. McRae
REGISTERED ELECTRICAL ENGINEER

July 20, 2012
PLANS APPROVAL DATE

REGISTERED PROFESSIONAL ENGINEER
Jeffery G. McRae
No. E14512
Exp. 6-30-14
ELECTRICAL
STATE OF CALIFORNIA

The State of California or its officers or agents shall not be responsible for the accuracy or completeness of electronic copies of this plan sheet.

To accompany plans dated 5-14-12

ISOFOOTCANDLE CURVE - MINIMUM

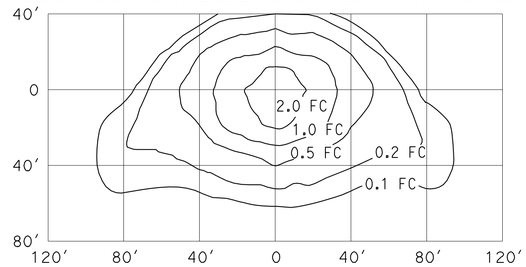

TYPE III MEDIUM CUTOFF

Cutoff Luminaire
34′ Mounting Height
Lamp operated at 22,000 lm
200-W high pressure sodium lamp
ANSI Designation S66

ISOFOOTCANDLE CURVE - MINIMUM

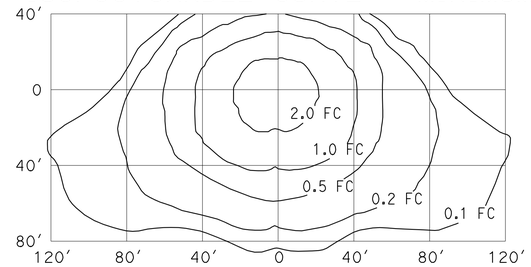

TYPE III MEDIUM CUTOFF

Cutoff Luminaire
40′ Mounting Height
Lamp operated at 37,000 lm
310-W high pressure sodium lamp
ANSI Designation S67

ISOFOOTCANDLE CURVE - MINIMUM

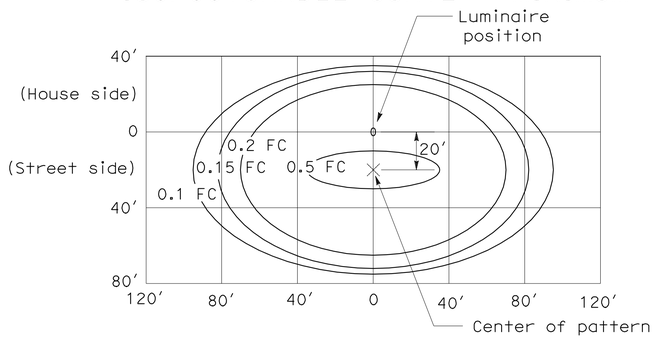

LED LUMINAIRE ROADWAY 1

200-W HPS Equivalent at 34′ Mounting Height

ISOFOOTCANDLE CURVE - MINIMUM

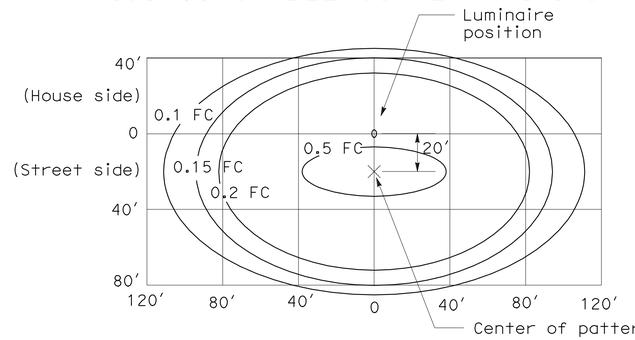

LED LUMINAIRE ROADWAY 2

310-W HPS Equivalent at 40′ Mounting Height

ISOFOOTCANDLE CURVE - MINIMUM

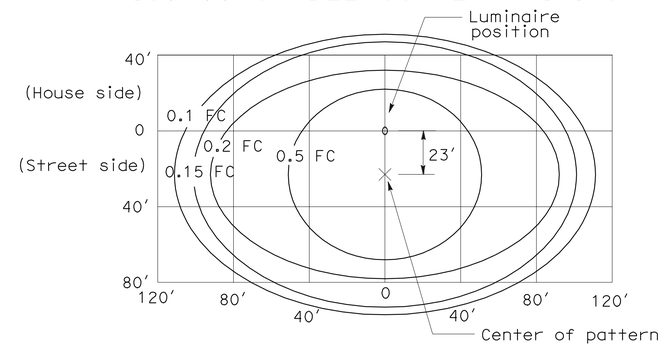

LED LUMINAIRE ROADWAY 4

400-W HPS Equivalent at 40′ Mounting Height

ISOFOOTCANDLE CURVE - MINIMUM

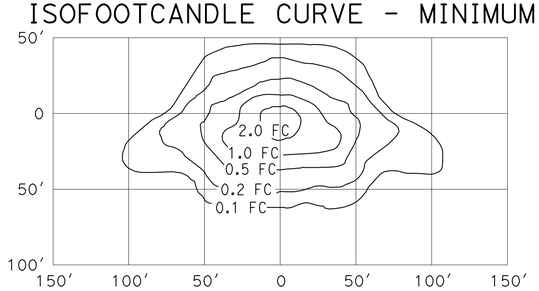

TYPE III MEDIUM CUTOFF

Cutoff Luminaire
30′ Mounting Height
Lamp operated at 16,000 lm
150-W high pressure sodium lamp
ANSI Designation S55

ISOFOOTCANDLE CURVE - MINIMUM

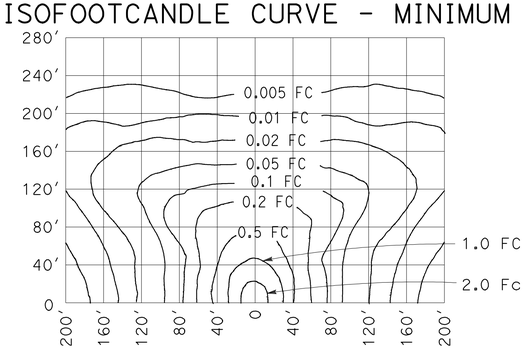

LOW PRESSURE SODIUM LUMINAIRE

40′ Mounting Height
Lamp operated at 33,000 lm
180-W low pressure sodium lamp

STATE OF CALIFORNIA
DEPARTMENT OF TRANSPORTATION

ELECTRICAL SYSTEMS (ISOFOOTCANDLE DIAGRAMS)

NO SCALE

NSP ES-10A DATED JULY 20, 2012 SUPPLEMENTS THE STANDARD PLANS BOOK DATED MAY 2006.

1 ADDED PER ADDENDUM No. 1 DATED SEPTEMBER 7, 2012

NEW STANDARD PLAN NSP ES-10A

2006 NEW STANDARD PLAN NSP ES-10A

2-16-12

DIST	COUNTY	ROUTE	POST MILES TOTAL PROJECT	SHEET NO.	TOTAL SHEETS
06	Ker	99	17.0/22.1	176B	201

1

Jeffery G. McRae
REGISTERED ELECTRICAL ENGINEER

July 20, 2012
PLANS APPROVAL DATE

REGISTERED PROFESSIONAL ENGINEER
Jeffery G. McRae
No. E14512
Exp. 6-30-14
ELECTRICAL
STATE OF CALIFORNIA

The State of California or its officers or agents shall not be responsible for the accuracy or completeness of electronic copies of this plan sheet.

To accompany plans dated 5-14-12

ISOFOOTCANDLE CURVE - MINIMUM

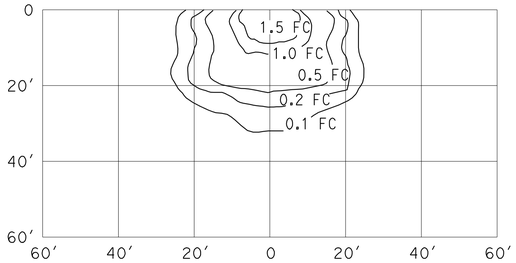

WALL LUMINAIRE
15′ Mounting Height
Lamp operated at 5,800 lm
70-W high pressure sodium lamp
ANSI Designation S62

ISOFOOTCANDLE CURVE - MINIMUM

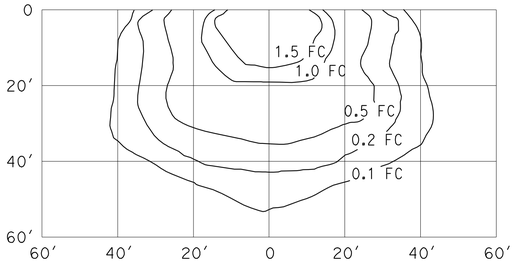

WALL LUMINAIRE
15′ Mounting Height
Lamp operated at 9,500 lm
100-W high pressure sodium lamp
ANSI Designation S54

ISOFOOTCANDLE CURVE - MINIMUM

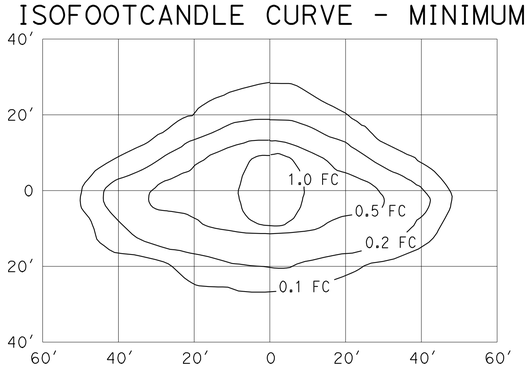

PENDANT SOFFIT LUMINAIRE
TYPE III SHORT
17′ Mounting Height
Lamp operated at 5,800 lm
70-W high pressure sodium lamp
ANSI Designation S62

ISOFOOTCANDLE CURVE - MINIMUM

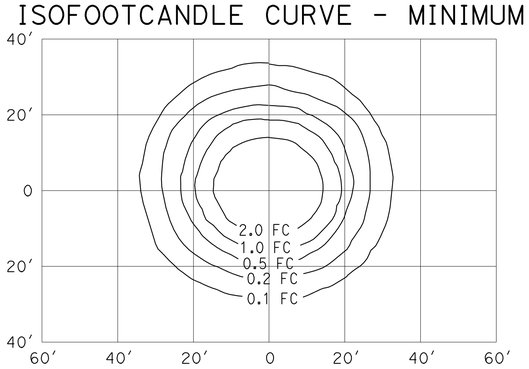

PENDANT SOFFIT LUMINAIRE
17′ Mounting Height
Lamp operated at 5,800 lm
70-W high pressure sodium lamp
ANSI Designation S62

ISOFOOTCANDLE CURVE - MINIMUM

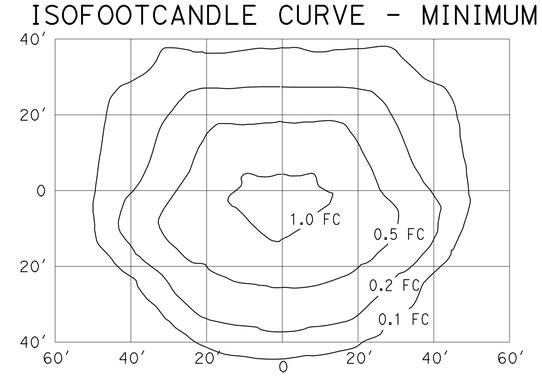

FLUSH SOFFIT LUMINAIRE
17′ Mounting Height
Lamp operated at 5,800 lm
70-W high pressure sodium lamp
ANSI Designation S62

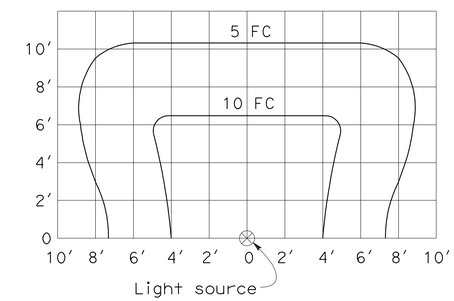

SIGN LIGHTING FIXTURE
ISOFOOTCANDLE DIAGRAM

NOTES:

1. Curves represent the minimum footcandle (FC) of initial illumination on a 10′-0" x 20′-0" panel.
2. The FC shown are with the fixture attached to the light fixture mounting channel which places the center of the source 4′-8" in front of panel and 1′-0" below the bottom edge.
3. Applicable lamp: 85-W fluorescent phosphor coated induction lamp.

STATE OF CALIFORNIA
DEPARTMENT OF TRANSPORTATION

ELECTRICAL SYSTEMS (ISOFOOTCANDLE DIAGRAMS)

NO SCALE

NSP ES-10B DATED JULY 20, 2012 SUPPLEMENTS THE STANDARD PLANS BOOK DATED MAY 2006.

1 **ADDED PER ADDENDUM No. 1 DATED SEPTEMBER 7, 2012**

NEW STANDARD PLAN NSP ES-10B

2006 NEW STANDARD PLAN NSP ES-10B

2-15-12

DIST	COUNTY	ROUTE	POST MILES TOTAL PROJECT	SHEET No.	TOTAL SHEETS
06	Ker	99	17.0/22.1	190	201

Nghia Nguyen 01-31-12
REGISTERED CIVIL ENGINEER DATE

5-14-12
PLANS APPROVAL DATE

REGISTERED PROFESSIONAL ENGINEER
Nghia H. Nguyen
No. C60069
Exp. 06-30-12
CIVIL
STATE OF CALIFORNIA

The State of California or its officers or agents shall not be responsible for the accuracy or completeness of electronic copies of this plan sheet.

STATE ROUTE 99 Sta 535+80.26 (0.0' Rt)
= SAN JOAQUIN VALLEY RAILROAD (SJVR)
AAR/DOT #750987D, RRMP 319.30

1 **REVISED PER ADDENDUM No. 1 DATED SEPTEMBER 7, 2012**

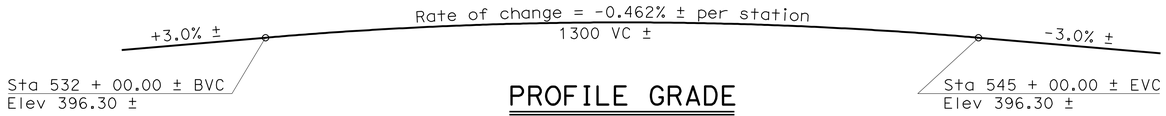

PROFILE GRADE

No Scale

Theoretical PG Shown. Adjust as required to match existing bridge deck elevations and slopes

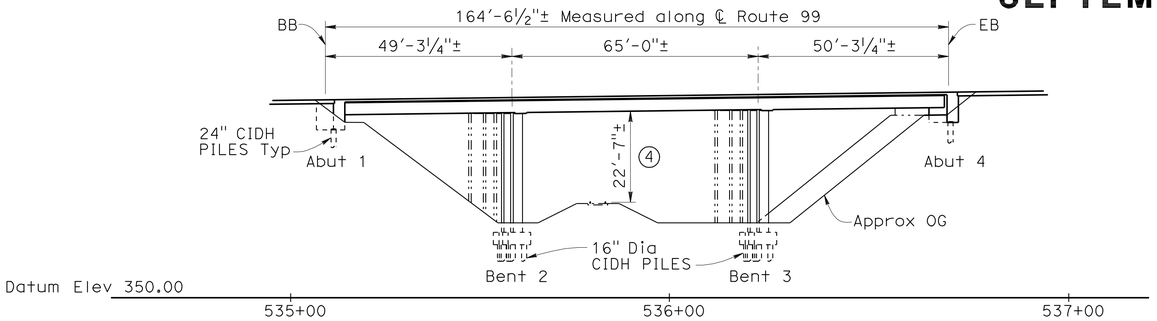

ELEVATION A-A

1" = 20'

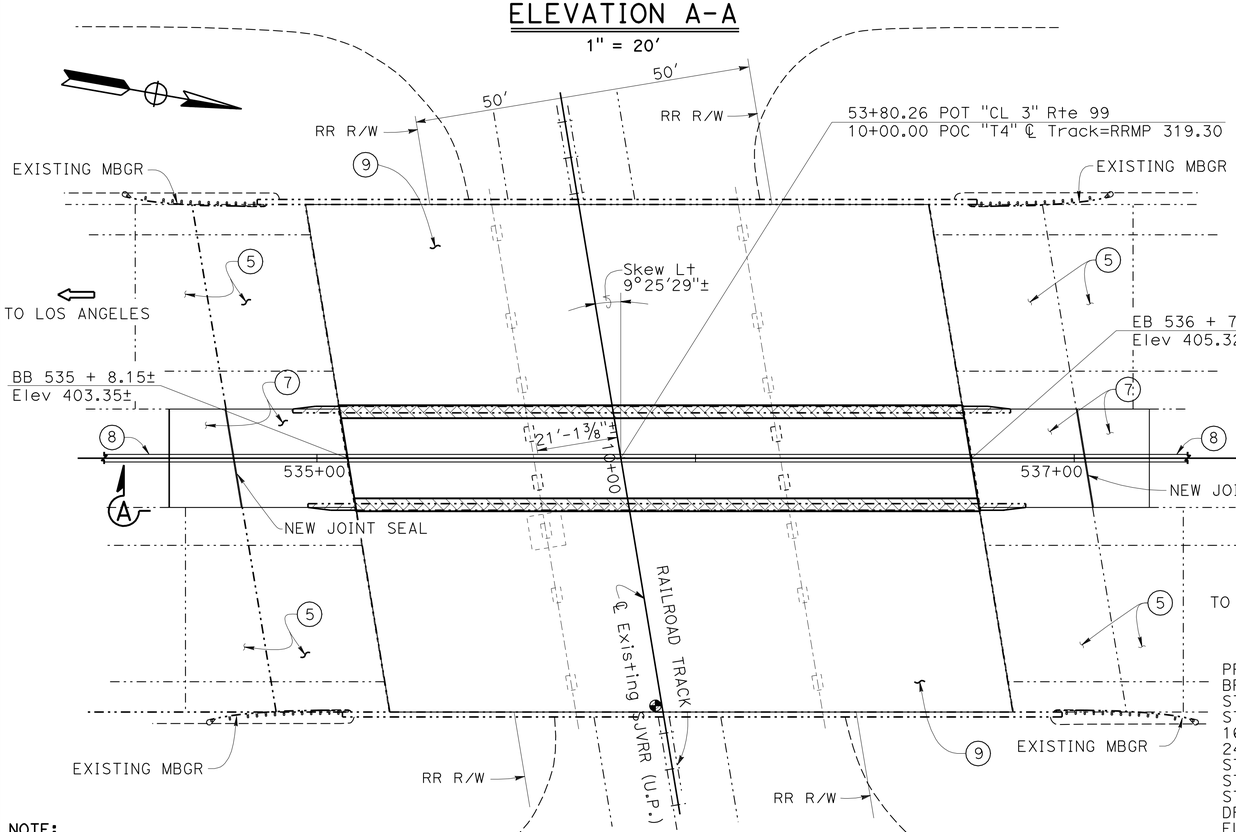

NOTE:
THE CONTRACTOR SHALL VERIFY ALL CONTROLLING FIELD DIMENSIONS BEFORE ORDERING OR FABRICATING ANY MATERIAL.

PLAN

1" = 20'

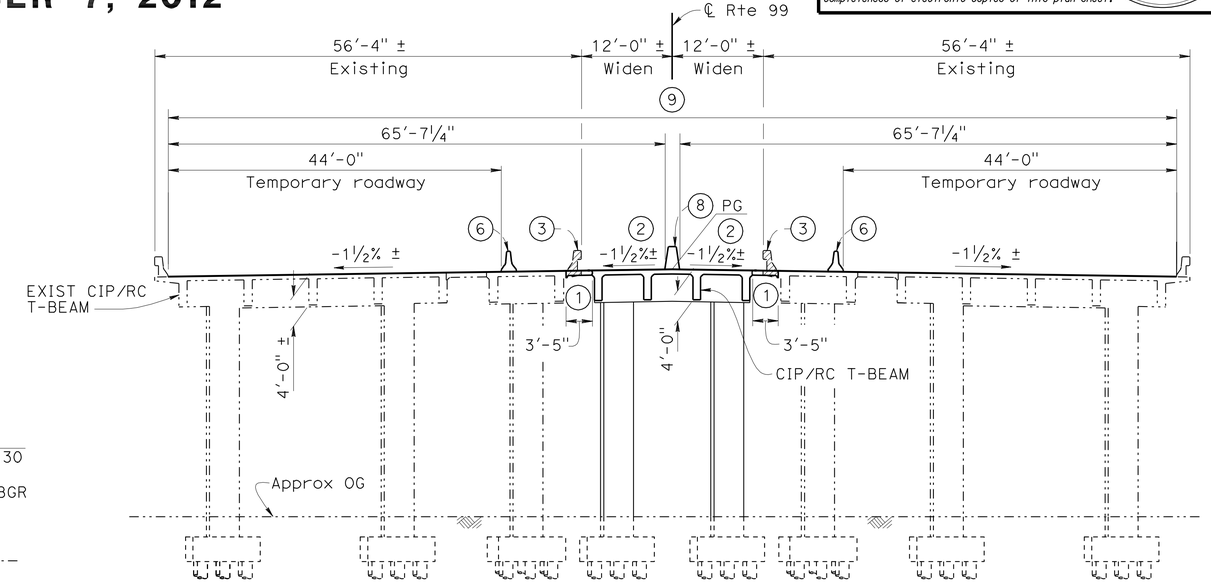

TYPICAL SECTION

1" = 10'

NOTES:

1. Wide Closure pour
2. Match existing cross slope
3. Remove existing concrete barrier Type 25
4. Existing minimum vertical clearance
5. Existing Approach and Sleeper Slab
6. Temporary Railing Type K, see "Road Plans"
7. New Approach Slab Type N (45D) shall be placed to final grade matching the existing approach slab surface and sleeper slab surface
8. Concrete Barrier Type 60A on bridge deck, other concrete barrier see "Road Plans"
9. Polyester concrete overlay entire existing bridge deck and new widen bridge deck. The new polyester concrete overlay shall be placed flush with structure approach at beginning of bridge and end of bridge, see "Typical Section" sheet

Bridge removal (Portion), Location B

Closure pour

Indicates existing structures

Indicates point of minimum vertical clearance

QUANTITIES

PREPARE CONCRETE BRIDGE DECK SURFACE	21,722	SQFT
BRIDGE REMOVAL (PORTION), LOCATION B	LUMP SUM	
STRUCTURE EXCAVATION (BRIDGE)	159	CY
STRUCTURE BACKFILL (BRIDGE)	111	CY
16" CAST-IN-DRILLED-HOLE CONCRETE PILING	738	LF
24" CAST-IN-DRILLED-HOLE CONCRETE PILING	421	LF
STRUCTURAL CONCRETE, BRIDGE FOOTING	26	CY
STRUCTURAL CONCRETE, BRIDGE	304	CY
STRUCTURAL CONCRETE, APPROACH SLAB (TYPE N)	92	CY
DRILL AND BOND DOWEL	69	LF
FURNISH POLYESTER CONCRETE OVERLAY	1,570	CF
PLACE POLYESTER CONCRETE OVERLAY	21,722	SQFT
BAR REINFORCING STEEL (BRIDGE)	116,310	LB
CONCRETE BARRIER (TYPE 60A)	259	LF

SOUTH BAKERSFIELD SR 99 WIDENING
SOUTH BAKERSFIELD OH (WIDEN)
GENERAL PLAN

DESIGN ENGINEER J. Setberg	DESIGN	BY N. NGUYEN	CHECKED G. SLOCUM	LOAD & RESISTANCE FACTOR DESIGN	LIVE LOADING: HL93 W/"LOW-BOY"; PERMIT DESIGN VEHICLE
	DETAILS	BY C. FIGUERRES\J. Yang	CHECKED G. Slocum	LAYOUT BY G. SLOCUM	CHECKED N. NGUYEN
	QUANTITIES	BY S. Kuruswamy	CHECKED N. Nguyen	SPECIFICATIONS BY M. Kopsa	PLANS AND SPECS COMPARED M. Kopsa

ORIGINAL SCALE IN INCHES FOR REDUCED PLANS 0 1 2 3

STATE OF CALIFORNIA
DEPARTMENT OF TRANSPORTATION

DIVISION OF ENGINEERING SERVICES
STRUCTURE DESIGN
DESIGN BRANCH 2

BRIDGE NO. 50-0242R/L
POST MILE 20.65

UNIT: 3577
PROJECT NUMBER & PHASE: 06000201650
CONTRACT NO.: 06-0G8301

DISREGARD PRINTS BEARING EARLIER REVISION DATES

REVISION DATES 01-13-11 09-26-11 10-03-11 11-28-11

SHEET 1 OF 12

USERNAME => s124496 DATE PLOTTED => 07-SEP-2012 TIME PLOTTED => 10:40

FILE => 50-242rl-a-gp.dgn

DIST	COUNTY	ROUTE	POST MILES TOTAL PROJECT	SHEET No.	TOTAL SHEETS
06	Ker	99	17.0/22.1	193	201

REGISTERED CIVIL ENGINEER 01-31-12 DATE

5-14-12
PLANS APPROVAL DATE

REGISTERED PROFESSIONAL ENGINEER Nghia H. Nguyen No. C60069 Exp. 06-30-12 CIVIL STATE OF CALIFORNIA

The State of California or its officers or agents shall not be responsible for the accuracy or completeness of electronic copies of this plan sheet.

NOTES:

Indicates existing structure

Indicates bridge and barrier removal (portion)

NEW CLOSURE POUR

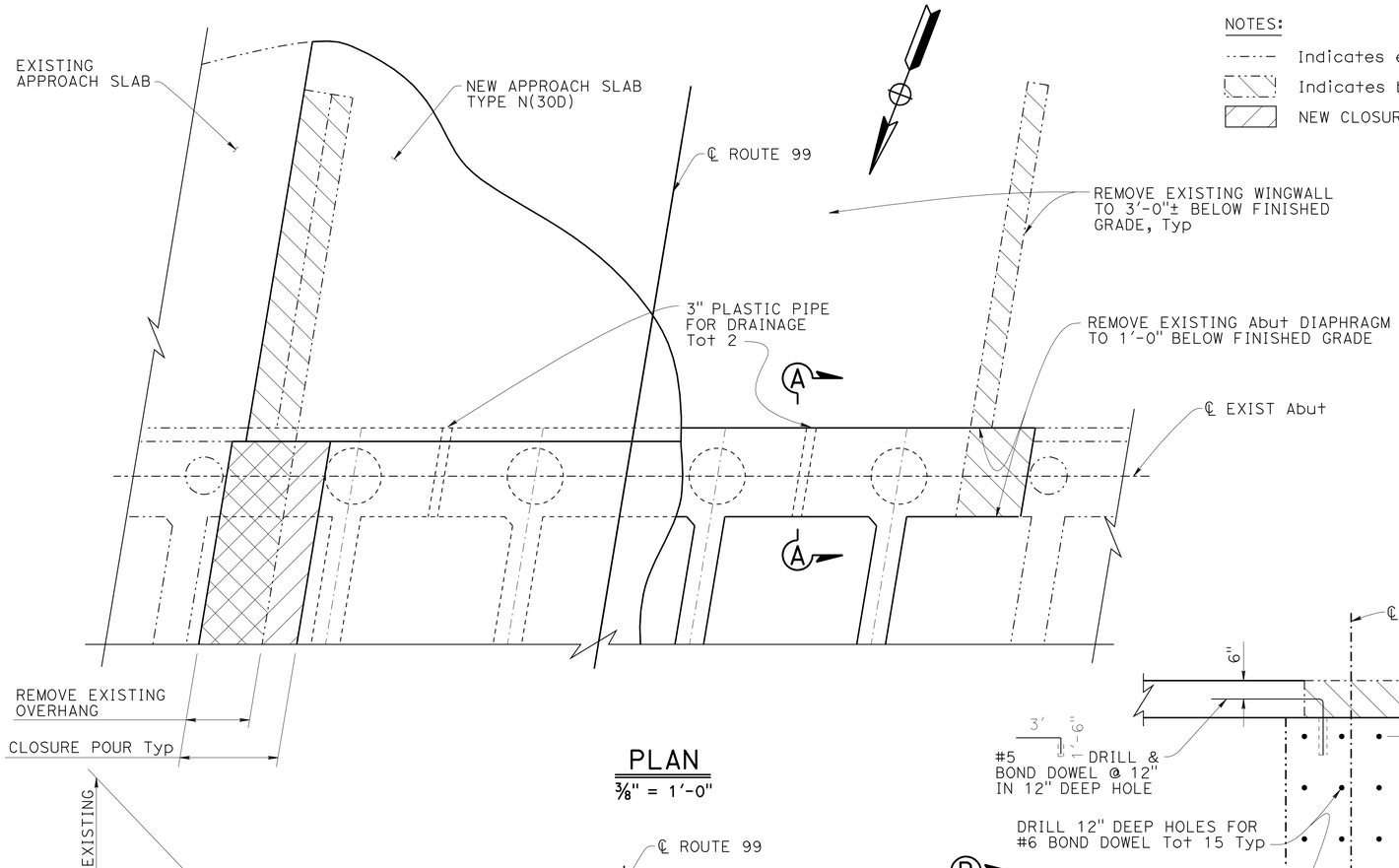

PLAN
3/8" = 1'-0"

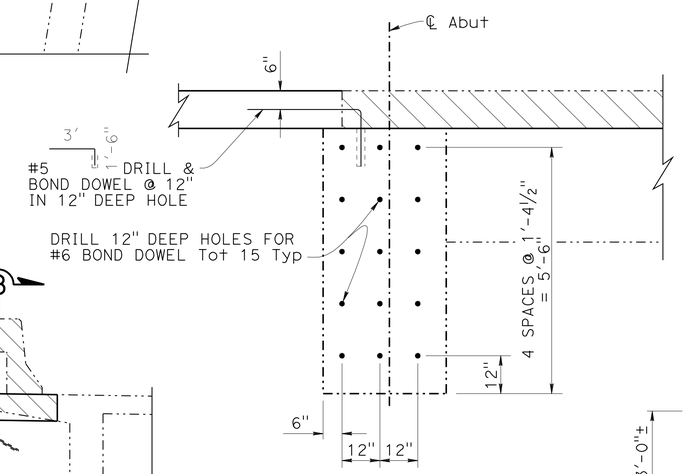

SECTION B-B
1/2" = 1'-0"

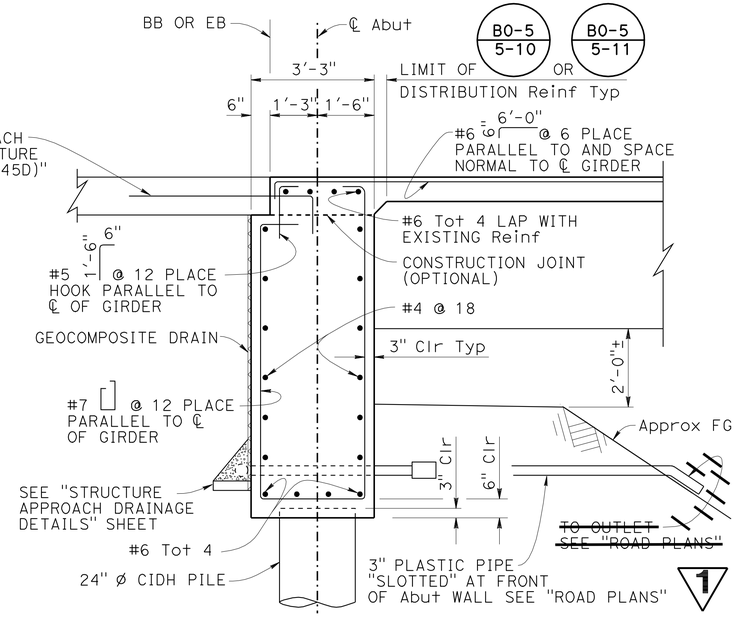

SECTION A-A
1/2" = 1'-0"

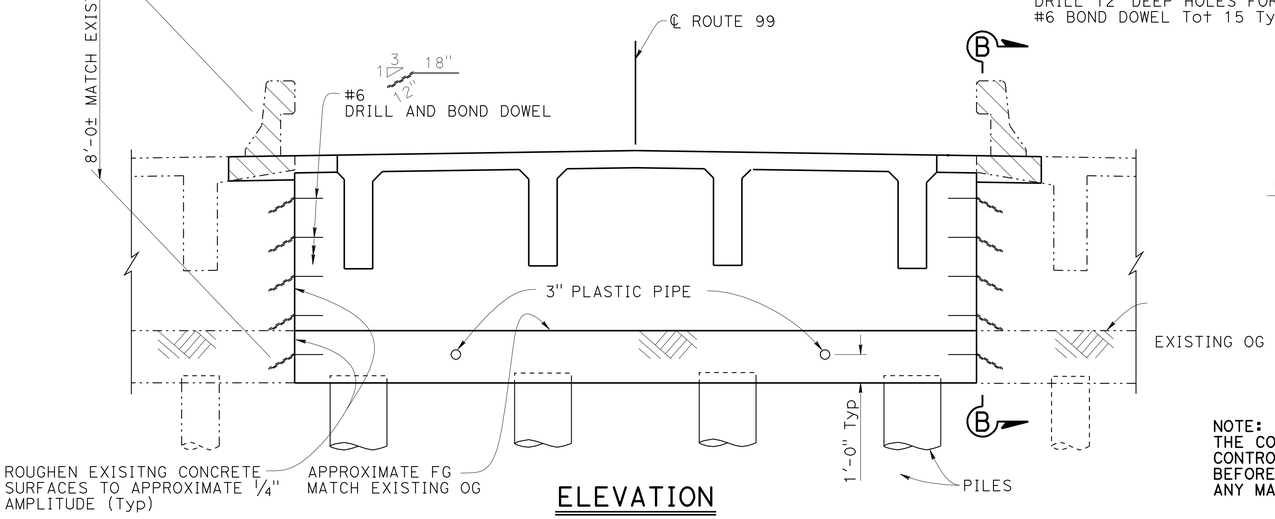

ELEVATION
3/8" = 1'-0"

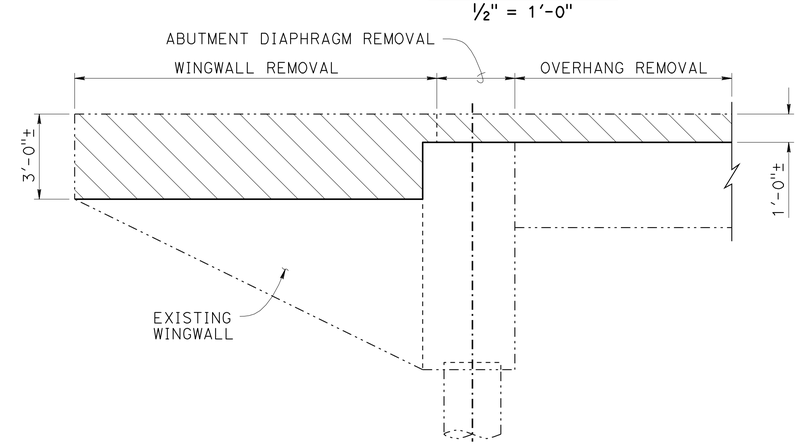

CONCRETE REMOVAL
3/8" = 1'-0"

NOTE:
THE CONTRACTOR SHALL VERIFY ALL CONTROLLING FIELD DIMENSIONS BEFORE ORDERING OR FABRICATING ANY MATERIAL.

1 **REVISED PER ADDENDUM No. 1 DATED SEPTEMBER 7, 2012**

	BY	CHECKED
DESIGN	N. NGUYEN	G. Slocum
DETAILS	J. Yang	G. Slocum
QUANTITIES	S. Kuruswamy	N. Nguyen

STATE OF CALIFORNIA
DEPARTMENT OF TRANSPORTATION

DIVISION OF ENGINEERING SERVICES
STRUCTURE DESIGN
DESIGN BRANCH 2

BRIDGE NO. 50-242R/L
POST MILE 20.65

SOUTH BAKERSFIELD SR 99 WIDENING
SOUTH BAKERSFIELD OH (WIDEN)
ABUTMENT LAYOUT & DETAILS

STRUCTURES DESIGN DETAIL SHEET (ENGLISH) (REV. 09-01-10)

ORIGINAL SCALE IN INCHES FOR REDUCED PLANS 0 1 2 3

UNIT: 3577
PROJECT NUMBER & PHASE: 06000201650
CONTRACT NO.: 06-0G8301

DISREGARD PRINTS BEARING EARLIER REVISION DATES

REVISION DATES 07-28-11 08-31-11

SHEET 4 OF 12

FILE => 50-242rl-h-alo.dgn

USERNAME => s124496 DATE PLOTTED => 07-SEP-2012 TIME PLOTTED => 10:40

DIST	COUNTY	ROUTE	POST MILES TOTAL PROJECT	SHEET No.	TOTAL SHEETS
06	Ker	99	17.0/22.1	198	201

Nghia Nguyen 01-31-12
REGISTERED CIVIL ENGINEER DATE

5-14-12
PLANS APPROVAL DATE

REGISTERED PROFESSIONAL ENGINEER Nghia H. Nguyen No. C60069 Exp. 06-30-12 CIVIL STATE OF CALIFORNIA

The State of California or its officers or agents shall not be responsible for the accuracy or completeness of electronic copies of this plan sheet.

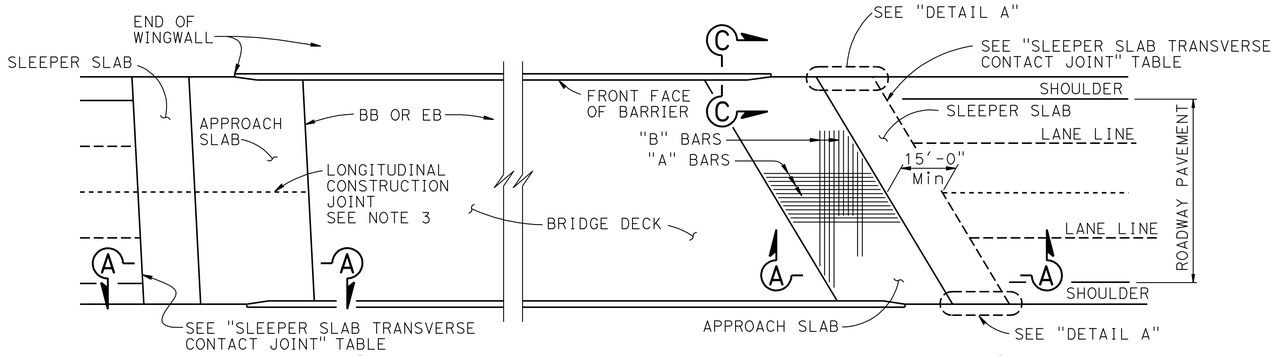

SKEW < 20°

PLAN
1" = 20'

SKEW ≥ 20°

NOTE: For "SECTION C-C", SEE "STRUCTURE APPROACH TYPE N(45D) DETAILS NO. 2" sheet

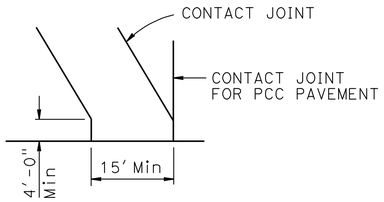

DETAIL A
NO SCALE

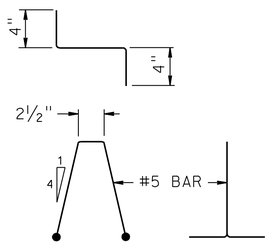

BAR CHAIR DETAIL

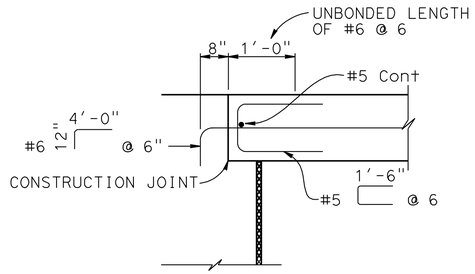

ALTERNATIVE 1

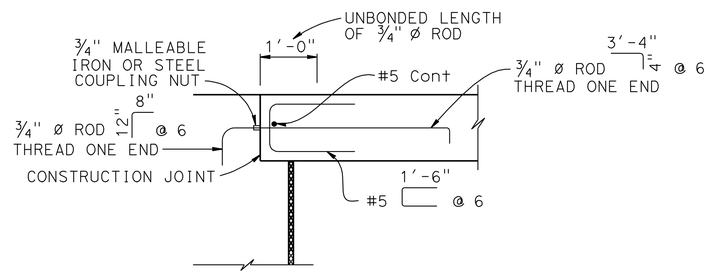

ALTERNATIVE 2

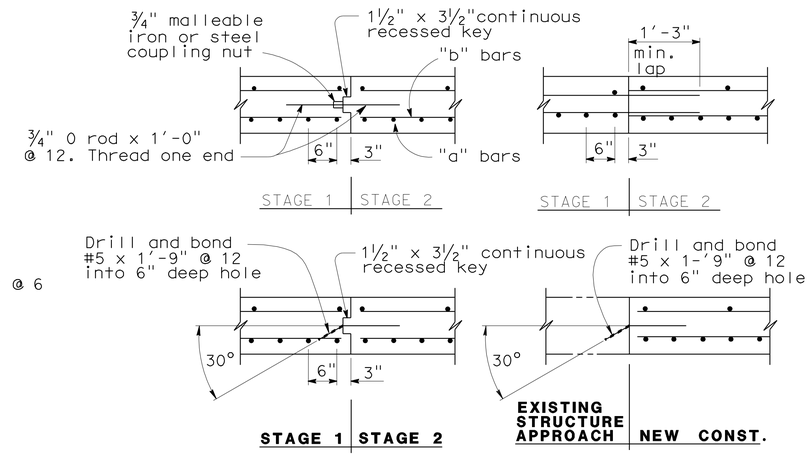

LONGITUDINAL CONSTRUCTION ② JOINT ALTERNATIVES

¾" = 1'-0"

DIAPHRAGM TYPE ABUTMENT TIE DETAILS (SEE NOTE 1)

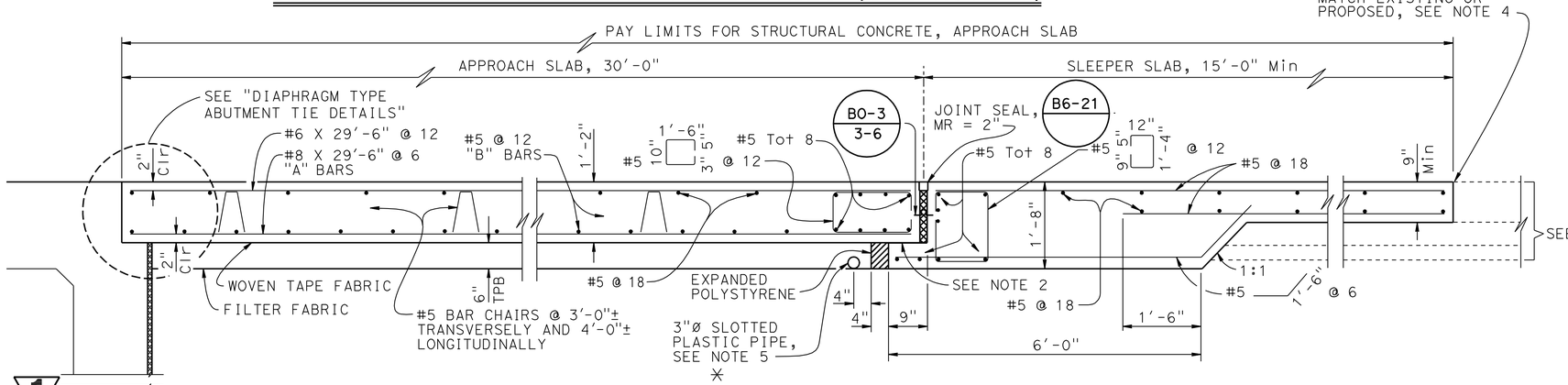

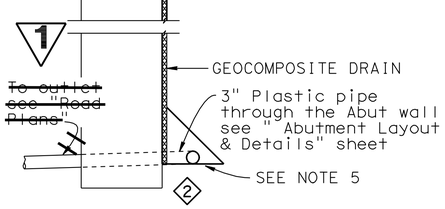

SECTION A-A
¾" = 1'-0"

SLEEPER SLAB TRANSVERSE CONTACT JOINT		
APPROACH SKEW	WITH AC ROADWAY PAVEMENT	WITH PCC ROADWAY PAVEMENT
< 20°	PARALLEL TO FACE OF PN	PARALLEL TO FACE OF PN
20° - 45°	PARALLEL TO FACE OF PN USE "DETAIL A"	STAGGER LINES 24' TO 36' APART
> 45°	PARALLEL TO FACE OF PN USE "DETAIL A"	STAGGER AT EACH LANE LINE

NOTES:

1. For details not noted or shown, see Structure Plans
2. Sliding joint ¼" x 9" neoprene strip, coat top with silicone grease and cover with 9" x 0.064" galvanized sheet metal
3. Longitudinal construction joints, when permitted by the Engineer, shall be located on lane lines
4. For transverse contact joint with new PCC paving, refer to Standard Plan P10.
5. For additional drainage details, see "STRUCTURE APPROACH DRAINAGE DETAILS" sheet
6. At the Contractor's option, slab transverse reinforcement may be placed parallel to paving notch. Spacing of transverse reinforcement is measured along ℄ roadway

② ✳ For new drainage 3" slotted plastic pipe shall be connected to the existing structure approach drainage system.

1 REVISED PER ADDENDUM No. 1 DATED SEPTEMBER 7, 2012

REVISED STANDARD DRAWING

FILE NO. xs3-010-1

APPROVAL DATE July 2011

① DELETED DETAILS
② ADDED DETAILS, NOTES, & REVISED REINFORCEMENT

STATE OF CALIFORNIA DEPARTMENT OF TRANSPORTATION

DIVISION OF ENGINEERING SERVICES

BRIDGE NO. 50-242R/L
POST MILE 20.65

SOUTH BAKERSFIELD SR 99 WIDENING
SOUTH BAKERSFIELD OH (WIDEN)
STRUCTURE APPROACH TYPE N(45D) DETAILS

DS OSD 2147A (ENGLISH STANDARD DRAWING "XS" BORDER REV. (02-02-11)

ORIGINAL SCALE IN INCHES FOR REDUCED PLANS 0 1 2 3

UNIT: 3577
PROJECT NUMBER & PHASE: 06000201650
CONTRACT NO.: 06-0G8301

DISREGARD PRINTS BEARING EARLIER REVISION DATES

REVISION DATES 11-28-11

SHEET 9 OF 12

FILE => 50-242r1-xs1-xs3-010-1[1].add

USERNAME => s124496 DATE PLOTTED => 07-SEP-2012 TIME PLOTTED => 10:40

DIST	COUNTY	ROUTE	POST MILES TOTAL PROJECT	SHEET No.	TOTAL SHEETS
06	Ker	99	17.0/22.1	199	201

Nghia Nguyen 01-31-12
REGISTERED CIVIL ENGINEER DATE

5-14-12
PLANS APPROVAL DATE

REGISTERED PROFESSIONAL ENGINEER
Nghia H. Nguyen
No. C60069
Exp. 06-30-12
CIVIL
STATE OF CALIFORNIA

The State of California or its officers or agents shall not be responsible for the accuracy or completeness of electronic copies of this plan sheet.

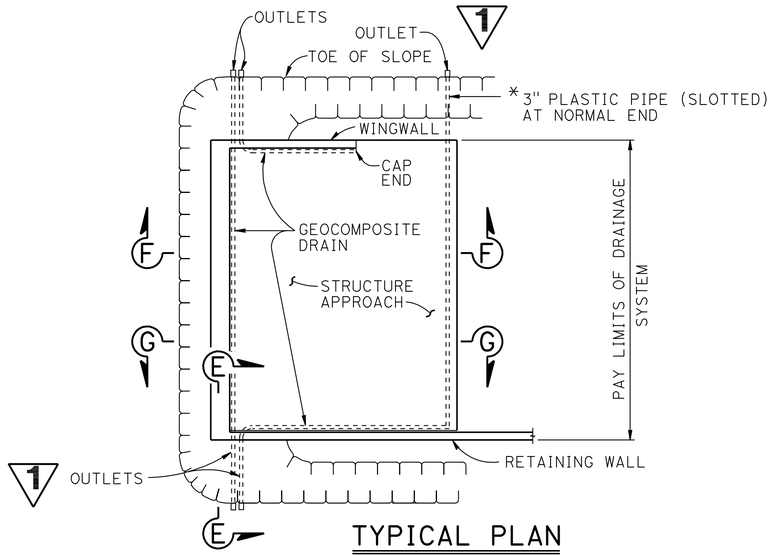

TYPICAL PLAN

1" = 10'

* FOR PIPE LAYOUT AT STAGGERED END, SEE "DETAIL B"

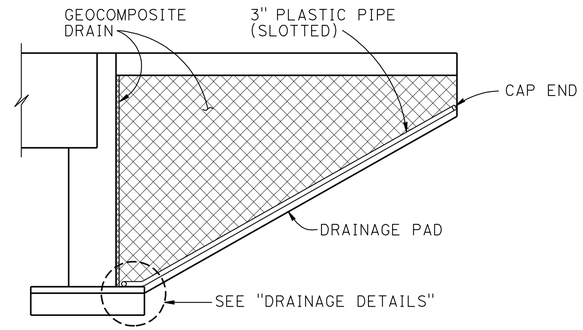

CANTILEVER WINGWALL

SECTION F-F

1/4" = 1'-0"

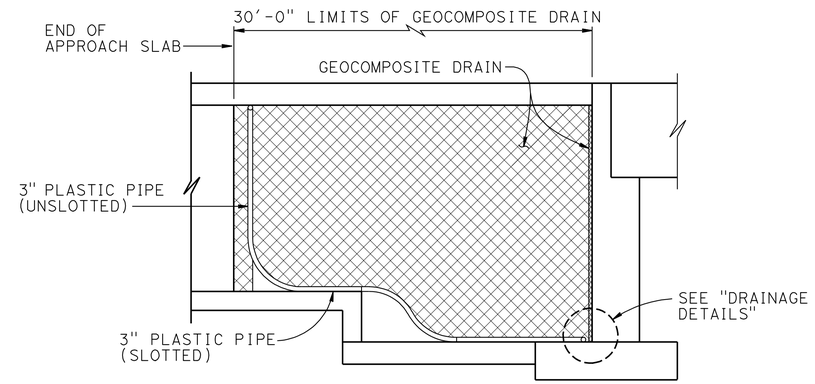

RETAINING WALL WINGWALL DRAINAGE DETAILS

SECTION G-G

1/4" = 1'-0"

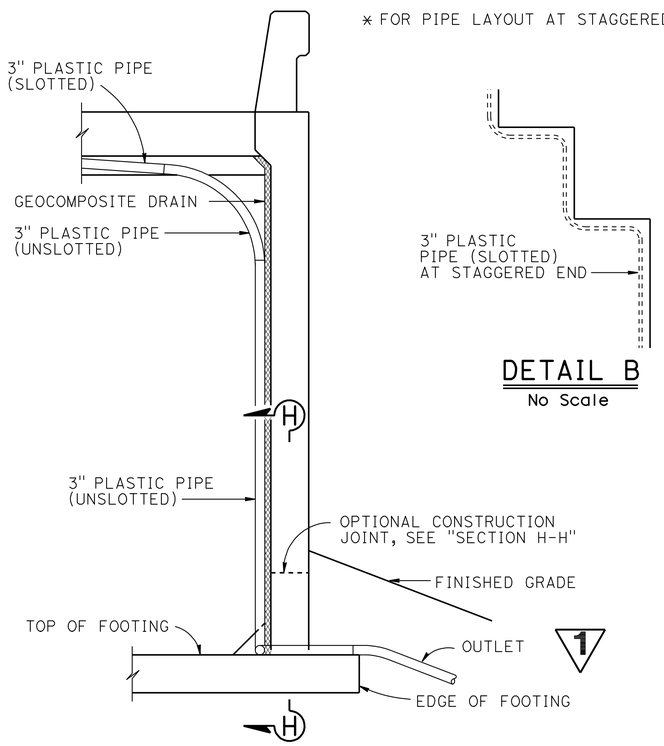

SECTION E-E

1/2" = 1'-0"

NOTE: Bends and junctions in 3" plastic pipe are 30" radius Min

DETAIL B

No Scale

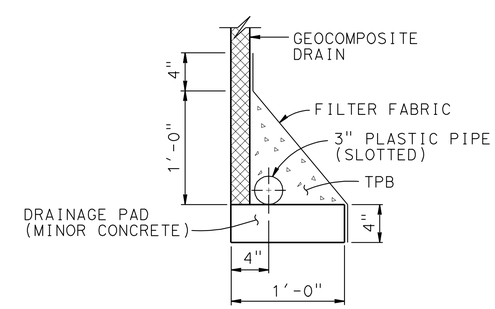

WITHOUT FOOTING

DRAINAGE DETAILS

1 1/2" = 1'-0"

1 **REVISED PER ADDENDUM No. 1 DATED SEPTEMBER 7, 2012**

1 DELETED DETAIL

REVISED STANDARD DRAWING

FILE NO. **xs3-110**

APPROVAL DATE July 2011

STATE OF **CALIFORNIA** DEPARTMENT OF TRANSPORTATION

DIVISION OF ENGINEERING SERVICES

BRIDGE NO. 50-0242R/L

POST MILE 20.65

SOUTH BAKERSFIELD SR 99 WIDENING

SOUTH BAKERSFIELD OH (WIDEN)

STRUCTURE APPROACH DRAINAGE DETAILS

DS OSD 2147A (ENGLISH STANDARD DRAWING "XS" BORDER REV. (02-02-11)

ORIGINAL SCALE IN INCHES FOR REDUCED PLANS 0 1 2 3

UNIT: 3577
PROJECT NUMBER & PHASE: 06000201650
CONTRACT NO.: 06-0G8301

DISREGARD PRINTS BEARING EARLIER REVISION DATES

REVISION DATES 10-03-11

SHEET 10 OF 12

FILE => 50-242rl-xs2-xs3-110.add

USERNAME => s124496 DATE PLOTTED => 07-SEP-2012 TIME PLOTTED => 10:40