Dist	COUNTY	ROUTE	POST MILES TOTAL PROJECT	SHEET No.	TOTAL SHEETS
06	Fre	41	R27.6/R29.8	3	107

REGISTERED CIVIL ENGINEER 04/07/09 DATE

8-17-09
PLANS APPROVAL DATE

REGISTERED PROFESSIONAL ENGINEER MICHAEL S. BETTEGA No. C 34348 Exp. 9/30/09 CIVIL STATE OF CALIFORNIA

THE STATE OF CALIFORNIA OR ITS OFFICERS OR AGENTS SHALL NOT BE RESPONSIBLE FOR THE ACCURACY OR COMPLETENESS OF SCANNED COPIES OF THIS PLAN SHEET.

DESIGN DESIGNATION

ADT (2010)	8,500
ADT (2020)	10,400
ADT (2030)	12,800
DHV (2020)	1,050
DHV (2030)	1,300
D	100%
T	3%

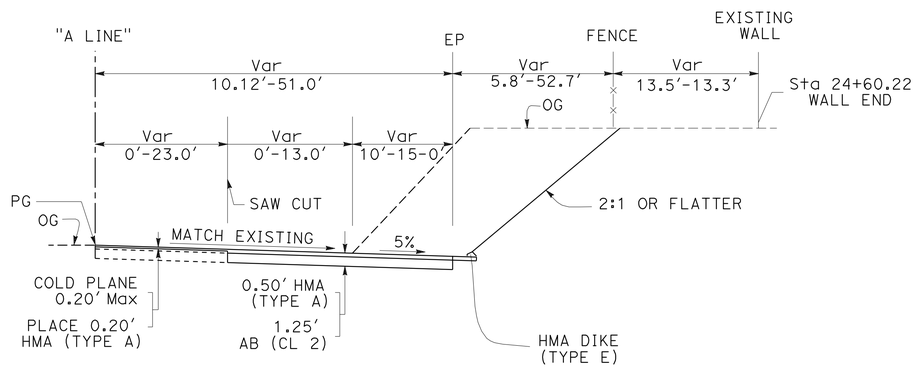

Sta 19+50.00 - Sta 30+90.69

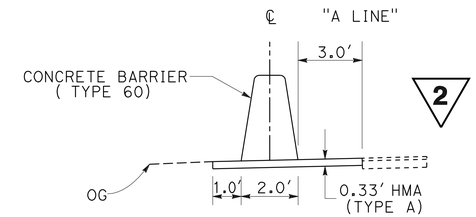

STA 12+70.31 TO 16+13.39

DESIGN DESIGNATION

ADT (2010)	4,350
ADT (2020)	5,300
ADT (2030)	6,600
DHV (2020)	540
DHV (2030)	660
D	100%
T	3%

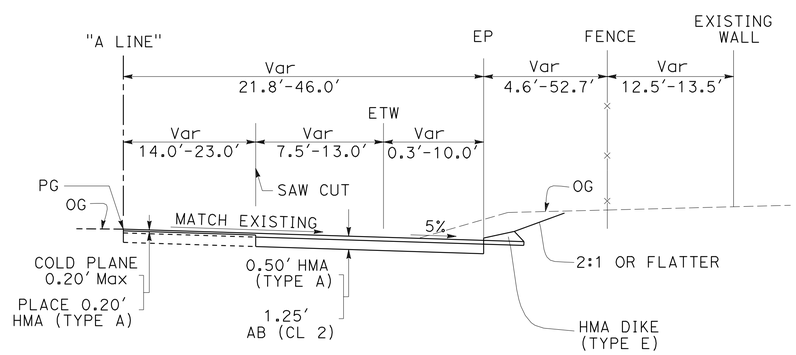

Sta 11+68.14 - Sta 19+50.00

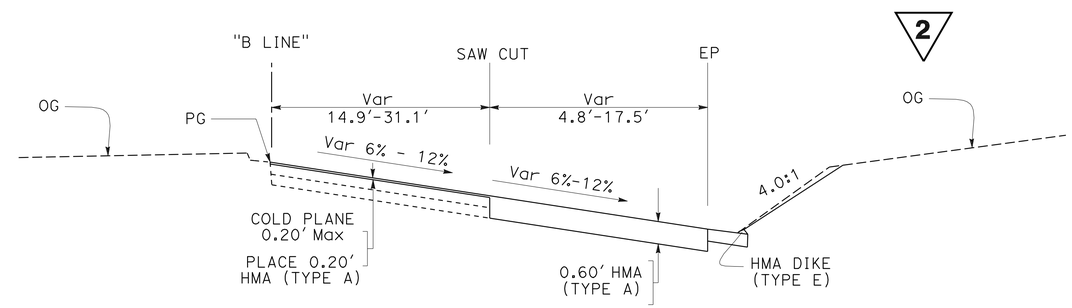

Sta 23+03.67 - Sta 28+19.02

ROUTE 41
SHAW AVENUE
LOCATION 2
NB DIRECTIONAL ON-RAMP

ROUTE 41
SHAW AVENUE
LOCATION 3
NB LOOP RAMP

2 **REVISED PER ADDENDUM No. 2 DATED FEBRUARY 25, 2010**

TYPICAL CROSS SECTIONS
NO SCALE **X-2**

STATE OF CALIFORNIA - DEPARTMENT OF TRANSPORTATION
DESIGN
FUNCTIONAL SUPERVISOR: GETACHEW ESHETE
CALCULATED-DESIGNED BY: MIKE BETTEGA
CHECKED BY: TRIET LY
REVISED BY / DATE REVISED

LAST REVISION 02-08-10 | DATE PLOTTED => 24-FEB-2010 | TIME PLOTTED => 11:24

Dist	COUNTY	ROUTE	POST MILES TOTAL PROJECT	SHEET No.	TOTAL SHEETS
06	Fre	41	R27.6/R29.8	4	107

REGISTERED CIVIL ENGINEER 04/07/09 DATE

8-17-09
PLANS APPROVAL DATE

REGISTERED PROFESSIONAL ENGINEER MICHAEL S. BETTEGA No. C 34348 Exp. 9/30/09 CIVIL STATE OF CALIFORNIA

THE STATE OF CALIFORNIA OR ITS OFFICERS OR AGENTS SHALL NOT BE RESPONSIBLE FOR THE ACCURACY OR COMPLETENESS OF SCANNED COPIES OF THIS PLAN SHEET.

DESIGN DESIGNATION

ADT (2010)	6,800
ADT (2020)	8,600
ADT (2030)	10,700
DHV (2020)	860
DHV (2030)	1,050
D	100%
T	3%

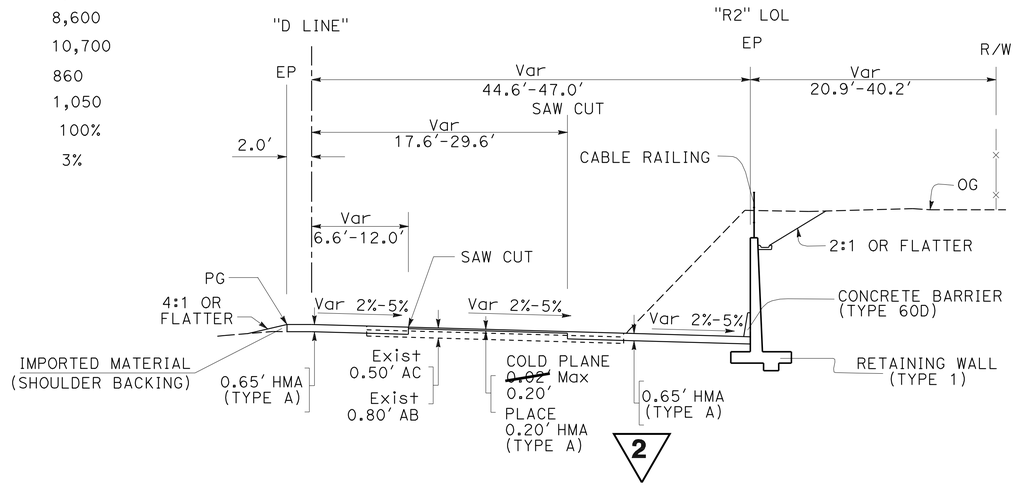

Sta 101+51.44 - Sta 106+28.52

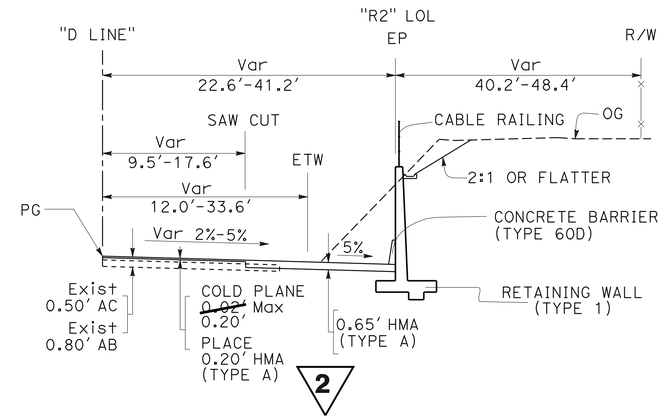

Sta 106+28.52 - Sta 118+97.15

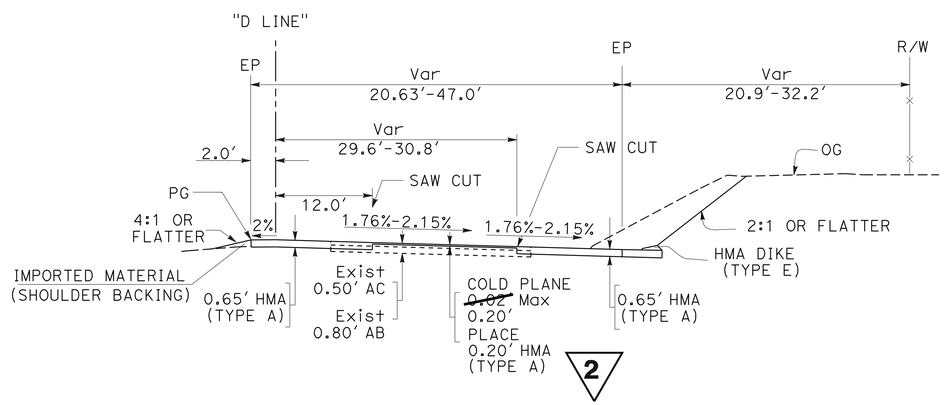

Sta 100+57.48 - Sta 101+51.44

ROUTE 41
BULLARD AVENUE
LOCATION 4
NB DIRECTIONAL ON-RAMP

2 **REVISED PER ADDENDUM No. 2 DATED FEBRUARY 25, 2010**

TYPICAL CROSS SECTIONS

NO SCALE **X-3**

STATE OF CALIFORNIA - DEPARTMENT OF TRANSPORTATION
Caltrans® **DESIGN**

FUNCTIONAL SUPERVISOR: GETACHEW ESHETE
CALCULATED-DESIGNED BY: MIKE BETTEGA
CHECKED BY: TRIET LY
REVISED BY
DATE REVISED

LAST REVISION 04-30-09 | DATE PLOTTED => 24-FEB-2010 | TIME PLOTTED => 11:24