Dist	COUNTY	ROUTE	POST MILES TOTAL PROJECT	SHEET No.	TOTAL SHEETS
06	Ker	14,58	18.2,R114.6	2	13

LICENSED LANDSCAPE ARCHITECT

5-18-09
PLANS APPROVAL DATE

LICENSED LANDSCAPE ARCHITECT
DAVID R. MARTIN #5038
SIGNATURE
3/31/11
REGISTRATION DATE
3/30/09
DATE
STATE OF CALIFORNIA

THE STATE OF CALIFORNIA OR ITS OFFICERS OR AGENTS SHALL NOT BE RESPONSIBLE FOR THE ACCURACY OR COMPLETENESS OF SCANNED COPIES OF THIS PLAN SHEET.

1

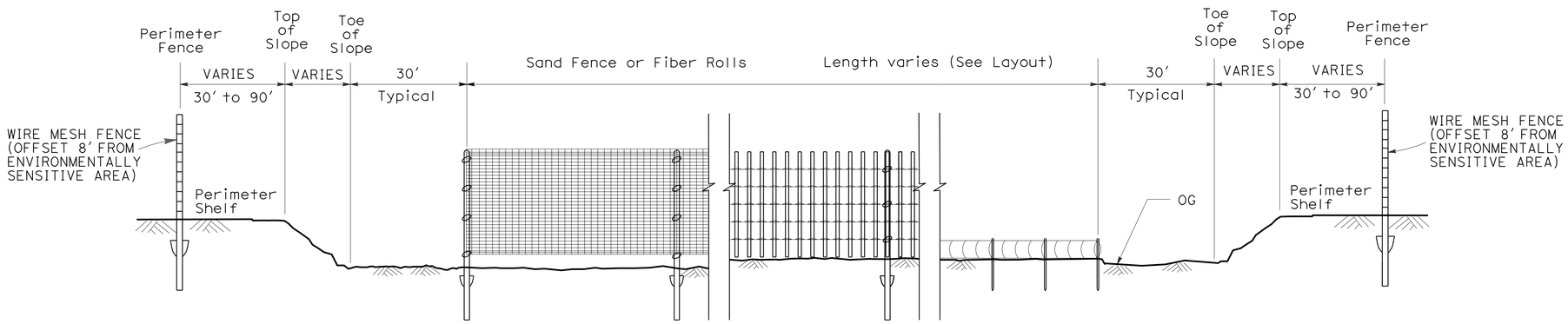

TYPICAL SECTION LOOKING NORTHWEST

FENCE AND FIBER ROLLS
SITE C

TYPICAL CROSS SECTIONS

NO SCALE

X-1

1 **REVISED PER ADDENDUM No. 1 DATED AUGUST 13, 2009**

STATE OF CALIFORNIA - DEPARTMENT OF TRANSPORTATION
Caltrans® LANDSCAPE ARCHITECTURE

FUNCTIONAL SUPERVISOR: ELBERT COX
CALCULATED-DESIGNED BY: DAVID MARTIN
CHECKED BY: CHARLES LaRUE
REVISED BY
DATE REVISED

LAST REVISION 03-30-09
DATE PLOTTED => 12-AUG-2009
TIME PLOTTED => 12:41

Dist	COUNTY	ROUTE	POST MILES TOTAL PROJECT	SHEET No.	TOTAL SHEETS
06	Ker	14,58	18.2,R114.6	3	13

LICENSED LANDSCAPE ARCHITECT

5-18-09
PLANS APPROVAL DATE

LICENSED LANDSCAPE ARCHITECT DAVID R. MARTIN #5089 Signature 3/31/11 Renewal Date 3/30/09 Date STATE OF CALIFORNIA

THE STATE OF CALIFORNIA OR ITS OFFICERS OR AGENTS SHALL NOT BE RESPONSIBLE FOR THE ACCURACY OR COMPLETENESS OF SCANNED COPIES OF THIS PLAN SHEET.

NOTE: FOR COMPLETE RIGHT OF WAY AND ACCURATE ACCESS DATA, SEE RIGHT OF WAY RECORD MAPS AT DISTRICT OFFICE.

LEGEND

ENVIRONMENTALLY SENSITIVE AREA (ESA)

WIRE MESH FENCE

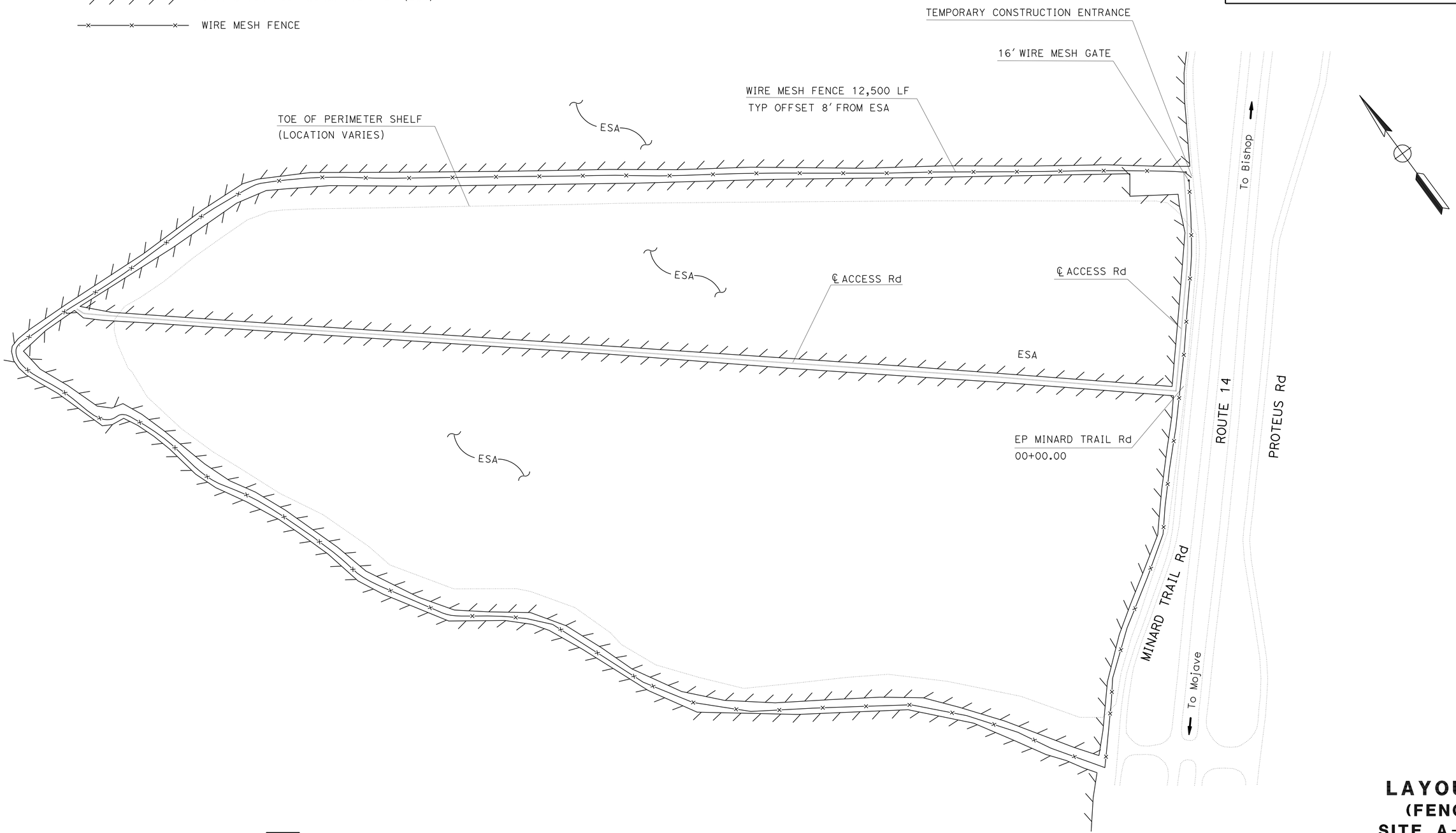

1 REVISED PER ADDENDUM No. 1 DATED AUGUST 13, 2009

SCALE: 1" = 200'

LAYOUT (FENCE SITE A-2) L-1

STATE OF CALIFORNIA - DEPARTMENT OF TRANSPORTATION
Caltrans® LANDSCAPE ARCHITECTURE

FUNCTIONAL SUPERVISOR: ELBERT COX

CALCULATED-DESIGNED BY: DAVID MARTIN
CHECKED BY: CHARLES LaRUE

REVISED BY
DATE REVISED

LAST REVISION 03-00-09
DATE PLOTTED => 12-AUG-2009
TIME PLOTTED => 12:41

Dist	COUNTY	ROUTE	POST MILES TOTAL PROJECT	SHEET No.	TOTAL SHEETS
06	Ker	14,58	18.2,R114.6	6	13

LICENSED LANDSCAPE ARCHITECT

5-18-09
PLANS APPROVAL DATE

LICENSED LANDSCAPE ARCHITECT DAVID R. MARTIN #5058 SIGNATURE 3/31/11 REGISTRATION DATE 3/30/09 DATE STATE OF CALIFORNIA

THE STATE OF CALIFORNIA OR ITS OFFICERS OR AGENTS SHALL NOT BE RESPONSIBLE FOR THE ACCURACY OR COMPLETENESS OF SCANNED COPIES OF THIS PLAN SHEET.

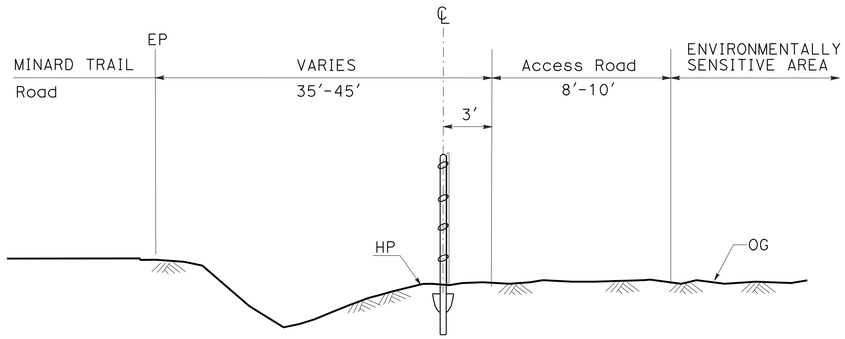

TYPICAL SECTION

WIRE MESH FENCE AT MINARD TRAIL ROAD SITE A-2

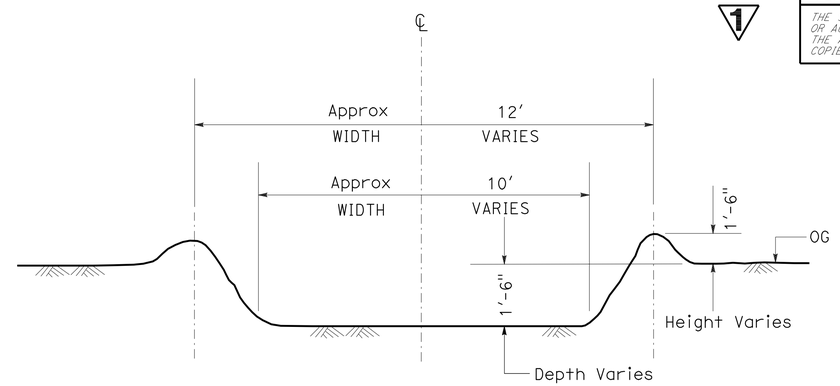

TYPICAL SECTION

Exist SOIL BERMS AND SWALES TO REMAIN SITE C

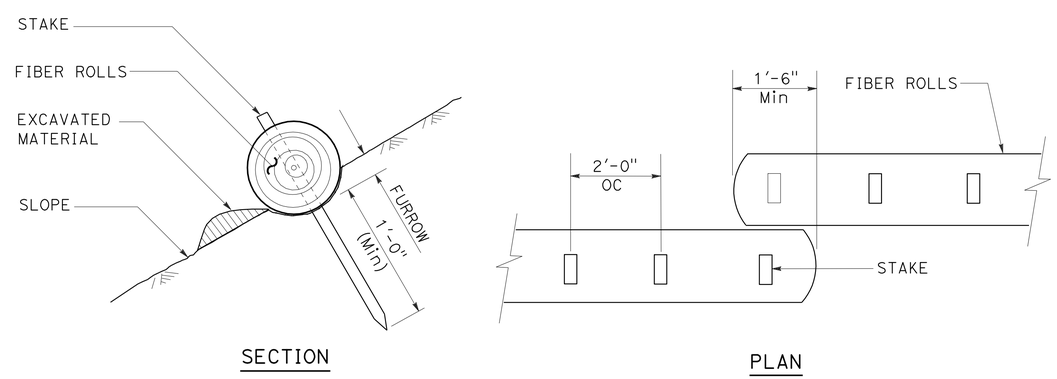

FIBER ROLLS (TYPE 1)

1 **REVISED PER ADDENDUM No. 1 DATED AUGUST 13, 2009**

CONSTRUCTION DETAILS

NO SCALE

C-2

STATE OF CALIFORNIA - DEPARTMENT OF TRANSPORTATION
Caltrans® LANDSCAPE ARCHITECTURE

FUNCTIONAL SUPERVISOR: ELBERT COX

CALCULATED-DESIGNED BY: DAVID MARTIN
CHECKED BY: CHARLES LaRUE
REVISED BY
DATE REVISED

LAST REVISION 03-30-09
DATE PLOTTED => 12-AUG-2009
TIME PLOTTED => 12:42

Dist	COUNTY	ROUTE	POST MILES TOTAL PROJECT	SHEET No.	TOTAL SHEETS
06	Ker	14,58	18.2,R114.6	10	13

LICENSED LANDSCAPE ARCHITECT

5-18-09
PLANS APPROVAL DATE

LICENSED LANDSCAPE ARCHITECT DAVID R. MARTIN #3093 STATE OF CALIFORNIA
Expiration Date 3/31/11
Registrant Date 3/30/09
Date

THE STATE OF CALIFORNIA OR ITS OFFICERS OR AGENTS SHALL NOT BE RESPONSIBLE FOR THE ACCURACY OR COMPLETENESS OF SCANNED COPIES OF THIS PLAN SHEET.

1

WIRE MESH FENCE AND GATES

LOCATION	FENCE (TYPE WM, METAL POST) (LF)	16' WIRE MESH GATE (EA)
SITE A-2	12,500	1
SITE C	11,500	2
TOTAL	24,000	3

WATER POLLUTION CONTROL

LOCATION	Temp Const ENTRANCE (EA)	Temp SOIL BINDER (SQYD)	Temp COVER (SQYD)
SITE A-2	1	———	———
SITE C	2	136,178	1340
TOTAL	3	136,178	1340

SAND FENCE AND FIBER ROLLS

LOCATION	SAND FENCE (TYPE POLYETHYLENE) (LF)	SAND FENCE (TYPE WOOD) (LF)	FIBER ROLLS (LF)
SITE C Loc 1	———	4860	
SITE C Loc 2	———	———	4075
SITE C Loc 3	———	———	7360
SITE C Loc 4	5150	———	———
TOTAL	5,150	4,860	11,435

EROSION CONTROL (DRILL SEED)

LOCATION	ACRES
SITE C	140
TOTAL	140

1 REVISED PER ADDENDUM No. 1 DATED AUGUST 13, 2009

SUMMARY OF QUANTITIES

Q-1

DAVID MARTIN — REVISED BY
CHARLES LaRUE — DATE REVISED
CALCULATED-DESIGNED BY
CHECKED BY
FUNCTIONAL SUPERVISOR
ELBERT COX
STATE OF CALIFORNIA - DEPARTMENT OF TRANSPORTATION
Caltrans® LANDSCAPE ARCHITECTURE

LAST REVISION 03-30-09
DATE PLOTTED => 12-AUG-2009
TIME PLOTTED => 12:42