INFORMATION HANDOUT

For Contract No. 06-0E3404
At 06-Ker-99-21.7/24.7

Identified by
Project ID 0612000122

MATERIALS INFORMATION

Alternative Crash Cushion System

Water Availability Memo

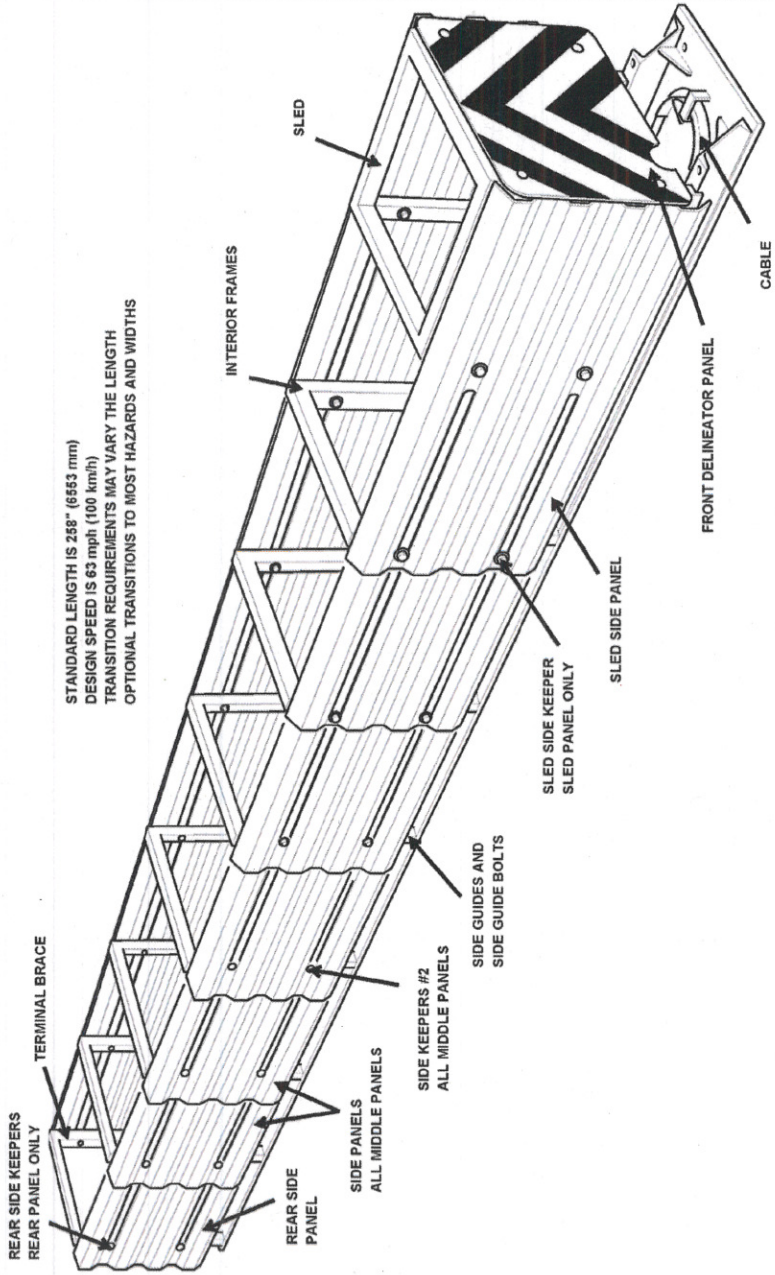

SCI100GM IMPACT ATTENUATOR

SCI Products Inc.

A Division of Stabler Companies Inc.

SCI17a

SHEET NO.	DATE
1 OF 2	6 / 01 / 05

SCI100GM IMPACT ATTENUATOR

SCI17a	
SHEET NO.	DATE
2 OF 2	6 / 01 / 05

SCI Products Inc.

A Division of Stabler Companies Inc.

QuadGuard® II

The New Standard in Crash Cushions

OVERVIEW

The QuadGuard family has evolved again! Using the existing framework of the QuadGuard, the QuadGuard II provides TL-2 and TL-3 protection using less length. The TL-2 QuadGuard II is 25% shorter than the original QuadGuard measuring less than 3m (10'). The TL-3 model is also nearly a meter, 3 feet, shorter than its predecessor.

The only modifications are the addition of the revolutionary Steel Nose, and the monorail Guide Stabilizers. The remaining components are identical to the existing NCHRP 350 systems that have been installed globally since the mid 1990's.

The QuadGuard II will telescope rearward on head-on impacts by both the light car and the high center-of-gravity pickup truck at speeds up to 100 km/h (62 mph) and safely redirect errant vehicles on impact up to 20 angles into the side of the unit without gating.

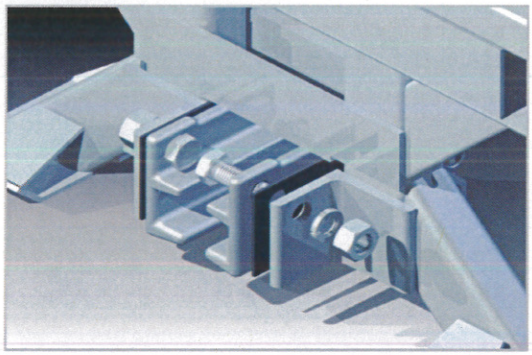

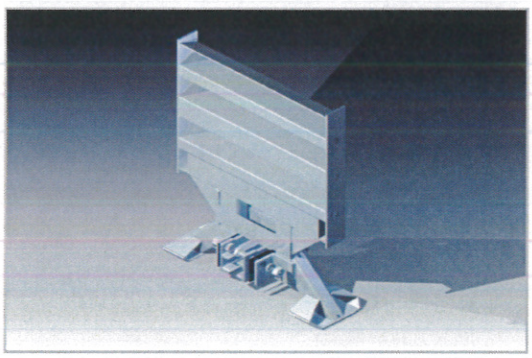

POST IMPACT DEBRIS

The design of the QuadGuard II does an excellent job of minimizing debris affecting other vehicles in the roadway.

FEATURES AND BENEFITS

- More is LESS!
- QuadGuard II has up to 25% less footprint reducing installation cost
- Steel Nose provides excellent visibly
- Majority of system is identical to QuadGuard- reduced inventory requirements
- Shorter Systems are less likely to be impacted
- Offers hazard protection from 40 km/h (25mph) to 115 km/h to (70mph)

QUADGUARD ® II

ENERGY ABSORPTION SYSTEMS, INC.

SAVING LIVES BY DESIGN®

www.energyabsorption.com

QUADGUARD® II

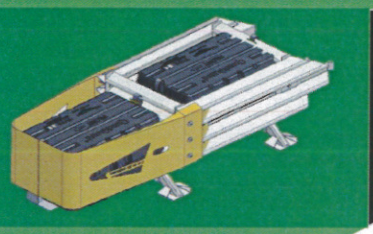

SPECIFICATIONS

Minimum Width at Backup	610 mm	(2')
Maximum Width at Backup	2.3 m	(8')
TL-2 Effective Length	2.6 m	(8'8")
TL-3 Effective Length	5.4 m	(8'8")

1 ENGINEERED STEEL NOSE
2 MONORAIL
3 STEEL BACKUP
4 FENDER PANEL

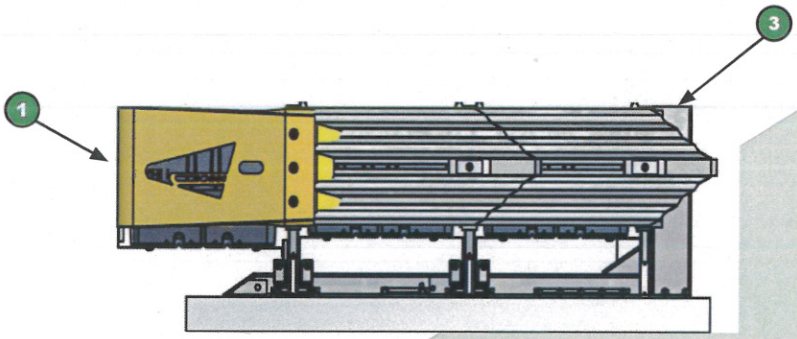

TL-2

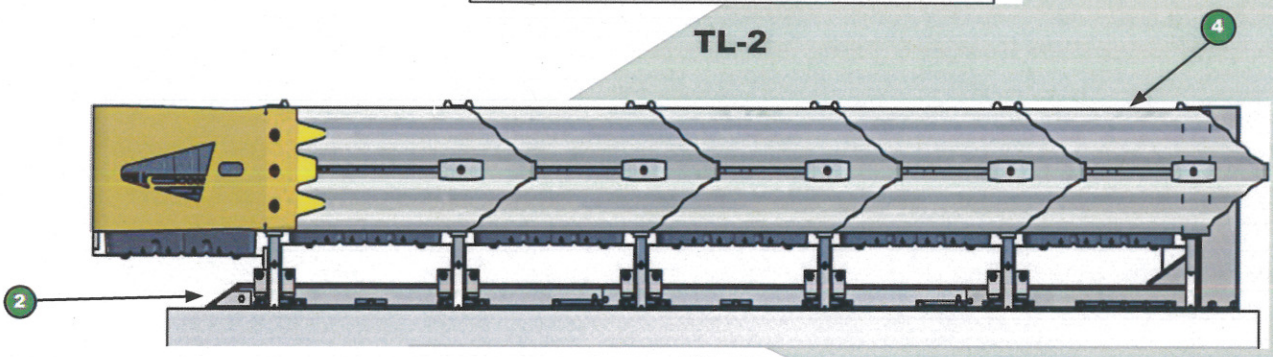

TL-3

QUADGUARD® II

DISTRIBUTED BY:

Quixote Transportation Safety
www.quixtrans.com

35 E. Wacker Drive • Chicago, IL 60601
Tel: (312) 467-6750 • Fax: (312) 467-9625

Crown House, Crown Street • Ipswich, IP1 3HS
Tel: 44-1473-221-105 • Fax: 44-1473-221-106

www.energyabsorption.com

ENERGY ABSORPTION SYSTEMS, INC.

INSTALLATION MANUAL

UNIVERSAL TAU-II®

NCHRP 350 TL-3 Redirective, Non-Gating, Crash Cushion

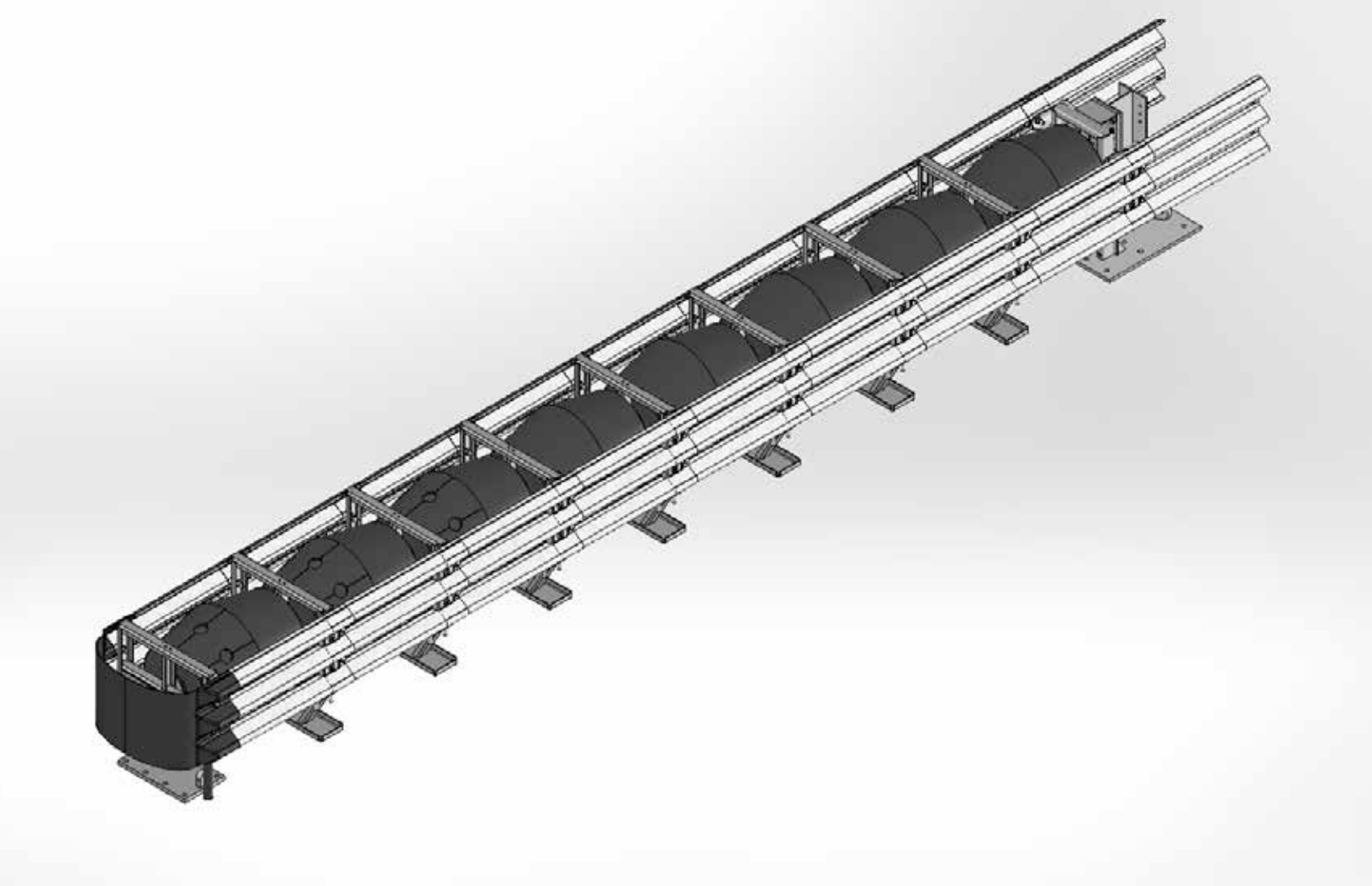

BARRIER SYSTEMS®
BY LINDSAY

STANDARD LIMITED WARRANTY

Lindsay Transportation Solutions, Inc. "LTS" (formerly Barrier Systems) has tested the impact performance of its barriers and crash cushion systems, and other highway safety hardware under controlled conditions, however, LTS does not represent nor warrant that the results of those controlled conditions would necessarily avoid injury to persons or property. LTS EXPRESSLY DISCLAIMS ANY WARRANTY OR LIABILITY FOR CLAIMS ARISING BY REASONS OF DEATH OR PERSONAL INJURY OR DAMAGE TO PROPERTY RESULTING FROM ANY IMPACT, COLLISION OR HARMFUL CONTACT WITH THE PRODUCTS OR NEARBY HAZARDS OR OBJECTS BY ANY VEHICLE, OBJECTS OR PERSONS.

LTS warrants that any product or component part manufactured by LTS will be free from defects in material or workmanship. LTS will replace free of cost any Product or component part manufactured by LTS that contains such a defect.

THE FOREGOING WARRANTY IS IN LIEU OF AND EXCLUDES ALL OTHER WARRANTIES NOT EXPRESSLY SET FORTH HEREIN, WHETHER EXPRESS OR IMPLIED BY OPERATION OF LAW OR OTHERWISE, INCLUDING BUT NOT LIMITED TO ANY IMPLIED WARRANTIES OF MERCHANTABILITY OR FITNESS FOR A PARTICULAR PURPOSE.

LTS' LIABILITY UNDER THIS WARRANTY IS EXPRESSLY LIMITED TO REPLACEMENT FREE OF COST (IN THE FORM AND UNDER THE TERMS ORIGINALLY SHIPPED), OR TO REPAIR OR TO MANUFACTURE BY LTS, PRODUCTS OR PARTS NOT COMPLYING WITH LTS SPECIFICATIONS, OR, AT LTS' ELECTION, TO THE REPAYMENT OF AN AMOUNT EQUAL TO THE PURCHASE PRICE OF SUCH PRODUCTS OR PARTS, WHETHER SUCH CLAIMS ARE FOR BREACH OF WARRANTY OR NEGLIGENCE. LTS SHALL NOT BE LIABLE FOR ANY INCIDENTAL, CONSEQUENTIAL OR SPECIAL LOSSES, DAMAGES OR EXPENSES OF ANY KIND, INCLUDING, WITHOUT LIMITATION, ANY SUCH LOSSES, DAMAGES OR EXPENSES ARISING DIRECTLY OR INDIRECTLY FROM THE SALE, HANDLING OR USE OF THE PRODUCTS FROM ANY OTHER CAUSE RELATING THERETO, OR FROM PERSONAL INJURY OR LOSS OF PROFIT.

Any claim by the Buyer with reference to Products sold hereunder for any cause shall be deemed waived by the Buyer unless LTS is notified in writing, in the case of defects apparent on visual inspection, within ninety (90) days from the delivery date, or, in the case of defects not apparent on visual inspection, within twelve (12) months from the said delivery date. Products claimed to be defective may be returned prepaid to LTS' plant for inspection in accordance with return shipping instructions that LTS shall furnish to the Buyer forthwith upon receipt of the Buyer's notice of claim. If the claim is established, LTS will reimburse that Buyer for all carriage costs incurred hereunder.

The forgoing warranty benefits shall not apply to (i) any Products that have been subject to improper storage, accident, misuse or unauthorized alterations, or that have not been installed, operated and maintained in accordance with approved procedures and (ii) any components manufactured by the Buyer.

W030587 Rev. 8 revised February 4, 2013

TABLE OF CONTENTS

Preface 4
Introduction 4
System Overview 4
Required Tools 4
Before Installation 5
Limitations and Warnings..... 5

Parts Index 6

PARALLEL SYSTEM INSTALLATION

Preparing for installation 8
Step 1. Backstop Installation 10
Step 2. Rear Cable Anchor Installation ... 11
Step 3. Front Cable Anchor Installation ... 12
Step 4. Install Diaphragms 13
Step 5. Install Guide Cables 14
Step 6. Attach Pipe Panel Mounts 15
Step 7. Install Side Panels 16
Step 8. Assemble Nose Assembly 18
Step 9. Install Energy Absorbing Cartridges 19
Step 10. Tension Guide Cables 20
Step 11. Final Inspection 20

TAPERED SYSTEM INSTALLATION

Introduction 21
System Overview 22
Required Tools 22
Step 1. Foundation Requirements 23
Step 2. Anchoring System 24
Step 3. Assemble Bulkheads 25
The Front Support 26
Middle Assembly 27
Step 4. Backstop Assemblies 30
Compact Backstop 31
Flush Mount Backstop 32
Wide Flange Backstop 33
Step 5. Attach Side Panels 35
Step 6. Attach Nose Piece 36
Step 7. Install Cables / Guides 37
Step 8. Stretch and Align System 39
Step 9. Tension Cables / Torque Sliders bolts 39
Step 10. Install Lateral Support Cables 40
Step 11. Insert Energy Absorbing Cartridges 42
Step 12. Final Inspection 43

APPENDIX

A. System Configuration Chart 44
B. System Torque Chart 46
C. System Foundation Drawings..... 47
D. System Transition Drawings 63
E. Installation Instructions to BarrierGuard 800 Steel Barrier 76

PREFACE

The Barrier Systems, Inc. (BSI), Universal TAU-II crash cushion system incorporates the newest roadside safety materials and engineering processes.

As with any roadside safety device, the Universal TAU-II system must be installed properly to insure proper performance. Thoroughly review and fully understand the installation instructions and product limitations before starting the installation. Do not start the installation without the proper plans and tools required for installation.

If you need additional information, or have questions about the Universal TAU-II Crash Cushion, please call the BSI Customer Service Department at (888) 800-3691 (U.S. toll free) or (707) 374-6800.

INTRODUCTION

The TAU-II system has been tested to meet the rigorous requirements of NCHRP Report 350, Test Levels 2 and 3. The systems will be provided in lengths and capacities for both low speed and high speed applications.

The TAU-II system is redirective and non-gating, and is ideally suited for narrow hazards such as the ends of rigid barriers, tollbooths, utility poles and more. Ease of installation, numerous transition options, low maintenance requirements, and reusability of system components make the TAU-II system ideal for treating many roadside hazards.

Redirective, non-gating crash cushions are highway safety devices whose primary function is to improve the safety for occupants of errant vehicles that impact the end of rigid or semi-rigid barriers or fixed roadside hazards by absorbing the kinetic energy of impact or by allowing controlled redirection of the vehicle. These devices are designed to safely decelerate an errant vehicle to a safe stop or redirect an errant vehicle away from roadside or median hazards. These types of systems are typically applied to locations where head-on and angled impacts are likely to occur and it is desirable to have the majority of post impact trajectories on the impact side of the system.

SYSTEM OVERVIEW

The Universal TAU-II system is designed and constructed to provide acceptable structural adequacy, minimal occupant risk and safe vehicle trajectory as set forth in NCHRP 350 for redirective, non-gating crash cushions. Refer to Figure 1 to familiarize yourself with the basic parts and part names of the system.

The Universal TAU-II system is designed to shield the ends of median barriers and other fixed objects likely to be struck head-on, by absorbing and dissipating the kinetic energy of impacting vehicles. Universal TAU-II systems utilize disposable Energy Absorbing Cartridges (EACs) to absorb the kinetic energy of the impacting vehicle. The EACs are separated by diaphragms and held in place with a framework of thrie-beam corrugated steel rail panels that “telescope” rearward during head-on impacts. As the vehicle compresses the cushion, it exerts a force on the first bay containing an EAC. The diaphragms distribute the impact forces uniformly to all the remaining cartridges in each bay until the vehicle eventually stops. The depth of penetration is dependent upon both the original impact speed and the mass of the impacting vehicle. Only the Energy Absorbing Cartridges are expended after most head-on impacts.

When hit at an angle along the side, the system is restrained laterally by guidance cables that run the length of the system and attach to the bottoms of the diaphragms and terminate at the anchors at each end of the system. The front and rear cable anchors are attached to the foundation as described in Appendix A Foundation Requirements.

BEFORE TAU-II INSTALLATION

Placement and use of the TAU-II system should be accomplished in accordance with the guidelines and recommendations set forth in the “AASHTO Roadside Design Guide,” FHWA memoranda and other state and local standards.

Depending on the application and circumstances at the job site, installation and assembly of a Test Level 3 system should take a two-person crew less than 3 hours.

The TAU-II is a highly engineered safety device made up of a relatively small amount of parts. Before

starting the assembly, become familiar with the basic elements that make up the TAU-II system. The TAUII system components are illustrated separately in Figure 1 (Pages 6-7).

Limitations and Warnings

The Universal TAU-II system has been rigorously tested and evaluated per the recommendations in the NCHRP Report 350 Guidelines for terminals and crash cushions. The impact conditions recommended in NCHRP 350 are intended to address typical in-service collisions.

When properly installed and maintained, the system is capable of stopping or containing and redirecting impacting vehicles in a predictable and safe manner under the NCHRP 350 impact conditions.
Vehicle impacts that vary from the NCHRP 350 impact conditions described for redirective, nongating, crash cushions may result in significantly different results than those experienced in testing.

Vehicle impact characteristics different than or in excess of those encountered in NCHRP 350 testing (speed and angle) may result in system performance that may not meet the NCHRP 350 evaluation criteria.

If you need additional information, or have questions about the Universal TAU-II Crash Cushion, please call the BSI Customer Service Department at (888) 800-3691 (U.S. toll free) or (707) 374-6800.

PROVIDED TOOLS

- Long bolt for nested slider panel installation
- Allen socket for the slider bolt assembly
- Cable socket

REQUIRED TOOLS

- ½” [12 mm] drive deep sockets:
  - 7⁄16 [11 mm]
  - 9⁄16 [14 mm]
  - ¾ [19 mm]
  - 13⁄16 [21 mm]
  - ⅞ [22 mm]
  - 15⁄16 [24 mm]
  - 1 ⅛ [29 mm]
  - 1 ¼ [32 mm]
- 3/4” [19mm] combination end wrench
- ½” (12 mm) drive ratchet with extensions
- Rotohammer for drilling holes in concrete:
- 7/8” [22 mm] X 10” [250 mm] bit for chemical anchors
- ½” Torque wrenchs:
- 20 ft-lbs [27 N-m] and 500 ft-lbs [680 N-m] capacity
- Measuring tape
- Safety Equipment: Glasses, Gloves
- ½” (12 mm) Air impact wrench (Optional)

Note: The tools list is a general recommendation. Depending on the specific characteristics of the job site, more or less tools may be necessary.

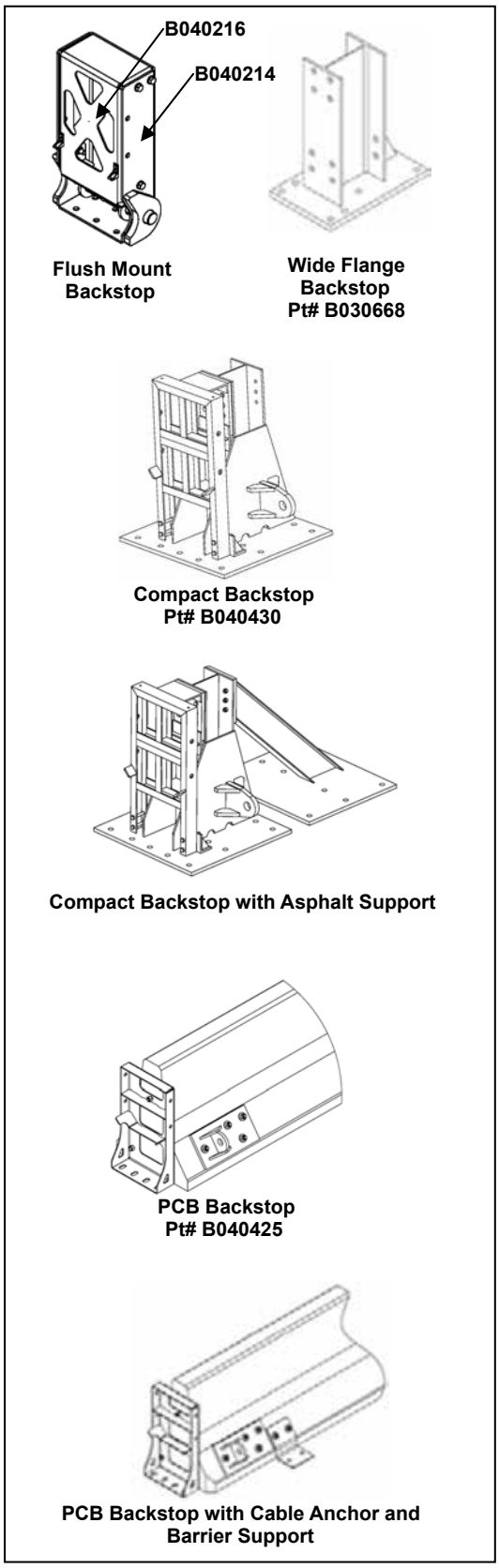

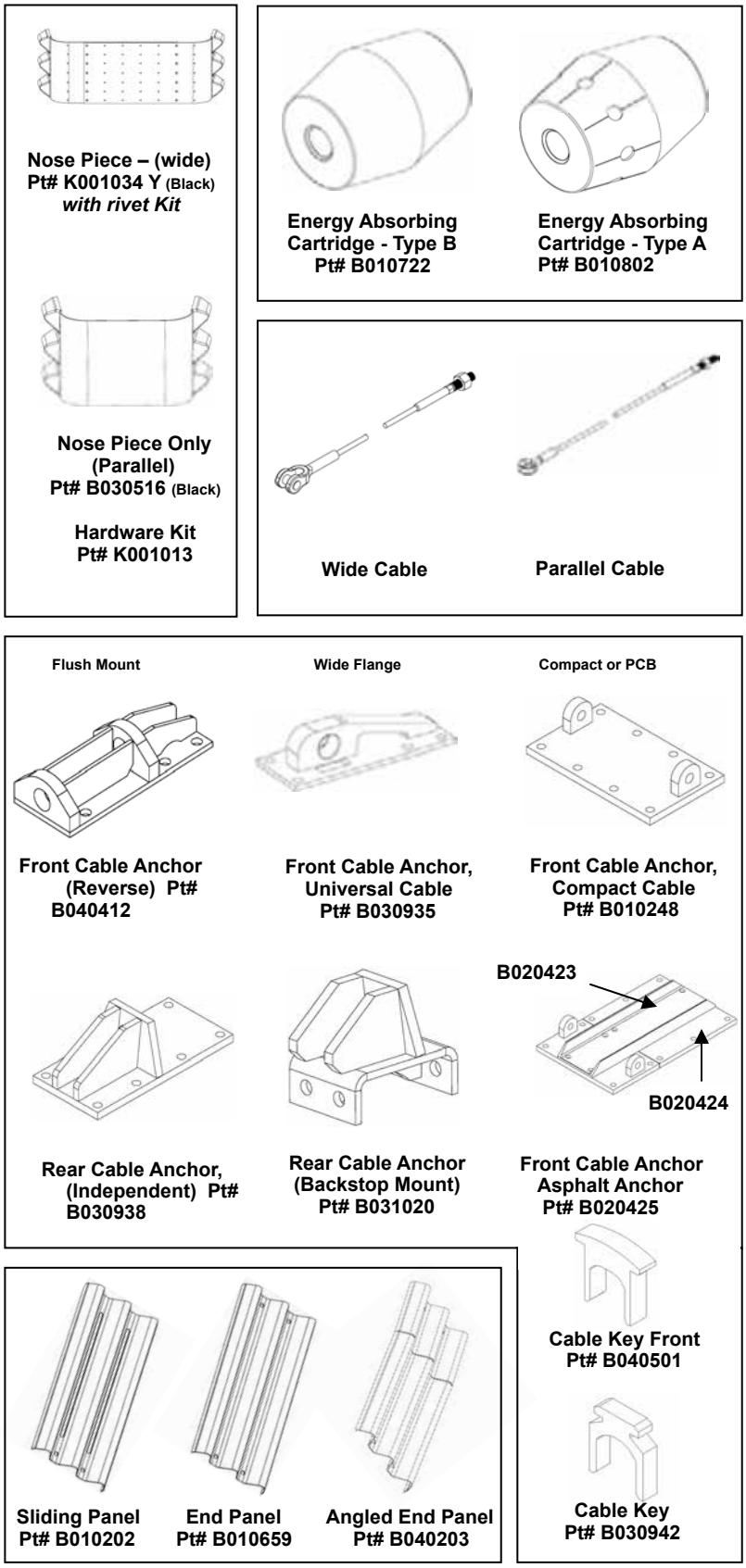

Figure 1. Illustrated parts list

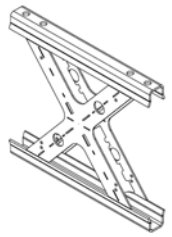

XL Bulkhead
Pt# B030521

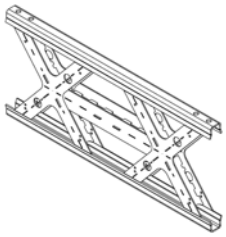

XXL Bulkhead
Pt# B030528

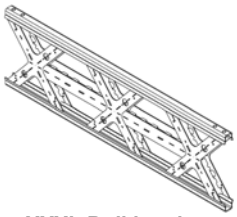

XXXL Bulkhead
Pt# B030529

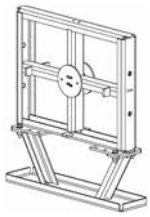

Middle Support
Pt# B030703

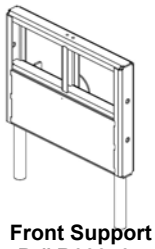

Front Support
Pt# B030704

Leg Kit Pt# K001005

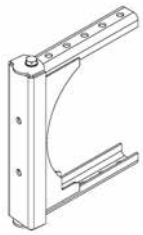

Wing Assembly
Pt# B030509

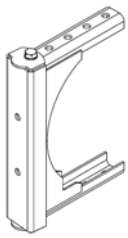

Transition Wing Assy.
Pt# B030910

36 Inch Adapter Assy
Pt# B031201

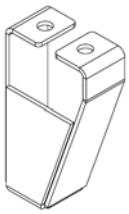

Leg (wide)
Pt# B030425

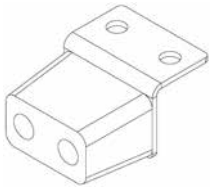

Bumper Assembly
(wide)
Pt# B031035

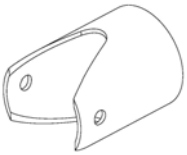

Pipe Panel Mount
Pt# B010651

Hardware Kit
Pt# K001017

Backstop Blockout
(wide)
Pt# B030713

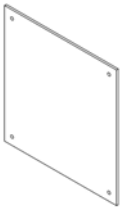

Front Collision Plate
(wide)
Pt# B030801

Wing Brace
(wide)
Pt# B030821

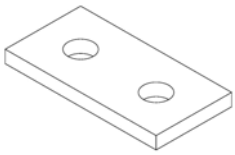

Spacer - Wing Brace
(wide)
Pt# B030823

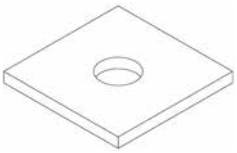

Level Spacer
Pt# B030551

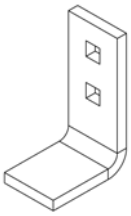

EAC Locator Kit (X4)
Pt# K001028

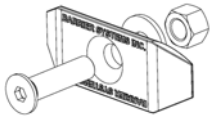

Slider Assembly Kit (x4)
Pt# K001003

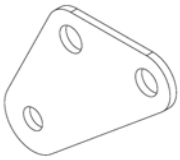

Leg Adapter
(wide)
Pt# A040223

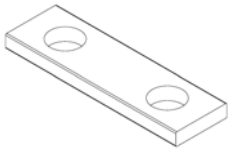

Backing Plate
(wide)
Pt# B030543

Lateral support Mount,
(Backstop Mount - wide)
Pt# B031011

Lateral Support
Cable Assembly Kit
Pt# K001031

Bulkhead Mount,
Lateral Support – (wide)
Pt# B031010

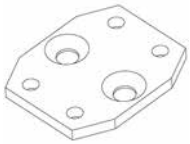

Cable Guide Mounting
Plate – (wide)
Pt# B030411

Cable Guide Assembly
Kit (x4)
Pt# K001004

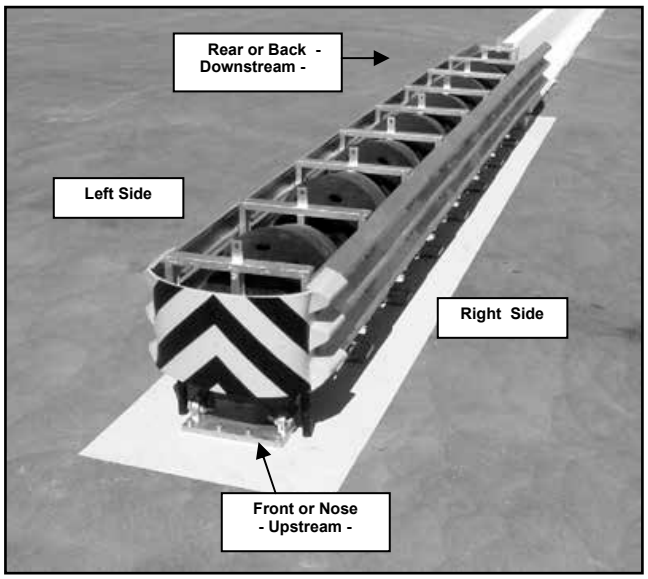

Sign Conventions

The picture of the TAU-II system above is labeled to show the descriptive terms that will be used throughout this manual.

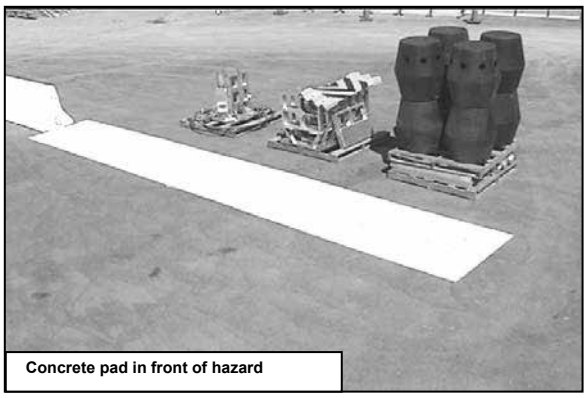

Concrete pad in front of hazard

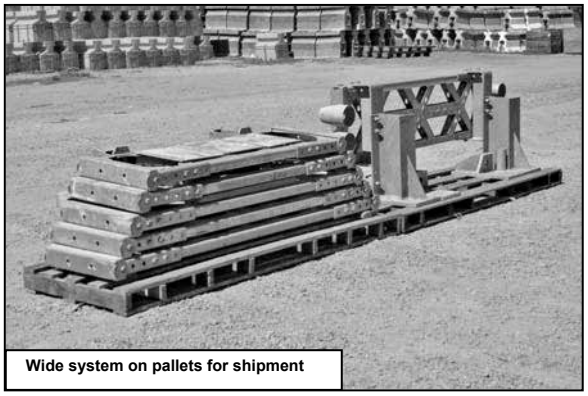

Wide system on pallets for shipment

Preparing for installation

Depending on the size of the system ordered, the parts will be shipped on two to five pallets. Assembly of the TAU-II system is typically done at the worksite. (If preferred, the system can be assembled "off-site" and set into position as one piece, with a forklift or crane.)

Before beginning the assembly of the TAU-II system, check the packing list to be certain that all of the system components were included in the shipment.

The TAU-II Crash Cushion system has been designed to attach to concrete or asphalt foundations. BSI recommends that at a minimum, the system be anchored to standard six-inch reinforced 4,000 psi (28 MPa) Portland Cement Concrete (PCC) pad or roadway, or 8" (200 mm) AR-4000 Asphalt Concrete. When installing to concrete, care must be taken when building the concrete pad to space the rebar so as to minimize interference with the anchor bolt holes.

(See Appendix "C", Page 47, for BSI recommended foundation options and material specifications.)

NOTE:

It is important to determine the system's installation position and angle, to optimize proper function and transition.

This system is available in two configurations:

1) The system can be attached directly to the end of a concrete barrier, utilizing the "PCB Backstop" (BSI part # B040425) or the "Flush Mount Backstop" (BSI part # B040219).

2) The second configuration utilizes a "Compact Backstop" (BSI part # B010537) which is a free standing back support.

This manual describes the installation procedure for an 8 bay (Test Level 3) system.

(See the System Configuration Chart in Appendix "A", Page 44, for guidelines on choosing a system length to accommodate different traffic criteria.)

Depending on the installation design, transition hardware may be necessary. Because each transition is unique, BSI recommends that the transition hardware be properly fitted before anchoring the system. Pre-assemble the transition hardware before setting the system base plates to assure the proper spacing between the system and the object being treated.

(NOTE: See Appendix "D", Page 63, for some recommended transition types)

CONCRETE PAD INSTALLATION

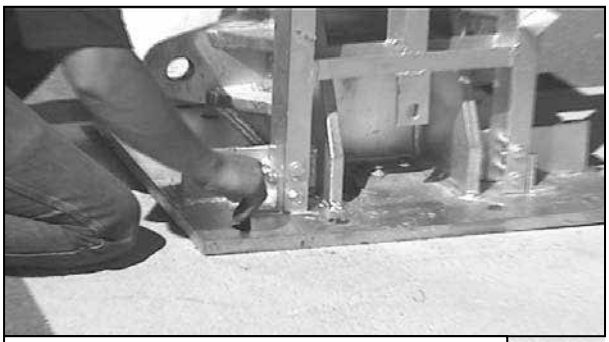

Use the Base Plate of the Compact Backstop as a template

Step 1. (Compact Backstop to Concrete Foundation)
Place the Compact Backstop in the desired final installation position. Use the holes in the base plate as a template to mark the location of the anchor points. Remove the backstop and drill the anchor bolt holes. The holes should be 6" (150 mm) deep and 7/8" (22 mm) diameter. Install the anchors into the pad following the instructions included with the anchor epoxy. When the epoxy is fully cured, install the nuts and flat washers. Tighten to 120 ft-lbs (160 N-m).

Use the P.C.B. Backstop as a template to drill the holes

Step 1. (PCB Backstop to Concrete Foundation)
Place the PCB Backstop in the desired final installation position. Use the holes in the backstop as a template to mark the location of the anchor points. The holes should be 6" (150 mm) deep and 7/8" (22 mm) diameter. Use a caulking gun and gun insert filled with anchoring compound to secure the ¾" x 8 ¼" (20 mm x 610 mm) galvanized anchors. Torque to 120 ft-lbs (160 N-m).

ASPHALT INSTALLATION

Compact Backstop Base with Asphalt Adapter

Step 1. (Compact Backstop to Asphalt)
If the unit is being installed on asphalt, the Asphalt Adapter must be attached to the Compact Backstop. Use the base as a template to mark the anchor point locations. All holes should be 15 to 16½" (380 to 420 mm) deep. Use 18" (460 mm) anchors for the Compact Backstop and the Asphalt Adapter. Install the anchors into the foundation following the instructions included with the anchor epoxy. When the epoxy is fully cured, install the nuts and flat washers. Tighten to 120 ft-lbs (160 N-m).

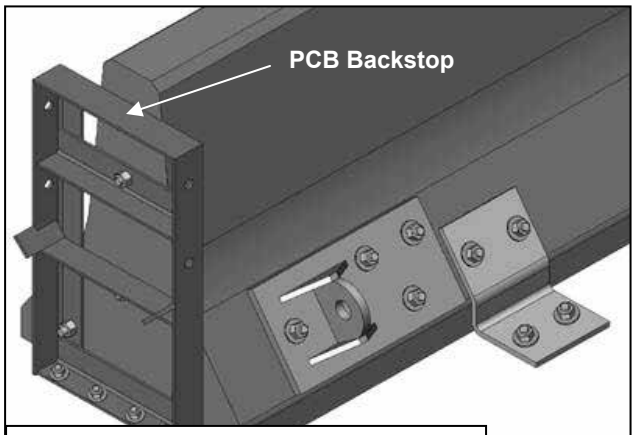

Use the P.C.B. Backstop as a template to drill the holes

Step 1. (PCB Backstop to Asphalt Foundation)
Place the PCB Backstop in the desired final installation position. Use the holes in the backstop as a template to mark the location of the anchor points. The holes should be 6" (150 mm) deep and 7/8" (22 mm) diameter. Use a caulking gun and gun insert filled with anchoring compound to secure the ¾" x 8 ¼" (20 mm x 610 mm) galvanized anchors. Torque
to to 5 ft-lbs (8 N-m).

CONCRETE PAD INSTALLATION

Step 2. (Concrete Rear Cable Anchors)

NOTE: IF YOU ARE USING THE COMPACT BACKSTOP, SKIP TO STEP 3.

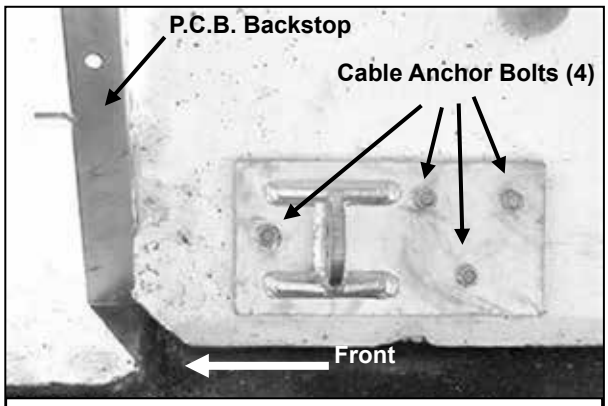

Use the Cable Anchor Plate as a template for the bolt holes (Right Side)

Use the holes in the plate as a template to mark the location of the holes for the anchor studs. (There is one Cable Anchor for each side of the P.C.B.). The holes should be drilled 6" (150 mm) deep and 7/8" (22 mm) in diameter. Install the (all thread) studs into the PCB following the instructions included with the anchor epoxy. When the epoxy is fully cured, install the nuts and flat washers. Tighten to 120 ft-lbs (160 N-m).

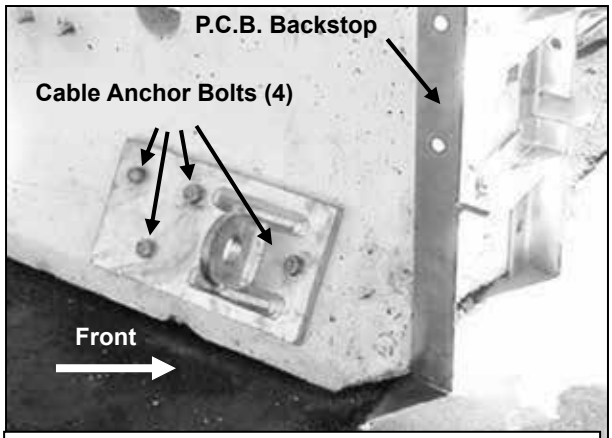

Use the Cable Anchor Plate as a template for the bolt holes (Left Side)

NOTE: For proper system performance, the concrete barrier must be rigidly attached to an adequate foundation. See Appendix "C" for Anchor Foundation Options and Page 24 for anchoring material options..

ASPHALT INSTALLATION

Step 2. (Asphalt Rear Cable Anchors)

NOTE: IF YOU ARE USING THE COMPACT BACKSTOP, SKIP TO STEP 3.

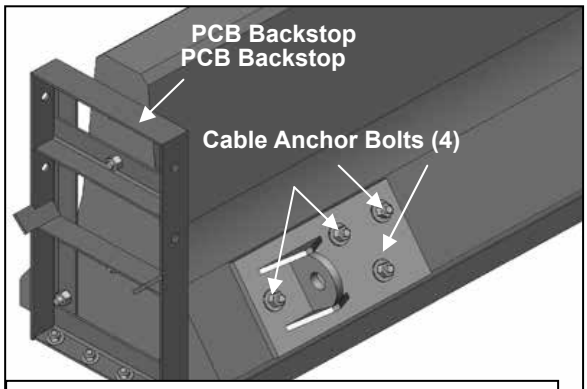

Use the Anchor Plate as a template for the bolt holes (Right Side)

Refer to the Installation Drawings in Appendix "C" to determine the correct Cable Anchor installation position. Use the holes in the plate as a template to mark the location of the holes for the anchor studs. (There is one Cable Anchor for each side of the P.C.B.). The holes should be drilled 6" (150 mm) deep and 7/8" (22 mm) in diameter. Install the (all thread) studs into the PCB following the instructions included with the anchor epoxy. When the epoxy is fully cured, install the nuts and flat washers. Tighten to 120 ft-lbs (160 N-m)

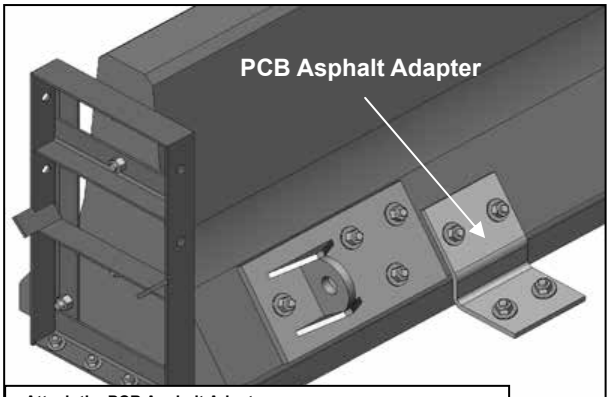

Attach the PCB Asphalt Adapter.

Attach the PCB Asphalt Adapter. Drill holes 6" (150 mm) deep and 7/8" (22 mm) in diameter in the concrete barrier. Drill 15 to 16 ½" (380 to 420 mm) in the foundation and install 18" (460 mm) anchors following the instructions included with the anchor epoxy. When the epoxy is fully cured, install the nuts and flat washers. Tighten to 120 ft-lbs (160 N-m).

CONCRETE PAD INSTALLATION

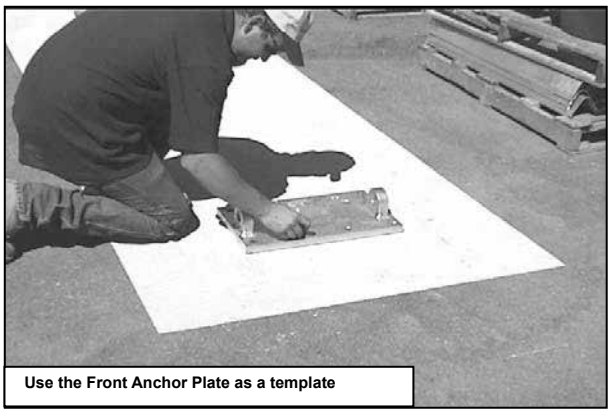

Use the Front Anchor Plate as a template

Step 3. (Concrete Front Cable Anchor)

Place the Front Cable Anchor in the desired final installation position. Use **Appendix C** for layout dimensions. Use the holes in the plate as a template to mark the location of the anchor points. Remove the plate and drill the anchor bolt holes to the desired size and depth. The holes should be 6" (150 mm) deep and 7/8" (22 mm) diameter.

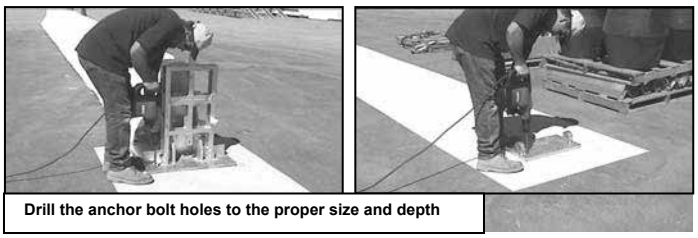

Drill the anchor bolt holes to the proper size and depth

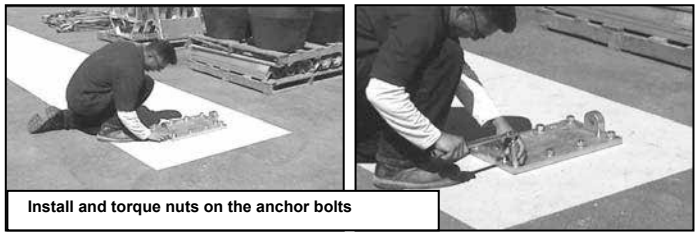

Install and torque nuts on the anchor bolts

NOTE:

It is important that the holes are drilled straight and in the correct position so that the plate will fit back over the bolts after they have been set with anchoring material. If the total hole depth cannot be reached due to rebar interference, a "diamond tip" drill or equivalent should be used to reach the total hole depth.

ASPHALT INSTALLATION

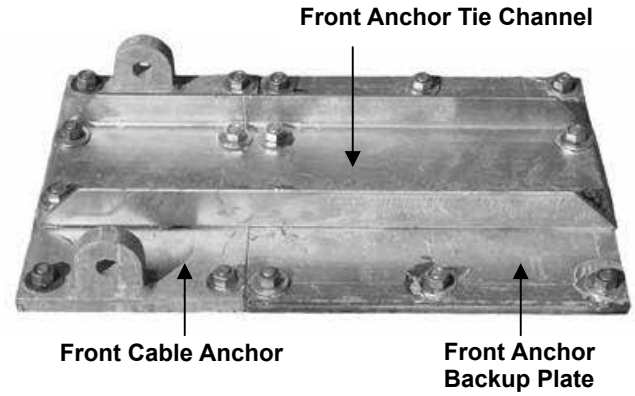

Step 3. (Asphalt Front Cable Anchor)

The Asphalt Front Cable Anchor is a three piece unit. Place the Front Cable Anchor and the Front Anchor Backup Plate in the desired final installation position. Use the holes in the plates as a template to mark the location of the anchor points. Remove the plates and drill the anchor bolt holes to the desired size and depth. The holes should be 15 to 16 ½" (380 to 420 mm) deep and 7/8" (22 mm) diameter. **Install the cable and clevis pin before installing the Front Anchor Tie Channel.** Install the Front Anchor Tie Channel on top of the Front Cable Anchor and the Front Anchor Backup Plate.

NOTE:

It is important that the holes are drilled straight and in the correct position so that the plate will fit back over the bolts after they have been set with anchoring material. If the total hole depth cannot be reached due to interference, a "diamond tip" drill or equivalent should be used to reach the total hole depth.

ALL FOUNDATIONS

After the anchoring epoxy is properly cured, install a nut and washer on each of the anchor bolts extending through the base plates of the Backstop and Front Cable Anchor plate.

For PC Concrete foundations, torque the nuts to 120 ft-lbs (160 N-m).

For Asphaltic Concrete foundations, torque the nuts to 5 ft-lbs (8 N-m).

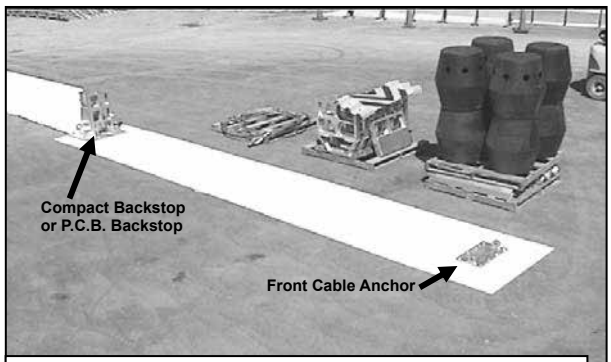

Compact Backstop and Front Cable Anchor installed

This photo shows a view of how the installation would look after the Backstop and Front Cable Anchor are securely fastened.

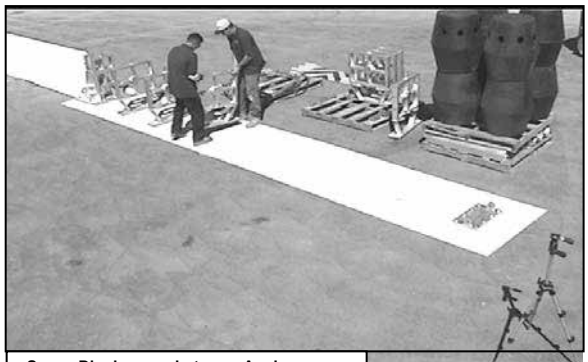
Space Diaphragms between Anchors

Step 4.

The Diaphragms should be spaced (one by one) evenly between the Front Cable Anchor and the Backstop. It is not important that they be exactly spaced at this point as they can easily be moved into the desired final assembly position when necessary.

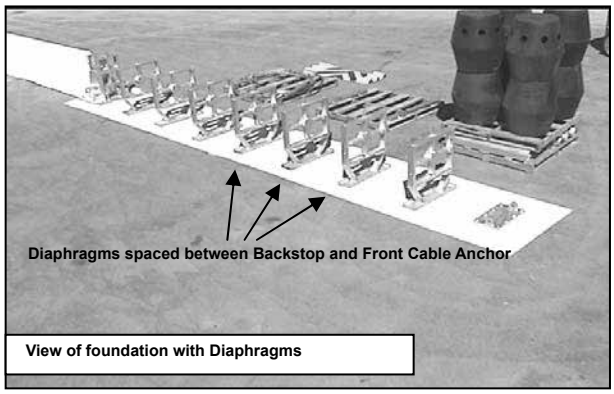

View of foundation with Diaphragms

The photo above shows what the installation would look like after the diaphragms have been placed between the Backstop and the Front Cable Anchor.

NOTE: Do not install the Front Support Assembly and nose piece at this time, it will be installed later.

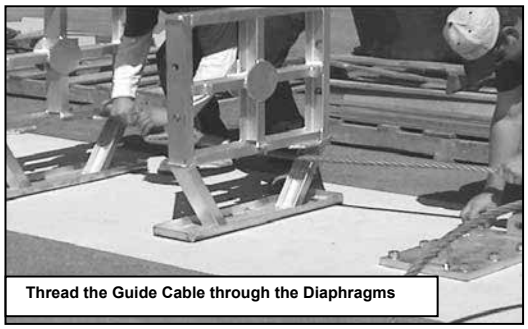
Thread the Guide Cable through the Diaphragms

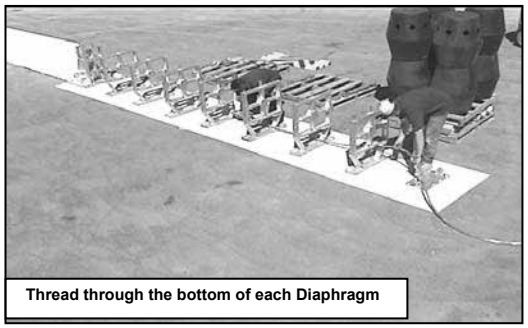
Thread through the bottom of each Diaphragm

Step 5.

Starting at the upstream end of the system, thread the Guide Cable through the space in the bottom of the Diaphragms. Make sure to pull the threaded cable end through first so that it will end up at the back of the unit. (Make sure that the Guide Cable is threaded through the bottom of each Diaphragm.)

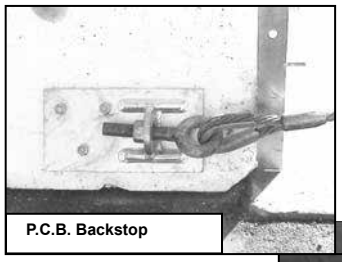
P.C.B. Backstop

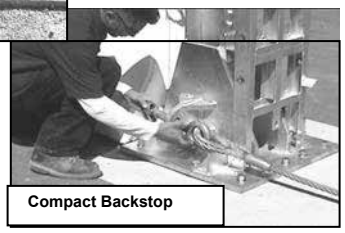
Compact Backstop

Push the threaded end of the cable through the hole in the anchor tab on the left side of the Compact Backstop. Install the nut on the end of the adjusting screw.

NOTE: Do not thread the nut beyond the end of the adjusting screw at this time. The nut will be tightened later.

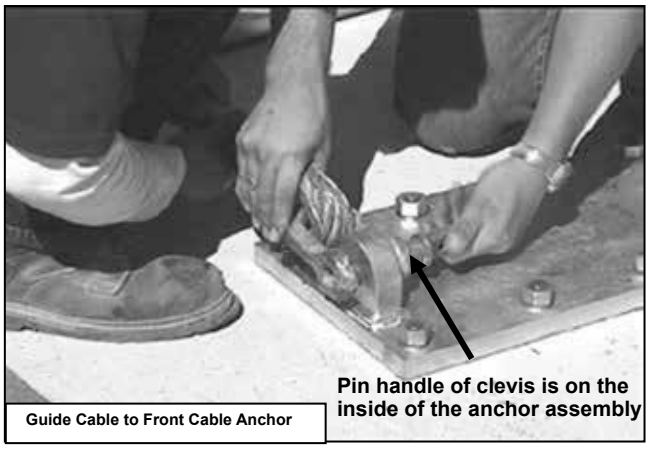

Guide Cable to Front Cable Anchor

Attach the other end of the Guide Cable to the left side of the Front Cable Anchor by first removing the pin from the clevis (shackle). Place the clevis over the anchor eye and re-install the pin through the eye, making sure that the handle portion of the pin is on the inside of the anchor assembly. Firmly tighten the pin.

For asphalt installations, the cable and clevis pin have been attached in Step 3 (Page 12).
Repeat the process outlined in steps 6, 7, and 8, for the other cable. Install the second cable along the right side of the system without crossing the first cable.

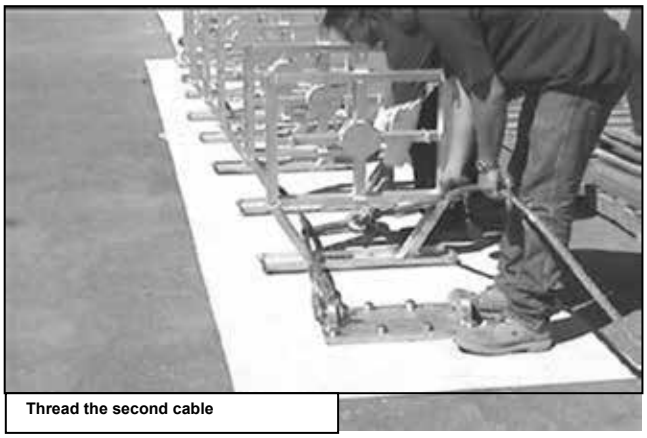
Thread the second cable

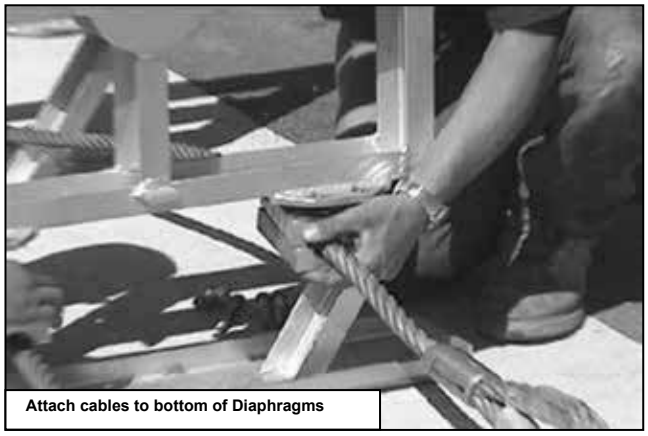
Attach cables to bottom of Diaphragms

Use the Cable Guide Assembly blocks to attach the Guide Cable to the bottom cross rail of the Diaphragms. The cable blocks consist of two grooved halves that, when put together, provide a path for the Guide Cable to move through.

It is easiest to install the Cable Guides by first placing the two halves of the blocks together around the cable. Next, hold the blocks and cable up to the plate on the bottom of the Diaphragm. Push the bolt from the top down through the plate and then through the blocks.

NOTE: See Page 28, Figure 9 for cable guide positions for wide flange systems.

Install a lock washer and nut to secure the bolt. Continue the process until all four of the attachment bolts are installed on each Cable Guide Assembly.

NOTE: If properly installed, the Guide Cable should slide freely through the Cable Guide blocks and the Diaphragm should slide freely along the cable.

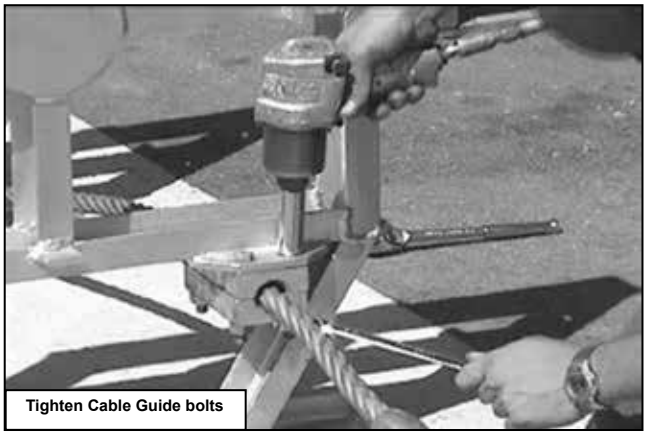

Tighten Cable Guide bolts

Use an impact wrench (or hand tools) to securely tighten the (4) bolts holding the Cable Guide blocks to the plate on the bottom of each Diaphragm. Use the Cable Guide Hardware Kit #K001004.

Compact Cables run thru the Cable Guide blocks on the Diaphragm bottoms

The photo above shows what the Diaphragms should look like after the Cable Guide blocks have been installed.

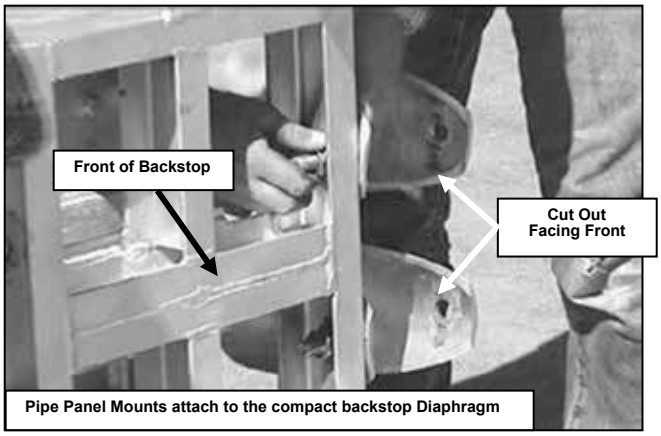

Pipe Panel Mounts attach to the compact backstop Diaphragm

Step 6.

Attach the Pipe Panel Mounts to the sides of the Backstop. (The End Panels are not attached directly to the Backstop Diaphragm.) The Pipe Panel Mount attaches between the Backstop Diaphragm and the End Panel to facilitate proper system performance during side impacts in this area.

The Pipe Panel Mount is made from a piece of 6" (150 mm) diameter galvanized pipe with angles of material cut out of the top and bottom of one end.

NOTE: It is important that the end of the mount that is cut flat be facing the back (downstream) end of the system and that the cut out end of the Pipe Panel Mount be facing toward the front (upstream).

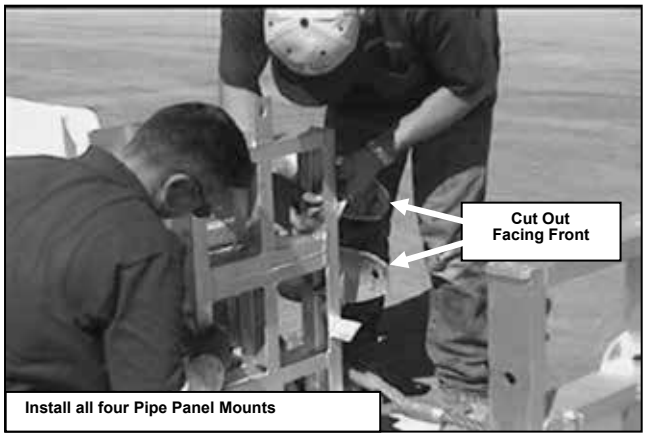

Install all four Pipe Panel Mounts

To attach the Pipe Panel Mount to the Backstop Diaphragm, place a washer on the attachment bolt and push the bolt through the inside hole on the Pipe Panel Mount and continue the bolt through the hole located on the side of the Diaphragm that is a part of the Backstop as shown in the photo above. Use the Pipe Panel Hardware Kit #K001017.

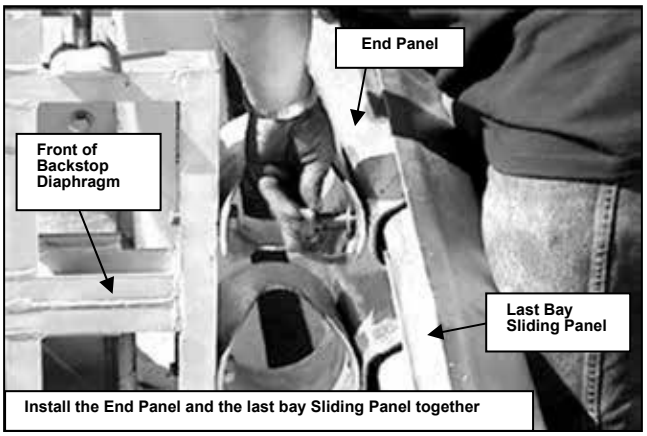

Install the End Panel and the last bay Sliding Panel together

Step 7.
At this point you will start assembling the sides of the system. The first two side panels are installed together as the Sliding Bolt attaches both of the panels to the Pipe Panel Mount located on the side of the Backstop Diaphragm. Attach the right side End Panel and right side rear-most Sliding Panel to the Pipe Panel Mount using the Sliding Bolt.

Insert the Slider Bolt through the slotted portion of the last bay Sliding Panel. Continue the bolt through the front hole of the End Panel. Continue the bolt through the bolt hole in the outside of the Pipe Panel Mount as shown in the photo above.

NOTE: For the system to telescope properly, the slotted Sliding Panel <u>MUST</u> be on the outside of the End Panel.

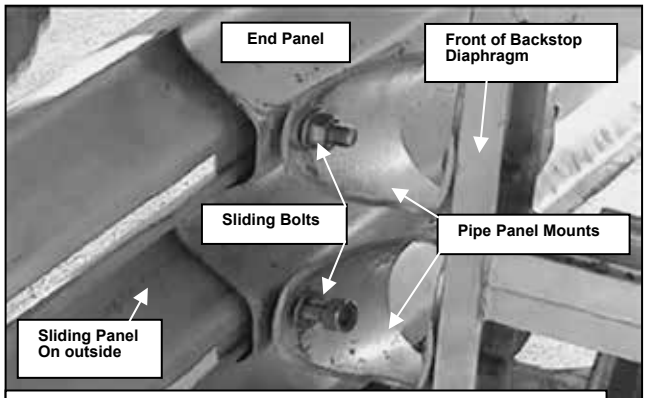

The Slider Bolt holds on the (last bay) Slider Panel and End Panel

The photo above shows the end of the Slider Bolt coming through (from the outside) the slot in the last left bay side Sliding Panel, through the front hole of the End Panel and through the outer hole of the Pipe Panel Mount.

NOTE: See configuration chart to determine if you have "stacked" or "nested" slider panels in some locations.

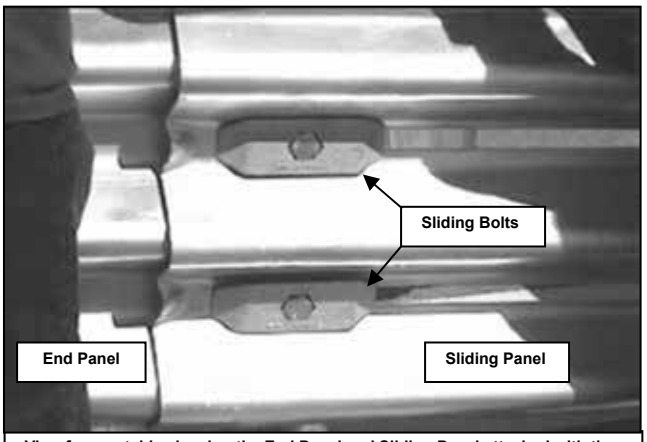

View from outside showing the End Panel and Sliding Panel attached with the Slider Bolt.

NOTE: For ease in assembly of the rest of the system, hand tighten the nut on the Slider Bolts. The bolts will be tightened in a later step. Use Slider Bolt Hardware Kit #K001003.

Install each of the Sliding Panels

You will now attach the right side panels one-by-one, moving towards the front of the system. Attach the rear bay and second-to-last bay Sliding Panels to the first diaphragm using Sliding Bolts. Insert the Sliding Bolt through the slot in the second-to-last bay Sliding Panel. Continue pushing the bolt through the hole in the front of the last Sliding Panel and finally push the bolt through the hole in the side of the corresponding Diaphragm.

NOTE: For the system to telescope properly, the forward most slotted Sliding Panel M<u>UST be on</u> the outside.

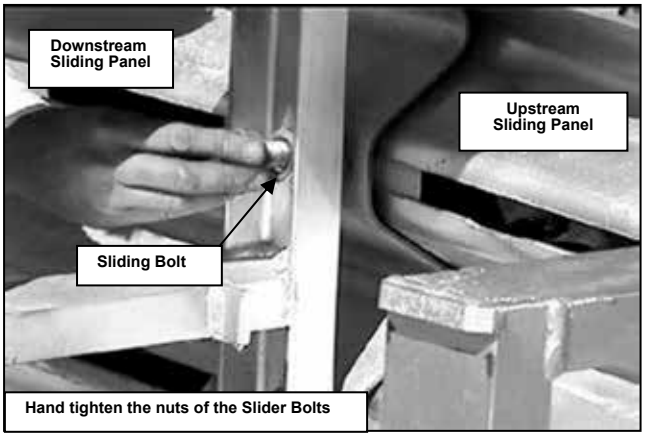

Hand tighten the nuts of the Slider Bolts

Repeat this step until all Sliding Panels have been mounted to the Diaphragms. The forward-most Sliding Panel must always be on the outside of the system (next to the mushroom head of the sliding bolt).

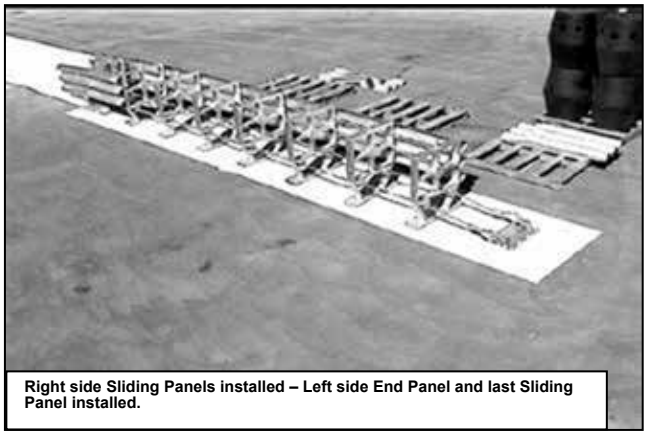
Right side Sliding Panels installed – Left side End Panel and last Sliding Panel installed.

The photo above shows what the system will look like after the End Panel and all of the Sliding Panels have been installed on the right side as well as the End Panel and rear-most Sliding Panel on the left side.

Continue attaching the Sliding Panels along the left side of the system until all of the Sliding Panels are installed.

NOTE: For the system to telescope properly, the forward most slotted Sliding Panel MUST be on the outside.

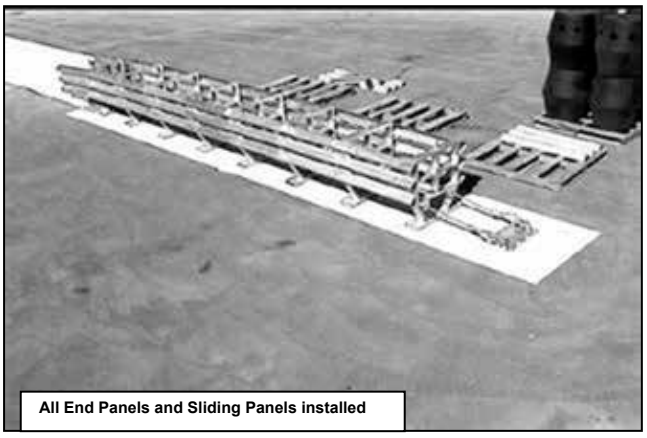
All End Panels and Sliding Panels installed

The photo above shows what the system will look like after both of the End Panels and all of the Sliding Panels have been installed.

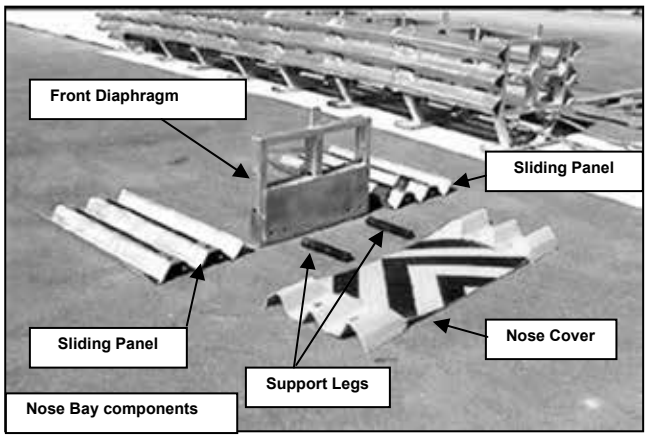

Nose Bay components

The final bay will be assembled separately from the rest of the system and then installed as a complete unit. The components that make up the final bay are two Sliding Panels, the Front Diaphragm, the Nose Cover and the Leg Supports.

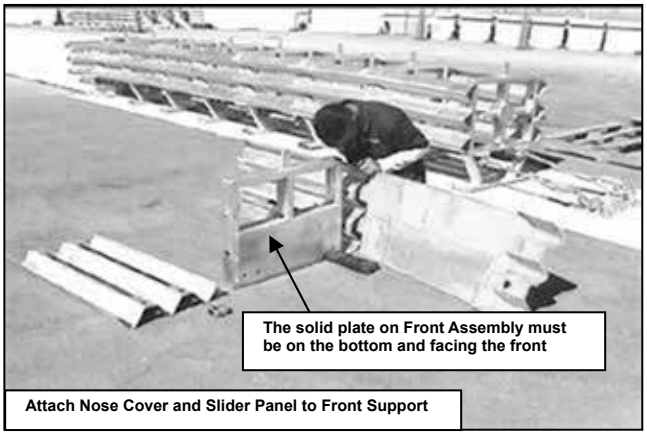

Attach Nose Cover and Slider Panel to Front Support

Bolt the Support Legs to the bottom of the Front Support Assembly.

Step 8.
Attach the Nose Cover and left Slider Panel to the Front Support. Install the bushing in the hole of the nose piece. Install the fender washer on the machine bolt (Slider Bolt not used) and push the bolt through the bushing in the Nose Cover hole. Continue the bolt through the hole in the front edge of the last-bay Slider Panel and finally push the bolt through the hole in the Front Diaphragm. Install the washer and hand tighten the nut. (The nut will be tightened later.) Use Nose Piece Hardware Kit #K001013.

The final step in the assembly of the nose bay is to install the Support Legs. Place the nose assembly on its side. Push one of the leg support machine bolts and washer through the hole in the bottom rail of the Front Support. Screw the Leg Support onto the bolt and tighten the bolt with a wrench or socket.
Warning: DO NOT OVER-TIGHTEN THIS BOLT.
Use the Front Support Leg Hardware Kit #K001005.

Repeat with the right side

Carry the assembled Front Support Assembly into position to attach.

Repeat the process outlined in Step 8 with the right side of the assembly.

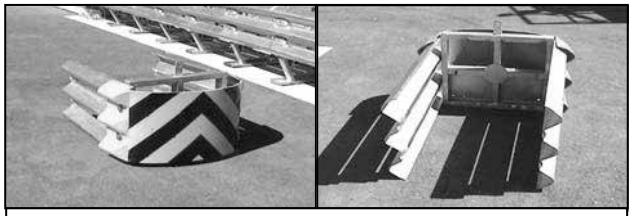

Front View of Assembled Nose Assembly Rear View

Carry the complete nose bay assembly to the front of the system. Attach the Slider Panels to the diaphragm by pushing the Slider Bolt through the slots in the final bay Slider Panels and then through the hole in the front of next bay Slider Panel. Finally, push the Slider Bolt through the hole in the side of the Diaphragm and attach the flat washer and nut.

NOTE: For the system to telescope properly, the forward most slotted Sliding Panel MUST be on the outside.

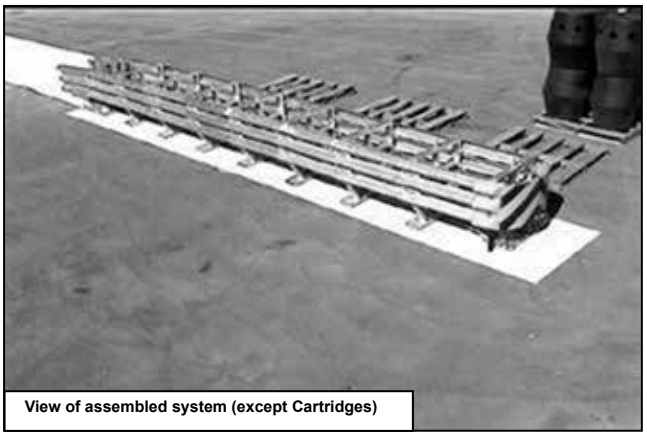

View of assembled system (except Cartridges)

It is important to make sure that the system bays are fully extended to ensure that the Energy Absorbing Cartridges will fit properly. Pull the Slider Panels of each bay until fully extended, working from the base toward the nose assembly.

Torque each of the Slider Bolts

Torque all of the Sliding Bolts to 20 ft-lbs (27 N-m). Torque the Front Panel Bolts (holding nose cover) to 200 ft-lbs (270 N-m). Do not overtighten.

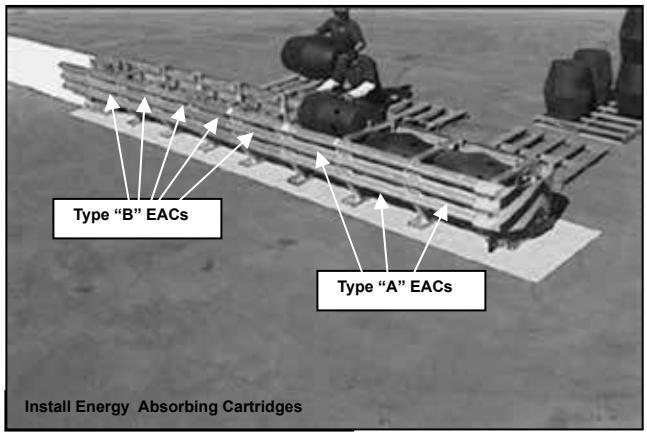

Install Energy Absorbing Cartridges

Step 9.
Insert a Type "A" Energy Absorbing Cartridge into each of the first three (3) bays of the 8 bay (TL-3) system. The Type "A" cartridges have holes and slots on the sides toward the end of the cartridge. Install each cartridge on its side with the holes and slots facing the front (upstream) of the system.

Insert a Type "B" Energy Absorbing Cartridge into the remaining five (5) bays. The Type "B" Cartridges have three holes on one end of the cartridge. Install each cartridge on its side with the holes facing the back (downstream) of the system.

Refer to the matrix in Appendix "A" for proper cartridge configurations.

NOTE: For proper system performance, the Energy Absorbing Cartridges must be installed in the proper order and in the proper direction as shown in Appendix "A".

Tension the Guide Cables with a torque wrench.

Step 10.
The final step in the installation of the TAU-II system is to apply tension to the Guide Cables that run underneath the system.

CONCRETE INSTALLATION:
Torque the nut on the end of the threaded cable end to 500 ft-lbs (680 N-m).

Torque the nut on the end of the adjustable Eye Bolt to 120 ft-lbs (160 N-m).

NOTE: For proper performance, the cables must be tensioned properly.

Step 11.
Use the check list on page 43 to confirm that all of the installation steps have been completed.

ASPHALT INSTALLATION

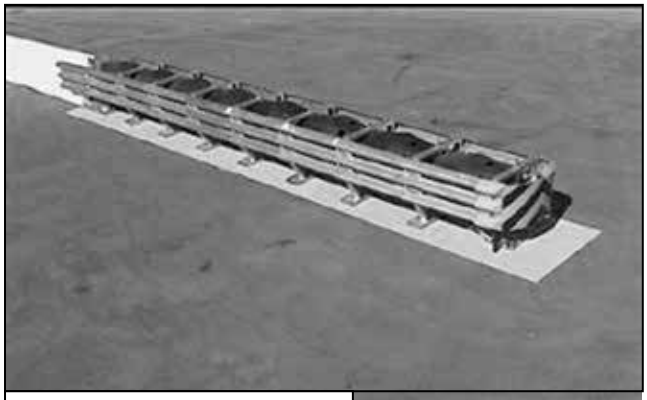

Complete Test Level 3 system (8 bay)

The above photo shows what a completely installed Test Level 3 TAU-II system with a compact backstop will look like.

INTRODUCTION

This manual is organized in steps that address each of the different installation options that are available. The Universal TAU-II system is very versatile and also easy to assemble and install if these basic guidelines are followed.

The Universal TAU-II system has been tested to meet the rigorous requirements of NCHRP Report 350, Test Levels 2 and 3. The systems are provided in lengths and capacities for both low speed and high speed applications and hazard widths up to 8.5 feet [2.6m].

The Universal TAU-II system is redirective, non-gating, and is ideally suited for hazards such as the ends of rigid barriers, tollbooths, utility poles, and more. Ease of installation, numerous non-proprietary transition options, low maintenance requirements, very low life cycle costs and reusability of system components make the Universal TAU-II system ideal for treating many roadside hazards.
Redirective, non-gating crash cushions are highway safety devices whose primary function is to improve the safety for occupants of errant vehicles that impact the end of rigid or semi-rigid barriers or fixed roadside hazards by absorbing the kinetic energy of impact or by allowing controlled redirection of the vehicle. These devices are designed to safely decelerate an errant vehicle to a safe stop or redirect an errant vehicle away from roadside or median hazards. These types of systems are typically applied to locations where head-on and angled impacts are likely to occur and it is desirable to have the majority of post impact trajectories on the impact side of the system.

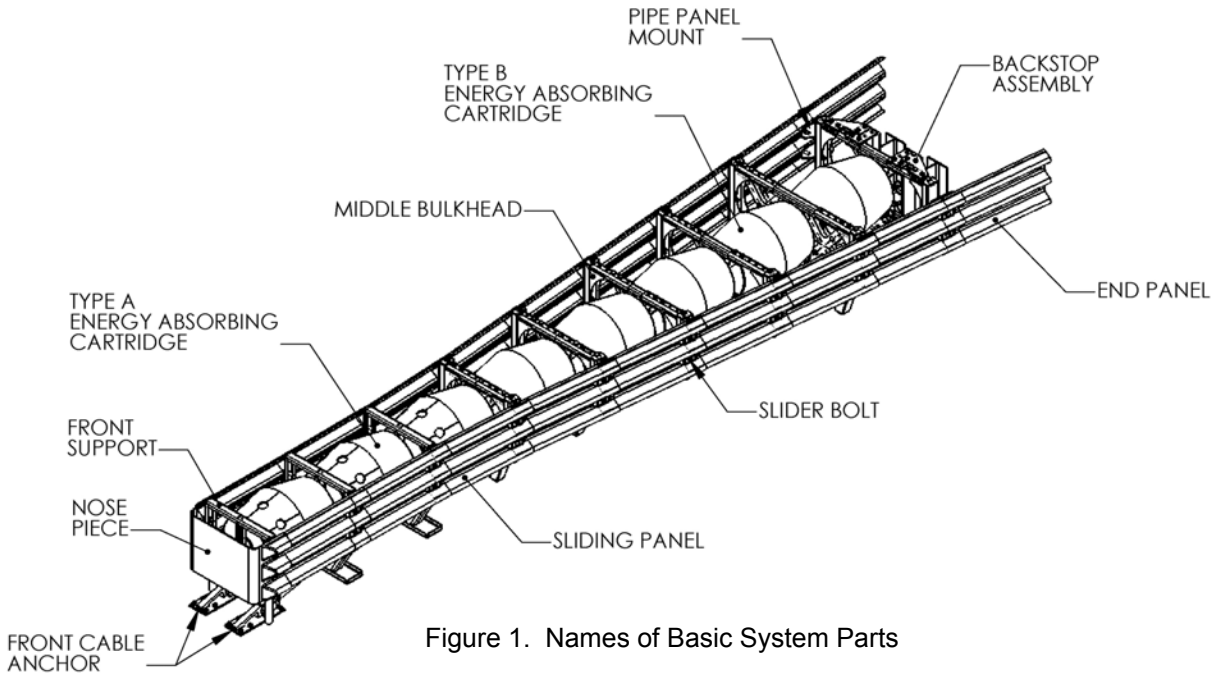

Figure 1. Names of Basic System Parts

SYSTEM OVERVIEW

The Universal TAU-II system is designed and constructed to provide acceptable structural adequacy, minimal occupant risk and safe vehicle trajectory as set forth in NCHRP 350 for redirective, non-gating crash cushions. Refer to Figure 1 to familiarize yourself with the basic parts and part names of the system.

The Universal TAU-II system is designed to shield the ends of median barriers and other fixed objects likely to be struck head-on, by absorbing and dissipating the kinetic energy of impacting vehicles. Universal TAU-II systems utilize disposable Energy Absorbing Cartridges (EACs) to absorb the kinetic energy of the impacting vehicle. The EACs are separated by diaphragms and held in place with a framework of thriebeam corrugated steel rail panels that "telescope" rearward during head-on impacts. As the vehicle compresses the cushion, it exerts a force on the first bay containing an EAC. The diaphragms distribute the impact forces uniformly to all the remaining cartridges in each bay until the vehicle eventually stops. The depth of penetration is dependent upon both the original impact speed and the mass of the impacting vehicle. Only the Energy Absorbing Cartridges are expended after most head-on impacts.

When hit at an angle along the side, the system is restrained laterally by guidance cables that run the length of the system and attach to the bottoms of the diaphragms and terminate at the anchors at each end of the system. The front and rear cable anchors are attached to the foundation as described in Appendix "C" Foundation Requirements.

STEP 1

FOUNDATION REQUIREMENTS

The Universal TAU-II crash cushion is designed to be compatible with a variety of foundations. If an existing foundation is present, verify dimensions and system layout. If modification is required, use the BSI specifications as a guideline and adapt accordingly. If no foundation is present or currently does not meet the system requirements, construct the foundation per these BSI specifications.

There are different foundation configurations depending on the system used and the type of backstop selected. Systems up to 36" [910mm] can have a P.C.B. (Portable Concrete Barrier) Backstop, Flush Mount Backstop or a stand-alone Compact Backstop. PCB and Compact Backstop systems are compatible with the optional Asphalt Anchoring Kits. Systems 42" [1070mm] and greater use a Wide Flange Backstop and require a PCC (Portland Concrete) foundation and anchoring kit.

NOTE: Recommended maximum 8% cross slope on all foundation options.

Foundation options for all configurations are specified in the following drawings contained in APPENDIX "C", Page 47:

- General Foundation and Anchorage Specs. Drawing No. A040113…….. **Page 48**
- Universal TAU-II Foundation, **PCB Backstop**-PCC Concrete Pad: Drawing No. A040105 ……. **Page 49**
- Universal TAU-II Foundation **PCB Backstop**-PCC Block: Drawing No. A040117 ……. **Page 50**
- Universal TAU-II Foundation **PCB Backstop**-Asphalt Anchoring: Drawing No. A040112 …….… **Page 51**
- Universal TAU-II Foundation **Compact Backstop**-PCC Concrete Pad: Drawing No. A040102 ….…… **Page 52**
- Universal TAU-II Foundation **Flush Mount Backstop**-PCC Pad: Drawing No. A040420 ……. **Page 53**
- Universal TAU-II Foundation **Compact Backstop**-PCC Blocks: Drawing No. A040115 …… **Page 54**
- Universal TAU-II Foundation **Compact Backstop**-Asphalt Anchor: Drawing No. A040110 …… **Page 55**
- Universal TAU-II Foundation **Wide Flange Backstop**-PCC Concrete Pad: Drawing No. A040108 ……. **Page 56**
- Universal TAU-II Foundation **Dimensions – US Standard Units** – Inches: Chart 1 …… **Page 57-59**
- Universal TAU-II Foundation **Dimensions – Metric Units** – Millimeters: Charts ……**Pages 60-62**

Variations of these foundations may be reviewed and determinations made as to equivalence by the project engineer.

If you need additional information, or have questions about the Universal TAU-II Crash Cushion, please call the BSI Customer Service Department at (888) 800-3691 (U.S. toll free) or (707) 374-6800.

STEP 2

Anchor System to Foundation

With the proper foundation in place, anchor the Backstop, Rear Cable Anchors, and Front Cable Anchors according to the particular foundation detail (refer to Step 1).

The anchorage of the system must be in accordance with BSI foundation specifications found in Appendix "C".

To anchor the Universal TAU-II system:

1.) Determine the backstop components and Front Cable Anchor positions about the centerline of the system. The foundation drawings show positioning.

2.) Using the actual parts as templates, either mark the holes to be drilled or drill through the parts acting as guides.

3.) Hole diameter and depth depends on the foundation and the anchoring compound used. See chart below for the hole diameter as specified by the anchoring compound manufacturer. Reference BSI Foundation and Anchorage Specifications in APPENDIX "C" for specific embedment depths.

4.) Prepare the holes as specified by the anchoring compound manufacturer.

5.) With the Front Cable Anchor and backstop components in place, apply the anchoring compound to the holes as specified by the manufacturer. Insert the anchors into the holes with the nuts and washers attached.

6.) Allow anchoring compound to cure before tightening the anchors.

The anchoring package supplied with the Universal TAU-II system contains the necessary threaded rods and anchoring compound needed to install the system. Follow the instructions on the supplied package and reference the guidelines outlined below.

Anchor holes should be drilled using air-flushed or water-flushed rotary percussive drilling equipment. If diamond core or non-percussive drills are used, the hole must be thoroughly scoured using a coarse wire flue brush.

Other anchoring materials can be used if they comply with the following specifications: material should meet the ASTM C307 tensile strength of 2,000 psi (14 Mpa) and compressive strength of 10,000 psi (70 Mpa) per ASTM C109 or C579. The anchoring compound should provide a pull out strength of 20,000 lbf (89 kN) minimum in 4,000 psi (28 Mpa) concrete. Products such as HILTI HIT HY150 injection Adhesive Anchor, RE500 injection Adhesive Anchor or HVA Adhesive Anchoring System fit these criteria. Refer to Table 1 below for required hole size for recommended anchor compounds.

Mechanical / Removable Anchors

When standard chemical anchors cannot be used to secure Barrier System products as a result of state, local, site or other requirements, mechanical anchors may be used. Various mechanical anchors are available that use wedge, self-undercutting, or expansion coils to establish the locking bond with the concrete. A minimum of 18,000 lbf [80kN] ultimate load in the tension (pull out) and a shear of 22,000 lbf [98kN] is required for use with BSI products. One product recommended is the Hilti HCA item number 00252018 HCA 3/4" x 6".

Torque anchors set in PCC concrete to 120 ft-lbf [160 N-m]. Torque anchors set in asphalt to 5 ft-lbf [8 N-m].

IMPORTANT: FOLLOW MANUFACTURER'S SPECIFICATIONS FOR HOLE SIZE AND PREPARATION

ANCHORING COMPOUND	HOLE DIAMETER
US Anchor Ultra Bond Speed Set	7/8" [22 mm]
HILTI - HIT HY 150	13/16" [20.5mm]
HILTI - HVA Adhesive Anchor System	7/8" [22 mm]
HILTI - RE 500	13/16" [20.5 mm] to 1" [25 mm]

STEP 3
Assemble Bulkheads

The Universal TAU-II is comprised of multiple bulkheads assembled to create a variety of different system lengths and widths. Systems are constructed with different bulkheads depending on the size of the system that is needed.

As illustrated in Figure 2, systems can be fully parallel, fully tapered or a combination.
Every system requires a Front Support, a series of Middle Bulkhead Assemblies and a Backstop Assembly.

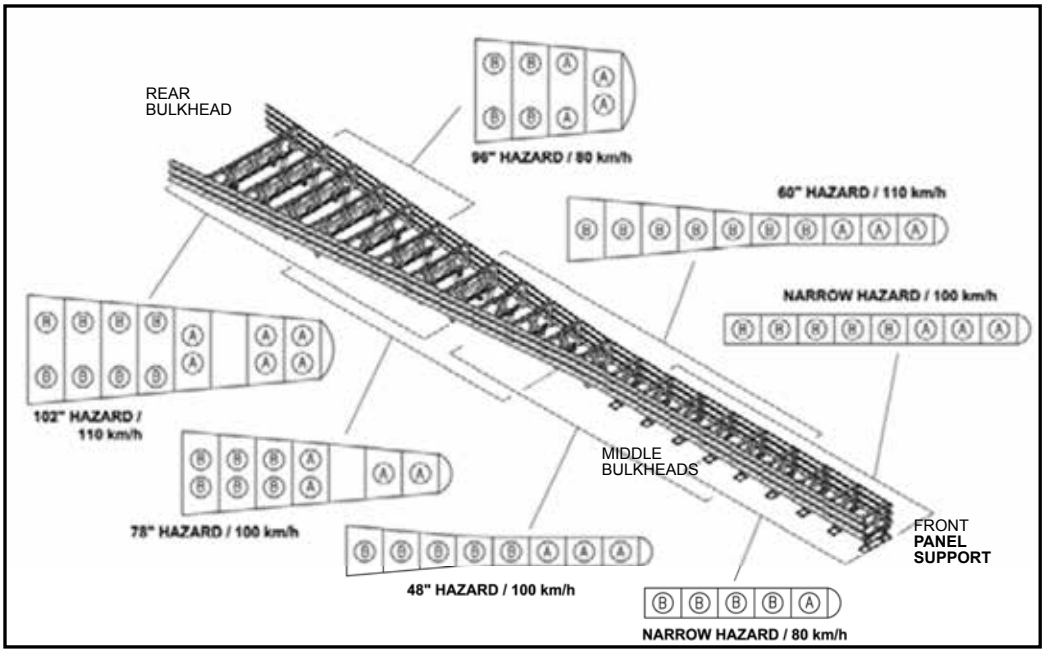

Figure 2.

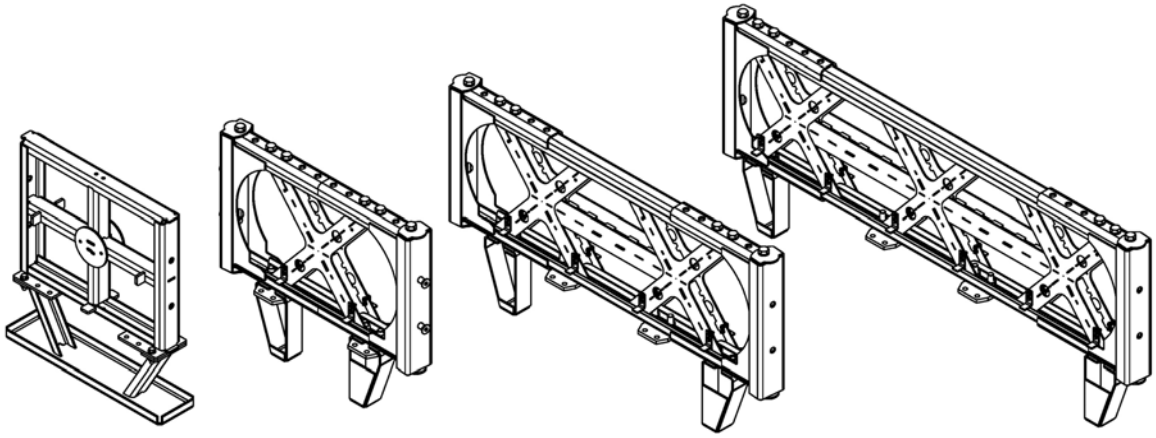

Front Panel Support (1X) (2X) (3X)

Figure 3. Middle Bulkheads

The Front Support

The Front Support is different from a bulkhead in that it has polymer front support Legs and it doesn't attach to the cables underneath the system. The Front Support also has metal plates called Collision Plates, attached in the impact area on the front of the assembly. The Front Support can be built in different variations depending on the system size.

Using a Front Support:
(parallel and combination systems)

Parallel and combination systems use the Front Support (Figure 4). A tapered system designed with a large nose section may use a modified 1X, 2X or 3X bulkhead for the Front Support (Figure 5).

The polymer front support legs bolt directly to the bottom of the Front Support using the hardware provided. All fasteners use a lock washer or Locktite.

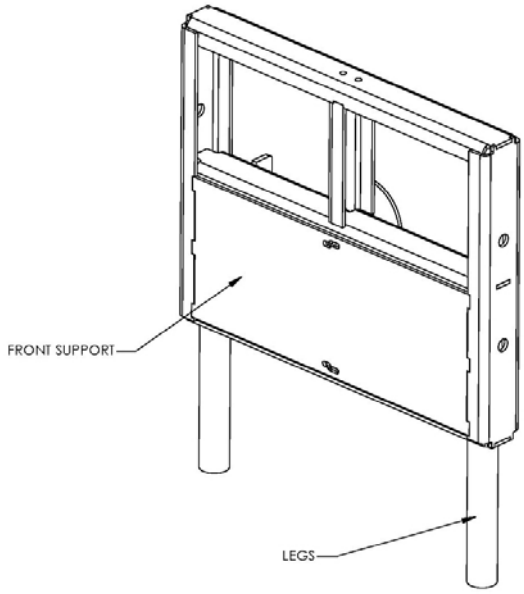

Figure 4. Use the Front Support for a parallel or combination systems.

Using a modified Bulkhead for Front Support
(Tapered systems)

An X style bulkhead can also be used as a Front Panel Support. The X style bulkheads are assembled according to the specific system requirements (Figure 5). Refer to the system drawing for the front bulkhead size needed. The Wing Assemblies slide over the ends of the bulkhead weldment and adjust to the width needed.

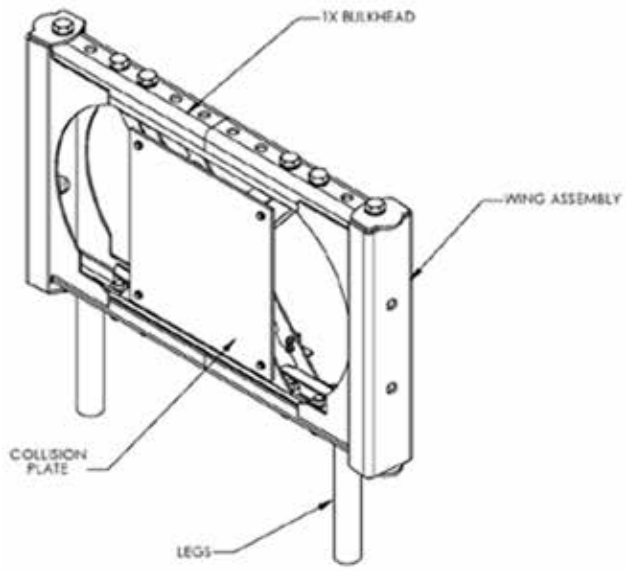

Figure 5. A 1X Style Middle Bulkhead converted into a Front Support

A Single X Bulkhead (1X) provides for Front Support widths of 30" [760] (using Transition Wing Assembly), 36" [910], 42" [1070], and 48" [1220].

A Double X Bulkhead (2X) provides for Front Support widths of 54" [1370], 60" [1525], 66" [1680], and 72" [1830].

A Triple X Bulkhead (3X) provides for Front Support widths of 78" [1980], 84" [2130], 90" [2290], and 96" [2440].

The Wing Assemblies are bolted in the appropriate location using Backing Plates and the hardware provided. All fasteners use a lock washer or Locktite (Figure 5).

The polymer front support legs bolt directly to the bottom of the assembly using free holes on the Wing Assemblies and the hardware provided (Figure 4,5). Some configurations require a leg adapter (Figure 6).

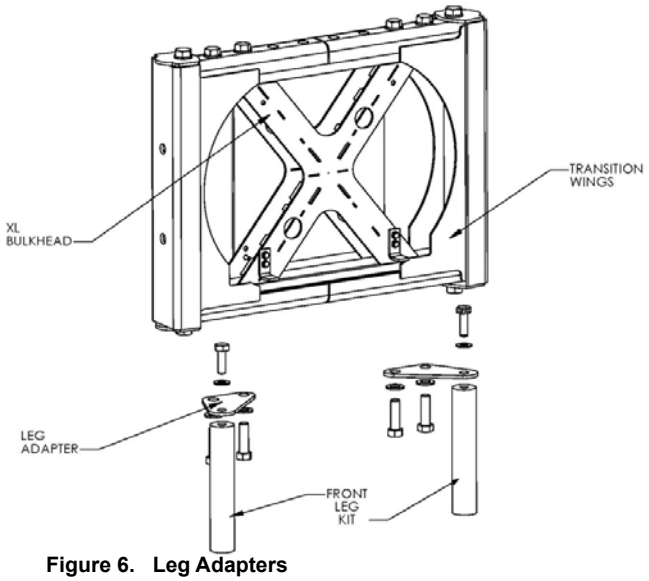

Figure 6. Leg Adapters

EAC Locating Tabs are bolted to the back of the assembly and Front Collision Plates are bolted to the front of the assembly. All fasteners use a lock washer and Locktite.

Middle Bulkhead Assemblies

The Middle Bulkheads come in two different styles: fixed and adjustable X-style. Depending on the system's cable location, the Cable Guide Mounting plates bolt to the bottom of the assembly at one of three positions.

Parallel Middle Bulkhead

The width of the Parallel Middle Bulkhead is not adjustable and is used in systems that are totally parallel or systems that start out parallel and finish with a rear taper (Figure 7).

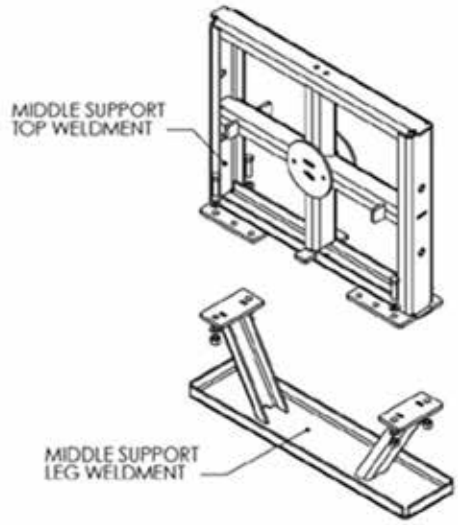

Figure 7. Parallel Middle Bulkhead

Adjustable Middle Bulkheads

The Adjustable Middle Bulkheads come in three different widths and are designated by the number of X patterns on the face of the bulkhead (Figure 3). The narrowest has a single X in its structure, the double X has two and the largest bulkhead has three X's.

All of the bulkheads have adjustable wings that are rigidly bolted on to each side (Figure 8). Using the adjustable wings, the different sized bulkheads can accommodate hazard widths up to 102" [2.6m]. The bulkheads can descend in 6" [150mm] increments until reaching the desired width.

The adjustable Middle Bulkheads are assembled according to the specific system requirements. Refer to the system drawing for the middle bulkhead sizes needed. The Wing Assemblies slide over the ends of the bulkhead and adjust to the width needed.

Single X (1) Middle Bulkheads provide for assembly widths of 30" [760] (using Transition Wing Assembly), 36" [910], 42" [1070], and 48" [1220].

Double X (2X) Middle Bulkheads provide for assembly widths of 54" [1370mm], 60" [1520mm], 66" [1680mm], and 72" [1830mm].

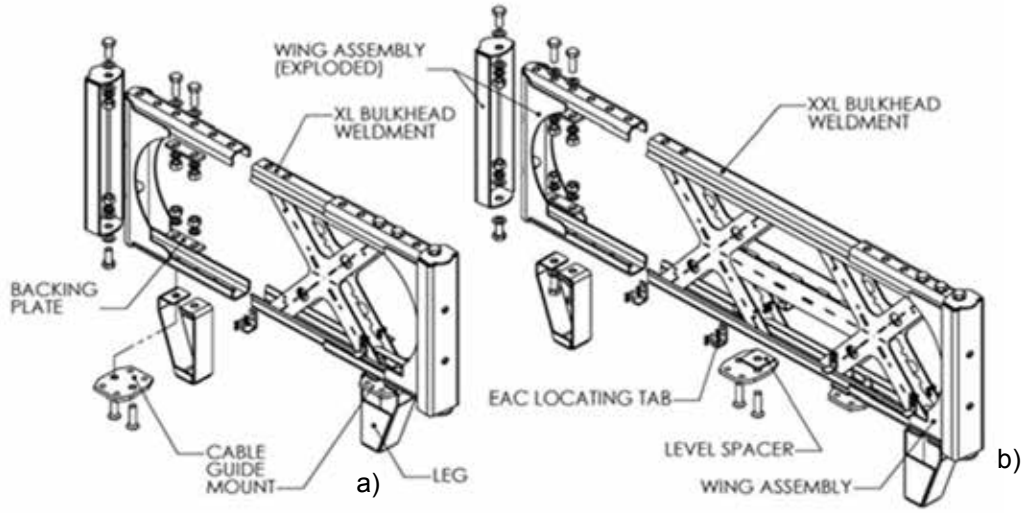

Figure 8. Adjustable Middle Bulkheads a) Single X (1X) b) Double X (2X)

Triple X (3X) Middle Bulkheads provide for assembly widths of 78" [1980mm], 84" [2130mm], 90" [2290mm], 96" [2440mm], 102" [2.6m].

The Wing Assemblies are bolted in the appropriate location using Backing Plates and the hardware provided. The Legs bolt directly to the bottom of the assembly where the Wing Assemblies attach using the same hardware. All fasteners use a lock washer or Locktite.

Cable Guide Mounts

If a parallel or 1X bulkhead is used as the Front Bulkhead Assembly, the cable is in the 1st position (Figure 9) and the Cable Guide Mounts would bolt in the corresponding location.
If a 2X or 3X bulkhead is used as the Front Bulkhead Assembly, the cable is in position 2 or 3 (Figure 9) respectively and the Cable Guide Mounts attach accordingly. If said cable position alignswith the leg mounting position the Cable Guide Mount bolts through the leg using the hardware provided for the Cable Guide Mount.

Backing Plates are used on all Leg, Wing Assembly, and Cable Guide fastenings. A Level Spacer is used when attaching components across the step between the Bulkhead

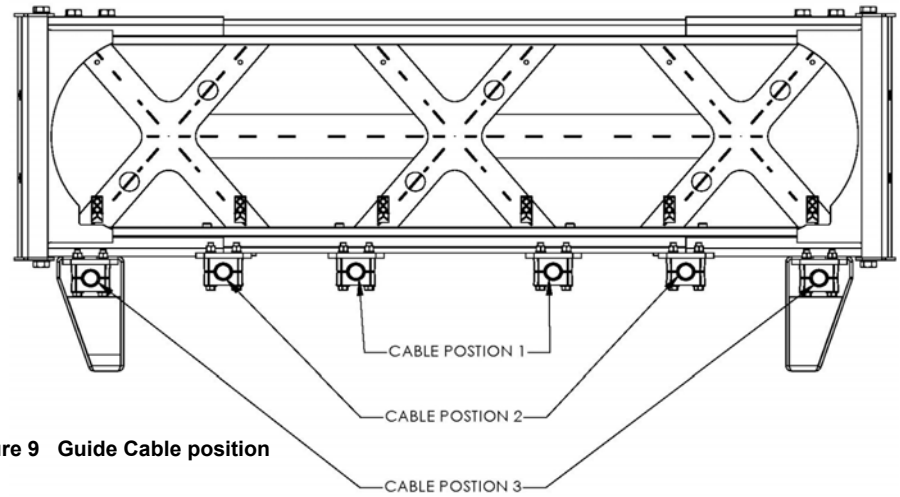

Figure 9 Guide Cable position

Weldment and the Wing Assembly.

EAC Locating Tabs

EAC Locating Tabs are bolted to the front and back of each Middle Bulkhead Assembly. All fasteners use a lock washer or Locktite (Figure 8).

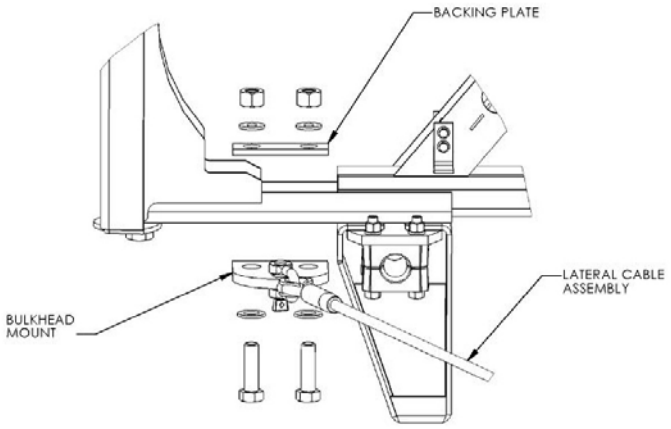

Figure 10. Lateral Cable Support

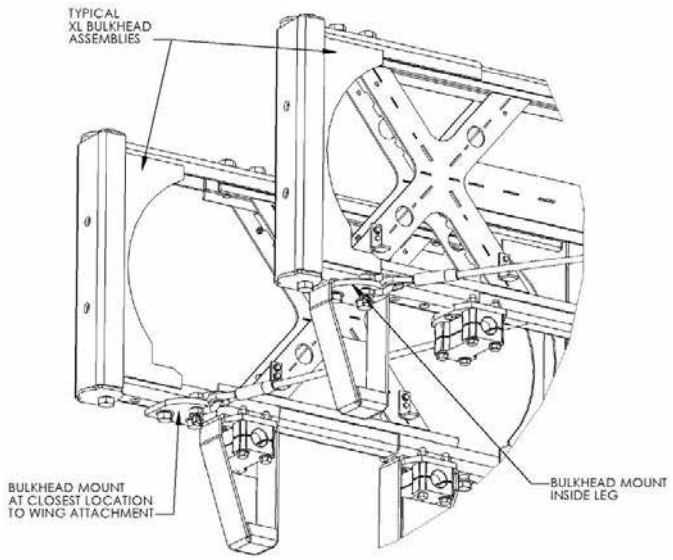

Figure 11. Lateral Cable Supports mounted inside and outside the leg

Lateral Cable Support

Some systems require a Lateral Cable Support Kit (Refer to Step 10 of this manual). The Lateral Cable Support Kit contains Bulkhead Mounts that attach to the last two bulkhead assemblies of required systems. They bolt to the outermost free holes in the Wing Assemblies (Figure 10). They do fit inside the Legs if necessary (Figure 11).

NOTE: Refer to the System Configuration chart in Appendix "A" to determine if Lateral Cable supports are required.

Empty Bay Bumpers

Some systems require an empty bay (no Energy Absorbing Cartridges). These systems utilize a Bumper Kit to minimize damage in an impact (Figure 12). The kit includes (4) Bumpers that mount to the rear bulkhead assembly of the empty bay. Two Bumpers mount to the top of the assembly at the Wing to Bulkhead joint using the same hardware. The other two Bumpers mount through the Leg to the Wing – Bulkhead joint.

NOTE: Refer to the System Configuration chart in Appendix "A" to determine if empty bays are required.

Following complete assembly of the Front, Middle, and Backstop Bulkhead assemblies, position them in order. Space them at approximately 34" [860mm] apart, center to center. Also, align them through the centerline of the system. Accuracy and care taken here will improve ease of assembly and reduce efforts to straighten the system.

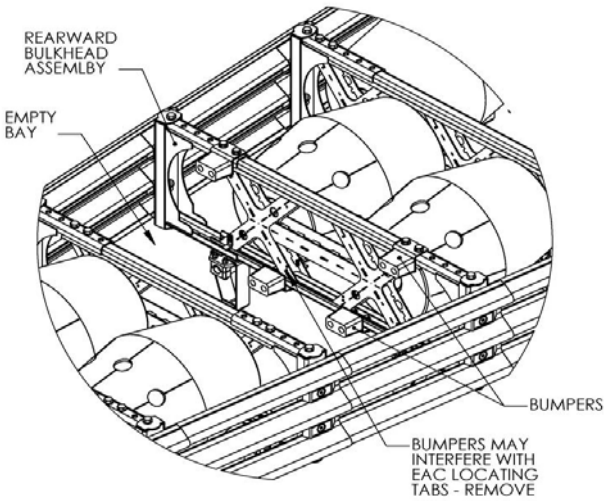

Figure 12 Empty Bay Bumpers

STEP 4

Backstop Assemblies

The Backstop Assembly is selected per application and can be configured to protect hazards up to 8.5' [2.6m] in width. Backstops can either be attached directly to a barrier wall or a suitable structure (Portable Concrete Barrier (PCB) Backstop, Flush Mount Backstop) or installed as a stand-alone system (Compact Backstop, Wide Flange Backstop). All backstops require minimum assembly if they are not pre-assembled.

PCB Backstop

The PCB Backstop (Figure 13) is configured from parts anchored directly to an existing concrete barrier wall. Refer to Step 1 and Step 2 for PCB Backstop layout and anchorage details. Pipe Panel Mounts bolt to the sides of the backstop and provide a mounting point for the Slider and End Panels.

Refer to the System Configuration Chart in Appendix "A" to determine system widths and Capacity Limitations.

If a 36" [910mm] Backstop is desired, attach the 36" [910mm] Backstop Adapters (Figure 14) to the sides of the backstops and bolt the Pipe Panel Mounts to the pivoting sections.

If the system is installed on an asphalt foundation, the portable concrete barrier must be anchored using the supplied brackets.

For additional information or questions about the Universal TAU-II Crash Cushion, please call the BSI Customer Service Department at (888) 800-3691 (U.S. toll free) or (707) 374-6800.

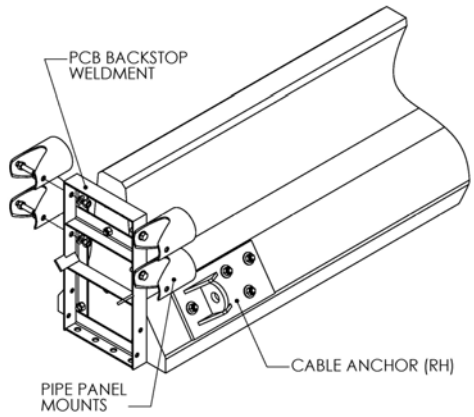

Figure 13 PCB Backstop (Parallel System)

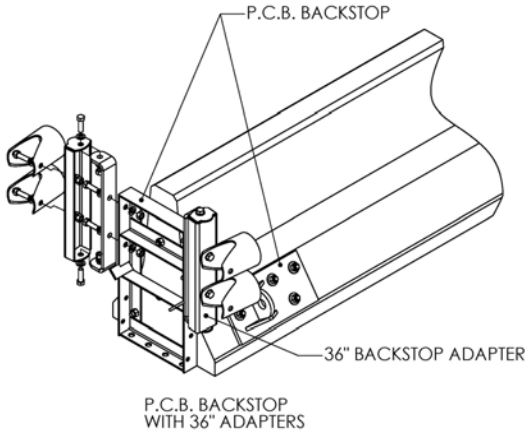

Figure 14 PCB Backstop (Tapered System)

Compact Backstop

The Compact Backstop (Figure 15) is bolted together in two halves and is usually pre-assembled. The Backstop is a stand alone design is not anchored to the hazard being protected.

Refer to Step 1 and Step 2 for Backstop layout and anchorage details.

Pipe Panel Mounts bolt to the sides of the backstop and provide a mounting point for the Slider and End Panels. Refer to the system drawing for the backstop assembly size needed.

If a 36” [910mm] Backstop is desired, attach the 36” [910mm] Backstop Adapters (Figure 16) to the sides of the backstops and bolt the Pipe Panel Mounts to the pivoting sections.

For additional information or questions about the Universal TAU-II Crash Cushion, please call the BSI Customer Service Department at (888) 800-3691 (U.S. toll free) or (707) 374-6800.

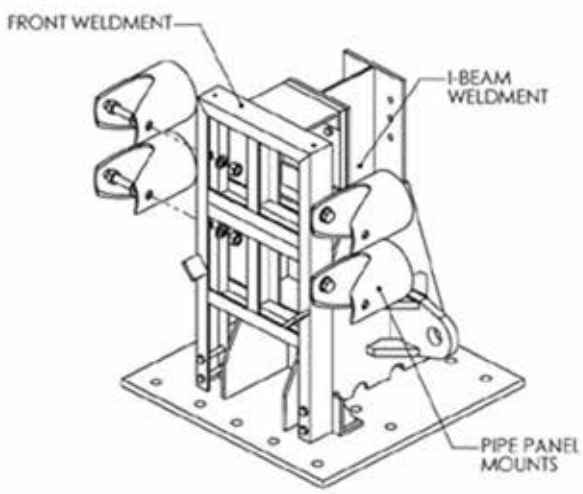

Figure 15 Compact Backstop (Parallel Systems)

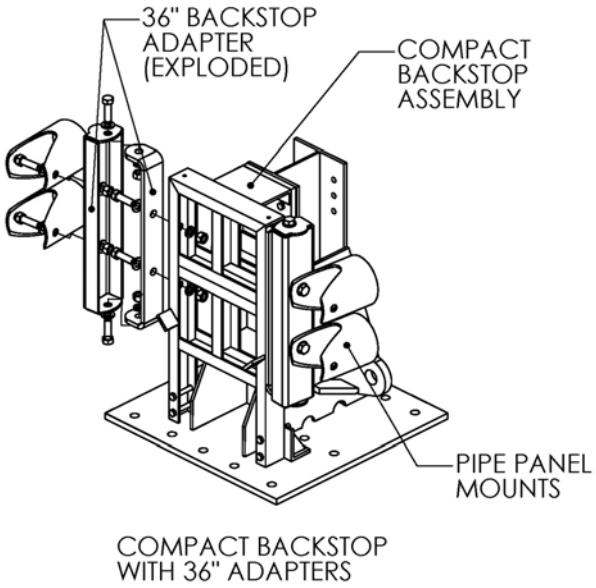

Figure 16 Compact Backstop (Tapered Systems)

Flush Mount Backstop

The Flush Mount Backstop system (Figure 17) is intended for applications where the hazard width exceeds the limitations of the PCB Backstop and are applicable in locations with limited foundation size. The Flush Mount Backstop can be attached to reinforced safety shape or vertical concrete structures up to 36" [910mm]. Systems over 24" [610mm] wide require the 36" [910mm] adapter. Edges of vertical concrete may require chamfer according to local standards.

The Cable Tensioning is moved to the front of the system so the rear cable anchors do not protrude outside of the rear extension panels.

The backstop is attached to the foundation and to the concrete backstop. Install anchors in accordance with BSI specifications. Vertical slots on the backstop allow removal replacement of the backstop. Anchors must be placed at the top of said slots to be effective. Flush Mount Backstop systems use the same cable used in all parallel systems. The cable is installed with the threaded tensioning end forward. The looped end is pinned in place at the backstop. The Front Cable Anchor uses an inserted key to keep the threaded stud from rotating during tensioning.

For additional information or questions about the Universal TAU-II Crash Cushion, please call the BSI Customer Service Department at (888) 800-3691 (U.S. toll free) or (707) 374-6800.

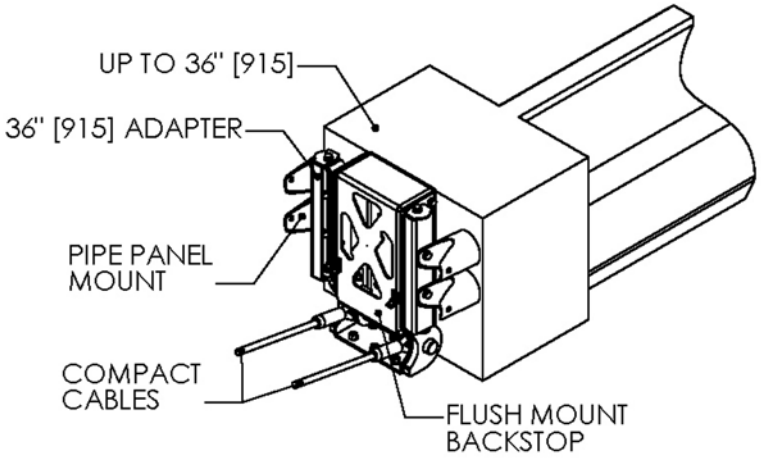

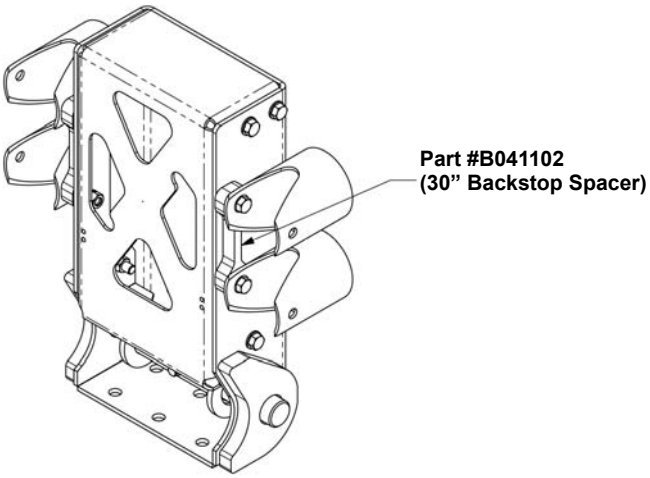

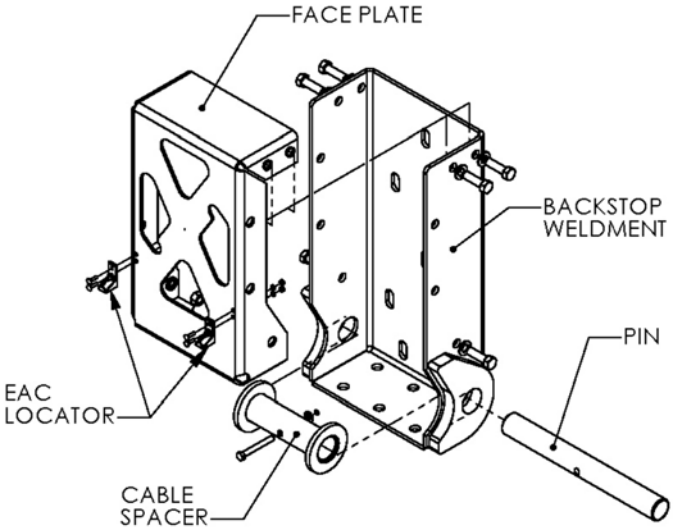

Figure 17 Flush Mount Backstop

Wide Flange Backstop

The Wide Flange Backstop (Figure 18) uses a combination of backstop elements to protect wide hazards.

The Wide Flange Backstop incorporates XL, XXL, or XXXL bulkhead assemblies attached to two Wide Flange Backstop Weldments.

The backstop bulkheads are assembled according to the specific system requirements. The Wing Assemblies slide over the ends of the bulkhead weldment and adjust to the width needed.

XL Bulkheads provide for backstop bulkhead assembly widths of 42” [1070] (using Transition Wing Assembly), 48” [1220], 54” [1370], and 60” [1525].
XXL Bulkheads provide for backstop bulkhead assembly widths of 66” [1680], 72” [1830], 78” [1980], and 84” [2130].

XXXL Bulkheads provide for backstop bulkhead assembly widths of 90” [2290], 96” [2440], and 102” [2290].

Backstop Block-outs mount to the bulkhead assemblies at the Wing Assembly to Bulkhead Weldment joint. The block-outs are bolted through the Wing Assemblies and bulkhead weldment and fastened using Backing Plates and the hardware provided. The bulkhead assembly and block-outs are then bolted to the Wide Flange Backstop Weldments. Pipe Panel Mounts are fastened to the pivoting section of the Wing Assemblies. EAC Locating Tabs bolt to the front of the bulkhead assembly. All fasteners use a lock washer or Locktite.

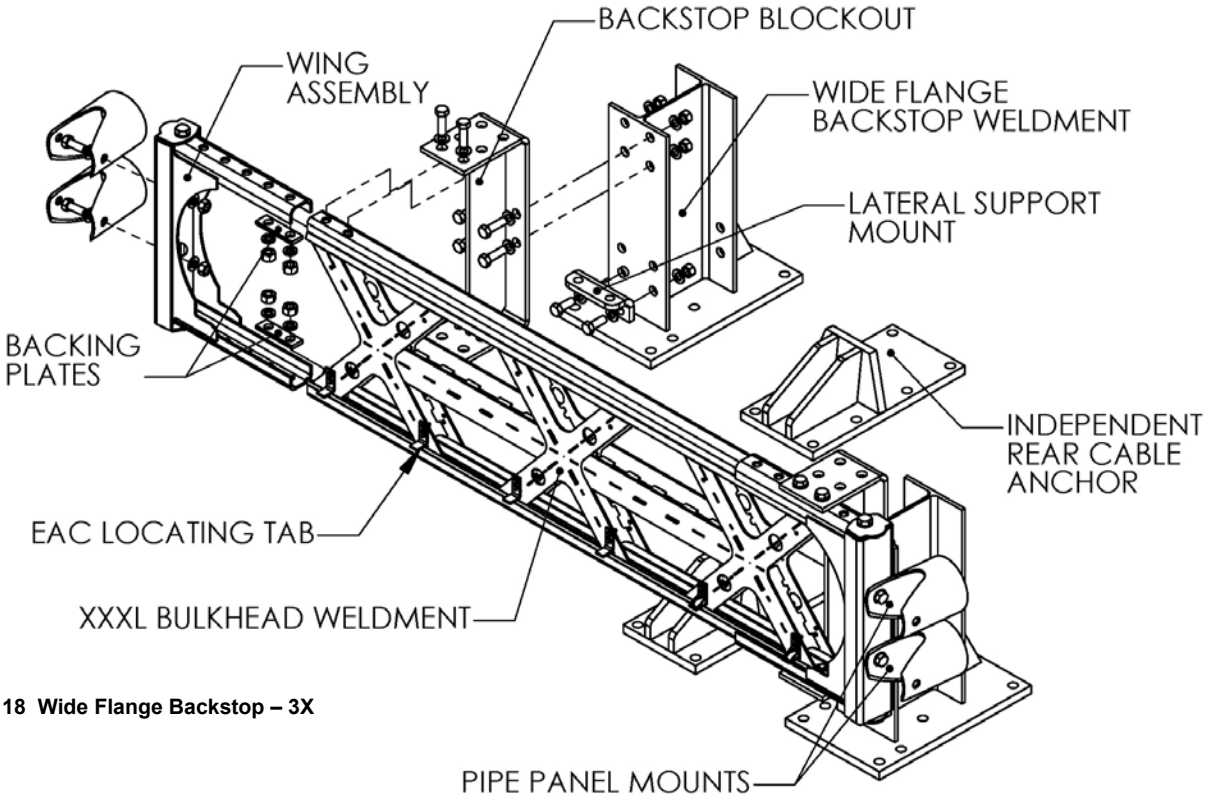

Figure 18 Wide Flange Backstop – 3X

Depending on the position of the cables in reference to the Wide Flange Backstop positioning, either an independent rear cable anchor (Figure 18) or a backstop mounted rear cable anchor (Figure 19) will be used. The independent rear cable anchor stands alone and requires no assembly. (Reference Step 1 and Step 2 for layout and anchorage specifications). The backstop mounted rear cable anchor bolts between the flanges of the Wide Flange Backstop. They are mounted to the interior of the system. All fasteners use a lock washer or Locktite. When the front support bulkhead and backstop utilize the same bulkhead, the rear cable anchors are mounted to the backstops. When the front support bulkhead and backstop bulkheads are different, the system is supplied with independent rear cable anchors mounted on the pad surface.

Some systems require a Lateral Cable Support Kit. The Lateral Cable Support Kit contains Lateral Support Mounts that attach to the backstop assembly of required systems. They bolt to the front of the Wide Flange Backstop Weldments in the lowest hole set. If backstop mounted rear cable anchors are used, one of the bolts will be shared. All fasteners use a lock washer or Locktite.
Refer to the System Configuration Chart in Appendix "A" to determine if Lateral Cable supports are required.

If the Wing Assemblies of the particular backstop are adjusted to one of their two most extended positions (54" [1370mm], 60" [1525mm], 78" [1980mm], 84" [2130mm], and 102" [2290mm] backstops), Wing Braces and Spacers are required (Figure 19). The Wing Braces attach to the Wing Assemblies and the Backstop Block-outs on the top and bottom. The Spacers level their mounting surfaces. All fasteners use a lock washer or Locktite.

For additional information or questions about the Universal TAU-II Crash Cushion, please call the BSI Customer Service Department at (888) 800-3691 (U.S. toll free) or (707) 374-6800.

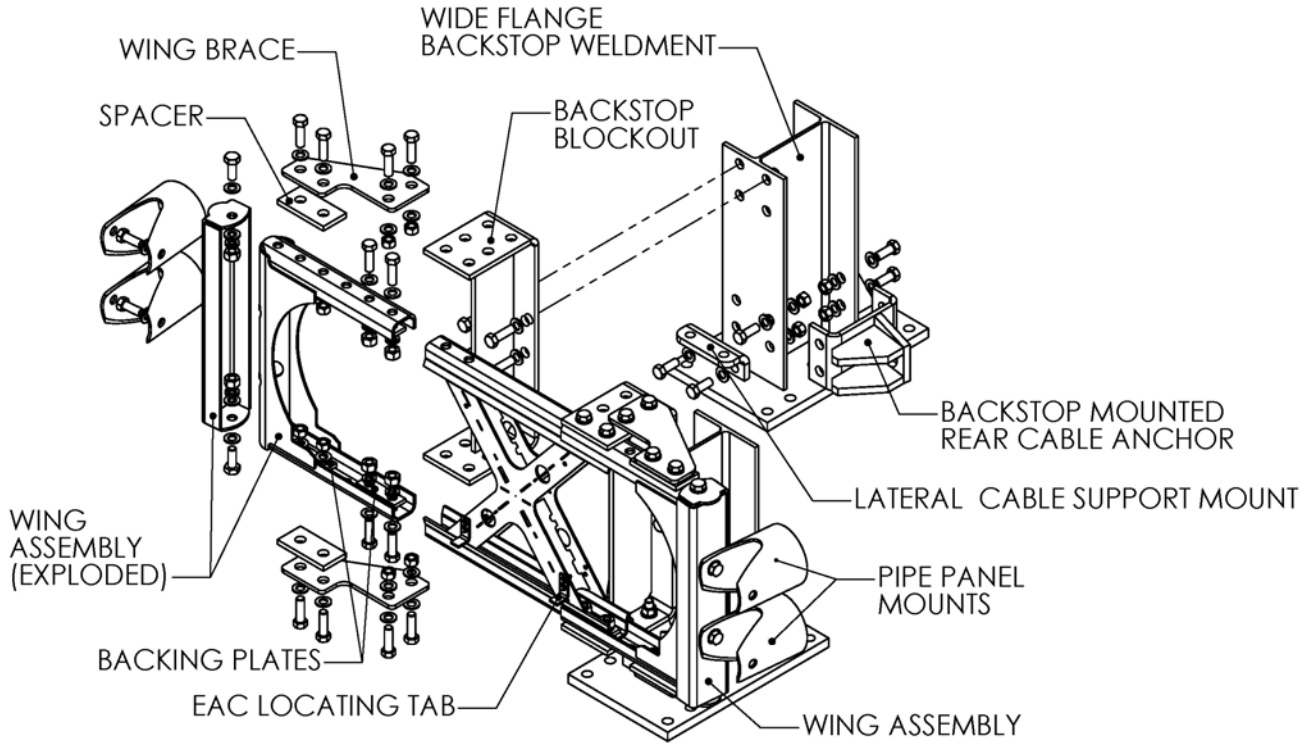

Figure 19 Backstop – 1X with Wing Braces

STEP 5

Attach Panels

The Universal TAU-II system uses two types of panels: Sliding Panels (Figure 20) and End Panels (Figure 21). Sliding Panels have a pair of holes forward and two long slots running the length of the panels. End Panels have a pair of holes at each end and do not have slots. Sliding panels are used on all collapsing bays. End panels are attached to the backstop only (Call BSI for non-proprietary transition options). Slider Bolts hold the panels to the bulkheads. Some systems require nested panels (doubled) on rearward bays.

NOTE: Refer to the System Configuration Chart in Appendix "A" to determine if/where nested panels are required. A long bolt is supplied to assist in the assembly to nest the panels.

Install the panels from back to front staggering from each side. Place the End Panels first. While holding the End Panel in place, lap the forward Sliding Panel over it and bolt through the slot, End Panel, and Pipe Panel Mount (Figure 22). Leave the nuts of the Slider Bolts loose and perform on both sides. Lap the next forward Sliding Panel and bolt through the slot, hole set in rearward Sliding Panel, and bulkhead. Leave the Slider Bolt nuts loose and progress forward alternating sides (Figure 23). If the bay requires nested panels, perform procedure with (2) panels, one nested inside the other.

The last panels to be installed will be on the first bay of the system, the Front Support. These panels lap the rearward panel and fasten to the 2nd bulkhead from the front as instructed above. The front of these panels will mount to the Front Support through the Nose Piece. Refer to Section 6 for this connection (Figure 26).

Leave the Slider Bolt nuts loose until the system is almost completely assembled and installed.

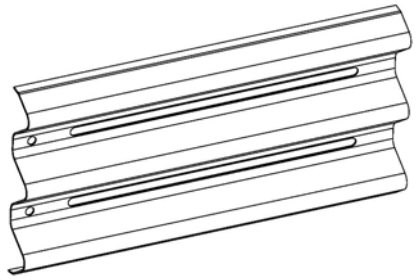

Figure 20 Slider Panel

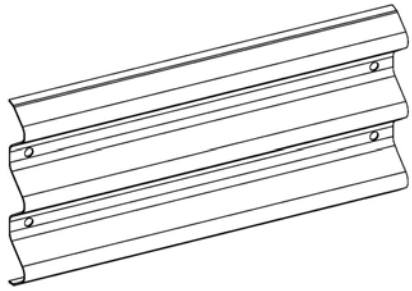

Figure 21 End Panel (no slots)

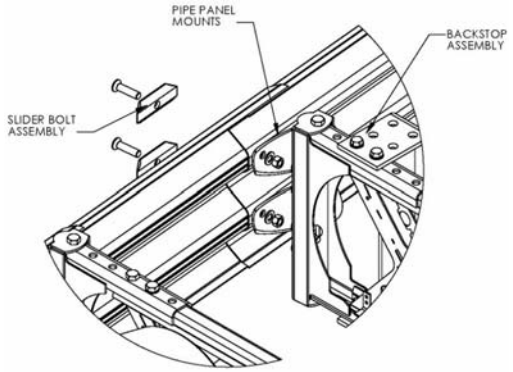

Figure 22 Attach Rear Panel

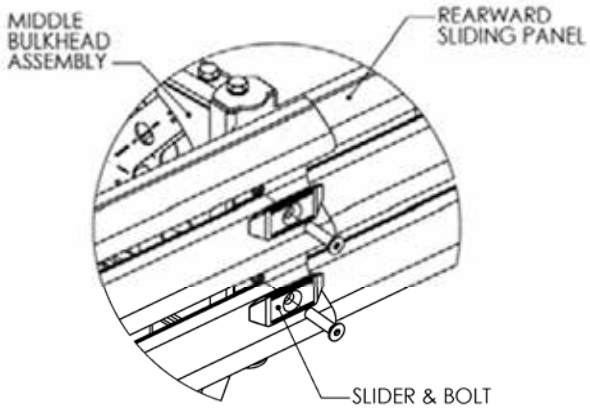

Figure 23 Attach Side Panels

STEP 6
Attach Nose Piece / Delineation Marker

Narrow systems (up to 36” [910mm] Front Support) use a one-piece polyurethane nose (Figure 24) with molded thrie beam corrugations on both ends. Wider Front Support Assemblies (42” [1070mm] and above) use two polyurethane parts (Figure 25) riveted together. The two part nose pieces have thrie beam corrugations on one side and a series of holes through the flat section. Guide Cable Torque

The Nose Piece attaches to the Front Support assembly through the Sliding Panels (Figure 26). Thick flat round washers are inserted in the mounting holes of the nose piece to limit compression of the polyurethane. Two ¾” [20mm] bolts with fender washers clamp the nose piece and Sliding Panel to the Front Support on each side. Fasteners use lock washers or Locktite.

Torque to 200 ft-lbf [270 N-m].

The two part nose pieces overlap across the width of the system. Adjust to desired profile and align holes. Using the supplied pop-rivets and washers, rivet two columns of holes. Rivets should pass through the overlapping nose pieces at the furthest possible columns apart (Figure 26).

Apply delineation markings as required (not supplied).

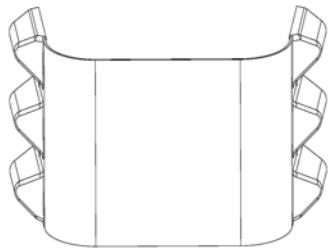

Figure 24 Nose Piece (up to 36”)

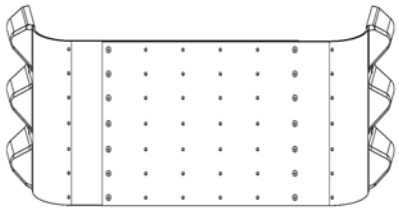

Figure 25 Nose Piece (wide)

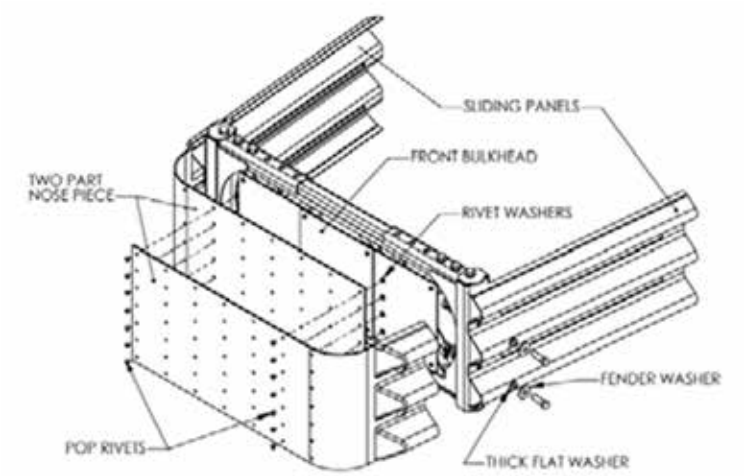

Figure 26 Wide Nose Piece Assembly

STEP 7

Install Cables and Cable Guides

Cable Location

Every system has a set of cables that run through the cable guides that attach underneath each bulkhead. The Cable Guides clamp around the cable and bolt to the bottom of the bulkheads. The Cable Guide is universal and fits all bulkhead and cable configurations. Two Cable Guide assemblies are used on every middle bulkhead assembly (Figure 27).

The cables are tentioned between the Backstop and Front Cable Anchor. The Front Cable Anchor is mounted under the first bay.

IMPORTANT NOTE: The Front Support Assembly is not attached to the cable.

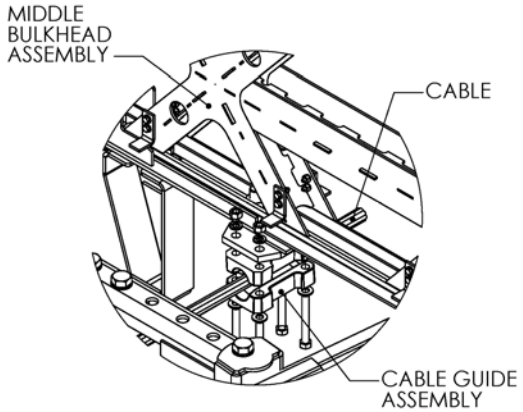

Figure 27 Cable Guide Clamp

Systems using a PCB, Compact Backstop or Flush Mount Backstop.

Systems using a PCB, Flush Mount or Compact Backstop use 1” [25mm] diameter cable (Figure 28). These Cables are identified by the loop and shackle on one end and a threaded stud swaged to the other end. (The shackle is not used on the Flush Mount Backstop).

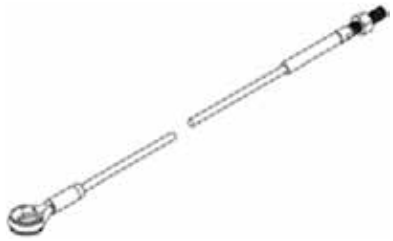

Figure 28 Compact Cable

Systems with Wide Flange Backstops

Systems with Wide Flange Backstops use a 1 1/8” [28mm] diameter cable (Figure 29). These cables have a threaded stud swaged to the rear end and a large “open swage socket” on the front end. A Key is also included which limits rotation of the cable during tensioning at the Rear Cable Anchor.

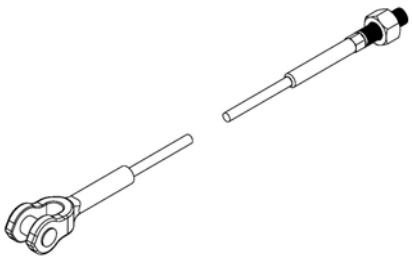

Figure 29 Universal Cable

The cables are fed through the bulkheads from the front. On parallel style bulkheads, the cables thread between the legs. On XL-XXXL bulkheads, the cables can go between the legs or through the legs, depending on the configuration. Lead with the rear of the cable. Place the rear cable end through the Rear Cable Anchor, PCB Backstop, or Compact Backstop.
Start the tensioning nut with about 1” [25mm] of thread.

Without pinning the Front Cable Anchor, attach the Cable Guides to the bulkheads. Start from the last bulkhead and move forward. Cable Guides attach with ½” [12mm] hardware provided. Fasteners use lock washers or Locktite.

When all the Cable Guides are installed, pin the front cable end to the Front Cable Anchor. On Wide Flange Backstop configurations, install the Key to the Rear Cable Anchor (Figure 30).

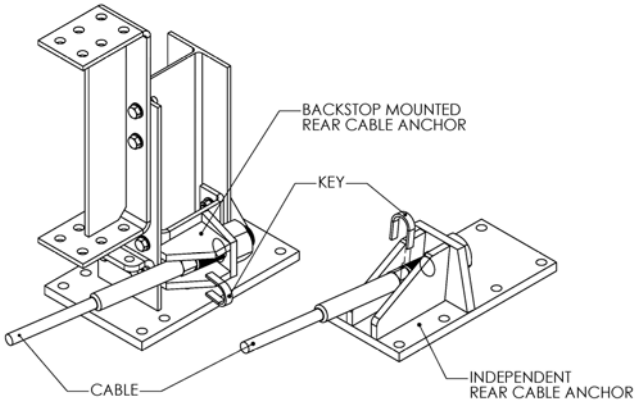

Figure 30 Backstop Cable Mount

STEP 8

Stretch and Align the System

This step can be avoided or reduced if care is taken to align and space the bulkheads properly during assembly.

Attach a pair of chains or straps to the Front Bulkhead assembly. Using a truck or other tow vehicle, pull the system forward to fully extend the bays. The bays are fully extended when the Slider Bolts are bottomed out in the slots of the Sliding Panels.

If necessary, bump or nudge the system into alignment. Each bulkhead should be aligned along the centerline of the system.

Recommended attachment points for straps or chains are at the corners of Front Support on the top and bottom horizontal channels. When attaching to XL-XXXL bulkheads, secure as close to the Wing Assembly attachment points as possible.

NOTE: Be sure not to jerk or pull on the backstop anchors before the anchoring compound has cured and the backstop is secured to the foundation.

STEP 9

Tension Cables and Torque Slider Bolts

Tension the Cables. Torque the cables in 50 ft-lbf [65 N-m] increments alternating between the two. Reference Torque Chart below (Table 2) for torque requirements. Use the deep socket provided.

Tighten Slider Bolts to approximately 100 ft-lbf [130 N-m], loosen, and then torque to 20 ft-lbf [27 N-m]. This procedure ensures proper nesting of the panels and torque accuracy.

NOTE: Care must be taken to not over tighten the sliders. Follow the procedure outlined above.

STEP 10

Install Lateral Support Cables

Skip this section if the system does not require a Lateral Cable Support Kit.

NOTE: Refer to the System Configuration chart in Appendix "A" to determine if Lateral Support Cables are required.

If the system requires a Lateral Cable Support Kit, the cable mounts should be installed on the last two bulkhead assemblies and the Wide Flange Backstops. Refer to Figure 9 and Figure 10 of Step 3.

The Lateral Support Cables are ½" [12mm] diameter and have a ½" [12mm] shackle on one end. There are eight (8) cable assemblies in the kit. The shackles pin to the cable mounts on the bulkheads and Wide Flange Backstops (Figure 31, 32, 33, 34, 35). The two cables from each backstop are routed to the opposite sides of the last two bulkheads (Figure 35).

These cables are attached to the cables pined to the bulkheads with cable clamps. Six cable clamps are used in series of three. Place the clamps at the furthest extents of the overlapping cables. The first cable clamp should be approximately 3" [75mm] from the cable end. Subsequent clamps should be spaced at 3" [75mm] (Figure 33).

Cables should be taught with minimal slack, but do not require tensioning. Routing above or below the main system cables is acceptable. Bundle access cable and use provided plastic wrap ties to secure the bundles to the suspended cables.

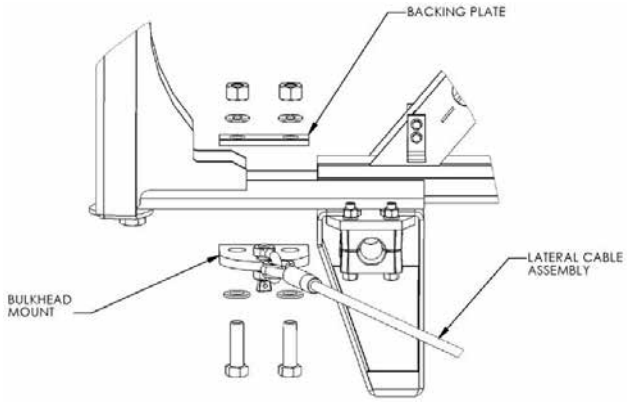

Figure 31 Lateral Support Cable

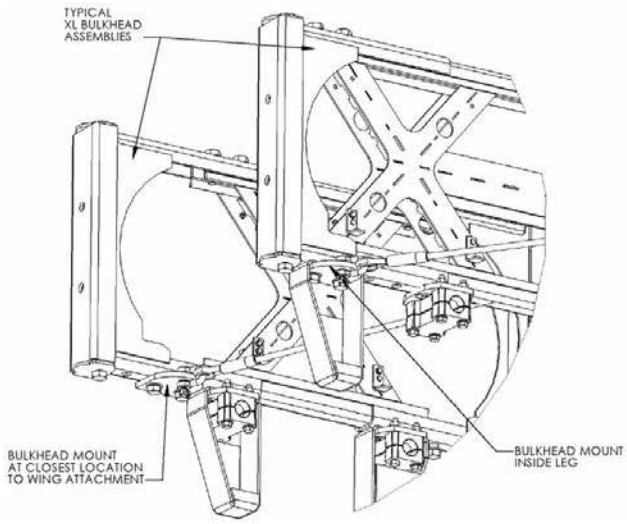

Figure 32 Lateral Support Cables

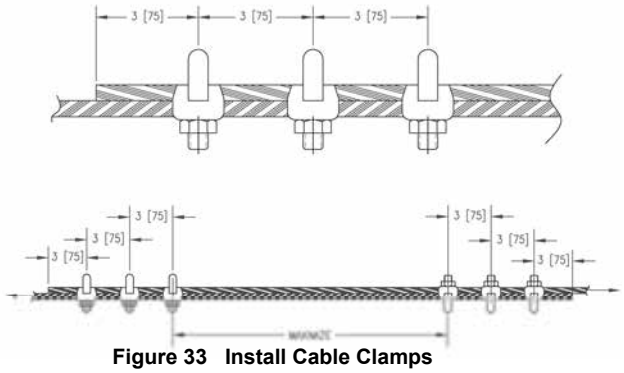

Figure 33 Install Cable Clamps

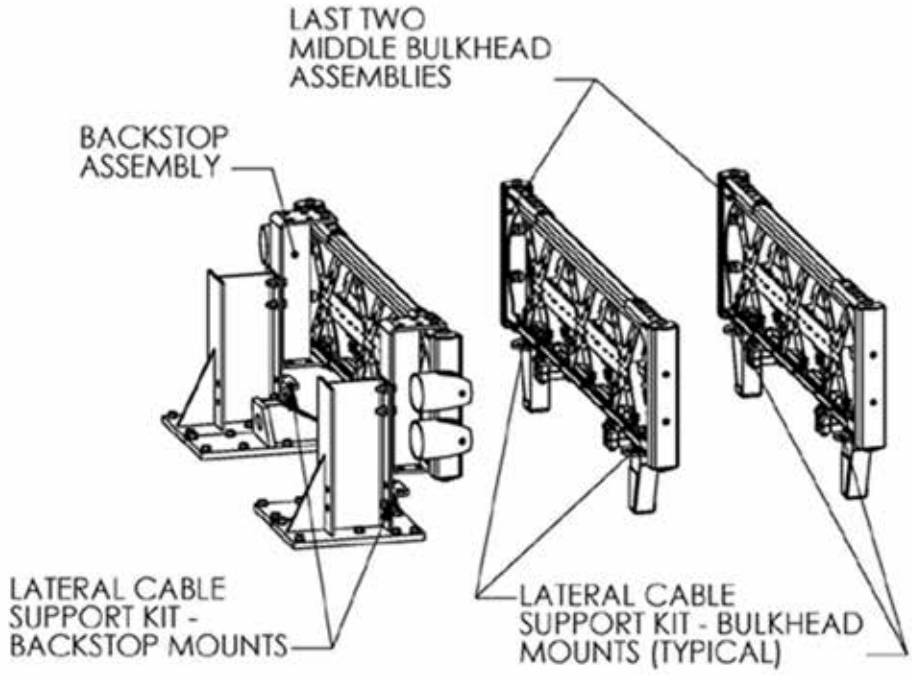

Figure 34 Cable Mounts

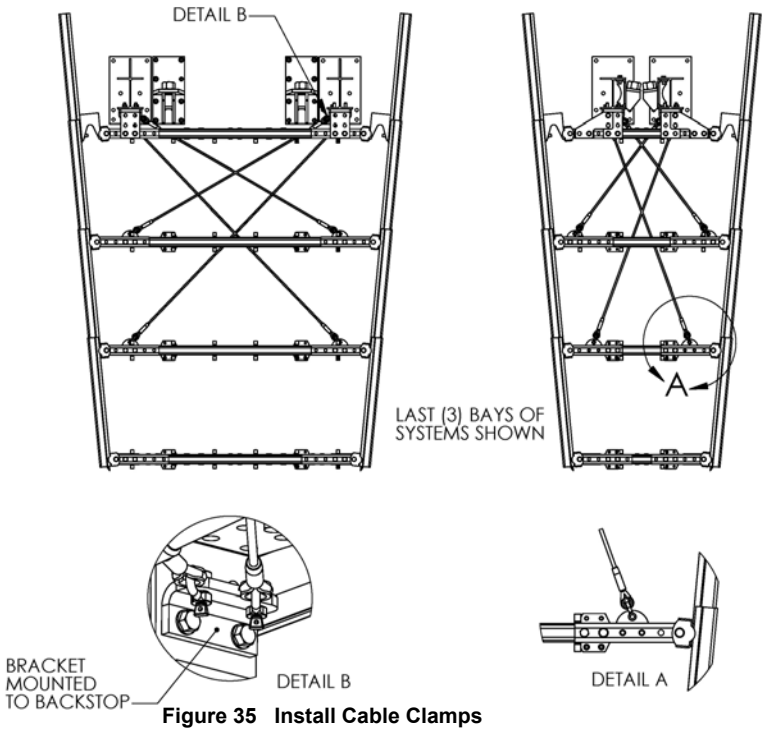

Figure 35 Install Cable Clamps

STEP 11

Insert Energy Absorbing Cartridges

There are two types of Energy Absorbing Cartridges (EAC). Each EAC has a forward and rearward end. Type “A” EAC’s (Figure 36) have eight (8) 3” [75mm] diameter holes around the circumference of the front half of the cylinder. Type “B” EAC’s (Figure 37) have a solid cylinder wall with three (3) vent holes on the rearward end.

When installing the EAC’s in a system it is important to ensure that they are placed according to manufacturer specification.

NOTE: Refer the System Configuration Chart in Appendix “A” for proper EAC placement.

When placed in the system, the front of the EAC will face the front of the system (narrow end). Text on the EAC reading “This Side Up” should be legible and at the top of the inserted EAC. The EAC should rest on the EAC Locating Tabs.

Note that bays capable of holding (2) EAC’s will always use (2) EAC’s except in specified empty bays. They will also always be placed in the widest locations available.

NOTE: A single bay will never have more than (2) EAC’s in it. Refer the System Configuration Chart in Appendix “A” for proper placement.

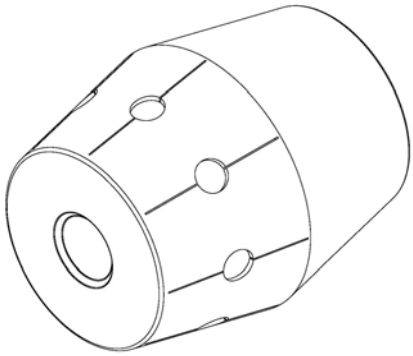

Figure 36 Energy Absorbing Cartridge – Type A

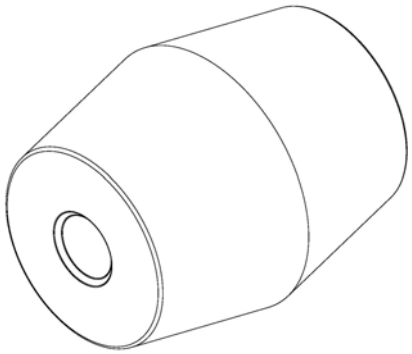

Figure 37 Energy Absorbing Cartridge – Type B

STEP 12

Final Inspection

Use the check list below to confirm that all of the installation steps have been completed.

Inspection Date	Inspection By:	Item
		All front cable anchor plate and backstop anchor bolts in place and epoxy cured.
		Clevis and pin, mounted to the front cable anchor, is installed with the handle portion of the pin on the inside of the anchor assembly, firmly tightened. *(This may be different depending on the type of foundation, ie, asphalt or PCC.)*
		All cable guide assemblies securely fastened.
		System cables tightened to meet torque specifications.
		Pipe panel mounts positioned properly, flat end facing back, cut out facing forward.
		Sliding panels installed properly to allow for stacking.
		Sliding panels should have no more than a ¾" (19mm) gap between stacked panels.
		Nose cover properly installed with thick spacer and tightened to specifications.
		Torque Sliding Bolt assemblies to specifications. Do NOT over tighten.
		Energy Absorbing Cartridges (EAC) installed in proper A-B position and sequence. See Configuration Chart.
		EAC air discharge holes positioned properly. Rotate cast ID to the top of the cartridge.
		Asphalt adapter installed on both sides of portable concrete barrier when applicable.
		Torque all fasteners to meet specifications.

APPENDIX A - System Configuration Chart

BACKSTOP WIDTH	30 mph* [50 km/h]	35+ mph* [60 km/h]	44 mph [70 km/h] Test Level -2	50 mph* [80 km/h]	53 mph [85 km/h]	55 mph [90 km/h]
Up to 30" [700 mm]	B B	B B A	B B B A	B B B B A	B B B B A A	B B B B B A A
36" [900 mm]	(X) B B (X)	(X) B B A (X)	(X) B B B A (X)	(X) B B B B A (X)	(X) B B B B A A (X)	(X) B B B B B A A (X)
42" [1060 mm]	B B L r	B B A	B B B A	B B B B A		B B B B B A A
48" [1220 mm]	B B	B B A L r	B B B A	B B B B A		B B B B B A A
54" [1370 mm]	B B	B B A	B B B A L r	B B B B A		B B B B B A A
60" [1520 mm]	B B	B B A	X B B B A	X B B B B A L r		X B B B B B A A
66" [1680 mm]		B A B A	X B B B B A	X B B B B B A		X B B B B B A A L r
72" [1830 mm]		B A B A	X B B B B A A	X B B B B A A A		X B B B B A A A A
78" [1980 mm]		B A B A	X B B B B A A	X B B B B A A A A		X B B B B A A A A A
84" [2130 mm]			X B B B B A A	X B B B B A A A A		X B B B B A A A A A A
90" [2290 mm]			X B B B B A A	X B B B B A A A A		X B B B B A A A A A A
96" [2440 mm]			X B B B B A A	X B B B B A A A A		X B B B B A A A A A A
102" [2600 mm]						

Legend:

- X Lateral Support Cables Required
- Double Slider Panels
- Single Slider Panel
- L r Leg Adapter Required
- Single X Bulkhead (XL)
- Double X Bulkhead (XXL)
- Triple X Bulkhead (XXXL)
- Parallel Diaphragm
- Nose Piece
- A Type A Energy Absorbing Cartridge
- B Type B Energy Absorbing Cartridge
- Transition Wing Assembly Required
- (X) 36" Adapter Assembly Required
- Wide Nose Piece

* Speed Capacity rounded down to nearest 5 mph level. Contact Customer service for further information.

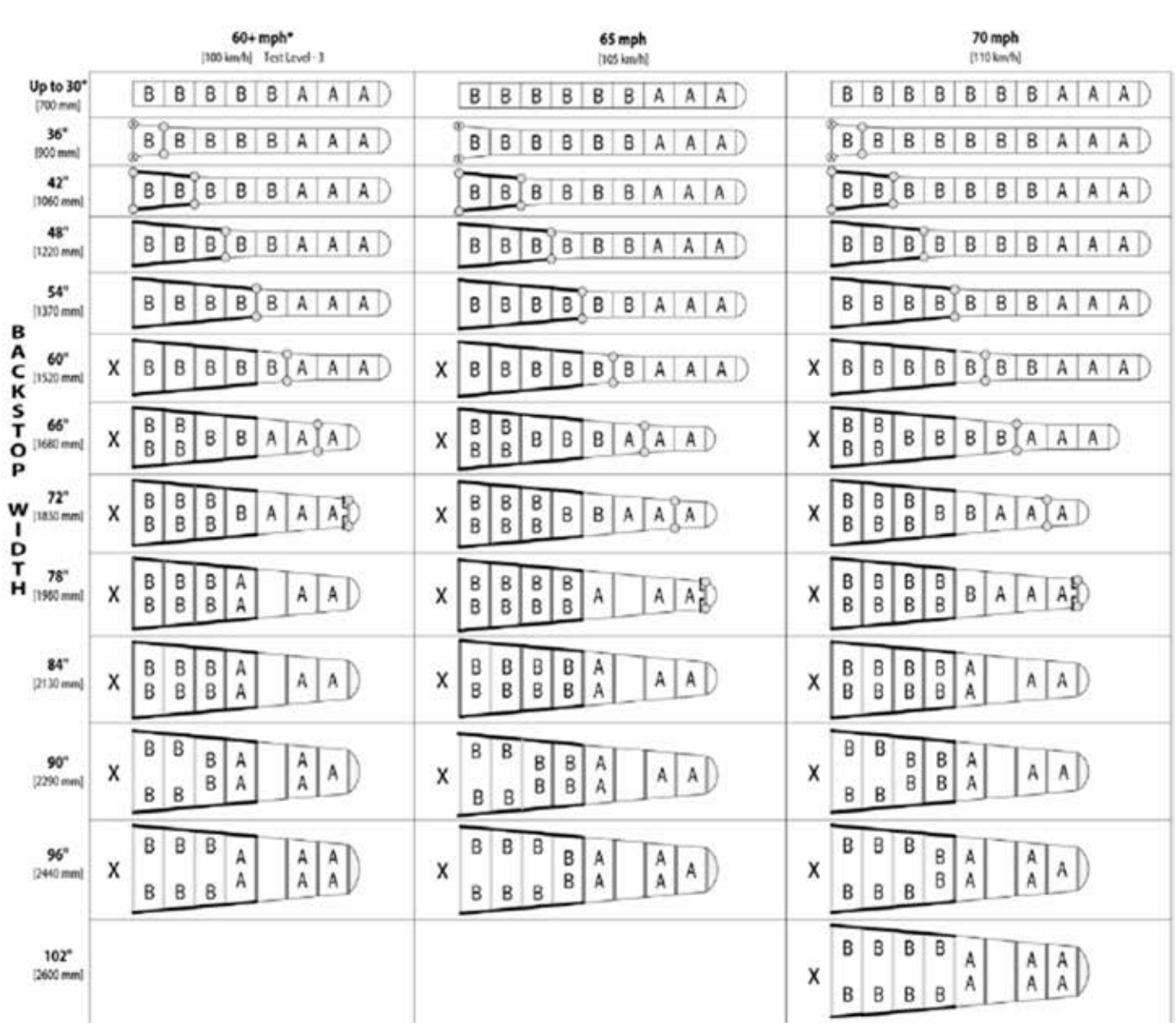

ADDITIONAL HIGHER SPEED SYSTEMS

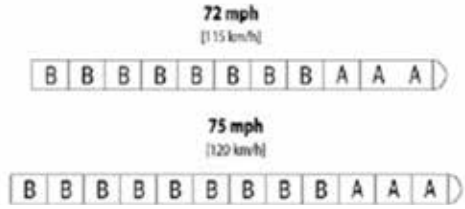

Call or email BSI Customer Service:
888 800-3691 (U.S. Toll Free)
707 374-6800 (Outside U.S.)
email: rkeener@barriersystemsinc.com

Visit our website at
www.barriersystemsinc.com

An ISO 9001:2000 Company

APPENDIX B - System Torque Chart

CONCRETE INSTALLATION

Compact Backstop Anchors.....	120 ft-lbs (160 N-m)
PCB Backstop Anchors.....	120 ft-lbs (160 N-m)
Cable Anchor (Rear).....	120 ft-lbs (160 N-m)
Cable Anchor (Front).....	120 ft-lbs (160 N-m)
Cable Adj. Eye Bolt.....	500 ft-lbs (675 N-m)

ASPHALT INSTALLATION

Compact Backstop Anchors.....	5 ft-lbs (8 N-m)
PCB Backstop Anchors.....	5 ft-lbs (8 N-m)
PCB Asphalt Adapter	5 ft-lbs (8 N-m)
Cable Anchor (Front).....	5 ft-lbs (8 N-m)
Cable Adj. Eye Bolt.....	120 ft-lbs (160 N-m)

SYSTEM COMPONENT INSTALLATION

Sliding Bolt Assembly.....	20 ft-lbs (27 N-m)
Front Panel Holding Nose Cover.....	200 ft-lbs (270 N-m)
Pipe Panel Mount to Backstop.....	70 ft-lbs (95 N-m)
Cable Guide Bolts	30 ft-lbs (48 N-m)

The Universal TAU-II Crash Cushion has been successfully tested in various configurations having the cable torque ranging from 120 ft-lbs for asphalt installation, to 500 ft-lbs of torque for concrete applications. The system will function properly under this full range of torque. If a torque wrench is not available, refer to the table below for an alternate method of reaching the desired torque range.

Ways of creating approximately 500 ft-lbs of torque:

- 6 ft. [1. 8 m] wrench extension with entire weight of 100 lbs [45 kg] applied 12” from the end
- 42 in. [1.1 m] wrench extension with entire weight of 200 lbs [90 kg] applied 12” from the end
- Use free weights or human weight

These methods should ensure torque within tested range and manufacturer tolerances.

APPENDIX C

Anchoring Foundation Options

There are three approved anchoring foundation configurations for the TAU-II system. The first method utilizes a solid concrete pad over the length of the system. The second utilizes concrete blocks at the Backstop and Front Cable Anchor locations. The third is on Asphaltic Concrete foundation.

(Variations of these foundations may be reviewed and determinations made as to equivalence by the Project Engineer.)

There are different foundation configurations depending on which backstop you are using (Compact or P.C.B.). Foundation options for both of the Backstop systems are shown in the following drawings.

DRAWINGS

Foundation Specifications …… 48
DWG# A040113

PCB Backstop …… 49
DWG# A040105

PCB Backstop – PCC Block …… 50
DWG# A040117

Asphalt with PCB Backstop ……. 51
DWG# S040112

Compact Backstop …… 52
DWG# A040102

Flush Mount Backstop – PCC Pad 53
DWG# A040420

Compact Backstop, PCC Blocks . 54
DWG# A040115

Asphalt with Compact Backstop . 55
DWG# A040110

Wide Flange Backstop ……... 56
DWG# A040108

Foundation Dimension Charts
English Units …… 57-59
Metric Units ……... 60-62

FOUNDATION SPECIFICATIONS:

THE TAU-II CRASH CUSHION SYSTEM HAS BEEN DESIGNED TO ATTACH TO CONCRETE OR ASPHALT FOUNDATIONS. USE THE ANCHORAGE SPECIFIED BELOW DEPENDING ON THE FOUNDATION AT THE JOB SITE. REFERENCE UNIVERSAL TAU-II FOUNDATION DRAWINGS FOR FURTHER DETAIL.

1.) CONCRETE PAD

FOUNDATION: MINIMUM 6 IN. [150 mm] REINFORCED PCC PAD OR 8 IN. [200 mm] NONREINFORCED PCC PAD

ANCHORAGE: 3/4 IN. [20 mm] X 8 $\frac{1}{4}$ IN. [210 mm] GALVANIZED ANCHOR WITH 6 IN. [150 mm] EMBEDMENT

2.) ASPHALT OVER SUBBASE

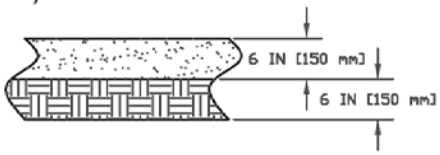

FOUNDATION: MINIMUM 6 IN [150 mm] AC OVER 6 IN. [150 mm] COMPACTED DGA SUBBASE

ANCHORAGE: 3/4 IN. [20 mm] X 18 IN. [460 mm] GALVANIZED ANCHORS WITH 16 IN. [410 mm] EMBEDMENT

ASPHALT ANCHORING KIT REQUIRED

3.) ASPHALT ONLY

FOUNDATION: MINIMUM 8 IN. [200 mm] AC

ANCHORAGE: 3/4 IN. [20 mm] X 18 IN. [460 mm] GALVANIZED ANCHORS WITH 16 IN. [410 mm] EMBEDMENT

ASPHALT ANCHORING KIT REQUIRED

4.) ASPHALT OVER P.C. CONCRETE

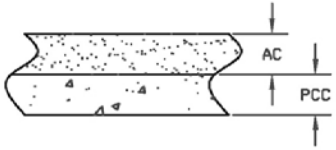

FOUNDATION: AC OVER PCC.

ANCHORAGE: 3/4 IN. [20 mm] GALVANIZED ANCHORS WITH MINIMUM 6 IN. [150 mm] EMBEDMENT IN PCC - ASPHALT ANCHORING KIT NOT REQUIRED
OR
IF 6 IN. [150 mm] EMBEDMENT IN PCC IS NOT POSSIBLE USE
3/4 IN. [20 mm] X 18 IN. [460 mm] GALVANIZED ANCHORS WITH 16 IN. [410 mm] EMBEDMENT - ASPHALT ANCHORING KIT REQUIRED

MATERIAL SPECIFICATIONS

PORTLAND CEMENT CONCRETE (PCC)

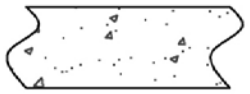

STONE AGGREGATE CONCRETE MIX, 4,000 PSI [28 MPa] MINIMUM COMPRESSIVE STRENGTH (SAMPLING PER ASTM C31-84 OR ASTM C42-84A, TESTING PER ASTM C39-84)

ASPHALTIC CONCRETE (AC)

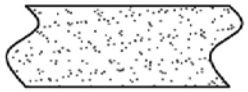

AR-4000 A.C. (PER ASTM D3381 '83) .75" MAXIMUM, MEDIUM (TYPE A OR B) AGGREGATE

SIEVE SIZE	% PASSING
1"	100
3/4"	95-100
3/8"	65-80
No. 4	49-54
No. 8	36-40
No. 30	18-21
No. 200	3-8

COMPACTED SUBBASE (DGA)

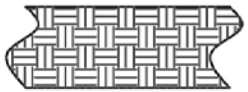

6 IN. [150 mm] MINIMUM DEPTH, 95% COMPACTION, CLASS 2 AGGREGATE

SIEVE SIZE	% PASSING
3"	100
2 1/2"	90-100
No. 4	40-90
No. 200	0-25

REV.	CHANGES	DATE	BY
A	SEE ECN 00589	03/02/04	GAD

REQ'D	NEXT ASSY.	ITEM

SCALE: FULL

	DATE	INIT.
DRAWN BY	01/09/04	GAD
APPR'D BY		JSM

Standard Tolerance
Angular ± 1/2°
Fractional ± 1/16
Dec .XXX= ± .010
Dec .XX= ± .030

TITLE :
FOUNDATION SPECIFICATIONS

MODEL	DRAWING NUMBER	REV.
	A040113	A

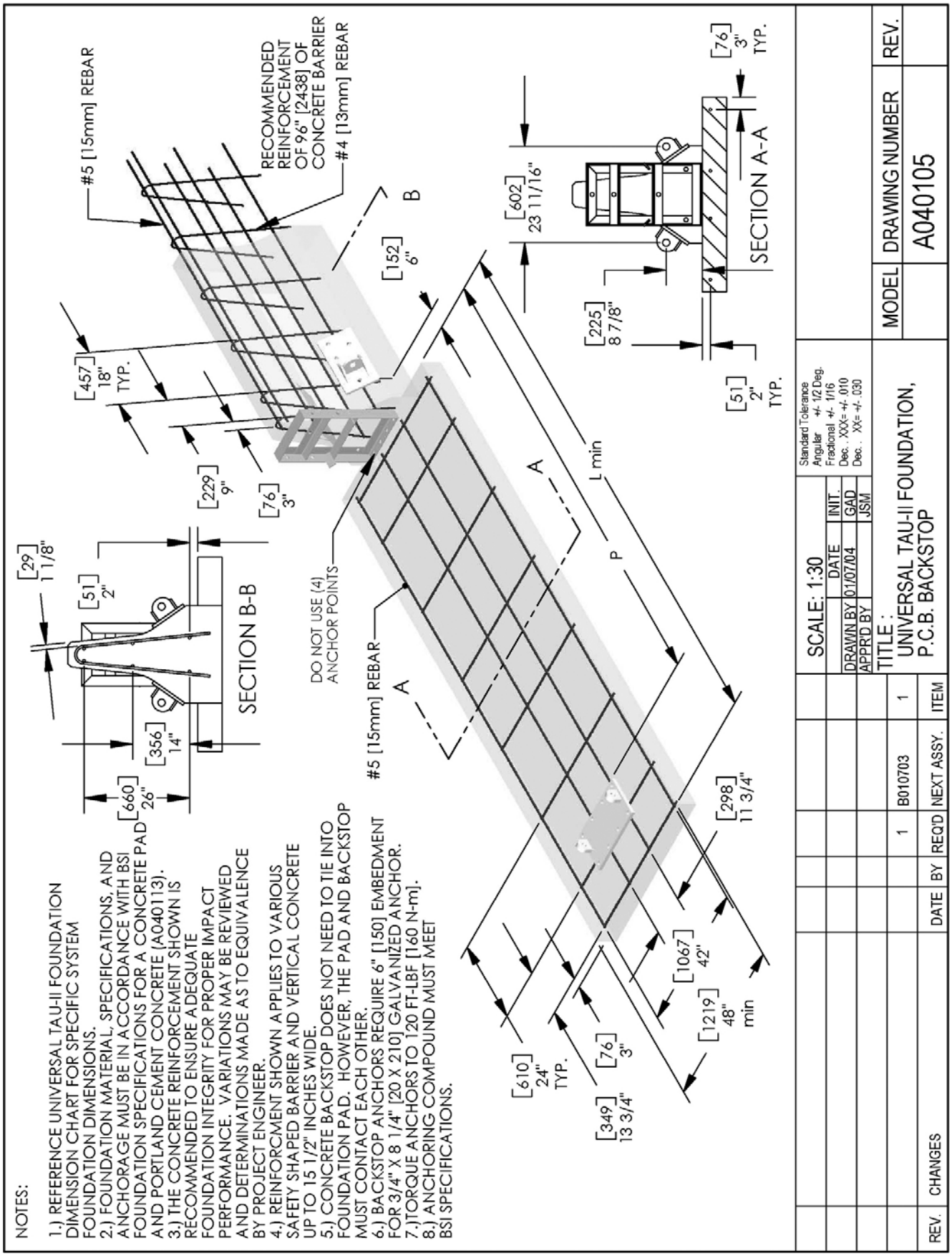
NOTES:
1.) REFERENCE UNIVERSAL TAU-II FOUNDATION DIMENSION CHART FOR SPECIFIC SYSTEM FOUNDATION DIMENSIONS.
2.) FOUNDATION MATERIAL, SPECIFICATIONS, AND ANCHORAGE MUST BE IN ACCORDANCE WITH BSI FOUNDATION SPECIFICATIONS FOR A CONCRETE PAD AND PORTLAND CEMENT CONCRETE (A040113).
3.) THE CONCRETE REINFORCEMENT SHOWN IS RECOMMENDED TO ENSURE ADEQUATE FOUNDATION INTEGRITY FOR PROPER IMPACT PERFORMANCE. VARIATIONS MAY BE REVIEWED AND DETERMINATIONS MADE AS TO EQUIVALENCE BY PROJECT ENGINEER.
4.) REINFORCMENT SHOWN APPLIES TO VARIOUS SAFETY SHAPED BARRIER AND VERTICAL CONCRETE UP TO 15 1/2" INCHES WIDE.
5.) CONCRETE BACKSTOP DOES NOT NEED TO TIE INTO FOUNDATION PAD. HOWEVER, THE PAD AND BACKSTOP MUST CONTACT EACH OTHER.
6.) BACKSTOP ANCHORS REQUIRE 6" [150] EMBEDMENT FOR 3/4" X 8 1/4" [20 X 210] GALVANIZED ANCHOR.
7.)TORQUE ANCHORS TO 120 FT-LBF [160 N-m].
8.) ANCHORING COMPOUND MUST MEET BSI SPECIFICATIONS.
#5 [15mm] REBAR
RECOMMENDED REINFORCEMENT OF 96" [2438] OF CONCRETE BARRIER
#4 [13mm] REBAR
[457] 18" TYP.
[229] 9"
[76] 3"
[152] 6"
B
[29] 1 1/8"
[51] 2"
[356] 14"
[660] 26"
SECTION B-B
DO NOT USE (4) ANCHOR POINTS
#5 [15mm] REBAR
A
A
L min
P
[602] 23 11/16"
[225] 8 7/8"
[51] 2" TYP.
[76] 3" TYP.
SECTION A-A
[298] 11 3/4"
[1067] 42"
[1219] 48" min
[610] 24" TYP.
[76] 3"
[349] 13 3/4"
Standard Tolerance
Angular +/- 1/2 Deg.
Fractional +/- 1/16
Dec. . XX= +/- .010
Dec. . XX= +/- .030
SCALE: 1:30
DATE
INIT.
DRAWN BY 01/07/04 GAD
APPR'D BY JSM
TITLE :
UNIVERSAL TAU-II FOUNDATION, P.C.B. BACKSTOP
MODEL
DRAWING NUMBER
A040105
REV.
REV. CHANGES DATE BY REQ'D NEXT ASSY. ITEM
1 B010703 1

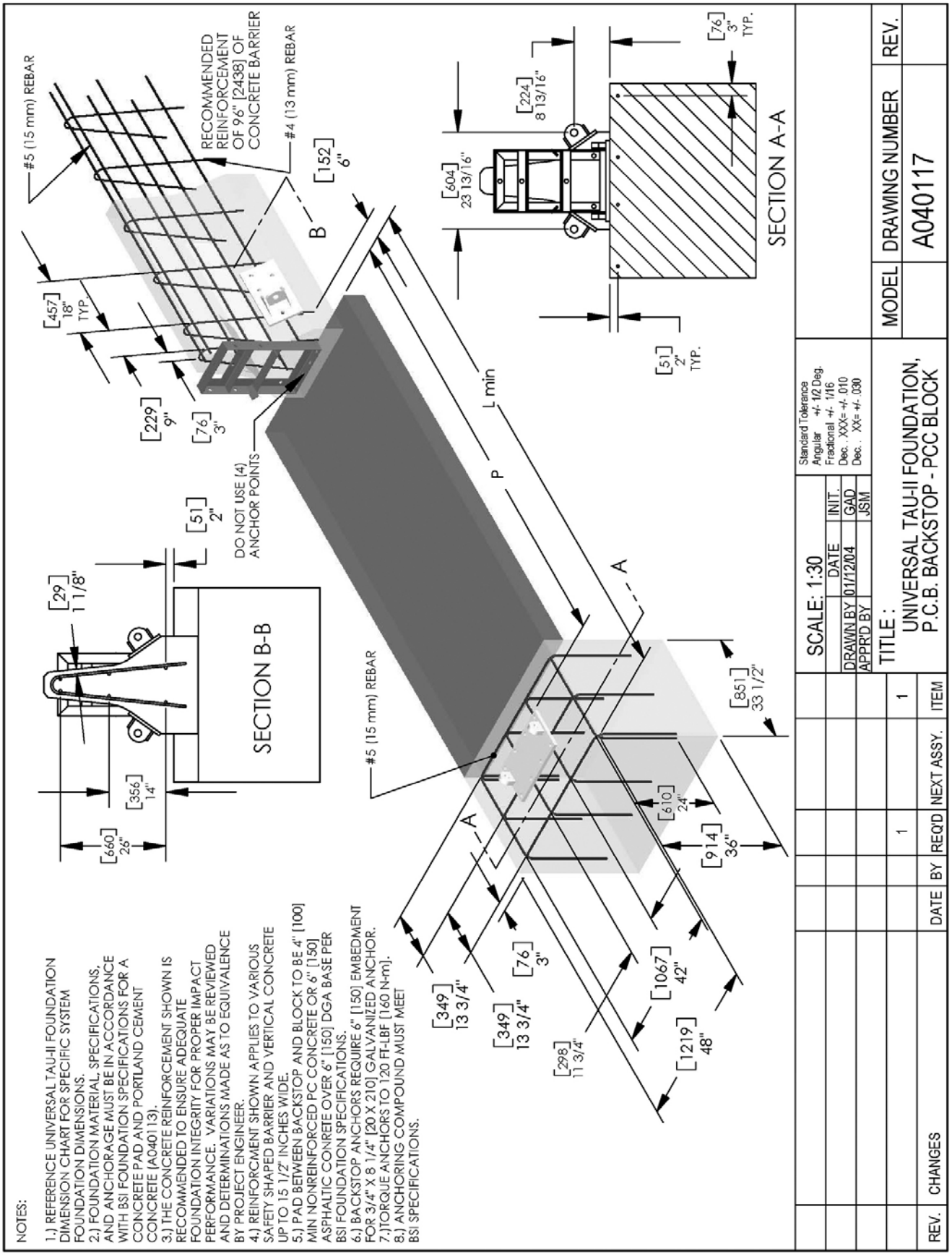
NOTES:
1.) REFERENCE UNIVERSAL TAU-II FOUNDATION DIMENSION CHART FOR SPECIFIC SYSTEM FOUNDATION DIMENSIONS.
2.) FOUNDATION MATERIAL, SPECIFICATIONS, AND ANCHORAGE MUST BE IN ACCORDANCE WITH BSI FOUNDATION SPECIFICATIONS FOR A CONCRETE PAD AND PORTLAND CEMENT CONCRETE (A040113).
3.) THE CONCRETE REINFORCEMENT SHOWN IS RECOMMENDED TO ENSURE ADEQUATE FOUNDATION INTEGRITY FOR PROPER IMPACT PERFORMANCE. VARIATIONS MAY BE REVIEWED AND DETERMINATIONS MADE AS TO EQUIVALENCE BY PROJECT ENGINEER.
4.) REINFORCEMENT SHOWN APPLIES TO VARIOUS SAFETY SHAPED BARRIER AND VERTICAL CONCRETE UP TO 15 1/2" INCHES WIDE.
5.) PAD BETWEEN BACKSTOP AND BLOCK TO BE 4" [100] MIN NONREINFORCED PC CONCRETE OR 6" [150] ASPHALTIC CONRETE OVER 6" [150] DGA BASE PER BSI FOUNDATION SPECIFICATIONS.
6.) BACKSTOP ANCHORS REQUIRE 6" [150] EMBEDMENT FOR 3/4" X 8 1/4" [20 X 210] GALVANIZED ANCHOR.
7.)TORQUE ANCHORS TO 120 FT-LBF [160 N-m].
8.) ANCHORING COMPOUND MUST MEET BSI SPECIFICATIONS.
#5 (15 mm) REBAR
RECOMMENDED REINFORCEMENT OF 96" [2438] OF CONCRETE BARRIER
#4 (13 mm) REBAR
[457] 18" TYP
[229] 9"
[76] 3"
[152] 6"
B
DO NOT USE (4) ANCHOR POINTS
[51] 2"
[29] 1 1/8"
SECTION B-B
[356] 14"
[660] 26"
#5 (15 mm) REBAR
L min
P
A
A
[349] 13 3/4"
[349] 13 3/4"
[76] 3"
[298] 11 3/4"
[1067] 42"
[1219] 48"
[610] 24"
[914] 36"
[851] 33 1/2"
[604] 23 13/16"
[224] 8 13/16"
[76] 3" TYP.
[51] 2" TYP.
SECTION A-A
Standard Tolerance
Angular +/- 1/2 Deg.
Fractional +/- 1/16
Dec. .XXX= +/- .010
Dec. .XX= +/- .030
SCALE: 1:30
DATE INIT.
DRAWN BY 01/12/04 GAD
APPR'D BY JSM
TITLE :
UNIVERSAL TAU-II FOUNDATION, P.C.B. BACKSTOP - PCC BLOCK
MODEL
DRAWING NUMBER
A040117
REV.
REV. CHANGES DATE BY REQ'D NEXT ASSY. ITEM
1 1

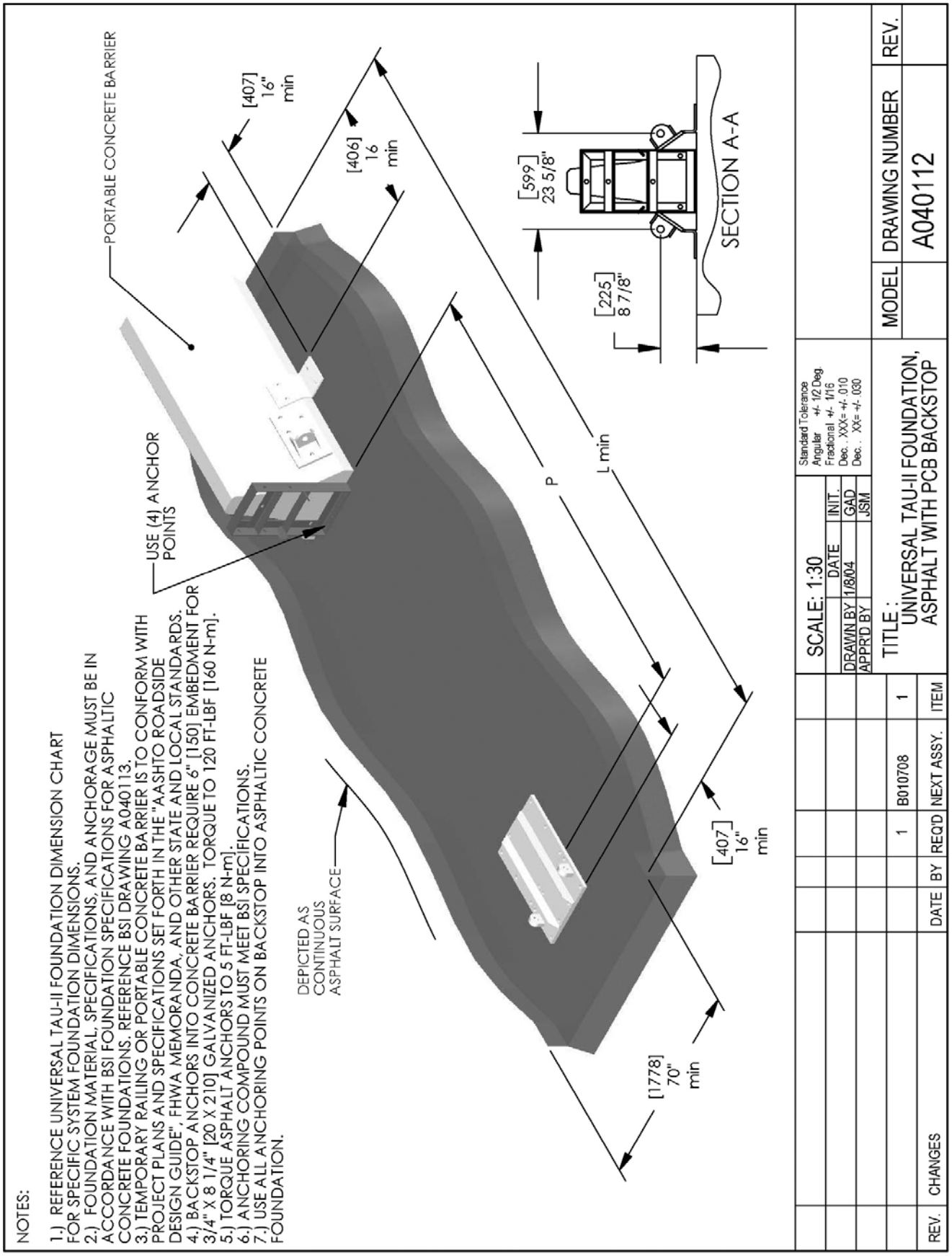
NOTES:
1.) REFERENCE UNIVERSAL TAU-II FOUNDATION DIMENSION CHART FOR SPECIFIC SYSTEM FOUNDATION DIMENSIONS.
2.) FOUNDATION MATERIAL, SPECIFICATIONS, AND ANCHORAGE MUST BE IN ACCORDANCE WITH BSI FOUNDATION SPECIFICATIONS FOR ASPHALTIC CONCRETE FOUNDATIONS. REFERENCE BSI DRAWING A040113.
3.) TEMPORARY RAILING OR PORTABLE CONCRETE BARRIER IS TO CONFORM WITH PROJECT PLANS AND SPECIFICATIONS SET FORTH IN THE "AASHTO ROADSIDE DESIGN GUIDE", FHWA MEMORANDA, AND OTHER STATE AND LOCAL STANDARDS.
4.) BACKSTOP ANCHORS INTO CONCRETE BARRIER REQUIRE 6" [150] EMBEDMENT FOR 3/4" X 8 1/4" [20 X 210] GALVANIZED ANCHORS. TORQUE TO 120 FT-LBF [160 N-m].
5.) TORQUE ASPHALT ANCHORS TO 5 FT-LBF [8 N-m].
6.) ANCHORING COMPOUND MUST MEET BSI SPECIFICATIONS.
7.) USE ALL ANCHORING POINTS ON BACKSTOP INTO ASPHALTIC CONCRETE FOUNDATION.
PORTABLE CONCRETE BARRIER
[407] 16" min
[406] 16 min
USE (4) ANCHOR POINTS
DEPICTED AS CONTINUOUS ASPHALT SURFACE
[1778] 70" min
P
L min
[407] 16" min
[599] 23 5/8"
[225] 8 7/8"
SECTION A-A
SCALE: 1:30
DRAWN BY 1/8/04 GAD
APPRD BY JSM
Standard Tolerance
Angular +/- 1/2 Deg.
Fractional +/- 1/16
Dec. . XXX= +/- .010
Dec. . XX= +/- .030
TITLE: UNIVERSAL TAU-II FOUNDATION, ASPHALT WITH PCB BACKSTOP
MODEL
DRAWING NUMBER
A040112
REV.
1 B010708 1
REV. CHANGES DATE BY REQ'D NEXT ASSY. ITEM

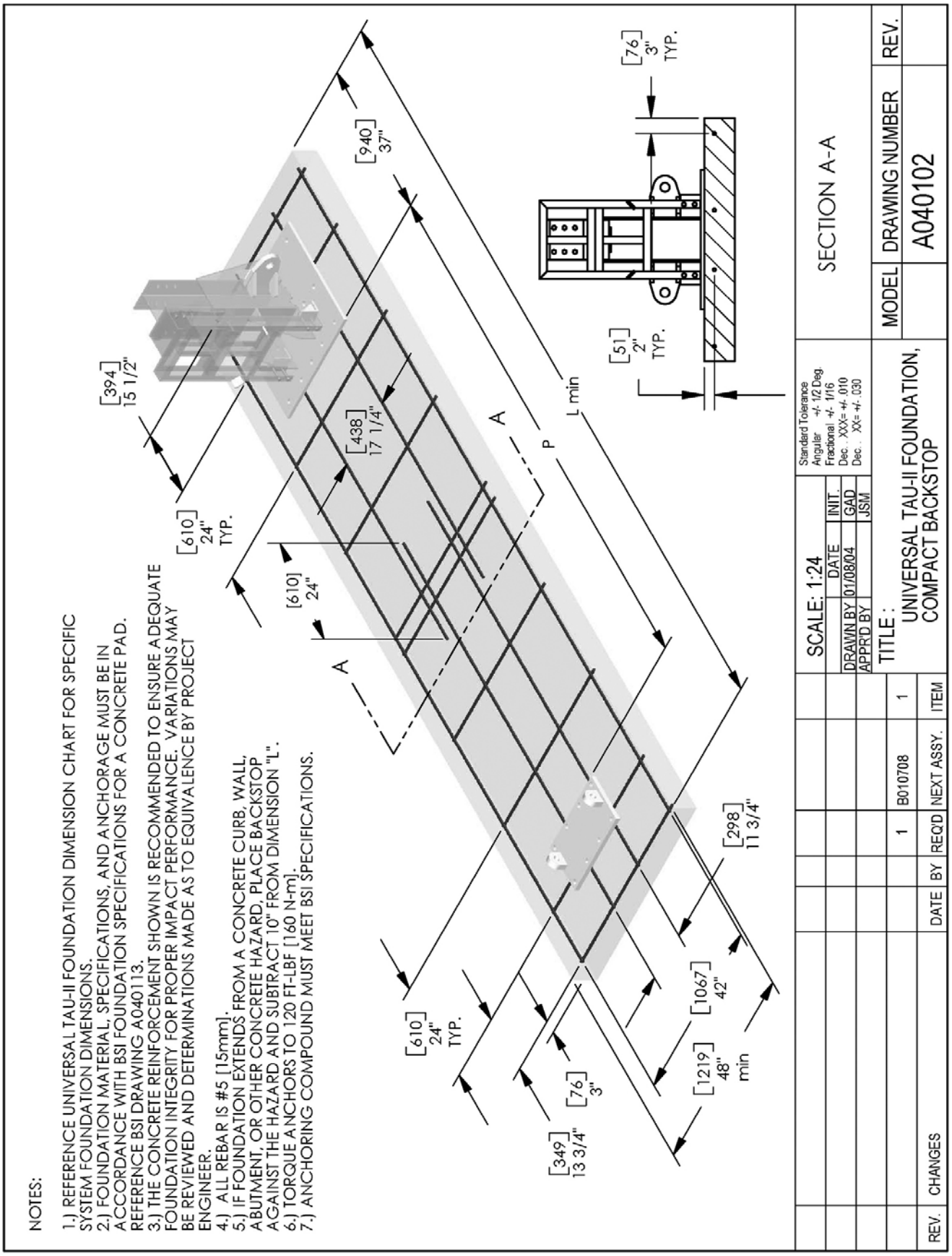
NOTES:
1.) REFERENCE UNIVERSAL TAU-II FOUNDATION DIMENSION CHART FOR SPECIFIC SYSTEM FOUNDATION DIMENSIONS.
2.) FOUNDATION MATERIAL, SPECIFICATIONS, AND ANCHORAGE MUST BE IN ACCORDANCE WITH BSI FOUNDATION SPECIFICATIONS FOR A CONCRETE PAD. REFERENCE BSI DRAWING A040113.
3.) THE CONCRETE REINFORCEMENT SHOWN IS RECOMMENDED TO ENSURE ADEQUATE FOUNDATION INTEGRITY FOR PROPER IMPACT PERFORMANCE. VARIATIONS MAY BE REVIEWED AND DETERMINATIONS MADE AS TO EQUIVALENCE BY PROJECT ENGINEER.
4.) ALL REBAR IS #5 [15mm].
5.) IF FOUNDATION EXTENDS FROM A CONCRETE CURB, WALL, ABUTMENT, OR OTHER CONCRETE HAZARD, PLACE BACKSTOP AGAINST THE HAZARD AND SUBTRACT 10" FROM DIMENSION "L".
6.) TORQUE ANCHORS TO 120 FT-LBF [160 N-m].
7.) ANCHORING COMPOUND MUST MEET BSI SPECIFICATIONS.
[394] 15 1/2"
[610] 24" TYP.
[610] 24"
[438] 17 1/4"
[940] 37"
A
A
P
L min
[76] 3" TYP.
[51] 2" TYP.
[610] 24" TYP.
[349] 13 3/4"
[76] 3"
[1219] 48" min
[1067] 42"
[298] 11 3/4"
SECTION A-A
Standard Tolerance
Angular +/- 1/2 Deg.
Fractional +/- 1/16
Dec. .XXX= +/- .010
Dec. .XX= +/- .030
SCALE: 1:24
DATE
INIT.
DRAWN BY 01/08/04 GAD
APPR'D BY JSM
TITLE :
UNIVERSAL TAU-II FOUNDATION, COMPACT BACKSTOP
MODEL
DRAWING NUMBER
A040102
REV.
REV. CHANGES DATE BY REQ'D NEXT ASSY. ITEM
1 B010708 1

NOTES:

1.) REFERENCE UNIVERSAL TAU-II FOUNDATION DIMENSION CHART FOR SPECIFIC SYSTEM FOUNDATION DIMENSIONS.
2.) FOUNDATION MATERIAL, SPECIFICATIONS, AND ANCHORAGE MUST BE IN ACCORDANCE WITH BSI FOUNDATION SPECIFICATIONS FOR A CONCRETE PAD AND PORTLAND CEMENT CONCRETE. REFERENCE BSI SPECIFICATION A040113.
3.) REINFORCEMENT OF CONCRETE PAD AND BACKSTOP TO EQUAL REINFORCMENT SPECIFIED IN BSI A040105. THE REINFORCENT IS RECOMMENDED TO ENSURE ADEQUATE FOUNDATION INTEGRITY FOR PROPER IMPACT PERFORMANCE. VARIATIONS MAY BE REVIEWED AND DETERMINATIONS MADE AS TO EQUIVALENCE BY PROJECT ENGINEER.

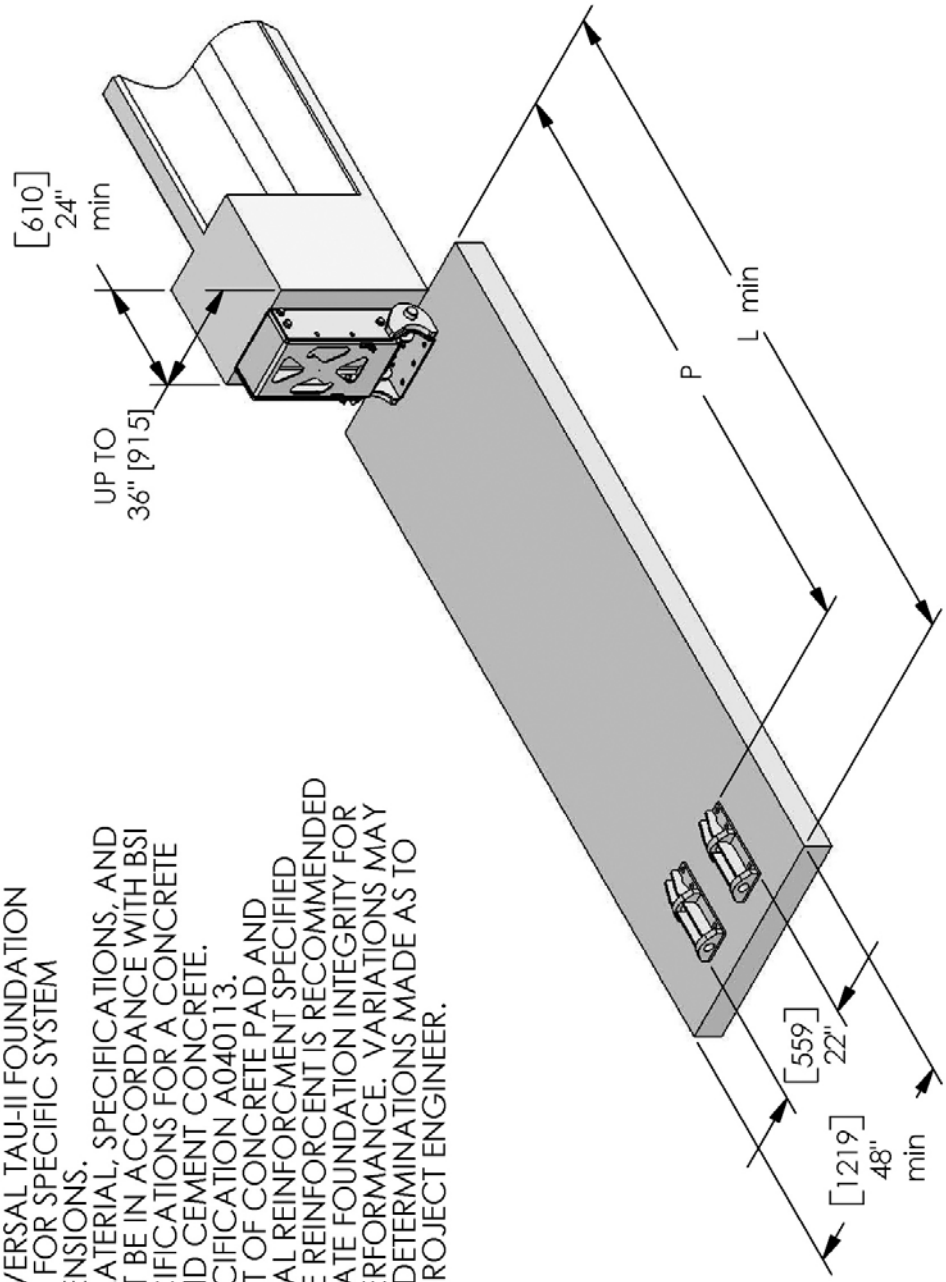

REV.	CHANGES	DATE	BY	REQ'D	NEXT ASSY.	ITEM
				1	B040239	1

SCALE: 1:30

	DATE	INIT.
DRAWN BY	04/28/04	GAD
APPR'D BY		OSD

Standard Tolerance
Angular +/- 1/2 Deg.
Fractional +/- 1/16
Dec. XXX= +/- .010
Dec. XX= +/- .030

TITLE UNIVERSAL TAU-II FOUNDATION, FLUSH MOUNT BACKSTOP - PCC PAD

MODEL	DRAWING NUMBER	REV.
	A040420	

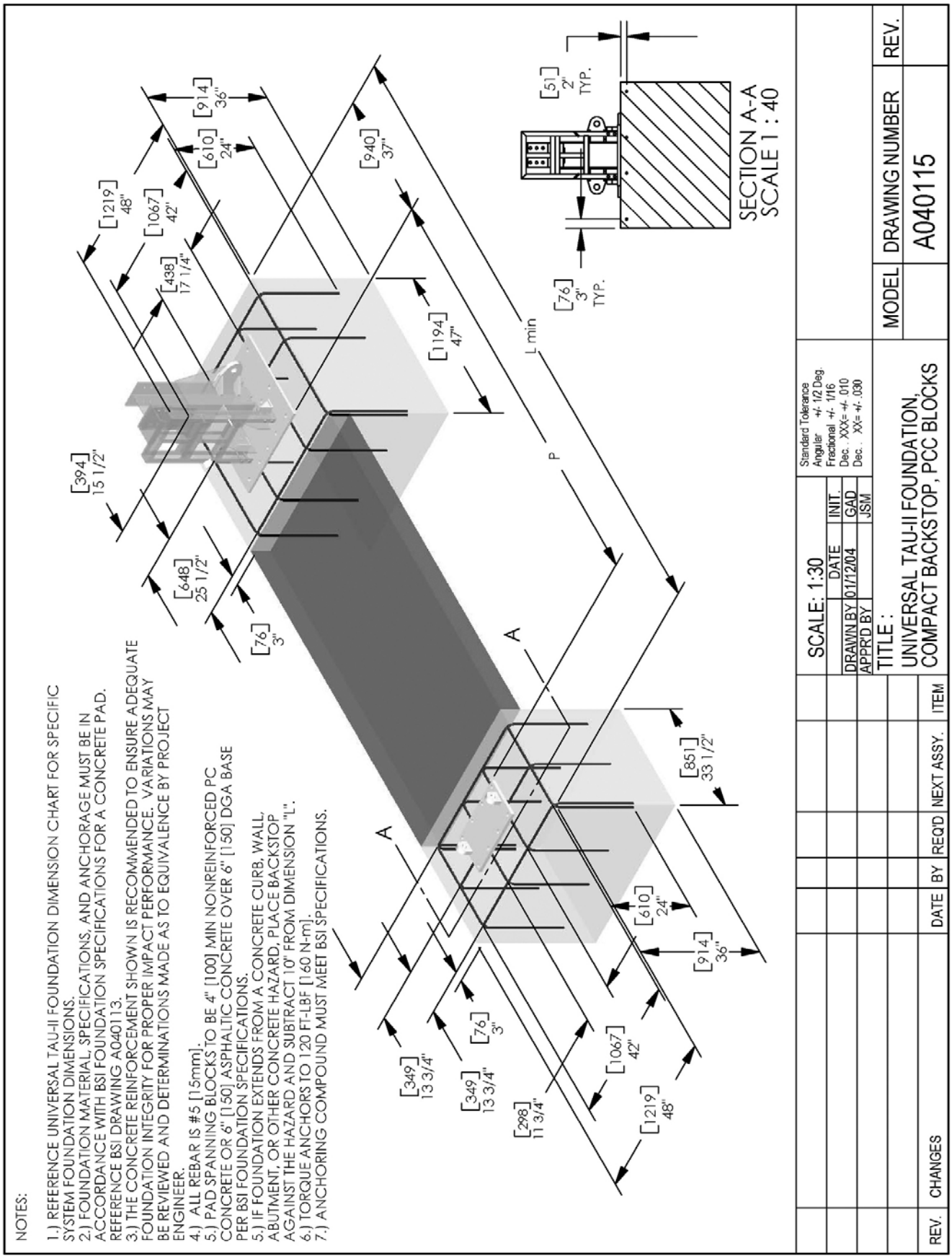
NOTES:
1.) REFERENCE UNIVERSAL TAU-II FOUNDATION DIMENSION CHART FOR SPECIFIC SYSTEM FOUNDATION DIMENSIONS.
2.) FOUNDATION MATERIAL, SPECIFICATIONS, AND ANCHORAGE MUST BE IN ACCORDANCE WITH BSI FOUNDATION SPECIFICATIONS FOR A CONCRETE PAD. REFERENCE BSI DRAWING A040113.
3.) THE CONCRETE REINFORCEMENT SHOWN IS RECOMMENDED TO ENSURE ADEQUATE FOUNDATION INTEGRITY FOR PROPER IMPACT PERFORMANCE. VARIATIONS MAY BE REVIEWED AND DETERMINATIONS MADE AS TO EQUIVALENCE BY PROJECT ENGINEER.
4.) ALL REBAR IS #5 [15mm].
5.) PAD SPANNING BLOCKS TO BE 4" [100] MIN NONREINFORCED PC CONCRETE OR 6" [150] ASPHALTIC CONCRETE OVER 6" [150] DGA BASE PER BSI FOUNDATION SPECIFICATIONS.
5.) IF FOUNDATION EXTENDS FROM A CONCRETE CURB, WALL, ABUTMENT, OR OTHER CONCRETE HAZARD, PLACE BACKSTOP AGAINST THE HAZARD AND SUBTRACT 10" FROM DIMENSION "L".
6.) TORQUE ANCHORS TO 120 FT-LBF [160 N-m].
7.) ANCHORING COMPOUND MUST MEET BSI SPECIFICATIONS.
[1219] 48"
[1067] 42"
[438] 17 1/4"
[610] 24"
[914] 36"
[940] 37"
[1194] 47"
[394] 15 1/2"
[648] 25 1/2"
[76] 3"
L min
P
A
A
[51] 2" TYP.
[76] 3" TYP.
SECTION A-A
SCALE 1 : 40
[851] 33 1/2"
[610] 24"
[914] 36"
[349] 13 3/4"
[349] 13 3/4"
[76] 3"
[298] 11 3/4"
[1067] 42"
[1219] 48"
REV.
CHANGES
DATE
BY
REQ'D
NEXT ASSY.
ITEM
SCALE: 1:30
DATE
INIT.
DRAWN BY 01/12/04 GAD
APPR'D BY JSM
Standard Tolerance
Angular +/- 1/2 Deg.
Fractional +/- 1/16
Dec. XXX= +/- .010
Dec. XX= +/- .030
TITLE :
UNIVERSAL TAU-II FOUNDATION,
COMPACT BACKSTOP, PCC BLOCKS
MODEL
DRAWING NUMBER
A040115
REV.

NOTES:

1.) REFERENCE UNIVERSAL TAU-II FOUNDATION DIMENSION CHART FOR SPECIFIC SYSTEM FOUNDATION DIMENSIONS.
2.) FOUNDATION MATERIAL, SPECIFICATIONS, AND ANCHORAGE MUST BE IN ACCORDANCE WITH BSI FOUNDATION SPECIFICATIONS FOR ASPHALTIC CONCRETE FOUNDATIONS. REFERENCE BSI DRAWING A040113.
3.) TORQUE ANCHORS TO 5 FT-LBF [8 N-m].
4.) ANCHORING COMPOUND MUST MEET BSI SPECIFICATIONS.

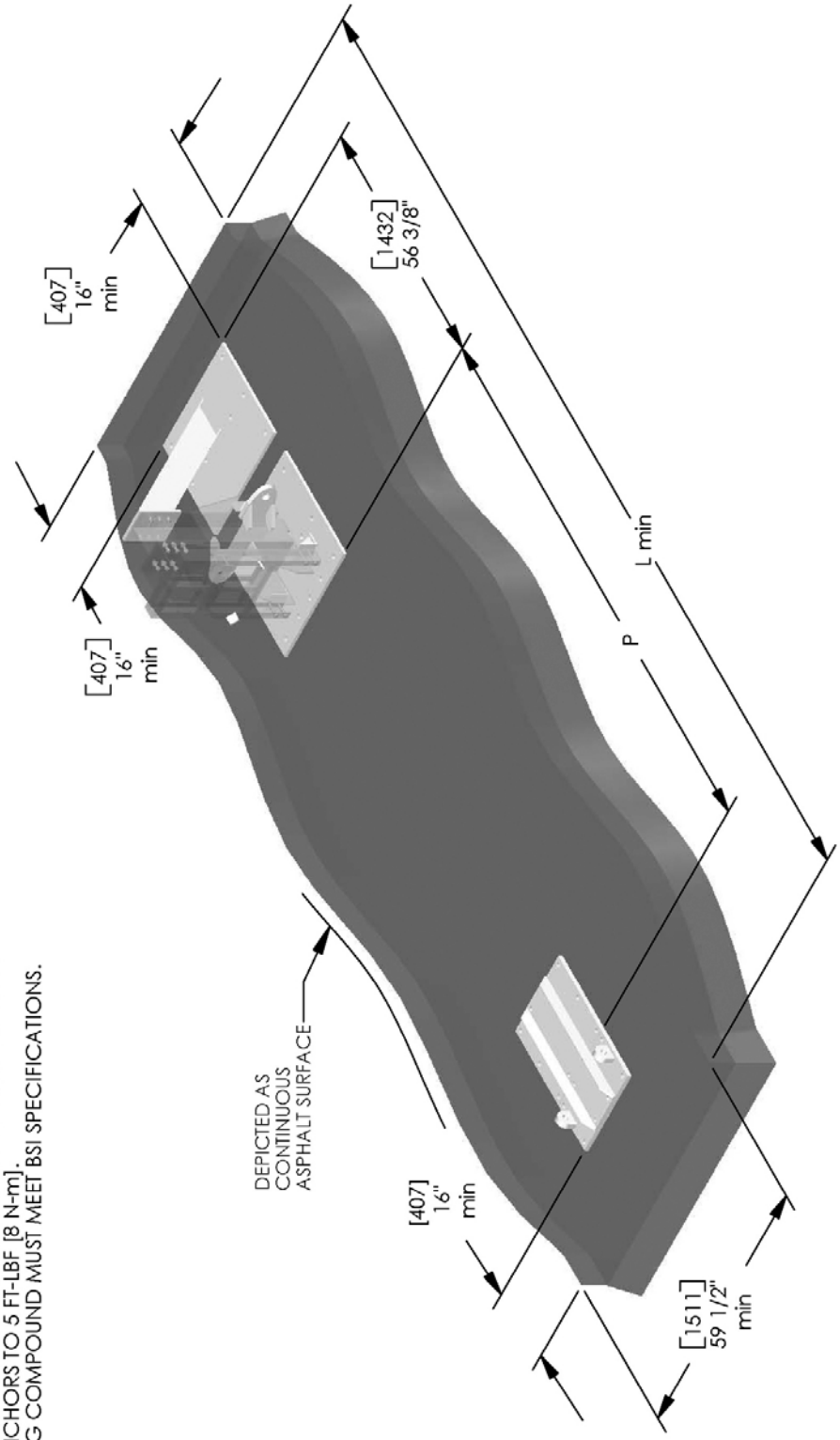

REV.	CHANGES	DATE	BY	REQ'D	NEXT ASSY.	ITEM
				1	B010708	1

SCALE: 1:30

	DATE	INIT.
DRAWN BY	01/08/04	GAD
APPR'D BY		JSM

Standard Tolerance
Angular +/- 1/2 Deg.
Fractional +/- 1/16
Dec. .XXX= +/- .010
Dec. .XX= +/- .030

TITLE :
UNIVERSAL TAU-II FOUNDATION,
ASPHALT WITH COMPACT BACKSTOP

MODEL	DRAWING NUMBER	REV.
	A040110	

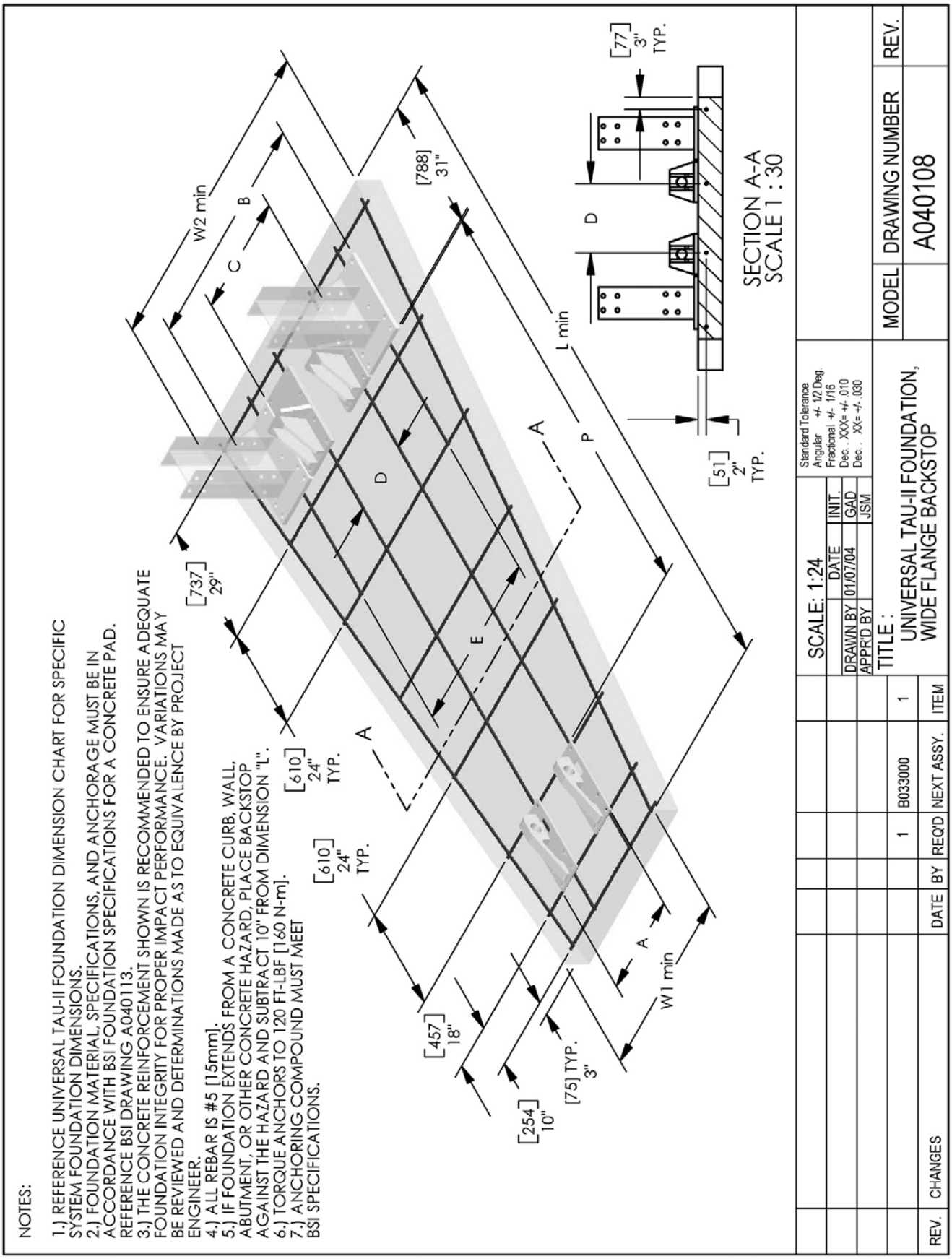
NOTES:
1.) REFERENCE UNIVERSAL TAU-II FOUNDATION DIMENSION CHART FOR SPECIFIC SYSTEM FOUNDATION DIMENSIONS.
2.) FOUNDATION MATERIAL, SPECIFICATIONS, AND ANCHORAGE MUST BE IN ACCORDANCE WITH BSI FOUNDATION SPECIFICATIONS FOR A CONCRETE PAD. REFERENCE BSI DRAWING A040113.
3.) THE CONCRETE REINFORCEMENT SHOWN IS RECOMMENDED TO ENSURE ADEQUATE FOUNDATION INTEGRITY FOR PROPER IMPACT PERFORMANCE. VARIATIONS MAY BE REVIEWED AND DETERMINATIONS MADE AS TO EQUIVALENCE BY PROJECT ENGINEER.
4.) ALL REBAR IS #5 [15mm].
5.) IF FOUNDATION EXTENDS FROM A CONCRETE CURB, WALL, ABUTMENT, OR OTHER CONCRETE HAZARD, PLACE BACKSTOP AGAINST THE HAZARD AND SUBTRACT 10" FROM DIMENSION "L".
6.) TORQUE ANCHORS TO 120 FT-LBF [160 N-m].
7.) ANCHORING COMPOUND MUST MEET BSI SPECIFICATIONS.
W2 min
B
C
[788] 31"
[737] 29"
[610] 24" TYP.
[610] 24" TYP.
A
D
E
A
L min
P
[77] 3" TYP.
D
[51] 2" TYP.
SECTION A-A
SCALE 1 : 30
[457] 18"
[254] 10"
[75] TYP. 3"
A
W1 min
Standard Tolerance
Angular +/- 1/2 Deg.
Fractional +/- 1/16
Dec. . XXX= +/- .010
Dec. . XX= +/- .030
SCALE: 1:24
DATE
INIT.
DRAWN BY 01/07/04 GAD
APPR'D BY JSM
TITLE :
UNIVERSAL TAU-II FOUNDATION, WIDE FLANGE BACKSTOP
MODEL
DRAWING NUMBER
A040108
REV.
REV. CHANGES DATE BY REQ'D NEXT ASSY. ITEM
1 B033000 1

UNIVERSAL TAU-II FOUNDATION DIMENSIONS

US STANDARD UNITS - INCHES

SYSTEM WIDTH (IN)	SYSTEM SPEED CAPACITY (MPH) 30	35	40 TL-2	50	53	55	60 TL-3	65	70	72	75	DRAWING NUMBER
UP TO 30" PCB BACKSTOP	30T050PBC	30T060PBC	30T070PBC	30T080PBC	30T085PBC	30T090PBC	30T100PBC	30T105PBC	30T110PBC	30T115PBC	30T120PBC	A040105 A040117
	30T050PYC	30T060PYC	30T070PYC	30T080PYC	30T085PYC	30T090PYC	30T100PYC	30T105PYC	30T110PYC	30T115PYC	30T120PYC	
L (in)	85 1/2	119 1/2	154	188	222	256	290 1/2	324 1/2	358 1/2	392 1/2	426 1/2	
P (in)	62 3/4	96 7/8	131	165 1/8	199 1/4	233 3/8	267 1/2	301 1/2	335 3/4	369 7/8	404	
UP TO 30" COMPACT BACKSTOP	30T050CBC	30T060CBC	30T070CBC	30T080CBC	30T085CBC	30T090CBC	30T100CBC	30T105CBC	30T110CBC	30T115CBC	30T120CBC	A040102 A040115
	30T050CYC	30T060CYC	30T070CYC	30T080CYC	30T085CYC	30T090CYC	30T100CYC	30T105CYC	30T110CYC	30T115CYC	30T120PYC	
L (in)	115 1/2	149 1/2	183 1/2	217 1/2	252	286	320	354	388 1/2	422 1/2	456 1/2	
P (in)	55 1/2	89 5/8	123 3/4	157 7/8	192	226 1/8	260 1/4	294 1/4	328 1/2	362 5/8	396 3/4	
UP TO 30" ASPHALT PCB BACKSTOP	30T050PBA	30T060PBA	30T070PBA	30T080PBA	30T085PBA	30T090PBA	30T100PBA	30T105PBA	30T110PBA	30T115PBA	30T120PBA	A040112
	30T050PYA	30T060PYA	30T070PYA	30T080PYA	30T085PYA	30T090PYA	30T100PYA	30T105PYA	30T110PYA	30T115PYA	30T120PYA	
L (in)	139 3/4	173 3/4	208 1/4	242 1/4	276 1/4	310 1/4	344 3/4	378 3/4	412 3/4	446 3/4	480 3/4	
P (in)	62 3/4	96 7/8	131	165 1/8	199 1/4	233 3/8	267 1/2	301 1/2	335 3/4	369 7/8	404	
UP TO 30" ASPHALT COMPACT BACKSTOP	30T050CBA	30T060CBA	30T070CBA	30T080CBA	30T085CBA	30T090CBA	30T100CBA	30T105CBC	30T110CBA	30T115CBA	30T120CBA	A040110
	30T050CYA	30T060CYA	30T070CYA	30T080CYA	30T085CYA	30T090CYA	30T100CYA	30T105CYA	30T110CYA	30T115CYA	30T120CYA	
L (in)	156 1/2	190 1/2	224 1/2	258 1/2	293	327	361	394	429 1/2	463 1/2	497 1/2	
P (in)	55 1/2	89 5/8	123 3/4	157 7/8	192	226 1/8	260 1/4	294 1/4	328 1/2	362 5/8	396 3/4	
36" PCB BACKSTOP	36T050PBC	36T060PBC	36T070PBC	36T080PBC	30T085PBC	36T090PBC	36T100PBC	36T105PBC	36T110PBC	36T115PBC	36T120PBC	A040105 A040117
	36T050PYC	36T060PYC	36T070PYC	36T080PYC	30T085PYC	36T090PYC	36T100PYC	36T105PYC	36T110PYC	36T115PYC	36T120PYC	
L (in)	85 1/2	119 1/2	154	188	222	256	290 1/2	324 1/5	358 1/2	392 1/2	426 1/2	
P (in)	62 3/4	96 7/8	131	165 1/8	199 1/4	233 3/8	267 1/2	301 1/5	335 3/4	369 7/8	404	
36" COMPACT BACKSTOP	36T050CBC	36T060CBC	36T070CBC	36T080CBC	36T085CBC	36T090CBC	36T100CBC	36T105CBC	36T110CBC	36T115CBC	36T120CBC	A040102 A040115
	36T050CYC	36T060CYC	36T070CYC	36T080CYC	36T085CYC	36T090CYC	36T100CYC	36T105CYC	36T110CYC	36T115CYC	36T120CYC	
L (in)	115 1/2	149 1/2	183 1/2	217 1/2	252	286	320	354	388 1/2	422 1/2	456 1/2	
P (in)	55 1/2	89 5/8	123 3/4	157 7/8	192	226 1/8	260 1/4	294 1/4	328 1/2	362 5/8	396 3/4	
36" ASPHALT PCB BACKSTOP	36T050PBA	36T060PBA	36T070PBA	36T080PBA	36T085PBA	36T090PBA	36T100PBA	36T105PBA	36T110PBA	36T115PBA	36T120PBA	A040112
	36T050PYA	36T060PYA	36T070PYA	36T080PYA	36T085PYA	36T090PYA	36T100PYA	36T105PYA	36T110PYA	36T115PYA	36T120PYA	
L (in)	139 3/4	173 3/4	208 1/4	242 1/4	276 1/4	310 1/4	344 3/4	378 3/4	412 3/4	446 3/4	480 3/4	
P (in)	62 3/4	96 7/8	131	165 1/8	199 1/4	233 3/8	267 1/2	301 1/4	335 3/4	369 7/8	404	
36" ASPHALT COMPACT BACKSTOP	36T050CBA	36T060CBA	36T070CBA	36T080CBA	36T085CBA	36T090CBA	36T100CBA	36T105CBA	36T110CBA	36T115CBA	36T120CBA	A040110
	36T050CBA	36T060CYA	36T070CYA	36T080CYA	36T085CYA	36T090CYA	36T100CYA	36T105CYA	36T110CYA	36T115CYA	36T120CYA	
L (in)	156 1/2	190 1/2	224 1/2	258 1/2	293	327	361	394	429 1/2	463 1/2	497 1/2	
P (in)	55 1/2	89 5/8	123 3/4	157 7/8	192	226 1/8	260 1/4	294 1/4	328 1/2	362 5/8	396 3/4	
UP TO 36" PCC PAD FLUSH MOUNT BACKSTOP	36T050FBC	36T060FBC	36T070FBC	36T080FBC	36T085FBC	36T090FBC	36T100FBC	36T105FBC	36T110FBC	36T115FBC	36T120FBC	A040420
	36T050FYC	36T060FYC	36T070FYC	36T080FYC	36T085FYC	36T090FYC	36T100FYC	36T105CYC	36T110FYC	36T115FYC	36T120FYC	
L (in)	83 1/2	117 1/2	151 1/2	185 1/2	220	254	288	322	356 1/2	390 1/2	424 1/2	
P (in)	59 1/2	93 1/2	127 1/2	161 1/2	196	230	264	298	332 1/2	366 1/2	400 1/2	
42" WF BACKSTOP	42T050WBC	42T060WBC	42T070WBC	42T080WBC		42T090WBC	42T100WBC	42T105WBC	42T110WBC			A040108
	42T050WYC	42T060WYC	42T070WYC	42T080WYC		42T090WYC	42T100WYC	42T105WYC	42T110WYC			
L (in)	125	159	193	227		295	329	363	397			
W1 (in)	44	44	44	44		44	44	44	44			
W2 (in)	51	51	51	51		51	51	51	51			
P (in)	65	99	133	167		235	269	303	337			
A (in)	22	22	22	22		22	22	22	22			
B (in)	31	31	31	31		31	31	31	31			
C (in) *	NA	NA	NA	NA		NA	NA	NA	NA			
D (in)	16	16	16	16		16	16	16	16			
E (in) *	NA	NA	NA	NA		NA	NA	NA	NA			

SYSTEM WIDTH (IN)	SYSTEM SPEED CAPACITY (MPH) 30	35	40 TL-2	50	53	55	60 TL-3	65	70	72	75	DRAWING NUMBER
48" WF BACKSTOP	**48T050WBC**	**48T060WBC**	**48T070WBC**	**48T080WBC**		**48T090WBC**	**48T100WBC**	**48T105WBC**	**48T110WBC**			
	48T050WYC	**48T060WYC**	**48T070WYC**	**48T080WYC**		**48T090WYC**	**48T100WYC**	**48T105WYC**	**48T110WYC**			
L (in)	125	159	193	227		295	329	363	397			
W1 (in)	44	44	44	44		44	44	44	44			
W2 (in)	51	51	51	51		51	51	51	51			
P (in)	65	99	133	167		235	269	303	337			**A040108**
A (in)	22	22	22	22		22	22	22	22			
B (in)	31	31	31	31		31	31	31	31			
C (in) *	NA	NA	NA	NA		NA	NA	NA	NA			
D (in)	16	16	16	16		16	16	16	16			
E (in) *	NA	NA	NA	NA		NA	NA	NA	NA			
54" WF BACKSTOP	**54T050WBC**	**54T060WBC**	**54T070WBC**	**54T080WBC**		**54T090WBC**	**54T100WBC**	**54T105WBC**	**54T110WBC**			
	54T050WYC	**54T060WYC**	**54T070WYC**	**54T080WYC**		**54T090WYC**	**54T100WYC**	**54T105WYC**	**54T110WYC**			
L (in)	125	159	193	227		295	329	363	397			
W1 (in)	44	44	44	44		44	44	44	44			
W2 (in)	51	51	51	51		51	51	51	51			
P (in)	65	99	133	167		235	269	303	337			**A040108**
A (in)	22	22	22	22		22	22	22	22			
B (in)	31	31	31	31		31	31	31	31			
C (in) *	NA	NA	NA	NA		NA	NA	NA	NA			
D (in)	16	16	16	16		16	16	16	16			
E (in) *	NA	NA	NA	NA		NA	NA	NA	NA			
60" WF BACKSTOP	**60T050WBC**	**60T060WBC**	**60T070WBC**	**60T080WBC**		**60T090WBC**	**60T100WBC**	**60T105WBC**	**60T110WBC**			
	60T050WYC	**60T060WYC**	**60T070WYC**	**60T080WYC**		**60T090WYC**	**60T100WYC**	**60T105WYC**	**60T110WYC**			
L (in)	125	159	193	227		295	329	363	397			
W1 (in)	44	44	44	44		44	44	44	44			
W2 (in)	51	51	51	51		51	51	51	51			
P (in)	65	99	133	167		235	269	303	337			**A040108**
A (in)	22	22	22	22		22	22	22	22			
B (in)	31	31	31	31		31	31	31	31			
C (in) *	NA	NA	NA	NA		NA	NA	NA	NA			
D (in)	16	16	16	16		16	16	16	16			
E (in) *	NA	NA	NA	NA		NA	NA	NA	NA			
66" WF BACKSTOP		**66T060WBC**	**66T070WBC**	**66T080WBC**		**66T090WBC**	**66T100WBC**	**66T105WBC**	**66T110WBC**			
		66T060WYC	**66T070WYC**	**66T080WYC**		**66T090WYC**	**66T100WYC**	**66T106WYC**	**66T110WYC**			
L (in)		125	159	193		261	295	329	363			
W1 (in)		69	44	44		44	44	44	44			
W2 (in)		75	75	75		75	75	75	75			
P (in)		65	99	133		201	235	269	303			**A040108**
A (in)		48 5/8	22	22		22	22	22	22			
B (in)		54 3/4	54 3/4	54 3/4		54 3/4	54 3/4	54 3/4	54 3/4			
C (in) *		NA	27 3/4	27 3/4		27 3/4	27 3/4	27 3/4	27 3/4			
D (in)		42 5/8	16	16		16	16	16	16			
E (in) *		NA	41 3/4	41 3/4		41 3/4	41 3/4	41 3/4	41 3/4			
72" WF BACKSTOP		**72T060WBC**	**72T070WBC**	**72T080WBC**		**72T090WBC**	**72T100WBC**	**72T105WBC**	**72T110WBC**			
		72T060WYC	**72T070WYC**	**72T080WYC**		**72T090WYC**	**72T100WYC**	**72T105WYC**	**72T110WYC**			
L (in)		125	159	193		227	295	329	329			
W1 (in)		69	69	44		44	44	44	44			
W2 (in)		75	75	75		75	75	75	75			
P (in)		65	99	133		167	235	269	269			**A040108**
A (in)		48 5/8	48 5/8	22		22	22	22	22			
B (in)		54 3/4	54 3/4	54 3/4		54 3/4	54 3/4	54 3/4	54 3/4			
C (in) *		NA	NA	27 3/4		27 3/4	27 3/4	27 3/4	27 3/4			
D (in)		42 5/8	42 5/8	16		16	16	16	16			
E (in) *		NA	NA	41 3/4		41 3/4	41 3/4	41 3/4	41 3/4			

SYSTEM WIDTH (IN)	SYSTEM SPEED CAPACITY (MPH)											DRAWING NUMBER
	30	35	40 TL-2	50	53	55	60 TL-3	65	70	72	75	
78" WF BACKSTOP		**78T060WBC**	**78T070WBC**	**78T080WBC**		**78T090WBC**	**78T100WBC**	**78T105WBC**	**78T110WBC**			
		78T060WYC	**78T070WYC**	**78T080WYC**		**78T090WYC**	**78T100WYC**	**78T105WYC**	**78T110WYC**			
L (in)		125	159	193		227	295	329	329			
W1 (in)		69	69	69		44	44	44	44			
W2 (in)		75	75	75		75	75	75	75			
P (in)		65	99	133		167	235	269	269			**A040108**
A (in)		48 5/8	48 5/8	48 5/8		22	22	22	22			
B (in)		54 3/4	54 3/4	54 3/4		54 3/4	54 3/4	54 3/4	54 3/4			
C (in) *		NA	NA	NA		27 3/4	27 3/4	27 3/4	27 3/4			
D (in)		42 5/8	42 5/8	42 5/8		16	16	16	16			
E (in) *		NA	NA	NA		41 3/4	41 3/4	41 3/4	41 3/4			
84" WF BACKSTOP			**84T070WBC**	**84T080WBC**		**84T090WBC**	**84T100WBC**	**84T105WBC**	**84T110WBC**			
			84T070WYC	**84T080WYC**		**84T090WYC**	**84T100WYC**	**84T105WYC**	**84T110WYC**			
L (in)			159	193		227	295	329	329			
W1 (in)			69	69		69	44	44	44			
W2 (in)			75	75		75	75	75	75			
P (in)			99	133		167	235	269	269			**A040108**
A (in)			48 5/8	48 5/8		48 5/8	22	22	22			
B (in)			54 3/4	54 3/4		54 3/4	54 3/4	54 3/4	54 3/4			
C (in) *			NA	NA		NA	27 3/4	27 3/4	27 3/4			
D (in)			42 5/8	42 5/8		42 5/8	16	16	16			
E (in) *			NA	NA		NA	41 3/4	41 3/4	41 3/4			
90" WF BACKSTOP			**90T070WBC**	**90T080WBC**		**90T090WBC**	**90T100WBC**	**90T105WBC**	**90T110WBC**			
			90T070WYC	**90T080WYC**		**90T090WYC**	**90T100WYC**	**90T105WYC**	**90T110WYC**			
L (in)			159	193		227	295	329	329			
W1 (in)			69	69		69	44	44	44			
W2 (in)			99	99		99	99	99	99			
P (in)			99	133		167	235	269	269			**A040108**
A (in)			48 5/8	48 5/8		48 5/8	22	22	22			
B (in)			78 5/8	78 5/8		78 5/8	78 5/8	78 5/8	78 5/8			
C (in) *			51 5/8	51 5/8		51 5/8	27 3/4	27 3/4	27 3/4			
D (in)			42 5/8	42 5/8		42 5/8	16	16	16			
E (in) *			65 5/8	65 5/8		65 5/8	65 5/8	65 5/8	65 5/8			
96" WF BACKSTOP			**96T070WBC**	**96T080WBC**		**96T090WBC**	**96T100WBC**	**96T105WBC**	**96T110WBC**			
			96T070WYC	**96T080WYC**		**96T090WYC**	**96T100WYC**	**96T105WYC**	**96T110WYC**			
L (in)			159	193		227	295	329	329			
W1 (in)			93	69		69	69	69	44			
W2 (in)			99	99		99	99	99	99			
P (in)			99	133		167	235	269	269			**A040108**
A (in)			72 5/8	48 5/8		48 5/8	48 5/8	22	22			
B (in)			78 5/8	78 5/8		78 5/8	78 5/8	78 5/8	78 5/8			
C (in) *			NA	51 5/8		51 1/3	51 5/8	27 3/4	27 3/4			
D (in) *			66 5/8	42 5/8		42 5/8	42 5/8	16	16			
E (in) *			NA	65 5/8		65 5/8	65 5/8	65 5/8	65 5/8			
102" WF BACKSTOP									**102T110WBC**			
									102T110WYC			
L (in)									329			
W1 (in)									69			
W2 (in)									99			
P (in)									269			**A040108**
A (in)									48 5/8			
B (in)									78 5/8			
C (in) *									51 5/8			
D (in)									42 5/8			
E (in) *									65 5/8			

UNIVERSAL TAU-II FOUNDATION DIMENSIONS

METRIC UNITS - MILLIMETERS

SYSTEM WIDTH (mm)	SYSTEM SPEED CAPACITY (KPH) 50	60	70 TL-2	80	85	90	100 TL-3	105	110	115	120	DRAWING NUMBER
UP TO 760mm PCB BACKSTOP	30T050PBC	30T060PBC	30T070PBC	30T080PBC	30T085PBC	30T090PBC	30T100PBC	30T105PBC	30T110PBC	30T115PBC	30T120PBC	A040105 A040117
	30T050PYC	30T060PYC	30T070PYC	30T080PYC	30T085PYC	30T090PYC	30T100PYC	30T105PYC	30T110PYC	30T115PYC	30T120PYC	
L (mm)	2172	3035	3912	4775	5639	6502	7379	8242	9106	9970	10833	
P (mm)	1594	2461	3327	4194	5061	5928	6795	7661	8528	9395	10262	
UP TO 760mm COMPACT BACKSTOP	30T050CBC	30T060CBC	30T070CBC	30T080CBC	30T085CBC	30T090CBC	30T100CBC	30T105CBC	30T110CBC	30T115CBC	30T120CBC	A040102 A040115
	30T050CYC	30T060CYC	30T070CYC	30T080CYC	30T085CYC	30T090CYC	30T100CYC	30T105CYC	30T110CYC	30T115CYC	30T120CYC	
L (mm)	2934	3797	4661	5525	6401	7264	8128	8991	9868	10732	11595	
P (mm)	1410	2276	3143	4010	4877	5744	6610	7477	8344	9211	10077	
UP TO 760mm ASPHALT PCB BACKSTOP	30T050PBA	30T060PBA	30T070PBA	30T080PBA	30T085PBA	30T090PBA	30T100PBA	30T105PBA	30T110PBA	30T115PBA	30T120PBA	A040112
	30T050PYA	30T060PYA	30T070PYA	30T080PYA	30T085PYA	30T090PYA	30T100PYA	30T105PYA	30T110PYA	30T115PYA	30T120PYA	
L (mm)	3550	4413	5290	6153	7017	7880	8757	9620	10484	11347	12211	
P (mm)	1594	2461	3327	4194	5061	5928	6795	7661	8528	9395	10262	
UP TO 760mm ASPHALT COMPACT BACKSTOP	30T050CBA	30T060CBA	30T070CBA	30T080CBA	30T085CBA	30T090CBA	30T100CBA	30T105CBA	30T110CBA	30T115CBA	30T120CBA	A040110
	30T050CYA	30T060CYA	30T070CYA	30T080CYA	30T085CYA	30T090CYA	30T100CYA	30T105CYA	30T110CYA	30T115CYA	30T120CYA	
L (mm)	3975	4839	5702	6566	7442	8306	9169	10033	10909	11773	12637	
P (mm)	1410	2276	3143	4010	4877	5744	6610	7477	8344	9211	10077	
915mm PCB BACKSTOP	36T050PBC	36T060PBC	36T070PBC	36T080PBC	36T085PBC	36T090PBC	36T100PBC	36T105PBC	36T110PBC	36T115PBC	36T120PBC	A040105 A040117
	36T050PYC	33T060PYC	36T070PYC	36T080PYC	36T085PYC	36T090PYC	36T100PYC	36T105PYC	36T110PYC	36T115PYC	36T120PYC	
L (mm)	2172	3035	3912	4775	5639	6502	7379	8242	9106	9970	10833	
P (mm)	1594	2461	3327	4194	5061	5928	6795	7661	8528	9395	10262	
915mm COMPACT BACKSTOP	36T050CBC	36T060CBC	36T070CBC	36T080CBC	36T085CBC	36T090CBC	36T100CBC	36T105CBC	36T110CBC	36T115CBC	36T120CBC	A040102 A040115
	36T050CYC	36T060CYC	36T070CYC	36T080CYC	36T085CYC	36T090CYC	36T100CYC	36T105CYC	36T110CYC	36T115CYC	36T120CYC	
L (mm)	2934	3797	4661	5525	6401	7264	8128	8991	9868	10732	11595	
P (mm)	1410	2276	3143	4010	4877	5744	6610	7477	8344	9211	10077	
915mm ASPHALT PCB BACKSTOP	36T050PBA	36T060PBA	36T070PBA	36T080PBA	36T085PBA	36T090PBA	36T100PBA	36T105PBA	36T110PBA	36T115PBA	36T120PBA	A040112
	36T050PYA	36T060PYA	36T070PYA	36T080PYA	36T085PYA	36T090PYA	36T100PYA	36T105PYA	36T110PYA	36T115PYA	36T120PYA	
L (mm)	3550	4413	5290	6153	7017	7880	8757	9620	10484	11347	12211	
P (mm)	1594	2461	3327	4194	5061	5928	6795	7661	8528	9395	10262	
915mm ASPHALT COMPACT BACKSTOP	36T050CBA	36T060CBA	36T070CBA	36T080CBA	36T085CBA	36T090CBA	36T100CBA	36T105CBA	36T110CBA	36T115CBC	36T120CBC	A040110
	36T050CYA	36T060CYA	36T070CYA	36T080CYA	36T085CYC	36T090CYA	36T100CYA	36T105CBC	36T110CYA	36T115CYA	36T120CYA	
L (mm)	3975	4839	5702	6566	7442	8306	9169	10033	10909	11773	12637	
P (mm)	1410	2276	3143	4010	4877	5744	6610	7477	8344	9211	10077	
UP TO 915mm PCC PAD FLUSH MOUNT BACKSTOP	36T050FBC	36T060FBC	36T070FBC	36T080FBC	36T085FBC	36T090FBC	36T100FBC	36T105FBC	36T110FBC	36T115FBC	36T120FBC	A040420
	36T050FYC	36T060FYC	36T070FYC	36T080FYC	36T085FYC	36T090FYC	36T100FYC	36T105FYC	36T110FYC	36T115FYC	36T120FYC	
L (mm)	2121	2985	3848	4712	5588	6452	7315	8179	9055	9919	10782	
P (mm)	1511	2375	3239	4102	4978	5842	6706	7569	8446	9309	10173	
1070mm WF BACKSTOP	42T050WBC	42T060WBC	42T070WBC	42T080WBC		42T090WBC	42T100WBC	42T105WBC	42T110WBC			A040108
	42T050WYC	42T060WYC	42T070WYC	42T080WYC		42T090WYC	42T100WYC	42T105WYC	42T110WYC			
L (mm)	3175	4039	4902	5766		7493	8357	9220	10084			
W1 (mm)	1118	1118	1118	1118		1118	1118	1118	1118			
W2 (mm)	1295	1295	1295	1295		1295	1295	1295	1295			
P (mm)	1651	2515	3378	4242		5969	6833	7696	8560			
A (mm)	559	559	559	559		559	559	559	559			
B (mm)	787	787	787	787		787	787	787	787			
C (mm)	NA	NA	NA	NA		NA	NA	NA	NA			
D (mm)	406	406	406	406		406	406	406	406			
E (mm)	NA	NA	NA	NA		NA	NA	NA	NA			

SYSTEM WIDTH (mm)	SYSTEM SPEED CAPACITY (KPH) 50	60	70 TL-2	80	85	90	100 TL-3	105	110	115	120	DRAWING NUMBER
1220mm WF BACKSTOP	**48T050WBC**	**48T060WBC**	**48T070WBC**	**48T080WBC**		**48T090WBC**	**48T100WBC**	**48T105WBC**	**48T110WBC**			
	48T050WYC	**48T060WYC**	**48T070WYC**	**48T080WYC**		**48T090WYC**	**48T100WYC**	**48T105WYC**	**48T110WYC**			
L (mm)	3175	4039	4902	5766		7493	8357	9220	10084			
W1 (mm)	1118	1118	1118	1118		1118	1118	118	1118			
W2 (mm)	1295	1295	1295	1295		1295	1295	1295	1295			
P (mm)	1651	2515	3378	4242		5969	6833	7696	8560			**A040108**
A (mm)	559	559	559	559		559	559	559	559			
B (mm)	787	787	787	787		787	787	787	787			
C (mm)	NA	NA	NA	NA		NA	NA	NA	NA			
D (mm)	406	406	406	406		406	406	406	406			
E (mm)	NA	NA	NA	NA		NA	NA	NA	NA			
1370mm WF BACKSTOP	**54T050WBC**	**54T060WBC**	**54T070WBC**	**54T080WBC**		**54T090WBC**	**54T100WBC**	**54T105WBC**	**54T110WBC**			
	54T050WYC	**54T060WYC**	**54T070WYC**	**54T080WYC**		**54T090WYC**	**54T100WYC**	**54T105WYC**	**54T110WYC**			
L (mm)	3175	4039	4902	5766		7493	8357	9220	10084			
W1 (mm)	1118	1118	1118	1118		1118	1118	118	1118			
W2 (mm)	1295	1295	1295	1295		1295	1295	1295	1295			
P (mm)	1651	2515	3378	4242		5969	6833	7696	8560			**A040108**
A (mm)	559	559	559	559		559	559	559	559			
B (mm)	787	787	787	787		787	787	785	787			
C (mm)	NA	NA	NA	NA		NA	NA	NA	NA			
D (mm)	406	406	406	406		406	406	406	406			
E (mm)	NA	NA	NA	NA		NA	NA	NA	NA			
1525mm WF BACKSTOP	**60T050WBC**	**60T060WBC**	**60T070WBC**	**60T080WBC**		**60T090WBC**	**60T100WBC**	**60T105WBC**	**60T110WBC**			
	60T050WYC	**60T060WYC**	**60T070WYC**	**60T080WYC**		**60T090WYC**	**60T100WYC**	**60T105WYC**	**60T110WYC**			
L (mm)	3175	4039	4902	5766		7493	8357	9220	10084			
W1 (mm)	1118	1118	1118	1118		1118	1118	118	1118			
W2 (mm)	1295	1295	1295	1295		1295	1295	1295	1295			
P (mm)	1651	2515	3378	4242		5969	6833	7696	8560			**A040108**
A (mm)	559	559	559	559		559	559	559	559			
B (mm)	787	787	787	787		787	787	787	787			
C (mm)	NA	NA	NA	NA		NA	NA	NA	NA			
D (mm)	406	406	406	406		406	406	406	406			
E (mm)	NA	NA	NA	NA		NA	NA	NA	NA			
1675mm WF BACKSTOP		**66T060WBC**	**66T070WBC**	**66T080WBC**		**66T090WBC**	**66T100WBC**	**66T105WBC**	**66T110WBC**			
		66T060WYC	**66T070WYC**	**66T080WYC**		**66T090WYC**	**66T100WYC**	**66T105WYC**	**66T110WYC**			
L (mm)		3175	4039	4902		6629	7493	8357	9220			
W1 (mm)		1753	1118	1118		1118	1118	1118	1118			
W2 (mm)		1905	1905	1905		1905	1905	1905	1905			
P (mm)		1651	2515	3378		5105	5969	6833	7696			**A040108**
A (mm)		1235	559	559		559	559	559	559			
B (mm)		1391	1391	1391		1391	1391	1391	1391			
C (mm)		NA	705	705		705	705	705	705			
D (mm)		1083	406	406		406	406	406	406			
E (mm)		NA	1060	1060		1060	1060	1060	1060			
1830mm WF BACKSTOP		**72T060WBC**	**72T070WBC**	**72T080WBC**		**72T090WBC**	**72T100WBC**	**72T105WBC**	**72T110WBC**			
		72T060WYC	**72T070WYC**	**72T080WYC**		**72T090WYC**	**72T100WYC**	**72T105WYC**	**72T110WYC**			
L (mm)		3175	4039	4902		5766	7493	8357	8357			
W1 (mm)		1753	1753	1118		1118	1118	115	1118			
W2 (mm)		1905	1905	1905		1905	1905	1905	1905			
P (mm)		1651	2515	3378		4242	5969	6833	6833			**A040108**
A (mm)		1235	1235	559		559	559	556	559			
B (mm)		1391	1391	1391		1391	1391	1391	1391			
C (mm)		NA	NA	705		705	705	705	705			
D (mm)		1083	1083	406		406	406	406	406			
E (mm)		NA	NA	1060		1060	1060	1060	1060			

SYSTEM WIDTH (mm)	SYSTEM SPEED CAPACITY (KPH)											DRAWING NUMBER
	50	60	70 TL-2	80	85	90	100 TL-3	105	110	115	120	
1980mm WF BACKSTOP		**78T060WBC**	**78T070WBC**	**78T080WBC**		**78T090WBC**	**78T100WBC**	**78T105WBC**	**78T110WBC**			
		78T060WYC	**78T070WYC**	**78T080WYC**		**78T090WYC**	**78T100WYC**	**78T105WYC**	**78T110WYC**			
L (mm)		3175	4039	4902		5766	7493	8357	8357			
W1 (mm)		1753	1753	1753		1118	1118	1118	1118			
W2 (mm)		1905	1905	1905		1905	1905	1905	1905			
P (mm)		1651	2515	3378		4242	5969	6833	6833			**A040108**
A (mm)		1235	1235	1235		559	559	559	559			
B (mm)		1391	1391	1391		1391	1391	1391	1391			
C (mm)		NA	NA	NA		705	705	705	705			
D (mm)		1083	1083	1083		406	406	406	406			
E (mm)		NA	NA	NA		1060	1060	1060	1060			
2135mm WF BACKSTOP			**84T070WBC**	**84T080WBC**		**84T090WBC**	**84T100WBC**	**84T105WBC**	**84T110WBC**			
			84T070WYC	**84T080WYC**		**84T090WYC**	**84T100WYC**	**84T105WYC**	**84T110WYC**			
L (mm)			4039	4902		5766	7493	8357	8357			
W1 (mm)			1753	1753		1753	1118	118	1118			
W2 (mm)			1905	1905		1905	1905	1905	1905			
P (mm)			2515	3378		4242	5969	6833	6833			**A040108**
A (mm)			1235	1235		1235	559	559	559			
B (mm)			1391	1391		1391	1391	1391	1391			
C (mm)			NA	NA		NA	705	705	705			
D (mm)			1083	1083		1083	406	406	406			
E (mm)			NA	NA		NA	1060	1060	1060			
2285mm WF BACKSTOP			**90T070WBC**	**90T080WBC**		**90T090WBC**	**90T100WBC**	**90T105WBC**	**90T110WBC**			
			90T070WYC	**90T080WYC**		**90T090WYC**	**90T100WYC**	**90T105WYC**	**90T110WYC**			
L (mm)			4039	4902		5766	7493	8357	8357			
W1 (mm)			1753	1753		1753	1118	1118	1118			
W2 (mm)			2515	2515		2515	2515	2515	2515			
P (mm)			2515	3378		4242	5969	6633	6833			**A040108**
A (mm)			1235	1235		1235	559	559	559			
B (mm)			1997	1997		1997	1997	1997	1997			
C (mm)			1311	1311		1311	705	705	705			
D (mm)			1083	1083		1083	406	406	406			
E (mm)			1667	1667		1667	1667	1667	1667			
2440mm WF BACKSTOP			**96T070WBC**	**96T080WBC**		**96T090WBC**	**96T100WBC**	**96T105WBC**	**96T110WBC**			
			96T070WYC	**96T080WYC**		**96T090WYC**	**96T100WYC**	**96T105WYC**	**96T110WYC**			
L (mm)			4039	4902		5766	7493	8357	8357			
W1 (mm)			2362	1753		1753	1753	118	1118			
W2 (mm)			2515	2515		2515	2515	2515	2515			
P (mm)			2515	3378		4242	5969	6833	6833			**A040108**
A (mm)			1845	1235		1235	1235	559	559			
B (mm)			1997	1997		1997	1997	1997	1997			
C (mm)			NA	1311		1305	1311	705	705			
D (mm)			1692	1083		1083	1083	406	406			
E (mm)			NA	1667		1667	1667	1667	1667			
2590mm WF BACKSTOP									**102T110WBC**			
									102T110WYC			
L (mm)									8357			
W1 (mm)									1753			
W2 (mm)									2515			
P (mm)									6833			**A040108**
A (mm)									1235			
B (mm)									1997			
C (mm)									1311			
D (mm)									1083			
E (mm)									1667			

APPENDIX D

TRANSITIONS

There are a variety of transition options available for the TAU-II system. The system was designed to be compatible with a variety of generic transitions already available to the industry.

Placement and installation of the TAU-II system and transitions must be accomplished in accordance with the guidelines and recommendations set forth in the "AASHTO Roadside Design Guide," FHWA memoranda and other state and local standards.

There are different transition configurations depending on which backstop you are using (Compact or P.C.B.). Transition options for either of the backstop systems are shown in the following drawings.

DRAWINGS

PCB Backstop to Vertical Concrete ……. 64
DWG# B010727

PCB Backstop to Safety Shape PCB …... 65
DWG# B10809

Compact Backstop to Safety Shape PCB .. 66
DWG# B010725

Compact Backstop to Safety Shape PCB
One Side…….. 67
DWG# B010811

Compact backstop to Safety shape PCB
Offset …….. …… 68
DWG# B010726

Compact Backstop to Concrete End Shoe 69
DWG# B010806

Compact Backstop to Thrie Beam Rail …. 70
DWG# B010724

Compact Backstop to W-Beam Rail …… 71
DWG# B010728

Transition to Median Barrier……. 72
DWG # B050606

Transition to Concrete Block ..…… 73
DWG#AP070406

Wide System to Bridge Pier
with Concrete Barrier ……. 74
DWG#AP070405

Transition to Cylindrical Bridge Pier …… 75
DWG#AP070301

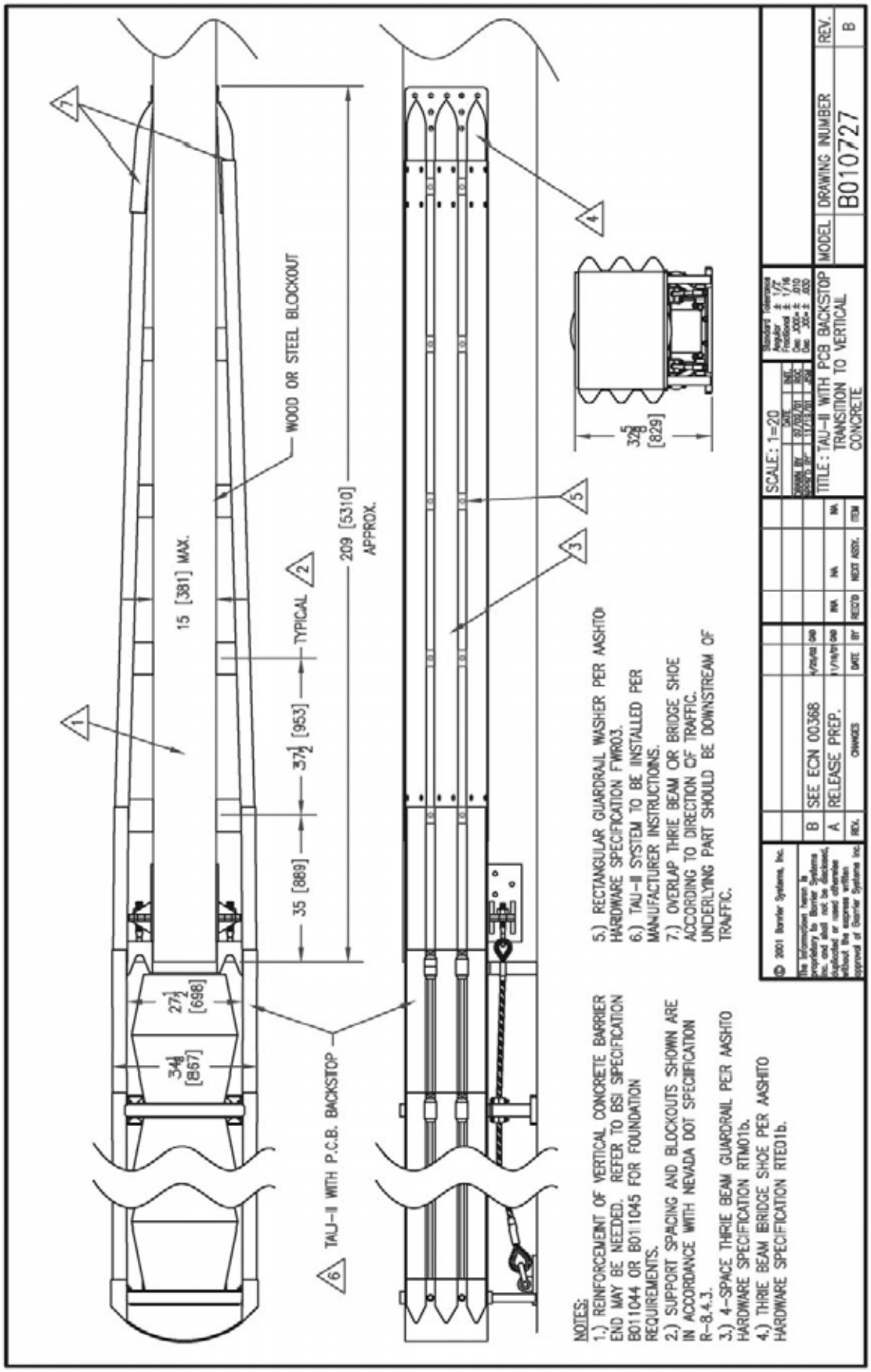
WOOD OR STEEL BLOCKOUT
15 [381] MAX.
TYPICAL
209 [5310] APPROX.
35 [889]
37½ [953]
27½ [698]
34⅛ [867]
32⅝ [829]
TAU-II WITH P.C.B. BACKSTOP
NOTES:
1.) REINFORCEMENT OF VERTICAL CONCRETE BARRIER END MAY BE NEEDED. REFER TO BSI SPECIFICATION B011C44 OR B011C45 FOR FOUNDATION REQUIREMENTS.
2.) SUPPORT SPACING AND BLOCKOUTS SHOWN ARE IN ACCORDANCE WITH NEVADA DOT SPECIFICATION R-8.4.3.
3.) 4-SPACE THRIE BEAM GUARDRAIL PER AASHTO HARDWARE SPECIFICATION RTM01b.
4.) THRIE BEAM BRIDGE SHOE PER AASHTO HARDWARE SPECIFICATION RTE01b.
5.) RECTANGULAR GUARDRAIL WASHER PER AASHTO HARDWARE SPECIFICATION FWR03.
6.) TAU-II SYSTEM TO BE INSTALLED PER MANUFACTURER INSTRUCTIONS.
7.) OVERLAP THRIE BEAM OR BRIDGE SHOE ACCORDING TO DIRECTION OF TRAFFIC. UNDERLYING PART SHOULD BE DOWNSTREAM OF TRAFFIC.
B SEE ECN 00368
A RELEASE PREP.
REV. CHANGES DATE BY REC'D NEXT ASSY. ITEM
© 2001 Barrier Systems, Inc.
SCALE: 1=20
TITLE: TAU-II WITH PCB BACKSTOP TRANSITION TO VERTICAL CONCRETE
MODEL DRAWING NUMBER REV.
B010727 B

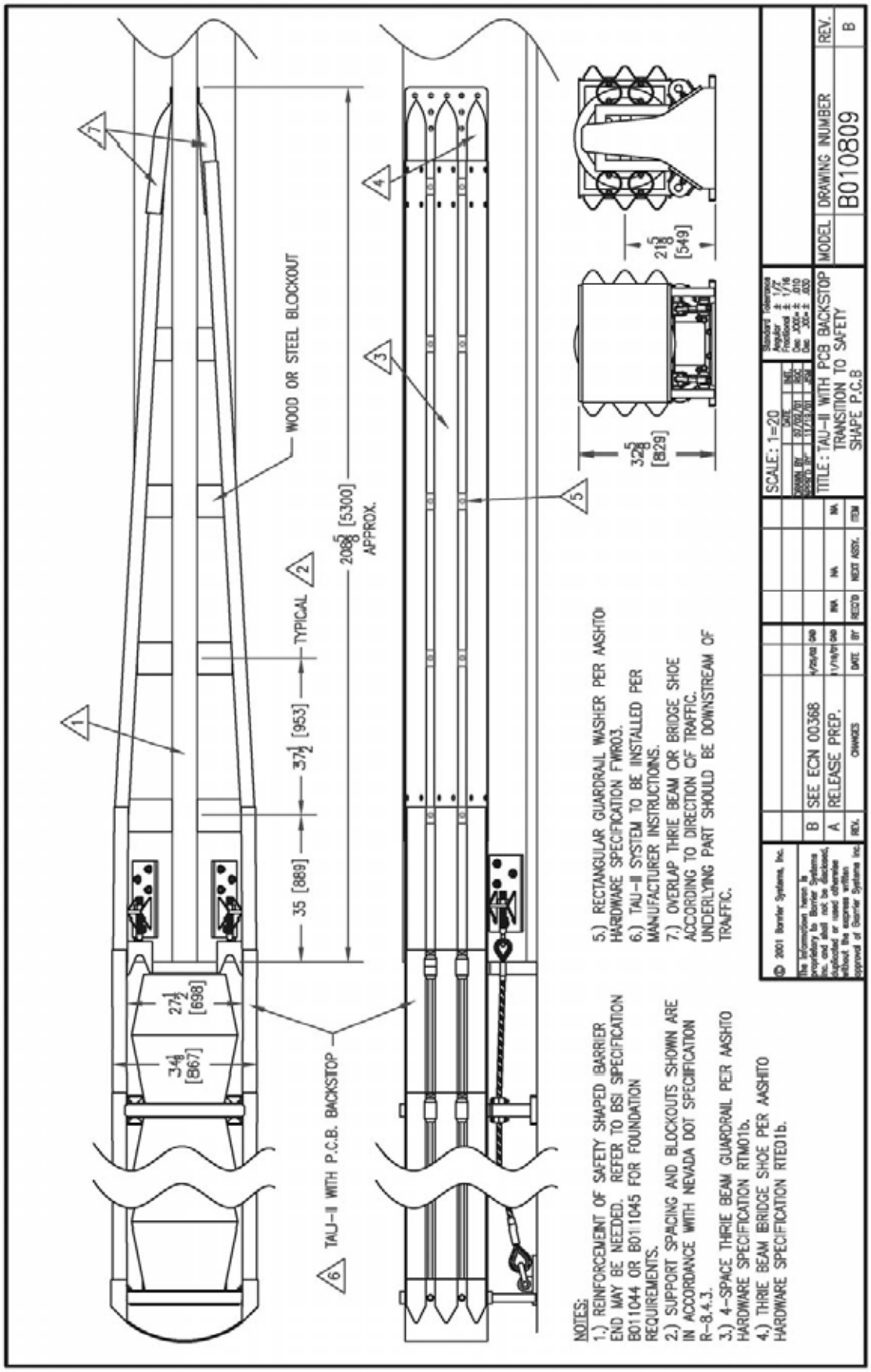
WOOD OR STEEL BLOCKOUT
TYPICAL
35 [889]
37½ [953]
208⅝ [5300] APPROX.
27½ [698]
34⅜ [867]
TAU-II WITH P.C.B. BACKSTOP
21⅝ [549]
32⅝ [829]
NOTES:
1.) REINFORCEMENT OF SAFETY SHAPED BARRIER END MAY BE NEEDED. REFER TO BSI SPECIFICATION B011044 OR B011045 FOR FOUNDATION REQUIREMENTS.
2.) SUPPORT SPACING AND BLOCKOUTS SHOWN ARE IN ACCORDANCE WITH NEVADA DOT SPECIFICATION R-8.4.3.
3.) 4-SPACE THRIE BEAM GUARDRAIL PER AASHTO HARDWARE SPECIFICATION RTM01b.
4.) THRIE BEAM BRIDGE SHOE PER AASHTO HARDWARE SPECIFICATION RTE01b.
5.) RECTANGULAR GUARDRAIL WASHER PER AASHTO HARDWARE SPECIFICATION FWR03.
6.) TAU-II SYSTEM TO BE INSTALLED PER MANUFACTURER INSTRUCTIONS.
7.) OVERLAP THRIE BEAM OR BRIDGE SHOE ACCORDING TO DIRECTION OF TRAFFIC. UNDERLYING PART SHOULD BE DOWNSTREAM OF TRAFFIC.
B SEE ECN 00368
A RELEASE PREP.
SCALE: 1=20
TITLE: TAU-II WITH PCB BACKSTOP TRANSITION TO SAFETY SHAPE P.C.B
MODEL
DRAWING NUMBER
B010809
REV.
B

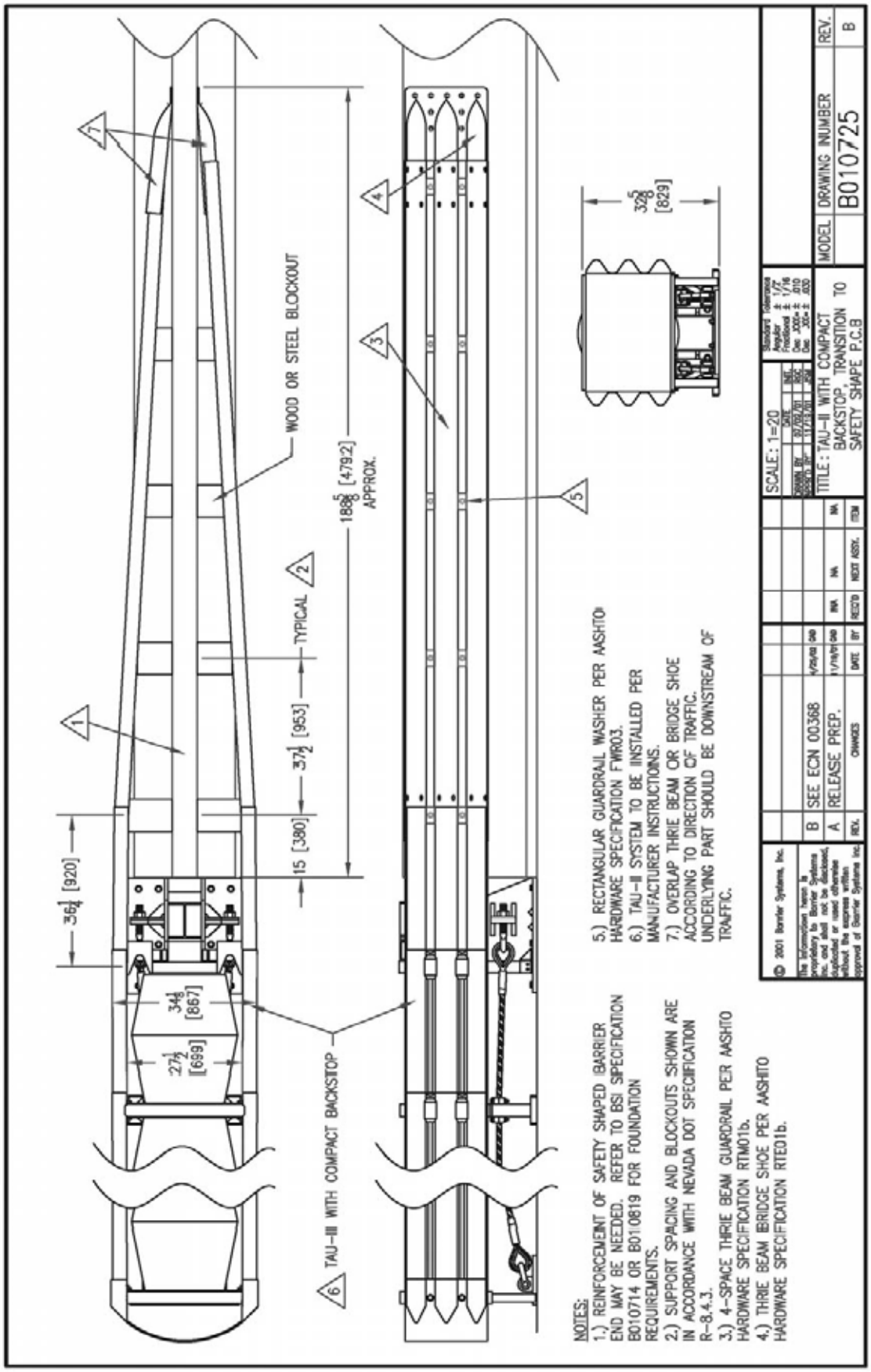
WOOD OR STEEL BLOCKOUT
188 5/8 [4792] APPROX.
TYPICAL
37 1/2 [953]
15 [380]
36 1/4 [920]
34 1/8 [867]
27 1/2 [699]
32 5/8 [829]
TAU-III WITH COMPACT BACKSTOP
NOTES:
1.) REINFORCEMENT OF SAFETY SHAPED BARRIER END MAY BE NEEDED. REFER TO BSI SPECIFICATION B010714 OR B010819 FOR FOUNDATION REQUIREMENTS.
2.) SUPPORT SPACING AND BLOCKOUTS SHOWN ARE IN ACCORDANCE WITH NEVADA DOT SPECIFICATION R-8.4.3.
3.) 4-SPACE THRIE BEAM GUARDRAIL PER AASHTO HARDWARE SPECIFICATION RTM01b.
4.) THRIE BEAM BRIDGE SHOE PER AASHTO HARDWARE SPECIFICATION RTE01b.
5.) RECTANGULAR GUARDRAIL WASHER PER AASHTO HARDWARE SPECIFICATION FWR03.
6.) TAU-II SYSTEM TO BE INSTALLED PER MANUFACTURER INSTRUCTIONS.
7.) OVERLAP THRIE BEAM OR BRIDGE SHOE ACCORDING TO DIRECTION OF TRAFFIC. UNDERLYING PART SHOULD BE DOWNSTREAM OF TRAFFIC.
© 2001 Barrier Systems, Inc.
B SEE ECN 00368
A RELEASE PREP.
SCALE: 1=20
TITLE: TAU-III WITH COMPACT BACKSTOP TRANSITION TO SAFETY SHAPE P.C.B
MODEL
DRAWING NUMBER
B010725
REV.
B

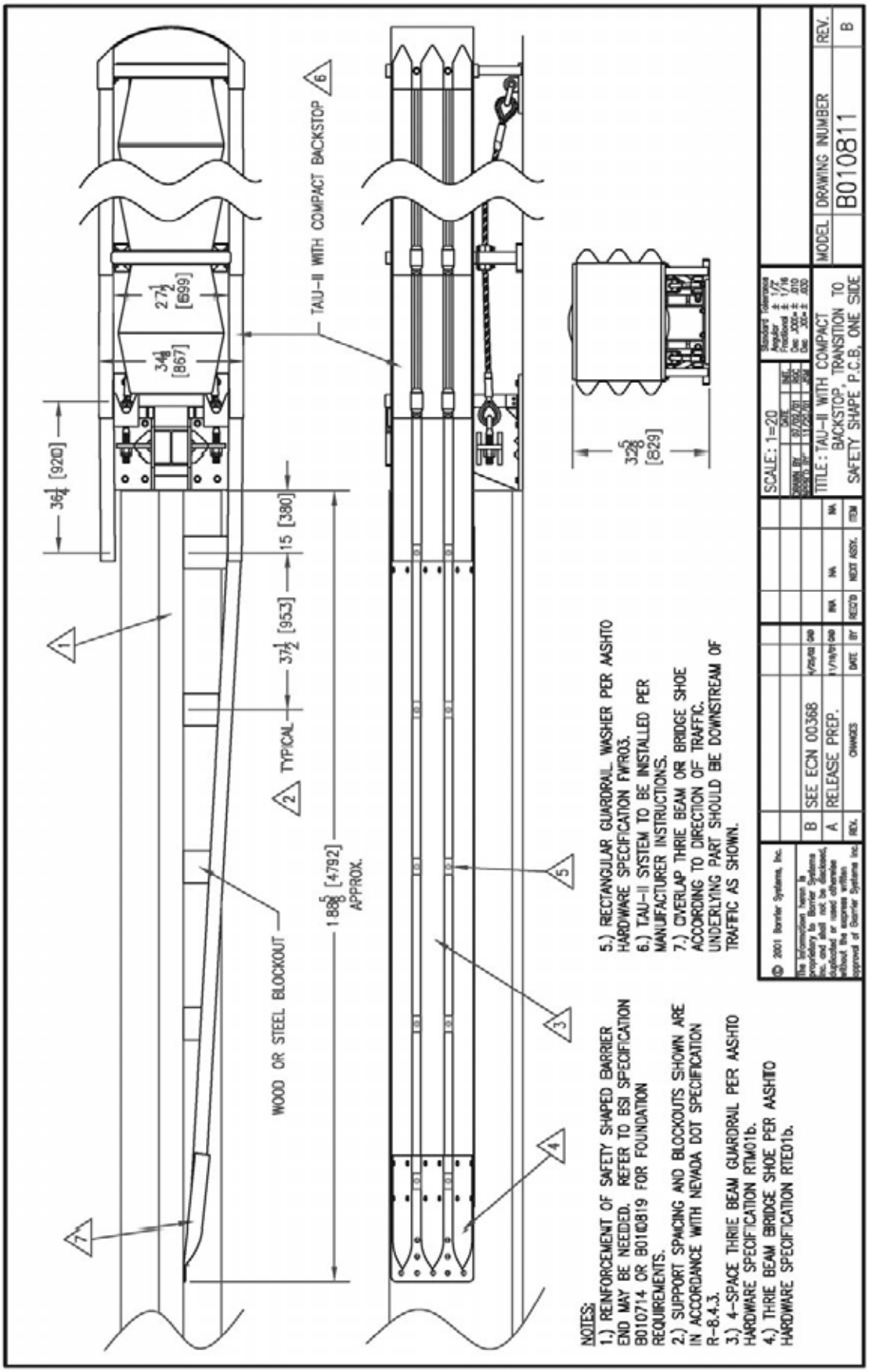
TAU-II WITH COMPACT BACKSTOP
27½ [699]
34¼ [867]
36¼ [920]
15 [380]
37½ [953]
TYPICAL
188⅝ [4792] APPROX.
WOOD OR STEEL BLOCKOUT
32⅝ [829]
NOTES:
1.) REINFORCEMENT OF SAFETY SHAPED BARRIER END MAY BE NEEDED. REFER TO BSI SPECIFICATION B010714 OR B010819 FOR FOUNDATION REQUIREMENTS.
2.) SUPPORT SPACING AND BLOCKOUTS SHOWN ARE IN ACCORDANCE WITH NEVADA DOT SPECIFICATION R-8.4.3.
3.) 4-SPACE THRIE BEAM GUARDRAIL PER AASHTO HARDWARE SPECIFICATION RTM01b.
4.) THRIE BEAM BRIDGE SHOE PER AASHTO HARDWARE SPECIFICATION RTE01b.
5.) RECTANGULAR GUARDRAIL WASHER PER AASHTO HARDWARE SPECIFICATION FWR03.
6.) TAU-II SYSTEM TO BE INSTALLED PER MANUFACTURER INSTRUCTIONS.
7.) OVERLAP THRIE BEAM OR BRIDGE SHOE ACCORDING TO DIRECTION OF TRAFFIC. UNDERLYING PART SHOULD BE DOWNSTREAM OF TRAFFIC AS SHOWN.
B SEE ECN 00368
A RELEASE PREP.
SCALE: 1=20
TITLE: TAU-II WITH COMPACT BACKSTOP, TRANSITION TO SAFETY SHAPE P.C.B., ONE SIDE
MODEL
DRAWING NUMBER
B010811
REV.
B

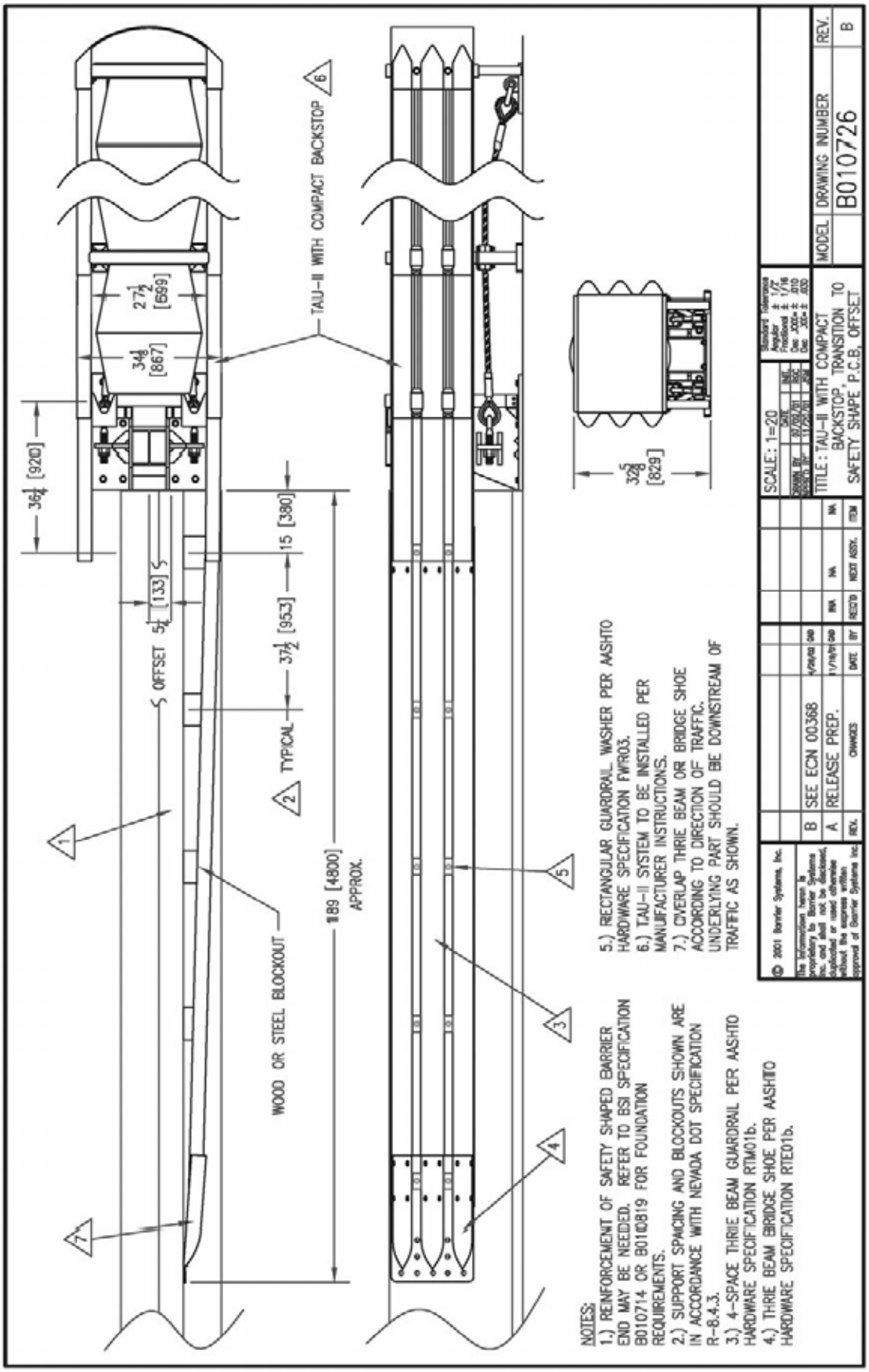
TAU-II WITH COMPACT BACKSTOP
27½ [699]
34¼ [867]
36¼ [920]
OFFSET 5¼ [133]
15 [380]
37½ [953]
TYPICAL
189 [4800] APPROX.
WOOD OR STEEL BLOCKOUT
32⅝ [829]
NOTES:
1.) REINFORCEMENT OF SAFETY SHAPED BARRIER END MAY BE NEEDED. REFER TO BSI SPECIFICATION B010714 OR B010819 FOR FOUNDATION REQUIREMENTS.
2.) SUPPORT SPACING AND BLOCKOUTS SHOWN ARE IN ACCORDANCE WITH NEVADA DOT SPECIFICATION R-8.4.3.
3.) 4-SPACE THRIE BEAM GUARDRAIL PER AASHTO HARDWARE SPECIFICATION RTM01b.
4.) THRIE BEAM BRIDGE SHOE PER AASHTO HARDWARE SPECIFICATION RTE01b.
5.) RECTANGULAR GUARDRAIL WASHER PER AASHTO HARDWARE SPECIFICATION FWR03.
6.) TAU-II SYSTEM TO BE INSTALLED PER MANUFACTURER INSTRUCTIONS.
7.) OVERLAP THRIE BEAM OR BRIDGE SHOE ACCORDING TO DIRECTION OF TRAFFIC. UNDERLYING PART SHOULD BE DOWNSTREAM OF TRAFFIC AS SHOWN.
SCALE: 1=20
TITLE: TAU-II WITH COMPACT BACKSTOP, TRANSITION TO SAFETY SHAPE P.C.B. OFFSET
MODEL
DRAWING NUMBER
B010726
REV.
B
B SEE ECN 00368
A RELEASE PREP.

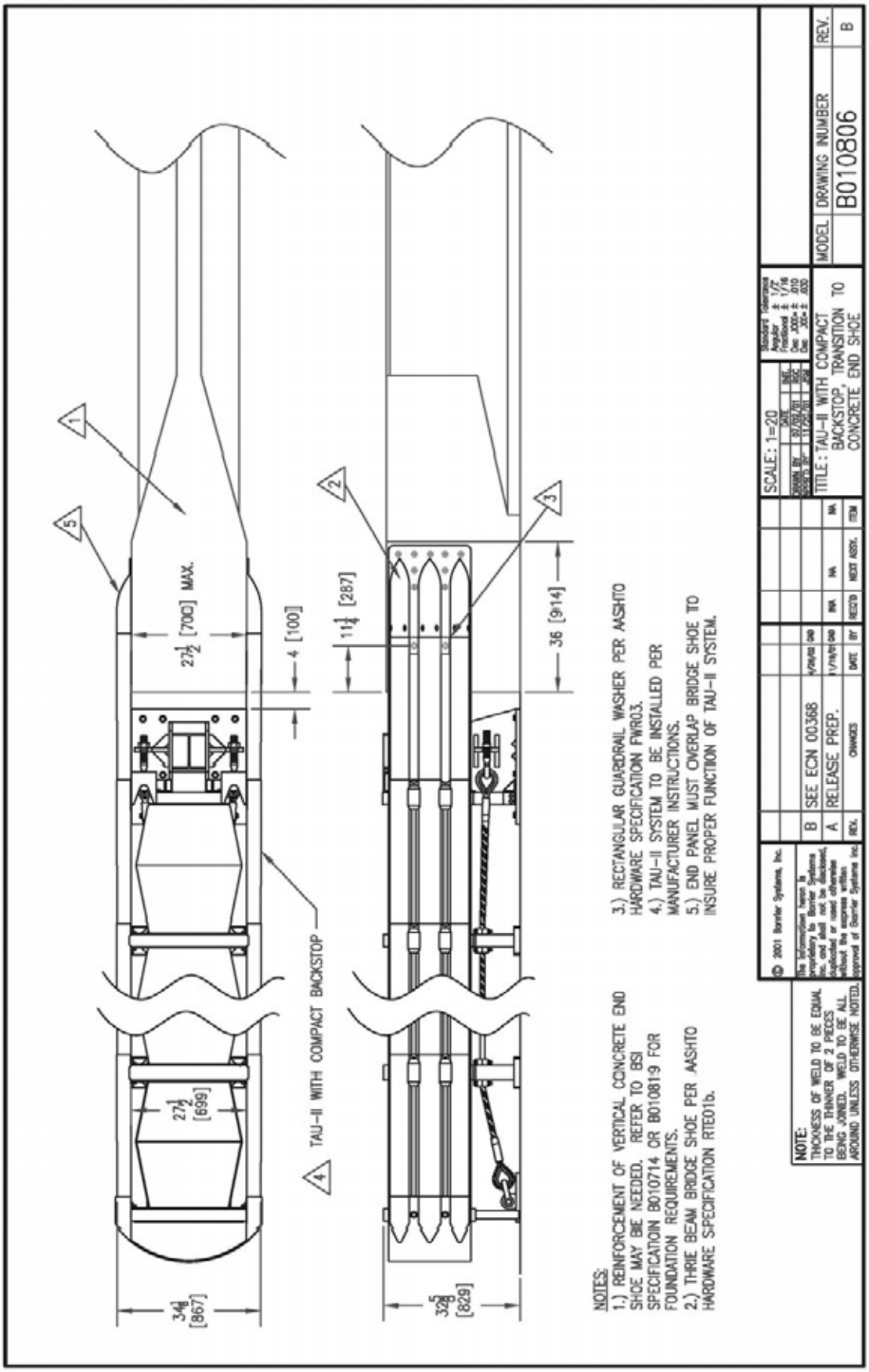
27½ [700] MAX.
4 [100]
11¼ [287]
36 [914]
27½ [699]
34¼ [867]
32⅝ [829]
TAU-II WITH COMPACT BACKSTOP
NOTES:
1.) REINFORCEMENT OF VERTICAL CONCRETE END SHOE MAY BE NEEDED. REFER TO BSI SPECIFICATION B010714 OR B010819 FOR FOUNDATION REQUIREMENTS.
2.) THRIE BEAM BRIDGE SHOE PER AASHTO HARDWARE SPECIFICATION RTE01b.
3.) RECTANGULAR GUARDRAIL WASHER PER AASHTO HARDWARE SPECIFICATION FWR03.
4.) TAU-II SYSTEM TO BE INSTALLED PER MANUFACTURER INSTRUCTIONS.
5.) END PANEL MUST OVERLAP BRIDGE SHOE TO INSURE PROPER FUNCTION OF TAU-II SYSTEM.
NOTE:
THICKNESS OF WELD TO BE EQUAL TO THE THINNER OF 2 PIECES BEING JOINED. WELD TO BE ALL AROUND UNLESS OTHERWISE NOTED.
© 2001 Barrier Systems, Inc.
B SEE ECN 00368
A RELEASE PREP.
SCALE: 1=20
TITLE: TAU-II WITH COMPACT BACKSTOP, TRANSITION TO CONCRETE END SHOE
MODEL
DRAWING NUMBER
B010806
REV.
B

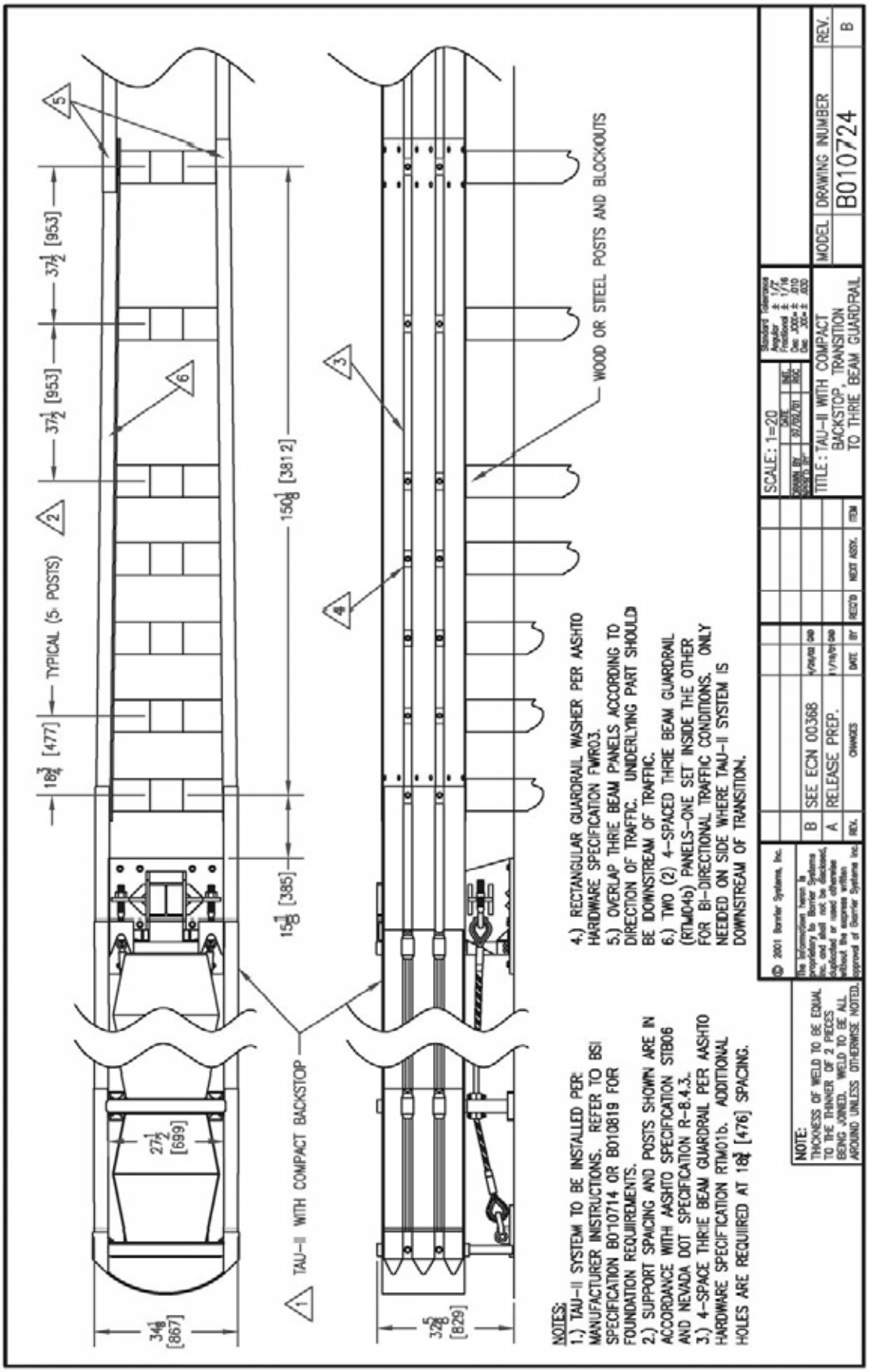
TAU-II WITH COMPACT BACKSTOP
TYPICAL (5 POSTS)
WOOD OR STEEL POSTS AND BLOCKOUTS
NOTES:
1.) TAU-II SYSTEM TO BE INSTALLED PER MANUFACTURER INSTRUCTIONS. REFER TO BSI SPECIFICATION B010714 OR B010819 FOR FOUNDATION REQUIREMENTS.
2.) SUPPORT SPACING AND POSTS SHOWN ARE IN ACCORDANCE WITH AASHTO SPECIFICATION STB06 AND NEVADA DOT SPECIFICATION R-8.4.3.
3.) 4-SPACE THRIE BEAM GUARDRAIL PER AASHTO HARDWARE SPECIFICATION RTM01b. ADDITIONAL HOLES ARE REQUIRED AT 18¾ [476] SPACING.
4.) RECTANGULAR GUARDRAIL WASHER PER AASHTO HARDWARE SPECIFICATION FWR03.
5.) OVERLAP THRIE BEAM PANELS ACCORDING TO DIRECTION OF TRAFFIC. UNDERLYING PART SHOULD BE DOWNSTREAM OF TRAFFIC.
6.) TWO (2) 4-SPACED THRIE BEAM GUARDRAIL (RTM04b) PANELS-ONE SET INSIDE THE OTHER FOR BI-DIRECTIONAL TRAFFIC CONDITIONS. ONLY NEEDED ON SIDE WHERE TAU-II SYSTEM IS DOWNSTREAM OF TRANSITION.
NOTE: THICKNESS OF WELD TO BE EQUAL TO THE THINNER OF 2 PIECES BEING JOINED. WELD TO BE ALL AROUND UNLESS OTHERWISE NOTED.
© 2001 Barrier Systems, Inc.
B SEE ECN 00368
A RELEASE PREP.
SCALE: 1=20
TITLE: TAU-II WITH COMPACT BACKSTOP TRANSITION TO THRIE BEAM GUARDRAIL
MODEL
DRAWING NUMBER
B010724
REV.
B

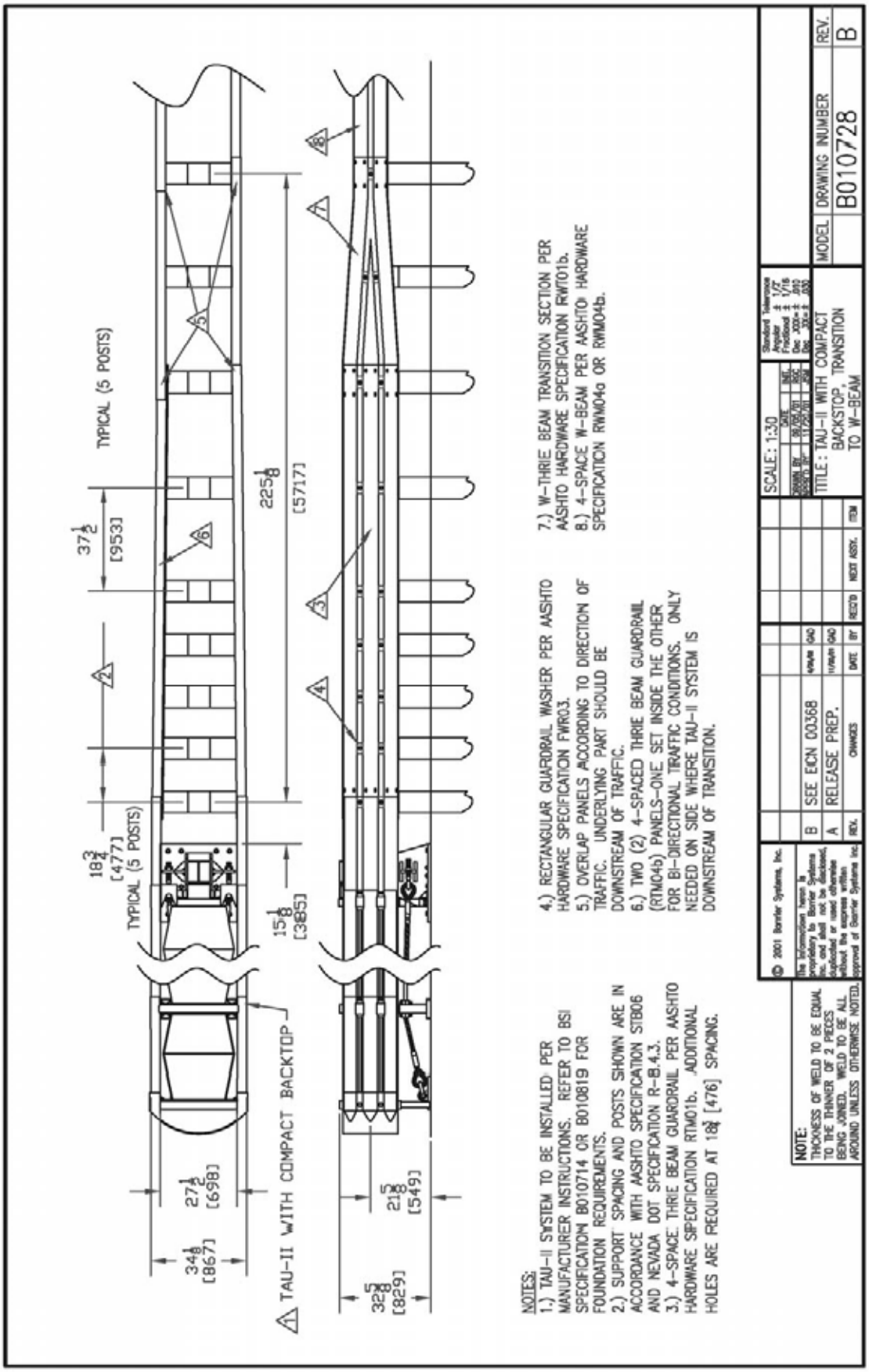
TYPICAL (5 POSTS)
TYPICAL (5 POSTS)
TAU-II WITH COMPACT BACKTOP
NOTES:
1.) TAU-II SYSTEM TO BE INSTALLED PER MANUFACTURER INSTRUCTIONS. REFER TO BSI SPECIFICATION B010714 OR B010819 FOR FOUNDATION REQUIREMENTS.
2.) SUPPORT SPACING AND POSTS SHOWN ARE IN ACCORDANCE WITH AASHTO SPECIFICATION STB06 AND NEVADA DOT SPECIFICATION R-B.4.3.
3.) 4-SPACE THRIE BEAM GUARDRAIL PER AASHTO HARDWARE SPECIFICATION RTM01b. ADDITIONAL HOLES ARE REQUIRED AT 18¾ [476] SPACING.
4.) RECTANGULAR GUARDRAIL WASHER PER AASHTO HARDWARE SPECIFICATION FWR03.
5.) OVERLAP PANELS ACCORDING TO DIRECTION OF TRAFFIC. UNDERLYING PART SHOULD BE DOWNSTREAM OF TRAFFIC.
6.) TWO (2) 4-SPACED THRIE BEAM GUARDRAIL (RTM04b) PANELS-ONE SET INSIDE THE OTHER FOR BI-DIRECTIONAL TRAFFIC CONDITIONS. ONLY NEEDED ON SIDE WHERE TAU-II SYSTEM IS DOWNSTREAM OF TRANSITION.
7.) W-THRIE BEAM TRANSITION SECTION PER AASHTO HARDWARE SPECIFICATION RWT01b.
8.) 4-SPACE W-BEAM PER AASHTO HARDWARE SPECIFICATION RWM04a OR RWM04b.
NOTE:
THICKNESS OF WELD TO BE EQUAL TO THE THINNER OF 2 PIECES BEING JOINED. WELD TO BE ALL AROUND UNLESS OTHERWISE NOTED.
© 2001 Barrier Systems, Inc.
B SEE ECN 00368
A RELEASE PREP.
SCALE: 1:30
TITLE: TAU-II WITH COMPACT BACKSTOP, TRANSITION TO W-BEAM
MODEL
DRAWING NUMBER
B010728
REV.
B

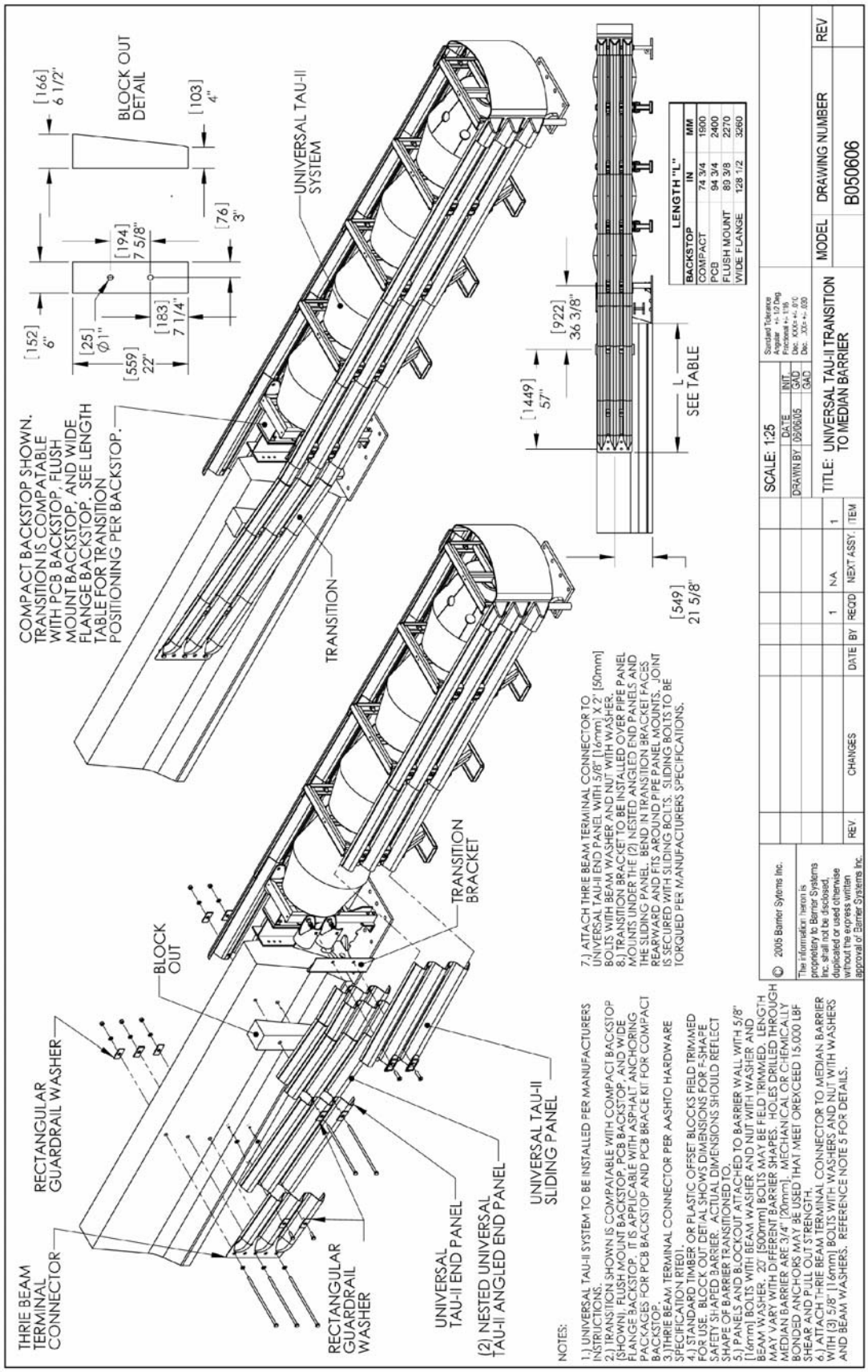
THRIE BEAM TERMINAL CONNECTOR
RECTANGULAR GUARDRAIL WASHER
RECTANGULAR GUARDRAIL WASHER
UNIVERSAL TAU-II END PANEL
(2) NESTED UNIVERSAL TAU-II ANGLED END PANEL
UNIVERSAL TAU-II SLIDING PANEL
BLOCK OUT
TRANSITION BRACKET
TRANSITION
COMPACT BACKSTOP SHOWN. TRANSITION IS COMPATABLE WITH PCB BACKSTOP, FLUSH MOUNT BACKSTOP, AND WIDE FLANGE BACKSTOP. SEE LENGTH TABLE FOR TRANSITION POSITIONING PER BACKSTOP.
UNIVERSAL TAU-II SYSTEM
BLOCK OUT DETAIL
[166] 6 1/2"
[103] 4"
[76] 3"
[194] 7 5/8"
[183] 7 1/4"
[152] 6"
[25] Ø1"
[559] 22"
[1449] 57"
[922] 36 3/8"
[549] 21 5/8"
L SEE TABLE
LENGTH "L"
BACKSTOP IN MM
COMPACT 74 3/4 1900
PCB 94 3/4 2400
FLUSH MOUNT 89 3/8 2270
WIDE FLANGE 128 1/2 3260
NOTES:
1.) UNIVERSAL TAU-II SYSTEM TO BE INSTALLED PER MANUFACTURERS INSTRUCTIONS.
2.) TRANSITION SHOWN IS COMPATABLE WITH COMPACT BACKSTOP (SHOWN), FLUSH MOUNT BACKSTOP, PCB BACKSTOP, AND WIDE FLANGE BACKSTOP. IT IS APPLICABLE WITH ASPHALT ANCHORING PACKAGES FOR PCB BACKSTOP AND PCB BRACE KIT FOR COMPACT BACKSTOP.
3.)THRIE BEAM TERMINAL CONNECTOR PER AASHTO HARDWARE SPECIFICATION R180.
4.) STANDARD TIMBER OR PLASTIC OFFSET BLOCKS FIELD TRIMMED FOR USE. BLOCK OUT DETAIL SHOWS DIMENSIONS FOR F-SHAPE SAFETY SHAPED BARRIER. ACTUAL DIMENSIONS SHOULD REFLECT SHAPE OF BARRIER TRANSITIONED TO.
5.) PANELS AND BLOCKOUT ATTACHED TO BARRIER WALL WITH 5/8" [16mm] BOLTS WITH BEAM WASHER AND NUT WITH WASHER AND BEAM WASHER. 20' [500mm] BOLTS MAY BE FIELD TRIMMED. LENGTH MAY VARY WITH DIFFERENT BARRIER SHAPES. HOLES DRILLED THROUGH MEDIAN BARRIER ARE 3/4" [20mm]. MECHANICAL OR CHEMICALLY BONDED ANCHORS MAY BE USED THAT MEET OREXCEED 15,000 LBF SHEAR AND PULL OUT STRENGTH.
6.) ATTACH THRIE BEAM TERMINAL CONNECTOR TO MEDIAN BARRIER WITH (3) 5/8" [16mm] BOLTS WITH WASHERS AND NUT WITH WASHERS AND BEAM WASHERS. REFERENCE NOTE 5 FOR DETAILS.
7.) ATTACH THRIE BEAM TERMINAL CONNECTOR TO UNIVERSAL TAU-II END PANEL WITH 5/8" [16mm] X 2" [50mm] BOLTS WITH BEAM WASHER AND NUT WITH WASHER.
8.) TRANSITION BRACKET TO BE INSTALLED OVER PIPE PANEL MOUNTS UNDER THE (2) NESTED ANGLED END PANELS AND THE SLIDING PANEL. BEND IN TRANSITION BRACKET FACES REARWARD AND FITS AROUND PIPE PANEL MOUNTS. JOINT IS SECURED WITH SLIDING BOLTS. SLIDING BOLTS TO BE TORQUED PER MANUFACTURERS SPECIFICATIONS.
© 2005 Barrier Systems Inc.
The information herein is proprietary to Barrier Systems Inc. shall not be disclosed, duplicated or used otherwise without the express written approval of Barrier Systems Inc.
REV CHANGES DATE BY REQ'D NEXT ASSY. ITEM
1 NA 1
SCALE: 1:25
DRAWN BY DATE
INIT. 09/06/05
CAD
QAD
Standard Tolerance
Angular +- 1/2 Deg
Fractional +- 1/16
Dec. .XX+- .010
Dec. .XXX+- .005
Dec. .XXX+- .003
TITLE: UNIVERSAL TAU-II TRANSITION TO MEDIAN BARRIER
MODEL DRAWING NUMBER REV
B050606

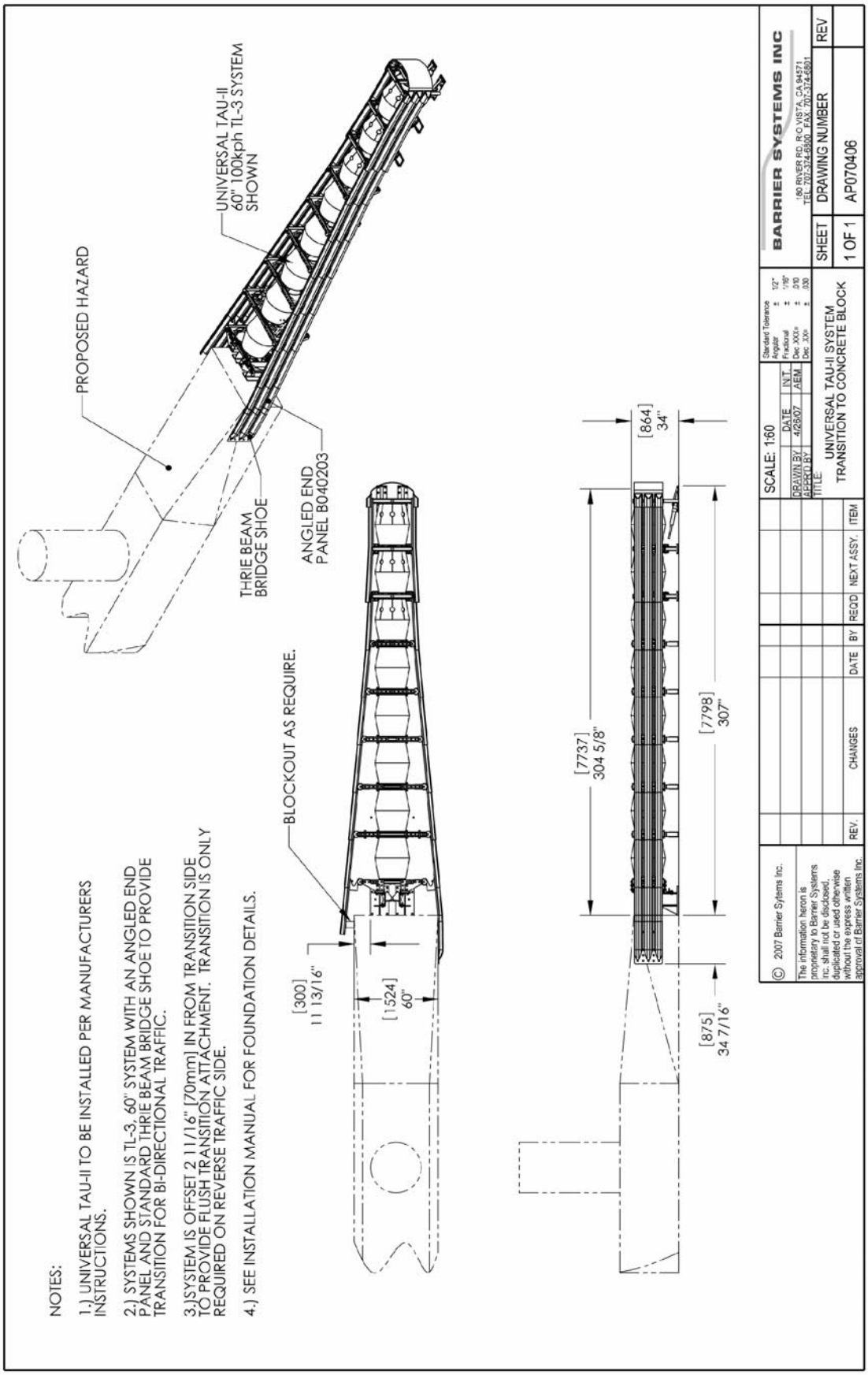
NOTES:
1.) UNIVERSAL TAU-II TO BE INSTALLED PER MANUFACTURERS INSTRUCTIONS.
2.) SYSTEMS SHOWN IS TL-3, 60" SYSTEM WITH AN ANGLED END PANEL AND STANDARD THRIE BEAM BRIDGE SHOE TO PROVIDE TRANSITION FOR BI-DIRECTIONAL TRAFFIC.
3.)SYSTEM IS OFFSET 2 11/16" [70mm] IN FROM TRANSITION SIDE TO PROVIDE FLUSH TRANSITION ATTACHMENT. TRANSITION IS ONLY REQUIRED ON REVERSE TRAFFIC SIDE.
4.) SEE INSTALLATION MANUAL FOR FOUNDATION DETAILS.
PROPOSED HAZARD
UNIVERSAL TAU-II 60" 100kph TL-3 SYSTEM SHOWN
THRIE BEAM BRIDGE SHOE
ANGLED END PANEL B040203
BLOCKOUT AS REQUIRE.
[300] 11 13/16"
[1524] 60"
[7737] 304 5/8"
[7798] 307"
[864] 34"
[875] 34 7/16"
SCALE: 1:60
DRAWN BY 4/26/07 INT
APPRD BY AEM
TITLE: UNIVERSAL TAU-II SYSTEM TRANSITION TO CONCRETE BLOCK
Standard Tolerance
Angular ± 1/2°
Fractional ± 1/16"
Dec .XXX± ± .010
Dec .XX± ± .030
BARRIER SYSTEMS INC
180 RIVER RD. R/O VISTA, CA 94571
TEL: 707-374-6800 FAX: 707-374-6881
SHEET 1 OF 1
DRAWING NUMBER AP070406
REV
REV. CHANGES DATE BY REQD NEXT ASSY. ITEM
© 2007 Barrier Sytems Inc.
The information heron is proprietary to Barrier Systems Inc. shall not be disclosed, duplicated or used otherwise without the express written approval of Barrier Systems Inc.

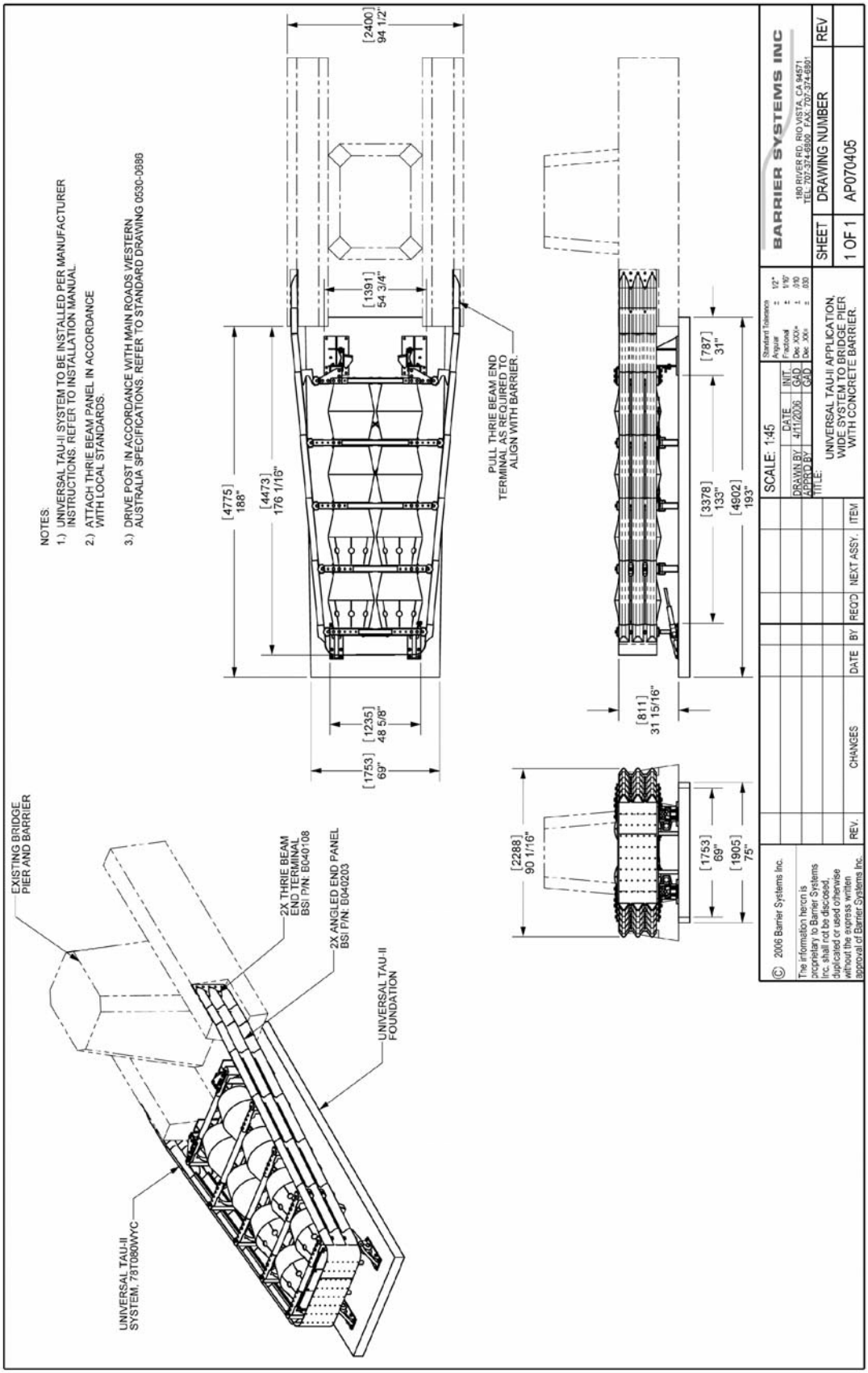
NOTES:
1.) UNIVERSAL TAU-II SYSTEM TO BE INSTALLED PER MANUFACTURER INSTRUCTIONS. REFER TO INSTALLATION MANUAL.
2.) ATTACH THRIE BEAM PANEL IN ACCORDANCE WITH LOCAL STANDARDS.
3.) DRIVE POST IN ACCORDANCE WITH MAIN ROADS WESTERN AUSTRALIA SPECIFICATIONS. REFER TO STANDARD DRAWING 0530-0086
EXISTING BRIDGE PIER AND BARRIER
2X THRIE BEAM END TERMINAL BSI P/N: B040108
2X ANGLED END PANEL BSI P/N: B040203
UNIVERSAL TAU-II FOUNDATION
UNIVERSAL TAU-II SYSTEM. 78T080WYC
[2400] 94 1/2"
[1391] 54 3/4"
[4775] 188"
[4473] 176 1/16"
PULL THRIE BEAM END TERMINAL AS REQUIRED TO ALIGN WITH BARRIER.
[1235] 48 5/8"
[1753] 69"
[787] 31"
[3378] 133"
[4902] 193"
[811] 31 15/16"
[2288] 90 1/16"
[1753] 69"
[1905] 75"
BARRIER SYSTEMS INC
180 RIVER RD. RIO VISTA, CA 94571
TEL: 707-374-6800 FAX: 707-374-6801
SHEET 1 OF 1
DRAWING NUMBER AP070405
REV
SCALE: 1:45
DRAWN BY 4/11/2006 GAD
APPRD BY GAD
UNIVERSAL TAU-II APPLICATION, WIDE SYSTEM TO BRIDGE PIER WITH CONCRETE BARRIER.
REV. CHANGES DATE BY REQ'D NEXT ASSY. ITEM
© 2006 Barrier Systems Inc.
The information herein is proprietary to Barrier Systems Inc. shall not be discosed, duplicated or used otherwise without the express written approval of Barrier Systems Inc.

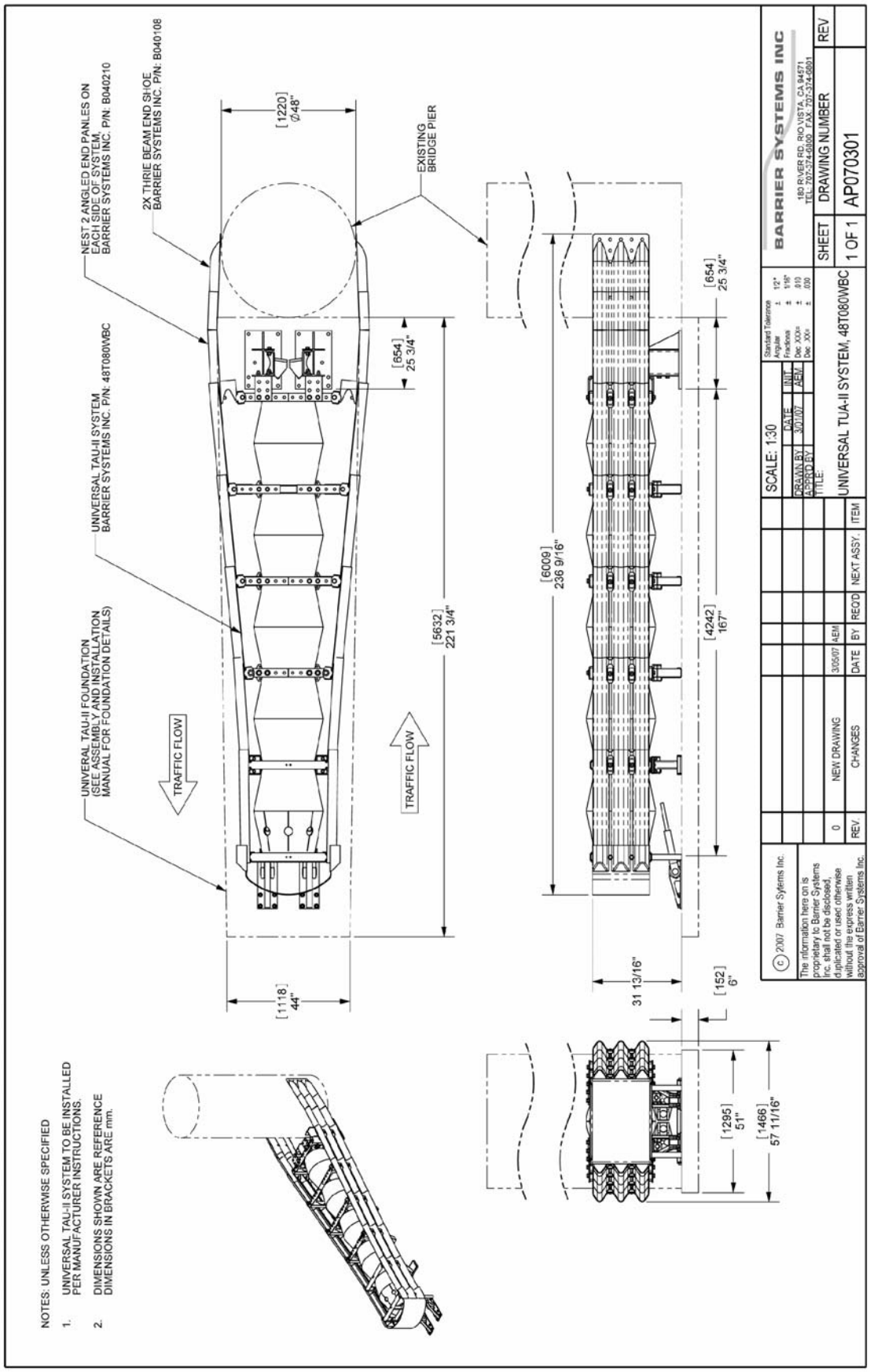
NOTES: UNLESS OTHERWISE SPECIFIED
1. UNIVERSAL TAU-II SYSTEM TO BE INSTALLED PER MANUFACTURER INSTRUCTIONS.
2. DIMENSIONS SHOWN ARE REFERENCE DIMENSIONS IN BRACKETS ARE mm.
UNIVERAL TAU-II FOUNDATION (SEE ASSEMBLY AND INSTALLATION MANUAL FOR FOUNDATION DETAILS)
UNIVERSAL TAU-II SYSTEM BARRIER SYSTEMS INC. P/N: 48T080WBC
NEST 2 ANGLED END PANLES ON EACH SIDE OF SYSTEM. BARRIER SYSTEMS INC. P/N: B040210
2X THRIE BEAM END SHOE BARRIER SYSTEMS INC. P/N: B040108
TRAFFIC FLOW
TRAFFIC FLOW
[1220] Ø48"
EXISTING BRIDGE PIER
[654] 25 3/4"
[654] 25 3/4"
[5632] 221 3/4"
[6009] 236 9/16"
[4242] 167"
[1118] 44"
31 13/16"
[152] 6"
[1295] 51"
[1466] 57 11/16"
BARRIER SYSTEMS INC
180 RIVER RD, RIO VISTA, CA 94571
TEL: 707-374-6800 FAX: 707-374-6801
SCALE: 1:30
DRAWN BY 3/01/07 AEM
APPRD BY
TITLE:
UNIVERSAL TUA-II SYSTEM, 48T080WBC
SHEET 1 OF 1
DRAWING NUMBER AP070301
REV
0 NEW DRAWING 3/05/07 AEM
REV CHANGES DATE BY
REQD NEXT ASSY. ITEM
© 2007 Barrier Sytems Inc.
The information here on is proprietary to Barrier Systems Inc. shall not be disclosed, duplicated or used otherwise without the express written approval of Barrier Systems Inc.

Universal TAU-II®
Attachment to BarrierGuard 800™
Installation Guide

Refer to the Universal TAU-II Installation and Maintenance Manual for more information, introduction, system overview, required tools, and other considerations for the Universal TAU-II systems.

The Universal TAU-II system is installed after the BarrierGuard 800 is fully deployed, installed, and anchored. Reference the BarrierGuard 800 Design, Installation, and Maintenance Manual for complete information on the BarrierGuard 800 barrier system implementation and installation.

The Universal TAU-II system utilizes a monolithic backstop that bolts directly in place of the terminal cover of the BarrierGuard 800. The front cable anchor remains as the only foundation anchorage required for the Universal TAU-II system. The front cable anchor is to be anchored to the same foundation type as the end of the BarrierGuard 800 that it is attached to (PC Concrete or Asphaltic Concrete). Anchorage shall be in accordance with
BSI specifications A040113.

Installation Procedure: *Each Procedure references a page number from the Universal TAU-II Installation Manual for further information –*

1.) Remove terminal cover from BarrierGuard 800 end section (if in place).

2.) Install and fasten Universal TAU-II BarrierGuard 800 Backstop in place. **(See diagram on next page).**

3.) Locate and position Front Cable anchor (see below). Drill and secure the appropriate anchors for the foundation used per BSI specification A040113. Use the Front Cable anchor as the drilling template. Use a BSI approved anchoring compound. See pages 12 &13.

4.) Place the Middle Bulkheads along the centerline of the system spaced approximately 34” [865mm] apart. See page 13.

5.) Thread the guide Cables through the legs of the Middle Bulkheads, threaded end first, starting from the front of the system. Loosely place the threaded end into the backstop lugs and spin the nut on to hold it in place. See pages 13 & 14.

6.) Pin the guide Cables to the Front Cable Anchor with the shackles. See page 14.

7.) Install Cable Guides. See pages 14 & 15.

8.) Attach Pipe Panel Mounts. See page 15.

9.) Install the End Panels and first Slider Panels starting at the Pipe Panel Mounts. If a transition is to be installed the End Panel will be replaced by the Angled End Panel. See page 16 & 72.

10.) Install Slider Panels. Start from the back of the system and move forward, overlapping the rearward panel. Secure the panels in place with the Slider Bolts. See pages 16 & 17.

11.) Install the Front Support, attach the Slider Panels, Nose Cover, and Leg Supports and connect to the first Middle Support with Slider Bolts. See page 18.

12.) Torque Slider Bolts and Front Panel Bolts and install Energy Absorbing Cartridges. See page 19.

13.) Apply tension to cables – Torque to specification. Ensure foundation anchors are properly cured. See page 20.

(See Installation Diagram on Next Page)

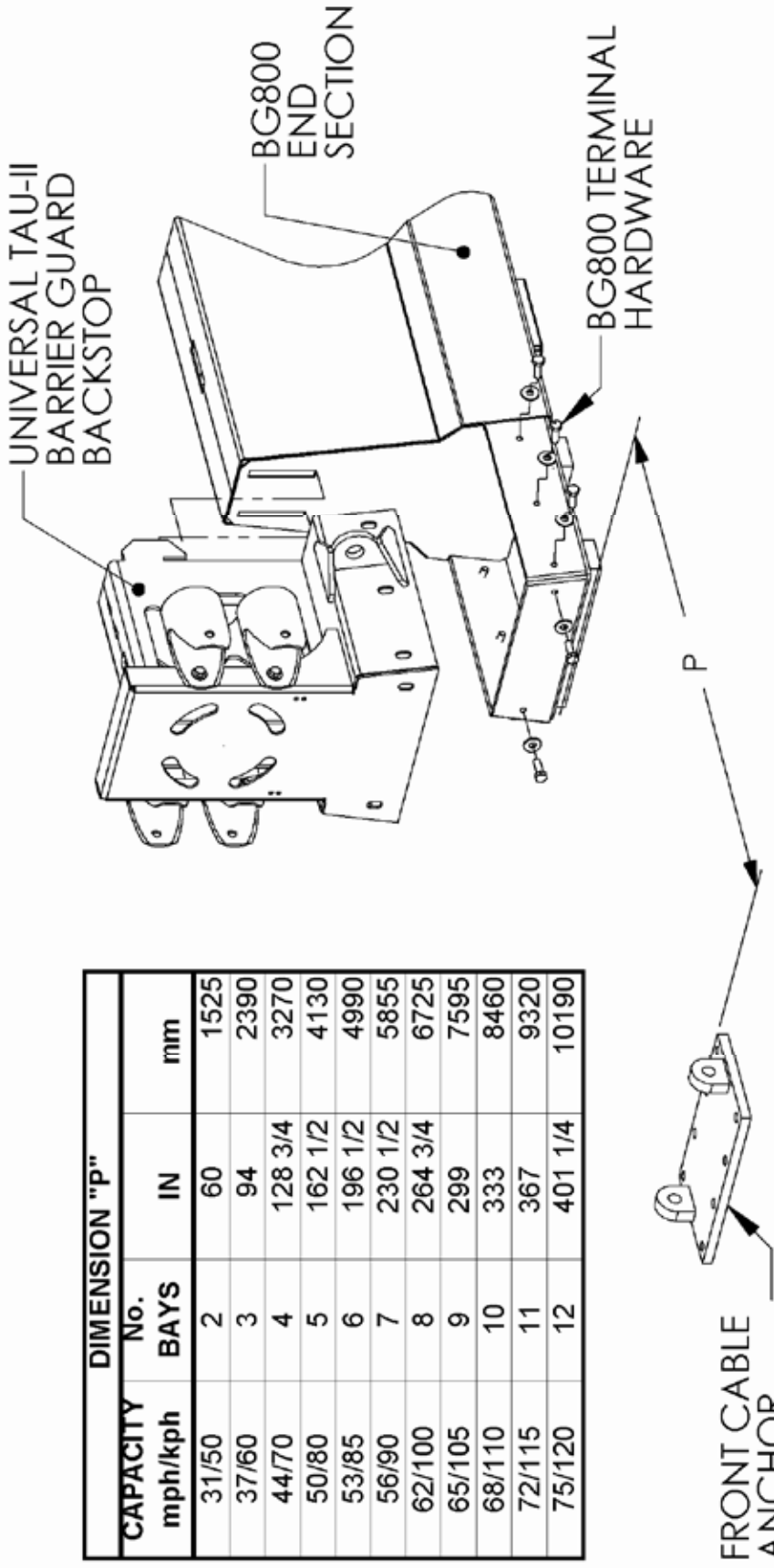

DIMENSION "P"			
CAPACITY mph/kph	No. BAYS	IN	mm
31/50	2	60	1525
37/60	3	94	2390
44/70	4	128 3/4	3270
50/80	5	162 1/2	4130
53/85	6	196 1/2	4990
56/90	7	230 1/2	5855
62/100	8	264 3/4	6725
65/105	9	299	7595
68/110	10	333	8460
72/115	11	367	9320
75/120	12	401 1/4	10190

Notes

APPENDIX E

Notes

LINDSAY™ TRANSPORTATION SOLUTIONS

BARRIER SYSTEMS® BY LINDSAY

RAILROAD PRODUCTS BY LINDSAY

SNOLINE™ BY LINDSAY

Lindsay Transportation Solutions Sales and Services, Inc
180 River Road • Rio Vista, CA 94571 • +1 707.374.6800 U.S. Toll Free: 888.800.3691 • www.barrriersystemsinc.com

Installation manual details for the TAU-II System are subject to change without notice to reflect improvements and upgrades.
Additional information is available from Barrier Systems Sales and Service © Lindsay Transportation Solutions

CALIFORNIA WATER SERVICE COMPANY
3725 SOUTH H STREET • BAKERSFIELD, CA 93304-6538
(661) 837-7200 • FAX (661) 396-2411

BAKERSFIELD DISTRICT

January 6, 2015

City of Bakersfield
Planning Department
1715 Chester Lane
Bakersfield, CA 93301

Will Serve Letter
Tract or Parcel Map No: *EA06-0E340*
Developer: *Caltrans*

To City of Bakersfield:

California Water Service Company (*insert district name*) district ("Cal Water") has determined that water is available to serve the above-referenced project based on the information provided. Cal Water agrees to operate the water system and provide service in accordance with the rules and regulations of the California Public Utilities Commission (CPUC) and the company's approved tariffs on file with the CPUC. This determination of water availability shall remain valid for **two years** from the date of this letter. If construction of the project has not commenced within this **two year** time frame, Cal Water will be under no further obligation to serve the project unless the developer receives an updated letter from Cal Water reconfirming water availability. Additionally, Cal Water reserves the right to rescind this letter at any time in the event its water supply is severely reduced by legislative, regulatory or environmental actions.

Cal Water will provide such potable water at such pressure as may be available from time to time as a result of its normal operations per the company's tariffs on file with the CPUC. Installation of facilities through developer funding shall be made in accordance with the current rules and regulations of the CPUC including, among others, Tariff Rules 15 and 16 and General Order 103-A. In order for us to provide adequate water for domestic use as well as fire service protection, it may be necessary for the developer to fund the cost of special facilities, such as, but not limited to, booster pumps, storage tanks, in addition to the cost of mains and services. The Developer will also be required to contribute towards Cal Water's water supply by paying facilities fees on a per lot basis as described in Rule 15. Cal Water will provide more specific information regarding special facilities and fees after you provide us with your improvement plans, fire department requirements, and engineering fees for this project.

CALIFORNIA WATER SERVICE COMPANY
3725 SOUTH H STREET • BAKERSFIELD, CA 93304-6538

This letter shall at all times be subject to such changes or modifications by the CPUC as said Commission may, from time to time, require in the exercise of its jurisdiction.

If you have any questions regarding the above, please call me at (661) 837-7240.

Sincerely,

Rudy A. Valles, Jr.
District Manager

cc: Ting He – Cal Water Engineering Dept
Brian Bennette – Customer Service Manager
File