Dist	COUNTY	ROUTE	POST MILES TOTAL PROJECT	SHEET No.	TOTAL SHEETS
05	SB,SLO	101	91.0,0.0/0.8	101	299

8-12-09
REGISTERED CIVIL ENGINEER DATE

11-2-09
PLANS APPROVAL DATE

REGISTERED PROFESSIONAL ENGINEER HASSAN MAREI No. C035068 Exp. 9-30-11 CIVIL STATE OF CALIFORNIA

THE STATE OF CALIFORNIA OR ITS OFFICERS OR AGENTS SHALL NOT BE RESPONSIBLE FOR THE ACCURACY OR COMPLETENESS OF SCANNED COPIES OF THIS PLAN SHEET.

CONSTRUCTION AREA SIGNS (STATIONARY MOUNTED) CONTINUED

SHEET No.	SIGN No. ◯	SIGN CODE	PANEL SIZE (in X in)	No. OF POST AND SIZE (in X in)	No. OF SIGNS	SIGN MESSAGE
TH-22	50	W13-1	24 X 24	1 - 4 X 6	1	55 MPH
	51	W20-1	48 X 48	1 - 4 X 6	1	ROAD WORK AHEAD
	52	W13-1	24 X 24	1 - 4 X 6	2	55 MPH
	53	W20-1	48 X 48	1 - 4 X 6	2	ROAD WORK AHEAD
TH-23	54	R11-2	48 X 30	1 - 6 X 6	1	RAMP CLOSED
		C38 (CA)	48 X 36			USE NEXT EXIT
	55	W1-4	48 X 48	1 - 4 X 6	2	TURN AND CURVE SIGN
TH-24	56	W13-1	24 X 24	1 - 4 X 6	1	55 MPH
	57	W20-1	48 X 48	1 - 4 X 6	1	ROAD WORK AHEAD
	58	W13-1	24 X 24	1 - 4 X 6	2	55 MPH
	59	W20-1	48 X 48	1 - 4 X 6	2	ROAD WORK AHEAD
TH-25	60	W20-1	48 X 48	1 - 4 X 6	2	ROAD WORK AHEAD
	61	C20(CA)(L+)	48 X 48	1 - 4 X 6	2	LEFT LANE CLOSED AHEAD
	62	W4-2L	48 X 48	1 - 6 X 6	2	LEFT LANE ENDS SYMBOL
		C29 (CA)	29 X 29			1000 FT

CONSTRUCTION AREA SIGNS (STATIONARY MOUNTED) CONTINUED

SHEET No.	SIGN No. ◯	SIGN CODE	PANEL SIZE (in X in)	No. OF POST AND SIZE (in X in)	No. OF SIGNS	SIGN MESSAGE
TH-25	63	M4-9a	30 X 24	1 - 4 X 6	1	BIKE/PED DETOUR R+ DIRECTIONAL ARROW (FROM STAGE 3)
		R44c	30 X 30			BICYCLES MUST EXIT (FROM STAGE 3)
	64	W20-1	48 X 48	1 - 4 X 6	1	ROAD WORK AHEAD
	65	C31A (CA)	48 X 48	1 - 4 X 6	1	NO SHOULDER
	66	W13-1	24 X 24	1 - 4 X 6	2	55 MPH
	67	C30 (CA)	48 X 48	1 - 4 X 6	1	LANE CLOSED
	68	C31A (CA)	48 X 48	1 - 4 X 6	2	NO SHOULDER
TH-29	69	W13-1	24 X 24	1 - 4 X 6	1	55 MPH
	70	W20-1	48 X 48	1 - 4 X 6	1	ROAD WORK AHEAD
	71	W13-1	24 X 24	1 - 4 X 6	2	55 MPH
	72	W20-1	48 X 48	1 - 4 X 6	2	ROAD WORK AHEAD

TRAFFIC HANDLING QUANTITIES

THQ-12

REVISED BY | DATE REVISED
JOE ERWIN | RAJESH PATEL
CALCULATED-DESIGNED BY | CHECKED BY
FUNCTIONAL SUPERVISOR | HASSAN MAREI
STATE OF CALIFORNIA - DEPARTMENT OF TRANSPORTATION
Caltrans® TRAFFIC DESIGN

LAST REVISION 08-12-09 | DATE PLOTTED => 15-DEC-2009 | TIME PLOTTED => 09:01

Dist	COUNTY	ROUTE	POST MILES TOTAL PROJECT	SHEET No.	TOTAL SHEETS
05	SB,SLO	101	91.0,0.0/0.8	102	299

Hassan Marei 8-12-09
REGISTERED CIVIL ENGINEER DATE

11-2-09
PLANS APPROVAL DATE

REGISTERED PROFESSIONAL ENGINEER HASSAN MAREI No. C035068 Exp. 9-30-11 CIVIL STATE OF CALIFORNIA

THE STATE OF CALIFORNIA OR ITS OFFICERS OR AGENTS SHALL NOT BE RESPONSIBLE FOR THE ACCURACY OR COMPLETENESS OF SCANNED COPIES OF THIS PLAN SHEET.

TRAFFIC DETOUR PLAN

FROM : SANTA MARIA OR 101 SOUTH

SB ON RAMP CLOSED AT ROUTE 101/166 Sep.
TAKE HUTTON ROAD NORTH TO TEFFT St.
TURN RIGHT ON TEFFT St.
TURN RIGHT ON SB ON RAMP TO ROUTE 101.

FROM : 166 EAST

SB ON RAMP CLOSED AT ROUTE 101/166 Sep.
TAKE 101 NORTH TO NIPOMO EXIT TEFFT St.
LEFT ON TEFFT St.
TURN LEFT ON SB ON RAMP TO ROUTE 101.

LEGEND:

- CONSTRUCT THIS STAGE
- DIRECTION OF TRAFFIC

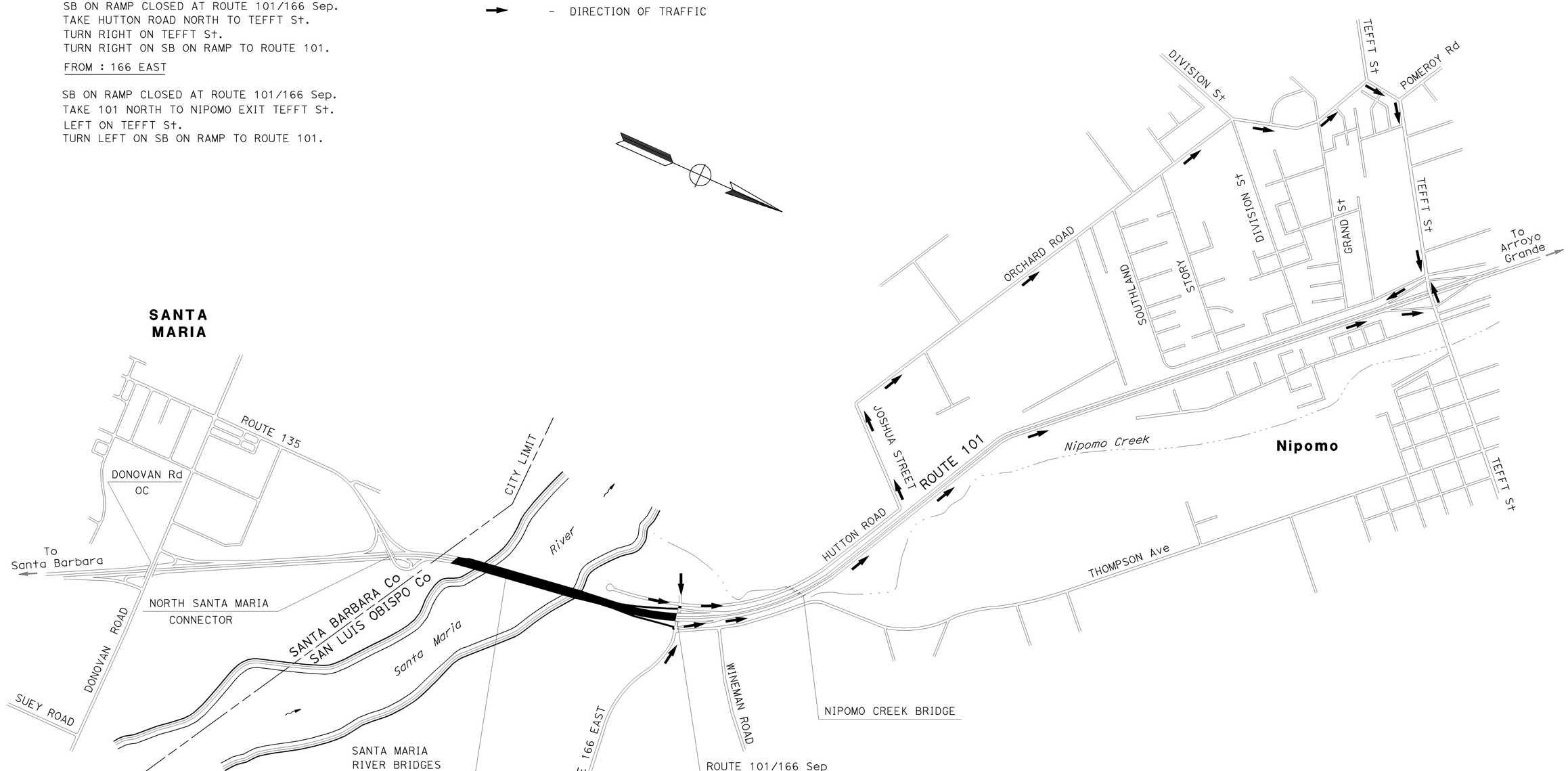

THIS PLAN ACCURATE FOR DETOUR CONSTRUCTION WORK ONLY.

DETOUR PLAN
(SB ON RAMP)

NO SCALE **DE-1**

STATE OF CALIFORNIA - DEPARTMENT OF TRANSPORTATION
Caltrans® **TRAFFIC DESIGN**

FUNCTIONAL SUPERVISOR: HASSAN MAREI
CALCULATED-DESIGNED BY: JOE ERWIN
CHECKED BY: GURMIT GILL
REVISED BY
DATE REVISED

LAST REVISION 08-12-09 | DATE PLOTTED => 15-DEC-2009 | TIME PLOTTED => 09:01

Dist	COUNTY	ROUTE	POST MILES TOTAL PROJECT	SHEET No.	TOTAL SHEETS
05	SB,SLO	101	91.0,0.0/0.8	103	299

REGISTERED CIVIL ENGINEER 8-12-09 DATE

11-2-09
PLANS APPROVAL DATE

REGISTERED PROFESSIONAL ENGINEER HASSAN MAREI No. C035068 Exp. 9-30-11 CIVIL STATE OF CALIFORNIA

THE STATE OF CALIFORNIA OR ITS OFFICERS OR AGENTS SHALL NOT BE RESPONSIBLE FOR THE ACCURACY OR COMPLETENESS OF SCANNED COPIES OF THIS PLAN SHEET.

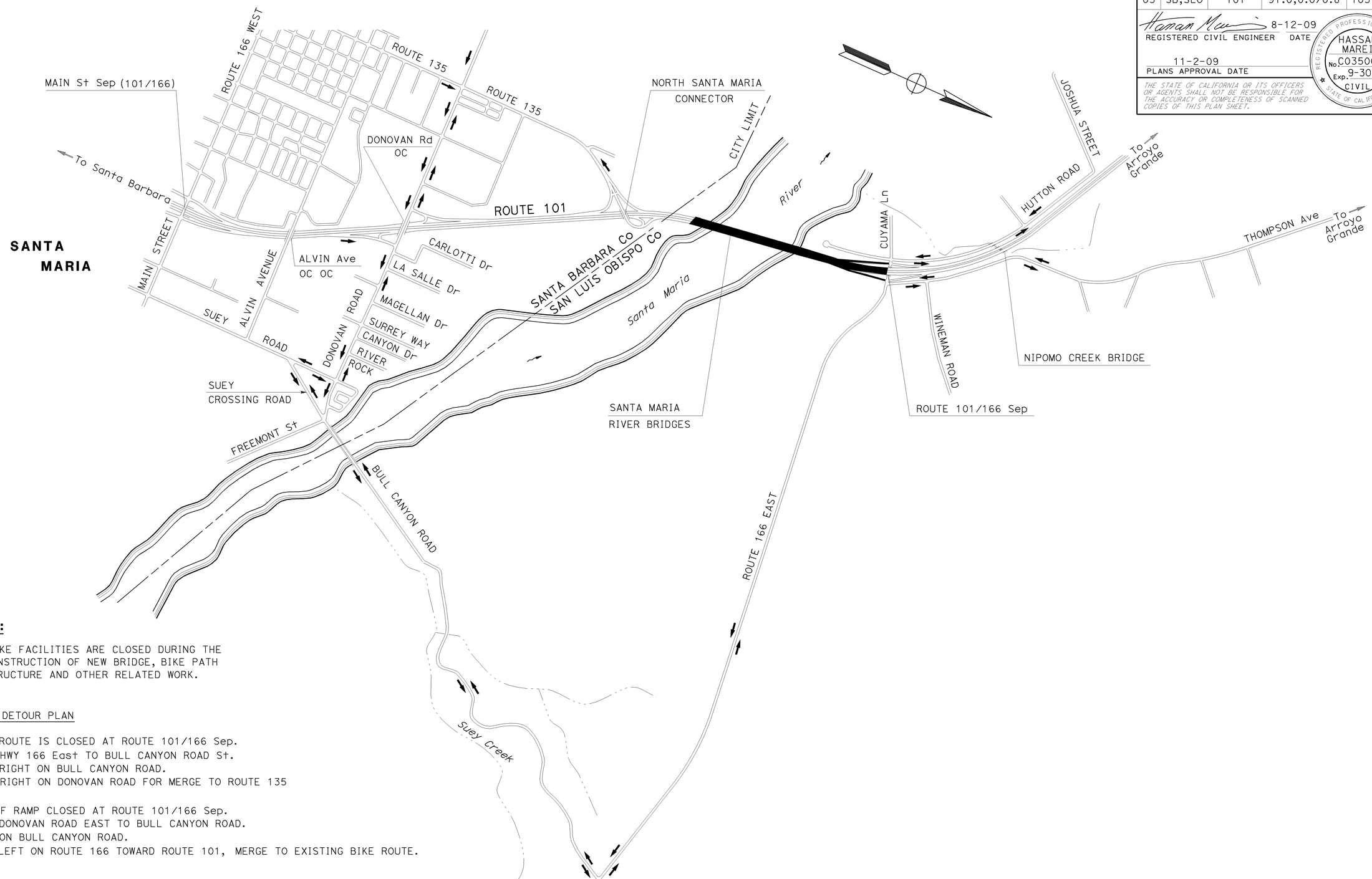

NOTE:

1. BIKE FACILITIES ARE CLOSED DURING THE CONSTRUCTION OF NEW BRIDGE, BIKE PATH STRUCTURE AND OTHER RELATED WORK.

BIKE DETOUR PLAN

BIKE ROUTE IS CLOSED AT ROUTE 101/166 Sep.
TAKE HWY 166 East TO BULL CANYON ROAD St.
TURN RIGHT ON BULL CANYON ROAD.
TURN RIGHT ON DONOVAN ROAD FOR MERGE TO ROUTE 135

NB OFF RAMP CLOSED AT ROUTE 101/166 Sep.
TAKE DONOVAN ROAD EAST TO BULL CANYON ROAD.
LEFT ON BULL CANYON ROAD.
TURN LEFT ON ROUTE 166 TOWARD ROUTE 101, MERGE TO EXISTING BIKE ROUTE.

THIS PLAN ACCURATE FOR DETOUR CONSTRUCTION WORK ONLY.

DETOUR PLAN
(BIKE PATH)

NO SCALE **DE-2**

STATE OF CALIFORNIA - DEPARTMENT OF TRANSPORTATION
Caltrans® **TRAFFIC DESIGN**

FUNCTIONAL SUPERVISOR: HASSAN MAREI
CALCULATED-DESIGNED BY: JOE ERWIN
CHECKED BY: GURMIT GILL
REVISED BY
DATE REVISED

LAST REVISION 08-12-09
DATE PLOTTED => 15-DEC-2009
TIME PLOTTED => 09:01

Dist	COUNTY	ROUTE	POST MILES TOTAL PROJECT	SHEET No.	TOTAL SHEETS
05	SB,SLO	101	91.0,0.0/0.8	104	299

REGISTERED CIVIL ENGINEER 8-12-09 DATE

11-2-09
PLANS APPROVAL DATE

REGISTERED PROFESSIONAL ENGINEER HASSAN MAREI No. C035068 Exp. 9-30-11 CIVIL STATE OF CALIFORNIA

THE STATE OF CALIFORNIA OR ITS OFFICERS OR AGENTS SHALL NOT BE RESPONSIBLE FOR THE ACCURACY OR COMPLETENESS OF SCANNED COPIES OF THIS PLAN SHEET.

TRAFFIC DETOUR PLAN

FROM : SANTA MARIA OR 101 SOUTH

NB OFF RAMP CLOSED AT ROUTE 101/166 Sep.
TAKE 101 NORTH TO NIPOMO EXIT TEFFT St.
LEFT ON TEFFT St.
TURN LEFT ON SB ON RAMP TO ROUTE 101/166 Sep.

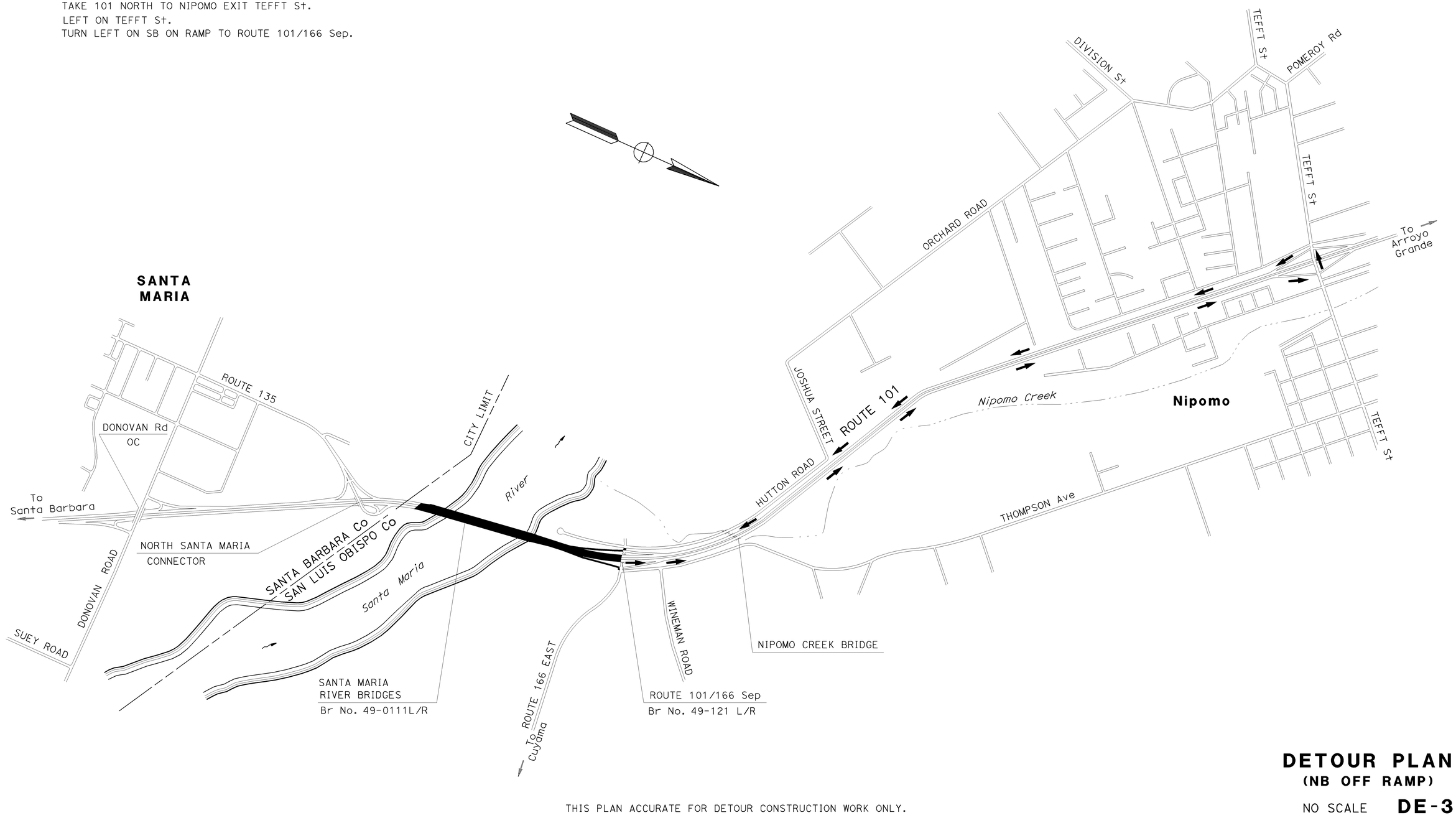

THIS PLAN ACCURATE FOR DETOUR CONSTRUCTION WORK ONLY.

DETOUR PLAN
(NB OFF RAMP)

NO SCALE **DE-3**

STATE OF CALIFORNIA - DEPARTMENT OF TRANSPORTATION
Caltrans® **TRAFFIC DESIGN**

FUNCTIONAL SUPERVISOR: HASSAN MAREI
CALCULATED-DESIGNED BY: JOE ERWIN
CHECKED BY: GURMIT GILL
REVISED BY
DATE REVISED

LAST REVISION 08-12-09 | DATE PLOTTED => 15-DEC-2009 | TIME PLOTTED => 09:02

Dist	COUNTY	ROUTE	POST MILES TOTAL PROJECT	SHEET No.	TOTAL SHEETS
05	SB,SLO	101	91.0,0.0/0.8	105	299

8-12-09
REGISTERED CIVIL ENGINEER DATE

11-2-09
PLANS APPROVAL DATE

REGISTERED PROFESSIONAL ENGINEER
HASSAN MAREI
No. C035068
Exp. 9-30-11
CIVIL
STATE OF CALIFORNIA

THE STATE OF CALIFORNIA OR ITS OFFICERS OR AGENTS SHALL NOT BE RESPONSIBLE FOR THE ACCURACY OR COMPLETENESS OF SCANNED COPIES OF THIS PLAN SHEET.

LEGEND

- (1) ROADSIDE SIGN (WITH NUMBER)
- (A) OVERHEAD SIGN (WITH LETTER)
- ⊗ REMOVE ROADSIDE SIGN (ONE OR TWO POST)
- XX THERMOPLASTIC TRAFFIC STRIPE (SPRAYABLE) DETAIL No.
- STRIPE CHANGE LOCATION
- INSTALL OVERHEAD SIGN STRUCTURE
- ROADSIDE SIGN (ONE OR TWO POST)
- ▲ RELOCATE ROADSIDE SIGN
- METAL (BARRIER-MOUNTED SIGN)
- ■ INSTALL ROADSIDE SIGN PANEL ON EXISTING POST
- ▼ INSTALL OVERHEAD SIGN PANEL ON EXISTING SIGN STRUCTURE
- ⊠ REMOVE ROADSIDE SIGN (LAMINATED WOOD BOX POST)
- I_F DELINEATOR TYPE F (CLASS 1)
- I_G DELINEATOR TYPE G (CLASS 1)
- I^F_{GR} GUARD RAILING DELINEATOR TYPE F-1
- I^G_{GR} GUARD RAILING DELINEATOR TYPE G-1
- I_L OBJECT MARKER TYPE L-1 (OM2-1V)
- I_P OBJECT MARKER TYPE P-1 (OM-3L) OR (OM-3R)
- FNBT FACING NORTHBOUND TRAFFIC
- ● SIGN TO REMAIN IN PLACE
- OVERHEAD SIGN

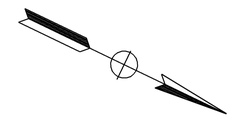

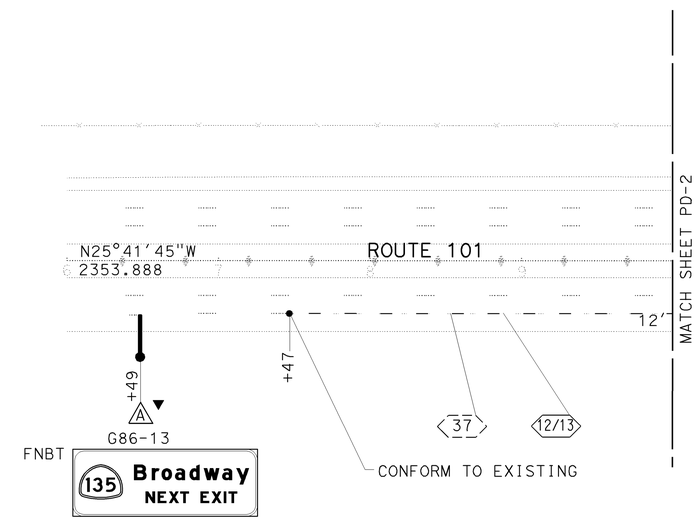

THIS PLAN ACCURATE FOR PAVEMENT DELINEATION AND SIGNING ONLY.

PAVEMENT DELINEATION AND SIGN PLAN

SCALE: 1"=50' **PD-1**

STATE OF CALIFORNIA - DEPARTMENT OF TRANSPORTATION
Caltrans® **TRAFFIC DESIGN**

FUNCTIONAL SUPERVISOR: HASSAN MAREI
CALCULATED-DESIGNED BY: JOE ERWIN
CHECKED BY: RAJESH PATEL
REVISED BY / DATE REVISED

LAST REVISION 08-12-09
DATE PLOTTED => 15-DEC-2009
TIME PLOTTED => 09:02

Dist	COUNTY	ROUTE	POST MILES TOTAL PROJECT	SHEET No.	TOTAL SHEETS
05	SB,SLO	101	91.0,0.0/0.8	106	299

8-12-09
REGISTERED CIVIL ENGINEER DATE

11-2-09
PLANS APPROVAL DATE

REGISTERED PROFESSIONAL ENGINEER
HASSAN MAREI
No. C035068
Exp. 9-30-11
CIVIL
STATE OF CALIFORNIA

THE STATE OF CALIFORNIA OR ITS OFFICERS OR AGENTS SHALL NOT BE RESPONSIBLE FOR THE ACCURACY OR COMPLETENESS OF SCANNED COPIES OF THIS PLAN SHEET.

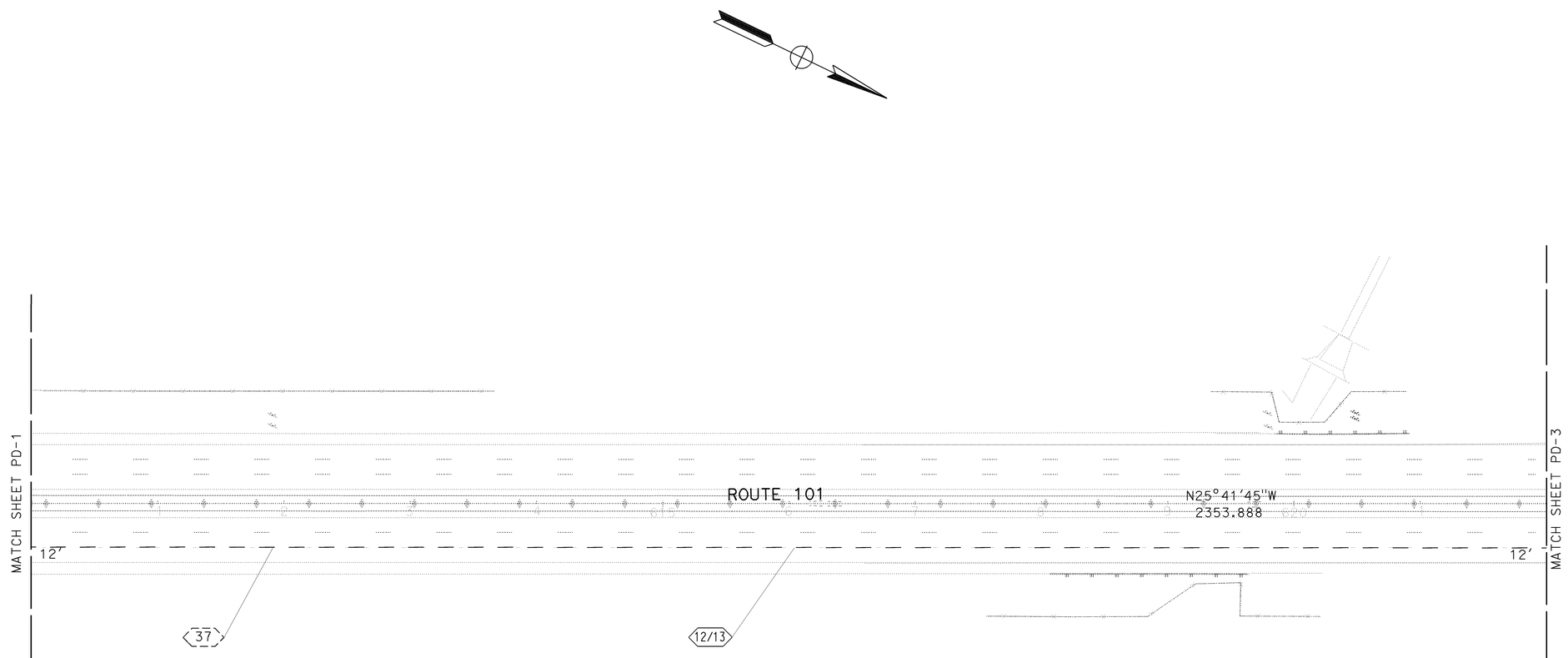

THIS PLAN ACCURATE FOR PAVEMENT DELINEATION AND SIGNING ONLY.

PAVEMENT DELINEATION AND SIGN PLAN

SCALE: 1"=50'

PD-2

STATE OF CALIFORNIA - DEPARTMENT OF TRANSPORTATION
Caltrans
TRAFFIC DESIGN

FUNCTIONAL SUPERVISOR: HASSAN MAREI
CALCULATED-DESIGNED BY: JOE ERWIN
CHECKED BY: RAJESH PATEL
REVISED BY
DATE REVISED

LAST REVISION 08-12-09
DATE PLOTTED => 15-DEC-2009
TIME PLOTTED => 09:02

Dist	COUNTY	ROUTE	POST MILES TOTAL PROJECT	SHEET No.	TOTAL SHEETS
05	SB,SLO	101	91.0,0.0/0.8	107	299

REGISTERED CIVIL ENGINEER 8-12-09 DATE

11-2-09
PLANS APPROVAL DATE

REGISTERED PROFESSIONAL ENGINEER
HASSAN MAREI
No. C035068
Exp. 9-30-11
CIVIL
STATE OF CALIFORNIA

THE STATE OF CALIFORNIA OR ITS OFFICERS OR AGENTS SHALL NOT BE RESPONSIBLE FOR THE ACCURACY OR COMPLETENESS OF SCANNED COPIES OF THIS PLAN SHEET.

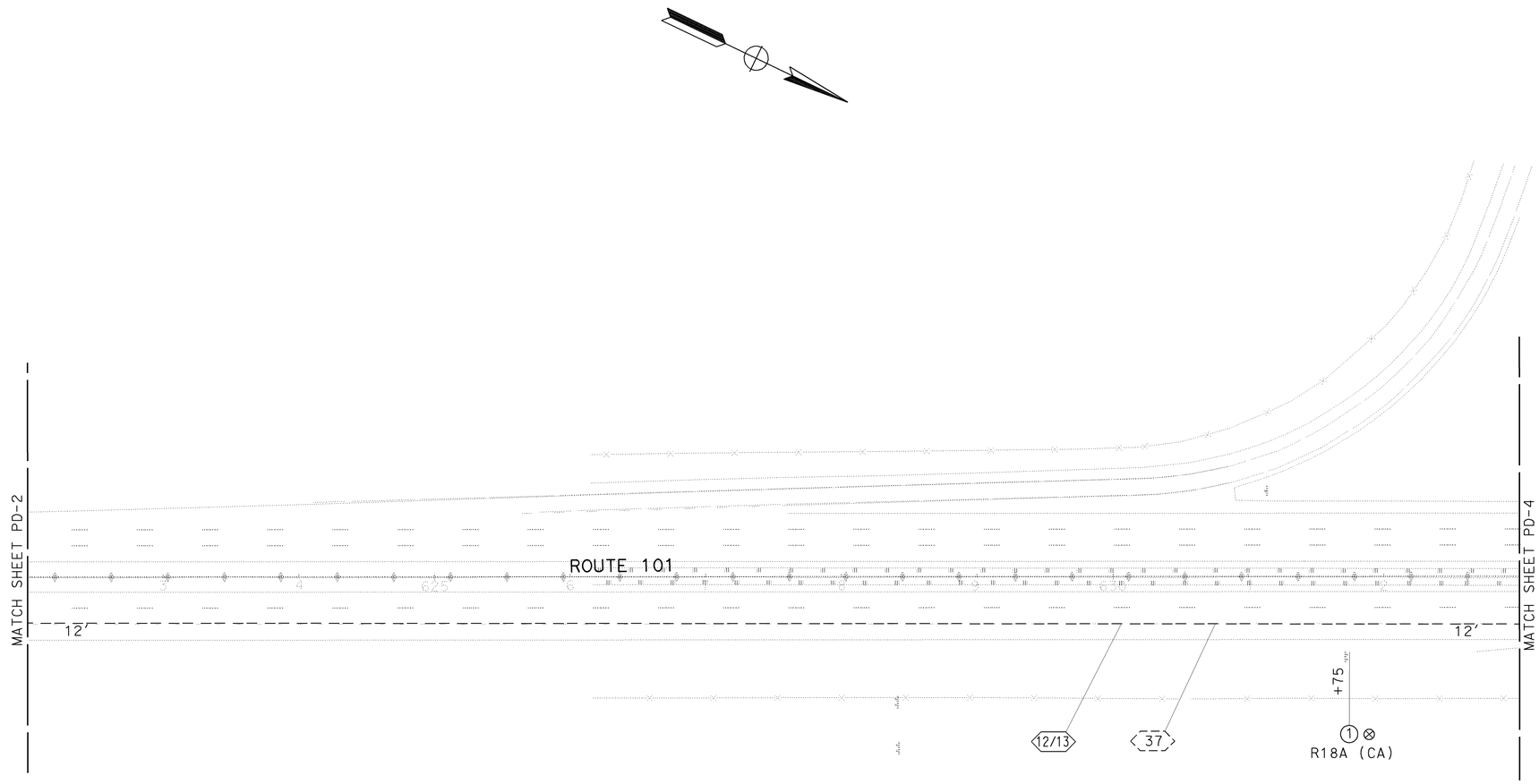

THIS PLAN ACCURATE FOR PAVEMENT DELINEATION AND SIGNING ONLY.

PAVEMENT DELINEATION AND SIGN PLAN

SCALE: 1"=50'

PD-3

STATE OF CALIFORNIA - DEPARTMENT OF TRANSPORTATION
Caltrans
TRAFFIC DESIGN

FUNCTIONAL SUPERVISOR: HASSAN MAREI
CALCULATED-DESIGNED BY: JOE ERWIN
CHECKED BY: RAJESH PATEL
REVISED BY
DATE REVISED

LAST REVISION 08-12-09
DATE PLOTTED => 15-DEC-2009
TIME PLOTTED => 09:02

Dist	COUNTY	ROUTE	POST MILES TOTAL PROJECT	SHEET No.	TOTAL SHEETS
05	SB,SLO	101	91.0,0.0/0.8	108	299

REGISTERED CIVIL ENGINEER 8-12-09 DATE

11-2-09
PLANS APPROVAL DATE

REGISTERED PROFESSIONAL ENGINEER HASSAN MAREI No. C035068 Exp. 9-30-11 CIVIL STATE OF CALIFORNIA

THE STATE OF CALIFORNIA OR ITS OFFICERS OR AGENTS SHALL NOT BE RESPONSIBLE FOR THE ACCURACY OR COMPLETENESS OF SCANNED COPIES OF THIS PLAN SHEET.

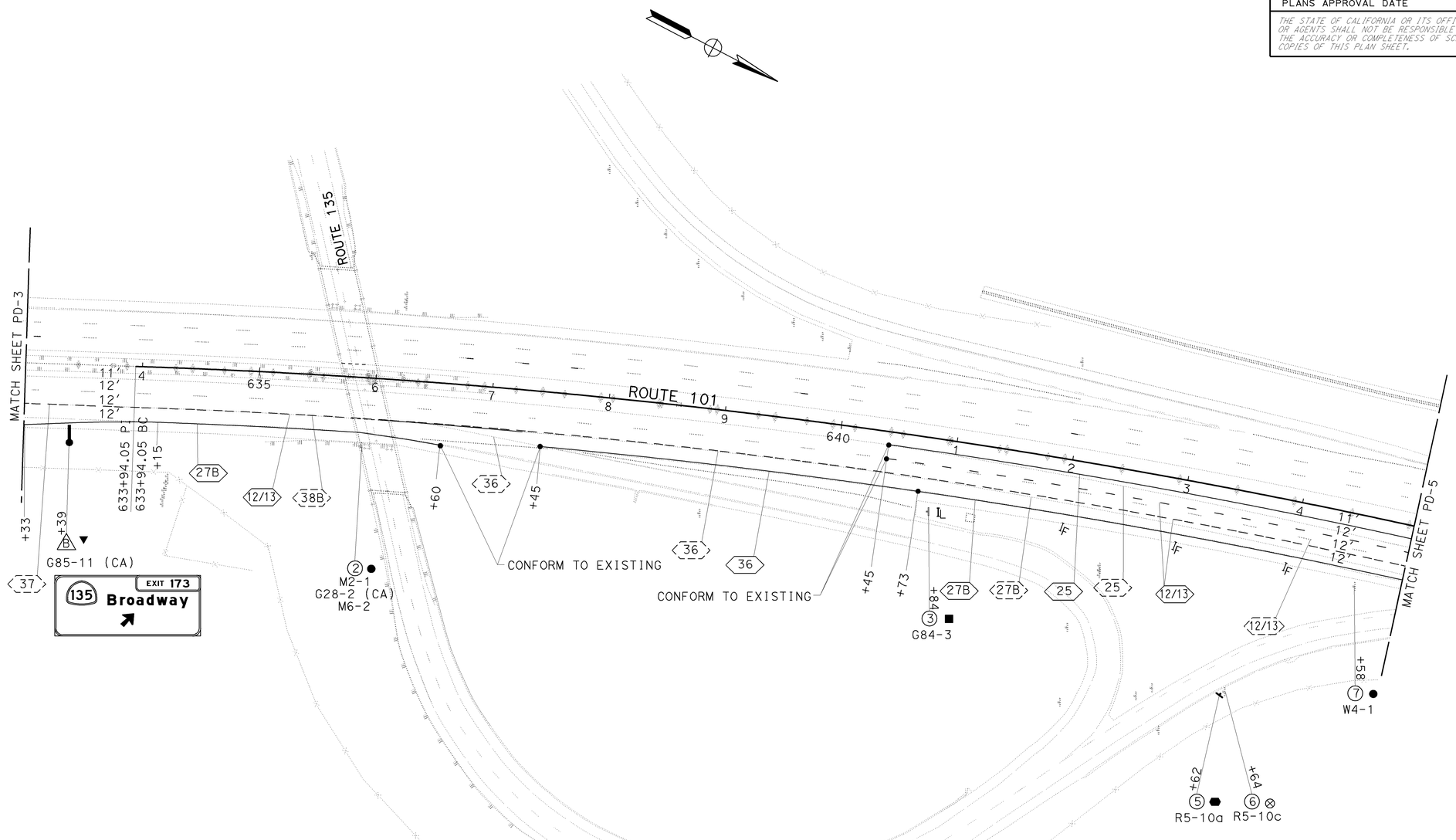

THIS PLAN ACCURATE FOR PAVEMENT DELINEATION AND SIGNING ONLY.

PAVEMENT DELINEATION AND SIGN PLAN

SCALE: 1"=50'

PD-4

STATE OF CALIFORNIA - DEPARTMENT OF TRANSPORTATION
Caltrans
TRAFFIC DESIGN

FUNCTIONAL SUPERVISOR: HASSAN MAREI
CALCULATED-DESIGNED BY: JOE ERWIN
CHECKED BY: RAJESH PATEL
REVISED BY
DATE REVISED

LAST REVISION 08-12-09
DATE PLOTTED => 15-DEC-2009
TIME PLOTTED => 09:02

Dist	COUNTY	ROUTE	POST MILES TOTAL PROJECT	SHEET No.	TOTAL SHEETS
05	SB,SLO	101	91.0,0.0/0.8	109	299

REGISTERED CIVIL ENGINEER 8-12-09 DATE

11-2-09
PLANS APPROVAL DATE

REGISTERED PROFESSIONAL ENGINEER HASSAN MAREI No. C035068 Exp. 9-30-11 CIVIL STATE OF CALIFORNIA

THE STATE OF CALIFORNIA OR ITS OFFICERS OR AGENTS SHALL NOT BE RESPONSIBLE FOR THE ACCURACY OR COMPLETENESS OF SCANNED COPIES OF THIS PLAN SHEET.

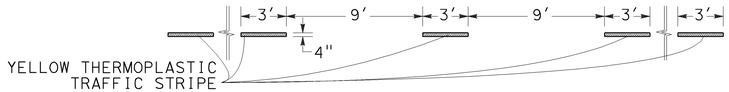

DETAIL 1 MODIFIED

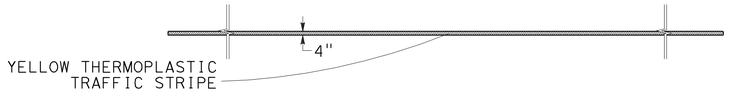

DETAIL 15 MODIFIED

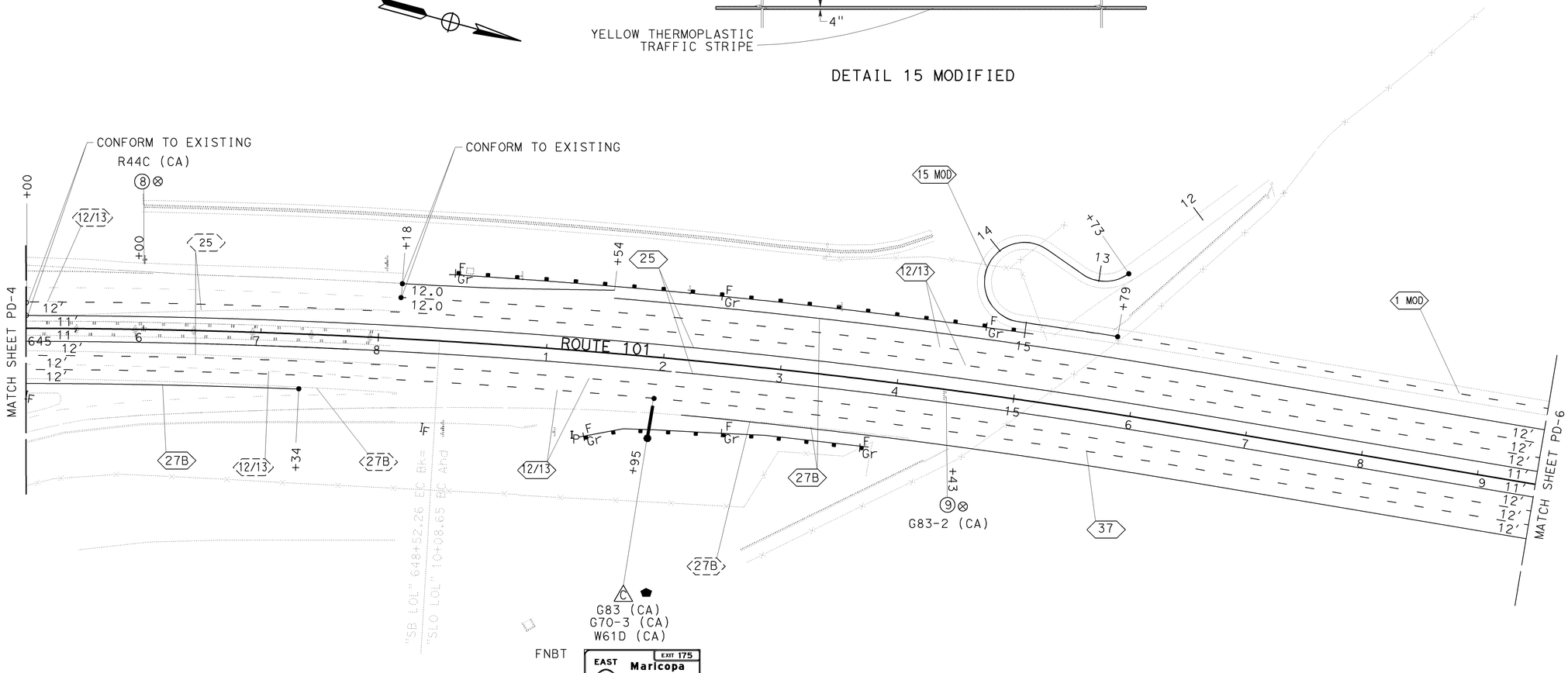

THIS PLAN ACCURATE FOR PAVEMENT DELINEATION AND SIGNING ONLY.

PAVEMENT DELINEATION AND SIGN PLAN

SCALE: 1"=50'

PD-5

STATE OF CALIFORNIA - DEPARTMENT OF TRANSPORTATION
Caltrans TRAFFIC DESIGN

FUNCTIONAL SUPERVISOR: HASSAN MAREI
CALCULATED-DESIGNED BY: JOE ERWIN
CHECKED BY: RAJESH PATEL
REVISED BY
DATE REVISED

LAST REVISION 08-12-09
DATE PLOTTED => 15-DEC-2009
TIME PLOTTED => 09:02

Dist	COUNTY	ROUTE	POST MILES TOTAL PROJECT	SHEET No.	TOTAL SHEETS
05	SB,SLO	101	91.0,0.0/0.8	110	299

Hassan Marei 8-12-09
REGISTERED CIVIL ENGINEER DATE

11-2-09
PLANS APPROVAL DATE

REGISTERED PROFESSIONAL ENGINEER
HASSAN MAREI
No. C035068
Exp. 9-30-11
CIVIL
STATE OF CALIFORNIA

THE STATE OF CALIFORNIA OR ITS OFFICERS OR AGENTS SHALL NOT BE RESPONSIBLE FOR THE ACCURACY OR COMPLETENESS OF SCANNED COPIES OF THIS PLAN SHEET.

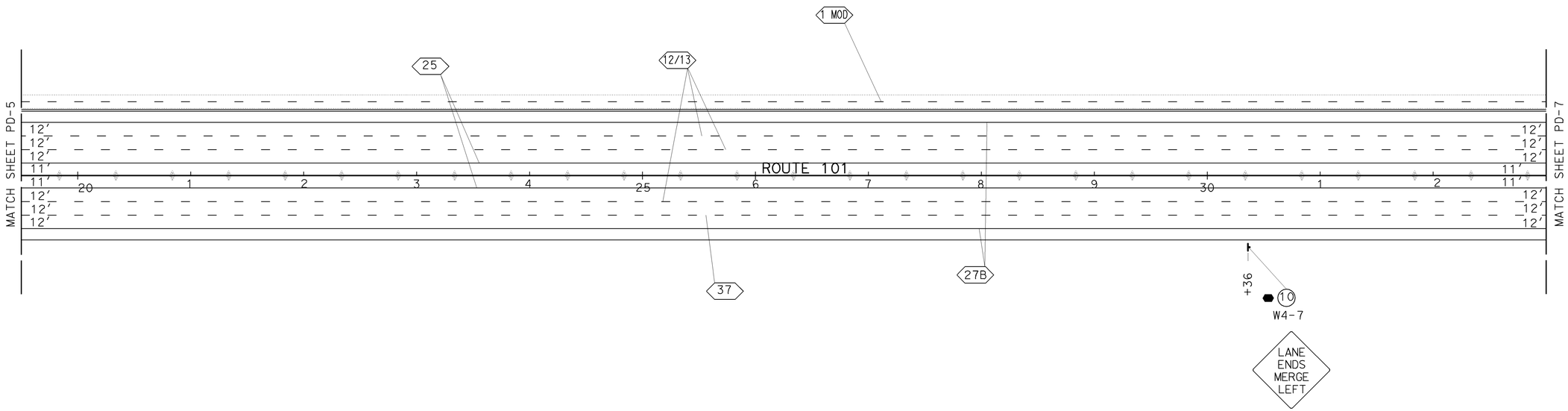

BRIDGE MOUNTED SIGN
(SEE DETAIL B11-55 ON THE STANDARD PLAN)

THIS PLAN ACCURATE FOR PAVEMENT DELINEATION AND SIGNING ONLY.

PAVEMENT DELINEATION AND SIGN PLAN

SCALE: 1"=50′ **PD-6**

STATE OF CALIFORNIA - DEPARTMENT OF TRANSPORTATION
Caltrans® **TRAFFIC DESIGN**

FUNCTIONAL SUPERVISOR: HASSAN MAREI
CALCULATED-DESIGNED BY: JOE ERWIN
CHECKED BY: RAJESH PATEL
REVISED BY
DATE REVISED

LAST REVISION 08-12-09
DATE PLOTTED => 15-DEC-2009
TIME PLOTTED => 09:02

Dist	COUNTY	ROUTE	POST MILES TOTAL PROJECT	SHEET No.	TOTAL SHEETS
05	SB,SLO	101	91.0,0.0/0.8	111	299

REGISTERED CIVIL ENGINEER 8-12-09 DATE

11-2-09
PLANS APPROVAL DATE

REGISTERED PROFESSIONAL ENGINEER HASSAN MAREI No. C035068 Exp. 9-30-11 CIVIL STATE OF CALIFORNIA

THE STATE OF CALIFORNIA OR ITS OFFICERS OR AGENTS SHALL NOT BE RESPONSIBLE FOR THE ACCURACY OR COMPLETENESS OF SCANNED COPIES OF THIS PLAN SHEET.

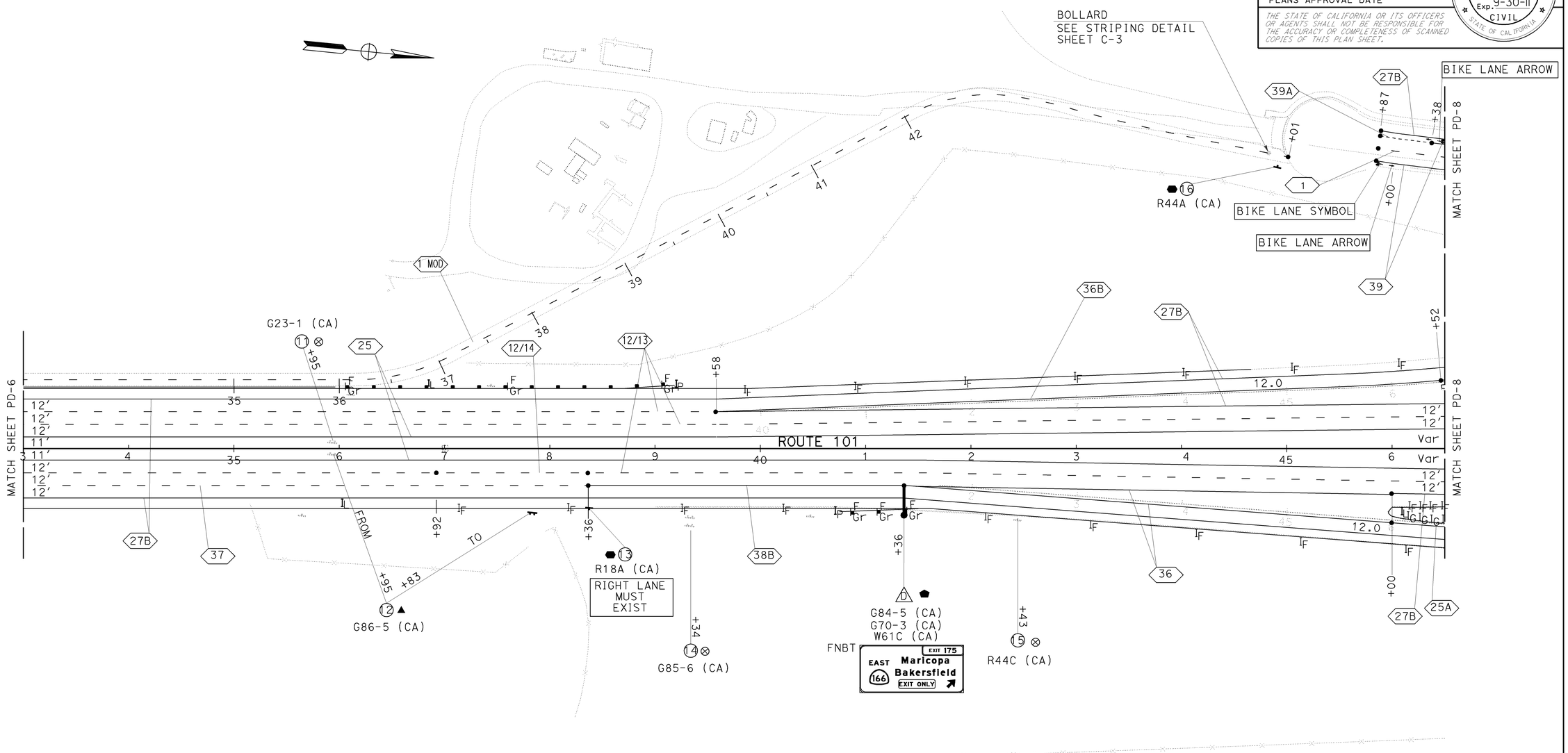

PAVEMENT DELINEATION AND SIGN PLAN

SCALE: 1"=50′ **PD-7**

THIS PLAN ACCURATE FOR PAVEMENT DELINEATION AND SIGNING ONLY.

REVISED BY	DATE REVISED

CALCULATED-DESIGNED BY: JOE ERWIN
CHECKED BY: RAJESH PATEL
FUNCTIONAL SUPERVISOR: HASSAN MAREI

STATE OF CALIFORNIA - DEPARTMENT OF TRANSPORTATION
Caltrans
TRAFFIC DESIGN

LAST REVISION 08-12-09
DATE PLOTTED => 15-DEC-2009
TIME PLOTTED => 09:02

Dist	COUNTY	ROUTE	POST MILES TOTAL PROJECT	SHEET No.	TOTAL SHEETS
05	SB,SLO	101	91.0,0.0/0.8	112	299

Hassan Marei 8-12-09
REGISTERED CIVIL ENGINEER DATE

11-2-09
PLANS APPROVAL DATE

REGISTERED PROFESSIONAL ENGINEER HASSAN MAREI No. C035068 Exp. 9-30-11 CIVIL STATE OF CALIFORNIA

THE STATE OF CALIFORNIA OR ITS OFFICERS OR AGENTS SHALL NOT BE RESPONSIBLE FOR THE ACCURACY OR COMPLETENESS OF SCANNED COPIES OF THIS PLAN SHEET.

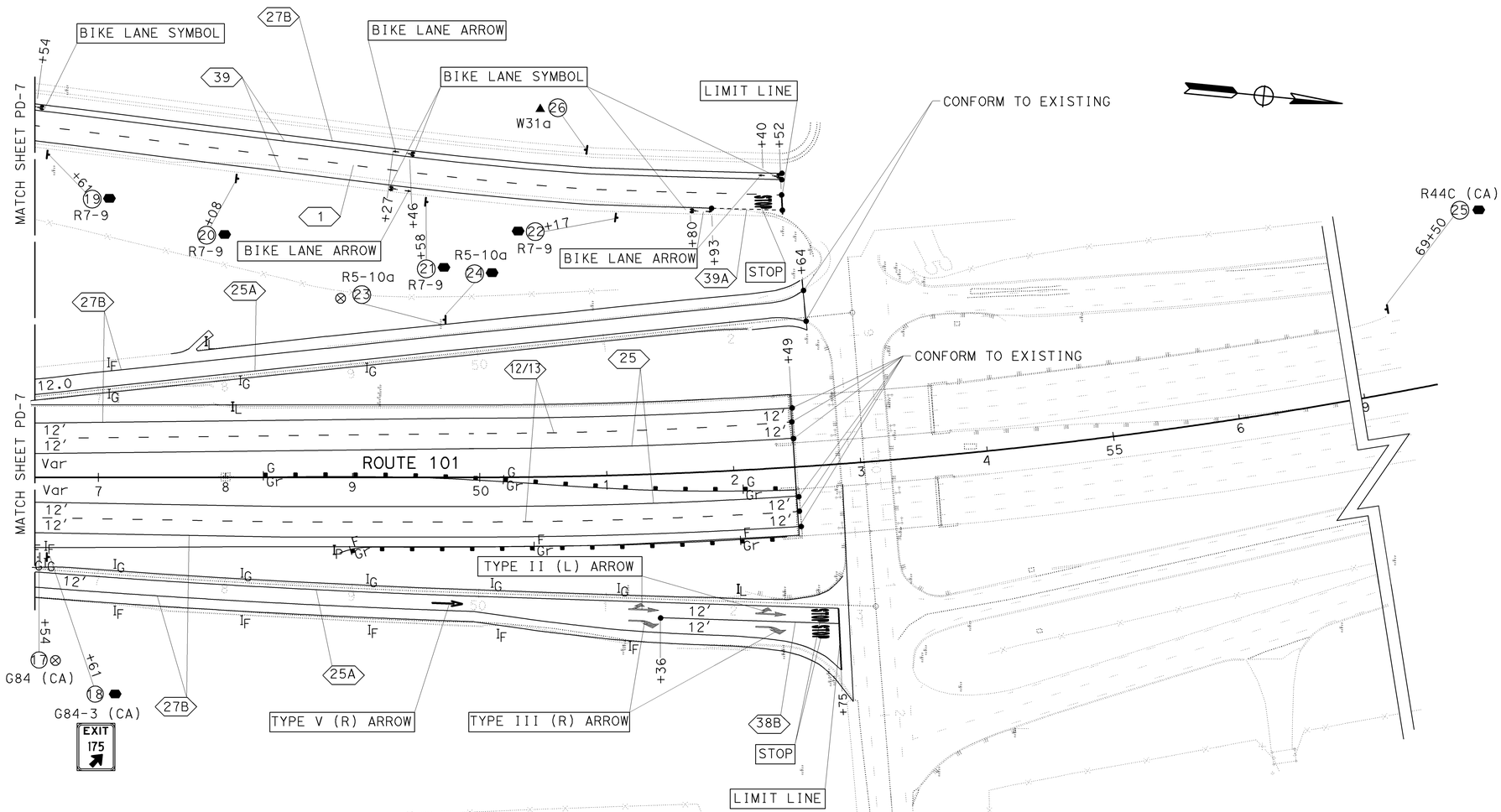

THIS PLAN ACCURATE FOR PAVEMENT DELINEATION AND SIGNING ONLY.

PAVEMENT DELINEATION AND SIGN PLAN

SCALE: 1"=50'

PD-8

REVISED BY	DATE REVISED
JOE ERWIN	RAJESH PATEL
CALCULATED-DESIGNED BY	CHECKED BY
FUNCTIONAL SUPERVISOR	HASSAN MAREI

STATE OF CALIFORNIA - DEPARTMENT OF TRANSPORTATION

Caltrans® **TRAFFIC DESIGN**

LAST REVISION 08-12-09 | DATE PLOTTED => 15-DEC-2009 | TIME PLOTTED => 09:02

Dist	COUNTY	ROUTE	POST MILES TOTAL PROJECT	SHEET No.	TOTAL SHEETS
05	SB,SLO	101	91.0,0.0/0.8	113	299

REGISTERED CIVIL ENGINEER 8-12-09 DATE

11-2-09
PLANS APPROVAL DATE

REGISTERED PROFESSIONAL ENGINEER HASSAN MAREI No. C035068 Exp. 9-30-11 CIVIL STATE OF CALIFORNIA

THE STATE OF CALIFORNIA OR ITS OFFICERS OR AGENTS SHALL NOT BE RESPONSIBLE FOR THE ACCURACY OR COMPLETENESS OF SCANNED COPIES OF THIS PLAN SHEET.

PAVEMENT DELINEATION QUANTITIES

SHEET No.	STATION	REMOVE DETAIL No.	REMOVE THERMOPLASTIC TRAFFIC STRIPE	REMOVE YELLOW THERMOPLASTIC TRAFFIC STRIPE	REMOVE PAVEMENT MARKER	DETAIL No.	PAVEMENT MARKER RETROREFLECTIVE				THERMOPLASTIC TRAFFIC STRIPE (SPRAYABLE)				DELINEATOR (CLASS-1)		OBJECT MARKER		GUARD RAILING DELINEATOR	
							TYPE A	TYPE C	TYPE G	TYPE H	4" WHITE	4" YELLOW	6" WHITE	8" WHITE	TYPE F-1	TYPE G-1	TYPE L	TYPE P	TYPE F-1	TYPE G-1
			LF	LF	EA		EA				LF				EA		EA		EA	
PD-1	Sta 607+47 TO 610+00 "SLO LOL"	37	102		18															
						12/13	24		7		253									
PD-2	Sta 610+00 TO 622+00 "SLO LOL"	37	480		82															
						12/13	100		25		1200									
PD-3	Sta 622+00 TO 633+00 "SLO LOL"	37	440		76															
						12/13	92		23		1100									
PD-4	Sta 633+00 TO 645+00 "SLO LOL"	12/13	114		50										3		1			
		25		455	10															
		27B	427																	
		36	1036		24															
		37	19		8															
		38	266		24															
						27B					787									
						12/13	138		37		1655									
						36			15					656						
						25				10		455								
PD-5	Sta 645+00 TO 19+50 "SLO LOL"	12/13	70		36										2			1	6	
		25		640	14															
		27B	320																	
						12/13	400		100		4730									
						25				54		2500								
						27B					1944									
						37		8	18					755						
						15 Mod						287								
						1 Mod						372								
PD-6	Sta 19+50 TO 33+00 "SLO LOL"					12/13	340		87		4050									
						25				58		2700								
						27B					2700									
						37			92					1350						
						1 Mod						1350								
SUBTOTAL			3274	1095	342		1094	8	404	122	18,419	7664		2761	4		1	1	6	

PAVEMENT DELINEATION QUANTITIES

PDQ-1

STATE OF CALIFORNIA - DEPARTMENT OF TRANSPORTATION
Caltrans TRAFFIC DESIGN

FUNCTIONAL SUPERVISOR: HASSAN MAREI
CALCULATED-DESIGNED BY: JOE ERWIN
CHECKED BY: RAJESH PATEL
REVISED BY
DATE REVISED

LAST REVISION 08-12-09 DATE PLOTTED => 15-DEC-2009 TIME PLOTTED => 09:03

Dist	COUNTY	ROUTE	POST MILES TOTAL PROJECT	SHEET No.	TOTAL SHEETS
05	SB,SLO	101	91.0,0.0/0.8	114	299

REGISTERED CIVIL ENGINEER 8-12-09 DATE

11-2-09
PLANS APPROVAL DATE

REGISTERED PROFESSIONAL ENGINEER HASSAN MAREI No. C035068 Exp. 9-30-11 CIVIL STATE OF CALIFORNIA

THE STATE OF CALIFORNIA OR ITS OFFICERS OR AGENTS SHALL NOT BE RESPONSIBLE FOR THE ACCURACY OR COMPLETENESS OF SCANNED COPIES OF THIS PLAN SHEET.

PAVEMENT DELINEATION QUANTITIES

SHEET No.	STATION	REMOVE DETAIL No.	REMOVE THERMOPLASTIC TRAFFIC STRIPE	REMOVE YELLOW THERMOPLASTIC TRAFFIC STRIPE	REMOVE PAVEMENT MARKER	DETAIL No.	PAVEMENT MARKER RETROREFLECTIVE				THERMOPLASTIC TRAFFIC STRIPE (SPRAYABLE)				DELINEATOR		OBJECT MARKER		GUARD RAILING DELINEATOR	
							TYPE A	TYPE C	TYPE G	TYPE H	4" WHITE	4" YELLOW	6" WHITE	8" WHITE	TYPE F-1	TYPE G-1	TYPE L	TYPE P	TYPE F-1	TYPE G-1
			LF	LF	EA		EA				LF				EA		EA		EA	
PD-7	Sta 33+00 TO 46+50 "SLO LOL"					1						64			19	4	3	2	6	
						12/13	276		68		3322									
						12/14	12	4	4		36									
						25				58		2700								
						25A				4		50								
						27B					3498									
						36			40					927						
						36B			30					690						
						37		8	30					536						
						38B			27					300						
						39							78							
						39A							50							
						1 Mod						1275								
PD-8	Sta 46+50 TO 69+50 "SLO LOL"					1						596			7	9	3	1	3	3
						12/13	108		27		1184									
						25				27		1184								
						25A				56		1244								
						27B					3047									
						38B			40					141						
						39							1142							
						39A							50							
SUB-TOTAL							396	12	266	145	11,085	7113	1320	2594	26	13	6	3	9	3
SUBTOTAL SHEET PDQ-1			3274	1095	342		1094	8	404	122	18,419	7664		2761	4		1	1	6	
SUBTOTAL SHEET THQ-8			24,315.13	18,753.03	2318						74,223.06	35,771.25								
TOTAL			27,589.13	19,848.03	2660		2447				160,950.31				43		7	4	18	

PAVEMENT MARKING

SHEET No.	LOCATION	THERMOPLASTIC PAVEMENT MARKING						
		STOP	LIMIT LINE	TYPE II ARROW	TYPE III (R) ARROW	TYPE V (L) ARROW	BIKE LANE SYMBOL	BIKE LANE ARROW
		SQFT						
PD-7	Sta 33+00 TO 46+50 "SLO LOL"						7	14
PD-8	Sta 46+50 TO 69+50 "SLO LOL"	66	65	90	84	33	35	28
SUBTOTAL		66	65	90	84	33	42	42
TOTAL		422						

PAVEMENT DELINEATION QUANTITIES
PDQ-2

STATE OF CALIFORNIA - DEPARTMENT OF TRANSPORTATION
Caltrans TRAFFIC DESIGN

FUNCTIONAL SUPERVISOR: HASSAN MAREI
CALCULATED-DESIGNED BY: JOE ERWIN
CHECKED BY: RAJESH PATEL
REVISED BY
DATE REVISED

LAST REVISION 08-12-09
DATE PLOTTED => 15-DEC-2009
TIME PLOTTED => 09:03

Dist	COUNTY	ROUTE	POST MILES TOTAL PROJECT	SHEET No.	TOTAL SHEETS
05	SB,SLO	101	91.0,0.0/0.8	115	299

REGISTERED CIVIL ENGINEER 8-12-09 DATE

11-2-09
PLANS APPROVAL DATE

REGISTERED PROFESSIONAL ENGINEER HASSAN MAREI No. C035068 Exp. 9-30-11 CIVIL STATE OF CALIFORNIA

THE STATE OF CALIFORNIA OR ITS OFFICERS OR AGENTS SHALL NOT BE RESPONSIBLE FOR THE ACCURACY OR COMPLETENESS OF SCANNED COPIES OF THIS PLAN SHEET.

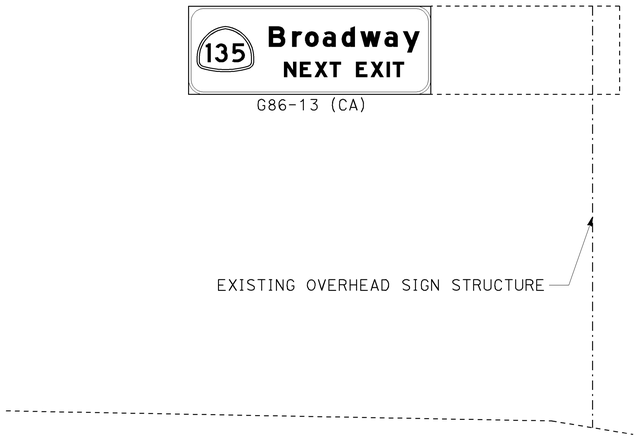

SIGN A FNBT Sta 606+49

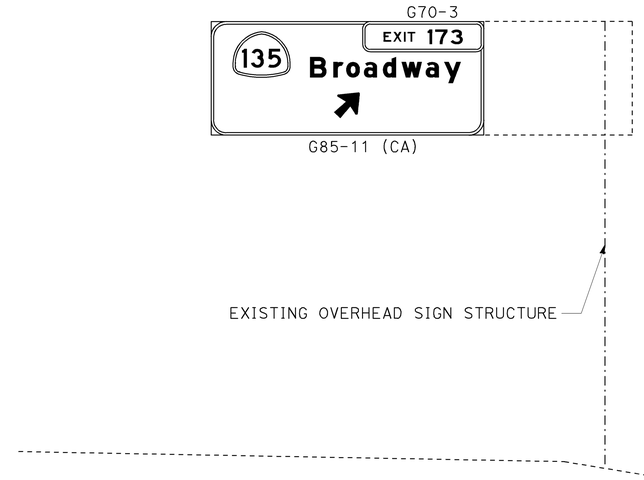

SIGN B FNBT Sta 633+39

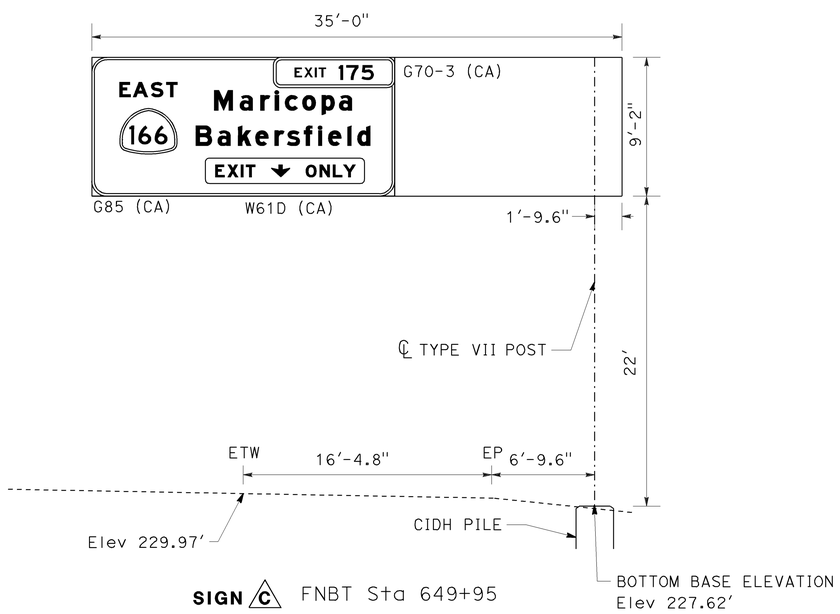

SIGN C FNBT Sta 649+95

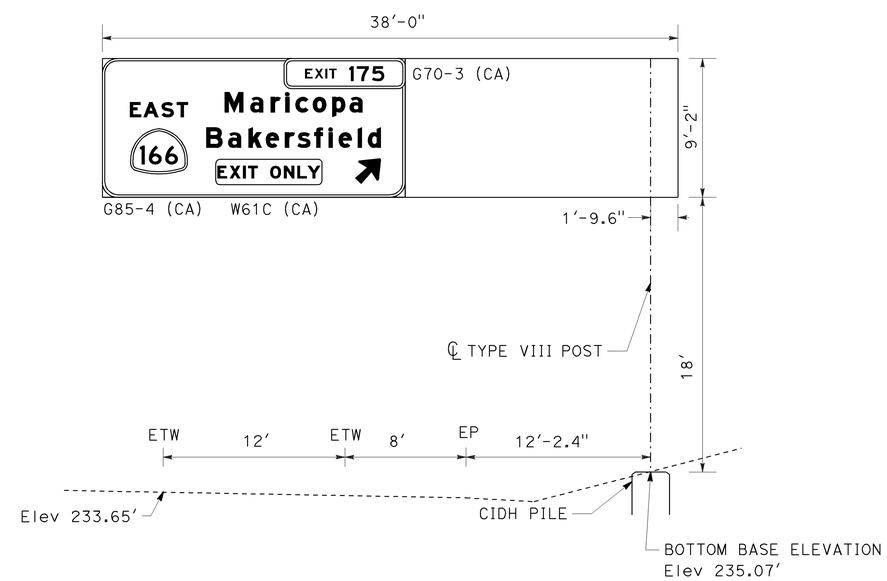

SIGN D FNBT Sta 41+36

SIGN DETAILS
(OVERHEAD SIGN)

NO SCALE

SD-1

STATE OF CALIFORNIA - DEPARTMENT OF TRANSPORTATION
Caltrans
TRAFFIC DESIGN

FUNCTIONAL SUPERVISOR: HASSAN MAREI
CALCULATED-DESIGNED BY: JOE ERWIN
CHECKED BY: RAJESH PATEL
REVISED BY
DATE REVISED

LAST REVISION 08-12-09
DATE PLOTTED => 15-DEC-2009
TIME PLOTTED => 09:03

Dist	COUNTY	ROUTE	POST MILES TOTAL PROJECT	SHEET No.	TOTAL SHEETS
05	SB,SLO	101	91.0,0.0/0.8	116	299

REGISTERED CIVIL ENGINEER 8-12-09 DATE

11-2-09
PLANS APPROVAL DATE

REGISTERED PROFESSIONAL ENGINEER HASSAN MAREI No. C035068 Exp. 9-30-11 CIVIL STATE OF CALIFORNIA

THE STATE OF CALIFORNIA OR ITS OFFICERS OR AGENTS SHALL NOT BE RESPONSIBLE FOR THE ACCURACY OR COMPLETENESS OF SCANNED COPIES OF THIS PLAN SHEET.

G70-3 (CA);
6.0" Radius, 2.0" Border, White On Green;
[EXIT] E; [173] E;

SIGN B FNBT Sta 633+39

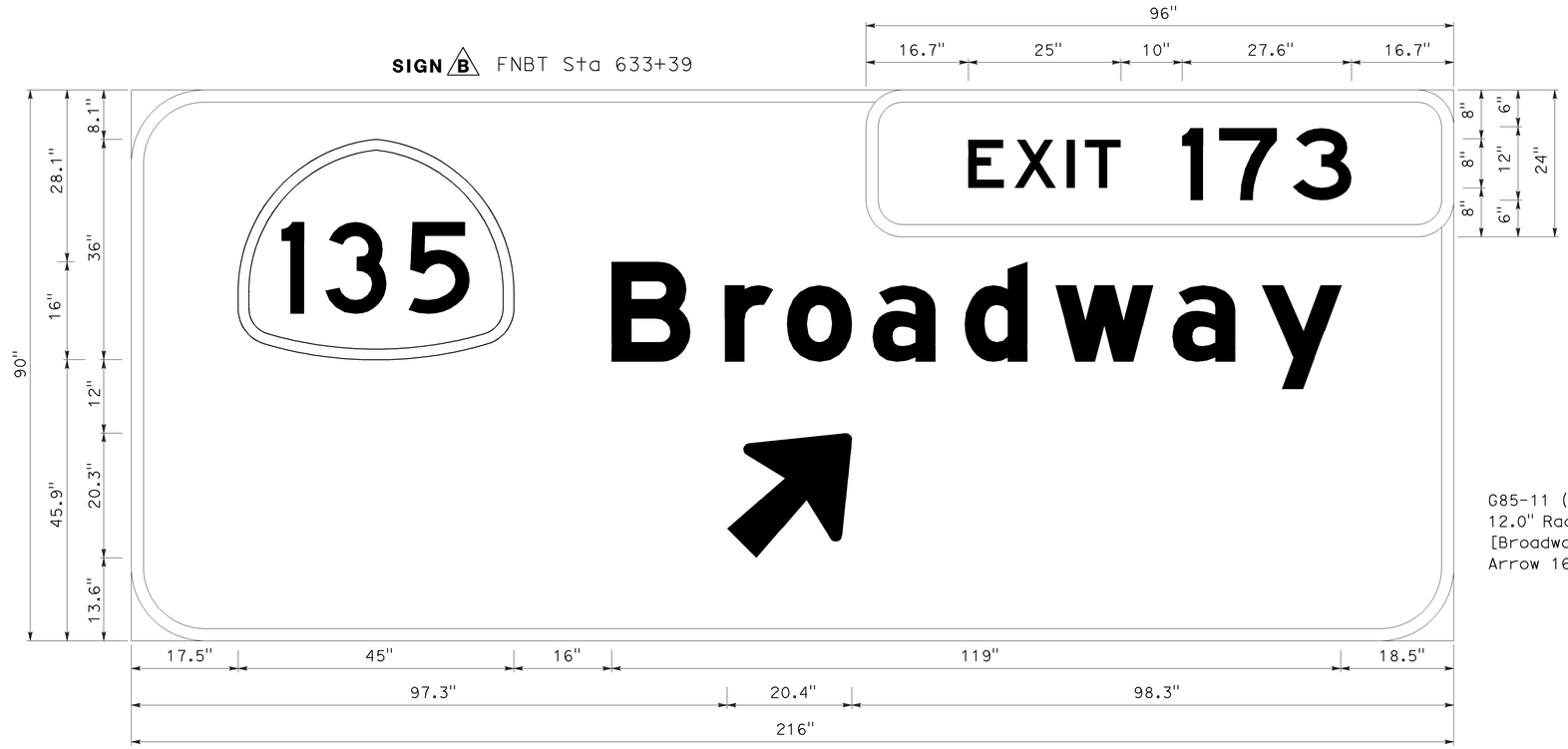

G85-11 (CA);
12.0" Radius, 2.0" Border, White On Green;
[Broadway] E Mod;
Arrow 16CAP-1L - 25.0" 45°;

SIGN A FNBT Sta 606+49

G86-13 (CA);
12.0" Radius, 2.0" Border, White On Green;
[Broadway] E Mod; [NEXT EXIT] E Mod;

SIGN DETAILS

NO SCALE **SD-2**

REVISED BY	DATE REVISED

CALCULATED-DESIGNED BY: RAJESH PATEL
CHECKED BY: JOE ERWIN
FUNCTIONAL SUPERVISOR: HASSAN MAREI

STATE OF CALIFORNIA - DEPARTMENT OF TRANSPORTATION
Caltrans TRAFFIC DESIGN

LAST REVISION 08-12-09
DATE PLOTTED => 15-DEC-2009
TIME PLOTTED => 09:03

Dist	COUNTY	ROUTE	POST MILES TOTAL PROJECT	SHEET No.	TOTAL SHEETS
05	SB,SLO	101	91.0,0.0/0.8	117	299

8-12-09
REGISTERED CIVIL ENGINEER DATE

11-2-09
PLANS APPROVAL DATE

REGISTERED PROFESSIONAL ENGINEER
HASSAN MAREI
No. C035068
Exp. 9-30-11
CIVIL
STATE OF CALIFORNIA

THE STATE OF CALIFORNIA OR ITS OFFICERS OR AGENTS SHALL NOT BE RESPONSIBLE FOR THE ACCURACY OR COMPLETENESS OF SCANNED COPIES OF THIS PLAN SHEET.

G70-3 (CA);
6.0" Radius, 2.0" Border, White On Green;
[EXIT] E; [175] E;

SIGN C FNBT Sta 649+95

G83 (CA);
12.0" Radius, 2.0" Border, White On Green;
[EAST] E Mod;
[Maricopa] E Mod;
[Bakersfield] E Mod;

W61D (CA);
3.0" Radius, No border, White On Yellow;
[EXIT] Black E Mod; Down Arrow Custom
- 10.0" 270° Black; [ONLY] Black E Mod;

SIGN DETAILS

NO SCALE **SD-3**

STATE OF CALIFORNIA - DEPARTMENT OF TRANSPORTATION
Caltrans® TRAFFIC DESIGN

FUNCTIONAL SUPERVISOR: HASSAN MAREI
CALCULATED-DESIGNED BY: JOE ERWIN
CHECKED BY: RAJESH PATEL
REVISED BY
DATE REVISED

LAST REVISION 08-12-09
DATE PLOTTED => 15-DEC-2009
TIME PLOTTED => 09:03

Dist	COUNTY	ROUTE	POST MILES TOTAL PROJECT	SHEET No.	TOTAL SHEETS
05	SB,SLO	101	91.0,0.0/0.8	118	299

REGISTERED CIVIL ENGINEER 8-12-09 DATE

11-2-09
PLANS APPROVAL DATE

REGISTERED PROFESSIONAL ENGINEER HASSAN MAREI No. C035068 Exp. 9-30-11 CIVIL STATE OF CALIFORNIA

THE STATE OF CALIFORNIA OR ITS OFFICERS OR AGENTS SHALL NOT BE RESPONSIBLE FOR THE ACCURACY OR COMPLETENESS OF SCANNED COPIES OF THIS PLAN SHEET.

SIGN No. 18

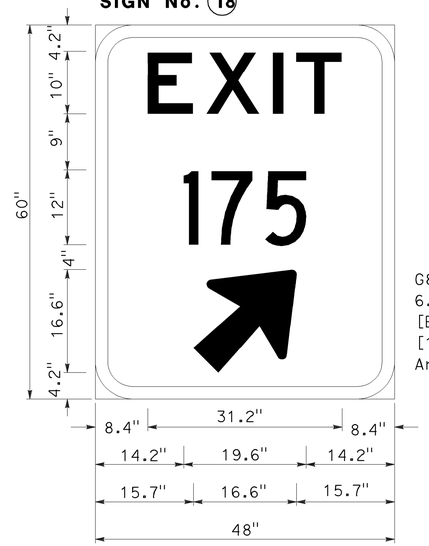

G84-3 (CA);
6.0" Radius, 2.0" Border, White On Green;
[EXIT] E;
[175] C;
Arrow 12CAP-1L - 20.3" 45°;

SIGN D FNBT Sta 41+36

G70-3 (CA);
EXIT] E; [175] E;
6.0" Radius, 2.0" Border, White On Green;

W85-4 (CA);
12.0" Radius, 2.0" Border, White On Green;
[EAST] E Mod;
[Maricopa] E Mod;
[Bakersfield] E Mod;
Arrow 16CAP-1L - 25.0" 45°;

W61C (CA);
3.0" Radius, No border, White On Yellow;
[EXIT ONLY] Black E Mod;

SIGN DETAILS

NO SCALE **SD-4**

STATE OF CALIFORNIA - DEPARTMENT OF TRANSPORTATION
Caltrans® TRAFFIC DESIGN

FUNCTIONAL SUPERVISOR: HASSAN MAREI
CALCULATED-DESIGNED BY: JOE ERWIN
CHECKED BY: RAJESH PATEL
REVISED BY
DATE REVISED

LAST REVISION 08-12-09 DATE PLOTTED => 15-DEC-2009 TIME PLOTTED => 09:03

Dist	COUNTY	ROUTE	POST MILES TOTAL PROJECT	SHEET No.	TOTAL SHEETS
05	SB,SLO	101	91.0,0.0/0.8	119	299

REGISTERED CIVIL ENGINEER 8-12-09 DATE

11-2-09
PLANS APPROVAL DATE

REGISTERED PROFESSIONAL ENGINEER HASSAN MAREI No. C035068 Exp. 9-30-11 CIVIL STATE OF CALIFORNIA

THE STATE OF CALIFORNIA OR ITS OFFICERS OR AGENTS SHALL NOT BE RESPONSIBLE FOR THE ACCURACY OR COMPLETENESS OF SCANNED COPIES OF THIS PLAN SHEET.

ROADSIDE SIGN

SHEET	SIGN No.	SIGN CODE	PANEL SIZE (L x D) (In x In)	POST SIZE (In x In)	POST TYPE: ONE POST	POST TYPE: TWO POST	BACKGROUND SHEETING COLOR	LEGEND SHEETING COLOR	ASTM TYPE RETROREFLECTIVITY	PROTECTIVE OVERLAY FILM: STANDARD	PROTECTIVE OVERLAY FILM: PREMIUM	FURNISH SINGLE SHEET ALUMINUM SIGN PANEL NO-FRAME 0.063 SQFT	ROADSIDE SIGN - ONE POST EA	REMOVE ROADSIDE SIGN EA	(N) SIGN TO REMAIN IN PLACE EA	RELOCATE ROADSIDE SIGN EA	REMARKS
PD-3	1	R18A				X								1			RIGHT LANE MUST EXIT
PD-4	2	M2-1			X										1		Jct
		G28-2 (CA)															CA 135 MARKER
		M6-2															UPWARD DIAGONAL ARROW
	3	G84-3 (CA)			X										1		EXIT
	4	D11-1	24 X 18	4 X 6	X		GREEN	WHITE	X		X	3	1				BIKE ROUTE
		G33-1 (CA)	24 X 6				GREEN	WHITE	X		X	1					RIGHT HORIZONTAL ARROW
	5	R5-10a	24 X 36	4 X 6	X		WHITE	BLACK	X		X	6	1				PEDESTRIAN BICYCLES MOTOR DRIVEN CYCLES PROHIBITED
	6	R5-10c			X									1			PEDESTRIANS PROHIBITED
	7	W4-1			X										1		MERGE FROM THE RIGHT
PD-5	8	R44C (CA)			X									1			BICYCLES MUST EXIT
	9	G83-2 (CA)			X									1			MARICOPA BAKERSFIELD 1/2 MILE
PD-6	10	W4-7	60 X 60	6 X 6	X		YELLOW	BLACK	X		X	25	1				LANE ENDS MERGE LEFT/ BRIDGE MOUNTED SIGN
PD-7	11	G23-1 (CA)			X									1			BROADWAY 1/ DONOVAN Rd 1 3/4 / MAIN St 2 3/4
	12	G86-5 (CA)		6 X 6		X										1	THOMPSON Rd/ HUTTON Rd/ NEXT EXIT
	13	R18A (CA)	48 X 66	6 X 6		X	WHITE	BLACK	X		X	22	1				RIGHT LANE MUST EXIT
	14	G85-6 (CA)				X								1			166 EAST/ MARICOPA/ BAKERSFIELD
	15	R44C (CA)			X									1			BICYCLES MUST EXIT
	16	R44A (CA)	12 X 24	4 X 4	X		WHITE	BLACK	X		X	2	1				BIKE PATH/ NO MOTOR VEHICLES OR MOTORIZED BICYCLES
PD-8	17	G84 (CA)			X									1			EXIT
	18	G84-3 (CA)	48 X 60	6 X 6	X		GREEN	WHITE	X		X		1				EXIT 175 (SEE SIGN DETAILS SD-3)
	19	R7-9	12 X 18	4 X 4	X		WHITE	RED	X		X	1.5	1				NO PARKING BIKE LANE
	20	R7-9	12 X 18	4 X 4	X		WHITE	RED	X		X	1.5	1				NO PARKING BIKE LANE
	21	R7-9	12 X 18	4 X 4	X		WHITE	RED	X		X	1.5	1				NO PARKING BIKE LANE
	22	R7-9	12 X 18	4 X 4	X		WHITE	RED	X		X	1.5	1				NO PARKING BIKE LANE
	23	R5-10a			X									1			PEDESTRIAN BICYCLES MOTOR DRIVEN CYCLES PROHIBITED
	24	R5-10a	24 X 36	4 X 6	X		WHITE	BLACK	X		X	6	1				PEDESTRIAN BICYCLES MOTOR DRIVEN CYCLES PROHIBITED
	25	R44C (CA)	30 X 30	4 X 6	X		WHITE	BLACK	X		X	6.25	1				BICYCLES MUST EXIT
	26	W31a (CA)		4 X 4	X											1	ROAD ENDS 600 Ft
									TOTAL			77.25	10	9		2	

(N) - NOT A SEPARATE PAY ITEM, FOR INFORMATION ONLY.

OVERHEAD SIGN QUANTITIES

SIGN No. △	STATION	CODE	PANEL SIZE (L x D) (In x In)	SIGN AREA SQFT	ROUTE, DIRECTION	SINGLE FACED	BACKGROUND SHEETING COLOR	BACKGROUND RETROREFLECTIVITY ASTM TYPE	LEGEND SHEETING COLOR	LEGEND RETROREFLECTIVITY ASTM TYPE	GRAFFITI FLOW STANDARD	GRAFFITI FLOW PREMIUM	FURNISH FORMED PANEL SIGN (OVERHEAD) SQFT	INSTALL SIGN STRUCTURE (TRUSS) LBS	FURNISH SIGN STRUCTURE (TRUSS) LBS	5' 0" DIA. CIDH CONCRETE PILE (SIGN FOUNDATION) FT	INSTALL SIGN PANEL ON EXISTING FRAME SQFT	REMARKS
A	606+49	G86-13 (CA)	192 x 70	93.3	101,FNBT	X	GREEN	IV	WHITE	IV		X	93.3				93.3	135 BROADWAY / NEXT EXIT
B	633+39	G85-11 (CA)	216 x 90	135.0	101,FNBT	X	GREEN	IV	WHITE	IV		X	135.0				135.0	135 BROADWAY / UPWARD DIAGONAL ARROW
		G70-3 (CA)	96 x 24	16.0	101,FNBT	X	GREEN	IV	WHITE	IV		X	16.0				16.0	EXIT 173
C	649+95	G83 (CA)	240 x 110	183.3	101,FNBT	X	GREEN	IV	WHITE	IV		X	183.3	19,650	19,650	23'.0"		EAST 166 / MARICOPA / BAKERSFIELD
		G70-3 (CA)	96 x 24	16.0	101,FNBT	X	GREEN	IV	WHITE	IV		X	16.0					EXIT 175
		W61D (CA)	126 x 20	17.5	101,FNBT	X	YELLOW	IV	BLACK	IV		X	17.5					EXIT ONLY WITH ARROW
D	41+36	G85-4 (CA)	240 x 110	183.3	101,FNBT	X	GREEN	IV	WHITE	IV		X	183.3	21,400	21,400	25'.0"		166 EAST / MARICOPA / BAKERSFIELD
		G70-3 (CA)	96 x 24	16.0	101,FNBT	X	GREEN	IV	WHITE	IV		X	16.0					EXIT 175
		W61C (CA)	84 x 20	11.7	101,FNBT	X	YELLOW	IV	BLACK	IV		X	11.7					EXIT ONLY
												TOTAL	672.1	41,050	41,050	48'.0"	244.3	

SIGN QUANTITIES
SQ-1

REVISED BY | DATE REVISED
RAJESH PATEL | JOE ERWIN
CALCULATED-DESIGNED BY | CHECKED BY
FUNCTIONAL SUPERVISOR | HASSAN MAREI

STATE OF CALIFORNIA - DEPARTMENT OF TRANSPORTATION
Caltrans TRAFFIC DESIGN

LAST REVISION 08-12-09 | DATE PLOTTED => 15-DEC-2009 | TIME PLOTTED => 09:03

Dist	COUNTY	ROUTE	POST MILES TOTAL PROJECT	SHEET No.	TOTAL SHEETS
05	SB,SLO	101	91.0,0.0/0.8	120	299

James R. Perano 8-12-09
REGISTERED CIVIL ENGINEER DATE

11-2-09
PLANS APPROVAL DATE

REGISTERED PROFESSIONAL ENGINEER James R.Perano No. 38617 Exp. 3-31-11 CIVIL STATE OF CALIFORNIA

THE STATE OF CALIFORNIA OR ITS OFFICERS OR AGENTS SHALL NOT BE RESPONSIBLE FOR THE ACCURACY OR COMPLETENESS OF SCANNED COPIES OF THIS PLAN SHEET.

BARRIERS

STATION	REMOVE CONCRETE BARRIER (TYPE 60)	CONCRETE BARRIER (TYPE 60)	CONCRETE BARRIER (TYPE 60C)	TRANSITION RAILING (TYPE DTB)	REMOVE SINGLE THRIE BEAM BARRIER	REMOVE DOUBLE THRIE BEAM BARRIER	DOUBLE THRIE BEAM BARRIER (STEEL POST)
	LF	LF	LF	LF	LF	LF	LF
"SB LOL" 640+27 TO "SLO LOL" 648+18	791						
"SB LOL" 640+27 TO "SLO LOL" 14+58.23			1274.3				
"SB LOL" 648+18 TO "SLO LOL" 14+58.23					980		
"SLO LOL" 35+74.75 TO 52+34.89				1		1660.1	
"SLO LOL" 35+47.78 TO 48+19.61		1271.8					
"SLO LOL" 48+19.61 TO 52+09.89							390.3
TOTAL	791	1271.8	1274.3	1	980	1660.1	390.3

HMA DIKE

STATION	LOCATION	REMOVE AC DIKE	PLACE HMA DIKE		HMA
			TYPE E	TYPE F	
		LF	LF	LF	TON
"SLO LOL"648+18 TO 13+87	R†	413			
"SLO LOL" 648+18 TO 11+70	R†		196		2.55
"SLO LOL"11+70 TO 13+93	R†			223	1.47
"SLO LOL"36+07 TO "R-71" 52+60	L†	1653			
"SLO LOL"47+00 TO "R-71"52+60	L†	560	560		7.28
"SLO LOL"35+01 TO "R-70" 52+91	R†		1790		23.27
"SLO LOL"35+19 TO "R-70" 52+91	R†	1772			
"R-70"46+50 TO 52+91	L†	641	641		8.33
"SLO LOL"36+19 TO 39+19	L†			300	1.98
"SLO LOL"39+19 TO "R-71" 52+60	L†		1341		17.43
"BP LOL"42+95.71 TO 45+40	L†	256	256		3.33
TOTAL		5295	4784	523	65.64

SURVEY MONUMENTS

LOCATION	SURVEY MONUMENT
	EA
"SLO LOL" 14+25	1
"SLO LOL" 14+50	1
"SLO LOL" 35+75	1
"SLO LOL" 36+00	1
"SLO LOL" 49+90	1
"R-70" 46+60	1
"R-71" 42+75	1
"R-71" 47+50	1
"R-71" 50+00	1
"BP LOL" 53+00	1
TOTAL	10

METAL BEAM GUARD RAILING

STATION	LOCATION	REMOVE MBGR	MBGR (STEEL POST)	TRANSITION RAILING (TYPE WB)	TERMINAL SYSTEM (TYPE SRT)
		LF	LF	EA	EA
"SLO LOL" 10+15 TO 14+95	L†	480			
"SLO LOL" 10+24 TO 14+85.13	L†		461.1	1	
"SLO LOL" 11+32.50 TO 11+70	R†				1
"SLO LOL" 11+70 TO 13+87	R†		217	1	
"SLO LOL" 13+09 TO 13+87	R†	78			
"SLO LOL" 36+07 TO 39+19	L†	312			
"SLO LOL" 36+19 TO 39+19	R†		300	1	
"SLO LOL" 48+90 TO 52+38.72	R†	349		1	
"SLO LOL" 48+90 TO 49+27.50	R†				1
"SLO LOL" 40+75 TO 41+50	R†		75		
"SLO LOL" 49+27.50 TO 52+13.72	R†		286		
TOTAL		1219	1339.1	4	2

TEMPORARY WATER POLLUTION CONTROL BMPs

TEMPORARY FIBER ROLL	TEMPORARY CONSTRUCTION ENTRANCE	TEMPORARY DRAINAGE INLET PROTECTION	TEMPORARY SILT FENCE	TEMPORARY HYDRAULIC MULCH (BONDED FIBER MATRIX)
LF	EA	EA	LF	SQFT
3120	2	9	590	114,000

SUMMARY OF QUANTITIES
Q-1

STATE OF CALIFORNIA - DEPARTMENT OF TRANSPORTATION
Caltrans® DESIGN

FUNCTIONAL SUPERVISOR: J.R.PERANO
CALCULATED-DESIGNED BY: M.ALIASGARIAN
CHECKED BY: M.TOWNE
REVISED BY
DATE REVISED

LAST REVISION 08-12-09 | DATE PLOTTED => 25-FEB-2011 | TIME PLOTTED => 08:26

Dist	COUNTY	ROUTE	POST MILES TOTAL PROJECT	SHEET No.	TOTAL SHEETS
05	SB,SLO	101	91.0,0.0/0.8	121	299

James R. Perano 8-12-09
REGISTERED CIVIL ENGINEER DATE

11-2-09
PLANS APPROVAL DATE

REGISTERED PROFESSIONAL ENGINEER James R.Perano No. 38617 Exp. 3-31-11 CIVIL STATE OF CALIFORNIA

THE STATE OF CALIFORNIA OR ITS OFFICERS OR AGENTS SHALL NOT BE RESPONSIBLE FOR THE ACCURACY OR COMPLETENESS OF SCANNED COPIES OF THIS PLAN SHEET.

FENCING

STATION	SIDE	TEMPORARY FENCE (TYPE ESA)	CHAIN LINK FENCE (TYPE CL-4)	CHAIN LINK FENCE (TYPE CL-6)	REMOVE CHAIN LINK FENCE
		LF	LF	LF	LF
"SLO LOL" 648+18 TO 19+50	R†	1182			
"SLO LOL" 14+11.34 TO 15+20.91	L†				202
"SLO LOL" 14+11.34 TO 14+61.80	L†			75	
"SLO LOL" 16+50 TO 19+50	L†	300			
"SLO LOL" 19+50 TO 32+50	R†, L†	2600			
"SLO LOL" 32+50 TO 35+00	R†	250			
"SLO LOL" 32+50 TO 41+50	L†	1113			
"SLO LOL" 35+85.44 TO "BP LOL" 42+40	L†				690
"BP LOL" 41+80 TO 42+40	L†			53	
"SLO LOL" 36+51 TO 37+00	L†				30
"SLO LOL" 43+15 TO 51+50	L†	895			
"BP LOL" 13+70 TO 14+25	R†, L†		89		
"BP LOL" 35+97.20 TO 43+04.44	L†		707		
"BP LOL" 36+07 TO 41+80	R†		583		
"BP LOL" 43+04.44 TO 45+47	LOL		243		
"BP LOL" 43+28 TO 45+57.43	L†			233	233
TOTAL		6340	1622	361	1155

VEHICLE BARRICADE (BOLLARD)

LOCATION	5" NPS GALVANIZED PIPE (N)	6" NPS GALVANIZED PIPE (SLEEVE) (N)	PCC (N)	CLASS 2 AGGREGATE BASE (N)	LOCKING FLANGE (N)
	FT	FT	CY	CY	EA
"BP LOL" 45+47	6	2	0.25	0.25	2

CONCRETE

LOCATION	REMOVE CONCRETE (CURB)	REMOVE CONCRETE (CURB & GUTTER)	REMOVE CONCRETE (SIDEWALK)	REMOVE CONCRETE (DRIVEWAY)	MINOR CONCRETE (DRIVEWAY)	MINOR CONCRETE (CURB & GUTTER)	MINOR CONCRETE (SIDEWALK)	MINOR CONCRETE (CURB RAMP)
	LF	LF	LF	LF	CY	CY	CY	CY
"R-70" 45+99 TO 46+40, RAMP GORE	113							
"BP LOL" 45+50 TO 45+65	15							
"BP LOL" 45+40 TO 45+60		37						
"BP LOL" 46+30 TO 51+65		535	379	164	69			
"BP LOL" 46+30 TO 52+94.99						39.3	28	
"BP LOL" 52+94.99 TO 53+33.77								3
FRITO LAY DRIVEWAYS	50							
TOTAL	178	572	379	164	69	39.3	28	3

GEOSYNTHETIC REINFORCED EMBANKMENT

STA 13+70 TO 14+25 "BP LOL"

GEOSYNTHETIC REINFORCEMENT	CELLULAR SOIL REINFORCEMENT	EMBANKMENT FILL (GEOSYNTHETIC REINFORCED EMBANKMENT)
SQYD	SQFT	CY
470	935	370

ROADWAY QUANTITIES

STATION	COLD PLANE ASPHALT CONCRETE PAVEMENT	ROADWAY EXCAVATION	EMBANKMENT (N)	CLASS 2 AGGREGATE BASE	HOT MIX ASPHALT	TACK COAT	GEOSYNTHETIC PAVEMENT INTERLAYER	PAVING ASPHALT (BINDER, GEOSYNTHETIC PAVEMENT INTERLAYER)
	SQYD	CY	CY	CY	TON	TON	SQYD	TON
"SB LOL" 648+18 TO "SLO LOL" 14+58.23 NB	320							
"SLO LOL" 648+18 TO 14+58.23 SB	320							
"SLO LOL" 45+75 TO 52+50 NB, SB	1280							
"R-70" 51+71 TO 52+91	120							
"R-71" 50+00 TO 53+24	256							
"SLO LOL" 648+18 TO 114+60		861						
"SLO LOL" 35+48 TO 52+50		3769						
"R-71" 39+99 TO 52+60		2690						
"SLO LOL" 642+00 TO 648+18				1213	1443			
HUTTON ROAD WIDENING		345		823	423			
"BP LOL" 35+94 TO 45+50		165	4930	213	125			
"SLO LOL" 648+18 TO 14+58				2847	3174	0.8	3439	0.4
"BP LOL" 12+77 TO 15+00			2760	50	30			
"SLO LOL" 35+48 TO 52+50				7685	5674	3.7		1.1
"R-71" 39+99 TO 52+60				2681	1391	0.4	12,860	
"R-70" 41+68 TO 52+91					707			
HMA DIKE FROM Q-1					66			
TOTAL	2296	7830	7690	15,512	13,033	4.9	16,299	1.5

(N) NOT A SEPARATE PAY ITEM, FOR INFORMATION ONLY.

SUMMARY OF QUANTITIES
Q-2

STATE OF CALIFORNIA - DEPARTMENT OF TRANSPORTATION
Caltrans® DESIGN

FUNCTIONAL SUPERVISOR: J.R.PERANO
CALCULATED-DESIGNED BY: M.ALIASGARIAN
CHECKED BY: M.TOWNE
REVISED BY
DATE REVISED

LAST REVISION DATE PLOTTED => 25-FEB-2011
TIME PLOTTED => 08:27
08-12-09

Dist	COUNTY	ROUTE	POST MILES TOTAL PROJECT	SHEET No.	TOTAL SHEETS
05	SB,SLO	101	91.0,0.0/0.8	122	299

LICENSED LANDSCAPE ARCHITECT

11-2-09
PLANS APPROVAL DATE

LICENSED LANDSCAPE ARCHITECT
Patrick Bolger
No. 3024
11-30-2010
Registration Date
8-12-09
Date
STATE OF CALIFORNIA

THE STATE OF CALIFORNIA OR ITS OFFICERS OR AGENTS SHALL NOT BE RESPONSIBLE FOR THE ACCURACY OR COMPLETENESS OF SCANNED COPIES OF THIS PLAN SHEET.

NOTE: FOR COMPLETE RIGHT OF WAY AND ACCURATE ACCESS DATA, SEE RIGHT OF WAY RECORD MAPS AT DISTRICT OFFICE.

LEGEND:

VALUE CODE

- BV SIZE
- VALVE NUMBER
- GPM
- QUANTITY OF TYPE SPRINKLERS

1½"-1-23-41

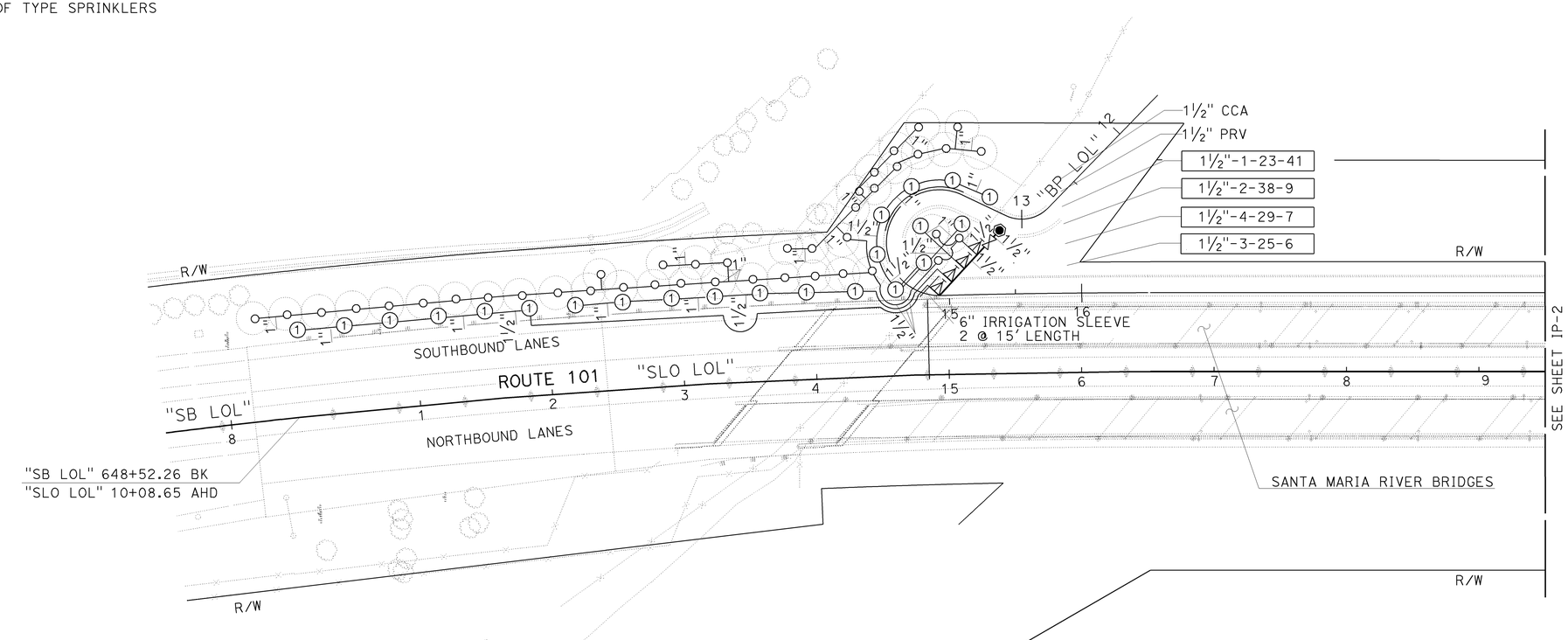

THIS PLAN ACCURATE FOR IRRIGATION WORK ONLY.

IRRIGATION PLAN
IP-1

SCALE: 1" = 50'

REVISED BY	DATE REVISED

CALCULATED-DESIGNED BY	CHECKED BY
P Bolger	D Emerson

SENIOR LANDSCAPE ARCHITECT
DENNIS REEVES

STATE OF CALIFORNIA - DEPARTMENT OF TRANSPORTATION
Caltrans® LANDSCAPE ARCHITECTURE

LAST REVISION 08-12-09
DATE PLOTTED => 15-DEC-2009
TIME PLOTTED => 12:52

Dist	COUNTY	ROUTE	POST MILES TOTAL PROJECT	SHEET No.	TOTAL SHEETS
05	SB,SLO	101	91.0,0.0/0.8	123	299

LICENSED LANDSCAPE ARCHITECT

11-2-09
PLANS APPROVAL DATE

THE STATE OF CALIFORNIA OR ITS OFFICERS OR AGENTS SHALL NOT BE RESPONSIBLE FOR THE ACCURACY OR COMPLETENESS OF SCANNED COPIES OF THIS PLAN SHEET.

LICENSED LANDSCAPE ARCHITECT
Patrick Bolger
No. 3025
11-30-2010
Renewal Date
8-12-09
Date
STATE OF CALIFORNIA

NOTE: FOR COMPLETE RIGHT OF WAY AND ACCURATE ACCESS DATA, SEE RIGHT OF WAY RECORD MAPS AT DISTRICT OFFICE.

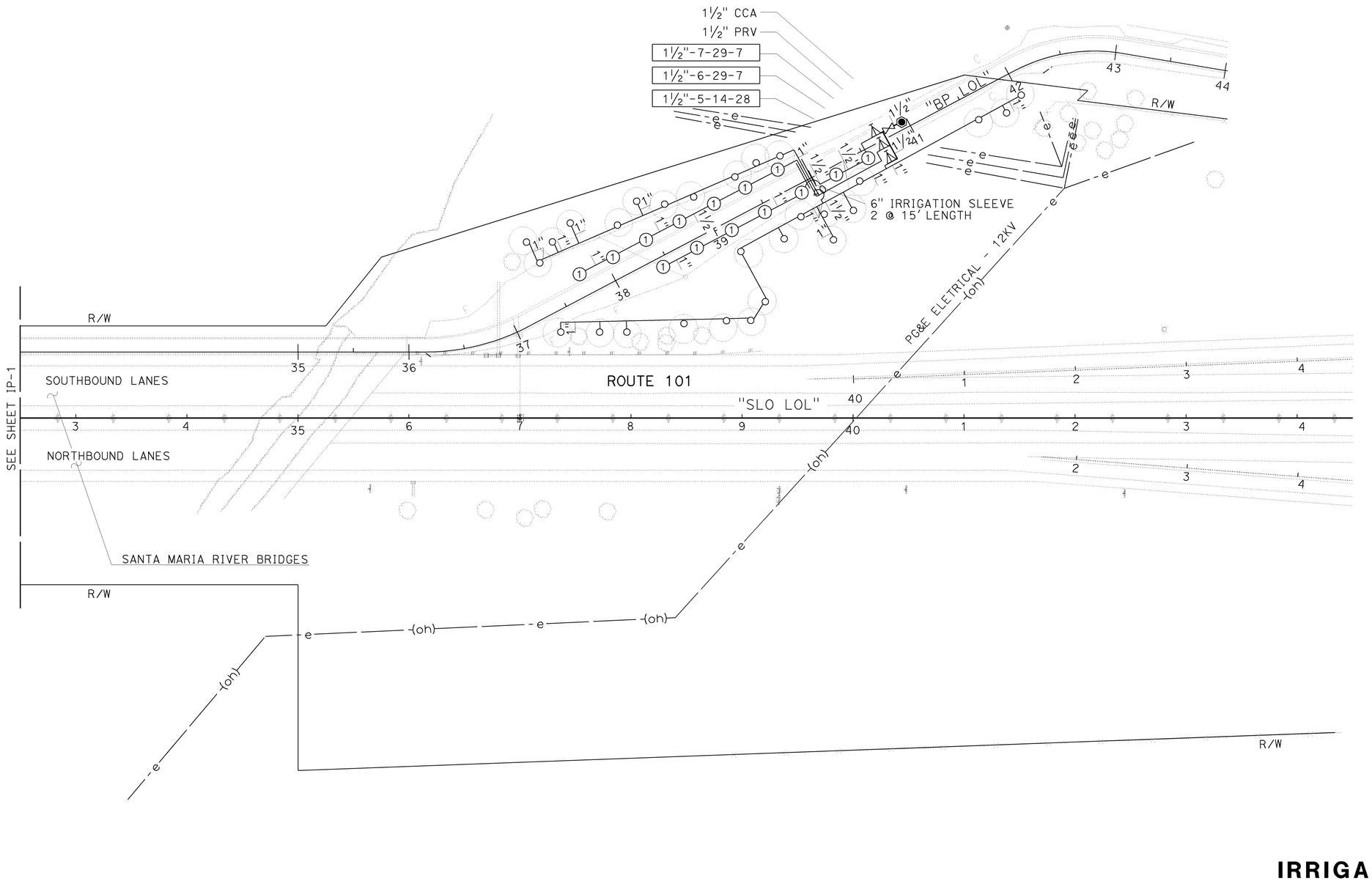

THIS PLAN ACCURATE FOR IRRIGATION WORK ONLY.

IRRIGATION PLAN

SCALE: 1" = 50'

IP-2

STATE OF CALIFORNIA - DEPARTMENT OF TRANSPORTATION
Caltrans LANDSCAPE ARCHITECTURE

SENIOR LANDSCAPE ARCHITECT: DENNIS REEVES

CALCULATED-DESIGNED BY: P Bolger
CHECKED BY: D Emerson

REVISED BY | DATE REVISED

LAST REVISION 08-12-09
DATE PLOTTED => 15-DEC-2009
TIME PLOTTED => 09:04

Dist	COUNTY	ROUTE	POST MILES TOTAL PROJECT	SHEET No.	TOTAL SHEETS
05	SB,SLO	101	91.0,0.0/0.8	124	299

LICENSED LANDSCAPE ARCHITECT

11-2-09
PLANS APPROVAL DATE

LICENSED LANDSCAPE ARCHITECT — Patrick T. Bolger — 11-30-2010 — 12-03-09 — STATE OF CALIFORNIA

THE STATE OF CALIFORNIA OR ITS OFFICERS OR AGENTS SHALL NOT BE RESPONSIBLE FOR THE ACCURACY OR COMPLETENESS OF SCANNED COPIES OF THIS PLAN SHEET.

PLANT LIST AND PLANTING SPECIFICATIONS

PLANT GROUP	PLANT No.	SYMBOL	BOTANICAL NAME	COMMON NAME	SIZE	QUANTITY EACH	HOLE SIZE (INCH) Dia	HOLE SIZE (INCH) DEPTH	BASIN TYPE	IRON SULFATE	SOIL AMEND ①	COMMERCIAL FERTILIZER ① PLANTING	COMMERCIAL FERTILIZER ① PLT ESTB	BASIN MULCH ①	STAKING	PLANTING LIMITS MINIMUM DISTANCE (Ft) FROM TRVD WAY	Pvmt	FENCE	WALL	PAVED DITCH	EARTH DITCH	ON CENTER (Ft)	REMARKS
B	1		CEANTHUS GRISEUS HORIZONTALIS 'YANKEE POINT'	CARMEL CREEPER	No. 5	12	20	12	II	-	0.08 CY	2 Pkt	7 Oz	2 CF	-	-	10	10	6	10	12	8	SHRUB ⑧
	2		FREMONTODENDRON 'KEN TAYLOR'	FLANNEL BUSH	No. 5	6	20	12	II	-	0.08 CY	2 Pkt	7 Oz	2 CF	-	-	10	10	10	10	12	9	SHRUB ⑧
U	3		CUPRESSUS MACROCARPA	MONTEREY CYPRESS	No. 15	16	30	24	II	-	0.14 CY	3 Pkt	21 Oz	4 CF	⑥	30	-	20	20	20	24	④	TREE ⑧
	4		POPULUS FREMONTII	WESTERN COTTONWOOD	No. 15	8	30	24	II	-	0.14 CY	3 Pkt	21 Oz	4 CF	⑥	30	-	20	15	15	18	④	TREE ⑧ ⑨
	5		PLATANUS RACEMOSA	CALIFORNIA SYCAMORE	No. 15	9	30	24	II	-	0.14 CY	3 Pkt	21 Oz	4 CF	⑥	40	-	20	20	20	24	④	TREE ⑧
	6		QUERCUS AGRIFOLIA	COAST LIVE OAK	No. 15	18	30	24	II	-	0.14 CY	3 Pkt	21 Oz	4 CF	⑥	30	-	20	15	15	17	④	TREE ⑧
	7		QUERCUS TOMENTELLA	ISLAND OAK	No. 15	18	30	24	II	-	0.14 CY	3 Pkt	21 Oz	4 CF	⑥	30	-	20	15	15	18	④	TREE ⑧
V	8		BACCHARIS SALICIFOLIA	MULEFAT	Cutting	740	⑦		-	-	-	-	-	-	-	-	-	-	-	-	-	12	SHRUB

APPLICABLE WHEN CIRCLED:

① - Quantities shown are "per plant" unless shown as SQFT or SQYD application rates.
2 - Sufficient to receive root ball, and root protector.
3 - Does not apply to mulch areas.
④ - As shown on plans.
5 - Unless otherwise shown on plans.
⑥ - Required.
⑦ - See detail below
⑧ - Root Protector required.
⑨ - Male plant only.

NOTE:
Underlined portions of botanical name indicate abbreviations used on Planting Plans.

LEGEND:

Erosion Control Type 1
Erosion Control (Compost Blanket) 1" Depth
Erosion Control (Hydroseed)

Existing Tree Planting

Area Mulch, 6" depth

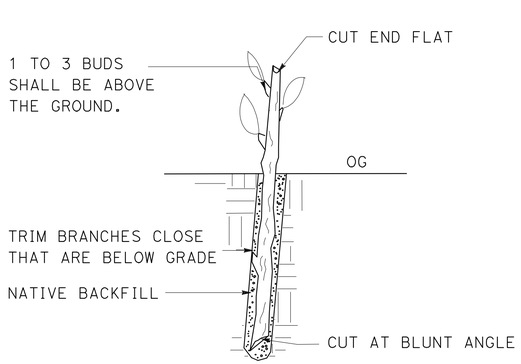

NO SCALE

BACCHARIS CUTTING PLANTING (GROUP V)

EROSION CONTROL TYPE 1

LOCATION SHEET	LOCATION STATION	SIDE L†	SIDE R†	EROSION CONTROL (HYDROSEED) SQFT	EROSION CONTROL (COMPOST BLANKET) CY
PP-1	"SLO LOL" 0+00 To 15+80	X		28,500	88.0
PP-1	"SLO LOL" 0+00 To 3+60		X	16,200	49.8
PP-3	"SLO LOL" 34+50 To 35+90		X	5,400	16.6
PP-3	"BP LOL" 35+80 To 41+80	X		23,400	71.9
PP-3	"BP LOL" 36+75 To 41+50		X	40,500	124.5
TOTAL				114,000	350.8

EROSION CONTROL (DRY SEED)

LOCATION STATION	SIDE L†	SIDE R†	EROSION CONTROL (DRY SEED) AC	REMARKS
"SLO LOL" 13+00 To 36+00	X	X	14.0	NOT SHOWN ON PLANS. SEED ALL AREAS IN RIVER BED DISTURBED BY CONSTRUCTION ACTIVITIES.
TOTAL			14.0	

PLANT LIST AND EROSION CONTROL QUANTITIES
PL-1

REVISED BY | DATE REVISED
P Bolger | D Emerson
CALCULATED-DESIGNED BY | CHECKED BY
SENIOR LANDSCAPE ARCHITECT DENNIS REEVES
STATE OF CALIFORNIA - DEPARTMENT OF TRANSPORTATION
Caltrans LANDSCAPE ARCHITECTURE

LAST REVISION 12-03-09 | DATE PLOTTED => 17-FEB-2011 | TIME PLOTTED => 14:25

Dist	COUNTY	ROUTE	POST MILES TOTAL PROJECT	SHEET No.	TOTAL SHEETS
05	SB,SLO	101	91.0,0.0/0.8	125	299

LICENSED LANDSCAPE ARCHITECT

11-2-09
PLANS APPROVAL DATE

LICENSED LANDSCAPE ARCHITECT — Todd K. Bolger — Expiration Date 11-30-2010 — Renewal Date 8-12-09 — Date — STATE OF CALIFORNIA

THE STATE OF CALIFORNIA OR ITS OFFICERS OR AGENTS SHALL NOT BE RESPONSIBLE FOR THE ACCURACY OR COMPLETENESS OF SCANNED COPIES OF THIS PLAN SHEET.

SPRINKLER SCHEDULE

SYMBOL	TYPE	DESCRIPTION	SPRAY PATTERN	OPERATING PRESSURE (PSI)	PRESSURE COMPENSATING	PLUS/MINUS 5% DISCHARGE GALLONS PER MINUTE (GPM)	PLUS/MINUS 5% DISCHARGE GALLONS PER HOUR (GPH)	PLUS/MINUS 5% RADIUS (Ft)	PLUS/MINUS 5% WIDTH x LENGTH (Ft)	MATERIAL	INLET CONNECTION (NPT INCH)	POSITIVE-LOCKING ADJ ARC STOP	BACKSPLASH PREVENTER	DIFFUSER PIN	DISTANCE CONTROL FLAP	ADJ DISCHARGE	RISER TYPE	RISER MATERIAL PLASTIC	RISER MATERIAL GALVANIZED	RISER SIZE (IPS INCH)	RISER HEIGHT (INCH)	RISER FLOW SHUTOFF DEVICE	SWING JOINT (TYPE)	RISER SUPPORT	SPRINKLER PROTECTOR (TYPE)	REMARKS
①	A-1	ROTOR	P	30	-	4.2	-	39	-	PL	¾	-	-	X	-	-	VI	-	-	¾	-	-	-	-	-	③⑤
○	C-3	BUBBLER	-	30	-	0.5	-	-	-	PL	½	-	-	-	-	X	V	-	-	½	-	-	-	-	-	④

X IN BOX DENOTES REQUIREMENT

APPLICABLE WHEN CIRCLED BELOW:

1 - See Special Provisions.
2 - If a pressure compensating device is specified, the discharge and radii shown reflect its use.
③ - Check valve required.
④ - One per tree. Install on uphill side of plant.
⑤ - 12" Pop-up required.

ABBREVIATIONS

F — full circle
P — part circle
F/P — full/part circle
Q — quarter circle
T — third circle
H — half circle
TT — two third circle
TQ — three quarter circle
CST — center strip
SST — side strip
EST — end strip
Ft — feet/foot
GPM — gallons per minute
GPH — gallons per hour
Adj — adjustable
PL — plastic
B/B — brass/bronze
B/PL — brass/plastic
B/B/PL — brass/bronze/plastic
NPT — national pipe thread
IPS — iron pipe size
PSI — pounds per square inch

LANDSCAPE DETAILS (SPRINKLER SCHEDULE)

LD-1

STATE OF CALIFORNIA - DEPARTMENT OF TRANSPORTATION
Caltrans® LANDSCAPE ARCHITECTURE

SENIOR LANDSCAPE ARCHITECT: DENNIS REEVES

CALCULATED-DESIGNED BY: P Bolger
CHECKED BY: D Emerson
REVISED BY
DATE REVISED

LAST REVISION 08-12-09 | DATE PLOTTED => 15-DEC-2009 | TIME PLOTTED => 09:04

Dist	COUNTY	ROUTE	POST MILES TOTAL PROJECT	SHEET No.	TOTAL SHEETS
05	SB,SLO	101	91.0,0.0/0.8	126	299

LICENSED LANDSCAPE ARCHITECT

11-2-09
PLANS APPROVAL DATE

LICENSED LANDSCAPE ARCHITECT
Patrick Bolger
No. 2349
11-30-2010
Expiration Date
12-03-09
Date
STATE OF CALIFORNIA

THE STATE OF CALIFORNIA OR ITS OFFICERS OR AGENTS SHALL NOT BE RESPONSIBLE FOR THE ACCURACY OR COMPLETENESS OF SCANNED COPIES OF THIS PLAN SHEET.

NOTE:

FOR ACCURATE RIGHT OF WAY AND ACCESS DATA,
CONTACT RIGHT OF WAY ENGINEERING AT THE DISTRICT OFFICE.

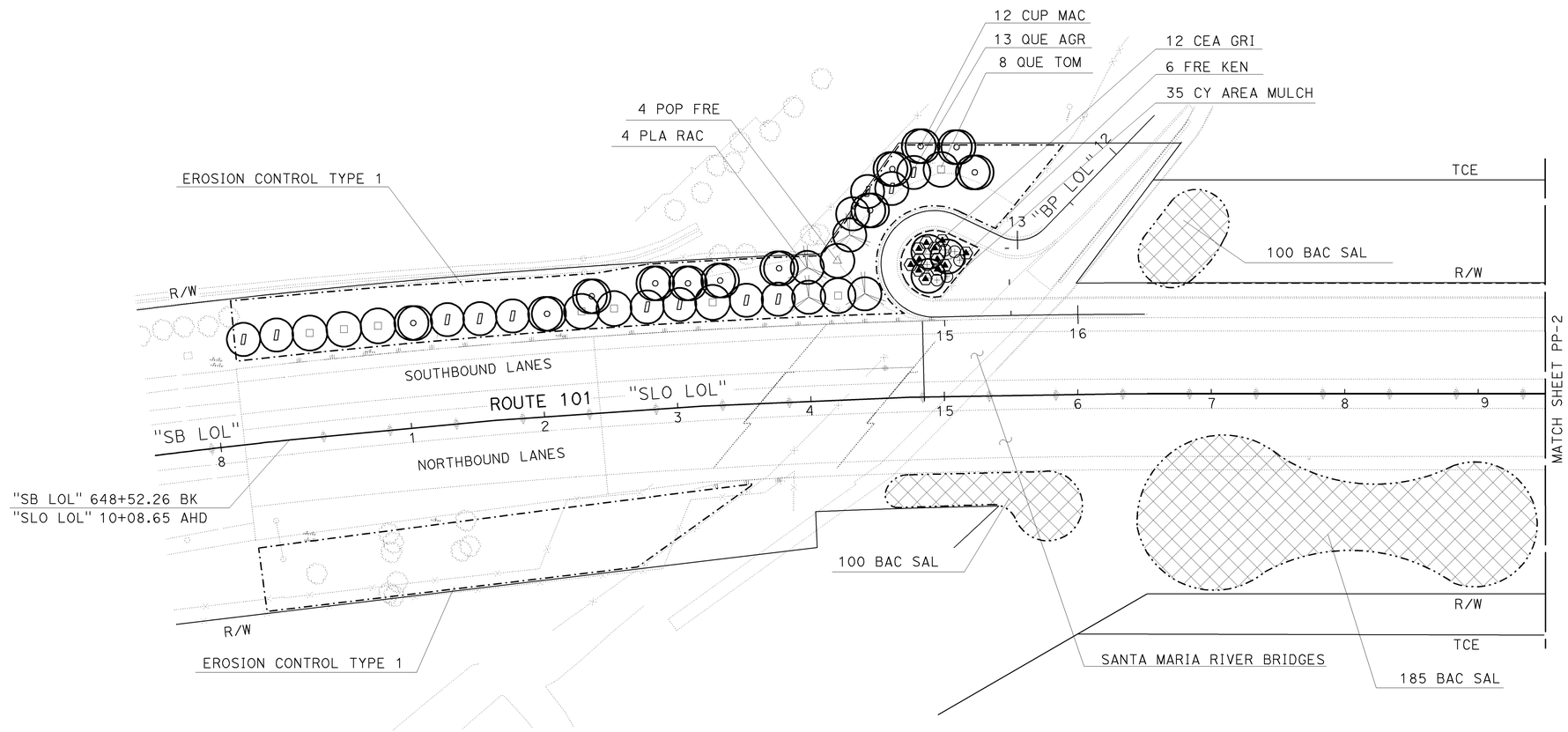

THIS PLAN ACCURATE FOR PLANTING WORK ONLY.

PLANTING PLAN

SCALE: 1" = 50'

PP-1

STATE OF CALIFORNIA - DEPARTMENT OF TRANSPORTATION
Caltrans LANDSCAPE ARCHITECTURE

SENIOR LANDSCAPE ARCHITECT: DENNIS REEVES

CALCULATED-DESIGNED BY: P Bolger
CHECKED BY: D Emerson

REVISED BY
DATE REVISED

LAST REVISION 12-03-09
DATE PLOTTED => 15-DEC-2009
TIME PLOTTED => 09:04

Dist	COUNTY	ROUTE	POST MILES TOTAL PROJECT	SHEET No.	TOTAL SHEETS
05	SB,SLO	101	91.0,0.0/0.8	127	299

LICENSED LANDSCAPE ARCHITECT

11-2-09
PLANS APPROVAL DATE

LICENSED LANDSCAPE ARCHITECT
Patrick Bolger
No. 1012
11-30-2010
Registration Expires
12-03-09
Date
STATE OF CALIFORNIA

THE STATE OF CALIFORNIA OR ITS OFFICERS OR AGENTS SHALL NOT BE RESPONSIBLE FOR THE ACCURACY OR COMPLETENESS OF SCANNED COPIES OF THIS PLAN SHEET.

NOTE:

FOR ACCURATE RIGHT OF WAY AND ACCESS DATA,
CONTACT RIGHT OF WAY ENGINEERING AT THE DISTRICT OFFICE.

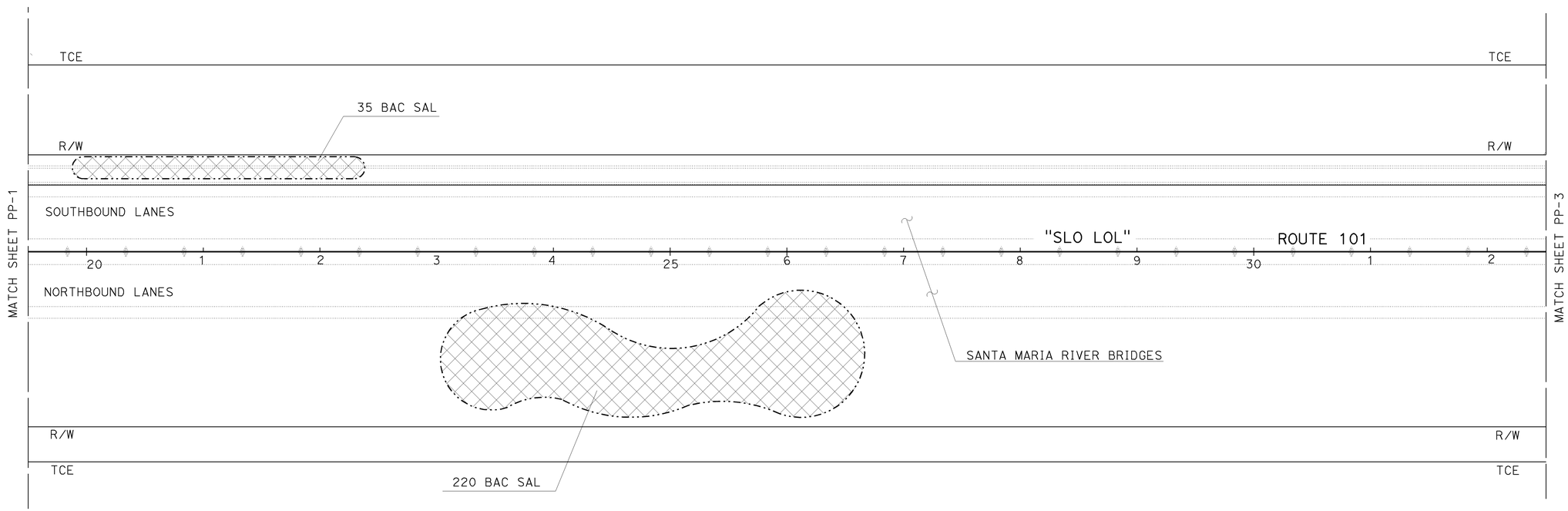

THIS PLAN ACCURATE FOR PLANTING WORK ONLY.

PLANTING PLAN

SCALE: 1" = 50'

PP-2

STATE OF CALIFORNIA - DEPARTMENT OF TRANSPORTATION
Caltrans LANDSCAPE ARCHITECTURE

FUNCTIONAL SUPERVISOR: DENNIS REEVES

CALCULATED-DESIGNED BY: PATRICK BOLGER
CHECKED BY: KAREN BEWLEY

REVISED BY
DATE REVISED

LAST REVISION 12-03-09
DATE PLOTTED =>
TIME PLOTTED =>

Dist	COUNTY	ROUTE	POST MILES TOTAL PROJECT	SHEET No.	TOTAL SHEETS
05	SB,SLO	101	91.0,0.0/0.8	128	299

LICENSED LANDSCAPE ARCHITECT

11-2-09
PLANS APPROVAL DATE

LICENSED LANDSCAPE ARCHITECT
Patrick Bolger
No. 2422
Exp. Date
11-30-2010
Date Signed
12-03-09
DATE
STATE OF CALIFORNIA

THE STATE OF CALIFORNIA OR ITS OFFICERS OR AGENTS SHALL NOT BE RESPONSIBLE FOR THE ACCURACY OR COMPLETENESS OF SCANNED COPIES OF THIS PLAN SHEET.

NOTE:

FOR ACCURATE RIGHT OF WAY AND ACCESS DATA,
CONTACT RIGHT OF WAY ENGINEERING AT THE DISTRICT OFFICE.

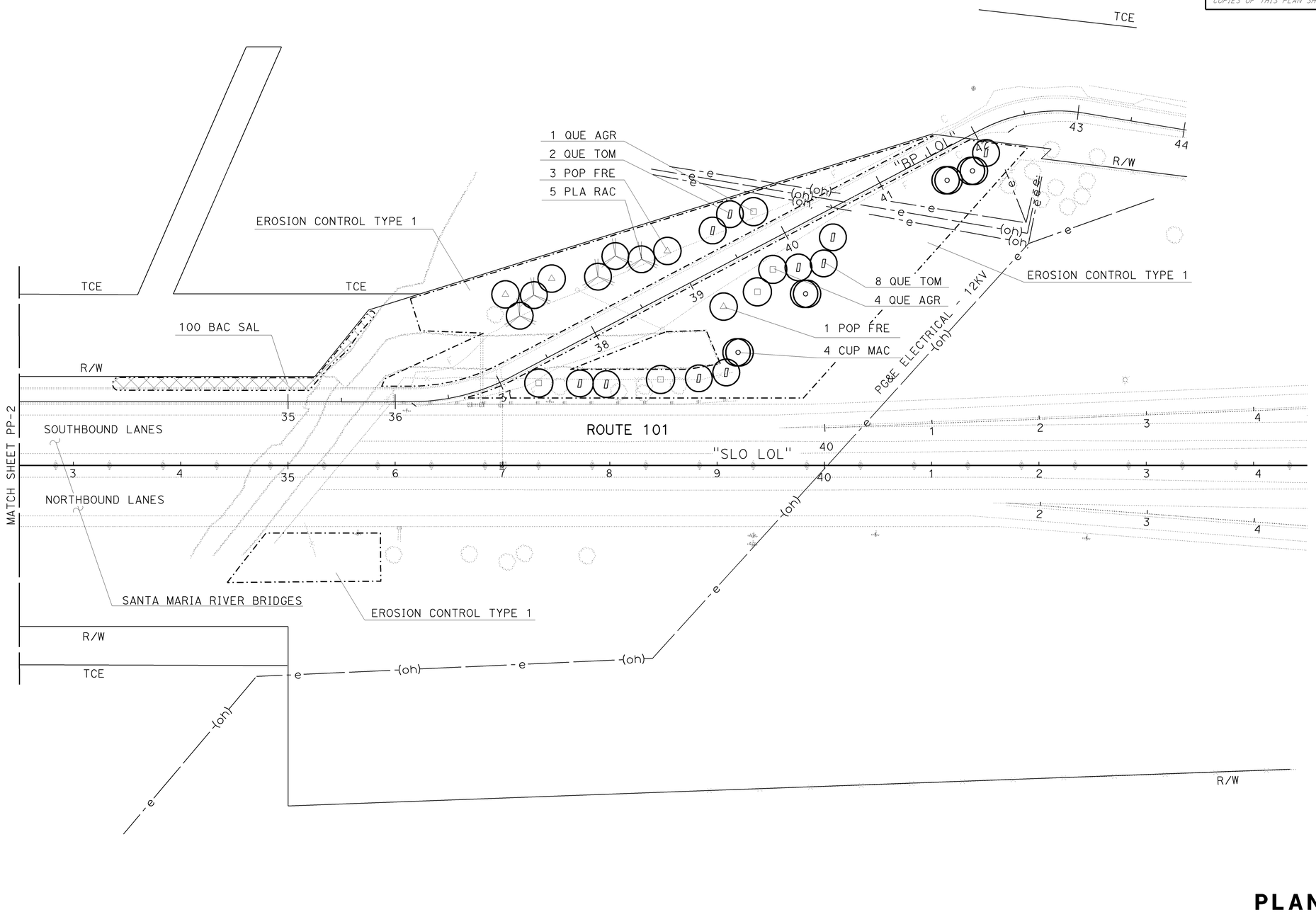

THIS PLAN ACCURATE FOR PLANTING WORK ONLY.

PLANTING PLAN

SCALE: 1" = 50'

PP-3

STATE OF CALIFORNIA - DEPARTMENT OF TRANSPORTATION
Caltrans LANDSCAPE ARCHITECTURE

SENIOR LANDSCAPE ARCHITECT: DENNIS REEVES

CALCULATED-DESIGNED BY: P Bolger
CHECKED BY: D Emerson
REVISED BY
DATE REVISED

LAST REVISION 12-03-09
DATE PLOTTED => 15-DEC-2009
TIME PLOTTED => 09:04

Dist	COUNTY	ROUTE	POST MILES TOTAL PROJECT	SHEET No.	TOTAL SHEETS
05	SB,SLO	101	91.0,0.0/0.8	129	299

REGISTERED CIVIL ENGINEER 8-12-09 DATE

11-2-09
PLANS APPROVAL DATE

REGISTERED PROFESSIONAL ENGINEER HASSAN MAREI No. C035068 Exp. 9-30-11 CIVIL STATE OF CALIFORNIA

THE STATE OF CALIFORNIA OR ITS OFFICERS OR AGENTS SHALL NOT BE RESPONSIBLE FOR THE ACCURACY OR COMPLETENESS OF SCANNED COPIES OF THIS PLAN SHEET.

NOTES:

1. SEE CONSTRUCTION AREA SIGNS, STAGE CONSTRUCTION AND TRAFFIC HANDLING PLANS FOR ADDITIONAL CONSTRUCTION AREA SIGNS.
2. DURING THE SB ON-RAMP CLOSURE, THE PCMS MESSAGE AT (A) SHOULD READ:

101 SB ON-RAMP CLOSED	→	USE 101 NB ON-RAMP EXIT
1ST FRAME		2ND FRAME

LEGEND

- CONSTRUCT THIS STAGE
- DIRECTION OF TRAFFIC

MOTORIST INFORMATION PLAN

FROM: SANTA MARIA OR 101 SOUTH

SB ON RAMP CLOSED AT ROUTE 101/166 Sep.
TAKE HUTTON ROAD NORTH TO TEFFT St.
TURN RIGHT ON TEFFT St.
TURN RIGHT ON SB ON RAMP TO ROUTE 101.

FROM: 166 EAST

SB ON RAMP CLOSED AT ROUTE 101/166 Sep.
TAKE 101 NORTH TO NIPOMO EXIT TEFFT St.
LEFT ON TEFFT St.
TURN LEFT ON SB ON RAMP TO ROUTE 101.

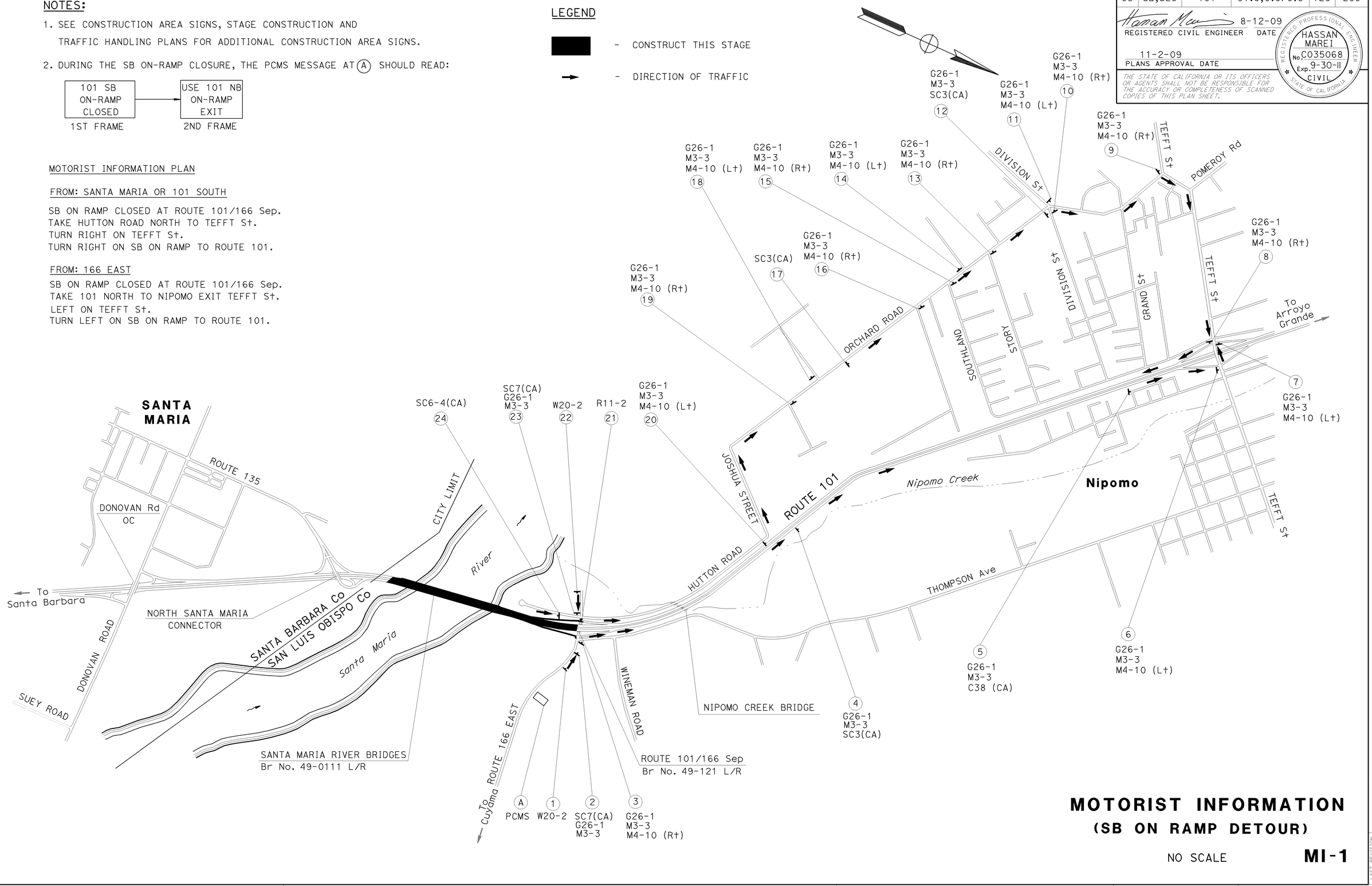

MOTORIST INFORMATION
(SB ON RAMP DETOUR)

NO SCALE

MI-1

STATE OF CALIFORNIA - DEPARTMENT OF TRANSPORTATION
Caltrans® TRAFFIC DESIGN

FUNCTIONAL SUPERVISOR: HASSAN MAREI
CALCULATED-DESIGNED BY: JOE ERWIN
CHECKED BY: RAJESH PATEL
REVISED BY
DATE REVISED

LAST REVISION 08-12-09 | DATE PLOTTED => 15-DEC-2009 | TIME PLOTTED => 09:04

Dist	COUNTY	ROUTE	POST MILES TOTAL PROJECT	SHEET No.	TOTAL SHEETS
05	SB,SLO	101	91.0,0.0/0.8	130	299

REGISTERED CIVIL ENGINEER 8-12-09 DATE

11-2-09
PLANS APPROVAL DATE

REGISTERED PROFESSIONAL ENGINEER HASSAN MAREI No. C035068 Exp. 9-30-11 CIVIL STATE OF CALIFORNIA

THE STATE OF CALIFORNIA OR ITS OFFICERS OR AGENTS SHALL NOT BE RESPONSIBLE FOR THE ACCURACY OR COMPLETENESS OF SCANNED COPIES OF THIS PLAN SHEET.

NOTES:

1. LOCATIONS OF CONSTRUCTION AREA SIGNS SHOWN ARE APPROXIMATE. EXACT LOCATIONS WILL BE DETERMINED BY THE ENGINEER.
2. SEE CONSTRUCTION AREA SIGNS, STAGE CONSTRUCTION AND TRAFFIC HANDLING PLANS FOR ADDITIONAL CONSTRUCTION AREA SIGNS.
3. DURING THE NB OFF-RAMP CLOSURE, THE PCMS MESSAGE AT (A) SHOULD READ:

1ST FRAME	2ND FRAME
101 NB OFF-RAMP CLOSED	USE 101 NB NEXT EXIT

TRAFFIC DETOUR PLAN

FROM : SANTA MARIA OR 101 SOUTH

SB OFF RAMP CLOSED AT ROUTE 101/166 Sep.
TAKE 101 NORTH TO NIPOMO EXIT TEFFT St.
LEFT ON TEFFT St.
TURN LEFT ON SB ON RAMP TO ROUTE 101 AND 166 Sep.

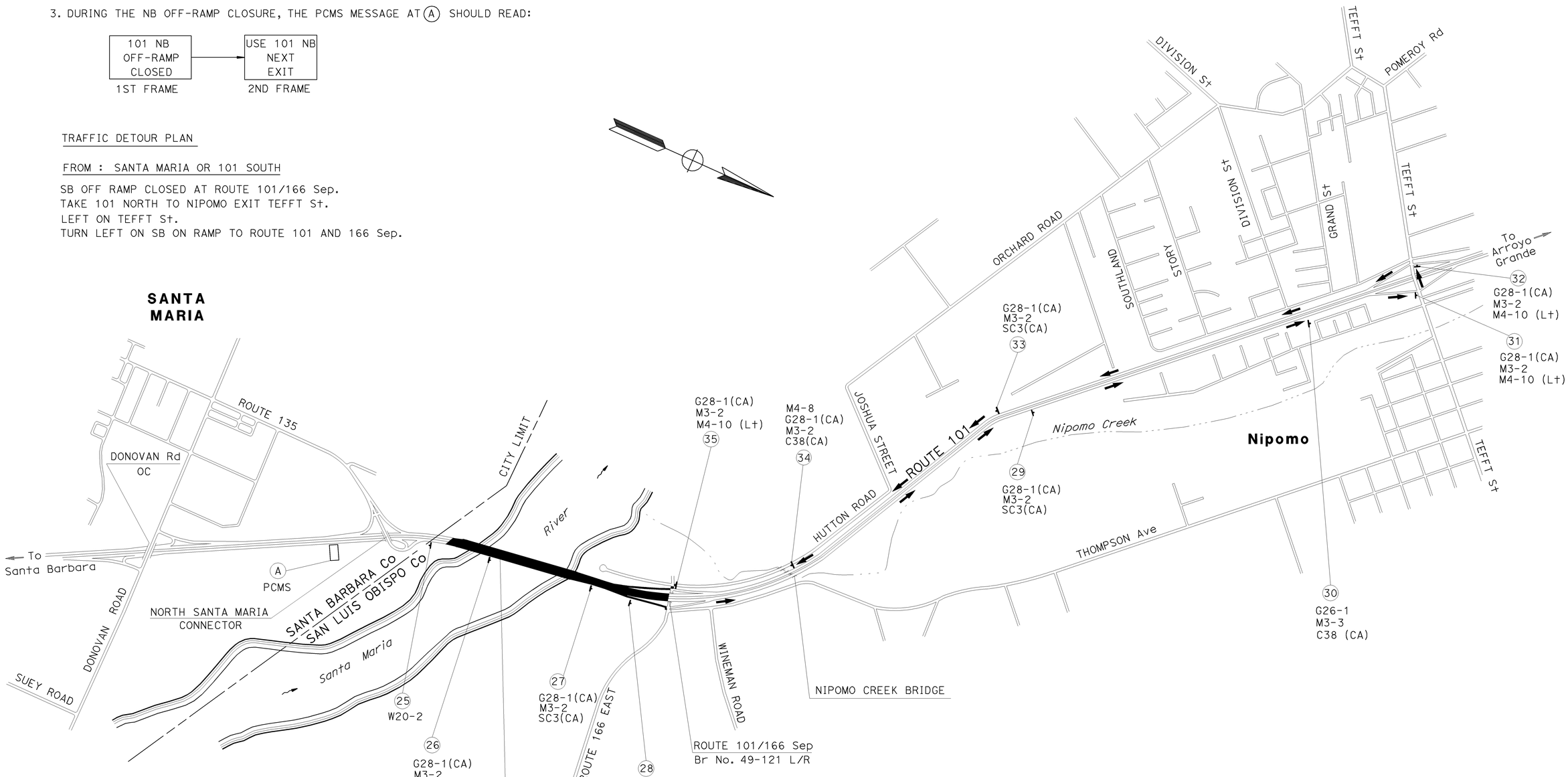

MOTORIST INFORMATION
(NB OFF RAMP DETOUR)

NO SCALE **MI-2**

STATE OF CALIFORNIA - DEPARTMENT OF TRANSPORTATION
Caltrans® **TRAFFIC DESIGN**

FUNCTIONAL SUPERVISOR: HASSAN MAREI
CALCULATED-DESIGNED BY: JOE ERWIN
CHECKED BY: RAJESH PATEL
REVISED BY
DATE REVISED

LAST REVISION 08-12-09
DATE PLOTTED => 15-DEC-2009
TIME PLOTTED => 09:04

Dist	COUNTY	ROUTE	POST MILES TOTAL PROJECT	SHEET No.	TOTAL SHEETS
05	SB,SLO	101	91.0,0.0/0.8	131	299

Hassan Marei 8-12-09
REGISTERED CIVIL ENGINEER DATE

11-2-09
PLANS APPROVAL DATE

REGISTERED PROFESSIONAL ENGINEER HASSAN MAREI No. C035068 Exp. 9-30-11 CIVIL STATE OF CALIFORNIA

THE STATE OF CALIFORNIA OR ITS OFFICERS OR AGENTS SHALL NOT BE RESPONSIBLE FOR THE ACCURACY OR COMPLETENESS OF SCANNED COPIES OF THIS PLAN SHEET.

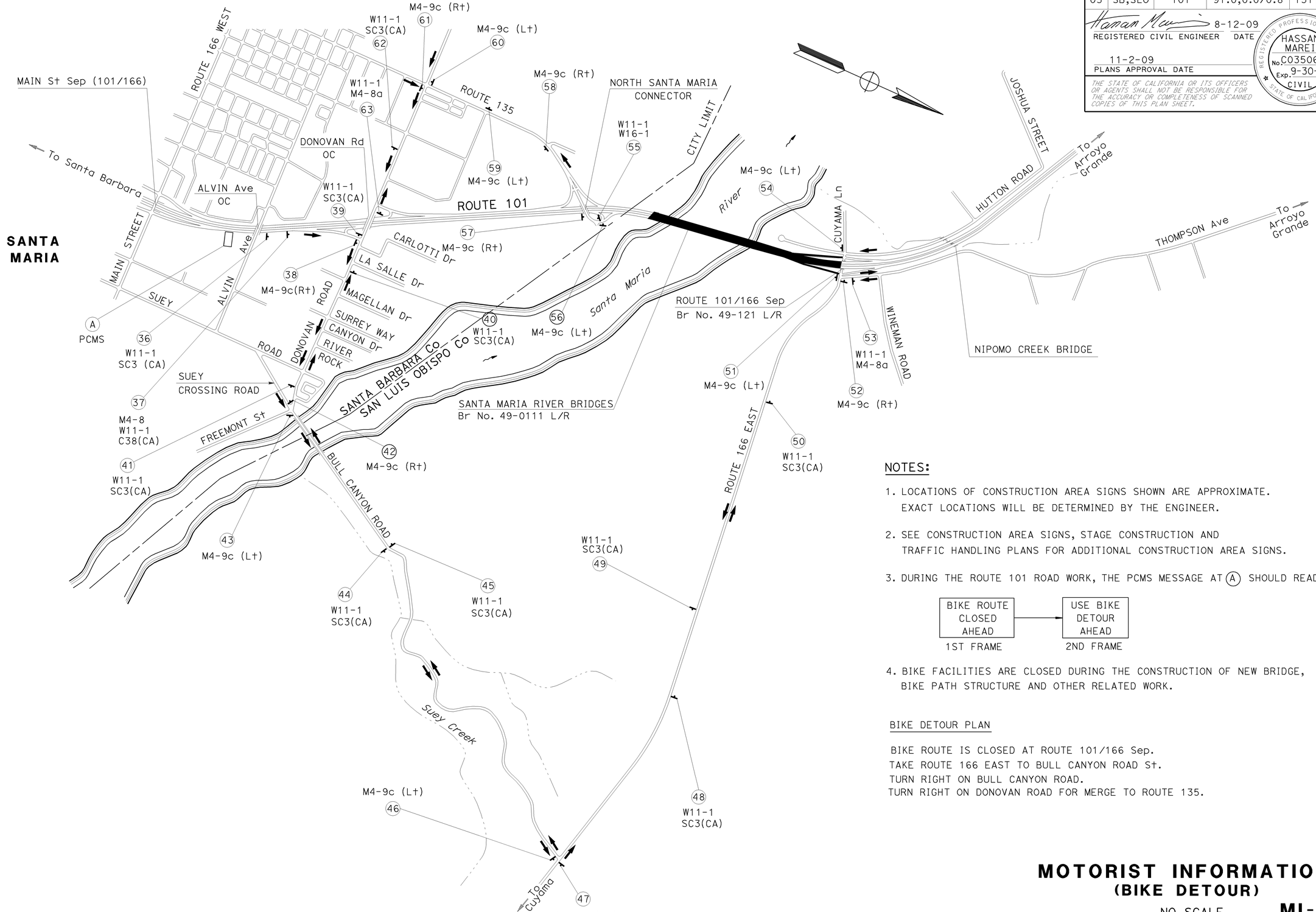

NOTES:

1. LOCATIONS OF CONSTRUCTION AREA SIGNS SHOWN ARE APPROXIMATE. EXACT LOCATIONS WILL BE DETERMINED BY THE ENGINEER.
2. SEE CONSTRUCTION AREA SIGNS, STAGE CONSTRUCTION AND TRAFFIC HANDLING PLANS FOR ADDITIONAL CONSTRUCTION AREA SIGNS.
3. DURING THE ROUTE 101 ROAD WORK, THE PCMS MESSAGE AT (A) SHOULD READ:

BIKE ROUTE CLOSED AHEAD	→	USE BIKE DETOUR AHEAD
1ST FRAME		2ND FRAME

4. BIKE FACILITIES ARE CLOSED DURING THE CONSTRUCTION OF NEW BRIDGE, BIKE PATH STRUCTURE AND OTHER RELATED WORK.

BIKE DETOUR PLAN

BIKE ROUTE IS CLOSED AT ROUTE 101/166 Sep.
TAKE ROUTE 166 EAST TO BULL CANYON ROAD St.
TURN RIGHT ON BULL CANYON ROAD.
TURN RIGHT ON DONOVAN ROAD FOR MERGE TO ROUTE 135.

MOTORIST INFORMATION
(BIKE DETOUR)

NO SCALE **MI-3**

STATE OF CALIFORNIA - DEPARTMENT OF TRANSPORTATION
Caltrans TRAFFIC DESIGN

FUNCTIONAL SUPERVISOR: HASSAN MAREI
CALCULATED-DESIGNED BY: JOE ERWIN
CHECKED BY: RAJESH PATEL
REVISED BY / DATE REVISED

LAST REVISION 08-12-09 | DATE PLOTTED => 15-DEC-2009 | TIME PLOTTED => 09:05

BORDER LAST REVISED 4/11/2008 | RELATIVE BORDER SCALE IS IN INCHES 0 1 2 3 | USERNAME => trmikesl | DGN FILE => 5445901b003.dgn | CU 06385 | EA 445901

Dist	COUNTY	ROUTE	POST MILES TOTAL PROJECT	SHEET No.	TOTAL SHEETS
05	SB,SLO	101	91.0,0.0/0.8	132	299

8-12-09
REGISTERED CIVIL ENGINEER DATE

11-2-09
PLANS APPROVAL DATE

REGISTERED PROFESSIONAL ENGINEER
HASSAN MAREI
No. C035068
Exp. 9-30-11
CIVIL
STATE OF CALIFORNIA

THE STATE OF CALIFORNIA OR ITS OFFICERS OR AGENTS SHALL NOT BE RESPONSIBLE FOR THE ACCURACY OR COMPLETENESS OF SCANNED COPIES OF THIS PLAN SHEET.

MOTORIST INFORMATION SIGNS (STATIONARY MOUNTED)

SHEET	SIGN ○	SIGN CODE	No. OF PANEL AND SIZE (In)	No. OF POST AND SIZE (In)	REMARKS
MI-1	1	W20-2	1-36 x 36	1-4 x 4	DETOUR AHEAD
	2	SC7(CA)	1-84 X 42	2-6 x 6	RAMP CLOSED USE RAMP AT TEFFT St
		G26-1	1-36 X 27		US 101 (SHIELD)
		M3-3	1-24 x 12		SOUTH
	3	G26-1 (CA)	1-36 x 36	1-6 x 6	US 101 (SHIELD)
		M3-3	1-26 x 12		SOUTH
		M4-10(Rt)	1-48 x 18		DETOUR (ARROW RIGHT)
	4	G26-1 (CA)	1-36 x 36	1-6 x 6	US 101 (SHIELD)
		M3-3	1-26 x 12		SOUTH
		SC3 (CA)	1-48 x 18		DETOUR (ARROW STRAIGHT)
	5	G26-1 (CA)	1-36 x 36	1-6 x 6	US 101 (SHIELD)
		M3-3	1-26 x 12		SOUTH
		C38 (CA)	1-48 x 36		USE NEXT EXIT
	6	G26-1 (CA)	1-36 x 36	1-6 x 6	US 101 (SHIELD)
		M3-3	1-26 x 12		SOUTH
		M4-10(Lt)	1-48 x 18		DETOUR (ARROW LEFT)
	7	G26-1 (CA)	1-36 x 36	1-6 x 6	US 101 (SHIELD)
		M3-3	1-26 x 12		SOUTH
		M4-10(Lt)	1-48 x 18		DETOUR (ARROW LEFT)
	8	G26-1 (CA)	1-36 x 36	1-6 x 6	US 101 (SHIELD)
		M3-3	1-26 x 12		SOUTH
		M4-10(Rt)	1-48 x 18		DETOUR (ARROW RIGHT)
	9	G26-1 (CA)	1-36 x 36	1-6 x 6	US 101 (SHIELD)
		M3-3	1-26 x 12		SOUTH
		M4-10(Rt)	1-48 x 18		DETOUR (ARROW RIGHT)
	10	G26-1 (CA)	1-36 x 36	1-6 x 6	US 101 (SHIELD)
		M3-3	1-26 x 12		SOUTH
		M4-10(Rt)	1-48 x 18		DETOUR (ARROW RIGHT)
	11	G26-1 (CA)	1-36 x 36	1-6 x 6	US 101 (SHIELD)
		M3-3	1-26 x 12		SOUTH
		M4-10(Lt)	1-48 x 18		DETOUR (ARROW LEFT)
	12	G26-1 (CA)	1-36 x 36	1-6 x 6	US 101 (SHIELD)
		M3-3	1-26 x 12		SOUTH
		SC3 (CA)	1-48 x 18		DETOUR (ARROW STRAIGHT)
	13	G26-1 (CA)	1-36 x 36	1-6 x 6	US 101 (SHIELD)
		M3-3	1-26 x 12		SOUTH
		M4-10(Rt)	1-48 x 18		DETOUR (ARROW RIGHT)
	14	G26-1 (CA)	1-36 x 36	1-6 x 6	US 101 (SHIELD)
		M3-3	1-26 x 12		SOUTH
		M4-10(Lt)	1-48 x 18		DETOUR (ARROW LEFT)
	15	G26-1 (CA)	1-36 x 36	1-6 x 6	US 101 (SHIELD)
		M3-3	1-26 x 12		SOUTH
		M4-10(Rt)	1-48 x 18		DETOUR (ARROW RIGHT)

MOTORIST INFORMATION SIGNS (STATIONARY MOUNTED) CONTINUED

SHEET	SIGN ○	SIGN CODE	No. OF PANEL AND SIZE (In)	No. OF POST AND SIZE (In)	REMARKS
MI-1	16	G26-1 (CA)	1-36 x 36	1-6 x 6	US 101 (SHIELD)
		M3-3	1-26 x 12		SOUTH
		M4-10(Rt)	1-48 x 18		DETOUR (ARROW RIGHT)
	17	SC3 (CA)	1-48 x 18	1-4 x 4	DETOUR (ARROW STRAIGHT)
	18	G26-1 (CA)	1-36 x 36	1-6 x 6	US 101 (SHIELD)
		M3-3	1-26 x 12		SOUTH
		M4-10(Lt)	1-48 x 18		DETOUR (ARROW RIGHT)
	19	G26-1 (CA)	1-36 x 36	1-6 x 6	US 101 (SHIELD)
		M3-3	1-26 x 12		SOUTH
		M4-10(Rt)	1-48 x 18		DETOUR (ARROW RIGHT)
	20	G26-1 (CA)	1-36 x 36	1-6 x 6	US 101 (SHIELD)
		M3-3	1-26 x 12		SOUTH
		M4-10(Lt)	1-48 x 18		DETOUR (ARROW RIGHT)
	21	R11-2	1-48 x 30	1-4 x 4	RAMP CLOSED
	22	W20-2	1-36 x 36	1-4 x 4	DETOUR AHEAD
	23	SC7(CA)	1-84 X 42	2-6 x 6	RAMP CLOSED USE RAMP AT TEFFT St
		G26-1	1-36 X 27		US 101 (SHIELD)
		M3-3	1-24 x 12		SOUTH
	24	SC6-4(CA)	1-48 X 60	1-6 x 6	RAMP CLOSED XX-XX THRU XX-XX
MI-2	25	W20-2	1-48 x 48	1-4 x 4	DETOUR AHEAD
	26	G28-1 (CA)	1-36 x 36	2-6 x 6	US 166 (SHIELD)
		M3-2	1-26 x 12		EAST
		SC7(CA)	1-84 X 42		RAMP CLOSED USE RAMP AT TEFFT St
	27	G28-1 (CA)	1-36 x 36	2-6 x 6	US 166 (SHIELD)
		M3-2	1-26 x 12		EAST
		SC7(CA)	1-84 X 42		RAMP CLOSED USE RAMP AT TEFFT St
	28	SC6-4(CA)	1-48 X 60	1-6 x 6	RAMP CLOSED XX-XX THRU XX-XX
	29	G28-1 (CA)	1-36 x 36	1-6 x 6	US 166 (SHIELD)
		M3-2	1-26 x 12		EAST
		SC3(CA)	1-48 x 18		DETOUR (ARROW STRAIGHT)
	30	G28-1 (CA)	1-36 x 36	1-6 x 6	US 166 (SHIELD)
		M3-2	1-26 x 12		EAST
		C38 (CA)	1-48 x 36		USE NEXT EXIT
	31	G28-1 (CA)	1-36 x 36	1-6 x 6	US 166 (SHIELD)
		M3-2	1-26 x 12		EAST
		M4-10(Lt)	1-48 x 18		DETOUR (ARROW LEFT)
	32	G28-1 (CA)	1-36 x 36	1-6 x 6	US 166 (SHIELD)
		M3-2	1-26 x 12		EAST
		M4-10(Lt)	1-48 x 18		DETOUR (ARROW LEFT)
	33	G28-1 (CA)	1-36 x 36	1-6 x 6	US 166 (SHIELD)
		M3-2	1-26 x 12		EAST
		SC3(CA)	1-48 x 18		DETOUR (ARROW STRAIGHT)

MOTORIST INFORMATION QUANTITIES
MIQ-1

STATE OF CALIFORNIA - DEPARTMENT OF TRANSPORTATION
Caltrans® TRAFFIC DESIGN

FUNCTIONAL SUPERVISOR: HASSAN MAREI
CALCULATED-DESIGNED BY: JOE ERWIN
CHECKED BY: RAJESH PATEL
REVISED BY
DATE REVISED

LAST REVISION 08-12-09
DATE PLOTTED => 15-DEC-2009
TIME PLOTTED => 09:05

Dist	COUNTY	ROUTE	POST MILES TOTAL PROJECT	SHEET No.	TOTAL SHEETS
05	SB,SLO	101	91.0,0.0/0.8	133	299

REGISTERED CIVIL ENGINEER 8-12-09 DATE

11-2-09
PLANS APPROVAL DATE

REGISTERED PROFESSIONAL ENGINEER HASSAN MAREI No. C035068 Exp. 9-30-11 CIVIL STATE OF CALIFORNIA

THE STATE OF CALIFORNIA OR ITS OFFICERS OR AGENTS SHALL NOT BE RESPONSIBLE FOR THE ACCURACY OR COMPLETENESS OF SCANNED COPIES OF THIS PLAN SHEET.

MOTORIST INFORMATION SIGNS (STATIONARY MOUNTED) CONTINUED

SHEET	SIGN ◯	SIGN CODE	No. OF PANEL AND SIZE (In)	No. OF POST AND SIZE (In)	REMARKS
MI-2	34	M4-8	1-24 x 12	2-6 x 6	DETOUR (PLAQUE)
		G28-1 (CA)	1-36 x 36		US 166 (SHIELD)
		M3-2	1-26 x 12		EAST
		SC3(CA)	1-48 x 18		DETOUR (ARROW STRAIGHT)
	35	G28-1 (CA)	1-36 x 36	2-6 x 6	US 166 (SHIELD)
		M3-2	1-26 x 12		EAST
		M4-10(L†)	1-48 x 18		DETOUR (ARROW LEFT)
MI-3	36	W11-1	1-36 x 36	1-6 x 6	BICYCLE SYMBOL
		SC3(CA)	1-48 x 18		DETOUR (ARROW STRAIGHT)
	37	M4-8	1-24 x 12	2-6 x 6	DETOUR (PLAQUE)
		W11-1	1-36 x 36		BICYCLE SYMBOL
		C38(CA)	1-36 x 36		USE NEXT EXIT
	38	M4-9c(R†)	1-30 x 24	1-4 x 4	BIKE DETOUR WITH ARROW
	39	W11-1	1-36 x 36	1-6 x 6	BICYCLE SYMBOLE
		SC3(CA)	1-48 x 18		DETOUR (ARROW STRAIGHT)
	40	W11-1	1-36 x 36	1-6 x 6	BICYCLE SYMBOL
		SC3(CA)	1-48 x 18		DETOUR (ARROW STRAIGHT)
	41	W11-1	1-36 x 36	1-6 x 6	BICYCLE SYMBOL
		SC3(CA)	1-48 x 18		DETOUR (ARROW STRAIGHT)
	42	M4-9c(R†)	1-30 x 24	1-4 x 4	BIKE DETOUR WITH ARROW
	43	M4-9c(L†)	1-30 x 24	1-4 x 4	BIKE DETOUR WITH ARROW
	44	W11-1	1-36 x 36	1-6 x 6	BICYCLE SYMBOL
		SC3(CA)	1-48 x 18		DETOUR (ARROW STRAIGHT)
	45	W11-1	1-36 x 36	1-6 x 6	US 166 (SHIELD)
		SC3(CA)	1-48 x 18		DETOUR (ARROW STRAIGHT)
	46	M4-9c(L†)	1-30 x 24	1-4 x 4	BIKE DETOUR WITH ARROW
	47	M4-9c(R†)	1-30 x 24	1-4 x 4	BIKE DETOUR WITH ARROW

MOTORIST INFORMATION SIGNS (STATIONARY MOUNTED) CONTINUED

SHEET	SIGN ◯	SIGN CODE	No. OF PANEL AND SIZE (In)	No. OF POST AND SIZE (In)	REMARKS
MI-3	48	W11-1	1-36 x 36	1-6 x 6	BICYCLE SYMBOL
		SC3(CA)	1-48 x 18		DETOUR (ARROW STRAIGHT)
	49	W11-1	1-36 x 36	1-6 x 6	BICYCLE SYMBOL
		SC3(CA)	1-48 x 18		DETOUR (ARROW STRAIGHT)
	50	W11-1	1-36 x 36	1-6 x 6	BICYCLE SYMBOL
		SC3(CA)	1-48 x 18		DETOUR (ARROW STRAIGHT)
	51	M4-9c(L†)	1-30 x 24	1-4 x 4	BIKE DETOUR WITH ARROW
	52	M4-9c(R†)	1-30 x 24	1-4 x 4	BIKE DETOUR WITH ARROW
	53	W11-1	1-36 x 36	1-6 x 6	BICYCLE SYMBOL
		M4-8a	1-24 x 18		END DETOUR
	54	M4-9c(L†)	1-30 x 24	1-4 x 4	BIKE DETOUR WITH ARROW
	55	W11-1	1-36 x 36	1-6 x 6	BICYCLE SYMBOL
		W16-1	1-24 x 30		SHARE THE ROAD
	56	M4-9c(L†)	1-30 x 24	1-4 x 4	BIKE DETOUR WITH ARROW
	57	M4-9c(R†)	1-30 x 24	1-4 x 4	BIKE DETOUR WITH ARROW
	58	M4-9c(R†)	1-30 x 24	1-4 x 4	BIKE DETOUR WITH ARROW
	59	M4-9c(L†)	1-30 x 24	1-4 x 4	BIKE DETOUR WITH ARROW
	60	M4-9c(L†)	1-30 x 24	1-4 x 4	BIKE DETOUR WITH ARROW
	61	M4-9c(R†)	1-30 x 24	1-4 x 4	BIKE DETOUR WITH ARROW
	62	W11-1	1-36 x 36	1-6 x 6	BICYCLE SYMBOL
		SC3(CA)	1-48 x 18		DETOUR (ARROW STRAIGHT)
	63	W11-1	1-36 x 36	1-6 x 6	BICYCLE SYMBOL
		M4-8a	1-24 x 18		END DETOUR

MOTORIST INFORMATION QUANTITIES
MIQ-2

STATE OF CALIFORNIA - DEPARTMENT OF TRANSPORTATION
Caltrans TRAFFIC DESIGN

FUNCTIONAL SUPERVISOR: HASSAN MAREI
CALCULATED-DESIGNED BY: JOE ERWIN
CHECKED BY: RAJESH PATEL
REVISED BY
DATE REVISED

LAST REVISION 08-12-09 | DATE PLOTTED => 15-DEC-2009 | TIME PLOTTED => 09:05

Dist	COUNTY	ROUTE	POST MILES TOTAL PROJECT	SHEET No.	TOTAL SHEETS
05	SB,SLO	101	91.0,0.0/0.8	134	299

Xavier Alfaro 8-12-09
REGISTERED ELECTRICAL ENGINEER

11-2-09
PLANS APPROVAL DATE

REGISTERED PROFESSIONAL ENGINEER XAVIER I. ALFARO No. E17488 Exp. 6-30-11 ELECTRICAL STATE OF CALIFORNIA

THE STATE OF CALIFORNIA OR ITS OFFICERS OR AGENTS SHALL NOT BE RESPONSIBLE FOR THE ACCURACY OR COMPLETENESS OF SCANNED COPIES OF THIS PLAN SHEET.

NOTE:

FOR ACCURATE RIGHT OF WAY AND ACCESS DATA, CONTACT RIGHT OF WAY ENGINEERING AT THE DISTRICT OFFICE.

ABBREVIATIONS:

CTID CALTRANS IDENTIFICATION
PG&E PACIFIC GAS AND ELECTRIC

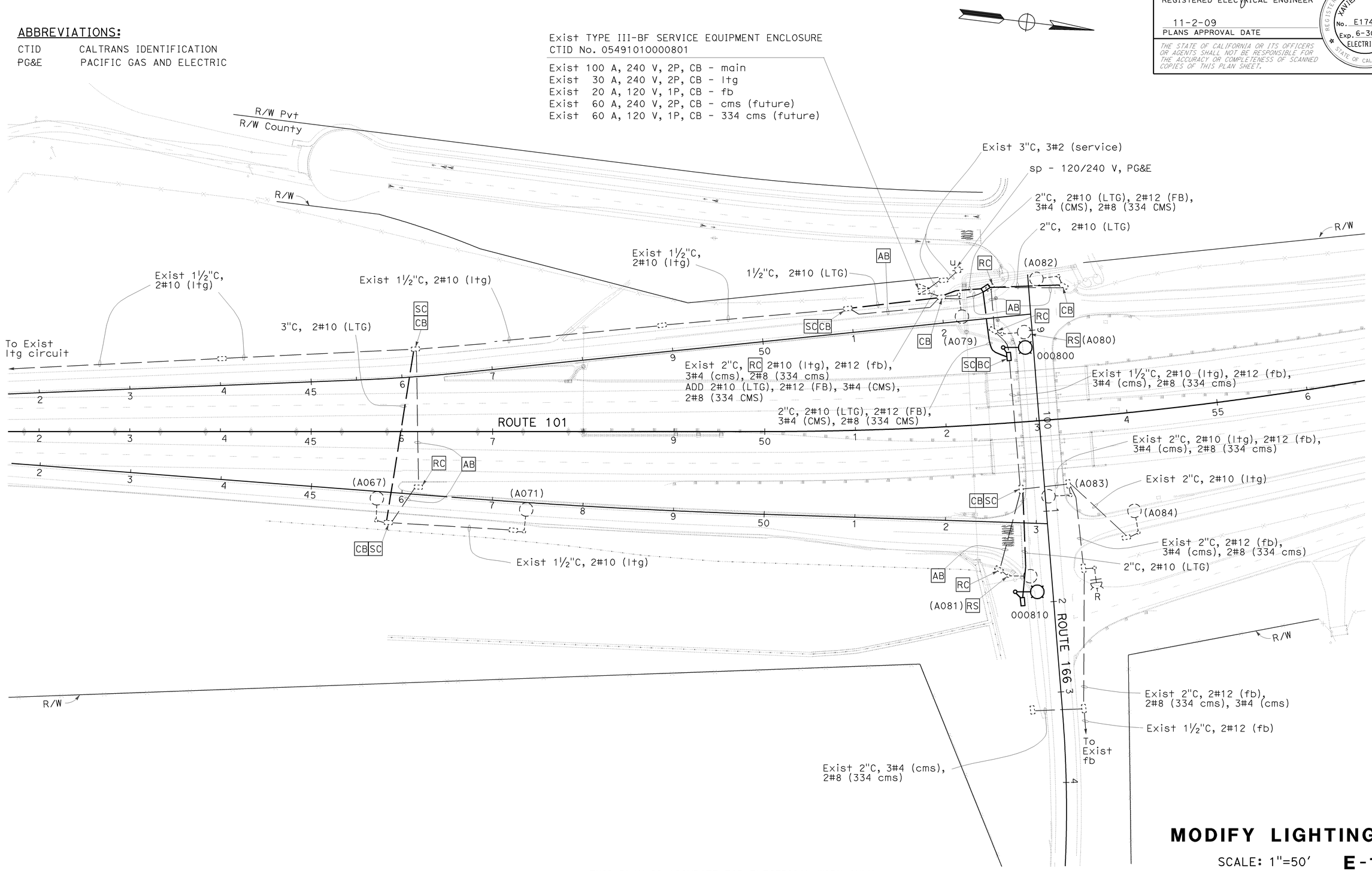

THIS PLAN IS ACCURATE FOR ELECTRICAL WORK ONLY.

MODIFY LIGHTING

SCALE: 1"=50′ **E-1**

STATE OF CALIFORNIA - DEPARTMENT OF TRANSPORTATION
Caltrans
ELECTRICAL DESIGN

FUNCTIONAL SUPERVISOR: ALI BAKHDOUD
CALCULATED-DESIGNED BY: XAVIER ALFARO
CHECKED BY: RAJPREET SINGH
REVISED BY
DATE REVISED

LAST REVISION 08-12-09
DATE PLOTTED => 15-DEC-2009
TIME PLOTTED => 09:05

DIST	COUNTY	ROUTE	POST MILES TOTAL PROJECT	SHEET NO.	TOTAL SHEETS
05	SB,SLO	101	91.0,0.0/0.8	135	299

REGISTERED CIVIL ENGINEER

June 6, 2008
PLANS APPROVAL DATE

REGISTERED PROFESSIONAL ENGINEER
Donald E. Howe
No. C46402
Exp. 3-31-09
CIVIL
STATE OF CALIFORNIA

The State of California or its officers or agents shall not be responsible for the accuracy or completeness of electronic copies of this plan sheet.

To accompany plans dated 11-2-09

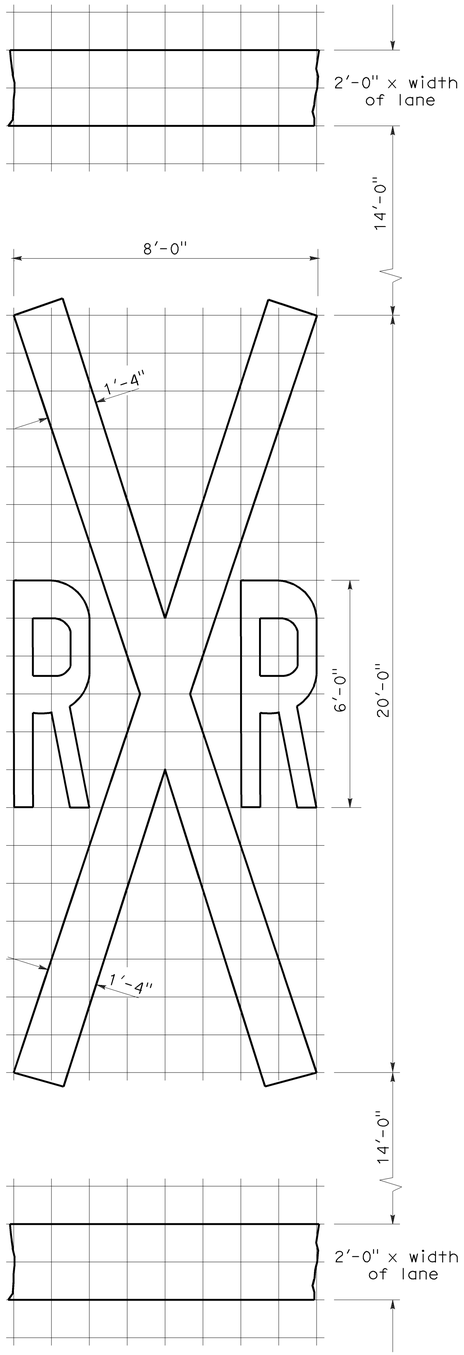

RAILROAD CROSSING SYMBOL

✳70 sq ft DOES NOT INCLUDE THE 2'-0" x VARIABLE WIDTH TRANSVERSE LINES.

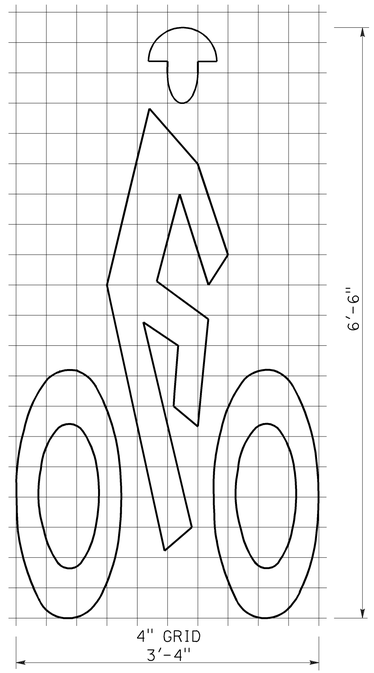

BIKE LANE SYMBOL

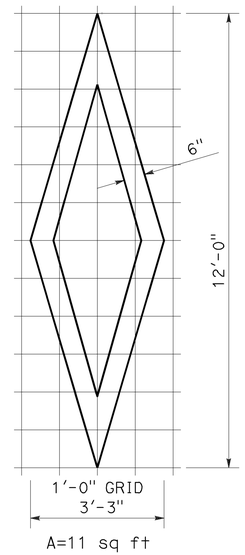

DIAMOND SYMBOL

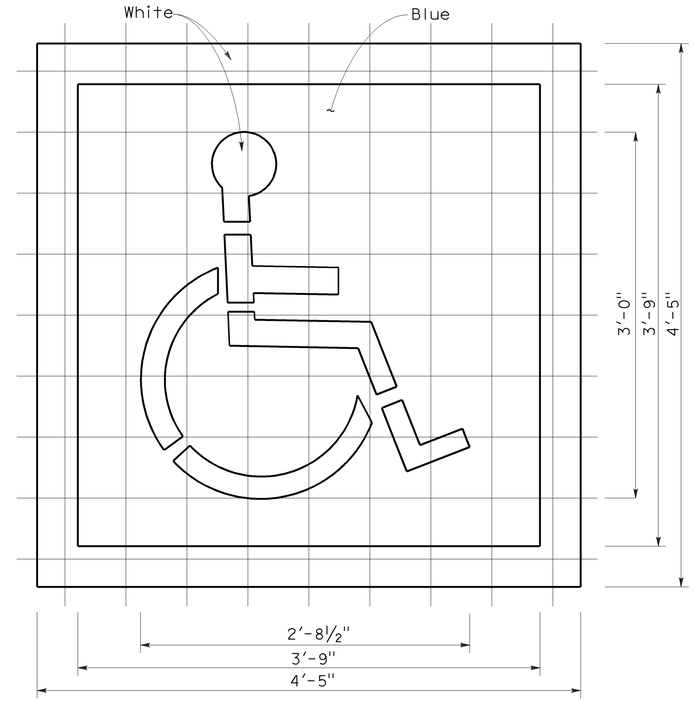

INTERNATIONAL SYMBOL OF ACCESSIBILITY MARKING

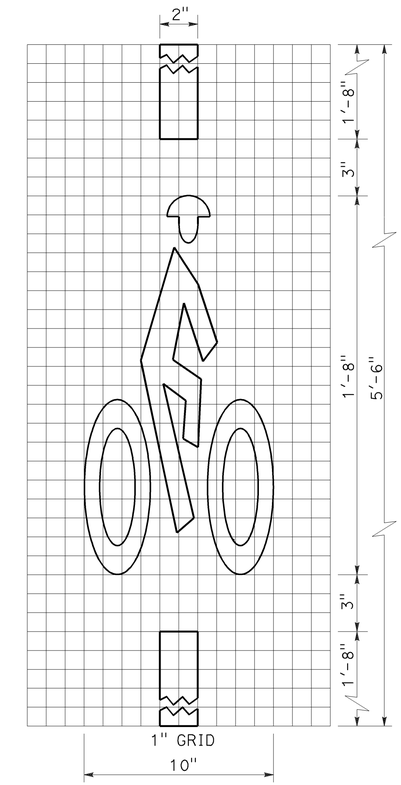

BICYCLE LOOP DETECTOR SYMBOL

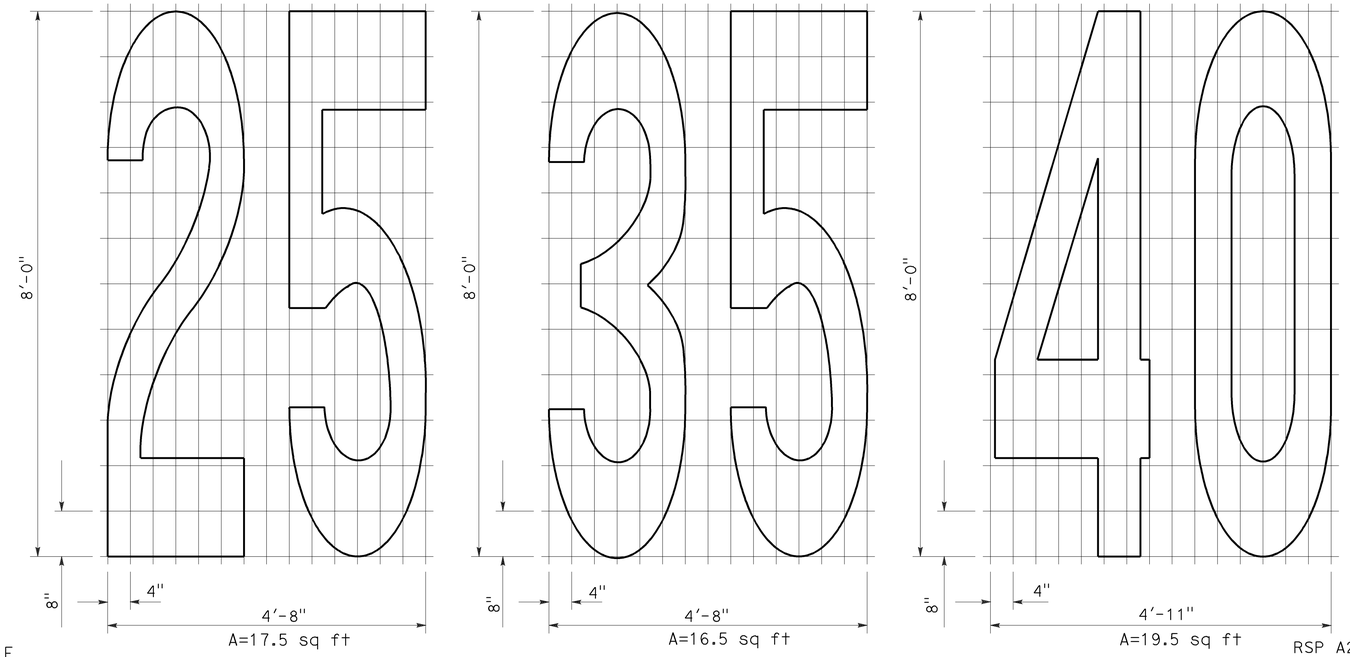

NUMERALS

NOTE:

1. Minor variations in dimensions may be accepted by the Engineer.

STATE OF CALIFORNIA
DEPARTMENT OF TRANSPORTATION

PAVEMENT MARKINGS SYMBOLS AND NUMERALS

NO SCALE

RSP A24C DATED JUNE 6, 2008 SUPERSEDES STANDARD PLAN A24C DATED MAY 1, 2006 - PAGE 11 OF THE STANDARD PLANS BOOK DATED MAY 2006.

REVISED STANDARD PLAN RSP A24C

2006 REVISED STANDARD PLAN RSP A24C

5-27-08

DIST	COUNTY	ROUTE	POST MILES TOTAL PROJECT	SHEET NO.	TOTAL SHEETS
05	SB,SLO	101	91.0,0.0/0.8	136	299

REGISTERED CIVIL ENGINEER

November 17, 2006
PLANS APPROVAL DATE

REGISTERED PROFESSIONAL ENGINEER Dallas Forester No. C37765 Exp. 12-31-06 CIVIL STATE OF CALIFORNIA

The State of California or its officers or agents shall not be responsible for the accuracy or completeness of electronic copies of this plan sheet.

To accompany plans dated 11-2-09

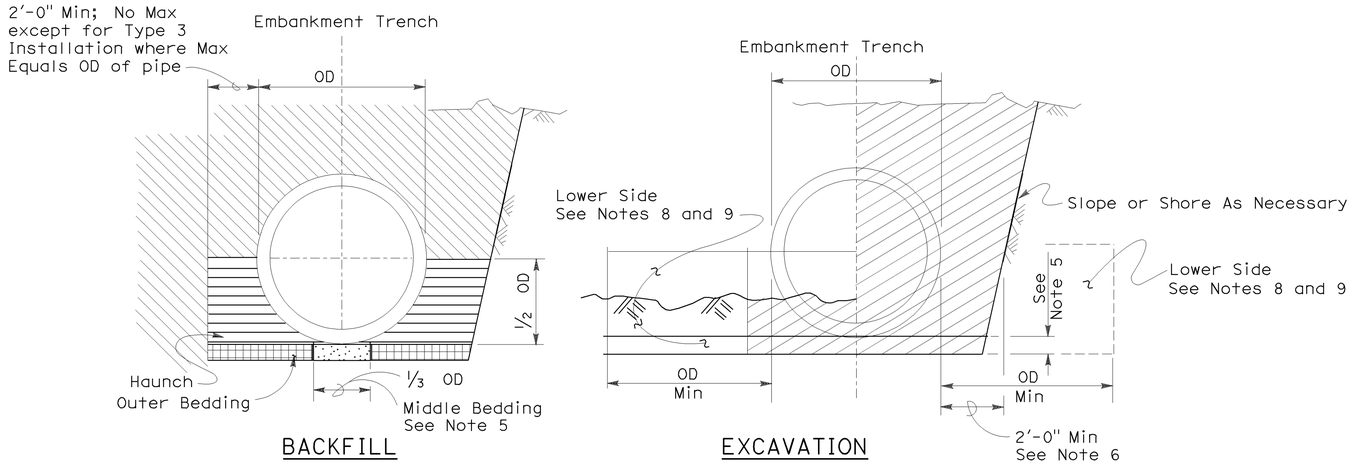

Roadway Embankment

Structure Backfill (Culvert) See Note 6

Structure Backfill (Culvert) See Note 6

Loose Backfill

Excavation Structure (Culvert)

TYPE 1 INSTALLATION:

The haunch and outer bedding shall be compacted to a minimum 90 percent relative compaction. In addition, the minimum sand equivalent in these areas shall be 30 and the maximum percentage passing the 75 μm sieve size shall be 12.

TYPE 2 INSTALLATION:

The haunch and outer bedding shall be compacted to a minimum 90 percent relative compaction. In addition, the minimum sand equivalent in these areas shall be 25.

TYPE 3 INSTALLATION:

The haunch and outer bedding shall be compacted to a minimum 85 percent relative compaction. 90 percent relative compaction will be required where the fill over the pipe is less than 4'-0" or 1/2 OD.

NOTES:

1. Unless otherwise shown on the plans or specified in the special provision, the Contractor shall have the option of selecting the class of RCP and the type of installation to be used, provided the height of cover does not exceed the value shown for the RCP selected.
   Example: 24" RCP culvert with maximum cover of 19'-0" the options are:
   a) Class III or stronger with Installation Type 1.
   b) Class III Special or stronger with Installation Type 2.
   c) Class IV Special or stronger with Installation Type 3.
   Cover is defined as the maximum vertical distance from top of the pipe to finished grade within the length of any given culvert.
2. The class of RCP and Installation Type selected shall be the same throughout the length of any given culvert.
3. The "length of any culvert" is defined as the culvert between:
   a) Successive drainage structure (inlets, junction boxes, headwalls, etc.).
   b) A drainage structure and the inlet or outlet end of the culvert.
   c) The inlet and outlet end of the culvert when there are no intervening drainage structures.
4. Oval and arch shaped RCP shall not be used.
5. 1/25 OD Min, not less than 3".
6. Slurry cement backfill may be substituted for backfill in the outer bedding and haunch areas. If slurry is used the outer and middle beddings shall be omitted. Prior to installation the soil under the middle 1/3 of the outside diameter of the pipe shall be softened by scarifying or other means to a minimum depth of 1/25 OD, but not less than 3". Where slurry cement backfill is used clear distance to trench wall may be reduced as set forth in Section 19-3.062 of the Standard Specifications.
7. Backfill shall be placed full width of excavation except where dimensions are shown for backfill width or thickness. Dimensions shown are minimums.
8. Lower side shall be suitable material as determined by the Engineer. Otherwise it shall be considered unsuitable as set forth in Section 19-2.02 of the Standard Specifications. See Note 9.
9. Where the pipe is placed in a trench, if the trench walls are sloped at 5 vertical to 1 horizontal or steeper for at least 90 percent of the trench height or up to not less than 12" from the grading plane, the firmness of the soil in the lower side need not be considered.
10. Non-reinforced precast concrete pipe sizes 3'-0" or smaller may be placed under installation Types 1, 2 or 3.

INSTALLATION TYPE 1

MINIMUM CLASS AND D-LOAD	COVER	
	108" Dia AND SMALLER	OVER 108" Dia
Class II 1000D	14.9'	12.9'
Class III 1350D	15.0' - 20.9'	13.0' - 18.9'
Class III Special 1700D	21.0' - 26.9'	19.0' - 24.9'
Class IV 2000D	27.0' - 31.9'	25.0' - 29.9'
Class IV Special 2500D	32.0' - 40.9'	30.0' - 38.9'
Class V 3000D	41.0' - 49.9'	39.0' - 46.9'
Class V Special 3600D	50.0' - 59.0'	47.0' - 58.0'

INSTALLATION TYPE 2

MINIMUM CLASS AND D-LOAD	COVER
Class II 1000D	9.9'
Class III 1350D	10.0'- 14.9'
Class III Special 1700D	15.0' - 19.9'
Class IV 2000D	20.0' - 24.9'
Class IV Special 2500D	25.0' - 31.9'
Class V 3000D	32.0' - 38.9'
Class V Special 3600D	39.0' - 47.0'

INSTALLATION TYPE 3

MINIMUM CLASS AND D-LOAD	COVER	
	48" Dia AND SMALLER	OVER 48" Dia
Class II 1000D	7.9'	5.9'
Class III 1350D	8.0' - 10.9'	6.0' - 8.9'
Class III Special 1700D	11.0' - 14.9'	9.0' - 12.9'
Class IV 2000D	15.0' - 17.9'	13.0' - 15.9'
Class IV Special 2500D	18.0' - 21.9'	16.0' - 19.9'
Class V 3000D	22.0' - 26.9'	20.0' - 24.9'
Class V Special 3600D	30.0' - 33.0'	25.0' - 31.0'

STATE OF CALIFORNIA
DEPARTMENT OF TRANSPORTATION

EXCAVATION AND BACKFILL CONCRETE PIPE CULVERTS

NO SCALE

RSP A62DA DATED NOVEMBER 17, 2006 SUPERSEDES STANDARD PLAN A62DA DATED MAY 1, 2006 - PAGE 20 OF THE STANDARD PLANS BOOK DATED MAY 2006.

REVISED STANDARD PLAN RSP A62DA

2006 REVISED STANDARD PLAN RSP A62DA

10-26-06

DIST	COUNTY	ROUTE	POST MILES TOTAL PROJECT	SHEET NO.	TOTAL SHEETS
05	SB,SLO	101	91.0,0.0/0.8	137	299

Mark S. Turner
PROFESSIONAL LAND SURVEYOR

June 30, 2006
PLANS APPROVAL DATE

LICENSED LAND SURVEYOR
Mark S. Turner
No. 6228
Exp. 3-31-08
STATE OF CALIFORNIA

The State of California or its officers or agents shall not be responsible for the accuracy or completeness of electronic copies of this plan sheet.

To accompany plans dated 11-2-09

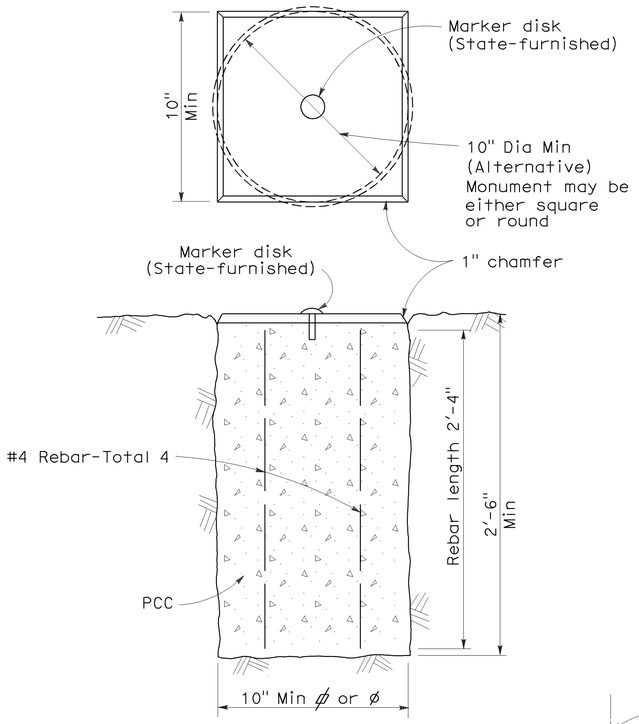

TYPE A

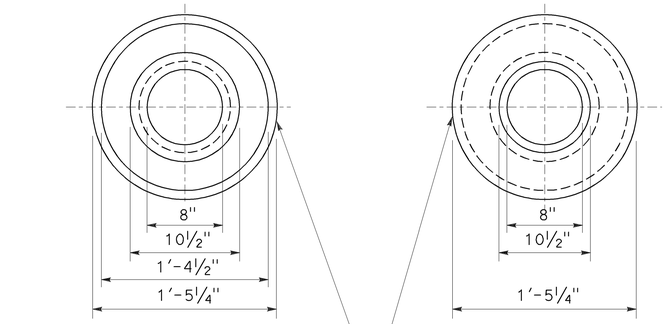

TOP VIEW OF
MONUMENT OF WELL RING

BOTTOM VIEW OF
MONUMENT OF WELL RING

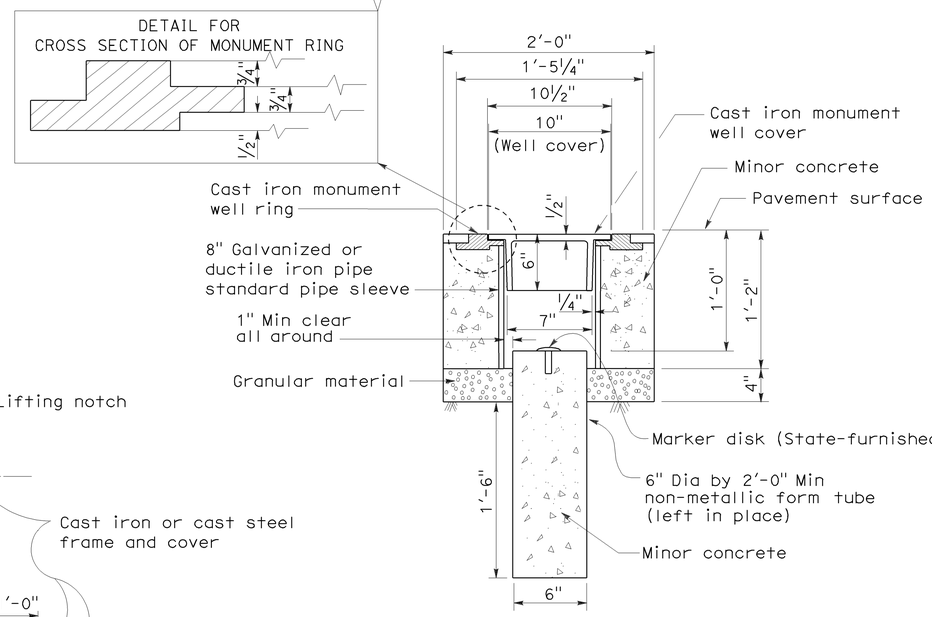

TYPE B

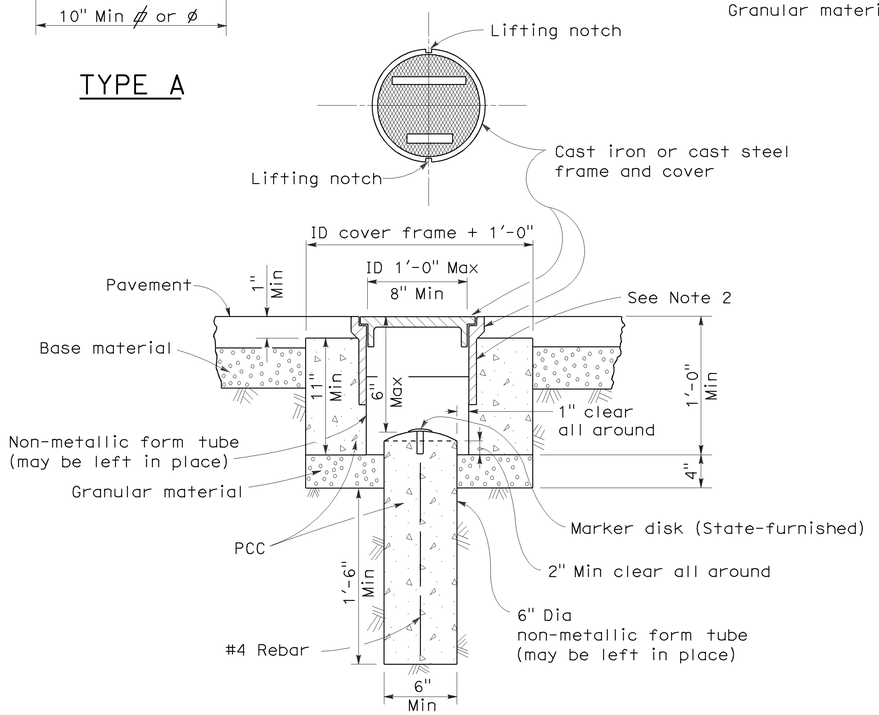

TYPE D
Alternative No. 1

NOTES:

1. The configuration of the cast iron or cast steel frame and cover may vary from that shown.
2. Frame shall be embedded in the concrete a minimum of 3".
3. Type D monument shall be either Alternative No. 1 or Alternative No. 2 at the contractor's option.
4. All portland cement concrete shall be Class 2 or minor concrete with 1" maximum aggregate.

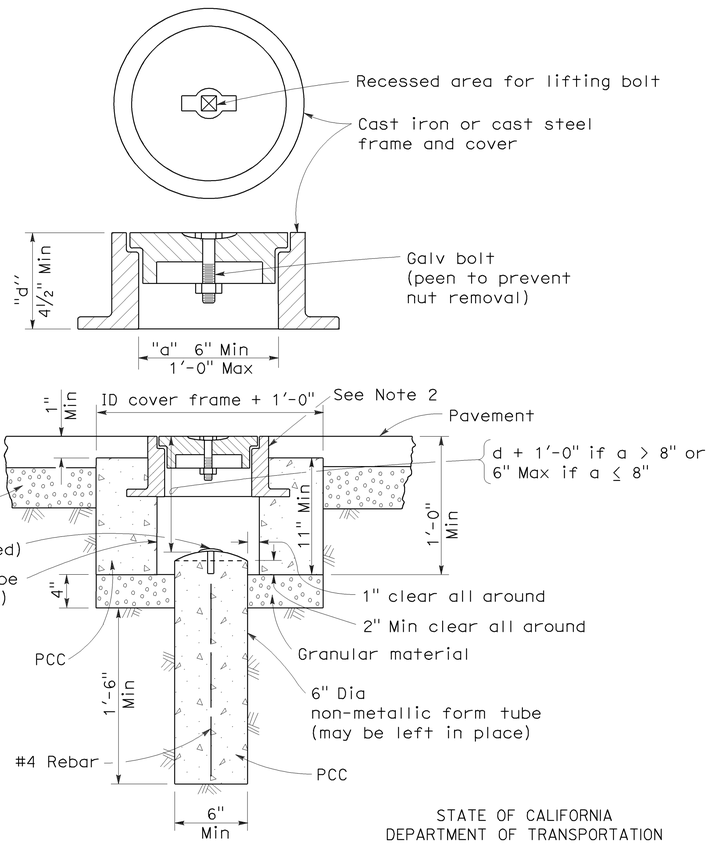

TYPE D
Alternative No. 2

STATE OF CALIFORNIA
DEPARTMENT OF TRANSPORTATION

SURVEY MONUMENTS

NO SCALE

RSP A74 DATED JUNE 30, 2006 SUPERSEDES STANDARD PLAN DATED MAY 1, 2006 - PAGE 28 OF THE STANDARD PLANS BOOK DATED MAY 2006.

REVISED STANDARD PLAN RSP A74

2006 REVISED STANDARD PLAN RSP A74

5-24-06

DIST	COUNTY	ROUTE	POST MILES TOTAL PROJECT	SHEET NO.	TOTAL SHEETS
05	SB,SLO	101	91.0,0.0/0.8	138	299

Randell D. Hiatt
REGISTERED CIVIL ENGINEER

June 6, 2008
PLANS APPROVAL DATE

REGISTERED PROFESSIONAL ENGINEER
Randell D. Hiatt
No. C50200
Exp. 6-30-09
CIVIL
STATE OF CALIFORNIA

The State of California or its officers or agents shall not be responsible for the accuracy or completeness of electronic copies of this plan sheet.

To accompany plans dated 11-2-09

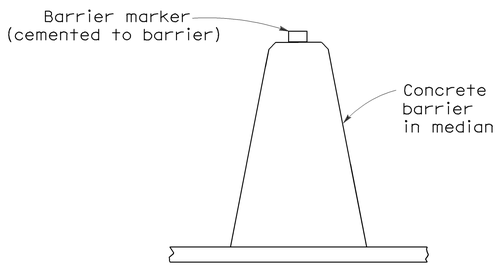

CONCRETE BARRIER TYPE 60 DELINEATION

See Notes 7 and 8

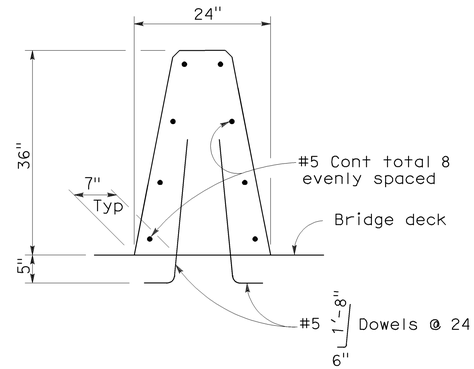

CONCRETE BARRIER TYPE 60A

Details similar to Type 60 except as noted.

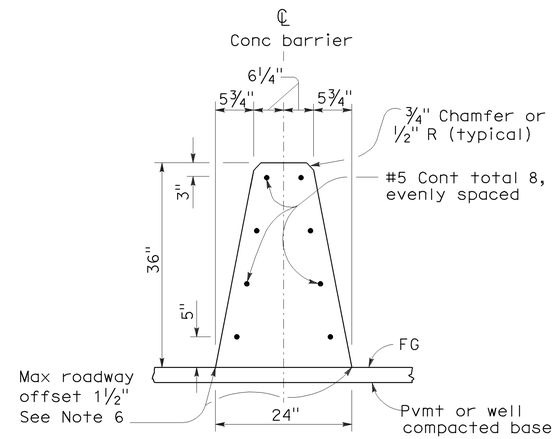

CONCRETE BARRIER TYPE 60

NOTES:

1. See Standard Plan A76B for details of Concrete Barrier Type 60 end anchors, connection to structures and transitions to Concrete Barrier Type 50 and Concrete Barrier Type 60S.
2. See Standard Plan A76C for Concrete Barrier Type 60 transitions at bridge column and sign pedestals.
3. Where glare screen is required on Concrete Barrier Type 60, use Concrete Barrier Type 60G.
4. Where the concrete barrier is added to the face of existing concrete structure, match existing weep holes.
5. Expansion joints in concrete barrier shall be located at all deck, pavement and principal wall joints. Expansion joint filler material shall be the same size as joint or ½" minimum.
6. Where roadway offset is greater than 1½", see Concrete Barrier Type 60C.
7. Barrier delineation to be used when required by the Special Provisions.
8. Spacing of barrier markers to match spacing of raised pavement markers on the adjacent median edgeline pavement delineation.
9. Reinforcing stirrup not required for roadway offsets less than 1'-0".
10. For roadway surfaces offset greater than 1½" to 3", no rebars required. For roadway surfaces offset greater than 3" to 8" use two #4 rebars at 3" above the lower roadway surface. For roadway surfaces offset greater than 8" to 12", use two #4 rebars at 3" above the lower roadway surface and two #4 rebars at 8" above the lower roadway surface. For roadway surfaces offset greater than 12" to 36", use two #4 rebars at 3" above the lower roadway surface and two #4 rebars at every 8" increment vertical spacing above the first two #4 rebars.

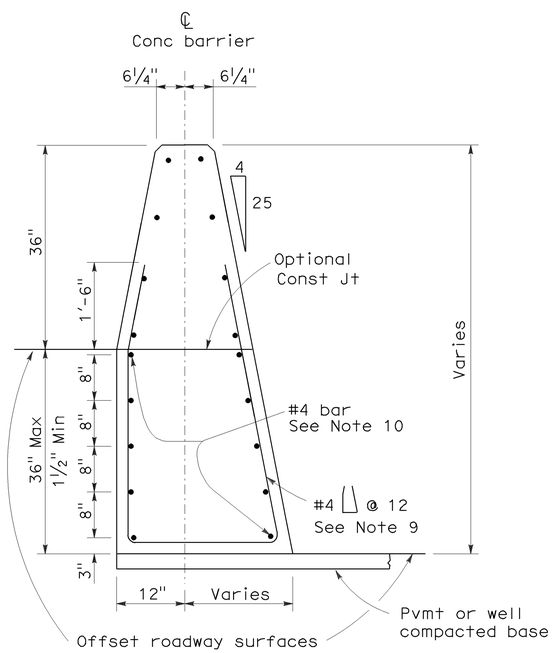

CONCRETE BARRIER TYPE 60C

Details similar to Type 60 except as noted.
Concrete barrier end anchor when necessary.
36" roadway surfaces offset shown.

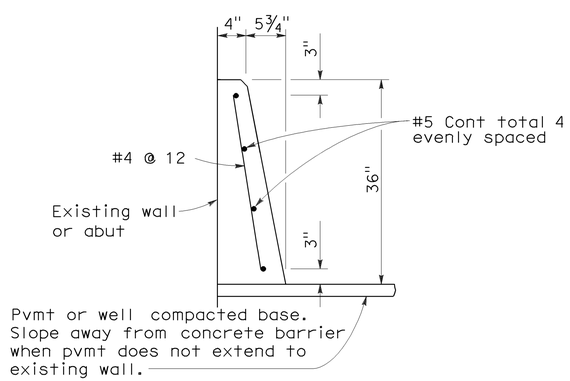

CONCRETE BARRIER TYPE 60D

STATE OF CALIFORNIA
DEPARTMENT OF TRANSPORTATION

CONCRETE BARRIER TYPE 60

NO SCALE

RSP A76A DATED JUNE 6, 2008 SUPERSEDES STANDARD PLAN A76A
DATED MAY 1, 2006 - PAGE 29 OF THE STANDARD PLANS BOOK DATED MAY 2006.

REVISED STANDARD PLAN RSP A76A

2006 REVISED STANDARD PLAN RSP A76A

5-21-08

DIST	COUNTY	ROUTE	POST MILES TOTAL PROJECT	SHEET NO.	TOTAL SHEETS
05	SB,SLO	101	91.0,0.0/0.8	139	299

Randell D. Hiatt
REGISTERED CIVIL ENGINEER

June 6, 2008
PLANS APPROVAL DATE

REGISTERED PROFESSIONAL ENGINEER
Randell D. Hiatt
No. C50200
Exp. 6-30-09
CIVIL
STATE OF CALIFORNIA

The State of California or its officers or agents shall not be responsible for the accuracy or completeness of electronic copies of this plan sheet.

To accompany plans dated 11-2-09

NOTES:

1. When necessary to place dike in front of face of guard railing, only Type C dike may be used. For dike details, see Standard Plan A87B.
2. For standard railing post embedment, see Standard Plans A77C3.
3. Guard railing delineation to be used where shown on the Project Plans.
4. When dike or curb is placed under guard railing, the maximum height of the dike or curb shall be 4". Mountable dike should not be used. For dike and curb details, see Revised Standard Plans RSP A87A and Standard Plan A87B.
5. For details of typical distance between the face of rail and hinge point, see Standard Plan A77C3.

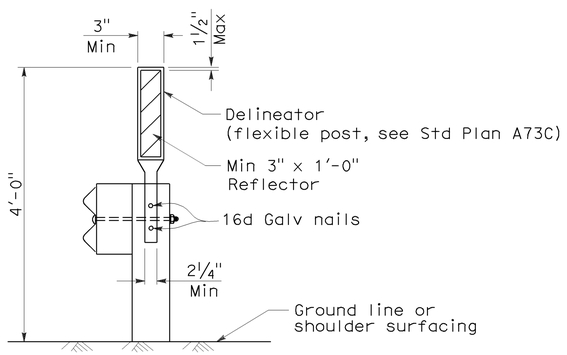

GUARD RAILING DELINEATION

See Note 3

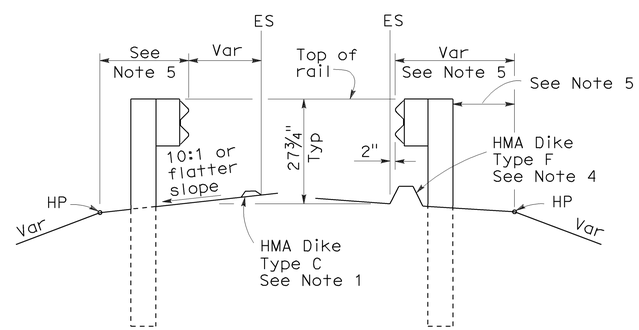

DIKE POSITIONING

See Note 1

STATE OF CALIFORNIA
DEPARTMENT OF TRANSPORTATION

METAL BEAM GUARD RAILING TYPICAL RAILING DELINEATION AND DIKE POSITIONING DETAILS

NO SCALE

RSP A77C4 DATED JUNE 6, 2008 SUPERSEDES STANDARD PLAN A77C4
DATED MAY 1, 2006 - PAGE 47 OF THE STANDARD PLANS BOOK DATED MAY 2006.

REVISED STANDARD PLAN RSP A77C4

2006 REVISED STANDARD PLAN RSP A77C4

12-10-07

DIST	COUNTY	ROUTE	POST MILES TOTAL PROJECT	SHEET NO.	TOTAL SHEETS
05	SB,SLO	101	91.0,0.0/0.8	140	299

Randell D. Hiatt
REGISTERED CIVIL ENGINEER

June 6, 2008
PLANS APPROVAL DATE

REGISTERED PROFESSIONAL ENGINEER Randell D. Hiatt No. C50200 Exp. 6-30-09 CIVIL STATE OF CALIFORNIA

The State of California or its officers or agents shall not be responsible for the accuracy or completeness of electronic copies of this plan sheet.

To accompany plans dated 11-2-09

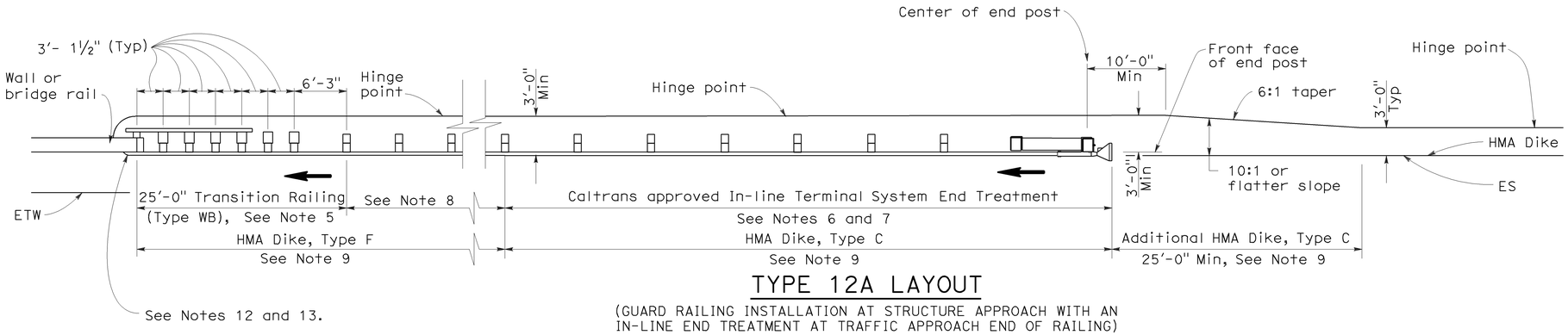

TYPE 12A LAYOUT

(GUARD RAILING INSTALLATION AT STRUCTURE APPROACH WITH AN IN-LINE END TREATMENT AT TRAFFIC APPROACH END OF RAILING)
See Notes 10

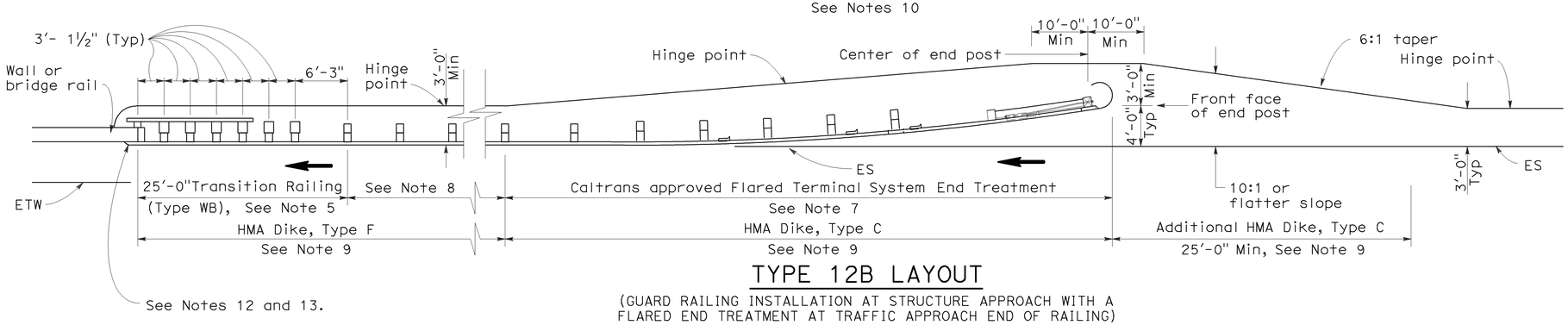

TYPE 12B LAYOUT

(GUARD RAILING INSTALLATION AT STRUCTURE APPROACH WITH A FLARED END TREATMENT AT TRAFFIC APPROACH END OF RAILING)
See Notes 10

NOTES:

1. Line post, blocks and hardware to be used are shown on Standard Plans A77A1, A77A2, A77B1, A77C1 and A77C2.
2. Guard rail post spacing to be 6'-3" center to center, except as otherwise noted.
3. Except as noted, line posts are 6" x 8" x 6'-0" wood with 6" x 8" x 1'-2" wood blocks. W6 x 9 steel posts, 6'-0" in length, with 6" x 8" x 1'-2" notched wood blocks or plastic blocks may be used for 6" x 8" x 6'-0" wood posts with 6" x 8" x 1'-2" wood blocks where applicable and when specified.
4. Direction of adjacent traffic indicated by ➡.
5. For Transition Railing (Type WB) details for Types 12A and 12B Layouts, see Standard Plan A77J4.
6. In-line Terminal System End Treatments are used where site conditions will not accommodate a flared end treatment.
7. The type of terminal system end treatment to be used will be shown on the Project Plans.
8. Dependent on site conditions (embankment height, side slopes, or other fixed objects), it may be advisable to construct additional guard railing (a length equal to multiples of 12'-6" with 6'-3" post spacing) between the transition railing and end treatment.
9. Where placement of dike is required with guard railing installations, see Revised Standard Plan RSP A77C4 for dike positioning details.
10. Type 12A or Type 12B Layouts are typically used:
    a. To the right of approaching traffic, at the end of a structure, on two-lane conventional highway where the roadbed width across the structure is less than 40 feet.
    b. To the left of approaching traffic, at the end of a structure, on two-lane conventional highway where the roadbed width across the structure is less than 40 feet.
    c. To the right of approaching traffic at the end of each structure on multilane freeways or expressways with separate adjacent or parallel bridges.
    d. To the right of approaching traffic at the end of the structure on multilane freeways or expressways with decked median on the bridge.
11. See Revised Standard Plan RSP A77F3 for typical layout used left of approaching traffic at the ends of each structure on multilane freeways or expressways with separate adjacent or parallel bridges.
12. For additional details of typical connections to bridge rail, see Connection Detail AA on Revised Standard Plans RSP A77J1 and RSP A77J2 and Connection Detail FF on Standard Plans A77K1 and A77K2.
13. For additional details of a typical connection to walls or abutments, see Standard Plan A77J3.

STATE OF CALIFORNIA
DEPARTMENT OF TRANSPORTATION

METAL BEAM GUARD RAILING TYPICAL LAYOUTS FOR STRUCTURE APPROACH

NO SCALE

RSP A77F1 DATED JUNE 6, 2008 SUPERSEDES STANDARD PLAN A77F1
DATED MAY 1, 2006 - PAGE 54 OF THE STANDARD PLANS BOOK DATED MAY 2006.

REVISED STANDARD PLAN RSP A77F1

2006 REVISED STANDARD PLAN RSP A77F1

12-10-07

DIST	COUNTY	ROUTE	POST MILES TOTAL PROJECT	SHEET NO.	TOTAL SHEETS
05	SB,SLO	101	91.0,0.0/0.8	141	299

Randell D. Hiatt
REGISTERED CIVIL ENGINEER

June 6, 2008
PLANS APPROVAL DATE

REGISTERED PROFESSIONAL ENGINEER
Randell D. Hiatt
No. C50200
Exp. 6-30-09
CIVIL
STATE OF CALIFORNIA

The State of California or its officers or agents shall not be responsible for the accuracy or completeness of electronic copies of this plan sheet.

To accompany plans dated 11-2-09

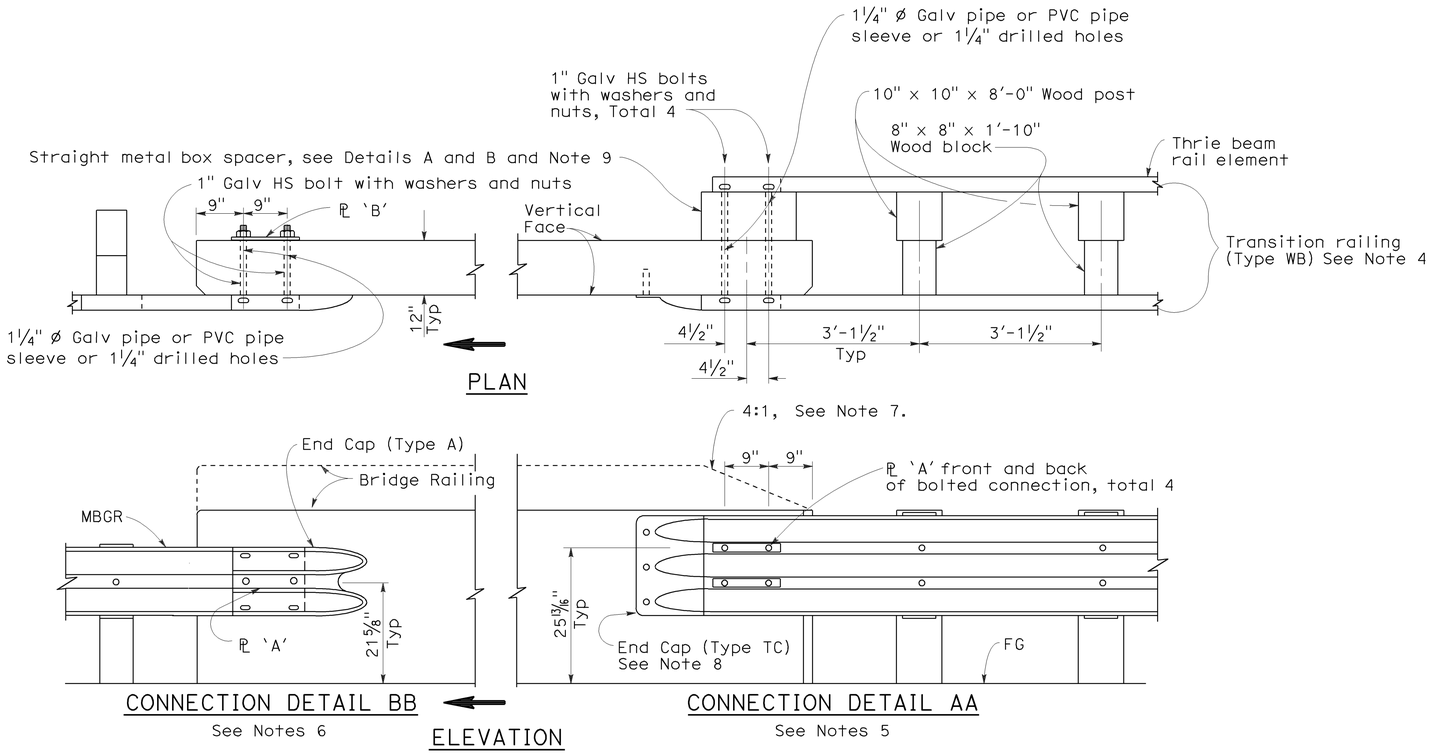

GUARD RAILING CONNECTION TO BRIDGE RAILING WITHOUT SIDEWALK

NOTES:

1. See Revised Standard Plan RSP A77J2 for additional connection details to bridges without sidewalks.
2. Additional details of posts, blocks and hardware are shown on Standard Plan A77B1, A77C1 and A77C2.
3. Direction of adjacent traffic indicated by ➡.
4. For additional details of Transition Railing (Type WB), see Standard Plan A77J4. Transition Railing (Type WB) transitions the 12 gage w-beam standard railing section of guard railing to a heavier gage nested thrie beam railing section which is connected to the concrete bridge railing.
5. For typical use of Connection Detail AA, see Layout Types 12A and 12B on Revised Standard Plan RSP A77F1, Layout Types 12C and 12D on Standard Plan A77F2, and Layout Type 12E on Revised Standard Plan RSP A77F3.
6. For typical use of Connection Detail BB, see Layout Type 12D (structure departure railing connection) on Standard Plan A77F2 and Layout Type 12DD on Standard Plan A77F5.
7. Where the height of the bridge railing exceeds the height of the thrie beam railing by more than 1" at Connection Detail AA, taper the top of the end of the bridge railing at 4:1 to match the top elevation of the thrie beam rail.
8. For details of End Cap (Type TC), see Standard Plan A77J4.
9. See Standard Plan A77J4 for additional details regarding depth dimension for straight metal box spacer.

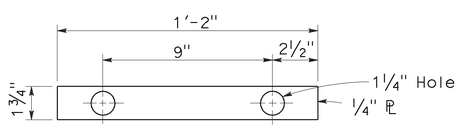

PLATE 'A'

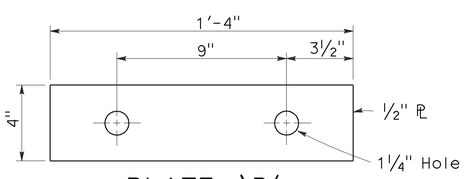

PLATE 'B'
(For backside of connection BB)

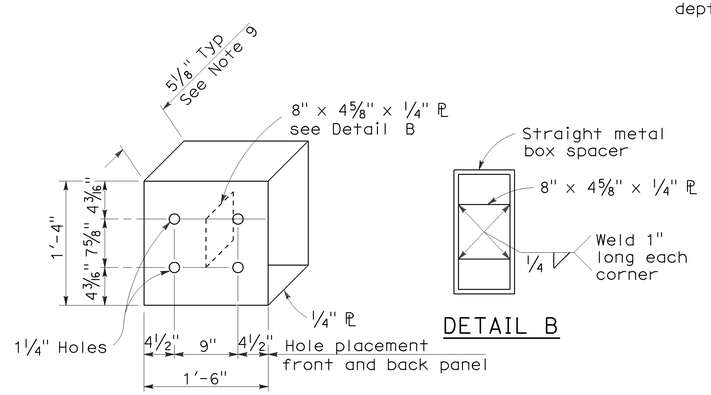

DETAIL B

DETAIL A

STRAIGHT METAL BOX SPACER

STATE OF CALIFORNIA
DEPARTMENT OF TRANSPORTATION

METAL BEAM GUARD RAILING CONNECTIONS TO BRIDGE RAILINGS WITHOUT SIDEWALKS DETAILS No.1

NO SCALE

RSP A77J1 DATED JUNE 6, 2008 SUPERSEDES STANDARD PLAN A77J1 DATED MAY 1, 2006 - PAGE 72 OF THE STANDARD PLANS BOOK DATED MAY 2006.

REVISED STANDARD PLAN RSP A77J1

2006 REVISED STANDARD PLAN RSP A77J1

12-10-07

DIST	COUNTY	ROUTE	POST MILES TOTAL PROJECT	SHEET NO.	TOTAL SHEETS
05	SB,SLO	101	91.0,0.0/0.8	142	299

Randell D. Hiatt
REGISTERED CIVIL ENGINEER

June 6, 2008
PLANS APPROVAL DATE

REGISTERED PROFESSIONAL ENGINEER
Randell D. Hiatt
No. C50200
Exp. 6-30-09
CIVIL
STATE OF CALIFORNIA

The State of California or its officers or agents shall not be responsible for the accuracy or completeness of electronic copies of this plan sheet.

To accompany plans dated 11-2-09

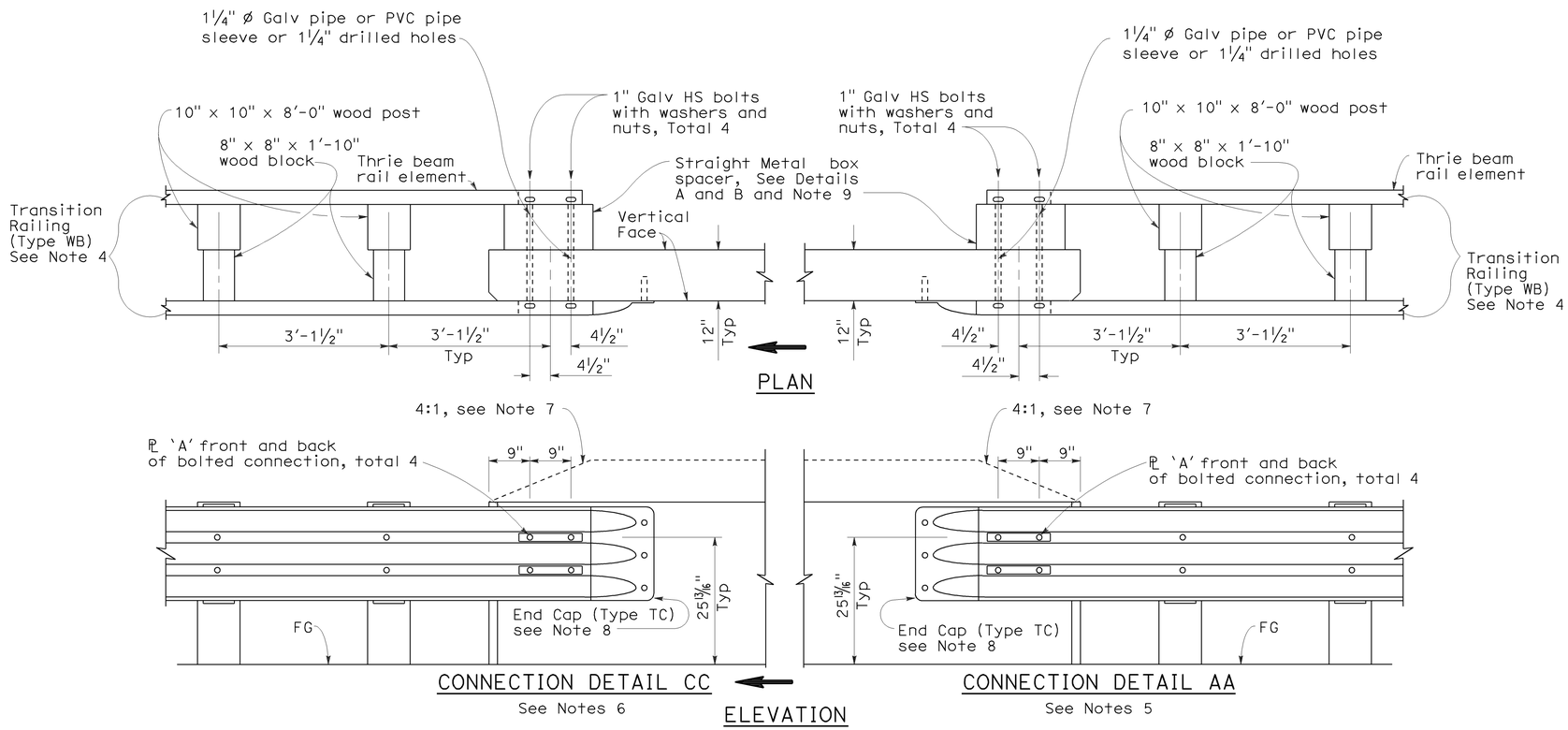

GUARD RAILING CONNECTION TO BRIDGE RAILING WITHOUT SIDEWALK

NOTES:

1. See Revised Standard Plan RSP A77J1 for additional connection details to bridges without sidewalks.
2. Additional details of posts, blocks and hardware are shown on Standard Plan A77B1, A77C1 and A77C2.
3. Direction of adjacent traffic indicated by ⟹.
4. For additional details of Transition Railing (Type WB), see Standard Plan A77J4. Transition Railing (Type WB) transitions the 12 gage w-beam standard railing section of guard railing to a heavier gage nested thrie beam railing section which is connected to the concrete bridge railing.
5. For typical use of Connection Detail AA, see Layout Types 12A and 12B on Revised Standard Plan RSP A77F1, Layout Types 12C and 12D on Standard Plan A77F2, and Layout Type 12E on Revised Standard Plan RSP A77F3.
6. For typical use of Connection Detail CC, see Layout Types 12AA and 12BB on Standard Plan A77F4 and Layout Type 12CC on Standard Plan A77F5.
7. Where the height of the bridge railing exceeds the height of the thrie beam railing by more than 1" at Connection Detail AA and connection Detail CC, taper the top of the end of the bridge railing at 4:1 to match the top elevation of the thrie beam railing.
8. For details of End Cap (Type TC), see Standard Plans A77J4.
9. See Standard Plans A77J4 for additional details regarding depth dimension for straight metal box spacer.

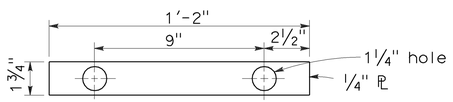

PLATE 'A'

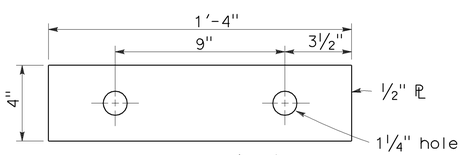

PLATE 'B'
(For backside of connection BB)

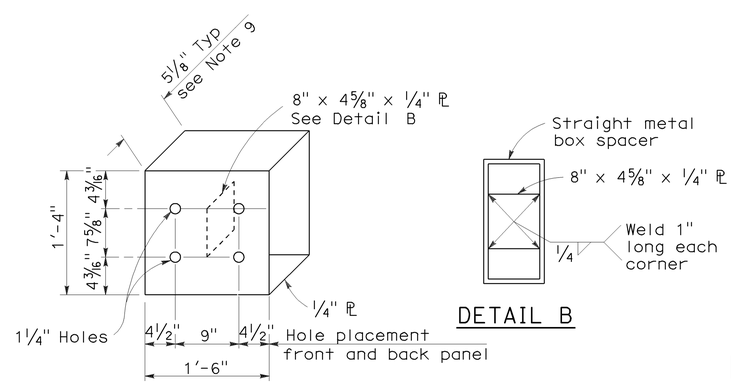

DETAIL A

DETAIL B

STRAIGHT METAL BOX SPACER

STATE OF CALIFORNIA
DEPARTMENT OF TRANSPORTATION

METAL BEAM GUARD RAILING CONNECTIONS TO BRIDGE RAILINGS WITHOUT SIDEWALKS DETAILS No.2

NO SCALE

RSP A77J2 DATED JUNE 6, 2008 SUPERSEDES STANDARD PLAN A77J2 DATED MAY 1, 2006 - PAGE 73 OF THE STANDARD PLANS BOOK DATED MAY 2006.

REVISED STANDARD PLAN RSP A77J2

2006 REVISED STANDARD PLAN RSP A77J2

12-10-07

DIST	COUNTY	ROUTE	POST MILES TOTAL PROJECT	SHEET NO.	TOTAL SHEETS
05	SB,SLO	101	91.0,0.0/0.8	143	299

Randell D. Hiatt
REGISTERED CIVIL ENGINEER

June 5, 2009
PLANS APPROVAL DATE

REGISTERED PROFESSIONAL ENGINEER
Randell D. Hiatt
No. C50200
Exp. 6-30-09
CIVIL
STATE OF CALIFORNIA

The State of California or its officers or agents shall not be responsible for the accuracy or completeness of electronic copies of this plan sheet.

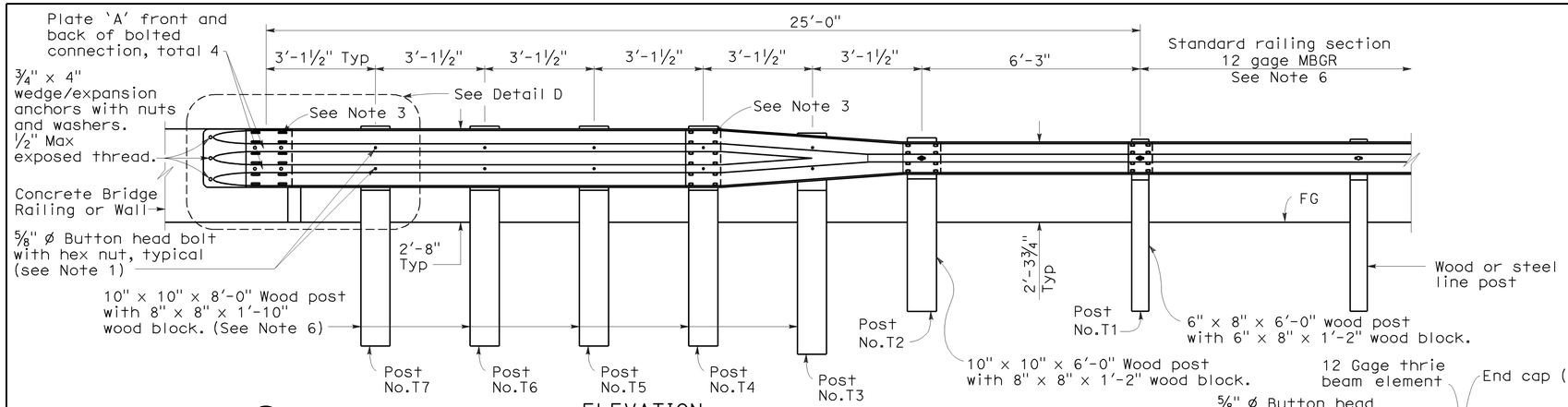

ELEVATION

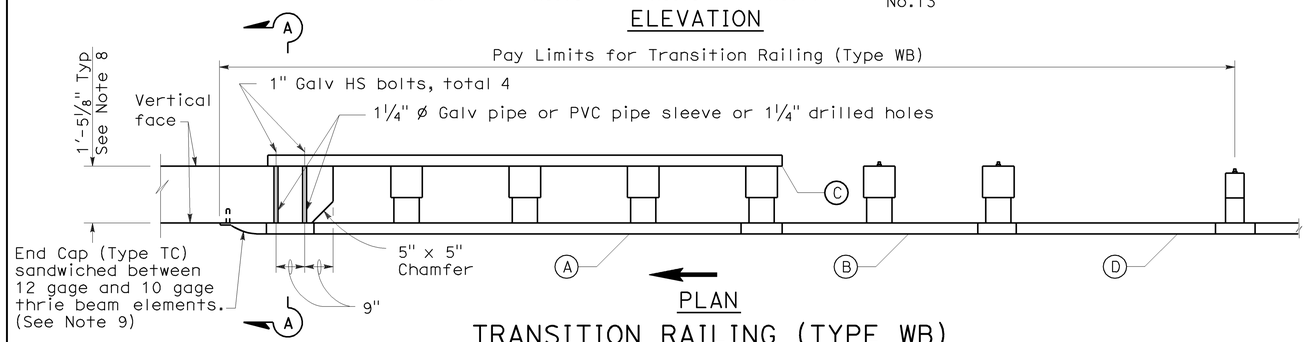

PLAN

TRANSITION RAILING (TYPE WB)

(No Blockout Attachment)

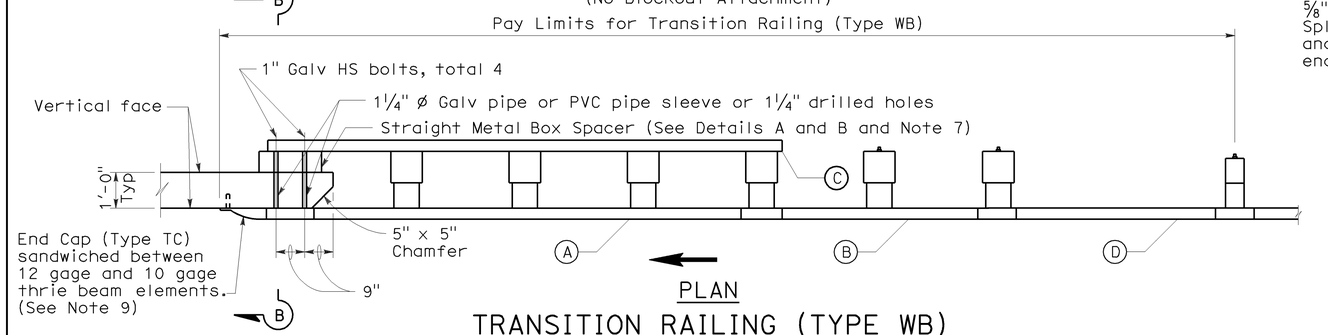

PLAN

TRANSITION RAILING (TYPE WB)

(Blockout Attachment)

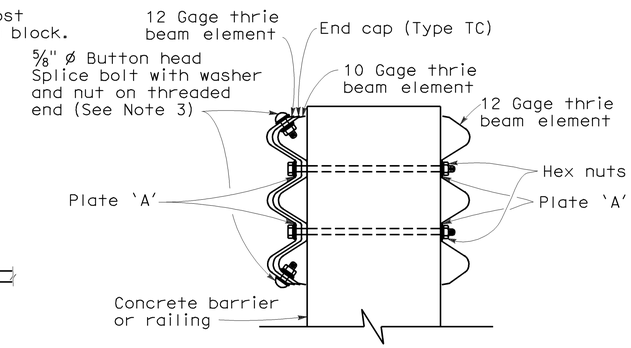

SECTION A-A

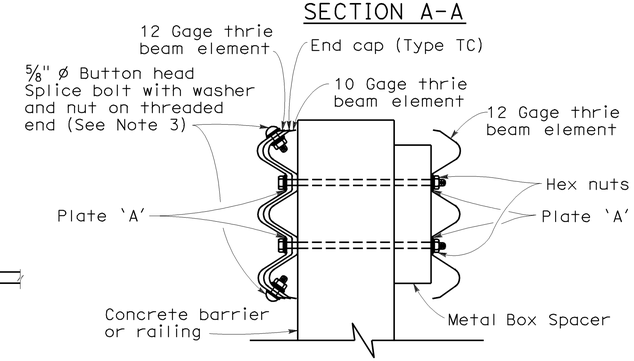

SECTION B-B

NOTES:

To accompany plans dated 11-2-09

1. Use 5/8 " ø Button head bolts and hex nuts for connections to posts. No washer on rail face for bolted connections to post.
2. The nested rail elements, end cap, and 'W' beam to thrie beam element may be spliced together prior to bolting the elements to the wood post and concrete barrier or railing.
3. Exterior splice bolt holes for rail element splices at Post No.T4 and the connection to the concrete barrier or railing shall be the standard 29/32 " x 1 1/8 " slot size. Interior splice bolt holes at these locations may be increased up to 1 1/4 " ø. Only the top 2 and the bottom 2 splice bolts with washers and nuts are required for rail splices at Post No.T4 and the connection to the concrete barrier or railing.
4. Direction of adjacent traffic indicated by →.
5. The top elevation of Post Nos.T2 through T7 shall not project more than 1" above the top elevation of the rail element.
6. Typically, the railing connected to Transition Railing (Type WB) will be either standard railing section of metal beam guard railing or an approved Caltrans end treatment attached to Post No.T1.
7. The depth of the metal box spacer varies from the 5 1/8 " to 1 1/2 " and is dependent on the width of the concrete railing or wall. The combined dimension for the depth of the metal box spacer plus the width of railing or wall is typically 17 1/8 ". Where the space between the backside of the concrete railing or wall and the rear thrie beam element is less than 1 1/2 ", metal plates similar to Plate 'A' are to be used as spacers.
8. Where the width of the concrete railing or wall is greater than 17 1/8 ", wood blocks are to be used to fill the space created between the backside of Posts No.4 through No.7 and the rear thrie beam element. These wood blocks shall be 8" in width and 1'-2" in length. The dimension between the front thrie beam element and the rear thrie beam element is to match the width of the concrete railing or wall.
9. End cap may be installed over 12 gage and 10 gage thrie beam elements where transition railing is installed on the departure end of bridge railing.

LEGEND

(A) Nested thrie beam elements (one 12 gage element nested over one 10 gage element).

(B) One 10 gage "W" beam to thrie beam element.

(C) One 12 gage thrie beam element.

(D) One 10 gage "W" beam rail element (7'-3½" length)

10 gage = 0.135" thick

12 gage = 0.108" thick

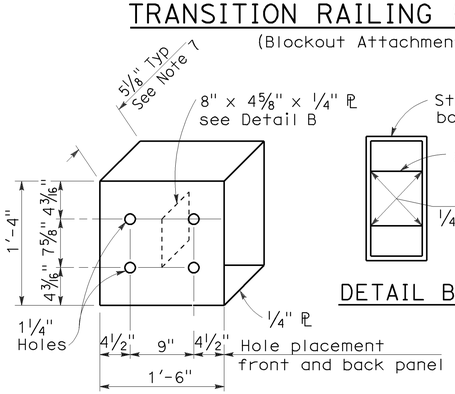

DETAIL A

STRAIGHT METAL BOX SPACER

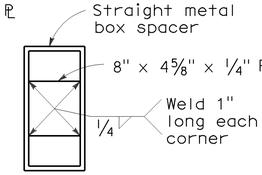

DETAIL B

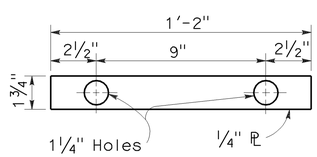

DETAIL C

PLATE 'A'

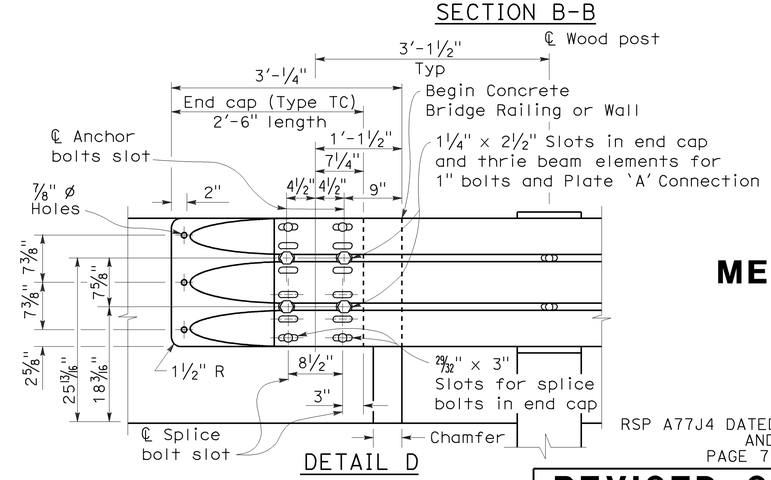

DETAIL D

STATE OF CALIFORNIA
DEPARTMENT OF TRANSPORTATION

METAL BEAM GUARD RAILING TRANSITION RAILING (TYPE WB)

NO SCALE

RSP A77J4 DATED JUNE 5, 2009 SUPERSEDES RSP A77J4 DATED JUNE 6, 2008 AND STANDARD PLAN A77J4 DATED MAY 1, 2006 - PAGE 75 OF THE STANDARD PLANS BOOK DATED MAY 2006.

REVISED STANDARD PLAN RSP A77J4

2006 REVISED STANDARD PLAN RSP A77J4

5-14-09

DIST	COUNTY	ROUTE	POST MILES TOTAL PROJECT	SHEET NO.	TOTAL SHEETS
05	SB,SLO	101	91.0,0.0/0.8	144	299

Randell D. Hiatt
REGISTERED CIVIL ENGINEER

June 6, 2008
PLANS APPROVAL DATE

REGISTERED PROFESSIONAL ENGINEER
Randell D. Hiatt
No. C50200
Exp. 6-30-09
CIVIL
STATE OF CALIFORNIA

The State of California or its officers or agents shall not be responsible for the accuracy or completeness of electronic copies of this plan sheet.

To accompany plans dated 11-2-09

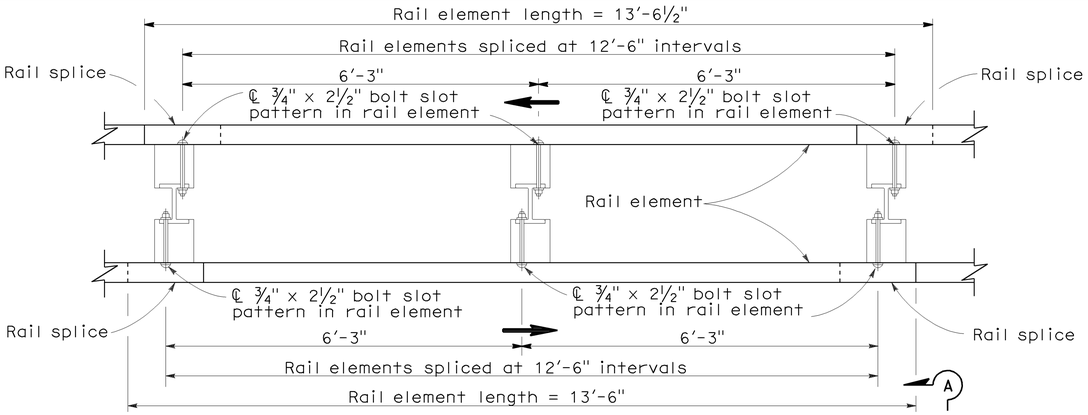

PLAN

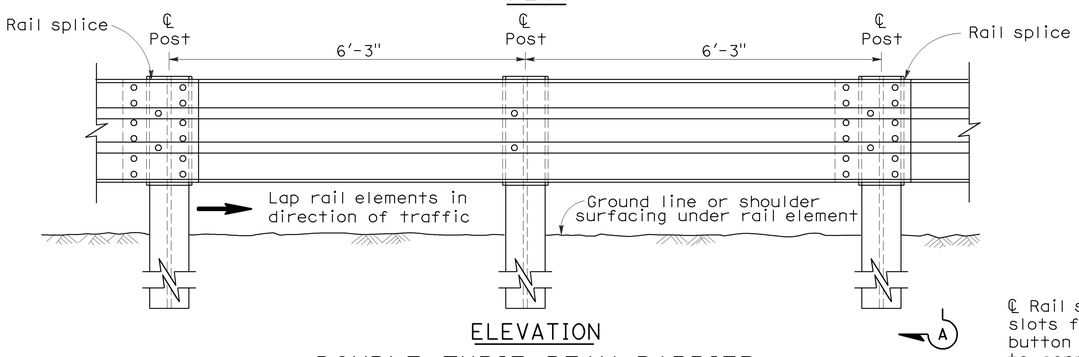

ELEVATION

DOUBLE THRIE BEAM BARRIER

(Steel post with notched wood or notched plastic blocks)
See Note 1

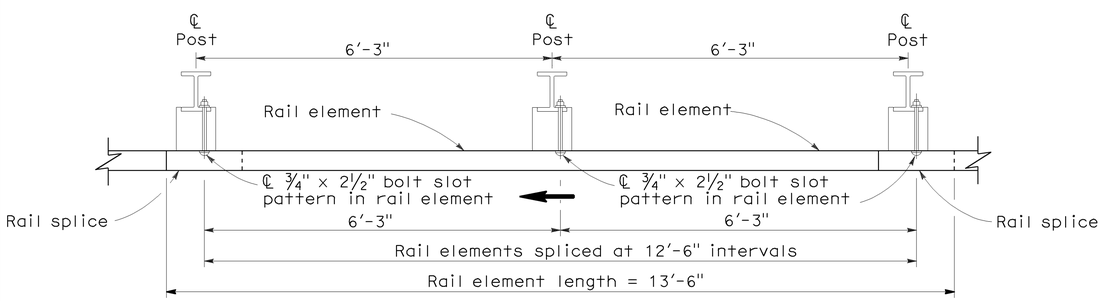

PLAN

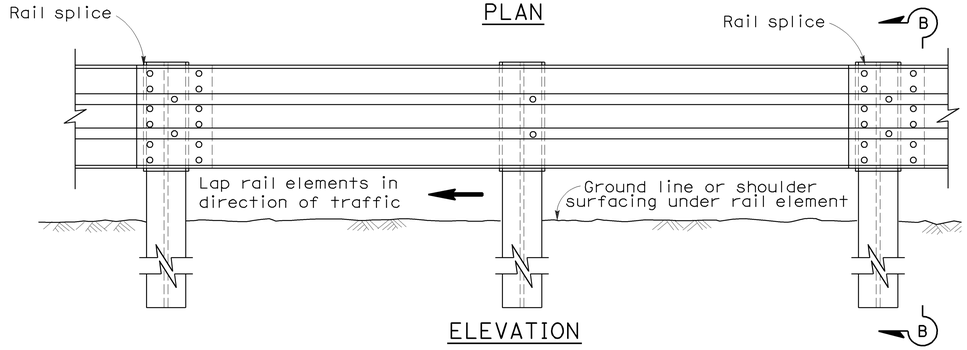

ELEVATION

SINGLE THRIE BEAM BARRIER

(Steel post with notched wood or notched plastic blocks)
See Note 1

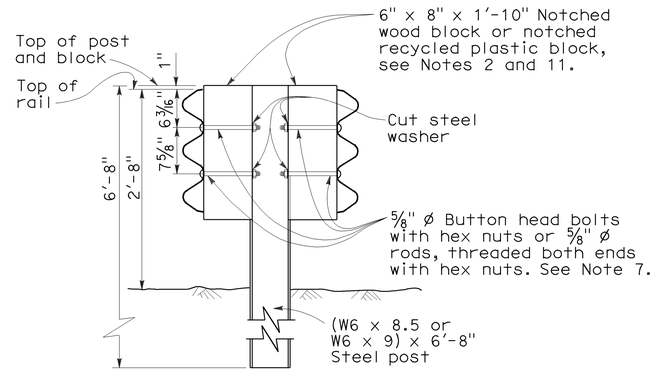

SECTION A-A

TYPICAL STEEL LINE POST INSTALLATION

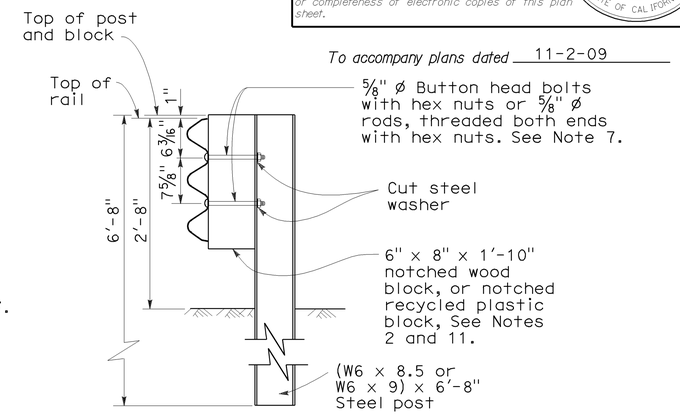

SECTION B-B

TYPICAL STEEL LINE POST INSTALLATION

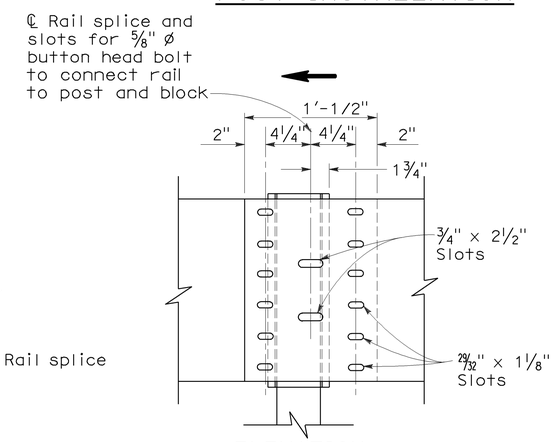

ELEVATION

RAIL ELEMENT SPLICE DETAIL

a) Connect the overlapped ends of the thrie beam rail elements with ⅝" ø x 1⅛" button head oval shoulder bolts inserted into the 29/32" x 1⅛" slots and bolted together with ⅝" ø x 1⅛" recessed hex nuts. Recess of hex nut points toward rail element. A total of 12 bolts and nuts are to be used at each rail splice connection.

b) The ends of the rail elements are to be overlapped in the direction of traffic (see details).

c) Where end cap is to be attached to the end of a rail element, a total of 4 of the above described splice bolts and nuts are to be used. Where a return cap is to be attached to the ends of rail elements, a total of 8 of the above described splice bolts and nuts are to be used.

NOTES:

1. For details of the cross section of the thrie beam rail element and details for wood post with wood block installations, see Standard Plan A78A.
2. For details of standard hardware, posts and blocks used to construct thrie beam barrier, see Revised Standard Plan RSP A78C1 and Standard Plan A78C2.
3. Thrie beam barrier post spacing to be 6'-3" center to center, except as otherwise noted.
4. Top of barrier rail to be 2'-8" above ground line or shoulder surfacing under the rail element.
5. For barrier end treatments and barrier connections, see Standard Plans A78E1, A78E2 and A78E3, Revised Standard Plans RSPs A78F1 and A78F2, Standard Plan A78G and Revised Standard Plan RSP A78H.
6. For connection to Concrete Barrier, see Revised Standard Plan RSP A78I.
7. Attach rail element to block and steel post with 2 bolts or rods on approaching traffic side of block and post web. No washer on rail face for rod or bolted connections to line post.
8. For details of thrie beam barrier on bridges, see Standard Plan A78D2. For details of thrie beam barrier at fixed objects, see Standard Plan A78D1.
9. Direction of traffic indicated by ⟶.
10. Notched face of block faces steel post.

STATE OF CALIFORNIA
DEPARTMENT OF TRANSPORTATION

THRIE BEAM BARRIER STANDARD BARRIER RAILING SECTION (STEEL POST WITH NOTCHED WOOD BLOCK OR NOTCHED RECYCLED PLASTIC BLOCK)

NO SCALE

RSP A78B DATED JUNE 6, 2008 SUPERSEDES STANDARD PLAN A78B DATED MAY 1, 2006 - PAGE 84 OF THE STANDARD PLANS BOOK DATED MAY 2006.

REVISED STANDARD PLAN RSP A78B

2006 REVISED STANDARD PLAN RSP A78B

5-14-08

DIST	COUNTY	ROUTE	POST MILES TOTAL PROJECT	SHEET No.	TOTAL SHEETS
05	SB,SLO	101	91.0,0.0/0.8	145	299

Randell D. Hiatt
REGISTERED CIVIL ENGINEER

June 6, 2008
PLANS APPROVAL DATE

REGISTERED PROFESSIONAL ENGINEER
Randell D. Hiatt
No. C50200
Exp. 6-30-09
CIVIL
STATE OF CALIFORNIA

The State of California or its officers or agents shall not be responsible for the accuracy or completeness of electronic copies of this plan sheet.

To accompany plans dated 11-2-09

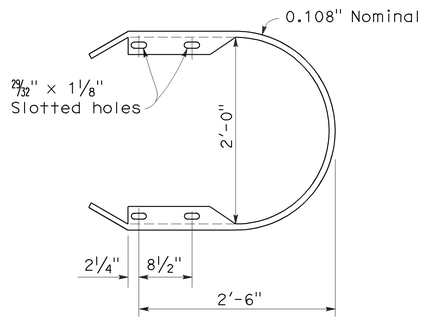

RETURN CAP
(TYPE TA)

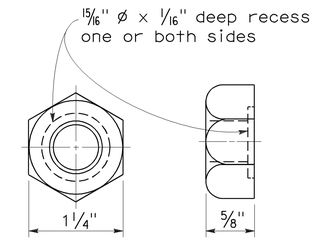

5/8" ø RECESS NUT

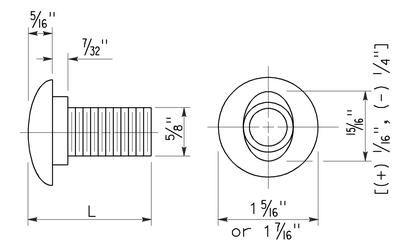

5/8" ø BUTTON HEAD BOLT

L	THREAD LENGTH
1 1/4"	full thread length
2"	full thread length
9 1/2"	4" Min thread length
18"	4" Min thread length

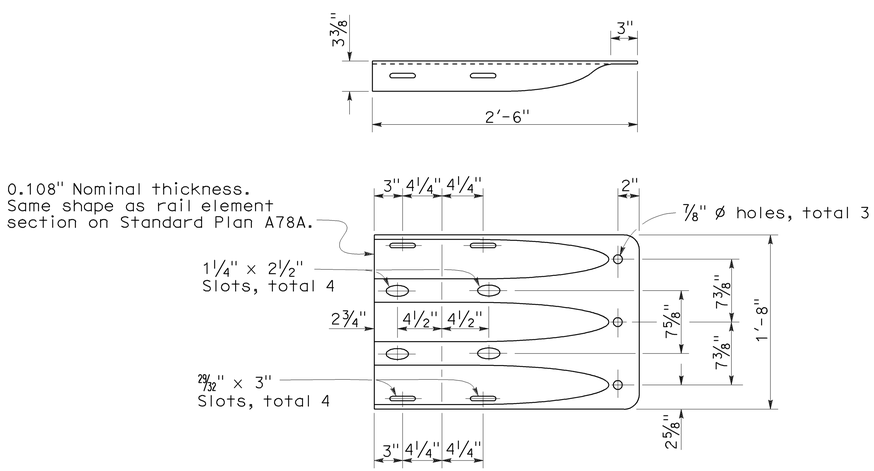

END CAP
(TYPE TC)

STATE OF CALIFORNIA
DEPARTMENT OF TRANSPORTATION

THRIE BEAM BARRIER STANDARD HARDWARE DETAILS

NO SCALE

RSP A78C1 DATED JUNE 6, 2008 SUPERSEDES STANDARD PLAN A78C1
DATED MAY 1, 2006 - PAGE 85 OF THE STANDARD PLANS BOOK DATED MAY 2006.

REVISED STANDARD PLAN RSP A78C1

2006 REVISED STANDARD PLAN RSP A78C1

4-21-08

DIST	COUNTY	ROUTE	POST MILES TOTAL PROJECT	SHEET NO.	TOTAL SHEETS
05	SB,SLO	101	91.0,0.0/0.8	146	299

Glenn DeCou
REGISTERED CIVIL ENGINEER

June 5, 2009
PLANS APPROVAL DATE

REGISTERED PROFESSIONAL ENGINEER Glenn DeCou No. C34547 Exp. 9-30-09 CIVIL STATE OF CALIFORNIA

The State of California or its officers or agents shall not be responsible for the accuracy or completeness of electronic copies of this plan sheet.

To accompany plans dated 11-2-09

2006 REVISED STANDARD PLAN RSP A85

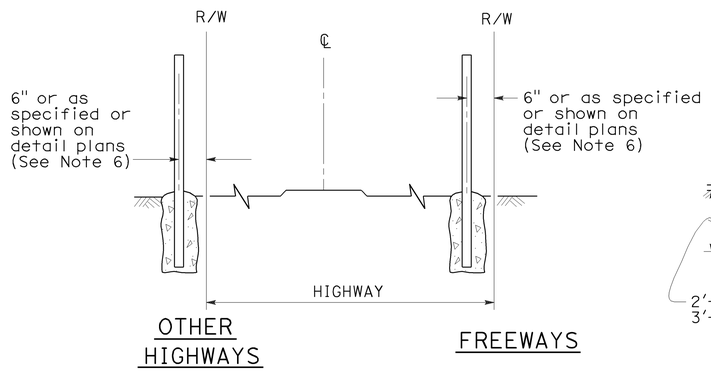

FENCE LOCATION

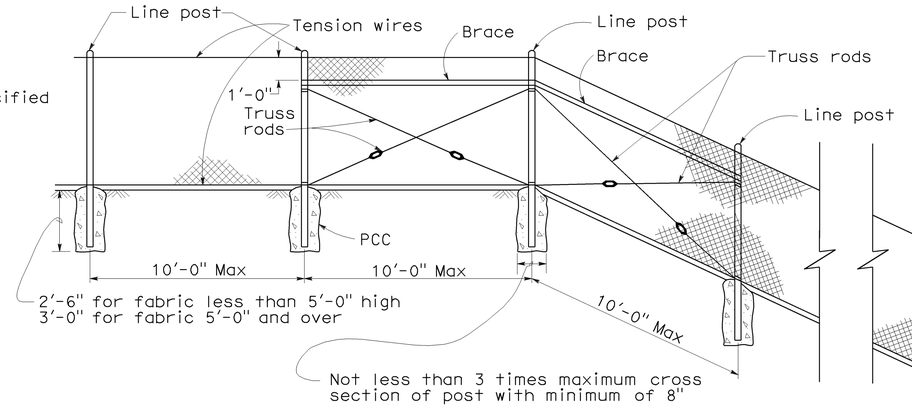

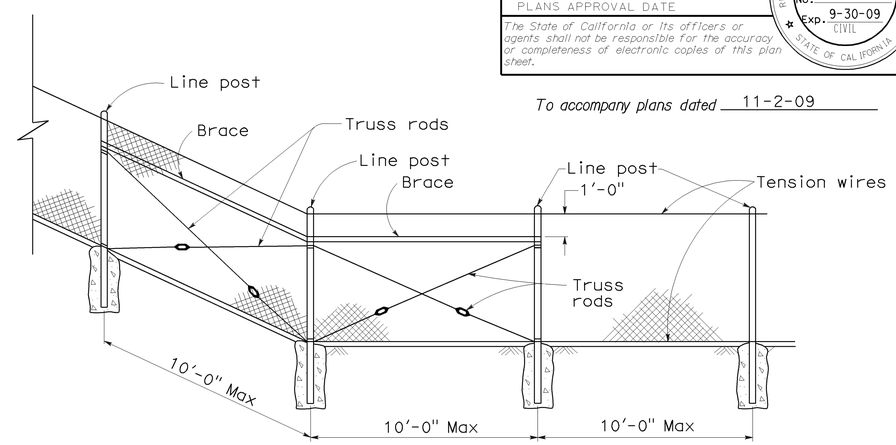

CHAIN LINK FENCE ON SHARP BREAK IN GRADE

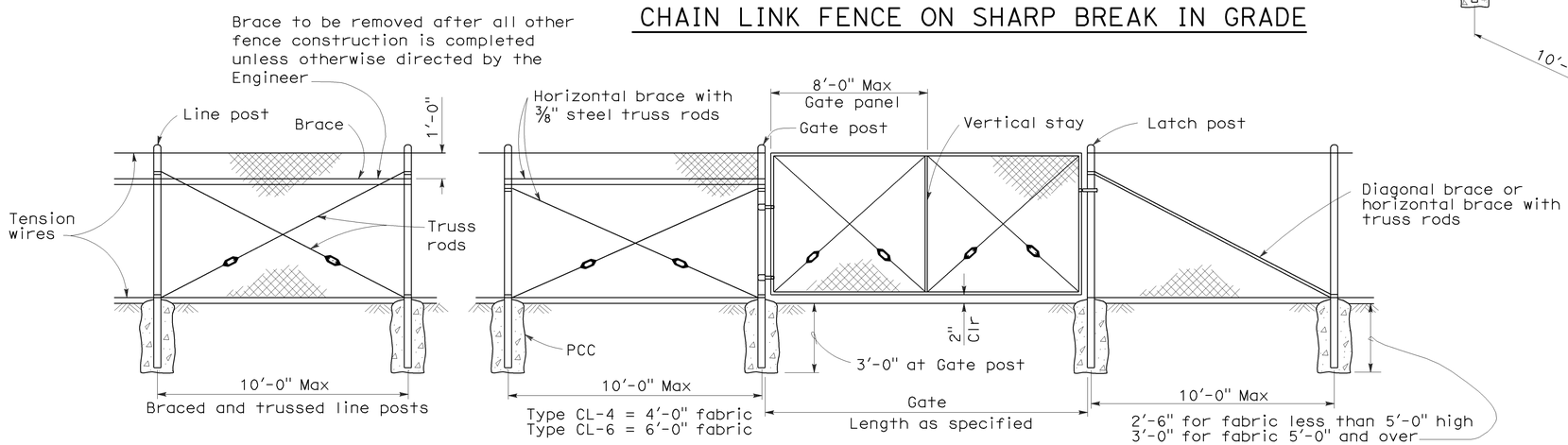

CHAIN LINK GATE INSTALLATION

GATE POST			
FENCE HEIGHT	GATE WIDTHS	NOMINAL ID	WEIGHT PER FOOT
6'-0" and Less	Up thru 6'-0"	2½"	4.95 LB
	Over 6'-0" thru 12'-0"	4"	10.79 LB
	Over 12'-0" thru 18'-0"	5"	14.62 LB
	Over 18'-0" to 24'-0" Max	6"	18.97 LB
Over 6'-0"	Up thru 6'-0"	3"	7.58 LB
	Over 6'-0" thru 12'-0"	5"	14.62 LB
	Over 12'-0" thru 18'-0"	6"	18.97 LB
	Over 18'-0" to 24'-0" Max	8"	28.55 LB

Above post dimensions and weights are minimums. Larger sizes may be used on approval of the Engineer.

NOTES:

1. The below table shows examples of post and brace sections which may comply with the Specifications.
2. Sections shown in the tables must also comply with the strength requirements and other provisions of the Specifications.
3. Other sections which comply with the strength requirements and other provisions of the Specifications may be used on approval of the Engineer.
4. Options exercised shall be uniform on any one project.
5. Dimensions shown are nominal.
6. Offset to be 2'-0" at monument locations, measured at right angles to R/W lines. Taper to achieve offset to be at least 20'-0" long.

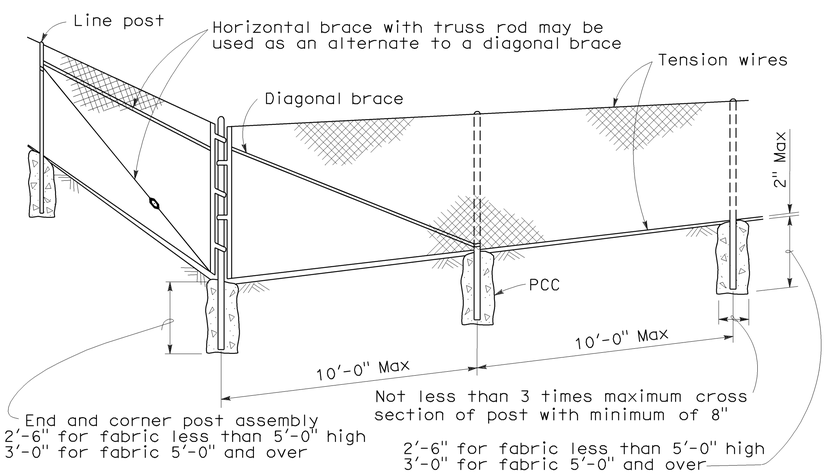

CORNER POST

TYPICAL MEMBER DIMENSIONS (See Notes)											
FENCE HEIGHT	LINE POSTS			END, LATCH & CORNER POSTS				BRACES			
	ROUND ID	H	ROLL FORMED	ROUND ID	ROLL FORMED			ROUND ID	H	ROLL FORMED	
6' & less	1½"	1⅞" × 1⅝"	1⅞" × 1⅝"	2"	3½" × 3½"	2" × 1¾"		1¼"	1½" × 1 5/16"	1⅝" × 1¼"	1¾" × 1¼"
Over 6'	2"	2¼" × 2"	2" × 1¾"	2½"	3½" × 3½"	2½" × 2½"		1¼"	1½" × 1 5/16"	1⅝" × 1¼"	1¾" × 1¼"

STATE OF CALIFORNIA
DEPARTMENT OF TRANSPORTATION

CHAIN LINK FENCE

NO SCALE

RSP A85 DATED JUNE 5, 2009 SUPERSEDES STANDARD PLAN A85
DATED MAY 1, 2006 - PAGE 111 OF THE STANDARD PLANS BOOK DATED MAY 2006.

REVISED STANDARD PLAN RSP A85

5-7-09

DIST	COUNTY	ROUTE	POST MILES TOTAL PROJECT	SHEET NO.	TOTAL SHEETS
05	SB,SLO	101	91.0,0.0/0.8	147	299

Glenn DeCou
REGISTERED CIVIL ENGINEER

June 5, 2009
PLANS APPROVAL DATE

REGISTERED PROFESSIONAL ENGINEER Glenn DeCou No. C34547 Exp. 9-30-09 CIVIL STATE OF CALIFORNIA

The State of California or its officers or agents shall not be responsible for the accuracy or completeness of electronic copies of this plan sheet.

To accompany plans dated 11-2-09

NOTES:

1. H is 2'-6" for fabric less than 5'-0" high.
   H is 3'-0" for fabric 5'-0" and over.
2. T is not less than 3 times maximum cross section of post with minimum of 8".
3. Arms with barbed wire to be used where shown on plans.
4. See Revised Standard Plan RSP A85 for Chain Link Fencing dimensions.
5. Reinforcing must comply with ASTM A 706.
6. See Detail A on New Standard Plan NSP A86B for connection at headwall.

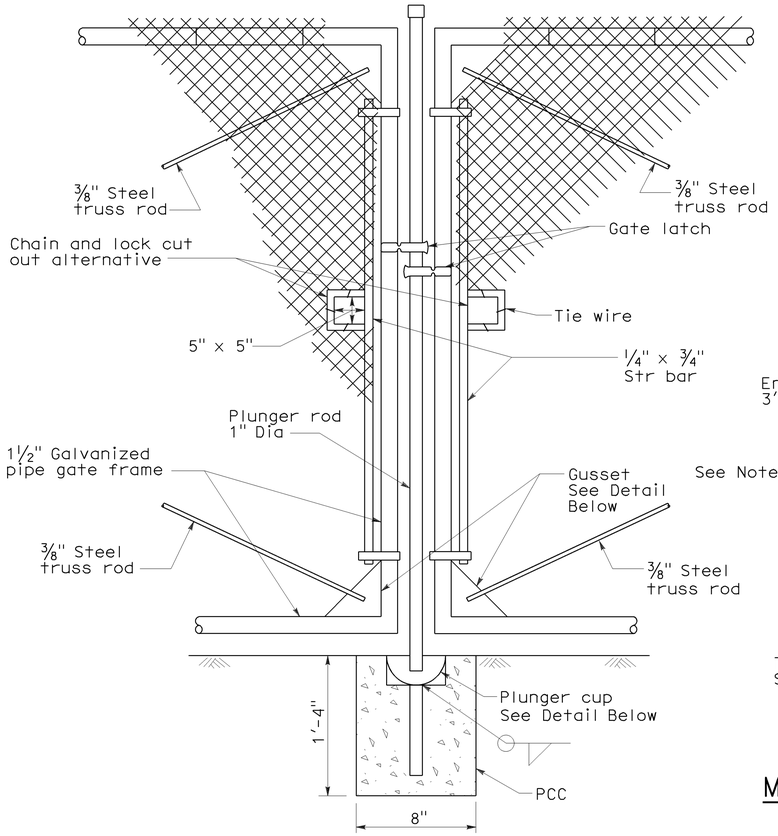

TYPICAL DOUBLE GATE
REMOVABLE CENTER POST

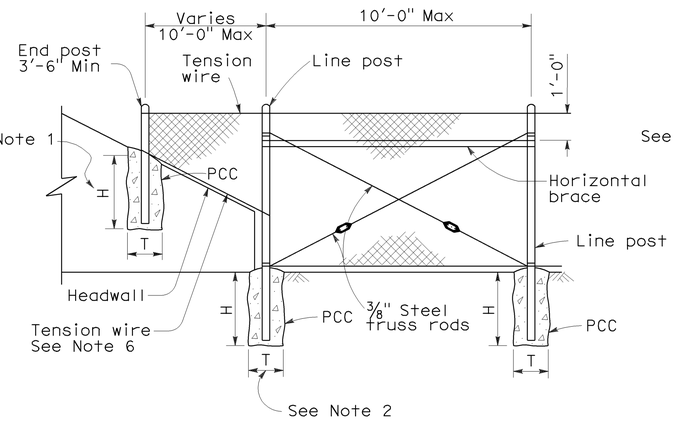

METHOD OF TYING FENCE TO HEADWALL

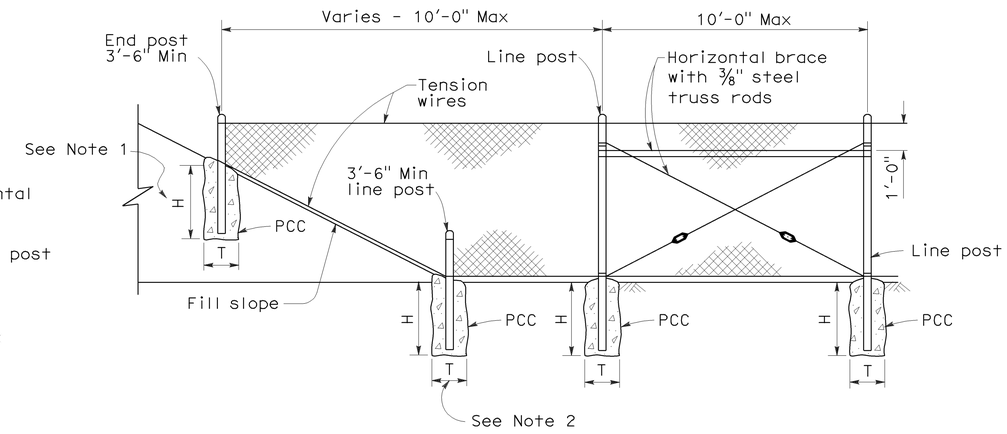

METHOD OF ERECTING FENCE FOR FILL SLOPE

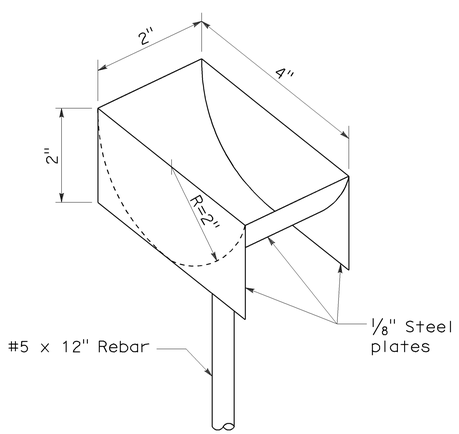

PLUNGER CUP DETAIL

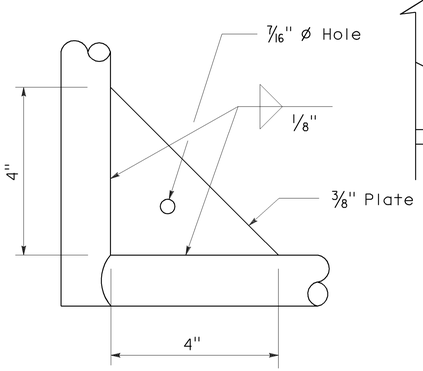

GUSSET DETAIL

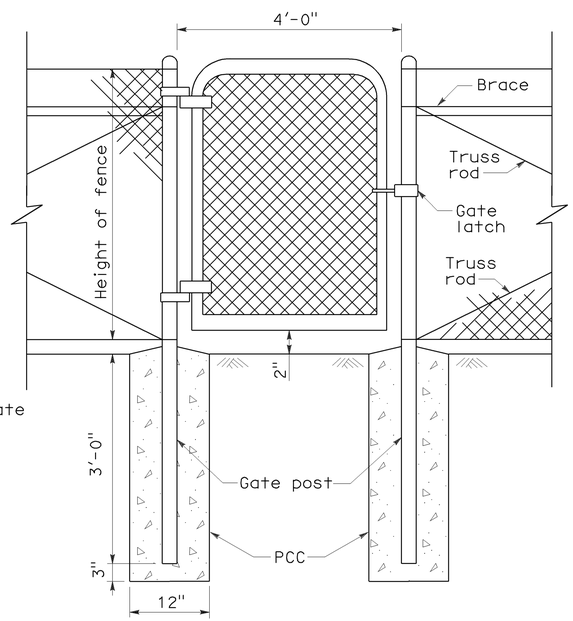

WALK GATE

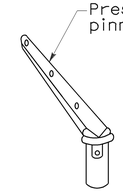

POST TOP END

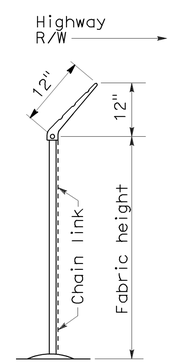

END ELEVATION

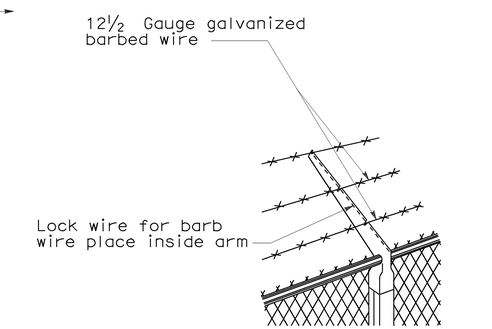

LINE POST TOP
Vertical arms when desired

BARBED WIRE POST TOP
See Note 3

STATE OF CALIFORNIA
DEPARTMENT OF TRANSPORTATION

CHAIN LINK FENCE DETAILS

NO SCALE

NSP A85A DATED JUNE 5, 2009 SUPPLEMENTS THE STANDARD PLANS BOOK DATED MAY 2006.

NEW STANDARD PLAN NSP A85A

2006 NEW STANDARD PLAN NSP A85A

5-7-09

DIST	COUNTY	ROUTE	POST MILES TOTAL PROJECT	SHEET NO.	TOTAL SHEETS
05	SB,SLO	101	91.0,0.0/0.8	148	299

Glenn DeCou
REGISTERED CIVIL ENGINEER

June 5, 2009
PLANS APPROVAL DATE

REGISTERED PROFESSIONAL ENGINEER Glenn DeCou No. C34547 Exp. 9-30-09 CIVIL STATE OF CALIFORNIA

The State of California or its officers or agents shall not be responsible for the accuracy or completeness of electronic copies of this plan sheet.

To accompany plans dated 11-2-09

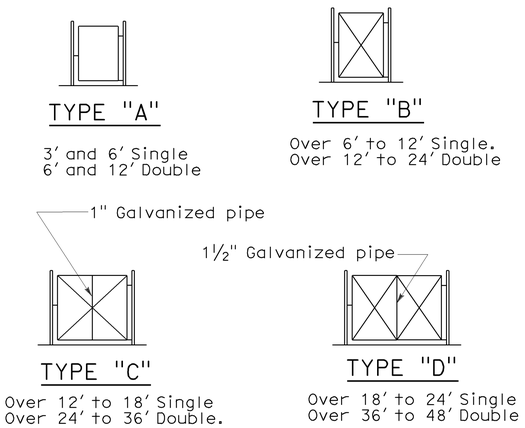

TYPICAL FRAMEWORK SHOWING NUMBER OF BAYS IN GATE

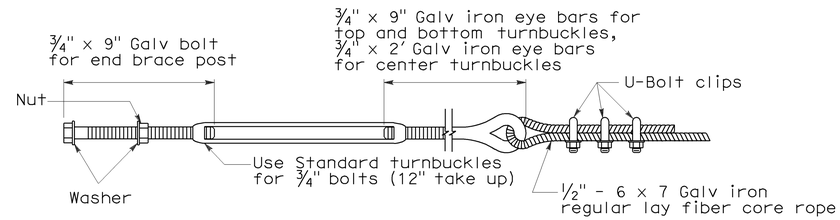

TURNBUCKLE A

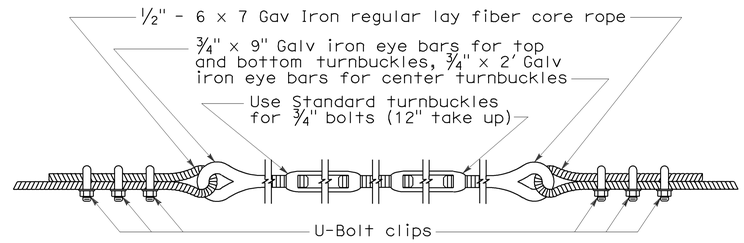

TURNBUCKLE B

NOTES:

1. All material for abutment connection to be galvanized.
2. The chain link fabric shall be replaced by barbed wire strands at 12" maximum centers between the double posts.
3. When the width of the culvert makes it necessary to anchor a post to the top of the culvert, a cast iron shoe or other device approved by the Engineer shall be used.
4. Fencing over stream and around headwall may also use Barbed Wire or Wire Mesh fencing with either wood post or steel post installation.
5. See Revised Standard Plan RSP A85 for Chain Link fence dimensions. See Standard Plan A86 for Barbed Wire and Wire Mesh fence dimensions and for wood post and steel post installation.

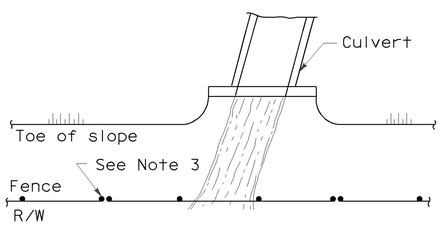

PLAN

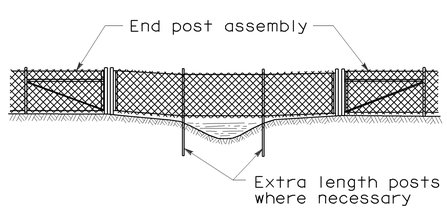

ELEVATION

INSTALLATION OVER STREAM

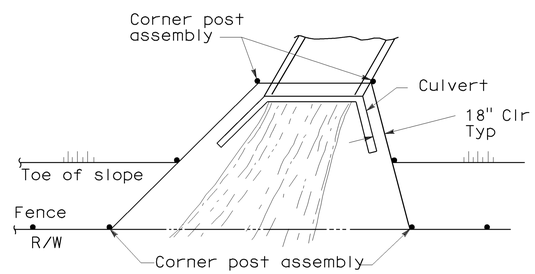

PLAN

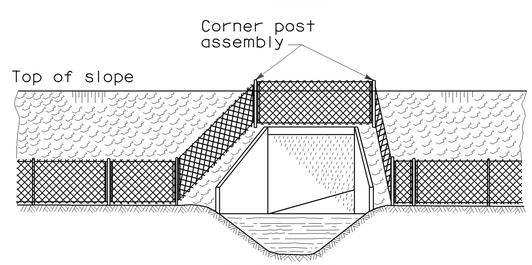

ELEVATION

INSTALLATION AROUND HEADWALL

See Note 4

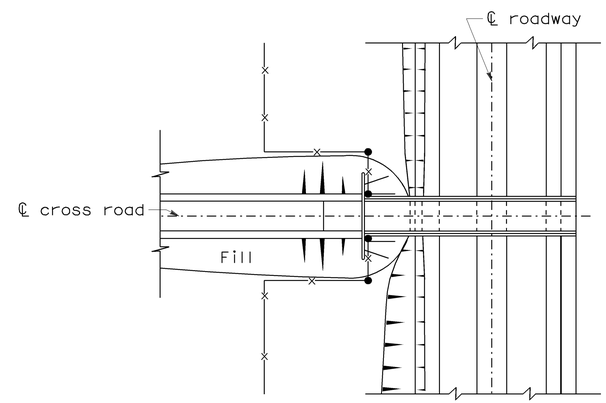

PLAN OF ROADWAY - UNDERPASS

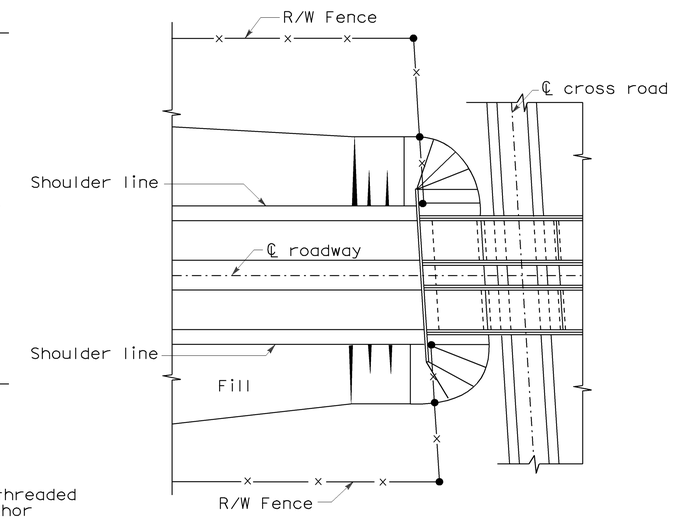

PLAN OF ROADWAY - OVERPASS

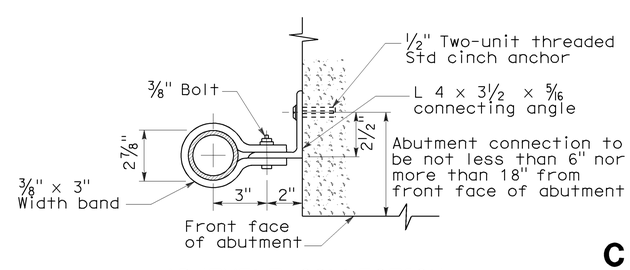

ABUTMENT CONNECTION

TYPICAL INSTALLATION AT BRIDGES

STATE OF CALIFORNIA
DEPARTMENT OF TRANSPORTATION

CHAIN LINK FENCE DETAILS

NO SCALE

NSP A85B DATED JUNE 5, 2009 SUPPLEMENTS THE STANDARD PLANS BOOK DATED MAY 2006.

NEW STANDARD PLAN NSP A85B

2006 NEW STANDARD PLAN NSP A85B

5-12-09

DIST	COUNTY	ROUTE	POST MILES TOTAL PROJECT	SHEET NO.	TOTAL SHEETS
05	SB,SLO	101	91.0,0.0/0.8	149	299

REGISTERED CIVIL ENGINEER

November 17, 2006
PLANS APPROVAL DATE

REGISTERED PROFESSIONAL ENGINEER Michael Janzen No. 44788 Exp. 03-31-08 CIVIL STATE OF CALIFORNIA

The State of California or its officers or agents shall not be responsible for the accuracy or completeness of electronic copies of this plan sheet.

To accompany plans dated 11-2-09

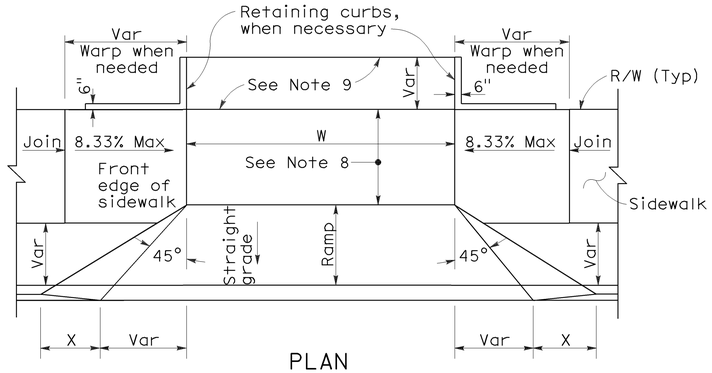

PLAN

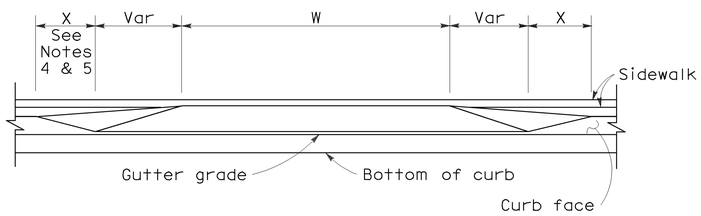

ELEVATION

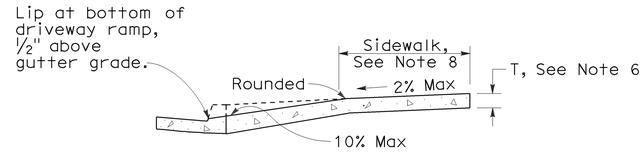

CASE A

Typical driveway, sidewalk not depressed

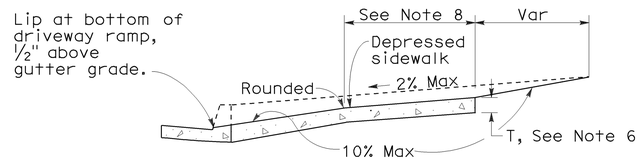

CASE B

Driveway with depressed sidewalk

SECTIONS

DRIVEWAYS

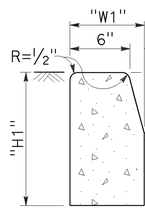

TYPE A1 CURBS

See Table A

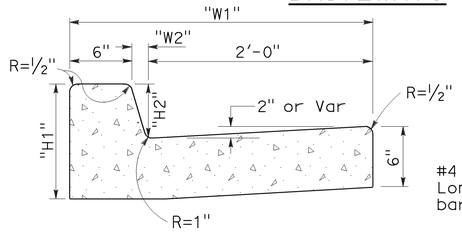

TYPE A2 CURBS

See Table A

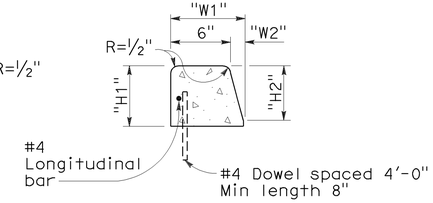

TYPE A3 CURBS

Superimposed on existing pavement
See Table A

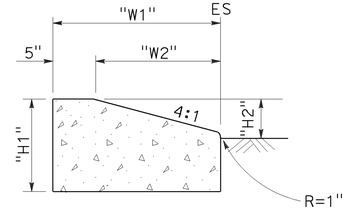

TYPE D CURBS

See Table A

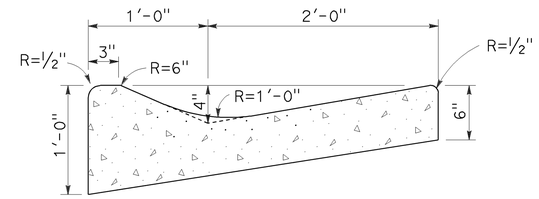

TYPE E CURB

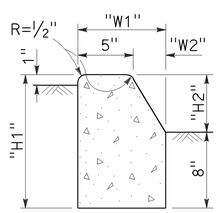

TYPE B1 CURBS

See Table A

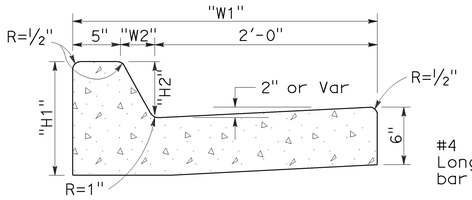

TYPE B2 CURBS

See Table A

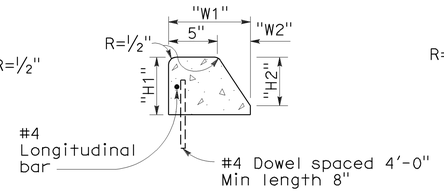

TYPE B3 CURBS

Superimposed on existing pavement
See Table A

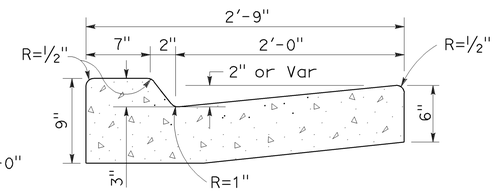

TYPE B4 CURBS

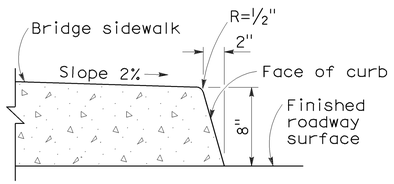

TYPE H CURB

On Bridges

CURBS

CURB QUANTITIES

TYPE	CUBIC YARDS PER LINEAR FOOT
A1-6	0.02585
A1-8	0.03084
A2-6	0.05903
A2-8	0.06379
A3-6	0.01036
A3-8	0.01435
B1-4	0.02185
B1-6	0.02930
B2-4	0.05515
B2-6	0.06171
B3-4	0.00641
B3-6	0.01074
B4	0.05709
D-4	0.04083
D-6	0.06804
E	0.06661

TABLE A

CURB TYPE	DIMENSIONS "H1"	"H2"	"W1"	"W2"
A1-6	1'-2"	6"	7½"	1½"
A1-8	1'-4"	8"	8"	2"
A2-6	1'-0"	6"	2'-7½"	1½"
A2-8	1'-2"	8"	2'-8"	2"
A3-6	6"	5"	7¼"	1¼"
A3-8	8"	7"	7¾"	1¾"
B1-4	1'-0"	4"	7½"	2½"
B1-6	1'-2"	6"	9"	4"
B2-4	10"	4"	2'-7½"	2½"
B2-6	1'-0"	6"	2'-9"	4"
B3-4	4"	3"	7"	2"
B3-6	6"	5"	8½"	3½"
D-4	10"	4"	1'-6"	1'-1"
D-6	1'-0"	6"	2'-2"	1'-8"

NOTES:

1. Case A driveway section typically applies.
2. Use Case B driveway section when ramp slopes would exceed 10% in Case A.
3. Use Case B driveway section when sidewalk cross slope would exceed 2% in Case A.
4. X=3'-0" except for curb heights over 10" where 4:1 slopes shall be used on curb slope.
5. X is a variable when sidewalk is located where wheelchairs may traverse the surface. Slopes shall not exceed 8.33%.
6. Sidewalk and ramp thickness "T" at driveway shall be 4" for residental and 6" for commercial.
7. Difference in slope of the driveway ramp and the slope of a line between the gutter and a point on the roadway 5'-0" from gutter line shall not exceed 15%. Reduce driveway ramp slope, not gutter slope, where required.
8. Minimum width of clear passageway for sidewalk shall be 4'-0".
9. Retaining curbs and acquisition of construction easement may be necessary for narrow sidewalks or curb heights in excess of 6".
10. Across the pedestrian route at curb ramp locations, the gutter pan slope shall not exceed 1" of depth for each 2'-0" of width.

STATE OF CALIFORNIA
DEPARTMENT OF TRANSPORTATION

CURBS AND DRIVEWAYS

NO SCALE

RSP A87A DATED NOVEMBER 17, 2006 SUPERSEDES STANDARD PLAN A87A DATED MAY 1, 2006 - PAGE 113 OF THE STANDARD PLANS BOOK DATED MAY 2006.

REVISED STANDARD PLAN RSP A87A

2006 REVISED STANDARD PLAN RSP A87A

10-25-06

DIST	COUNTY	ROUTE	POST MILES TOTAL PROJECT	SHEET NO.	TOTAL SHEETS
05	SB,SLO	101	91.0,0.0/0.8	150	299

REGISTERED CIVIL ENGINEER

September 1, 2006
PLANS APPROVAL DATE

REGISTERED PROFESSIONAL ENGINEER — Hector David Cordova — No. C41957 — Exp. 3-31-08 — CIVIL — STATE OF CALIFORNIA

The State of California or its officers or agents shall not be responsible for the accuracy or completeness of electronic copies of this plan sheet.

To accompany plans dated 11-2-09

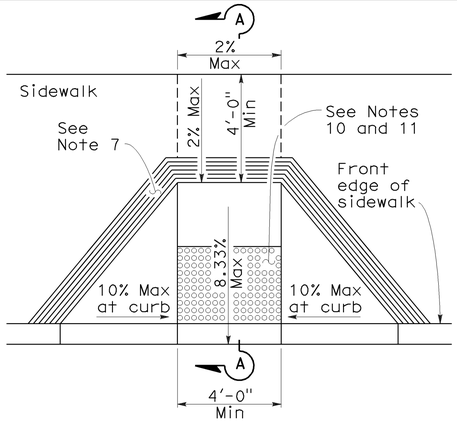

CASE A

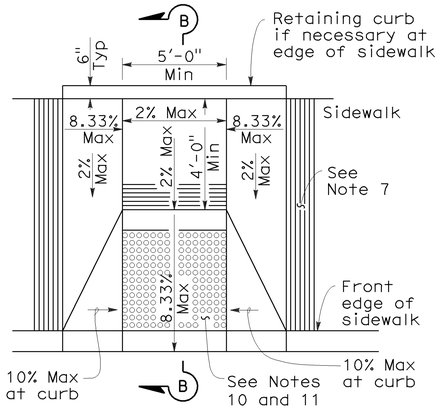

CASE B

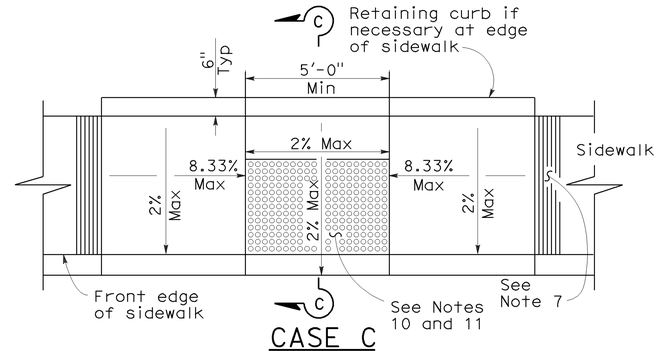

CASE C

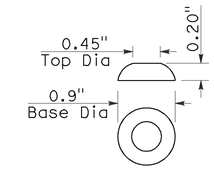

RAISED TRUNCATED DOME

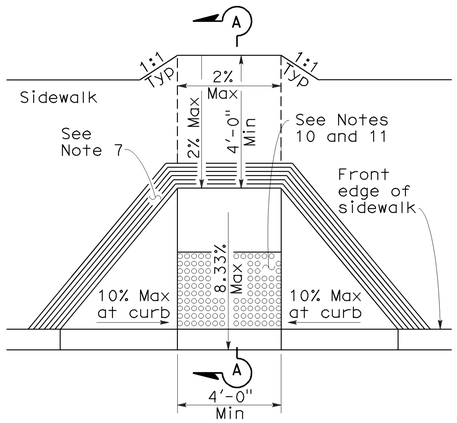

CASE D

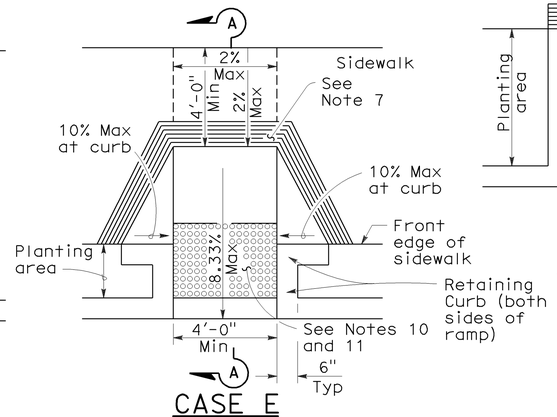

CASE E

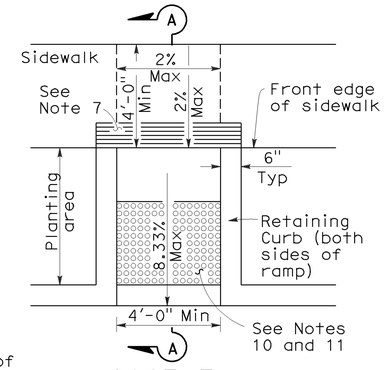

CASE F

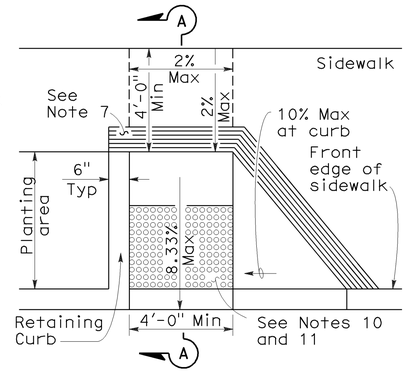

CASE G

See Note 4

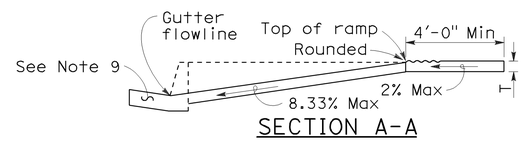

SECTION A-A

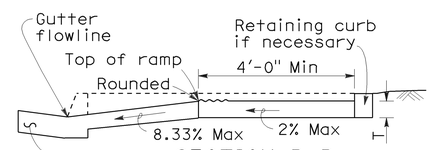

SECTION B-B

Depress entire sidewalk as required

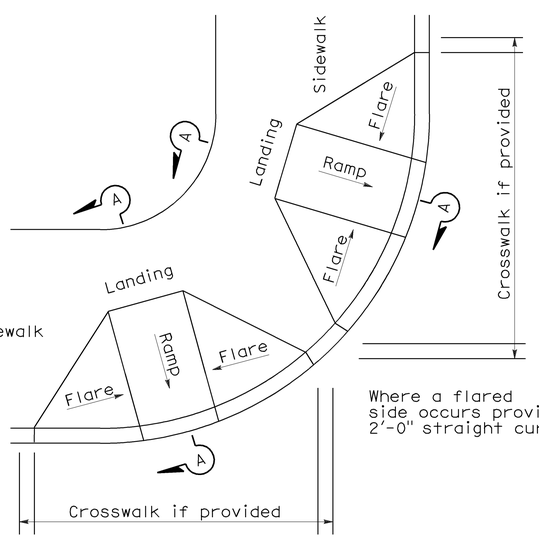

DETAIL A

TYPICAL TWO-RAMP CORNER INSTALLATION

See Note 1

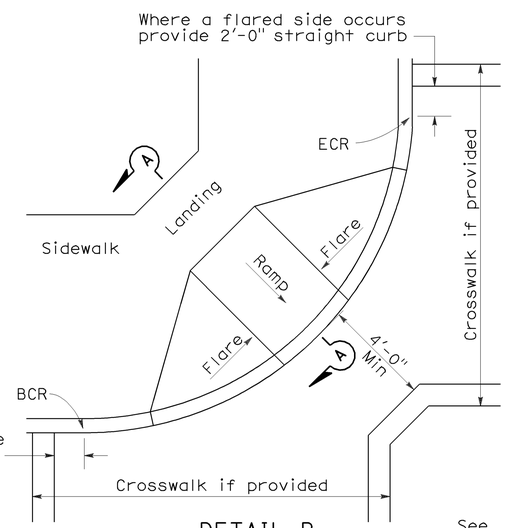

DETAIL B

TYPICAL ONE-RAMP CORNER INSTALLATION

See Notes 1 and 3

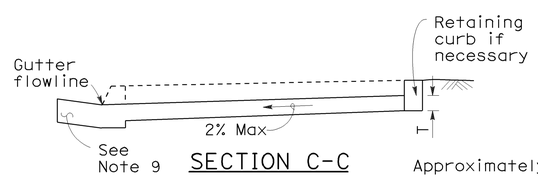

SECTION C-C

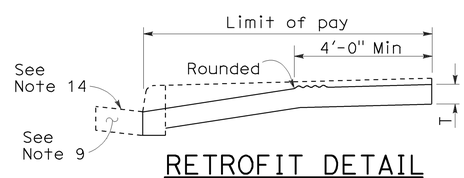

RETROFIT DETAIL

Existing curb and sidewalk

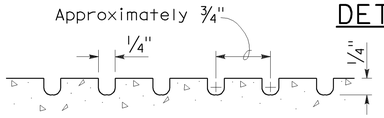

GROOVING DETAIL

NOTES:

1. As site conditions dictate, Case A through Case G curb ramps may be used for corner installations similar to those shown in Detail A and Detail B. The case of curb ramps used in Detail A do not have to be the same. Case A through Case G curb ramps also may be used at mid block locations, as site conditions dictate.
2. If distance from curb to back of sidewalk is too short to accommodate ramp and 4'-0" platform (landing) as shown in Case A, the sidewalk may be depressed longitudinally as in Case B, or C or may be widened as in Case D.
3. When ramp is located in center of curb return, crosswalk configuration must be similar to that shown for Detail B.
4. As site conditions dictate, the retaining curb side and the flared side of the Case G ramp shall be constructed in reversed position.
5. If located on a curve, the sides of the ramp need not be parallel, but the minimum width of the ramp shall be 4'-0".
6. Side slope of ramp flares vary uniformly from a maximum of 10% at curb to conform with longitudinal sidewalk slope adjacent to top of the ramp, except in Case C and Case F.
7. The curb ramp shall be outlined, as shown, with a 1'-0" wide border with 1/4" grooves approximately 3/4" on center. See grooving detail.
8. Transitions from ramps and landing to walks, gutters or streets shall be flush and free of abrupt changes.
9. Maximum slopes of adjoining gutters, the road surface immediately adjacent to the curb ramp or accessible route shall not exceed 5 percent within 4'-0" of the top and bottom of the curb ramp.
10. Curb ramps shall have a detectable warning surface that extends the full width and 3'-0" depth of the ramp. Detectable Warning Surfaces shall conform to the details on this plan and the requirements in the Special Provisions.
11. The edge of the detectable warning surface nearest the street shall be between 6" and 8" from the gutter flowline.
12. Sidewalk and ramp thickness, "T", shall be 3 1/2" minimum.
13. Utility pull boxes, manholes, vaults and all other utility facilities within the boundaries of the curb ramp will be relocated or adjusted to grade by the owner prior to, or in conjunction with, curb ramp construction.
14. For retrofit conditions, removal and replacement of curb apron will be at the Contractor's option, unless otherwise shown on project plans.

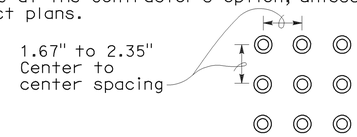

RAISED TRUNCATED DOME PATTERN (IN-LINE)

DETECTABLE WARNING SURFACE

See Note 10

STATE OF CALIFORNIA
DEPARTMENT OF TRANSPORTATION

CURB RAMP DETAILS

NO SCALE

RSP A88A DATED SEPTEMBER 1, 2006 SUPERSEDES STANDARD PLAN A88A DATED MAY 1, 2006 - PAGE 115 OF THE STANDARD PLANS BOOK DATED MAY 2006.

REVISED STANDARD PLAN RSP A88A

2006 REVISED STANDARD PLAN RSP A88A

8-3-06

DIST	COUNTY	ROUTE	POST MILES TOTAL PROJECT	SHEET NO.	TOTAL SHEETS
05	SB,SLO	101	91.0,0.0/0.8	151	299

LICENSED LANDSCAPE ARCHITECT

April 3, 2009
PLANS APPROVAL DATE

The State of California or its officers or agents shall not be responsible for the accuracy or completeness of electronic copies of this plan sheet.

LICENSED LANDSCAPE ARCHITECT — Robert B. Schott 3625 — Signature — 11-30-10 Renewal date — 2-25-09 Date — STATE OF CALIFORNIA

To accompany plans dated 11-2-09

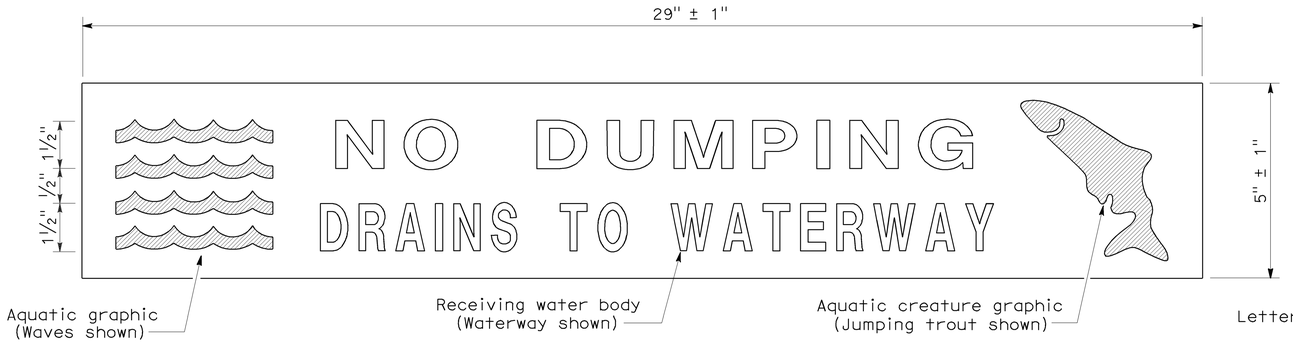

PLAN
DRAINAGE INLET MARKER
(PREFABRICATED THERMOPLASTIC)

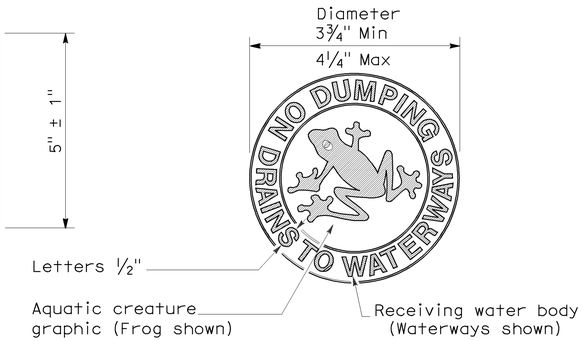

PLAN
DRAINAGE INLET MARKER
(MEDALLION)

PLAN
DRAINAGE INLET MARKER
(STAMPED CONCRETE IMPRINT)

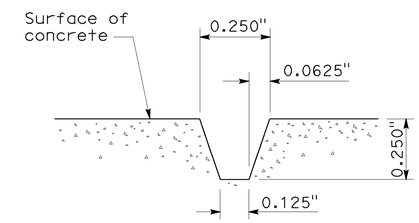

SECTION A-A
STAMPED CONCRETE
IMPRINT DETAIL

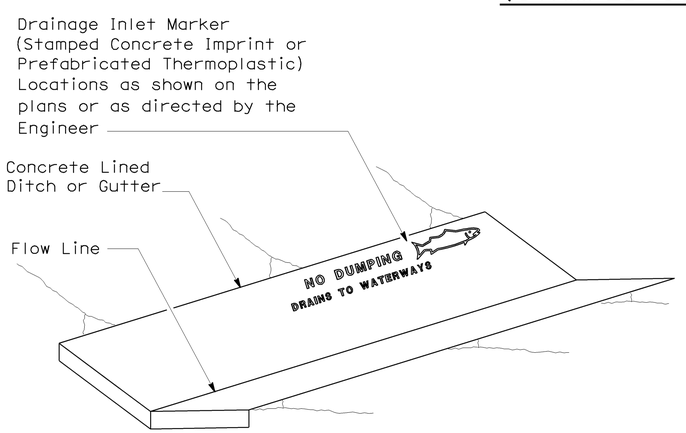

PERSPECTIVE
DRAINAGE INLET MARKER ON
CONCRETE LINED DITCH

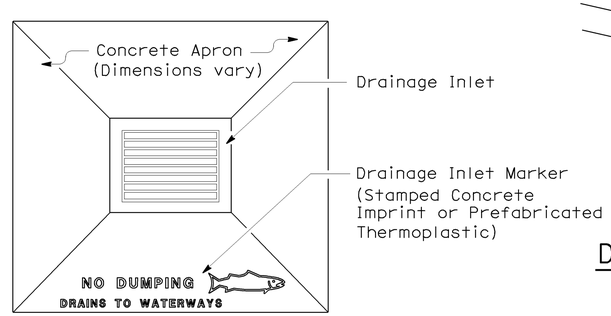

PLAN
DRAINAGE INLET MARKER ON
DRAINAGE INLET APRON

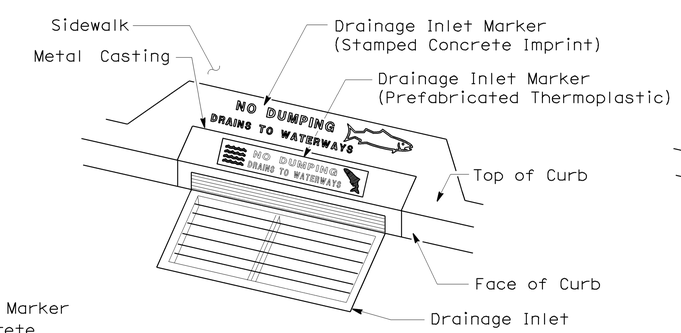

PERSPECTIVE
DRAINAGE INLET MARKER ON
DRAINAGE INLET

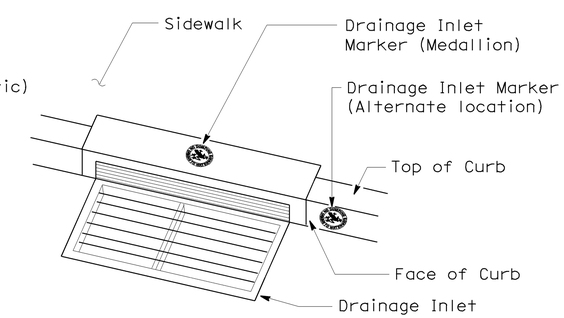

PERSPECTIVE
DRAINAGE INLET MARKER (MEDALLION)
ON DRAINAGE INLET

STATE OF CALIFORNIA
DEPARTMENT OF TRANSPORTATION

DRAINAGE INLET MARKERS

NO SCALE

NSP D71 DATED APRIL 3, 2009 SUPPLEMENTS
THE STANDARD PLANS BOOK DATED MAY 2006.

NEW STANDARD PLAN NSP D71

2006 NEW STANDARD PLAN NSP D71

7-24-08

DIST	COUNTY	ROUTE	POST MILES TOTAL PROJECT	SHEET NO.	TOTAL SHEETS
05	SB,SLO	101	91.0,0.0/0.8	152	299

REGISTERED CIVIL ENGINEER

June 5, 2009
PLANS APPROVAL DATE

REGISTERED PROFESSIONAL ENGINEER Glenn DeCou No. C34547 Exp. 9-30-09 CIVIL STATE OF CALIFORNIA

The State of California or its officers or agents shall not be responsible for the accuracy or completeness of electronic copies of this plan sheet.

To accompany plans dated 11-2-09

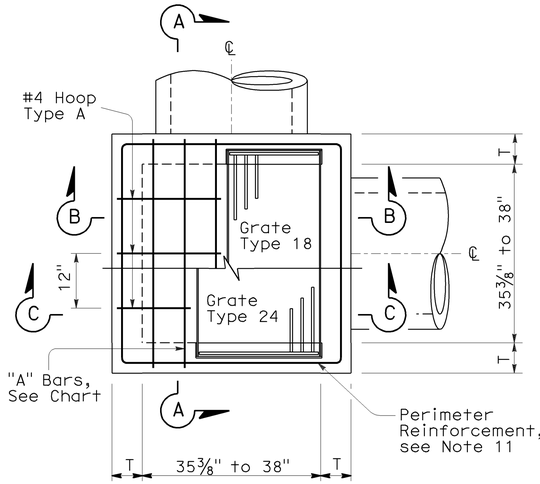

STANDARD TYPE G2 OR G4

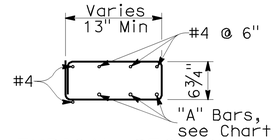

TYPICAL SECTION
(HOOP TYPE A)

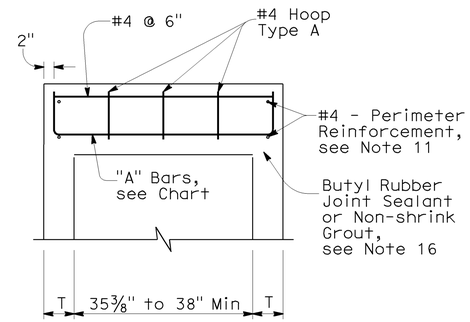

SECTION A-A

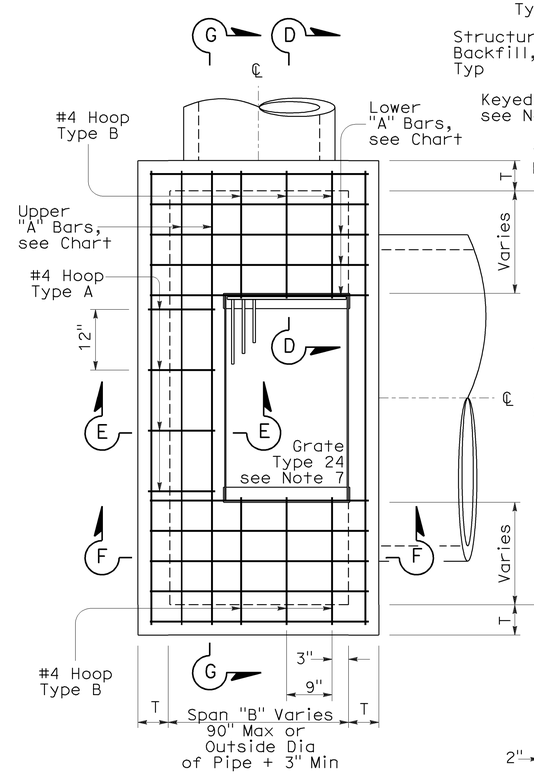

EXPANDED TYPE G2 OR G4
(Top Rebar Not Shown)

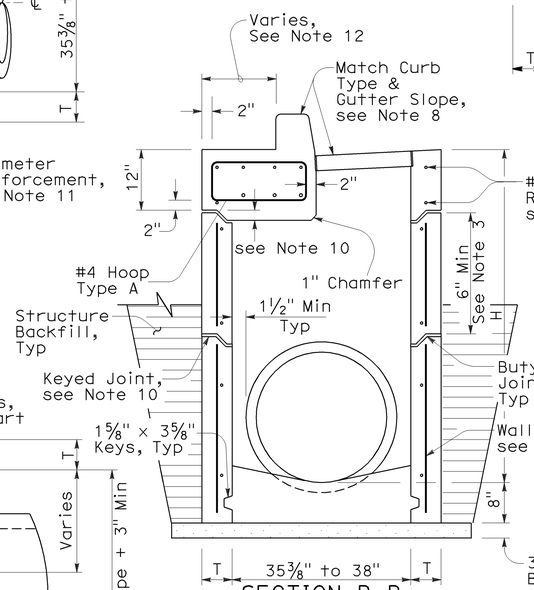

SECTION B-B
(with G4 Top)

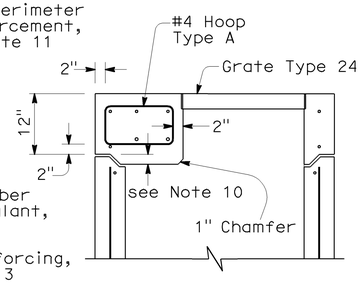

SECTION C-C
(with G2 Top)

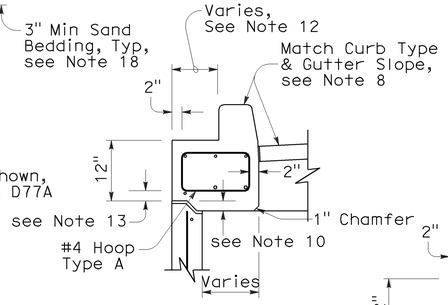

SECTION E-E
(with G4 Top)

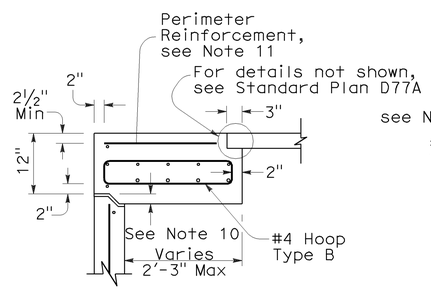

SECTION D-D

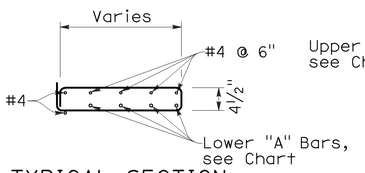

TYPICAL SECTION
(HOOP TYPE B)

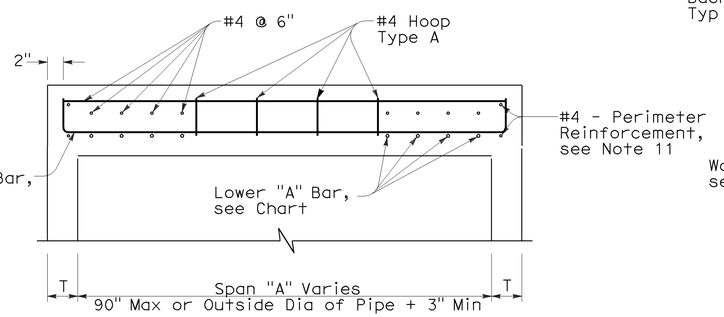

SECTION G-G

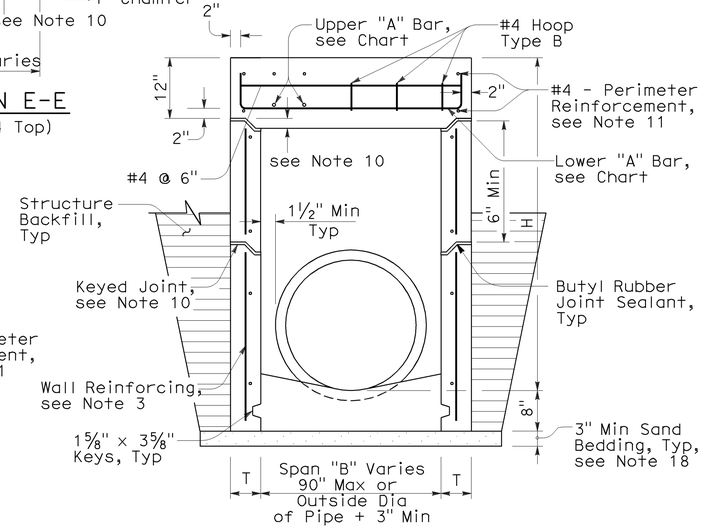

SECTION F-F
(with G2 Top)

NOTES:

1. "H" is the difference in elevation between the outlet pipe flow line and the normal gutter grade line undepressed.
2. For "T" wall thickness: T=6" when "H" is 8' or less. T=8" when "H" is over 8'.
3. Wall reinforcing not required when "H" is 8' or less and the unsupported width or length is 6'-0" or less. Reinforce wall exceeding these limits with #4 bars @ 1'-6" ± centers placed 2" clear to the inside of inlet unless otherwise shown. Short independent wall sections or height adjustment rings 6" to 24" high must have a minimum of two #4 horizontal bars.
4. Seal pre-cast inlets connection openings between wall and pipe with non-shrink grout or resilient connectors as specified in the Special Provisions.
5. Steps - None required where "H" is less than 2'-6". Where "H" is 2'-6" or more, install steps with lowest rung 1'-0" above the floor and highest rung not more than 6" below bottom of lid. The distance between steps must not exceed 1'-0" and be uniform throughout the length of the wall. Place steps in the wall without an opening. Steps inserts may be substituted for the bar steps. Step inserts must comply with State Industrial Safety Requirements. See Standard Plan D74C for step details.
6. Pipe(s) can be placed in any wall.
7. Set inlet so that grate bars are parallel to direction of principal surface flow.
8. Type G4 inlet can use Grate Type 18 or 24. Type G2 inlet uses Grate Type 24. See Revised Standard Plan RSP D77A and Standard Plan D77B for grate and frame details and weights of miscellaneous Iron and Steel.
9. G4 inlet details are the same as the G2 with the addition of a curb and sloped grate that matches the adjacent curb and gutter depression. See Standard Plans D78A & D78B for gutter and inlet depresssion details. See Revised Standard Plan RSP A87A & Standard Plan A87B for Curb and Dike Details.
10. Provide pre-cast inlets with separate top sections for final grade adjustment under Standard Specifcation Section 51-1.02. Provide keyed joints between the top and wall and multiple wall sections. Joint design may vary but must be 1" to 3" in depth.
11. Perimeter reinforcement serves as a rigid frame to position and attach the required structural reinforcement and may be tack welded at outer corners when using ASTM A706 weldable bars.
12. This dimension will vary with different grates, curbs types, box width and wall thickness.
13. 2" unless inlet is expanded in the Span "A" direction, then clearance is 2" plus the diameter of the lower "A" bar.
14. Place "A" Bars at an angle so hooked ends will maintain 2" clear coverage.
15. Refer to Standard Plan D73, Table A for concrete quantities.
16. Non-shrink grout can be used for upper most joint to facilitate final top grade adjustment.
17. Slope inlet floors 4:1 towards the outlet pipe. Pre-cast inlets may have monolithic sloped floors, flat floors, or no floors in which case a sloped floor must be cast in the field. Inlet floors do not require reinforcing.
18. Extend sand bedding under all structure backfill.

TOP REINFORCEMENT CHART

16 Bar Diameters — "A" Bars — See Note 14 — Varies

Span	"A" Bars	Required steel area per foot (in^2/ft)
Under 38" with Type 24 Grate	#5 @ 7" C-C 2-#5 Min	0.525
Under 38" with Type 18 Grate	#5 @ 7" C-C 3-#5 Min	0.525
38"-60"	#5 @ 6" C-C	0.621
61"-72"	#5 @ 5" C-C	0.744
73"-90"	#6 @ 6" C-C	0.811

STATE OF CALIFORNIA
DEPARTMENT OF TRANSPORTATION

DRAINAGE INLETS (PRECAST)

NO SCALE

NSP D73A DATED JUNE 5, 2009 SUPPLEMENTS THE STANDARD PLANS BOOK DATED MAY 2006.

NEW STANDARD PLAN NSP D73A

2006 NEW STANDARD PLAN NSP D73A

3-16-09

DIST	COUNTY	ROUTE	POST MILES TOTAL PROJECT	SHEET NO.	TOTAL SHEETS
05	SB,SLO	101	91.0,0.0/0.8	152A	299

REGISTERED CIVIL ENGINEER

June 15, 2007
PLANS APPROVAL DATE

REGISTERED PROFESSIONAL ENGINEER Glenn DeCou No. C34547 Exp. 9-30-07 CIVIL STATE OF CALIFORNIA

The State of California or its officers or agents shall not be responsible for the accuracy or completeness of electronic copies of this plan sheet.

To accompany plans dated 11-2-09

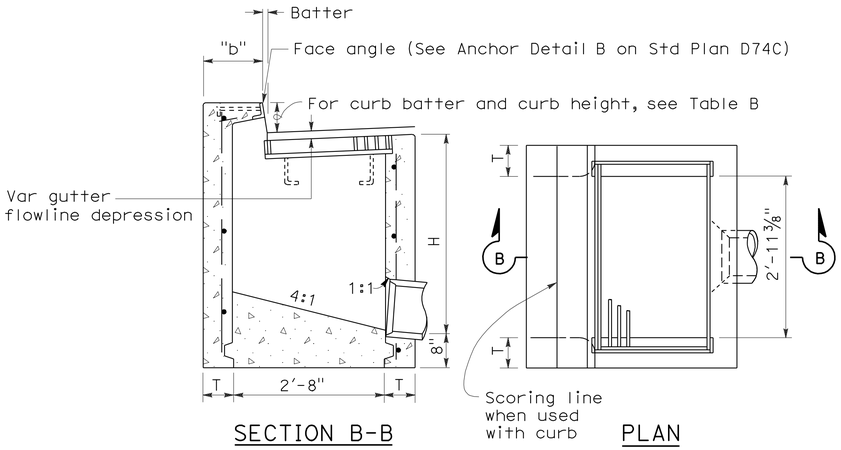

SECTION B-B PLAN

TYPE GO

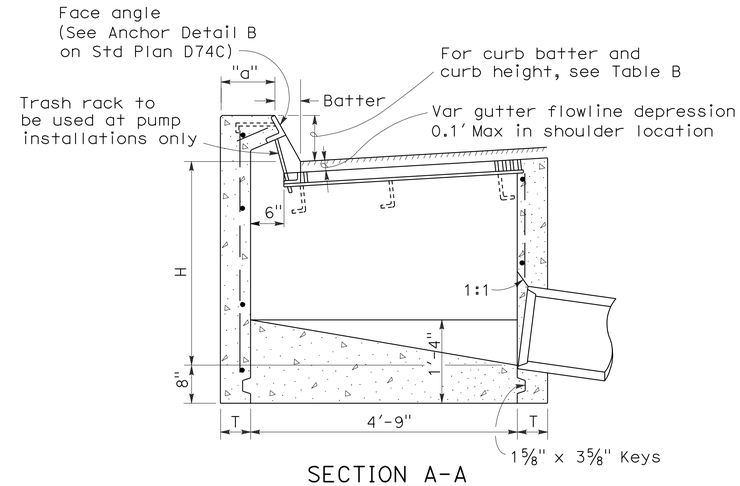

SECTION A-A

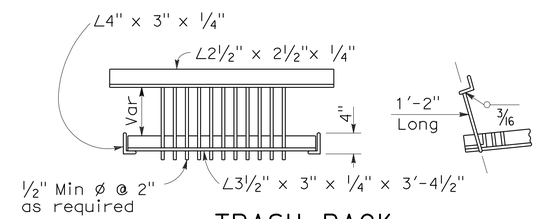

TRASH RACK

(For use with pump installation)

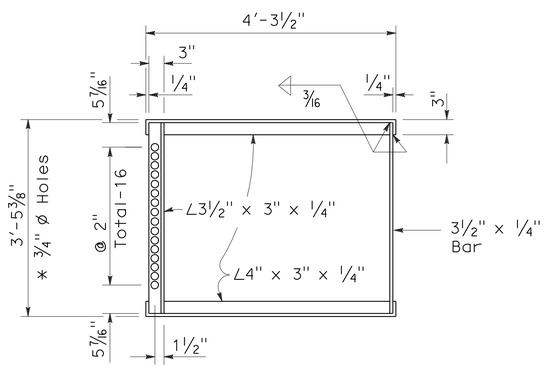

* 3/4" ø Holes required only with trash rack

GRATE FRAME FOR TYPE GDO INLET

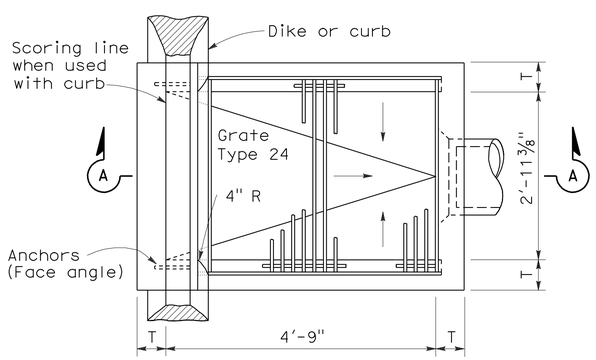

PLAN

TYPE GDO

TABLE A

CONCRETE QUANTITIES				
TYPE	H=3'-0" TO 8'-0" (T=6")		H=8'-1" TO 20'-0" (T=8")	
	H=3'-0" (CY)	ADDITIONAL PCC PER FOOT (CY)	H=8'-1" (CY)	ADDITIONAL PCC PER FOOT (CY)
GO	1.24	0.245	3.39	0.346
GDO	1.62	0.322	4.36	0.446

Table based on 8" floor slab, no deduction for pipe openings, and curb type giving highest quantity of concrete. No deductions or adjustments are to be made to these quantities because of pipe openings, different floor alternatives or different curb type.

TABLE B

CURB TYPE	NORMAL CURB HEIGHT	CURB BATTER	"a" DIMENSION	"b" DIMENSION
A1-6	6"	1 1/2"	T+7 1/2"	T+6 1/2"
A1-8	8"	2"	T+7"	T+6"
B1-6	6"	4"	T+5"	T+4"
Type A Dike	6"	3"	T+6"	T+5"

NOTES:

1. "H" is the difference in elevation between the outlet pipe flow line and the normal gutter grade line undepressed.
2. For "T" wall thickness, see Table A below.
3. Wall reinforcing not required when "H" is 8'-0" or less and the unsupported width or length is 7'-0" or less. Walls exceeding these limits shall be reinforced with #4 @ 18"± centers placed 1 1/2" clear to inside of box unless otherwise shown.
4. Inlet bottom reinforcing not required. See Standard Plan D74C for alternative reinforced bottom.
5. Steps - None required where "H" is less than 2'-6" Where "H" is 2'-6" or more, install steps with lowest rung 1'-0" above the floor and highest rung not more than 6" below top of inlet. The distance between steps shall not exceed 1'-0" and shall be uniform throughout the length of the wall. Place steps in the wall without an opening. Step inserts may be substituted for the bar steps. Step Inserts shall comply with State Industrial Safety requirements. See Standard Plan D74C for step details.
6. When shown on the project plans, place a 3/4" plain round protection bar horizontally across the length of the opening and bend back 4" into the inlet wall on each side.
7. Pipe(s) can be placed in any wall.
8. Curb section shall match adjacent curb.
9. Basin floors shall have wood trowel finish and shall slope toward the outlet pipe as shown.
10. Galvanizing - See Standard Specifications or Special Provisions.
11. See Standard Plan D77A and D77B for grate and frame details and weights of miscellaneous iron and Steel.
12. See Standard Plan D78A for gutter depression details.
13. Full penetration butt welds may be substituted for the fillet welds on all anchors.
14. Standard square, hexagon, round or equivalent headed anchors may be substituted for the right angle hooks on the anchors shown on this plan.
15. Cast-in-place or precast alternative is optional with contractor. See Standard Specifications.
16. Cast-in-place inlets to be formed around all pipes/stubs intersecing the inlet and concrete poured in one continuous operation. Precast inlets shall have mortared pipe connections conforming to details for Type GCP inlets on Standard Plan D75B. See Standard Specifications for mortar composition.

STATE OF CALIFORNIA
DEPARTMENT OF TRANSPORTATION

DRAINAGE INLETS

NO SCALE

RSP D74B DATED JUNE 15, 2007 SUPERSEDES STANDARD PLAN D74B DATED MAY 1, 2006 - PAGE 150 OF THE STANDARD PLANS BOOK DATED MAY 2006.

REVISED STANDARD PLAN RSP D74B

2006 REVISED STANDARD PLAN RSP D74B

4-16-07

DIST	COUNTY	ROUTE	POST MILES TOTAL PROJECT	SHEET NO.	TOTAL SHEETS
05	SB,SLO	101	91.0,0.0/0.8	152B	299

Raymond Don Tsztoo
REGISTERED CIVIL ENGINEER

January 18, 2008
PLANS APPROVAL DATE

REGISTERED PROFESSIONAL ENGINEER
Raymond Don Tsztoo
No. C37332
Exp. 6-30-08
CIVIL
STATE OF CALIFORNIA

The State of California or its officers or agents shall not be responsible for the accuracy or completeness of electronic copies of this plan sheet.

To accompany plans dated 11-2-09

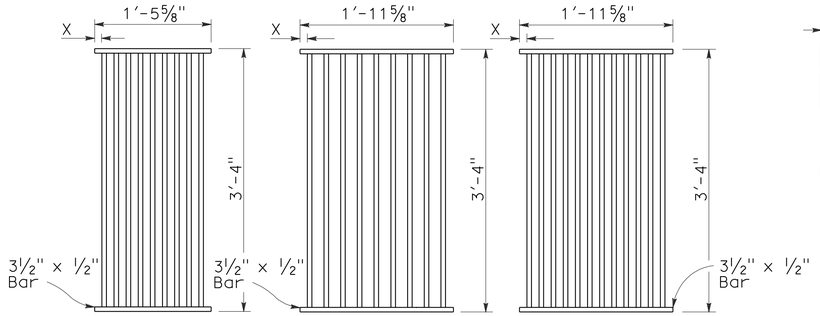

TYPE 18-9

1⅜" Clear spacing. Use within the roadbed on highways where bicycles and pedestrians are excluded.

TYPE 24-9

2" Clear spacing. Use in locations off the roadbed on all types of highways.

TYPE 24-12

1⅜" Clear spacing. Use within the roadbed on highways where bicycles and pedestrians are excluded.

RECTANGULAR GRATE DETAILS

(See table below)

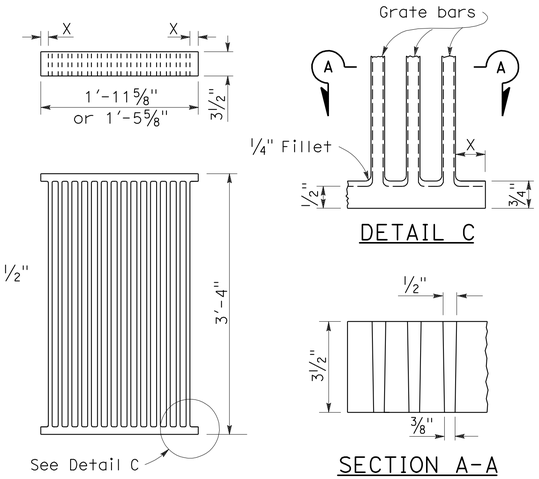

DETAIL C

SECTION A-A

ALTERNATIVE CAST NODULAR IRON GRATE OR CAST STEEL GRATE

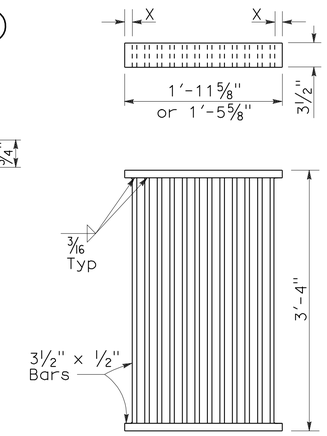

ALTERNATIVE WELDED GRATE

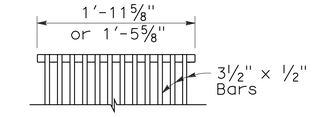

CAST END BLOCK

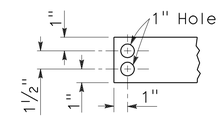

END OF BAR

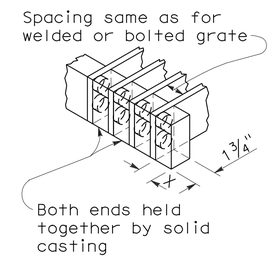

ALTERNATIVE CAST NODULAR IRON OR CAST STEEL END BLOCK GRATE

NOTES:

1. Grate type numbers refer to approximate width of grate in inches and number of bars, respectively.
2. Contractor has the option of using cast nodular iron, cast steel, welded, bolted, or cast end block grate.
3. See Special Provisions for requirements pertaining to galvanizing or asphalt dipping of grates and frames.
4. Rounded top of bars optional on all grates.
5. Pipe inlets with a grate shall be placed so that bars parallel direction of principle surface flow.
6. Full penetration butt welds may be substituted for the fillet welds on all anchors.
7. Standard square, hexagon, round or equivalent headed anchors may be substituted for the right angle hooks on the anchors shown on this plan.
8. Grate and frame weights are based on welded grates (weights of face angles, steps, protection bars, etc. are not included).

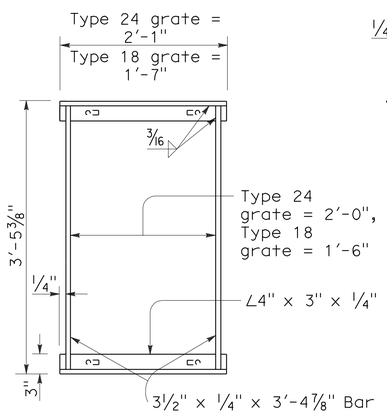

TYPICAL FRAME

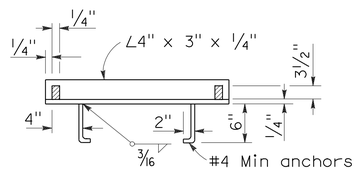

CROSS SECTION

(Thru frame)

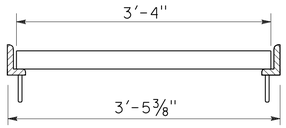

LONGITUDINAL SECTION

(Thru frame and grate)

RECTANGULAR FRAME DETAILS

(For all rectangular grates)

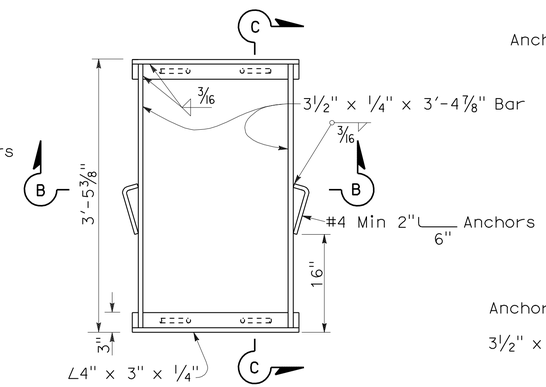

TYPICAL FRAME

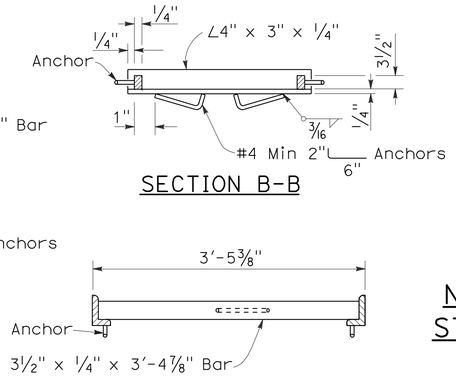

SECTION B-B

SECTION C-C

ALTERNATIVE ANCHOR FOR RECTANGULAR FRAME

(For details not shown, See Rectangular Frame Details)

INLET TYPE	GRATE TYPE	No. OF GRATES	WEIGHT LB
GDO	24-12	2	634
GOL-7	24-12	1	326
GOL-10	24-12	1	326
GO,G1,G2,G3,G4 (TYPE 24)	24-9	1	263
	24-12	1	326
G4 (TYPE 18),G5,G6	18-9	1	249
GT1	18-9	2	498
GT2	18-9	2	498
GT3	24-12	2	652
GT4	24-12	2	652
TRASH RACK			22

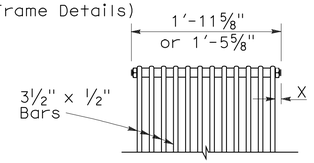

BOLTED END BLOCK

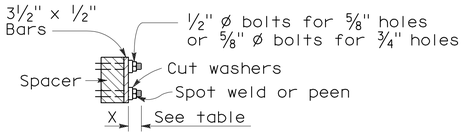

BOLTING DETAIL

ALTERNATIVE BOLTED GRATE

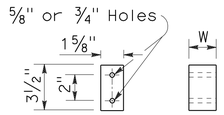

BAR SPACER

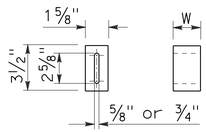

ALTERNATIVE SPACER

W = 1⅜" or 2"

GRATE BAR SPACING TABLE

TYPE	No. OF BARS	CLEAR BAR SPACING	X
18-9	9	1⅜"	1 1/16"
24-9	9	2"	1 9/16"
24-12	12	1⅜"	1¼"

INLET TYPE	COVER TYPE	WEIGHT LB
OS	PLATE	174
OL-7	PLATE	170
OL-10	PLATE	170
OL-14	PLATE	170
OL-21	PLATE	170
OCP	PLATE	112
OCPI	PLATE	112
OCPI	REDWOOD	42
OMP	PLATE	177
OMPI	PLATE	177

BASIS FOR MISC IRON & STEEL FINAL PAY WEIGHTS FOR DRAINAGE INLETS

(See General Notes, No 8)

STATE OF CALIFORNIA
DEPARTMENT OF TRANSPORTATION

GRATE DETAILS

NO SCALE

RSP D77A DATED JANUARY 18, 2008 SUPERSEDES STANDARD PLAN D77A DATED MAY 1, 2006 - PAGE 155 OF THE STANDARD PLANS BOOK DATED MAY 2006.

REVISED STANDARD PLAN RSP D77A

2006 REVISED STANDARD PLAN RSP D77A

12-14-07

DIST	COUNTY	ROUTE	POST MILES TOTAL PROJECT	SHEET NO.	TOTAL SHEETS
05	SB,SLO	101	91.0,0.0/0.8	153	299

LICENSED LANDSCAPE ARCHITECT

June 5, 2009
PLANS APPROVAL DATE

Gregory A. Balzer 2576
10-28-10 Renewal Date
2-28-11 Renewal Date
5-14-09 Date
LICENSED LANDSCAPE ARCHITECT
STATE OF CALIFORNIA

The State of California or its officers or agents shall not be responsible for the accuracy or completeness of electronic copies of this plan sheet.

To accompany plans dated 11-2-09

A

AB	aggregate base
ABS	acrylonitrile-butadiene-styrene
AC	asphalt concrete
Adj	adjacent/adjustable
AIC	auxiliary irrigation controller
Alt	alternative
AMEND	amendment
ARV	air release valve
AUTO	automatic
AUX	auxiliary
AVB	atmospheric vacuum breaker

B

B&B	balled and burlapped
B/B	brass/bronze
B/B/PL	brass/bronze/plastic
B/PL	brass/plastic
BFM	bonded fiber matrix
Bit Ctd	bituminous coated
BP	booster pump
BPA	backflow preventer assembly
BPAE	backflow preventer assembly in enclosure
BPE	backflow preventer enclosure
BV	ball valve

C

CAP	corrugated aluminum pipe
CARV	combination air release valve
CCA	cam coupler assembly
CEC	controller enclosure cabinet
CHDPE	corrugated high density polyethylene
CL	chain link
CNC	control and neutral conductors
Conc	concrete
Cond	conduit
CSP	corrugated steel pipe
CST	center strip
CV	check valve

D

Dia	diameter
DIP	ductile iron pipe
DN	diameter nominal

E

EA	each
Elect	electric/electrical
Elev	elevation
ENCL	enclosure
EP	edge of pavement
ES	edge of shoulder
EST	end strip
ESTB	establishment
ETW	edge of traveled way

F

F	full circle
F/P	full/part circle
FAU	filter assembly unit
FCV	flow control valve
FERT	fertilizer
FG	finished grade
FIPT	female iron pipe thread
FIS	fertilizer injector system
FL	flow line
FM	flow monitor
FS	flow sensor
Ft	foot/feet
FV	flush valve

G

GAL	Gallon(s)
Galv	galvanized
GARV	garden valve
GPH	gallons per hour
GPM	gallons per minute
GSP	galvanized steel pipe
GV	gate valve

H

H	half circle
HB	hose bib
HDPE	high density polyethylene
HP	horsepower/hinge point
HPL	high pressure line
Hwy	highway

I

IC	irrigation controller
ICC	irrigation controller(s) in controller enclosure cabinet
ID	inside diameter
In	inches
IFS	irrigation filtration system
IPS	iron pipe size
IPT	iron pipe thread
Irr	irrigation

L

L	length
LF	linear foot

M

Max	maximum
MBGR	metal beam guard railing
MCV	manual control valve
MIC	master irrigation controller
Min	minimum
MIPT	male iron pipe thread
Misc	miscellaneous
Mtl	material
MVP	maintenance vehicle pullout

N

NCN	no common name
NL	nozzle line
No.	number
NPT	national pipe thread

O

O/C	on center
OD	outside diameter
Oz	ounce

P

P	part circle
PB	pull box
PCC	portland cement concrete
PE	polyethylene
Pkt	packet
PL	plastic
PLT	plant/planting
PLT ESTB	plant establishment
PM	post mile
PR	pressure rated
PRLV	pressure relief valve
PSFM	polymer stabilized fiber matrix
PSI	pounds per square inch
PRV	pressure reducing valve
PVC	polyvinyl chloride
Pvmt	pavement

Q

Q	quarter circle
QCV	quick coupling valve

R

R	radius
RCP	reinforced concrete pipe
RCV	remote control valve
RCVM	remote control valve (master)
RCVMF	remote control valve (master) w/ flow meter
RCW	recycled/reclaimed water
RECP	rolled erosion control product
REQ	required
R/W	right of way

S

S	slip
SCC	sprinkler control conduit
SCH	schedule
SF	state-furnished
Shld	shoulder
SQFT	square foot/feet
SQYD	square yard(s)
SST	side strip
Sta	station
Std	standard
SW	sidewalk/sound wall

T

T	third circle/thread
TLS	truck loading standpipe
TQ	three quarter circle
TRM	turf reinforcement mat
TRVD	traveled
TT	two third circle
Typ	typical

U

UG	underground

V

VAU	valve assembly unit

W

W	width
W/	with
WM	water meter
WS	wye strainer
WSP	welded steel pipe
WWM	welded wire mesh

NOTE:

FOR ADDITIONAL ABBREVIATIONS, SEE STANDARD PLANS A10A AND A10B.

STATE OF CALIFORNIA
DEPARTMENT OF TRANSPORTATION

PLANTING AND IRRIGATION ABBREVIATIONS

NO SCALE

RSP H1 DATED JUNE 5, 2009 SUPERSEDES STANDARD PLAN H1
DATED MAY 1, 2006 - PAGE 201 OF THE STANDARD PLANS BOOK DATED MAY 2006.

REVISED STANDARD PLAN RSP H1

2006 REVISED STANDARD PLAN RSP H1

DIST	COUNTY	ROUTE	POST MILES TOTAL PROJECT	SHEET NO.	TOTAL SHEETS
05	SB,SLO	101	91.0,0.0/0.8	154	299

LICENSED LANDSCAPE ARCHITECT

June 5, 2009
PLANS APPROVAL DATE

The State of California or its officers or agents shall not be responsible for the accuracy or completeness of electronic copies of this plan sheet.

Gregory A. Balzer 2576 — 10-28-10 (Renewal Date) — LICENSED LANDSCAPE ARCHITECT — STATE OF CALIFORNIA

2-28-11 (Renewal Date)
5-14-09 (Date)

To accompany plans dated 11-2-09

EXISTING	PROPOSED	ITEM DESCRIPTION
		WATER METER (WM)
		BACKFLOW PREVENTER ASSEMBLY (BPA)
		BACKFLOW PREVENTER ASSEMBLY IN ENCLOSURE (BPAE)
		BACKFLOW PREVENTER ENCLOSURE (BPE)
		BOOSTER PUMP (BP)
		TRUCK LOADING STANDPIPE (TLS)
FS	FS	FLOW SENSOR (FS)
X	X	MASTER IRRIGATION CONTROLLER (MIC)
X	X	AUXILIARY IRRIGATION CONTROLLER (AIC)
		IRRIGATION CONTROLLER (IC)/ IRRIGATION CONTROLLER (IC) (BATTERY) IRRIGATION CONTROLLER (IC) (SOLAR)
		IRRIGATION CONTROLLER(S) IN CONTROLLER ENCLOSURE CABINET (ICC)
		CONTROL AND NEUTRAL CONDUCTORS (CNC)
SCC	SCC	SPRINKLER CONTROL CONDUIT (SCC)
		IRRIGATION CROSSOVER
		EXTEND IRRIGATION CROSSOVER
		IRRIGATION SLEEVE
dip	DIP	DUCTILE IRON PIPE (SUPPLY LINE) (MAIN) (DIP)
		GALVANIZED STEEL PIPE (SUPPLY LINE) (MAIN) (GSP)
		GALVANIZED STEEL PIPE (SUPPLY LINE) (LATERAL) (GSP)
		PLASTIC PIPE (PR 200) (SUPPLY LINE) (MAIN)
		PLASTIC PIPE (PR 200) (SUPPLY LINE) (LATERAL)
		PLASTIC PIPE (IRRIGATION LINE)
		REMOTE CONTROL VALVE (RCV) REMOTE CONTROL VALVE (MASTER) (RCVM) REMOTE CONTROL VALVE (MASTER) W/FLOW METER (RCVMF)
		MANUAL CONTROL VALVE (MCV)
		VALVE ASSEMBLY UNIT (VAU)
		WYE STRAINER (WS)
		FILTER ASSEMBLY UNIT (FAU)
		GATE VALVE (GV)
		BALL VALVE (BV)

EXISTING	PROPOSED	ITEM DESCRIPTION
		QUICK COUPLING VALVE (QCV)
		CAM COUPLER ASSEMBLY (CCA)
		PRESSURE REDUCING VALVE (PRV)
		PRESSURE RELIEF VALVE (PRLV)
		FLOW CONTROL VALVE (FCV)
		COMBINATION AIR RELEASE VALVE (CARV)
		CHECK VALVE (CV)
		FLUSH VALVE (FV)
		NOZZLE LINE W/TURNING UNION
		IRRIGATION SYSTEM
		IRRIGATION SYSTEM TO BE REMOVED
		CHAIN LINK GATE
		QUICK COUPLING VALVE W/SPRINKLER PROTECTOR
3	3	SPRINKLER W/SPRINKLER PROTECTOR
	C	CONNECT TO EXISTING SYSTEM
		CAP
		CAP EXISTING

VALVE CODE

RCV SIZE
IRRIGATION CONTROLLER
CONTROLLER STATION
VALVE IN PARALLEL (IF APPLICABLE)
GPM
QUANTITY OF SPRINKLERS (WHEN SHOWN)

* 2½"-A-2b-40 -60

MCV SIZE
VALVE NUMBER
GPM
QUANTITY OF TYPE SPRINKLERS (WHEN SHOWN)

* 2"-3-30 -50

* VALVE CODES FOR EXISTING VALVES ARE SHOWN IN A DASHED ENCLOSURE.

STATE OF CALIFORNIA
DEPARTMENT OF TRANSPORTATION

PLANTING AND IRRIGATION SYMBOLS

NO SCALE

RSP H2 DATED JUNE 5, 2009 SUPERSEDES RSP H2 DATED MARCH 7, 2008 AND STANDARD PLAN H2 DATED MAY 1, 2006 - PAGE 202 OF THE STANDARD PLANS BOOK DATED MAY 2006.

REVISED STANDARD PLAN RSP H2

2006 REVISED STANDARD PLAN RSP H2

5-11-09

DIST	COUNTY	ROUTE	POST MILES TOTAL PROJECT	SHEET NO.	TOTAL SHEETS
05	SB,SLO	101	91.0,0.0/0.8	155	299

LICENSED LANDSCAPE ARCHITECT

June 5, 2009
PLANS APPROVAL DATE

Gregory A. Balzer 2576
10-31-10
2-28-11
5-14-09
LICENSED LANDSCAPE ARCHITECT STATE OF CALIFORNIA

The State of California or its officers or agents shall not be responsible for the accuracy or completeness of electronic copies of this plan sheet.

To accompany plans dated 11-2-09

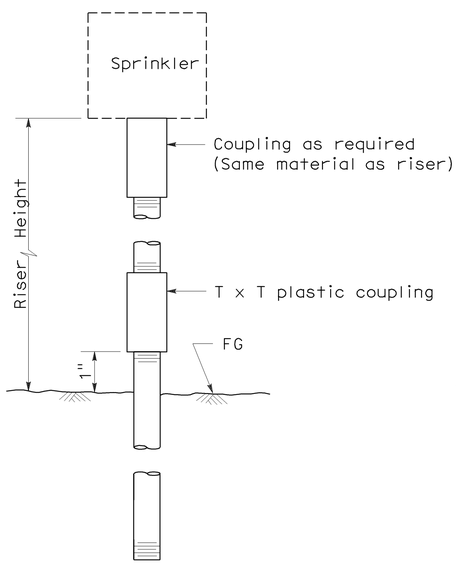

ELEVATION
RISER TYPE I

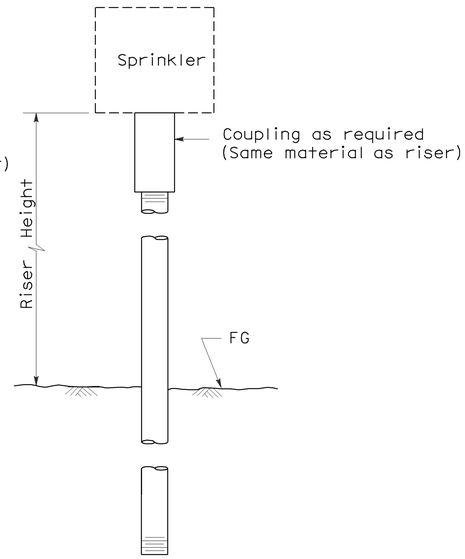

ELEVATION
RISER TYPE II

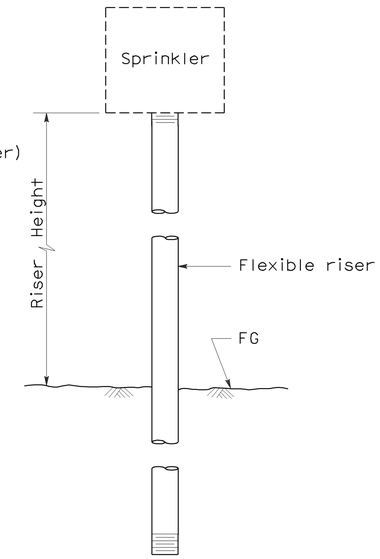

ELEVATION
RISER TYPE III

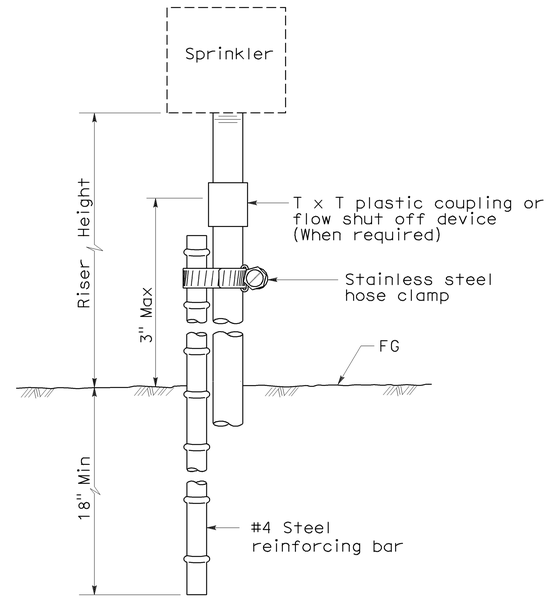

ELEVATION
RISER TYPE IV

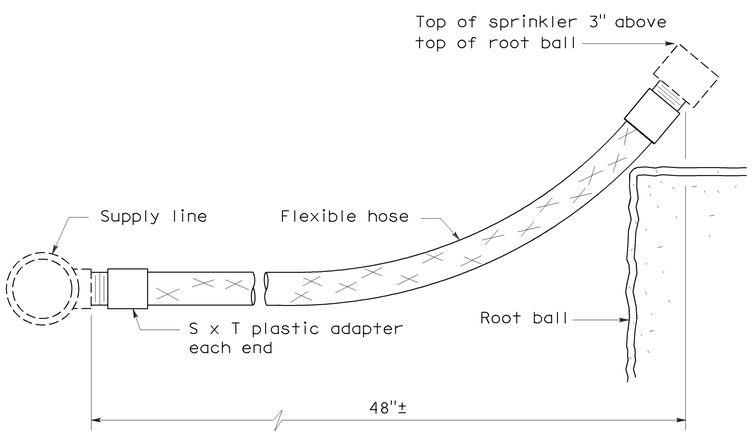

ELEVATION
RISER TYPE V

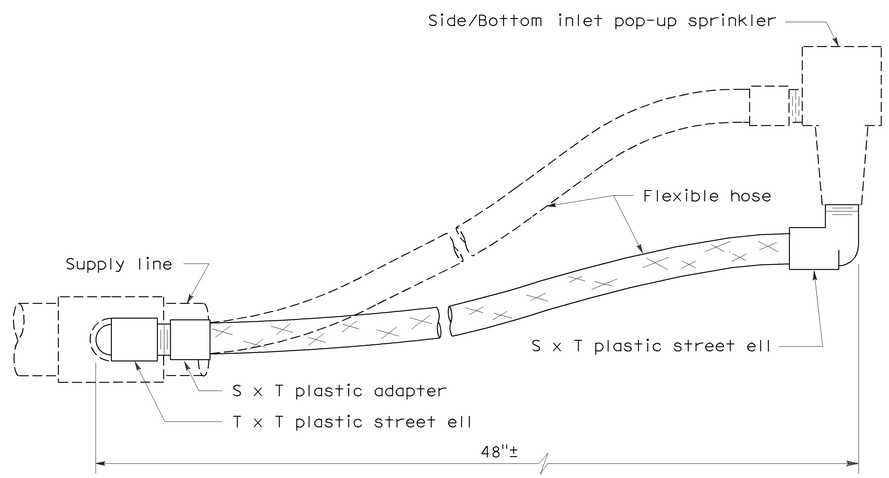

ELEVATION
RISER TYPE VI

STATE OF CALIFORNIA
DEPARTMENT OF TRANSPORTATION

PLANTING AND IRRIGATION DETAILS

NO SCALE

RSP H5 DATED JUNE 5, 2009 SUPERSEDES STANDARD PLAN H5
DATED MAY 1, 2006 - PAGE 205 OF THE STANDARD PLANS BOOK DATED MAY 2006.

REVISED STANDARD PLAN RSP H5

2006 REVISED STANDARD PLAN RSP H5

5-28-09

DIST	COUNTY	ROUTE	POST MILES TOTAL PROJECT	SHEET NO.	TOTAL SHEETS
05	SB,SLO	101	91.0,0.0/0.8	156	299

LICENSED LANDSCAPE ARCHITECT

June 5, 2009
PLANS APPROVAL DATE

The State of California or its officers or agents shall not be responsible for the accuracy or completeness of electronic copies of this plan sheet.

LICENSED LANDSCAPE ARCHITECT Gregory A. Balzer 2576 STATE OF CALIFORNIA
10-28-10 Expiration date
2-28-11 Renewal date
5-14-09 Date

To accompany plans dated 11-2-09

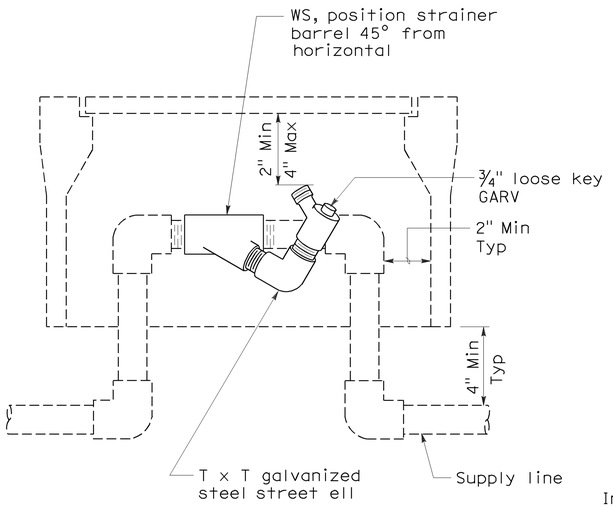

ELEVATION
WYE STRAINER

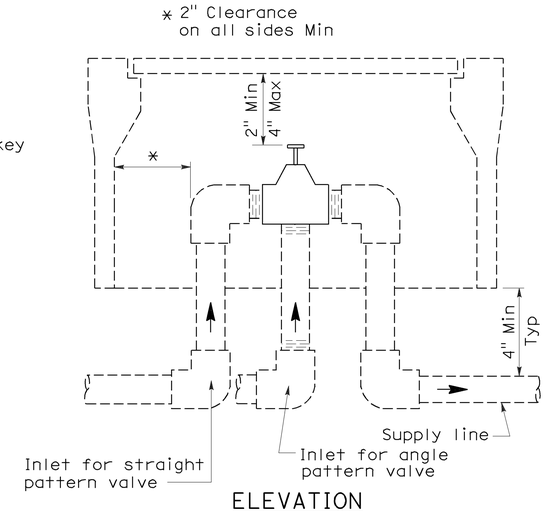

ELEVATION
VALVE

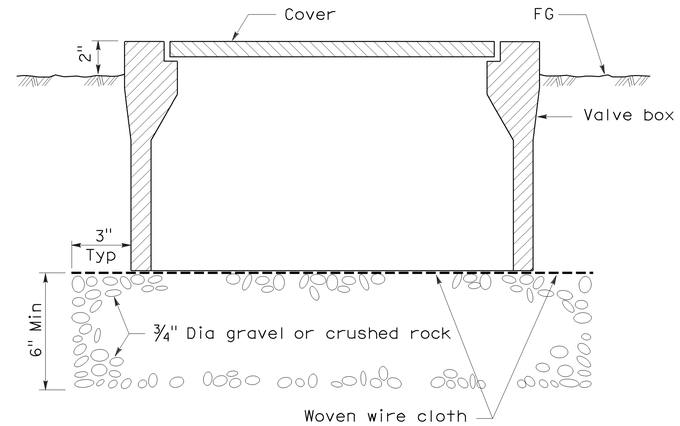

SECTION
VALVE BOX

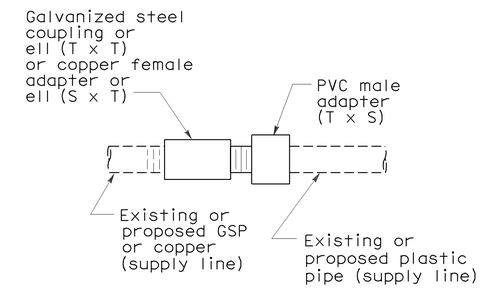

PLAN
GALVANIZED OR COPPER PIPE CONNECTION TO PLASTIC PIPE

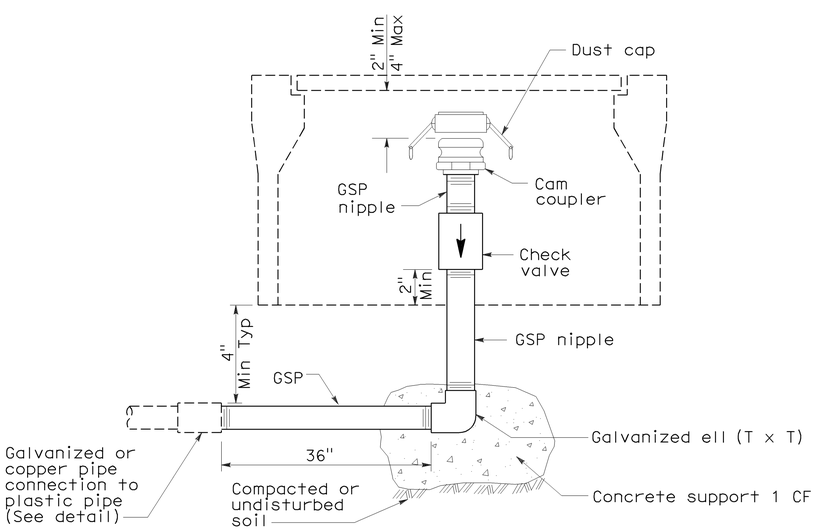

ELEVATION
CAM COUPLER ASSEMBLY

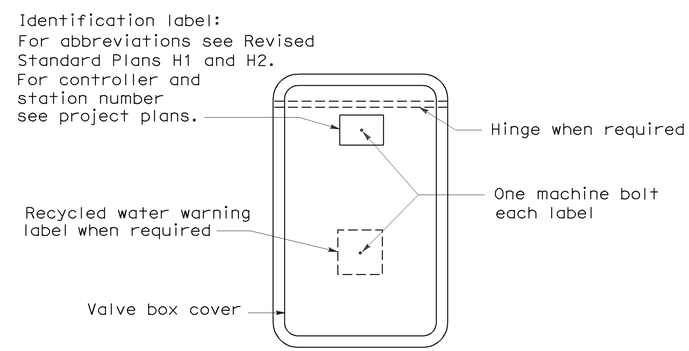

PLAN

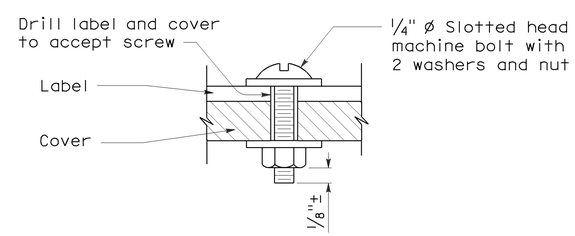

SECTION
VALVE BOX IDENTIFICATION

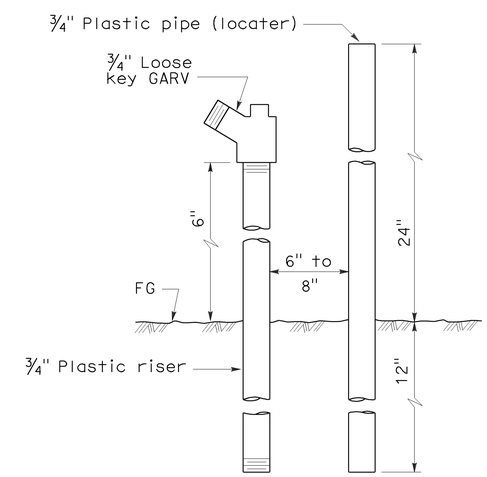

ELEVATION
FLUSH VALVE

STATE OF CALIFORNIA
DEPARTMENT OF TRANSPORTATION

PLANTING AND IRRIGATION DETAILS

NO SCALE

RSP H7 DATED JUNE 5, 2009 SUPERSEDES STANDARD PLAN H7
DATED MAY 1, 2006 - PAGE 207 OF THE STANDARD PLANS BOOK DATED MAY 2006.

REVISED STANDARD PLAN RSP H7

2006 REVISED STANDARD PLAN RSP H7

5-28-09

DIST	COUNTY	ROUTE	POST MILES TOTAL PROJECT	SHEET NO.	TOTAL SHEETS
05	SB,SLO	101	91.0,0.0/0.8	157	299

Randell D. Hiatt
REGISTERED CIVIL ENGINEER

June 6, 2008
PLANS APPROVAL DATE

REGISTERED PROFESSIONAL ENGINEER
Randell D. Hiatt
No. C50200
Exp. 6-30-09
CIVIL
STATE OF CALIFORNIA

The State of California or its officers or agents shall not be responsible for the accuracy or completeness of electronic copies of this plan sheet.

To accompany plans dated 11-2-09

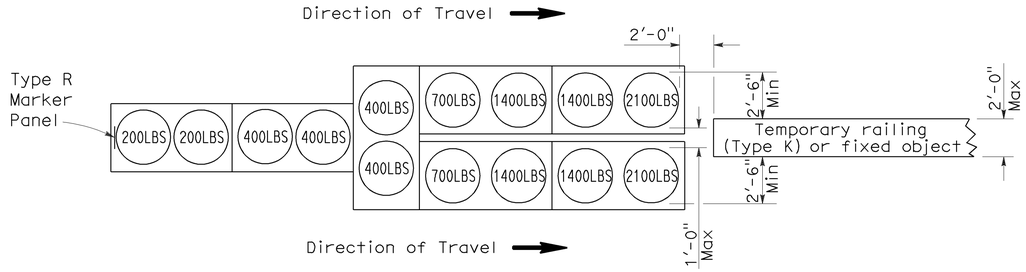

ARRAY 'TU14'

Approach speed 45 mph or more

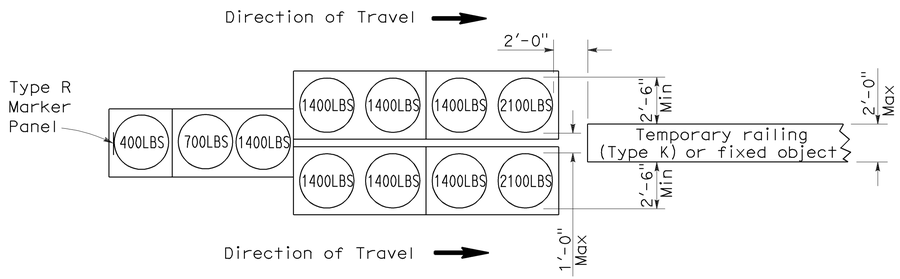

ARRAY 'TU11'

Approach speed less than 45 mph

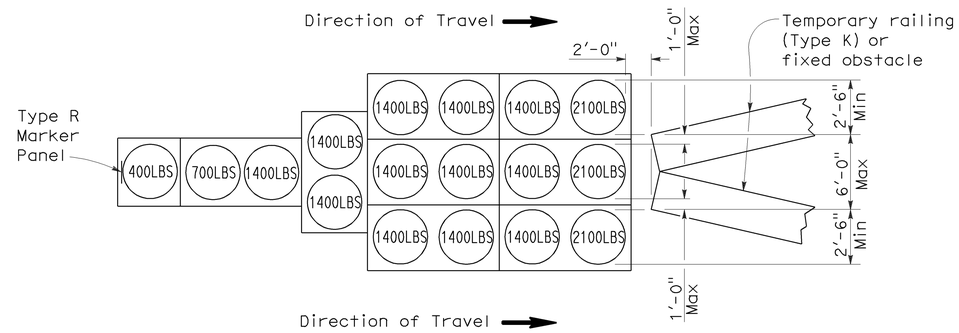

ARRAY 'TU17'

Approach speed less than 45 mph

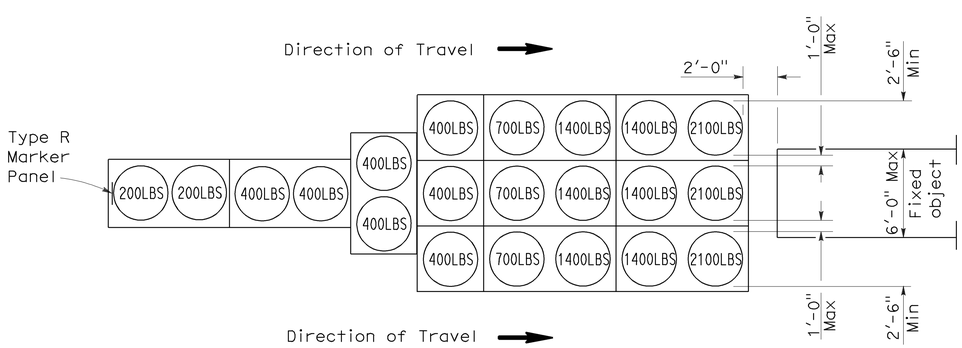

ARRAY 'TU21'

Approach speed 45 mph or more

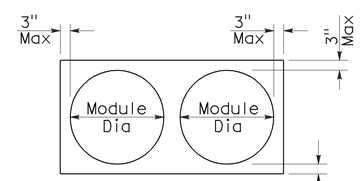

PLAN

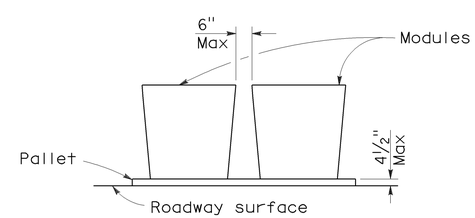

ELEVATION

CRASH CUSHION PALLET DETAIL

See Note 7

NOTES:

1. (XXX) Indicates sand filled module location and weight of sand in pounds for each module. Module spacing is based on the greater diameter of the module.
2. All sand weights are nominal.
3. Temporary crash cushion arrays shall not encroach on the traveled way.
4. Place the top of Type R marker panel 1" below the module lid.
5. Refer to Standard Plan A73B for marker details.
6. Approach speeds indicated conform to NCHRP 350 Report criteria.
7. Use of pallets is optional.

STATE OF CALIFORNIA
DEPARTMENT OF TRANSPORTATION

TEMPORARY CRASH CUSHION, SAND FILLED (UNIDIRECTIONAL)

NO SCALE

RSP T1A DATED JUNE 6, 2008 SUPERSEDES STANDARD PLAN T1A
DATED MAY 1, 2006 - PAGE 211 OF THE STANDARD PLANS BOOK DATED MAY 2006.

REVISED STANDARD PLAN RSP T1A

2006 REVISED STANDARD PLAN RSP T1A

5-15-08

DIST	COUNTY	ROUTE	POST MILES TOTAL PROJECT	SHEET NO.	TOTAL SHEETS
05	SB,SLO	101	91.0,0.0/0.8	158	299

Randell D. Hiatt
REGISTERED CIVIL ENGINEER

June 6, 2008
PLANS APPROVAL DATE

REGISTERED PROFESSIONAL ENGINEER
Randell D. Hiatt
No. C50200
Exp. 6-30-09
CIVIL
STATE OF CALIFORNIA

The State of California or its officers or agents shall not be responsible for the accuracy or completeness of electronic copies of this plan sheet.

To accompany plans dated 11-2-09

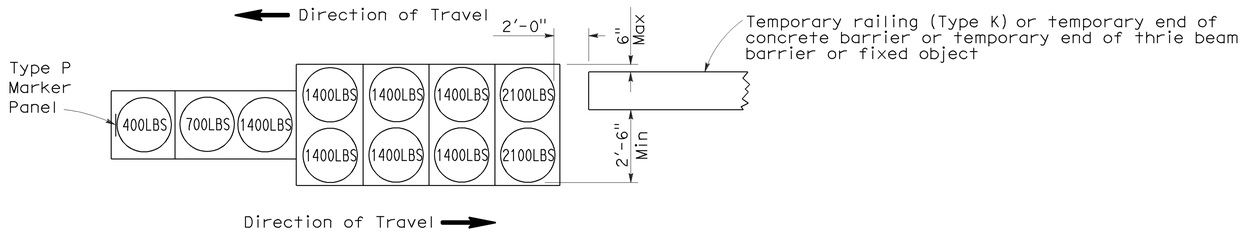

ARRAY 'TB11'

Approach speed less than 45 mph

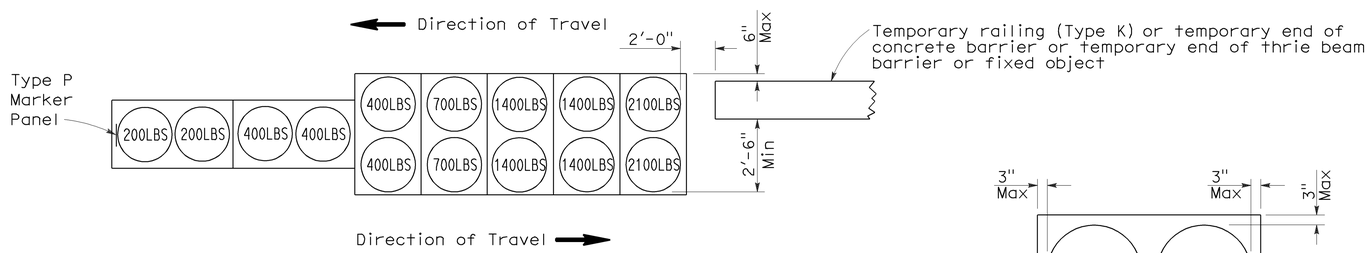

ARRAY 'TB14'

Approach speed 45 mph or more

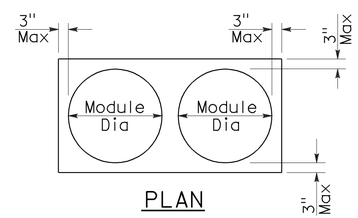

PLAN

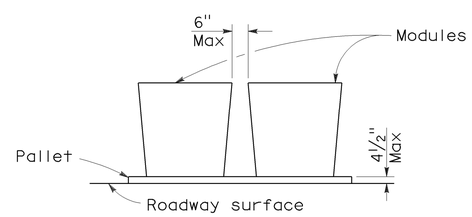

ELEVATION

CRASH CUSHION PALLET DETAIL

See Note 7

NOTES:

1. (XXX) Indicates sand filled module location and weight of sand in pounds for each module. Module spacing is based on the greater diameter of the module.
2. All sand weights are nominal.
3. Temporary crash cushion arrays shall not encroach on the traveled way.
4. Place the Type P marker panel so that the bottom of the panel rests upon the pallet.
5. Refer to Standard Plan A73B for marker details.
6. Approach speeds indicated conform to NCHRP 350 Report criteria.
7. Use of pallets is optional.

STATE OF CALIFORNIA
DEPARTMENT OF TRANSPORTATION

TEMPORARY CRASH CUSHION, SAND FILLED (BIDIRECTIONAL)

NO SCALE

RSP T1B DATED JUNE 6, 2008 SUPERSEDES STANDARD PLAN T1B
DATED MAY 1, 2006 - PAGE 212 OF THE STANDARD PLANS BOOK DATED MAY 2006.

REVISED STANDARD PLAN RSP T1B

2006 REVISED STANDARD PLAN RSP T1B

5-15-08

DIST	COUNTY	ROUTE	POST MILES TOTAL PROJECT	SHEET NO.	TOTAL SHEETS
05	SB,SLO	101	91.0,0.0/0.8	159	299

Randell D. Hiatt
REGISTERED CIVIL ENGINEER

June 6, 2008
PLANS APPROVAL DATE

REGISTERED PROFESSIONAL ENGINEER
Randell D. Hiatt
No. C50200
Exp. 6-30-09
CIVIL
STATE OF CALIFORNIA

The State of California or its officers or agents shall not be responsible for the accuracy or completeness of electronic copies of this plan sheet.

To accompany plans dated 11-2-09

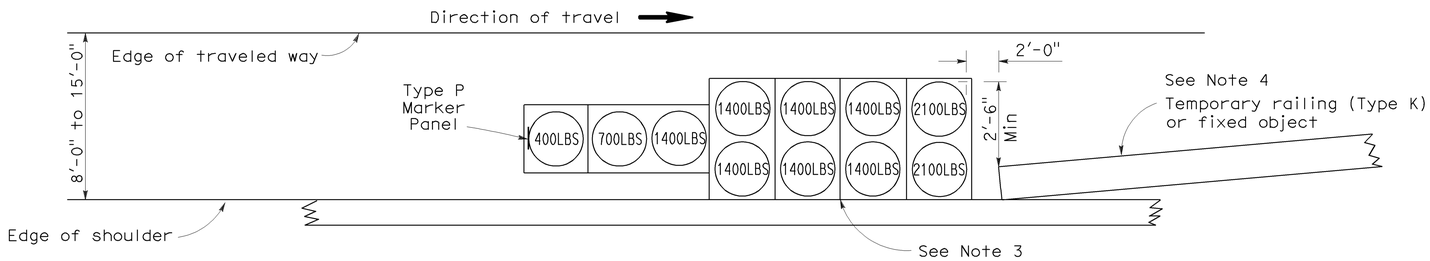

ARRAY 'TS11'

Approach speed less than 45 mph
See Note 9

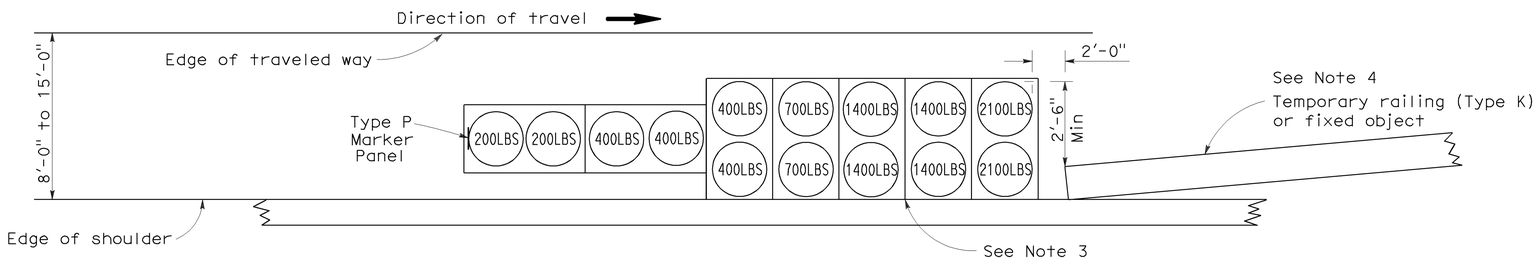

ARRAY 'TS14'

Approach speed 45 mph or more
See Note 9

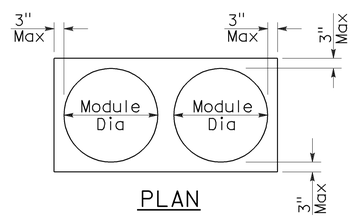

PLAN

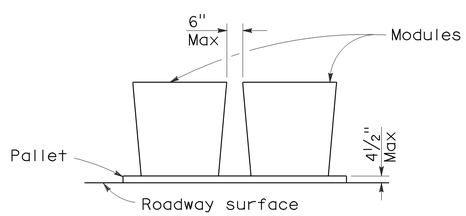

ELEVATION

CRASH CUSHION PALLET DETAIL

See Note 11

NOTES:

1. (XXX) Indicates sand filled module location and weight of sand in pounds for each module. Module spacing is based on the greater diameter of the module.
2. All sand weights are nominal.
3. The temporary crash cushion arrays shown on this plan shall be used only in locations where there will be traffic on one side of the temporary crash cushion array.
4. If the fixed object or approach end of the temporary railing is less than 15'-0" from the edge of traveled way, a temporary crash cushion is required in a construction or work zone.
5. Temporary crash cushion arrays shall not encroach on the traveled way.
6. Arrays for median shoulders shall conform to details shown on this plan for outside shoulders.
7. Place the Type P marker panel so that the bottom of the panel rests upon the pallet and faces traffic.
8. Refer to Standard Plan A73B for marker details.
9. For shoulder widths less than 8'-0", appropriate approved crash cushion protection, other than sand filled modules, shall be provided at fixed objects and at approach ends of temporary railing. The specific type of crash cushion shall be as shown on the project plans or as specified in the Special Provisions, or if not shown on the project plans or specified in the Special Provisions, shall be as approved by the Engineer.
10. Approach speeds indicated conform to NCHRP 350 Report criteria.
11. Use of pallets is optional.

STATE OF CALIFORNIA
DEPARTMENT OF TRANSPORTATION

TEMPORARY CRASH CUSHION, SAND FILLED (SHOULDER INSTALLATIONS)

NO SCALE

RSP T2 DATED JUNE 6, 2008 SUPERSEDES STANDARD PLAN T2
DATED MAY 1, 2006 - PAGE 213 OF THE STANDARD PLANS BOOK DATED MAY 2006.

REVISED STANDARD PLAN RSP T2

2006 REVISED STANDARD PLAN RSP T2

5-15-08

DIST	COUNTY	ROUTE	POST MILES TOTAL PROJECT	SHEET NO.	TOTAL SHEETS
05	SB,SLO	101	91.0,0.0/0.8	160	299

Greg W. Edwards
REGISTERED CIVIL ENGINEER

November 17, 2006
PLANS APPROVAL DATE

REGISTERED PROFESSIONAL ENGINEER
Greg W. Edwards
No. C36386
Exp. 6-30-08
CIVIL
STATE OF CALIFORNIA

The State of California or its officers or agents shall not be responsible for the accuracy or completeness of electronic copies of this plan sheet.

To accompany plans dated 11-2-09

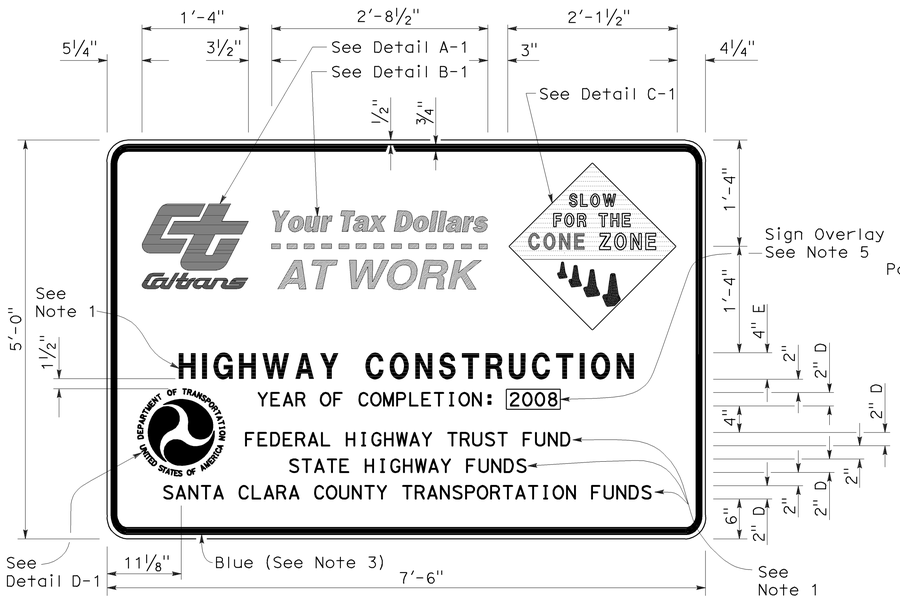

TYPE 1

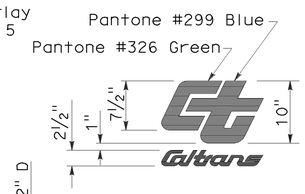

DETAIL A-1

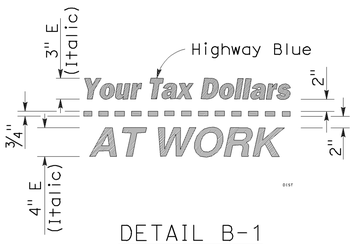

DETAIL B-1
(See Note 3)

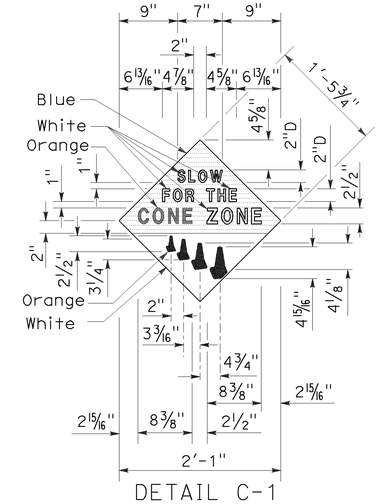

DETAIL C-1
(See Note 4)

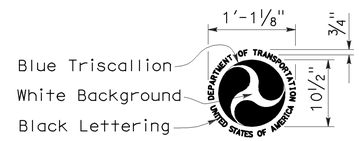

DETAIL D-1
(See Note 6)

NOTES:

1. The sign messages shown for type of project and fund types are examples only. See the Special Provisions for the applicable type of project and fund type messages to be used.
2. Except as otherwise shown, the legend of sign shall be black on a white background (non-reflective).
3. The border of the signs and details "B-1" and "B-2" shall be blue (non-reflective).
4. The diamond in details "C-1" and "C-2" shall be blue for the background of message, " SLOW FOR THE CONE ZONE", and white background for the orange cones. The color and type of font for the "SLOW FOR THE CONE ZONE" message shall be: "SLOW" white D; "FOR THE" white D; "CONE" orange Arial font; "ZONE" white Arial font.
5. Year of completion of project construction shown on the overlay is an example only. See the Special Provisions.
6. Use when the Project involves Federal Highway Trust Fund.

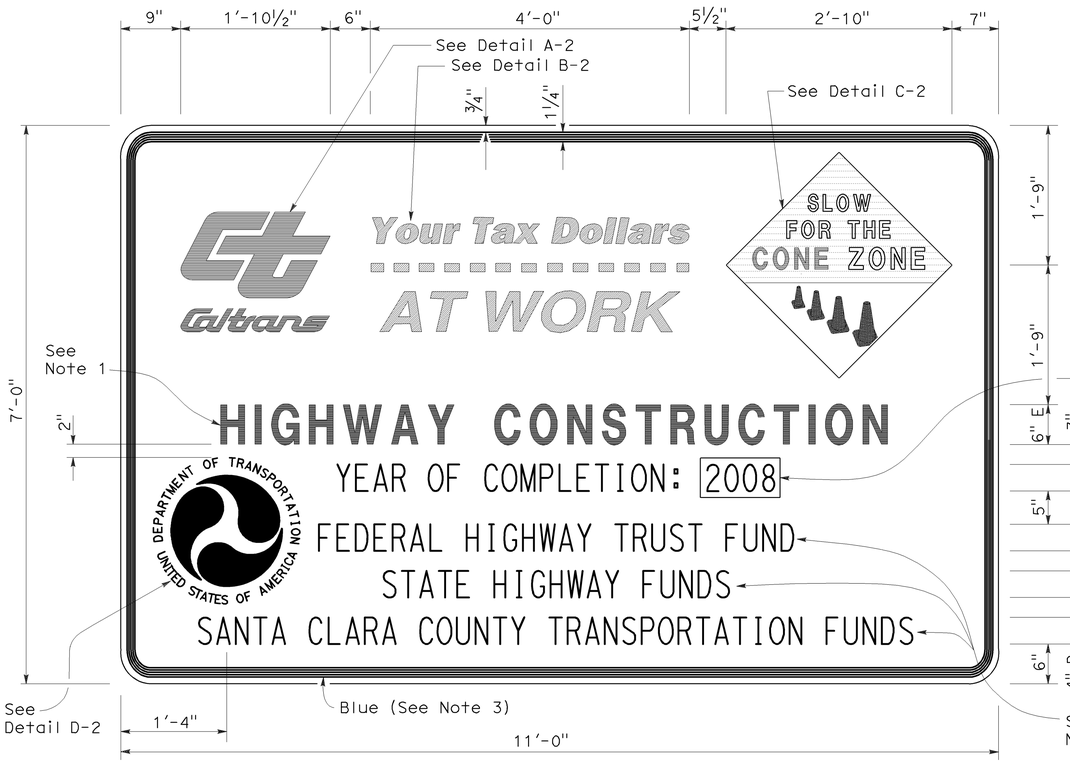

TYPE 2

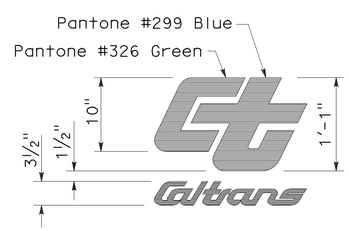

DETAIL A-2

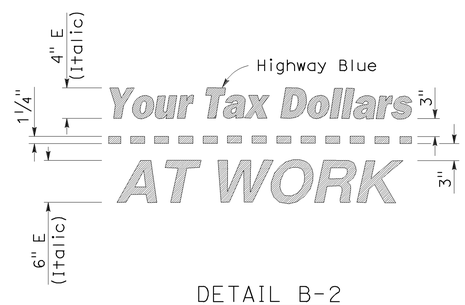

DETAIL B-2
(See Note 3)

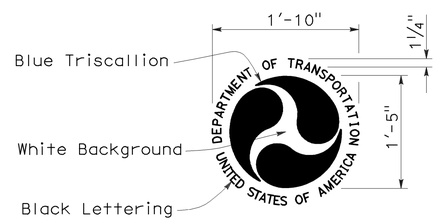

DETAIL D-2
(See Note 6)

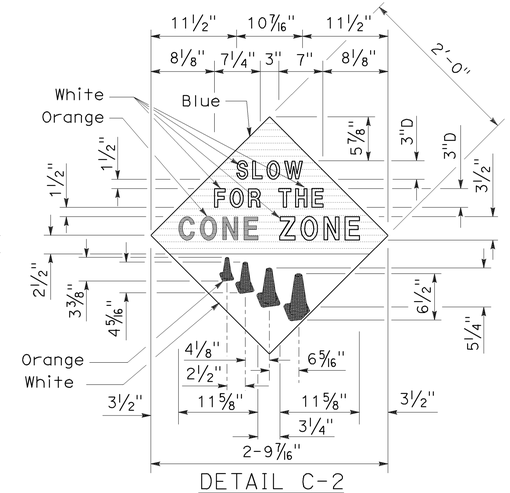

DETAIL C-2
(See Note 4)

STATE OF CALIFORNIA
DEPARTMENT OF TRANSPORTATION

CONSTRUCTION PROJECT FUNDING IDENTIFICATION SIGNS

NO SCALE

RSP T7 DATED NOVEMBER 17, 2006 SUPERSEDES STANDARD PLAN T7
DATED MAY 1, 2006 - PAGE 217 OF THE STANDARD PLANS BOOK DATED MAY 2006.

REVISED STANDARD PLAN RSP T7

2006 REVISED STANDARD PLAN RSP T7

9-7-06

DIST	COUNTY	ROUTE	POST MILES TOTAL PROJECT	SHEET NO.	TOTAL SHEETS
05	SB,SLO	101	91.0,0.0/0.8	161	299

LICENSED LANDSCAPE ARCHITECT

April 3, 2009
PLANS APPROVAL DATE

LICENSED LANDSCAPE ARCHITECT — Robert B. Schott 3635 — Renewal date 11-30-10 — 2-25-09 Date — STATE OF CALIFORNIA

The State of California or its officers or agents shall not be responsible for the accuracy or completeness of electronic copies of this plan sheet.

To accompany plans dated 11-2-09

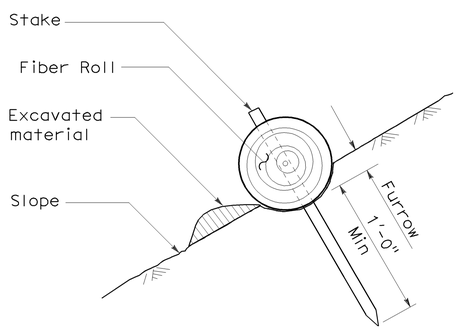

SECTION

TEMPORARY FIBER ROLL (TYPE 1)

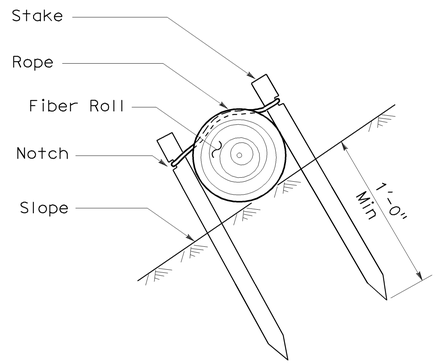

SECTION

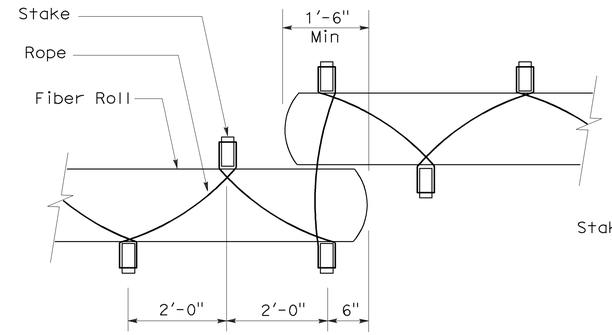

PLAN

TEMPORARY FIBER ROLL (TYPE 2)

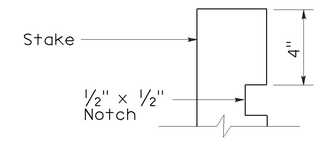

ELEVATION

STAKE NOTCH DETAIL

NOTES:

1. Temporary fiber roll spacing varies depending upon slope inclination.
2. Installations shown in the perspectives are for slope inclination of 10:1 and steeper.

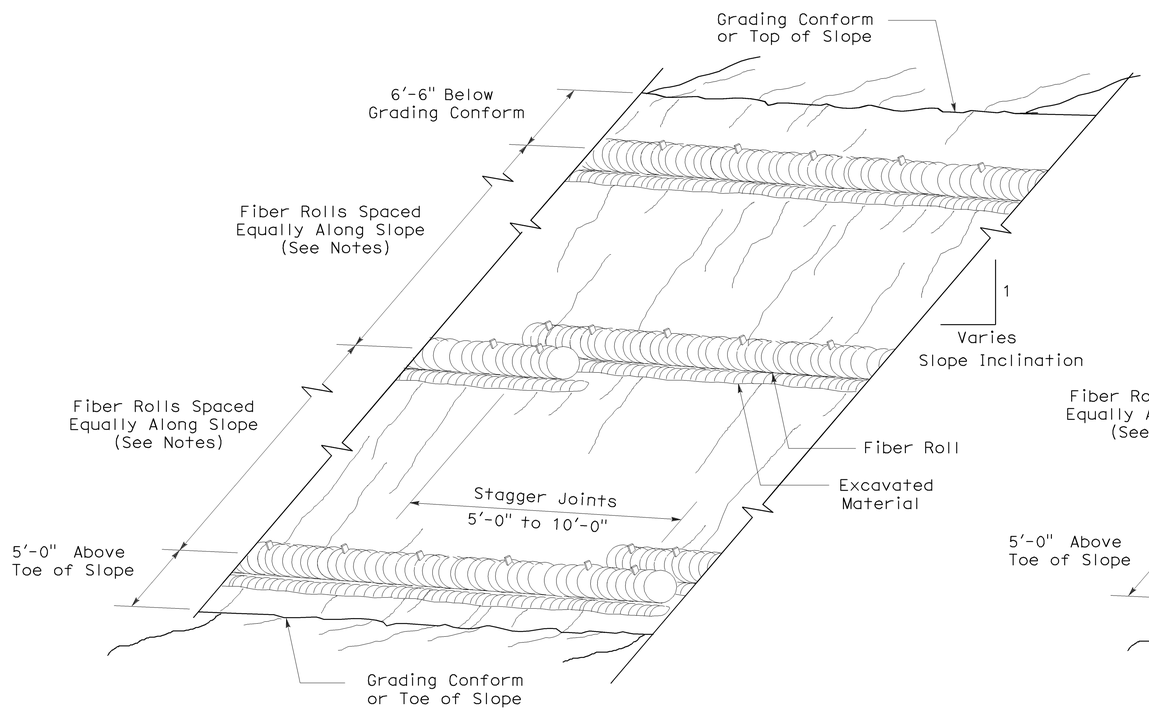

PERSPECTIVE

TEMPORARY FIBER ROLL (TYPE 1)

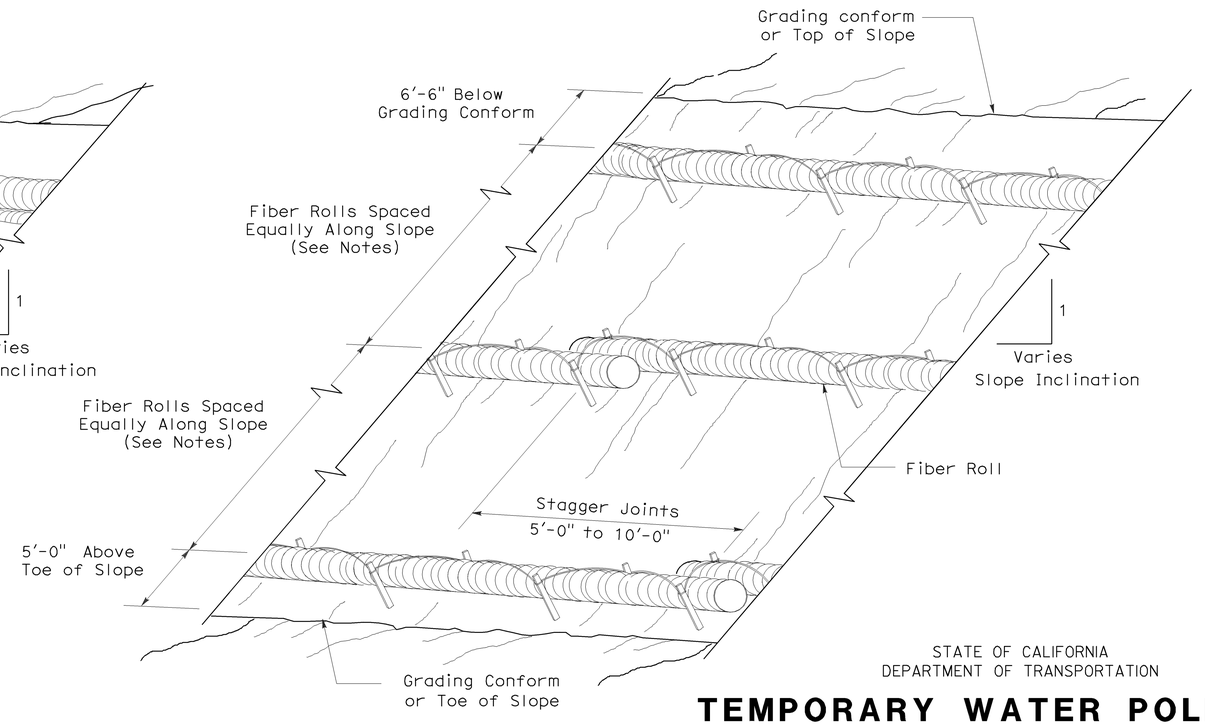

PERSPECTIVE

TEMPORARY FIBER ROLL (TYPE 2)

STATE OF CALIFORNIA
DEPARTMENT OF TRANSPORTATION

TEMPORARY WATER POLLUTION CONTROL DETAILS (TEMPORARY FIBER ROLL)

NO SCALE

RSP T56 DATED APRIL 3, 2009 SUPERSEDES STANDARD PLAN T56
DATED MAY 1, 2006 - PAGE 232 OF THE STANDARD PLANS BOOK DATED MAY 2006.

REVISED STANDARD PLAN RSP T56

2006 REVISED STANDARD PLAN RSP T56

2-23-09

DIST	COUNTY	ROUTE	POST MILES TOTAL PROJECT	SHEET NO.	TOTAL SHEETS
05	SB,SLO	101	91.0,0.0/0.8	161A	299

Robert B Schott
LICENSED LANDSCAPE ARCHITECT

April 3, 2009
PLANS APPROVAL DATE

LICENSED LANDSCAPE ARCHITECT
Robert B. Schott 3025
Robert B Schott
Signature
11-30-10
Renewal Date
2-25-09
Date
STATE OF CALIFORNIA

The State of California or its officers or agents shall not be responsible for the accuracy or completeness of electronic copies of this plan sheet.

To accompany plans dated 11-2-09

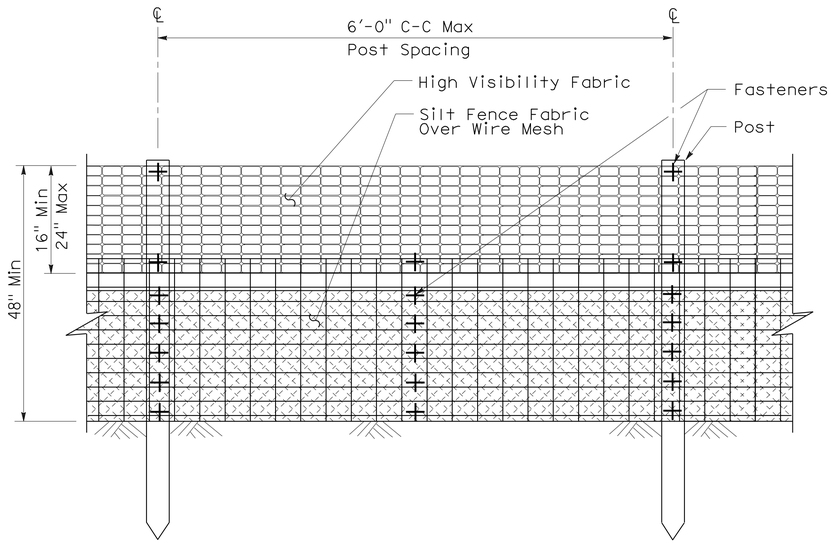

ELEVATION

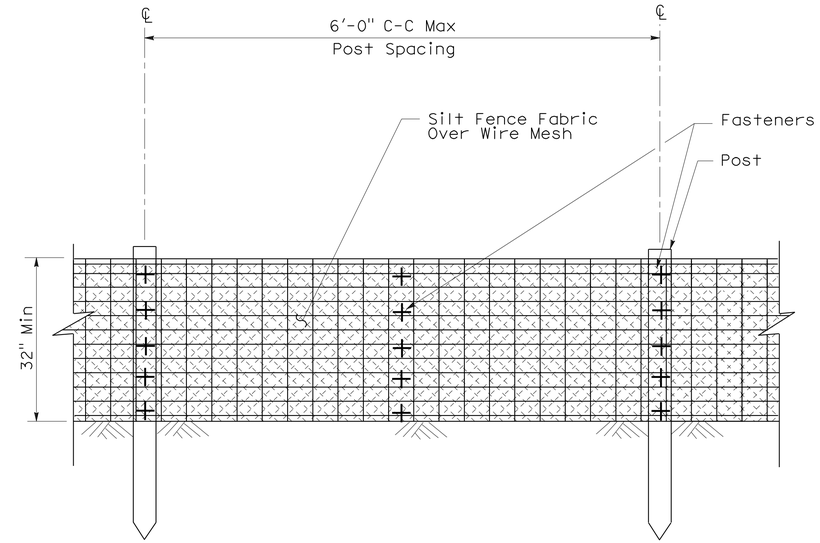

ELEVATION

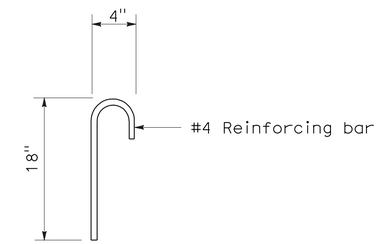

ANCHOR

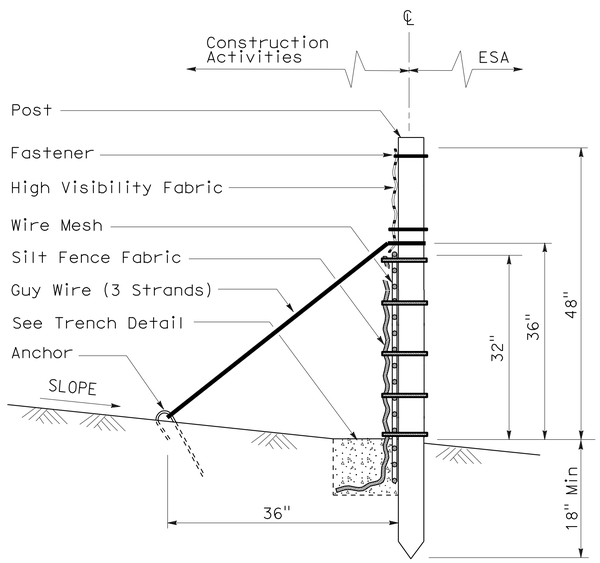

SECTION

TEMPORARY REINFORCED SILT FENCE (TYPE 1)

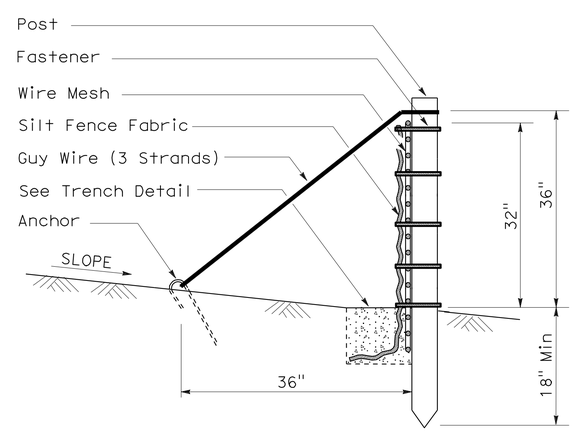

SECTION

TEMPORARY REINFORCED SILT FENCE (TYPE 2)

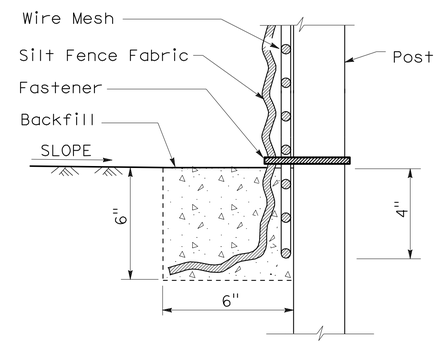

SECTION

TRENCH DETAIL

STATE OF CALIFORNIA
DEPARTMENT OF TRANSPORTATION

TEMPORARY WATER POLLUTION CONTROL DETAILS (TEMPORARY REINFORCED SILT FENCE)

NO SCALE

NSP T60 DATED APRIL 3, 2009 SUPPLEMENTS
THE STANDARD PLANS BOOK DATED MAY 2006.

NEW STANDARD PLAN NSP T60

2006 NEW STANDARD PLAN NSP T60

1-7-09

DIST	COUNTY	ROUTE	POST MILES TOTAL PROJECT	SHEET NO.	TOTAL SHEETS
05	SB,SLO	101	91.0,0.0/0.8	161B	299

LICENSED LANDSCAPE ARCHITECT

August 15, 2008
PLANS Approval DATE

The State of California or its officers or agents shall not be responsible for the accuracy or completeness of electronic copies of this plan sheet.

LICENSED LANDSCAPE ARCHITECT Robert B. Schott 3895 Signature 11-04-08 Renewal Date 08-11-08 Date STATE OF CALIFORNIA

To accompany plans dated 11-2-09

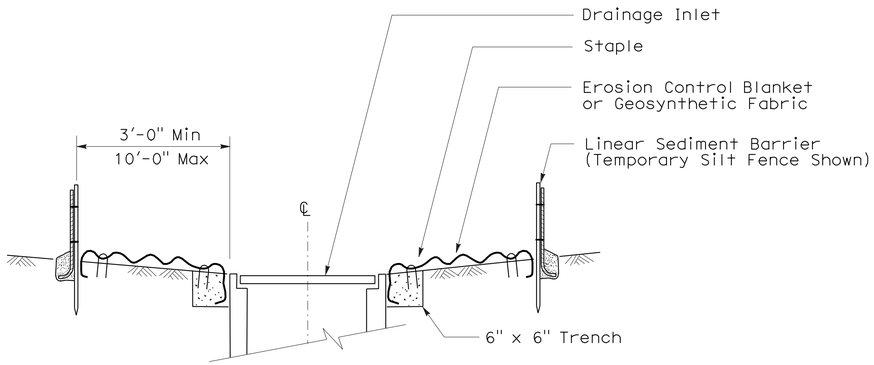

SECTION A-A

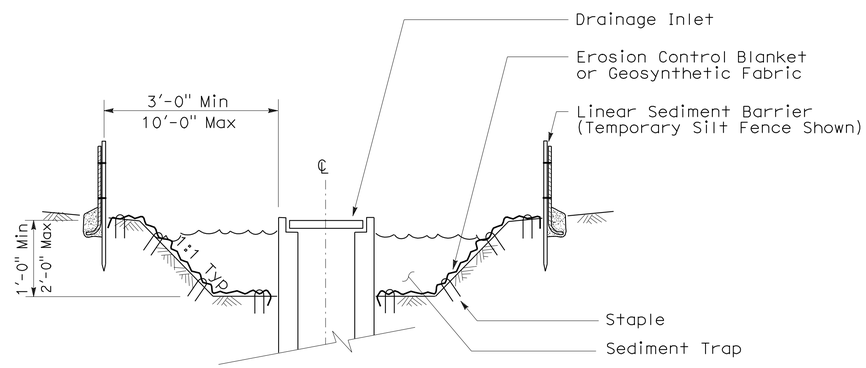

SECTION B-B

NOTES:

1. See Standard Plan T51 for Temporary Silt Fence.
2. Dimensions may vary to fit field conditions.

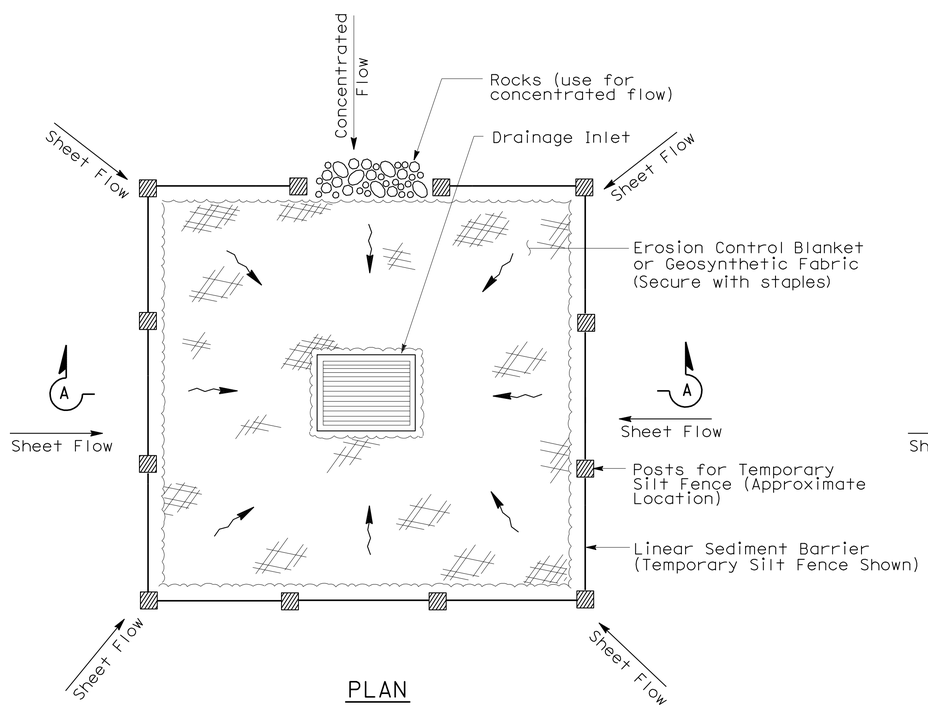

PLAN

TEMPORARY DRAINAGE INLET PROTECTION (TYPE 1)

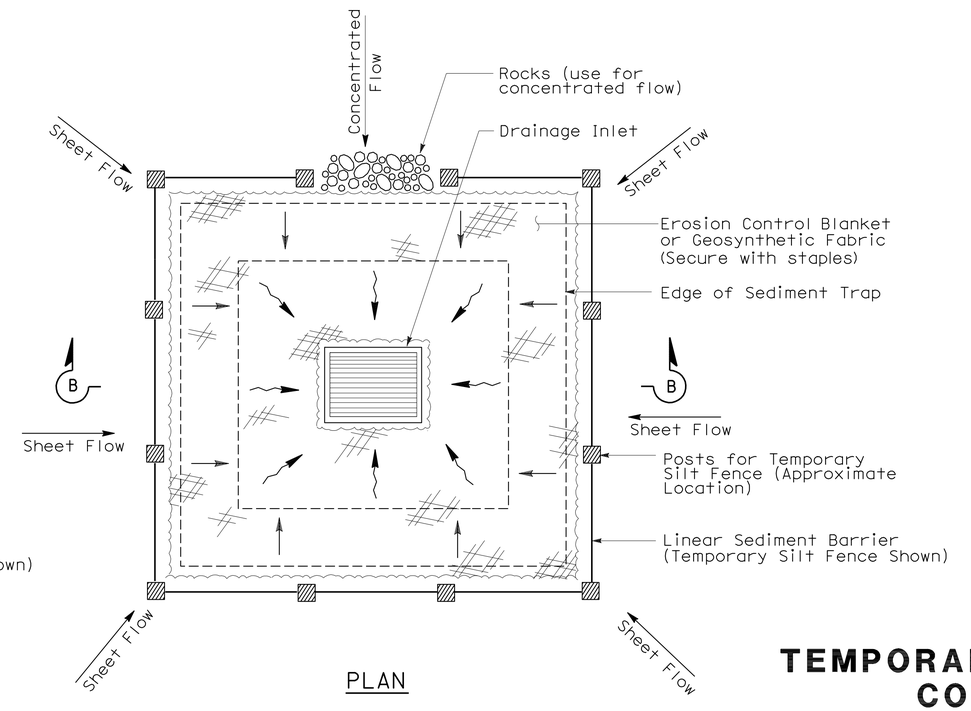

PLAN

TEMPORARY DRAINAGE INLET PROTECTION (TYPE 2) (EXCAVATED SEDIMENT TRAP)

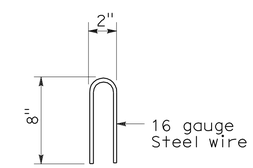

STAPLE DETAIL

STATE OF CALIFORNIA
DEPARTMENT OF TRANSPORTATION

TEMPORARY WATER POLLUTION CONTROL DETAILS (TEMPORARY DRAINAGE INLET PROTECTION)

NO SCALE

NSP T61 DATED AUGUST 15, 2008 SUPPLEMENTS THE STANDARD PLANS BOOK DATED MAY 2006.

NEW STANDARD PLAN NSP T61

2006 NEW STANDARD PLAN NSP T61

7-11-08

DIST	COUNTY	ROUTE	POST MILES TOTAL PROJECT	SHEET NO.	TOTAL SHEETS
05	SB,SLO	101	91.0,0.0/0.8	162	299

LICENSED LANDSCAPE ARCHITECT

August 15, 2008
PLANS APPROVAL DATE

The State of California or its officers or agents shall not be responsible for the accuracy or completeness of electronic copies of this plan sheet.

LICENSED LANDSCAPE ARCHITECT — Robert B. Schott — Signature — 11-04-08 Renewal Date — 08-11-08 Date — STATE OF CALIFORNIA

To accompany plans dated 11-2-09

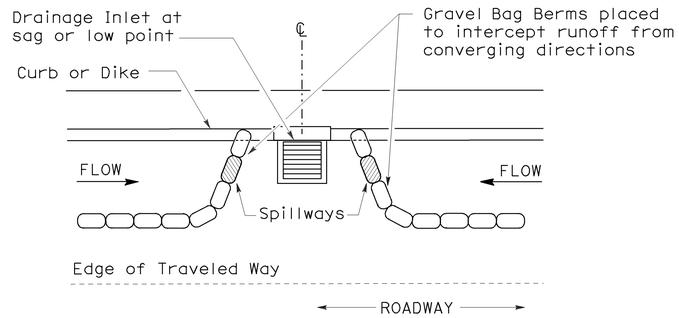

PLAN

CONFIGURATION FOR SAG POINT INLET (GRAVEL BAG BERM)

GRAVEL BAG BERM (TYPE 3A) SPACING TABLE

SLOPE OF ROADWAY (PERCENT)	1 to 3.9	4 to 5.9	6 to 7.9	8 to 10	10+
INTERVAL BETWEEN BERM	100′	75′	50′	25′	12′

For slope of less than 1%, install barriers only if erosion/sediment is prevalent

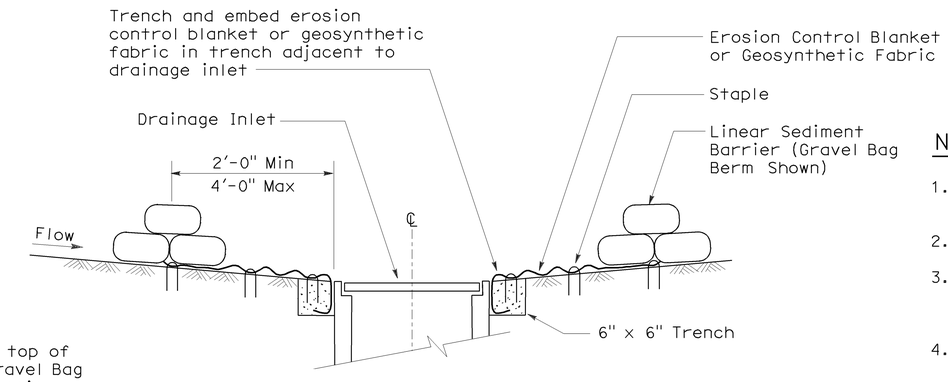

SECTION A-A

NOTES:

1. Place safety cones adjacent to drainage inlet protection.
2. Dimensions may vary to fit field conditions.
3. Install a minimum of 3 gravel bag berms upstream of each drainage inlet to be protected.
4. Position erosion control blanket or geosynthetic fabric at edge of concrete apron and secure in trench.
5. Erosion control blanket or geosynthetic fabric is not required if the area adjacent to the drainage inlet is vegetated or paved.

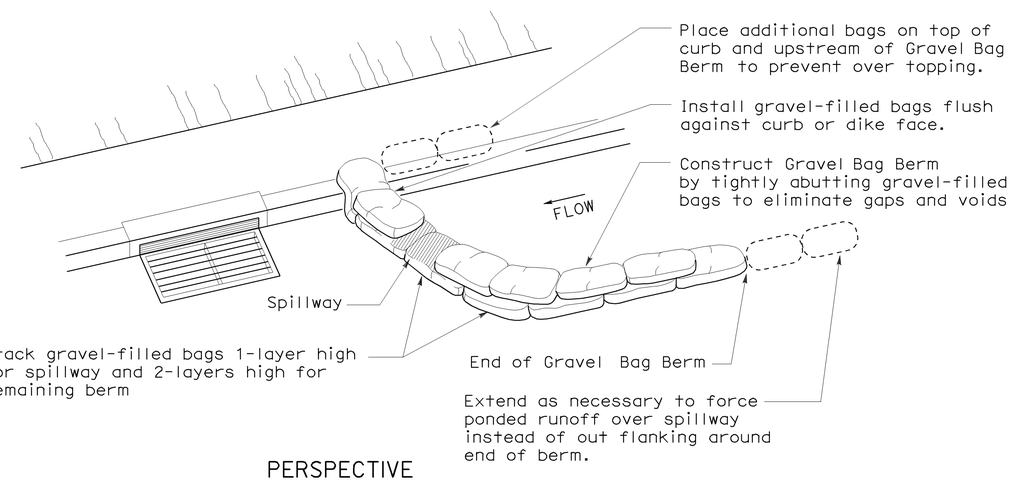

PERSPECTIVE

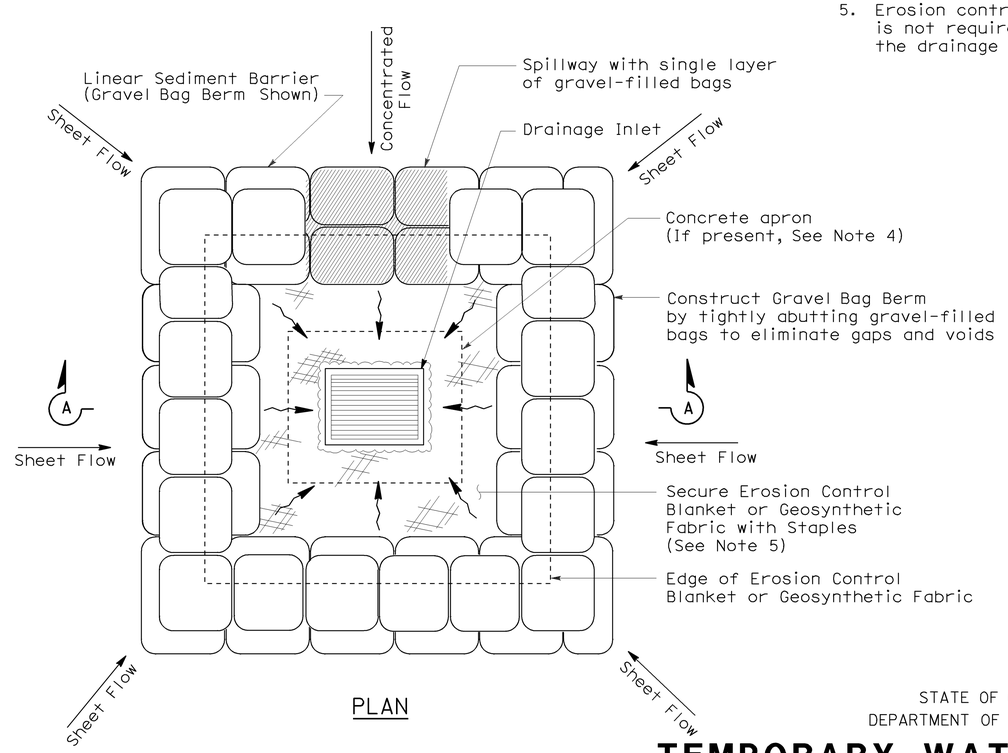

PLAN

TEMPORARY DRAINAGE INLET PROTECTION (TYPE 3B)

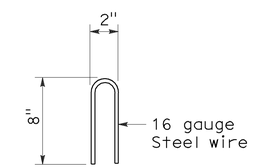

STAPLE DETAIL

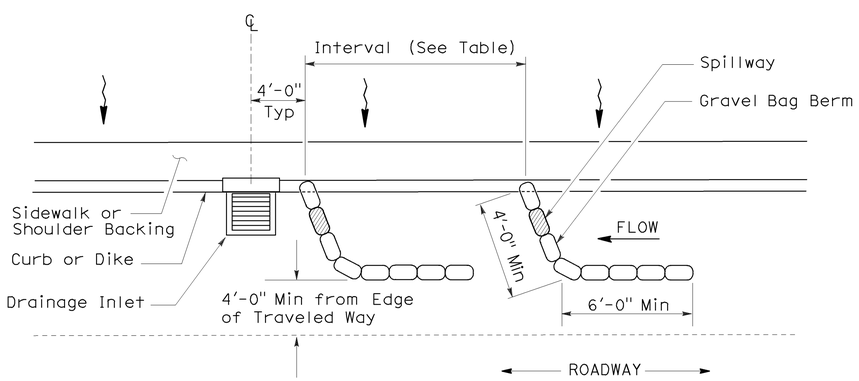

PLAN

TEMPORARY DRAINAGE INLET PROTECTION (TYPE 3A) (GRAVEL BAG BERM)

STATE OF CALIFORNIA
DEPARTMENT OF TRANSPORTATION

TEMPORARY WATER POLLUTION CONTROL DETAILS (TEMPORARY DRAINAGE INLET PROTECTION)

NO SCALE

NSP T62 DATED AUGUST 15, 2008 SUPPLEMENTS THE STANDARD PLANS BOOK DATED MAY 2006.

NEW STANDARD PLAN NSP T62

2006 NEW STANDARD PLAN NSP T62

7-11-08

DIST	COUNTY	ROUTE	POST MILES TOTAL PROJECT	SHEET NO.	TOTAL SHEETS
05	SB,SLO	101	91.0,0.0/0.8	163	299

LICENSED LANDSCAPE ARCHITECT

August 15, 2008
PLANS APPROVAL DATE

The State of California or its officers or agents shall not be responsible for the accuracy or completeness of electronic copies of this plan sheet.

LICENSED LANDSCAPE ARCHITECT Robert B. Schott 3625 Signature 11-04-08 Renewal Date 08-11-08 Date STATE OF CALIFORNIA

To accompany plans dated 11-2-09

FLEXIBLE SEDIMENT BARRIER SPACING TABLE

SLOPE OF ROADWAY (PERCENT)	0 to 0.9	1 to 1.9	2 to 2.9	3 to 4	5+
INTERVAL BETWEEN BARRIERS	50′	35′	30′	25′	20′
ANGLE FROM FACE OF CURB	70°	70°	70°	45°	45°
SUGGESTED BARRIER LENGTH	6′	6′	6′	6′	6′

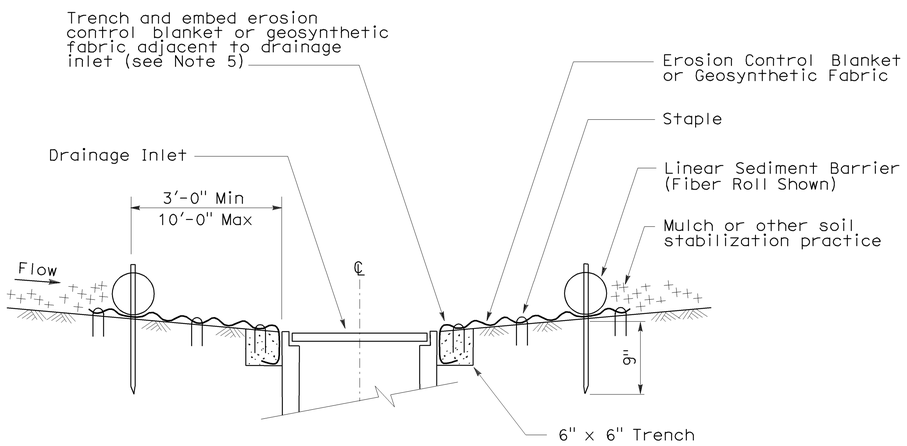

SECTION A-A

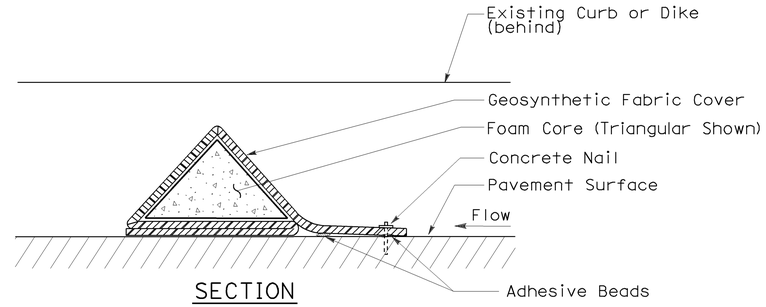

SECTION

FLEXIBLE SEDIMENT BARRIER DETAIL (FOAM BARRIER SHOWN)

NOTES:

1. See Standard Plan T51 for Temporary Silt Fence.
2. Dimensions may vary to fit field conditions.
3. Install a minimum of 3 flexible sediment barriers upstream of each drainage inlet to be protected.
4. Position erosion control blanket or geosynthetic fabric at edge of concrete apron and secure in trench.
5. Erosion control blanket or geosynthetic fabric is not required if the area adjacent to the drainage inlet is vegetated.

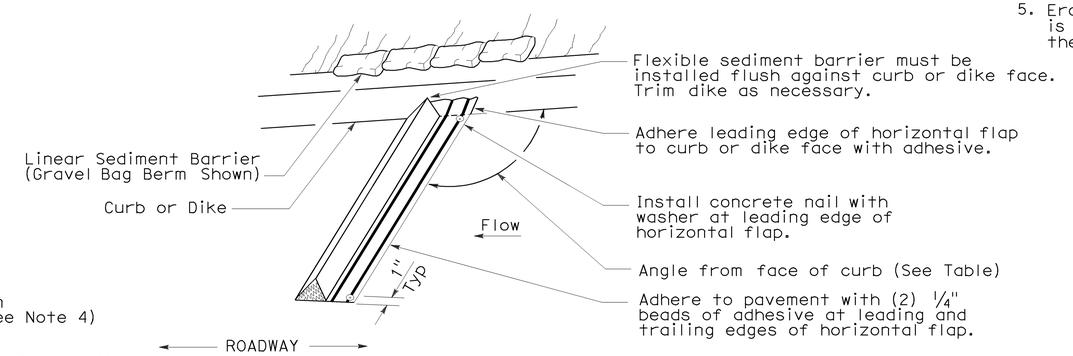

PERSPECTIVE

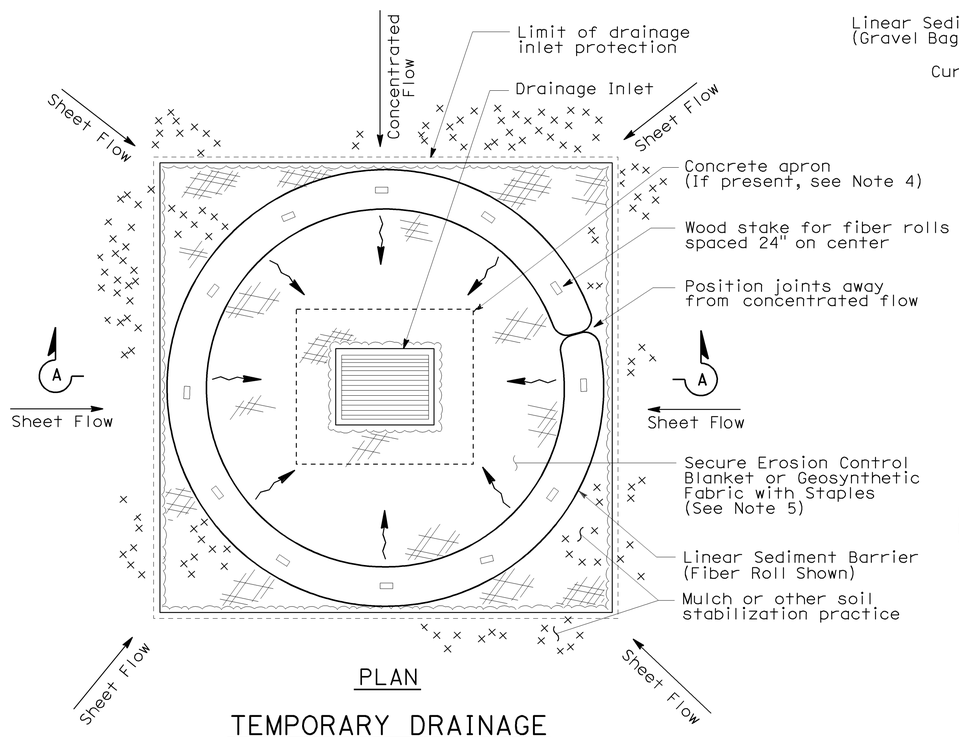

PLAN

TEMPORARY DRAINAGE INLET PROTECTION (TYPE 4A)

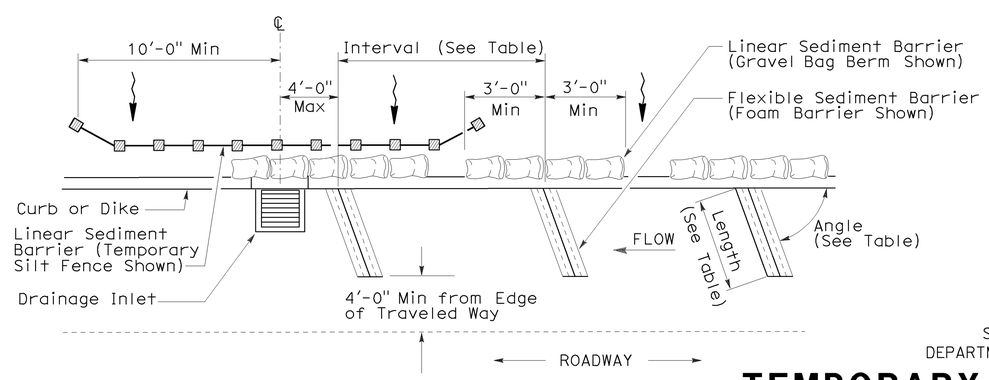

PLAN

TEMPORARY DRAINAGE INLET PROTECTION (TYPE 4B) FLEXIBLE SEDIMENT BARRIER

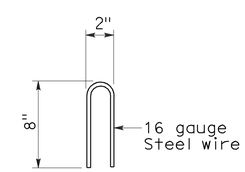

STAPLE DETAIL

STATE OF CALIFORNIA
DEPARTMENT OF TRANSPORTATION

TEMPORARY WATER POLLUTION CONTROL DETAILS (TEMPORARY DRAINAGE INLET PROTECTION)

NO SCALE

NSP T63 DATED AUGUST 15, 2008 SUPPLEMENTS THE STANDARD PLANS BOOK DATED MAY 2006.

NEW STANDARD PLAN NSP T63

2006 NEW STANDARD PLAN NSP T63

7-11-08

DIST	COUNTY	ROUTE	POST MILES TOTAL PROJECT	SHEET NO.	TOTAL SHEETS
05	SB,SLO	101	91.0,0.0/0.8	164	299

LICENSED LANDSCAPE ARCHITECT

August 15, 2008
PLANS APPROVAL DATE

LICENSED LANDSCAPE ARCHITECT
Robert B. Schott 3625
Signature
11-04-08
Renewal Date
08-11-08
Date
STATE OF CALIFORNIA

The State of California or its officers or agents shall not be responsible for the accuracy or completeness of electronic copies of this plan sheet.

To accompany plans dated 11-2-09

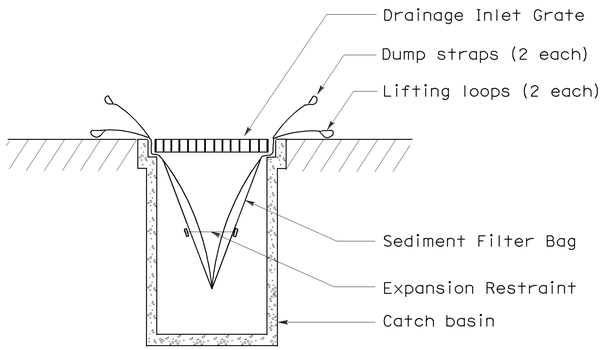

SECTION B-B

SEDIMENT FILTER BAG DETAIL

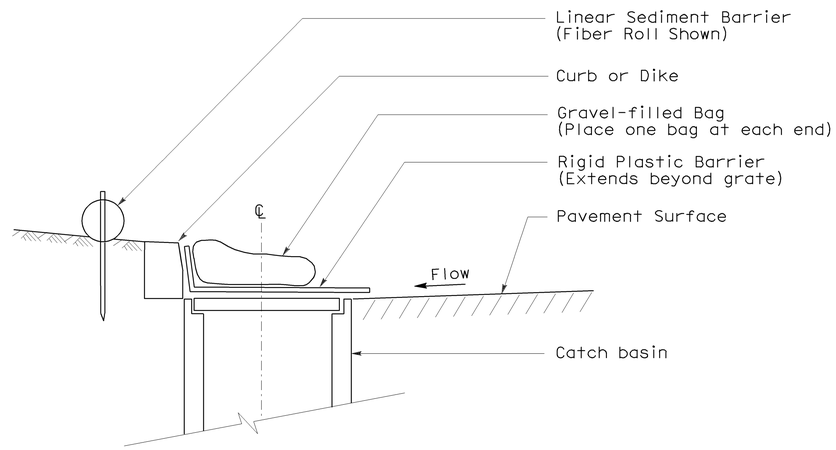

SECTION

TEMPORARY DRAINAGE INLET PROTECTION (TYPE 6A) (CATCH BASIN WITH GRATE)

NOTES:

1. See Standard Plan T51 for Temporary Silt Fence.
2. Dimensions may vary to fit field conditions.

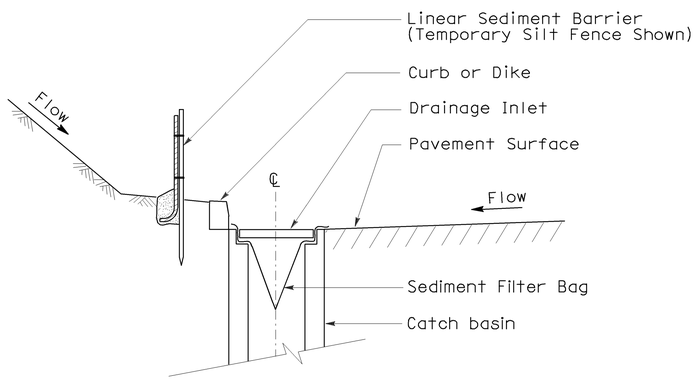

SECTION A-A

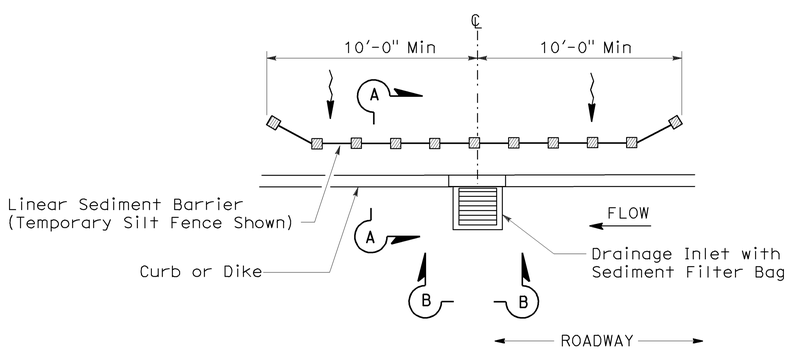

PLAN

TEMPORARY DRAINAGE INLET PROTECTION (TYPE 5) (SEDIMENT FILTER BAG)

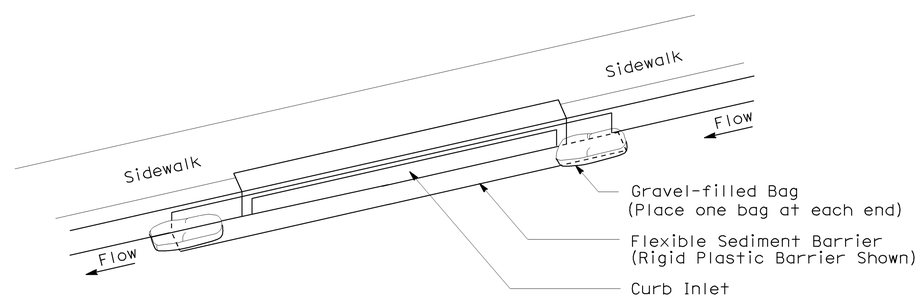

PERSPECTIVE

TEMPORARY DRAINAGE INLET PROTECTION (TYPE 6B) (CURB INLET WITHOUT GRATE)

STATE OF CALIFORNIA
DEPARTMENT OF TRANSPORTATION

TEMPORARY WATER POLLUTION CONTROL DETAILS (TEMPORARY DRAINAGE INLET PROTECTION)

NO SCALE

NSP T64 DATED AUGUST 15, 2008 SUPPLEMENTS
THE STANDARD PLANS BOOK DATED MAY 2006.

NEW STANDARD PLAN NSP T64

2006 NEW STANDARD PLAN NSP T64

7-11-08

DIST	COUNTY	ROUTE	POST MILES TOTAL PROJECT	SHEET NO.	TOTAL SHEETS
05	SB,SLO	101	91.0,0.0/0.8	165	299

LICENSED LANDSCAPE ARCHITECT

April 3, 2009
PLANS APPROVAL DATE

The State of California or its officers or agents shall not be responsible for the accuracy or completeness of electronic copies of this plan sheet.

LICENSED LANDSCAPE ARCHITECT — Robert B. Schott — Signature — 11-30-10 Renewal Date — 2-25-09 Date — STATE OF CALIFORNIA

To accompany plans dated 11-2-09

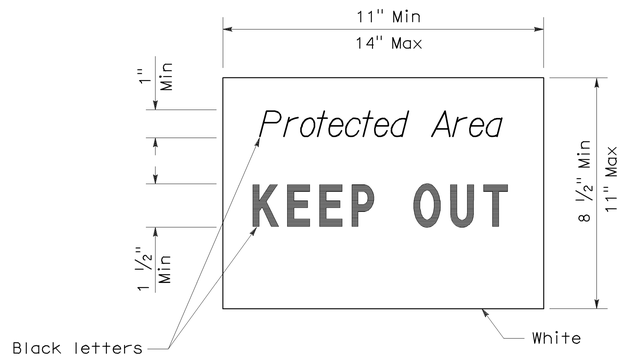

SIGN DETAIL

NOTE:

1. Temporary silt fence and temporary straw bale barrier shown for reference purposes only.

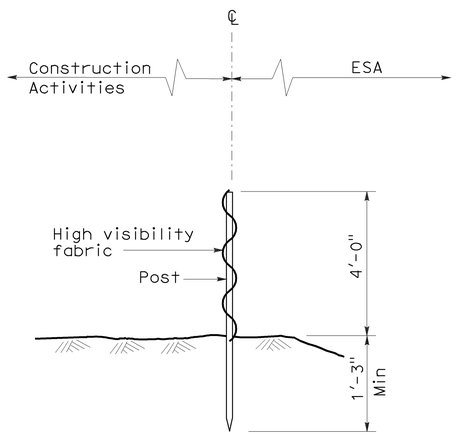

SECTION
TEMPORARY FENCE (TYPE ESA)

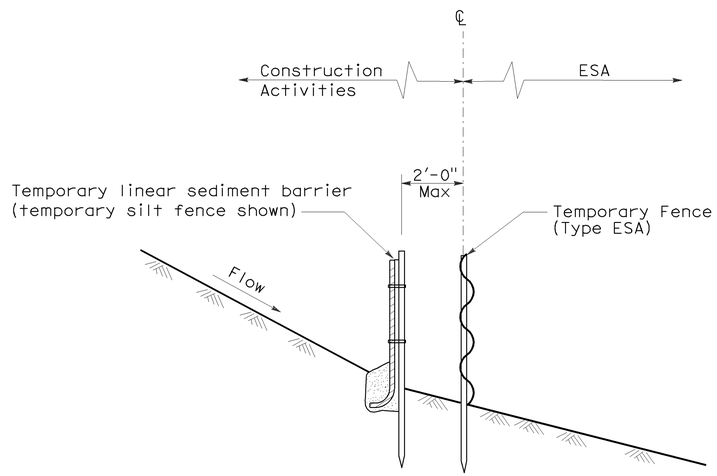

SECTION
PLACEMENT DETAIL
FOR TEMPORARY LINEAR SEDIMENT BARRIER
USED WITH TEMPORARY
FENCE (TYPE ESA)
(See Note 1)

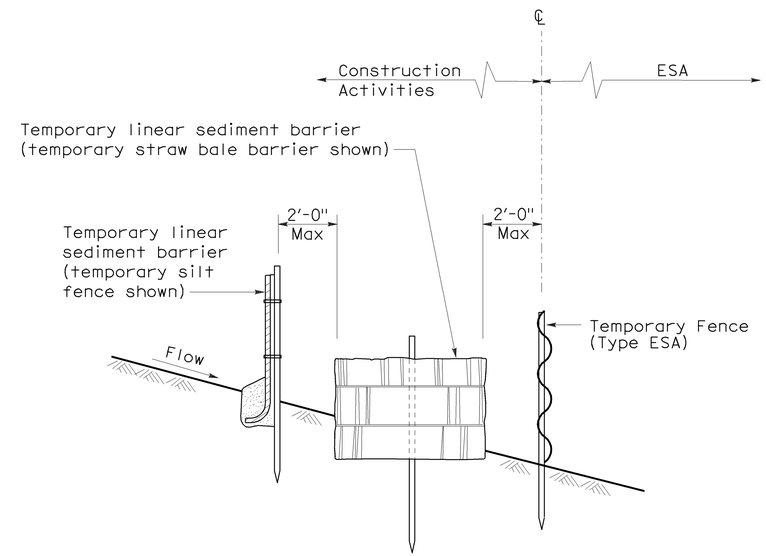

SECTION
PLACEMENT DETAIL
FOR TEMPORARY SILT FENCE
AND TEMPORARY STRAW BALE BARRIER
USED WITH TEMPORARY FENCE (TYPE ESA)
(See Note 1)

STATE OF CALIFORNIA
DEPARTMENT OF TRANSPORTATION

TEMPORARY WATER POLLUTION CONTROL DETAILS [TEMPORARY FENCE (TYPE ESA)]

NO SCALE

NSP T65 DATED APRIL 3, 2009 SUPPLEMENTS
THE STANDARD PLANS BOOK DATED MAY 2006.

NEW STANDARD PLAN NSP T65

2006 NEW STANDARD PLAN NSP T65

DIST	COUNTY	ROUTE	POST MILES TOTAL PROJECT	SHEET NO.	TOTAL SHEETS
05	SB,SLO	101	91.0,0.0/0.8	166	299

REGISTERED ELECTRICAL ENGINEER

October 5, 2007
PLANS APPROVAL DATE

REGISTERED PROFESSIONAL ENGINEER Jeffery G. McRae No. E14512 Exp. 6-30-08 ELECTRICAL STATE OF CALIFORNIA

The State of California or its officers or agents shall not be responsible for the accuracy or completeness of electronic copies of this plan sheet.

To accompany plans dated 11-2-09

2006 REVISED STANDARD PLAN RSP ES-1A

ELECTROLIERS

STANDARD TYPES
15, 15D
15 STRUCTURE
21, 21D STRUCTURE
30
31
32
35
36-20A

High mast light pole

Double Arm lighting standard

Existing electrolier

Electrolier foundation (Future installation)

NOTES:

1. Luminaires shall be 310 W HPS when installed on Type 21, 21D, 30, 31, 32, 35 and 36-20A Standards, unless otherwise specified. Luminaires shall be 200 W HPS when installed on other type standards or poles, unless otherwise specified.
2. Luminaires shall be the cutoff type, ANSI Type Ⅲ medium cutoff lighting distribution, unless otherwise specified.
3. Variations noted adjacent to symbol on project plans.

Electrolier (see project notes or project plans)

Luminaire on wood pole

STANDARD NOTES:

- AB — Abandon. If applied to conduit, remove conductors.
- BC — Install pull box in existing conduit run.
- BP — Pedestrian barricade, type as indicated on plan.
- CB — Install conduit into existing pull box.
- CC — Connect new and existing conduit. Remove existing conductors and install conductors as indicated.
- CF — Conduit to remain for future use. Remove conductors. Install pull wire or rope.
- DH — Detector handhole.
- FA — Foundation to be abandoned.
- IS — Install sign on signal mast arm.
- NS — No slip base on standard.
- PEC — Photoelectric control.
- PEU — Photoelectric unit.
- RC — Equipment or material to be removed and become the property of the Contractor.
- RE — Remove electrolier, fuses and ballast. Tape ends of conductors.
- RL — Relocate equipment.
- RR — Remove and reuse equipment.
- RS — Remove and salvage equipment.
- SC — Splice new to existing conductors.
- SD — Service disconnect.
- SF — Standard to remain for future use. Remove luminaire, pole conductors, fuses and ballast.
- TSP — Telephone service point.

ABBREVIATIONS AND EQUIPMENT DESIGNATIONS

PROPOSED	EXISTING	
BBS	bbs	Battery backup system
BC	bc	Bolt circle
C	C	Conduit
CCTV	cctv	Closed circuit television
CKT	ckt	Circuit
CMS	cms	Changeable message sign
DLC	dlc	Loop detector lead-in cable
EMS	ems	Extinguishable message sign
EVC	evc	Emergency vehicle cable
EVD	evd	Emergency vehicle detector
FB	fb	Flashing beacon
FBCA	fbca	Flashing beacon control assembly
FBS	fbs	Flashing beacon with slip base
FO	fo	Fiber optic
G	G	Ground (Equipment Grounding Conductor)
GFCI	GFCI	Ground fault circuit interrupt
HAR	har	Highway advisory radio
HEX	hex	Hexagonal
HPS	hps	High pressure sodium
IISNS	iisns	Internally illuminated street name sign
ISL	isl	Induction sign lighting
LED	led	Light emitting diode
LMA	lma	Luminaire mast arm
LPS	lps	Low pressure sodium
LTG	ltg	Lighting
LUM	lum	Luminaire
MAT	mat	Mast arm mounting vehicle signal faces, top attachment
MAS	mas	Mast arm mounting vehicle signal faces, side attachment
MAS-4A	mas-4A	Mast arm mounting vehicle signal faces, side attachment - 4 signal section
MAS-4B	mas-4B	
MAS-4C	mas-4C	
MAS-5A	mas-5A	Mast arm mounting vehicle signal faces, side attachment - 5 signal section
MAS-5B	mas-5B	
MC	mc	Mercury contactor
M/M	m/m	Multiple to multiple transformer
MT	mt	Conduit with pull wire or rope only
MTG	mtg	Mounting
	mv	Mercury vapor lighting fixture
N	N	Neutral (Grounded Conductor)
NC	NC	Normally closed
NO	NO	Normally open
PB	pb	Pull box
PEC	pec	Photoelectric control (Type Ⅰ, Ⅱ, Ⅲ, Ⅳ or Ⅴ as shown)
PED	ped	Pedestrian
PEU	peu	Photoelectric unit
PPB	ppb	Pedestrian push button
RL		Relocated equipment
RM	rm	Ramp metering
SB	sb	Slip base
SIC	sic	Signal interconnect cable
SIG	sig	Signal
SMA	sma	Signal mast arm
SNS	sns	Street name sign
SP	sp	Service point
TDC	tdc	Telephone demarcation cabinet
TMS	tms	Traffic monitoring station
TOS	tos	Traffic Operations System
VEH	veh	Vehicle
XFMR	xfmr	Transformer
COMM	comm	Communication
RWIS	rwis	Roadway weather information system

SOFFIT AND WALL MOUNTED LUMINAIRES

Pendant, 70 W HPS unless otherwise specified.

Flush, 70 W HPS unless otherwise specified.

Wall surface, 70 W HPS unless otherwise specified.

Existing soffit or wall luminaire to remain unmodified.

Existing soffit or wall luminaire to be modified as specified.

NOTE:

Arrow indicates "street side" of luminaire.

STATE OF CALIFORNIA
DEPARTMENT OF TRANSPORTATION

ELECTRICAL SYSTEMS (SYMBOLS AND ABBREVIATIONS)

NO SCALE

RSP ES-1A DATED OCTOBER 5, 2007 SUPERSEDES STANDARD PLAN ES-1A DATED MAY 1, 2006 - PAGE 400 OF THE STANDARD PLANS BOOK DATED MAY 2006.

REVISED STANDARD PLAN RSP ES-1A

DIST	COUNTY	ROUTE	POST MILES TOTAL PROJECT	SHEET NO.	TOTAL SHEETS
05	SB,SLO	101	91.0,0.0/0.8	167	299

REGISTERED ELECTRICAL ENGINEER

October 5, 2007
PLANS APPROVAL DATE

REGISTERED PROFESSIONAL ENGINEER Jeffery G. McRae No. E14512 Exp. 6-30-08 ELECTRICAL STATE OF CALIFORNIA

The State of California or its officers or agents shall not be responsible for the accuracy or completeness of electronic copies of this plan sheet.

To accompany plans dated 11-2-09

CONDUIT

PROPOSED	EXISTING	
		Lighting Conduit, unless otherwise indicated or noted
		Traffic signal conduit
C	c	Communication conduit
T	t	Telephone conduit
F	f	Fire alarm conduit
FO	fo	Fiber optic conduit
		Conduit termination (RSP ES-9A C)
R	r	Conduit riser in/on structure or service pole

SERVICE EQUIPMENT

PROPOSED	EXISTING	
OH	oh	Overhead lines
U	U	Wood pole "U" indicates utility owned
		Pole guy with anchor
		Utility transformer - ground mounted
III		Service equipment enclosure type
		Service equipment enclosure door indicates front of enclosure
T	t	Telephone demarcation cabinet

POLE-MOUNTED SERVICE DESIGNATION

Type of installation

TYPE H SERVICE - 28'-10" ← Pole height above grade

ILLUMINATED OVERHEAD SIGN

PROPOSED	EXISTING	
		Overhead sign - Single post
		Overhead sign - Two post
		Overhead sign - Mounted on structure
		Overhead sign with electrolier

SIGNAL EQUIPMENT

PROPOSED	EXISTING	
		Pedestrian signal face
		Pedestrian push button post
		Pedestrian barricade
		Vehicle signal face (with backplate, 3-Section: red, yellow and green)
		Vehicle signal face with angle visors
PV	PV	Modifications of basic symbols: "L" indicates all non-arrow sections louvered "LG" indicates louvered green section only "PV" indicates 12" programmed visibility sections "8" indicates all 8" sections (only when specified)
		Type 15TS and Vehicle signal face
		Vehicle signal face with red, yellow and green left arrow sections
		Vehicle signal face with red and yellow sections and up green arrow
		Vehicle signal face (5 Section) with red, yellow and green sections and yellow and green right arrows
		Type 1 Standard and attached vehicle signal faces
		Standard with signal mast arm only and attached vehicle signal faces and internally illuminated street name sign
		Type 33 Standard, Left-turn vehicle signal face and sign
		Standard with luminaire and signal mast arms and attached vehicle signal faces
		Cantilever flashing beacon Type 9 Frame, with a sign unless otherwise specified or indicated
		Type 15-FBS Standard with two vehicle signal face sections with lens, backplate and visor with a sign
R	Y	Flashing beacon. One vehicle signal face section with lens, backplate and visor. "R" indicates red indication, "Y" indicates yellow indication
		Controller assembly. Door indicates front of cabinet

SIGNAL EQUIPMENT Cont

PROPOSED	EXISTING	
		Guard post
		Type 1 Standard with "Meter On" sign
		Emergency Vehicle detector

NOTES:

1. All signal sections shall be 12" unless shown otherwise.
2. Signal heads shall be provided with backplates unless shown otherwise.
3. Signal indication shall be LED.

STATE OF CALIFORNIA
DEPARTMENT OF TRANSPORTATION

ELECTRICAL SYSTEMS (SYMBOLS AND ABBREVIATIONS)

NO SCALE

RSP ES-1B DATED OCTOBER 5, 2007 SUPERCEDES STANDARD PLAN ES-1B DATED MAY 1, 2006 - PAGE 401 OF THE STANDARD PLANS BOOK DATED MAY 2006.

REVISED STANDARD PLAN RSP ES-1B

2006 REVISED STANDARD PLAN RSP ES-1B

7-10-07

DIST	COUNTY	ROUTE	POST MILES TOTAL PROJECT	SHEET NO.	TOTAL SHEETS
05	SB,SLO	101	91.0,0.0/0.8	168	299

REGISTERED ELECTRICAL ENGINEER

October 5, 2007
PLANS APPROVAL DATE

REGISTERED PROFESSIONAL ENGINEER Jeffery G. McRae No. E14512 Exp. 6-30-08 ELECTRICAL STATE OF CALIFORNIA

The State of California or its officers or agents shall not be responsible for the accuracy or completeness of electronic copies of this plan sheet.

To accompany plans dated 11-2-09

EQUIPMENT IDENTIFICATION

ILLUMINATED SIGN IDENTIFICATION NUMBER:

Sign No. 12345 — Sign number - Place on post or structure

10 ISL SCI 1.0

- 1.0 — Transformer rating (kVA)
- SCI — Lighting control type
- ISL — Number and type of fixtures

Do NOT place on standard or structure

ELECTROLIER OR EQUIPMENT IDENTIFICATION NUMBER:

12345 - 15'-0"

- 15'-0" — Mast arm length, if shown. Do not place on standard or structure.
- 12345 — Equipment number - Place on standard or structure. Existing equipment numbers are shown in parenthesis

CONDUIT AND CONDUCTOR IDENTIFICATION:

1½"C, 2#10, 15#14, 2 DLC

- 2#10, 15#14, 2 DLC — Number and size of conductors and cables
- 1½"C — Size of conduit in inches

Ø1, Ø2, Ø2P, etc.	Traffic phase identification for signal faces, detectors and phase diagrams
1 2 3	Project note numbers
A B C	Equipment description, installation or item numbers
1 2 3	Conduit run numbers

SIGNAL AND LIGHTING STANDARD (TYPICAL DESIGNATION):

19A - 3 - 100

- 100 — Wind velocity = 100 mph
- 3 — Case 3 arm loading
- 19A — Standard type
- Standard Plan sheet number
- Detail number or letter

MISCELLANEOUS EQUIPMENT

PROPOSED	EXISTING	
CMS	cms	Changeable message sign
		Closed circuit television camera
		Highway advisory radio pole and antenna
EMS	ems	Extinguishable message sign
M V	m v	Detection device M = Microwave sensor V = Video image sensor

WIRING DIAGRAM LEGEND

P	Pole
CB	Circuit breaker
A	Ampere
V	Volt
M	Metered
UM	Unmetered
NB	Neutral bus
GB	Ground bus
G	Equipment grounding conductor
N	Grounded conductor (Neutral)

- External conductor
- Conductor or bus
- Tie point
- Contactor coil
- Contactor, Contact NO
- Terminal blocks
- Contactor, Contact NC
- Enclosure bond
- Grounding electrode
- Circuit breaker
- Receptacle

PULL BOXES

PROPOSED EXISTING

Pull box-No. 5 unless otherwise indicated or noted.

3 — 9A(21)

Pull box-Additional designations or descriptions

3 = No. 3½ pull box
5 = No. 5 pull box
6 = No. 6 pull box
7 = No. 7 (Ceiling pull box)
8 = No. 8 (Pendant soffit pull box)
9 = No. 9 pull box
9A = No. 9A pull box

(C) = Communications pull box
(E) = Pull box with extension
(S) = Sprinkler control pull box
(21) = Anchor bolts and conduit for future installation of Type 21 Standard
(T) = Traffic pull box

VEHICLE DETECTORS

5 J 9 U

- U — U = Upper, L = Lower
- 9 — Slot number in input file
- J — Input file (I or J)
- 5 — Phase

PROPOSED	EXISTING	
		Type A detector loop. Outline of sawcut shown.
		Type B detector loop. Outline of sawcut shown.
		Type C detector loop. Outline of sawcut shown.
		Type D detector loop. Outline of sawcut shown.
		Type E detector loop. Outline of sawcut shown.
		Type Q detector loop. Outline of sawcut shown.
		Magnetic detector
DH	dh	Detector handhole
		Microwave or video detection zone

STATE OF CALIFORNIA
DEPARTMENT OF TRANSPORTATION

ELECTRICAL SYSTEMS (SYMBOLS AND ABBREVIATIONS)

NO SCALE

RSP ES-1C DATED OCTOBER 5, 2007 SUPERCEDES STANDARD PLAN ES-1C DATED MAY 1, 2006 - PAGE 402 OF THE STANDARD PLANS BOOK DATED MAY 2006.

REVISED STANDARD PLAN RSP ES-1C

2006 REVISED STANDARD PLAN RSP ES-1C

7-10-07

DIST	COUNTY	ROUTE	POST MILES TOTAL PROJECT	SHEET NO.	TOTAL SHEETS
05	SB,SLO	101	91.0,0.0/0.8	169	299

REGISTERED CIVIL ENGINEER

October 5, 2007
PLANS APPROVAL DATE

REGISTERED PROFESSIONAL ENGINEER
Stanley P. Johnson
No. C57793
Exp. 3-31-08
CIVIL
STATE OF CALIFORNIA

The State of California or its officers or agents shall not be responsible for the accuracy or completeness of electronic copies of this plan sheet.

To accompany plans dated 11-2-09

2006 REVISED STANDARD PLAN RSP ES-6A

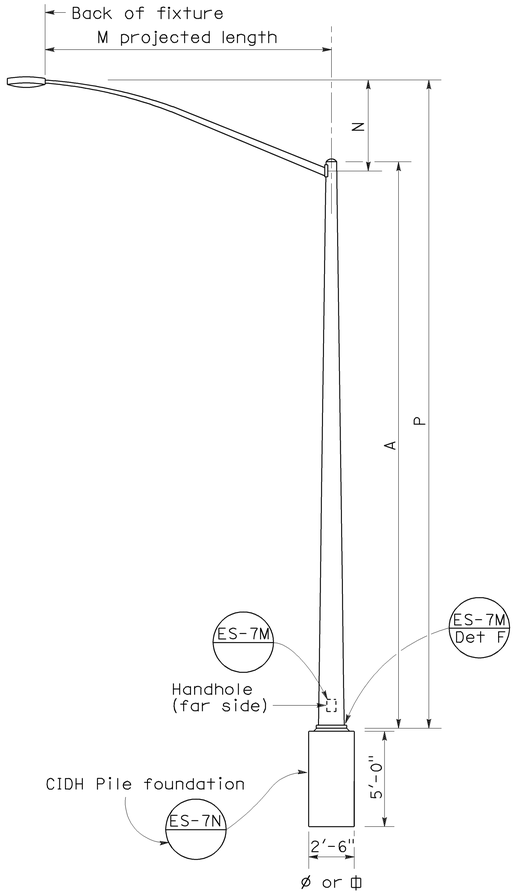

ELEVATION
TYPE 15 AND TYPE 21

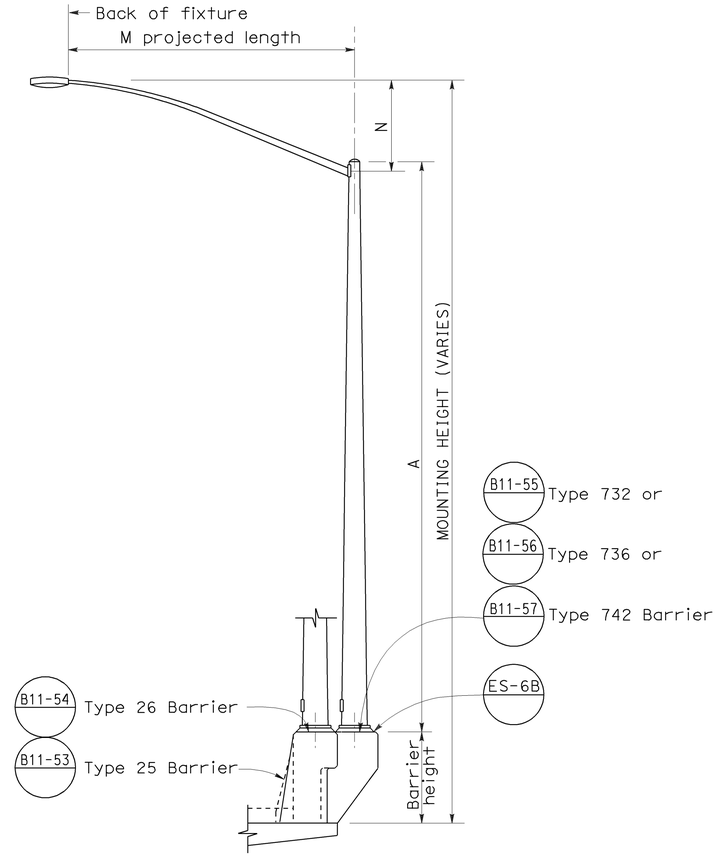

ELEVATION
TYPE 15 AND TYPE 21 BARRIER RAIL MOUNTED

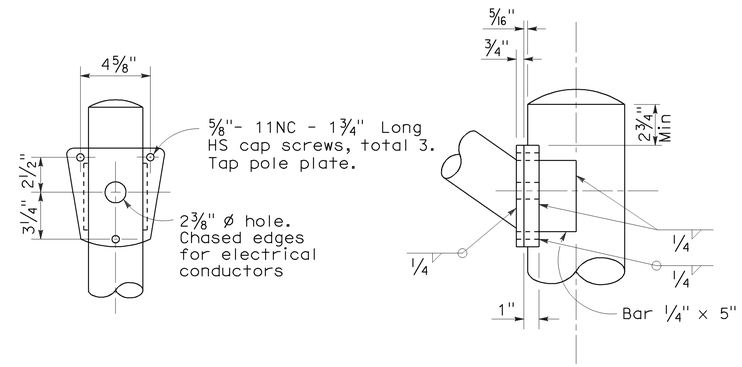

DETAIL R
LUMINAIRE ARM CONNECTION

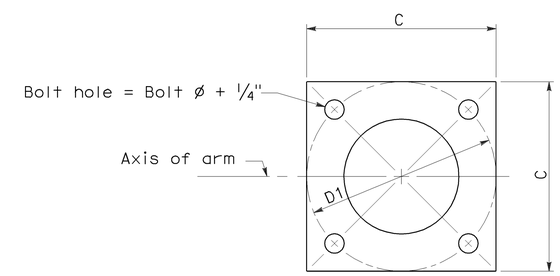

BASE PLATE

POLE TYPE	POLE DATA				BASE PLATE DATA				LUMINAIRE ARM
	A Height	Min OD Base	Min OD Top	Wall Thickness	C	D1 Bolt Circle	Thick-ness	Anchor Bolts Size	
15	30′	8"	3⅞"	0.1196"	1′-0"	1′-0"	1"	1" ø x 3′-0" x 4"*	6′ - 15′ [12′]
21	35′	8⅝"	3⅞"	0.1196"	1′-0"	1′-0"	1"	1¼"ø x 3′-0" x 4"*	6′ - 15′ [12′]

* For barrier rail bolts, see Standard Plan ES-6B.

LUMINAIRE ARM DATA					
M Projected Length	N Rise	Min OD At Pole	Nominal Thickness	P Type 15	P Type 21
6′-0"	2′-0"±	3¼"	0.1196"	31′-6"±	36′-6"±
8′-0"	2′-6"±	3½"	0.1196"	32′-0"±	37′-0"±
10′-0"	3′-3"±	3⅞"	0.1196"	32′-9"±	37′-9"±
12′-0"	4′-3"±	3⅞"	0.1196"	33′-9"±	38′-9"±
15′-0"	4′-9"±	4¼"	0.1196"	34′-3"±	39′-3"±

NOTES:

1. ☐ Indicates arm length to be used unless otherwise noted on the plans.
2. For Type 15-SB, use Type 15 standard with Type 30 slip base plate details, see Standard Plan ES-6F.
3. For additional notes, see Standard Plan ES-7M and ES-7N.

STATE OF CALIFORNIA
DEPARTMENT OF TRANSPORTATION

ELECTRICAL SYSTEMS (LIGHTING STANDARD TYPES 15 AND 21)

NO SCALE

RSP ES-6A DATED OCTOBER 5, 2007 SUPERCEDES STANDARD PLAN ES-6A
DATED MAY 1, 2006 - PAGE 427 OF THE STANDARD PLANS BOOK DATED MAY 2006.

REVISED STANDARD PLAN RSP ES-6A

DIST	COUNTY	ROUTE	POST MILES TOTAL PROJECT	SHEET NO.	TOTAL SHEETS
05	SB,SLO	101	91.0,0.0/0.8	170	299

REGISTERED CIVIL ENGINEER

October 5, 2007
PLANS APPROVAL DATE

REGISTERED PROFESSIONAL ENGINEER Stanley P. Johnson No. C57793 Exp. 3-31-08 CIVIL STATE OF CALIFORNIA

The State of California or its officers or agents shall not be responsible for the accuracy or completeness of electronic copies of this plan sheet.

To accompany plans dated 11-2-09

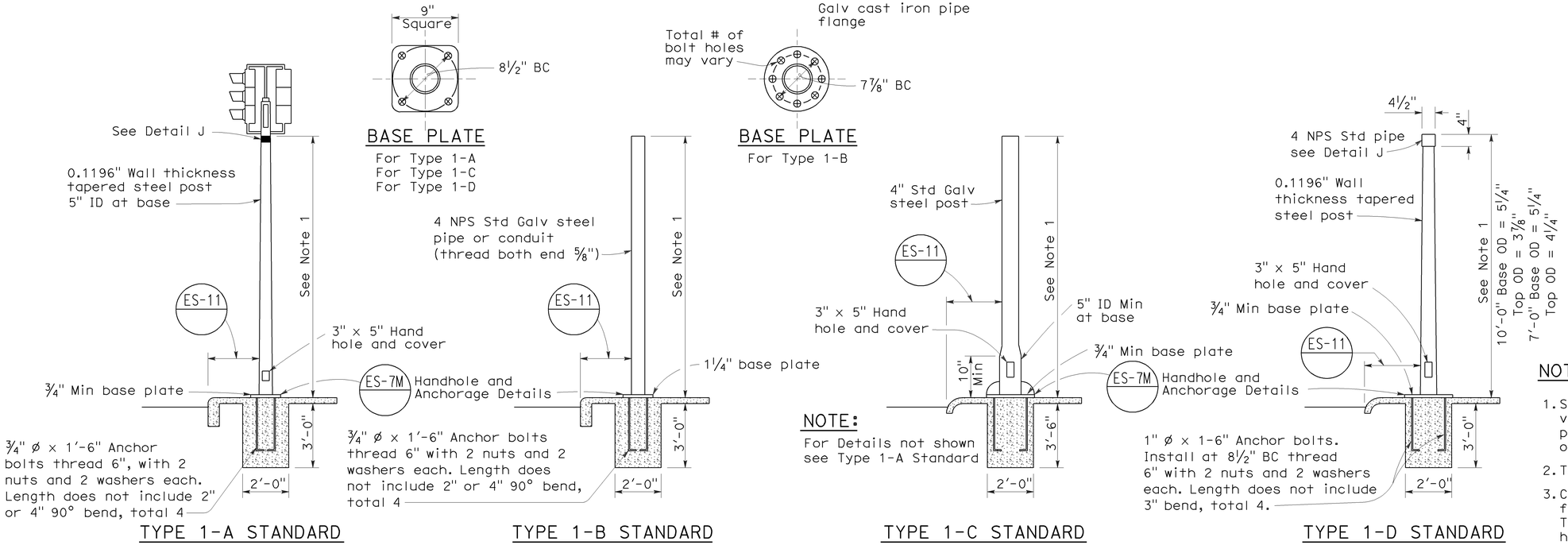

TYPE 1 SIGNAL STANDARDS

NOTES:

1. Standards shall be 10'-0" ± 2" for vehicle signals and 7'-0" ± 2" for pedestrian signals unless otherwise noted on plans.
2. Top of standards shall be 4½" OD.
3. Conduits shall extend 2" maximum above finished surface of foundation and for Types 1-A, 1-C and 1-D shall be sloped toward handhole.
4. Anchor bolts shall be bonded to conduit or grounding conductor.
5. Conduit between standard and adjacent pull box shall be 2" minimum.
6. Paint numbers on roadway side facing traffic when electrolier or post is left of direction of traffic.

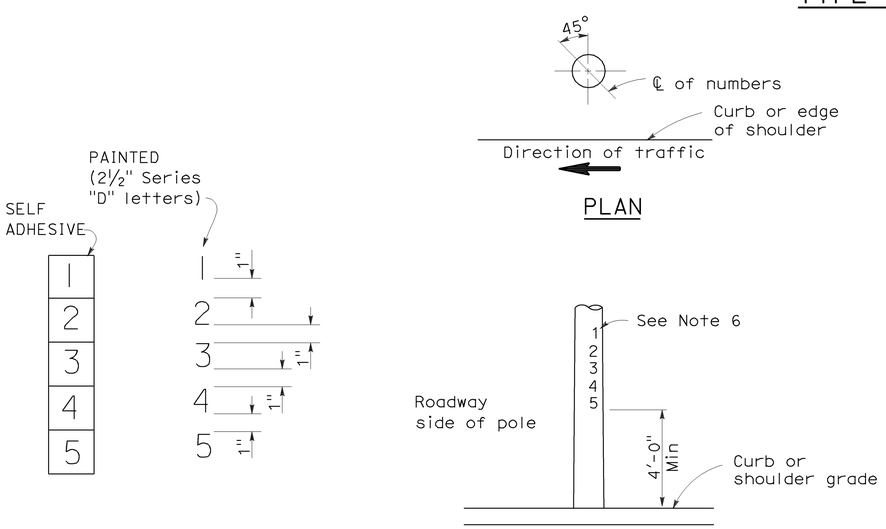

LOCATION OF EQUIPMENT NUMBERS ON STANDARDS AND POSTS

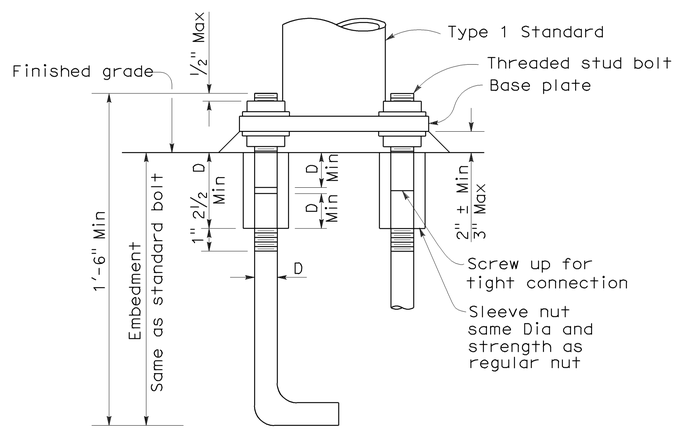

ANCHOR BOLTS WITH SLEEVE NUTS

Sleeve nuts to be used only when shown or specified on Project Plans

D = Diameter of anchor bolt

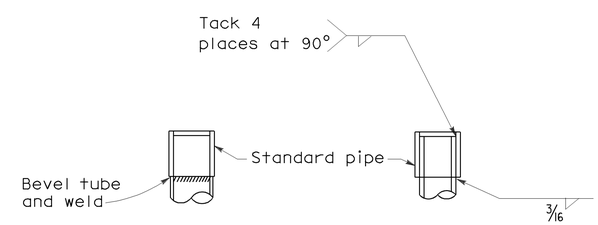

DETAIL J

Tube may be inserted into pipe or butted as required

STATE OF CALIFORNIA
DEPARTMENT OF TRANSPORTATION

ELECTRICAL SYSTEMS (SIGNAL AND LIGHTING STANDARD TYPE 1 STANDARD AND EQUIPMENT NUMBERING)

NO SCALE

RSP ES-7B DATED OCTOBER 5, 2007 SUPERCEDES STANDARD PLAN ES-7B DATED MAY 1, 2006 - PAGE 438 OF THE STANDARD PLANS BOOK DATED MAY 2006.

REVISED STANDARD PLAN RSP ES-7B

2006 REVISED STANDARD PLAN RSP ES-7B

7-10-07

DIST	COUNTY	ROUTE	POST MILES TOTAL PROJECT	SHEET No	TOTAL SHEETS
05	SB,SLO	101	91.0,0.0/0.8	171	299

Pete W. Norboe 8-3-09
REGISTERED CIVIL ENGINEER DATE

11-2-09
PLANS APPROVAL DATE

REGISTERED PROFESSIONAL ENGINEER Pete Norboe No. C57519 Exp. 12-31-09 CIVIL STATE OF CALIFORNIA

The State of California or its officers or agents shall not be responsible for the accuracy or completeness of electronic copies of this plan sheet.

Legend:

-·-·- Denotes existing structures
—— Denotes new structure
▨ Denotes limits of bridge removal

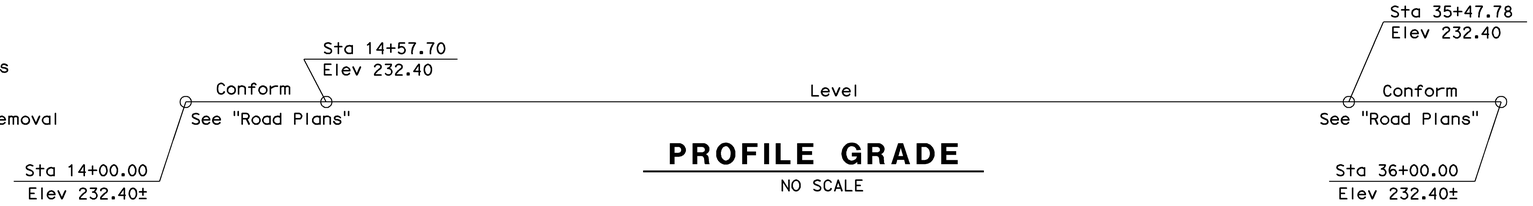

PROFILE GRADE

NO SCALE

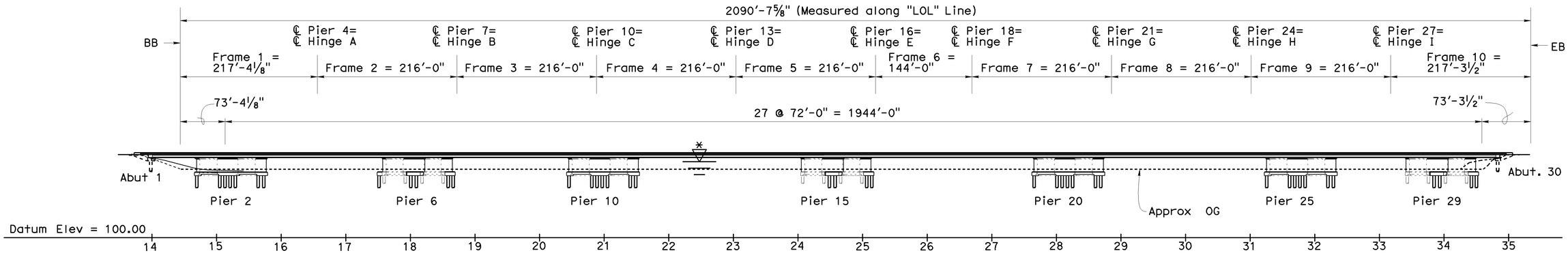

ELEVATION

1" =80'

Note: All Piers not shown

Notes:

1. For Index To Plans, Standard Plans list, and General Notes, see "INDEX TO PLANS" sheet.
2. Pile Data Table, see "PILE DATA" sheet.

Notes:

* For Hydraulic Summary Table, see "FOUNDATION PLAN" sheets.

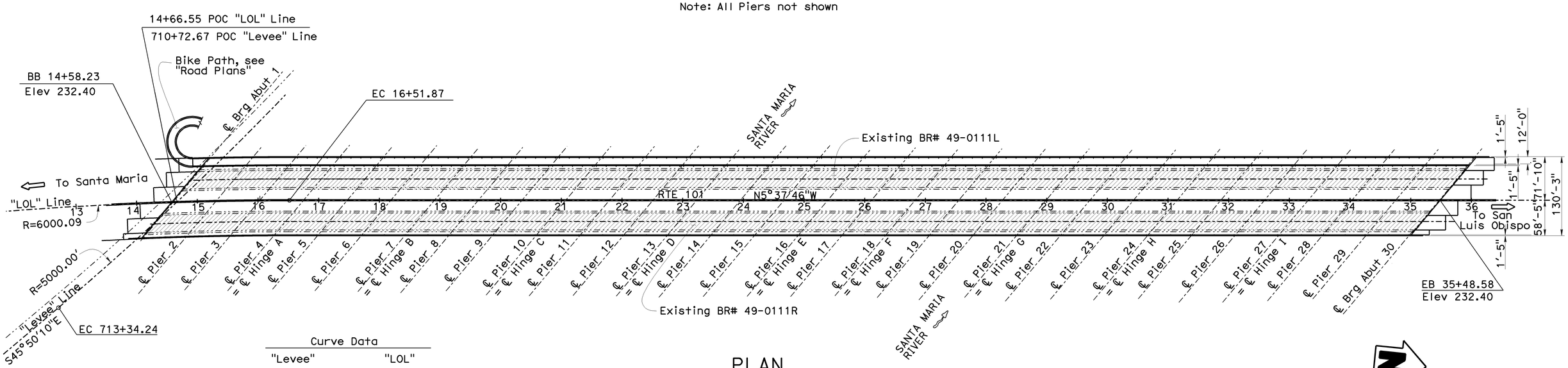

Curve Data

"Levee"	"LOL"
R= 5000.00'	R= 6000.09'
Δ= 39°25'19"	Δ= 6°08'32"
T= 1791.24'	T= 321.92'
L= 3440.21'	L= 643.22'

PLAN

1" = 80'

NOTE:
THE CONTRACTOR SHALL VERIFY ALL CONTROLLING FIELD DIMENSIONS BEFORE ORDERING OR FABRICATING ANY MATERIAL.

Gordon Danke
DESIGN ENGINEER

	BY	CHECKED
DESIGN	Rosa Candiotti	Pete Norboe
DETAILS	D. Elliott	Pete Norboe
QUANTITIES	Rosa Candiotti	Pete Norboe

LOAD & RESISTANCE FACTOR DESIGN — LIVE LOADING: HL93 W/"LOW-BOY"; PERMIT DESIGN VEHICLE
LAYOUT — BY D. Elliott — CHECKED Pete Norboe
SPECIFICATIONS — BY Todd Geerts — PLANS AND SPECS COMPARED Todd Geerts

STATE OF CALIFORNIA
DEPARTMENT OF TRANSPORTATION

DIVISION OF ENGINEERING SERVICES
STRUCTURE DESIGN
DESIGN BRANCH 9

CU 05
EA 445901

BRIDGE NO. 49-0111
POST MILE SLO 0.0/0.4

SANTA MARIA RIVER BRIDGE (WIDEN)
GENERAL PLAN NO. 1

STRUCTURES DESIGN GENERAL PLAN SHEET (ENGLISH) (REV. 10/25/05)

ORIGINAL SCALE IN INCHES FOR REDUCED PLANS 0 1 2 3

DISREGARD PRINTS BEARING EARLIER REVISION DATES

REVISION DATES: 2-12-08 5-1-09 4-14-09 6-12-09 7-28-09

SHEET 1 OF 129

FILE => 49-0111-a-gp01.dgn

STRUCTURES DESIGN GENERAL PLAN SHEET (ENGLISH) (REV.07-24-06)

USERNAME => rrmikest DATE PLOTTED => 15-DEC-2009 TIME PLOTTED => 12:27

DIST	COUNTY	ROUTE	POST MILES TOTAL PROJECT	SHEET No	TOTAL SHEETS
05	SB,SLO	101	91.0,0.0/0.8	172	299

Pete W. Norboe 8-3-09
REGISTERED CIVIL ENGINEER DATE

11-2-09
PLANS APPROVAL DATE

REGISTERED PROFESSIONAL ENGINEER Pete Norboe No. C57519 Exp. 12-31-09 CIVIL STATE OF CALIFORNIA

The State of California or its officers or agents shall not be responsible for the accuracy or completeness of electronic copies of this plan sheet.

QUANTITIES

	LUMP SUM	
BRIDGE REMOVAL (PORTION)		
STRUCTURE EXCAVATION (BRIDGE)	8,913	CY
STRUCTURE BACKFILL (BRIDGE)	4,627	CY
AGGREGATE BASE (APPROACH SLAB)	35	CY
24" CAST-IN-DRILLED-HOLE CONCRETE PILING	95	LF
FURNISH 48" CAST-IN-STEEL SHELL CONCRETE PILING	11,539	LF
DRIVE 48" CAST-IN-STEEL SHELL CONCRETE PILE	184	EA
STRUCTURAL CONCRETE, BRIDGE FOOTING	4,207	CY
STRUCTURAL CONCRETE, BRIDGE	12,899	CY
STRUCTURAL CONCRETE, APPROACH SLAB (TYPE N)	171	CY
STRUCTURAL CONCRETE, APPROACH SLAB (TYPE R)	201	CY
DRILL AND BOND DOWEL	30,905	LF
FURNISH PRECAST PRESTRESSED CONCRETE BOX GIRDER (70'-80')	261	EA
ERECT PRECAST PRESTRESSED CONCRETE GIRDER	261	EA
CORE CONCRETE (2")	9,274	LF
JOINT SEAL (MR 1 1/4")	1,870	LF
BAR REINFORCING STEEL (BRIDGE)	4,763,862	LF
ROCK SLOPE PROTECTION (1 TON, METHOD A)	96	CY
MISCELLANEOUS METAL (RESTRAINER - CABLE TYPE)	28,506	LB
TUBULAR HANDRAILING	2,127	LF
TUBULAR BICYCLE RAILING	72	LF
CONCRETE BARRIER (TYPE 60 MODIFIED)	2,090	LF
CONCRETE BARRIER (TYPE 732)	4,268	LF
CONCRETE BARRIER (TYPE 742)	2,090	LF

Legend:

1. Temporary Railing - Type K, see "ROAD PLANS"
2. Concrete Barrier Type 732
3. Concrete Barrier Type 742
4. Concrete Barrier Type 60A (Mod) - (Placed after Stage 3 Construction)
5. Tubular Hand Railing

-·-·- Denotes existing structure
—— Denotes new structure
* 3' Closure Pour

Note: For Pier 29, see "PIER LAYOUT NO. 4" sheet.

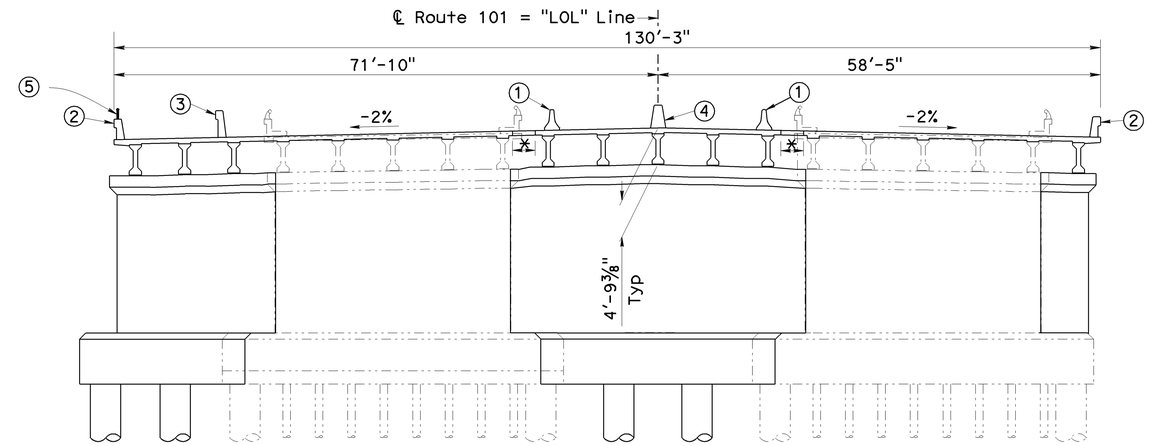

PIERS 12,15,18,21,24,27,28

Note: For Details not shown see, Typical Section of "PIERS 2,4,5,7,8,10,11,13,14,16,17,19,20,22,23,25,26".

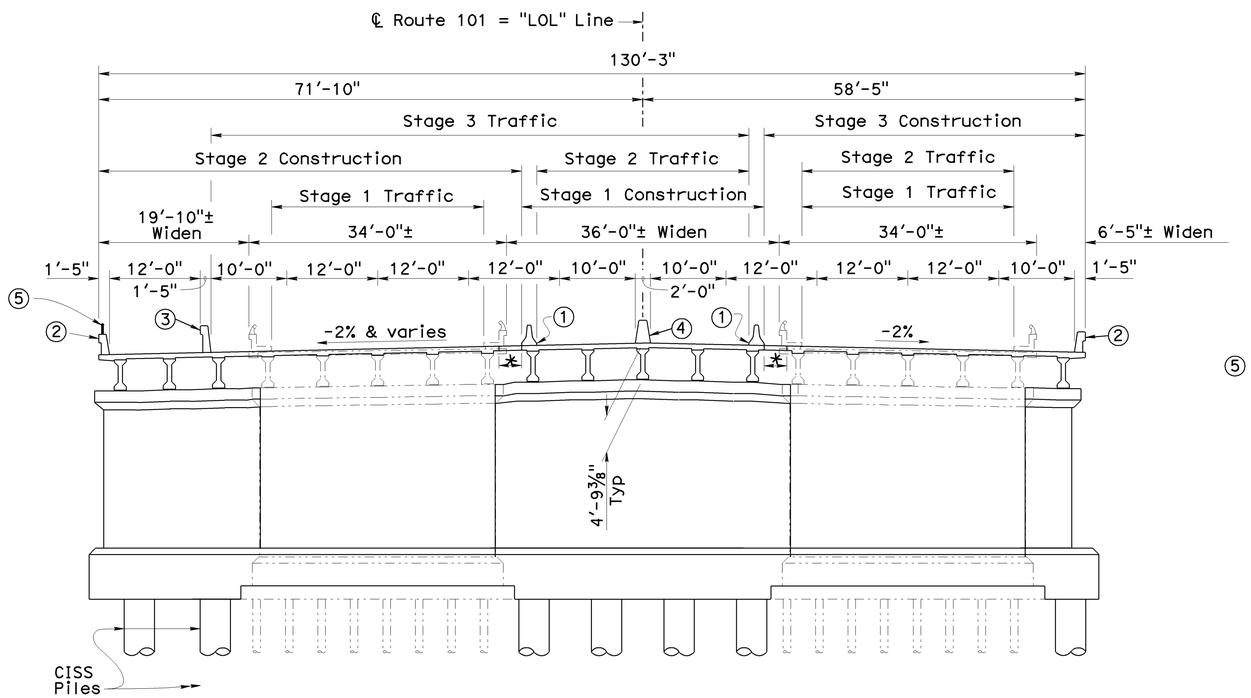

PIERS 2,4,5,7,8,10,11,13,14,16,17,19,20,22,23,25,26

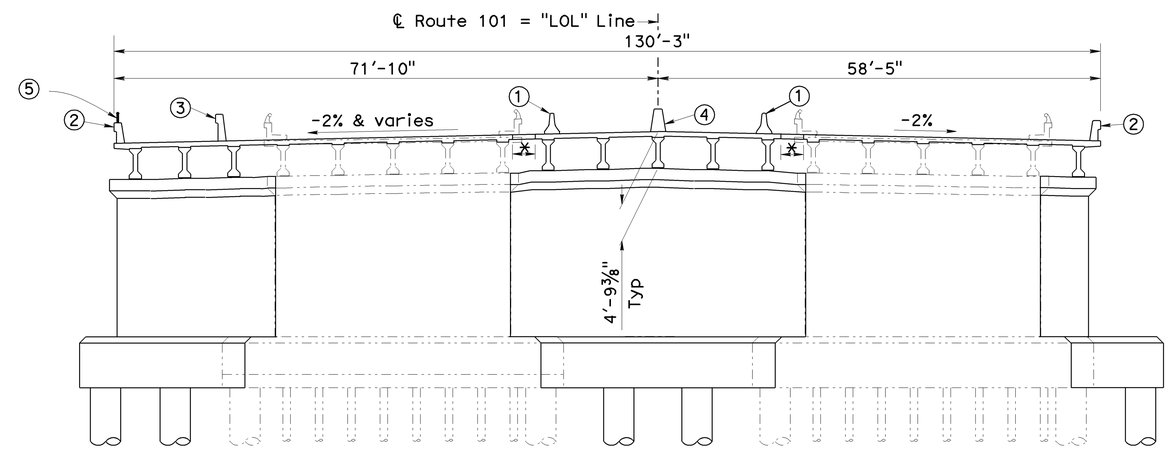

PIERS 3,6,9

Note: For Details not shown see, Typical Section of "PIERS 2,4,5,7,8,10,11,13,14,16,17,19,20,22,23,25,26".

NOTE:
THE CONTRACTOR SHALL VERIFY ALL CONTROLLING FIELD DIMENSIONS BEFORE ORDERING OR FABRICATING ANY MATERIAL.

TYPICAL SECTIONS

Scale: 1" = 10'

Gordon Danke, DESIGN ENGINEER	DESIGN	BY Rosa Candiotti	CHECKED Pete Norboe	LOAD & RESISTANCE FACTOR DESIGN	LIVE LOADING: HL93 W/"LOW-BOY"; PERMIT DESIGN VEHICLE
	DETAILS	BY D. Elliott	CHECKED Pete Norboe	LAYOUT: BY Rosa Candiotti	CHECKED Pete Norboe
	QUANTITIES	BY Rosa Candiotti	CHECKED Pete Norboe	SPECIFICATIONS: BY Todd Greets	PLANS AND SPECS COMPARED Todd Greets

STATE OF CALIFORNIA DEPARTMENT OF TRANSPORTATION

DIVISION OF ENGINEERING SERVICES STRUCTURE DESIGN DESIGN BRANCH 9

BRIDGE NO. 49-0111
POST MILE SLO 0.0/0.4

SANTA MARIA RIVER BRIDGE (WIDEN)
GENERAL PLAN NO. 2

STRUCTURES DESIGN GENERAL PLAN SHEET (ENGLISH) (REV. 10/25/05)

ORIGINAL SCALE IN INCHES FOR REDUCED PLANS 0 1 2 3

CU 05
EA 445901

DISREGARD PRINTS BEARING EARLIER REVISION DATES

REVISION DATES: 2-13-09 4-14-09 4-29-09 5-13-09 7-29-09

SHEET 2 OF 129

FILE => 49-0111-a-gp02.dgn

STRUCTURES DESIGN GENERAL PLAN SHEET (ENGLISH) (REV.07-24-06)

USERNAME => trmikesl DATE PLOTTED => 15-DEC-2009 TIME PLOTTED => 12:27

DIST	COUNTY	ROUTE	POST MILES TOTAL PROJECT	SHEET No	TOTAL SHEETS
05	SB,SLO	101	91.0,0.0/0.8	173	299

Pete W. Norboe 8-3-09
REGISTERED CIVIL ENGINEER DATE

11-2-09
PLANS APPROVAL DATE

REGISTERED PROFESSIONAL ENGINEER Pete Norboe No. C57519 Exp. 12-31-09 CIVIL STATE OF CALIFORNIA

The State of California or its officers or agents shall not be responsible for the accuracy or completeness of electronic copies of this plan sheet.

INDEX TO PLANS

SHEET No.	TITLE
1.	GENERAL PLAN NO. 1
2.	GENERAL PLAN NO. 2
3.	INDEX TO PLANS NO. 1
4.	INDEX TO PLANS NO. 2
5.	PILE DATA
6.	PILE LOAD TEST DETAILS
7.	STRUCTURE PLAN NO. 1
8.	STRUCTURE PLAN NO. 2
9.	STRUCTURE PLAN NO. 3
10.	STRUCTURE PLAN NO. 4
11.	DECK CONTOURS NO. 1
12.	DECK CONTOURS NO. 2
13.	DECK CONTOURS NO. 3
14.	DECK CONTOURS NO. 4
15.	FOUNDATION PLAN NO. 1
16.	FOUNDATION PLAN NO. 2
17.	FOUNDATION PLAN NO. 3
18.	FOUNDATION PLAN NO. 4
19.	ABUTMENT 1 LAYOUT
20.	ABUTMENT 30 LAYOUT
21.	ABUTMENT DETAILS NO. 1
22.	ABUTMENT DETAILS NO. 2
23.	ABUTMENT DETAILS NO. 3
24.	ABUTMENT DETAILS NO. 4
25.	ABUTMENT DETAILS NO. 5
26.	ABUTMENT DETAILS NO. 6
27.	ABUTMENT DETAILS NO. 7
28.	ABUTMENT DETAILS NO. 8
29.	ABUTMENT DETAILS NO. 9
30.	ABUTMENT DETAILS NO. 10
31.	ABUTMENT DETAILS NO. 11
32.	ABUTMENT DETAILS NO. 12
33.	ABUTMENT DETAILS NO. 13
34.	ABUTMENT EXCAVATION AND BACKFILL DETAILS NO. 1
35.	ABUTMENT EXCAVATION AND BACKFILL DETAILS NO. 2
36.	ABUTMENT REMOVAL DETAILS NO. 1
37.	ABUTMENT REMOVAL DETAILS NO. 2
38.	PIER LAYOUT NO. 1
39.	PIER LAYOUT NO. 2
40.	PIER LAYOUT NO. 3
41.	PIER LAYOUT NO. 4
42.	PIER LAYOUT NO. 5
43.	PIER LAYOUT NO. 6
44.	PIER DETAILS NO. 1
45.	PIER DETAILS NO. 2
46.	PIER DETAILS NO. 3
47.	PIER DETAILS NO. 4
48.	PIER DETAILS NO. 5
49.	PIER DETAILS NO. 6
50.	PIER DETAILS NO. 7
51.	PIER DETAILS NO. 8
52.	PIER DETAILS NO. 9
53.	PIER DETAILS NO. 10
54.	PIER DETAILS NO. 11
55.	PIER DETAILS NO. 12
56.	PIER DETAILS NO. 13
57.	PIER DETAILS NO. 14
58.	PIER DETAILS NO. 15
59.	PIER DETAILS NO. 16
60.	PIER DETAILS NO. 17
61.	PIER EXCAVATION AND BACKFILL DETAILS NO. 1
62.	PIER EXCAVATION AND BACKFILL DETAILS NO. 2
63.	PIER EXCAVATION AND BACKFILL DETAILS NO. 3
64.	PIER EXCAVATION AND BACKFILL DETAILS NO. 4
65.	PIER REMOVAL DETAILS NO. 1
66.	PIER REMOVAL DETAILS NO. 2
67.	PIER REMOVAL DETAILS NO. 3
68.	TYPICAL SECTION NO. 1
69.	TYPICAL SECTION NO. 2
70.	GIRDER LAYOUT NO. 1
71.	GIRDER LAYOUT NO. 2
72.	GIRDER LAYOUT NO. 3
73.	GIRDER LAYOUT NO. 4
74.	PRECAST PRESTRESSED I GIRDER NO. 1
75.	PRECAST PRESTRESSED I GIRDER NO. 2
76.	TOP LONGITUDINAL REINFORCEMENT
77.	GIRDER DETAILS
78.	STRUCTURE APPROACH TYPE N (30S)
79.	STRUCTURE APPROACH TYPE R (30S)
80.	STRUCTURE APPROACH DETAILS
81.	STRUCTURE APPROACH DRAINAGE DETAILS
82.	ABUTMENT CABLE RESTRAINER REMOVAL DETAILS
83.	PIER CABLE RESTRAINER REMOVAL DETAILS
84.	CABLE RESTRAINER TYPE 5
85.	LOG OF TEST BORINGS NO. 1
86.	LOG OF TEST BORINGS NO. 2
87.	LOG OF TEST BORINGS NO. 3
88.	LOG OF TEST BORINGS NO. 4
89.	LOG OF TEST BORINGS NO. 5
90.	LOG OF TEST BORINGS NO. 6
91.	LOG OF TEST BORINGS NO. 7
92.	LOG OF TEST BORINGS NO. 8
93.	LOG OF TEST BORINGS NO. 9
94.	LOG OF TEST BORINGS NO. 10
95.	LOG OF TEST BORINGS NO. 11
96.	LOG OF TEST BORINGS NO. 12
97.	LOG OF TEST BORINGS NO. 13
98.	LOG OF TEST BORINGS NO. 14
99.	LOG OF TEST BORINGS NO. 15
100.	LOG OF TEST BORINGS NO. 16
101.	LOG OF TEST BORINGS NO. 17
102.	LOG OF TEST BORINGS NO. 18
103.	LOG OF TEST BORINGS NO. 19
104.	LOG OF TEST BORINGS NO. 20
105.	LOG OF TEST BORINGS NO. 21
106.	LOG OF TEST BORINGS NO. 22
107.	LOG OF TEST BORINGS NO. 23
108.	LOG OF TEST BORINGS NO. 24
109.	LOG OF TEST BORINGS NO. 25
110.	LOG OF TEST BORINGS NO. 26
111.	LOG OF TEST BORINGS NO. 27
112.	LOG OF TEST BORINGS NO. 28
113.	LOG OF TEST BORINGS NO. 29
114.	LOG OF TEST BORINGS NO. 30
115.	LOG OF TEST BORINGS NO. 31
116.	LOG OF TEST BORINGS NO. 32
117.	LOG OF TEST BORINGS NO. 33
118.	LOG OF TEST BORINGS NO. 34
119.	LOG OF TEST BORINGS NO. 35
120.	LOG OF TEST BORINGS NO. 36
121.	LOG OF TEST BORINGS NO. 37
122.	LOG OF TEST BORINGS NO. 38
123.	LOG OF TEST BORINGS NO. 39
124.	LOG OF TEST BORINGS NO. 40
125.	LOG OF TEST BORINGS NO. 41
126.	LOG OF TEST BORINGS NO. 42
127.	LOG OF TEST BORINGS NO. 43
128.	LOG OF TEST BORINGS NO. 44
129.	LOG OF TEST BORINGS NO. 45

GENERAL NOTES

LOAD AND RESISTANCE FACTOR DESIGN

DESIGN:

AASHTO LRFD Bridge Design Specifications, 3rd edition with the 2005, 2006 Interims and the California Amendments V3.06.01 except that the abutments and piers are designed using the Bridge Design Specification (LFD Version, April 2000)

SEISMIC DESIGN:

Caltrans Seismic Design Criteria (SDC), Version 1.4 dated June 2006

DEAD LOAD:

Includes 35 psf for future wearing surface. The deck load between the girders has been increased by a factor of 10% to allow for the use of steel deck forms.

LIVE LOADING:

HL93 and permit design load.

SEISMIC LOADING:

See Site Specific Acceleration Response Spectra Curve

CONCRETE:

$f'y$ = 60 ksi
$f'c$ = 3.6 ksi
n = 8

See prestressing notes on "PRECAST PRESTRESSED I GIRDER NO. 1" sheet

STRUCTURAL STEEL (new construction):

fy = ASTM A709 Grade 50
Steel Pipe Piles: ASTM A709

STRUCTURAL STEEL
(assumed for evaluation of existing structure):

ASTM A7
fy = 39 ksi

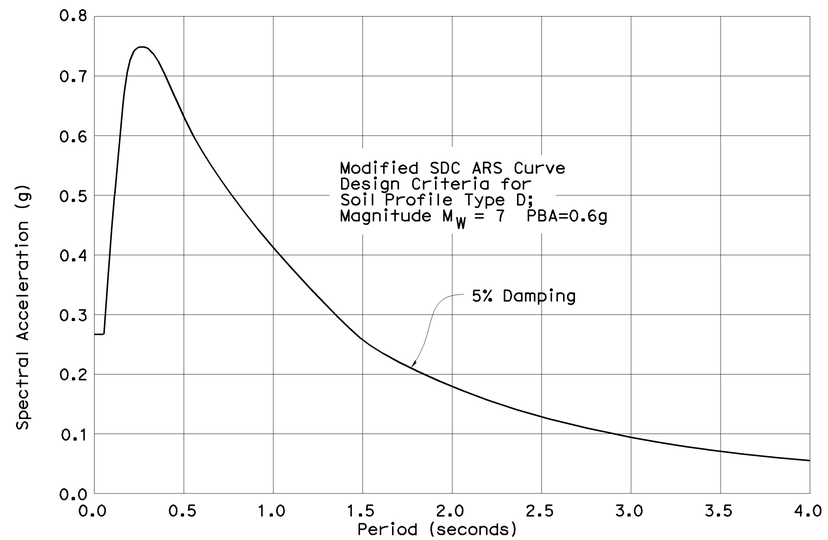

SITE SPECIFIC ACCELERATION RESPONSE SPECTRA CURVE

RESERVED FOR QUANTITIES

STANDARD PLANS DATED MAY 2006

A10A	ACRONYMS AND ABBREVIATIONS (SHEET 1 OF 2)
A10B	ACRONYMS AND ABBREVIATIONS (SHEET 2 OF 2)
A10C	SYMBOLS (SHEET 1 OF 2)
A10D	SYMBOLS (SHEET 2 OF 2)
A62C	LIMITS OF PAYMENT FOR EXCAVATION AND BACKFILL - BRIDGE
A76A	CONCRETE BARRIER TYPE 60
B0-1	BRIDGE DETAILS
B0-3	BRIDGE DETAILS
B0-5	BRIDGE DETAILS
B0-13	BRIDGE DETAILS
B2-9	LOAD TEST PILE DETAILS (1)
B2-11	LOAD TEST PILE DETAILS (3)
B6-21	JOINT SEALS (MAXIMUM MOVEMENT RATING = 2")
B7-5	DECK DRAINS
B11-51	TUBULAR HAND RAILING
B11-55	CONCRETE BARRIER TYPE 732
B11-57	CONCRETE BARRIER TYPE 742
T-3	TEMPORARY RAILING (TYPE K)

STANDARD PLAN SHEET No.

DETAIL No.

Note:

For concrete strength and Type Limits, see "INDEX TO PLANS NO. 2" sheet.

	BY	CHECKED
DESIGN	Rosa Candiotti	Pete Norboe
DETAILS	Rania Heider	Pete Norboe
QUANTITIES	Rosa Candiotti	Pete Norboe

STATE OF CALIFORNIA
DEPARTMENT OF TRANSPORTATION

DIVISION OF ENGINEERING SERVICES
STRUCTURE DESIGN
DESIGN BRANCH 9

BRIDGE NO. 49-0111
POST MILE SLO 0.0/0.4

SANTA MARIA RIVER BRIDGE (WIDEN)
INDEX TO PLANS NO. 1

STRUCTURES DESIGN DETAIL SHEET (ENGLISH) (REV. 10/25/05)

ORIGINAL SCALE IN INCHES FOR REDUCED PLANS 0 1 2 3

CU 05
EA 445901

DISREGARD PRINTS BEARING EARLIER REVISION DATES

REVISION DATES: 1-15-09 3-1-09 4-14-09 4-22-09 6-13-09

SHEET 3 OF 129

FILE => 49-0111-a-itp_01.dgn

USERNAME => trmikes| DATE PLOTTED => 15-DEC-2009 TIME PLOTTED => 12:28

DIST	COUNTY	ROUTE	POST MILES TOTAL PROJECT	SHEET No	TOTAL SHEETS
05	SB,SLO	101	91.0,0.0/0.8	174	299

Pete W. Norboe 8-3-09
REGISTERED CIVIL ENGINEER DATE

11-2-09
PLANS APPROVAL DATE

REGISTERED PROFESSIONAL ENGINEER
Pete Norboe
No. C57519
Exp. 12-31-09
CIVIL
STATE OF CALIFORNIA

The State of California or its officers or agents shall not be responsible for the accuracy or completeness of electronic copies of this plan sheet.

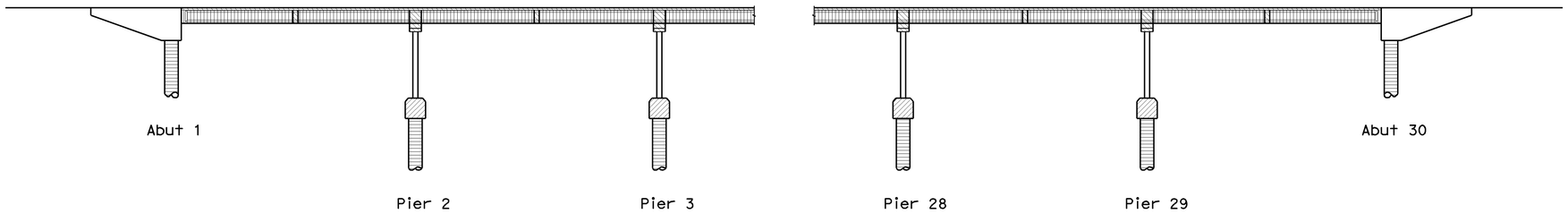

Structural Concrete, Bridge
Structural Concrete, Bridge (f'c = 5000 psi)
Structural Concrete, Bridge Footing
CISS Pile (f'c = 5000 psi)
PC/PS "I" Girder, see "PRECAST PRESTRESSED I GIRDER" sheets

CONCRETE STRENGTH AND TYPE LIMITS

No Scale

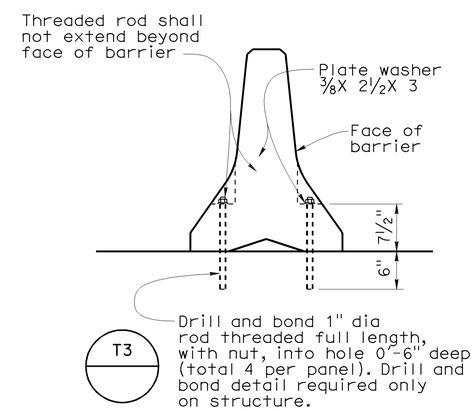

TEMPORARY RAILING ANCHOR DETAILS

1" = 10'

Note: See "ROAD PLANS"

NOTE:
THE CONTRACTOR SHALL VERIFY ALL CONTROLLING FIELD DIMENSIONS BEFORE ORDERING OR FABRICATING ANY MATERIAL.

	BY	CHECKED
DESIGN	Rosa Candiotti	Pete Norboe
DETAILS	D. Elliott	Pete Norboe
QUANTITIES	Rosa Candiotti	Pete Norboe

STATE OF CALIFORNIA
DEPARTMENT OF TRANSPORTATION

DIVISION OF ENGINEERING SERVICES
STRUCTURE DESIGN
DESIGN BRANCH 9

BRIDGE NO. 49-0111
POST MILE SLO 0.0/0.4

SANTA MARIA RIVER BRIDGE (WIDEN)
INDEX TO PLANS NO. 2

STRUCTURES DESIGN DETAIL SHEET (ENGLISH) (REV. 10/25/05)

ORIGINAL SCALE IN INCHES FOR REDUCED PLANS 0 1 2 3

CU 05
EA 445901

DISREGARD PRINTS BEARING EARLIER REVISION DATES

REVISION DATES: 3-2-09 4-1-09 4-14-09 4-22-09 6-12-09 7-28-09

SHEET 4 OF 129

FILE => 49-0111-a-itp_02.dgn

USERNAME => trmikes1 DATE PLOTTED => 15-DEC-2009 TIME PLOTTED => 12:28

DIST	COUNTY	ROUTE	POST MILES TOTAL PROJECT	SHEET No	TOTAL SHEETS
05	SB,SLO	101	91.0,0.0/0.8	175	299

Pete W. Norboe 8-3-09
REGISTERED CIVIL ENGINEER DATE

11-2-09
PLANS APPROVAL DATE

REGISTERED PROFESSIONAL ENGINEER
Pete Norboe
No. C57519
Exp. 12-31-09
CIVIL
STATE OF CALIFORNIA

The State of California or its officers or agents shall not be responsible for the accuracy or completeness of electronic copies of this plan sheet.

PILE DATA TABLE

Location	Pile Type	Nominal Resistance		Design Tip Elevation * (FT)	Specified Tip Elevation (FT)	Nominal Driving Resistance (Kips)
		Compression (Kips)	Tension (Kips)			
Abutment 1	CISS NPS 48 x 0.75	390	0	179 (a)	179	400
Abutment 1 RW	CISS NPS 24 x 0.50	90	0	179 (a)	179	180
Pier 2	CISS NPS 48 x 0.75	1290	150	134 (a) 160 (b)	132	2090
Pier 3	CISS NPS 48 x 0.75	1250	150	139 (a) 159 (b)	137	2100
Pier 4	CISS NPS 48 x 0.75	1180	150	136 (a) 159 (b)	136	2200
Pier 5	CISS NPS 48 x 0.75	1080	150	141 (a) 158 (b)	137	1730
Pier 6	CISS NPS 48 x 0.75	1290	150	131 (a) 157 (b)	127	1960
Pier 7	CISS NPS 48 x 0.75	1000	150	143 (a) 159 (b)	143	1750
Pier 8	CISS NPS 48 x 0.75	1000	150	143 (a) 159 (b)	141	1640
Pier 9	CISS NPS 48 x 0.75	1290	150	134 (a) 157 (b)	132	1840
Pier 10	CISS NPS 48 x 0.75	1000	150	141 (a) 157 (b)	139	1610
Pier 11	CISS NPS 48 x 0.75	1000	150	145 (a) 158 (b)	140	1470
Pier 12	CISS NPS 48 x 0.75	720	150	143 (a) 155 (b)	143	1350
Pier 13	CISS NPS 48 x 0.75	720	150	134 (a) 159 (b)	134	1550
Pier 14	CISS NPS 48 x 0.75	720	150	132 (a) 156 (b)	132	1350
Pier 15	CISS NPS 48 x 0.75	580	150	133 (a) 155 (b)	133	1500

PILE DATA TABLE

Location	Pile Type	Nominal Resistance		Design Tip Elevation * (FT)	Specified Tip Elevation (FT)	Nominal Driving Resistance (Kips)
		Compression (Kips)	Tension (Kips)			
Pier 16	CISS NPS 48 x 0.75	580	150	130 (a) 155 (b)	130	1600
Pier 17	CISS NPS 48 x 0.75	580	150	132 (a) 158 (b)	131	1500
** Pier 18	CISS NPS 48 x 0.75	680	150	131 (a) 151 (b)	130	1420
Pier 19	CISS NPS 48 x 0.75	680	150	131 (a) 157 (b)	131	1520
Pier 20	CISS NPS 48 x 0.75	680	150	129 (a) 151 (b)	129	1500
Pier 21	CISS NPS 48 x 0.75	680	150	128 (a) 154 (b)	128	1410
Pier 22	CISS NPS 48 x 0.75	680	150	130 (a) 155 (b)	130	1500
Pier 23	CISS NPS 48 x 0.75	680	150	130 (a) 158 (b)	130	1520
Pier 24	CISS NPS 48 x 0.75	680	150	130 (a) 159 (b)	130	1800
Pier 25	CISS NPS 48 x 0.75	1000	150	134 (a) 159 (b)	130	1420
Pier 26	CISS NPS 48 x 0.75	1000	150	135 (a) 155 (b)	132	1500
Pier 27	CISS NPS 48 x 0.75	1000	150	139 (a) 157 (b)	135	1340
Pier 28	CISS NPS 48 x 0.75	1000	150	138 (a) 156 (b)	136	1530
Pier 29	CISS NPS 48 x 0.75	1000	150	138 (a) 156 (b)	136	1530
Abutment 30	CISS NPS 48 x 0.75	390	0	178 (a)	178	400

* Design tip elevation is controlled by the following demands:
(a) Compression; (b) Tension (c) Projected Scour Elevations @ 180.50'

** Pile Load Test location, for details, see "PILE LOAD TEST DETAILS" sheet

	BY	CHECKED
DESIGN	Rosa Candiotti	Pete Norboe
DETAILS	D. Elliott	Pete Norboe
QUANTITIES	Rosa Candiotti	Pete Norboe

STATE OF CALIFORNIA
DEPARTMENT OF TRANSPORTATION

DIVISION OF ENGINEERING SERVICES
STRUCTURE DESIGN
DESIGN BRANCH 9

BRIDGE NO. 49-0111
POST MILE SLO 0.0/0.4

SANTA MARIA RIVER BRIDGE (WIDEN)
PILE DATA

STRUCTURES DESIGN DETAIL SHEET (ENGLISH) (REV. 10/25/05)

ORIGINAL SCALE IN INCHES FOR REDUCED PLANS 0 1 2 3

CU 05
EA 445901

DISREGARD PRINTS BEARING EARLIER REVISION DATES

REVISION DATES: 2-25-09 3-25-09 4-1-09 4-17-09 6-12-09 7-28-09

SHEET 5 OF 129

FILE => 49-0111-a-pile_data.dgn

USERNAME => trmikes1 DATE PLOTTED => 15-DEC-2009 TIME PLOTTED => 12:28

DIST	COUNTY	ROUTE	POST MILES TOTAL PROJECT	SHEET No	TOTAL SHEETS
05	SB,SLO	101	91.0,0.0/0.8	176	299

Pete W. Norboe 8-3-09
REGISTERED CIVIL ENGINEER DATE

11-2-09
PLANS APPROVAL DATE

REGISTERED PROFESSIONAL ENGINEER Pete Norboe No. C57519 Exp. 12-31-09 CIVIL STATE OF CALIFORNIA

The State of California or its officers or agents shall not be responsible for the accuracy or completeness of electronic copies of this plan sheet.

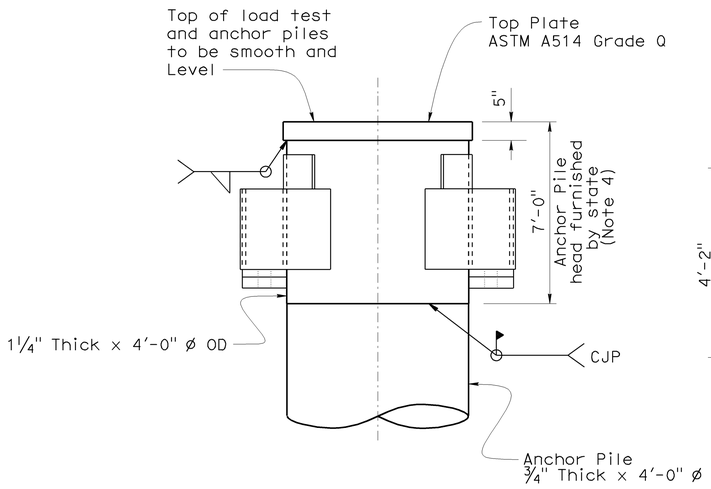

ANCHOR PILES
(See Note 1)

ELEVATION

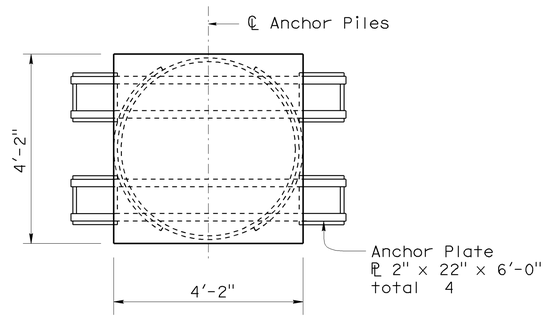

ANCHOR PILES

PLAN

PILE HEAD CONNECTION DETAILS

No Scale

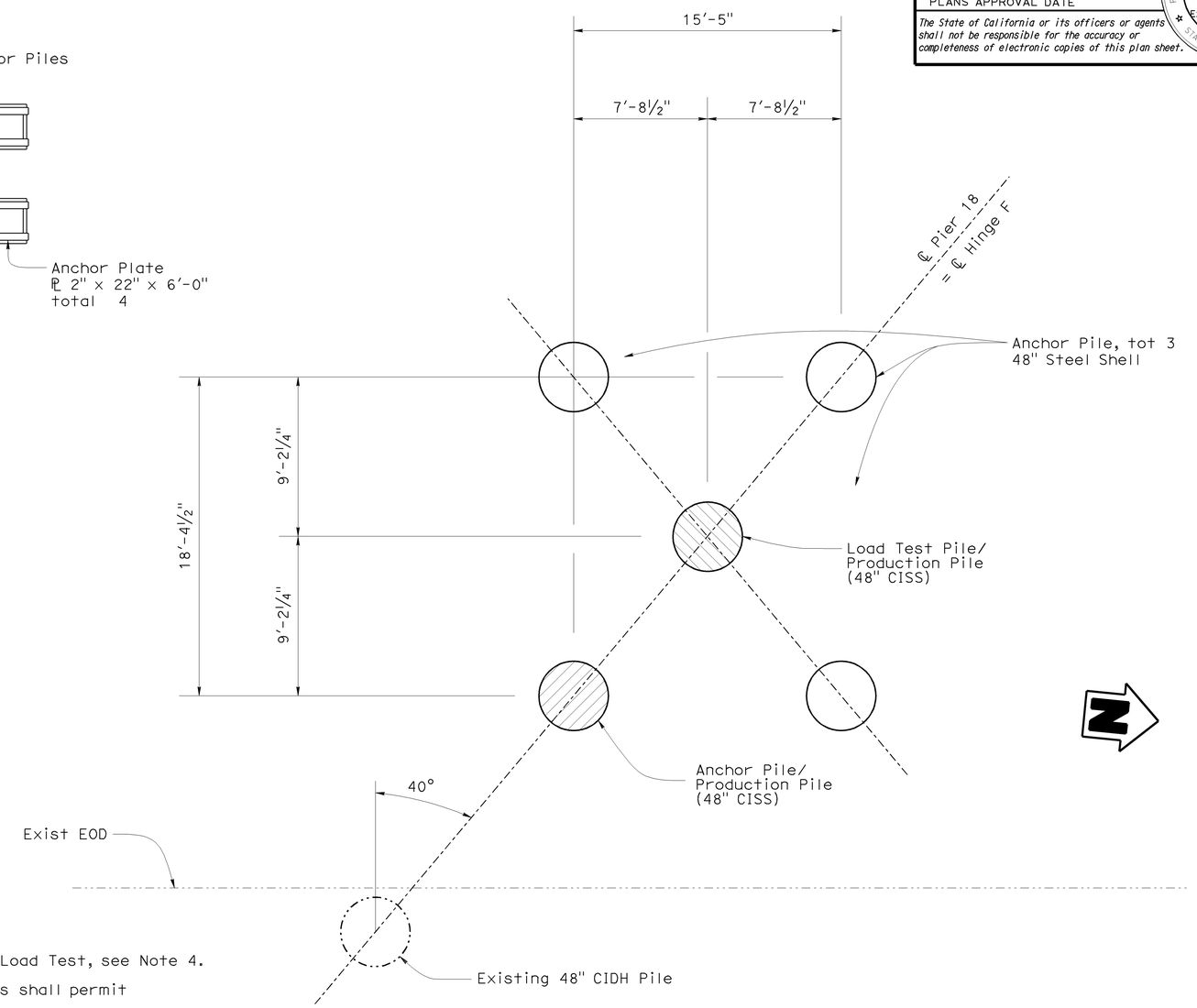

LEGEND:

- Existing Pile
- Anchor Pile
- Anchor Pile/Production Pile
- Load Test Pile/Production Pile

NOTES:

1. Five Anchor Pile Heads required for Load Test, see Note 4.
2. Alignment of slots and bearing plates shall permit anchor plates to pass through pile.
3. For complete joint penetration weld at anchor pile, prepare surface only.
4. Four Anchor Pile Heads will be furnished by the state. One additional Anchor Pile Head shall be fabricated by the contractor and become property of the state after completion of the test.
5. Specified tip elevations for the anchor piles shall be the same as the specified tip elevations for the production piles.

NOTE:
THE CONTRACTOR SHALL VERIFY ALL CONTROLLING FIELD DIMENSIONS BEFORE ORDERING OR FABRICATING ANY MATERIAL.

PILE HEAD CONNECTION DETAILS

No Scale

B2-9 B2-11

	BY	CHECKED
DESIGN	Rosa Candiotti	Pete Norboe
DETAILS	D. Elliott	Pete Norboe
QUANTITIES	Rosa Candiotti	Pete Norboe

STATE OF CALIFORNIA
DEPARTMENT OF TRANSPORTATION

DIVISION OF ENGINEERING SERVICES
STRUCTURE DESIGN
DESIGN BRANCH 9

BRIDGE NO. 49-0111
POST MILE SLO 0.0/0.4

SANTA MARIA RIVER BRIDGE (WIDEN)
PILE LOAD TEST DETAILS

STRUCTURES DESIGN DETAIL SHEET (ENGLISH) (REV. 10/25/05)

ORIGINAL SCALE IN INCHES FOR REDUCED PLANS 0 1 2 3

CU 05
EA 445901

DISREGARD PRINTS BEARING EARLIER REVISION DATES

REVISION DATES: 3-26-09 4-3-09 4-14-09 6-17-09 7-28-09

SHEET 6 OF 129

FILE => 49-0111-a-pile_load.dgn

USERNAME => trmikest DATE PLOTTED => 15-DEC-2009 TIME PLOTTED => 12:28

DIST	COUNTY	ROUTE	POST MILES TOTAL PROJECT	SHEET No	TOTAL SHEETS
05	SB,SLO	101	91.0,0.0/0.8	177	299

Pete W. Norboe 8-3-09
REGISTERED CIVIL ENGINEER DATE

11-2-09
PLANS APPROVAL DATE

REGISTERED PROFESSIONAL ENGINEER PETE NORBOE No. C57519 Exp. 12-31-2009 CIVIL STATE OF CALIFORNIA

The State of California or its officers or agents shall not be responsible for the accuracy or completeness of electronic copies of this plan sheet.

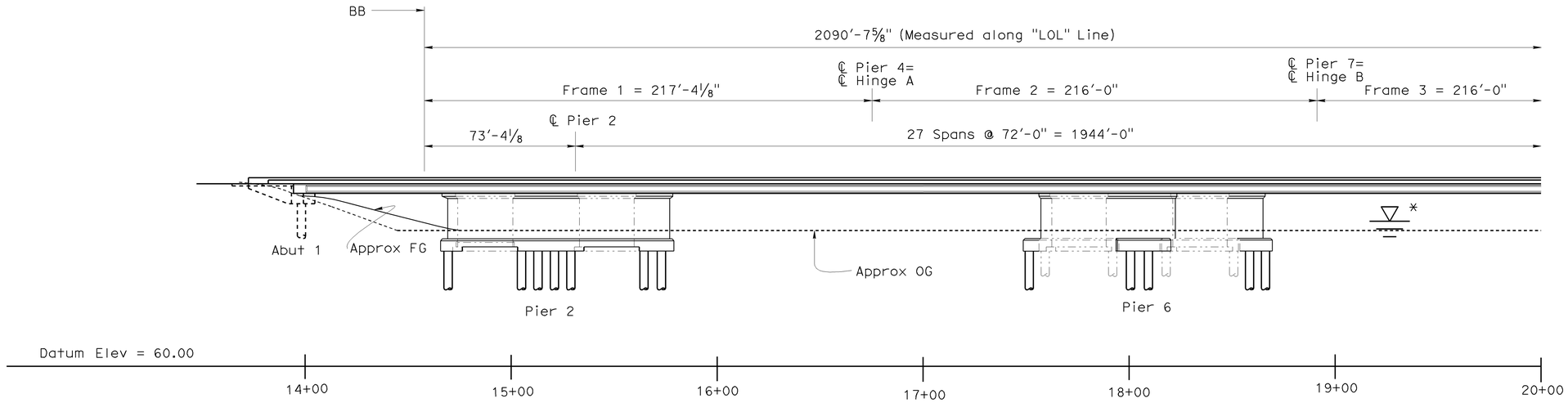

ELEVATION

1" = 30'

Note: All Piers not shown

* For Hydraulic Summary Table, see "FOUNDATION PLAN NO. 1" sheet"

LEGEND

1. Paint "Bridge No. 49-0111"
2. Paint "SANTA MARIA RIVER BRIDGE"
3. MBGR, see "Road Plans"
4. Concrete Barrier Type 732
5. Concrete Barrier Type 742
6. Concrete Barrier Type 60A (Mod)
7. Structure Approach Type R(30S) or Structure Approach Type N(30S) Mod

-·-·- Denotes existing structures

—— Denotes new structures

- Deck Drain - Type "B" B7-5

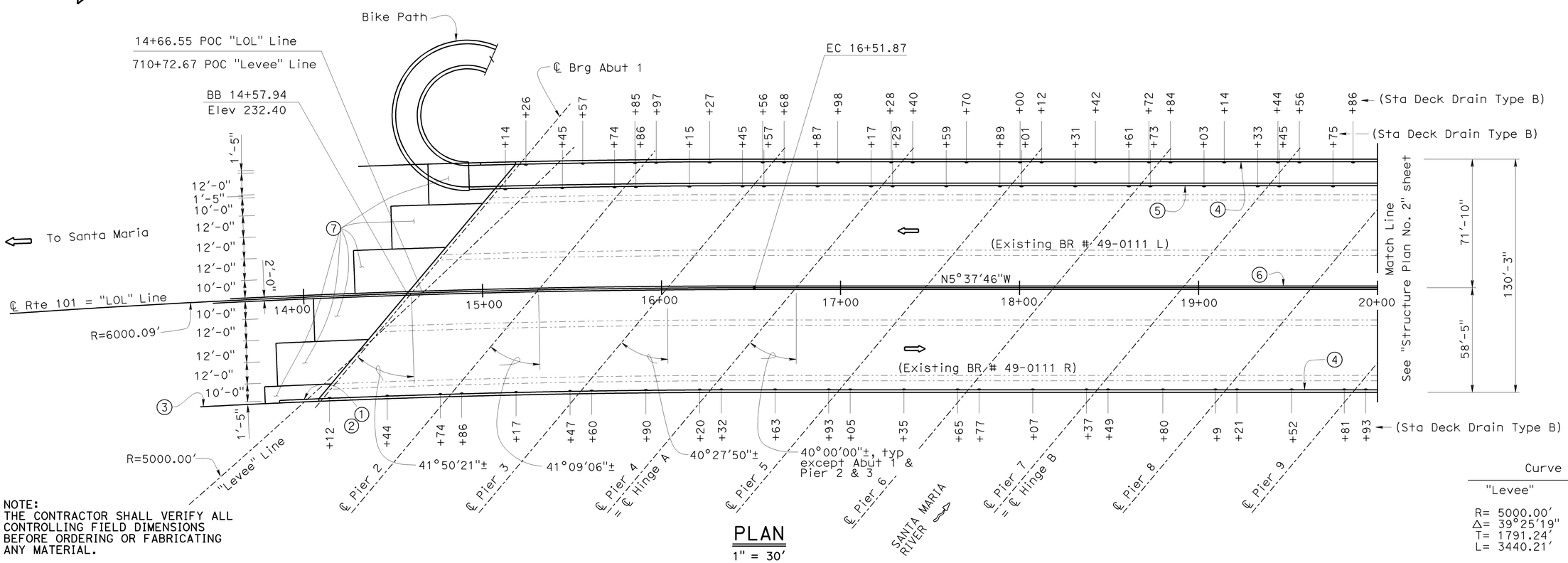

PLAN

1" = 30'

NOTE:
THE CONTRACTOR SHALL VERIFY ALL CONTROLLING FIELD DIMENSIONS BEFORE ORDERING OR FABRICATING ANY MATERIAL.

Curve Data

"Levee"	"LOL"
R= 5000.00'	R= 6000.09'
Δ= 39°25'19"	Δ= 6°08'32"
T= 1791.24'	T= 321.92'
L= 3440.21'	L= 643.22'

	BY	CHECKED
DESIGN	Rosa Candiotti	Pete Norboe
DETAILS	D. Elliott/ R. Heider	Pete Norboe
QUANTITIES	Rosa Candiotti	Pete Norboe

STATE OF CALIFORNIA
DEPARTMENT OF TRANSPORTATION

DIVISION OF ENGINEERING SERVICES
STRUCTURE DESIGN
DESIGN BRANCH 9

BRIDGE NO. 49-0111
POST MILE SLO 0.0/0.4

SANTA MARIA RIVER BRIDGE (WIDEN)
STRUCTURE PLAN NO. 1

STRUCTURES DESIGN DETAIL SHEET (ENGLISH) (REV. 10/25/05)

ORIGINAL SCALE IN INCHES FOR REDUCED PLANS 0 1 2 3

CU 05
EA 445901

DISREGARD PRINTS BEARING EARLIER REVISION DATES

REVISION DATES: 2-17-2009 4-14-09 4-28-09 6-12-09 7-28-09

SHEET 7 OF 129

FILE => 49-0111-c-sp01.dgn

USERNAME => trmikesi DATE PLOTTED => 15-DEC-2009 TIME PLOTTED => 12:28

DIST	COUNTY	ROUTE	POST MILES TOTAL PROJECT	SHEET No	TOTAL SHEETS
05	SB,SLO	101	91.0,0.0/0.8	178	299

Pete W. Norboe 8-3-09
REGISTERED CIVIL ENGINEER DATE

11-2-09
PLANS APPROVAL DATE

REGISTERED PROFESSIONAL ENGINEER PETE NORBOE No. C57519 Exp. 12-31-2009 CIVIL STATE OF CALIFORNIA

The State of California or its officers or agents shall not be responsible for the accuracy or completeness of electronic copies of this plan sheet.

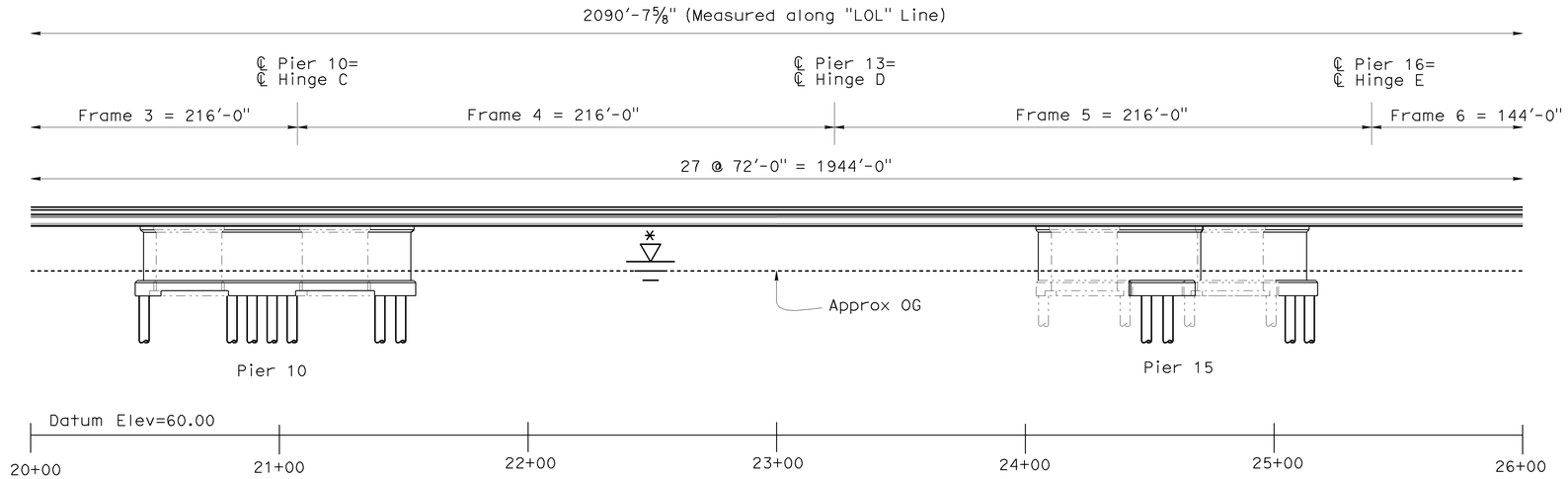

ELEVATION

1" = 30'

Note: All Piers not shown

* For Hydraulic Summary Table, see "FOUNDATION PLAN NO. 1" sheet

LEGEND

1	Concrete Barrier Type 732
2	Concrete Barrier Type 742
3	Concrete Barrier Type 60A (Mod)
-·-·-·-	Denotes Existing Structure
———	Dentoes New Structure
-	Deck Drain - Type "B" B7-5

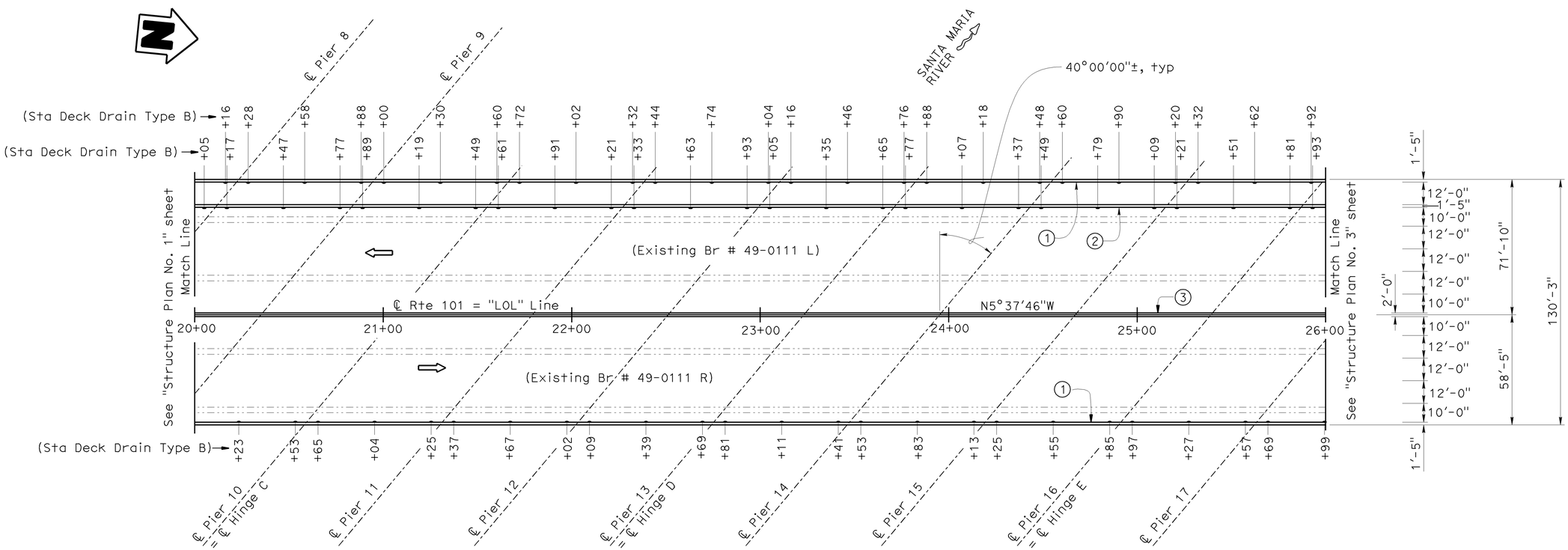

PLAN

1" = 30'

NOTE:
THE CONTRACTOR SHALL VERIFY ALL CONTROLLING FIELD DIMENSIONS BEFORE ORDERING OR FABRICATING ANY MATERIAL.

	BY	CHECKED
DESIGN	Rosa Candiotti	Pete Norboe
DETAILS	D. Elliott / R. Heider	Pete Norboe
QUANTITIES	Rosa Candiotti	Pete Norboe

STATE OF CALIFORNIA
DEPARTMENT OF TRANSPORTATION

DIVISION OF ENGINEERING SERVICES
STRUCTURE DESIGN
DESIGN BRANCH 9

BRIDGE NO. 49-0111
POST MILE SLO 0.0/0.4

SANTA MARIA RIVER BRIDGE (WIDEN)
STRUCTURE PLAN NO. 2

STRUCTURES DESIGN DETAIL SHEET (ENGLISH) (REV. 10/25/05)

ORIGINAL SCALE IN INCHES FOR REDUCED PLANS 0 1 2 3

CU 05
EA 445901

DISREGARD PRINTS BEARING EARLIER REVISION DATES

REVISION DATES: 2-25-09 4-14-09 4-24-09 6-17-09 7-28-09

SHEET 8 OF 129

FILE => 49-0111-c-sp02.dgn

USERNAME => trmikest DATE PLOTTED => 15-DEC-2009 TIME PLOTTED => 12:28

DIST	COUNTY	ROUTE	POST MILES TOTAL PROJECT	SHEET No	TOTAL SHEETS
05	SB,SLO	101	91.0,0.0/0.8	179	299

Peter W. Norboe 8-3-09
REGISTERED CIVIL ENGINEER DATE

11-2-09
PLANS APPROVAL DATE

REGISTERED PROFESSIONAL ENGINEER
PETE NORBOE
No. C57519
Exp. 12-31-2009
CIVIL
STATE OF CALIFORNIA

The State of California or its officers or agents shall not be responsible for the accuracy or completeness of electronic copies of this plan sheet.

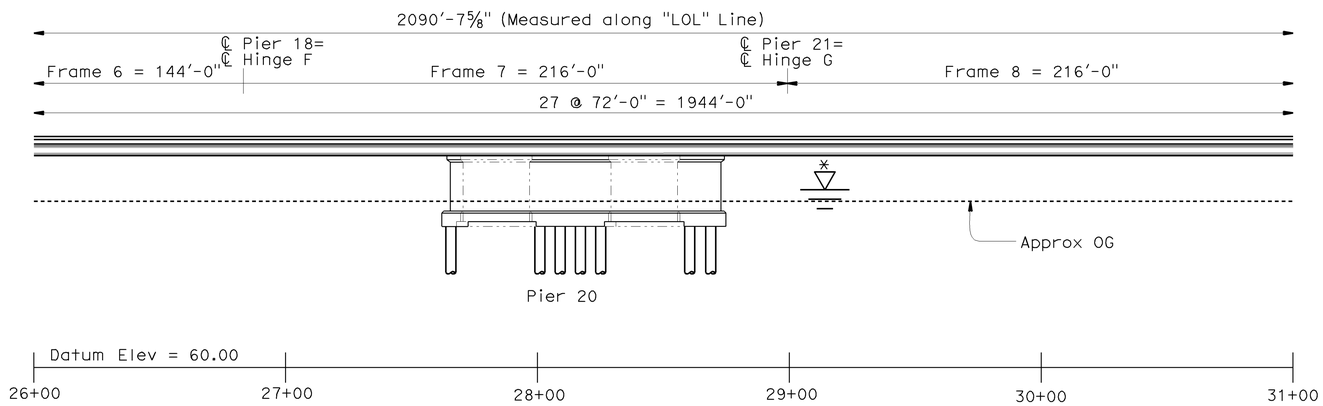

* For Hydraulic Summary Table, see "FOUNDATION PLAN NO. 1" sheet

ELEVATION

1" = 30'

Note: All Piers not shown

LEGEND

1. Concrete Barrier Type 732
2. Concrete Barrier Type 742
3. Concrete Barrier Type 60A (Mod)

Denotes Existing Structure

Denotes New Structure

Deck Drain - Type "B" (B7-5)

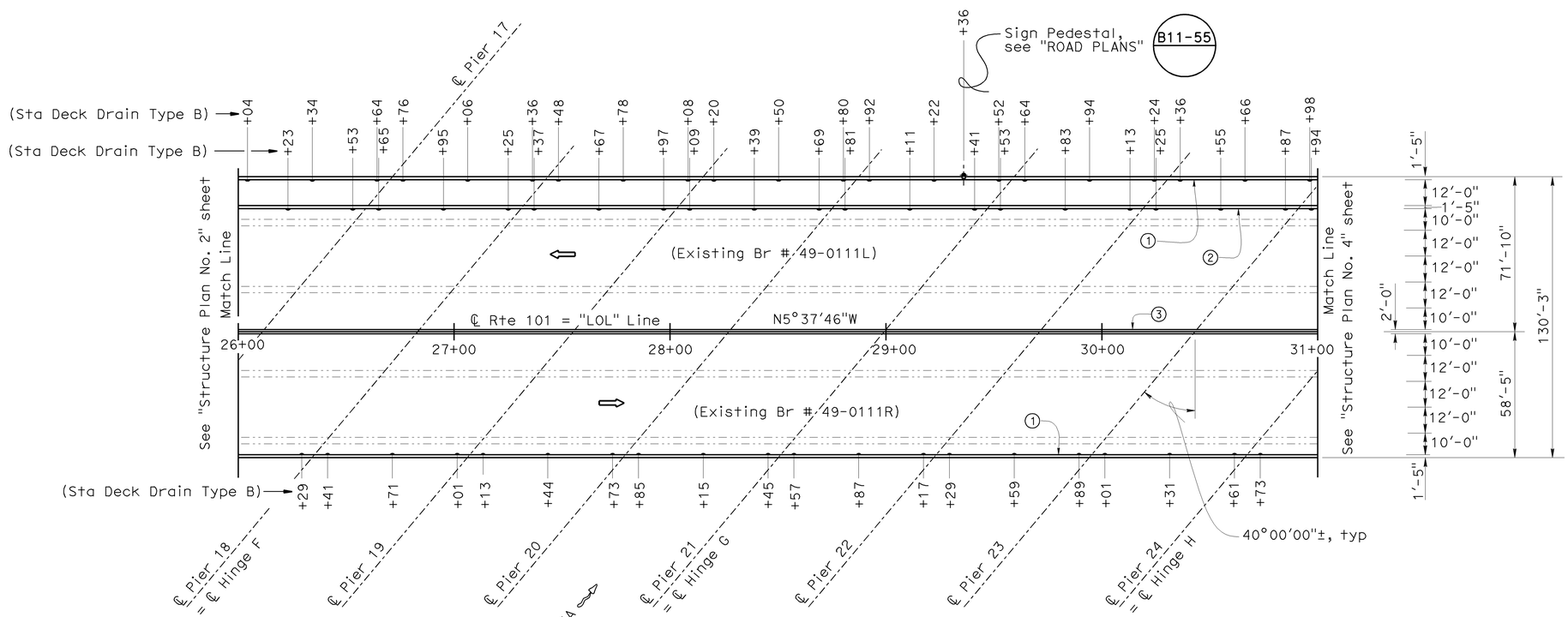

PLAN

1" = 30'

NOTE:
THE CONTRACTOR SHALL VERIFY ALL CONTROLLING FIELD DIMENSIONS BEFORE ORDERING OR FABRICATING ANY MATERIAL.

	BY	CHECKED
DESIGN	Rosa Candiotti	Pete Norboe
DETAILS	D. Elliott / R. Heider	Pete Norboe
QUANTITIES	Rosa Candiotti	Pete Norboe

STATE OF CALIFORNIA
DEPARTMENT OF TRANSPORTATION

DIVISION OF ENGINEERING SERVICES
STRUCTURE DESIGN
DESIGN BRANCH 9

BRIDGE NO. 49-0111
POST MILE SLO 0.0/0.4

SANTA MARIA RIVER BRIDGE (WIDEN)
STRUCTURE PLAN NO. 3

STRUCTURES DESIGN DETAIL SHEET (ENGLISH) (REV. 10/25/05)

ORIGINAL SCALE IN INCHES FOR REDUCED PLANS 0 1 2 3

CU 05
EA 445901

DISREGARD PRINTS BEARING EARLIER REVISION DATES

REVISION DATES: 2-26-09 4-14-09 4-24-09 6-29-09 6-11-09 7-28-09

SHEET 9 OF 129

FILE => 49-0111-c-sp03.dgn

USERNAME => trmikesl DATE PLOTTED => 15-DEC-2009 TIME PLOTTED => 12:28

DIST	COUNTY	ROUTE	POST MILES TOTAL PROJECT	SHEET No	TOTAL SHEETS
05	SB,SLO	101	91.0,0.0/0.8	180	299

Pete W. Norboe 8-3-09
REGISTERED CIVIL ENGINEER DATE

11-2-09
PLANS APPROVAL DATE

REGISTERED PROFESSIONAL ENGINEER PETE NORBOE No. 57519 Exp. 12-31-2009 CIVIL STATE OF CALIFORNIA

The State of California or its officers or agents shall not be responsible for the accuracy or completeness of electronic copies of this plan sheet.

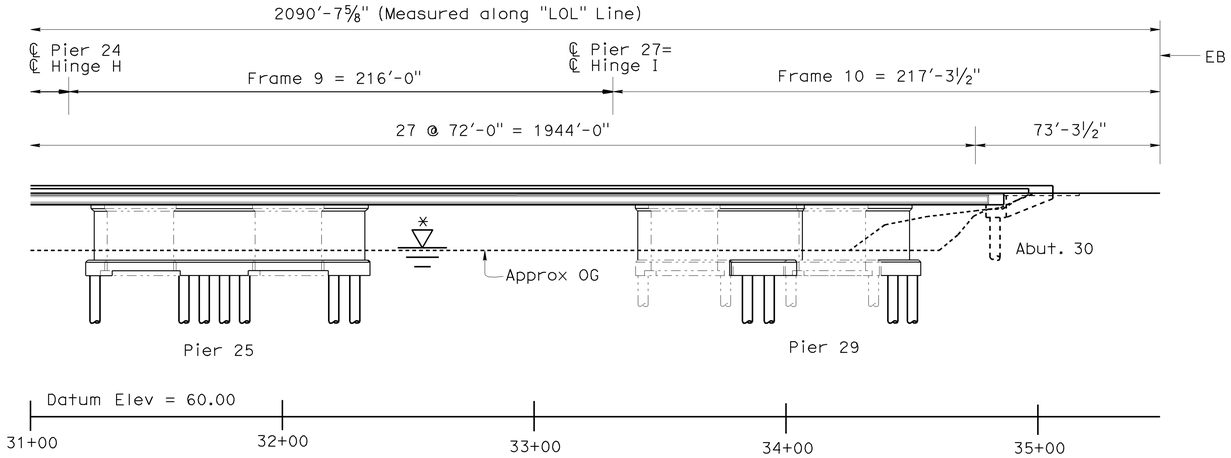

ELEVATION

1" = 30'

Note: All Piers not shown

* For Hydraulic Summary Table, see "FOUNDATION PLAN NO. 1" sheet

LEGEND

1. Paint "Bridge No. 49-0111"
2. Paint "SANTA MARIA RIVER BRIDGE"
3. MBGR, see "Road Plans"
4. Concrete Barrier Type 732
5. Concrete Barrier Type 742
6. Concrete Barrier Type 60A (Mod)
7. Structure Approach Type R(30S) or Structure Approach Type N(30S) Mod

-·-·-·- Denotes Existing Structure

——— Denotes New Structure

\- Deck Drain - Type "B" B7-5

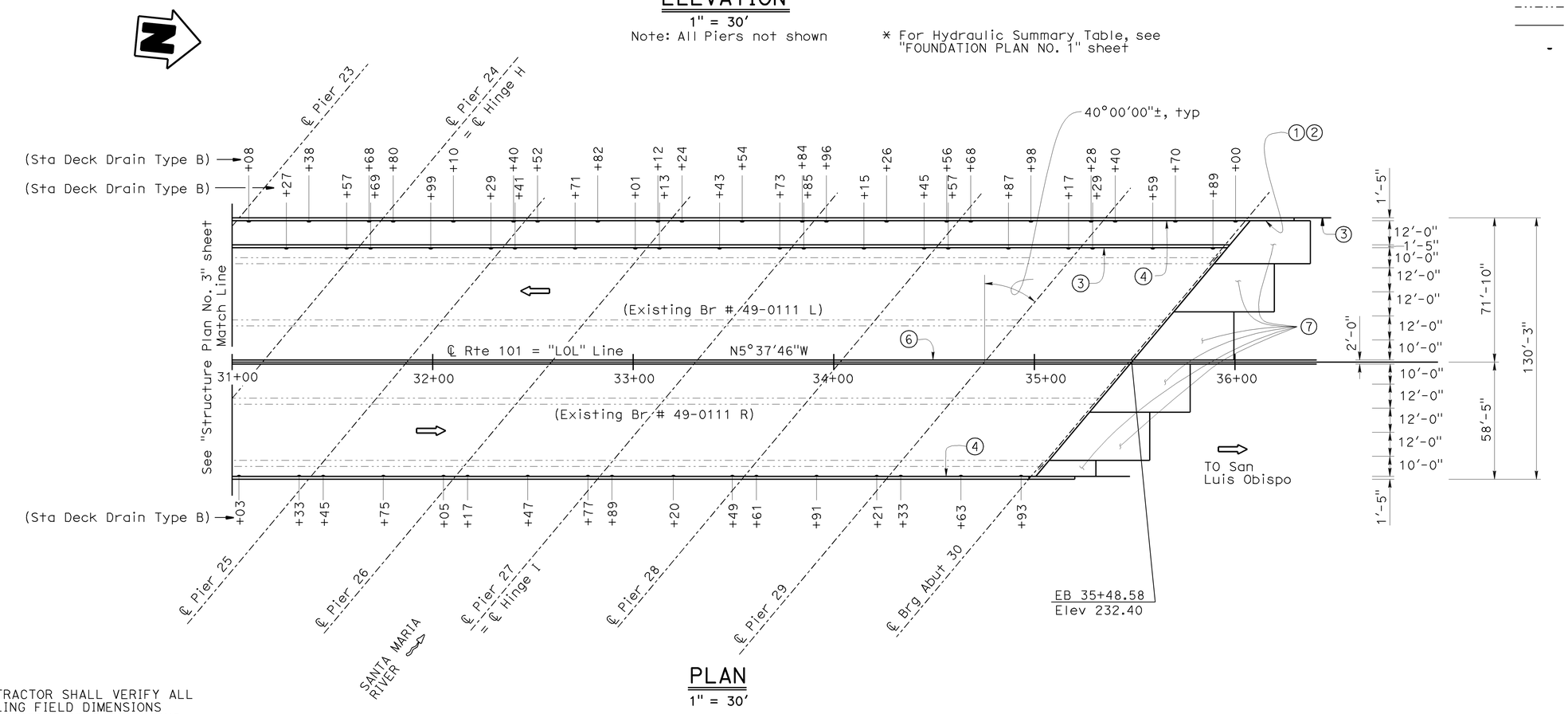

PLAN

1" = 30'

NOTE:
THE CONTRACTOR SHALL VERIFY ALL CONTROLLING FIELD DIMENSIONS BEFORE ORDERING OR FABRICATING ANY MATERIAL.

	BY	CHECKED
DESIGN	Rosa Candiotti	Pete Norboe
DETAILS	D. Elliott / R. Heider	Pete Norboe
QUANTITIES	Rosa Candiotti	Pete Norboe

STATE OF CALIFORNIA
DEPARTMENT OF TRANSPORTATION

DIVISION OF ENGINEERING SERVICES
STRUCTURE DESIGN
DESIGN BRANCH 9

BRIDGE NO. 49-0111
POST MILE SLO 0.0/0.4

SANTA MARIA RIVER BRIDGE (WIDEN)

STRUCTURE PLAN NO. 4

STRUCTURES DESIGN DETAIL SHEET (ENGLISH) (REV. 10/25/05)

ORIGINAL SCALE IN INCHES FOR REDUCED PLANS 0 1 2 3

CU 05
EA 445901

DISREGARD PRINTS BEARING EARLIER REVISION DATES

REVISION DATES: 3-05-09 4-14-09 4-22-09 4-29-09 6-12-09 7-28-09

FILE => 49-0111-c-sp04.dgn

USERNAME => trmikest DATE PLOTTED => 15-DEC-2009 TIME PLOTTED => 12:28

DIST	COUNTY	ROUTE	POST MILES TOTAL PROJECT	SHEET No	TOTAL SHEETS
05	SB,SLO	101	91.0,0.0/0.8	181	299

Pete W. Norboe 8-3-09
REGISTERED CIVIL ENGINEER DATE

11-2-09
PLANS APPROVAL DATE

REGISTERED PROFESSIONAL ENGINEER
Pete Norboe
No. C57519
Exp. 12-31-09
CIVIL
STATE OF CALIFORNIA

The State of California or its officers or agents shall not be responsible for the accuracy or completeness of electronic copies of this plan sheet.

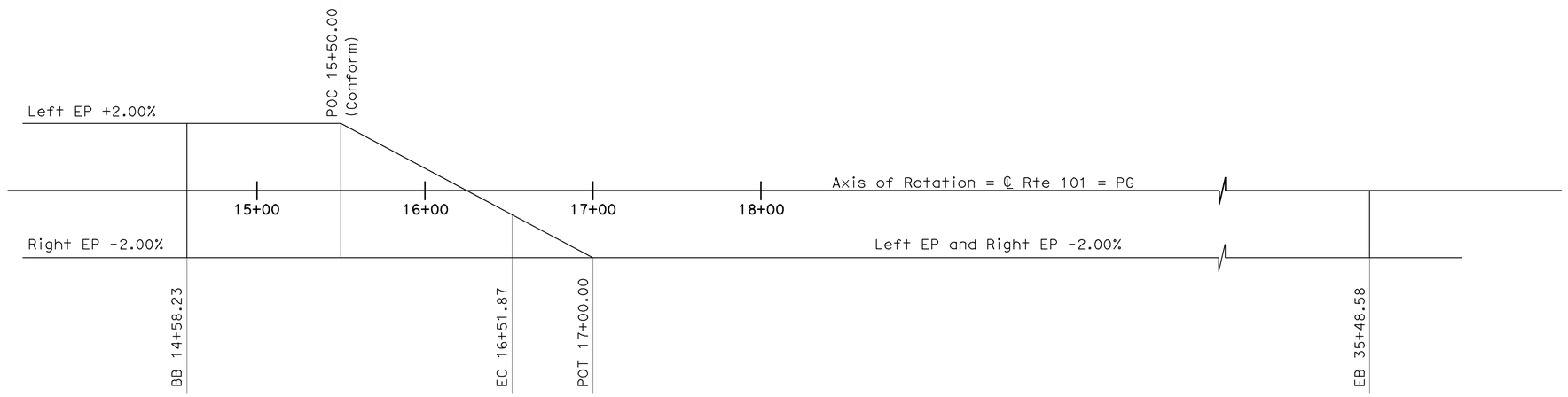

SUPERELEVATION DIAGRAM

No Scale

Notes:

X - 5 ft intervals station line
- Contour do not include camber
- Contour intervals = 0.5 ft

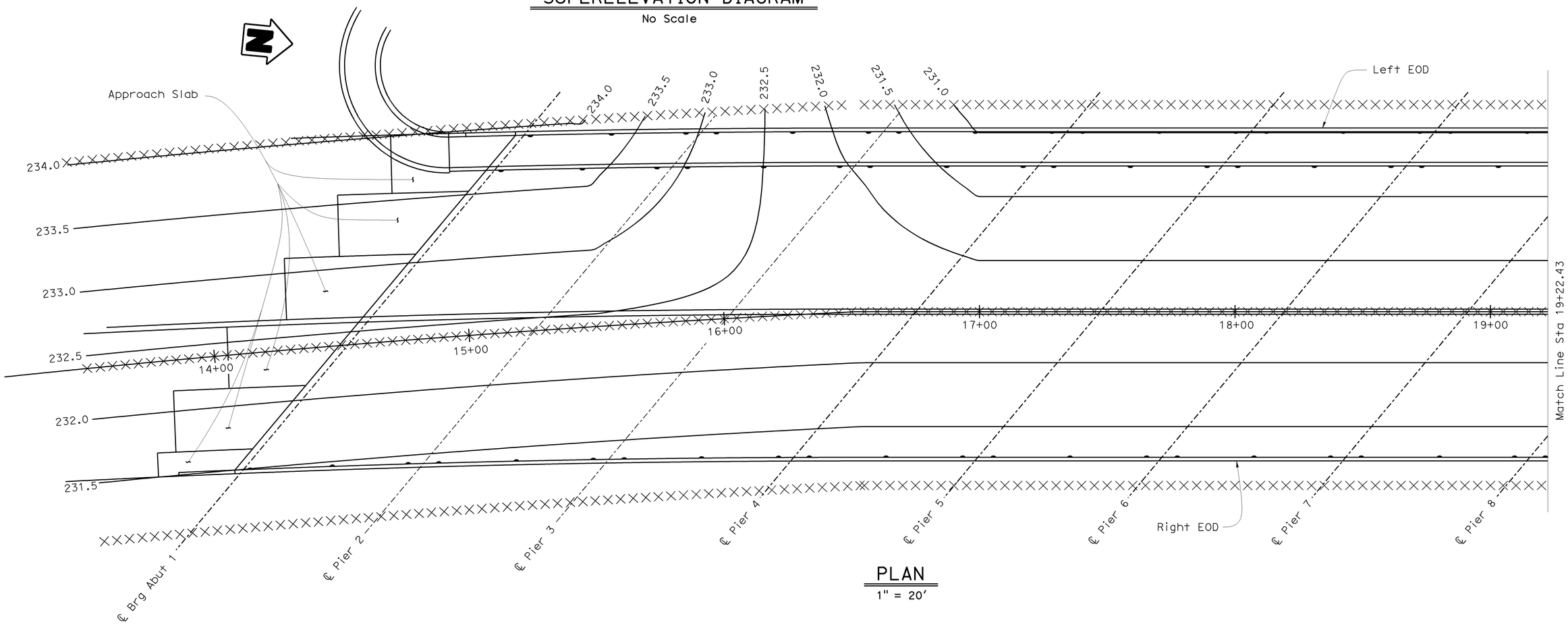

PLAN

1" = 20'

	BY	CHECKED
DESIGN	Rosa Candiotti	Pete Norboe
DETAILS	D. Elliott	Pete Norboe
QUANTITIES	Rosa Candiotti	Pete Norboe

STATE OF CALIFORNIA
DEPARTMENT OF TRANSPORTATION

DIVISION OF ENGINEERING SERVICES
STRUCTURE DESIGN
DESIGN BRANCH 9

BRIDGE NO. 49-0111
POST MILE SLO 0.0/0.4

SANTA MARIA RIVER BRIDGE (WIDEN)
DECK CONTOURS NO. 1

STRUCTURES DESIGN DETAIL SHEET (ENGLISH) (REV. 10/25/05)

ORIGINAL SCALE IN INCHES FOR REDUCED PLANS 0 1 2 3

CU 05
EA 445901

DISREGARD PRINTS BEARING EARLIER REVISION DATES

REVISION DATES: 3-23-09 4-14-09 4-28-09 6-13-09

SHEET 11 OF 129

FILE => 49-0111-d-dc01.dgn

USERNAME => trmikesl DATE PLOTTED => 15-DEC-2009 TIME PLOTTED => 12:28

DIST	COUNTY	ROUTE	POST MILES TOTAL PROJECT	SHEET No	TOTAL SHEETS
05	SB,SLO	101	91.0,0.0/0.8	182	299

Pete W. Norboe 8-3-09
REGISTERED CIVIL ENGINEER DATE

11-2-09
PLANS APPROVAL DATE

REGISTERED PROFESSIONAL ENGINEER
Pete Norboe
No. C57519
Exp. 12-31-09
CIVIL
STATE OF CALIFORNIA

The State of California or its officers or agents shall not be responsible for the accuracy or completeness of electronic copies of this plan sheet.

Notes:

× - 5 ft intervals station line
- Contour do not include camber
- Contour intervals = 0.5 ft

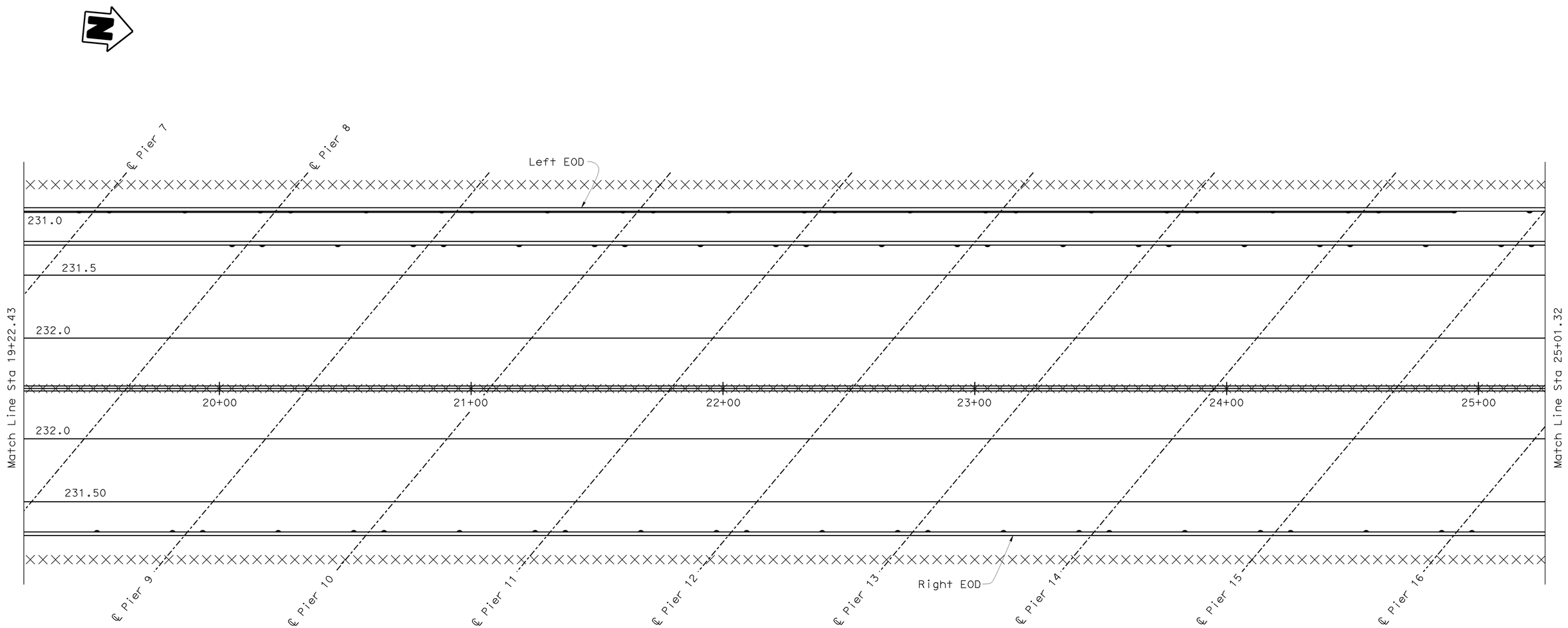

PLAN
1" = 20'

	BY	CHECKED
DESIGN	Rosa Candiotti	Pete Norboe
DETAILS	D. Elliott	Pete Norboe
QUANTITIES	Rosa Candiotti	Pete Norboe

STATE OF CALIFORNIA
DEPARTMENT OF TRANSPORTATION

DIVISION OF ENGINEERING SERVICES
STRUCTURE DESIGN
DESIGN BRANCH 9

BRIDGE NO. 49-0111
POST MILE SLO 0.0/0.4

SANTA MARIA RIVER BRIDGE (WIDEN)
DECK CONTOURS NO. 2

STRUCTURES DESIGN DETAIL SHEET (ENGLISH) (REV. 10/25/05)

ORIGINAL SCALE IN INCHES FOR REDUCED PLANS 0 1 2 3

CU 05
EA 445901

DISREGARD PRINTS BEARING EARLIER REVISION DATES
REVISION DATES: 4-14-09 4-29-09 6-13-09

SHEET 12 OF 129

FILE => 49-0111-d-dc02.dgn

USERNAME => trmikesl DATE PLOTTED => 15-DEC-2009 TIME PLOTTED => 12:28

DIST	COUNTY	ROUTE	POST MILES TOTAL PROJECT	SHEET No	TOTAL SHEETS
05	SB,SLO	101	91.0,0.0/0.8	183	299

Pete W. Norboe 8-3-09
REGISTERED CIVIL ENGINEER DATE

11-2-09
PLANS APPROVAL DATE

REGISTERED PROFESSIONAL ENGINEER
Pete Norboe
No. C57519
Exp. 12-31-09
CIVIL
STATE OF CALIFORNIA

The State of California or its officers or agents shall not be responsible for the accuracy or completeness of electronic copies of this plan sheet.

Notes:

× - 5 ft intervals station line

- Contour do not include camber

- Contour intervals = 0.5 ft

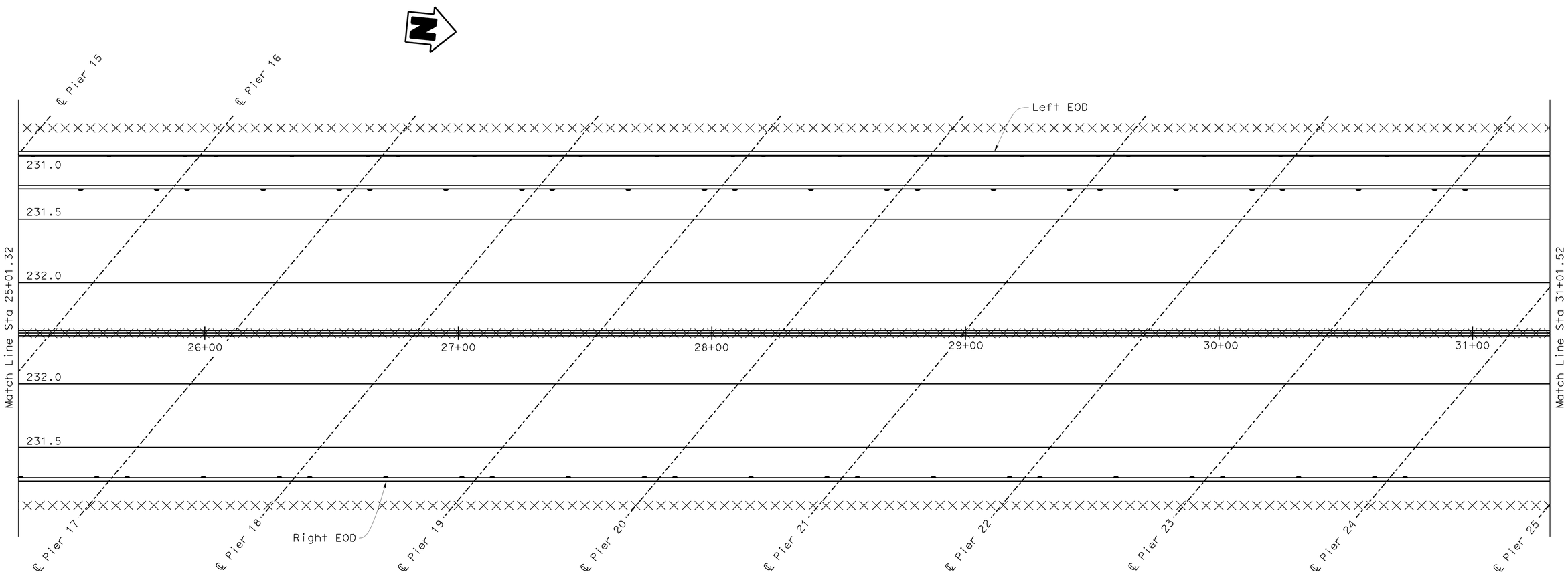

PLAN

1" = 20'

DESIGN	BY Rosa Candiotti	CHECKED Pete Norboe
DETAILS	BY D. Elliott	CHECKED Pete Norboe
QUANTITIES	BY Rosa Candiotti	CHECKED Pete Norboe

STATE OF CALIFORNIA
DEPARTMENT OF TRANSPORTATION

DIVISION OF ENGINEERING SERVICES
STRUCTURE DESIGN
DESIGN BRANCH 9

BRIDGE NO. 49-0111
POST MILE SLO 0.0/0.4

SANTA MARIA RIVER BRIDGE (WIDEN)
DECK CONTOURS NO. 3

STRUCTURES DESIGN DETAIL SHEET (ENGLISH) (REV. 10/25/05)

ORIGINAL SCALE IN INCHES FOR REDUCED PLANS 0 1 2 3

CU 05
EA 445901

DISREGARD PRINTS BEARING EARLIER REVISION DATES

REVISION DATES: 4-13-09 4-20-09 6-15-09 7-31-09

SHEET 13 OF 129

FILE => 49-0111-d-dc03.dgn

USERNAME => trmrkes1 DATE PLOTTED => 15-DEC-2009 TIME PLOTTED => 12:28

DIST	COUNTY	ROUTE	POST MILES TOTAL PROJECT	SHEET No	TOTAL SHEETS
05	SB,SLO	101	91.0,0.0/0.8	184	299

Pete W. Norboe 8-3-09
REGISTERED CIVIL ENGINEER DATE

11-2-09
PLANS APPROVAL DATE

REGISTERED PROFESSIONAL ENGINEER
Pete Norboe
No. C57519
Exp. 12-31-09
CIVIL
STATE OF CALIFORNIA

The State of California or its officers or agents shall not be responsible for the accuracy or completeness of electronic copies of this plan sheet.

Notes:

× - 5 ft intervals station line
- Contour do not include camber
- Contour intervals = 0.5 ft

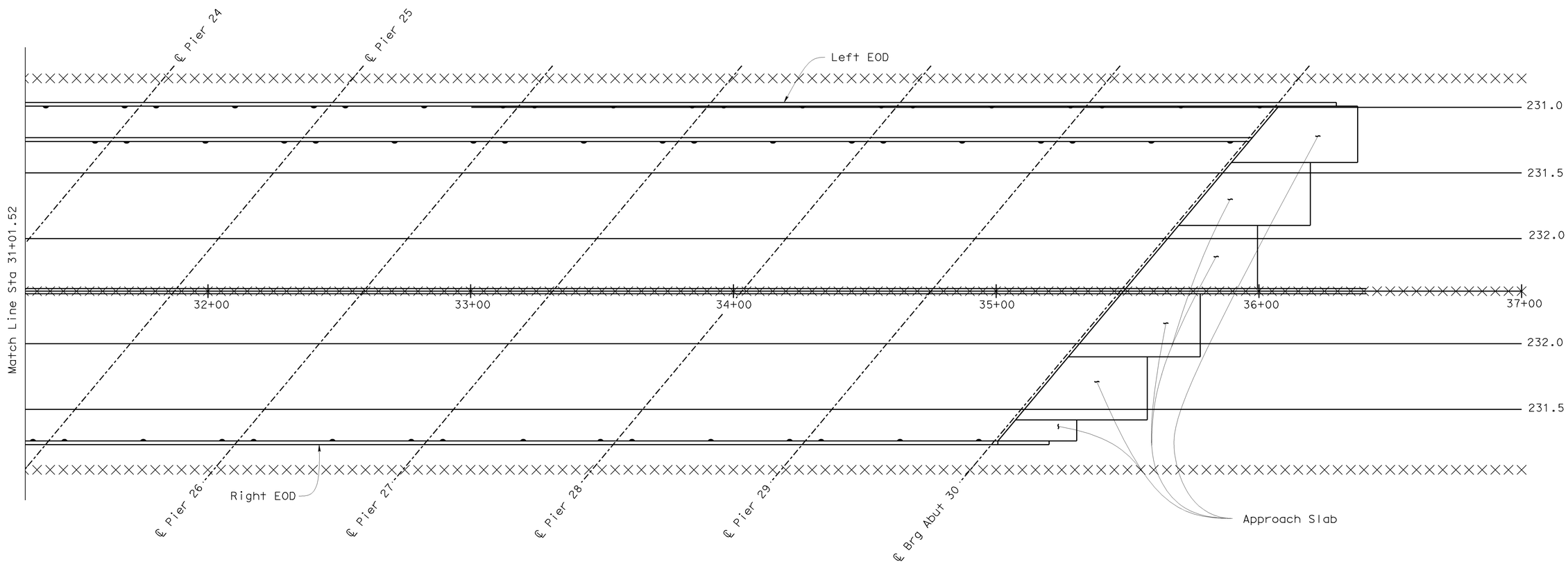

PLAN
1" = 20'

DESIGN	BY Rosa Candiotti	CHECKED Pete Norboe	
DETAILS	BY D. Elliott	CHECKED Pete Norboe	
QUANTITIES	BY Rosa Candiotti	CHECKED Pete Norboe	

STATE OF CALIFORNIA
DEPARTMENT OF TRANSPORTATION

DIVISION OF ENGINEERING SERVICES
STRUCTURE DESIGN
DESIGN BRANCH 9

BRIDGE NO. 49-0111
POST MILE SLO 0.0/0.4

SANTA MARIA RIVER BRIDGE (WIDEN)
DECK CONTOURS NO. 4

STRUCTURES DESIGN DETAIL SHEET (ENGLISH) (REV. 10/25/05)

ORIGINAL SCALE IN INCHES FOR REDUCED PLANS 0 1 2 3

CU 05
EA 445901

DISREGARD PRINTS BEARING EARLIER REVISION DATES

REVISION DATES: 4-17-09 4-29-09 6-12-09 7-14-09

SHEET 14 OF 129

FILE => 49-0111-d-dc04.dgn

USERNAME => trmikest DATE PLOTTED => 15-DEC-2009 TIME PLOTTED => 12:28

DIST	COUNTY	ROUTE	POST MILES TOTAL PROJECT	SHEET No	TOTAL SHEETS
05	SB SLO	101	91.0,0.0/0.8	185	299

Pete W. Norboe 8-3-09
REGISTERED CIVIL ENGINEER DATE

11-2-09
PLANS APPROVAL DATE

REGISTERED PROFESSIONAL ENGINEER Pete Norboe No. C57519 Exp. 12-31-2009 CIVIL STATE OF CALIFORNIA

The State of California or its officers or agents shall not be responsible for the accuracy or completeness of electronic copies of this plan sheet.

HYDROLOGIC SUMMARY

DRAINAGE AREA: x SQUARE MILES

	MAX DAILY RELEASE	ALLOWED BASE FLOOD	ORDINARY HIGHWATER ESTIMATE
FREQUENCY (YEARS)	50-yr	100-yr	N/A
EXISTING WATER SURFACE ELEV. (FEET)	55,500	74,000	N/A
DISCHARGE (CUBIC FEET PER SECOND)	209.1	210.1	N/A

FLOOD PLAIN DATA ARE BASED UPON INFORMATION AVAILABLE WHEN THE PLANS WERE PREPARED AND ARE SHOWN TO MEET FEDERAL REQUIREMENTS. THE ACCURACY OF SAID INFORMATION IS NOT WARRANTED BY THE STATE AND INTERESTED OR AFFECTED PARTIES SHOULD MAKE THEIR OWN INVESTIGATIONS.

Bridge Location (Existing Br: #49-0111L)

① - 48.98 Lt. ℄ Exist Rte 101, Sta.15+0.78, Elev.=231.84 ±
② - 21.59 Lt. ℄ Exist Rte 101, Sta.14+76.11, Elev.=231.28±

Bridge Location (Existing Br: #49-0111R)

③ - 21.06 Rt. ℄ Exist Rte 101, Sta.14+37.80, Elev.=231.35 ±
④ - 48.64 Rt. ℄ Exist Rte 101, Sta.14+12.77, Elev.=230.81 ±

CURVE DATA

No.	R	Δ	T	L
Ⓐ	6000.09	6°8'32"	321.92	643.22
Ⓑ	5000.00	39°25'19"	1791.24	3440.21'

PM18
N 2190115.76
E 5832753.86
EL.=226.87

LEGEND:

- CISS NPS 48 x 0.75 Pile (New), (Existing Piles not Shown)
- CISS NPS 24 x 0.50 Pile (New),
- Denotes Bottom of Footing Elevation

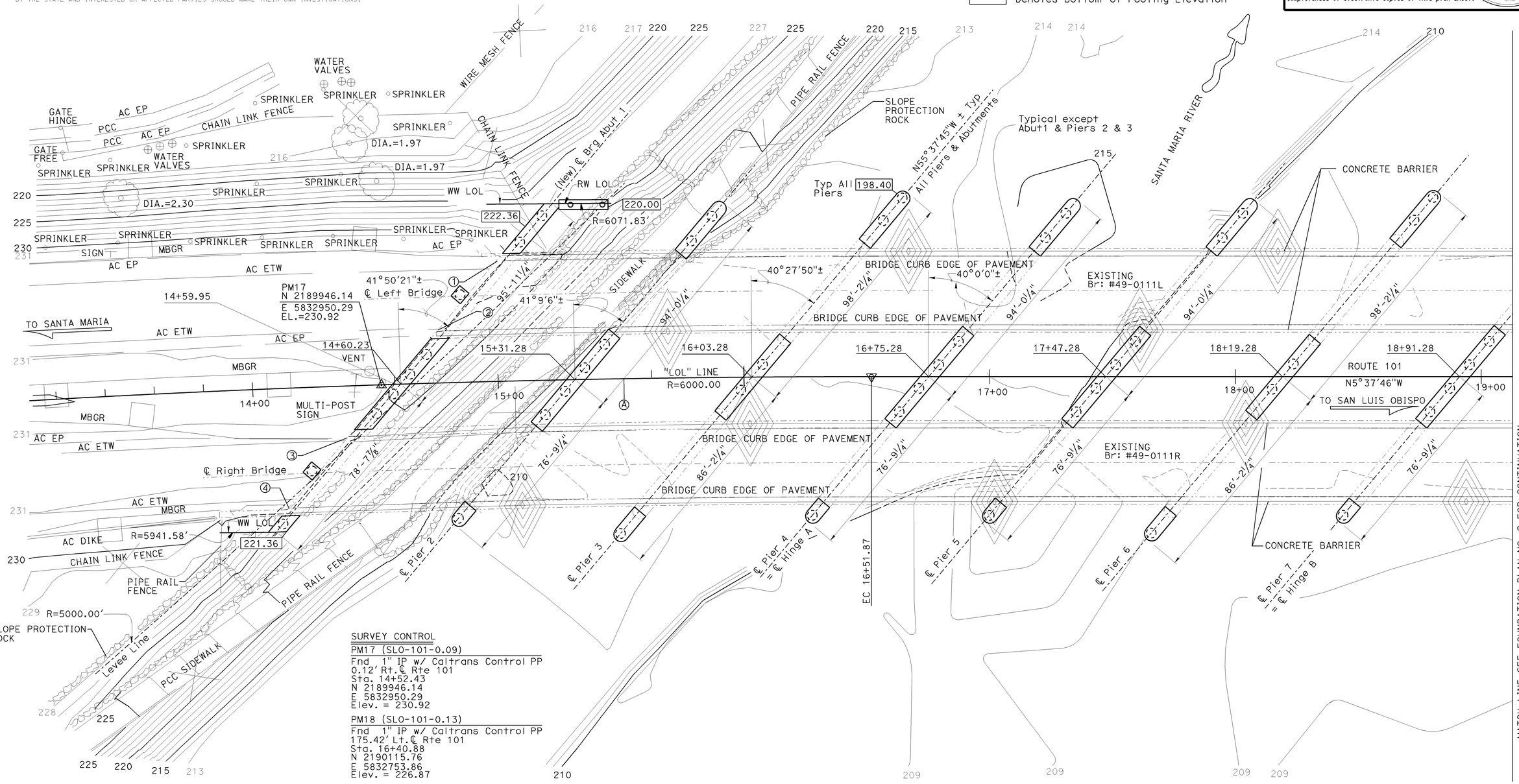

SURVEY CONTROL

PM17 (SLO-101-0.09)

Fnd 1" IP w/ Caltrans Control PP
0.12' Rt. ℄ Rte 101
Sta. 14+52.43
N 2189946.14
E 5832950.29
Elev. = 230.92

PM18 (SLO-101-0.13)

Fnd 1" IP w/ Caltrans Control PP
175.42' Lt. ℄ Rte 101
Sta. 16+40.88
N 2190115.76
E 5832753.86
Elev. = 226.87

PRELIMINARY INVESTIGATION SECTION					
SCALE 1:20	VERT.DATUM NAVD 88	PHOTOGRAMMETRY AS OF: X			
	HORZ.DATUM NAD 83	SURVEYED	BY DISTRICT	CHECKED	BY M. LICHA/ E. LOPEZ
ALIGNMENT TIES	DISTR.TRAVERSE SHEET	DRAFTED	BY Y. ZHANG 04/2007	CHECKED	BY T.ZOLNIKOVA 04/2007

	BY	CHECKED
DESIGN	Rosa Candiotti	Pete Norboe
DETAILS	Rania Heider	Pete Norboe
QUANTITIES	Rosa Candiotti	Pete Norboe

STATE OF CALIFORNIA
DEPARTMENT OF TRANSPORTATION

DIVISION OF ENGINEERING SERVICES
STRUCTURE DESIGN
DESIGN BRANCH 9

BRIDGE NO. 49-0111
POST MILE SLO 0.0/0.4

SANTA MARIA RIVER BRIDGE (WIDEN)
FOUNDATION PLAN NO. 1

STRUCTURES FOUNDATION PLAN SHEET (ENGLISH) (REV. 10/25/05)

ORIGINAL SCALE IN INCHES FOR REDUCED PLANS 0 1 2 3

CU 05
EA 445901

DISREGARD PRINTS BEARING EARLIER REVISION DATES

REVISION DATES: 4/11/2007 8/24/2007 2/11/2009 3/9/2009 4-14-09 6-14-09 7-14-09 7-28-09

SHEET 15 OF 129

FILE => 49-0111-e-fp01.dgn

USERNAME => trmikest DATE PLOTTED => 15-DEC-2009 TIME PLOTTED => 12:28

DIST	COUNTY	ROUTE	POST MILES TOTAL PROJECT	SHEET No	TOTAL SHEETS
05	SB,SLO	101	91.0,0.0/0.8	186	299

Pete W. Norboe 8-3-09
REGISTERED CIVIL ENGINEER DATE

11-2-09
PLANS APPROVAL DATE

REGISTERED PROFESSIONAL ENGINEER
PETE NORBOE
No. C57519
Exp. 12-31-2009
CIVIL
STATE OF CALIFORNIA

The State of California or its officers or agents shall not be responsible for the accuracy or completeness of electronic copies of this plan sheet.

LEGEND:

CISS NPS 48 x 0.75 Pile (New), (Existing Piles not Shown)

Denotes Bottom of Footing Elevation

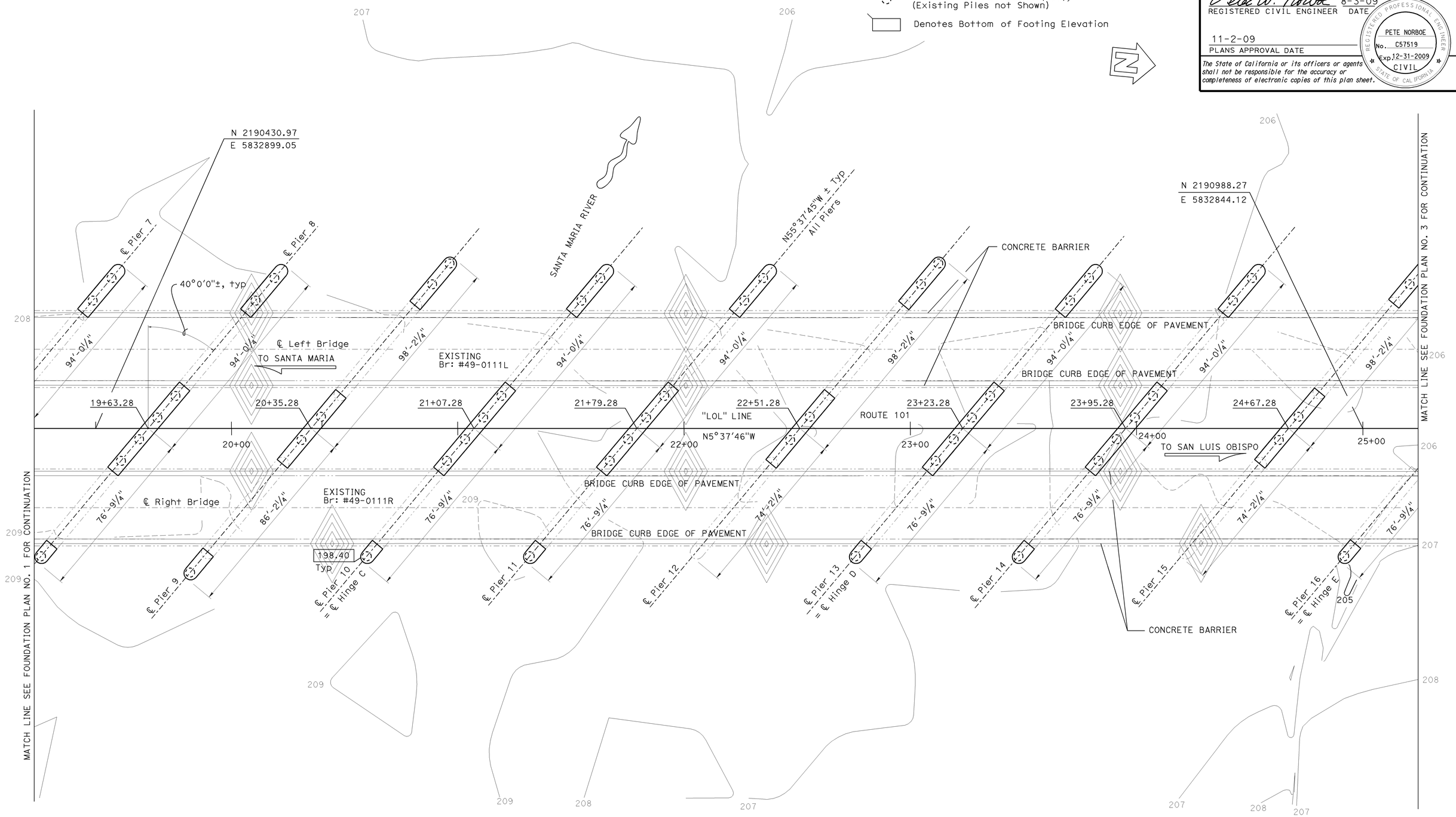

PRELIMINARY INVESTIGATION SECTION					
SCALE 1:20	VERT.DATUM NAVD 88	PHOTOGRAMMETRY AS OF: X			
	HORZ.DATUM NAD 83	SURVEYED	BY DISTRICT	CHECKED	BY M. LICHA/ E. LOPEZ
ALIGNMENT TIES DISTR.TRAVERSE SHEET		DRAFTED	BY Y. ZHANG 04/2007	CHECKED	BY T.ZOLNIKOVA 04/2007

	BY	CHECKED
DESIGN	Rosa Candiotti	Pete Norboe
DETAILS	Rania Heider	Pete Norboe
QUANTITIES	Rosa Candiotti	Pete Norboe

STATE OF CALIFORNIA
DEPARTMENT OF TRANSPORTATION

DIVISION OF ENGINEERING SERVICES
STRUCTURE DESIGN
DESIGN BRANCH 9

BRIDGE NO. 49-0111
POST MILE SLO 0.0/0.4

SANTA MARIA RIVER BRIDGE (WIDEN)
FOUNDATION PLAN NO. 2

STRUCTURES FOUNDATION PLAN SHEET (ENGLISH) (REV. 10/25/05)

ORIGINAL SCALE IN INCHES FOR REDUCED PLANS 0 1 2 3

CU 05
EA 445901

DISREGARD PRINTS BEARING EARLIER REVISION DATES

REVISION DATES: 4-11-2007 2-11-2008 3-10-2008 8-14-09 6-14-09 7-28-09

SHEET 16 OF 129

FILE => 49-0111-e-fp02.dgn

USERNAME => trmikesl DATE PLOTTED => 15-DEC-2009 TIME PLOTTED => 12:28

DIST	COUNTY	ROUTE	POST MILES TOTAL PROJECT	SHEET No	TOTAL SHEETS
05	SB,SLO	101	91.0,0.0/0.8	187	299

Pete W. Norboe 8-3-09
REGISTERED CIVIL ENGINEER DATE

11-2-09
PLANS APPROVAL DATE

REGISTERED PROFESSIONAL ENGINEER PETE NORBOE No. C57519 Exp. 12-31-2009 CIVIL STATE OF CALIFORNIA

The State of California or its officers or agents shall not be responsible for the accuracy or completeness of electronic copies of this plan sheet.

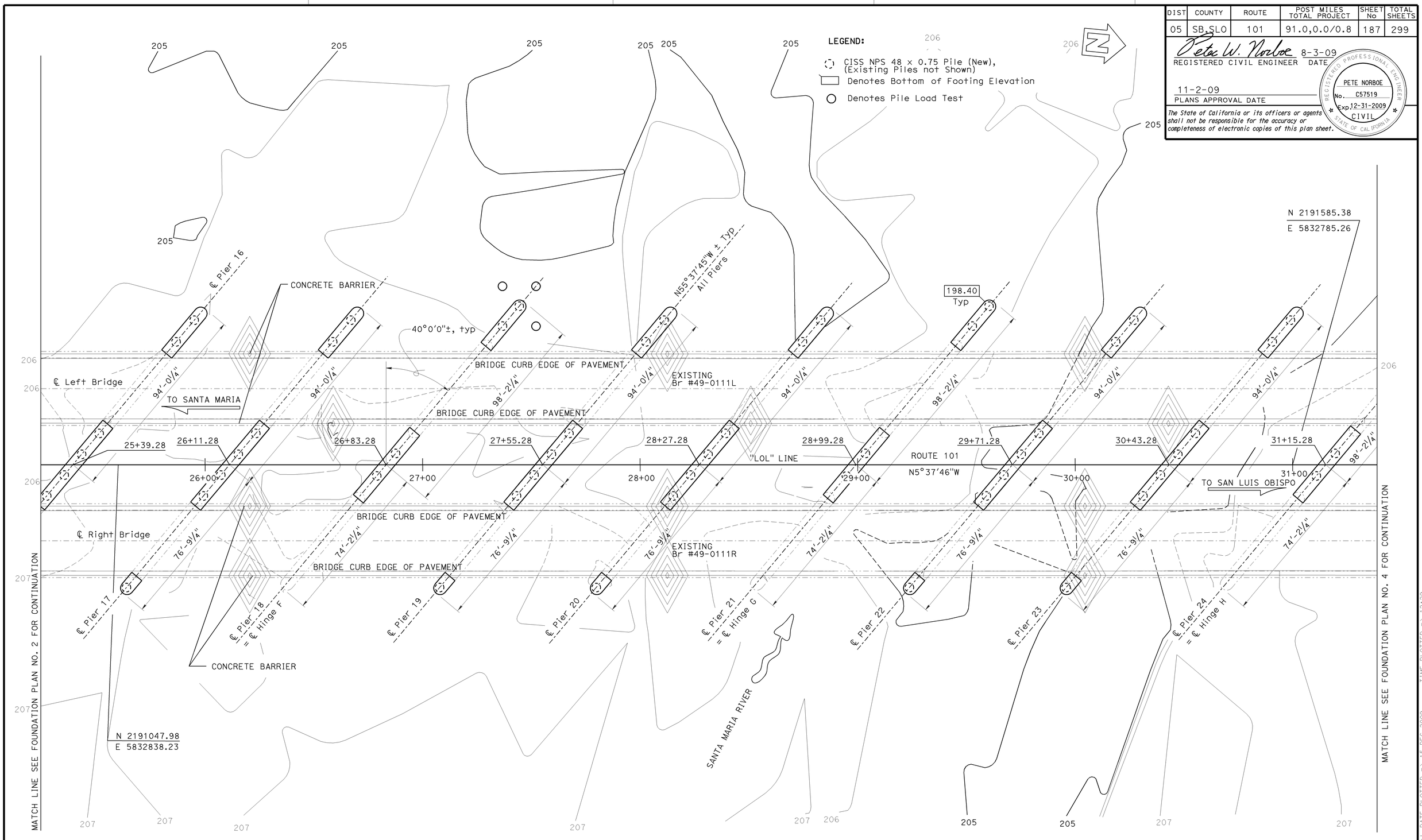

PRELIMINARY INVESTIGATION SECTION							
SCALE 1:20	VERT.DATUM NAVD 88	PHOTOGRAMMETRY AS OF: X					
	HORZ.DATUM NAD 83	SURVEYED	BY DISTRICT	CHECKED	BY M. LICHA/ E. LOPEZ		
ALIGNMENT TIES DISTR.TRAVERSE SHEET		DRAFTED	BY Y. ZHANG 04/2007	CHECKED	BY T.ZOLNIKOVA 04/2007		

	BY	CHECKED
DESIGN	Rosa Candiotti	Pete Norboe
DETAILS	Rania Heider	Pete Norboe
QUANTITIES	Rosa Candiotti	Pete Norboe

STATE OF CALIFORNIA
DEPARTMENT OF TRANSPORTATION

DIVISION OF ENGINEERING SERVICES
STRUCTURE DESIGN
DESIGN BRANCH 9

BRIDGE NO. 49-0111
POST MILE SLO 0.0/0.4

SANTA MARIA RIVER BRIDGE (WIDEN)
FOUNDATION PLAN NO. 3

STRUCTURES FOUNDATION PLAN SHEET (ENGLISH) (REV. 10/25/05)

ORIGINAL SCALE IN INCHES FOR REDUCED PLANS 0 1 2 3

CU 05
EA 445901

DISREGARD PRINTS BEARING EARLIER REVISION DATES

REVISION DATES: 4/11/2007 2/18/2009 3/10/2009 4-14-09 4-29-09 6-14-09 7-28-09

SHEET 17 OF 129

USERNAME => trmihkes1 DATE PLOTTED => 15-DEC-2009 TIME PLOTTED => 12:23

FILE => 49-0111-e-fp03.dgn

DIST	COUNTY	ROUTE	POST MILES TOTAL PROJECT	SHEET No	TOTAL SHEETS
05	SB,SLO	101	91.0,0.0/0.8	188	299

Pete W. Norboe 8-3-09
REGISTERED CIVIL ENGINEER DATE

11-2-09
PLANS APPROVAL DATE

The State of California or its officers or agents shall not be responsible for the accuracy or completeness of electronic copies of this plan sheet.

REGISTERED PROFESSIONAL ENGINEER PETE NORBOE No. C57519 Exp. 12-31-2009 CIVIL STATE OF CALIFORNIA

Bridge Location (Existing Br: #49-0111L)
⑤ - 48.91 Lt. ℄ Exist Rte 101, Sta.35+90.45, Elev.=230.94 ±
⑥ - 21.03 Lt. ℄ Exist Rte 101, Sta.35+66.25, Elev.=231.40 ±

Bridge Location (Existing Br: #49-0111R)
⑦ - 19.03 Rt. ℄ Exist Rte 101, Sta.35+31.59, Elev.=232.26 ±
⑧ - 50.76 Rt. ℄ Exist Rte 101, Sta.35+06.03, Elev.=231.84 ±

LEGEND:

CISS NPS 48 x 0.75 Pile (New), (Existing Piles not Shown)

Denotes Bottom of Footing Elevation

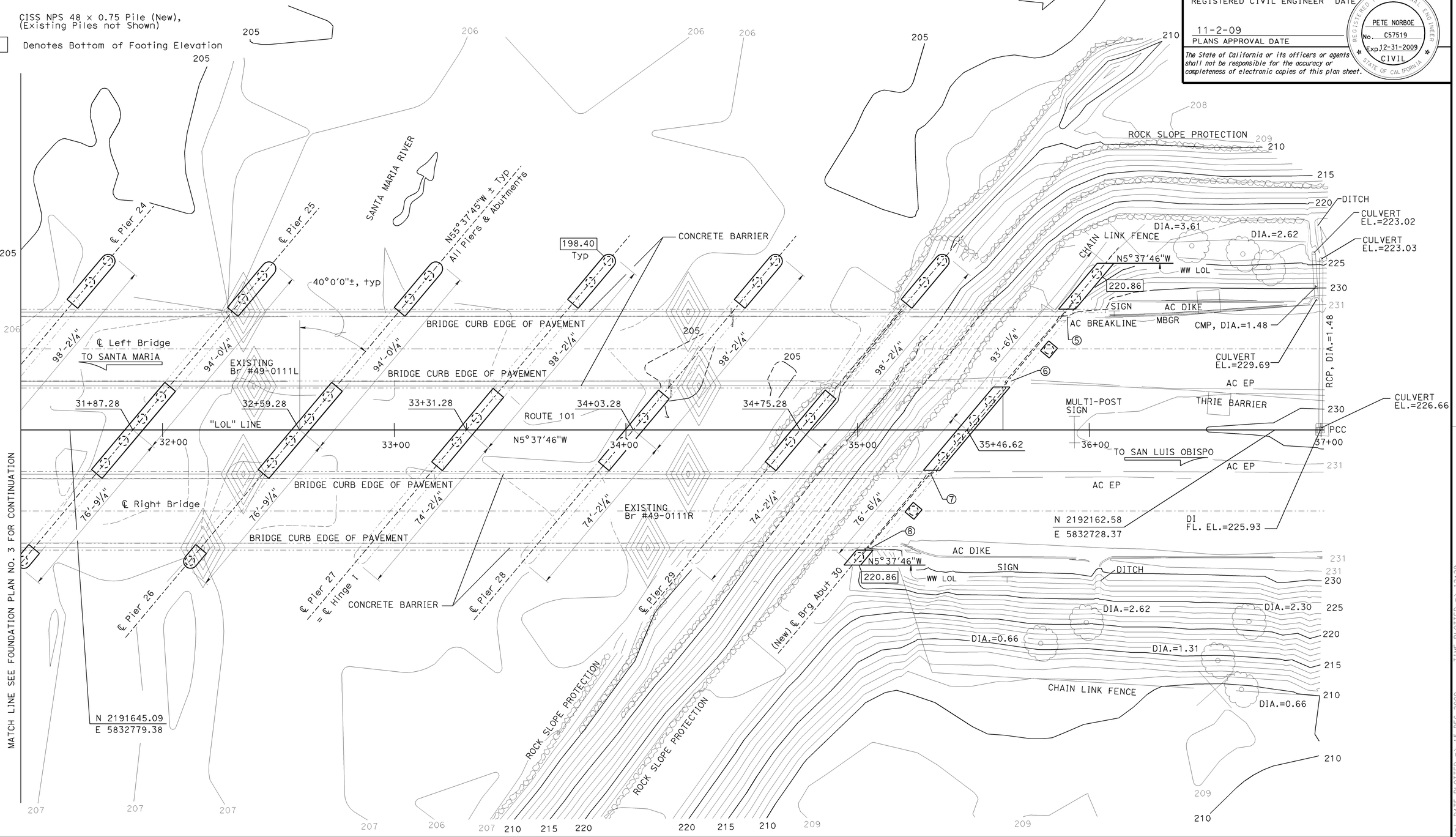

PRELIMINARY INVESTIGATION SECTION							
SCALE	VERT.DATUM NAVD 88	PHOTOGRAMMETRY AS OF: X					
1:20	HORZ.DATUM NAD 83	SURVEYED	BY DISTRICT	CHECKED	BY M. LICHA/ E. LOPEZ		
ALIGNMENT TIES DISTR.TRAVERSE SHEET		DRAFTED	BY Y. ZHANG 04/2007	CHECKED	BY T.ZOLNIKOVA 04/2007		

	BY	CHECKED
DESIGN	Rosa Candiotti	Pete Norboe
DETAILS	Rania Heider	Pete Norboe
QUANTITIES	Rosa Candiotti	Pete Norboe

STATE OF CALIFORNIA
DEPARTMENT OF TRANSPORTATION

DIVISION OF ENGINEERING SERVICES
STRUCTURE DESIGN
DESIGN BRANCH 9

BRIDGE NO. 49-0111
POST MILE SLO 0.0/0.4

SANTA MARIA RIVER BRIDGE (WIDEN)
FOUNDATION PLAN NO. 4

STRUCTURES FOUNDATION PLAN SHEET (ENGLISH) (REV. 10/25/05)

ORIGINAL SCALE IN INCHES FOR REDUCED PLANS 0 1 2 3

CU 05
EA 445901

DISREGARD PRINTS BEARING EARLIER REVISION DATES

REVISION DATES: 4/11/2007 2/15/2008 3/11/2009 4-14-09 6-14-09 7-28-09

SHEET 18 OF 129

FILE => 49-0111-e-fp04.dgn

USERNAME => trmihes1 DATE PLOTTED => 15-DEC-2009 TIME PLOTTED => 12:23

DIST	COUNTY	ROUTE	POST MILES TOTAL PROJECT	SHEET No	TOTAL SHEETS
05	SB,SLO	101	91.0,0.0/0.8	189	299

Pete W. Norboe 8-3-09
REGISTERED CIVIL ENGINEER DATE

11-2-09
PLANS APPROVAL DATE

REGISTERED PROFESSIONAL ENGINEER Pete Norboe No. C57519 Exp. 12-31-09 CIVIL STATE OF CALIFORNIA

The State of California or its officers or agents shall not be responsible for the accuracy or completeness of electronic copies of this plan sheet.

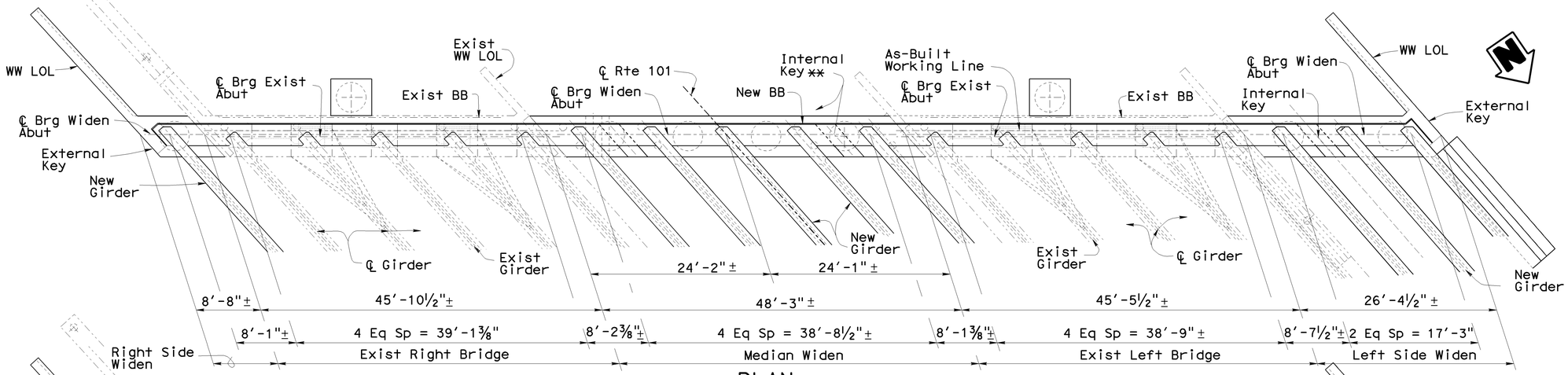

PLAN GIRDER LEVEL
⅛" = 1'-0"

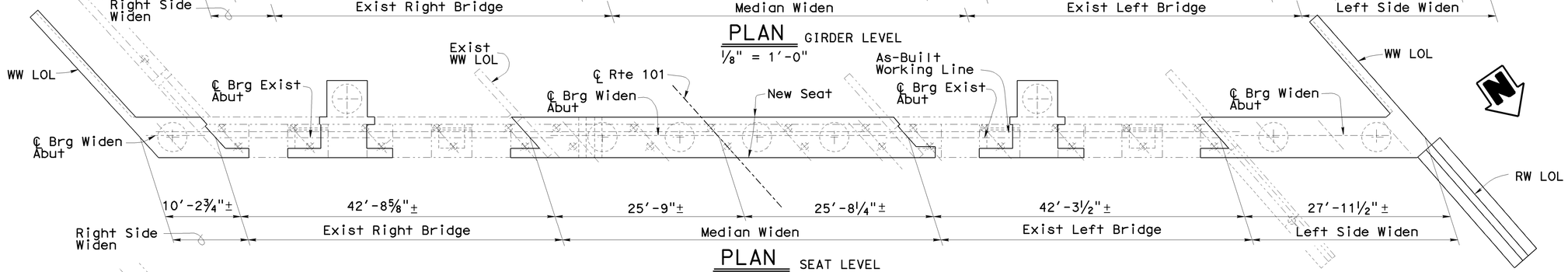

PLAN SEAT LEVEL
⅛" = 1'-0"

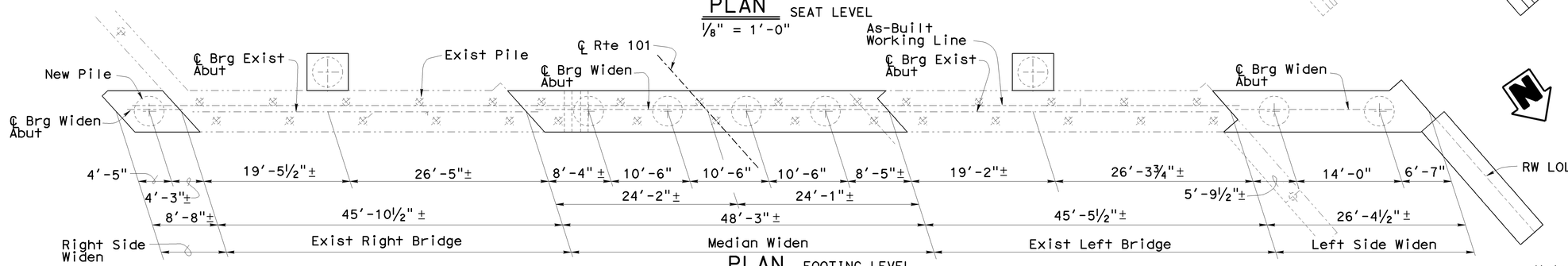

PLAN FOOTING LEVEL
⅛" = 1'-0"

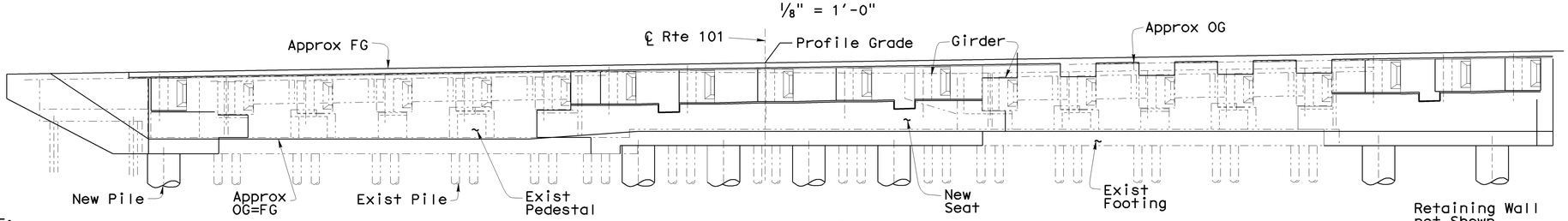

ELEVATION
⅛" = 1'-0"

Concrete Barriers not Shown
Weep Holes Not Shown

NOTE:
THE CONTRACTOR SHALL VERIFY ALL CONTROLLING FIELD DIMENSIONS BEFORE ORDERING OR FABRICATING ANY MATERIAL.

Notes:

1. For Abutment Diaphragm Details, see "Abutment Details No. 1" and "Abutment Details No. 2" sheets.
2. For Abutment Seat Details, see "Abutment Details No. 3" and "Abutment Details No. 4" sheets.
3. For Abutment Footing Details, see "Abutment Details No. 5" and "Abutment Details No. 6" sheets.
4. For Additional Details, see "Abutment Details No. 7" Through "Abutment Details No. 10" sheets.

Denotes Existing Structure
Denotes New Construction

	BY	CHECKED
DESIGN	M. VAN DE POL	Kimberly Mori
DETAILS	M. VAN DE POL	Kimberly Mori
QUANTITIES	M. VAN DE POL	Kimberly Mori

STATE OF CALIFORNIA
DEPARTMENT OF TRANSPORTATION

DIVISION OF ENGINEERING SERVICES
STRUCTURE DESIGN
DESIGN BRANCH 9

BRIDGE NO. 49-0111
POST MILE SLO 0.0/0.4

SANTA MARIA RIVER BRIDGE (WIDEN)
ABUTMENT 1 LAYOUT

STRUCTURES DESIGN DETAIL SHEET (ENGLISH) (REV. 10/25/05)

ORIGINAL SCALE IN INCHES FOR REDUCED PLANS 0 1 2 3

CU 05
EA 445901

DISREGARD PRINTS BEARING EARLIER REVISION DATES

REVISION DATES: 02-26-09 4-14-09 7-28-09

SHEET 19 OF 129

FILE => 49-0111-f-abut01_lo.dgn

USERNAME => trmikesl DATE PLOTTED => 15-DEC-2009 TIME PLOTTED => 12:29

DIST	COUNTY	ROUTE	POST MILES TOTAL PROJECT	SHEET No	TOTAL SHEETS
05	SB,SLO	101	91.0,0.0/0.8	190	299

Pete W. Norboe 8-3-09
REGISTERED CIVIL ENGINEER DATE

11-2-09
PLANS APPROVAL DATE

REGISTERED PROFESSIONAL ENGINEER Pete Norboe No. C57519 Exp. 12-31-09 CIVIL STATE OF CALIFORNIA

The State of California or its officers or agents shall not be responsible for the accuracy or completeness of electronic copies of this plan sheet.

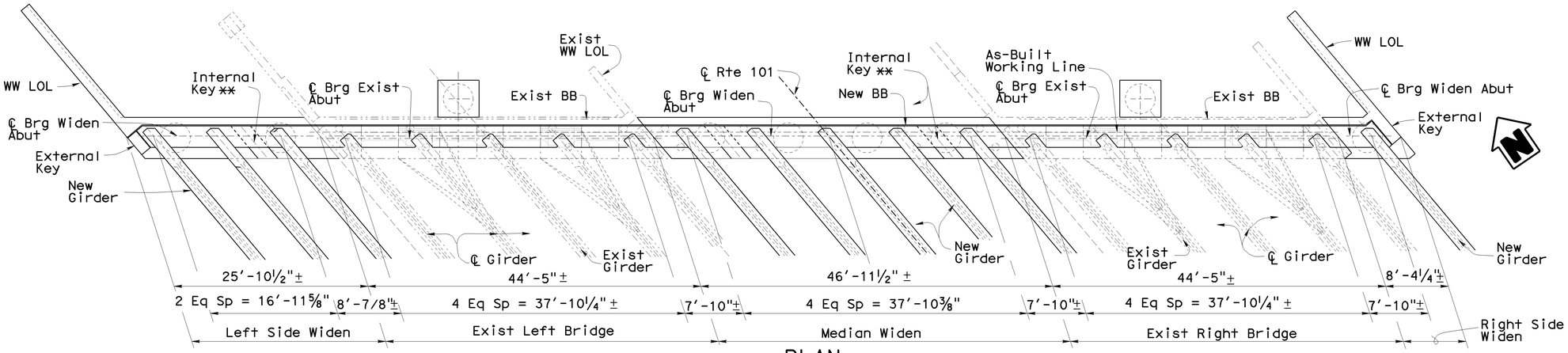

PLAN
⅛" = 1'-0" GIRDER LEVEL

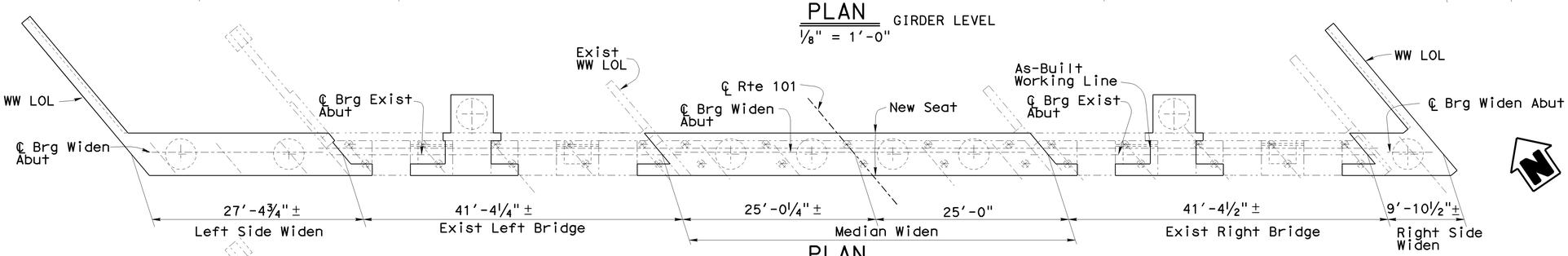

PLAN
⅛" = 1'-0" SEAT LEVEL

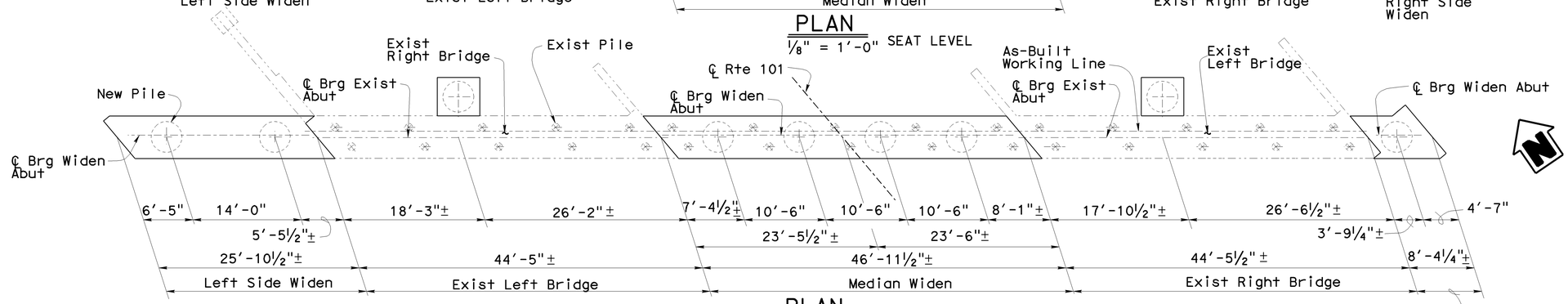

PLAN
⅛" = 1'-0" FOOTING LEVEL

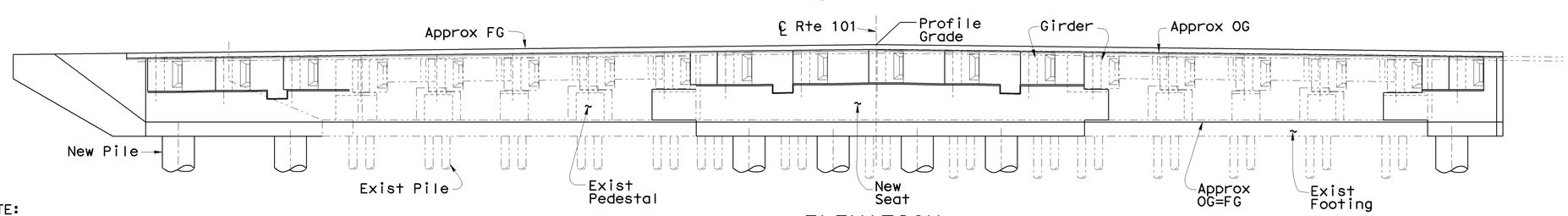

ELEVATION
⅛" = 1'-0"

Concrete Barriers not Shown
Weep Holes Not Shown

NOTE:
THE CONTRACTOR SHALL VERIFY ALL CONTROLLING FIELD DIMENSIONS BEFORE ORDERING OR FABRICATING ANY MATERIAL.

Notes:

1. For Abutment Diaphragm Details, see "Abutment Details No. 1" and "Abutment Details No. 2" sheets.
2. For Abutment Seat Details, see "Abutment Details No. 3" and "Abutment Details No. 4" sheets.
3. For Abutment Footing Details, see "Abutment Details No. 5" and "Abutment Details No. 6" sheets.
4. For Additional Details, see "Abutment Details No. 7" Through "Abutment Details No. 10" sheets.

** ℄ Bay = ℄ Key

Denotes Existing Structure
Denotes New Construction

	BY	CHECKED
DESIGN	M. VAN DE POL	Kimberly Mori
DETAILS	M. VAN DE POL	Kimberly Mori
QUANTITIES	M. VAN DE POL	Kimberly Mori

STATE OF CALIFORNIA
DEPARTMENT OF TRANSPORTATION

DIVISION OF ENGINEERING SERVICES
STRUCTURE DESIGN
DESIGN BRANCH 9

BRIDGE NO. 49-0111
POST MILE SLO 0.0/0.4

SANTA MARIA RIVER BRIDGE (WIDEN)
ABUTMENT 30 LAYOUT

STRUCTURES DESIGN DETAIL SHEET (ENGLISH) (REV. 10/25/05)

ORIGINAL SCALE IN INCHES FOR REDUCED PLANS 0 1 2 3

CU 05
EA 445901

DISREGARD PRINTS BEARING EARLIER REVISION DATES

REVISION DATES: 02-09-09 4-14-09 7-28-09

SHEET 20 OF 129

FILE => 49-0111-f-abut30_io.dgn

USERNAME => trmikest DATE PLOTTED => 15-DEC-2009 TIME PLOTTED => 12:29

DIST	COUNTY	ROUTE	POST MILES TOTAL PROJECT	SHEET No	TOTAL SHEETS
05	SB,SLO	101	91.0,0.0/0.8	191	299

Pete W. Norboe 8-3-09
REGISTERED CIVIL ENGINEER DATE

11-2-09
PLANS APPROVAL DATE

REGISTERED PROFESSIONAL ENGINEER Pete Norboe No. C57519 Exp. 12-31-10 CIVIL STATE OF CALIFORNIA

The State of California or its officers or agents shall not be responsible for the accuracy or completeness of electronic copies of this plan sheet.

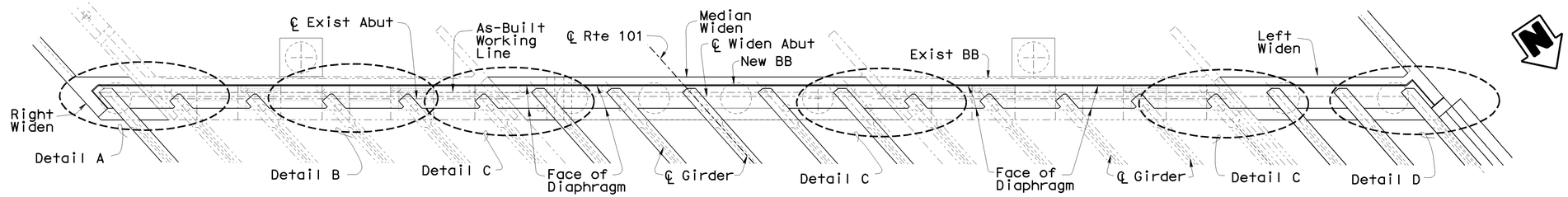

NOTE:
THE CONTRACTOR SHALL VERIFY ALL CONTROLLING FIELD DIMENSIONS BEFORE ORDERING OR FABRICATING ANY MATERIAL.

PART PLAN
1/8" = 1'-0"

Abutment End Diaphragms
Abutment 1 Shown
Abutment 30 Similar

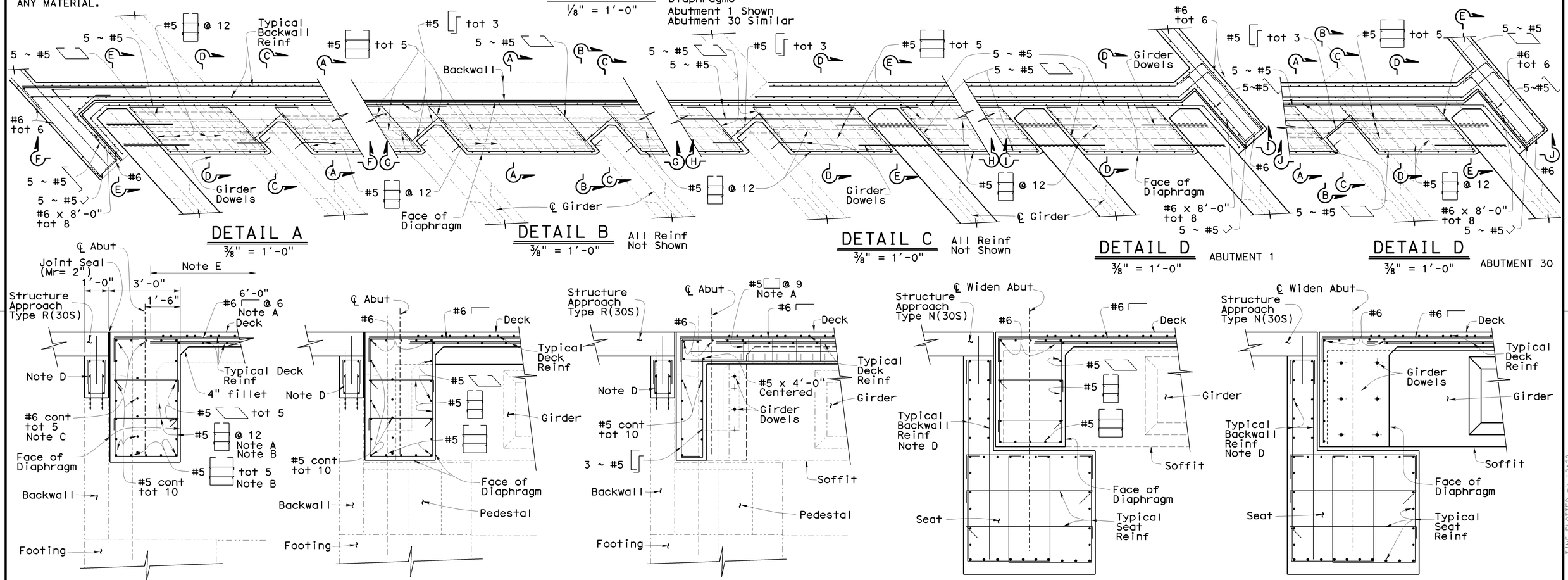

DETAIL A
3/8" = 1'-0"

DETAIL B
3/8" = 1'-0"
All Reinf Not Shown

DETAIL C
3/8" = 1'-0"
All Reinf Not Shown

DETAIL D
3/8" = 1'-0"
ABUTMENT 1

DETAIL D
3/8" = 1'-0"
ABUTMENT 30

SECTION A-A
1/2" = 1'-0"

SECTION B-B
1/2" = 1'-0"
For Details, see "Section A-A"

SECTION C-C
1/2" = 1'-0"
For Details, see "Section A-A"

SECTION D-D
1/2" = 1'-0"
For Details, see "Section A-A"
Pile Not Shown

SECTION E-E
1/2" = 1'-0"
For Details, see "Section A-A"
Pile Not Shown

Note A
Place parallel to ℄ Girder & space along ℄ Brg Abut

Note B
Alternate cross tie hooks. Hook around vertical reinf

Note C
Extend to Edge of Deck and into Closure Pours. Lap Splice at Closure Pours

Note D
For Details, see "Abutment Details No. 3" and "Abutment Details No. 7" Sheets

Note E
Limits of B0-5 5-10 or B0-5 5-11 and distribution bars, see "Abutment Details No. 12" Sheet and "Girder Layout" Sheets

END DIAPHRAGM DETAILS

For Structure Approach Details, see "Structure Approach Type R(30S)" and "Structure Approach Type N(30S)" Sheets

Denotes Existing Structure

Denotes New Construction

For "Joint Protection Details", see "Abutment Details No. 10" sheet

For Additional Details, see "Girder End Details" on "Abutment Details No. 6" Sheet

For Section F-F Through Section J-J, see "Abutment Details No. 2" Sheet

For Additional Details, see "Abutment Details No. 3" and "Abutment Details No. 9" Sheet

	BY	CHECKED
DESIGN	M. VAN DE POL	Kimberly Mori
DETAILS	M. VAN DE POL	Kimberly Mori
QUANTITIES	M. VAN DE POL	Kimberly Mori

STATE OF CALIFORNIA
DEPARTMENT OF TRANSPORTATION

DIVISION OF ENGINEERING SERVICES
STRUCTURE DESIGN
DESIGN BRANCH 9

BRIDGE NO. 49-0111
POST MILE SLO 0.0/0.4

SANTA MARIA RIVER BRIDGE (WIDEN)
ABUTMENT DETAILS NO. 1

STRUCTURES DESIGN DETAIL SHEET (ENGLISH) (REV. 10/25/05)

ORIGINAL SCALE IN INCHES FOR REDUCED PLANS 0 1 2 3

CU 05
EA 445901

DISREGARD PRINTS BEARING EARLIER REVISION DATES

REVISION DATES 02-09-09 4-14-09 7-28-09

SHEET 21 OF 129

FILE => 49-0111-f-abutdet01.dgn

USERNAME => trmikesl DATE PLOTTED => 15-DEC-2009 TIME PLOTTED => 12:29

DIST	COUNTY	ROUTE	POST MILES TOTAL PROJECT	SHEET No	TOTAL SHEETS
05	SB,SLO	101	91.0,0.0/0.8	192	299

Pete W. Norboe 8-3-09
REGISTERED CIVIL ENGINEER DATE

11-2-09
PLANS APPROVAL DATE

REGISTERED PROFESSIONAL ENGINEER Pete Norboe No. C57519 Exp. 12-31-09 CIVIL STATE OF CALIFORNIA

The State of California or its officers or agents shall not be responsible for the accuracy or completeness of electronic copies of this plan sheet.

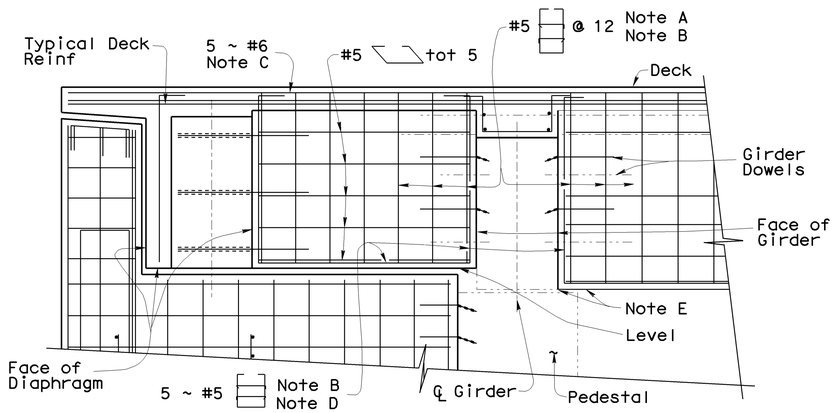

SECTION F-F

½" = 1'-0"

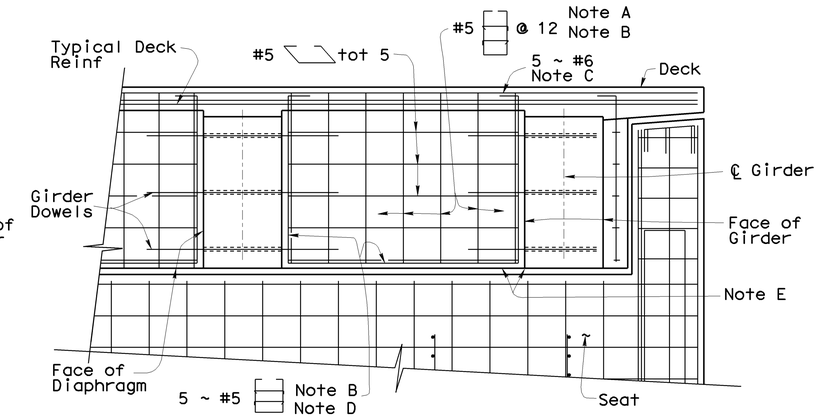

SECTION I-I

½" = 1'-0"

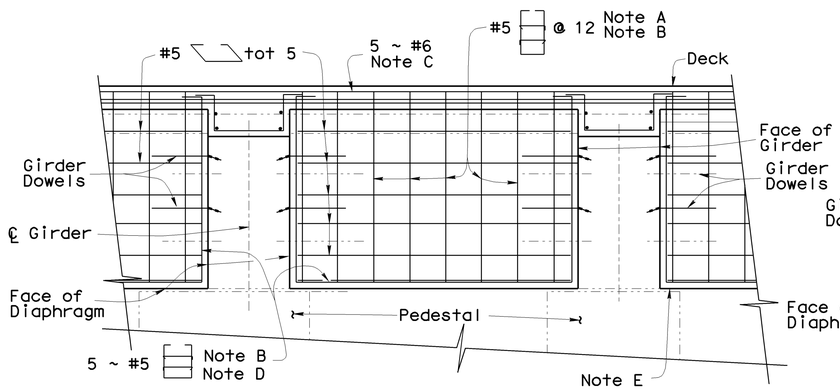

SECTION G-G

½" = 1'-0"

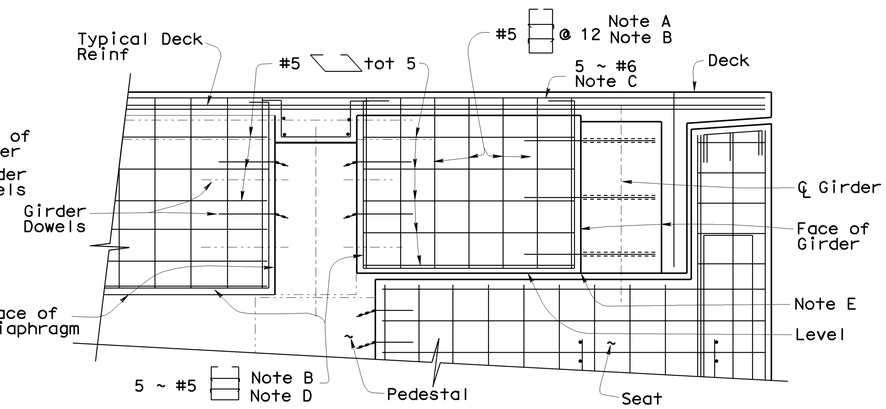

SECTION J-J

½" = 1'-0"

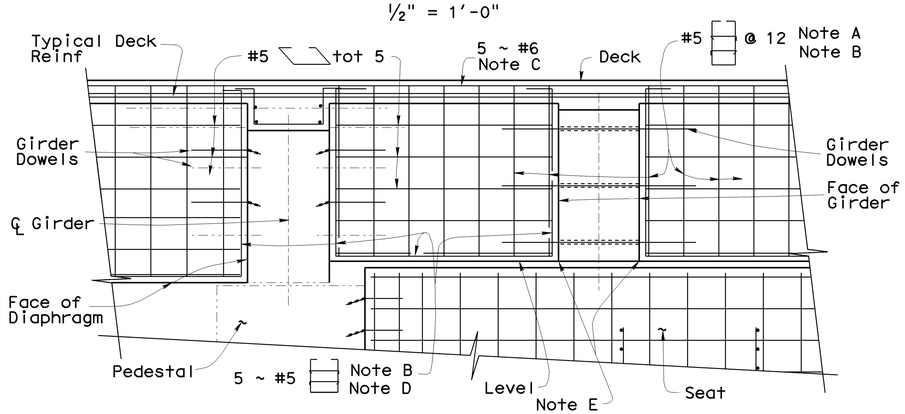

SECTION H-H

½" = 1'-0"

NOTE:
THE CONTRACTOR SHALL VERIFY ALL CONTROLLING FIELD DIMENSIONS BEFORE ORDERING OR FABRICATING ANY MATERIAL.

Note A
Place parallel to ℄ Girder & space along ℄ Brg Abut

Note B
Alternate cross tie hooks. Hook around vertical reinf

Note C
Extend to Edge of Deck and into Closure Pours. Lap Splice at Closure Pours

Note D
Place parallel to ℄ Brg Abut & space along ℄ Girder

Note E
Bottom of End Diaphragm Matches Bottom of Girder

For "Part Elevation Exterior Keys", see "Abutment Details No. 9" Sheet

For Locations of Section F-F Through Section J-J, see "Abutment Details No. 1" Sheet

For Additional Details, see "Girder End Details" Sheet and "Abutment Details No.6" Sheet

For Additional Details, see Other "Abutment Details" Sheets

Denotes Existing Structure

Denotes New Construction

	BY	CHECKED
DESIGN	M. VAN DE POL	Kimberly Mori
DETAILS	M. VAN DE POL	Kimberly Mori
QUANTITIES	M. VAN DE POL	Kimberly Mori

STATE OF CALIFORNIA
DEPARTMENT OF TRANSPORTATION

DIVISION OF ENGINEERING SERVICES
STRUCTURE DESIGN
DESIGN BRANCH 9

BRIDGE NO. 49-0111
POST MILE SLO 0.0/0.4

SANTA MARIA RIVER BRIDGE (WIDEN)
ABUTMENT DETAILS NO. 2

STRUCTURES DESIGN DETAIL SHEET (ENGLISH) (REV. 10/25/05)

ORIGINAL SCALE IN INCHES FOR REDUCED PLANS 0 1 2 3

CU 05
EA 445901

DISREGARD PRINTS BEARING EARLIER REVISION DATES → 02-09-09 4-14-09

REVISION DATES

SHEET 22 OF 129

FILE => 49-0111-f-abutdet02.dgn

USERNAME => trmikesl DATE PLOTTED => 15-DEC-2009 TIME PLOTTED => 12:29

DIST	COUNTY	ROUTE	POST MILES TOTAL PROJECT	SHEET No	TOTAL SHEETS
05	SB,SLO	101	91.0,0.0/0.8	193	299

Pete W. Norboe 8-3-09
REGISTERED CIVIL ENGINEER DATE

11-2-09
PLANS APPROVAL DATE

REGISTERED PROFESSIONAL ENGINEER Pete Norboe No. C57519 Exp. 12-31-09 CIVIL STATE OF CALIFORNIA

The State of California or its officers or agents shall not be responsible for the accuracy or completeness of electronic copies of this plan sheet.

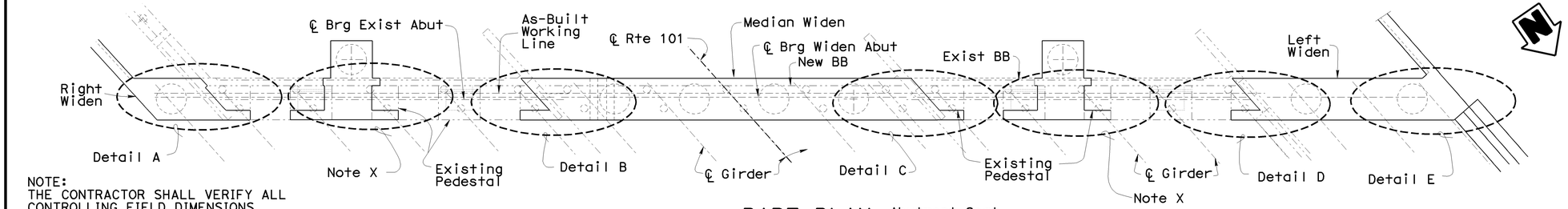

NOTE:
THE CONTRACTOR SHALL VERIFY ALL CONTROLLING FIELD DIMENSIONS BEFORE ORDERING OR FABRICATING ANY MATERIAL.

PART PLAN

1/8" = 1'-0"

Abutment Seat
Abutment 1 Shown
Abutment 30 Similar

Denotes Existing Structure
Denotes New Construction

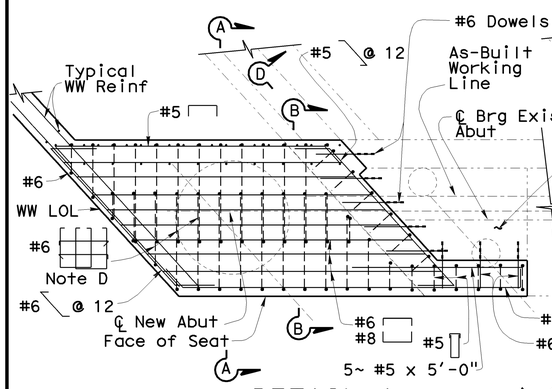

DETAIL A

3/8" = 1'-0"

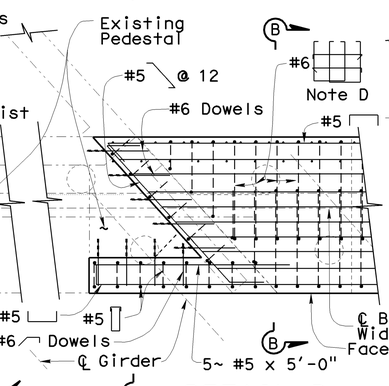

DETAIL B

3/8" = 1'-0"

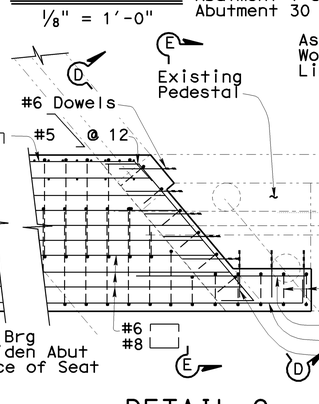

DETAIL C

3/8" = 1'-0"

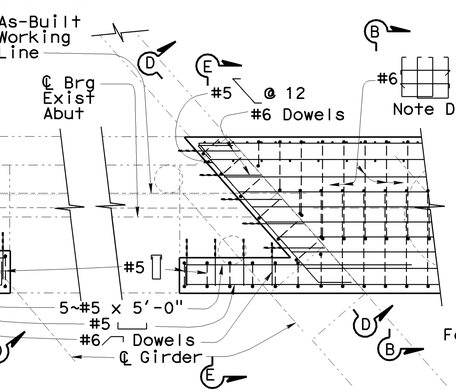

DETAIL D

3/8" = 1'-0"

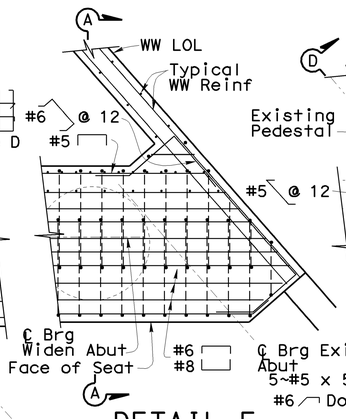

DETAIL E

ABUTMENT 1

3/8" = 1'-0"

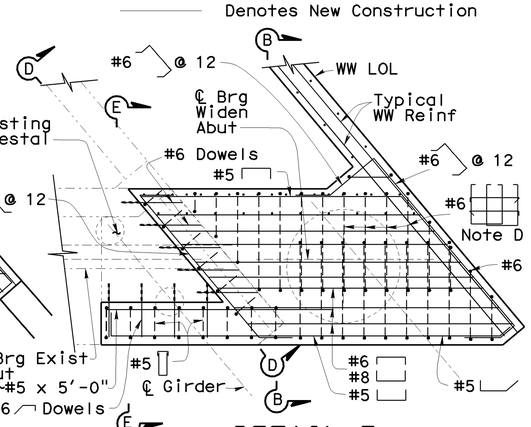

DETAIL E

ABUTMENT 30

3/8" = 1'-0"

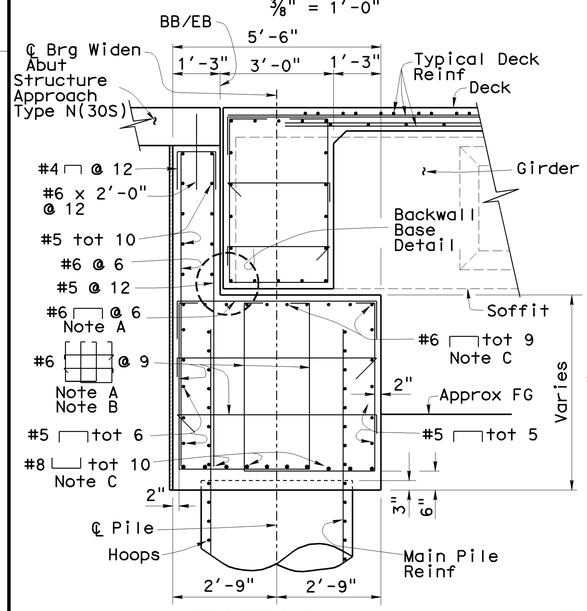

SECTION A-A

1/2" = 1'-0"

Note A
Place Normal to and space along ℄ Brg Abut

Note B
Alternate cross tie hooks. Hook around vertical reinf

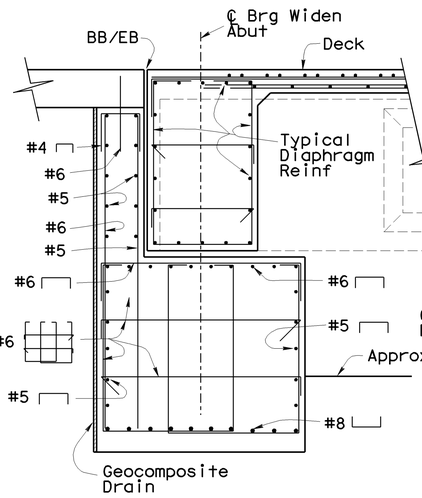

SECTION B-B

1/2" = 1'-0"

For Details, see Section A-A

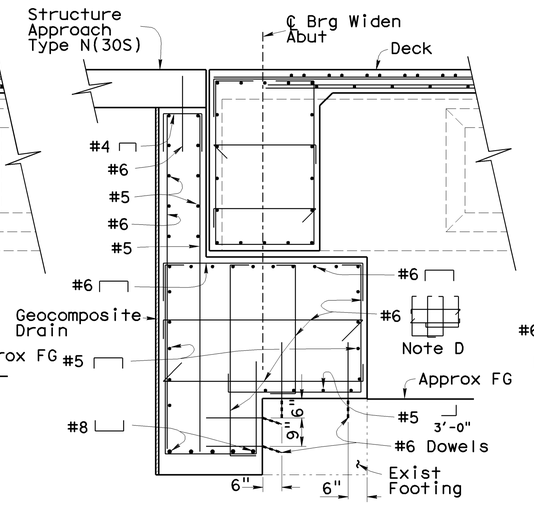

SECTION C-C

1/2" = 1'-0"

For Details, see Section A-A

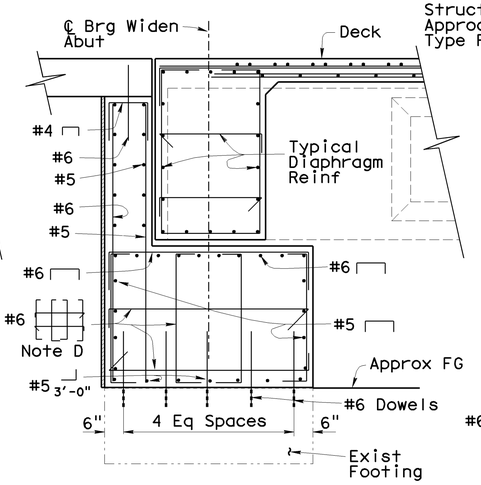

SECTION D-D

1/2" = 1'-0"

For Details, see Section A-A

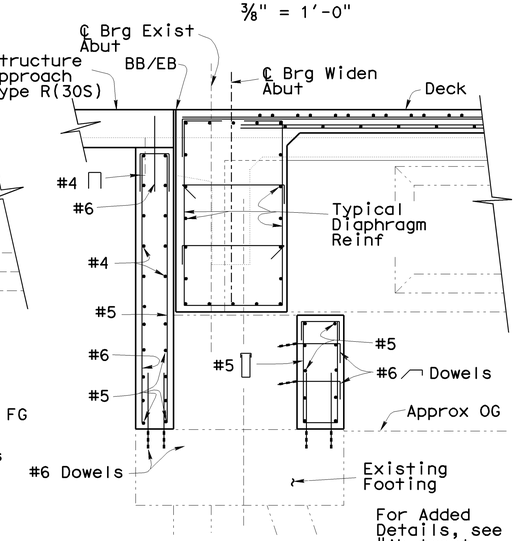

SECTION E-E

1/2" = 1'-0"

For Added Details, see "Abutment Details No.7" Sheet

Note C
Place parallel to ℄ Abut and space along ℄ Girder

Note D
For Alternative Stirrup Details see "Abutment Details No. 5" Sheet

Note X
For "Detail X", see "Abutment Details No. 7" Sheet

For Pile Details, see "Abutment Details No. 12" Sheet

For "Backwall Base Detail", see "Abutment Details No. 10" Sheet

For Dowel Details, see "Abutment Details No. 4", "Abutment Details No. 5" and "Abutment Details No. 7" Sheets

For Drainage Details, see "Structure Approach Drainage Details" Sheet

ABUTMENT SEAT DETAILS

For Structure Approach Details, see "Structure Approach Type N (30S) Details" and "Structure Approach Type R(30S) Details" Sheets

	BY	CHECKED
DESIGN	M. VAN DE POL	Kimberly Mori
DETAILS	M. VAN DE POL	Kimberly Mori
QUANTITIES	M. VAN DE POL	Kimberly Mori

STATE OF CALIFORNIA
DEPARTMENT OF TRANSPORTATION

DIVISION OF ENGINEERING SERVICES
STRUCTURE DESIGN
DESIGN BRANCH 9

BRIDGE NO. 49-0111
POST MILE SLO 0.0/0.4

SANTA MARIA RIVER BRIDGE (WIDEN)
ABUTMENT DETAILS NO. 3

STRUCTURES DESIGN DETAIL SHEET (ENGLISH) (REV. 10/25/05)

ORIGINAL SCALE IN INCHES FOR REDUCED PLANS 0 1 2 3

CU 05
EA 445901

DISREGARD PRINTS BEARING EARLIER REVISION DATES
REVISION DATES 02-09-09 4-14-09 7-29-09

SHEET 23 OF 129

FILE => 49-0111-f-abutdet03.dgn

USERNAME => trmikesl DATE PLOTTED => 15-DEC-2009 TIME PLOTTED => 12:29

DIST	COUNTY	ROUTE	POST MILES TOTAL PROJECT	SHEET No	TOTAL SHEETS
05	SB,SLO	101	91.0,0.0/0.8	194	299

Pete W. Norboe 8-3-09
REGISTERED CIVIL ENGINEER DATE

11-2-09
PLANS APPROVAL DATE

REGISTERED PROFESSIONAL ENGINEER Pete Norboe No. C57519 Exp. 12-31-09 CIVIL STATE OF CALIFORNIA

The State of California or its officers or agents shall not be responsible for the accuracy or completeness of electronic copies of this plan sheet.

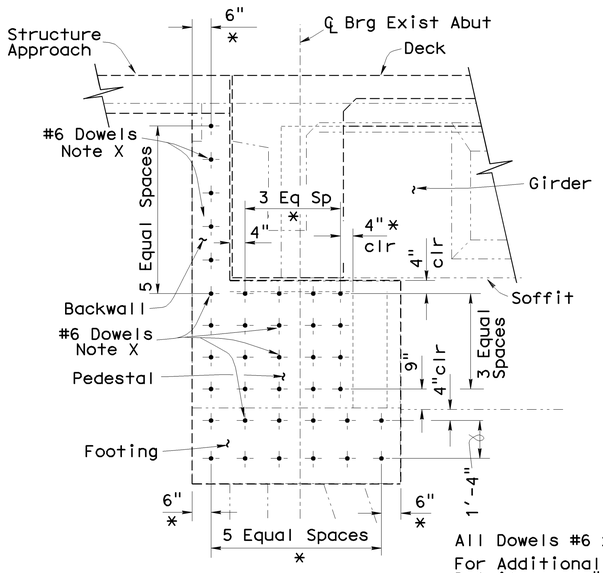

SECTION F-F
3/8" = 1'-0"

All Dowels #6 x 2'-0"

For Additional Dowel Details, see "Abutment Details No. 3", "Abutment Details No. 5" and "Abutment Details No. 7" Sheets

* Measured Along Face

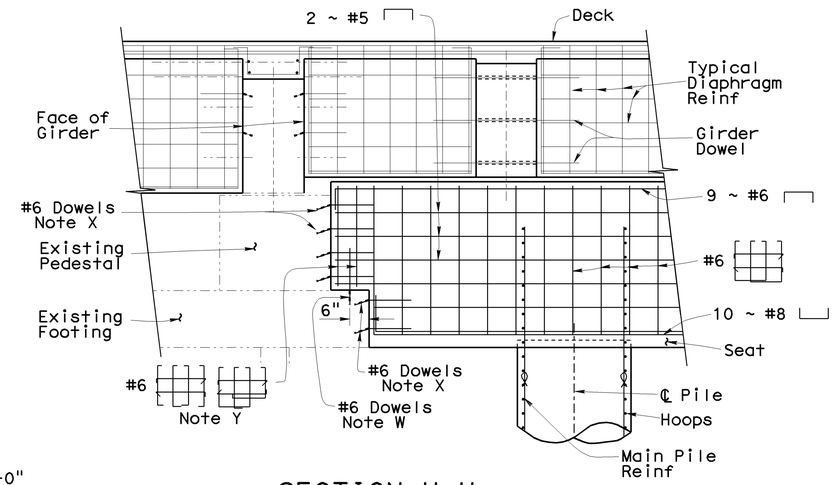

SECTION H-H
3/8" = 1'-0"

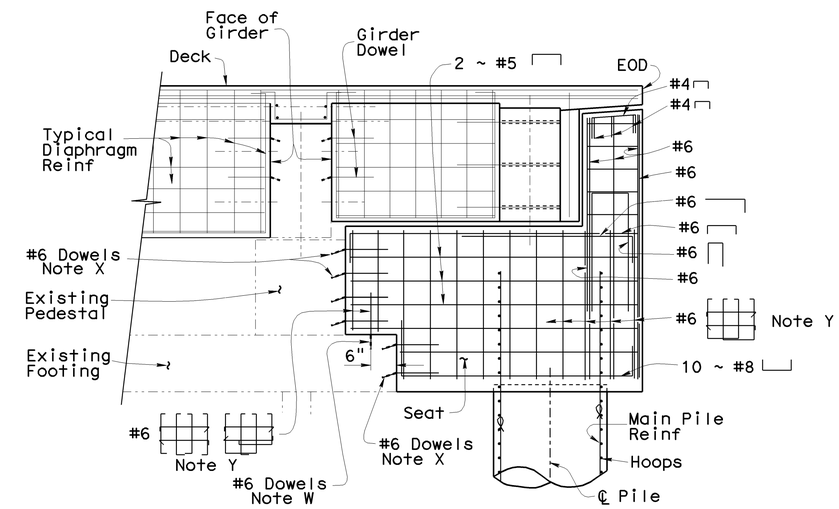

SECTION J-J
3/8" = 1'-0"

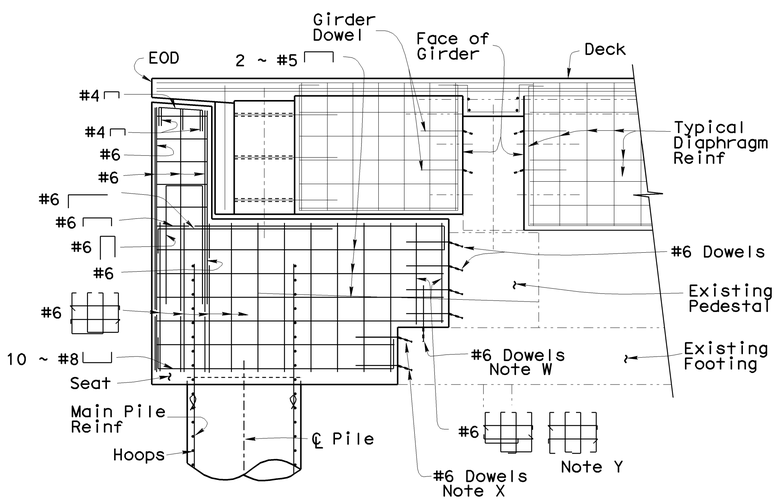

SECTION G-G
3/8" = 1'-0"

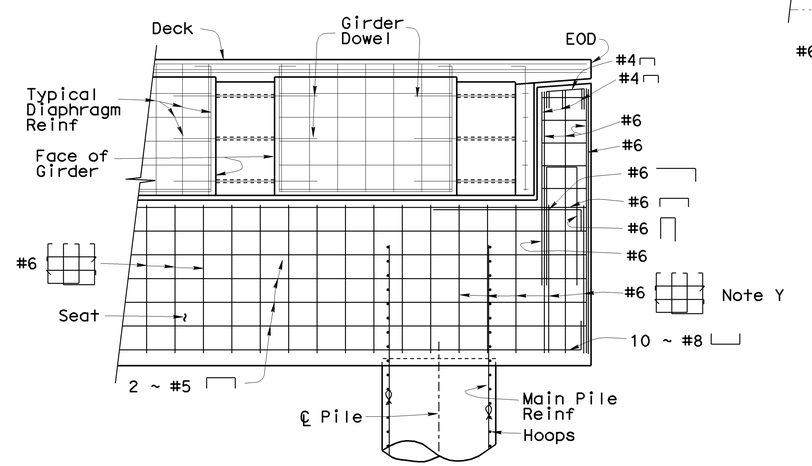

SECTION I-I
3/8" = 1'-0"

Concrete Barrier Not Shown

For Drainage Details, see "Structure Approach Drainage Details" Sheet

For Locations of "Section F-F" Through "Section J-J", see "Abutment Details No. 1" Sheet

For External Key Details, see "Abutment Details No. 9" Sheet

Note Y
For Alternative Stirrups, see "Abutment Details No. 5" Sheet

Note W
Drill and Bond Dowels into 6" Deep Vertical Hole
Dowel Spacing = 12"

Note X
Drill and Bond Dowels into 6" Deep Hole 3/1

Denotes Existing Structure
Denotes New Construction
Denotes Bundled Reinforcement

NOTE:
THE CONTRACTOR SHALL VERIFY ALL CONTROLLING FIELD DIMENSIONS BEFORE ORDERING OR FABRICATING ANY MATERIAL.

	BY	CHECKED
DESIGN	M. VAN DE POL	Kimberly Mori
DETAILS	M. VAN DE POL	Kimberly Mori
QUANTITIES	M. VAN DE POL	Kimberly Mori

STATE OF CALIFORNIA
DEPARTMENT OF TRANSPORTATION

DIVISION OF ENGINEERING SERVICES
STRUCTURE DESIGN
DESIGN BRANCH 9

BRIDGE NO. 49-0111
POST MILE SLO 0.0/0.4

SANTA MARIA RIVER BRIDGE (WIDEN)
ABUTMENT DETAILS NO. 4

STRUCTURES DESIGN DETAIL SHEET (ENGLISH) (REV. 10/25/05)

ORIGINAL SCALE IN INCHES FOR REDUCED PLANS 0 1 2 3

CU 05
EA 445901

DISREGARD PRINTS BEARING EARLIER REVISION DATES 02-09-09 4-15-09 7-29-09

REVISION DATES

SHEET 24 OF 129

FILE => 49-0111-f-abutdet04.dgn

USERNAME => trmikest DATE PLOTTED => 15-DEC-2009 TIME PLOTTED => 12:29

DIST	COUNTY	ROUTE	POST MILES TOTAL PROJECT	SHEET No	TOTAL SHEETS
05	SB,SLO	101	91.0,0.0/0.8	195	299

Pete W. Norboe 8-3-09
REGISTERED CIVIL ENGINEER DATE

11-2-09
PLANS APPROVAL DATE

REGISTERED PROFESSIONAL ENGINEER Pete Norboe No. C57519 Exp. 12-31-09 CIVIL STATE OF CALIFORNIA

The State of California or its officers or agents shall not be responsible for the accuracy or completeness of electronic copies of this plan sheet.

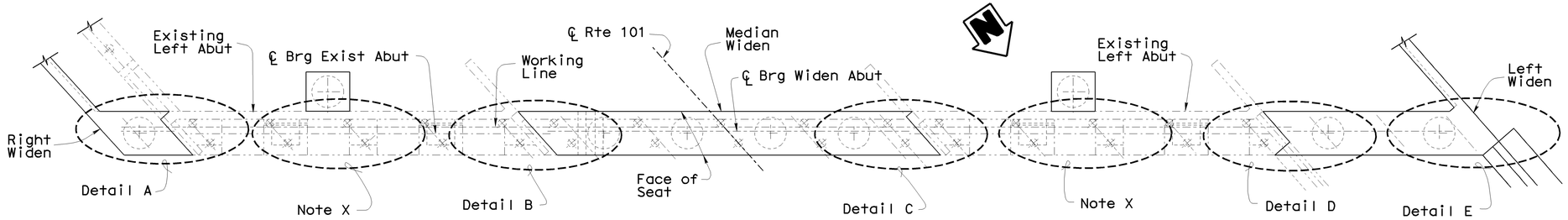

PART PLAN

1/8" = 1'-0"

Footing Level
Abutment 1 Shown
Abutment 30 Similar

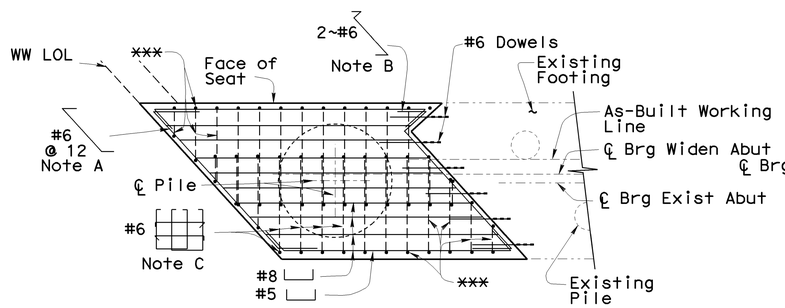

DETAIL A

3/8" = 1'-0"

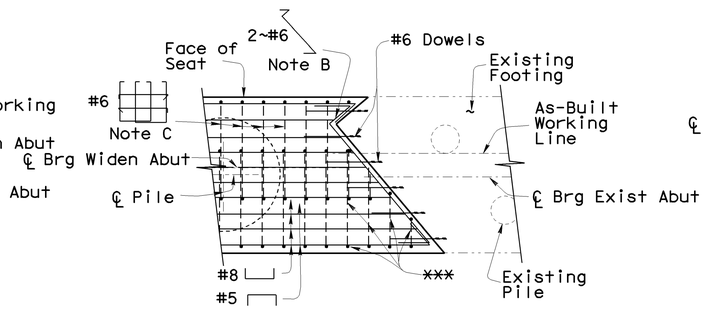

DETAIL C

3/8" = 1'-0"

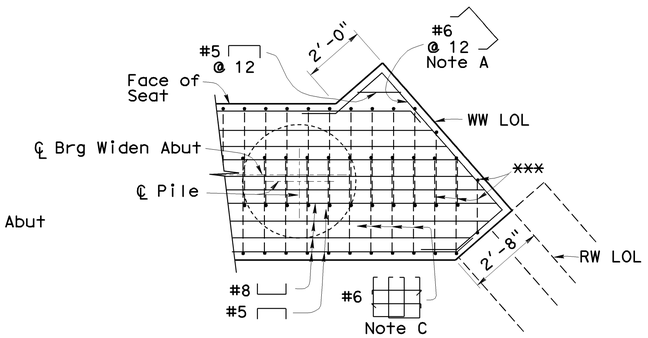

DETAIL E

Abutment 1

3/8" = 1'-0"

*** #6
Varied Stirrup Configurations

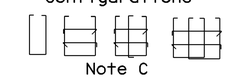

Note C

Note A
Reinforcement Spaced Between Top and Bottom of Seat

Note B
Reinforcement Evenly Placed Between Top and Bottom of Adjacent Existing Footing

Note C
At the Option of the Contractor, Stirrups may be Oriented Parallel to ℄ Girder. Spaced Along ℄ Abut

Note X
For Details, see Detail X, on "Abutment Details No. 7" Sheet

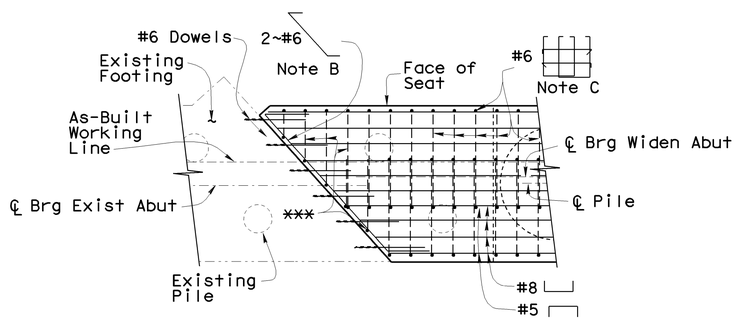

DETAIL B

3/8" = 1'-0"

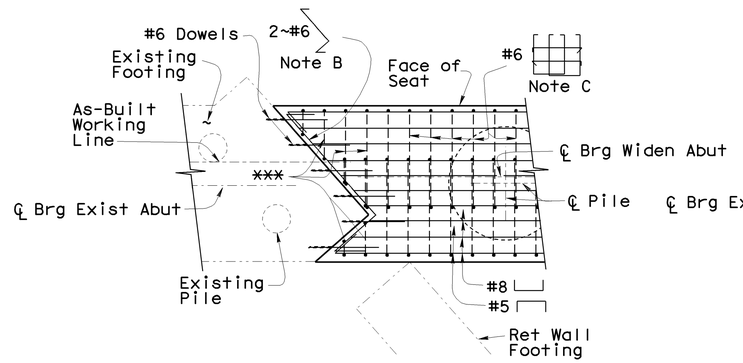

DETAIL D

3/8" = 1'-0"

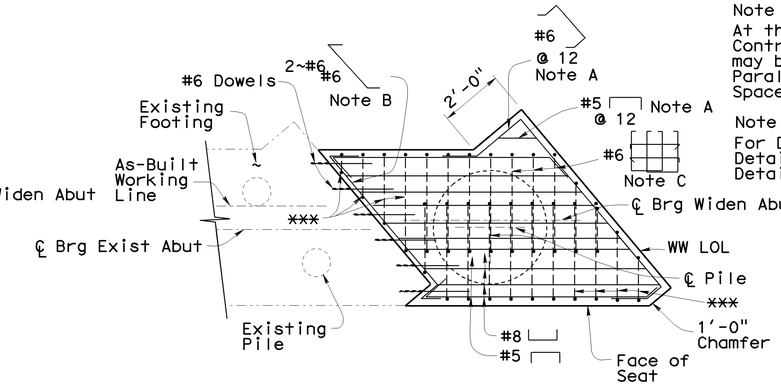

DETAIL E

Abutment 30

3/8" = 1'-0"

For Additional Details, see "Abutment Details No. 1" and "Abutment Details No. 3" Sheets

For Additional Dowel Location Details, see "Abutment Details No. 3" and "Abutment Details No.4" Sheets

Pile Reinforcement and Wingwall Reinforcement not Shown

Denotes Existing Structure
Denotes New Construction

DETAILS AT EXISTING FOOTING LEVEL

NOTE:
THE CONTRACTOR SHALL VERIFY ALL CONTROLLING FIELD DIMENSIONS BEFORE ORDERING OR FABRICATING ANY MATERIAL.

	BY	CHECKED
DESIGN	M. VAN DE POL	Kimberly Mori
DETAILS	M. VAN DE POL	Kimberly Mori
QUANTITIES	M. VAN DE POL	Kimberly Mori

STATE OF CALIFORNIA
DEPARTMENT OF TRANSPORTATION

DIVISION OF ENGINEERING SERVICES
STRUCTURE DESIGN
DESIGN BRANCH 9

BRIDGE NO. 49-0111
POST MILE SLO 0.0/0.4

SANTA MARIA RIVER BRIDGE (WIDEN)
ABUTMENT DETAILS NO. 5

STRUCTURES DESIGN DETAIL SHEET (ENGLISH) (REV. 10/25/05)

ORIGINAL SCALE IN INCHES FOR REDUCED PLANS 0 1 2 3

CU 05
EA 445901

DISREGARD PRINTS BEARING EARLIER REVISION DATES

REVISION DATES: 02-09-09 4-14-09 7-29-09

SHEET 25 OF 129

FILE => 49-0111-f-abutdet05.dgn

USERNAME => trmikesl DATE PLOTTED => 15-DEC-2009 TIME PLOTTED => 12:29

DIST	COUNTY	ROUTE	POST MILES TOTAL PROJECT	SHEET No	TOTAL SHEETS
05	SB,SLO	101	91.0,0.0/0.8	196	299

Pete W. Norboe 8-3-09
REGISTERED CIVIL ENGINEER DATE

11-2-09
PLANS APPROVAL DATE

REGISTERED PROFESSIONAL ENGINEER Pete Norboe No. C57519 Exp. 12-31-09 CIVIL STATE OF CALIFORNIA

The State of California or its officers or agents shall not be responsible for the accuracy or completeness of electronic copies of this plan sheet.

Denotes Existing Structure
Denotes New Construction

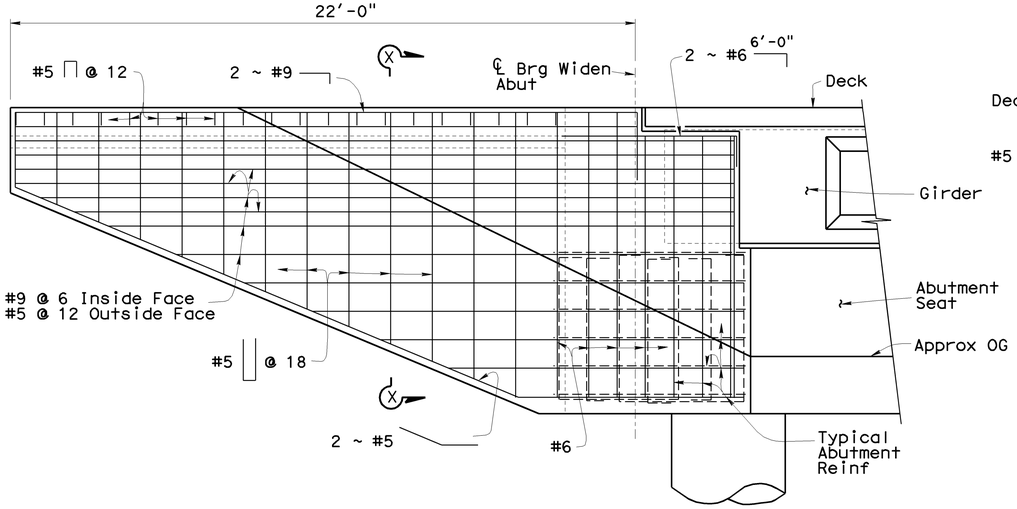

WINGWALL ELEVATION

3/8" = 1'-0"

Concrete Barrier not Shown

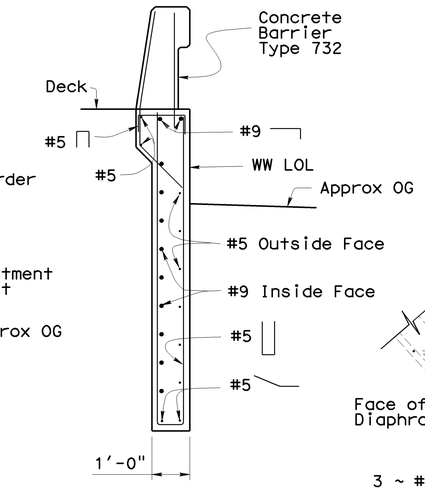

SECTION X-X

1/2" = 1'-0"

Structure Approach Not Shown

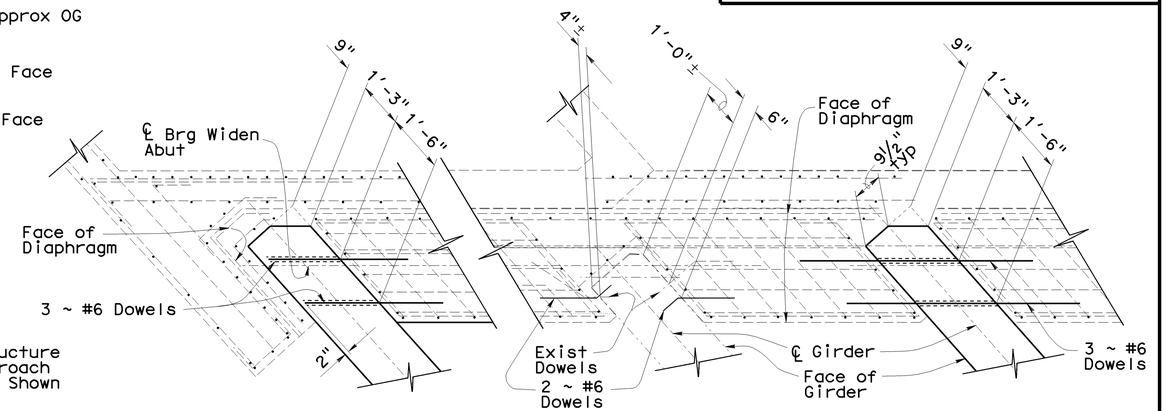

PART PLANS

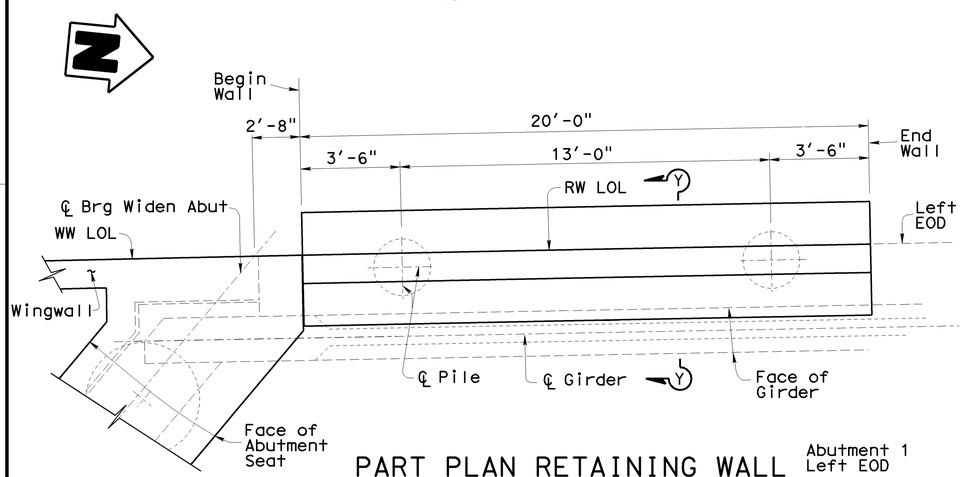

PART PLAN RETAINING WALL

3/8" = 1'-0"

Abutment 1 Left EOD

RW LOL = WW LOL = Left EOD

For Retaining Wall Location, see "Abutment 1 Layout" Sheet

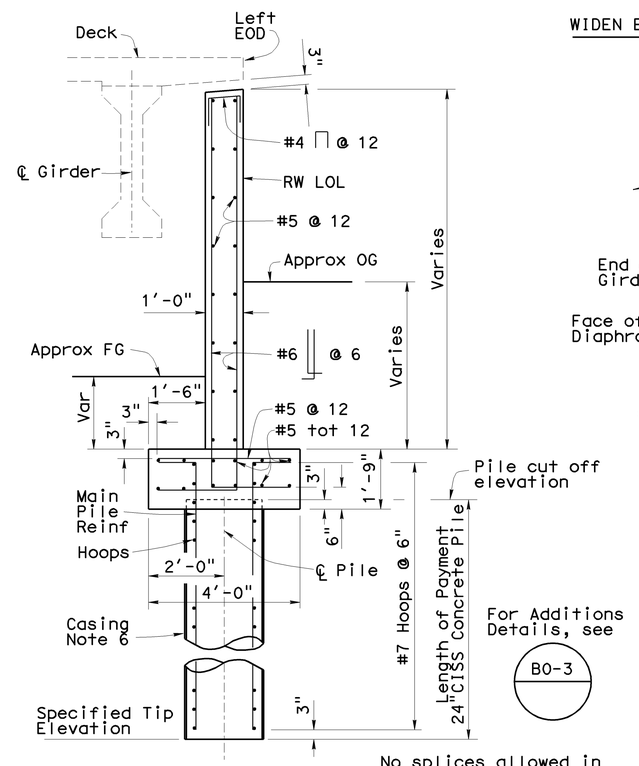

For Additions Details, see B0-3

SECTION Y-Y

1/2" = 1'-0"

No splices allowed in main pile reinforcement

Pile hoops shall have ultimate butt splices

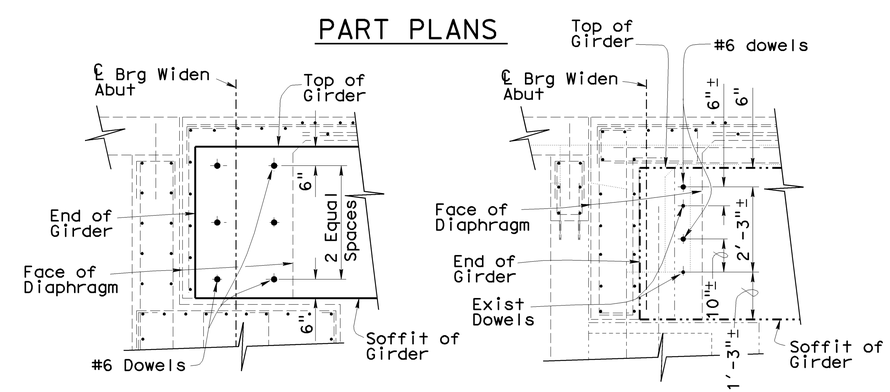

GIRDER END DETAILS

1/2" = 1'-0"

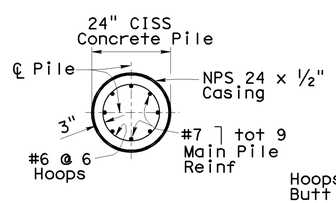

PILE SECTION

1/2" = 1'-0"

Hoops "Ultimate Butt Spliced"

No Lap Splices Allowed in Main Pile Reinf

Notes:

1. For Interior Girders typ - 1 1/4" Ø formed holes for #6 X 7'-0" dowels.
2. Dowels shall be centered in the formed holes.
3. For Exterior Girder typ - 1 1/4" Ø formed holes for #6 X 4'-0" dowels.
4. Pressure grout or epoxy bond dowels in formed holes.
5. For existing girders, drill and bond #6 x 2'-0" dowels into 4" deep holes. Care shall be taken to clear existing prestressing strands and anchoarges.
6. If predrilling is used, the voided space shall be backfilled with grout.
7. For added details, see other "Abutment Details" sheets.

NOTE:
THE CONTRACTOR SHALL VERIFY ALL CONTROLLING FIELD DIMENSIONS BEFORE ORDERING OR FABRICATING ANY MATERIAL.

	BY	CHECKED
DESIGN	M. VAN DE POL	Kimberly Mori
DETAILS	M. VAN DE POL	Kimberly Mori
QUANTITIES	M. VAN DE POL	Kimberly Mori

STATE OF CALIFORNIA
DEPARTMENT OF TRANSPORTATION

DIVISION OF ENGINEERING SERVICES
STRUCTURE DESIGN
DESIGN BRANCH 9

BRIDGE NO. 49-0111
POST MILE SLO 0.0/0.4

SANTA MARIA RIVER BRIDGE (WIDEN)
ABUTMENT DETAILS NO. 6

STRUCTURES DESIGN DETAIL SHEET (ENGLISH) (REV. 10/25/05)

ORIGINAL SCALE IN INCHES FOR REDUCED PLANS 0 1 2 3

CU 05
EA 445901

DISREGARD PRINTS BEARING EARLIER REVISION DATES
REVISION DATES 02-09-09 4-14-09 7-31-09

SHEET 26 OF 129

FILE => 49-0111-f-abutdet06.dgn

USERNAME => trmikest DATE PLOTTED => 15-DEC-2009 TIME PLOTTED => 12:29

DIST	COUNTY	ROUTE	POST MILES TOTAL PROJECT	SHEET No	TOTAL SHEETS
05	SB,SLO	101	91.0,0.0/0.8	197	299

Pete W. Norboe 8-3-09
REGISTERED CIVIL ENGINEER DATE

11-2-09
PLANS APPROVAL DATE

REGISTERED PROFESSIONAL ENGINEER Pete Norboe No. C57519 Exp. 12-31-09 CIVIL STATE OF CALIFORNIA

The State of California or its officers or agents shall not be responsible for the accuracy or completeness of electronic copies of this plan sheet.

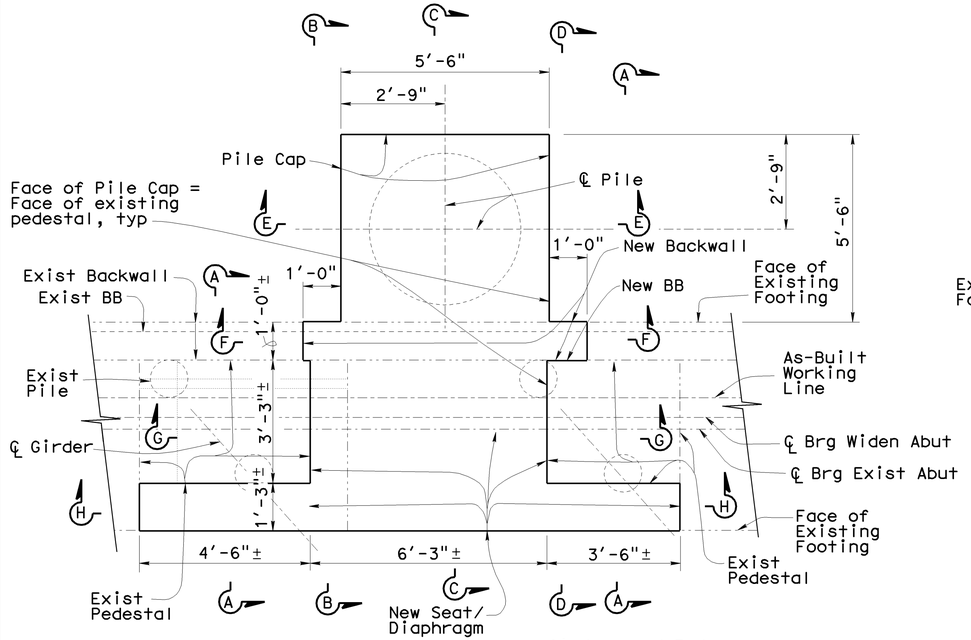

DETAIL X

½" = 1'-0"

Girders and End Diaphragm not Shown

For Location of "Detail X", see "Abutment 1 Layout", "Abutment 30 Layout" and "Abutment Details No. 3" Sheets

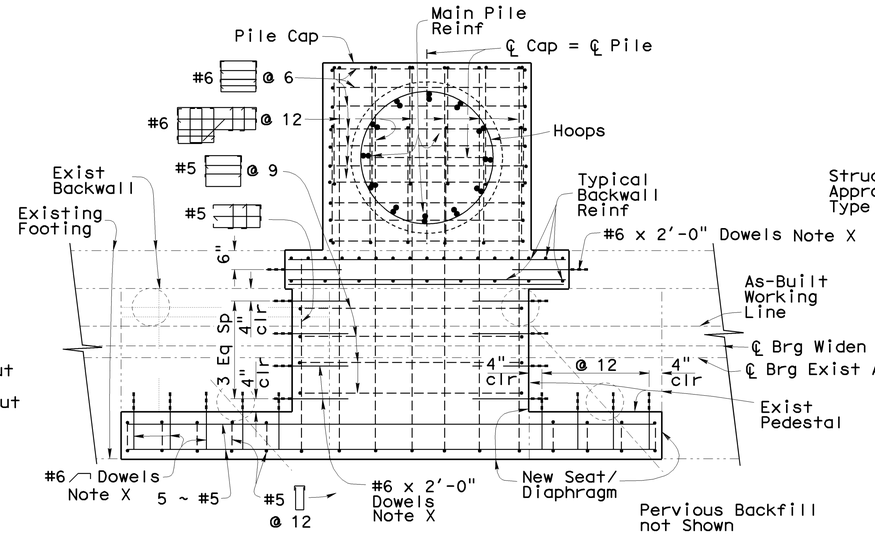

PART PLAN - SEAT/DIAPHRAGM

½" = 1'-0"

Pervious Backfill not Shown

Retained Existing Backwall and Pedestal Reinf not Shown

Vertical Dowels not Shown

For Dowel Details, see Section C-C, on "Abutment Details No. 8" Sheet

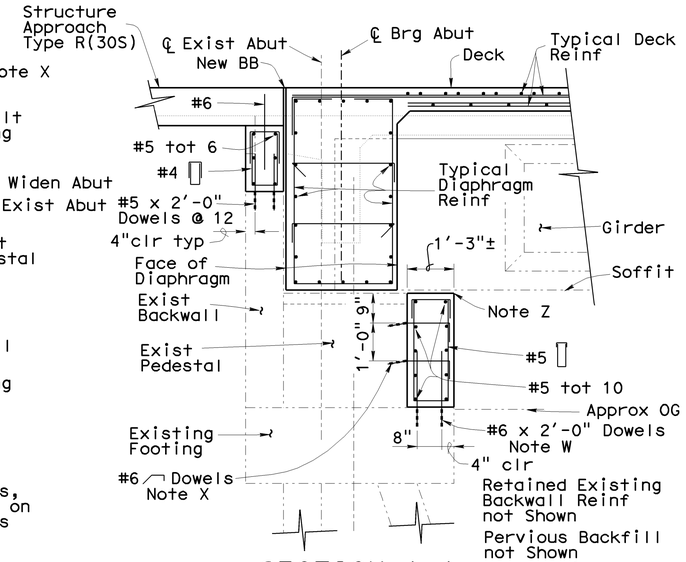

SECTION A-A

½" = 1'-0"

Pervious Backfill not Shown

For Details not Shown, see "End Diaphragm Details" on "Abutment Details No. 1" Sheet

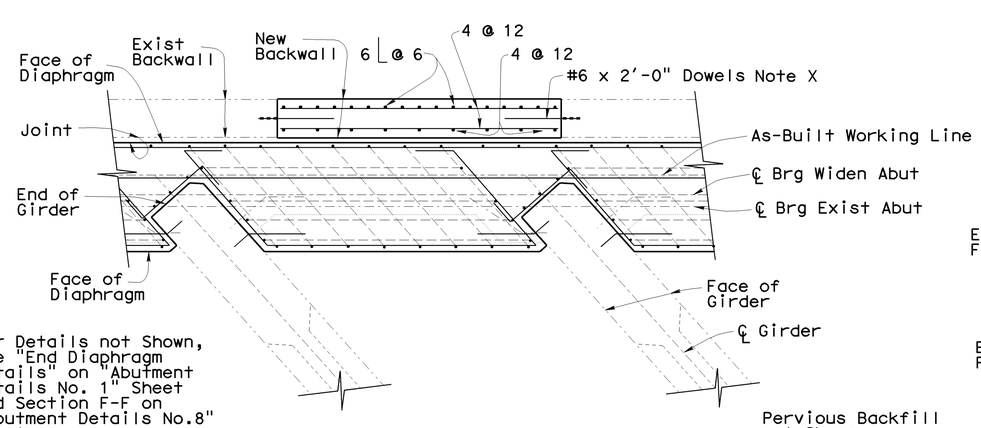

For Details not Shown, see "End Diaphragm Details" on "Abutment Details No. 1" Sheet and Section F-F on "Abutment Details No.8" Sheet

Pervious Backfill not Shown

Retained Existing Backwall Reinf not Shown

PART PLAN - DIAPHRAGM AND BACKWALL

½" = 1'-0"

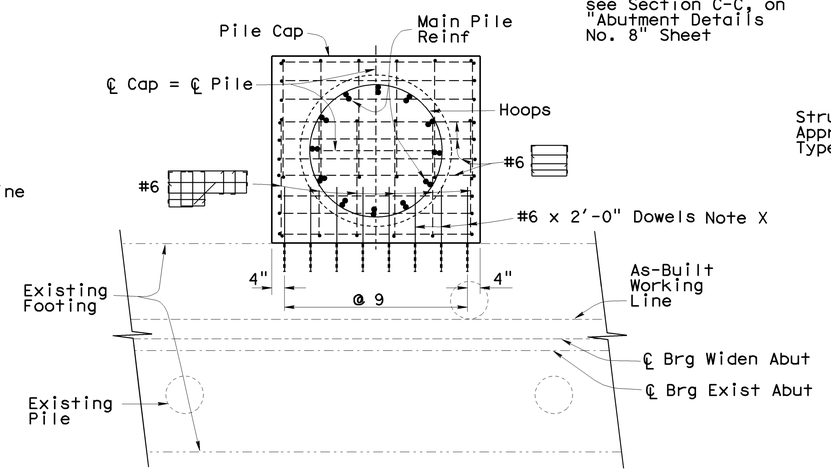

PART PLAN - FOOTING

½" = 1'-0"

Existing Footing Reinf not Shown

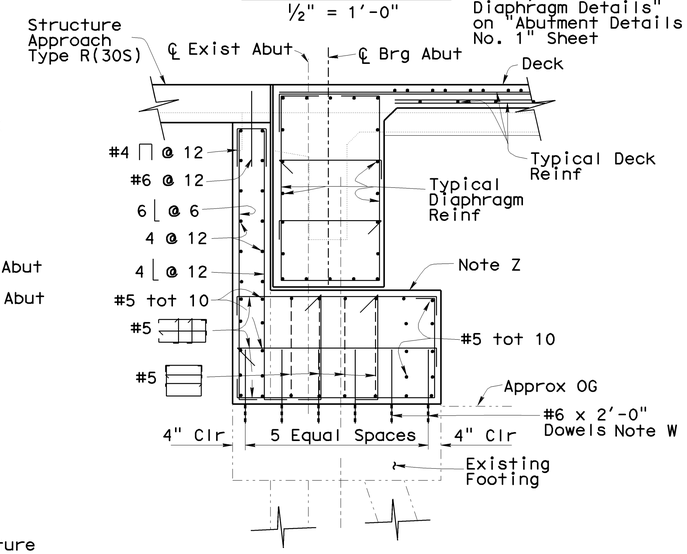

SECTION B-B

½" = 1'-0"

Backwall Horizontal Dowels not Shown

NOTE:
THE CONTRACTOR SHALL VERIFY ALL CONTROLLING FIELD DIMENSIONS BEFORE ORDERING OR FABRICATING ANY MATERIAL.

For Section C-C Through Section H-H, see "Abutment Details No. 8" Sheet

For Structure Approach Details, see "Structure Approach Type R(30S)" Sheet

Note W
Drill and Bond Dowels into 6" Deep Vertical Hole

Note X
Drill and Bond Dowels into 6" Deep Hole 3 / 1

Note Z
Cast New Seat to Match Level of Existing Pedestal Seat

For Additional Dowel Details, see "Abutment Details No. 4" and "Abutment Details No. 8" Sheets

Denotes Existing Structure

Denotes New Construction

	BY	CHECKED
DESIGN	M. VAN DE POL	Kimberly Mori
DETAILS	M. VAN DE POL	Kimberly Mori
QUANTITIES	M. VAN DE POL	Kimberly Mori

STATE OF CALIFORNIA
DEPARTMENT OF TRANSPORTATION

DIVISION OF ENGINEERING SERVICES
STRUCTURE DESIGN
DESIGN BRANCH 9

BRIDGE NO. 49-0111
POST MILE SLO 0.0/0.4

SANTA MARIA RIVER BRIDGE (WIDEN)
ABUTMENT DETAILS NO. 7

STRUCTURES DESIGN DETAIL SHEET (ENGLISH) (REV. 10/25/05)

ORIGINAL SCALE IN INCHES FOR REDUCED PLANS 0 1 2 3

CU 05
EA 445901

DISREGARD PRINTS BEARING EARLIER REVISION DATES

REVISION DATES 02-09-09 4-14-09 7-29-09

SHEET 27 OF 129

FILE => 49-0111-f-abutdet07.dgn

USERNAME => trmikest DATE PLOTTED => 15-DEC-2009 TIME PLOTTED => 12:29

DIST	COUNTY	ROUTE	POST MILES TOTAL PROJECT	SHEET No	TOTAL SHEETS
05	SB,SLO	101	91.0,0.0/0.8	198	299

Pete W. Norboe 8-3-09
REGISTERED CIVIL ENGINEER DATE

11-2-09
PLANS APPROVAL DATE

REGISTERED PROFESSIONAL ENGINEER Pete Norboe No. C57519 Exp. 12-31-09 CIVIL STATE OF CALIFORNIA

The State of California or its officers or agents shall not be responsible for the accuracy or completeness of electronic copies of this plan sheet.

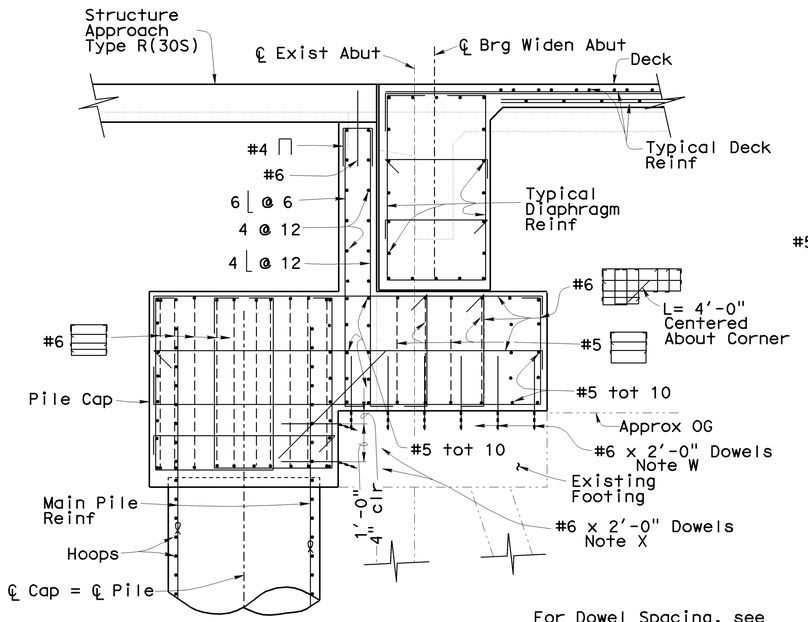

SECTION C-C
½" = 1'-0"

For Dowel Spacing, see "Section B-B" and "Part Plan - Footing" on "Abutment Details No. 7" Sheet

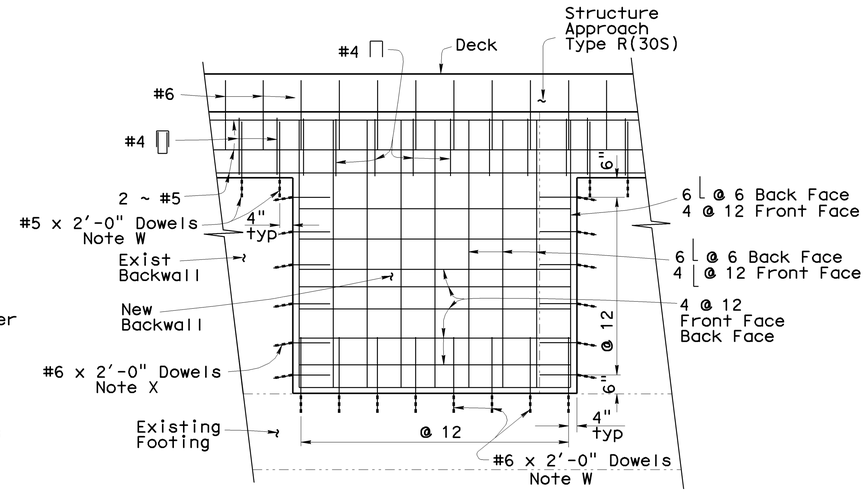

SECTION F-F
½" = 1'-0"

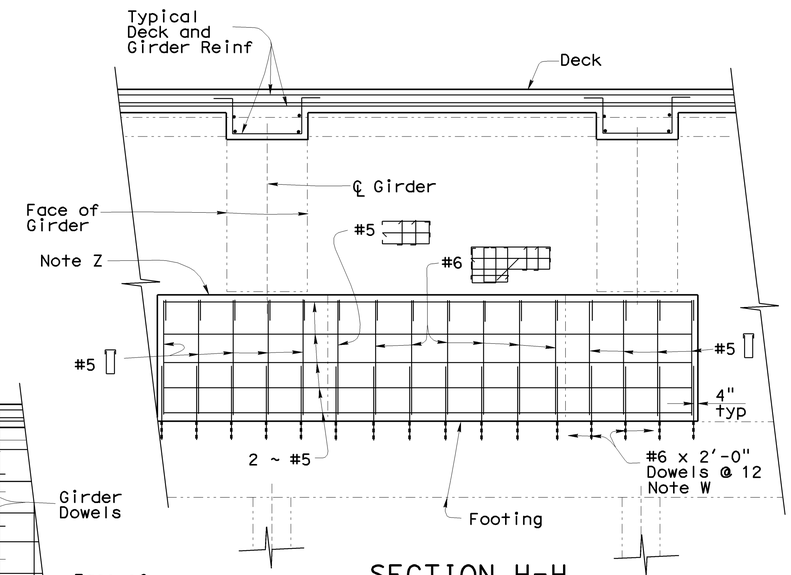

SECTION H-H
½" = 1'-0"

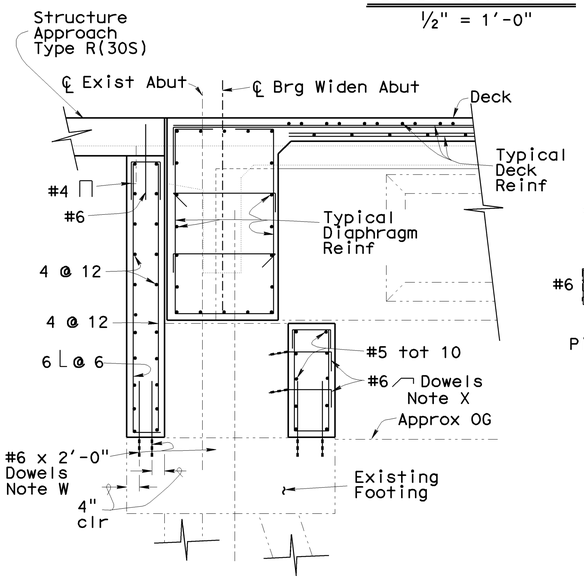

SECTION D-D
½" = 1'-0"

Backwall Horizontal Dowels not Shown

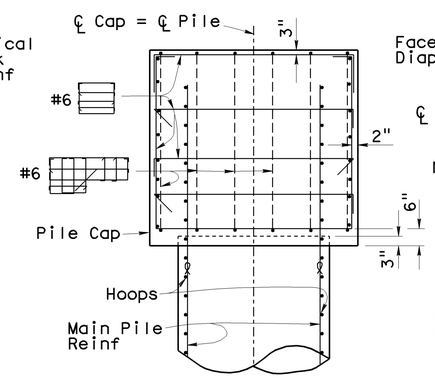

SECTION E-E
½" = 1'-0"

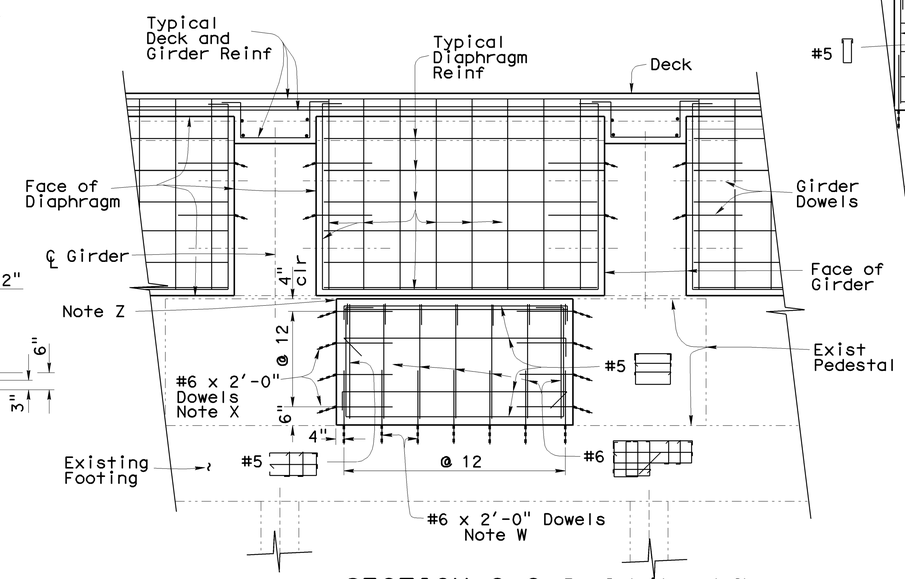

SECTION G-G
½" = 1'-0"

For Details not Shown, see "End Diaphragm Details" on "Abutment Details No. 1" Sheet

For Girder End Details, see "Girder End Details" Sheet

For Locations of Section C-C Through Section H-H, see "Abutment Details No. 7" Sheet

For Structure Approach Details, see "Structure Approach Type R(30S) Sheet

Note Z
Cast New Seat to Match Level of Existing Pedestal Seat

For Additional Dowel Details, see "Abutment Details No. 4" and "Abutment Details No. 7" Sheets

Note W
Drill and Bond Dowels into 6" Deep Vertical Hole

Note X
Drill and Bond Dowels into 6" Deep Hole 3/1

Denotes Existing Structure
Denotes New Construction
Denotes Bundled Reinforcement

NOTE:
THE CONTRACTOR SHALL VERIFY ALL CONTROLLING FIELD DIMENSIONS BEFORE ORDERING OR FABRICATING ANY MATERIAL.

	BY	CHECKED
DESIGN	M. VAN DE POL	Kimberly Mori
DETAILS	M. VAN DE POL	Kimberly Mori
QUANTITIES	M. VAN DE POL	Kimberly Mori

STATE OF CALIFORNIA
DEPARTMENT OF TRANSPORTATION

DIVISION OF ENGINEERING SERVICES
STRUCTURE DESIGN
DESIGN BRANCH 9

BRIDGE NO. 49-0111
POST MILE SLO 0.0/0.4

SANTA MARIA RIVER BRIDGE (WIDEN)
ABUTMENT DETAILS NO. 8

STRUCTURES DESIGN DETAIL SHEET (ENGLISH) (REV. 10/25/05)

ORIGINAL SCALE IN INCHES FOR REDUCED PLANS 0 1 2 3

CU 05
EA 445901

DISREGARD PRINTS BEARING EARLIER REVISION DATES
REVISION DATES 02-01-09 4-14-09 7-29-09

SHEET 28 OF 129

FILE => 49-0111-f-abutdet08.dgn

USERNAME => trmikest DATE PLOTTED => 15-DEC-2009 TIME PLOTTED => 12:30

DIST	COUNTY	ROUTE	POST MILES TOTAL PROJECT	SHEET No	TOTAL SHEETS
05	SB,SLO	101	91.0,0.0/0.8	199	299

Peter W. Norboe 8-3-09
REGISTERED CIVIL ENGINEER DATE

11-2-09
PLANS APPROVAL DATE

REGISTERED PROFESSIONAL ENGINEER Pete Norboe No. C57519 Exp. 12-31-09 CIVIL STATE OF CALIFORNIA

The State of California or its officers or agents shall not be responsible for the accuracy or completeness of electronic copies of this plan sheet.

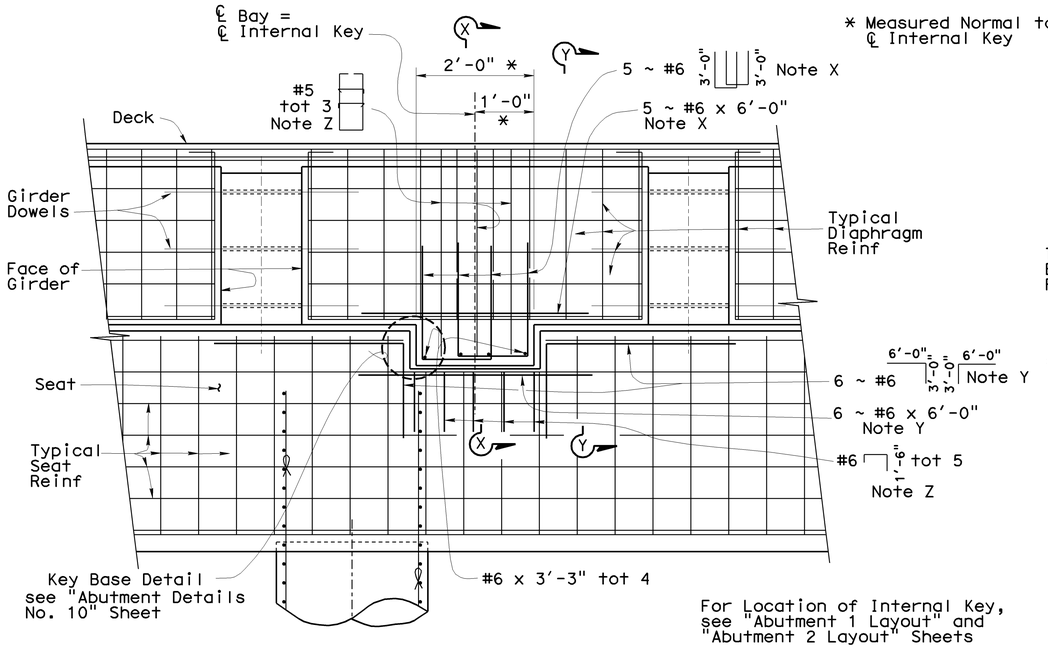

PART ELEVATION INTERNAL KEY

½" = 1'-0"

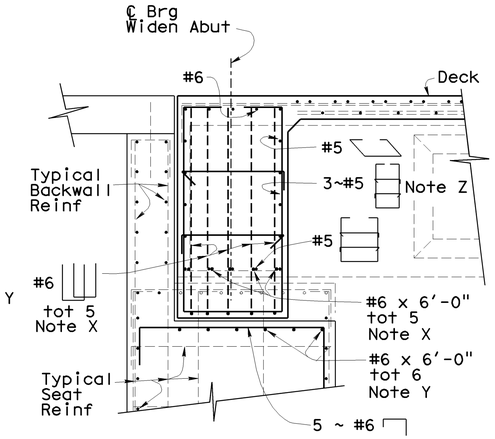

SECTION X-X

½" = 1'-0"

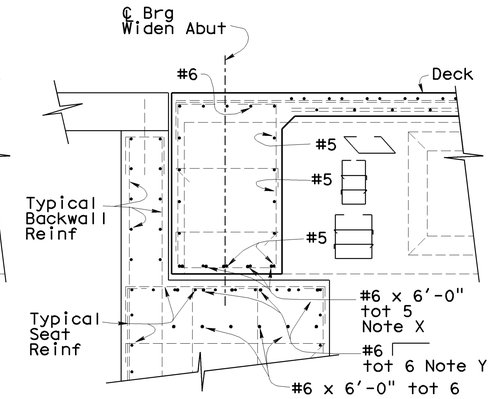

SECTION Y-Y

½" = 1'-0"

Note X
Place Parallel to ℄ Abut, Space Evenly Along ℄ Key Within Diaphragm

Note Y
Place Parallel to ℄ Abut, Space Evenly Along ℄ Key Within Seat

Note Z
Place Parallel to ℄ Girder, Space Along ℄ Abut Within Internal Key

For End Diaphragm Details, see "Abutment Details No. 1" Sheet

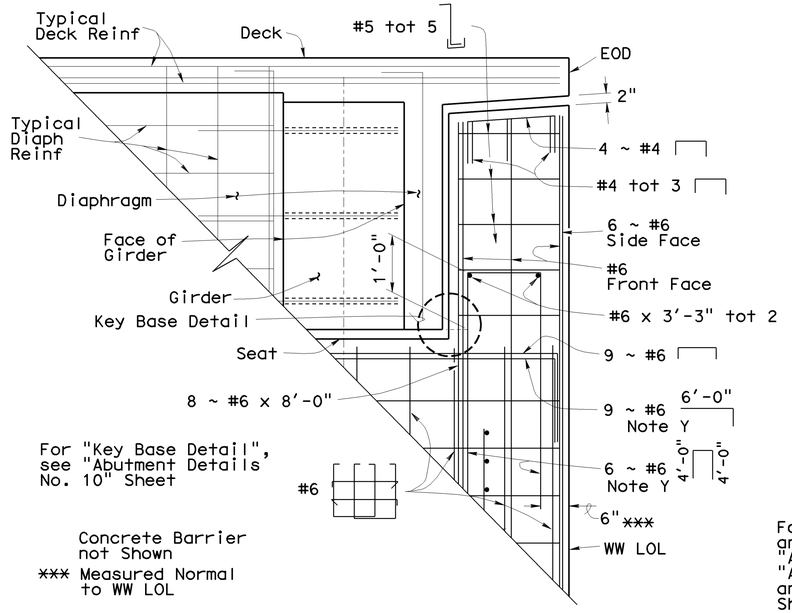

PART ELEVATION EXTERNAL KEYS

¾" = 1'-0"

For External Key Locations and Other Details, see "Abutment Details No. 1", "Abutment Details No. 2" and "Abutment Details No. 4" Sheets

NOTE:
THE CONTRACTOR SHALL VERIFY ALL CONTROLLING FIELD DIMENSIONS BEFORE ORDERING OR FABRICATING ANY MATERIAL.

Denotes Bundled Reinforcement
Denotes Existing Structure
Denotes New Construction

	BY	CHECKED
DESIGN	M. VAN DE POL	Kimberly Mori
DETAILS	M. VAN DE POL	Kimberly Mori
QUANTITIES	M. VAN DE POL	Kimberly Mori

STATE OF CALIFORNIA
DEPARTMENT OF TRANSPORTATION

DIVISION OF ENGINEERING SERVICES
STRUCTURE DESIGN
DESIGN BRANCH 9

BRIDGE NO. 49-0111
POST MILE SLO 0.0/0.4

SANTA MARIA RIVER BRIDGE (WIDEN)
ABUTMENT DETAILS NO. 9

STRUCTURES DESIGN DETAIL SHEET (ENGLISH) (REV. 10/25/05)

ORIGINAL SCALE IN INCHES FOR REDUCED PLANS 0 1 2 3

CU 05
EA 445901

DISREGARD PRINTS BEARING EARLIER REVISION DATES 02-09-09 4-14-09 7-29-09

REVISION DATES

SHEET 29 OF 129

FILE => 49-0111-f-abutdet09.dgn

USERNAME => ttmirkes| DATE PLOTTED => 15-DEC-2009 TIME PLOTTED => 12:30

DIST	COUNTY	ROUTE	POST MILES TOTAL PROJECT	SHEET No	TOTAL SHEETS
05	SB,SLO	101	91.0,0.0/0.8	200	299

Pete W. Norboe 8-3-09
REGISTERED CIVIL ENGINEER DATE

11-2-09
PLANS APPROVAL DATE

REGISTERED PROFESSIONAL ENGINEER Pete Norboe No. C57519 Exp. 12-31-09 CIVIL STATE OF CALIFORNIA

The State of California or its officers or agents shall not be responsible for the accuracy or completeness of electronic copies of this plan sheet.

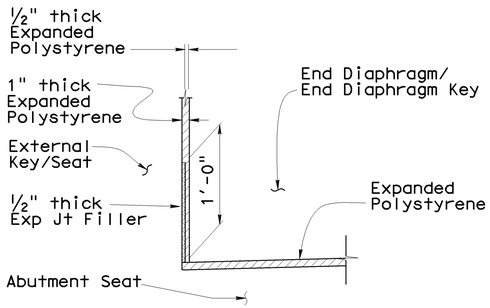

KEY BASE DETAIL

No Scale

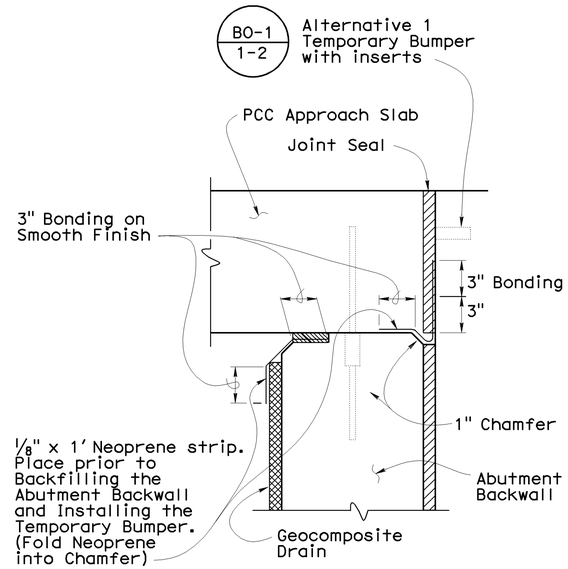

JOINT PROTECTION DETAIL

No Scale

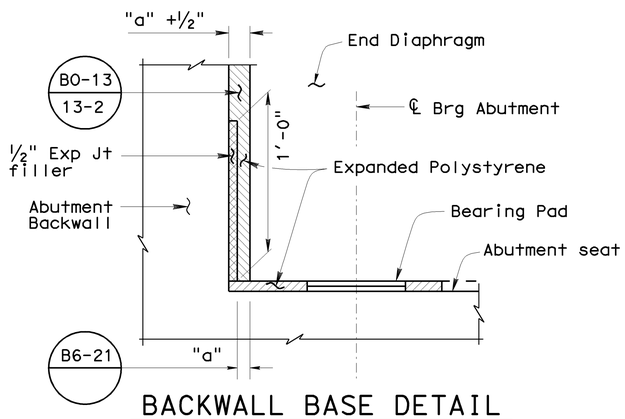

BACKWALL BASE DETAIL

No Scale

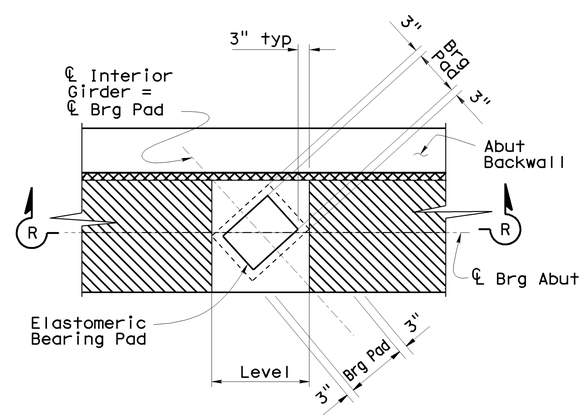

PLAN

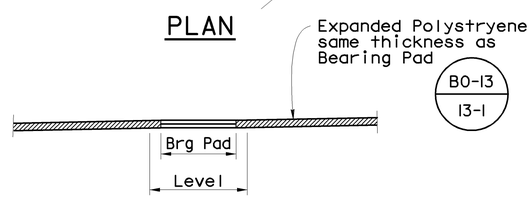

SECTION R-R

BEARING PAD DETAIL (ABUTMENTS)

1:20

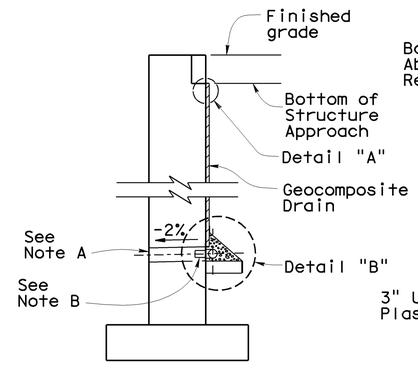

WALL SECTION

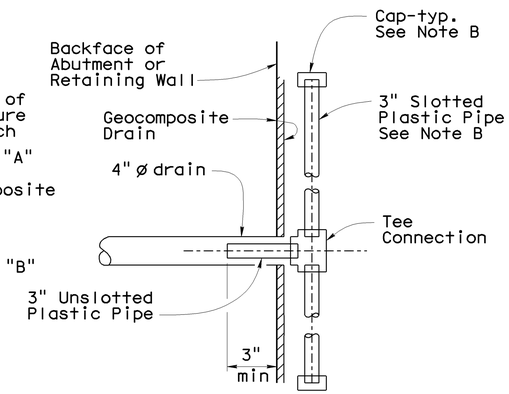

SECTION A-A

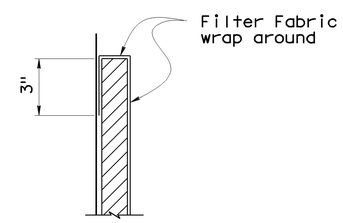

DETAIL "A"

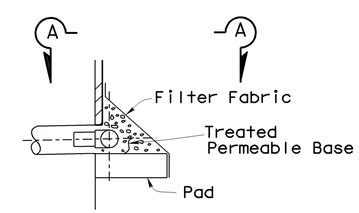

DETAIL "B"

WEEP HOLE AND GEOCOMPOSITE DRAIN

No Scale

Notes:

A. 4"ø drains at 8' max center to center for interior and left exterior widenings. 4"ø drains at 4' max center to center for right exterior widening. For added details, see "Structure Approach Drainage Details" Sheet

B. Geocomposite drain, cement treated permeable base, and 3"ø slotted plastic pipe continuous behind retaining wall or abutment. Cap ends of pipe. Provide "Tee" connection at each 100 mmø drain. For added details, see "Structure Approach Drainage Details" Sheet

C. Connect the low end of plastic pipe to the main outlet pipe as applicable.

D. For additional details, see "Structure Approach Drainage Details" sheet

NOTES:

For Locations of "Key Base Detail" and "Backwall Base Detail", see "Abutment Details No. 1", "Abutment Details No. 3" and "Abutment Details No. 9" Sheets

For Location of "Joint Protection Detail", see "Abutment Details No. 1" and "Abutment Details No. 3" Sheets

For Bearing Pad Locations and Details, see "Abutment 1 Layout" and "Abutment 30 Layout" Sheets

For Added Drainage Details, see "Structure Approach Drainage Details" Sheet

NOTE:
THE CONTRACTOR SHALL VERIFY ALL CONTROLLING FIELD DIMENSIONS BEFORE ORDERING OR FABRICATING ANY MATERIAL.

Denotes Existing Structure
Denotes New Construction

	BY	CHECKED
DESIGN	M. VAN DE POL	Kimberly Mori
DETAILS	M. VAN DE POL	Kimberly Mori
QUANTITIES	M. VAN DE POL	Kimberly Mori

STATE OF CALIFORNIA
DEPARTMENT OF TRANSPORTATION

DIVISION OF ENGINEERING SERVICES
STRUCTURE DESIGN
DESIGN BRANCH 9

BRIDGE NO. 49-0111
POST MILE SLO 0.0/0.4

SANTA MARIA RIVER BRIDGE (WIDEN)
ABUTMENT DETAILS NO. 10

STRUCTURES DESIGN DETAIL SHEET (ENGLISH) (REV. 10/25/05)

ORIGINAL SCALE IN INCHES FOR REDUCED PLANS 0 1 2 3

CU 05
EA 445901

DISREGARD PRINTS BEARING EARLIER REVISION DATES

REVISION DATES: 02-09-09 4-14-09

SHEET 30 OF 129

FILE => 49-0111-f-abutdet10.dgn

USERNAME => trmikest DATE PLOTTED => 15-DEC-2009 TIME PLOTTED => 12:30