DIST	COUNTY	ROUTE	POST MILES TOTAL PROJECT	SHEET No	TOTAL SHEETS
05	SB,SLO	101	91.0,0.0/0.8	172	299

Pete W. Norboe 8-3-09
REGISTERED CIVIL ENGINEER DATE

11-2-09
PLANS APPROVAL DATE

REGISTERED PROFESSIONAL ENGINEER Pete Norboe No. C57519 Exp. 12-31-09 CIVIL STATE OF CALIFORNIA

The State of California or its officers or agents shall not be responsible for the accuracy or completeness of electronic copies of this plan sheet.

QUANTITIES 1

BRIDGE REMOVAL (PORTION)	LUMP SUM	
STRUCTURE EXCAVATION (BRIDGE)	8,913	CY
STRUCTURE BACKFILL (BRIDGE)	4,627	CY
AGGREGATE BASE (APPROACH SLAB)	35	CY
~~24" CAST IN DRILLED HOLE CONCRETE PILING~~	~~95~~	~~LF~~
FURNISH 48" CAST-IN-STEEL SHELL CONCRETE PILING	11,745 ~~11,539~~	LF
DRIVE 48" CAST-IN-STEEL SHELL CONCRETE PILE	187 ~~184~~	EA
STRUCTURAL CONCRETE, BRIDGE FOOTING	4,207	CY
STRUCTURAL CONCRETE, BRIDGE	12,899	CY
STRUCTURAL CONCRETE, APPROACH SLAB (TYPE N)	171	CY
STRUCTURAL CONCRETE, APPROACH SLAB (TYPE R)	201	CY
DRILL AND BOND DOWEL	30,905	LF
FURNISH PRECAST PRESTRESSED CONCRETE BOX GIRDER (70'-80')	261	EA
ERECT PRECAST PRESTRESSED CONCRETE GIRDER	261	EA
CORE CONCRETE (2")	9,274	LF
JOINT SEAL (MR 1¼")	1,870	LF
BAR REINFORCING STEEL (BRIDGE)	4,763,862	LF
ROCK SLOPE PROTECTION (1 TON, METHOD A)	96	CY
MISCELLANEOUS METAL (RESTRAINER - CABLE TYPE)	28,506	LB
TUBULAR HANDRAILING	2,127	LF
TUBULAR BICYCLE RAILING	72	LF
CONCRETE BARRIER (TYPE 60 MODIFIED)	2,090	LF
CONCRETE BARRIER (TYPE 732)	4,268	LF
CONCRETE BARRIER (TYPE 742)	2,090	LF
DRIVE 24" CAST-IN-STEEL SHELL CONCRETE PILE	2	EA
FURNISH 24" CAST-IN-STEEL SHELL CONCRETE PILING	83	FT

Legend:

1. Temporary Railing - Type K, see "ROAD PLANS"
2. Concrete Barrier Type 732
3. Concrete Barrier Type 742
4. Concrete Barrier Type 60A (Mod) - (Placed after Stage 3 Construction)
5. Tubular Hand Railing

-·-·- Denotes existing structure
—— Denotes new structure
* 3' Closure Pour

Note: For Pier 29, see "PIER LAYOUT NO. 4" sheet.

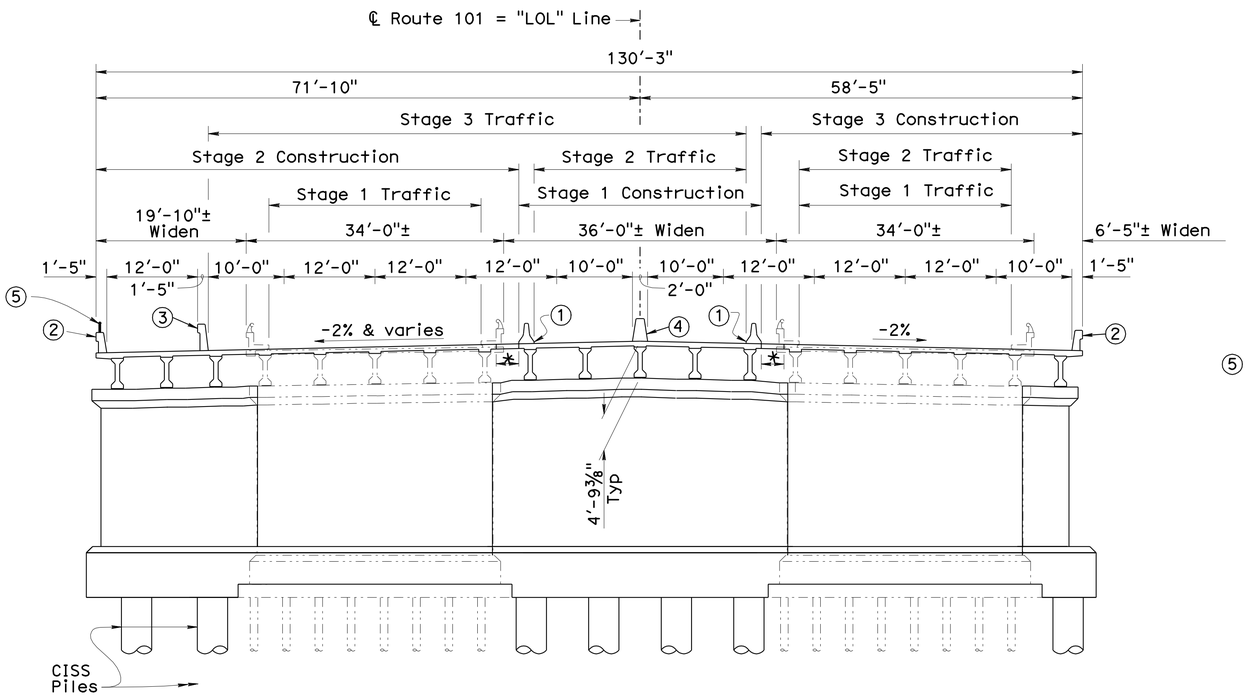

PIERS 2,4,5,7,8,10,11,13,14,16,17,19,20,22,23,25,26

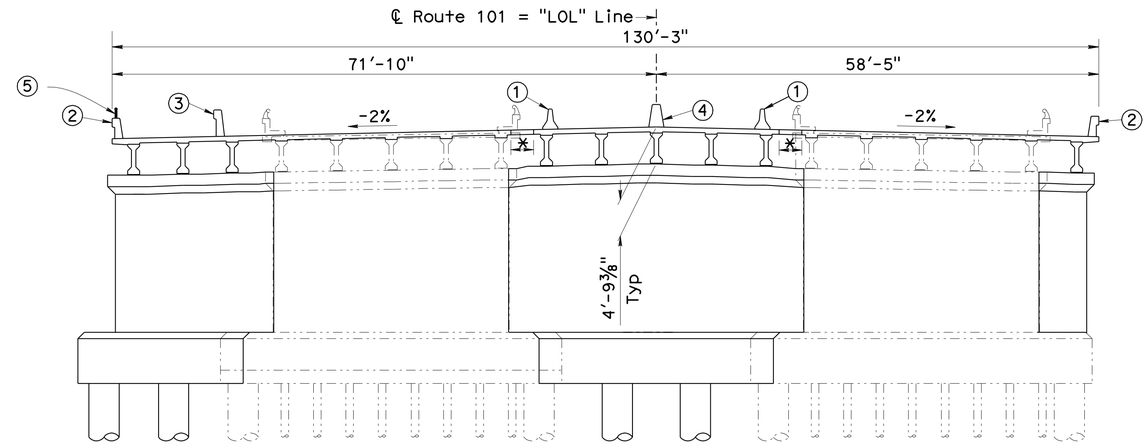

PIERS 12,15,18,21,24,27,28

Note: For Details not shown see, Typical Section of "PIERS 2,4,5,7,8,10,11,13,14,16,17,19,20,22,23,25,26".

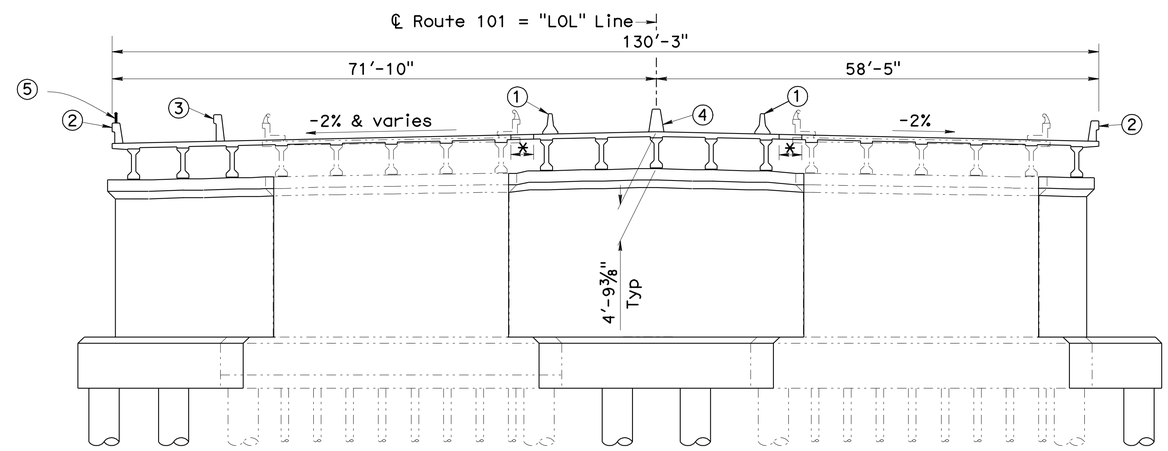

PIERS 3,6,9

Note: For Details not shown see, Typical Section of "PIERS 2,4,5,7,8,10,11,13,14,16,17,19,20,22,23,25,26".

NOTE:
THE CONTRACTOR SHALL VERIFY ALL CONTROLLING FIELD DIMENSIONS BEFORE ORDERING OR FABRICATING ANY MATERIAL.

TYPICAL SECTIONS

Scale: 1" = 10'

1 REVISED PER ADDENDUM No. 1 DATED APRIL 28, 2011

Gordon Danke
DESIGN ENGINEER

	BY	CHECKED			
DESIGN	Rosa Candiotti	Pete Norboe	LOAD & RESISTANCE FACTOR DESIGN	LIVE LOADING: HL93 W/"LOW-BOY"; PERMIT DESIGN VEHICLE	
DETAILS	D. Elliott	Pete Norboe	LAYOUT	Rosa Candiotti	Pete Norboe
QUANTITIES	Rosa Candiotti	Pete Norboe	SPECIFICATIONS	Todd Greets	PLANS AND SPECS COMPARED Todd Greets

STATE OF CALIFORNIA
DEPARTMENT OF TRANSPORTATION

DIVISION OF ENGINEERING SERVICES
STRUCTURE DESIGN
DESIGN BRANCH 9

BRIDGE NO. 49-0111
POST MILE SLO 0.0/0.4

SANTA MARIA RIVER BRIDGE (WIDEN)
GENERAL PLAN NO. 2

STRUCTURES DESIGN GENERAL PLAN SHEET (ENGLISH) (REV. 10/25/05)

ORIGINAL SCALE IN INCHES FOR REDUCED PLANS 0 1 2 3

CU 05
EA 445901

DISREGARD PRINTS BEARING EARLIER REVISION DATES

REVISION DATES: 2-12-09 4-14-09 4-22-09 4-29-09 6-15-09 7-29-09

SHEET 2 OF 129

FILE => 49-0111-a-gp02.add

STRUCTURES DESIGN GENERAL PLAN SHEET (ENGLISH) (REV.07-24-06)

USERNAME => trmnguye DATE PLOTTED => 27-APR-2011 TIME PLOTTED => 10:38

DIST	COUNTY	ROUTE	POST MILES TOTAL PROJECT	SHEET No	TOTAL SHEETS
05	SB,SLO	101	91.0,0.0/0.8	176	299

Pete W. Norboe 8-3-09
REGISTERED CIVIL ENGINEER DATE

11-2-09
PLANS APPROVAL DATE

REGISTERED PROFESSIONAL ENGINEER
Pete Norboe
No. C57519
Exp. 12-31-09
CIVIL
STATE OF CALIFORNIA

The State of California or its officers or agents shall not be responsible for the accuracy or completeness of electronic copies of this plan sheet.

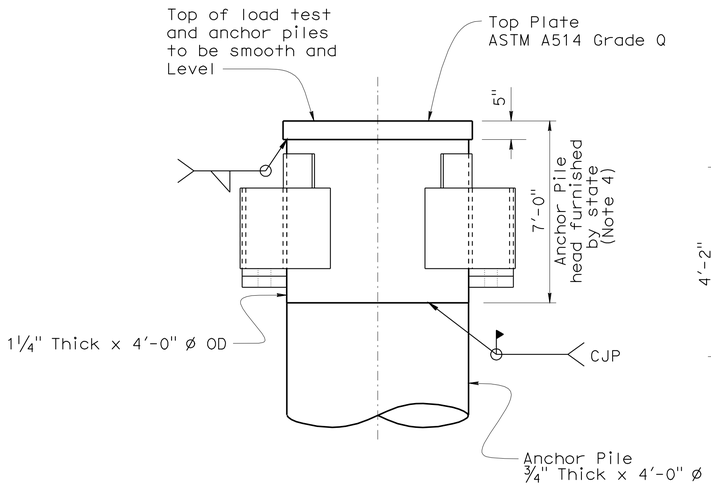

ANCHOR PILES
(See Note 1)

ELEVATION

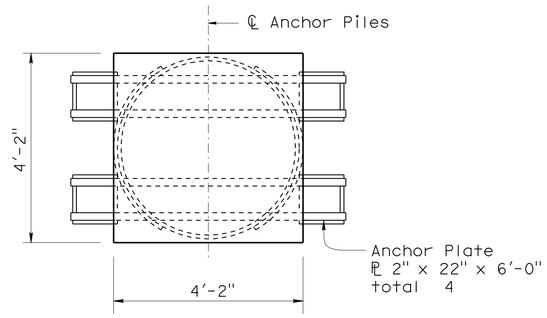

ANCHOR PILES

PLAN

PILE HEAD CONNECTION DETAILS

No Scale

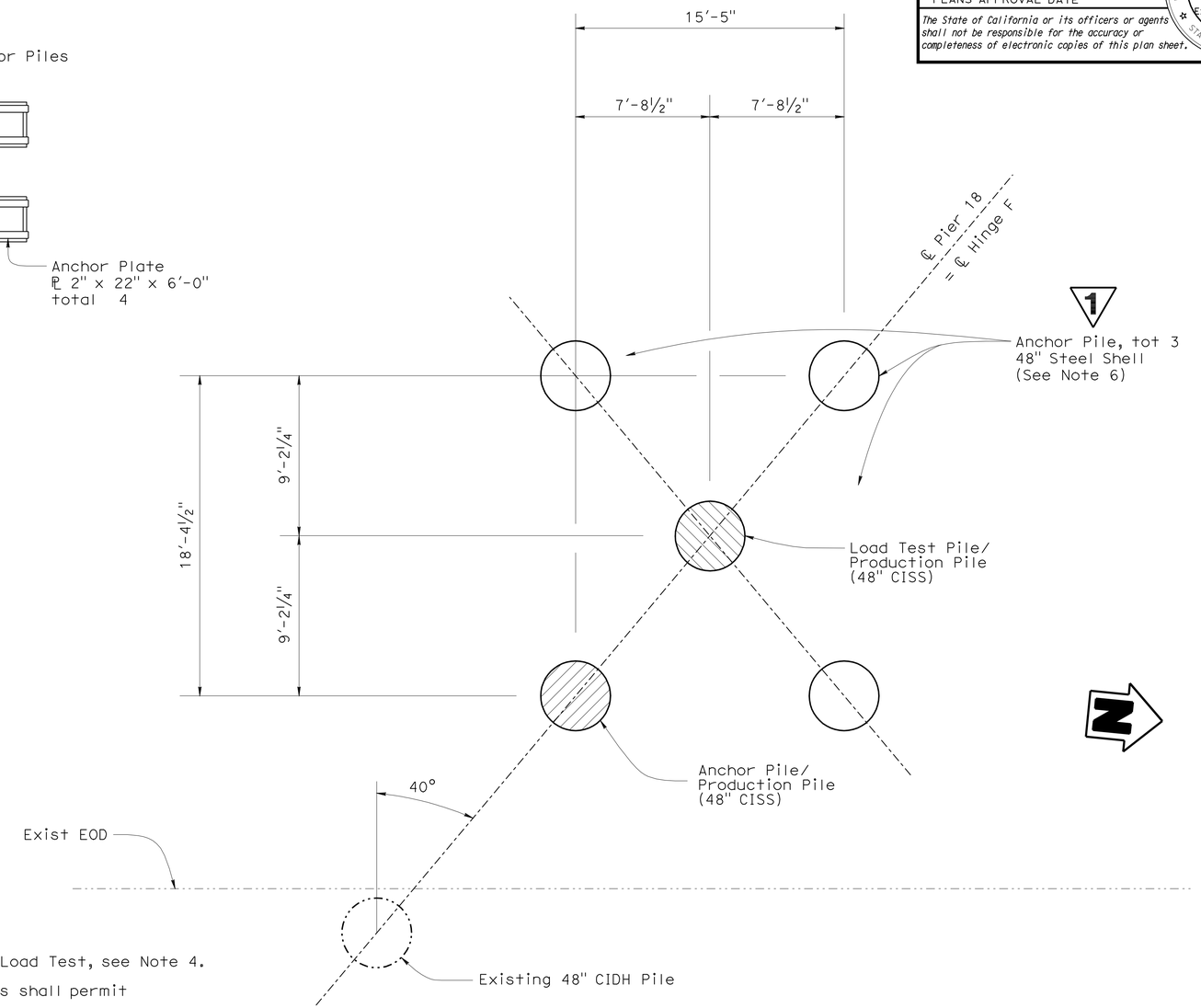

LEGEND:

- Existing Pile
- Anchor Pile
- Anchor Pile/Production Pile
- Load Test Pile/Production Pile

NOTES:

1. Five Anchor Pile Heads required for Load Test, see Note 4.
2. Alignment of slots and bearing plates shall permit anchor plates to pass through pile.
3. For complete joint penetration weld at anchor pile, prepare surface only.
4. Four Anchor Pile Heads will be furnished by the state. One additional Anchor Pile Head shall be fabricated by the contractor and become property of the state after completion of the test.
5. Specified tip elevations for the anchor piles shall be the same as the specified tip elevations for the production piles.
6. Piles shall be cutoff 3' below FG after completion of load test.

NOTE:
THE CONTRACTOR SHALL VERIFY ALL CONTROLLING FIELD DIMENSIONS BEFORE ORDERING OR FABRICATING ANY MATERIAL.

PILE HEAD CONNECTION DETAILS

No Scale

B2-9 B2-11

1 **REVISED PER ADDENDUM No. 1 DATED APRIL 28, 2011**

	BY	CHECKED
DESIGN	Rosa Candiotti	Pete Norboe
DETAILS	D. Elliott	Pete Norboe
QUANTITIES	Rosa Candiotti	Pete Norboe

STATE OF CALIFORNIA
DEPARTMENT OF TRANSPORTATION

DIVISION OF ENGINEERING SERVICES
STRUCTURE DESIGN
DESIGN BRANCH 9

BRIDGE NO. 49-0111
POST MILE SLO 0.0/0.4

SANTA MARIA RIVER BRIDGE (WIDEN)
PILE LOAD TEST DETAILS

STRUCTURES DESIGN DETAIL SHEET (ENGLISH) (REV. 10/25/05)

ORIGINAL SCALE IN INCHES FOR REDUCED PLANS 0 1 2 3

CU 05
EA 445901

DISREGARD PRINTS BEARING EARLIER REVISION DATES

REVISION DATES: 1-28-09 3-3-09 4-14-09 6-12-09 7-28-09

SHEET 6 OF 129

FILE => 49-0111-a-pile_load.add

USERNAME => trstrk DATE PLOTTED => 27-APR-2011 TIME PLOTTED => 11:00