Dist	COUNTY	ROUTE	POST MILES TOTAL PROJECT	SHEET No.	TOTAL SHEETS
05	SLO	46	36.6/41.2	401	595

8-24-09
REGISTERED CIVIL ENGINEER DATE

12-7-09
PLANS APPROVAL DATE

REGISTERED PROFESSIONAL ENGINEER
JOSE M. ARGUELLO
No. 51321
Exp 06-30-10
CIVIL
STATE OF CALIFORNIA

THE STATE OF CALIFORNIA OR ITS OFFICERS OR AGENTS SHALL NOT BE RESPONSIBLE FOR THE ACCURACY OR COMPLETENESS OF ELECTRONIC COPIES OF THIS PLAN SHEET.

NOTE: FOR ACCURATE RIGHT OF WAY AND ACCESS DATA, CONTACT RIGHT OF WAY ENGINEERING AT THE DISTRICT OFFICE.

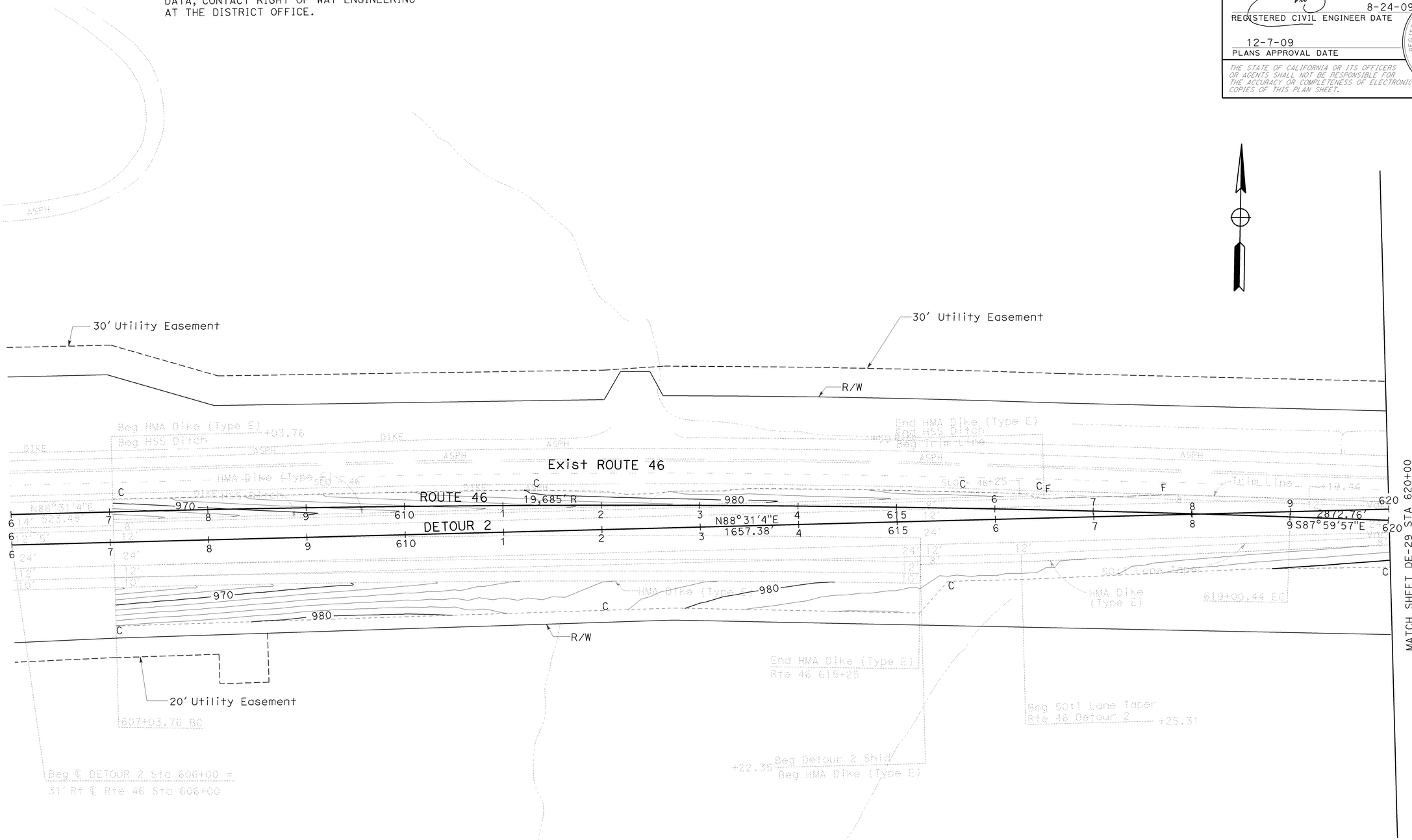

THIS PLAN ACCURATE FOR DETOUR CONSTRUCTION WORK ONLY.

DETOUR PLAN
(DRAINAGE AND CONTOUR GRADING PLAN)
(DETOUR 2)

SCALE: 1" = 50'

DE-28

CALCULATED-DESIGNED BY: JOSE ARGUELLO
CHECKED BY: SUMI HOODE
REVISED BY
DATE REVISED
FUNCTIONAL SUPERVISOR: JACK WALKER
STATE OF CALIFORNIA - DEPARTMENT OF TRANSPORTATION
Caltrans
06-DESIGN

LAST REVISION DATE PLOTTED => 08-DEC-2009
TIME PLOTTED => 10:02
07-21-09

BORDER LAST REVISED 3/1/2007
RELATIVE BORDER SCALE IS IN INCHES 0 1 2 3
USERNAME => trrichf
DGN FILE => 533072mg028.dgn
CU 06220
EA 330721

Dist	COUNTY	ROUTE	POST MILES TOTAL PROJECT	SHEET No.	TOTAL SHEETS
05	SLO	46	36.6/41.2	402	595

8-24-09
REGISTERED CIVIL ENGINEER DATE

12-7-09
PLANS APPROVAL DATE

REGISTERED PROFESSIONAL ENGINEER
JOSE M. ARGUELLO
No. 51321
Exp 06-30-10
CIVIL
STATE OF CALIFORNIA

THE STATE OF CALIFORNIA OR ITS OFFICERS OR AGENTS SHALL NOT BE RESPONSIBLE FOR THE ACCURACY OR COMPLETENESS OF ELECTRONIC COPIES OF THIS PLAN SHEET.

. **NOTE:** FOR ACCURATE RIGHT OF WAY AND ACCESS DATA, CONTACT RIGHT OF WAY ENGINEERING AT THE DISTRICT OFFICE.

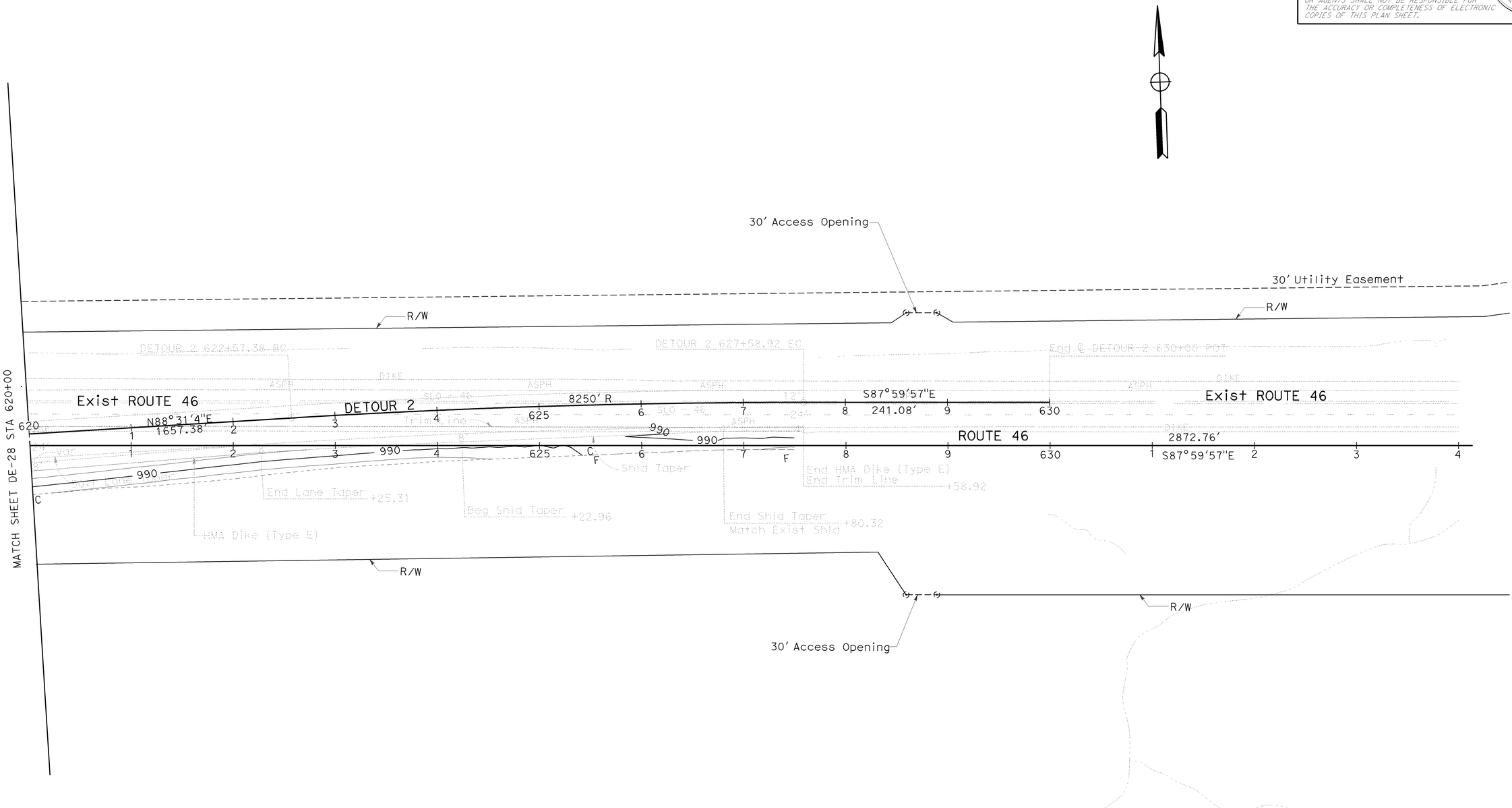

THIS PLAN ACCURATE FOR DETOUR CONSTRUCTION WORK ONLY.

DETOUR PLAN
(DRAINAGE AND CONTOUR GRADING PLAN)
(DETOUR 2)

SCALE: 1" = 50'

DE-29

REVISED BY | DATE REVISED

CALCULATED-DESIGNED BY: JOSE ARGUELLO
CHECKED BY: SUMI HOODE

FUNCTIONAL SUPERVISOR: JACK WALKER

STATE OF CALIFORNIA - DEPARTMENT OF TRANSPORTATION
06-DESIGN

LAST REVISION | DATE PLOTTED => 08-DEC-2009
07-21-09 | TIME PLOTTED => 10:02

BORDER LAST REVISED 3/1/2007 | RELATIVE BORDER SCALE IS IN INCHES 0 1 2 3 | USERNAME => trrichf DGN FILE => 533072mg029.dgn | CU 06220 | EA 330721

Dist	COUNTY	ROUTE	POST MILES TOTAL PROJECT	SHEET No.	TOTAL SHEETS
05	SLO	46	36.6/41.2	403	595

/Cw H. Mw 06-01-09
REGISTERED CIVIL ENGINEER DATE

12-7-09
PLANS APPROVAL DATE

REGISTERED PROFESSIONAL ENGINEER
KEVIN H. MURAI
No. C 59586
Exp 12/31/09
CIVIL
STATE OF CALIFORNIA

THE STATE OF CALIFORNIA OR ITS OFFICERS OR AGENTS SHALL NOT BE RESPONSIBLE FOR THE ACCURACY OR COMPLETENESS OF SCANNED COPIES OF THIS PLAN SHEET.

LEGEND:

- NEW SIGN
- RELOCATE SIGN
- REMOVE SIGN
- ONE POST SIGN
- TWO POST SIGN
- METAL POST (STREET NAME) SIGN
- XX THERMOPLASTIC TRAFFIC STRIPE DETAIL NUMBER
- XX REMOVE THERMOPLASTIC TRAFFIC STRIPE
- I_L OBJECT MARKER TYPE L-1 (OM2-1V)
- I_{GR}^{F} GUARDRAILING DELINEATOR TYPE F-1
- I_F DELINEATOR TYPE F (CLASS 1)
- I_G DELINEATOR TYPE G (CLASS 1)

- STRIPE CHANGE LOCATION
- THERMOPLASTIC PAVEMENT MARKING TYPE V ARROW
- THERMOPLASTIC PAVEMENT MARKING TYPE III ARROW (Lt OR Rt)
- THERMOPLASTIC PAVEMENT MARKING TYPE VI ARROW (Lt OR Rt)
- THERMOPLASTIC PAVEMENT MARKING
- REMOVE THERMOPLASTIC PAVEMENT MARKING
- DIRECTION OF TRAFFIC FLOW

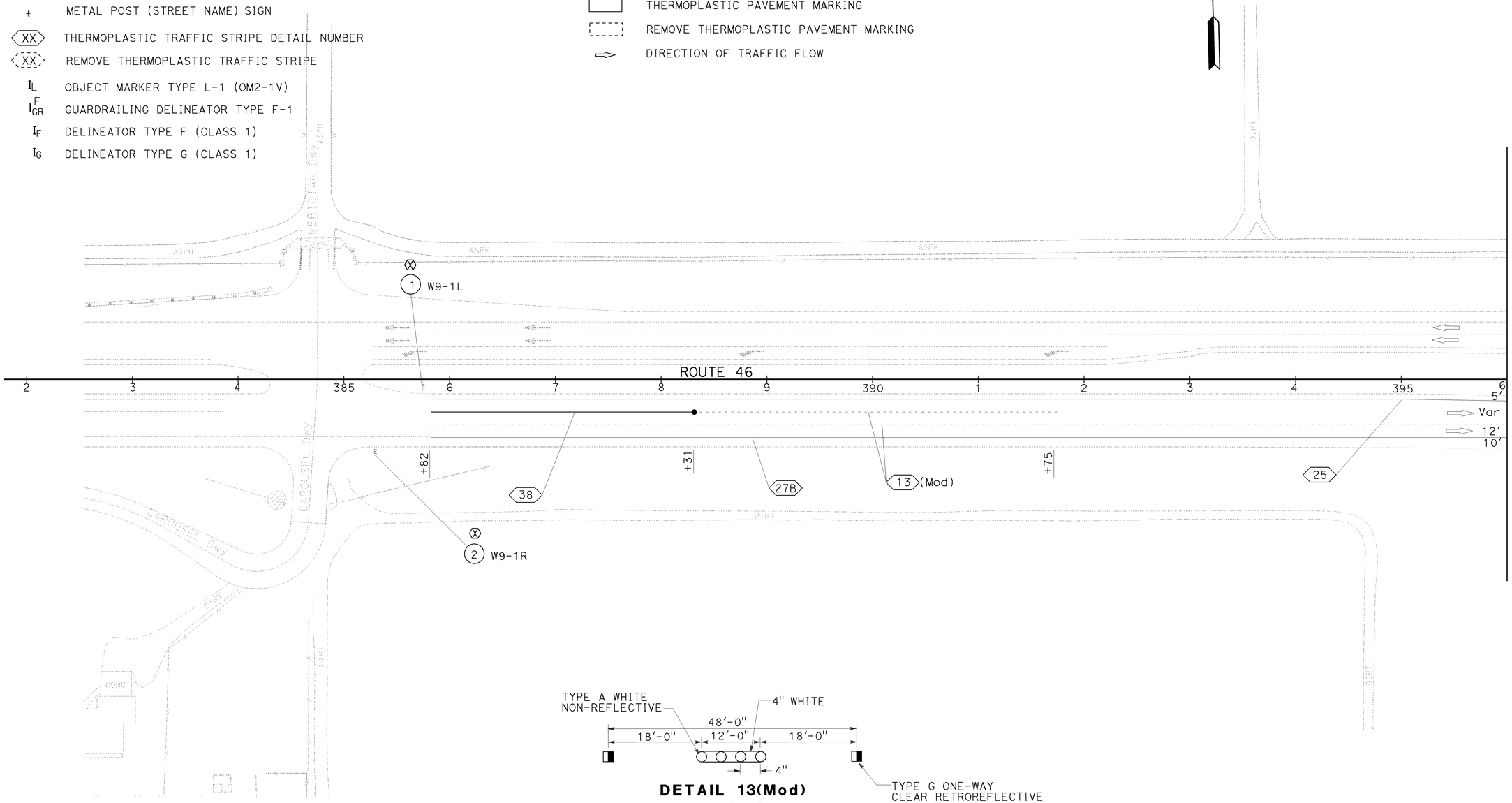

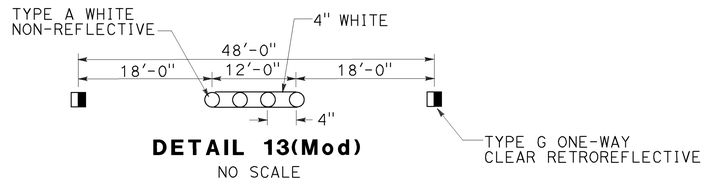

DETAIL 13(Mod)
NO SCALE

PAVEMENT DELINEATION AND SIGN PLAN

SCALE: 1"= 50'

PD-1

THIS PLAN ACCURATE FOR PAVEMENT DELINEATION AND SIGN WORK ONLY.

STATE OF CALIFORNIA - DEPARTMENT OF TRANSPORTATION
TRAFFIC DESIGN
FUNCTIONAL SUPERVISOR: MOHAMMED QATAMI
CALCULATED-DESIGNED BY: KEVIN MURAI
CHECKED BY: HASSAN TAHA
REVISED BY / DATE REVISED

LAST REVISION DATE PLOTTED => 08-DEC-2009
06-01-09 TIME PLOTTED => 10:02

BORDER LAST REVISED 4/11/2008
RELATIVE BORDER SCALE IS IN INCHES 0 1 2 3
USERNAME => trrichf
DGN FILE => 533072na001.dgn
CU 06386
EA 330721

Dist	COUNTY	ROUTE	POST MILES TOTAL PROJECT	SHEET No.	TOTAL SHEETS
05	SLO	46	36.6/41.2	404	595

/Kevin H. Murai 06-01-09
REGISTERED CIVIL ENGINEER DATE

12-7-09
PLANS APPROVAL DATE

REGISTERED PROFESSIONAL ENGINEER
KEVIN H. MURAI
No. C 59586
Exp.12/31/09
CIVIL
STATE OF CALIFORNIA

THE STATE OF CALIFORNIA OR ITS OFFICERS OR AGENTS SHALL NOT BE RESPONSIBLE FOR THE ACCURACY OR COMPLETENESS OF SCANNED COPIES OF THIS PLAN SHEET.

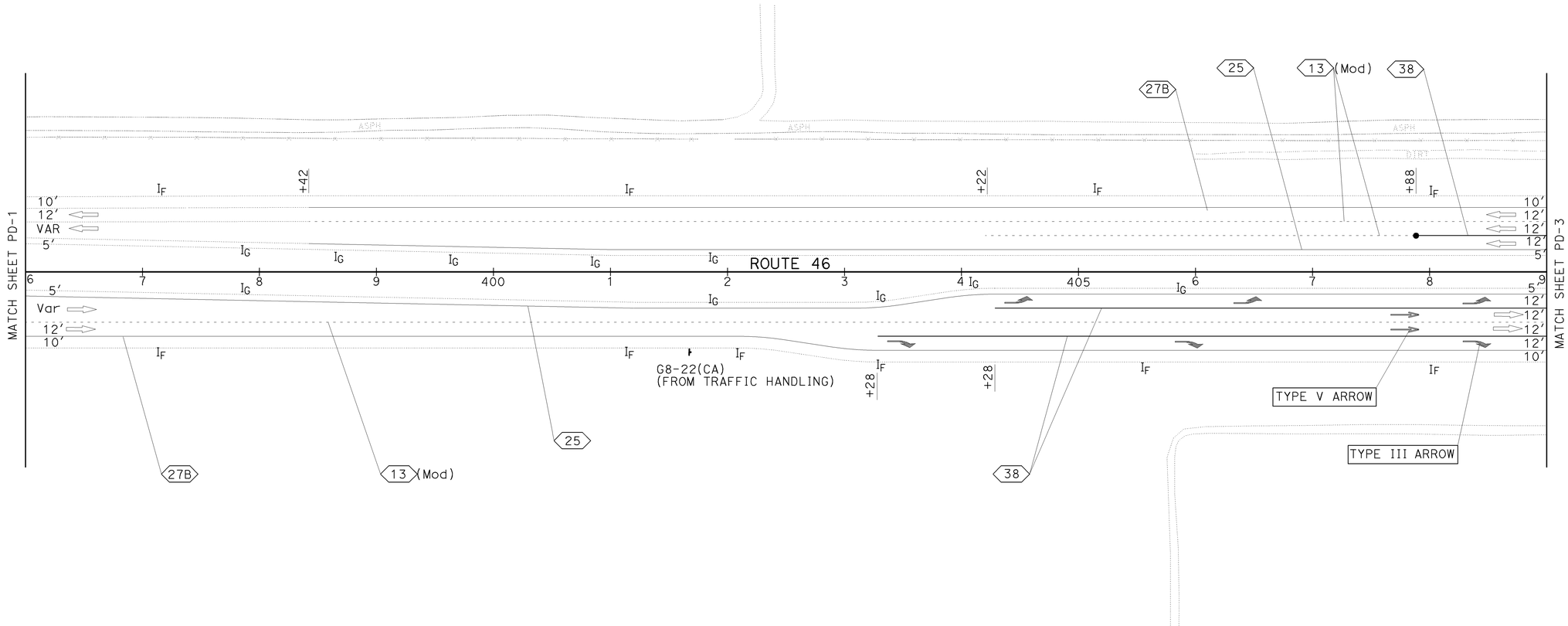

PAVEMENT DELINEATION AND SIGN PLAN

SCALE: 1"= 50′

PD-2

THIS PLAN ACCURATE FOR PAVEMENT DELINEATION AND SIGN WORK ONLY.

CALCULATED-DESIGNED BY: KEVIN MURAI
CHECKED BY: HASSAN TAHA
REVISED BY
DATE REVISED
FUNCTIONAL SUPERVISOR: MOHAMMED QATAMI
STATE OF CALIFORNIA - DEPARTMENT OF TRANSPORTATION
TRAFFIC DESIGN
Caltrans

LAST REVISION DATE PLOTTED => 08-DEC-2009
TIME PLOTTED => 10:02
06-01-09

BORDER LAST REVISED 4/11/2008
RELATIVE BORDER SCALE IS IN INCHES 0 1 2 3
USERNAME => trrichf
DGN FILE => 533072na002.dgn
CU 06386
EA 330721

Dist	COUNTY	ROUTE	POST MILES TOTAL PROJECT	SHEET No.	TOTAL SHEETS
05	SLO	46	36.6/41.2	405	595

/Kevin H. Murai 06-01-09
REGISTERED CIVIL ENGINEER DATE

12-7-09
PLANS APPROVAL DATE

REGISTERED PROFESSIONAL ENGINEER
KEVIN H. MURAI
No. C 59586
Exp.12/31/09
CIVIL
STATE OF CALIFORNIA

THE STATE OF CALIFORNIA OR ITS OFFICERS OR AGENTS SHALL NOT BE RESPONSIBLE FOR THE ACCURACY OR COMPLETENESS OF SCANNED COPIES OF THIS PLAN SHEET.

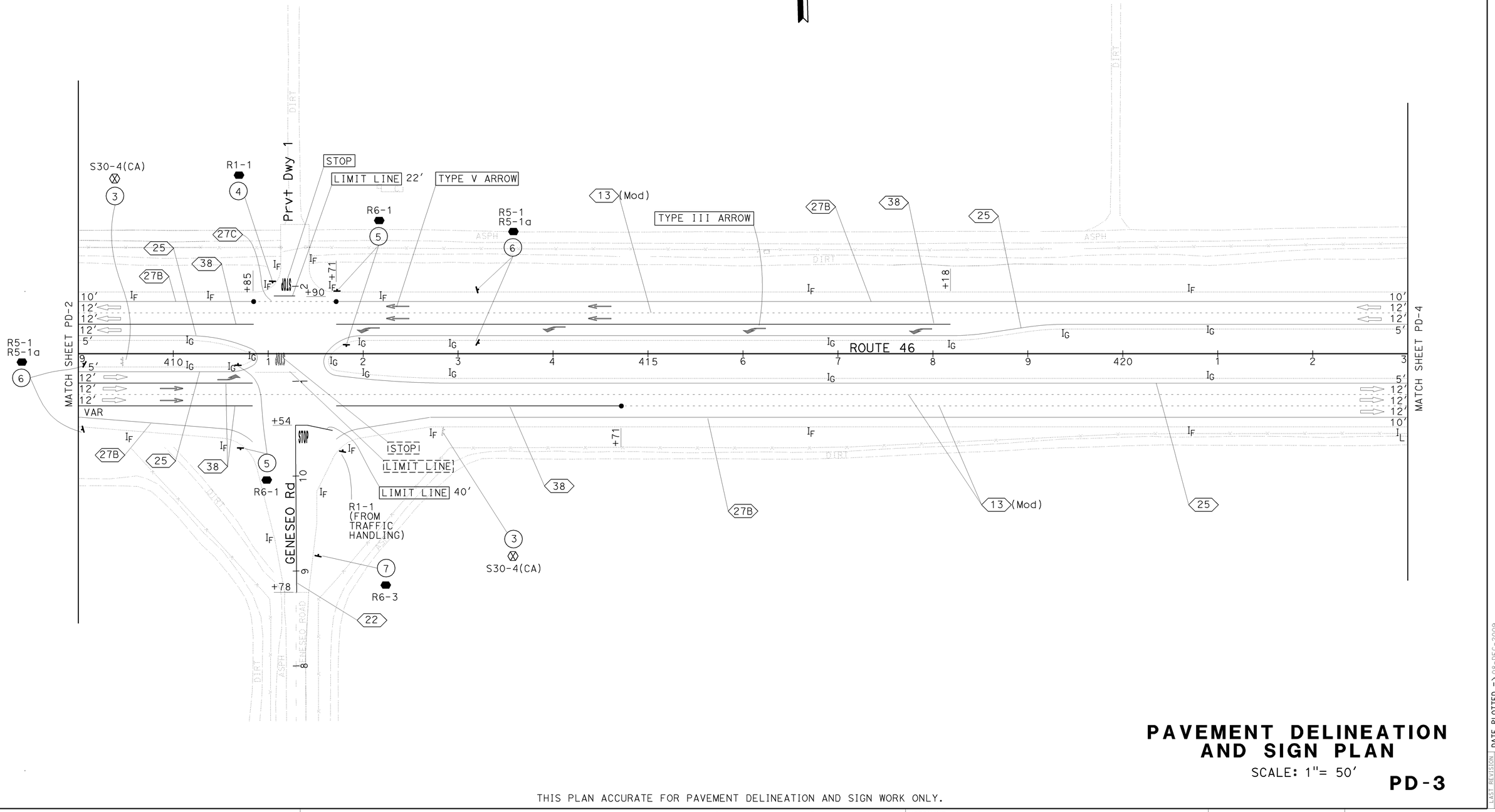

PAVEMENT DELINEATION AND SIGN PLAN

SCALE: 1"= 50'

PD-3

THIS PLAN ACCURATE FOR PAVEMENT DELINEATION AND SIGN WORK ONLY.

STATE OF CALIFORNIA - DEPARTMENT OF TRANSPORTATION
Caltrans®
TRAFFIC DESIGN
FUNCTIONAL SUPERVISOR: MOHAMMED QATAMI
CALCULATED-DESIGNED BY: KEVIN MURAI
CHECKED BY: HASSAN TAHA
REVISED BY
DATE REVISED

LAST REVISION DATE PLOTTED => 08-DEC-2009
TIME PLOTTED => 10:02

BORDER LAST REVISED 4/11/2008
RELATIVE BORDER SCALE IS IN INCHES 0 1 2 3
USERNAME => trrichf
DGN FILE => 533072na003.dgn
CU 06386
EA 330721

Dist	COUNTY	ROUTE	POST MILES TOTAL PROJECT	SHEET No.	TOTAL SHEETS
05	SLO	46	36.6/41.2	406	595

/Cw: H Mw: 06-01-09
REGISTERED CIVIL ENGINEER DATE

12-7-09
PLANS APPROVAL DATE

REGISTERED PROFESSIONAL ENGINEER
KEVIN H. MURAI
No. C 59586
Exp.12/31/09
CIVIL
STATE OF CALIFORNIA

THE STATE OF CALIFORNIA OR ITS OFFICERS OR AGENTS SHALL NOT BE RESPONSIBLE FOR THE ACCURACY OR COMPLETENESS OF SCANNED COPIES OF THIS PLAN SHEET.

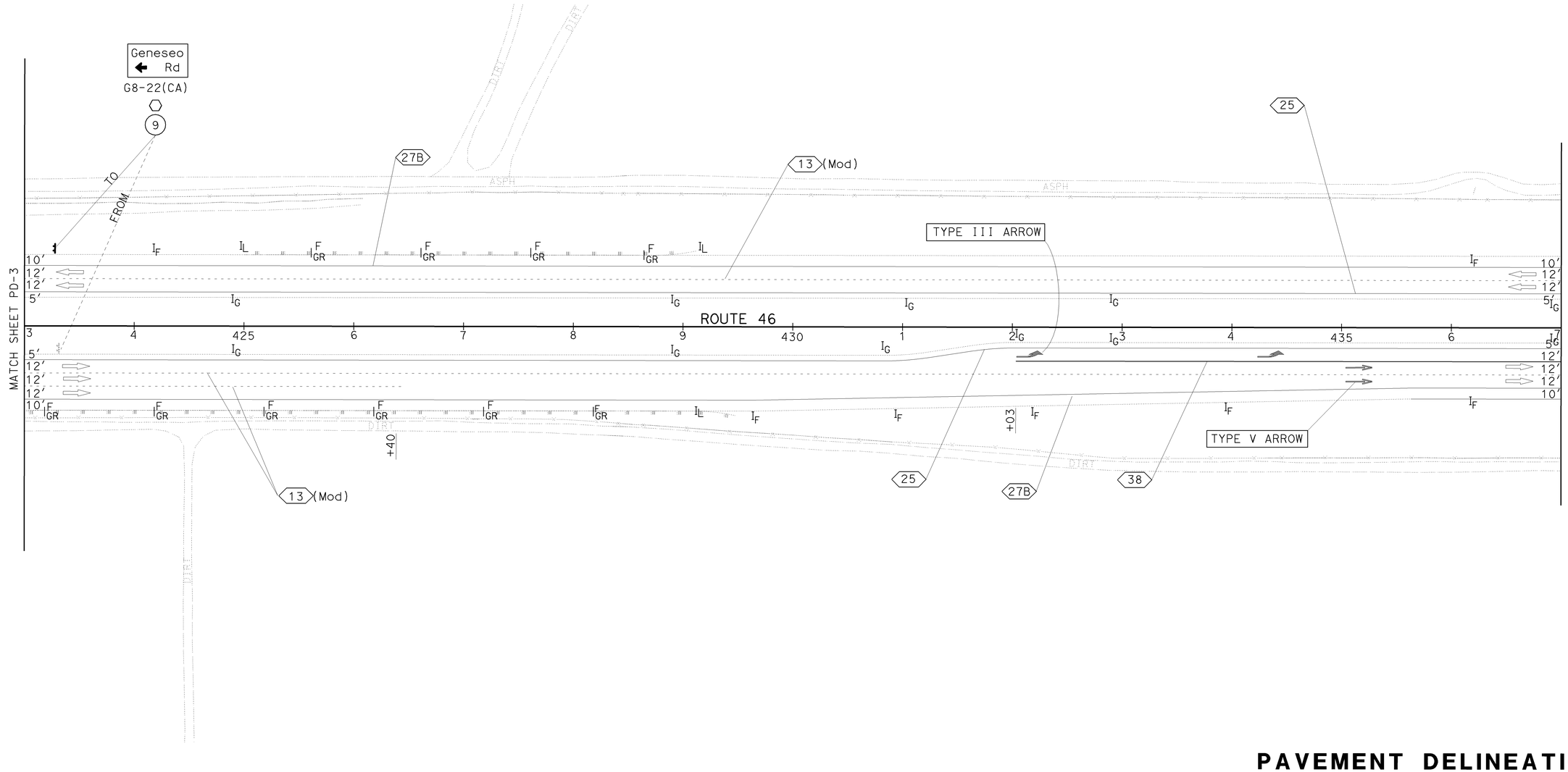

PAVEMENT DELINEATION AND SIGN PLAN

SCALE: 1"= 50'

PD-4

THIS PLAN ACCURATE FOR PAVEMENT DELINEATION AND SIGN WORK ONLY.

REVISED BY | DATE REVISED

CALCULATED-DESIGNED BY: KEVIN MURAI
CHECKED BY: HASSAN TAHA

FUNCTIONAL SUPERVISOR: MOHAMMED QATAMI

STATE OF CALIFORNIA - DEPARTMENT OF TRANSPORTATION
Caltrans
TRAFFIC DESIGN

LAST REVISION | DATE PLOTTED => 08-DEC-2009
06-01-09 | TIME PLOTTED => 10:02

BORDER LAST REVISED 4/11/2008

RELATIVE BORDER SCALE IS IN INCHES 0 1 2 3

USERNAME => trrichf
DGN FILE => 533072na004.dgn

CU 06386

EA 330721

Dist	COUNTY	ROUTE	POST MILES TOTAL PROJECT	SHEET No.	TOTAL SHEETS
05	SLO	46	36.6/41.2	407	595

/Kevin H. Murai 06-01-09
REGISTERED CIVIL ENGINEER DATE

12-7-09
PLANS APPROVAL DATE

REGISTERED PROFESSIONAL ENGINEER
KEVIN H. MURAI
No. C 59586
Exp.12/31/09
CIVIL
STATE OF CALIFORNIA

THE STATE OF CALIFORNIA OR ITS OFFICERS OR AGENTS SHALL NOT BE RESPONSIBLE FOR THE ACCURACY OR COMPLETENESS OF SCANNED COPIES OF THIS PLAN SHEET.

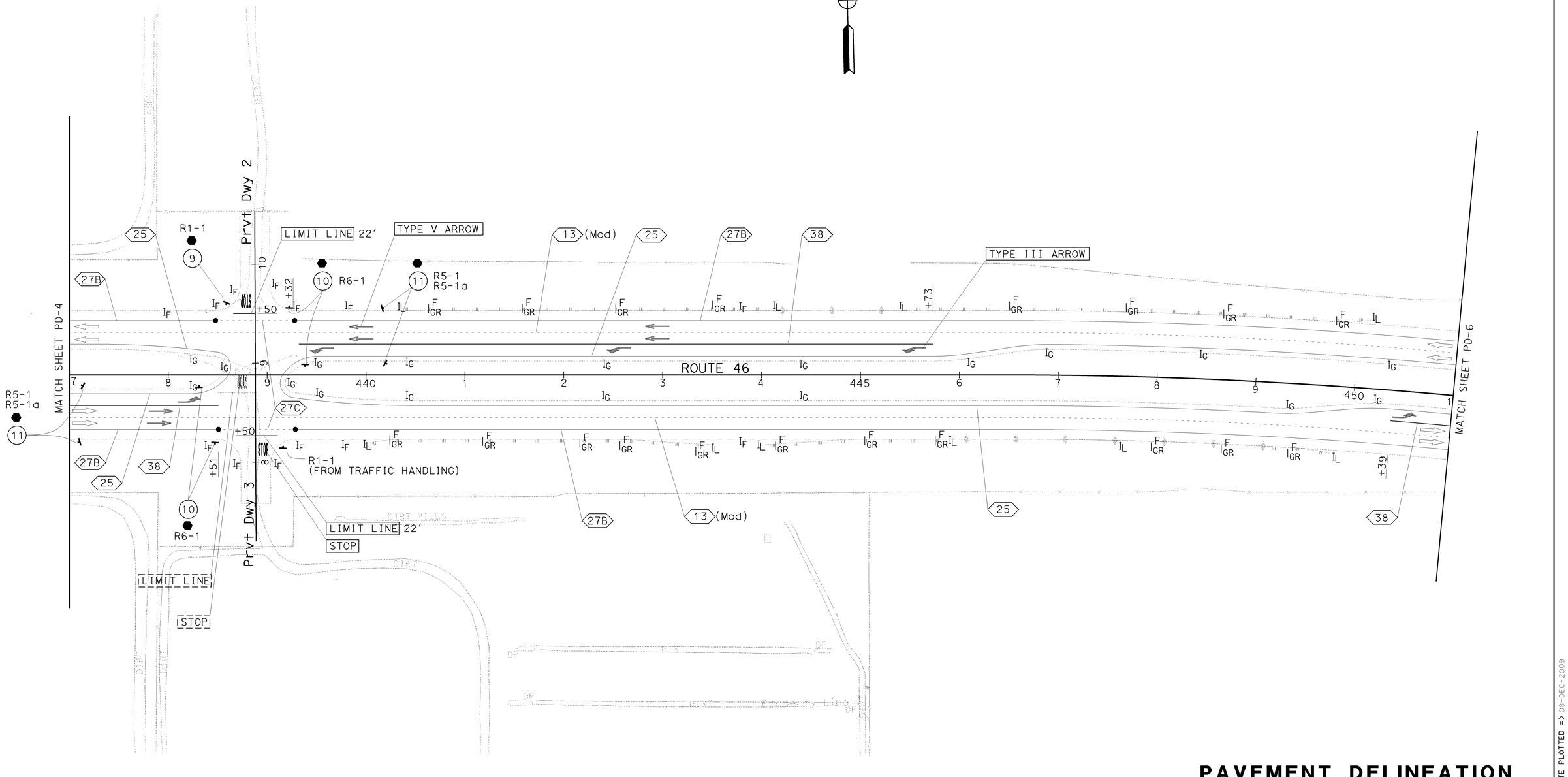

PAVEMENT DELINEATION AND SIGN PLAN

SCALE: 1"= 50'

PD-5

THIS PLAN ACCURATE FOR PAVEMENT DELINEATION AND SIGN WORK ONLY.

STATE OF CALIFORNIA - DEPARTMENT OF TRANSPORTATION
TRAFFIC DESIGN
FUNCTIONAL SUPERVISOR: MOHAMMED QATAMI
CALCULATED-DESIGNED BY: KEVIN MURAI
CHECKED BY: HASSAN TAHA
REVISED BY
DATE REVISED

LAST REVISION DATE PLOTTED => 08-DEC-2009
TIME PLOTTED => 10:02
06-01-09

BORDER LAST REVISED 4/11/2008
RELATIVE BORDER SCALE IS IN INCHES 0 1 2 3
USERNAME => trrichf
DGN FILE => 533072na005.dgn
CU 06386
EA 330721

Dist	COUNTY	ROUTE	POST MILES TOTAL PROJECT	SHEET No.	TOTAL SHEETS
05	SLO	46	36.6/41.2	408	595

/Cen H. Mur. 06-01-09
REGISTERED CIVIL ENGINEER DATE

12-7-09
PLANS APPROVAL DATE

REGISTERED PROFESSIONAL ENGINEER
KEVIN H. MURAI
No. C 59586
Exp.12/31/09
CIVIL
STATE OF CALIFORNIA

THE STATE OF CALIFORNIA OR ITS OFFICERS OR AGENTS SHALL NOT BE RESPONSIBLE FOR THE ACCURACY OR COMPLETENESS OF SCANNED COPIES OF THIS PLAN SHEET.

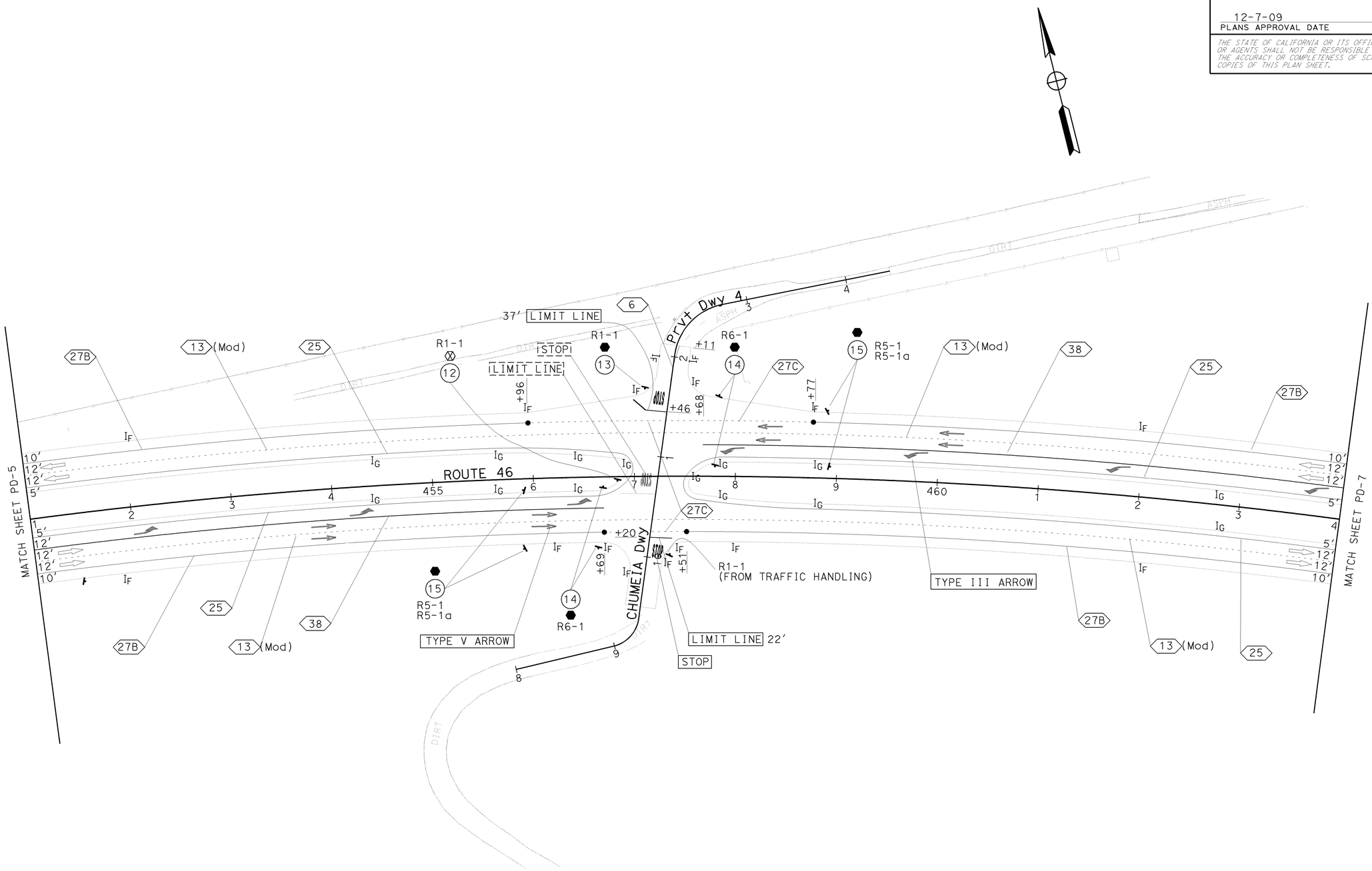

PAVEMENT DELINEATION AND SIGN PLAN

SCALE: 1"= 50'

PD-6

THIS PLAN ACCURATE FOR PAVEMENT DELINEATION AND SIGN WORK ONLY.

STATE OF CALIFORNIA - DEPARTMENT OF TRANSPORTATION
TRAFFIC DESIGN
FUNCTIONAL SUPERVISOR: MOHAMMED QATAMI
CALCULATED-DESIGNED BY: KEVIN MURAI
CHECKED BY: HASSAN TAHA
REVISED BY
DATE REVISED

LAST REVISION DATE PLOTTED => 08-DEC-2009
TIME PLOTTED => 10:02
06-01-09

BORDER LAST REVISED 4/11/2008
RELATIVE BORDER SCALE IS IN INCHES 0 1 2 3
USERNAME => trrichf
DGN FILE => 533072na006.dgn
CU 06386
EA 330721

Dist	COUNTY	ROUTE	POST MILES TOTAL PROJECT	SHEET No.	TOTAL SHEETS
05	SLO	46	36.6/41.2	409	595

/Cw H. Mw 06-01-09
REGISTERED CIVIL ENGINEER DATE

12-7-09
PLANS APPROVAL DATE

REGISTERED PROFESSIONAL ENGINEER
KEVIN H. MURAI
No. C 59586
Exp.12/31/09
CIVIL
STATE OF CALIFORNIA

THE STATE OF CALIFORNIA OR ITS OFFICERS OR AGENTS SHALL NOT BE RESPONSIBLE FOR THE ACCURACY OR COMPLETENESS OF SCANNED COPIES OF THIS PLAN SHEET.

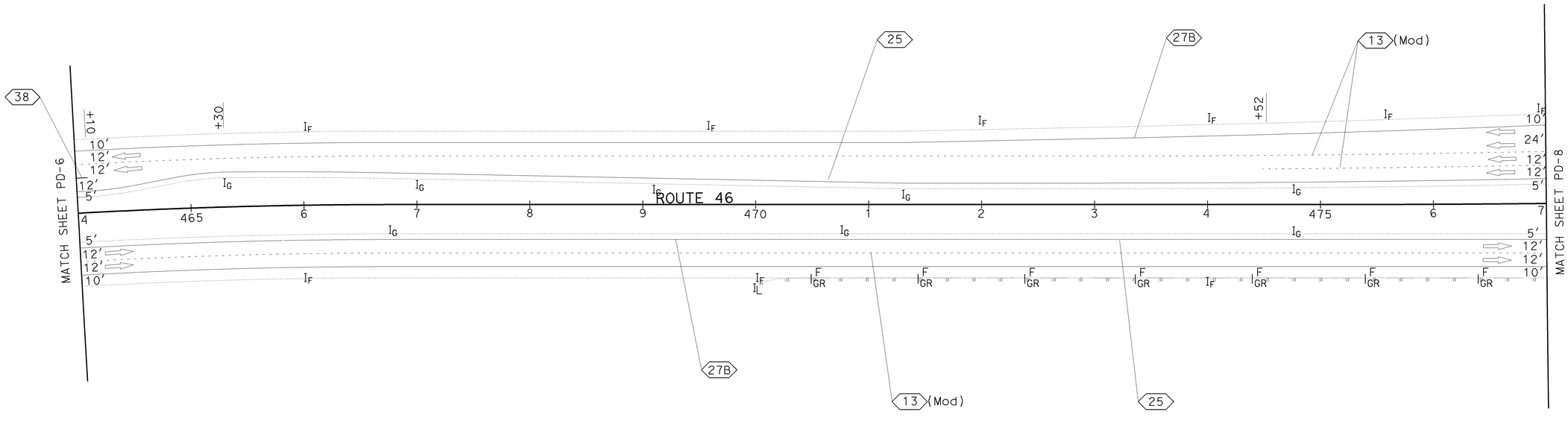

PAVEMENT DELINEATION AND SIGN PLAN

SCALE: 1"= 50'

PD-7

THIS PLAN ACCURATE FOR PAVEMENT DELINEATION AND SIGN WORK ONLY.

STATE OF CALIFORNIA - DEPARTMENT OF TRANSPORTATION
Caltrans®
TRAFFIC DESIGN

FUNCTIONAL SUPERVISOR: MOHAMMED QATAMI

CALCULATED-DESIGNED BY: KEVIN MURAI
CHECKED BY: HASSAN TAHA

REVISED BY | DATE REVISED

LAST REVISION 06-01-09 | DATE PLOTTED => 08-DEC-2009 | TIME PLOTTED => 10:02

BORDER LAST REVISED 4/11/2008

RELATIVE BORDER SCALE IS IN INCHES 0 1 2 3

USERNAME => trrichf
DGN FILE => 533072na007.dgn

CU 06386

EA 330721

Dist	COUNTY	ROUTE	POST MILES TOTAL PROJECT	SHEET No.	TOTAL SHEETS
05	SLO	46	36.6/41.2	410	595

/Cw H. Mw 06-01-09
REGISTERED CIVIL ENGINEER DATE

12-7-09
PLANS APPROVAL DATE

REGISTERED PROFESSIONAL ENGINEER
KEVIN H. MURAI
No. C 59586
Exp.12/31/09
CIVIL
STATE OF CALIFORNIA

THE STATE OF CALIFORNIA OR ITS OFFICERS OR AGENTS SHALL NOT BE RESPONSIBLE FOR THE ACCURACY OR COMPLETENESS OF SCANNED COPIES OF THIS PLAN SHEET.

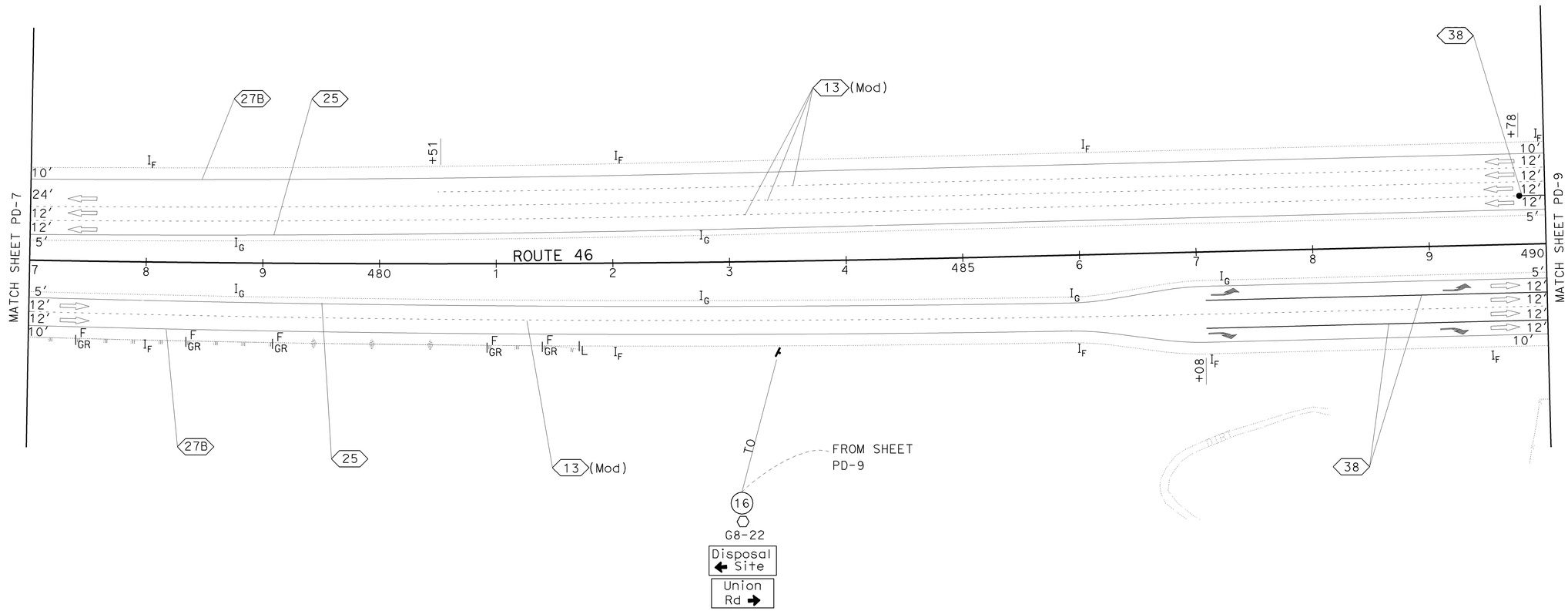

PAVEMENT DELINEATION AND SIGN PLAN

SCALE: 1"= 50′

PD-8

THIS PLAN ACCURATE FOR PAVEMENT DELINEATION AND SIGN WORK ONLY.

STATE OF CALIFORNIA - DEPARTMENT OF TRANSPORTATION
Caltrans®
TRAFFIC DESIGN

FUNCTIONAL SUPERVISOR: MOHAMMED QATAMI

CALCULATED-DESIGNED BY: KEVIN MURAI
CHECKED BY: HASSAN TAHA

REVISED BY | DATE REVISED

LAST REVISION | DATE PLOTTED => 08-DEC-2009
06-01-09 | TIME PLOTTED => 10:03

BORDER LAST REVISED 4/11/2008

RELATIVE BORDER SCALE IS IN INCHES 0 1 2 3

USERNAME => trrichf
DGN FILE => 533072na008.dgn

CU 06386

EA 330721

Dist	COUNTY	ROUTE	POST MILES TOTAL PROJECT	SHEET No.	TOTAL SHEETS
05	SLO	46	36.6/41.2	411	595

/Cen H. Mur 06-01-09
REGISTERED CIVIL ENGINEER DATE

12-7-09
PLANS APPROVAL DATE

REGISTERED PROFESSIONAL ENGINEER
KEVIN H. MURAI
No. C 59586
Exp.12/31/09
CIVIL
STATE OF CALIFORNIA

THE STATE OF CALIFORNIA OR ITS OFFICERS OR AGENTS SHALL NOT BE RESPONSIBLE FOR THE ACCURACY OR COMPLETENESS OF SCANNED COPIES OF THIS PLAN SHEET.

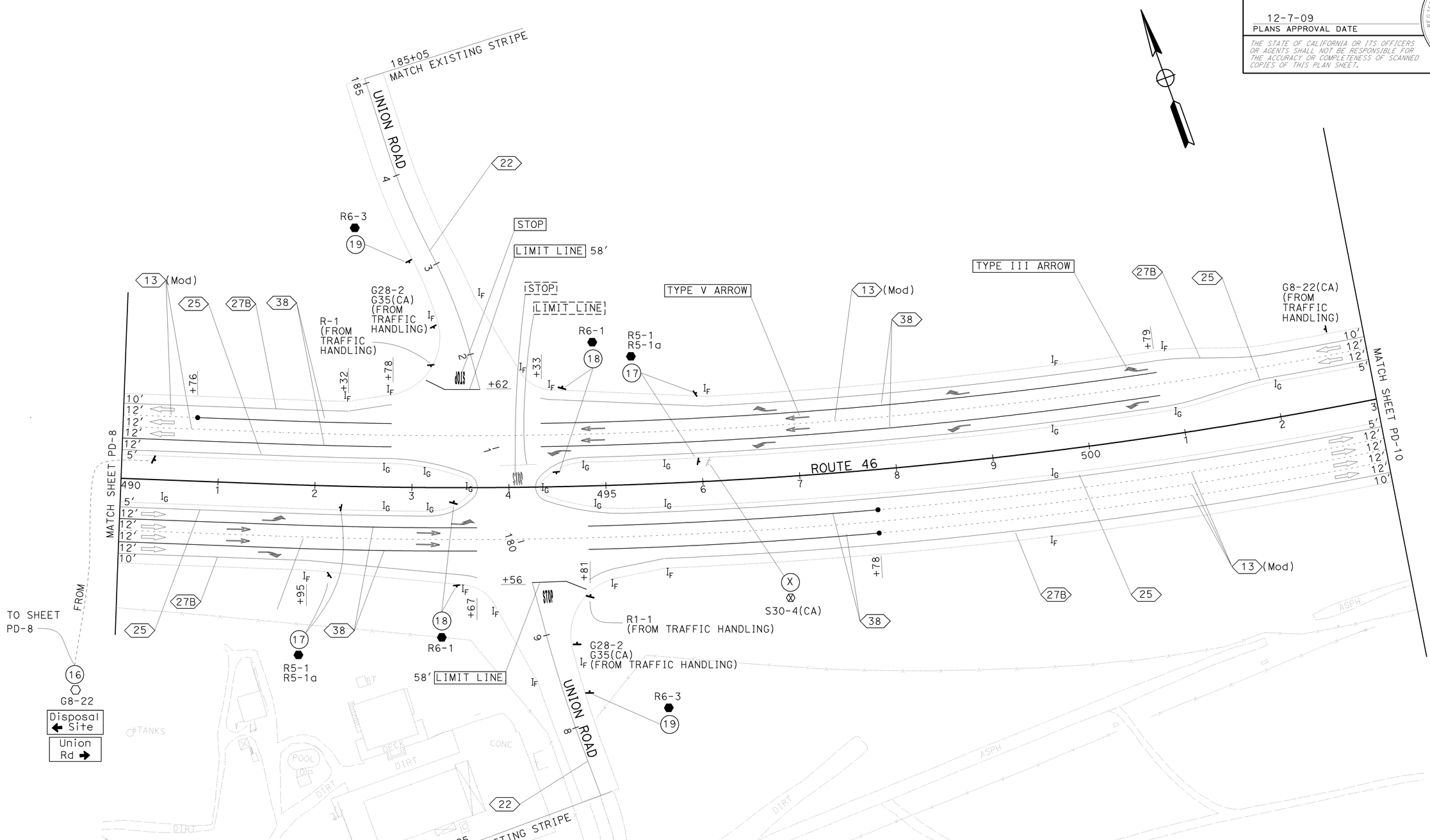

PAVEMENT DELINEATION AND SIGN PLAN

SCALE: 1"=50'

PD-9

THIS PLAN ACCURATE FOR PAVEMENT DELINEATION AND SIGN WORK ONLY.

CALCULATED-DESIGNED BY: KEVIN MURAI
CHECKED BY: HASSAN TAHA
REVISED BY
DATE REVISED
FUNCTIONAL SUPERVISOR: MOHAMMED QATAMI

STATE OF CALIFORNIA - DEPARTMENT OF TRANSPORTATION
Caltrans®
TRAFFIC DESIGN

LAST REVISION | DATE PLOTTED => 08-DEC-2009
TIME PLOTTED => 09:24
06-01-09

BORDER LAST REVISED 4/11/2008
RELATIVE BORDER SCALE IS IN INCHES 0 1 2 3
USERNAME => trmnguye
DGN FILE => 533072na009.dgn
CU 06386
EA 330721

Dist	COUNTY	ROUTE	POST MILES TOTAL PROJECT	SHEET No.	TOTAL SHEETS
05	SLO	46	36.6/41.2	412	595

/Cw H. Mur 06-01-09
REGISTERED CIVIL ENGINEER DATE

12-7-09
PLANS APPROVAL DATE

KEVIN H. MURAI No. C 59586 Exp.12/31/09 CIVIL
REGISTERED PROFESSIONAL ENGINEER STATE OF CALIFORNIA

THE STATE OF CALIFORNIA OR ITS OFFICERS OR AGENTS SHALL NOT BE RESPONSIBLE FOR THE ACCURACY OR COMPLETENESS OF SCANNED COPIES OF THIS PLAN SHEET.

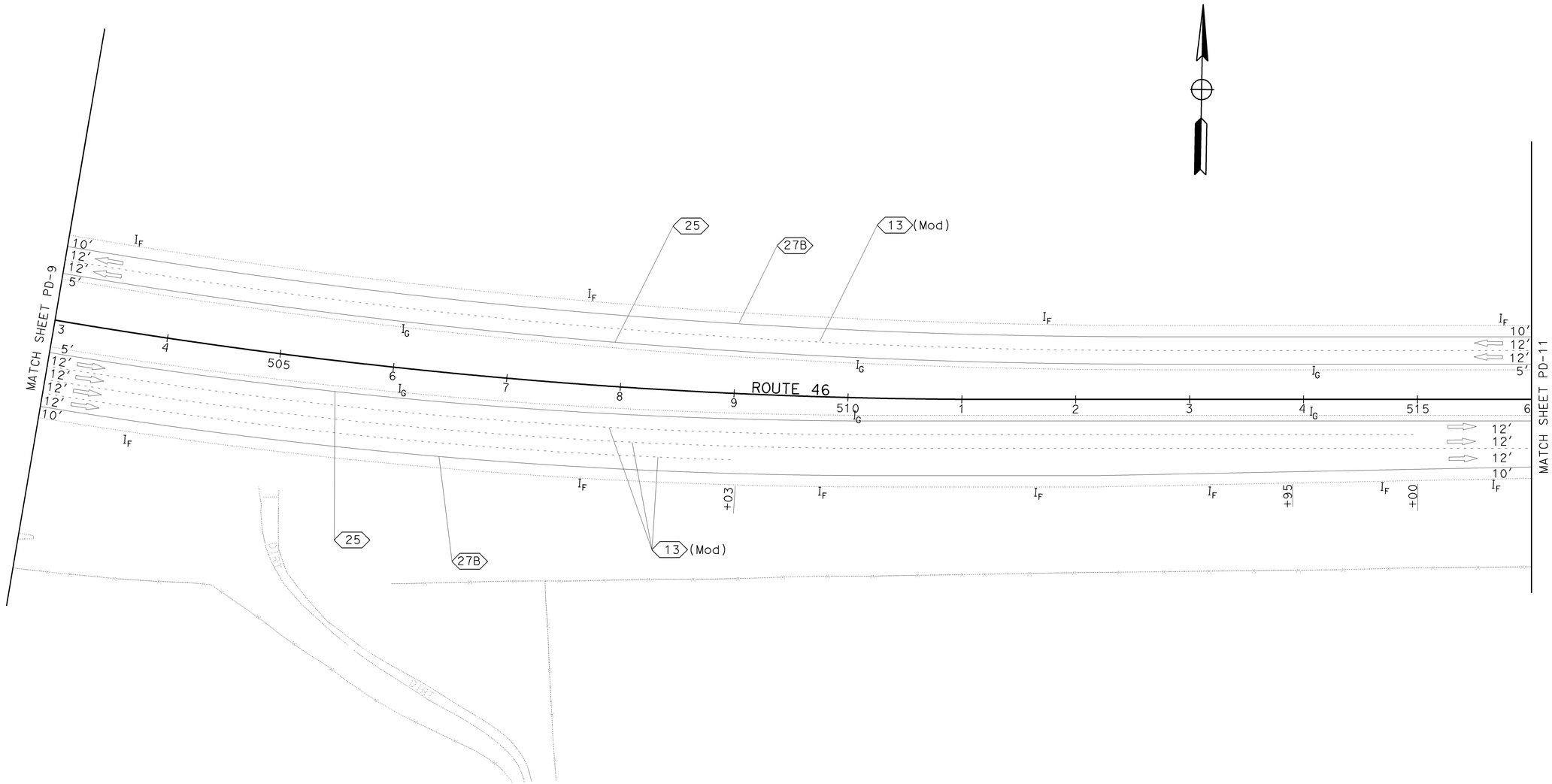

PAVEMENT DELINEATION AND SIGN PLAN

SCALE: 1"=50′

PD-10

THIS PLAN ACCURATE FOR PAVEMENT DELINEATION AND SIGN WORK ONLY.

STATE OF CALIFORNIA - DEPARTMENT OF TRANSPORTATION
Caltrans®
TRAFFIC DESIGN

FUNCTIONAL SUPERVISOR: MOHAMMED QATAMI

CALCULATED-DESIGNED BY: KEVIN MURAI
CHECKED BY: HASSAN TAHA

REVISED BY | DATE REVISED

LAST REVISION DATE PLOTTED => 08-DEC-2009
TIME PLOTTED => 09:24
06-01-09

BORDER LAST REVISED 4/11/2008

RELATIVE BORDER SCALE IS IN INCHES 0 1 2 3

USERNAME => trmnguye
DGN FILE => 533072na010.dgn

CU 06386

EA 330721

Dist	COUNTY	ROUTE	POST MILES TOTAL PROJECT	SHEET No.	TOTAL SHEETS
05	SLO	46	36.6/41.2	413	595

/Cw H. Mw 06-01-09
REGISTERED CIVIL ENGINEER DATE

12-7-09
PLANS APPROVAL DATE

REGISTERED PROFESSIONAL ENGINEER
KEVIN H. MURAI
No. C 59586
Exp.12/31/09
CIVIL
STATE OF CALIFORNIA

THE STATE OF CALIFORNIA OR ITS OFFICERS OR AGENTS SHALL NOT BE RESPONSIBLE FOR THE ACCURACY OR COMPLETENESS OF SCANNED COPIES OF THIS PLAN SHEET.

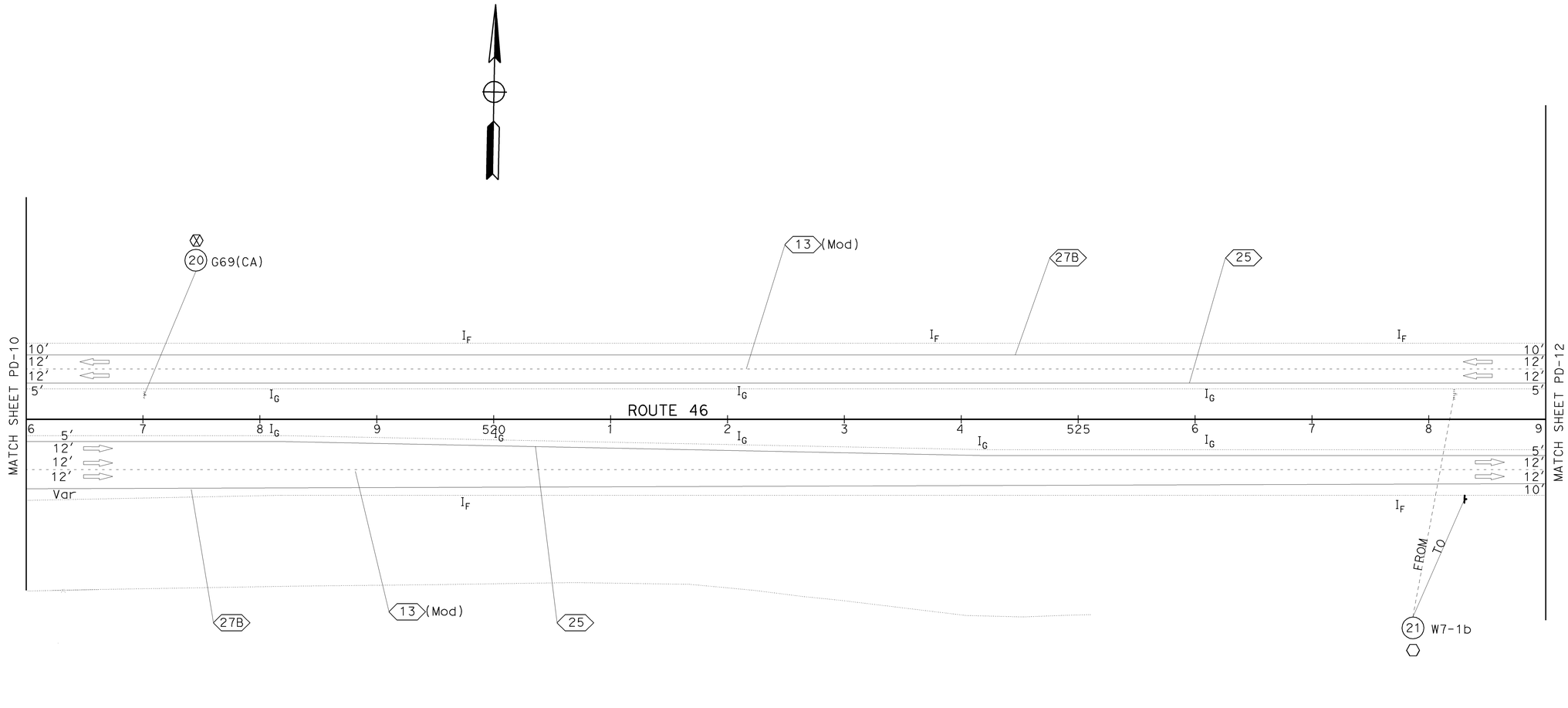

PAVEMENT DELINEATION AND SIGN PLAN

SCALE: 1"=50′

PD-11

THIS PLAN ACCURATE FOR PAVEMENT DELINEATION AND SIGN WORK ONLY.

REVISED BY | DATE REVISED

CALCULATED-DESIGNED BY: KEVIN MURAI
CHECKED BY: HASSAN TAHA
FUNCTIONAL SUPERVISOR: MOHAMMED QATAMI

STATE OF CALIFORNIA - DEPARTMENT OF TRANSPORTATION
TRAFFIC DESIGN

LAST REVISION 06-01-09
DATE PLOTTED => 08-DEC-2009
TIME PLOTTED => 09:24

BORDER LAST REVISED 4/11/2008

RELATIVE BORDER SCALE IS IN INCHES 0 1 2 3

USERNAME => trmnguye
DGN FILE => 533072na011.dgn

CU 06386

EA 330721

Dist	COUNTY	ROUTE	POST MILES TOTAL PROJECT	SHEET No.	TOTAL SHEETS
05	SLO	46	36.6/41.2	414	595

/Cw H. Mm 06-01-09
REGISTERED CIVIL ENGINEER DATE

12-7-09
PLANS APPROVAL DATE

REGISTERED PROFESSIONAL ENGINEER
KEVIN H. MURAI
No. C 59586
Exp.12/31/09
CIVIL
STATE OF CALIFORNIA

THE STATE OF CALIFORNIA OR ITS OFFICERS OR AGENTS SHALL NOT BE RESPONSIBLE FOR THE ACCURACY OR COMPLETENESS OF SCANNED COPIES OF THIS PLAN SHEET.

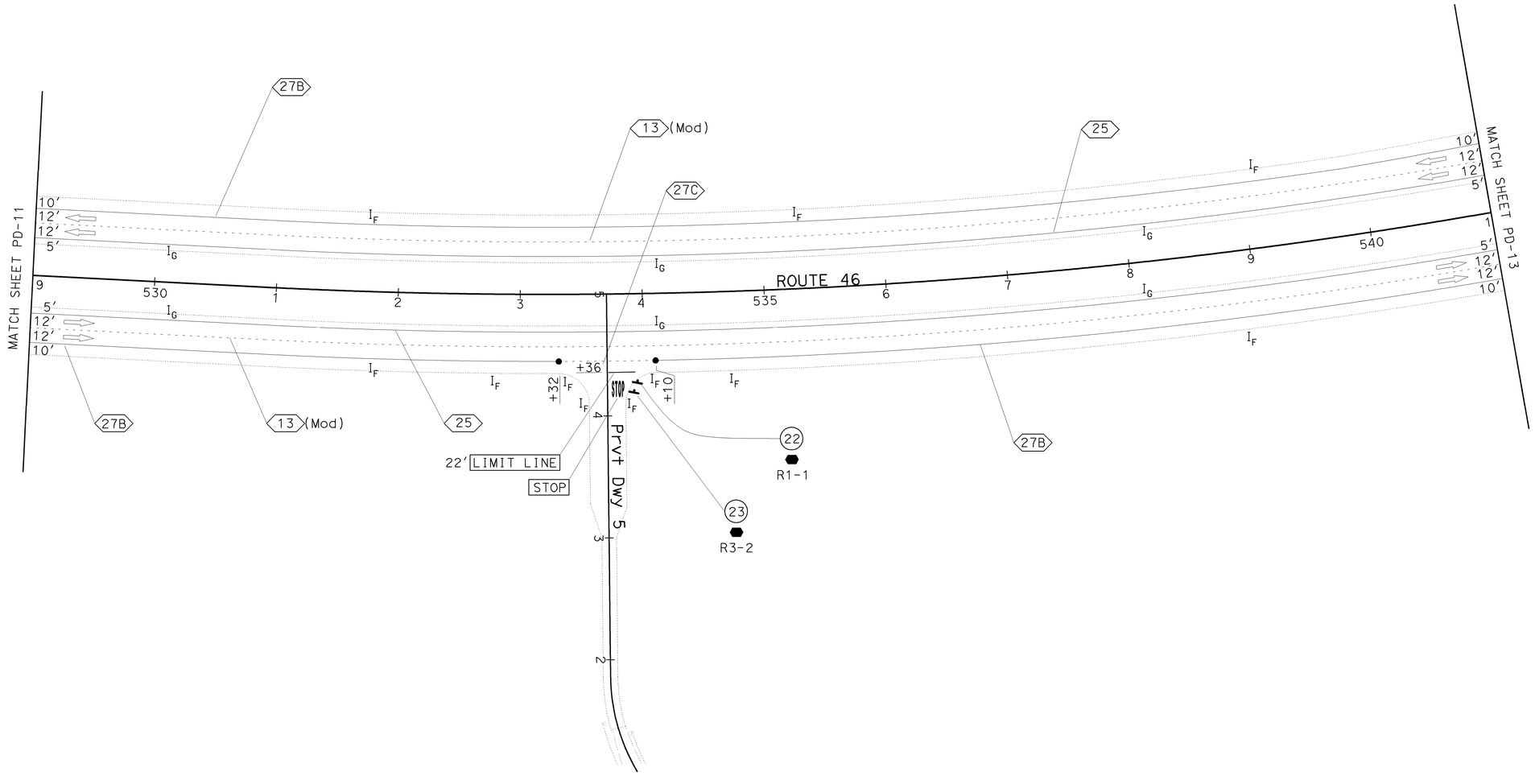

PAVEMENT DELINEATION AND SIGN PLAN

SCALE: 1"=50′

PD-12

THIS PLAN ACCURATE FOR PAVEMENT DELINEATION AND SIGN WORK ONLY.

STATE OF CALIFORNIA - DEPARTMENT OF TRANSPORTATION
TRAFFIC DESIGN
Caltrans
FUNCTIONAL SUPERVISOR: MOHAMMED QATAMI
CALCULATED-DESIGNED BY: KEVIN MURAI
CHECKED BY: HASSAN TAHA
REVISED BY
DATE REVISED

LAST REVISION 06-01-09
DATE PLOTTED => 08-DEC-2009
TIME PLOTTED => 09:24

BORDER LAST REVISED 4/11/2008
RELATIVE BORDER SCALE IS IN INCHES 0 1 2 3
USERNAME => trmnguye
DGN FILE => 533072na012.dgn
CU 06386
EA 330721

Dist	COUNTY	ROUTE	POST MILES TOTAL PROJECT	SHEET No.	TOTAL SHEETS
05	SLO	46	36.6/41.2	415	595

/Cen H. Mur. 06-01-09
REGISTERED CIVIL ENGINEER DATE

12-7-09
PLANS APPROVAL DATE

REGISTERED PROFESSIONAL ENGINEER
KEVIN H. MURAI
No. C 59586
Exp.12/31/09
CIVIL
STATE OF CALIFORNIA

THE STATE OF CALIFORNIA OR ITS OFFICERS OR AGENTS SHALL NOT BE RESPONSIBLE FOR THE ACCURACY OR COMPLETENESS OF SCANNED COPIES OF THIS PLAN SHEET.

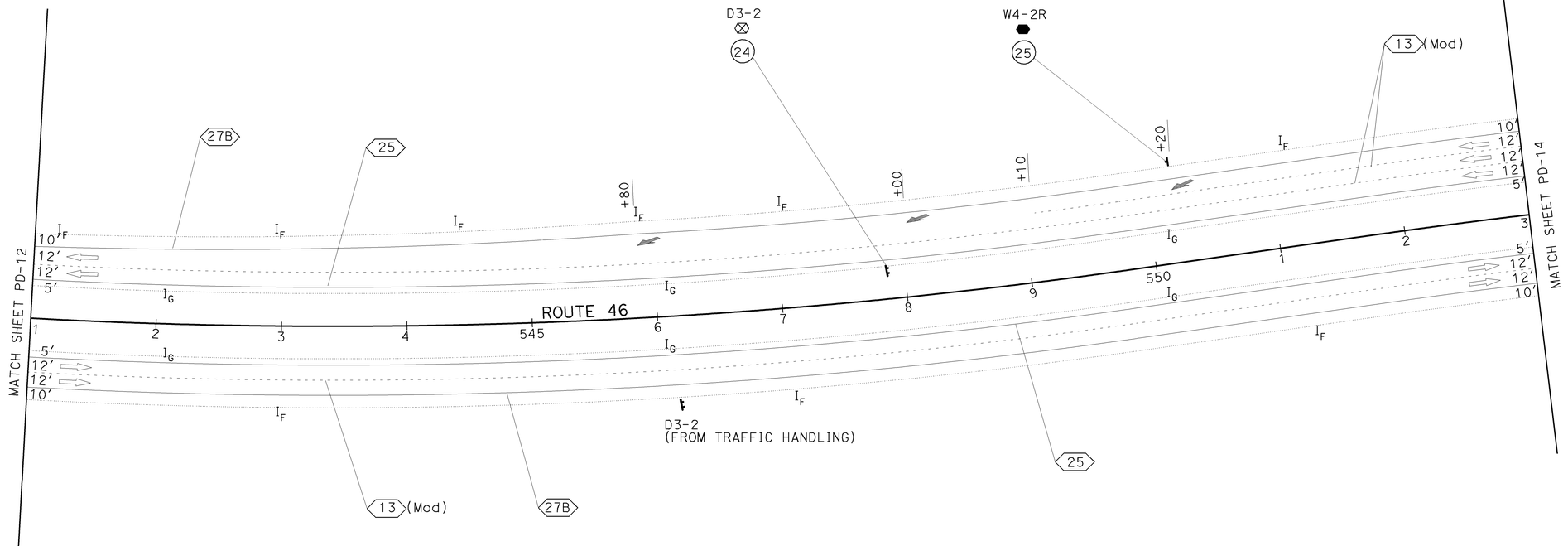

PAVEMENT DELINEATION AND SIGN PLAN

SCALE: 1"=50′

PD-13

THIS PLAN ACCURATE FOR PAVEMENT DELINEATION AND SIGN WORK ONLY.

STATE OF CALIFORNIA - DEPARTMENT OF TRANSPORTATION
Caltrans®
TRAFFIC DESIGN
FUNCTIONAL SUPERVISOR: MOHAMMED QATAMI
CALCULATED-DESIGNED BY: KEVIN MURAI
CHECKED BY: HASSAN TAHA
REVISED BY
DATE REVISED

LAST REVISION | DATE PLOTTED => 08-DEC-2009 | 06-01-09 | TIME PLOTTED => 09:24

BORDER LAST REVISED 4/11/2008
RELATIVE BORDER SCALE IS IN INCHES 0 1 2 3
USERNAME => trmnguye
DGN FILE => 533072na013.dgn
CU 06386
EA 330721

Dist	COUNTY	ROUTE	POST MILES TOTAL PROJECT	SHEET No.	TOTAL SHEETS
05	SLO	46	36.6/41.2	416	595

/Kevin H. Murai 06-01-09
REGISTERED CIVIL ENGINEER DATE

12-7-09
PLANS APPROVAL DATE

REGISTERED PROFESSIONAL ENGINEER
KEVIN H. MURAI
No. C 59586
Exp.12/31/09
CIVIL
STATE OF CALIFORNIA

THE STATE OF CALIFORNIA OR ITS OFFICERS OR AGENTS SHALL NOT BE RESPONSIBLE FOR THE ACCURACY OR COMPLETENESS OF SCANNED COPIES OF THIS PLAN SHEET.

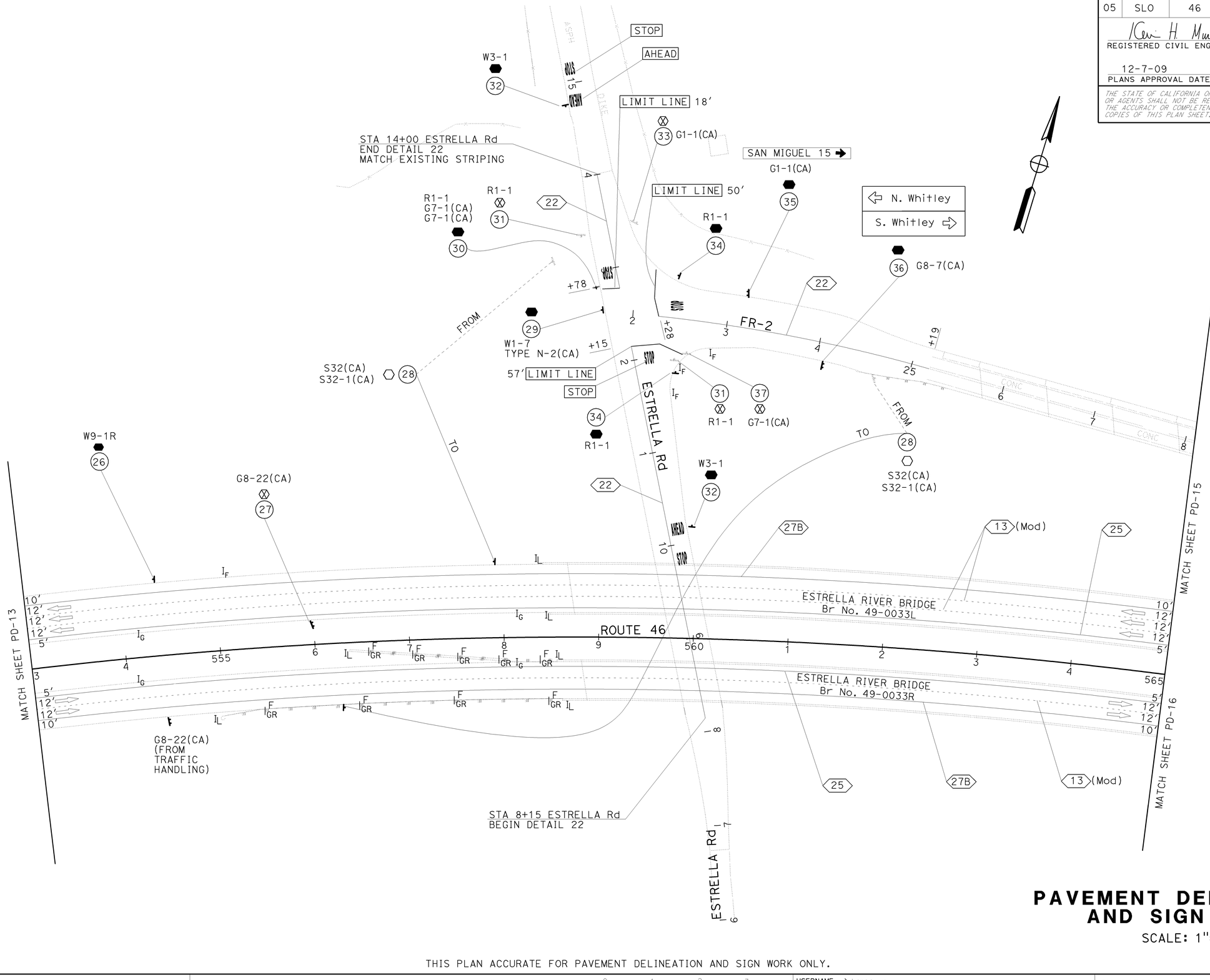

PAVEMENT DELINEATION AND SIGN PLAN

SCALE: 1"=50′

PD-14

THIS PLAN ACCURATE FOR PAVEMENT DELINEATION AND SIGN WORK ONLY.

STATE OF CALIFORNIA - DEPARTMENT OF TRANSPORTATION
TRAFFIC DESIGN
FUNCTIONAL SUPERVISOR: MOHAMMED QATAMI
CALCULATED-DESIGNED BY: KEVIN MURAI
CHECKED BY: HASSAN TAHA
REVISED BY
DATE REVISED

LAST REVISION 06-01-09
DATE PLOTTED => 08-DEC-2009
TIME PLOTTED => 09:24

BORDER LAST REVISED 4/11/2008
RELATIVE BORDER SCALE IS IN INCHES 0 1 2 3
USERNAME => trmnguye
DGN FILE => 533072na014.dgn
CU 06386
EA 330721

Dist	COUNTY	ROUTE	POST MILES TOTAL PROJECT	SHEET No.	TOTAL SHEETS
05	SLO	46	36.6/41.2	417	595

/Cen H. Mur 06-01-09
REGISTERED CIVIL ENGINEER DATE

12-7-09
PLANS APPROVAL DATE

KEVIN H. MURAI No. C 59586 Exp.12/31/09 CIVIL — REGISTERED PROFESSIONAL ENGINEER — STATE OF CALIFORNIA

THE STATE OF CALIFORNIA OR ITS OFFICERS OR AGENTS SHALL NOT BE RESPONSIBLE FOR THE ACCURACY OR COMPLETENESS OF SCANNED COPIES OF THIS PLAN SHEET.

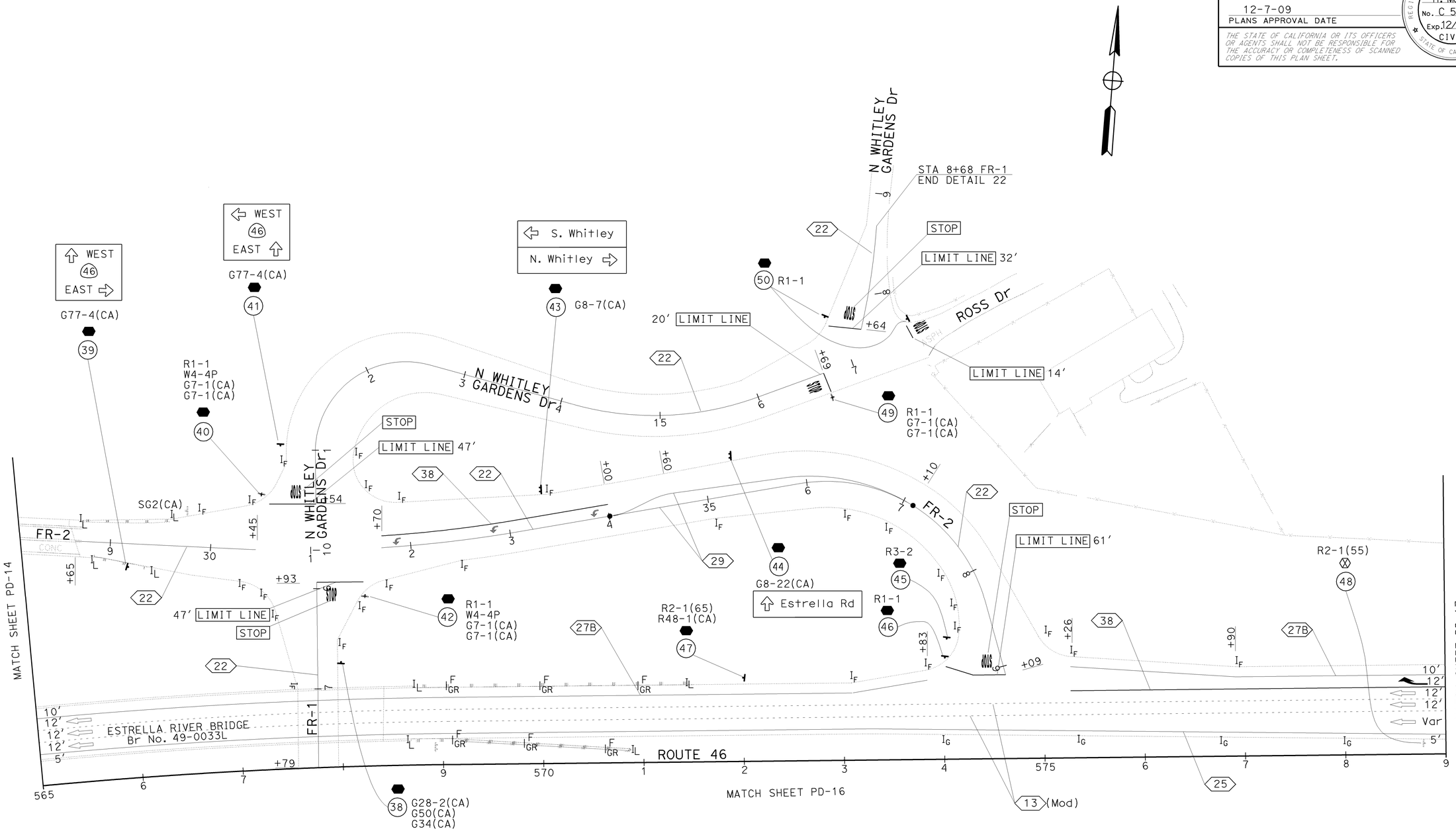

PAVEMENT DELINEATION AND SIGN PLAN

SCALE: 1"=50'

PD-15

THIS PLAN ACCURATE FOR PAVEMENT DELINEATION AND SIGN WORK ONLY.

STATE OF CALIFORNIA - DEPARTMENT OF TRANSPORTATION
TRAFFIC DESIGN
FUNCTIONAL SUPERVISOR: MOHAMMED QATAMI
CALCULATED-DESIGNED BY: KEVIN MURAI
CHECKED BY: HASSAN TAHA
REVISED BY
DATE REVISED

LAST REVISION DATE PLOTTED => 08-DEC-2009
TIME PLOTTED => 09:25
06-01-09

BORDER LAST REVISED 4/11/2008
RELATIVE BORDER SCALE IS IN INCHES 0 1 2 3
USERNAME => trmnguye
DGN FILE => 533072na015.dgn
CU 06386
EA 330721

Dist	COUNTY	ROUTE	POST MILES TOTAL PROJECT	SHEET No.	TOTAL SHEETS
05	SLO	46	36.6/41.2	418	595

/Cen H. Mur 06-01-09
REGISTERED CIVIL ENGINEER DATE

12-7-09
PLANS APPROVAL DATE

KEVIN H. MURAI No. C 59586 Exp.12/31/09 CIVIL
REGISTERED PROFESSIONAL ENGINEER STATE OF CALIFORNIA

THE STATE OF CALIFORNIA OR ITS OFFICERS OR AGENTS SHALL NOT BE RESPONSIBLE FOR THE ACCURACY OR COMPLETENESS OF SCANNED COPIES OF THIS PLAN SHEET.

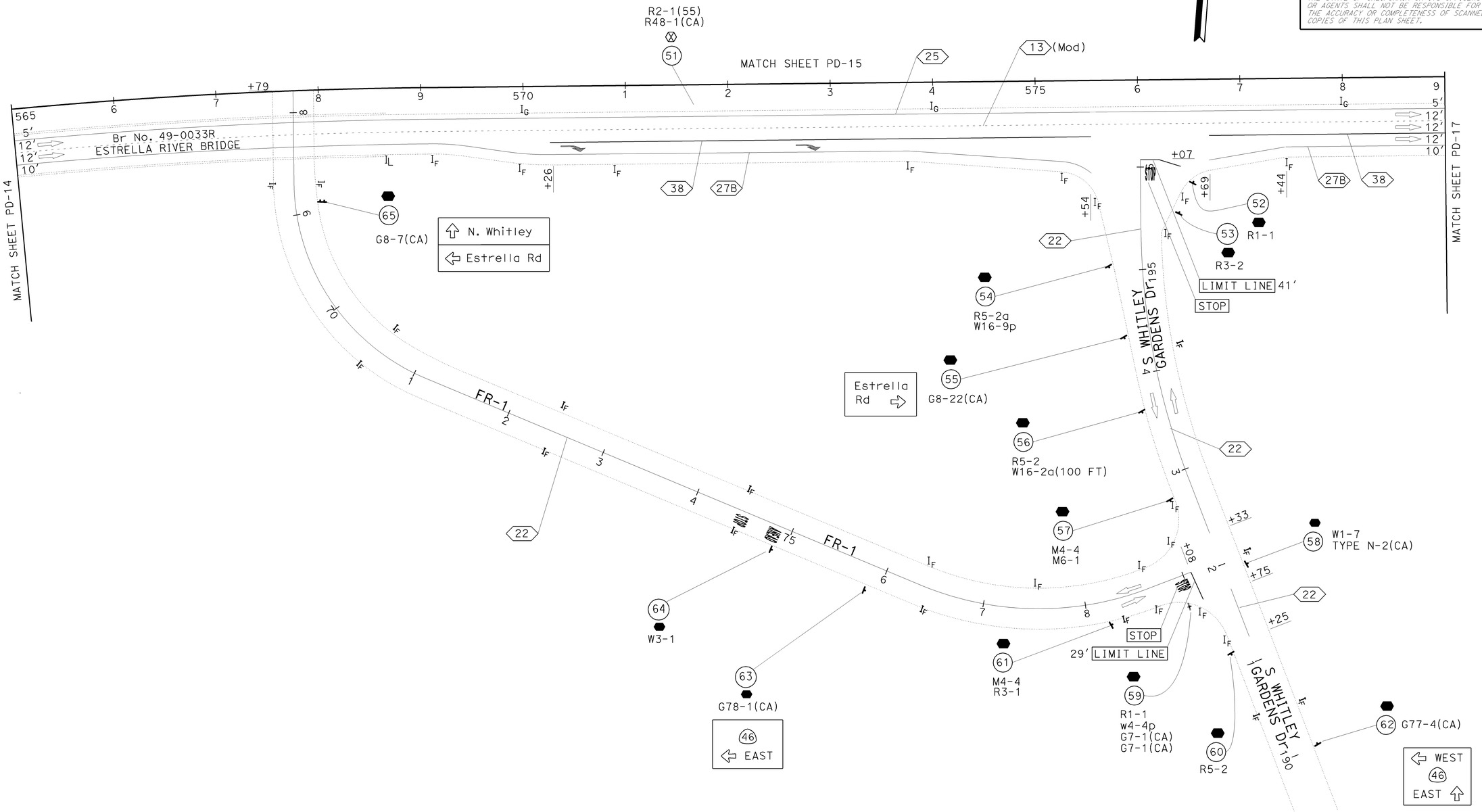

PAVEMENT DELINEATION AND SIGN PLAN

SCALE: 1"=50′

PD-16

THIS PLAN ACCURATE FOR PAVEMENT DELINEATION AND SIGN WORK ONLY.

STATE OF CALIFORNIA - DEPARTMENT OF TRANSPORTATION
Caltrans®
TRAFFIC DESIGN
FUNCTIONAL SUPERVISOR: MOHAMMED QATAMI
CALCULATED-DESIGNED BY: KEVIN MURAI
CHECKED BY: HASSAN TAHA
REVISED BY
DATE REVISED

LAST REVISION DATE PLOTTED => 08-DEC-2009
TIME PLOTTED => 09:25
06-01-09

BORDER LAST REVISED 4/11/2008
RELATIVE BORDER SCALE IS IN INCHES 0 1 2 3
USERNAME => trmnguye
DGN FILE => 533072na016.dgn
CU 06386
EA 330721

Dist	COUNTY	ROUTE	POST MILES TOTAL PROJECT	SHEET No.	TOTAL SHEETS
05	SLO	46	36.6/41.2	419	595

/Cen H. Mur. 06-01-09
REGISTERED CIVIL ENGINEER DATE

12-7-09
PLANS APPROVAL DATE

REGISTERED PROFESSIONAL ENGINEER
KEVIN H. MURAI
No. C 59586
Exp.12/31/09
CIVIL
STATE OF CALIFORNIA

THE STATE OF CALIFORNIA OR ITS OFFICERS OR AGENTS SHALL NOT BE RESPONSIBLE FOR THE ACCURACY OR COMPLETENESS OF SCANNED COPIES OF THIS PLAN SHEET.

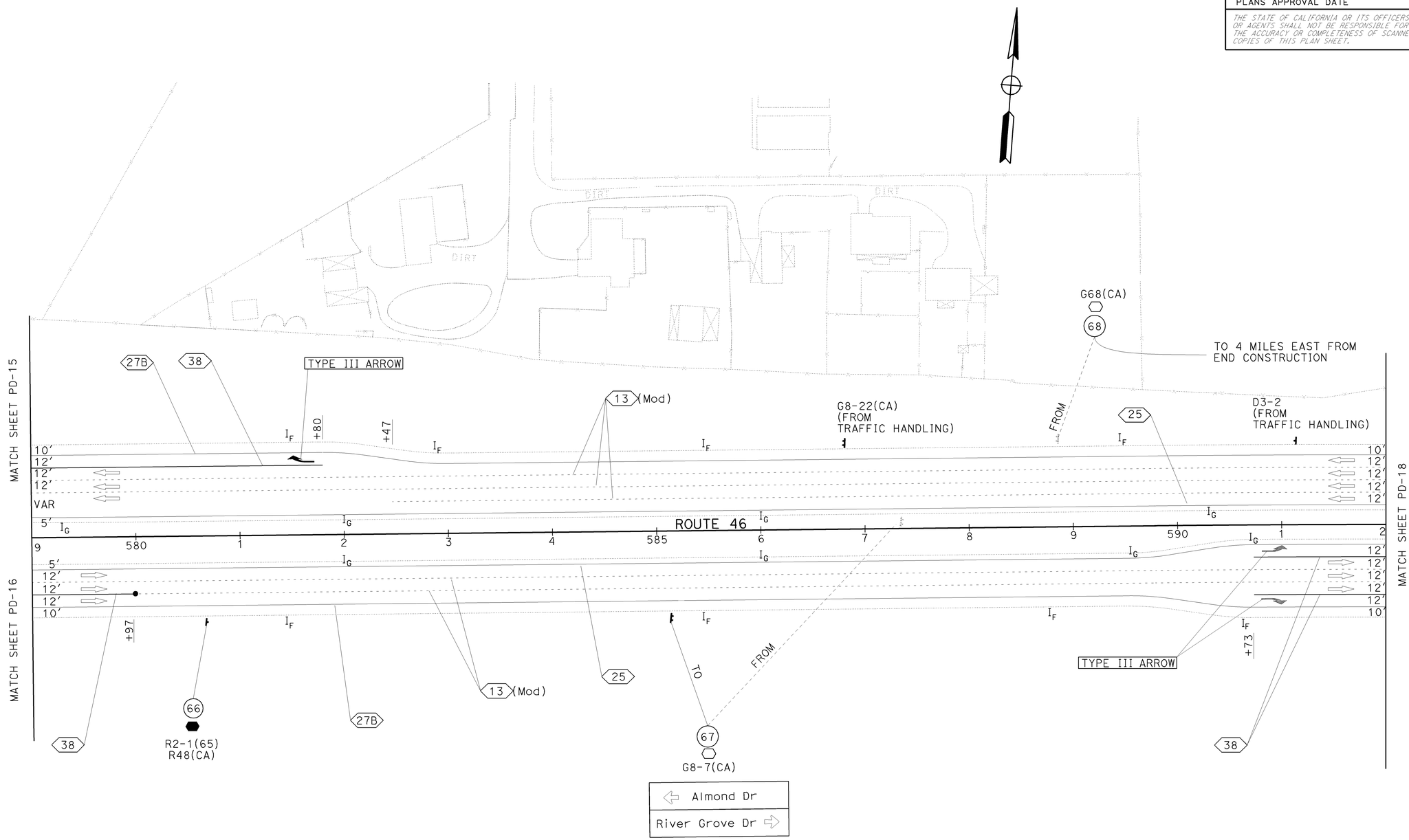

PAVEMENT DELINEATION AND SIGN PLAN

SCALE: 1"=50′

PD-17

THIS PLAN ACCURATE FOR PAVEMENT DELINEATION AND SIGN WORK ONLY.

CALCULATED-DESIGNED BY: KEVIN MURAI
CHECKED BY: HASSAN TAHA
FUNCTIONAL SUPERVISOR: MOHAMMED QATAMI
REVISED BY
DATE REVISED
STATE OF CALIFORNIA - DEPARTMENT OF TRANSPORTATION
TRAFFIC DESIGN
Gates & Gates

LAST REVISION DATE PLOTTED => 08-DEC-2009
TIME PLOTTED => 09:25
06-01-09

BORDER LAST REVISED 4/11/2008
RELATIVE BORDER SCALE IS IN INCHES 0 1 2 3
USERNAME => trmnguye
DGN FILE => 533072na017.dgn
CU 06386
EA 330721

Dist	COUNTY	ROUTE	POST MILES TOTAL PROJECT	SHEET No.	TOTAL SHEETS
05	SLO	46	36.6/41.2	420	595

/Cvi H. Mur 06-01-09
REGISTERED CIVIL ENGINEER DATE

12-7-09
PLANS APPROVAL DATE

REGISTERED PROFESSIONAL ENGINEER
KEVIN H. MURAI
No. C 59586
Exp.12/31/09
CIVIL
STATE OF CALIFORNIA

THE STATE OF CALIFORNIA OR ITS OFFICERS OR AGENTS SHALL NOT BE RESPONSIBLE FOR THE ACCURACY OR COMPLETENESS OF SCANNED COPIES OF THIS PLAN SHEET.

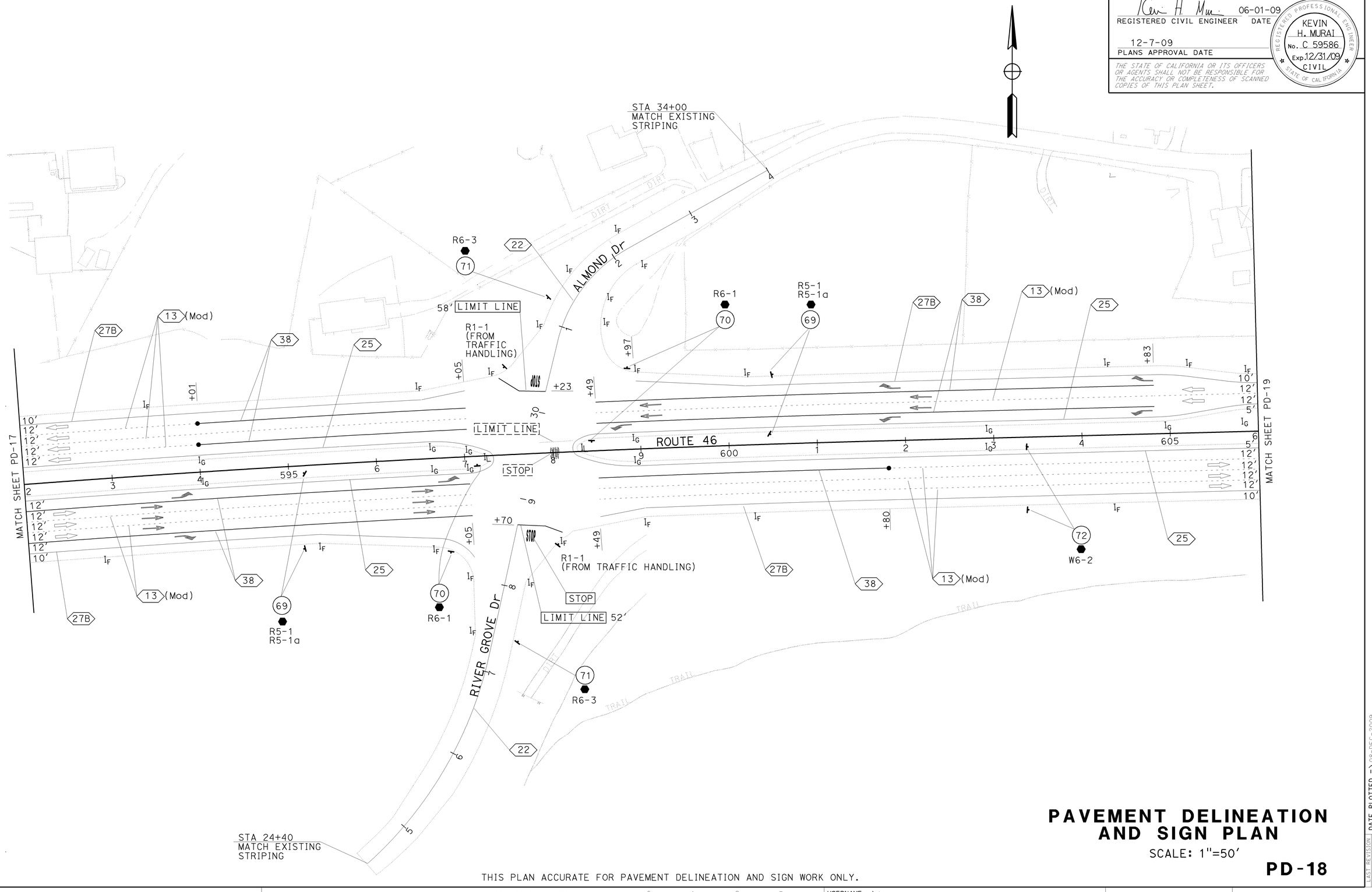

PAVEMENT DELINEATION AND SIGN PLAN

SCALE: 1"=50'

PD-18

THIS PLAN ACCURATE FOR PAVEMENT DELINEATION AND SIGN WORK ONLY.

STATE OF CALIFORNIA - DEPARTMENT OF TRANSPORTATION
Caltrans®
TRAFFIC DESIGN
FUNCTIONAL SUPERVISOR: MOHAMMED QATAMI
CALCULATED-DESIGNED BY: KEVIN MURAI
CHECKED BY: HASSAN TAHA
REVISED BY
DATE REVISED

LAST REVISION DATE PLOTTED => 08-DEC-2009
TIME PLOTTED => 09:25
06-01-09

BORDER LAST REVISED 4/11/2008
RELATIVE BORDER SCALE IS IN INCHES 0 1 2 3
USERNAME => trmnguye
DGN FILE => 533072na018.dgn
CU 06386
EA 330721

Dist	COUNTY	ROUTE	POST MILES TOTAL PROJECT	SHEET No.	TOTAL SHEETS
05	SLO	46	36.6/41.2	421	595

/Cen H. Mur 06-01-09
REGISTERED CIVIL ENGINEER DATE

12-7-09
PLANS APPROVAL DATE

REGISTERED PROFESSIONAL ENGINEER
KEVIN H. MURAI
No. C 59586
Exp 12/31/09
CIVIL
STATE OF CALIFORNIA

THE STATE OF CALIFORNIA OR ITS OFFICERS OR AGENTS SHALL NOT BE RESPONSIBLE FOR THE ACCURACY OR COMPLETENESS OF SCANNED COPIES OF THIS PLAN SHEET.

PAVEMENT DELINEATION AND SIGN PLAN

SCALE: 1"=50'

PD-19

THIS PLAN ACCURATE FOR PAVEMENT DELINEATION AND SIGN WORK ONLY.

CALCULATED-DESIGNED BY: KEVIN MURAI
CHECKED BY: HASSAN TAHA
FUNCTIONAL SUPERVISOR: MOHAMMED QATAMI
STATE OF CALIFORNIA - DEPARTMENT OF TRANSPORTATION
Caltrans® TRAFFIC DESIGN
REVISED BY | DATE REVISED

LAST REVISION 06-01-09
DATE PLOTTED => 08-DEC-2009
TIME PLOTTED => 10:06

BORDER LAST REVISED 4/11/2008
RELATIVE BORDER SCALE IS IN INCHES 0 1 2 3
USERNAME => trrene
DGN FILE => 533072na019.dgn
CU 06386
EA 330721

Dist	COUNTY	ROUTE	POST MILES TOTAL PROJECT	SHEET No.	TOTAL SHEETS
05	SLO	46	36.6/41.2	422	595

/Cen H. Mur. 06-01-09
REGISTERED CIVIL ENGINEER DATE

12-7-09
PLANS APPROVAL DATE

REGISTERED PROFESSIONAL ENGINEER
KEVIN H. MURAI
No. C 59586
Exp.12/31/09
CIVIL
STATE OF CALIFORNIA

THE STATE OF CALIFORNIA OR ITS OFFICERS OR AGENTS SHALL NOT BE RESPONSIBLE FOR THE ACCURACY OR COMPLETENESS OF SCANNED COPIES OF THIS PLAN SHEET.

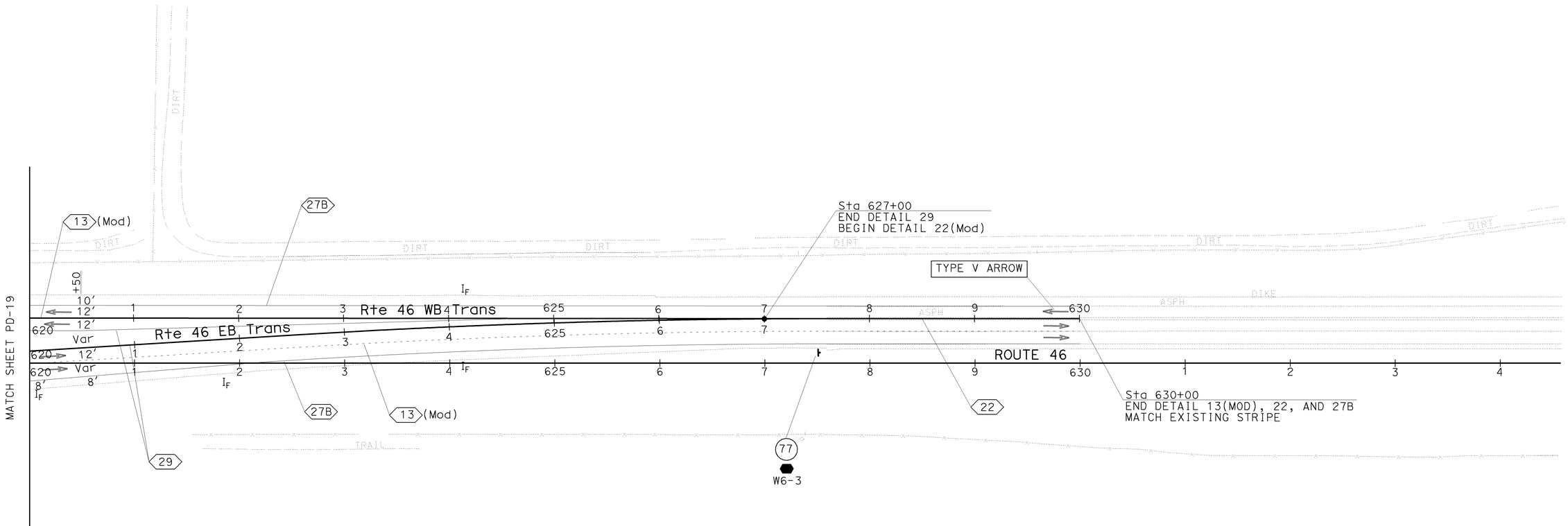

PAVEMENT DELINEATION AND SIGN PLAN

SCALE: 1"=50′

PD-20

THIS PLAN ACCURATE FOR PAVEMENT DELINEATION AND SIGN WORK ONLY.

CALCULATED-DESIGNED BY: KEVIN MURAI
CHECKED BY: HASSAN TAHA
FUNCTIONAL SUPERVISOR: MOHAMMED QATAMI
STATE OF CALIFORNIA - DEPARTMENT OF TRANSPORTATION
TRAFFIC DESIGN
REVISED BY
DATE REVISED

LAST REVISION DATE PLOTTED => 08-DEC-2009
TIME PLOTTED => 10:08
06-01-09

BORDER LAST REVISED 4/11/2008
RELATIVE BORDER SCALE IS IN INCHES 0 1 2 3
USERNAME => trrene
DGN FILE => 533072na020.dgn
CU 06386
EA 330721

Dist	COUNTY	ROUTE	POST MILES TOTAL PROJECT	SHEET No.	TOTAL SHEETS
05	SLO	46	36.6/41.2	423	595

REGISTERED CIVIL ENGINEER — DATE: 06-01-09

KEVIN H. MURAI No. C 59586 Exp 12/31/09 CIVIL — REGISTERED PROFESSIONAL ENGINEER — STATE OF CALIFORNIA

12-7-09
PLANS APPROVAL DATE

THE STATE OF CALIFORNIA OR ITS OFFICERS OR AGENTS SHALL NOT BE RESPONSIBLE FOR THE ACCURACY OR COMPLETENESS OF SCANNED COPIES OF THIS PLAN SHEET.

PAVEMENT DELINEATION QUANTITIES

SHEET No.	ROUTE	LOCATION		DIRECTION	DETAIL No.	INSTALL/REMOVE	PAVEMENT MARKERS				REMOVE PAVEMENT MARKER	THERMOPLASTIC TRAFFIC STRIPE					REMOVE THERMOPLASTIC TRAFFIC STRIPE, YELLOW (HAZARDOUS WASTE)		THERMOPLASTIC PAVEMENT MARKING		REMOVE THERMOPLASTIC PAVEMENT MARKING	
							(RETRO-REFLECTIVE)			(NON-REFLECTIVE)												
							TYPE D Yellow (Two-Way)	TYPE G Yellow (One-Way)	TYPE H Yellow (One-Way)	TYPE A Yellow (One-Way)		SOLID	SOLID	SPRAYABLE	(BROKEN 12-3)	(BROKEN 36-12)						
												4"	8"	4"	8"	4"	WHITE	YELLOW				
		FROM	TO				EA	EA	EA	EA	EA	LF	LF	LF	LF	LF	LF	LF	DESCRIPTION	SQFT	DESCRIPTION	SQFT
PD-1	ROUTE 46	385+82	396+00	EB	27B	I								1,018								
		385+82	396+00	EB	13(Mod)	I		22		86						1,018						
		385+82	388+31	EB	38	I		11					249									
		388+31	391+75	EB	13(Mod)	I		8		30						344						
		385+82	396+00	EB	25	I			22					1,018								
PD-2	ROUTE 46	396+00	409+00	EB	27B	I								1,300					2 TYPE V ARROW	66		
		396+00	409+00	EB	13(Mod)	I		28		110						1,300			6 TYPE III ARROW	252		
		396+00	409+00	EB	25	I			28					1,300								
		403+28	409+00	EB	38	I		25					572									
		404+28	409+00	EB	38	I		21					472									
		398+42	409+00	WB	25	I			23					1,058								
		398+42	409+00	WB	13(Mod)	I		23		90						1,058						
		398+42	409+00	WB	27B	I								1,058								
		404+22	407+88	WB	13(Mod)	I		9		32						366						
		404+88	409+00	WB	38	I		18					412									
PD-3	ROUTE 46	409+00	410+85	EB	38	I		9					185						6 TYPE V ARROW	198	1 STOP	22
		409+00	410+85	EB	38	I		9					185						2 STOP	44	1 LIMIT LINE	42
		409+00	410+85	EB	25	I			5					185					5 TYPE III ARROW	210		
		409+00	423+00	EB	13(Mod)	I		30		118						1,400			2 LIMIT LINE	62		
		411+71	414+71	EB	38	I		14					300									
		411+71	423+00	EB	25	I			25					1,129								
		412+70	423+00	EB	27B	I								1,030								
		414+71	423+00	EB	13(Mod)	I		18		70						829						
		409+00	410+85	WB	25	I			5					185								
		409+00	410+85	WB	38	I		9					185									
		409+00	423+00	WB	13(Mod)	I		30		118						1,400						
		409+00	410+85	WB	27B	I								185								
		410+85	411+71	WB	27C	I									86							
		411+71	423+00	WB	25	I			25					1,129								
		411+71	418+18	WB	38	I		28					647									
		411+71	423+00	WB	27B	I								1,129								
	GENESEO Rd	8+78	10+54	NB	22	I	18					352										
PD-4	ROUTE 46	423+00	437+00	EB	27B	I								1,400					2 TYPE V ARROW	66		
		423+00	426+40	EB	13(Mod)	I		8		30						340			2 TYPE III ARROW	84		
		423+00	437+00	EB	13(Mod)	I		30		118						1,400						
		423+00	437+00	EB	25	I			30					1,400								
		432+03	437+00	EB	38	I		22					497									
		423+00	437+00	WB	25	I			30					1,400								
		423+00	437+00	WB	13(Mod)	I		30		118						1,400						
		423+00	437+00	WB	27B	I								1,400								
PD-5	ROUTE 46	437+00	438+51	EB	27B	I								151								
		437+00	451+00	EB	13(Mod)	I		30		118						1,400						
		437+00	438+51	EB	38	I		7					151									
		437+00	438+51	EB	25	I			4					151								
SHEET TOTAL							18	439	197	1038	0	352	3855	17,626	86	12,255	0	0		982		64

PAVEMENT DELINEATION QUANTITIES

PDQ-1

STATE OF CALIFORNIA - DEPARTMENT OF TRANSPORTATION
TRAFFIC DESIGN
Caltrans
FUNCTIONAL SUPERVISOR: MOHAMMED QATAMI
CALCULATED-DESIGNED BY: KEVIN MURAI
CHECKED BY: VANIK POGOSYAN
REVISED BY
DATE REVISED

LAST REVISION | DATE PLOTTED => 10-DEC-2009 | TIME PLOTTED => 06:41
06-01-09

BORDER LAST REVISED 4/11/2008
RELATIVE BORDER SCALE IS IN INCHES 0 1 2 3
USERNAME => trmikesl
DGN FILE => 533072nc001.dgn
CU 06386
EA 330721

Dist	COUNTY	ROUTE	POST MILES TOTAL PROJECT	SHEET No.	TOTAL SHEETS
05	SLO	46	36.6/41.2	424	595

REGISTERED CIVIL ENGINEER — 06-01-09 DATE

12-7-09
PLANS APPROVAL DATE

KEVIN H. MURAI No. C 59586 Exp 12/31/09 CIVIL — REGISTERED PROFESSIONAL ENGINEER — STATE OF CALIFORNIA

THE STATE OF CALIFORNIA OR ITS OFFICERS OR AGENTS SHALL NOT BE RESPONSIBLE FOR THE ACCURACY OR COMPLETENESS OF SCANNED COPIES OF THIS PLAN SHEET.

PAVEMENT DELINEATION QUANTITIES

SHEET No.	ROUTE	LOCATION		DIRECTION	DETAIL No.	INSTALL/REMOVE	PAVEMENT MARKER (RETRO-REFLECTIVE)			PAVEMENT MARKER (NON-REFLECTIVE)	REMOVE PAVEMENT MARKER	THERMOPLASTIC TRAFFIC STRIPE					REMOVE THERMOPLASTIC TRAFFIC STRIPE, YELLOW (HAZARDOUS WASTE)		THERMOPLASTIC PAVEMENT MARKING		REMOVE THERMOPLASTIC PAVEMENT MARKING	
		FROM	TO				TYPE D Yellow (Two-Way)	TYPE G Yellow (One-Way)	TYPE H Yellow (One-Way)	TYPE A Yellow (One-Way)		SOLID 4"	SOLID 8"	SPRAYABLE 4"	(BROKEN 12-3) 8"	(BROKEN 36-12) 4"	WHITE	YELLOW	DESCRIPTION	SQFT	DESCRIPTION	SQFT
							EA	EA	EA	EA	EA	LF	LF	LF	LF	LF	LF	LF				
PD-5	ROUTE 46	438+51	439+32	EB	27C	I									81				2 STOP	44	1 STOP	22
		439+32	451+00	EB	27B	I								1,168					2 LIMIT LINE	46	1 LIMIT LINE	40
		439+32	451+00	EB	25	I			25					1,168					6 TYPE V ARROW	198		
		450+39	451+00	EB	38	I		4					61						5 TYPE III ARROW	210		
		437+00	438+51	WB	25	I			4					151								
		437+00	451+00	WB	13(Mod)	I		30		118						1,400						
		437+00	438+51	WB	27B	I								151								
		438+51	439+32	WB	27C	I									81							
		439+32	451+00	WB	25	I			25					1,168								
		439+32	445+73	WB	38	I		28					641									
		439+32	451+00	WB	27B	I								1,168								
PD-6	ROUTE 46	451+00	456+69	EB	27B	I								569					2 STOP	44	1 STOP	22
		456+69	457+51	EB	27C	I									82				2 LIMIT LINE	59	1 LIMIT LINE	35
		451+00	464+00	EB	13(Mod)	I		28		110						1,300			8 TYPE V ARROW	264		
		451+00	456+69	EB	38	I		25					569						7 TYPE III ARROW	294		
		451+00	456+69	EB	25	I			13					569								
		457+51	464+00	EB	27B	I								649								
		457+51	464+00	EB	25	I			15					649								
		451+00	455+96	WB	25	I			11					496								
		451+00	464+00	WB	13(Mod)	I		28		110						1,300						
		451+00	455+96	WB	27B	I								496								
		455+96	458+77	WB	27C	I									281							
		457+68	464+00	WB	25	I			14					632								
		457+68	464+00	WB	38	I		27					632									
		458+77	464+00	WB	27B	I								523								
	Prvt Dwy 4	1+46	2+11	NB	6	I	2									65						
PD-7	ROUTE 46	464+00	477+00	EB	27B	I								1,300								
		464+00	477+00	EB	13(Mod)	I		28		110						1,300						
		464+00	477+00	EB	25	I			28					1,300								
		464+00	477+00	WB	25	I			28					1,300								
		464+00	464+10	WB	38	I		1					10									
		464+00	477+00	WB	13(Mod)	I		28		110						1,300						
		474+52	477+00	WB	13(Mod)	I		6		22						248						
		464+00	477+00	WB	27B	I								1,300								
PD-8	ROUTE 46	477+00	490+00	EB	27B	I								1,300					4 TYPE III ARROW	168		
		477+00	490+00	EB	13(Mod)	I		28		110						1,300						
		477+00	490+00	EB	25	I			28					1,300								
		487+08	490+00	EB	38	I		13					292									
		487+08	490+00	EB	38	I		13					292									
		477+00	490+00	WB	25	I			28					1,300								
		477+00	490+00	WB	13(Mod)	I		28		110						1,300						
		477+00	490+00	WB	13(Mod)	I		28		110						1,300						
		477+00	490+00	WB	27B	I								1,300								
		480+51	490+00	WB	13(Mod)	I		21		80						949						
SHEET TOTAL							2	365	220	990	0	0	2497	19,957	525	11,762	0	0		1327		119

PAVEMENT DELINEATION QUANTITIES
PDQ-2

REVISED BY | DATE REVISED
VANIK POGOSYAN | KEVIN MURAI
CALCULATED-DESIGNED BY | CHECKED BY
FUNCTIONAL SUPERVISOR: MOHAMMED QATAMI
STATE OF CALIFORNIA - DEPARTMENT OF TRANSPORTATION
Caltrans® TRAFFIC DESIGN

LAST REVISION | DATE PLOTTED => 10-DEC-2009
06-01-09 | TIME PLOTTED => 06:41

BORDER LAST REVISED 4/11/2008 | RELATIVE BORDER SCALE IS IN INCHES 0 1 2 3 | USERNAME => trmikesl | DGN FILE => 533072nc002.dgn | CU 06386 | EA 330721

Dist	COUNTY	ROUTE	POST MILES TOTAL PROJECT	SHEET No.	TOTAL SHEETS
05	SLO	46	36.6/41.2	425	595

REGISTERED CIVIL ENGINEER — DATE: 06-01-09

KEVIN H. MURAI No. C 59586 Exp 12/31/09 CIVIL — REGISTERED PROFESSIONAL ENGINEER — STATE OF CALIFORNIA

12-7-09
PLANS APPROVAL DATE

THE STATE OF CALIFORNIA OR ITS OFFICERS OR AGENTS SHALL NOT BE RESPONSIBLE FOR THE ACCURACY OR COMPLETENESS OF SCANNED COPIES OF THIS PLAN SHEET.

PAVEMENT DELINEATION QUANTITIES

SHEET No.	ROUTE	LOCATION FROM	LOCATION TO	DIRECTION	DETAIL No.	INSTALL/REMOVE	PAVEMENT MARKER (RETRO-REFLECTIVE) TYPE D Yellow (Two-Way)	PAVEMENT MARKER (RETRO-REFLECTIVE) TYPE G Yellow (One-Way)	PAVEMENT MARKER (RETRO-REFLECTIVE) TYPE H Yellow (One-Way)	PAVEMENT MARKER (NON-REFLECTIVE) TYPE A Yellow (One-Way)	REMOVE PAVEMENT MARKER	THERMOPLASTIC TRAFFIC STRIPE SOLID 4"	SOLID 8"	SPRAYABLE 4"	(BROKEN 12-3) 8"	(BROKEN 36-12) 4"	REMOVE THERMOPLASTIC TRAFFIC STRIPE, YELLOW (HAZARDOUS WASTE) WHITE	YELLOW	THERMOPLASTIC PAVEMENT MARKING DESCRIPTION	SQFT	REMOVE THERMOPLASTIC PAVEMENT MARKING DESCRIPTION	SQFT
							EA	EA	EA	EA	EA	LF	LF	LF	LF	LF	LF	LF				
PD-9	ROUTE 46	490+00	491+95	EB	27B	I								195					2 STOP	44	1 STOP	22
		490+00	493+67	EB	38	I		16					367						2 LIMIT LINE	116	1 LIMIT LINE	37
		490+00	503+00	EB	13(Mod)	I		28		110						1,300			8 TYPE V ARROW	264		
		490+00	493+67	EB	38	I		16					367						10 TYPE III ARROW	420		
		490+00	493+67	EB	25	I			9					367								
		494+81	497+78	EB	38	I		13					297									
		494+81	497+78	EB	38	I		13					297									
		494+33	503+00	EB	25	I			19					867								
		495+67	503+00	EB	27B	I								733								
		490+00	493+67	WB	25	I			9					367								
		490+00	492+78	WB	38	I		13					278									
		490+00	503+00	WB	13(Mod)	I		28		110						1,300						
		490+00	490+76	WB	13(Mod)	I		3		8						76						
		490+00	492+32	WB	27B	I								232								
		490+76	492+78	WB	38	I		9					202									
		494+33	503+00	WB	25	I			19					867								
		494+33	500+79	WB	38	I		28					646									
		494+33	500+79	WB	38	I		28					646									
		496+07	503+00	WB	27B	I								693								
	UNION Rd	177+25	179+56	SB	6	I	6									231						
	UNION Rd	181+62	185+05	NB	6	I	8									343						
PD-10	ROUTE 46	503+00	516+00	EB	27B	I								1,300								
		503+00	509+03	EB	13(Mod)	I		14		52						603						
		503+00	516+00	EB	13(Mod)	I		28		110						1,300						
		503+00	516+00	EB	13(Mod)	I		28		110						1,300						
		503+00	516+00	EB	25	I			28					1,300								
		503+00	516+00	WB	25	I			28					1,300								
		503+00	516+00	WB	13(Mod)	I		28		110						1,300						
		503+00	516+00	WB	27B	I								1,300								
PD-11	ROUTE 46	516+00	529+00	EB	27B	I								1,300								
		516+00	529+00	EB	13(Mod)	I		28		110						1,300						
		516+00	529+00	EB	25	I			28					1,300								
		516+00	529+00	WB	25	I			28					1,300								
		516+00	529+00	WB	13(Mod)	I		28		110						1,300						
		516+00	529+00	WB	27B	I								1,300								
PD-12	ROUTE 46	529+00	533+32	EB	27B	I								432					1 STOP	22		
		533+32	534+10	EB	27C	I									78				1 LIMIT LINE	22		
		529+00	541+00	EB	13(Mod)	I		26		100						1,200						
		529+00	541+00	EB	25	I			26					1,200								
		534+10	541+00	EB	27B	I								690								
		529+00	541+00	WB	25	I			26					1,200								
		529+00	541+00	WB	13(Mod)	I		26		100						1,200						
		529+00	541+00	WB	27B	I								1,200								
SHEET TOTAL							14	402	220	1030	0	0	3100	19,443	78	12,753	0	0		888		59

PAVEMENT DELINEATION QUANTITIES
PDQ-3

REVISED BY | DATE REVISED
CALCULATED-DESIGNED BY: VANIK POGOSYAN
CHECKED BY: KEVIN MURAI
FUNCTIONAL SUPERVISOR: MOHAMMED QATAMI
STATE OF CALIFORNIA - DEPARTMENT OF TRANSPORTATION
Caltrans® TRAFFIC DESIGN

LAST REVISION | DATE PLOTTED => 10-DEC-2009
06-01-09 | TIME PLOTTED => 06:41

BORDER LAST REVISED 4/11/2008 | RELATIVE BORDER SCALE IS IN INCHES 0 1 2 3 | USERNAME => trmikesl | DGN FILE => 533072nc003.dgn | CU 06386 | EA 330721

Dist	COUNTY	ROUTE	POST MILES TOTAL PROJECT	SHEET No.	TOTAL SHEETS
05	SLO	46	36.6/41.2	426	595

REGISTERED CIVIL ENGINEER — DATE: 06-01-09

KEVIN H. MURAI No. C 59586 Exp 12/31/09 CIVIL — REGISTERED PROFESSIONAL ENGINEER — STATE OF CALIFORNIA

PLANS APPROVAL DATE: 12-7-09

THE STATE OF CALIFORNIA OR ITS OFFICERS OR AGENTS SHALL NOT BE RESPONSIBLE FOR THE ACCURACY OR COMPLETENESS OF SCANNED COPIES OF THIS PLAN SHEET.

PAVEMENT DELINEATION QUANTITIES

SHEET No.	ROUTE	LOCATION FROM	LOCATION TO	DIRECTION	DETAIL No.	INSTALL/REMOVE	PAVEMENT MARKER (RETRO-REFLECTIVE) TYPE D Yellow (Two-Way)	PAVEMENT MARKER (RETRO-REFLECTIVE) TYPE G Yellow (One-Way)	PAVEMENT MARKER (RETRO-REFLECTIVE) TYPE H Yellow (One-Way)	PAVEMENT MARKER (NON-REFLECTIVE) TYPE A Yellow (One-Way)	REMOVE PAVEMENT MARKER	THERMOPLASTIC TRAFFIC STRIPE SOLID 4"	SOLID 8"	SPRAYABLE 4"	(BROKEN 12-3) 8"	(BROKEN 36-12) 4"	REMOVE THERMOPLASTIC TRAFFIC STRIPE, YELLOW (HAZARDOUS WASTE) WHITE	YELLOW	THERMOPLASTIC PAVEMENT MARKING DESCRIPTION	SQFT	REMOVE THERMOPLASTIC PAVEMENT MARKING DESCRIPTION	SQFT
							EA	EA	EA	EA	EA	LF	LF	LF	LF	LF	LF	LF				
PD-13	ROUTE 46	541+00	553+00	EB	27B	I								1,200					3 TYPE VI ARROW	126		
		541+00	553+00	EB	13(Mod)	I		26		100						1,200						
		541+00	553+00	EB	25	I			26					1,200								
		541+00	553+00	WB	25	I			26					1,200								
		541+00	553+00	WB	13(Mod)	I		26		100						1,200						
		549+10	553+00	WB	13(Mod)	I		9		34						390						
		541+00	553+00	WB	27B	I								1,200								
PD-14	ROUTE 46	553+00	565+00	EB	27B	I								1,200					5 STOP	110		
		553+00	565+00	EB	13(Mod)	I		26		100						1,200			2 AHEAD	62		
		553+00	565+00	EB	25	I			26					1,200								
		553+00	565+00	WB	25	I			26					1,200								
		553+00	565+00	WB	13(Mod)	I		26		100						1,200						
		553+00	565+00	WB	13(Mod)	I		26		100						1,200						
		553+00	565+00	WB	27B	I								1,200								
	ESTRELLA Rd	8+15	12+15	NB	22	I	36					800							2 LIMIT LINE	75		
	ESTRELLA Rd	12+78	14+00	NB	22	I	14					244										
	FR-2	22+28	25+19	EB	22	I	28					582							1 LIMIT LINE	50		
PD-15	ROUTE 46	565+00	579+00	WB	25	I			30					1,400					6 STOP	132		
		565+00	579+00	WB	13(Mod)	I		30		118						1,400			6 LIMIT LINE	221		
		565+00	579+00	WB	13(Mod)	I		30		118						1,400			3 TYPE IV ARROW	45		
		565+00	573+83	WB	27B	I								883					1 TYPE III ARROW	42		
		575+26	579+00	WB	27B	I								374								
		575+26	579+00	WB	38	I		17					374									
	FR-2	28+65	30+45	WB	22	I	18					360										
		31+70	34+00	WB	22	I	22					460										
		31+70	34+00	WB	38	I		11					230									
		34+00	37+10	WB	29	I	28					1240										
		37+10	39+09	WB	22	I	20					398										
	FR-1	65+93	67+79	NB	22	I	18					372										
		10+54	16+69	EB	22	I	54					1230										
	N.WHITLEY	7+64	8+68	SB	22	I	12					208										
PD-16	ROUTE 46	565+00	575+54	EB	27B	I								1,054								
		565+00	579+00	EB	13(Mod)	I		30		118						1,400			3 STOP	66		
		565+00	579+00	EB	25	I			30					1,400					2 LIMIT LINE	70		
		570+26	575+54	EB	38	I		23					528						2 TYPE III ARROW	84		
		576+69	579+00	EB	38	I		11					231						1 AHEAD	31		
		576+69	579+00	EB	27B	I								231								
	FR-1	67+79	79+08	SB	22	I	98					2258										
	S.WHITLEY	191+25	191+75	SB	22	I	8					100										
		192+33	196+07	SB	22	I	34					748										
SHEET TOTAL							390	290	164	888	0	9000	1363	14,942	0	10,590	0	0		1114		0

PAVEMENT DELINEATION QUANTITIES

PDQ-4

REVISED BY | DATE REVISED

VANIK POGOSYAN | KEVIN MURAI

CALCULATED-DESIGNED BY | CHECKED BY

FUNCTIONAL SUPERVISOR: MOHAMMED QATAMI

STATE OF CALIFORNIA - DEPARTMENT OF TRANSPORTATION

Caltrans® TRAFFIC DESIGN

LAST REVISION | DATE PLOTTED => 10-DEC-2009 | TIME PLOTTED => 06:41

06-01-09

BORDER LAST REVISED 4/11/2008

RELATIVE BORDER SCALE IS IN INCHES 0 1 2 3

USERNAME => trmikesl

DGN FILE => 533072nc004.dgn

CU 06386

EA 330721

Dist	COUNTY	ROUTE	POST MILES TOTAL PROJECT	SHEET No.	TOTAL SHEETS
05	SLO	46	36.6/41.2	427	595

REGISTERED CIVIL ENGINEER — 06-01-09 DATE

12-7-09
PLANS APPROVAL DATE

REGISTERED PROFESSIONAL ENGINEER — KEVIN H. MURAI No. C 59586 Exp 12/31/09 CIVIL — STATE OF CALIFORNIA

THE STATE OF CALIFORNIA OR ITS OFFICERS OR AGENTS SHALL NOT BE RESPONSIBLE FOR THE ACCURACY OR COMPLETENESS OF SCANNED COPIES OF THIS PLAN SHEET.

PAVEMENT DELINEATION QUANTITIES

SHEET No.	ROUTE	LOCATION FROM	LOCATION TO	DIRECTION	DETAIL No.	INSTALL/REMOVE	PAVEMENT MARKER (RETRO-REFLECTIVE) TYPE D Yellow (Two-Way)	PAVEMENT MARKER (RETRO-REFLECTIVE) TYPE G Yellow (One-Way)	PAVEMENT MARKER (RETRO-REFLECTIVE) TYPE H Yellow (One-Way)	PAVEMENT MARKER (NON-REFLECTIVE) TYPE A Yellow (One-Way)	REMOVE PAVEMENT MARKER	THERMOPLASTIC TRAFFIC STRIPE SOLID 4"	SOLID 8"	SPRAYABLE 4"	(BROKEN 12-3) 8"	(BROKEN 36-12) 4"	REMOVE THERMOPLASTIC TRAFFIC STRIPE, YELLOW (HAZARDOUS WASTE) WHITE	YELLOW	THERMOPLASTIC PAVEMENT MARKING DESCRIPTION	SQFT	REMOVE THERMOPLASTIC PAVEMENT MARKING DESCRIPTION	SQFT
							EA	EA	EA	EA	EA	LF	LF	LF	LF	LF	LF	LF				
PD-17	ROUTE 46	579+00	592+00	EB	27B	I								1,300					3 TYPE III ARROW	126		
		579+00	579+97	EB	38	I		5					97									
		579+97	592+00	EB	13(Mod)	I		26		102						1,203						
		579+00	592+00	EB	13(Mod)	I		28		110						1,300						
		579+00	592+00	EB	25	I			28					1,300								
		590+73	592+00	EB	38	I		6					127									
		590+73	592+00	EB	38	I		6					127									
		579+00	592+00	WB	25	I			28					1,300								
		579+00	592+00	WB	13(Mod)	I		28		110						1,300						
		579+00	592+00	WB	13(Mod)	I		28		110						1,300						
		579+00	581+80	WB	38	I		13					280									
		579+00	592+00	WB	27B	I								1,300								
		582+47	592+00	WB	13(Mod)	I		21		80						953						
PD-18	ROUTE 46	592+00	595+05	EB	27B	I								305					2 STOP	44	1 STOP	22
		592+00	597+05	EB	38	I		22					505						2 LIMIT LINE	110	1 LIMIT LINE	30
		592+00	597+05	EB	13(Mod)	I		12		44						505			10 TYPE V ARROW	330		
		592+00	597+05	EB	13(Mod)	I		12		44						505			8 TYPE III ARROW	336		
		592+00	597+05	EB	38	I		22					505									
		592+00	597+05	EB	25	I			12					505								
		598+49	606+00	EB	13(Mod)	I		17		64						751						
		598+49	606+00	EB	13(Mod)	I		17		64						751						
		598+49	601+80	EB	38	I		15					331									
		598+49	606+00	EB	25	I			17					751								
		598+49	606+00	EB	27B	I								751								
		601+80	606+00	EB	13(Mod)	I		10		36						420						
		592+00	597+05	WB	25	I			12					505								
		592+00	594+01	WB	13(Mod)	I		5		18						201						
		592+00	597+05	WB	13(Mod)	I		12		44						505						
		592+00	597+05	WB	25	I			12					505								
		592+00	594+01	WB	13(Mod)	I		5		18						201						
		592+00	597+05	WB	27B	I								505								
		594+01	597+05	WB	38	I		14					304									
		594+01	597+05	WB	38	I		14					304									
		598+49	606+00	WB	25	I			17					751								
		598+49	604+83	WB	38	I		27					634									
		598+49	606+00	WB	13(Mod)	I		17		64						751						
		598+49	604+83	WB	38	I		27					634									
		598+97	606+00	WB	27B	I								703								
	RIVER GROVE Dr	24+40	28+70	NB	22	I	38					860										
	ALMOND Dr	30+23	34+00	SB	22	I	34					754										
SHEET TOTAL							72	407	124	908	0	1614	3848	10,481	0	10,646	0	0		946		52

PAVEMENT DELINEATION QUANTITIES
PDQ-5

STATE OF CALIFORNIA - DEPARTMENT OF TRANSPORTATION
Caltrans®
TRAFFIC DESIGN

FUNCTIONAL SUPERVISOR: MOHAMMED QATAMI

CALCULATED-DESIGNED BY: VANIK POGOSYAN
CHECKED BY: KEVIN MURAI

REVISED BY | DATE REVISED

LAST REVISION | DATE PLOTTED => 10-DEC-2009
06-01-09 | TIME PLOTTED => 06:41

BORDER LAST REVISED 4/11/2008

RELATIVE BORDER SCALE IS IN INCHES 0 1 2 3

USERNAME => trmikesl
DGN FILE => 533072nc005.dgn

CU 06386

EA 330721

Dist	COUNTY	ROUTE	POST MILES TOTAL PROJECT	SHEET No.	TOTAL SHEETS
05	SLO	46	36.6/41.2	428	595

REGISTERED CIVIL ENGINEER — 06-01-09 DATE

12-7-09
PLANS APPROVAL DATE

KEVIN H. MURAI No. C 59586 Exp 12/31/09 CIVIL — REGISTERED PROFESSIONAL ENGINEER — STATE OF CALIFORNIA

THE STATE OF CALIFORNIA OR ITS OFFICERS OR AGENTS SHALL NOT BE RESPONSIBLE FOR THE ACCURACY OR COMPLETENESS OF SCANNED COPIES OF THIS PLAN SHEET.

PAVEMENT DELINEATION QUANTITIES

SHEET No.	ROUTE	LOCATION FROM	LOCATION TO	DIRECTION	DETAIL No.	INSTALL/REMOVE	PAVEMENT MARKER (RETRO-REFLECTIVE) TYPE D Yellow (Two-Way)	PAVEMENT MARKER (RETRO-REFLECTIVE) TYPE G Yellow (One-Way)	PAVEMENT MARKER (RETRO-REFLECTIVE) TYPE H Yellow (One-Way)	PAVEMENT MARKER (NON-REFLECTIVE) TYPE A Yellow (One-Way)	REMOVE PAVEMENT MARKER	THERMOPLASTIC TRAFFIC STRIPE SOLID 4"	SOLID 8"	SPRAYABLE 4"	(BROKEN 12-3) 8"	(BROKEN 36-12) 4"	REMOVE THERMOPLASTIC TRAFFIC STRIPE, YELLOW (HAZARDOUS WASTE) WHITE	YELLOW	THERMOPLASTIC PAVEMENT MARKING DESCRIPTION	SQFT	REMOVE THERMOPLASTIC PAVEMENT MARKING DESCRIPTION	SQFT
							EA	EA	EA	EA	EA	LF	LF	LF	LF	LF	LF	LF				
PD-19	ROUTE 46	606+00	620+00	EB	27B	I								1,400					3 TYPE VI ARROW	126		
		606+00	609+22	EB	13(Mod)	I		8		28						322			2 TYPE V ARROW	66		
		606+00	620+00	EB	13(Mod)	I		30		118						1,400						
		606+00	613+03	EB	13(Mod)	I		16		60						703						
		606+00	619+44	EB	25	I			29					1,344								
		619+44	620+00	EB	29	I	8					224										
		606+00	619+44	WB	25	I			29					1,344								
		606+00	620+00	WB	13(Mod)	I		30		118						1,400						
		606+00	620+00	WB	27B	I								1,400								
PD-20	ROUTE 46	620+00	630+00	EB	27B	I								1,000					7 TYPE V ARROW	231		
		620+00	630+00	EB	13(Mod)	I		22		84						1,000						
		620+00	627+00	EB	29	I	62					2,800										
		627+00	630+00	EB	22(Mod)	I	78					600										
		620+00	620+50	WB	13(Mod)	I		2		6						50						
		620+00	630+00	WB	27B	I								1,000								
SHEET TOTAL							148	108	58	414	0	3,624	0	7,488	0	4,875	0	0		423		0
SHEET PDQ-1 TOTAL							18	439	197	1038	0	352	3,855	17,626	86	12,255	0	0		982		64
SHEET PDQ-2 TOTAL							2	365	220	990	0	0	2,497	19,957	525	11,762	0	0		1327		119
SHEET PDQ-3 TOTAL							14	402	220	1030	0	0	3,100	19,443	78	12,753	0	0		888		59
SHEET PDQ-4 TOTAL							390	290	164	888	0	9,000	1,363	14,942	0	10,590	0	0		1114		0
SHEET PDQ-5 TOTAL							72	407	124	908	0	1,614	3,848	10,481	0	10,646	0	0		946		52
SHEET THQ-5 TOTAL							4194	491	237	338	1297			139,969			12,953	15,861		2173		483
GRAND TOTAL								8560		5606	1297	14,590	14,663	229,906	689	62,881	12,953	15,861		7853		777

PAVEMENT DELINEATION QUANTITIES
PDQ-6

STATE OF CALIFORNIA - DEPARTMENT OF TRANSPORTATION
Caltrans® TRAFFIC DESIGN

FUNCTIONAL SUPERVISOR: MOHAMMED QATAMI
CALCULATED-DESIGNED BY: VANIK POGOSYAN
CHECKED BY: KEVIN MURAI
REVISED BY / DATE REVISED

LAST REVISION | DATE PLOTTED => 10-DEC-2009
06-01-09 | TIME PLOTTED => 06:41

Dist	COUNTY	ROUTE	POST MILES TOTAL PROJECT	SHEET No.	TOTAL SHEETS
05	SLO	46	36.6/41.2	429	595

REGISTERED CIVIL ENGINEER — DATE: 06-01-09

12-7-09
PLANS APPROVAL DATE

KEVIN H. MURAI No. C 59586 Exp 12/31/09 CIVIL — REGISTERED PROFESSIONAL ENGINEER — STATE OF CALIFORNIA

THE STATE OF CALIFORNIA OR ITS OFFICERS OR AGENTS SHALL NOT BE RESPONSIBLE FOR THE ACCURACY OR COMPLETENESS OF SCANNED COPIES OF THIS PLAN SHEET.

DELINEATOR (CLASS 1)

SHEET No.	DELINEATORS (CLASS 1)	
	TYPE F	TYPE G
	EA	EA
PD-2	10	10
PD-3	17	14
PD-4	17	9
PD-5	30	18
PD-6	16	14
PD-7	14	7
PD-8	14	6
PD-9	17	15
PD-10	10	6
PD-11	5	8
PD-12	11	6
PD-13	8	6
PD-14	12	2
PD-15	31	4
PD-16	31	3
PD-17	8	8
PD-18	24	12
PD-19	9	9
PD-20	4	
SUBTOTAL	288	157
TOTAL	445	

MILEPOST MARKER

MILEPOST MARKER		
LOCATION	EASTBOUND EACH	WESTBOUND EACH
POSTMILE 37.0	1	1
POSTMILE 38.0	1	1
POSTMILE 39.0	1	1
Br No. 49-0033R	1	
Br No. 49-0033L		1
POSTMILE 41.0	1	1
SUBTOTAL	5	5
TOTAL	10	

OBJECT MARKERS

SHEET No.	OBJECT MARKERS
	TYPE L
	EACH
PD-3	1
PD-4	3
PD-5	6
PD-7	1
PD-8	1
PD-14	6
PD-15	8
PD-16	1
PD-18	2
TOTAL	29

PAVEMENT DELINEATION QUANTITIES
PDQ-7

REVISED BY	DATE REVISED

CALCULATED-DESIGNED BY: VANIK POGOSYAN
CHECKED BY: KEVIN MURAI
FUNCTIONAL SUPERVISOR: MOHAMMED QATAMI

STATE OF CALIFORNIA - DEPARTMENT OF TRANSPORTATION
Caltrans®
TRAFFIC DESIGN

LAST REVISION DATE PLOTTED => 08-DEC-2009
06-01-09 TIME PLOTTED => 10:06

BORDER LAST REVISED 4/11/2008

RELATIVE BORDER SCALE IS IN INCHES 0 1 2 3

USERNAME => trrene
DGN FILE => 533072nc007.dgn

CU 06386

EA 330721

Dist	COUNTY	ROUTE	POST MILES TOTAL PROJECT	SHEET No.	TOTAL SHEETS
05	SLO	46	36.6/41.2	430	595

/Cevin H. Murai 06-01-09
REGISTERED CIVIL ENGINEER DATE

12-7-09
PLANS APPROVAL DATE

REGISTERED PROFESSIONAL ENGINEER
KEVIN H. MURAI
No. C 59586
Exp.12/31/09
CIVIL
STATE OF CALIFORNIA

THE STATE OF CALIFORNIA OR ITS OFFICERS OR AGENTS SHALL NOT BE RESPONSIBLE FOR THE ACCURACY OR COMPLETENESS OF SCANNED COPIES OF THIS PLAN SHEET.

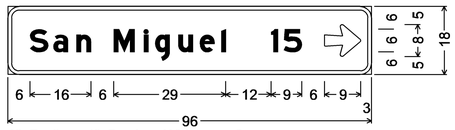

3" Radius, 1" Border, White on Green;
[San Miguel] E Mod; [15] E Mod;
Arrow 6UC-1L - 10" 0°;

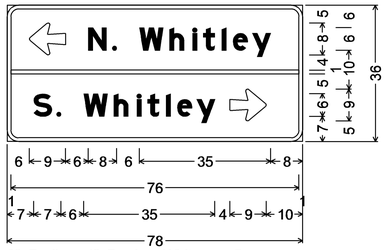

3" Radius, 1" Border, White on Green;
Arrow 6UC-1L - 10" 180°;
[N. Whitley] E Mod; [S. Whitley] E Mod;
Arrow 6UC-1L - 10" 0°;

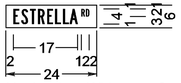

No border, White on Green;
[ESTRELLA] B;
[RD] B;

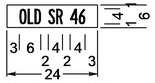

No border, White on Green;
[OLD SR 46] B 50% spacing;

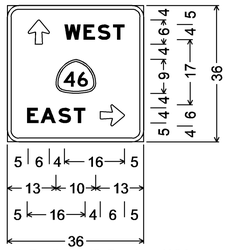

3" Radius, 1" Border, White on Green;
Arrow 4UC&CAP-1L - 6" 90°;
[WEST] E Mod;
[EAST] E Mod;
Arrow 4UC&CAP-1L - 6" 0°;

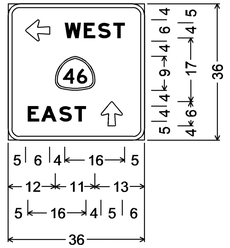

3" Radius, 1" Border, White on Green;
Arrow 4UC&CAP-1L - 6" 180°;
[WEST] E Mod;
[EAST] E Mod;
Arrow 4UC&CAP-1L - 6" 90°;

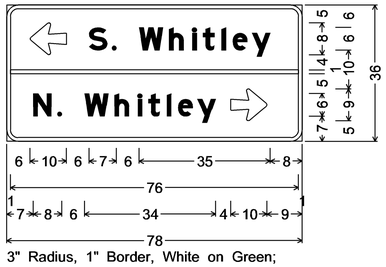

3" Radius, 1" Border, White on Green;
Arrow 6UC-1L - 10" 180°;
[S. Whitley] E Mod; [N. Whitley] E Mod;
Arrow 6UC-1L - 10" 0°;

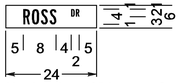

No border, White on Green;
[ROSS] B;
[DR] B;

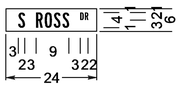

No border, White on Green;
[S] B;
[ROSS] B;
[DR] B;

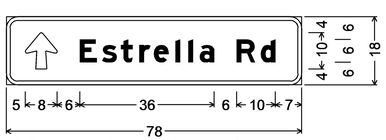

3" Radius, 1" Border, White on Green;
Arrow 6UC-1L - 10" 90°;
[Estrella Rd] E Mod;

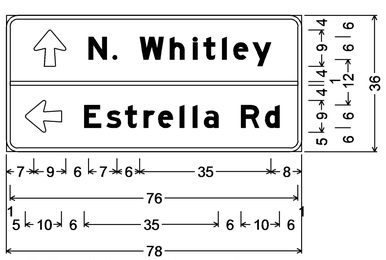

3" Radius, 1" Border, White on Green;
Arrow 6UC-1L - 10" 90°;
[N. Whitley] E Mod;
Arrow 6UC-1L - 10" 180°;
[Estrella Rd] E Mod;

SIGN DETAILS
NO SCALE
SD-1

THIS PLAN ACCURATE FOR PAVEMENT DELINEATION AND SIGN WORK ONLY.

KEVIN MURAI — CALCULATED-DESIGNED BY
HASSAN TAHA — CHECKED BY
MOHAMMED QATAMI — FUNCTIONAL SUPERVISOR
STATE OF CALIFORNIA - DEPARTMENT OF TRANSPORTATION
TRAFFIC DESIGN
Caltrans
REVISED BY
DATE REVISED

LAST REVISION 06-01-09
DATE PLOTTED => 08-DEC-2009
TIME PLOTTED => 11:06

BORDER LAST REVISED 4/11/2008
RELATIVE BORDER SCALE IS IN INCHES 0 1 2 3
USERNAME => trrene
DGN FILE => 533072ab001.dgn
CU 06386
EA 330721

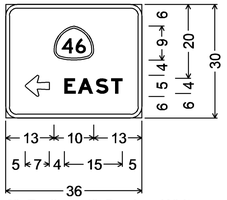

3" Radius, 1" Border, White on Green;
Arrow 4UC&CAP-1L - 6" 180°;
[EAST] E Mod;

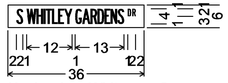

No border, White on Green;
[S] B;
[WHITLEY GARDENS] B 20% spacing;
[DR] B;

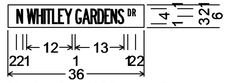

No border, White on Green;
[N] B;
[WHITLEY GARDENS] B 20% spacing;
[DR] B;

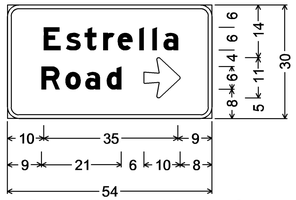

3" Radius, 1" Border, White on Green;
[Estrella] E Mod;
[Road] E Mod;
Arrow 6UC-2LH - 10" 0°;

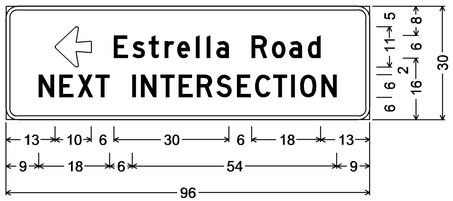

3" Radius, 1" Border, White on Green;
Arrow 6UC-2LH - 10" 180°; [Estrella Road] D;
[NEXT INTERSECTION] D;

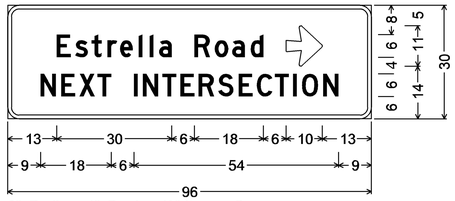

3" Radius, 1" Border, White on Green;
[Estrella Road] D; Arrow 6UC-2LH - 10" 0°;
[NEXT INTERSECTION] D;

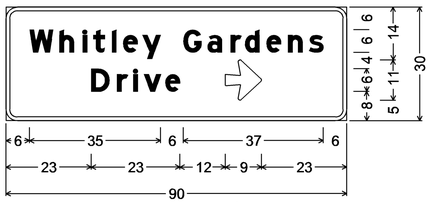

3" Radius, 1" Border, White on Green;
[Whitley Gardens] E Mod; [Drive] E Mod;
Arrow 6UC-2LH - 10" 0°;

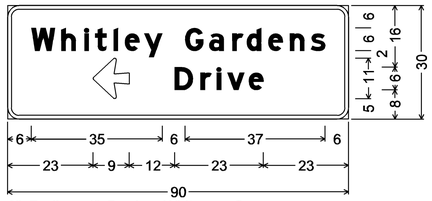

3" Radius, 1" Border, White on Green;
[Whitley Gardens] E Mod;
Arrow 6UC-2LH - 10" 180°; [Drive] E Mod;

Dist	COUNTY	ROUTE	POST MILES TOTAL PROJECT	SHEET No.	TOTAL SHEETS
05	SLO	46	36.6/41.2	431	595

/Kevin H. Murai 06-01-09
REGISTERED CIVIL ENGINEER DATE

12-7-09
PLANS APPROVAL DATE

REGISTERED PROFESSIONAL ENGINEER
KEVIN H. MURAI
No. C 59586
Exp. 12/31/09
CIVIL
STATE OF CALIFORNIA

THE STATE OF CALIFORNIA OR ITS OFFICERS OR AGENTS SHALL NOT BE RESPONSIBLE FOR THE ACCURACY OR COMPLETENESS OF SCANNED COPIES OF THIS PLAN SHEET.

CALCULATED-DESIGNED BY: KEVIN MURAI
CHECKED BY: HASSAN TAHA
FUNCTIONAL SUPERVISOR: MOHAMMED QATAMI
REVISED BY
DATE REVISED

STATE OF CALIFORNIA - DEPARTMENT OF TRANSPORTATION
Caltrans®
TRAFFIC DESIGN

SIGN DETAILS

NO SCALE

THIS PLAN ACCURATE FOR PAVEMENT DELINEATION AND SIGN WORK ONLY.

SD-2

LAST REVISION 06-01-09
DATE PLOTTED => 08-DEC-2009
TIME PLOTTED => 10:12

BORDER LAST REVISED 4/11/2008
RELATIVE BORDER SCALE IS IN INCHES 0 1 2 3
USERNAME => trmartin
DGN FILE => 533072ob002.dgn
CU 06386
EA 330721

Dist	COUNTY	ROUTE	POST MILES TOTAL PROJECT	SHEET No.	TOTAL SHEETS
05	SLO	46	36.6/41.2	432	595

/Cen H. Mur 06-01-09
REGISTERED CIVIL ENGINEER DATE

12-7-09
PLANS APPROVAL DATE

KEVIN H. MURAI No. C 59586 Exp.12/31/09 CIVIL
REGISTERED PROFESSIONAL ENGINEER
STATE OF CALIFORNIA

THE STATE OF CALIFORNIA OR ITS OFFICERS OR AGENTS SHALL NOT BE RESPONSIBLE FOR THE ACCURACY OR COMPLETENESS OF SCANNED COPIES OF THIS PLAN SHEET.

NOTES:

1. STREET NAME SIGN BLADES TO BE EXTRUDED ALUMINUM, 6063-T6 ALLOY, DEGREASED AND ETCHED WITH GREEN SCOTCHLITE, APPLIED TO BOTH SURFACES.
2. POST-TO-SIGN BRACKET TO BE DIE-CAST, #360 ALLOY WITH TWO ANGLED GUSSETS EACH SIDE FOR STRENGTH TO FIT 2⅜" O.D. GALVANIZED PIPE (2" I.D.). SIGN-TO-SIGN BRACKET TO BE SIMILAR CONSTRUCTION WITH 90 DEGREE AND 45 DEGREE SEPARATION.
3. CAPITAL LETTERS TO BE DIE-CUT SILVER SCOTCHLITE, SERIES B.
4. SCREWS FOR SECURING BRACKETS TO BE ZINC PLATED HEX SOCKET HEAD SCREWS ¼" × ½".
5. SIGN SADDLE BRACKET TO BE EXTRUDED ALUMINUM, TO FIT 2⅜" O.D. PIPE, FASTEN WITH A VANDAL PROOF NUT SET (HAWKINS TRAFFIC M2G-S2S, OR APPROVED EQUAL).

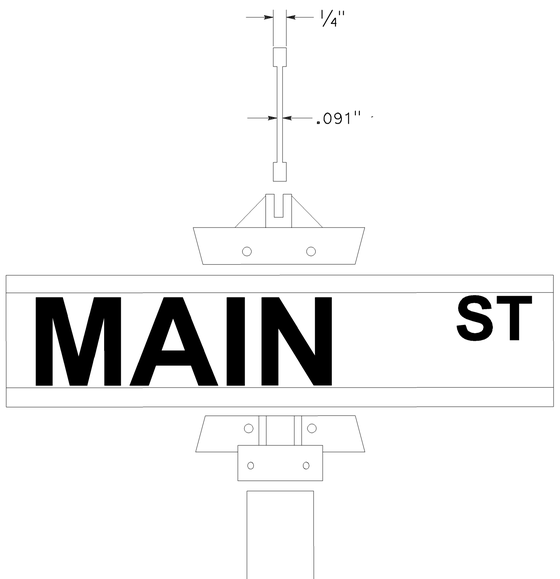

STREET NAME SIGN ASSEMBLY DETAIL

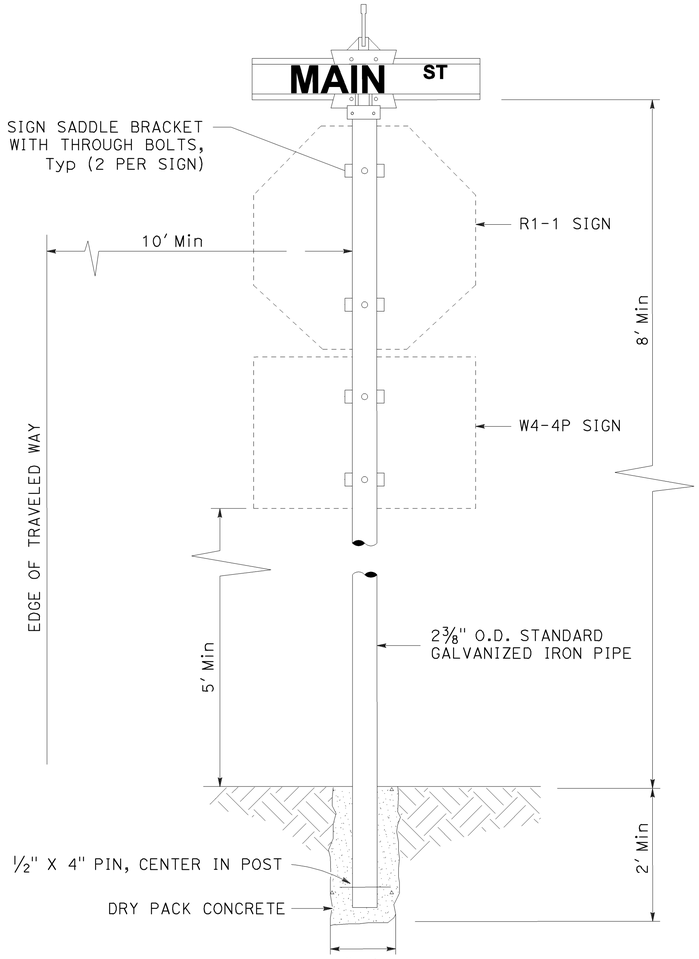

SIGN INSTALLATION

FOR COUNTY MAINTAINED ROADS, SIGN SHALL BE WHITE LETTERS ON A GREEN BACKGROUND.

STREET NAME SIGN DETAIL

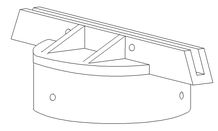

POST-TO-SIGN

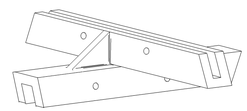

SIGN-TO-SIGN

STREET NAME SIGN BRACKET DETAILS

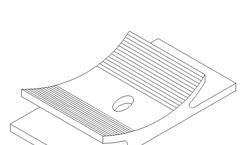

SIGN SADDLE BRACKET DETAIL

SIGN DETAILS (ROADSIDE SIGN-METAL POST)

NO SCALE

SD-3

THIS PLAN ACCURATE FOR PAVEMENT DELINEATION AND SIGN WORK ONLY.

CALCULATED-DESIGNED BY	KEVIN MURAI	REVISED BY	
CHECKED BY	HASSAN TAHA	DATE REVISED	
FUNCTIONAL SUPERVISOR	MOHAMMED QATAMI		

STATE OF CALIFORNIA - DEPARTMENT OF TRANSPORTATION
Caltrans
TRAFFIC DESIGN

LAST REVISION | DATE PLOTTED => 08-DEC-2009
06-01-09 | TIME PLOTTED => 10:12

Dist	COUNTY	ROUTE	POST MILES TOTAL PROJECT	SHEET No.	TOTAL SHEETS
05	SLO	46	36.6/41.2	433	595

/Cen H. Mur 06-01-09
REGISTERED CIVIL ENGINEER DATE

12-7-09
PLANS APPROVAL DATE

REGISTERED PROFESSIONAL ENGINEER
KEVIN H. MURAI
No. C 59586
Exp.12/31/09
CIVIL
STATE OF CALIFORNIA

THE STATE OF CALIFORNIA OR ITS OFFICERS OR AGENTS SHALL NOT BE RESPONSIBLE FOR THE ACCURACY OR COMPLETENESS OF SCANNED COPIES OF THIS PLAN SHEET.

ROADSIDE SIGN

SHEET No.	SIGN No.	SIGN CODE	PANEL SIZE (L×D) (INCH × INCH)	No. OF POST AND SIZE (INCH × INCH)	BACKGROUND SHEETING COLOR	LEGEND SHEETING COLOR	ASTM TYPE RETROREFLECTIVITY	GRAFFITI FLOW STANDARD	GRAFFITI FLOW PREMIUM	FURNISH SINGLE SHEET ALUMINUM SIGN 0.063"-UNFRAMED (SQFT)	0.080"-UNFRAMED (SQFT)	0.063"-FRAMED (SQFT)	0.080"-FRAMED (SQFT)	ROAD SIDE SIGN-ONE POST (EA)	ROAD SIDE SIGN-TWO POST (EA)	REMOVE ROADSIDE SIGN (EA)	RELOCATE ROADSIDE SIGN (EA)	ROAD SIDE SIGN-METAL POST (EA)	REMARKS
PD-1	1	W9-1L														1			LEFT LANE ENDS
	2	W9-1R														1			RIGHT LANE ENDS
PD-3	3	S30-4(CA)														2			TURN ON HEADLIGHTS (WESTBOUND)
	4	R1-1	36" × 36"	1-4" × 6"	RED	WHITE	IV		X	9.00				1					STOP
	5	R6-1	54" × 18"	1-4" × 6"	BLACK	WHITE	III	X			18.00			4					ONE-WAY ARROW
	6	R5-1	48" × 48"	1-6" × 6"	RED	WHITE	VII		X		64.00			4					DO NOT ENTER
		R5-1a	42" × 30"		WHITE	RED	VII		X	35.00									WRONG WAY
	7	R6-3	36" × 30"	1-4" × 6"	WHITE	BLACK	III	X		7.50				1					DIVIDED HIGHWAY SYMBOL
PD-4	8	G8-22(CA)															1		GENESEO Rd
PD-5	9	R1-1	36" × 36"	1-4" × 6"	RED	WHITE	IV		X	9.00				1					STOP
	10	R6-1	54" × 18"	1-4" × 6"	BLACK	WHITE	III	X			18.00			4					ONE-WAY ARROW
	11	R5-1	48" × 48"	1-6" × 6"	RED	WHITE	VII		X		64.00			4					DO NOT ENTER
		R5-1a	42" × 30"		WHITE	RED	VII		X	35.00									WRONG WAY
PD-6	12	R1-1														1			STOP
	13	R1-1	36" × 36"	1-4" × 6"	RED	WHITE	IV		X	9.00				1					STOP
	14	R6-1	54" × 18"	1-4" × 6"	BLACK	WHITE	III	X			18.00			4					ONE-WAY ARROW
	15	R5-1	48" × 48"	1-6" × 6"	RED	WHITE	VII		X		64.00			4					DO NOT ENTER
		R5-1a	42" × 30"		WHITE	RED	VII		X	35.00									WRONG WAY
PD-8/9	16	G8-22(CA)															1		DISPOSAL SITE UNION Rd
PD-9	17	R5-1	48" × 48"	1-6" × 6"	RED	WHITE	VII		X		64.00			4					DO NOT ENTER
		R5-1a	42" × 30"		WHITE	RED	VII		X	35.00									WRONG WAY
	18	R6-1	54" × 18"	1-4" × 6"	BLACK	WHITE	III	X			18.00			4					ONE-WAY ARROW
	19	R6-3	36" × 30"	1-4" × 6"	WHITE	BLACK	III	X		15.00				2					DIVIDED HIGHWAY SYMBOL
PD-11	20	G69(CA)														1			PASSING LANE
	21	W7-1b															1		HILL WITH GRADE SYMBOL
PD-12	22	R1-1	36" × 36"	1-4" × 6"	RED	WHITE	VII		X	9.00				1					STOP
	23	R3-2	36" × 36"	1-4" × 6"	WHITE	BLACK/RED	IV		X	9.00				1					NO LEFT TURN SYMBOL
PD-13	24	D3-2														1			ESTRELLA Rd NEXT INTERSECTION
	25	W4-2R	48" × 48"	1-4" × 6"	YELLOW	BLACK	III	X			16.00			1					RIGHT LANE REDUCTION SYMBOL
PD-14	26	W9-1R	48" × 48"	1-4" × 6"	YELLOW	BLACK	III	X			16.00			1					RIGHT LANE ENDS
	27	G8-22(CA)														1			WHITLEY GARDENS DRIVE LEFT ARROW
	28	S32,S32-1															2		ADOPT-A-HIGHWAY, LITTER REMOVAL
	29	W1-7	48" × 24"	1-4" × 6"	YELLOW	BLACK	III	X			8.00			1					TWO-DIRECTION LARGE ARROW
		TYPE N-2(CA)	18" × 18"		RED		III	X			2.25								TYPE N-2(CA) MARKER
	30	R1-1	30" × 30"	STANDARD GALVANIZED IRON PIPE	RED	WHITE	IV		X	6.25									STOP
		G7-1(CA)	24" × 6"		GREEN	WHITE	III	X		2.00								1	ESTRELLA Rd (FACING BOTH DIRECTIONS)
			24" × 6"		GREEN	WHITE	III	X		2.00									OLD SR 46 (FACING BOTH DIRECTIONS)
	31	R1-1														2			STOP
	32	W3-1	36" × 36"	1-4" × 6"	YELLOW	W/R/B	VII		X	18.00				2					STOP AHEAD
	33	G1-1(CA)														1			SAN MIGUEL 15
	34	R1-1	30" × 30"	1-4" × 4"	RED	WHITE	IV		X	12.50				2					STOP
	35	G1-1(CA)	96" × 18"	2-4" × 4"	GREEN	WHITE	III	X					12.00		1				SAN MIGUEL 15
	36	G8-7(CA)	78" × 36"	2-4" × 6"	GREEN	WHITE	III	X				19.50			1				S WHITLEY/N WHITLEY
	37	G7-1(CA)														1			ESTRELLA Rd/ROUTE 46
SHEET SQ-1 TOTAL										248.25	370.25	19.50	12.00	47	2	12	5	1	

THIS PLAN ACCURATE FOR PAVEMENT DELINEATION AND SIGN WORK ONLY.

SIGN QUANTITIES
SQ-1

REVISED BY	DATE REVISED

CALCULATED-DESIGNED BY: KEVIN MURAI
CHECKED BY: HASSAN TAHA
FUNCTIONAL SUPERVISOR: MOHAMMED QATAMI

STATE OF CALIFORNIA - DEPARTMENT OF TRANSPORTATION
TRAFFIC DESIGN

LAST REVISION | DATE PLOTTED => 08-DEC-2009
06-01-09 | TIME PLOTTED => 10:12

BORDER LAST REVISED 4/11/2008

RELATIVE BORDER SCALE IS IN INCHES 0 1 2 3

USERNAME => trmartin
DGN FILE => 533072oc001.dgn

CU 06386

EA 330721

Dist	COUNTY	ROUTE	POST MILES TOTAL PROJECT	SHEET No.	TOTAL SHEETS
05	SLO	46	36.6/41.2	434	595

/Cen H. Mur 06-01-09
REGISTERED CIVIL ENGINEER DATE

12-7-09
PLANS APPROVAL DATE

REGISTERED PROFESSIONAL ENGINEER
KEVIN H. MURAI
No. C 59586
Exp.12/31/09
CIVIL
STATE OF CALIFORNIA

THE STATE OF CALIFORNIA OR ITS OFFICERS OR AGENTS SHALL NOT BE RESPONSIBLE FOR THE ACCURACY OR COMPLETENESS OF SCANNED COPIES OF THIS PLAN SHEET.

ROADSIDE SIGN

SHEET No.	SIGN No.	SIGN CODE	PANEL SIZE (L×D) (INCH × INCH)	No. OF POST AND SIZE (INCH × INCH)	BACKGROUND SHEETING COLOR	LEGEND SHEETING COLOR	ASTM TYPE RETROREFLECTIVITY	GRAFFITI FLOW STANDARD	GRAFFITI FLOW PREMIUM	FURNISH SINGLE SHEET ALUMINUM SIGN 0.063"-UNFRAMED (SQFT)	FURNISH SINGLE SHEET ALUMINUM SIGN 0.080"-UNFRAMED (SQFT)	FURNISH SINGLE SHEET ALUMINUM SIGN 0.063"-FRAMED (SQFT)	FURNISH SINGLE SHEET ALUMINUM SIGN 0.080"-FRAMED (SQFT)	ROAD SIDE SIGN-ONE POST (EA)	ROAD SIDE SIGN-TWO POST (EA)	REMOVE ROADSIDE SIGN (EA)	RELOCATE ROADSIDE SIGN (EA)	ROAD SIDE SIGN-METAL POST (EA)	REMARKS
PD-15	38	G28-2(CA)	24" × 25"	1-4" × 6"	GREEN	WHITE	III	X		4.17									ROUTE 46 MARKER
		G50(CA)	30" × 15"		GREEN	WHITE	III	X		3.13				1					WEST
		G34(CA)	21" × 15"		GREEN	WHITE	III	X		2.19									RIGHT ARROW
	39	G77-4(CA)	36" × 36"	1-4" × 6"	GREEN	WHITE	III	X		9.00				1					ROUTE 46 EAST/WEST
	40	R1-1	30" × 30"	STANDARD GALVANIZED IRON PIPE	RED	WHITE	IV		X	6.25									STOP
		W4-4P	30" × 24"		YELLOW	BLACK	III	X		5.00								1	CROSS TRAFFIC DOES NOT STOP
		G7-1(CA)	24" × 6"		GREEN	WHITE	III	X		2.00									ROSS Dr (FACING BOTH DIRECTIONS)
			24" × 6"		GREEN	WHITE	III	X		2.00									OLD SR 46 (FACING BOTH DIRECTIONS)
	41	G77-4(CA)	36" × 36"	1-4" × 6"	GREEN	WHITE	III	X		9.00				1					ROUTE 46 EAST/WEST
	42	R1-1	30" × 30"	STANDARD GALVANIZED IRON PIPE	RED	WHITE	IV		X	6.25									STOP
		W4-4P	30" × 24"		YELLOW	BLACK	III	X		5.00								1	CROSS TRAFFIC DOES NOT STOP
		G7-1(CA)	24" × 6"		GREEN	WHITE	III	X		2.00									S ROSS Dr (FACING BOTH DIRECTIONS)
			24" × 6"		GREEN	WHITE	III	X		2.00									OLD SR 46 (FACING BOTH DIRECTIONS)
	43	G8-7(CA)	78" × 36"	2-4" × 6"	GREEN	WHITE	III	X				19.50			1				S WHITLEY/N WHITLEY
	44	G8-22(CA)	78" × 18"	1-4" × 6"	GREEN	WHITE	III	X				9.75		1					ESTRELLA Rd
	45	R3-2	36" × 36"	1-4" × 6"	WHITE	BLACK/RED	IV		X	9.00				1					NO LEFT TURN SYMBOL
	46	R1-1	36" × 36"	1-4" × 6"	RED	WHITE	IV		X	9.00				1					STOP
	47	R2-1(65)	36" × 48"	1-4" × 6"	WHITE	BLACK	III	X		12.00				1					SPEED LIMIT 65
		R48-1(CA)	36" × 36"		WHITE	BLACK	III	X		9.00									RADAR ENFORCED
	48	R2-1(55)														1			SPEED LIMIT 55
	49	R1-1	30" × 30"	STANDARD GALVANIZED IRON PIPE	RED	WHITE	IV		X	6.25									STOP
		G7-1(CA)	36" × 6"		GREEN	WHITE	III	X		3.00								1	N WHITLEY (FACING BOTH DIRECTIONS)
			24" × 6"		GREEN	WHITE	III	X		2.00									ROSS Dr (FACING BOTH DIRECTIONS)
	50	R1-1	30" × 30"	1-4" × 4"	RED	WHITE	IV		X	12.50				2					STOP
PD-16	51	R2-1,R48-1														1			SPEED LIMIT 55, RADAR ENFORCED
	52	R1-1	36" × 36"	1-4" × 6"	RED	WHITE	IV		X	9.00				1					STOP
	53	R3-2	36" × 36"	1-4" × 6"	WHITE	BLACK/RED	IV		X	9.00				1					NO LEFT TURN SYMBOL
	54	R5-2a	30" × 30"	1-4" × 4"	WHITE	BLACK	III	X		6.25				1					NO TRUCKS
		W16-9p	30" × 18"		RED	WHITE	IV	X		3.75									AHEAD
	55	G8-22(CA)	54" × 30"	1-4" × 6"	GREEN	WHITE	III	X			11.25			1					ESTRELLA Rd
	56	R5-2	30" × 30"	1-4" × 4"	WHITE	BLACK	III	X		6.25				1					NO TRUCK SYMBOL
		W16-2a	30" × 18"		YELLOW	BLACK	III	X		3.75									100 FT
	57	M4-4	24" × 12"	1-4" × 4"	WHITE	BLACK	III	X		2.00				1					TRUCK ROUTE MARKER
		M6-1	21" × 15"		WHITE	BLACK	III	X		2.19									RIGHT TURN ARROW
	58	W1-7	48" × 24"	1-4" × 6"	YELLOW	BLACK	III	X			8.00			1					TWO-DIRECTION LARGE ARROW
		TYPE N-2(CA)	18" × 18"		RED		III	X			2.25								TYPE N-2(CA) MARKER
	59	R1-1	30" × 30"	STANDARD GALVANIZED IRON PIPE	RED	WHITE	IV		X	6.25									STOP
		W4-4p	30" × 24"		YELLOW	BLACK	III	X		5.00								1	CROSS TRAFFIC DOES NOT STOP
		G7-1(CA)	36" × 6"		GREEN	WHITE	III	X		3.00									S WHITLEY (FACING BOTH DIRECTIONS)
			24" × 6"		GREEN	WHITE	III	X		2.00									S ROSS Dr (FACING BOTH DIRECTIONS)
	60	R5-2	30" × 30"	1-4" × 4"	WHITE	BLACK	III	X		6.25				1					NO TRUCK SYMBOL
	61	M4-4	24" × 12"	1-4" × 6"	WHITE	BLACK	III	X		2.00				1					TRUCK ROUTE MARKER
		R3-1	36" × 36"		WHITE	RED/BLACK	VII		X	9.00									NO RIGHT TURN SYMBOL
	62	G77-4(CA)	36" × 36"	1-4" × 6"	GREEN	WHITE	III	X		9.00				1					ROUTE 46 EAST/WEST
	63	G78-1(CA)	36" × 30"	1-4" × 6"	GREEN	WHITE	III	X		7.50				1					ROUTE 46 EAST
	64	W3-1	36" × 36"	1-4" × 6"	YELLOW	W/R/B	VII		X	9.00				1					STOP AHEAD
	65	G8-7(CA)	78" × 36"	2-4" × 6"	GREEN	WHITE	III	X				19.50			1				N Whitley/ESTRELLA Rd
SHEET SQ-2 TOTAL										221.93	21.50	48.75	0.00	21	2	2	0	4	

THIS PLAN ACCURATE FOR PAVEMENT DELINEATION AND SIGN WORK ONLY.

SIGN QUANTITIES
SQ-2

LAST REVISION DATE PLOTTED => 08-DEC-2009
06-01-09 TIME PLOTTED => 10:12

REVISED BY
DATE REVISED
KEVIN MURAI
HASSAN TAHA
CALCULATED-DESIGNED BY
CHECKED BY
FUNCTIONAL SUPERVISOR
MOHAMMED QATAMI
STATE OF CALIFORNIA - DEPARTMENT OF TRANSPORTATION
TRAFFIC DESIGN
Caltrans

BORDER LAST REVISED 4/11/2008
RELATIVE BORDER SCALE IS IN INCHES 0 1 2 3
USERNAME => trmartin
DGN FILE => 533072oc002.dgn
CU 06386
EA 330721

Dist	COUNTY	ROUTE	POST MILES TOTAL PROJECT	SHEET No.	TOTAL SHEETS
05	SLO	46	36.6/41.2	435	595

/Cen H. Mur. 06-01-09
REGISTERED CIVIL ENGINEER DATE

12-7-09
PLANS APPROVAL DATE

REGISTERED PROFESSIONAL ENGINEER
KEVIN H. MURAI
No. C 59586
Exp.12/31/09
CIVIL
STATE OF CALIFORNIA

THE STATE OF CALIFORNIA OR ITS OFFICERS OR AGENTS SHALL NOT BE RESPONSIBLE FOR THE ACCURACY OR COMPLETENESS OF SCANNED COPIES OF THIS PLAN SHEET.

ROADSIDE SIGN

SHEET No.	SIGN No.	SIGN CODE	PANEL SIZE (L×D) (INCH × INCH)	No. OF POST AND SIZE (INCH × INCH)	BACKGROUND SHEETING COLOR	LEGEND SHEETING COLOR	ASTM TYPE RETROREFLECTIVITY	GRAFFITI FLOW STANDARD	GRAFFITI FLOW PREMIUM	FURNISH SINGLE SHEET ALUMINUM SIGN 0.063"-UNFRAMED (SQFT)	0.080"-UNFRAMED (SQFT)	0.063"-FRAMED (SQFT)	0.080"-FRAMED (SQFT)	ROAD SIDE SIGN-ONE POST (EA)	ROAD SIDE SIGN-TWO POST (EA)	REMOVE ROADSIDE SIGN (EA)	RELOCATE ROADSIDE SIGN (EA)	ROAD SIDE SIGN-METAL POST (EA)	REMARKS
PD-17	66	R2-1(65)	36" × 48"	1-4" × 6"	WHITE	BLACK	III	X		12.00				1					SPEED LIMIT 65
		R48-1(CA)	36" × 36"		WHITE	BLACK	III	X		9.00									RADAR ENFORCED
	67	G8-7(CA)															1		ALMOND Dr/RIVER GROVE Dr
	68	G68(CA)															1		DIVIDED ROAD 4 MILES AHEAD
PD-18	69	R5-1	48" × 48"	1-6" × 6"	RED	WHITE	VII		X		64.00			4					DO NOT ENTER
		R5-1a	42" × 30"		WHITE	RED	VII		X	35.00									WRONG WAY
	70	R6-1	54" × 18"	1-4" × 6"	BLACK	WHITE	III	X			18.00			4					ONE-WAY ARROW
	71	R6-3	36" × 30"	1-4" × 6"	WHITE	BLACK	III	X		15.00				2					DIVIDED HIGHWAY SYMBOL
	72	W6-2	48" × 48"	1-4" × 6"	YELLOW	BLACK	III	X			32.00			2					DIVIDED HIGHWAY SYMBOL
PD-19	73	W9-1R	48" × 48"	1-4" × 6"	YELLOW	BLACK	III	X			16.00			1					RIGHT LANE ENDS
	74	W4-2R	48" × 48"	1-4" × 6"	YELLOW	BLACK	III	X			32.00			2					RIGHT LANE REDUCTION SYMBOL
	75	R5-1	48" × 48"	1-6" × 6"	RED	WHITE	VII		X		32.00			2					DO NOT ENTER
		R5-1a	42" × 30"		WHITE	RED	VII		X	17.50									WRONG WAY
	76	R4-7	24" × 30"	1-4" × 4"	WHITE	BLACK	III	X		5.00				1					KEEP RIGHT SYMBOL
PD-20	77	W6-3	48" × 48"	1-4" × 6"	YELLOW	BLACK	III	X			16.00			1					TWO-WAY TRAFFIC SYMBOL
SHEET SQ-3 TOTAL										93.50	210.00	0.00	0.00	20	0	0	2	0	
SHEET SQ-2 TOTAL										221.93	21.50	48.75	0.00	21	2	2	0	4	
SHEET SQ-1 TOTAL										248.25	370.25	19.50	12.00	47	2	12	5	1	
SHEET THQ-6 TOTAL										36.00	0.00	0.00	116.25	4	6	6	33	0	
GRAND TOTAL										599.68	601.75	68.25	128.25	92	10	20	40	5	

THIS PLAN ACCURATE FOR PAVEMENT DELINEATION AND SIGN WORK ONLY.

SIGN QUANTITIES
SQ-3

CALCULATED-DESIGNED BY	KEVIN MURAI	REVISED BY	
CHECKED BY	HASSAN TAHA	DATE REVISED	
FUNCTIONAL SUPERVISOR	MOHAMMED QATAMI		
STATE OF CALIFORNIA - DEPARTMENT OF TRANSPORTATION	TRAFFIC DESIGN		

LAST REVISION 06-01-09
DATE PLOTTED => 08-DEC-2009
TIME PLOTTED => 10:12

BORDER LAST REVISED 4/11/2008

RELATIVE BORDER SCALE IS IN INCHES 0 1 2 3

USERNAME => trmartin
DGN FILE => 533072oc003.dgn

CU 06386

EA 330721

Dist	COUNTY	ROUTE	POST MILES TOTAL PROJECT	SHEET No.	TOTAL SHEETS
05	SLO	46	36.6/41.2	436	595

8-24-09
REGISTERED CIVIL ENGINEER DATE

12-7-09
PLANS APPROVAL DATE

REGISTERED PROFESSIONAL ENGINEER
JOSE M. ARGUELLO
No. 51321
Exp 06-30-10
CIVIL
STATE OF CALIFORNIA

THE STATE OF CALIFORNIA OR ITS OFFICERS OR AGENTS SHALL NOT BE RESPONSIBLE FOR THE ACCURACY OR COMPLETENESS OF ELECTRONIC COPIES OF THIS PLAN SHEET.

ABBREVIATIONS:

(N) NOT A SEPARATE PAY ITEM, FOR INFORMATION ONLY.

S	STAGE	Aux	AUXILARY
P	PHASE	Prvt	PRIVATE
TOC	TOP OF CUT	X-Over	CROSS OVER
TOF	TOE OF FILL	Ovrly / Lvl	OVERLAY / LEVELING
IS	INSIDE SHOULDER	OSD	OVERSIDE DRAIN
OS	OUTSIDE SHOULDER	PP	PLASTIC PIPE
T/W	TRAVELED WAY	NWG	N WHITLEY GARDENS

TEMPORARY FIBER ROLL

STATION	LOCATION	LF
℄ Rte 46 STA 398+00 to STA 627+00	EASTBOUND SLOPES	20,700
℄ Rte 46 STA 398+00 to STA 627+00	WESTBOUND SLOPES	37,200
℄ ESTRELLA RD STA 7+12 to STA 11+50	ESTRELLA ROAD SIDE SLOPES	460
℄ FR-1 STA 67+50 to STA 73+50	FR-1 SIDE SLOPES	1,100
℄ FR-2 STA 29+00 to ℄ N WHITLEY GARDENS Dr STA 13+00	N WHITLEY GARDENS DR SIDE SLOPES	790
℄ Rte 46 STA 415+00 to STA 420+50	TOP OF CUT SLOPE ON LEFT	560
℄ Rte 46 STA 429+00 to STA 434+00	TOP OF CUT SLOPE ON LEFT	500
℄ Rte 46 STA 429+30 to STA 434+40	TOP OF CUT SLOPE ON RIGHT	520
℄ Rte 46 STA 496+50 to STA 500+00	TOP OF CUT SLOPE ON LEFT	350
℄ Rte 46 STA 506+50 to STA 508+00	TOP OF CUT SLOPE ON LEFT	150
℄ Rte 46 STA 517+50 to STA 518+00	TOP OF CUT SLOPE ON LEFT	50
℄ Rte 46 STA 525+00 to STA 526+50	TOP OF CUT SLOPE ON LEFT	160
TOTAL		62,540

DEER GUARD

LOCATION	EA
Prvt Dwy 2	1
Prvt Dwy 3	1
Prvt Dwy 4	1
CHUMEIA Dwy	1
TOTAL	4

DEER GUARD DRAINAGE

ALIGNMENT	STATION	Max Cover (N)	10" PP
		LF	LF
Prvt Dwy 2	10+45	0.9	22.8
Prvt Dwy 3	7+67	0.9	21.1
Prvt Dwy 4	9+11	4.8	69.6
CHUMEIA Dwy	5+97	1.1	187.9
		TOTAL	301.4

TEMPORARY HYDRAULIC MULCH (BONDED FIBER MATRIX)

STATION	LOCATION	SQYD
℄ Rte 46 STA 398+00 to STA 627+00	EASTBOUND SLOPES	35,000
℄ Rte 46 STA 398+00 to STA 627+00	WESTBOUND SLOPES	66,000
℄ ESTRELLA RD STA 7+12 to STA 11+50	SIDE SLOPES	1,000
℄ FR-1 STA 67+50 to STA 73+50	SIDE SLOPES	2,000
℄ N WHITLEY GARDENS Dr STA 10+00 to STA 13+00	SIDE SLOPES	1,100
TOTAL		105,100

EMERGENCY DRAIN VALVE

LOCATION	STATION	Max Cover (N)	8" PP	8" Maint DRAIN VALVE
		LF	LF	EA
ESTRELLA BASIN	℄ ESTRELLA Rd 14+08	6.4	81.2	1
PINE BASIN	℄ RIVER GROVE Dr 25+85	3.7	51.1	1
		TOTAL	132.3	2

TEMPORARY SILT FENCE

STATION	LOCATION	LF
℄ Rte 46 STA 398+00 to STA 627+00	EASTBOUND AND WESTBOUND SLOPE PERIMETER	48,560
℄ FR-1 STA 65+62 to STA 79+39	RIGHT AND LEFT SLOPE PERIMETER	2,760
℄ FR-2 STA 21+92 to STA 39+95	RIGHT AND LEFT SLOPE PERIMETER	3,610
℄ ESTRELLA Rd STA 7+00 to STA 16+35	RIGHT AND LEFT SLOPE PERIMETER	1,870
℄ UNION Rd STA 176+50 to STA 185+50	RIGHT AND LEFT SLOPE PERIMETER	1,800
TOTAL		58,600

TEMPORARY CHECK DAM

STATION	LOCATION	LF
℄ Rte 46 STA 398+00 to STA 627+00	MEDIAN	41,150
℄ Rte 46 STA 408+50 to STA 411+00	SWALE ON Lt	30
℄ Rte 46 STA 411+75 to STA 413+75	SWALE ON Lt	120
℄ Rte 46 STA 437+22 to STA 438+40	SWALE ON Lt	100
℄ Rte 46 STA 445+50 to STA 457+00	SWALE ON Lt	600
℄ Rte 46 STA 470+00 to STA 475+50	SWALE ON Lt	290
℄ Rte 46 STA 484+50 to STA 485+25	SWALE ON Lt	50
℄ Rte 46 STA 561+50 to STA 562+75	SWALE ON Rt	70
℄ Rte 46 STA 568+50 to STA 575+00	SWALE ON Rt	520
℄ FR-1 STA 72+25 to STA 75+25	SWALE ON Lt	160
TOTAL		43,090

SUMMARY OF QUANTITIES
Q-1

REVISED BY | DATE REVISED
CALCULATED-DESIGNED BY | CHECKED BY
JOSE ARGUELLO | SUMI HOODE
FUNCTIONAL SUPERVISOR | JACK WALKER
STATE OF CALIFORNIA - DEPARTMENT OF TRANSPORTATION | 06-DESIGN
Caltrans

LAST REVISION 07-13-09 | DATE PLOTTED => 08-DEC-2009 | TIME PLOTTED => 10:12

8-24-09
REGISTERED CIVIL ENGINEER DATE

12-7-09
PLANS APPROVAL DATE

REGISTERED PROFESSIONAL ENGINEER
JOSE M. ARGUELLO
No. 51321
Exp. 06-30-10
CIVIL
STATE OF CALIFORNIA

THE STATE OF CALIFORNIA OR ITS OFFICERS OR AGENTS SHALL NOT BE RESPONSIBLE FOR THE ACCURACY OR COMPLETENESS OF ELECTRONIC COPIES OF THIS PLAN SHEET.

TEMPORARY DRAINAGE INLET PROTECTION

DRAINAGE SYSTEM No.	DRAINAGE UNIT No.	DRAINAGE PLAN SHEET No.	DI PROTECTION TYPE 3A	DI PROTECTION TYPE 4A	LOCATION
			EA	EA	
4	f	D3		1	412+72.88 ℄ Rte 46
4	h	D3	1		412+72.88 ℄ Rte 46
4	l	D3		1	411+97.49 ℄ Rte 46
4	m	D3	1		412+06.25 ℄ Rte 46
4	p	D3	1		413+38.50 ℄ Rte 46
6	j	D4	1		434+95.66 ℄ Rte 46
7	f	D5		1	437+66.32 ℄ Rte 46
7	h	D5		1	438+24.11 ℄ Rte 46
9	b	D5	1		8+09.50 ℄ Prvt Dwy 3
9	d	D5	1		8+23.34 ℄ Prvt Dwy 3
13	d	D5		1	449+58.77 ℄ Rte 46
13	k	D5		1	449+18.77 ℄ Rte 46
13	n	D5		1	449+86.12 ℄ Rte 46
14	i	D6		1	457+87.66 ℄ Rte 46
14	k	D6		1	458+33.50 ℄ Rte 46
16	d	D6		1	475+55.09 ℄ Rte 46
22	d	D9	1		494+46.53 ℄ Rte 46
22	f	D9	1		496+17.00 ℄ Rte 46
22	h	D9		1	494+77.00 ℄ Rte 46
22	j	D9		1	495+25.00 ℄ Rte 46
23	h	D10		1	507+68.15 ℄ Rte 46
23	j	D10	1		507+90.00 ℄ Rte 46
24	f	D10		1	512+50.00 ℄ Rte 46
24	h	D10	1		512+74.00 ℄ Rte 46
24	m	D10	1		515+00.00 ℄ Rte 46
24	r	D11	1		518+00.00 ℄ Rte 46
24	y	D11	1		521+25.00 ℄ Rte 46
25	b	D11	1		528+80.00 ℄ Rte 46
25	d	D11	1		526+50.00 ℄ Rte 46
25	i	D11	1		528+80.00 ℄ Rte 46
25	l	D11		1	528+80.00 ℄ Rte 46
25	n	D11	1		528+80.00 ℄ Rte 46
25	p	D11	1		528+00.00 ℄ Rte 46
25	r	D11	1		527+00.00 ℄ Rte 46
26	a	D12	1		539+25.00 ℄ Rte 46
26	f	D12	1		534+75.20 ℄ Rte 46
26	k	D12	1		530+90.00 ℄ Rte 46
27	b	D12		1	534+39.16 ℄ Rte 46
27	d	D12	1		4+10.00 ℄ Prvt Dwy 5
27	f	D12	1		3+28.00 ℄ Prvt Dwy 5
27	j	D12	1		4+10.00 ℄ Prvt Dwy 5
27	m	D12	1		533+30.00 ℄ Rte 46
27	o	D12	1		4+22.34 ℄ Prvt Dwy 5
28	b	D13	1		545+30.00 ℄ Rte 46
28	g	D13	1		542+75.00 ℄ Rte 46
28	i	D13		1	542+75.00 ℄ Rte 46
28	k	D13	1		542+75.00 ℄ Rte 46
29	g	D14	1		553+80.00 ℄ Rte 46
29	k	D13	1		546+95.00 ℄ Rte 46
29	m	D13		1	546+95.00 ℄ Rte 46
29	o	D13	1		546+95.00 ℄ Rte 46
31	d	D14		1	558+18.23 ℄ Rte 46
31	f	D14		1	557+90.17 ℄ Rte 46
31	h	D14		1	558+43.64 ℄ Rte 46
SUBTOTAL			33	21	

TEMPORARY DRAINAGE INLET PROTECTION

DRAINAGE SYSTEM No.	DRAINAGE UNIT No.	DRAINAGE PLAN SHEET No.	DI PROTECTION TYPE 3A	DI PROTECTION TYPE 4A	LOCATION
			EA	EA	
32	e	D14	1		7+75.31 ℄ ESTRELLA Rd
38	d	D16	1		68+00.00 ℄ FR-1
38	f	D16	1		67+78.00 ℄ FR-1
43	n	D16	1		576+73.18 ℄ Rte 46
43	p	D16	1		577+43.15 ℄ Rte 46
43	r	D16	1		578+00.00 ℄ Rte 46
43	t	D15		1	576+73.14 ℄ Rte 46
43	v	D15		1	576+02.37 ℄ Rte 46
44	a	D15		1	577+43.96 ℄ Rte 46
44	c	D17		1	580+70.00 ℄ Rte 46
44	d	D17	1		580+70.00 ℄ Rte 46
44	g	D17	1		580+70.00 ℄ Rte 46
44	i	D17		1	583+70.00 ℄ Rte 46
44	j	D17	1		583+70.00 ℄ Rte 46
44	m	D17	1		583+70.00 ℄ Rte 46
44	o	D17		1	586+50.00 ℄ Rte 46
44	q	D17	1		586+50.00 ℄ Rte 46
48	h	D18	1		28+00.00 ℄ RIVER GROVE Dr
48	j	D18	1		598+20.24 ℄ Rte 46
48	l	D18	1		411+97.49 ℄ Rte 46
48	n	D18	1		599+05.26 ℄ Rte 46
48	p	D18	1		602+70.00 ℄ Rte 46
48	r	D18		1	599+05.26 ℄ Rte 46
48	z	D18		1	598+50.77 ℄ Rte 46
SUBTOTAL			16	8	
SUBTOTAL			49	29	
TOTAL			78		

TEMPORARY FENCE (TYPE ESA)

LOCATION SHEET	STATION LIMITS	Lt	Rt	ESA FENCE (LF)
EC-5	444+00 - 445+50	X		421
EC-5	446+00 - 449+10		X	374
EC-6	458+50 - 459+10		X	74
EC-6	461+00 - 462+00		X	109
EC-7	470+10 - 470+50		X	56
EC-7	471+00 - 471+30		X	49
EC-8	479+40 - 480+70		X	345
EC-8	481+90 - 482+25		X	66
EC-8	483+50 - 484+10		X	109
EC-13	547+50 - 548+10	X		63
EC-13	548+50 - 549+10	X		141
EC-14	556+70 - 557+90	X		438
EC-14	557+90 - 558+50	X		238
EC-14	560+20 - 560+60		X	100
EC-14	562+00 - 562+75	X		205
EC-14	562+65 - 563+10	X		183
EC-14	563+00 - 565+00	X		202
EC-14	563+10 - 565+00		X	109
EC-15	565+00 - 565+75	X		177
EC-16	565+00 - 572+00		X	1022
EC-16	574+00 - 575+00		X	280
EC-18	597+40 - 597+75	X		70
	TOTAL			4831

SUMMARY OF QUANTITIES
Q-2

STATE OF CALIFORNIA - DEPARTMENT OF TRANSPORTATION
Caltrans
06-DESIGN
FUNCTIONAL SUPERVISOR: JACK WALKER
CALCULATED-DESIGNED BY: JOSE ARGUELLO
CHECKED BY: SUMI HOODE
REVISED BY
DATE REVISED

REMOVE FENCE

SHEET No.	LOCATION FROM	LOCATION TO	LENGTH LF
L-3,L-4	Rte 46 ℄ STA 412+69.8 Rt	Rte 46 ℄ STA 433+16.8 Rt	2,059
L-4	Rte 46 ℄ STA 425+85.2 Lt	Rte 46 ℄ STA 427+96.6 Lt	212
L-5	Rte 46 ℄ STA 440+95.9 Lt	Rte 46 ℄ STA 444+31.6 Lt	336
L-5	Rte 46 ℄ STA 442+91.3 Rt	Rte 46 ℄ STA 444+88.1 Rt	197
L-5,L-6	Rte 46 ℄ STA 445+51.3 Lt	Rte 46 ℄ STA 451+60.2 Lt	621
L-5,L-6	Rte 46 ℄ STA 450+56.2 Rt	Rte 46 ℄ STA 457+22.0 Rt	658
L-6,L-7	Rte 46 ℄ STA 458+05.2 Rt	Rte 46 ℄ STA 468+06.8 Lt	1,031
L-6,L-7	Rte 46 ℄ STA 457+39.3 Rt	Rte 46 ℄ STA 479+43.2 Rt	2,194
L-7,L-8,L-9	Rte 46 ℄ STA 471+90.4 Lt	Rte 46 ℄ STA 493+03.3 Lt	2,114
L-8	Rte 46 ℄ STA 480+55.2 Rt	Rte 46 ℄ STA 487+35.6 Rt	684
L-9	Union Rd ℄ STA 181+83.1 Lt	Union Rd ℄ STA 182+51.6 Lt	61
L-9	Union Rd ℄ STA 183+03.1 Lt	Union Rd ℄ STA 183+91.9 Lt	94
L-9	Union Rd ℄ STA 181+10.2 Rt	Union Rd ℄ STA 183+44.5 Rt	244
L-9	Rte 46 ℄ STA 494+34.3 Lt	Rte 46 ℄ STA 507+51.9 Lt	1,336
L-9	Rte 46 ℄ STA 500+85.2 Rt	Rte 46 ℄ STA 501+93.6 Rt	115
L-10,L-11	Rte 46 ℄ STA 507+87.8 Lt	Rte 46 ℄ STA 517+77.0 Lt	989
L-11,L-12	Rte 46 ℄ STA 518+08.7 Lt	Rte 46 ℄ STA 533+50.3 Lt	1,543
L-11,L-12	Rte 46 ℄ STA 520+46.3 Rt	Rte 46 ℄ STA 529+99.2 Rt	956
L-12	Rte 46 ℄ STA 533+50.3 Rt	Rte 46 ℄ STA 541+67.6 Rt	887
L-12,L-13	Rte 46 ℄ STA 535+50.0 Rt	Rte 46 ℄ STA 542+02.6 Rt	714
L-13	Rte 46 ℄ STA 541+56.1 Rt	Rte 46 ℄ STA 548+03.5 Rt	709
L-13	Rte 46 ℄ STA 541+67.6 Lt	Rte 46 ℄ STA 547+43.3 Lt	630
L-13	Rte 46 ℄ STA 547+39.4 Lt	Rte 46 ℄ STA 551+20.8 Lt	488
L-13	Rte 46 ℄ STA 548+31.5 Rt	Rte 46 ℄ STA 550+91.0 Rt	331
L-13	Rte 46 ℄ STA 550+95.6 Lt	Rte 46 ℄ STA 558+22.8 Lt	848
L-13,L-14	Rte 46 ℄ STA 549+80.2 Lt	Rte 46 ℄ STA 559+26.2 Lt	1,055
L-14	Estrella Rd ℄ STA 6+92.2 Rt	Estrella Rd ℄ STA 8+16.1 Rt	143
L-14	Estrella Rd ℄ STA 15+04.6 Lt	Estrella Rd ℄ STA 15+80.0 Lt	76
L-14	Rte 46 ℄ STA 560+67.4 Lt	Rte 46 ℄ STA 561+43.6 Lt	333
L-14	Rte 46 ℄ STA 560+98.5 Rt	Rte 46 ℄ STA 563+60.4 Lt	323
L-14	Rte 46 ℄ STA 561+48.1 Rt	Rte 46 ℄ STA 561+69.6 Rt	126
L-14	Rte 46 ℄ STA 562+18.3 Rt	Rte 46 ℄ STA 562+44.3 Rt	139
L-14	Rte 46 ℄ STA 563+31.5 Rt	Rte 46 ℄ STA 564+11.1 Lt	79
L-14	FR-2 ℄ STA 22+28.7 Lt	FR-2 ℄ STA 25+73.7 Lt	369
L-14	FR-2 ℄ STA 25+73.1 Lt	FR-2 ℄ STA 25+74.9 Lt	35
L-15	FR-2 ℄ STA 29+51.4 Lt	FR-2 ℄ STA 36+91.9 Rt	718
L-15	FR-2 ℄ STA 36+47.8 Lt	FR-2 ℄ STA 36+91.9 Lt	148
L-15,L16	Rte 46 ℄ STA 566+95.9 Lt	Rte 46 ℄ STA 574+27.8 Lt	738
L-15,L16	Rte 46 ℄ STA 568+25.0 Lt	Rte 46 ℄ STA 569+79.1 Rt	363
L-15,L16	Rte 46 ℄ STA 572+61.9 Lt	Rte 46 ℄ STA 573+58.0 Rt	333
L-15	N Whitley Gardens Dr ℄ STA 12+45.6 Lt	N Whitley Gardens Dr ℄ STA 17+06.2 Lt	498
L-15	N Whitley Gardens Dr ℄ STA 17+06.6 Rt	N Whitley Gardens Dr ℄ STA 17+21.1 Lt	107
L-15,L16	S Whitley Gardens Dr ℄ STA 194+23.3 Rt	S Whitley Gardens Dr ℄ STA 196+25.6 Lt	213
L-15,L16	S Whitley Gardens Dr ℄ STA 194+13.4 Rt	S Whitley Gardens Dr ℄ STA 194+30.9 Rt	71
L-15,L16	S Whitley Gardens Dr ℄ STA 195+14.1 Rt	S Whitley Gardens Dr ℄ STA 196+71.1 Rt	168
L-15,L16	Rte 46 ℄ STA 577+16.7 Lt	Rte 46 ℄ STA 577+71.5 Rt	168
L-15,L-16,L-17	Rte 46 ℄ STA 575+51.6 Rt	Rte 46 ℄ STA 584+81.7 Rt	956
L-17,L-18	Rte 46 ℄ STA 585+12.8 Rt	Rte 46 ℄ STA 596+49.7 Rt	1,228
L18	Almond Dr ℄ STA 3+35.4 Lt	Almond Dr ℄ STA 4+82.2 Lt	244
L18	Almond Dr ℄ STA 2+81.5 Rt	Almond Dr ℄ STA 4+78.6 Rt	198
L-18,L-19	Almond Dr ℄ STA 2+18.4 Rt	Almond Dr ℄ STA 2+50.4 Rt	17
L-17	Rte 46 ℄ STA 583+43.1 Rt	Rte 46 ℄ STA 583+44.3 Rt	121
L18	Rte 46 ℄ STA 592+28.0 Lt	Rte 46 ℄ STA 594+17.3 Lt	252
L18	Rte 46 ℄ STA 594+32.2 Lt	Rte 46 ℄ STA 595+11.5 Lt	111
L18	Rte 46 ℄ STA 595+38.5 Rt	Rte 46 ℄ STA 596+43.6 Rt	283
L18	Rte 46 ℄ STA 599+53.9 Lt	Rte 46 ℄ STA 612+02.5 Lt	1,261
L18,L19,L20	Rte 46 ℄ STA 595+33.4 Lt	Rte 46 ℄ STA 596+86.5 Lt	212
L-19	Rte 46 ℄ STA 599+14.7 Rt	Rte 46 ℄ STA 621+26.2 Rt	2,260
L-19	Rte 46 ℄ STA 612+65.8 Lt	Rte 46 ℄ STA 612+92.9 Lt	34
L-20	Rte 46 ℄ STA 613+21.7 Lt	Rte 46 ℄ STA 621+74.0 Lt	856
L-20	Rte 46 ℄ STA 621+54.9 Rt	Rte 46 ℄ STA 623+12.8 Rt	158
L-20	Rte 46 ℄ STA 622+02.4 Lt	Rte 46 ℄ STA 630+00 Lt	797
L-20	Rte 46 ℄ STA 623+41.6 Rt	Rte 46 ℄ STA 630+00 Rt	659
		TOTAL	35,901

Dist	COUNTY	ROUTE	POST MILES TOTAL PROJECT	SHEET No.	TOTAL SHEETS
05	SLO	46	36.6/41.2	438	595

8-24-09
REGISTERED CIVIL ENGINEER DATE

12-7-09
PLANS APPROVAL DATE

REGISTERED PROFESSIONAL ENGINEER
JOSE M. ARGUELLO
No. 51321
Exp 06-30-10
CIVIL
STATE OF CALIFORNIA

THE STATE OF CALIFORNIA OR ITS OFFICERS OR AGENTS SHALL NOT BE RESPONSIBLE FOR THE ACCURACY OR COMPLETENESS OF ELECTRONIC COPIES OF THIS PLAN SHEET.

CALCULATED-DESIGNED BY: JOSE ARGUELLO
CHECKED BY: SUMI HOODE
REVISED BY / DATE REVISED:
FUNCTIONAL SUPERVISOR: JACK WALKER
STATE OF CALIFORNIA - DEPARTMENT OF TRANSPORTATION
Caltrans 06-DESIGN

SUMMARY OF QUANTITIES
Q-3

LAST REVISION DATE PLOTTED => 08-DEC-2009
TIME PLOTTED => 10:12
07-13-09

BORDER LAST REVISED 3/1/2007
RELATIVE BORDER SCALE IS IN INCHES 0 1 2 3
USERNAME => trmartin
DGN FILE => 533072pa003.dgn
CU 06220
EA 330721

Dist	COUNTY	ROUTE	POST MILES TOTAL PROJECT	SHEET No.	TOTAL SHEETS
05	SLO	46	36.6/41.2	439	595

8-24-09
REGISTERED CIVIL ENGINEER DATE

JOSE M. ARGUELLO
No. 51321
Exp 06-30-10
CIVIL
REGISTERED PROFESSIONAL ENGINEER
STATE OF CALIFORNIA

12-7-09
PLANS APPROVAL DATE

THE STATE OF CALIFORNIA OR ITS OFFICERS OR AGENTS SHALL NOT BE RESPONSIBLE FOR THE ACCURACY OR COMPLETENESS OF ELECTRONIC COPIES OF THIS PLAN SHEET.

HMA OVERSIDE DRAINS

LENGTH L' (N)	PLACE HMA *		ROCK SLOPE PROTECTION**		DESCRIPTION		STAGE - PHASE	STATION	DRAINAGE PLAN Sht No.
	Misc AREA	HMA	BACKING No. 2, METHOD B	FABRIC					
LF	SQYD	TON	CY	SQYD					
28.0	12	1.9			OSD HMA Lt	N WHITLEY GARDENS Dr	S1-P1	15+78	D-15
12.9	6	0.9	1	3	OSD HMA Rt	ALMOND Dr	S2-P1	32+75	D-18
24.0	9	1.5			OSD HMA Lt	FR-2	S2-P1	34+50	D-15
31.2	13	2.1	1	3	OSD HMA Lt	UNION Rd	S2-P1	182+75	D-9
18.5	7	1.1	1	3	OSD HMA Rt	UNION Rd	S2-P1	182+99	D-9
19.1	9	1.4	1	3	OSD HMA Lt	Rte 46	S2-P1	398+45	D-2
18.1	8	1.3	1	3	OSD HMA Rt	Rte 46	S1-P1	399+15	D-2
32.8	12	2.0			OSD HMA Rt	Rte 46	S1-P1	411+73	D-3
17.5	8	1.3	1	3	OSD HMA Lt	Rte 46	S2-P1	413+42	D-3
18.3	8	1.2	1	3	OSD HMA Rt	Rte 46	S1-P1	421+88	D-3
19.0	8	1.3			OSD HMA Lt	Rte 46	S2-P1	424+59	D-4
18.3	8	1.3	1	3	OSD HMA Lt	Rte 46	S2-P1	435+33	D-4
18.1	8	1.2	1	3	OSD HMA Rt	Rte 46	S1-P1	442+50	D-5
18.0	7	1.2	1	3	OSD HMA Rt	Rte 46	S1-P1	453+53	D-6
15.6	6	1.0			OSD HMA Lt	Rte 46	S2-P1	461+75	D-6
18.3	8	1.3	1	3	OSD HMA Rt	Rte 46	S1-P1	468+74	D-7
18.0	7	1.2	1	3	OSD HMA Lt	Rte 46	S2-P1	482+53	D-8
18.9	8	1.4	1	3	OSD HMA Lt	Rte 46	S2-P1	485+25	D-8
18.3	8	1.4	1	3	OSD HMA Rt	Rte 46	S3	488+03	D-8
42.7	17	2.8	1	3	OSD HMA Lt	Rte 46	S2-P1	492+34	D-9
77.7	29	4.6			OSD HMA Rt	Rte 46	S3	551+99	D-13
17.7	8	1.3	1		OSD HMA Lt, Temporary	DETOUR 1	S1-P1	553+17	DE-27
18.7	9	1.4	1		OSD HMA Rt, Temporary	DETOUR 1	S1-P1	553+22	DE-27
6.1	4	0.6	1	3	OSD HMA Lt	Rte 46	S1-P1	578+50	D-15
-	227	36.7	18	48	TOTAL				

* QUANTITY INCLUDED IN PLACE HMA (Misc AREA) TABLE (Sht Q-8)

** QUANTITY INCLUDED IN ROCK SLOPE PROTECTION TABLE (Sht Q-18)

CALCULATED-DESIGNED BY: JOSE ARGUELLO
CHECKED BY: SUMI HOODE
REVISED BY
DATE REVISED
FUNCTIONAL SUPERVISOR: JACK WALKER
STATE OF CALIFORNIA - DEPARTMENT OF TRANSPORTATION
Caltrans
06-DESIGN

SUMMARY OF QUANTITIES
Q-4

LAST REVISION 07-31-09
DATE PLOTTED => 08-DEC-2009
TIME PLOTTED => 10:12

Dist	COUNTY	ROUTE	POST MILES TOTAL PROJECT	SHEET No.	TOTAL SHEETS
05	SLO	46	36.6/41.2	440	595

8-24-09
REGISTERED CIVIL ENGINEER DATE

12-7-09
PLANS APPROVAL DATE

REGISTERED PROFESSIONAL ENGINEER
JOSE M. ARGUELLO
No. 51321
Exp 06-30-10
CIVIL
STATE OF CALIFORNIA

THE STATE OF CALIFORNIA OR ITS OFFICERS OR AGENTS SHALL NOT BE RESPONSIBLE FOR THE ACCURACY OR COMPLETENESS OF ELECTRONIC COPIES OF THIS PLAN SHEET.

METAL BEAM GUARD RAILING

STAGE	LOCATION		LAYOUT TYPE (N)	RECONSTRUCT OR NEW MBGR (STEEL POST)	EXISTING MBGR		ALTERNATE FLARED TERMINAL SYSTEM	END ANCHOR ASSEMBLY (TYPE SFT)	TRANSITION RAILING (TYPE WB)	END CAP (A) (N)	END CAP (TC) (N)	BURIED ANCHOR POST (N)	RAIL TENSION ASSEMBLY (N)	ALTERNATIVE CRASH CUSHION SYSTEM	PLAN SHEET No.
					TO BE REMOVED AND RECONSTRUCTED	TO BE REMOVED									
	FROM	TO		LF	LF	LF	EA	EA	EA	EA	EA	EA	EA	EA	
S1P1	Rte 46 ℄ STA 422+82.5 Rt	Rte 46 ℄ STA 429+47.5 Rt	11E	590			2								L-3, L-4
S1P1	Rte 46 ℄ STA 440+02.5 Rt	Rte 46 ℄ STA 443+50.0 Rt	11G	310			1					1			L-5
S1P1	Rte 46 ℄ STA 444+00.0 Rt	Rte 46 ℄ STA 445+88.7 Rt	12C	164					1		1	1			L-5
S1P1	Rte 46 ℄ STA 449+18.1 Rt	Rte 46 ℄ STA 449+81.5 Rt	12BB	0			1		1		1				L-5
S1P1	Rte 46 ℄ STA 470+02.5 Rt	Rte 46 ℄ STA 479+18.9 Rt	12B	855			1		1		1				L-7, L-8
S1P1	Rte 46 ℄ STA 480+88.3 Rt	Rte 46 ℄ STA 481+75.4 Rt	12BB	25			1		1		1				L-8
S1P1	NWG Dr ℄ STA 13+50.0 Rt	NWG Dr ℄ STA 17+37.4 Rt	11E	326			2								L-15
S1P1	Rte 46 ℄ STA 555+00.0 Rt	Rte 46 ℄ STA 558+61.6 Rt	12B	292			1		1		1				L-14
S1P1	Rte 46 ℄ STA 556+78.6 Rt	Rte 46 ℄ STA 558+55.8 Rt	12E	215					1		1		1	1	L-14
S1P1	Rte 46 ℄ STA 568+68.1 Lt	Rte 46 ℄ STA 572+22.1 Lt	12E	562					1		1		1	1	L-15
S1P1	Rte 46 ℄ STA 568+73.8 Lt	Rte 46 ℄ STA 571+37.5 Lt	12B	203			1		1		1				L-15
	S1P1 TOTAL			3542			10		8		8	2	2	2	
S2P1	Rte 46 ℄ STA 425+00.0 Lt	Rte 46 ℄ STA 429+12.5 Lt	11B	375			1	1							L-4
S2P1	Rte 46 ℄ STA 440+30.0 Lt	Rte 46 ℄ STA 444+08.4 Lt	12DD	379				1		1					L-5
S2P1	Rte 46 ℄ STA 445+46.1 Lt	Rte 46 ℄ STA 450+12.5 Lt	12B	408			1		1		1				L-5
S2P1	Rte 46 ℄ STA 551+68.9 Lt	Estrella Rd ℄ STA 13+92.3 Lt			851										L-14
S2P1	Estrella Rd ℄ STA 13+58.6 Rt	FR-2 ℄ STA 25+20.2 Lt			426										L-14
S2P1	FR-2 ℄ STA 24+43.5 Rt	FR-2 ℄ STA 25+46.2 Rt				103									L-14
S2P1	FR-2 ℄ STA 28+71.6 Lt	FR-2 ℄ STA 29+58.3 Lt				87									L-15
S2P1	FR-2 ℄ STA 28+84.2 Rt	FR-2 ℄ STA 29+38.9 Rt			55										L-15
S2P1	FR-2 ℄ STA 23+92.2 Lt	FR-2 ℄ STA 25+29.6 Lt	12B	77			1		1		1				L-14
S2P1	FR-2 ℄ STA 24+82.2 Rt	FR-2 ℄ STA 25+44.0 Rt	12B	0			1		1		1				L-14
S2P1	FR-2 ℄ STA 28+71.6 Lt	FR-2 ℄ STA 30+33.7 Lt	12B	102			1		1		1				L-15
S2P1	FR-2 ℄ STA 28+84.2 Rt	FR-2 ℄ STA 29+45.9 Rt	12B	0			1		1		1				L-15
S2P1	Rte 46 ℄ STA 596+11.5 Lt	Almond Dr ℄ STA 31+01.4 Lt				228									L-18
	S2P1 SUB-TOTAL			1341	1333	418	6	2	5	1	5				
	S2P1 AVAILABLE MATERIAL FROM RECONSTRUCTION MBGR			1333											
	S2P1 TOTAL			9	1333	418	6	2	5	1	5				
	S1P1 TOTAL			3542			10		8		8	2	2	2	
	TOTAL			3551	1333	418	16	2	13	1	13	2	2	2	
	TOTAL NEW MBGR			3551											

(N) NOT A SEPARATE PAY ITEM, FOR INFORMATION ONLY.

SUMMARY OF QUANTITIES
Q-5

REVISED BY | DATE REVISED
CALCULATED-DESIGNED BY: JOSE ARGUELLO | CHECKED BY: SUMI HOODE
FUNCTIONAL SUPERVISOR: JACK WALKER
STATE OF CALIFORNIA - DEPARTMENT OF TRANSPORTATION
06-DESIGN
Caltrans

LAST REVISION 07-28-09 | DATE PLOTTED => 08-DEC-2009 | TIME PLOTTED => 10:12

BORDER LAST REVISED 3/1/2007 | RELATIVE BORDER SCALE IS IN INCHES 0 1 2 3 | USERNAME => trmartin | DGN FILE => 533072pa005.dgn | CU 06220 | EA 330721

Dist	COUNTY	ROUTE	POST MILES TOTAL PROJECT	SHEET No.	TOTAL SHEETS
05	SLO	46	36.6/41.2	441	595

8-24-09
REGISTERED CIVIL ENGINEER DATE

12-7-09
PLANS APPROVAL DATE

REGISTERED PROFESSIONAL ENGINEER
JOSE M. ARGUELLO
No. 51321
Exp 06-30-10
CIVIL
STATE OF CALIFORNIA

THE STATE OF CALIFORNIA OR ITS OFFICERS OR AGENTS SHALL NOT BE RESPONSIBLE FOR THE ACCURACY OR COMPLETENESS OF ELECTRONIC COPIES OF THIS PLAN SHEET.

ABANDON AND REMOVE DRAINAGE FACILITY

Max COVER (N)	REMOVE FES	REMOVE HW	REMOVE INLET	REMOVE Culv	REMOVE SCSP	LENGTH (N)	Abn Culv	SAND Bkf	DESCRIPTION	STAGE - PHASE	STATION	DRAINAGE PLAN Sht No.	(#) DRAINAGE SYSTEM No.	(×) DRAINAGE UNIT No.
	EA	EA	EA	LF	LF	LF	EA	CY						
		1							Remove HEADWALL Rte 46	S2-P1	411+19	D-3	1X	a
1.7′						39.2	1	2.6	Abn CMP 18"	S2-P1		D-3	1X	b
		1							Remove HEADWALL	S2-P1		D-3	1X	c
		1							Remove HEADWALL Rte 46	S2-P1	413+41	D-3	2X	a
2.9′						70.4	1	8.2	Abn RCP 24"	S2-P1		D-3	2X	b
			1						Remove INLET	S2-P1		D-3	2X	c
0.3′				24.0					Remove PCP DD 10" Rte 46	S2-P1	425+61	D-4	3X	a
					20.0				Remove SCSP	S2-P1		D-4	3X	b
0.9′						48.4	1	3.2	Abn CMP 18" Rte 46	S1-P1	438+88	D-5	4X	a
1.3′				21.7					Remove CMP DD 10" Rte 46	S2-P1	439+91	D-5	5X	a
					20.0				Remove SCSP	S2-P1		D-5	5X	b
0.8′				19.5					Remove CMP DD 10" Rte 46	S2-P1	439+93	D-5	6X	a
					20.0				Remove SCSP	S2-P1		D-5	6X	b
1.1′				19.7					Remove CMP DD 10" Rte 46	S2-P1	443+15	D-5	7X	a
					20.0				Remove SCSP	S2-P1		D-5	7X	b
1.5′				34.2					Remove CMP DD 10" Rte 46	S2-P1	445+92	D-5	8X	a
					20.0				Remove SCSP	S2-P1		D-5	8X	b
1.0′				23.6					Remove CMP DD 10" Rte 46	S1-P1	447+41	D-5	9X	a
					20.0				Remove SCSP & DIKE	S1-P1		D-5	9X	b
0.6′				13.1					Remove CMP DD 10" Rte 46	S1-P1	449+87	D-5	10X	a
					20.0				Remove SCSP & DIKE	S1-P1		D-5	10X	b
	1								Remove FES Rte 46	S1-P1	456+95	D-6	11X	a
2.0′				140.0					Remove CMP 24"	S1-P1		D-6	11X	b
	1								Remove FES	S1-P1		D-6	11X	c
		1							Remove HEADWALL Rte 46	S2-P1	457+32	D-6	12X	a
1.7′						40.1	1	2.6	Abn CMP 18"	S2-P1		D-6	12X	b
		1							Remove HEADWALL	S2-P1		D-6	12X	c
		1							Remove HEADWALL Rte 46	S1-P1	471+57	D-7	13X	a
3.1′						54.9	1	6.4	Abn RCP 24"	S1-P1		D-7	13X	b
0.5′				16.9					Remove CMP DD 10" Rte 46	S1-P1	474+73	D-7	14X	a
					20.0				Remove SCSP & DIKE	S1-P1		D-7	14X	b
0.5′				13.1					Remove CMP DD 10" Rte 46	S1-P1	477+74	D-8	15X	a
					20.0				Remove SCSP & DIKE	S1-P1		D-8	15X	b
1.2′				21.6					Remove CMP DD 10" Rte 46	S2-P1	490+97	D-9	16X	a
					20.0				Remove SCSP	S2-P1		D-9	16X	b
		1							Remove HEADWALL Rte 46	S2-P1	493+64	D-9	17X	a
3.1′						86.8	1	5.7	Abn CMP 18"	S2-P1		D-9	17X	b
			1						Remove INLET	S2-P1		D-9	17X	c
9.2′						107.3	1	12.5	Abn RCP 24" Rte 46	S3	502+22	D-9	18X	a
			1						Remove INLET	S3		D-9	18X	b
1.6′				30.0					Remove CMP DD 10" Rte 46	S3	509+96	D-10	19X	a
					20.0				Remove SCSP	S3		D-10	19X	b
1.0′				30.2					Remove CMP DD 8" Rte 46	S3	513+29	D-10	20X	a
					20.0				Remove SCSP	S3		D-10	20X	b

CONTINUED

ABANDON AND REMOVE DRAINAGE FACILITY (CONTINUED)

Max COVER (N)	REMOVE FES	REMOVE HW	REMOVE INLET	REMOVE Culv	REMOVE SCSP	LENGTH (N)	Abn Culv	SAND Bkf	DESCRIPTION	STAGE - PHASE	STATION	DRAINAGE PLAN Sht No.	(#) DRAINAGE SYSTEM No.	(×) DRAINAGE UNIT No.
	EA	EA	EA	LF	LF	LF	EA	CY						
7.1′				84.1					Remove RCP 24" Rte 46	S3	514+42	D-10	21X	a
		1							Remove HEADWALL	S3		D-10	21X	b
5.9′						98.3	1	11.4	Abn RCP 24" Rte 46	S1-P1	404+90	D-2	22X	a
			1						Remove INLET	S1-P1		D-2	22X	b
			1						Remove INLET FR-2	S2-P1	28+87	D-15	23X	a
0.5′				42.5					Remove CMP 8"	S2-P1		D-15	23X	b
2.7′				36.9					Remove CMP 18" Rte 46	S2-P1	544+26	D-13	24X	a
		1							Remove HEADWALL	S2-P1		D-13	24X	b
0.7′						17.4	1	3.2	Abn CMP 30" Rte 46	S2-P1	546+60	D-13	25X	a
		1							Remove HEADWALL	S2-P1		D-13	25X	b
1.0′						18.3	1	0.5	Abn CMP 12" Rte 46	S2-P1	548+52	D-13	26X	a
17.1′						134.5	1	15.6	Abn RCP 24" Rte 46	S2-P1	552+13	D-13	27X	a
		1							Remove HEADWALL	S2-P1		D-13	27X	b
0.5′				20.3					Remove CMP 18" Rte 46	S2-P1	559+35	D-14	28X	a
0.5′				20.2					Remove CMP 18" Rte 46	S2-P1	559+41	D-14	29X	a
1.0′				40.0					Remove CMP 18" S WHITLEY GARDENS Dr	S1-P2	191+17	D-16	30X	a
0.1′				17.9					Remove CMP DD 8" Rte 46	S2-P1	587+64	D-17	31X	a
					20.0				Remove SCSP	S2-P1		D-17	31X	b
0.4′				19.6					Remove CMP DD 8" Rte 46	S2-P1	588+39	D-17	32X	a
					20.0				Remove SCSP	S2-P1		D-17	32X	b
2.5′				30.4					Remove CMP DD 8" Rte 46	S2-P1	591+14	D-17	33X	a
					20.0				Remove SCSP	S2-P1		D-17	33X	b
2.3′				36.3					Remove CMP DD 8" Rte 46	S1-P1	591+31	D-17	34X	a
2.2′				74.8					Remove CMP DD 8" Rte 46	S2-P1	594+17	D-18	35X	a
					20.0				Remove SCSP	S2-P1		D-18	35X	b
1.1′				41.2					Remove CIP DD 12" Rte 46	S1-P1	594+29	D-18	36X	a
10.4′						75.8	1	8.8	Abn RCP 24" Rte 46	S1-P1	597+35	D-18	37X	a
		1							Remove HEADWALL	S1-P1		D-18	37X	b
		1							Remove HEADWALL Rte 46	S2-P1	598+31	D-18	38X	a
8.3′						81.0	1	5.3	Abn RCP 18"	S2-P1		D-18	38X	b
		1							Remove HEADWALL	S2-P1		D-18	38X	c
1.0′				57.9					Remove CMP 8" FR-2	S2-P1	25+60	D-14	39X	a
-	6	19	13	842.0	-	1328.7	17	283.8	DRAINAGE SYSTEMS Sht DQ-16					
	8	33	18	1771.7	320.0	2201.1	30	369.8	TOTAL					

SUMMARY OF QUANTITIES
Q-6

REVISED BY | DATE REVISED

CALCULATED-DESIGNED BY | CHECKED BY

FUNCTIONAL SUPERVISOR

STATE OF CALIFORNIA - DEPARTMENT OF TRANSPORTATION

Caltrans

JOSE ARGUELLO | SUMI HOODE

JACK WALKER

06-DESIGN

LAST REVISION | DATE PLOTTED =>08-DEC-2009
08-12-09 | TIME PLOTTED =>10:02

BORDER LAST REVISED 3/1/2007

RELATIVE BORDER SCALE IS IN INCHES 0 1 2 3

USERNAME => trmariak
DGN FILE => 533072pa006.dgn

CU 06220

EA 330721

Dist	COUNTY	ROUTE	POST MILES TOTAL PROJECT	SHEET No.	TOTAL SHEETS
05	SLO	46	36.6/41.2	442	595

8-24-09
REGISTERED CIVIL ENGINEER DATE

12-7-09
PLANS APPROVAL DATE

REGISTERED PROFESSIONAL ENGINEER
JOSE M. ARGUELLO
No. 51321
Exp 06-30-10
CIVIL
STATE OF CALIFORNIA

THE STATE OF CALIFORNIA OR ITS OFFICERS OR AGENTS SHALL NOT BE RESPONSIBLE FOR THE ACCURACY OR COMPLETENESS OF ELECTRONIC COPIES OF THIS PLAN SHEET.

EARTHWORK

LOCATION	ROADWAY EXCAVATION CY	EMBANKMENT (N) CY
STAGE 1 PHASE 1		
Rte 46 EB Lanes, STA 395+41.11 to STA 413+00.00	16,226	398
Rte 46 EB Lanes, STA 413+00.00 to STA 486+00.00	86,526	99,745
Rte 46 EB & WB Lanes, STA 554+00.00 to STA 558+75.48	31,700	223,943
Rte 46 EB & WB Lanes, STA 568+57.93 to STA 580+00.00	66,476	124,137
Rte 46 EB Lanes, STA 580+00.00 to STA 615+25.00	182,750	106,332
(*) Rte 46 WB Lanes, STA 494+44.79 to STA 519+00.00, Grading Only	145,301	500
Overexcavated area (see layout plan L-14)	107,607	107,607
Geneseo Rd	1,972	2
FR-1	1,293	92,585
N Whitley Garden Dr	1,153	12,355
River Grove Dr	1,202	3,088
Prvt Dwy 3	122	98
Chumeia Dwy	284	7
DETOUR 1, STA 537+00.00 to STA 554+65.52	101,685	5,145
DETOUR 3, STA 398+93.89 to STA 404+29.38	422	97
BASIN AT River Grove Dr STA 26+00 Lt	6	4,345
Swale-R	189	34
DETOUR 2	19,850	66
STAGE 1 PHASE 2		
S Whitley Garden Dr	4,678	637
DETOUR 1, STA 528+98.34 to STA 537+00.00	4,934	607
DETOUR 3, STA 392+22.32 to STA 400+16.03	678	39
DETOUR 4	2,737	1,632
STAGE 1 SUBTOTAL	777,791	783,399
STAGE 2 PHASE 1		
Rte 46 WB Lanes, STA 395+00.00 to STA 413+00.00	6,590	1,629
Rte 46 WB Lanes, STA 413+00.00 to STA 468+00.00	20,617	11,753
Rte 46 WB Lanes, STA 468+00.00 to STA 491+00.00	11,357	4,174
Rte 46 WB Lanes, STA 491+00.00 to STA 494+44.79	4,123	2,759
(*) Rte 46 WB Lanes, STA 519+00.00 to STA 528+98.17	176,775	0
Rte 46 WB Lanes, STA 528+98.171 to STA 554+00.00	474,983	697,983
Rte 46 WB Lanes, STA 580+00.00 to STA 618+00.00	79,621	16,378
Union Rd, North Side	4,452	344
FR-2	9,036	6,356
Estrella Rd	7,650	35,988
Almond Dr	73	4,343
Prvt Dwy 1	230	40
Prvt Dwy 2	68	185
Prvt Dwy 4	160	170
Swale Rte 46, STA 561+60 to STA 562+85 Rt	125	0
BASIN AT Estrella Rd STA 13+00 Lt	500	2,500
STAGE 2 PHASE 2		
Rte 46 WB Trans, STA 618+00.00 to STA 620+50	109	85
DETOUR 5	905	190
STAGE 2 SUBTOTAL	797,374	784,877
SUBTOTAL (1)	1,575,165	1,568,276

EARTHWORK

LOCATION	ROADWAY EXCAVATION CY	EMBANKMENT (N) CY
STAGE 3		
(+) Rte 46 WB Lanes, STA 494+44.79 to STA 528+98.17	104,444	220
Rte 46 EB Lanes, STA 392+22.52 to STA 395+65.37	407	654
Rte 46 EB Lanes, STA 486+00.00 to STA 491+00.00	3,660	3,750
Rte 46 EB Lanes, STA 491+00.00 to STA 528+98.17	122,243	50,381
Rte 46 EB Lanes, STA 528+98.17 to STA 554+00.00	54,580	160,434
Rte 46 WB Trans, STA 620+50 to STA 627+59.45	55	314
Union Rd, South Side	216	944
Prvt Dwy 5	5,766	8
Regrade Rte 46 Median STA 413+00.00 to STA 456+59.54	0	160
Remove DETOUR 4 & Regrade Rte 46 Median STA 474+50 to Sta 486+00	1,961	195
STAGE 3 SUBTOTAL	293,332	217,060
STAGE 4		
Remove Rte 46 Temp Pvmt Widening, Remove D 5 and Regrade Rte 46 Median STA 457+62.11 to STA 474+50	807	22
Regrade Rte 46 Median STA 486+00 to STA 491+00	0	35
STAGE 4 SUBTOTAL	807	57
SUBTOTAL (1)	1,575,165	1,568,276
TOTAL	1,869,304	1,785,393

(*) CONSTRUCT WITHOUT LANDFORM GRADING ON THE NORTH SLOPES.

(+) CONSTRUCT LANDFORM GRADING ON THE NORTH SLOPES.

(N) NOT A SEPARATE PAY ITEM, FOR INFORMATION ONLY.

SUMMARY OF QUANTITIES
Q-7

REVISED BY | DATE REVISED
CALCULATED-DESIGNED BY: JOSE ARGUELLO
CHECKED BY: SUMI HOODE
FUNCTIONAL SUPERVISOR: JACK WALKER
STATE OF CALIFORNIA - DEPARTMENT OF TRANSPORTATION
Caltrans
06-DESIGN

LAST REVISION 08-24-09 | DATE PLOTTED => 08-DEC-2009 | TIME PLOTTED => 10:03

Dist	COUNTY	ROUTE	POST MILES TOTAL PROJECT	SHEET No.	TOTAL SHEETS
05	SLO	46	36.6/41.2	443	595

8-24-09
REGISTERED CIVIL ENGINEER DATE

12-7-09
PLANS APPROVAL DATE

REGISTERED PROFESSIONAL ENGINEER
JOSE M. ARGUELLO
No. 51321
Exp 06-30-10
CIVIL
STATE OF CALIFORNIA

THE STATE OF CALIFORNIA OR ITS OFFICERS OR AGENTS SHALL NOT BE RESPONSIBLE FOR THE ACCURACY OR COMPLETENESS OF ELECTRONIC COPIES OF THIS PLAN SHEET.

IRRIGATION CROSSOVERS

LOCATION		SIDE		CONDUIT TYPE ③	(N) WATER LINE CROSSOVER	(N) SPRINKLER CONTROL CROSSOVER
LINE	STATION	Rt	Lt	SIZE (INCH) 8 / LENGTH (LF)	SIZE (INCH)	SIZE (INCH)
SWGD	193+00	X	X	42	2	2
FR-1	69+90	X	X	42	2	2
FR-2	38+00	X	X	53	2	2
FR-2	29+56	X	X	52	2	2
FR-2	3+36	X	X	47	2	2
SR-46	568+00	X		45	2	2
SR-46	568+00		X	57	2	2
SR-46	559+71	X		45	2	2
SR-46	559+71		X	57	2	2
ER	8+10	X	X	41	2	2
TOTAL				481		

(N) - NOT A SEPARATE PAY ITEM FOR INFORMATION ONLY
X - DENOTES REQUIREMENT

LINE
AD -ALMOND DRIVE
ER -ESTRELLA ROAD
FR -FRONTAGE ROAD
SWGD -SOUTH WHITLEY GARDENS
RGD -RIVER GROVE DRIVE
SR-46 -STATE ROUTE 46

CONDUIT TYPE
(Applicable when circled below and shown under the 'CONDUIT TYPE' column heading)
1 BITUMINOUS COATED CORRUGATED STEEL PIPE (0.064 INCH THICK)
2 CORRUGATED STEEL PIPE (0.064 INCH THICK)
③ CORRUGATED HIGH DENSITY POLYETHYLENE PIPE
4 ALTERNATIVE CONDUIT

TACK COAT

STAGE	DESCRIPTION	LOCATION FROM	LOCATION TO	TON
S1P2	DETOUR 3	396+00.00	401+91.00	0.53
		S1P2 TOTAL		0.53
S2P1	Rte 46 WB	395+00.00	398+42.20	1.33
S2P1	Rte 46 WB	398+42.20	401+50.00	0.99
S2P1	Rte 46 WB	401+50.00	404+50.00	1.23
S2P1	Rte 46 WB T/W	413+00.00	428+00.00	3.79
S2P1	Rte 46 WB T/W	432+50.00	438+88.17	1.66
S2P1	Rte 46 WB T/W	438+88.17	443+00.00	1.09
S2P1	Rte 46 WB	448+00.00	453+50.00	1.52
		S2P1 TOTAL		11.60
S3	Rte 46 EB	395+41.12	411+28.43	9.78
S3	Rte 46 EB	411+28.43	438+88.54	16.30
S3	Rte 46 EB	438+88.54	457+23.51	9.02
S3	Rte 46 EB	457+23.51	485+88.49	12.95
S3	Rte 46 EB	554+00.00	558+52.69	2.03
S3	Rte 46 EB	568+70.64	597+77.75	19.32
S3	Rte 46 EB	597+77.75	615+25.00	11.32
S3	EB Trans	607+04.16	627+58.92	0.96
S3	WB Trans	620+50.00	627+58.92	0.56
S3	MEDIAN (EB SIDE)			2.04
		S3 TOTAL		84.31
S4	Rte 46 WB	468+00.00	493+97.44	17.78
S4	Rte 46 WB	493+97.44	558+43.72	33.34
S4	Rte 46 WB	568+75.64	597+77.75	21.54
S4	Rte 46 WB	597+77.75	620+50.00	12.45
S4	MEDIAN (WB SIDE)			0.72
		S4 TOTAL		85.83
		S3 TOTAL		84.31
		S2P1 TOTAL		11.60
		S1P2 TOTAL		0.53
		TOTAL		182.27

PLACE HMA (Misc AREA)

PLACE HMA Misc AREA (SQYD)	PLACE HMA HMA* (TON)	DESCRIPTION	
506	49.2	DRAINAGE SYSTEMS	Sht DQ-16
227	36.7	HMA OVERSIDE DRAINS	Sht Q-4
23	3.5	PIPE DOWNDRAINS	Sht Q-17
98	16.6	HMA SLOPE PAVING (RW-1, WLX-1, RW-2)	
283	47.7	HMA SLOPE PAVING (RW-3, WLX-1, RW-4)	
38	6.4	HMA SLOPE PAVING (RW-5)	
1175	160.1	TOTAL	

* INCLUDED IN ROADWAY QUANTITIES TABLE (SHEET Q-14)

DITCH EXCAVATION

DITCH EXCAVATION (CY)	DITCH EMBANKMENT (N) (CY)	DESCRIPTION	STATION
189.3	33.8	SWALE-R Rte 46 Rt	480+00
129.1	5.4	SWALE Rte 46 Rt	562+00
318.4	39.2	TOTAL	

HIGH SIDE SUPER DITCH (HSSD)

FROM	TO	LENGTH LF (N)	HMA* (TON)
Rte 46 ℄ Sta 461+72.00 Lt	Rte 46 ℄ Sta 469+60.00 Lt	795	89.45
Union Rd ℄ Sta 183+00.00 Rt	Rte 46 ℄ Sta 494+45.00 Lt	174	11.74
Union ℄ Sta 178+50.00 Rt	Rte 46 ℄ Sta 496+75.00 Rt	290	19.55
Rte 46 ℄ Sta 514+00.00 Rt	Rte 46 ℄ Sta 533+50.00 Rt	1950	65.81
Rte 46 ℄ Sta 529+00.00 Rt	Prvt Dwy 5 ℄ Sta 3+28.57 Lt	551	37.21
Prvt Dwy 5 ℄ Sta 3+25.18 Rt	Rte 46 ℄ Sta 552+00.00 Rt	1934	130.51
N Whitley Gardens Dr ℄ Sta 12+60.00 Lt	N Whitley Gardens Dr ℄ Sta 13+60.00 Lt	101	6.84
FR-2 ℄ Sta 34+50.00 Lt	FR-2 ℄ Sta 38+75.00 Lt	470	31.72
River Grove Drive ℄ Sta 24+40.00 Rt	Rte 46 ℄ Sta 598+18.73 Rt	461	31.14
		TOTAL	423.98

* INCLUDED IN ROADWAY QUANTITIES TABLE (SHEET Q-14)

SUMMARY OF QUANTITIES
Q-8

STATE OF CALIFORNIA - DEPARTMENT OF TRANSPORTATION
Caltrans
06-DESIGN
FUNCTIONAL SUPERVISOR: JACK WALKER
CALCULATED-DESIGNED BY: JOSE ARGUELLO
CHECKED BY: SUMI HOODE
REVISED BY
DATE REVISED

LAST REVISION 07-31-09
DATE PLOTTED => 08-DEC-2009
TIME PLOTTED => 10:05

BORDER LAST REVISED 3/1/2007
RELATIVE BORDER SCALE IS IN INCHES 0 1 2 3
USERNAME => trmariak
DGN FILE => 533072pa008.dgn
CU 06220
EA 330721

Dist	COUNTY	ROUTE	POST MILES TOTAL PROJECT	SHEET No.	TOTAL SHEETS
05	SLO	46	36.6/41.2	444	595

8-24-09
REGISTERED CIVIL ENGINEER DATE

12-7-09
PLANS APPROVAL DATE

REGISTERED PROFESSIONAL ENGINEER
JOSE M. ARGUELLO
No. 51321
Exp 06-30-10
CIVIL
STATE OF CALIFORNIA

THE STATE OF CALIFORNIA OR ITS OFFICERS OR AGENTS SHALL NOT BE RESPONSIBLE FOR THE ACCURACY OR COMPLETENESS OF ELECTRONIC COPIES OF THIS PLAN SHEET.

COLLECT CHIPPED MATERIAL AND TREE TRUNK

LOCATION			SIDE		COLLECT CHIPPED MATERIAL	COLLECT TREE TRUNK	DESCRIPTION (DBH,DDL,SPECIES)
SHEET	LINE	STATION	L†	R†	Approx CY (N)	EA (N)	
L-4	SR-46	431+25	X		1		10",12',OAK
L-4	SR-46	431+75		X	5		30",25',OAK
L-4	SR-46	431+80		X	5		24",20',OAK
L-4	SR-46	432+05		X	1		8",10',OAK
L-4	SR-46	432+10	X		2		8",12',OAK
L-4	SR-46	432+50	X		2		12",12',OAK
L-4	SR-46	432+90	X		0.5		6",6',OAK
L-4	SR-46	433+00		X	0.5		8",6',OAK
L-5	SR-46	441+00	X		0.5		6",6',OAK
L-5	SR-46	443+25	X		0.5		6",6',OAK
L-5	SR-46	443+85		X	3		12",20',OAK
L-5	SR-46	448+50		X	6		24",36',OAK
L-6	SR-46	460+70		X	4		18",20',OAK
L-6	SR-46	462+45		X	5		30",30',OAK
L-7	SR-46	471+30		X	5		30",30',OAK
L-7	SR-46	473+50		X	5		24",30',OAK
L-11	SR-46	525+90		X	0.5		6",12',OAK
L-12	SR-46	535+15		X		1	41",35',OAK
L-12	SR-46	535+50		X	2		14",20',OAK
L-12	SR-46	536+10		X	2		8",12',OAK
L-12	SR-46	536+30		X	1		8",7',OAK
L-12	SR-46	539+50	X		3		12",20',OAK
L-12	SR-46	539+75	X		4		12",20',OAK
L-12	SR-46	539+95	X		5		12",20',OAK
L-12	SR-46	540+80		X	6		17",22',OAK
L-12	SR-46	540+90		X	6		13",18',OAK
L-13	SR-46	541+65		X	4		12",17',OAK
L-13	SR-46	541+90		X	6		17",30',OAK
L-13	SR-46	542+10		X	5		14",20',OAK
L-13	SR-46	542+45		X	1		6",6',OAK
L-13	SR-46	542+45		X	6		14",24',OAK
L-13	SR-46	542+55		X	5		12",24',OAK
L-13	SR-46	544+25		X	4		7",15',OAK
L-13	SR-46	544+75		X	6		18",15',OAK
L-13	SR-46	545+50		X	5		12",15',OAK
L-13	SR-46	545+50	X		5		30",30',OAK
L-13	SR-46	545+75	X			1	30",30',OAK
L-13	SR-46	546+15		X	4		18",20',OAK
L-13	SR-46	546+75	X		4		18",20',OAK
L-13	SR-46	548+45	X		4		18",20',OAK
L-13	SR-46	550+60	X		5		24",20',OAK
L-13	SR-46	551+15	X		4		18",20',OAK
L-14	SR-46	553+50		X		1	36",30',OAK
L-14	SR-46	557+20		X	5		30",20',OAK
L-14	ER	11+60	X		6		24",30',OAK
L-15	FR-2	29+50	X		5		12",25',OAK
L-15	FR-2	30+50	X		5		18",25',OAK
L-15	FR-2	31+50	X		4		24",20',OAK
		SUBTOTAL 1			168.5	3	

(N) NOT A SEPARATE PAY ITEM. FOR INFORMATION ONLY.

LINE		DESCRIPTION
AD	-ALMOND DRIVE	DBH - DIAMETER BREAST HEIGHT
ER	-ESTRELLA ROAD	DDL - DIAMETER DRIP LINE
FR	-FRONTAGE ROAD	
NWGD	-NORTH WHITLEY GARDENS	
RGD	-RIVER GROVE DRIVE	
SR-46	-STATE ROUTE 46	

COLLECT CHIPPED MATERIAL AND TREE TRUNK

LOCATION			SIDE		COLLECT CHIPPED MATERIAL	COLLECT TREE TRUNK	DESCRIPTION (DBH,DDL,SPECIES)
SHEET	LINE	STATION	L†	R†	Approx CY (N)	EA (N)	
L-15	FR-2	31+75	X		4		18",20',OAK
L-15	NWGD	14+30	X			1	48",50',OAK
L-15	SR-46	570+00		X	6		30",30',OAK
L-15	SR-46	570+45	X		3		12",12',OAK
L-15	SR-46	570+65	X		3		12",12',OAK
L-15	SR-46	570+75	X		5		24",20',OAK
L-15	SR-46	571+00	X		4		18",20',OAK
L-16	SR-46	571+90		X		1	36",40',OAK
L-16	SR-46	576+90		X		1	36",40',OAK
L-17	SR-46	588+40	X		6		24",30',OAK
L-18	RGD	27+50	X		6		18",30',OAK
L-18	RGD	28+50	X			1	30",50',OAK
L-18	AD	31+00		X		1	48",35',OAK
L-18	AD	31+45	X		7		18",45',OAK
		SUBTOTAL 2			44	5	
		SUBTOTAL 1			168.5	3	
		TOTAL			212.5	8	

(N) NOT A SEPARATE PAY ITEM. FOR INFORMATION ONLY.

LINE		DESCRIPTION
AD	-ALMOND DRIVE	DBH - DIAMETER BREAST HEIGHT
ER	-ESTRELLA ROAD	DDL - DIAMETER DRIP LINE
FR	-FRONTAGE ROAD	
NWGD	-NORTH WHITLEY GARDENS	
RGD	-RIVER GROVE DRIVE	
SR-46	-STATE ROUTE 46	

SUMMARY OF QUANTITIES
Q-9

STATE OF CALIFORNIA - DEPARTMENT OF TRANSPORTATION
Caltrans
06-DESIGN
FUNCTIONAL SUPERVISOR: JACK WALKER
CALCULATED-DESIGNED BY: JOSE ARGUELLO
CHECKED BY: SUMI HOODE
REVISED BY
DATE REVISED

LAST REVISION 07-23-09
DATE PLOTTED => 10-DEC-2009
TIME PLOTTED => 07:06

Dist	COUNTY	ROUTE	POST MILES TOTAL PROJECT	SHEET No.	TOTAL SHEETS
05	SLO	46	36.6/41.2	445	595

8-24-09
REGISTERED CIVIL ENGINEER DATE

12-7-09
PLANS APPROVAL DATE

REGISTERED PROFESSIONAL ENGINEER
JOSE M. ARGUELLO
No. 51321
Exp 06-30-10
CIVIL
STATE OF CALIFORNIA

THE STATE OF CALIFORNIA OR ITS OFFICERS OR AGENTS SHALL NOT BE RESPONSIBLE FOR THE ACCURACY OR COMPLETENESS OF ELECTRONIC COPIES OF THIS PLAN SHEET.

ROADWAY QUANTITIES

LOCATION	HMA (TYPE A)	LEAN CONCRETE BASE (LCB)	CLASS 1 AGGREGATE SUBBASE	STAGE-PHASE
	TON	CY	CY	
WB Rte 46 ℄ STA 554+00.00 TO STA 558+43.72 Inside Shld	101	46	170	S1P1
WB Rte 46 ℄ STA 554+00.00 TO STA 558+43.72 Outside Shld	201	91	174	S1P1
WB Rte 46 ℄ STA 554+00.00 TO STA 558+43.72 Outside Aux Lane	242	109	209	S1P1
WB Rte 46 ℄ STA 554+00.00 TO STA 558+43.72 Traveled Way	483	219	815	S1P1
WB Rte 46 ℄ STA 568+75.64 TO STA 573+27.75 Inside Shld	103	47	174	S1P1
WB Rte 46 ℄ STA 568+75.64 TO STA 573+84.34 Outside Shld	231	104	199	S1P1
WB Rte 46 ℄ STA 568+75.64 TO STA 585+00.00 Outside Aux Lane	1,446	654	1,249	S1P1
WB Rte 46 ℄ STA 568+75.64 TO STA 585+00.00 Traveled Way	1,761	797	2,969	S1P1
WB Rte 46 ℄ STA 573+27.75 TO STA 585+00.00 Inside Shld	264	119	228	S1P1
WB Rte 46 ℄ STA 573+27.75 TO STA 585+00.00 Inside Aux Lane	471	213	407	S1P1
WB Rte 46 ℄ STA 575+26.12 TO STA 585+00.00 Outside Shld	437	198	377	S1P1
WB S1P1 SUBTOTAL	5,740	2,597	6,971	
EB Rte 46 ℄ STA 395+41.12 TO STA 401+20.00 Inside Shld	130	59	113	S1P1
EB Rte 46 ℄ STA 401+20.00 TO STA 403+08.42 Inside Shld	42	19	72	S1P1
EB Rte 46 ℄ STA 403+08.42 TO STA 410+10.40 Inside Shld	169	77	146	S1P1
EB Rte 46 ℄ STA 412+92.15 TO STA 430+83.17 Inside Shld	403	182	680	S1P1
EB Rte 46 ℄ STA 430+83.17 TO STA 438+24.11 Inside Shld	167	75	144	S1P1
EB Rte 46 ℄ STA 440+46.90 TO STA 449+18.77 Inside Shld	196	89	331	S1P1
EB Rte 46 ℄ STA 449+18.77 TO STA 456+59.54 Inside Shld	166	75	144	S1P1
EB Rte 46 ℄ STA 458+82.66 TO STA 485+88.49 Inside Shld	650	294	1,096	S1P1
EB Rte 46 ℄ STA 554+00.00 TO STA 558+52.69 Inside Shld	101	46	171	S1P1
EB Rte 46 ℄ STA 568+70.64 TO STA 585+00.00 Inside Shld	367	166	619	S1P1
EB Rte 46 ℄ STA 585+00.00 TO STA 589+52.75 Inside Shld	102	46	172	S1P1
EB Rte 46 ℄ STA 589+52.75 TO STA 597+04.73 Inside Shld	169	77	146	S1P1
EB Rte 46 ℄ STA 598+94.66 TO STA 607+03.76 Inside Shld	182	82	157	S1P1
EB Rte 46 ℄ STA 395+41.12 TO STA 402+08.42 Outside Shld	300	136	506	S1P1
EB Rte 46 ℄ STA 402+08.42 TO STA 410+52.55 Outside Shld	380	172	329	S1P1
EB Rte 46 ℄ STA 411+95.77 TO STA 435+63.42 Outside Shld	1,066	482	921	S1P1
EB Rte 46 ℄ STA 435+63.42 TO STA 438+48.54 Outside Shld	128	58	216	S1P1
EB Rte 46 ℄ STA 439+28.54 TO STA 456+69.30 Outside Shld	778	352	1,312	S1P1
EB Rte 46 ℄ STA 457+51.63 TO STA 485+88.49 Outside Shld	1,273	576	2,148	S1P1
EB Rte 46 ℄ STA 554+00.00 TO STA 558+52.69 Outside Shld	203	92	342	S1P1
EB Rte 46 ℄ STA 568+70.64 TO STA 575+25.75 Outside Shld	297	134	257	S1P1
EB Rte 46 ℄ STA 576+68.98 TO STA 585+00.00 Outside Shld	374	169	323	S1P1
EB Rte 46 ℄ STA 585+00.00 TO STA 596+67.43 Outside Shld	525	237	453	S1P1
EB Rte 46 ℄ STA 597+88.12 TO STA 615+25.00 Outside Shld	780	353	674	S1P1
EB Rte 46 ℄ STA 395+41.12 TO STA 403+08.42 Inside Aux Lane	147	66	127	S1P1
EB Rte 46 ℄ STA 403+08.42 TO STA 410+10.40 Inside Aux Lane	374	169	323	S1P1
EB Rte 46 ℄ STA 430+83.17 TO STA 438+24.11 Inside Aux Lane	368	166	318	S1P1
EB Rte 46 ℄ STA 449+18.77 TO STA 456+59.54 Inside Aux Lane	366	166	316	S1P1
EB Rte 46 ℄ STA 589+52.75 TO STA 597+77.75 Inside Aux Lane	409	185	353	S1P1
EB Rte 46 ℄ STA 597+77.75 TO STA 607+03.76 Inside Aux Lane	504	228	435	S1P1
EB Rte 46 ℄ STA 402+08.42 TO STA 411+28.43 Outside Aux Lane	547	248	473	S1P1
EB Rte 46 ℄ STA 411+28.43 TO STA 435+63.42 Outside Aux Lane	1,210	547	1,045	S1P1
EB Rte 46 ℄ STA 438+48.54 TO STA 439+28.54 Outside Aux Lane	36	16	31	S1P1
EB Rte 46 ℄ STA 456+69.30 TO STA 457+51.63 Outside Aux Lane	37	17	32	S1P1
EB Rte 46 ℄ STA 568+70.64 TO STA 585+00.00 Outside Aux Lane	969	438	837	S1P1
EB Rte 46 ℄ STA 585+00.00 TO STA 597+77.75 Outside Aux Lane	1,176	532	1,016	S1P1
EB Rte 46 ℄ STA 597+77.75 TO STA 615+25.00 Outside Aux Lane	1,042	471	900	S1P1
EB Rte 46 ℄ STA 395+41.12 TO STA 403+08.42 Traveled Way	829	375	1,398	S1P1
EB Rte 46 ℄ STA 403+08.42 TO STA 411+28.43 Traveled Way	886	401	1,494	S1P1
EB Rte 46 ℄ STA 411+28.43 TO STA 438+88.17 Traveled Way	2,982	1,349	5,029	S1P1
EB Rte 46 ℄ STA 438+88.17 TO STA 457+23.51 Traveled Way	1,966	890	3,316	S1P1
EB Rte 46 ℄ STA 457+23.51 TO STA 485+88.49 Traveled Way	3,096	1,401	5,221	S1P1
EB Rte 46 ℄ STA 554+00.00 TO STA 558+52.69 Traveled Way	486	220	820	S1P1
EB Rte 46 ℄ STA 568+70.64 TO STA 585+00.00 Traveled Way	1,763	798	2,973	S1P1
EB Rte 46 ℄ STA 585+00.00 TO STA 597+77.75 Traveled Way	1,366	618	2,304	S1P1
EB Rte 46 ℄ STA 597+77.75 TO STA 615+25.00 Traveled Way	1,897	859	3,200	S1P1
EB S1P1 SUBTOTAL	31,404	14,208	43,433	

ROADWAY QUANTITIES

LOCATION	HMA (TYPE A)	LEAN CONCRETE BASE (LCB)	CLASS 2 AGGREGATE BASE	CLASS 1 AGGREGATE SUBBASE	STAGE-PHASE
	TON	CY	CY	CY	
Rte 46 X-Over MEDIAN / Geneseo Rd EB SIDE	180	81		155	S1P1
Rte 46 X-Over MEDIAN / Prvt Dwy 3 EB SIDE	166	75		143	S1P1
Rte 46 X-Over MEDIAN / Chumeia Dwy EB SIDE	164	74		142	S1P1
Rte 46 X-Over MEDIAN / River Grove Dr EB SIDE	123	56		106	S1P1
S1P1 X-Over MEDIAN SUBTOTAL	633	286		546	
Rte 46 DETOUR 1 ℄ STA 537+00.00 TO STA 554+00.00 Inside Shld	634		287	417	S1P1
Rte 46 DETOUR 1 ℄ STA 537+00.00 TO STA 554+00.00 Outside Shld	638		289	420	S1P1
Rte 46 DETOUR 1 ℄ STA 537+00.00 TO STA 554+00.00 Traveled Way	1,908		863	1,255	S1P1
S1P1 DETOUR SUBTOTAL	3,180		1439	2,092	
Geneseo Rd ℄ STA 8+77.43 TO STA 11+28.93 Lt Shld	31		21	46	S1P1
Geneseo Rd ℄ STA 8+77.43 TO STA 11+28.93 Rt Shld	30		21	45	S1P1
Geneseo Rd ℄ STA 8+77.43 TO STA 11+28.93 Traveled Way	136		94	202	S1P1
Prvt Dwy 3 ℄ STA 7+74.31 TO STA 8+88.17 Traveled Way	32		22	48	S1P1
Chumeia Dwy ℄ STA 6+04.65 TO STA 7+23.51 Traveled Way	35		24	52	S1P1
FR-1 ℄ STA 65+61.59 TO STA 79+38.87 Lt Shld	203		140	301	S1P1
FR-1 ℄ STA 65+61.59 TO STA 79+38.87 Rt Shld	214		148	316	S1P1
FR-1 ℄ STA 65+61.59 TO STA 79+38.87 Traveled Way	699		483	1,035	S1P1
N Whitley Gardens Dr Lt Shld	122		84	180	S1P1
N Whitley Gardens Dr Rt Shld	101		70	149	S1P1
N Whitley Gardens Dr Traveled Way	542		375	803	S1P1
River Grove Dr Lt Shld	57		40	85	S1P1
River Grove Dr Rt Shld	57		40	85	S1P1
River Grove Dr Traveled Way	203		140	300	S1P1
S1P1 COUNTY Rd SUBTOTAL	2,462		1702	3,647	
WB S1P1 SUBTOTAL	5,740	2,597		6,971	
EB S1P1 SUBTOTAL	31,404	14,208		43,433	
S1P1 X-Over MEDIAN SUBTOTAL	633	286		546	
S1P1 DETOUR SUBTOTAL	3,180		1439	2,092	
TOTAL FOR STAGE 1 PHASE 1	43,419	17,091	3141	56,689	
Rte 46 DETOUR 1 ℄ STA 529+00.00 TO STA 537+00.00 Inside Shld	94		42	62	S1P2
Rte 46 DETOUR 1 ℄ STA 529+00.00 TO STA 537+00.00 Outside Shld	289		131	190	S1P2
Rte 46 DETOUR 1 ℄ STA 529+00.00 TO STA 537+00.00 Traveled Way	588		266	387	S1P2
Rte 46 DETOUR 3 ℄ STA 392+22.44 TO STA 399+00.00	621		281	409	S1P2
Rte 46 DETOUR 3 ℄ STA 399+00.00 TO STA 404+10.89	278		126	183	S1P2
Rte 46 DETOUR 4 ℄ STA 467+00.00 TO STA 488+55.00	2,261		1023	1,488	S1P2
Rte 46 Det 2 / Trans ℄ STA 616+36.06 TO STA 627+58.92 OS	415	188		700	S1P2
Rte 46 Det 2 / Trans ℄ STA 607+03.76 TO STA 626+73.89 T/W	2,456	1,111		4,142	S1P2
Rte 46 DETOUR 3 ℄ STA396+00.00 TO STA 401+91.00 Overlay	135				S1P2
S Whitley Gardens Dr ℄ STA 192+73.81 TO STA 196+85.00 Lt Shld	65		45	97	S1P2
S Whitley Gardens Dr ℄ STA 191+30.00 TO STA 196+85.00 Rt Shld	81		56	120	S1P2
S Whitley Gardens Dr ℄ STA 191+30.00 TO STA 196+85.00 T/W	280		193	414	S1P2
TOTAL FOR STAGE 1 PHASE 2	7,563	1,299	2163	8,192	
TOTAL FOR STAGE 1 PHASE 1	43,419	17,091	3141	56,689	
TOTAL FOR STAGE 1	50,982	18,390	5304	64,881	

SUMMARY OF QUANTITIES
Q-10

REVISED BY | DATE REVISED
CALCULATED-DESIGNED BY | CHECKED BY
JOSE ARGUELLO | SUMI HOODE
FUNCTIONAL SUPERVISOR | JACK WALKER
STATE OF CALIFORNIA - DEPARTMENT OF TRANSPORTATION
Caltrans | 06-DESIGN

LAST REVISION DATE PLOTTED => 08-DEC-2009
08-17-09 TIME PLOTTED => 10:03

BORDER LAST REVISED 3/1/2007 | RELATIVE BORDER SCALE IS IN INCHES 0 1 2 3 | USERNAME => trmariak | DGN FILE => 533072pa010.dgn | CU 06220 | EA 330721

ROADWAY QUANTITIES

LOCATION	RHMA (GAP GRADED)	HMA (TYPE A)	LEAN CONCRETE BASE (LCB)	CLASS 2 AGGREGATE BASE	CLASS 1 AGGREGATE SUBBASE	STAGE-PHASE
	TON	TON	CY	CY	CY	
WB Rte 46 ℄ STA 392+22.41 TO STA 398+42.20 Inside Shld		149		96	210	S2P1
WB Rte 46 ℄ STA 398+42.20 TO STA 402+35.12 Inside Shld		96		62	134	S2P1
WB Rte 46 ℄ STA 404+50.00 TO STA 410+16.29 Inside Shld	32	96	58		110	S2P1
WB Rte 46 ℄ STA 411+97.49 TO STA 413+00.00 Inside Shld	6	17	10		20	S2P1
WB Rte 46 ℄ STA 413+00.00 TO STA 419+38.42 Inside Shld	48	96		189		S2P1
WB Rte 46 ℄ STA 419+38.42 TO STA 428+00.00 Inside Shld	65	129		255		S2P1
WB Rte 46 ℄ STA 428+00.00 TO STA 432+50.00 Inside Shld	25	76	46		171	S2P1
WB Rte 46 ℄ STA 432+50.00 TO STA 437+29.44 Inside Shld	36	72		142		S2P1
WB Rte 46 ℄ STA 439+52.23 TO STA 443+00.00 Inside Shld	26	52		103		S2P1
WB Rte 46 ℄ STA 443+00.00 TO STA 446+93.72 Inside Shld	22	67	40		77	S2P1
WB Rte 46 ℄ STA 446+93.72 TO STA 448+00.00 Inside Shld	6	18	11		21	S2P1
WB Rte 46 ℄ STA 448+00.00 TO STA 452+00.00 Inside Shld	30	60		119		S2P1
WB Rte 46 ℄ STA 453+50.00 TO STA 455+65.18 Inside Shld	12	37	22		82	S2P1
WB Rte 46 ℄ STA 457+87.66 TO STA 468+00.00 Inside Shld	57	172	104		198	S2P1
WB Rte 46 ℄ STA 468+00.00 TO STA 492+73.78 Inside Shld		556	252		481	S2P1
WB Rte 46 ℄ STA 494+77.52 TO STA 502+00.00 Inside Shld		162	73		140	S2P1
WB Rte 46 ℄ STA 502+00.00 TO STA 554+00.00 Inside Shld		1,166	528		1,967	S2P1
WB Rte 46 ℄ STA 585+00.00 TO STA 596+60.43 Inside Shld		261	118		226	S2P1
WB Rte 46 ℄ STA 598+50.79 TO STA 606+02.75 Inside Shld		169	76		146	S2P1
WB Rte 46 ℄ STA 606+02.75 TO STA 618+00.00 Inside Shld		270	122		456	S2P1
WB Rte 46 ℄ STA 398+42.20 TO STA 404+50.00 Outside Shld		354		229	498	S2P1
WB Rte 46 ℄ STA 404+50.00 TO STA 410+88.34 Outside Shld	72	215	130		483	S2P1
WB Rte 46 ℄ STA 411+68.34 TO STA 413+00.00 Outside Shld	15	44	27		100	S2P1
WB Rte 46 ℄ STA 413+00.00 TO STA 428+00.00 Outside Shld	274	686		609	1,218	S2P1
WB Rte 46 ℄ STA 428+00.00 TO STA 432+50.00 Outside Shld	51	152	92		342	S2P1
WB Rte 46 ℄ STA 432+50.00 TO STA 438+47.81 Outside Shld	104	260		231	462	S2P1
WB Rte 46 ℄ STA 439+27.81 TO STA 443+00.00 Outside Shld	63	158		140	280	S2P1
WB Rte 46 ℄ STA 443+00.00 TO STA 448+00.00 Outside Shld	56	169	102		381	S2P1
WB Rte 46 ℄ STA 448+00.00 TO STA 453+50.00 Outside Shld	98	245		218	436	S2P1
WB Rte 46 ℄ STA 453+50.00 TO STA 455+94.82 Outside Shld	28	84	50		188	S2P1
WB Rte 46 ℄ STA 458+75.83 TO STA 468+00.00 Outside Shld	105	315	190		709	S2P1
WB Rte 46 ℄ STA 468+00.00 TO STA 471+30.00 Outside Shld		149	67		128	S2P1
WB Rte 46 ℄ STA 471+30.00 TO STA 492+78.05 Outside Shld		980	443		846	S2P1
WB Rte 46 ℄ STA 494+44.78 TO STA 502+00.00 Outside Shld		335	151		289	S2P1
WB Rte 46 ℄ STA 502+00.00 TO STA 539+85.91 Outside Shld		1,685	763		2,842	S2P1
WB Rte 46 ℄ STA 539+84.85 TO STA 554+00.00 Outside Shld		630	285		544	S2P1
WB Rte 46 ℄ STA 585+00.00 TO STA 597+37.62 Outside Shld		558	253		482	S2P1
WB Rte 46 ℄ STA 598+97.26 TO STA 606+02.75 Outside Shld		317	144		274	S2P1
WB Rte 46 ℄ STA 606+02.75 TO STA 618+00.00 Outside Shld		542	245		914	S2P1
WB Rte 46 ℄ STA 395+00.00 TO STA 398+42.20 Inside Aux Lane		50		32	70	S2P1
WB Rte 46 ℄ STA 398+42.20 TO STA 402+35.12 Inside Aux Lane		90		58	127	S2P1
WB Rte 46 ℄ STA 404+50.00 TO STA 410+16.29 Inside Aux Lane	76	229	138		264	S2P1
WB Rte 46 ℄ STA 411+97.49 TO STA 413+00.00 Inside Aux Lane	14	41	25		48	S2P1
WB Rte 46 ℄ STA 413+00.00 TO STA 419+38.42 Inside Aux Lane	104	208		411		S2P1
WB Rte 46 ℄ STA 439+52.23 TO STA 443+00.00 Inside Aux Lane	63	125		247		S2P1
WB Rte 46 ℄ STA 443+00.00 TO STA 446+93.72 Inside Aux Lane	45	135	82		156	S2P1
WB Rte 46 ℄ STA 457+87.66 TO STA 465+30.00 Inside Aux Lane	93	278	167		320	S2P1
WB Rte 46 ℄ STA 468+00.00 TO STA 493+97.44 Inside Aux Lane		1,348	610		1,164	S2P1
WB Rte 46 ℄ STA 493+97.44 TO STA 502+00.00 Inside Aux Lane		403	182		348	S2P1
WB Rte 46 ℄ STA 585+00.00 TO STA 597+77.75 Inside Aux Lane		694	314		600	S2P1
WB Rte 46 ℄ STA 597+77.75 TO STA 606+02.75 Inside Aux Lane		410	185		354	S2P1
WB Rte 46 ℄ STA 410+88.34 TO STA 411+68.34 Outside Aux Lane	9	27	16		31	S2P1
WB Rte 46 ℄ STA 438+47.81 TO STA 439+27.81 Outside Aux Lane	12	30		27	53	S2P1
WB Rte 46 ℄ STA 455+94.92 TO STA 458+75.83 Outside Aux Lane	60	181	109		208	S2P1
WB Rte 46 ℄ STA 468+00.00 TO STA 493+97.44 Outside Aux Lane		1,098	497		949	S2P1
WB Rte 46 ℄ STA 493+97.44 TO STA 502+00.00 Outside Aux Lane		489	221		423	S2P1
WB Rte 46 ℄ STA 539+84.85 TO STA 554+00.00 Outside Aux Lane		598	271		517	S2P1
WB Rte 46 ℄ STA 585+00.00 TO STA 597+77.75 Outside Aux Lane		758	343		654	S2P1
WB Rte 46 ℄ STA 597+77.75 TO STA 606+02.75 Outside Aux Lane		482	218		416	S2P1
WB Rte 46 ℄ STA 404+50.00 TO STA 411+28.93 Traveled Way	183	550	332		1,237	S2P1
WB Rte 46 ℄ STA 411+28.93 TO STA 413+00.00 Traveled Way	46	139	84		312	S2P1
WB Rte 46 ℄ STA 428+00.00 TO STA 432+50.00 Traveled Way	122	365	220		820	S2P1
WB Rte 46 ℄ STA 443+00.00 TO STA 448+00.00 Traveled Way	135	406	245		914	S2P1
WB Rte 46 ℄ STA 453+50.00 TO STA 457+23.51 Traveled Way	103	310	187		698	S2P1
WB S2P1 SUBTOTAL 1	2296	21,043	8848	3168	26,538	

Dist	COUNTY	ROUTE	POST MILES TOTAL PROJECT	SHEET No.	TOTAL SHEETS
05	SLO	46	36.6/41.2	446	595

8-24-09
REGISTERED CIVIL ENGINEER DATE

12-7-09
PLANS APPROVAL DATE

REGISTERED PROFESSIONAL ENGINEER
JOSE M. ARGUELLO
No. 51321
Exp 06-30-10
CIVIL
STATE OF CALIFORNIA

THE STATE OF CALIFORNIA OR ITS OFFICERS OR AGENTS SHALL NOT BE RESPONSIBLE FOR THE ACCURACY OR COMPLETENESS OF ELECTRONIC COPIES OF THIS PLAN SHEET.

CALCULATED-DESIGNED BY: JOSE ARGUELLO
CHECKED BY: SUMI HOODE
REVISED BY
DATE REVISED
FUNCTIONAL SUPERVISOR: JACK WALKER
STATE OF CALIFORNIA - DEPARTMENT OF TRANSPORTATION
06-DESIGN
Caltrans

SUMMARY OF QUANTITIES
Q-11

LAST REVISION 08-17-09
DATE PLOTTED => 08-DEC-2009
TIME PLOTTED => 10:03

BORDER LAST REVISED 3/1/2007
RELATIVE BORDER SCALE IS IN INCHES 0 1 2 3
USERNAME => trmariak
DGN FILE => 533072pa011.dgn
CU 06220
EA 330721

ROADWAY QUANTITIES

LOCATION	RHMA (GAP GRADED)	HMA (TYPE A)	LEAN CONCRETE BASE (LCB)	CLASS 2 AGGREGATE BASE	CLASS 1 AGGREGATE SUBBASE	STAGE-PHASE
	TON	TON	CY	CY	CY	
WB Rte 46 ℄ STA 457+23.51 TO STA 468+00.00 Traveled Way	291	874	527		1,966	S2P1
WB Rte 46 ℄ STA 468+00.00 TO STA 493+97.44 Traveled Way		2,786	1,261		4,699	S2P1
WB Rte 46 ℄ STA 493+97.44 TO STA 502+00.00 Traveled Way		873	395		1,472	S2P1
WB Rte 46 ℄ STA 502+00.00 TO STA 554+00.00 Traveled Way		5,597	2,533		9,440	S2P1
WB Rte 46 ℄ STA 585+00.00 TO STA 597+77.75 Traveled Way		1,395	631		2,352	S2P1
WB Rte 46 ℄ STA 597+77.75 TO STA 606+02.75 Traveled Way		877	397		1,479	S2P1
WB Rte 46 ℄ STA 606+02.75 TO STA 618+00.00 Traveled Way		1,299	588		2,191	S2P1
WB S2P1 SUBTOTAL 2	291	13,701	6,332		23,599	
Rte 46 X-Over MEDIAN / Geneseo Rd WB SIDE	53	159		279		S2P1
Rte 46 X-Over MEDIAN / Prvt Dwy 3 WB SIDE	41	124		218		S2P1
Rte 46 X-Over MEDIAN / Chumeia DWY WB SIDE	42	126		221		S2P1
Rte 46 X-Over MEDIAN / Union Rd WB SIDE		158	72		137	S2P1
Rte 46 X-Over MEDIAN / River Grove DR WB SIDE		92	56		106	S2P1
S2P1 X-Over MEDIAN SUBTOTAL	136	659	128	718	243	
WB Rte 46 ℄ STA395+00.00 TO STA 398+42.20 Ovrly / Lvl		128				S2P1
WB Rte 46 ℄ STA398+42.20 TO STA 401+50.00 T/W Ovrly / Lvl		236				S2P1
WB Rte 46 ℄ STA401+50.00 TO STA 404+50.00 T/W Ovrly / Lvl		536				S2P1
WB Rte 46 ℄ STA413+00.00 TO STA 428+00.00 T/W Ovrly / Lvl	371	1,414				S2P1
WB Rte 46 ℄ STA432+50.00 TO STA 438+88.17 T/W Ovrly / Lvl	162	803				S2P1
WB Rte 46 ℄ STA438+88.17 TO STA 443+00.00 T/W Ovrly / Lvl	133	497				S2P1
WB Rte 46 ℄ STA448+00.00 TO STA 453+50.00 T/W Ovrly / Lvl	144	816				S2P1
S2P1 OVERLAY / LEVELING SUBTOTAL	810	4,430				
Prvt Dwy 1 ℄ STA 11+28.93 TO STA 12+65.08 Traveled Way		45		31	67	S2P1
Prvt Dwy 2 ℄ STA 8+88.17 TO STA 10+37.18 Traveled Way		52		36	77	S2P1
Prvt Dwy 4 ℄ STA 7+23.51 TO STA 9+03.93 Traveled Way		62		43	91	S2P1
Union Rd ℄ STA 180+57.77 TO STA 184+50.00 Lt Shld		53		37	79	S2P1
Union Rd ℄ STA 180+57.77 TO STA 184+50.00 Rt Shld		56		39	83	S2P1
Union Rd ℄ STA 180+57.77 TO STA 184+50.00 Traveled Way		202		140	300	S2P1
Estrella Rd ℄ STA 7+12.26 TO STA 16+19.74 Lt Shld		110		76	163	S2P1
Estrella Rd ℄ STA 7+12.26 TO STA 11+59.50 Rt Shld		58		40	86	S2P1
Estrella Rd ℄ STA 13+40.26 TO STA 16+19.74 Rt Shld		23		16	34	S2P1
Estrella Rd ℄ STA 7+12.26 TO STA 16+19.47 Traveled Way		456		315	675	S2P1
FR-2 ℄ STA 21+91.19 TO STA 25+20.00 Lt Shld		54		37	80	S2P1
FR-2 ℄ STA 21+91.19 TO STA 25+20.00 Rt Shld		46		32	68	S2P1
FR-2 ℄ STA 21+91.19 TO STA 25+20.00 Traveled Way		248		171	367	S2P1
FR-2 ℄ STA 28+72.55 TO STA 30+35.44 Lt Shld		25		17	37	S2P1
FR-2 ℄ STA 28+72.55 TO STA 30+32.19 Rt Shld		17		12	25	S2P1
FR-2 ℄ STA 28+72.55 TO STA 39+95.40 Traveled Way		850		587	1,259	S2P1
FR-2 ℄ STA 31+70.99 TO STA 39+95.40 Rt Shld		112		77	165	S2P1
FR-2 ℄ STA 31+87.23 TO STA 39+95.40 Lt Shld		119		82	176	S2P1
Almond Dr Lt Shld		59		41	87	S2P1
Almond Dr Rt Shld		50		34	73	S2P1
Almond Dr Traveled Way		245		169	363	S2P1
S2P1 COUNTY Rd SUBTOTAL		2,942		2032	4,355	
S2P1 OVERLAY / LEVELING SUBTOTAL	810	4,430				
S2P1 X-Over MEDIAN SUBTOTAL	136	659	128	718	243	
WB S2P1 SUBTOTAL 2	291	13,701	6,332		23,599	
WB S2P1 SUBTOTAL 1 (FROM SHEET Q-11)	2296	21,043	8848	3168	26,538	
TOTAL FOR STAGE 2 PHASE 1	3533	42,775	15,308	5918	54,735	
WB Rte 46 ℄ STA 618+00.00 TO STA 620+50.00 Inside Shld		92	41		155	S2P2
WB Rte 46 ℄ STA 618+00.00 TO STA 620+50.00 Outside Shld		113	51		190	S2P2
WB Rte 46 ℄ STA 618+00.00 TO STA 620+50.00 Traveled Way		270	122		456	S2P2
Rte 46 DETOUR 5 ℄ STA 463+00.00 TO STA 474+51.00		724		328	477	S2P2
TOTAL FOR STAGE 2 PHASE 2		1,199	214	328	1,278	
TOTAL FOR STAGE 2 PHASE 1	3533	42,775	15,308	5918	54,735	
TOTAL FOR STAGE 2	3533	43,974	15,522	6246	56,013	

Dist	COUNTY	ROUTE	POST MILES TOTAL PROJECT	SHEET No.	TOTAL SHEETS
05	SLO	46	36.6/41.2	447	595

8-24-09
REGISTERED CIVIL ENGINEER DATE

12-7-09
PLANS APPROVAL DATE

REGISTERED PROFESSIONAL ENGINEER
JOSE M. ARGUELLO
No. 51321
Exp 06-30-10
CIVIL
STATE OF CALIFORNIA

THE STATE OF CALIFORNIA OR ITS OFFICERS OR AGENTS SHALL NOT BE RESPONSIBLE FOR THE ACCURACY OR COMPLETENESS OF ELECTRONIC COPIES OF THIS PLAN SHEET.

CALCULATED- JOSE ARGUELLO
DESIGNED BY SUMI HOODE
CHECKED BY
REVISED BY
DATE REVISED
FUNCTIONAL SUPERVISOR JACK WALKER

STATE OF CALIFORNIA - DEPARTMENT OF TRANSPORTATION
Caltrans
06-DESIGN

SUMMARY OF QUANTITIES
Q-12

LAST REVISION 08-17-09 | DATE PLOTTED => 08-DEC-2009 | TIME PLOTTED => 10:03

BORDER LAST REVISED 3/1/2007 | RELATIVE BORDER SCALE IS IN INCHES 0 1 2 3 | USERNAME => trmariak | DGN FILE => 533072pa012.dgn | CU 06220 | EA 330721

Dist	COUNTY	ROUTE	POST MILES TOTAL PROJECT	SHEET No.	TOTAL SHEETS
05	SLO	46	36.6/41.2	448	595

8-24-09
REGISTERED CIVIL ENGINEER DATE

12-7-09
PLANS APPROVAL DATE

REGISTERED PROFESSIONAL ENGINEER
JOSE M. ARGUELLO
No. 51321
Exp 06-30-10
CIVIL
STATE OF CALIFORNIA

THE STATE OF CALIFORNIA OR ITS OFFICERS OR AGENTS SHALL NOT BE RESPONSIBLE FOR THE ACCURACY OR COMPLETENESS OF ELECTRONIC COPIES OF THIS PLAN SHEET.

ROADWAY QUANTITIES

LOCATION	RHMA (GAP GRADED)	STAGE-PHASE
	TON	
EB Rte 46 ℄ Sta 395+41.12 TO Sta 401+20.00 Overlay IS	33	S3
EB Rte 46 ℄ Sta 401+20.00 TO Sta 403+08.42 Overlay IS	11	S3
EB Rte 46 ℄ Sta 403+08.42 TO Sta 410+10.40 Overlay IS	42	S3
EB Rte 46 ℄ Sta 412+92.15 TO Sta 430+83.17 Overlay IS	101	S3
EB Rte 46 ℄ Sta 430+83.17 TO Sta 438+24.11 Overlay IS	42	S3
EB Rte 46 ℄ Sta 440+46.90 TO Sta 449+18.77 Overlay IS	49	S3
EB Rte 46 ℄ Sta 449+18.77 TO Sta 456+59.54 Overlay IS	42	S3
EB Rte 46 ℄ Sta 458+82.66 TO Sta 485+88.49 Overlay IS	162	S3
EB Rte 46 ℄ Sta 485+88.49 TO Sta 493+17.11 Overlay IS	41	S3
EB Rte 46 ℄ Sta 495+24.75 TO Sta 524+18.89 Overlay IS	163	S3
EB Rte 46 ℄ Sta 524+18.89 TO Sta 554+00.00 Overlay IS	168	S3
EB Rte 46 ℄ Sta 554+00.00 TO Sta 558+52.69 Overlay IS	25	S3
EB Rte 46 ℄ Sta 568+70.64 TO Sta 585+00.00 Overlay IS	92	S3
EB Rte 46 ℄ Sta 585+00.00 TO Sta 589+52.75 Overlay IS	25	S3
EB Rte 46 ℄ Sta 589+52.75 TO Sta 597+04.73 Overlay IS	42	S3
EB Rte 46 ℄ Sta 598+94.66 TO Sta 607+03.76 Overlay IS	46	S3
EB Rte 46 ℄ Sta 395+41.12 TO Sta 402+08.42 Overlay OS	75	S3
EB Rte 46 ℄ Sta 402+08.42 TO Sta 410+52.55 Overlay OS	95	S3
EB Rte 46 ℄ Sta 411+95.77 TO Sta 435+63.42 Overlay OS	267	S3
EB Rte 46 ℄ Sta 435+63.42 TO Sta 438+48.54 Overlay OS	32	S3
EB Rte 46 ℄ Sta 439+28.54 TO Sta 456+69.30 Overlay OS	195	S3
EB Rte 46 ℄ Sta 457+51.63 TO Sta 485+88.49 Overlay OS	318	S3
EB Rte 46 ℄ Sta 485+88.49 TO Sta 493+55.91 Overlay OS	87	S3
EB Rte 46 ℄ Sta 495+07.28 TO Sta 518+18.89 Overlay OS	263	S3
EB Rte 46 ℄ Sta 518+18.89 TO Sta 554+00.00 Overlay OS	406	S3
EB Rte 46 ℄ Sta 554+00.00 TO Sta 558+52.69 Overlay OS	51	S3
EB Rte 46 ℄ Sta 568+70.64 TO Sta 575+25.75 Overlay OS	74	S3
EB Rte 46 ℄ Sta 576+68.98 TO Sta 585+00.00 Overlay OS	94	S3
EB Rte 46 ℄ Sta 585+00.00 TO Sta 596+67.43 Overlay OS	131	S3
EB Rte 46 ℄ Sta 597+88.12 TO Sta 615+25.00 Overlay OS	195	S3
EB Rte 46 ℄ Sta 395+41.12 TO Sta 403+08.42 Overlay Med Aux Ln	37	S3
EB Rte 46 ℄ Sta 403+08.42 TO Sta 410+10.40 Overlay Med Aux Ln	93	S3
EB Rte 46 ℄ Sta 430+83.17 TO Sta 438+24.11 Overlay Med Aux Ln	92	S3
EB Rte 46 ℄ Sta 449+18.77 TO Sta 456+59.54 Overlay Med Aux Ln	91	S3
EB Rte 46 ℄ Sta 485+88.49 TO Sta 493+97.44 Overlay Med Aux Ln	103	S3
EB Rte 46 ℄ Sta 493+97.44 TO Sta 524+18.89 Overlay Med Aux Ln	368	S3
EB Rte 46 ℄ Sta 589+52.75 TO Sta 597+77.75 Overlay Med Aux Ln	102	S3
EB Rte 46 ℄ Sta 597+77.75 TO Sta 607+03.76 Overlay Med Aux Ln	126	S3
EB Rte 46 ℄ Sta 402+08.42 TO Sta 411+28.43 Overlay Out Aux Ln	137	S3
EB Rte 46 ℄ Sta 411+28.43 TO Sta 435+63.42 Overlay Out Aux Ln	302	S3
EB Rte 46 ℄ Sta 438+48.54 TO Sta 439+28.54 Overlay Out Aux Ln	9	S3
EB Rte 46 ℄ Sta 456+69.30 TO Sta 457+51.63 Overlay Out Aux Ln	9	S3
EB Rte 46 ℄ Sta 485+88.49 TO Sta 493+97.44 Overlay Out Aux Ln	124	S3
EB Rte 46 ℄ Sta 493+97.44 TO Sta 518+18.89 Overlay Out Aux Ln	299	S3
EB Rte 46 ℄ Sta 568+70.64 TO Sta 585+00.00 Overlay Out Aux Ln	242	S3
EB Rte 46 ℄ Sta 585+00.00 TO Sta 597+77.75 Overlay Out Aux Ln	294	S3
EB Rte 46 ℄ Sta 597+77.75 TO Sta 615+25.00 Overlay Out Aux Ln	260	S3
EB Rte 46 ℄ Sta 395+41.12 TO Sta 403+08.42 Overlay T/W	207	S3
EB Rte 46 ℄ Sta 403+08.42 TO Sta 411+28.43 Overlay T/W	222	S3
EB Rte 46 ℄ Sta 411+28.43 TO Sta 438+88.17 Overlay T/W	745	S3
EB Rte 46 ℄ Sta 438+88.17 TO Sta 457+23.51 Overlay T/W	492	S3
EB Rte 46 ℄ Sta 457+23.51 TO Sta 485+88.49 Overlay T/W	774	S3
EB Rte 46 ℄ Sta 485+88.49 TO Sta 493+97.44 Overlay T/W	223	S3
EB Rte 46 ℄ Sta 493+97.44 TO Sta 554+00.00 Overlay T/W	1,627	S3
EB Rte 46 ℄ Sta 554+00.00 TO Sta 558+52.69 Overlay T/W	122	S3
EB Rte 46 ℄ Sta 568+70.64 TO Sta 585+00.00 Overlay T/W	441	S3
EB Rte 46 ℄ Sta 585+00.00 TO Sta 597+77.75 Overlay T/W	342	S3
EB Rte 46 ℄ Sta 597+77.75 TO Sta 615+25.00 Overlay T/W	474	S3
Rte 46 X-Over MEDIAN / Geneseo Rd EB SIDE Overlay	45	S3
Rte 46 X-Over MEDIAN / Prvt Dwy 3 EB SIDE Overlay	41	S3
Rte 46 X-Over MEDIAN / Chumeia Dwy EB SIDE Overlay	41	S3
Rte 46 X-Over MEDIAN / River Grove Dr EB SIDE Overlay	31	S3
EB Trans Rte 46 ℄ Sta 607+04.16 TO Sta 620+50.00 IS Overlay	120	S3
EB Trans Rte 46 ℄ Sta 607+04.16 TO Sta 626+73.89 T/W Overlay	399	S3
EB Trans Rte 46 ℄ Sta 615+22.35 TO Sta 627+58.92 OS Overlay	104	S3
WB Trans Rte 46 ℄ Sta 620+50.00 TO Sta 627+58.92 OS Overlay	76	S3
WB Trans Rte 46 ℄ Sta 620+50.00 TO Sta 627+58.92 T/W Overlay	289	S3
EB S3 OVERLAY TOTAL	12,870	

ROADWAY QUANTITIES

LOCATION	RHMA (GAP GRADED)	HMA (TYPE A)	LEAN CONCRETE BASE (LCB)	CLASS 2 AGGREGATE BASE	CLASS 1 AGGREGATE SUBBASE	STAGE-PHASE
	TON	TON	CY	CY	CY	
EB Rte 46 ℄ Sta 485+88.49 TO Sta 493+17.11 Inside Shld		123	74		142	S3
EB Rte 46 ℄ Sta 495+24.75 TO Sta 524+18.89 Inside Shld		490	296		564	S3
EB Rte 46 ℄ Sta 524+18.89 TO Sta 554+00.00 Inside Shld		505	305		1,136	S3
EB Rte 46 ℄ Sta 485+88.49 TO Sta 493+55.91 Outside Shld		260	157		300	S3
EB Rte 46 ℄ Sta 495+07.28 TO Sta 518+18.89 Outside Shld		789	476		909	S3
EB Rte 46 ℄ Sta 518+18.89 TO Sta 554+00.00 Outside Shld		1,217	734		2,736	S3
EB Rte 46 ℄ Sta 485+88.49 TO Sta 493+97.44 Inside Aux Lane		308	186		355	S3
EB Rte 46 ℄ Sta 493+97.44 TO Sta 524+18.89 Inside Aux Lane		1,104	666		1,271	S3
EB Rte 46 ℄ Sta 485+88.49 TO Sta 493+97.44 Outside Aux Lane		371	224		427	S3
EB Rte 46 ℄ Sta 493+97.44 TO Sta 518+18.89 Outside Aux Lane		897	541		1,033	S3
EB Rte 46 ℄ Sta 485+88.49 TO Sta 493+97.44 Traveled Way		669	404		1,504	S3
EB Rte 46 ℄ Sta 493+97.44 TO Sta 554+00.00 Traveled Way		4,881	2945		10,975	S3
Rte 46 X-Over MEDIAN / UNION Rd EB SIDE	41	122	74		140	S3
EB S3 SUBTOTAL	41	11,736	7082		21,492	
Union Rd ℄ Sta 178+00.00 TO Sta 180+57.77 Lt Shld		32		22	48	S3
Union Rd ℄ Sta 178+00.00 TO Sta 180+57.77 Rt Shld		32		22	47	S3
Union Rd ℄ Sta 178+00.00 TO Sta 180+57.77 Traveled Way		139		96	206	S3
Prvt Dwy 5 ℄ Sta 1+00.00 TO Sta 3+25.18 Traveled Way				32		S3
Prvt Dwy 5 ℄ Sta 3+25.18 TO Sta 5+00.00 Traveled Way		66		45	97	S3
COUNTY Rd S3 SUBTOTAL		269		217	398	
EB S3 SUBTOTAL	41	11,736	7082		21,492	
S3 SUBTOTAL	41	12,005	7082	217	21,890	

ROADWAY QUANTITIES

LOCATION	RHMA (GAP GRADED)	HMA (TYPE A)	LEAN CONCRETE BASE (LCB)	CLASS 2 AGGREGATE BASE	CLASS 1 AGGREGATE SUBBASE
	TON	TON	CY	CY	CY
EB S3 OVERLAY TOTAL	12,870				
EB S3 SUBTOTAL	41	12,005	7082	217	21,890
TOTAL FOR STAGE 3	12,911	12,005	7082	217	21,890

SUMMARY OF QUANTITIES
Q-13

CALCULATED-DESIGNED BY	CHECKED BY	REVISED BY	DATE REVISED
JOSE ARGUELLO	SUMI HOODE		

FUNCTIONAL SUPERVISOR: JACK WALKER

STATE OF CALIFORNIA - DEPARTMENT OF TRANSPORTATION
06-DESIGN
Caltrans

LAST REVISION 08-17-09 | DATE PLOTTED => 08-DEC-2009 | TIME PLOTTED => 10:49

BORDER LAST REVISED 3/1/2007 | RELATIVE BORDER SCALE IS IN INCHES 0 1 2 3 | USERNAME => trmnguye | DGN FILE => 5330?2pa013.dgn | CU 06220 | EA 330721

Dist	COUNTY	ROUTE	POST MILES TOTAL PROJECT	SHEET No.	TOTAL SHEETS
05	SLO	46	36.6/41.2	449	595

8-24-09
REGISTERED CIVIL ENGINEER DATE

12-7-09
PLANS APPROVAL DATE

REGISTERED PROFESSIONAL ENGINEER
JOSE M. ARGUELLO
No. 51321
Exp 06-30-10
CIVIL
STATE OF CALIFORNIA

THE STATE OF CALIFORNIA OR ITS OFFICERS OR AGENTS SHALL NOT BE RESPONSIBLE FOR THE ACCURACY OR COMPLETENESS OF ELECTRONIC COPIES OF THIS PLAN SHEET.

ROADWAY QUANTITIES

LOCATION	RHMA (GAP GRADED) TON	STAGE-PHASE
WB Rte 46 ℄ Sta 468+00.00 TO Sta 492+73.78 Overlay IS	139	S4
WB Rte 46 ℄ Sta 494+77.52 TO Sta 502+00.00 Overlay IS	40	S4
WB Rte 46 ℄ Sta 502+00.00 TO Sta 554+00.00 Overlay IS	292	S4
WB Rte 46 ℄ Sta 554+00.00 TO Sta 558+43.72 Overlay IS	25	S4
WB Rte 46 ℄ Sta 568+75.64 TO Sta 573+27.75 Overlay IS	26	S4
WB Rte 46 ℄ Sta 573+27.75 TO Sta 585+00.00 Overlay IS	66	S4
WB Rte 46 ℄ Sta 585+00.00 TO Sta 596+60.43 Overlay IS	65	S4
WB Rte 46 ℄ Sta 598+50.79 TO Sta 606+02.75 Overlay IS	42	S4
WB Rte 46 ℄ Sta 606+02.75 TO Sta 618+00.00 Overlay IS	68	S4
WB Rte 46 ℄ Sta 618+00.00 TO Sta 620+50.00 Overlay IS	23	S4
WB Rte 46 ℄ Sta 468+00.00 TO Sta 471+30.00 Overlay OS	37	S4
WB Rte 46 ℄ Sta 471+30.00 TO Sta 492+78.05 Overlay OS	245	S4
WB Rte 46 ℄ Sta 494+44.78 TO Sta 502+00.00 Overlay OS	84	S4
WB Rte 46 ℄ Sta 502+00.00 TO Sta 539+85.91 Overlay OS	421	S4
WB Rte 46 ℄ Sta 539+84.85 TO Sta 554+00.00 Overlay OS	158	S4
WB Rte 46 ℄ Sta 554+00.00 TO Sta 558+43.72 Overlay OS	50	S4
WB Rte 46 ℄ Sta 568+75.64 TO Sta 573+84.34 Overlay OS	58	S4
WB Rte 46 ℄ Sta 575+26.12 TO Sta 585+00.00 Overlay OS	109	S4
WB Rte 46 ℄ Sta 585+00.00 TO Sta 597+37.62 Overlay OS	140	S4
WB Rte 46 ℄ Sta 598+97.26 TO Sta 606+02.75 Overlay OS	79	S4
WB Rte 46 ℄ Sta 606+02.75 TO Sta 618+00.00 Overlay OS	135	S4
WB Rte 46 ℄ Sta 618+00.00 TO Sta 620+50.00 Overlay OS	28	S4
WB Rte 46 ℄ Sta 468+00.00 TO Sta 493+97.44 Overlay Med Aux Ln	337	S4
WB Rte 46 ℄ Sta 493+97.44 TO Sta 502+00.00 Overlay Med Aux Ln	101	S4
WB Rte 46 ℄ Sta 573+27.75 TO Sta 585+00.00 Overlay Med Aux Ln	118	S4
WB Rte 46 ℄ Sta 585+00.00 TO Sta 597+77.75 Overlay Med Aux Ln	174	S4
WB Rte 46 ℄ Sta 597+77.75 TO Sta 606+02.75 Overlay Med Aux Ln	102	S4
WB Rte 46 ℄ Sta 468+00.00 TO Sta 493+97.44 Overlay Out Aux Ln	275	S4
WB Rte 46 ℄ Sta 493+97.44 TO Sta 502+00.00 Overlay Out Aux Ln	122	S4
WB Rte 46 ℄ Sta 539+84.85 TO Sta 554+00.00 Overlay Out Aux Ln	150	S4
WB Rte 46 ℄ Sta 554+00.00 TO Sta 558+43.72 Overlay Out Aux Ln	60	S4
WB Rte 46 ℄ Sta 568+75.64 TO Sta 585+00.00 Overlay Out Aux Ln	362	S4
WB Rte 46 ℄ Sta 585+00.00 TO Sta 597+77.75 Overlay Out Aux Ln	189	S4
WB Rte 46 ℄ Sta 597+77.75 TO Sta 606+02.75 Overlay Out Aux Ln	120	S4
WB Rte 46 ℄ Sta 468+00.00 TO Sta 493+97.44 Overlay T/W	697	S4
WB Rte 46 ℄ Sta 493+97.44 TO Sta 502+00.00 Overlay T/W	218	S4
WB Rte 46 ℄ Sta 502+00.00 TO Sta 554+00.00 Overlay T/W	1399	S4
WB Rte 46 ℄ Sta 554+00.00 TO Sta 558+43.72 Overlay T/W	121	S4
WB Rte 46 ℄ Sta 568+75.64 TO Sta 585+00.00 Overlay T/W	440	S4
WB Rte 46 ℄ Sta 585+00.00 TO Sta 597+77.75 Overlay T/W	349	S4
WB Rte 46 ℄ Sta 597+77.75 TO Sta 606+02.75 Overlay T/W	219	S4
WB Rte 46 ℄ Sta 606+02.75 TO Sta 618+00.00 Overlay T/W	325	S4
WB Rte 46 ℄ Sta 618+00.00 TO Sta 620+50.00 Overlay T/W	68	S4
Rte 46 X-Over MEDIAN / Union Rd WB SIDE Overlay	40	S4
Rte 46 X-Over MEDIAN / River Grove Dr WB SIDE Overlay	31	S4
TOTAL FOR STAGE 4	8347	

ROADWAY QUANTITIES

LOCATION	RHMA (GAP GRADED) TON	HMA (TYPE A) TON	LEAN CONCRETE BASE (LCB) CY	CLASS 2 AGGREGATE BASE CY	CLASS 1 AGGREGATE SUBBASE CY
TOTAL FOR STAGE 4 (SHEET TOTAL Q-14)	8,347				
TOTAL FOR STAGE 3 (SHEET TOTAL Q-13)	12,911	12,005	7,082	217	21,890
TOTAL FOR STAGE 2 (SHEET TOTAL Q-12)	3,533	43,974	15,522	6,246	56,013
TOTAL FOR STAGE 1 (SHEET TOTAL Q-10)		50,982	18,390	5,304	64,881
PLACE HMA (Misc Area) (SHEET Q-8)		161			
HIGH SIDE SUPER DITCH (HSSD) (SHEET Q-8)		424			
HMA DIKE (SHEET Q-16)		70			
RETAINING WALL (SHEET Q-17)				131	
END WALL WALL BASE (SHEET Q-17)				21	
ESTRELLA RIVER ACCESS Rd, WEST OF FR-1 (Sht D-16)				193	
ESTRELLA DRAINAGE BASIN ACCESS Rd AND RAMP (Sht DD-20)				460	
PINE DRAINAGE BASIN ACCESS Rd AND RAMP (Sht DD-22)				414	
TOTAL	24,791	107,616	40,994	12,986	142,784

COLD PLANE HMA Pvmt

LOCATION	SQYD
WB Rte 46 ℄ Sta 395+00.00 to WB Rte 46 ℄ Sta 398+42.20	11,471
WB Rte 46 ℄ Sta 398+42.20 to WB Rte 46 ℄ Sta 402+35.12	8,750
TOTAL	20,221

CRACK TREATMENT

STAGE	STATION	LOCATION	LENGTH LNMI
S1P2	Rte 46 ℄ Sta 396+00.00 TO Sta 401+91.00	DETOUR 3	0.1
S2P1	Rte 46 ℄ Sta 395+00.00 TO Sta 404+50.00	WESTBOUND LANES	0.2
S2P1	Rte 46 ℄ Sta 413+00.00 TO Sta 428+00.00	WESTBOUND LANES	0.3
S2P1	Rte 46 ℄ Sta 432+50.00 TO Sta 438+88.17	WESTBOUND LANES	0.1
S2P1	Rte 46 ℄ Sta 438+88.17 TO Sta 443+00.00	WESTBOUND LANES	0.1
S2P1	Rte 46 ℄ Sta 448+00.00 TO Sta 453+50.00	WESTBOUND LANES	0.1
S2P1	Rte 46 ℄ Sta 620+50.00 TO Sta 627+58.00	WESTBOUND LANES	0.1
	TOTAL		1.0

SUMMARY OF QUANTITIES
Q-14

REVISED BY	DATE REVISED

CALCULATED-DESIGNED BY: JOSE ARGUELLO
CHECKED BY: SUMI HOODE
FUNCTIONAL SUPERVISOR: JACK WALKER
STATE OF CALIFORNIA - DEPARTMENT OF TRANSPORTATION
06-DESIGN
Caltrans

LAST REVISION 08-17-09 | DATE PLOTTED => 08-DEC-2009 | TIME PLOTTED => 11:02

PLACE HMA DIKE

FROM	TO	TYPE F LF	TYPE E LF	TYPE C LF	TYPE D LF	HMA* (TON)
Rte 46 ℄ Sta 395+00.00 Lt	Rte 46 ℄ Sta 410+88.34 Lt		1,589			2.43
Rte 46 ℄ Sta 411+68.34 Lt	Rte 46 ℄ Sta 424+02.00 Lt		1,234			1.89
Rte 46 ℄ Sta 424+56.00 Lt	Rte 46 ℄ Sta 425+00.00 Lt		44			0.07
Rte 46 ℄ Sta 425+00.00 Lt	Rte 46 ℄ Sta 428+75.00 Lt	375				0.29
Rte 46 ℄ Sta 428+75.00 Lt	Rte 46 ℄ Sta 429+50.00 Lt			75		0.04
Rte 46 ℄ Sta 429+50.00 Lt	Rte 46 ℄ Sta 435+36.00 Lt		586			0.90
Rte 46 ℄ Sta 436+81.00 Lt	Rte 46 ℄ Sta 438+47.81 Lt		167			0.26
Rte 46 ℄ Sta 439+27.81 Lt	Rte 46 ℄ Sta 440+30.00 Lt		102			0.16
Rte 46 ℄ Sta 440+30.00 Lt	Rte 46 ℄ Sta 444+08.38 Lt	379				0.29
Rte 46 ℄ Sta 461+72.00 Lt	Rte 46 ℄ Sta 467+93.00 Lt				628	1.95
Rte 46 ℄ Sta 467+93.00 Lt	Rte 46 ℄ Sta 469+75.00 Lt		182			0.38
Rte 46 ℄ Sta 482+50.00 Lt	Rte 46 ℄ Sta 489+91.00 Lt		740			1.54
Rte 46 ℄ Sta 492+32.39 Lt	Union Rd ℄ Sta 183+20.00 Lt		221			0.34
Union Rd ℄ Sta 183+00.00 Rt	Rte 46 ℄ Sta 494+45.00 Lt		174			0.27
Rte 46 ℄ Sta 494+45.00 Lt	Rte 46 ℄ Sta 545+50.00 Lt		5,057			10.55
FR-1 ℄ Sta 66+51.20 Lt	FR-1 ℄ Sta 72+03.83 Lt		527			0.81
FR-2 ℄ Sta 28+71.92 Lt	FR-2 ℄ Sta 29+97.10 Lt	126				0.10
FR-2 ℄ Sta 28+84.55 Rt	FR-2 ℄ Sta 29+09.01 Rt	25				0.02
FR-2 ℄ Sta 28+84.55 Rt	FR-2 ℄ Sta 29+81.85 Rt			74		0.04
FR-2 ℄ Sta 29+97.10 Lt	N Whitley Gardens Dr ℄ Sta 11+22.00 Lt			142		0.08
FR-2 ℄ Sta 29+81.85 Rt	FR-1 ℄ Sta 67+62.99 Rt		242			0.37
FR-2 ℄ Sta 34+50.00 Lt	FR-2 ℄ Sta 38+75.00 Lt		470			0.72
Estrella RD ℄ Sta 7+34.83 Lt	Estrella RD ℄ Sta 11+70.00 Lt		433			0.66
Estrella RD ℄ Sta 13+70.00 Rt	Estrella RD ℄ Sta 16+00.00 Rt		230			0.35
N Whitley Gardens Dr ℄ Sta 12+60.00 Lt	N Whitley Gardens Dr ℄ Sta 13+60.00 Lt		101			0.15
N Whitley Gardens Dr ℄ Sta 15+75.00 Lt	N Whitley Gardens Dr ℄ Sta 18+20.00 Lt		168			0.26
N Whitley Gardens Dr ℄ Sta 16+54.30 Rt	N Whitley Gardens Dr ℄ Sta 17+30.00 Rt			76		0.04
Rte 46 ℄ Sta 578+50.00 Lt	Rte 46 ℄ Sta 597+37.46 Lt		2,430			5.07
Rte 46 ℄ Sta 597+37.46 Lt	Almond Dr ℄ Sta 31+00.00 Lt		89			0.14
Almond Dr ℄ Sta 33+60.00 Lt	Almond Dr ℄ Sta 34+00.00 Lt		41			0.06
Almond Dr ℄ Sta 32+78.00 Lt	Rte 46 ℄ Sta 598+97.26 Lt		218			0.33
Rte 46 ℄ Sta 598+97.26 Lt	Rte 46 ℄ Sta 620+00.00 Lt		2,108			4.40
Rte 46 ℄ Sta 395+41.11 Rt	Rte 46 ℄ Sta 410+52.93 Rt		1,511			3.15
Rte 46 ℄ Sta 410+52.93 Rt	Geneseo Rd ℄ Sta 8+27.43 Lt		236			0.36
Rte 46 ℄ Sta 411+97.73 Rt	Rte 46 ℄ Sta 421+34.00 Rt		940			1.96
Rte 46 ℄ Sta 421+85.00 Rt	Rte 46 ℄ Sta 422+40.00 Rt		55			0.11
Rte 46 ℄ Sta 422+40.00 Rt	Rte 46 ℄ Sta 423+20.00 Rt			80		0.07
Rte 46 ℄ Sta 423+20.00 Rt	Rte 46 ℄ Sta 429+10.00 Rt	590				0.62
Rte 46 ℄ Sta 429+63.50 Rt	Rte 46 ℄ Sta 430+00.00 Rt			37		0.03
Rte 46 ℄ Sta 430+00.00 Rt	Rte 46 ℄ Sta 438+48.54 Rt		849			1.77
Rte 46 ℄ Sta 439+28.54 Rt	Rte 46 ℄ Sta 439+60.00 Rt		31			0.06
Rte 46 ℄ Sta 439+60.00 Rt	Rte 46 ℄ Sta 440+40.00 Rt			80		0.07
Rte 46 ℄ Sta 440+40.00 Rt	Rte 46 ℄ Sta 442+50.00 Rt	210				0.22
Rte 46 ℄ Sta 442+50.00 Rt	Rte 46 ℄ Sta 445+00.00 Rt			250		0.52
Rte 46 ℄ Sta 445+00.00 Rt	Rte 46 ℄ Sta 445+88.69 Rt	89				0.09
Rte 46 ℄ Sta 449+18.12 Rt	Rte 46 ℄ Sta 449+43.45 Rt	25				0.03
Rte 46 ℄ Sta 449+43.45 Rt	Rte 46 ℄ Sta 450+20.00 Rt			76		0.06
Rte 46 ℄ Sta 450+20.00 Rt	Rte 46 ℄ Sta 451+50.00 Rt		128			0.27
Rte 46 ℄ Sta 453+50.00 Rt	Rte 46 ℄ Sta 456+40.42 Rt		287			0.60
Rte 46 ℄ Sta 468+71.00 Rt	Rte 46 ℄ Sta 469+60.00 Rt		89			0.19
Rte 46 ℄ Sta 469+60.00 Rt	Rte 46 ℄ Sta 470+40.00 Rt			80		0.07
Rte 46 ℄ Sta 470+40.00 Rt	Rte 46 ℄ Sta 479+18.90 Rt	880				0.92
Rte 46 ℄ Sta 480+88.29 Rt	Rte 46 ℄ Sta 481+38.83 Rt	50				0.05
Rte 46 ℄ Sta 481+38.83 Rt	Rte 46 ℄ Sta 482+10.00 Rt			72		0.06
Rte 46 ℄ Sta 482+10.00 Rt	Rte 46 ℄ Sta 486+74.00 Rt		466			0.97
Rte 46 ℄ Sta 488+00.00 Rt	Rte 46 ℄ Sta 490+00.00 Rt		200			0.31
Union ℄ Sta 178+50.00 Rt	Rte 46 ℄ Sta 496+75.00 Rt		290			0.44
Rte 46 ℄ Sta 516+74.00 Rt	Rte 46 ℄ Sta 529+00.00 Rt		1,226			1.88
Rte 46 ℄ Sta 529+00.00 Rt	Rte 46 ℄ Sta 533+31.47 Rt		435			0.67
Rte 46 ℄ Sta 533+31.47 Rt	Prvt Dwy 5 ℄ Sta 3+28.57 Lt		116			0.18
Prvt Dwy 5 ℄ Sta 3+25.18 Rt	Rte 46 ℄ Sta 534+09.90 Rt		120			0.18
Rte 46 ℄ Sta 534+09.90 Rt	Rte 46 ℄ Sta 552+00.00 Rt		1,814			2.78
Rte 46 ℄ Sta 554+75.00 Rt	Rte 46 ℄ Sta 555+37.50 Rt			62		0.05
Rte 46 ℄ Sta 555+37.50 Rt	Rte 46 ℄ Sta 558+58.03 Rt	316				0.33
Rte 46 ℄ Sta 568+70.64 Rt	Rte 46 ℄ Sta 575+25.75 Rt		658			1.37
S Whitley Gardens Dr ℄ Sta 192+23.50 Rt	Rte 46 ℄ Sta 576+68.98 Rt		385			0.59
	SUBTOTAL 1	3065	26,989	1104	628	55.99

* QUANTITY INCLUDED IN ROADWAY QUANTITY TABLE (SHEET Q-14)

Dist	COUNTY	ROUTE	POST MILES TOTAL PROJECT	SHEET No.	TOTAL SHEETS
05	SLO	46	36.6/41.2	450	595

8-24-09
REGISTERED CIVIL ENGINEER DATE

12-7-09
PLANS APPROVAL DATE

REGISTERED PROFESSIONAL ENGINEER
JOSE M. ARGUELLO
No. 51321
Exp 06-30-10
CIVIL
STATE OF CALIFORNIA

THE STATE OF CALIFORNIA OR ITS OFFICERS OR AGENTS SHALL NOT BE RESPONSIBLE FOR THE ACCURACY OR COMPLETENESS OF ELECTRONIC COPIES OF THIS PLAN SHEET.

CALCULATED-DESIGNED BY: JOSE ARGUELLO
CHECKED BY: SUMI HOODE
REVISED BY
DATE REVISED
FUNCTIONAL SUPERVISOR: JACK WALKER
STATE OF CALIFORNIA - DEPARTMENT OF TRANSPORTATION
Caltrans
06-DESIGN

SUMMARY OF QUANTITIES

Q-15

LAST REVISION 08-17-09
DATE PLOTTED => 08-DEC-2009
TIME PLOTTED => 10:49

BORDER LAST REVISED 3/1/2007
RELATIVE BORDER SCALE IS IN INCHES 0 1 2 3
USERNAME => trmnguye
DGN FILE => 533072pa015.dgn
CU 06220
EA 330721

PLACE HMA DIKE

FROM	TO	TYPE F LF	TYPE E LF	TYPE C LF	TYPE D LF	HMA* (TON)
Rte 46 ℄ Sta 576+68.98 Rt	Rte 46 ℄ Sta 596+67.43 Rt		1,997			4.17
Rte 46 ℄ Sta 596+67.43 Rt	River Grove Drive ℄ Sta 24+40.00 Lt		407			0.62
River Grove Drive ℄ Sta 24+40.00 Rt	Rte 46 ℄ Sta 598+18.73 Rt		461			0.71
Rte 46 ℄ Sta 598+18.73 Rt	Rte 46 ℄ Sta 615+25.00 Rt		2,624			5.47
Rte 46 ℄ Sta 615+22.35 Rt	Rte 46 ℄ Sta 627+58.92 Rt		1,235			2.58
	SUBTOTAL 2		6,724			13.54
	SUBTOTAL 1	3065	26,989	1104	628	55.99
	TOTAL	3065	33,713	1104	628	69.53

* QUANTITY INCLUDED IN ROADWAY QUANTITY TABLE (SHEET Q-14)

RUMBLE STRIP

STAGE	LOCATION		RUMBLE STRIP		
			INSIDE Shld(IES)	OUTSIDE Shld(OES)	LANE LINE(LL)
	FROM	TO	Sta	Sta	Sta
S1P1	EB Rte 46 ℄ Sta 395+41.1	EB Rte 46 ℄ Sta 410+52.6		15.11	
S1P1	EB Rte 46 ℄ Sta 404+29.4	EB Rte 46 ℄ Sta 410+60.4	6.31		
S1P1	EB Rte 46 ℄ Sta 411+96.2	EB Rte 46 ℄ Sta 436+38.2		24.42	
S1P1	EB Rte 46 ℄ Sta 413+78.9	EB Rte 46 ℄ Sta 438+24.1	24.45		
S1P1	EB Rte 46 ℄ Sta 441+38.2	EB Rte 46 ℄ Sta 456+59.5	15.21		
S1P1	EB Rte 46 ℄ Sta 441+38.2	EB Rte 46 ℄ Sta 454+69.8		13.32	
S1P1	EB Rte 46 ℄ Sta 459+73.5	EB Rte 46 ℄ Sta 485+88.3		26.15	
S1P1	EB Rte 46 ℄ Sta 459+73.5	EB Rte 46 ℄ Sta 463+00.0	3.26		
S1P1	EB Rte 46 ℄ Sta 474+00.0	EB Rte 46 ℄ Sta 480+00.0			6.00
S1P1	EB Rte 46 ℄ Sta 554+00.0	EB Rte 46 ℄ Sta 558+52.7	4.53		
S1P1	EB Rte 46 ℄ Sta 554+00.0	EB Rte 46 ℄ Sta 558+52.7		4.53	
S1P1	EB Rte 46 ℄ Sta 557+00.0	EB Rte 46 ℄ Sta 558+50.0			1.50
S1P1	EB Rte 46 ℄ Sta 568+70.6	EB Rte 46 ℄ Sta 597+04.7	28.34		
S1P1	EB Rte 46 ℄ Sta 568+70.6	EB Rte 46 ℄ Sta 575+25.8		6.55	
S1P1	EB Rte 46 ℄ Sta 576+69.0	EB Rte 46 ℄ Sta 596+67.4		19.98	
S1P1	EB Rte 46 ℄ Sta 583+00.0	EB Rte 46 ℄ Sta 593+00.0			10.00
S1P1	EB Rte 46 ℄ Sta 598+18.7	EB Rte 46 ℄ Sta 615+25.0		17.06	
S1P1	EB Rte 46 ℄ Sta 598+94.7	EB Rte 46 ℄ Sta 607+03.8	8.09		
		EB TOTAL FOR S1P1	90.19	127.12	17.50
S1P1	WB Rte 46 ℄ Sta 554+00.0	WB Rte 46 ℄ Sta 558+43.7		4.44	
S1P1	WB Rte 46 ℄ Sta 554+00.0	WB Rte 46 ℄ Sta 558+43.7	4.44		
S1P1	WB Rte 46 ℄ Sta 568+75.6	WB Rte 46 ℄ Sta 570+25.0			1.49
S1P1	WB Rte 46 ℄ Sta 568+75.6	WB Rte 46 ℄ Sta 573+83.3		5.08	
S1P1	WB Rte 46 ℄ Sta 568+75.6	WB Rte 46 ℄ Sta 585+00.0	16.24		
S1P1	WB Rte 46 ℄ Sta 575+26.4	WB Rte 46 ℄ Sta 585+00.0		9.74	
S1P1	WB Rte 46 ℄ Sta 583+00.0	WB Rte 46 ℄ Sta 585+00.0			2.00
		WB TOTAL FOR S1P1	20.68	19.26	3.49
S1P1	Det 1 Rte 46 ℄ Sta 537+00.0	Det 1 Rte 46 ℄ Sta 554+00.0	17.00		
S1P1	Det 1 Rte 46 ℄ Sta 537+00.0	Det 1 Rte 46 ℄ Sta 554+00.0		17.00	
S1P1	Det 1 Rte 46 ℄ Sta 537+00.0	Det 1 Rte 46 ℄ Sta 554+00.0			17.00
		Det TOTAL FOR S1P1	17.00	17.00	17.00
S1P2	Det 1 Rte 46 ℄ Sta 528+98.3	Det 1 Rte 46 ℄ Sta 537+00.0		8.02	
S1P2	Det 1 Rte 46 ℄ Sta 534+95.1	Det 1 Rte 46 ℄ Sta 537+00.0	2.05		
S1P2	Det 1 Rte 46 ℄ Sta 535+00.0	Det 1 Rte 46 ℄ Sta 537+00.0			2.00
S1P2	Det 2 Rte 46 ℄ Sta 607+03.8	Det 2 Rte 46 ℄ Sta 616+50.0	9.46		
S1P2	Det 2 Rte 46 ℄ Sta 615+22.4	Det 2 Rte 46 ℄ Sta 627+58.9		12.37	
S1P2	Det 3 Rte 46 ℄ Sta 395+65.4	Det 3 Rte 46 ℄ Sta 404+29.4	8.64		
S1P2	Det 3 Rte 46 ℄ Sta 392+22.5	Det 3 Rte 46 ℄ Sta 401+68.2		9.46	
S1P2	Det 4 Rte 46 ℄ Sta 463+00.0	Det 4 Rte 46 ℄ Sta 481+00.0	18.00		
S1P2	Det 4 Rte 46 ℄ Sta 480+00.0	Det 4 Rte 46 ℄ Sta 486+31.1		6.31	
		Det TOTAL FOR S1P2	38.15	36.16	2.00
S2P1	WB Rte 46 ℄ Sta 395+00.0	WB Rte 46 ℄ Sta 408+78.9		13.79	
S2P1	WB Rte 46 ℄ Sta 395+00.0	WB Rte 46 ℄ Sta 410+16.3	15.16		
S2P1	WB Rte 46 ℄ Sta 411+97.5	WB Rte 46 ℄ Sta 436+38.1	24.41		
S2P1	WB Rte 46 ℄ Sta 413+78.9	WB Rte 46 ℄ Sta 436+38.1		22.59	
S2P1	WB Rte 46 ℄ Sta 439+52.2	WB Rte 46 ℄ Sta 454+73.5	15.21		
S2P1	WB Rte 46 ℄ Sta 441+38.2	WB Rte 46 ℄ Sta 454+73.5		13.35	
S2P1	WB Rte 46 ℄ Sta 457+87.7	WB Rte 46 ℄ Sta 471+00.0	13.12		
S2P1	WB Rte 46 ℄ Sta 459+73.5	WB Rte 46 ℄ Sta 492+78.1		33.05	
S2P1	WB Rte 46 ℄ Sta 474+50.0	WB Rte 46 ℄ Sta 492+73.8	18.24		
S2P1	WB Rte 46 ℄ Sta 494+44.8	WB Rte 46 ℄ Sta 554+00.0		59.55	
S2P1	WB Rte 46 ℄ Sta 494+77.5	WB Rte 46 ℄ Sta 554+00.0	59.22		
S2P1	WB Rte 46 ℄ Sta 508+00.0	WB Rte 46 ℄ Sta 554+00.0			46.00
S2P1	WB Rte 46 ℄ Sta 585+00.0	WB Rte 46 ℄ Sta 597+37.5		12.37	

RUMBLE STRIP

STAGE	LOCATION		RUMBLE STRIP		
			INSIDE Shld(IES)	OUTSIDE Shld(OES)	LANE LINE(LL)
	FROM	TO	Sta	Sta	Sta
S2P1	WB Rte 46 ℄ Sta 585+00.0	WB Rte 46 ℄ Sta 596+60.4	11.60		
S2P1	WB Rte 46 ℄ Sta 585+00.0	WB Rte 46 ℄ Sta 593+00.0			8.00
S2P1	WB Rte 46 ℄ Sta 598+50.8	WB Rte 46 ℄ Sta 618+00.0	19.49		
S2P1	WB Rte 46 ℄ Sta 598+97.3	WB Rte 46 ℄ Sta 618+00.0		19.03	
		WB TOTAL FOR S2P1	176.45	173.73	54.00
S2P2	WB Rte 46 ℄ Sta 618+00.0	WB Rte 46 ℄ Sta 620+50.0		2.50	
S2P2	WB Rte 46 ℄ Sta 618+00.0	WB Rte 46 ℄ Sta 619+43.5	1.44		
		WB TOTAL FOR S2P2	1.44	2.50	
S2P2	Det 5 Rte 46 ℄ Sta 463+00.0	Det 5 Rte 46 ℄ Sta 470+91.2	7.91		
S2P2	Det 5 Rte 46 ℄ Sta 468+50.7	Det 5 Rte 46 ℄ Sta 474+00.0		5.49	
		Det TOTAL FOR S2P2	7.91	5.49	
S3	EB Rte 46 ℄ Sta 395+41.1	EB Rte 46 ℄ Sta 410+60.4	15.19		
S3	EB Rte 46 ℄ Sta 395+41.1	EB Rte 46 ℄ Sta 410+52.9		15.12	
S3	EB Rte 46 ℄ Sta 411+96.2	EB Rte 46 ℄ Sta 436+38.2		24.42	
S3	EB Rte 46 ℄ Sta 413+78.9	EB Rte 46 ℄ Sta 438+24.1	24.45		
S3	EB Rte 46 ℄ Sta 441+38.2	EB Rte 46 ℄ Sta 456+59.5	15.21		
S3	EB Rte 46 ℄ Sta 441+38.2	EB Rte 46 ℄ Sta 454+69.8		13.32	
S3	EB Rte 46 ℄ Sta 459+73.5	EB Rte 46 ℄ Sta 493+54.9		33.81	
S3	EB Rte 46 ℄ Sta 459+73.5	EB Rte 46 ℄ Sta 463+00.0	3.26		
S3	EB Rte 46 ℄ Sta 485+88.5	EB Rte 46 ℄ Sta 493+17.1	7.29		
S3	EB Rte 46 ℄ Sta 485+88.5	EB Rte 46 ℄ Sta 558+52.7	72.64		
S3	EB Rte 46 ℄ Sta 495+57.1	EB Rte 46 ℄ Sta 531+20.7		35.64	
S3	EB Rte 46 ℄ Sta 536+20.7	EB Rte 46 ℄ Sta 558+52.7		22.32	
S3	EB Rte 46 ℄ Sta 568+70.6	EB Rte 46 ℄ Sta 597+04.7	28.34		
S3	EB Rte 46 ℄ Sta 568+70.6	EB Rte 46 ℄ Sta 575+25.8		6.55	
S3	EB Rte 46 ℄ Sta 576+69.0	EB Rte 46 ℄ Sta 596+67.4		19.98	
S3	EB Rte 46 ℄ Sta 598+18.7	EB Rte 46 ℄ Sta 619+43.5	21.25		
S3	EB Rte 46 ℄ Sta 598+94.7	EB Rte 46 ℄ Sta 607+03.8		8.09	
S3	EB Rte 46 ℄ Sta 607+03.8	EB Rte 46 ℄ Sta 616+46.6		9.43	
		EB TOTAL FOR S3	187.63	188.68	
S4	EB Rte 46 ℄ Sta 463+00.0	EB Rte 46 ℄ Sta 485+88.5	22.88		
S4	WB Rte 46 ℄ Sta 468+00.0	WB Rte 46 ℄ Sta 492+78.1		24.78	
S4	WB Rte 46 ℄ Sta 468+00.0	WB Rte 46 ℄ Sta 492+73.8	24.74		
S4	WB Rte 46 ℄ Sta 494+44.8	WB Rte 46 ℄ Sta 558+43.7		63.99	
S4	WB Rte 46 ℄ Sta 494+77.5	WB Rte 46 ℄ Sta 558+43.7	63.66		
S4	WB Rte 46 ℄ Sta 568+75.6	WB Rte 46 ℄ Sta 573+83.3		5.08	
S4	WB Rte 46 ℄ Sta 568+75.6	WB Rte 46 ℄ Sta 596+60.4	27.85		
S4	WB Rte 46 ℄ Sta 575+26.1	WB Rte 46 ℄ Sta 597+37.5		22.11	
S4	WB Rte 46 ℄ Sta 598+50.8	WB Rte 46 ℄ Sta 619+43.5	20.93		
S4	WB Rte 46 ℄ Sta 598+97.3	WB Rte 46 ℄ Sta 620+50.0		21.53	
		WB TOTAL FOR S4	160.06	137.49	
		EB TOTAL FOR S3	187.63	188.68	
		Det TOTAL FOR S2P2	7.91	5.49	
		WB TOTAL FOR S2P2	1.44	2.50	
		WB TOTAL FOR S2P1	176.45	173.73	54.00
		Det TOTAL FOR S1P2	38.15	36.16	2.00
		Det TOTAL FOR S1P1	17.00	17.00	17.00
		WB TOTAL FOR S1P1	20.68	19.26	3.49
		EB TOTAL FOR S1P1	90.19	127.12	17.50
		SUBTOTAL	699.51	707.43	93.99
		TOTAL		1500.93	

Dist	COUNTY	ROUTE	POST MILES TOTAL PROJECT	SHEET No.	TOTAL SHEETS
05	SLO	46	36.6/41.2	451	595

8-24-09
REGISTERED CIVIL ENGINEER DATE

JOSE M. ARGUELLO No. 51321 Exp 06-30-10 CIVIL — REGISTERED PROFESSIONAL ENGINEER — STATE OF CALIFORNIA

12-7-09
PLANS APPROVAL DATE

THE STATE OF CALIFORNIA OR ITS OFFICERS OR AGENTS SHALL NOT BE RESPONSIBLE FOR THE ACCURACY OR COMPLETENESS OF ELECTRONIC COPIES OF THIS PLAN SHEET.

SUMMARY OF QUANTITIES
Q-16

REVISED BY | DATE REVISED
JOSE ARGUELLO | SUMI HOODE
CALCULATED-DESIGNED BY | CHECKED BY
FUNCTIONAL SUPERVISOR: JACK WALKER
STATE OF CALIFORNIA, -, DEPARTMENT OF TRANSPORTATION
Caltrans 06-DESIGN

LAST REVISION 08-19-09 | DATE PLOTTED => 08-DEC-2009 | TIME PLOTTED => 10:49

BORDER LAST REVISED 3/1/2007 | RELATIVE BORDER SCALE IS IN INCHES 0 1 2 3 | USERNAME => trmnguye | DGN FILE => 533072pa016.dgn | CU 06220 | EA 330721

Dist	COUNTY	ROUTE	POST MILES TOTAL PROJECT	SHEET No.	TOTAL SHEETS
05	SLO	46	36.6/41.2	452	595

8-24-09
REGISTERED CIVIL ENGINEER DATE

12-7-09
PLANS APPROVAL DATE

REGISTERED PROFESSIONAL ENGINEER
JOSE M. ARGUELLO
No. 51321
Exp 06-30-10
CIVIL
STATE OF CALIFORNIA

THE STATE OF CALIFORNIA OR ITS OFFICERS OR AGENTS SHALL NOT BE RESPONSIBLE FOR THE ACCURACY OR COMPLETENESS OF ELECTRONIC COPIES OF THIS PLAN SHEET.

PIPE DOWNDRAINS

LENGTH L' (N)	PLACE HMA *		DOWNDRAIN				ROCK SLOPE PROTECTION**		DESCRIPTION	STAGE - PHASE	STATION	DRAINAGE PLAN Sht No.
	Misc AREA	HMA	12" CSP (0.079" THICK)	12" Anch Assy	12" Ent TAPER	12" SLIP Jt	BACKING No. 2, METHOD B	FABRIC				
LF	SQYD	TON	LF	EA	EA	EA	CY	SQYD				
56.8	2	0.3	45.0		1	1			DD CSP 12" Rt N WHITLEY GARDENS Dr	S2-P1	16+57	D-15
22.7	2	0.3	10.9	1	1	1			DD CSP 12" Anchored Lt FR-2	S1-P1	28+75	D-15
33.9	2	0.3	22.1	1	1	1			DD CSP 12" Anchored Rt FR-2	S2-P1	28+87	D-15
52.0	3	0.5	40.2	1	1	1	1	5	DD CSP 12" Anchored Lt ALMOND Dr	S2-P1	30+61	D-18
14.8	2	0.3	3.0	1	1	1			DD CSP 12" Anchored Lt Rte 46	S2-P1	411+71	D-3
30.9	2	0.3	19.1	1	1	1	1	5	DD CSP 12" Anchored Rt Rte 46	S1-P1	423+23	D-4
18.9	2	0.3	7.1	1	1	1	1	5	DD CSP 12" Anchored Lt Rte 46	S2-P1	428+72	D-4
18.9	2	0.3	7.1	1	1	1	1	5	DD CSP 12" Anchored Rt Rte 46	S1-P1	429+07	D-4
20.9	2	0.3	9.1	1	1	1	1	5	DD CSP 12" Anchored Lt Rte 46	S2-P1	438+45	D-5
41.0	2	0.3	29.2	1	1	1	1	5	DD CSP 12" Anchored Rt Rte 46	S1-P1	470+43	D-7
23.7	2	0.3	11.9	1	1	1	1	5	DD CSP 12" Anchored Rt Rte 46	S1-P1	482+13	D-8
334.5	23	3.5	204.7	10	11	11	7	35	TOTAL			

* QUANTITY INCLUDED IN PLACE HMA (Misc AREA) TABLE (Sht Q-8)
** QUANTITY INCLUDED IN ROCK SLOPE PROTECTION TABLE (Sht Q-18)

END WALL BASE

LOCATION	CLASS 2 AB 95% (*) CY
FR-1 ℄ 69+23.54, 109.99' Rt ENDWALL	21
TOTAL	21

(*) INCLUDED IN ROADWAY QUANTITY TABLES (SHEET Q-14)

BOX CULVERT

DESCRIPTION	LOCATION	BAR REINFORCING STEEL (BOX Culv)	CLASS 1 CONCRETE (BOX Culv)
		LB	CY
DRAINAGE QUANTITIES Sht DQ-16		35,338	378.4
WILDLIFE CROSSING Reinf Conc SINGLE BOX Culv	Rte 46 ℄ Sta 445+71.332	103,468	430
WILDLIFE CROSSING CUTOFF WALL	Rte 46 ℄ Sta 445+07.73 & Sta 446+30.04	367	6
WILDLIFE CROSSING PARAPET	Rte 46 ℄ Sta 445+07.73 & Sta 446+30.04	461	3
	TOTAL	139,634	817.4

MINOR CONCRETE (GUTTER)

RETAINING WALL No.	LOCATION	LENGTH (N)	MINOR CONCRETE (GUTTER)
		LF	CY
1 & 2	Rte 46 ℄ Sta 444+08.38 78.15' Lt to Sta 445+46.07 78.15' Lt	138.00	4.59
3 & 4	Rte 46 ℄ Sta 445+88.69 72.13' Rt to Sta 447+64.11 71.13' Rt	174.00	5.78
5	Rte 46 ℄ Sta 448+39.96 72.22' Rt to Sta 449+18.14 72.15' Rt	80.00	2.66
	TOTAL	392.00	13.02

(N) NOT A SEPARATE PAY ITEM, FOR INFORMATION ONLY.

RETAINING WALL

RETAINING WALL No.	LOCATION	RETAINING WALL TYPE	STRUCTURAL CONCRETE (RW) CY	BAR REINFORCING STEEL (RW) LB	STRUCTURE EXCAVATION (RW) CY	STRUCTURE BACKFILL (RW) CY	PERVIOUS BACKFILL MATERIAL (RW) CY	WATER STOP (N)	CLASS 2 AB 95% (*) CY
1	Rte 46 ℄ Sta 444+08.381 78.146' Lt to Sta 444+98.381 78.145' Lt	1	103.16	10,265.30	331.56	226.04	16.47	0.00	0.00
2	Rte 46 ℄ Sta 445+17.077 78.145' Lt to Sta 445+46.073 78.145' Lt	1	36.77	4,110.82	120.72	81.64	5.07	13.02	0.00
3	Rte 46 ℄ Sta 445+88.691 72.132' Rt to Sta 446+20.691 72.131' Rt	1	37.58	4,054.92	71.91	96.25	5.63	0.00	0.00
4	Rte 46 ℄ Sta 446+39.388 72.133' Rt to Sta 447+64.114 72.130' Rt	1	165.06	19,623.32	258.23	430.15	33.53	16.14	0.00
5	Rte 46 ℄ Sta 448+28.842 72.150' Lt to Sta 449+18.143 72.154' Rt	1	98.47	9,578.28	129.77	205.55	19.70	12.58	97.86
7	Rte 46 ℄ Sta 479+18.889 69.655' Rt to Sta 480+88.274 71.384' Rt	1	191.34	20,593.19	320.42	526.44	41.31	13.45	32.68
		TOTAL	632.38	68,225.83	1232.61	1566.07	121.71	55.19	130.54

(*) INCLUDED IN ROADWAY QUANTITY TABLES (SHEET Q-14)

SUMMARY OF QUANTITIES
Q-17

CALCULATED-DESIGNED BY: JOSE ARGUELLO
CHECKED BY: SUMI HOODE
REVISED BY / DATE REVISED
FUNCTIONAL SUPERVISOR: JACK WALKER
STATE OF CALIFORNIA - DEPARTMENT OF TRANSPORTATION
06-DESIGN
Caltrans

LAST REVISION | DATE PLOTTED => 08-DEC-2009
07-23-09 | TIME PLOTTED => 10:49

BORDER LAST REVISED 3/1/2007
RELATIVE BORDER SCALE IS IN INCHES 0 1 2 3
USERNAME => trmnguye
DGN FILE => 533072pa017.dgn
CU 06220
EA 330721

Dist	COUNTY	ROUTE	POST MILES TOTAL PROJECT	SHEET No.	TOTAL SHEETS
05	SLO	46	36.6/41.2	453	595

8-24-09
REGISTERED CIVIL ENGINEER DATE

12-7-09
PLANS APPROVAL DATE

JOSE M. ARGUELLO No. 51321 Exp 06-30-10 CIVIL — REGISTERED PROFESSIONAL ENGINEER — STATE OF CALIFORNIA

THE STATE OF CALIFORNIA OR ITS OFFICERS OR AGENTS SHALL NOT BE RESPONSIBLE FOR THE ACCURACY OR COMPLETENESS OF ELECTRONIC COPIES OF THIS PLAN SHEET.

CONCRETE STAINING

STAGE - PHASE	DRAINAGE PLAN Sht No.	DRAINAGE SYSTEM No. ⬡	DRAINAGE UNIT No. ○	DESCRIPTION	Conc STAINING
				CONCRETE APRON	SQYD
S1-P1	D-3	4	f	G2 DI 24-9 Median	27.8
S2-P1	D-3	4	l	G2 DI 24-9 Median	27.8
S1-P1	D-5	7	f	G2 DI 24-9 Median	27.8
S2-P1	D-5	7	h	G2 DI 24-9 Median	27.8
S1-P1	D-5	13	d	G2 DI 24-9 Median	27.8
S1-P1	D-5	13	k	G2 DI 24-9 Median	27.8
S1-P1	D-5	13	n	G2 DI 24-9 Median	27.8
S2-P1	D-6	14	i	G2 DI 24-9 Median	27.8
S2-P1	D-6	14	k	G2 DI 24-9 Median	27.8
S1-P1	D-7	16	d	G2 DI 24-9 Median	27.8
S2-P1	D-9	22	h	G2 DI 24-9 Median	27.8
S2-P1	D-9	22	j	G2 DI 24-9 Median	27.8
S2-P1	D-10	23	h	G1 DI 24-9 Median	27.8
S2-P1	D-10	24	f	G2 DI 24-9 Median	27.8
S3	D-11	25	l	G2 DI 24-9 Median	27.8
S2-P1	D-12	27	b	G2 DI 24-9 Median	27.8
S2-P1	D-13	28	i	G2 DI 24-9 Median	27.8
S2-P1	D-14	29	e	G2 DI 24-9 Swale	23.8
S2-P1	D-14	29	g	G2 DI 24-9 Swale	17.1
S2-P1	D-13	29	i	G2 DI 24-9 Swale	17.1
S2-P1	D-13	29	k	G2 DI 24-9 Swale	17.1
S2-P1	D-13	29	m	G2 DI 24-9 Median	27.8
S1-P1	D-14	31	d	G2 DI 24-9 Median	73.1
S1-P1	D-14	31	f	G2 DI 24-9 Median	27.8
S1-P1	D-14	31	h	G2 DI 24-9 Median	63.8
S1-P1	D-15	44	f	G2 DI 24-9 Median	27.8
S1-P1	D-15	44	k	G2 DI 24-9 Median	27.8
S1-P1	D-15	44	m	G2 DI 24-9 Median	27.8
S1-P1	D-17	44	cc	G1 DI 24-9 Median	27.8
S1-P1	D-18	48	r	G2 DI 24-9 Median	27.7
S2-P1	D-18	48	z	G2 DI 24-9 Median	27.8
				CONCRETE APRON SUBTOTAL	906.9
				CONCRETE DITCH LINING SUBTOTAL (Q-18)	5192.5
				MBGR SUBTOTAL (Q-23)	2264.0
				SIGN POST SUBTOTAL 1 (Q-23)	243.5
				SIGN POST SUBTOTAL 2 (Q-23)	75.5
				TOTAL	8682.4

CONCRETE (DITCH LINING)

ALIGNMENT	TYPE	Beg STATION	END STATION	SIDE	TOC DITCH	TOF DITCH	Conc ** STAINING
					CY	CY	SQYD
ESTRELLA Rd	SLOPE DITCH *	11+58	12+63	Lt	-	8.0	-
ESTRELLA Rd	SLOPE DITCH *	12+71	13+07	Lt	-	1.5	-
N WHITLEY GARDENS Dr	4.0' TOF	13+60	15+58	Lt	-	9.2	93.1
FR-2	4.0' TOC	36+50	37+96	Lt	12.8	-	130.4
Rte 46	4.0' TOC	412+73	416+00	Rt	16.6	-	169.7
Rte 46	4.0' TOC	420+50	424+25	Lt	18.9	-	194.0
Rte 46	5.2' TOF	424+25	427+00	Lt	-	16.7	178.0
Rte 46	4.0' TOC	435+00	438+67	Rt	18.9	-	194.0
Rte 46	5.2' TOF	439+22	441+43	Rt	-	13.5	141.2
Rte 46	5.2' TOF	439+25	441+95	Lt	-	16.2	172.3
Rte 46	5.2' TOF	445+17	446+22	Rt	-	6.7	67.4
Rte 46	4.0' TOC	448+46	449+40	Rt	4.9	-	49.2
Rte 46	5.2' TOF	460+75	462+25	Lt	-	9.2	95.4
Rte 46	4.0' TOC	462+25	471+63	Lt	47.5	-	491.5
Rte 46	4.0' TOC	508+00	515+50	Lt	37.2	-	383.9
Rte 46	4.0' TOC	516+50	521+00	Rt	23.9	-	246.2
Rte 46	4.0' TOC	521+30	533+00	Rt	59.3	-	614.1
Rte 46	4.0' TOC	526+50	529+07	Lt	13.2	-	135.0
Rte 46	4.0' TOC	534+30	546+95	Rt	71.0	-	735.1
Rte 46	4.0' TOC	545+00	555+25	Lt	53.9	-	557.7
Rte 46	6.0' TOF	552+25	559+78	Rt	-	50.3	544.3
				SUB-TOTAL	378.1	131.3	5192.5
				CONCRETE DITCH LINING TOTAL	509.4		

* SEE ESTRELLA DRAINAGE BASIN DETAIL (SHEET DD-20)
** QUANTITY INCLUDED IN CONCRETE STAINING TABLE (Q-18)

ROCK SLOPE PROTECTION

ROCK SLOPE PROTECTION ½ TON, METHOD B	ROCK SLOPE PROTECTION ¼ TON, METHOD B	ROCK SLOPE PROTECTION LIGHT, METHOD B	ROCK SLOPE PROTECTION BACKING No. 2, METHOD B	ROCK SLOPE PROTECTION FABRIC	DESCRIPTION	STAGE - PHASE	STATION	DRAINAGE PLAN Sht No.
CY	CY	CY	CY	SQYD				
4278	470	3478	2247	13,603	DRAINAGE SYSTEMS Sht DQ-16			
-	-	-	18	48	HMA OVERSIDE DRAINS Sht Q-4			
-	-	-	7	35	PIPE DOWNDRAINS Sht Q-17			
		31			RSP RW No.3 & No.4, RCB1 (WLX-1)	S1-P1	445+71	D-5
		205			RSP RW No.7	S1-P1	480+00	D-8
4278	470	3714	2272	13,686	TOTAL			

SUMMARY OF QUANTITIES
Q-18

STATE OF CALIFORNIA - DEPARTMENT OF TRANSPORTATION
Caltrans
06-DESIGN
FUNCTIONAL SUPERVISOR: JACK WALKER
CALCULATED-DESIGNED BY: JOSE ARGUELLO
CHECKED BY: SUMI HOODE
REVISED BY
DATE REVISED

LAST REVISION | DATE PLOTTED => 08-DEC-2009
08-19-09 | TIME PLOTTED => 10:49

BORDER LAST REVISED 3/1/2007 | RELATIVE BORDER SCALE IS IN INCHES 0 1 2 3 | USERNAME => trmnguye DGN FILE => 533072pa018.dgn | CU 06220 | EA 330721

FENCE (TYPE BW, 5 STRAND, METAL POST)

SHEET No.	LOCATION FROM	LOCATION TO	LENGTH LF
	WESTBOUND SIDE		
L-3	Rte 46 ℄ Sta 411+44.0 Lt	Rte 46 ℄ Sta 411+64.3 Lt	40
L3,L4	Rte 46 ℄ Sta 411+64.3 Lt	Rte 46 ℄ Sta 425+00.0 Lt	1,336
L5	Rte 46 ℄ Sta 429+00.0 Lt	Rte 46 ℄ Sta 437+90.5 Lt	890
L9	Union Rd ℄ Sta 184+57.6 Rt	Union Rd ℄ Sta 184+57.6 Rt	37
L9	Union Rd ℄ Sta 184+57.6 Rt	Rte 46 ℄ Sta 493+94.1 Lt	189
L9-L14	Rte 46 ℄ Sta 493+94.1 Lt	Rte 46 ℄ Sta 556+50.8 Lt	6,129
L14	Rte 46 ℄ Sta 556+50.8 Lt	Rte 46 ℄ Sta 558+32.6 Lt	240
L14	Rte 46 ℄ Sta 558+32.6 Lt	Estrella Rd ℄ Sta 16+63.9 Lt	83
L14	Rte 46 ℄ Sta 558+66.6 Lt	Rte 46 ℄ Sta 559+57.3 Lt	92
L14	Rte 46 ℄ Sta 559+57.3 Lt	Estrella Rd ℄ Sta 10+37.2 Lt	49
L14	Estrella Rd ℄ Sta 10+37.2 Lt	Estrella Rd ℄ Sta 10+44.1 Lt	16
L14	Estrella Rd ℄ Sta 11+10.8 Lt	Estrella Rd ℄ Sta 11+95.1 Lt	125
L14	Estrella Rd ℄ Sta 12+11.1 Lt	Estrella Rd ℄ Sta 15+59.0 Lt	348
L14	Estrella Rd ℄ Sta 15+75.0 Lt	Estrella Rd ℄ Sta 16+63.9 Lt	89
L14	Estrella Rd ℄ Sta 7+45.2 Rt	Estrella Rd ℄ Sta 11+43.1 Rt	402
L14	Estrella Rd ℄ Sta 11+59.1 Rt	Estrella Rd ℄ Sta 11+84.0 Rt	29
L14	Estrella Rd ℄ Sta 11+84.0 Rt	FR-2 ℄ Sta 25+43.4 Rt	288
L15	FR-2 ℄ Sta 28+84.6 Rt	FR-1 ℄ Sta 66+02.4 Rt	162
L15,L16	FR-1 ℄ Sta 66+02.4 Rt	FR-1 ℄ Sta 70+34.4 Rt	471
L15	FR-1 ℄ Sta 66+03.0 Lt	FR-1 ℄ Sta 66+96.8 Lt	113
L15	FR-1 ℄ Sta 66+96.8 Lt	Rte 46 ℄ Sta 568+42.4 Lt	45
L15	FR-1 ℄ Sta 66+03.0 Lt	FR-2 ℄ Sta 32+49.3 Rt	94
L15	FR-2 ℄ Sta 32+49.3 Rt	FR-2 ℄ Sta 35+91.9 Rt	344
L15	FR-2 ℄ Sta 35+91.9 Rt	FR-2 ℄ Sta 36+91.5 Rt	119
L15	FR-2 ℄ Sta 36+48.5 Lt	FR-2 ℄ Sta 36+85.2 Lt	63
L15	FR-2 ℄ Sta 36+93.3 Lt	Rte 46 ℄ Sta 574+89.3 Lt	126
L15,L17	Rte 46 ℄ Sta 574+89.3 Lt	Rte 46 ℄ Sta 592+00.0 Lt	1,725
L18	Rte 46 ℄ Sta 596+71.0 Lt	Almond Dr ℄ Sta 33+61.2 Lt	390
L18	Almond Dr ℄ Sta 32+76.3 Rt	Almond Dr ℄ Sta 34+50.6 Rt	174
L18	Rte 46 ℄ Sta 599+54.9 Lt	Almond Dr ℄ Sta 32+76.3 Rt	89
L18,L19	Rte 46 ℄ Sta 599+54.9 Lt	Rte 46 ℄ Sta 612+03.4 Lt	1,258
L19	Rte 46 ℄ Sta 612+03.4 Lt	Rte 46 ℄ Sta 612+62.1 Lt	90
L19,L20	Rte 46 ℄ Sta 612+62.1 Lt	Rte 46 ℄ Sta 628+59.2 Lt	1,604
L20	Rte 46 ℄ Sta 628+88.7 Lt	Rte 46 ℄ Sta 630+00.0 Lt	129
		WESTBOUND SIDE TOTAL	17,378
	EASTBOUND SIDE		
L-3	Rte 46 ℄ Sta 411+53.3 Rt	Rte 46 ℄ Sta 412+70.0 Rt	179
L3,L4	Rte 46 ℄ Sta 412+70.0 Rt	Rte 46 ℄ Sta 424+25.0 Rt	1,157
L5	Rte 46 ℄ Sta 427+50.0 Rt	Rte 46 ℄ Sta 437+89.4 Rt	1,041
L9	Rte 46 ℄ Sta 494+82.5 Rt	Union Rd ℄ Sta 177+45.2 Rt	157
L9	Rte 46 ℄ Sta 494+82.5 Rt	Rte 46 ℄ Sta 495+34.6 Rt	84
L9-L11	Rte 46 ℄ Sta 495+34.6 Rt	Rte 46 ℄ Sta 520+46.9 Rt	2,582
L11	Rte 46 ℄ Sta 520+44.7 Rt	Rte 46 ℄ Sta 520+46.9 Rt	50
L11,L12	Rte 46 ℄ Sta 520+44.7 Rt	Rte 46 ℄ Sta 533+53.1 Rt	1,326
L12	Rte 46 ℄ Sta 533+53.1 Rt	Prvt Dwy 5 ℄ Sta 2+11.3 Lt	119
L12	Prvt Dwy 5 ℄ Sta 2+06.4 Lt	Rte 46 ℄ Sta 533+88.3 Rt	120
L12,L13,L14	Rte 46 ℄ Sta 533+88.3 Rt	Rte 46 ℄ Sta 559+88.3 Rt	2,743
L14	Rte 46 ℄ Sta 558+88.3 Rt	Rte 46 ℄ Sta 559+88.3 Rt	99
L14	Rte 46 ℄ Sta 559+88.3 Rt	Estrella Rd ℄ Sta 7+08.5 Lt	122
L14	Estrella Rd ℄ Sta 6+95.1 Rt	Estrella Rd ℄ Sta 7+29.8 Rt	35
L14	Estrella Rd ℄ Sta 6+95.1 Rt	Rte 46 ℄ Sta 564+00.0 Rt	326
L16	Rte 46 ℄ Sta 566+50.0 Rt	FR-1 ℄ Sta 70+34.5 Rt	162
L16	FR-1 ℄ Sta 68+47.3 Lt	FR-1 ℄ Sta 71+42.3 Lt	260
L16	FR-1 ℄ Sta 68+47.3 Lt	Rte 46 ℄ Sta 568+37.1 Rt	41
L16	FR-1 ℄ Sta 66+02.4 Rt	FR-1 ℄ Sta 70+34.5 Rt	471
L16	Rte 46 ℄ Sta 569+56.3 Rt	Rte 46 ℄ Sta 574+51.5 Rt	503
L16	Rte 46 ℄ Sta 574+51.5 Rt	FR-1 ℄ Sta 78+02.6 Lt	311
L16	FR-1 ℄ Sta 78+02.6 Lt	S Whitley Gardens Dr ℄ Sta 193+24.9 Lt	112
L16	S Whitley Gardens Dr ℄ Sta 193+24.9 Rt	Rte 46 ℄ Sta 576+99.5 Rt	258
L16,L17	Rte 46 ℄ Sta 576+99.5 Rt	Rte 46 ℄ Sta 590+00.0 Rt	1,303
L18	Rte 46 ℄ Sta 592+69.3 Rt	Rte 46 ℄ Sta 593+08.9 Rt	59
L18	Rte 46 ℄ Sta 593+08.9 Rt	Rte 46 ℄ Sta 593+56.9 Rt	48
L18	Rte 46 ℄ Sta 593+56.9 Rt	River Grove Dr ℄ Sta 24+73.0 Lt	278
L18	River Grove Dr ℄ Sta 24+00.0 Lt	River Grove Dr ℄ Sta 24+73.0 Lt	72
L18	River Grove Dr ℄ Sta 24+00.0 Rt	Rte 46 ℄ Sta 598+94.6 Rt	496
L18,L19,L20	Rte 46 ℄ Sta 598+94.6 Rt	Rte 46 ℄ Sta 628+59.2 Rt	2,978
L20	Rte 46 ℄ Sta 628+88.9 Rt	Rte 46 ℄ Sta 630+00.0 Rt	177
		EASTBOUND SIDE SUBTOTAL 1	17,669

FENCE (TYPE BW, 5 STRAND, METAL POST)

LOCATION	LENGTH LF
WESTBOUND SIDE SUBTOTAL	17,378
EASTBOUND SIDE SUBTOTAL	17,669
TOTAL	35,047

Dist	COUNTY	ROUTE	POST MILES TOTAL PROJECT	SHEET No.	TOTAL SHEETS
05	SLO	46	36.6/41.2	454	595

8-24-09
REGISTERED CIVIL ENGINEER DATE

12-7-09
PLANS APPROVAL DATE

JOSE M. ARGUELLO
No. 51321
Exp 06-30-10
CIVIL
REGISTERED PROFESSIONAL ENGINEER
STATE OF CALIFORNIA

THE STATE OF CALIFORNIA OR ITS OFFICERS OR AGENTS SHALL NOT BE RESPONSIBLE FOR THE ACCURACY OR COMPLETENESS OF ELECTRONIC COPIES OF THIS PLAN SHEET.

FENCE (TYPE WM, Mod)

SHEET No.	LOCATION FROM	LOCATION TO	LENGTH LF
	WESTBOUND SIDE		
L5	Rte 46 ℄ Sta 437+90.5 Lt	Rte 46 ℄ Sta 437+90.2 Lt	49
L5	Rte 46 ℄ Sta 437+90.2 Lt	Rte 46 ℄ Sta 438+71.5 Lt	81
L5	Rte 46 ℄ Sta 438+71.5 Lt	Rte 46 ℄ Sta 438+71.5 Lt	17
L5	Rte 46 ℄ Sta 439+03.5 Lt	Rte 46 ℄ Sta 439+03.5 Lt	17
L5	Rte 46 ℄ Sta 439+03.5 Lt	Rte 46 ℄ Sta 439+21.7 Lt	18
L5	Rte 46 ℄ Sta 439+21.7 Lt	Rte 46 ℄ Sta 439+21.9 Lt	50
L5	Rte 46 ℄ Sta 439+21.9 Lt	Rte 46 ℄ Sta 440+00.0 Lt	78
L6	Rte 46 ℄ Sta 445+79.9 Lt	Rte 46 ℄ Sta 457+81.8 Lt	1241
L6	Rte 46 ℄ Sta 457+81.8 Lt	Rte 46 ℄ Sta 457+85.6 Lt	18
L6	Rte 46 ℄ Sta 457+69.7 Lt	Rte 46 ℄ Sta 457+85.6 Lt	17
L6	Rte 46 ℄ Sta 457+76.4 Lt	Rte 46 ℄ Sta 457+92.3 Lt	17
L6	Rte 46 ℄ Sta 457+92.3 Lt	Rte 46 ℄ Sta 458+03.5 Lt	52
L6	Rte 46 ℄ Sta 458+03.5 Lt	Rte 46 ℄ Sta 474+00.0 Lt	1616
L8,L9	Rte 46 ℄ Sta 478+00.0 Lt	Rte 46 ℄ Sta 490+00.0 Lt	1194
L9	Rte 46 ℄ Sta 492+92.4 Lt	Union Rd ℄ Sta 184+57.6 Lt	209
		WESTBOUND SIDE TOTAL	4674
	EASTBOUND SIDE		
L5	Rte 46 ℄ Sta 437+89.9 Rt	Rte 46 ℄ Sta 438+56.2 Rt	56
L5	Rte 46 ℄ Sta 438+56.2 Rt	Rte 46 ℄ Sta 438+56.2 Rt	12
L5	Rte 46 ℄ Sta 438+56.2 Rt	Rte 46 ℄ Sta 438+72.7 Rt	17
L5	Rte 46 ℄ Sta 438+72.7 Rt	Rte 46 ℄ Sta 438+72.7 Rt	17
L5	Rte 46 ℄ Sta 439+04.7 Rt	Rte 46 ℄ Sta 439+04.7 Rt	17
L5	Rte 46 ℄ Sta 439+04.7 Rt	Rte 46 ℄ Sta 439+20.7 Rt	16
L5	Rte 46 ℄ Sta 439+20.7 Rt	Rte 46 ℄ Sta 439+20.7 Rt	12
L5	Rte 46 ℄ Sta 439+20.7 Rt	Rte 46 ℄ Sta 440+00.0 Rt	79
L5	Rte 46 ℄ Sta 442+91.4 Rt	Rte 46 ℄ Sta 444+88.1 Rt	212
L6	Rte 46 ℄ Sta 451+00.0 Rt	Rte 46 ℄ Sta 456+27.1 Rt	516
L6	Rte 46 ℄ Sta 456+27.1 Rt	Rte 46 ℄ Sta 456+27.1 Rt	34
L6	Rte 46 ℄ Sta 456+27.1 Rt	Rte 46 ℄ Sta 456+86.7 Rt	58
L6	Rte 46 ℄ Sta 456+86.7 Rt	Rte 46 ℄ Sta 456+90.4 Rt	22
L6	Rte 46 ℄ Sta 457+20.4 Rt	Rte 46 ℄ Sta 457+22.7 Rt	17
L6	Rte 46 ℄ Sta 457+20.4 Rt	Rte 46 ℄ Sta 457+51.0 Rt	30
L6	Rte 46 ℄ Sta 457+51.0 Rt	Rte 46 ℄ Sta 457+51.0 Rt	34
L6,L7	Rte 46 ℄ Sta 457+51.0 Rt	Rte 46 ℄ Sta 473+80.0 Rt	1611
L7,L8	Rte 46 ℄ Sta 476+00.0 Rt	Rte 46 ℄ Sta 479+18.9 Rt	240
L8	Rte 46 ℄ Sta 479+19.0 Rt	Rte 46 ℄ Sta 479+40.0 Rt	38
L8	Rte 46 ℄ Sta 480+60.0 Rt	Rte 46 ℄ Sta 480+87.9 Rt	44
L8	Rte 46 ℄ Sta 480+87.9 Rt	Rte 46 ℄ Sta 489+00.0 Rt	815
L8	Rte 46 ℄ Sta 493+10.0 Rt	Rte 46 ℄ Sta 493+60.4 Rt	62
L9	Rte 46 ℄ Sta 493+60.4 Rt	Rte 46 ℄ Sta 494+37.8 Rt	128
L9	Rte 46 ℄ Sta 494+37.8 Rt	Union Rd ℄ Sta 177+43.0 Rt	159
		EASTBOUND SIDE TOTAL	4246
		WESTBOUND SIDE TOTAL	4674
		TOTAL	8920

SUMMARY OF QUANTITIES
Q-19

LAST REVISION DATE PLOTTED => 08-DEC-2009
TIME PLOTTED => 10:49
08-19-09

STATE OF CALIFORNIA - DEPARTMENT OF TRANSPORTATION
Caltrans
06-DESIGN
FUNCTIONAL SUPERVISOR: JACK WALKER
CALCULATED-DESIGNED BY: SUMI HOODE
CHECKED BY: JOSE ARGUELLO
DATE REVISED
REVISED BY

BORDER LAST REVISED 3/1/2007
RELATIVE BORDER SCALE IS IN INCHES 0 1 2 3
USERNAME => trmnguye
DGN FILE => 533072pa019.dgn
CU 06220
EA 330721

Dist	COUNTY	ROUTE	POST MILES TOTAL PROJECT	SHEET No.	TOTAL SHEETS
05	SLO	46	36.6/41.2	455	595

8-24-09
REGISTERED CIVIL ENGINEER DATE

12-7-09
PLANS APPROVAL DATE

REGISTERED PROFESSIONAL ENGINEER
JOSE M. ARGUELLO
No. 51321
Exp 06-30-10
CIVIL
STATE OF CALIFORNIA

THE STATE OF CALIFORNIA OR ITS OFFICERS OR AGENTS SHALL NOT BE RESPONSIBLE FOR THE ACCURACY OR COMPLETENESS OF ELECTRONIC COPIES OF THIS PLAN SHEET.

CHAIN LINK FENCE (TYPE CL-7)

SHEET No.	LOCATION FROM	LOCATION TO	LENGTH LF
L2	Rte 46 ℄ Sta 396+00.0 Lt	Rte 46 ℄ Sta 401+00.0 Lt	501
L2	Rte 46 ℄ Sta 397+00.0 Rt	Rte 46 ℄ Sta 401+00.0 Rt	400
L4	Rte 46 ℄ Sta 424+25.0 Rt	Rte 46 ℄ Sta 427+50.0 Rt	325
L4	Rte 46 ℄ Sta 425+00.0 Lt	Rte 46 ℄ Sta 427+96.0 Lt	296
L4	Rte 46 ℄ Sta 427+98.4 Lt	Rte 46 ℄ Sta 429+00.0 Lt	102
L5	Rte 46 ℄ Sta 440+07.4 Lt	Rte 46 ℄ Sta 444+23.4 Lt	436
L5	Rte 46 ℄ Sta 440+00.0 Rt	Rte 46 ℄ Sta 442+91.4 Rt	293
L5	Rte 46 ℄ Sta 444+88.1 Rt	Rte 46 ℄ Sta 445+90.0 Rt	102
L5	Rte 46 ℄ Sta 445+26.1 Lt	Rte 46 ℄ Sta 445+70.3 Lt	57
L5	Rte 46 ℄ Sta 445+90.0 Rt	Rte 46 ℄ Sta 446+11.2 Rt	36
L5	Rte 46 ℄ Sta 447+33.7 Rt	Rte 46 ℄ Sta 448+16.8 Rt	83
L5	Rte 46 ℄ Sta 448+93.3 Rt	Rte 46 ℄ Sta 451+00.0 Rt	210
L7	Rte 46 ℄ Sta 473+80.0 Rt	Rte 46 ℄ Sta 476+80.0 Rt	302
L7,L8	Rte 46 ℄ Sta 474+00.0 Lt	Rte 46 ℄ Sta 478+00.0 Lt	402
L8	Rte 46 ℄ Sta 489+00.0 Rt	Rte 46 ℄ Sta 493+10.0 Rt	405
L8	Rte 46 ℄ Sta 490+00.0 Lt	Rte 46 ℄ Sta 492+12.7 Lt	240
L8	Rte 46 ℄ Sta 492+20.9 Lt	Rte 46 ℄ Sta 492+92.4 Lt	68
L12	Rte 46 ℄ Sta 533+53.1 Rt	Rte 46 ℄ Sta 533+60.1 Rt	7
L12	Rte 46 ℄ Sta 533+81.2 Rt	Rte 46 ℄ Sta 533+88.3 Rt	7
L17,L18	Rte 46 ℄ Sta 590+00.0 Rt	Rte 46 ℄ Sta 592+54.2 Rt	305
L18	Rte 46 ℄ Sta 592+00.0 Lt	Rte 46 ℄ Sta 593+32.7 Lt	153
L18	Rte 46 ℄ Sta 593+46.9 Lt	Rte 46 ℄ Sta 594+95.9 Lt	175
L18	Rte 46 ℄ Sta 595+10.9 Lt	Rte 46 ℄ Sta 596+71.0 Lt	172
		TOTAL	5077

CL GATE (TYPE CL-7)

LOCATION	16' CL GATE (TYPE CL-7) EA
Rte 46 ℄ Sta 396+00.0 Lt	1
Rte 46 ℄ Sta 397+00.0 Rt	1
Rte 46 ℄ Sta 401+00.0 Rt	1
Rte 46 ℄ Sta 401+00.0 Lt	1
Rte 46 ℄ Sta 424+25.0 Rt	1
Rte 46 ℄ Sta 427+50.0 Rt	1
Rte 46 ℄ Sta 425+00.0 Lt	1
Rte 46 ℄ Sta 427+98.4 Lt	1
Rte 46 ℄ Sta 440+00.0 Lt	1
Rte 46 ℄ Sta 440+00.0 Rt	1
Rte 46 ℄ Sta 442+91.4 Rt	1
Rte 46 ℄ Sta 445+79.9 Lt	1
Rte 46 ℄ Sta 445+90.0 Rt	1
Rte 46 ℄ Sta 451+00.0 Rt	1
Rte 46 ℄ Sta 473+80.0 Rt	1
Rte 46 ℄ Sta 474+00.0 Lt	1
Rte 46 ℄ Sta 476+80.0 Rt	1
Rte 46 ℄ Sta 478+00.0 Lt	1
Rte 46 ℄ Sta 479+19.0 Rt	1
Rte 46 ℄ Sta 480+87.9 Rt	1
Rte 46 ℄ Sta 489+00.0 Rt	1
Rte 46 ℄ Sta 490+00.0 Lt	1
Rte 46 ℄ Sta 492+13.0 Lt	1
Rte 46 ℄ Sta 493+10.0 Rt	1
Rte 46 ℄ Sta 533+60.1 Lt	1
Rte 46 ℄ Sta 590+00.0 Rt	1
Rte 46 ℄ Sta 592+54.2 Rt	1
Rte 46 ℄ Sta 593+33.0 Lt	1
Rte 46 ℄ Sta 594+95.9 Lt	1
Estrella Rd ℄ Sta 6+91.5 Lt	1
Estrella Rd ℄ Sta 7+29.8 Rt	1
Estrella Rd ℄ Sta 11+43.1 Rt	1
Estrella Rd ℄ Sta 11+95.1 Lt	1
Estrella Rd ℄ Sta 15+59.0 Lt	1
FR-1 ℄ Sta 70+34.4 Rt	1
FR-1 ℄ Sta 71+42.3 Lt	1
FR-2 ℄ Sta 36+85.2 Lt	1
TOTAL	37

SUMMARY OF QUANTITIES
Q-20

CALCULATED-DESIGNED BY: JOSE ARGUELLO
CHECKED BY: SUMI HOODE
REVISED BY
DATE REVISED
FUNCTIONAL SUPERVISOR: JACK WALKER
STATE OF CALIFORNIA - DEPARTMENT OF TRANSPORTATION
Caltrans 06-DESIGN

LAST REVISION DATE PLOTTED => 08-DEC-2009
TIME PLOTTED => 10:49
08-19-09

BORDER LAST REVISED 3/1/2007
RELATIVE BORDER SCALE IS IN INCHES 0 1 2 3
USERNAME => trmnguye
DGN FILE => 533072pa020.dgn
CU 06220
EA 330721

Dist	COUNTY	ROUTE	POST MILES TOTAL PROJECT	SHEET No.	TOTAL SHEETS
05	SLO	46	36.6/41.2	456	595

8-24-09
REGISTERED CIVIL ENGINEER DATE

12-7-09
PLANS APPROVAL DATE

REGISTERED PROFESSIONAL ENGINEER
JOSE M. ARGUELLO
No. 51321
Exp 06-30-10
CIVIL
STATE OF CALIFORNIA

THE STATE OF CALIFORNIA OR ITS OFFICERS OR AGENTS SHALL NOT BE RESPONSIBLE FOR THE ACCURACY OR COMPLETENESS OF ELECTRONIC COPIES OF THIS PLAN SHEET.

SURVEY MONUMENT

LOCATION	OFFSET	DESCRIPTION	TYPE A EA	TYPE D EA
Rte 46 ℄ Sta 390+00.00	0	New Survey Monument	1	
Rte 46 ℄ Sta 410+00.00	0	New Survey Monument	1	
Rte 46 ℄ Sta 430+00.00	0	New Survey Monument	1	
Rte 46 ℄ Sta 446+45.67 BC	0	New Survey Monument	1	
Rte 46 ℄ Sta 455+00.00	0	New Survey Monument	1	
Rte 46 ℄ Sta 466+75.49 EC	0	New Survey Monument	1	
Rte 46 ℄ Sta 475+02.54 BC	0	New Survey Monument	1	
Rte 46 ℄ Sta 485+31.31 EC	0	New Survey Monument	1	
Rte 46 ℄ Sta 491+64.69 BC	0	New Survey Monument	1	
Rte 46 ℄ Sta 500+00.00	0	New Survey Monument	1	
Rte 46 ℄ Sta 511+29.08 EC	0	New Survey Monument	1	
Rte 46 ℄ Sta 525+00.00	0	New Survey Monument	1	
Rte 46 ℄ Sta 530+93.41 BC	0	New Survey Monument	1	
Rte 46 ℄ Sta 540+00.00	0	New Survey Monument	1	
Rte 46 ℄ Sta 549+77.62 EC	0	New Survey Monument	1	
Rte 46 ℄ Sta 551+80.20 BC	0	New Survey Monument	1	
Rte 46 ℄ Sta 555+00.00	0	New Survey Monument	1	
Estrella Rd ℄ Sta 8+11.50	0.62′ Lt	1.25" IP 3MB94 PT 805		1
N Whitley Gardens Dr ℄ Sta 17+37.38	1.89′ Rt	¾" IP WTAG ILLEGIBLE 47PM8 26PM17 PT 469		1
Rte 46 ℄ Sta 570+00.00	0	New Survey Monument	1	
Rte 46 ℄ Sta 574+83.87	0	New Survey Monument	1	
Rte 46 ℄ Sta 576+01.85	0	New Survey Monument	1	
Rte 46 ℄ Sta 589+78.34 BC	0	New Survey Monument	1	
Rte 46 ℄ Sta 601+80.28 EC	0	New Survey Monument	1	
Rte 46 EB Trans Sta 625+28.95 EC	0	New Survey Monument	1	
		SUBTOTAL	23	2
		TOTAL	25	

CABLE RAILING

LOCATION	CABLE RAILING LF
ESTRELLA Rd ℄ Sta 12+76.81 281.26′ Lt	27.0
ESTRELLA Rd ℄ Sta 12+94.48 269.35′ Lt	27.0
FR-1 ℄ Sta 69+23.54 109.99′ Rt	17.0
FR-1 ℄ Sta 69+88.28 60.40′ Lt	12.0
Rte 46 ℄ Sta 425+61.56 116.85′ Rt	12.0
Rte 46 ℄ Sta 426+90.51 110.26′ Lt	12.0
Rte 46 ℄ Sta 441+50.03 90.42′ Rt	13.5
Rte 46 ℄ Sta 442+02.53 102.97′ Lt	13.5
Rte 46 ℄ Sta 444+08.38 78.15′ Lt to Sta 445+46.07 78.15′ Lt	138
Rte 46 ℄ Sta 445+47.16 101.90′ Lt	40.7
Rte 46 ℄ Sta 445+88.69 72.13′ Rt to Sta 447+64.11 72.13′ Rt	174
Rte 46 ℄ Sta 447+98.36 94.95′ Rt to Sta 449+18.14 72.15′ Rt	125
Rte 46 ℄ Sta 490+13.25 114.00′ Rt	12.0
Rte 46 ℄ Sta 491+73.41 115.12′ Lt	12.0
Rte 46 ℄ Sta 556+53.32 302.30′ Lt	43.7
Rte 46 ℄ Sta 575+00.00 133.04′ Rt	12.0
Rte 46 ℄ Sta 591+77.76 164.62′ Rt	127.4
Rte 46 ℄ Sta 594+19.38 157.89′ Lt	81.1
TOTAL	899.9

CONCRETE BARRIER

LOCATION	TYPE 732A LF	TYPE 732B (Mod 1) LF	TYPE 732B (Mod 2) LF
Rte 46 ℄ Sta 445+88.69 Rt to Sta 449+18.12 Rt		305	21
Rte 46 ℄ Sta 479+18.90 Rt to Sta 480+88.29 Rt	170		
Rte 46 ℄ Sta 444+08.38 Lt to Sta 445+46.08 Lt		138	
SUBTOTAL	170	443	21
TOTAL		634	

SUMMARY OF QUANTITIES

Q-21

CALCULATED-DESIGNED BY	JOSE ARGUELLO	REVISED BY	
CHECKED BY	SUMI HOODE	DATE REVISED	
FUNCTIONAL SUPERVISOR	JACK WALKER		
STATE OF CALIFORNIA - DEPARTMENT OF TRANSPORTATION	06-DESIGN		

LAST REVISION 08-11-09 | DATE PLOTTED => 08-DEC-2009 | TIME PLOTTED => 10:49

BORDER LAST REVISED 3/1/2007 | RELATIVE BORDER SCALE IS IN INCHES 0 1 2 3 | USERNAME => trmnguye | DGN FILE => 533072pq021.dgn | CU 06220 | EA 330721

Dist	COUNTY	ROUTE	POST MILES TOTAL PROJECT	SHEET No.	TOTAL SHEETS
05	SLO	46	36.6/41.2	457	595

8-24-09
REGISTERED CIVIL ENGINEER DATE

12-7-09
PLANS APPROVAL DATE

REGISTERED PROFESSIONAL ENGINEER
JOSE M. ARGUELLO
No. 51321
Exp 06-30-10
CIVIL
STATE OF CALIFORNIA

THE STATE OF CALIFORNIA OR ITS OFFICERS OR AGENTS SHALL NOT BE RESPONSIBLE FOR THE ACCURACY OR COMPLETENESS OF ELECTRONIC COPIES OF THIS PLAN SHEET.

GEOSYNTHETIC REINFORCED EMBANKMENT

Rte 46
ESTRELLA RIVER Br
WEST ABUTMENT EMBANKMENT

LOCATION: REINFORCEMENT ELEVATION (N)	PRIMARY REINFORCEMENT AREA (N)	SECONDARY REINFORCEMENT AREA (N)	EMBEDMENT DEPTH (N)	GEOSYNTHETIC REINFORCED EMBANKMENT
	SQYD	SQYD		CY
862′	788.1		55′	525.4
863′				
864′	1,196.3		55′	797.6
865′				
866′	1,493.3		55′	995.6
867′				
868′	1,739.7		55′	1,159.8
869′				
870′	1,881.0		55′	1,254.0
871′		73.1	4′	
872′	1,884.4		55′	1,256.3
873′		100.0	4′	
874′	1,914.4		55′	1,276.3
875′		117.9	4′	
876′	1,908.3		55′	1,272.2
877′		137.3	4′	
878′	1,968.7		55′	1,312.4
879′		140.2	4′	
880′	1,944.6		55′	1,296.4
881′		143.9	4′	
882′	2,525.0		55′	1,683.3
883′		148.0	4′	
884′	2,852.1		55′	1,901.4
885′		151.4	4′	
886′	2,755.7		55′	1,837.1
887′		222.8	4′	
888′	2,688.6		55′	1,792.4
889′		223.1	4′	
890′	2,692.9		55′	1,795.3
891′		115.3	4′	
892′	2,631.3		55′	1,754.2
893′		227.6	4′	
894′	2,712.4		55′	1,808.3
895′		230.0	4′	
896′	2,665.2		55′	1,776.8
897′		228.2	4′	
898′	2,691.7		55′	1,794.4
899′		229.4	4′	
900′	2,619.2		55′	1,746.1
901′		223.8	4′	
902′	2,551.3		55′	1,700.9
903′		219.1	4′	
904′	2,480.6		55′	1,653.7
905′		213.8	4′	
906′	1,445.2		30′	963.5
907′		208.8	4′	
908′	1,407.1		30′	938.1
909′		203.7	4′	
910′	1,368.2		30′	912.1
911′		198.4	4′	
912′	1,327.7		30′	885.1
913′		193.6	4′	
914′	1,294.6		30′	863.0
915′		188.2	4′	
916′	1,256.9		30′	837.9
917′		184.2	4′	
918′	1,217.6		30′	811.7
919′		177.1	4′	
SUBTOTAL 1	57,902.1	4499.0		38,601.3

GEOSYNTHETIC REINFORCED EMBANKMENT

Rte 46
ESTRELLA RIVER Br
WEST ABUTMENT EMBANKMENT

LOCATION: REINFORCEMENT ELEVATION (N)	PRIMARY REINFORCEMENT AREA (N)	SECONDARY REINFORCEMENT AREA (N)	EMBEDMENT DEPTH (N)	GEOSYNTHETIC REINFORCED EMBANKMENT
	SQYD	SQYD		CY
920′	1,181.0		30′	787.3
921′		173.1	4′	
922′	1,143.6		30′	762.4
923′		168.6	4′	
924′	1,105.9		30′	737.3
925′		162.3	4′	
926′	573.7		15′	382.4
927′		158.0	4′	
928′	548.1		15′	365.4
929′		153.4	4′	
930′	536.7		15′	357.8
931′		148.3	4′	
932′	516.3		15′	344.2
933′		142.4	4′	
934′	497.2		15′	331.5
935′		137.0	4′	
936′	478.4		15′	319.0
937′		137.3	4′	
938′	459.6		15′	306.4
939′		127.9	4′	
940′	440.2		15′	293.5
SUBTOTAL 2	7,480.7	1508.4		4,987.2
SUBTOTAL 1	57,902.1	4499.0		38,601.3
TOTAL	65,382.8	6007.4		43,588.5

(N) NOT A SEPARATE PAY ITEM,FOR INFORMATION ONLY.

SUMMARY OF QUANTITIES
Q-22

LAST REVISION 07-22-09 | DATE PLOTTED => 08-DEC-2009 | TIME PLOTTED => 10:49

REVISED BY | DATE REVISED
CALCULATED-DESIGNED BY: JOSE ARGUELLO
CHECKED BY: SUMI HOODE
FUNCTIONAL SUPERVISOR: JACK WALKER
STATE OF CALIFORNIA - DEPARTMENT OF TRANSPORTATION
Caltrans 06-DESIGN

BORDER LAST REVISED 3/1/2007 | RELATIVE BORDER SCALE IS IN INCHES 0 1 2 3 | USERNAME => trmnguye | DGN FILE => 533072pa022.dgn | CU 06220 | EA 330721

Dist	COUNTY	ROUTE	POST MILES TOTAL PROJECT	SHEET No.	TOTAL SHEETS
05	SLO	46	36.6/41.2	458	595

8-24-09
REGISTERED CIVIL ENGINEER DATE

12-7-09
PLANS APPROVAL DATE

REGISTERED PROFESSIONAL ENGINEER
JOSE M. ARGUELLO
No. 51321
Exp 06-30-10
CIVIL
STATE OF CALIFORNIA

THE STATE OF CALIFORNIA OR ITS OFFICERS OR AGENTS SHALL NOT BE RESPONSIBLE FOR THE ACCURACY OR COMPLETENESS OF ELECTRONIC COPIES OF THIS PLAN SHEET.

VEGETATION CONTROL (MINOR CONCRETE)

SIGN POST					
SHEET No.	SIGN CODE	ROADSIDE SIGN ONE POST	ROADSIDE SIGN TWO POST	MINOR CONCRETE	** CONCRETE STAINING
		EA		SQYD	SQYD
TH-11	G8-22(CA)		1	4.5	4.5
TH-12	R1-1	1		2.5	2.5
TH-14	R1-1	1		2.5	2.5
TH-15	R1-1	1		2.5	2.5
TH-22	G8-22(CA)		1	4.5	4.5
TH-25	R1-1	1		2.5	2.5
TH-32	R1-1	2		4.5	4.5
	G28-2, G35(CA)	2		4.5	4.5
	G8-22(CA)	1		2.5	2.5
TH-36	D3-2		1	5.0	5.0
TH-39	G8-22(CA)		1	5.0	5.0
	D3-2		1	5.0	5.0
TH-40	G8-7(CA)		1	5.0	5.0
	R1-1	1		2.5	2.5
PD-3	R1-1	1		2.5	2.5
	R6-1	4		10.0	10.0
	R5-1, R5-1a	4		10.0	10.0
	R6-3	1		2.5	2.5
PD-4	G8-22(CA)		1	4.5	4.5
PD-5	R1-1	1		2.5	2.5
	R6-1	4		10.0	10.0
	R5-1, R5-1a	4		10.0	10.0
PD-6	R1-1	1		2.5	2.5
	R6-1	4		10.0	10.0
	R5-1, R5-1a	4		10.0	10.0
PD-8	G8-22(CA)	1		2.5	2.5
PD-9	R5-1, R5-1a	4		10.0	10.0
	R6-1	4		10.0	10.0
	R6-3	2		5.0	5.0
PD-11	W7-1b	1		2.5	2.5
PD-12	R1-1	1		2.5	2.5
	R3-2	1		2.5	2.5
PD-13	W4-2R	1		2.5	2.5
PD-14	W9-1R	1		2.5	2.5
	W1-7	1		2.5	2.5
	G1-1(CA)		1	5.0	5.0
	R1-1	2		5.0	5.0
	W3-1	2		5.0	5.0
	S32(CA), S32-1(CA)	2		5.0	5.0
	G8-7(CA)		1	4.5	4.5
PD-15	G28-2(CA),G50(CA),G34(CA)	1		2.5	2.5
	G8-22(CA)		1	4.5	4.5
	R1-1	3		7.5	7.5
	G8-7(CA)		1	4.5	4.5
	R2-1(65), R48-1(CA)	1		2.5	2.5
	R3-2	1		2.5	2.5
	G77-4(CA)	2		5.0	5.0
PD-16	G78-1(CA)	1		2.5	2.5
	R3-2	1		2.5	2.5
	R1-1	1		2.5	2.5
	R5-2a, W16-9p	1		2.5	2.5
	G8-22(CA)	1		2.5	2.5
	R5-2, W16-2a	1		2.5	2.5
	M4-4, M6-1	1		2.5	2.5
	W1-7	1		2.5	2.5
	SIGN POST SUBTOTAL 1			243.5	243.5

VEGETATION CONTROL (MINOR CONCRETE)

SIGN POST					
SHEET No.	SIGN CODE	ROADSIDE SIGN ONE POST	ROADSIDE SIGN TWO POST	MINOR CONCRETE	** CONCRETE STAINING
		EA		SQYD	SQYD
PD-16	W3-1	1		2.5	2.5
	R5-2	1		2.5	2.5
	M4-4, R3-1	1		2.5	2.5
	G77-4(CA)	1		2.5	2.5
	G8-7(CA)		1	5.0	5.0
PD-17	R2-1(65), R48-1(CA)	1		2.5	2.5
	G8-7(CA)		1	5.0	5.0
	G68(CA) *		1	5.5	5.5
PD-18	R5-1, R5-1a	4		10.0	10.0
	R6-1	4		10.0	10.0
	R6-3	2		5.0	5.0
	W6-2	2		5.0	5.0
PD-19	W9-1R	1		2.5	2.5
	W4-2R	2		5.0	5.0
	R5-1, R5-1a	2		5.0	5.0
	R4-7	1		2.5	2.5
PD-20	W6-3	1		2.5	2.5
	SIGN POST SUBTOTAL 2			75.5	75.5
	SIGN POST SUBTOTAL 1			243.5	243.5
	SIGN POST SUBTOTAL			319.0	319.0
	VEGETATION CONTROL MINOR CONCRETE SIGN POST SUBTOTAL			319.0	
	MBGR LOCATION				
	EB Rte 46 ℄ Sta 422+88.5 TO Sta 429+63.5			264	264
	WB Rte 46 ℄ Sta 425+00.0 TO Sta 429+28.5			158	158
	EB Rte 46 ℄ Sta 439+86.5 TO Sta 442+50.0			104	104
	WB Rte 46 ℄ Sta 440+30.0 TO Sta 444+08.4			126	126
	EB Rte 46 ℄ Sta 445+00.0 TO Sta 445+88.7			30	30
	WB Rte 46 ℄ Sta 445+46.1 TO Sta 450+27.6			178	178
	EB Rte 46 ℄ Sta 449+18.1 TO Sta 449+97.7			42	42
	EB Rte 46 ℄ Sta 469+86.5 TO Sta 479+18.9			327	327
	EB Rte 46 ℄ Sta 480+88.3 TO Sta 481+91.7			50	50
	Lt FR-2 ℄ Sta 23+69.3 TO Sta 25+29.6			79	79
	Rt FR-2 ℄ Sta 24+66.4 TO Sta 25+44.0			39	39
	Lt FR-2 ℄ Sta 28+71.6 TO Sta 30+47.1			82	82
	Rt FR-2 ℄ Sta 28+84.2 TO Sta 29+63.2			49	49
	Rt NWG Dr ℄ Sta 13+32.8 TO Sta 17+00.0			147	147
	EB Rte 46 ℄ Sta 554+82.8 TO Sta 558+61.6			168	168
	MEDIAN EB Rte 46 ℄ Sta 556+75.0 TO Sta 558+55.8			82	82
	MEDIAN WB Rte 46 ℄ Sta 568+68.1 TO Sta 572+25.0			181	181
	WB Rte 46 ℄ Sta 568+73.8 TO Sta 571+54.5			158	158
	MBGR SUBTOTAL			2264	2264
	VEGETATION CONTROL MINOR CONCRETE MBGR SUBTOTAL			2264.0	
	VEGETATION CONTROL MINOR CONCRETE SIGN POST SUBTOTAL			319.0	
	VEGETATION CONTROL MINOR CONCRETE TOTAL			2583.0	

* OUTSIDE PROJECT LIMITS

** SEE SHEET Q-18 FOR SUMMARY TABLE CONCRETE STAINING

SUMMARY OF QUANTITIES

Q-23

REVISED BY | DATE REVISED

CALCULATED-DESIGNED BY: JOSE ARGUELLO
CHECKED BY: SUMI HOODE

FUNCTIONAL SUPERVISOR: JACK WALKER

STATE OF CALIFORNIA - DEPARTMENT OF TRANSPORTATION
06-DESIGN
Caltrans

LAST REVISION | DATE PLOTTED => 08-DEC-2009
08-19-09 | TIME PLOTTED => 10:50

BORDER LAST REVISED 3/1/2007

RELATIVE BORDER SCALE IS IN INCHES 0 1 2 3

USERNAME => trmnguye
DGN FILE => 533072pa023.dgn

CU 06220

EA 330721

Dist	COUNTY	ROUTE	POST MILES TOTAL PROJECT	SHEET No.	TOTAL SHEETS
05	SLO	46	36.6/41.2	459	595

8-24-09
REGISTERED CIVIL ENGINEER DATE

12-7-09
PLANS APPROVAL DATE

REGISTERED PROFESSIONAL ENGINEER
JOSE M. ARGUELLO
No. 51321
Exp 06-30-10
CIVIL
STATE OF CALIFORNIA

THE STATE OF CALIFORNIA OR ITS OFFICERS OR AGENTS SHALL NOT BE RESPONSIBLE FOR THE ACCURACY OR COMPLETENESS OF SCANNED COPIES OF THIS PLAN SHEET.

LEGEND

- XXXX — STANDARD PLAN No.
- 0.25' HMA SLOPE PAVING
- DRAINAGE SYSTEM No.
- TFESA — TEMPORARY FENCE (TYPE ESA)
- EXCAVATE AND COMPACT (MOISTURE CONDITIONED) NATIVE SOIL TO 95%
- RSP

NOTES:

1. FOR RSP LIMITS, SEE DRAINAGE PLANS.
2. SEE STANDARD PLAN D84 FOR CONNECTION OF WLX-1 RCB TO RETAINING WALLS.
3. FOR DETAILS NOT SHOWN, SEE STANDARD PLANS.

ABBREVIATIONS:

RW	RETAINING WALL
OETW	OUTSIDE EDGE OF TRAVELED WAY
IETW	INSIDE EDGE OF TRAVELED WAY

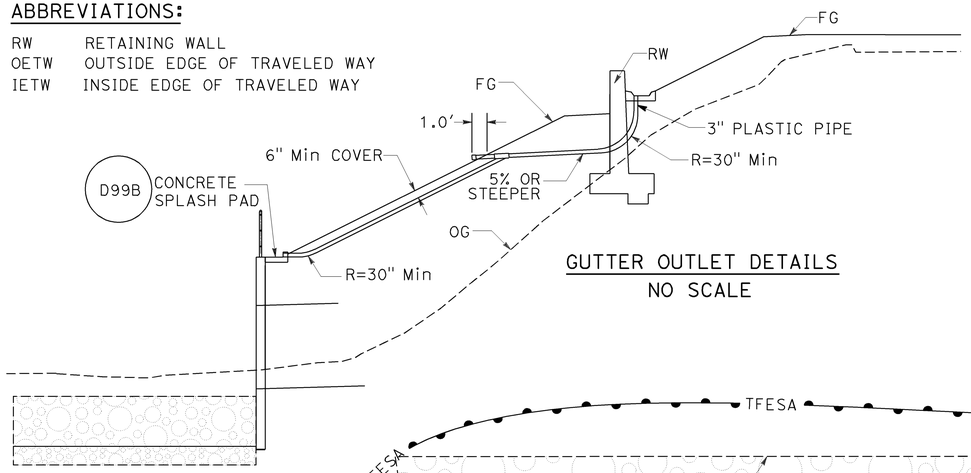

GUTTER OUTLET DETAILS
NO SCALE

WW FLARE ANGLE	
ø1	50°51'28"
ø2	129°08'31"

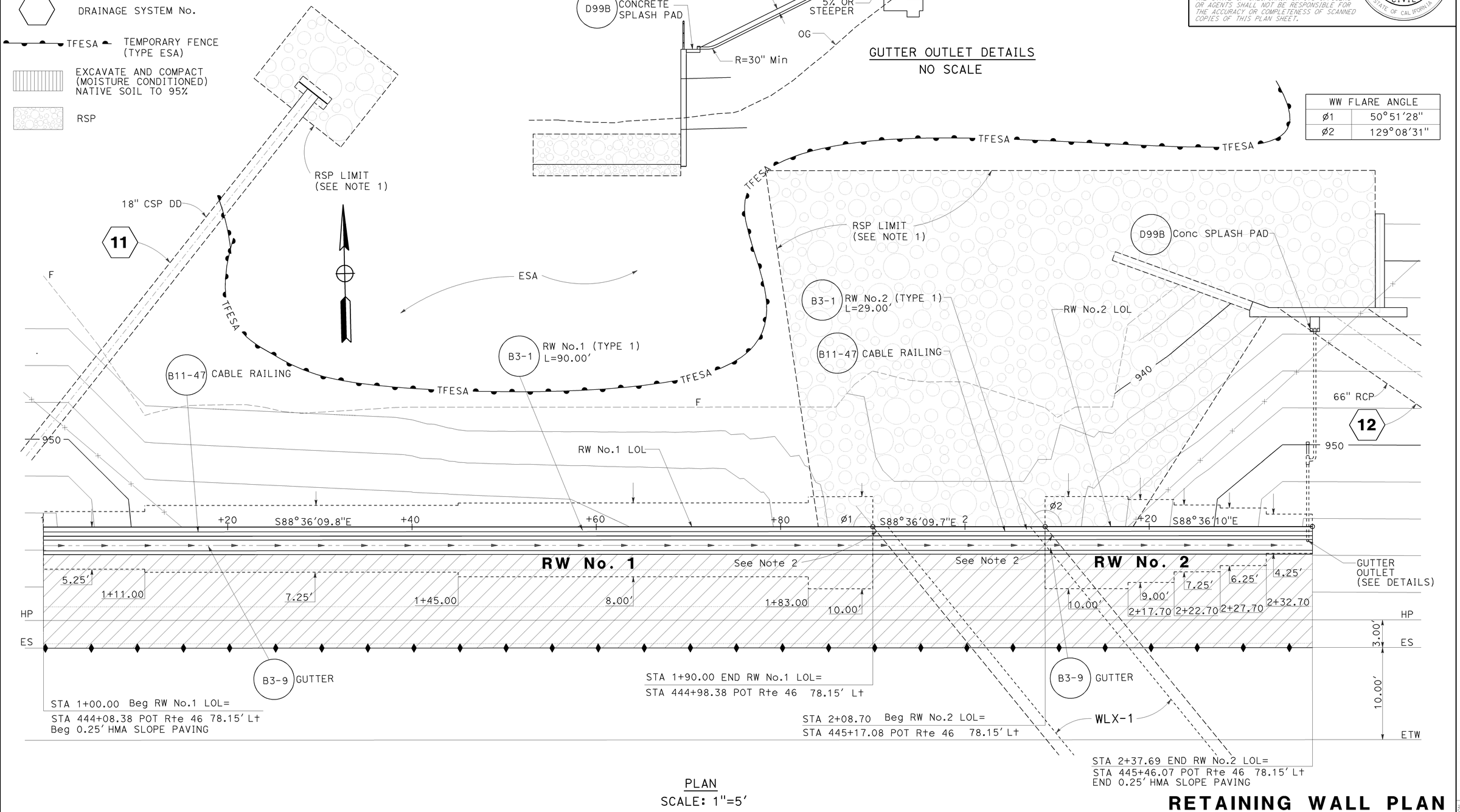

PLAN
SCALE: 1"=5'

THIS PLAN IS ACCURATE FOR RETAINING WALL WORK ONLY.

RETAINING WALL PLAN
(RETAINING WALLS No. 1 & 2)

R-1

STATE OF CALIFORNIA - DEPARTMENT OF TRANSPORTATION
06-DESIGN
FUNCTIONAL SUPERVISOR: JACK WALKER
CALCULATED-DESIGNED BY: WHECHIN LIU
CHECKED BY: SUMI HOODE
REVISED BY
DATE REVISED
Caltrans

LAST REVISION DATE PLOTTED => 08-DEC-2009
07-08-09 TIME PLOTTED => 10:52

BORDER LAST REVISED 3/1/2007
RELATIVE BORDER SCALE IS IN INCHES 0 1 2 3
USERNAME => trmnguye
DGN FILE => 533072qa001.dgn
CU 06220
EA 330721

Dist	COUNTY	ROUTE	POST MILES TOTAL PROJECT	SHEET No.	TOTAL SHEETS
05	SLO	46	36.6/41.2	460	595

8-24-09
REGISTERED CIVIL ENGINEER DATE

12-7-09
PLANS APPROVAL DATE

REGISTERED PROFESSIONAL ENGINEER
JOSE M. ARGUELLO
No. 51321
Exp 06-30-10
CIVIL
STATE OF CALIFORNIA

THE STATE OF CALIFORNIA OR ITS OFFICERS OR AGENTS SHALL NOT BE RESPONSIBLE FOR THE ACCURACY OR COMPLETENESS OF ELECTRONIC COPIES OF THIS PLAN SHEET.

WW FLARE ANGLE	
ø3	129°08'14"
ø4	50°12'38"

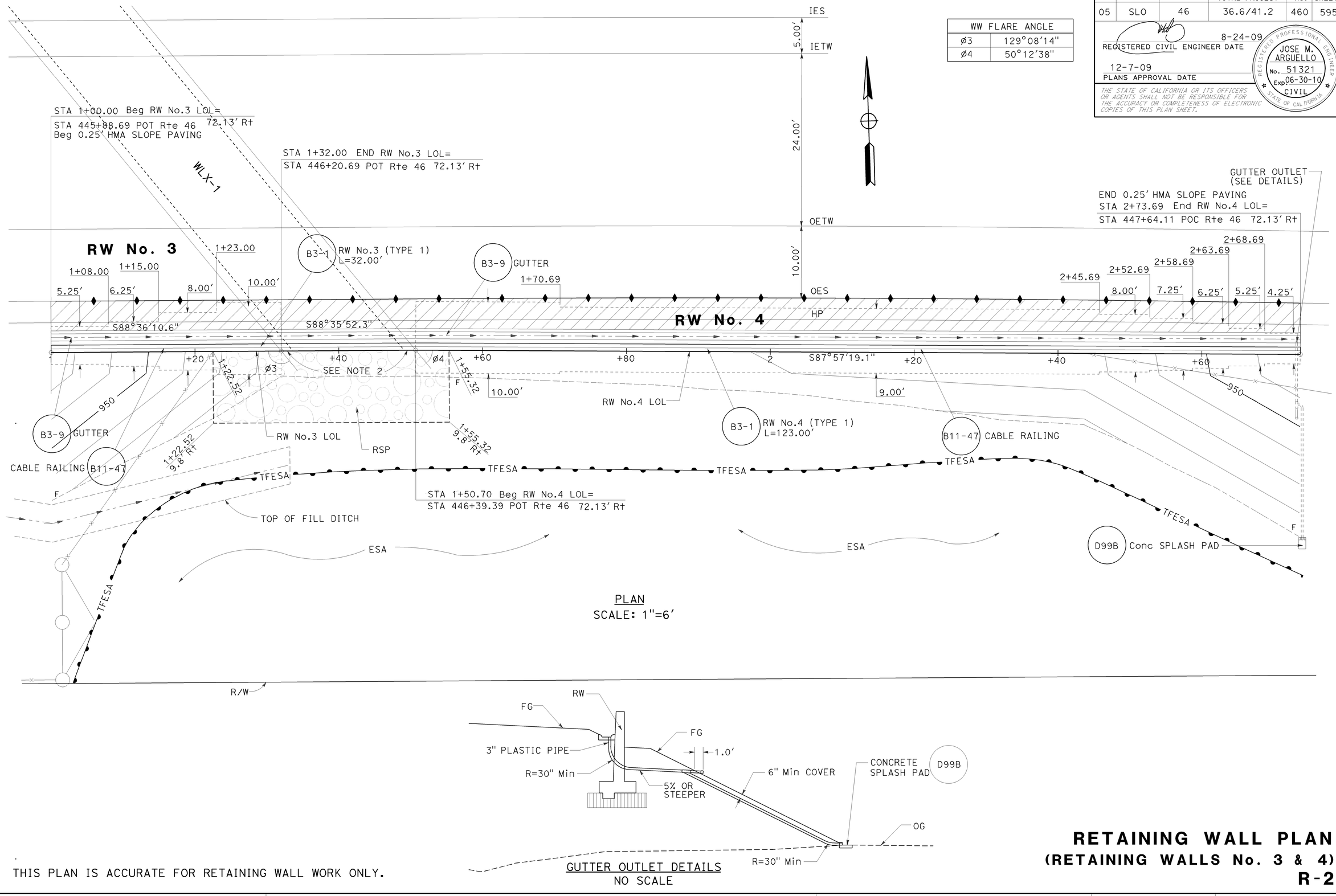

PLAN
SCALE: 1"=6'

GUTTER OUTLET DETAILS
NO SCALE

THIS PLAN IS ACCURATE FOR RETAINING WALL WORK ONLY.

RETAINING WALL PLAN
(RETAINING WALLS No. 3 & 4)

R-2

STATE OF CALIFORNIA - DEPARTMENT OF TRANSPORTATION
Caltrans
06-DESIGN
FUNCTIONAL SUPERVISOR: JACK WALKER
CALCULATED-DESIGNED BY: WHECHIN LIU
CHECKED BY: SUMI HOODE
REVISED BY
DATE REVISED

LAST REVISION | DATE PLOTTED => 08-DEC-2009
05-22-09 | TIME PLOTTED => 10:07

BORDER LAST REVISED 3/1/2007
RELATIVE BORDER SCALE IS IN INCHES 0 1 2 3
USERNAME => s135318
DGN FILE => 533072qa002.dgn
CU 06220
EA 330721

Dist	COUNTY	ROUTE	POST MILES TOTAL PROJECT	SHEET No.	TOTAL SHEETS
05	SLO	46	36.6/41.2	461	595

8-24-09
REGISTERED CIVIL ENGINEER DATE

12-7-09
PLANS APPROVAL DATE

REGISTERED PROFESSIONAL ENGINEER
JOSE M. ARGUELLO
No. 51321
Exp 06-30-10
CIVIL
STATE OF CALIFORNIA

THE STATE OF CALIFORNIA OR ITS OFFICERS OR AGENTS SHALL NOT BE RESPONSIBLE FOR THE ACCURACY OR COMPLETENESS OF ELECTRONIC COPIES OF THIS PLAN SHEET.

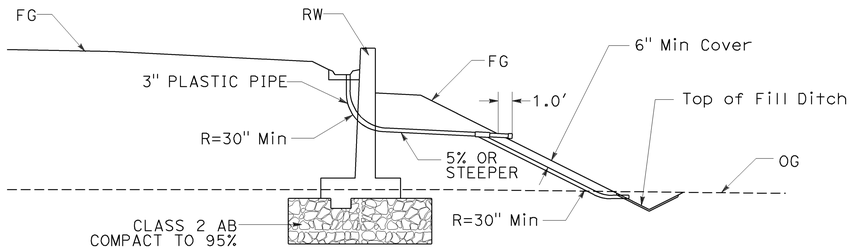

GUTTER OUTLET DETAILS
NO SCALE

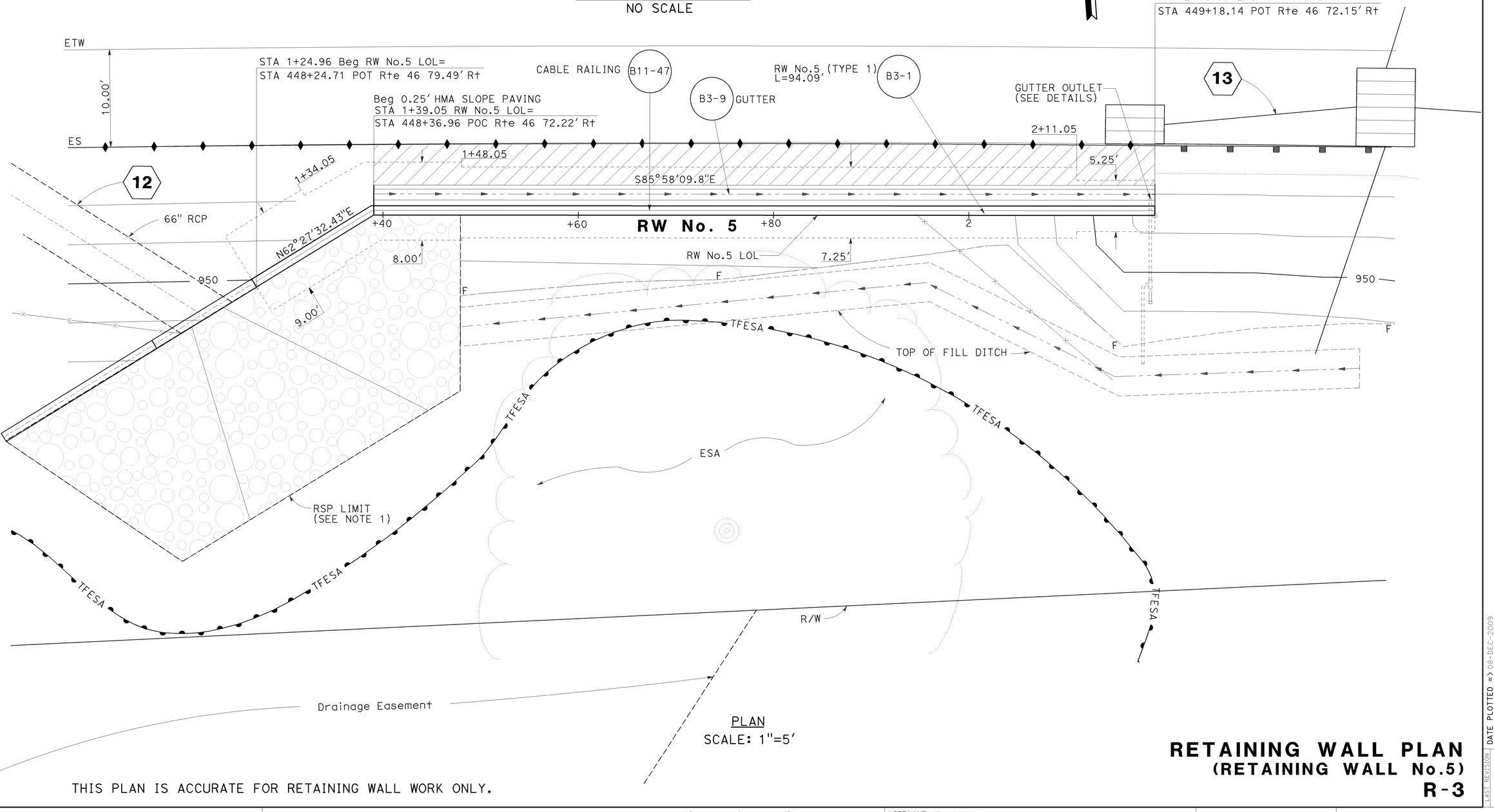

PLAN
SCALE: 1"=5'

THIS PLAN IS ACCURATE FOR RETAINING WALL WORK ONLY.

RETAINING WALL PLAN
(RETAINING WALL No.5)
R-3

REVISED BY	DATE REVISED

CALCULATED-DESIGNED BY: WHECHIN LIU
CHECKED BY: SUMI HOODE
FUNCTIONAL SUPERVISOR: JACK WALKER
STATE OF CALIFORNIA - DEPARTMENT OF TRANSPORTATION
06-DESIGN
Caltrans

LAST REVISION 05-22-09
DATE PLOTTED => 08-DEC-2009
TIME PLOTTED => 10:07

BORDER LAST REVISED 3/1/2007
RELATIVE BORDER SCALE IS IN INCHES 0 1 2 3
USERNAME => s135318
DGN FILE => 533072qa003.dgn
CU 06220
EA 330721

Dist	COUNTY	ROUTE	POST MILES TOTAL PROJECT	SHEET No.	TOTAL SHEETS
05	SLO	46	36.6/41.2	462	595

8-24-09
REGISTERED CIVIL ENGINEER DATE

12-7-09
PLANS APPROVAL DATE

REGISTERED PROFESSIONAL ENGINEER
JOSE M. ARGUELLO
No. 51321
Exp 06-30-10
CIVIL
STATE OF CALIFORNIA

THE STATE OF CALIFORNIA OR ITS OFFICERS OR AGENTS SHALL NOT BE RESPONSIBLE FOR THE ACCURACY OR COMPLETENESS OF ELECTRONIC COPIES OF THIS PLAN SHEET.

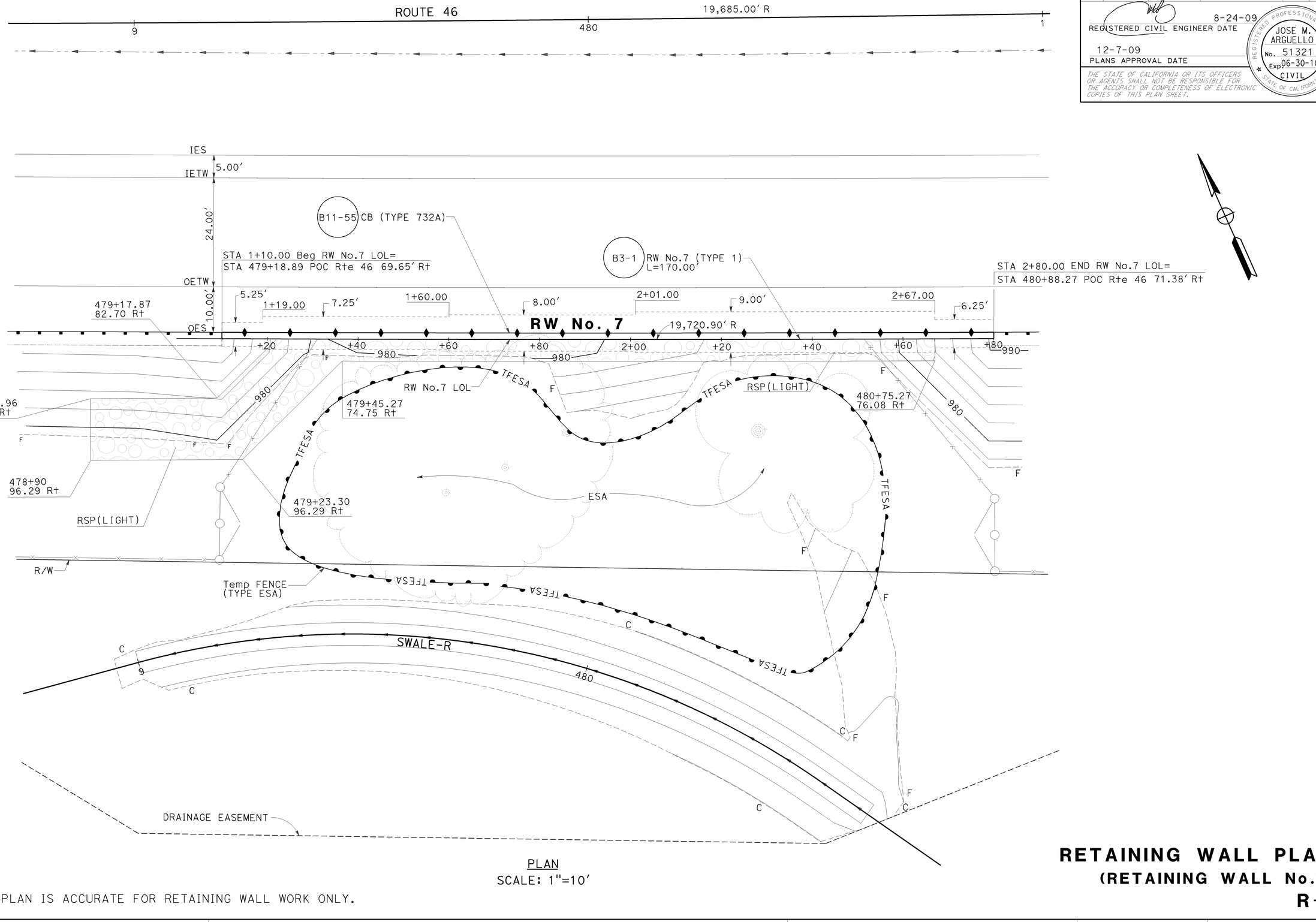

PLAN
SCALE: 1"=10'

THIS PLAN IS ACCURATE FOR RETAINING WALL WORK ONLY.

RETAINING WALL PLAN
(RETAINING WALL No.7)
R-4

LAST REVISION | DATE PLOTTED => 08-DEC-2009
05-22-09 | TIME PLOTTED => 10:08

CALCULATED-DESIGNED BY | CHECKED BY
REVISED BY | DATE REVISED
WHECHIN LIU | SUMI HOODE
FUNCTIONAL SUPERVISOR | JACK WALKER
STATE OF CALIFORNIA - DEPARTMENT OF TRANSPORTATION | 06-DESIGN
Caltrans

BORDER LAST REVISED 3/1/2007 | RELATIVE BORDER SCALE IS IN INCHES 0 1 2 3 | USERNAME => s135318 | DGN FILE => 533072qa004.dgn | CU 06220 | EA 330721

Dist	COUNTY	ROUTE	POST MILES TOTAL PROJECT	SHEET No.	TOTAL SHEETS
05	SLO	46	36.6/41.2	463	595

8-24-09
REGISTERED CIVIL ENGINEER DATE

12-7-09
PLANS APPROVAL DATE

REGISTERED PROFESSIONAL ENGINEER
JOSE M. ARGUELLO
No. 51321
Exp 06-30-10
CIVIL
STATE OF CALIFORNIA

THE STATE OF CALIFORNIA OR ITS OFFICERS OR AGENTS SHALL NOT BE RESPONSIBLE FOR THE ACCURACY OR COMPLETENESS OF ELECTRONIC COPIES OF THIS PLAN SHEET.

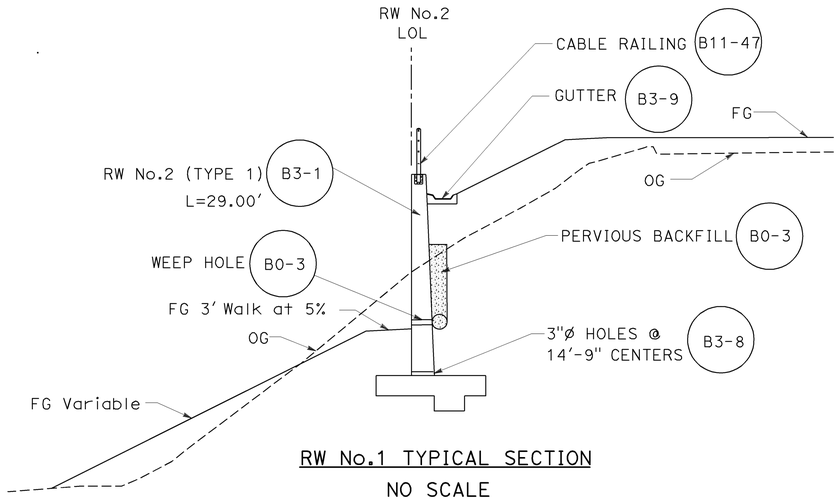

RW No.1 TYPICAL SECTION
NO SCALE

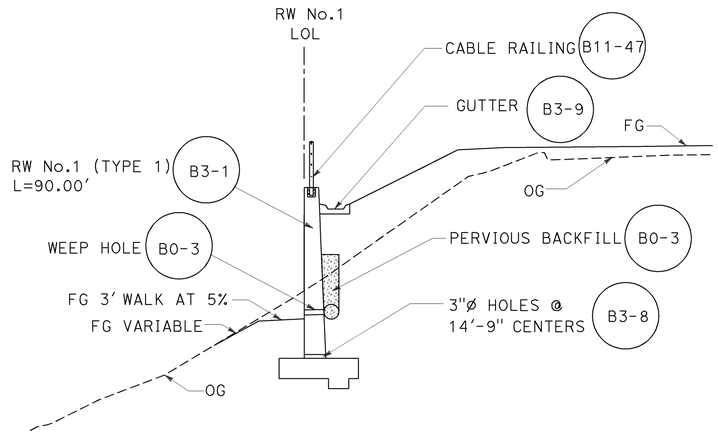

RW No.2 TYPICAL SECTION
NO SCALE

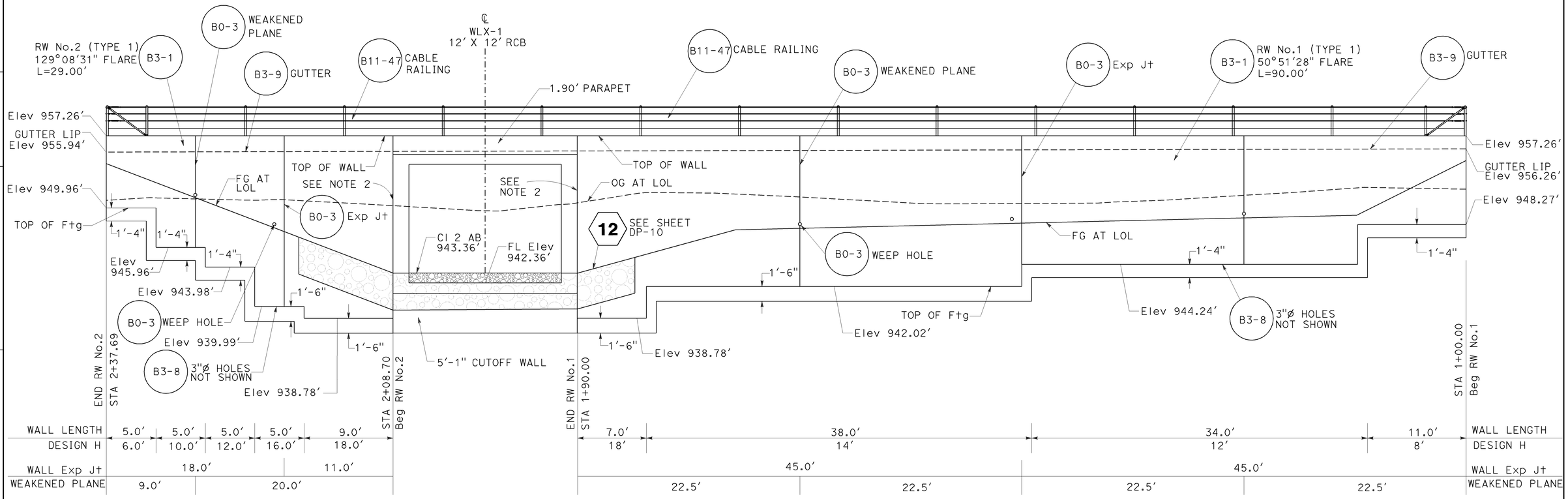

ELEVATION
SCALE: 1"=5'

RETAINING WALL DETAILS
(RETAINING WALLS No.1 & 2)
R-5

THIS PLAN IS ACCURATE FOR RETAINING WALL WORK ONLY.

WHECHIN LIU — CALCULATED-DESIGNED BY
SUMI HOODE — CHECKED BY
JACK WALKER — FUNCTIONAL SUPERVISOR
REVISED BY — DATE REVISED

STATE OF CALIFORNIA - DEPARTMENT OF TRANSPORTATION
06-DESIGN
Caltrans

LAST REVISION 05-08-09 DATE PLOTTED => 08-DEC-2009 TIME PLOTTED => 10:08

BORDER LAST REVISED 3/1/2007
RELATIVE BORDER SCALE IS IN INCHES 0 1 2 3
USERNAME => s135318
DGN FILE => 533072qa005.dgn
CU 06220
EA 330721

Dist	COUNTY	ROUTE	POST MILES TOTAL PROJECT	SHEET No.	TOTAL SHEETS
05	SLO	46	36.6/41.2	464	595

8-24-09
REGISTERED CIVIL ENGINEER DATE

12-7-09
PLANS APPROVAL DATE

REGISTERED PROFESSIONAL ENGINEER
JOSE M. ARGUELLO
No. 51321
Exp 06-30-10
CIVIL
STATE OF CALIFORNIA

THE STATE OF CALIFORNIA OR ITS OFFICERS OR AGENTS SHALL NOT BE RESPONSIBLE FOR THE ACCURACY OR COMPLETENESS OF ELECTRONIC COPIES OF THIS PLAN SHEET.

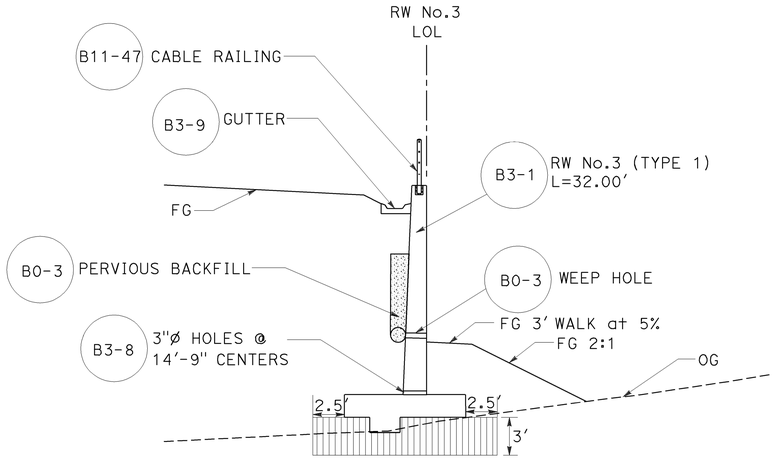

RW No.3 TYPICAL SECTION
NO SCALE

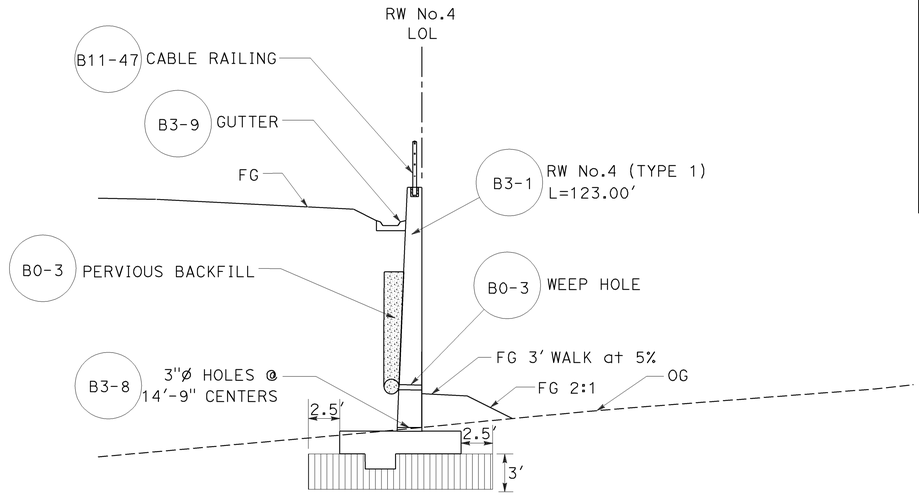

RW No.4 TYPICAL SECTION
NO SCALE

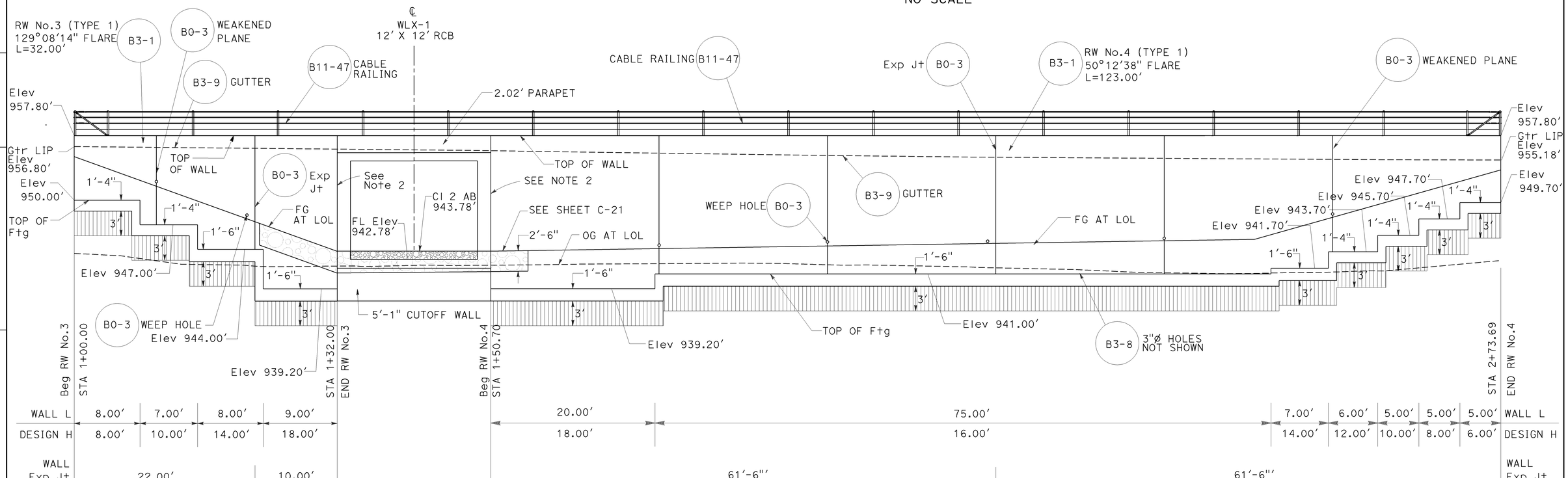

RW No. 3 **RW No. 4**

ELEVATION
SCALE: 1"=6'

THIS PLAN IS ACCURATE FOR RETAINING WALL WORK ONLY.

RETAINING WALL DETAILS
(RETAINING WALLS No. 3 & 4)

R-6

STATE OF CALIFORNIA - DEPARTMENT OF TRANSPORTATION
06-DESIGN
FUNCTIONAL SUPERVISOR: JACK WALKER
CALCULATED-DESIGNED BY: WHECHIN LIU
CHECKED BY: SUMI HOODE
REVISED BY
DATE REVISED

LAST REVISION DATE PLOTTED => 08-DEC-2009
TIME PLOTTED => 10:08
05-08-09

BORDER LAST REVISED 3/1/2007
RELATIVE BORDER SCALE IS IN INCHES 0 1 2 3
USERNAME => s135318
DGN FILE => 533072qa006.dgn
CU 06220
EA 330721

Dist	COUNTY	ROUTE	POST MILES TOTAL PROJECT	SHEET No.	TOTAL SHEETS
05	SLO	46	36.6/41.2	465	595

8-24-09
REGISTERED CIVIL ENGINEER DATE

12-7-09
PLANS APPROVAL DATE

REGISTERED PROFESSIONAL ENGINEER
JOSE M. ARGUELLO
No. 51321
Exp 06-30-10
CIVIL
STATE OF CALIFORNIA

THE STATE OF CALIFORNIA OR ITS OFFICERS OR AGENTS SHALL NOT BE RESPONSIBLE FOR THE ACCURACY OR COMPLETENESS OF ELECTRONIC COPIES OF THIS PLAN SHEET.

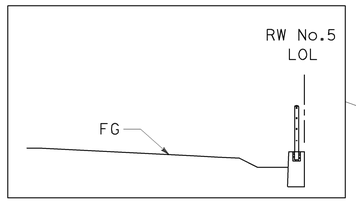

STA 1+24.96 TO STA 1+39.04

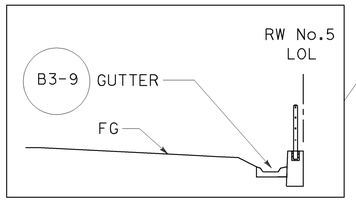

STA 1+39.04 TO STA 2+19.05

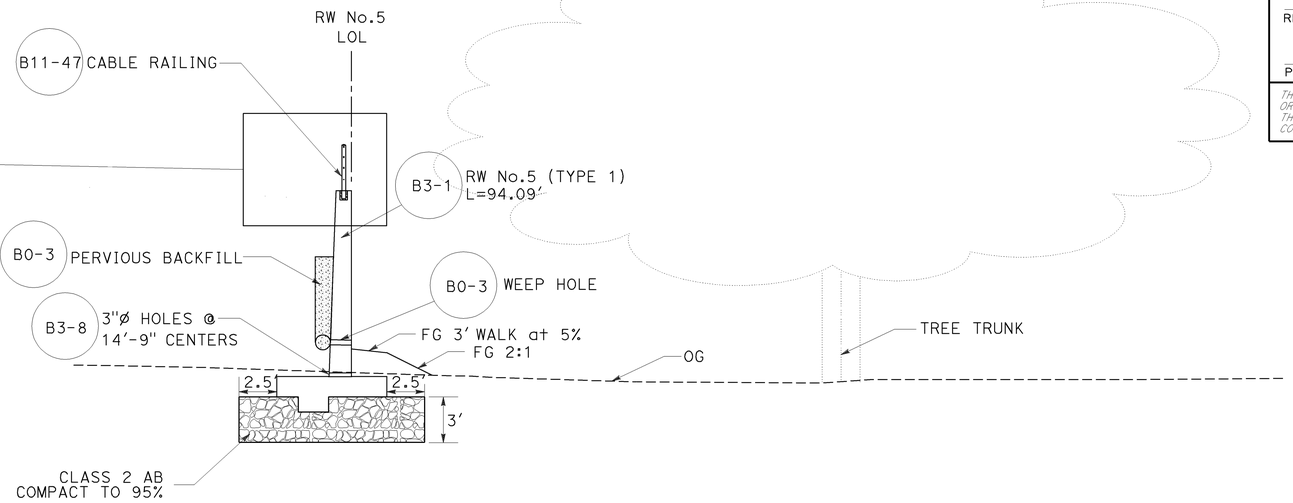

TYPICAL SECTION
NO SCALE

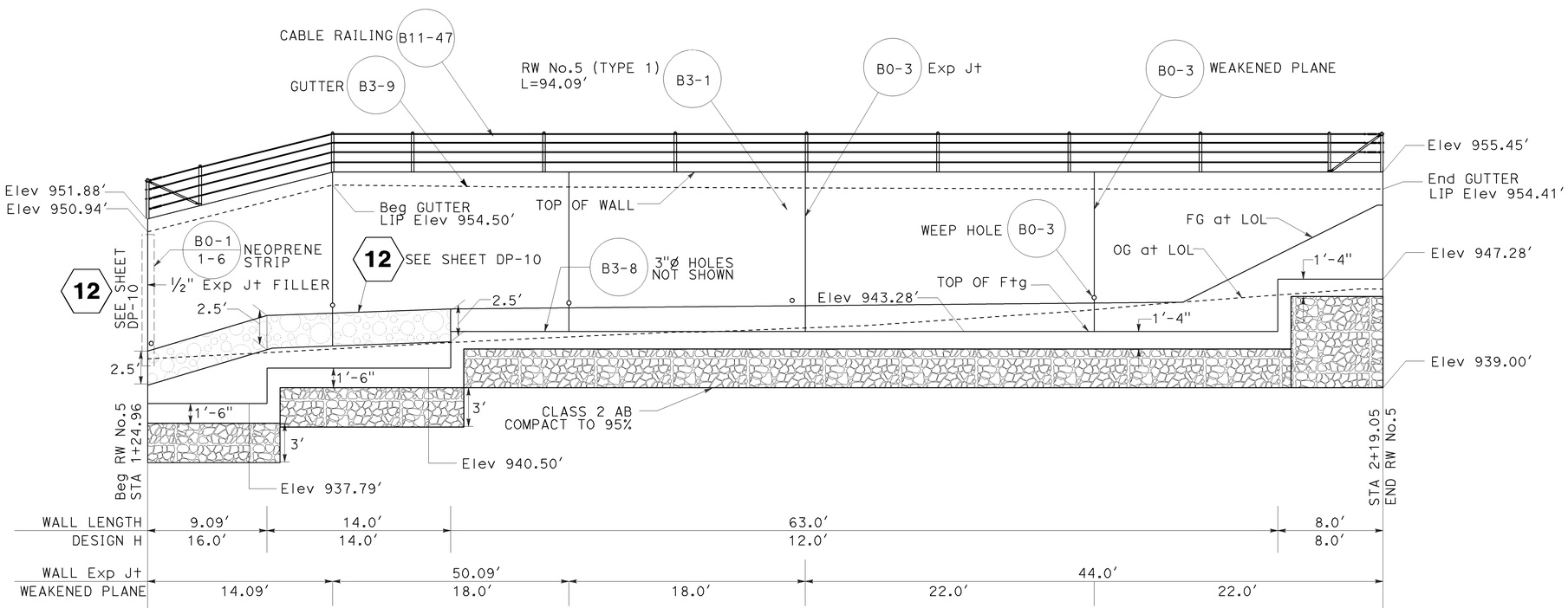

ELEVATION
SCALE: 1"=5'

THIS PLAN IS ACCURATE FOR RETAINING WALL WORK ONLY.

RETAINING WALL DETAILS
(RETAINING WALL No.5)
R-7

LAST REVISION 05-06-09
DATE PLOTTED => 08-DEC-2009
TIME PLOTTED => 10:08

STATE OF CALIFORNIA - DEPARTMENT OF TRANSPORTATION
06-DESIGN
FUNCTIONAL SUPERVISOR: JACK WALKER
CALCULATED-DESIGNED BY: WHECHIN LIU
CHECKED BY: SUMI HOODE
REVISED BY
DATE REVISED

BORDER LAST REVISED 3/1/2007
RELATIVE BORDER SCALE IS IN INCHES 0 1 2 3
USERNAME => s135318
DGN FILE => 533072qq007.dgn
CU 06220
EA 330721

Dist	COUNTY	ROUTE	POST MILES TOTAL PROJECT	SHEET No.	TOTAL SHEETS
05	SLO	46	36.6/41.2	466	595

8-24-09
REGISTERED CIVIL ENGINEER DATE

12-7-09
PLANS APPROVAL DATE

REGISTERED PROFESSIONAL ENGINEER
JOSE M. ARGUELLO
No. 51321
Exp 06-30-10
CIVIL
STATE OF CALIFORNIA

THE STATE OF CALIFORNIA OR ITS OFFICERS OR AGENTS SHALL NOT BE RESPONSIBLE FOR THE ACCURACY OR COMPLETENESS OF ELECTRONIC COPIES OF THIS PLAN SHEET.

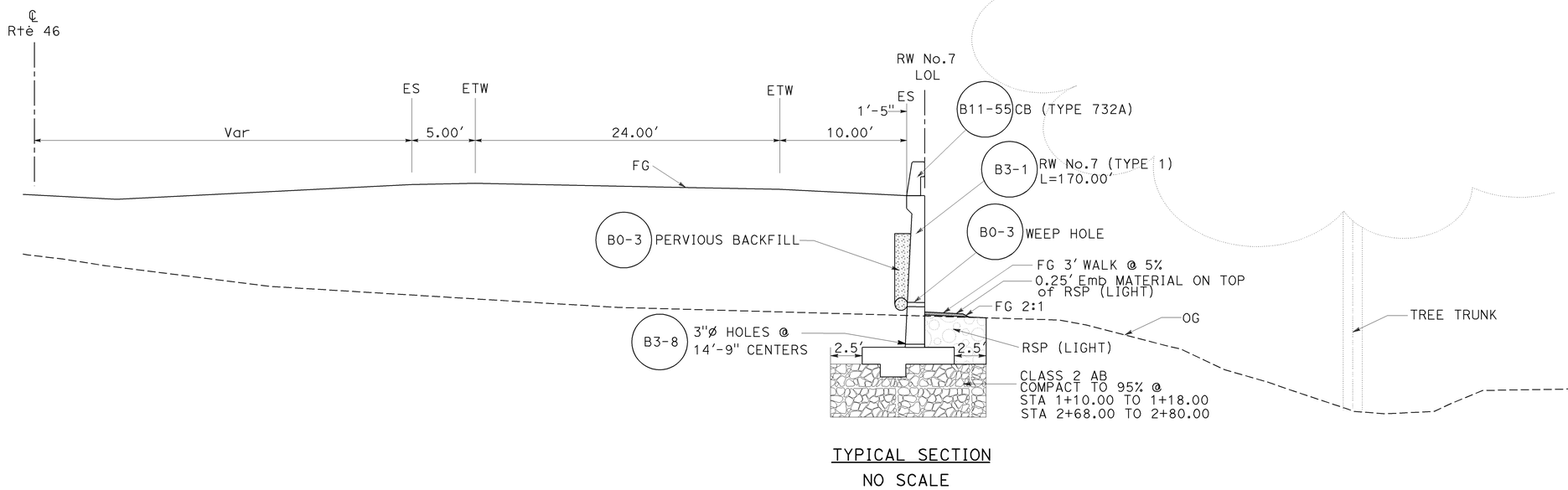

TYPICAL SECTION
NO SCALE

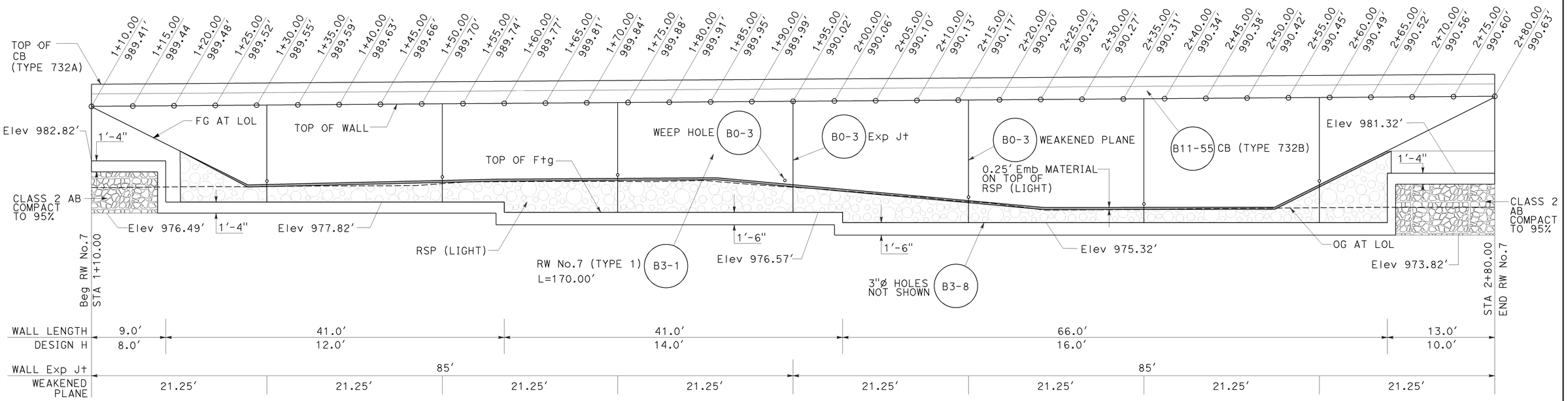

ELEVATION
SCALE: 1"=6'

THIS PLAN IS ACCURATE FOR RETAINING WALL WORK ONLY.

RETAINING WALL DETAILS
(RETAINING WALL No.7)

R-8

LAST REVISION DATE PLOTTED => 08-DEC-2009
05-07-09 TIME PLOTTED => 10:08

STATE OF CALIFORNIA - DEPARTMENT OF TRANSPORTATION
Caltrans
06-DESIGN
FUNCTIONAL SUPERVISOR: JACK WALKER
CALCULATED-DESIGNED BY: WHECHIN LIU
CHECKED BY: SUMI HOODE
REVISED BY
DATE REVISED

BORDER LAST REVISED 3/1/2007
RELATIVE BORDER SCALE IS IN INCHES 0 1 2 3
USERNAME => s135318
DGN FILE => 533072qa008.dgn
CU 06220
EA 330721

DIST	COUNTY	ROUTE	POST MILES TOTAL PROJECT	SHEET No	TOTAL SHEETS
05	SLO	46	36.6/41.2	467	595

Dan Appelbaum 10-6-09
REGISTERED CIVIL ENGINEER

12-7-09
PLANS APPROVAL DATE

The State of California or its officers or agents shall not be responsible for the accuracy or completeness of electronic copies of this plan sheet.

REGISTERED PROFESSIONAL ENGINEER — Dan Appelbaum — No. C50001 — Exp. 6-30-11 — CIVIL — STATE OF CALIFORNIA

This LOTB sheet was prepared in accordance with the Caltrans Soil & Rock Logging, Classification, & Presentation Manual (June 2007).

BENCH MARK

PM 37.71 Elev 955.461′ (NGVD29)
¾" iron pipe with plug and nail,
19.01′ Lt Rte 46 Sta 446+45.21
N 2435944.462, E 5804446.049

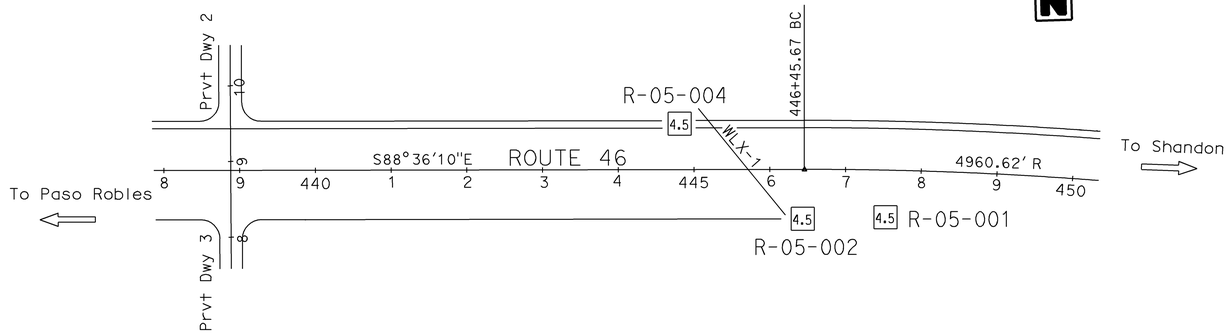

PLAN
1" = 100′

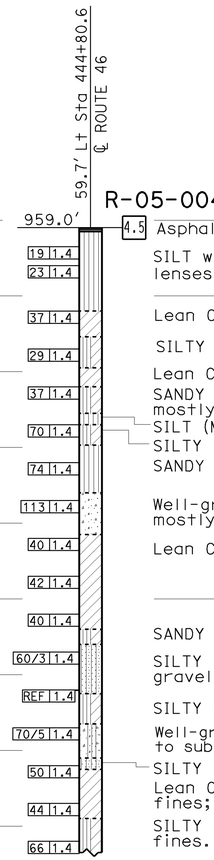

R-05-004

4.5 Asphalt

SILT with SAND (ML); medium dense; pale yellow; moist; little fine sand; mostly nonplastic fines; lenses of dark brown fat clay (FILL).

Lean CLAY (CL); hard; yellowish brown; moist; mostly medium plasticity fines.

SILTY CLAY with SAND (CL-ML); hard; pale yellow; moist; little fine sand; mostly low plasticity fines.

Lean CLAY (CL); hard; brown; moist; trace medium to fine sand; mostly medium plasticity fines.

SANDY SILTY CLAY (CL-ML); hard; brown; moist; trace fine, subangular gravel; some fine sand; mostly low plasticity fines.

SILT (ML); very dense; pale yellow; moist; mostly nonplastic fines; moderate cementation; cemented with calcite.

SILTY CLAY (CL-ML); hard; yellowish brown; moist; mostly low plasticity fines.

SANDY SILT (ML); very dense; yellowish brown; moist; some fine sand; mostly nonplastic fines.

Well-graded SAND with GRAVEL (SW); very dense; yellowish brown; wet; little fine, subangular gravel; mostly coarse to fine, subangular sand; trace nonplastic fines.

Lean CLAY (CL); hard; yellowish brown; moist; mostly medium plasticity fines; calcite nodules.

SANDY SILTY CLAY (CL-ML); hard; yellowish brown; moist; some fine sand; mostly low plasticity fines.

SILTY SAND with GRAVEL (SM); very dense; yellowish brown; wet; little fine, subangular to subrounded gravel; mostly fine sand; some low plasticity fines.

SILTY CLAY (CL-ML); hard; yellowish brown; moist; trace fine sand; mostly low plasticity fines.

Well-graded SAND with SILT and GRAVEL (SW-SM); very dense; yellowish brown; wet; little fine subangular to subrounded gravel; mostly coarse to fine, subangular to subrounded sand; little nonplastic fines.

SILTY SAND (SM); dense; yellowish brown; moist; mostly medium to fine sand; some nonplastic fines.

Lean CLAY (CL); hard; yellowish brown; moist; trace fine, subrounded gravel; mostly medium plasticity fines; calcite nodules.

SILTY CLAY with SAND (CL-ML); hard; yellowish brown; moist; little fine sand; mostly low plasticity fines.

11-3-05
Terminated at Elev 876.5′
ER_j = 60%
Ground water not measured

960 950 940 930 920 910 900 890 880 870

444+00 445+00 446+00

PROFILE
HOR. 1" = 10′
VER. 1" = 10′

ENGINEERING SERVICES		GEOTECHNICAL SERVICES		STATE OF CALIFORNIA DEPARTMENT OF TRANSPORTATION	DIVISION OF ENGINEERING SERVICES STRUCTURE DESIGN	BRIDGE NO.	RETAINING WALL NOS. 1, 2, 3, & 4
FUNCTIONAL SUPERVISOR	DRAWN BY: C. Christian, I.G-Remmen, 9/09	FIELD INVESTIGATION BY:			DESIGN BRANCH	POST MILES 36.6/41.2	LOG OF TEST BORINGS 1 OF 4
NAME: M. Finegan	CHECKED BY: M. Jurasius	D. Appelbaum					

OGS CIVIL LOG OF TEST BORINGS SHEET

ORIGINAL SCALE IN INCHES FOR REDUCED PLANS 0 1 2 3

CU 05
EA 330721

DISREGARD PRINTS BEARING EARLIER REVISION DATES →

REVISION DATES: 09-25-09 | 10-05-09

SHEET OF

FILE => 533072qa009.dgn

USERNAME = s1135318 DATE PLOTTED => 08-DEC-2009 TIME PLOTTED => 10:08

DIST	COUNTY	ROUTE	POST MILES TOTAL PROJECT	SHEET No	TOTAL SHEETS
05	SLO	46	36.6/41.2	468	595

Dan Appelbaum 10-6-09
REGISTERED CIVIL ENGINEER

12-7-09
PLANS APPROVAL DATE

REGISTERED PROFESSIONAL ENGINEER — Dan Appelbaum — No. C50001 — Exp. 6-30-11 — CIVIL — STATE OF CALIFORNIA

The State of California or its officers or agents shall not be responsible for the accuracy or completeness of electronic copies of this plan sheet.

This LOTB sheet was prepared in accordance with the Caltrans Soil & Rock Logging, Classification, & Presentation Manual (June 2007).

FOR PLAN VIEW, SEE
"LOG OF TEST BORINGS 1 OF 4"

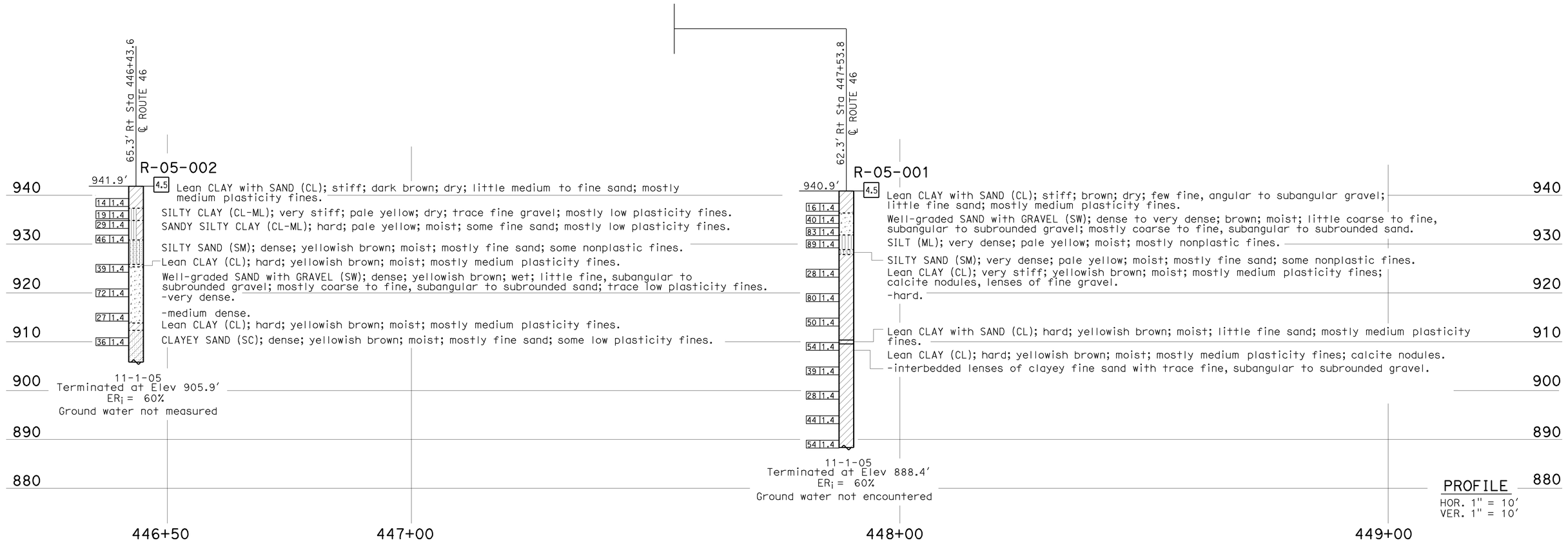

ENGINEERING SERVICES	GEOTECHNICAL SERVICES		STATE OF CALIFORNIA DEPARTMENT OF TRANSPORTATION	DIVISION OF ENGINEERING SERVICES STRUCTURE DESIGN	BRIDGE NO.	RETAINING WALL NOS. 1, 2, 3, & 4
FUNCTIONAL SUPERVISOR	DRAWN BY: C. Christian, I.G-Remmen, 9/09	FIELD INVESTIGATION BY:		DESIGN BRANCH	POST MILES	LOG OF TEST BORINGS 2 OF 4
NAME: M. Finegan	CHECKED BY: M. Jurasius	D. Appelbaum			36.6/41.2	

OGS CIVIL LOG OF TEST BORINGS SHEET

ORIGINAL SCALE IN INCHES FOR REDUCED PLANS 0 1 2 3

CU 05
EA 330721

DISREGARD PRINTS BEARING EARLIER REVISION DATES →

REVISION DATES									SHEET	OF
09-23-09	10-05-09									

FILE => 533072qa010.dgn

USERNAME = s1135318 DATE PLOTTED => 08-DEC-2009 TIME PLOTTED => 10:08

REFERENCE: CALTRANS SOIL & ROCK LOGGING, CLASSIFICATION, AND PRESENTATION MANUAL (JUNE 2007)

DIST	COUNTY	ROUTE	POST MILES TOTAL PROJECT	SHEET No	TOTAL SHEETS
05	SLO	46	36.6/41.2	469	595

Dan Appelbaum 10-6-09
REGISTERED CIVIL ENGINEER

12-7-09
PLANS APPROVAL DATE

REGISTERED PROFESSIONAL ENGINEER — Dan Appelbaum — No. C50001 — Exp. 6-30-11 — CIVIL — STATE OF CALIFORNIA

The State of California or its officers or agents shall not be responsible for the accuracy or completeness of electronic copies of this plan sheet.

CEMENTATION

Description	Criteria
Weak	Crumbles or breaks with handling or little finger pressure.
Moderate	Crumbles or breaks with considerable finger pressure.
Strong	Will not crumble or break with finger pressure.

BOREHOLE IDENTIFICATION

Symbol	Hole Type	Description
Size	A	Auger Boring
Size	R P	Rotary drilled boring Rotary percussion boring (air)
Size	R	Rotary drilled diamond core
Size	HD HA	Hand driven (1-inch soil tube) Hand Auger
●	D	Dynamic Cone Penetration Boring
▲	CPT	Cone Penetration Test (ASTM D 5778-95)
⬚	O	Other

Note: Size in inches.

CONSISTENCY OF COHESIVE SOILS

Description	Unconfined Compressive Strength (tsf)	Pocket Penetrometer Measurement (tsf)	Torvane Measurement (tsf)	Field Approximation
Very Soft	< 0.25	< 0.25	< 0.12	Easily penetrated several inches by fist
Soft	0.25 to 0.50	0.25 to 0.50	0.12 to 0.25	Easily penetrated several inches by thumb
Medium Stiff	0.50 to 1.0	0.50 to 1.0	0.25 to 0.50	Penetrated several inches by thumb with moderate effort
Stiff	1 to 2	1 to 2	0.50 to 1.0	Readily indented by thumb but penetrated only with great effort
Very Stiff	2 to 4	2 to 4	1.0 to 2.0	Readily indented by thumbnail
Hard	> 4.0	> 4.0	> 2.0	Indented by thumbnail with difficulty

PLASTICITY OF FINE-GRAINED SOILS

Description	Criteria
Nonplastic	A 1/8-inch thread cannot be rolled at any water content.
Low	The thread can barely be rolled and the lump cannot be formed when drier than the plastic limit.
Medium	The thread is easy to roll and not much time is required to reach the plastic limit. The thread cannot be rerolled after reaching the plastic limit. The lump crumbles when drier than the plastic limit.
High	It takes considerable time rolling and kneading to reach the plastic limit. The thread can be rerolled several times after reaching the plastic limit. The lump can be formed without crumbling when drier than the plastic limit.

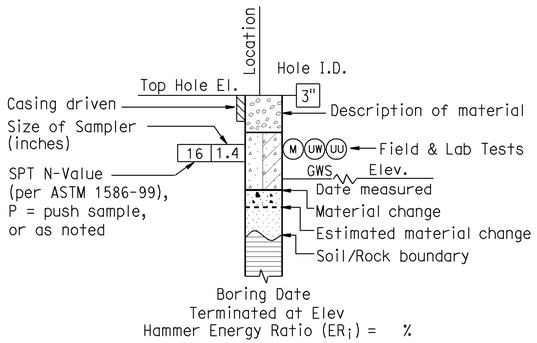

ROTARY BORING

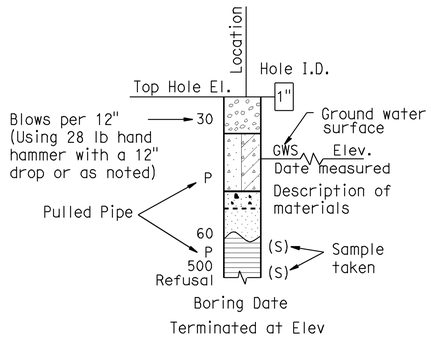

HAND BORING

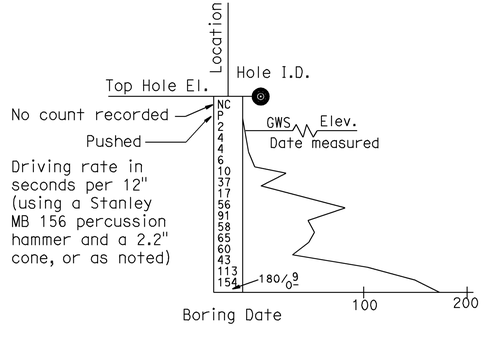

DYNAMIC CONE PENETRATION BORING

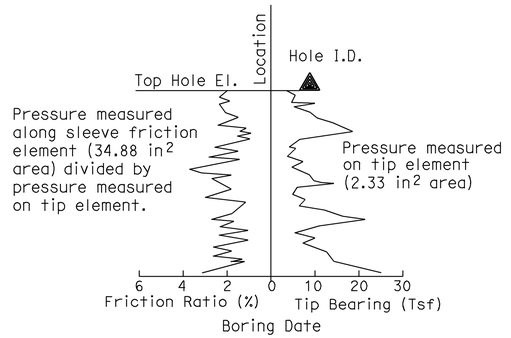

CONE PENETRATION TEST (CPT) SOUNDING

ENGINEERING SERVICES	GEOTECHNICAL SERVICES	STATE OF CALIFORNIA DEPARTMENT OF TRANSPORTATION	DIVISION OF ENGINEERING SERVICES STRUCTURE DESIGN	BRIDGE NO.	RETAINING WALL NOS. 1, 2, 3, & 4
	PREPARED BY: I.G-Remmen, 9/09		DESIGN BRANCH	POST MILE 36.6/41.2	LOG OF TEST BORINGS 3 OF 4

GS LOTB SOIL LEGEND

ORIGINAL SCALE IN INCHES FOR REDUCED PLANS 0 1 2 3

CU 05
EA 330721

DISREGARD PRINTS BEARING EARLIER REVISION DATES →

REVISION DATES | SHEET | OF

FILE => 533072qa011.dgn

USERNAME => s135318 DATE PLOTTED => 08-DEC-2009 TIME PLOTTED => 10:08

REFERENCE: CALTRANS SOIL & ROCK LOGGING, CLASSIFICATION, AND PRESENTATION MANUAL (JUNE 2007)

GROUP SYMBOLS AND NAMES

Graphic/Symbol	Group Names	Graphic/Symbol	Group Names
GW	Well-graded GRAVEL Well-graded GRAVEL with SAND	CL	Lean CLAY Lean CLAY with SAND Lean CLAY with GRAVEL SANDY lean CLAY SANDY lean CLAY with GRAVEL GRAVELLY lean CLAY GRAVELLY lean CLAY with SAND
GP	Poorly graded GRAVEL Poorly graded GRAVEL with SAND		
GW-GM	Well-graded GRAVEL with SILT Well-graded GRAVEL with SILT and SAND	CL-ML	SILTY CLAY SILTY CLAY with SAND SILTY CLAY with GRAVEL SANDY SILTY CLAY SANDY SILTY CLAY with GRAVEL GRAVELLY SILTY CLAY GRAVELLY SILTY CLAY with SAND
GW-GC	Well-graded GRAVEL with CLAY (or SILTY CLAY) Well-graded GRAVEL with CLAY and SAND (or SILTY CLAY and SAND)		
GP-GM	Poorly graded GRAVEL with SILT Poorly graded GRAVEL with SILT and SAND	ML	SILT SILT with SAND SILT with GRAVEL SANDY SILT SANDY SILT with GRAVEL GRAVELLY SILT GRAVELLY SILT with SAND
GP-GC	Poorly graded GRAVEL with CLAY (or SILTY CLAY) Poorly graded GRAVEL with CLAY and SAND (or SILTY CLAY and SAND)		
GM	SILTY GRAVEL SILTY GRAVEL with SAND	OL	ORGANIC lean CLAY ORGANIC lean CLAY with SAND ORGANIC lean CLAY with GRAVEL SANDY ORGANIC lean CLAY SANDY ORGANIC lean CLAY with GRAVEL GRAVELLY ORGANIC lean CLAY GRAVELLY ORGANIC lean CLAY with SAND
GC	CLAYEY GRAVEL CLAYEY GRAVEL with SAND		
GC-GM	SILTY, CLAYEY GRAVEL SILTY, CLAYEY GRAVEL with SAND	OL	ORGANIC SILT ORGANIC SILT with SAND ORGANIC SILT with GRAVEL SANDY ORGANIC SILT SANDY ORGANIC SILT with GRAVEL GRAVELLY ORGANIC SILT GRAVELLY ORGANIC SILT with SAND
SW	Well-graded SAND Well-graded SAND with GRAVEL		
SP	Poorly graded SAND Poorly graded SAND with GRAVEL	CH	Fat CLAY Fat CLAY with SAND Fat CLAY with GRAVEL SANDY fat CLAY SANDY fat CLAY with GRAVEL GRAVELLY fat CLAY GRAVELLY fat CLAY with SAND
SW-SM	Well-graded SAND with SILT Well-graded SAND with SILT and GRAVEL		
SW-SC	Well-graded SAND with CLAY (or SILTY CLAY) Well-graded SAND with CLAY and GRAVEL (or SILTY CLAY and GRAVEL)	MH	Elastic SILT Elastic SILT with SAND Elastic SILT with GRAVEL SANDY elastic SILT SANDY elastic SILT with GRAVEL GRAVELLY elastic SILT GRAVELLY elastic SILT with SAND
SP-SM	Poorly graded SAND with SILT Poorly graded SAND with SILT and GRAVEL		
SP-SC	Poorly graded SAND with CLAY (or SILTY CLAY) Poorly graded SAND with CLAY and GRAVEL (or SILTY CLAY and GRAVEL)	OH	ORGANIC fat CLAY ORGANIC fat CLAY with SAND ORGANIC fat CLAY with GRAVEL SANDY ORGANIC fat CLAY SANDY ORGANIC fat CLAY with GRAVEL GRAVELLY ORGANIC fat CLAY GRAVELLY ORGANIC fat CLAY with SAND
SM	SILTY SAND SILTY SAND with GRAVEL		
SC	CLAYEY SAND CLAYEY SAND with GRAVEL	OH	ORGANIC elastic SILT ORGANIC elastic SILT with SAND ORGANIC elastic SILT with GRAVEL SANDY ORGANIC elastic SILT SANDY ORGANIC elastic SILT with GRAVEL GRAVELLY ORGANIC elastic SILT GRAVELLY ORGANIC elastic SILT with SAND
SC-SM	SILTY, CLAYEY SAND SILTY, CLAYEY SAND with GRAVEL		
PT	PEAT	OL/OH	ORGANIC SOIL ORGANIC SOIL with SAND ORGANIC SOIL with GRAVEL SANDY ORGANIC SOIL SANDY ORGANIC SOIL with GRAVEL GRAVELLY ORGANIC SOIL GRAVELLY ORGANIC SOIL with SAND
	COBBLES COBBLES and BOULDERS BOULDERS		

FIELD AND LABORATORY TESTING

- (C) Consolidation (ASTM D 2435)
- (CL) Collapse Potential (ASTM D 5333)
- (CP) Compaction Curve (CTM 216)
- (CR) Corrosivity Testing (CTM 643, CTM 422, CTM 417)
- (CU) Consolidated Undrained Triaxial (ASTM D 4767)
- (DS) Direct Shear (ASTM D 3080)
- (EI) Expansion Index (ASTM D 4829)
- (M) Moisture Content (ASTM D 2216)
- (OC) Organic Content-% (ASTM D 2974)
- (P) Permeability (CTM 220)
- (PA) Particle Size Analysis (ASTM D 422)
- (PI) Plasticity Index (AASHTO T 90) Liquid Limit (AASHTO T 89)
- (PL) Point Load Index (ASTM D 5731)
- (PM) Pressure Meter
- (PP) Pocket Penetrometer
- (R) R-Value (CTM 301)
- (SE) Sand Equivalent (CTM 217)
- (SG) Specific Gravity (AASHTO T 100)
- (SL) Shrinkage Limit (ASTM D 427)
- (SW) Swell Potential (ASTM D 4546)
- (TV) Pocket Torvane
- (UC) Unconfined Compression-Soil (ASTM D 2166) Unconfined Compression-Rock (ASTM D 2938)
- (UU) Unconsolidated Undrained Triaxial (ASTM D 2850)
- (UW) Unit Weight (ASTM D 4767)
- (VS) Vane Shear (AASHTO T 223)

DIST	COUNTY	ROUTE	POST MILES TOTAL PROJECT	SHEET No	TOTAL SHEETS
05	SLO	46	36.6/41.2	470	595

Dan Appelbaum 10-6-09
REGISTERED CIVIL ENGINEER

12-7-09
PLANS APPROVAL DATE

REGISTERED PROFESSIONAL ENGINEER — Dan Appelbaum — No. C50001 — Exp. 6-30-11 — CIVIL — STATE OF CALIFORNIA

The State of California or its officers or agents shall not be responsible for the accuracy or completeness of electronic copies of this plan sheet.

APPARENT DENSITY OF COHESIONLESS SOILS

Description	SPT N_{60} (Blows / 12 inches)
Very loose	0 - 4
Loose	5 - 10
Medium Dense	11 - 30
Dense	31 - 50
Very Dense	> 50

MOISTURE

Description	Criteria
Dry	Absence of moisture, dusty, dry to the touch
Moist	Damp but no visible water
Wet	Visible free water, usually soil is below water table

PERCENT OR PROPORTION OF SOILS

Description	Criteria
Trace	Particles are present but estimated to be less than 5%
Few	5 to 10%
Little	15 to 25%
Some	30 to 45%
Mostly	50 to 100%

PARTICLE SIZE

Description		Size
Boulder		> 12"
Cobble		3" to 12"
Gravel	Coarse	3/4" to 3"
	Fine	No. 4 to 3/4"
Sand	Coarse	No. 10 to No. 4
	Medium	No. 40 to No. 10
	Fine	No. 200 to No. 40

ENGINEERING SERVICES	GEOTECHNICAL SERVICES	STATE OF CALIFORNIA DEPARTMENT OF TRANSPORTATION	DIVISION OF ENGINEERING SERVICES STRUCTURE DESIGN	BRIDGE NO.	RETAINING WALL NOS. 1, 2, 3, & 4
	PREPARED BY: I.G-Remmen, 9/09		DESIGN BRANCH	POST MILE 36.6/41.2	LOG OF TEST BORINGS 4 OF 4

GS LOTB SOIL LEGEND

ORIGINAL SCALE IN INCHES FOR REDUCED PLANS 0 1 2 3

CU 05
EA 330721

DISREGARD PRINTS BEARING EARLIER REVISION DATES →

REVISION DATES | SHEET | OF

FILE => 533072qa012.dgn

USERNAME => s135318 DATE PLOTTED => 08-DEC-2009 TIME PLOTTED => 10:08

DIST	COUNTY	ROUTE	POST MILES TOTAL PROJECT	SHEET No	TOTAL SHEETS
05	SLO	46	36.6/41.2	471	595

Michael S. Finegan 9-25-09
REGISTERED CIVIL ENGINEER

12-7-09
PLANS APPROVAL DATE

The State of California or its officers or agents shall not be responsible for the accuracy or completeness of electronic copies of this plan sheet.

REGISTERED PROFESSIONAL ENGINEER — Michael S. Finegan — No. C50138 — Exp. 6-30-11 — CIVIL — STATE OF CALIFORNIA

This LOTB sheet was prepared in accordance with the Caltrans Soil & Rock Logging, Classification, & Presentation Manual (June 2007).

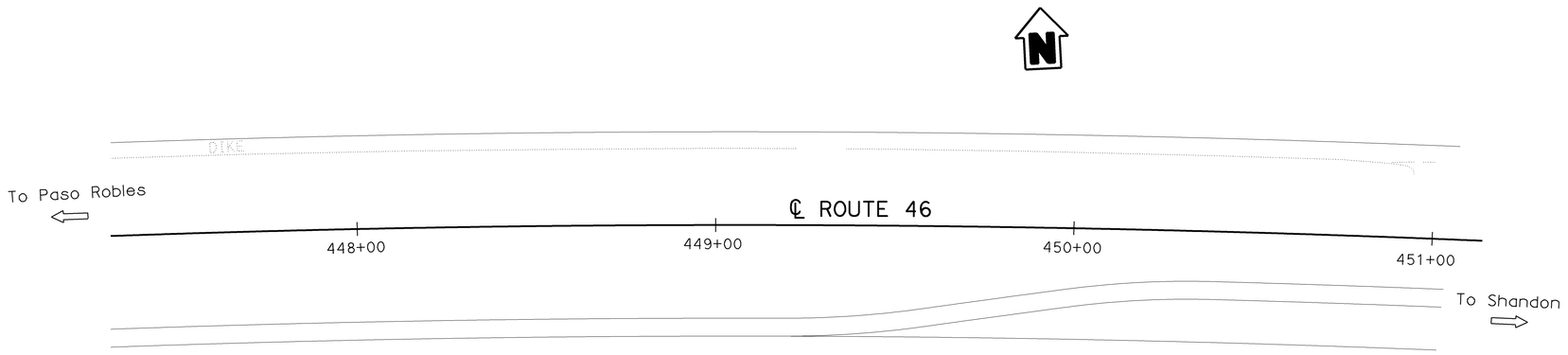

BENCH MARK

SL046 PM-37.90
Fnd 1" IP w/Caltrans control pp.
Elev 964.46′ (NGVD29)
N 2435866.313
E 5805492.634

R-08-002 3.7

R-08-003 3.7

PLAN

1" = 20′

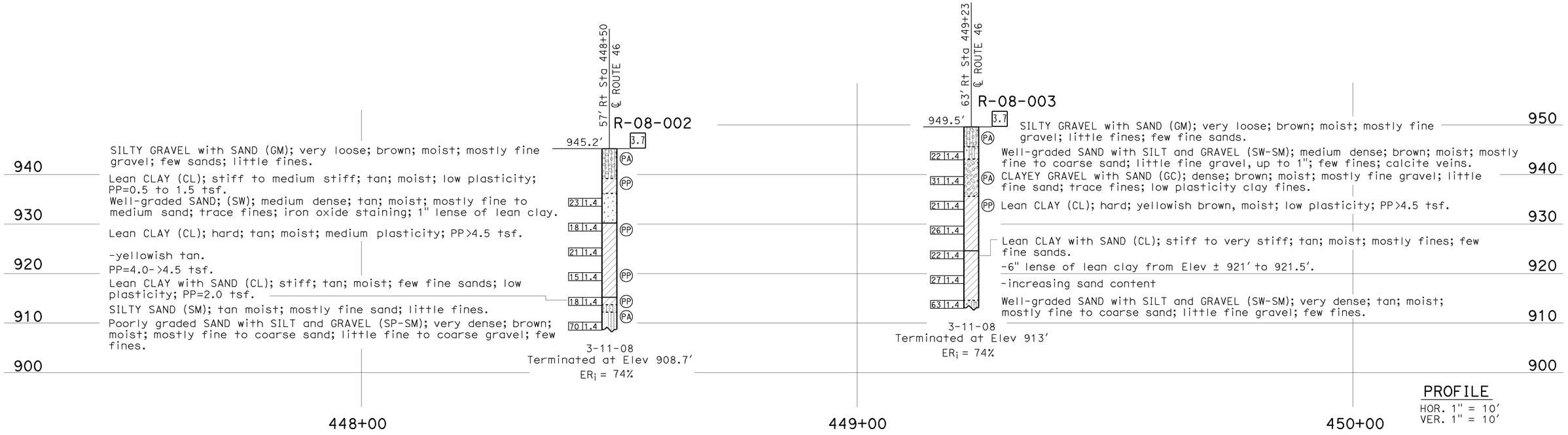

PROFILE

HOR. 1" = 10′
VER. 1" = 10′

ENGINEERING SERVICES	GEOTECHNICAL SERVICES	STATE OF CALIFORNIA DEPARTMENT OF TRANSPORTATION	DIVISION OF ENGINEERING SERVICES STRUCTURE DESIGN	BRIDGE NO.	RETAINING WALL NO. 5
FUNCTIONAL SUPERVISOR NAME: R. Bibbens	DRAWN BY: C. Christian CHECKED BY: M. Jurasius	FIELD INVESTIGATION BY: R. Turner, M. Finegan	DESIGN BRANCH	POST MILES 36.6/41.2	LOG OF TEST BORINGS 1 OF 3

OGS CIVIL LOG OF TEST BORINGS SHEET

ORIGINAL SCALE IN INCHES FOR REDUCED PLANS 0 1 2 3

CU 05
EA 330721

DISREGARD PRINTS BEARING EARLIER REVISION DATES →

REVISION DATES: 09-16-09

SHEET OF

FILE => 533072qa013.dgn

USERNAME = rrstrk DATE PLOTTED => 08-DEC-2009 TIME PLOTTED => 10:03

REFERENCE: CALTRANS SOIL & ROCK LOGGING, CLASSIFICATION, AND PRESENTATION MANUAL (JUNE 2007)

DIST	COUNTY	ROUTE	POST MILES TOTAL PROJECT	SHEET No	TOTAL SHEETS
05	SLO	46	36.6/41.2	472	595

Michael S. Finegan 9-25-09
REGISTERED CIVIL ENGINEER

12-7-09
PLANS APPROVAL DATE

REGISTERED PROFESSIONAL ENGINEER — Michael S. Finegan — No. C50138 — Exp. 6-30-11 — CIVIL — STATE OF CALIFORNIA

The State of California or its officers or agents shall not be responsible for the accuracy or completeness of electronic copies of this plan sheet.

CEMENTATION

Description	Criteria
Weak	Crumbles or breaks with handling or little finger pressure.
Moderate	Crumbles or breaks with considerable finger pressure.
Strong	Will not crumble or break with finger pressure.

BOREHOLE IDENTIFICATION

Symbol	Hole Type	Description
Size	A	Auger Boring
Size	R P	Rotary drilled boring Rotary percussion boring (air)
Size	R	Rotary drilled diamond core
Size	HD HA	Hand driven (1-inch soil tube) Hand Auger
●	D	Dynamic Cone Penetration Boring
▲	CPT	Cone Penetration Test (ASTM D 5778-95)
⬚	O	Other

Note: Size in inches.

CONSISTENCY OF COHESIVE SOILS

Description	Unconfined Compressive Strength (tsf)	Pocket Penetrometer Measurement (tsf)	Torvane Measurement (tsf)	Field Approximation
Very Soft	< 0.25	< 0.25	< 0.12	Easily penetrated several inches by fist
Soft	0.25 to 0.50	0.25 to 0.50	0.12 to 0.25	Easily penetrated several inches by thumb
Medium Stiff	0.50 to 1.0	0.50 to 1.0	0.25 to 0.50	Penetrated several inches by thumb with moderate effort
Stiff	1 to 2	1 to 2	0.50 to 1.0	Readily indented by thumb but penetrated only with great effort
Very Stiff	2 to 4	2 to 4	1.0 to 2.0	Readily indented by thumbnail
Hard	> 4.0	> 4.0	> 2.0	Indented by thumbnail with difficulty

PLASTICITY OF FINE-GRAINED SOILS

Description	Criteria
Nonplastic	A 1/8-inch thread cannot be rolled at any water content.
Low	The thread can barely be rolled and the lump cannot be formed when drier than the plastic limit.
Medium	The thread is easy to roll and not much time is required to reach the plastic limit. The thread cannot be rerolled after reaching the plastic limit. The lump crumbles when drier than the plastic limit.
High	It takes considerable time rolling and kneading to reach the plastic limit. The thread can be rerolled several times after reaching the plastic limit. The lump can be formed without crumbling when drier than the plastic limit.

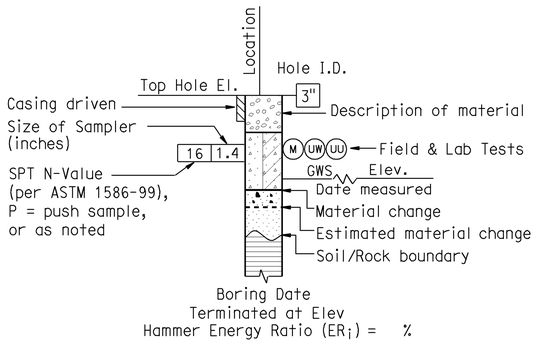

ROTARY BORING

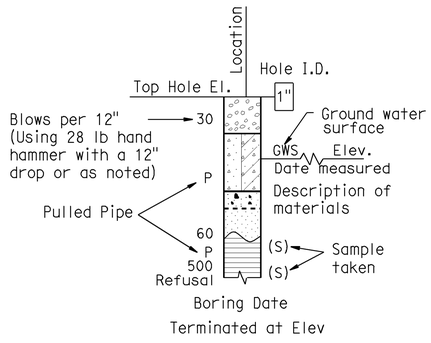

HAND BORING

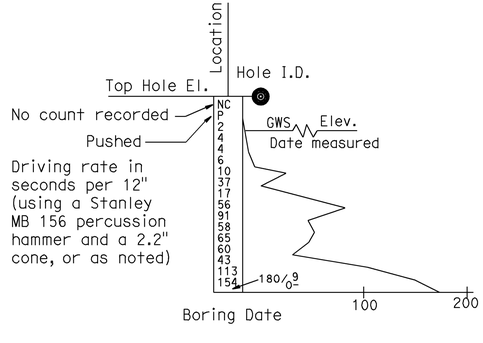

DYNAMIC CONE PENETRATION BORING

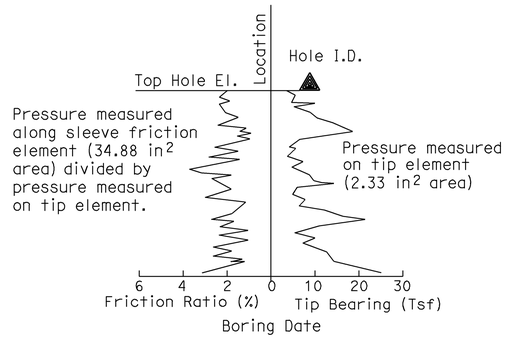

CONE PENETRATION TEST (CPT) SOUNDING

ENGINEERING SERVICES	GEOTECHNICAL SERVICES	STATE OF CALIFORNIA DEPARTMENT OF TRANSPORTATION	DIVISION OF ENGINEERING SERVICES STRUCTURE DESIGN	BRIDGE NO.	RETAINING WALL NO. 5
	PREPARED BY: I.G-Remmen, 9/09		DESIGN BRANCH	POST MILE 36.6/41.2	LOG OF TEST BORINGS 2 OF 3

GS LOTB SOIL LEGEND

ORIGINAL SCALE IN INCHES FOR REDUCED PLANS 0 1 2 3

CU 05
EA 330721

DISREGARD PRINTS BEARING EARLIER REVISION DATES →

REVISION DATES | SHEET | OF

FILE => 533072qa014.dgn

USERNAME => ttistrk DATE PLOTTED => 08-DEC-2009 TIME PLOTTED => 10:03

REFERENCE: CALTRANS SOIL & ROCK LOGGING, CLASSIFICATION, AND PRESENTATION MANUAL (JUNE 2007)

GROUP SYMBOLS AND NAMES

Graphic/Symbol	Group Names	Graphic/Symbol	Group Names
GW	Well-graded GRAVEL Well-graded GRAVEL with SAND	CL	Lean CLAY Lean CLAY with SAND Lean CLAY with GRAVEL SANDY lean CLAY SANDY lean CLAY with GRAVEL GRAVELLY lean CLAY GRAVELLY lean CLAY with SAND
GP	Poorly graded GRAVEL Poorly graded GRAVEL with SAND		
GW-GM	Well-graded GRAVEL with SILT Well-graded GRAVEL with SILT and SAND	CL-ML	SILTY CLAY SILTY CLAY with SAND SILTY CLAY with GRAVEL SANDY SILTY CLAY SANDY SILTY CLAY with GRAVEL GRAVELLY SILTY CLAY GRAVELLY SILTY CLAY with SAND
GW-GC	Well-graded GRAVEL with CLAY (or SILTY CLAY) Well-graded GRAVEL with CLAY and SAND (or SILTY CLAY and SAND)		
GP-GM	Poorly graded GRAVEL with SILT Poorly graded GRAVEL with SILT and SAND	ML	SILT SILT with SAND SILT with GRAVEL SANDY SILT SANDY SILT with GRAVEL GRAVELLY SILT GRAVELLY SILT with SAND
GP-GC	Poorly graded GRAVEL with CLAY (or SILTY CLAY) Poorly graded GRAVEL with CLAY and SAND (or SILTY CLAY and SAND)		
GM	SILTY GRAVEL SILTY GRAVEL with SAND	OL	ORGANIC lean CLAY ORGANIC lean CLAY with SAND ORGANIC lean CLAY with GRAVEL SANDY ORGANIC lean CLAY SANDY ORGANIC lean CLAY with GRAVEL GRAVELLY ORGANIC lean CLAY GRAVELLY ORGANIC lean CLAY with SAND
GC	CLAYEY GRAVEL CLAYEY GRAVEL with SAND		
GC-GM	SILTY, CLAYEY GRAVEL SILTY, CLAYEY GRAVEL with SAND	OL	ORGANIC SILT ORGANIC SILT with SAND ORGANIC SILT with GRAVEL SANDY ORGANIC SILT SANDY ORGANIC SILT with GRAVEL GRAVELLY ORGANIC SILT GRAVELLY ORGANIC SILT with SAND
SW	Well-graded SAND Well-graded SAND with GRAVEL		
SP	Poorly graded SAND Poorly graded SAND with GRAVEL	CH	Fat CLAY Fat CLAY with SAND Fat CLAY with GRAVEL SANDY fat CLAY SANDY fat CLAY with GRAVEL GRAVELLY fat CLAY GRAVELLY fat CLAY with SAND
SW-SM	Well-graded SAND with SILT Well-graded SAND with SILT and GRAVEL		
SW-SC	Well-graded SAND with CLAY (or SILTY CLAY) Well-graded SAND with CLAY and GRAVEL (or SILTY CLAY and GRAVEL)	MH	Elastic SILT Elastic SILT with SAND Elastic SILT with GRAVEL SANDY elastic SILT SANDY elastic SILT with GRAVEL GRAVELLY elastic SILT GRAVELLY elastic SILT with SAND
SP-SM	Poorly graded SAND with SILT Poorly graded SAND with SILT and GRAVEL		
SP-SC	Poorly graded SAND with CLAY (or SILTY CLAY) Poorly graded SAND with CLAY and GRAVEL (or SILTY CLAY and GRAVEL)	OH	ORGANIC fat CLAY ORGANIC fat CLAY with SAND ORGANIC fat CLAY with GRAVEL SANDY ORGANIC fat CLAY SANDY ORGANIC fat CLAY with GRAVEL GRAVELLY ORGANIC fat CLAY GRAVELLY ORGANIC fat CLAY with SAND
SM	SILTY SAND SILTY SAND with GRAVEL		
SC	CLAYEY SAND CLAYEY SAND with GRAVEL	OH	ORGANIC elastic SILT ORGANIC elastic SILT with SAND ORGANIC elastic SILT with GRAVEL SANDY ORGANIC elastic SILT SANDY ORGANIC elastic SILT with GRAVEL GRAVELLY ORGANIC elastic SILT GRAVELLY ORGANIC elastic SILT with SAND
SC-SM	SILTY, CLAYEY SAND SILTY, CLAYEY SAND with GRAVEL		
PT	PEAT	OL/OH	ORGANIC SOIL ORGANIC SOIL with SAND ORGANIC SOIL with GRAVEL SANDY ORGANIC SOIL SANDY ORGANIC SOIL with GRAVEL GRAVELLY ORGANIC SOIL GRAVELLY ORGANIC SOIL with SAND
	COBBLES COBBLES and BOULDERS BOULDERS		

FIELD AND LABORATORY TESTING

- (C) Consolidation (ASTM D 2435)
- (CL) Collapse Potential (ASTM D 5333)
- (CP) Compaction Curve (CTM 216)
- (CR) Corrosivity Testing (CTM 643, CTM 422, CTM 417)
- (CU) Consolidated Undrained Triaxial (ASTM D 4767)
- (DS) Direct Shear (ASTM D 3080)
- (EI) Expansion Index (ASTM D 4829)
- (M) Moisture Content (ASTM D 2216)
- (OC) Organic Content-% (ASTM D 2974)
- (P) Permeability (CTM 220)
- (PA) Particle Size Analysis (ASTM D 422)
- (PI) Plasticity Index (AASHTO T 90) Liquid Limit (AASHTO T 89)
- (PL) Point Load Index (ASTM D 5731)
- (PM) Pressure Meter
- (PP) Pocket Penetrometer
- (R) R-Value (CTM 301)
- (SE) Sand Equivalent (CTM 217)
- (SG) Specific Gravity (AASHTO T 100)
- (SL) Shrinkage Limit (ASTM D 427)
- (SW) Swell Potential (ASTM D 4546)
- (TV) Pocket Torvane
- (UC) Unconfined Compression-Soil (ASTM D 2166) Unconfined Compression-Rock (ASTM D 2938)
- (UU) Unconsolidated Undrained Triaxial (ASTM D 2850)
- (UW) Unit Weight (ASTM D 4767)
- (VS) Vane Shear (AASHTO T 223)

DIST	COUNTY	ROUTE	POST MILES TOTAL PROJECT	SHEET No	TOTAL SHEETS
05	SLO	46	36.6/41.2	473	595

Michael S. Finegan 9-25-09
REGISTERED CIVIL ENGINEER

12-7-09
PLANS APPROVAL DATE

REGISTERED PROFESSIONAL ENGINEER — Michael S. Finegan — No. C50138 — Exp. 6-30-11 — CIVIL — STATE OF CALIFORNIA

The State of California or its officers or agents shall not be responsible for the accuracy or completeness of electronic copies of this plan sheet.

APPARENT DENSITY OF COHESIONLESS SOILS

Description	SPT N_{60} (Blows / 12 inches)
Very loose	0 - 4
Loose	5 - 10
Medium Dense	11 - 30
Dense	31 - 50
Very Dense	> 50

MOISTURE

Description	Criteria
Dry	Absence of moisture, dusty, dry to the touch
Moist	Damp but no visible water
Wet	Visible free water, usually soil is below water table

PERCENT OR PROPORTION OF SOILS

Description	Criteria
Trace	Particles are present but estimated to be less than 5%
Few	5 to 10%
Little	15 to 25%
Some	30 to 45%
Mostly	50 to 100%

PARTICLE SIZE

Description		Size
Boulder		> 12"
Cobble		3" to 12"
Gravel	Coarse	3/4" to 3"
	Fine	No. 4 to 3/4"
Sand	Coarse	No. 10 to No. 4
	Medium	No. 40 to No. 10
	Fine	No. 200 to No. 40

ENGINEERING SERVICES	GEOTECHNICAL SERVICES	STATE OF CALIFORNIA DEPARTMENT OF TRANSPORTATION	DIVISION OF ENGINEERING SERVICES STRUCTURE DESIGN	BRIDGE NO.	RETAINING WALL NO. 5
	PREPARED BY: I.G-Remmen, 9/09		DESIGN BRANCH	POST MILE 36.6/41.2	LOG OF TEST BORINGS 3 OF 3

GS LOTB SOIL LEGEND

ORIGINAL SCALE IN INCHES FOR REDUCED PLANS 0 1 2 3

CU 05
EA 330721

DISREGARD PRINTS BEARING EARLIER REVISION DATES →

REVISION DATES | SHEET | OF

FILE => 533072qa015.dgn

USERNAME => ttstrk DATE PLOTTED => 08-DEC-2009 TIME PLOTTED => 10:03

DIST	COUNTY	ROUTE	POST MILES TOTAL PROJECT	SHEET No	TOTAL SHEETS
05	SLO	46	36.6/41.2	474	595

Michael S. Finegan 9-25-09
REGISTERED CIVIL ENGINEER

12-7-09
PLANS APPROVAL DATE

REGISTERED PROFESSIONAL ENGINEER — Michael S. Finegan — No. C50138 — Exp. 6-30-11 — CIVIL — STATE OF CALIFORNIA

The State of California or its officers or agents shall not be responsible for the accuracy or completeness of electronic copies of this plan sheet.

This LOTB sheet was prepared in accordance with the Caltrans Soil & Rock Logging, Classification, & Presentation Manual (June 2007).

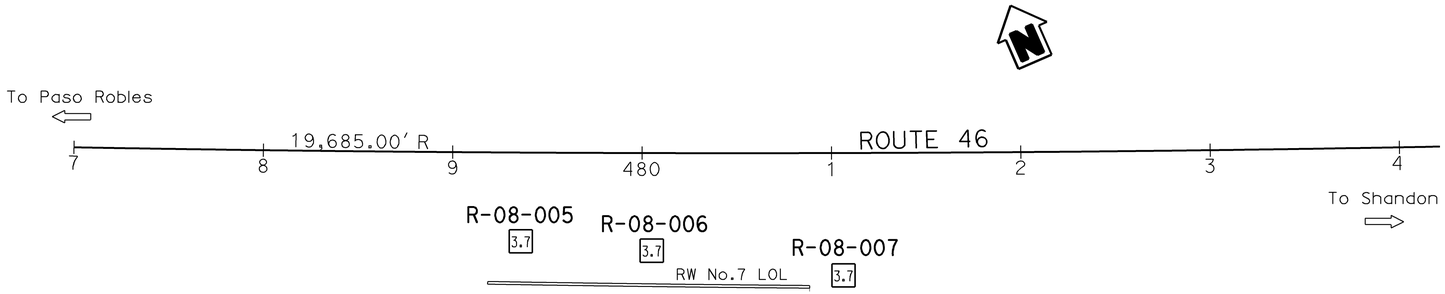

BENCH MARK

SLO46 PM-38.62
Fnd 1" IP w/Caltrans control pp,
122.91' Rt "RTE46" Line CL Rte 46
Sta 495+33.26
Elev 1027.665 (NGVD29)
N 2434235.732
E 5809001.820

PLAN

1" = 40'

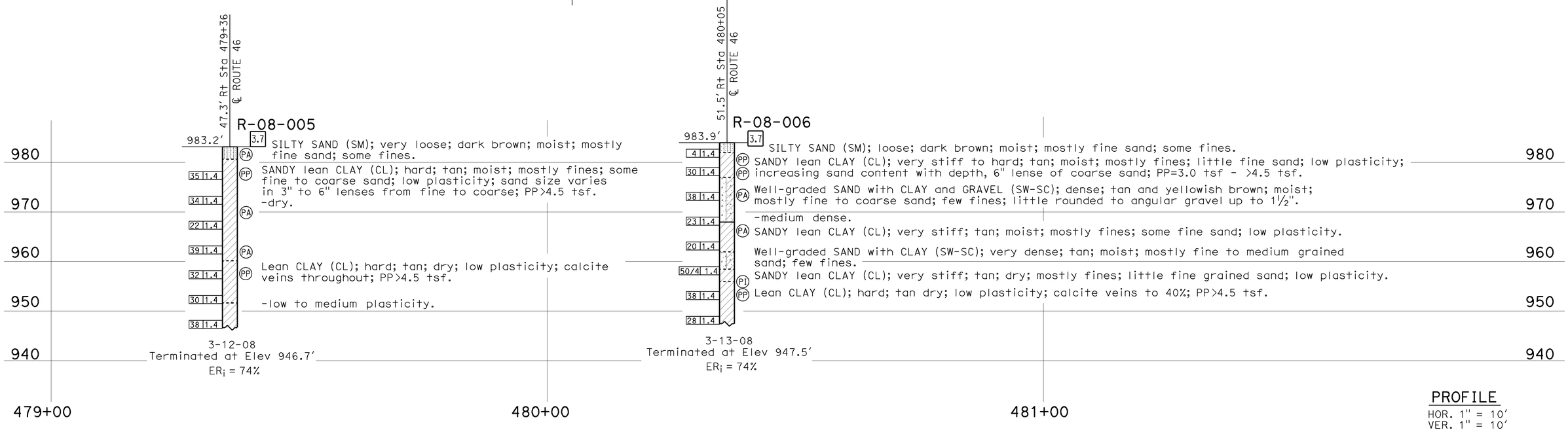

PROFILE

HOR. 1" = 10'
VER. 1" = 10'

ENGINEERING SERVICES	GEOTECHNICAL SERVICES	STATE OF CALIFORNIA DEPARTMENT OF TRANSPORTATION	DIVISION OF ENGINEERING SERVICES STRUCTURE DESIGN	BRIDGE NO.	RETAINING WALL NO. 7
FUNCTIONAL SUPERVISOR NAME: R. Bibbens	DRAWN BY: C. Christian, I.G-Remmen 9/09 CHECKED BY: M. Jurasius		DESIGN BRANCH	POST MILES 36.6/41.2	LOG OF TEST BORINGS 1 OF 4
OGS CIVIL LOG OF TEST BORINGS SHEET	FIELD INVESTIGATION BY: R. Turner	ORIGINAL SCALE IN INCHES FOR REDUCED PLANS 0 1 2 3	CU 05 EA 330721	DISREGARD PRINTS BEARING EARLIER REVISION DATES →	REVISION DATES: 09-16-09

FILE => 533072qa016.dgn

USERNAME => ttrstrk DATE PLOTTED => 08-DEC-2009 TIME PLOTTED => 10:03

DIST	COUNTY	ROUTE	POST MILES TOTAL PROJECT	SHEET No	TOTAL SHEETS
05	SLO	46	36.6/41.2	475	595

Michael S. Finegan 9-25-09
REGISTERED CIVIL ENGINEER

12-7-09
PLANS APPROVAL DATE

REGISTERED PROFESSIONAL ENGINEER — Michael S. Finegan — No. C50138 — Exp. 6-30-11 — CIVIL — STATE OF CALIFORNIA

The State of California or its officers or agents shall not be responsible for the accuracy or completeness of electronic copies of this plan sheet.

This LOTB sheet was prepared in accordance with the Caltrans Soil & Rock Logging, Classification, & Presentation Manual (June 2007).

FOR PLAN VIEW, SEE
"LOG OF TEST BORINGS 1 OF 4"

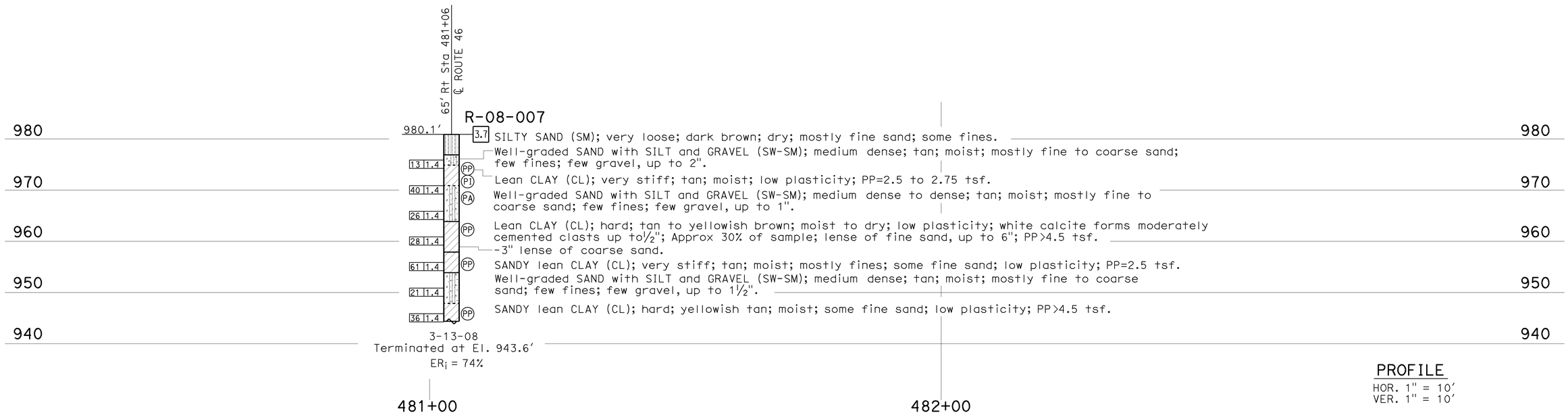

PROFILE
HOR. 1" = 10'
VER. 1" = 10'

ENGINEERING SERVICES	GEOTECHNICAL SERVICES		STATE OF CALIFORNIA DEPARTMENT OF TRANSPORTATION	DIVISION OF ENGINEERING SERVICES STRUCTURE DESIGN	BRIDGE NO.	RETAINING WALL NO. 7
FUNCTIONAL SUPERVISOR	DRAWN BY: C. Christian, I.G-Remmen 9/09	FIELD INVESTIGATION BY:		DESIGN BRANCH	POST MILES 36.6/41.2	LOG OF TEST BORINGS 2 OF 4
NAME: R. Bibbens	CHECKED BY: M. Jurasius	R. Turner				

OGS CIVIL LOG OF TEST BORINGS SHEET

ORIGINAL SCALE IN INCHES FOR REDUCED PLANS 0 1 2 3

CU 05
EA 330721

DISREGARD PRINTS BEARING EARLIER REVISION DATES →

REVISION DATES										SHEET	OF
09-16-09											

FILE => 533072qa017.dgn

USERNAME => tfrstrk DATE PLOTTED => 08-DEC-2009 TIME PLOTTED => 10:03

REFERENCE: CALTRANS SOIL & ROCK LOGGING, CLASSIFICATION, AND PRESENTATION MANUAL (JUNE 2007)

DIST	COUNTY	ROUTE	POST MILES TOTAL PROJECT	SHEET No	TOTAL SHEETS
05	SLO	46	36.6/41.2	476	595

Michael S. Finegan 9-25-09
REGISTERED CIVIL ENGINEER

12-7-09
PLANS APPROVAL DATE

Michael S. Finegan No. C50138 Exp. 6-30-11 CIVIL — REGISTERED PROFESSIONAL ENGINEER — STATE OF CALIFORNIA

The State of California or its officers or agents shall not be responsible for the accuracy or completeness of electronic copies of this plan sheet.

CEMENTATION

Description	Criteria
Weak	Crumbles or breaks with handling or little finger pressure.
Moderate	Crumbles or breaks with considerable finger pressure.
Strong	Will not crumble or break with finger pressure.

BOREHOLE IDENTIFICATION

Symbol	Hole Type	Description
Size	A	Auger Boring
Size	R P	Rotary drilled boring Rotary percussion boring (air)
Size	R	Rotary drilled diamond core
Size	HD HA	Hand driven (1-inch soil tube) Hand Auger
●	D	Dynamic Cone Penetration Boring
▲	CPT	Cone Penetration Test (ASTM D 5778-95)
⬚	O	Other

Note: Size in inches.

CONSISTENCY OF COHESIVE SOILS

Description	Unconfined Compressive Strength (tsf)	Pocket Penetrometer Measurement (tsf)	Torvane Measurement (tsf)	Field Approximation
Very Soft	< 0.25	< 0.25	< 0.12	Easily penetrated several inches by fist
Soft	0.25 to 0.50	0.25 to 0.50	0.12 to 0.25	Easily penetrated several inches by thumb
Medium Stiff	0.50 to 1.0	0.50 to 1.0	0.25 to 0.50	Penetrated several inches by thumb with moderate effort
Stiff	1 to 2	1 to 2	0.50 to 1.0	Readily indented by thumb but penetrated only with great effort
Very Stiff	2 to 4	2 to 4	1.0 to 2.0	Readily indented by thumbnail
Hard	> 4.0	> 4.0	> 2.0	Indented by thumbnail with difficulty

PLASTICITY OF FINE-GRAINED SOILS

Description	Criteria
Nonplastic	A 1/8-inch thread cannot be rolled at any water content.
Low	The thread can barely be rolled and the lump cannot be formed when drier than the plastic limit.
Medium	The thread is easy to roll and not much time is required to reach the plastic limit. The thread cannot be rerolled after reaching the plastic limit. The lump crumbles when drier than the plastic limit.
High	It takes considerable time rolling and kneading to reach the plastic limit. The thread can be rerolled several times after reaching the plastic limit. The lump can be formed without crumbling when drier than the plastic limit.

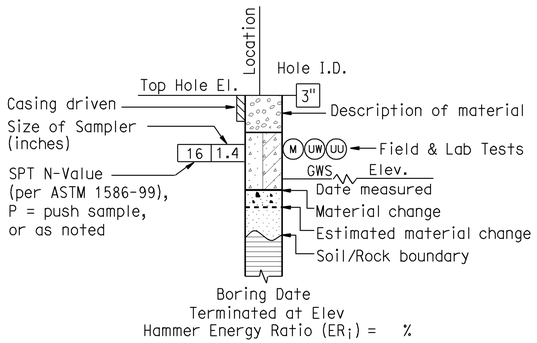

ROTARY BORING

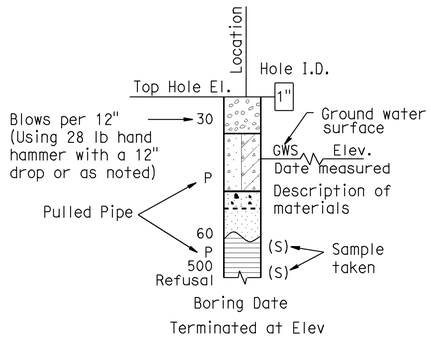

HAND BORING

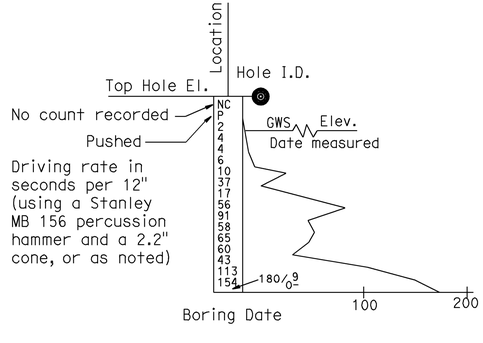

DYNAMIC CONE PENETRATION BORING

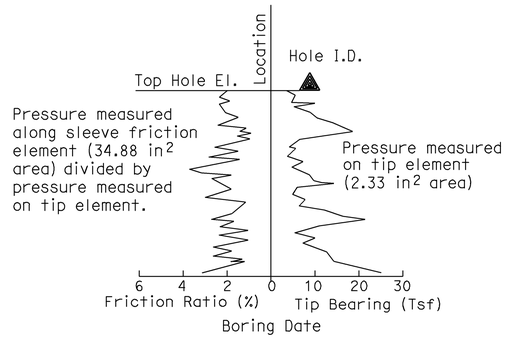

CONE PENETRATION TEST (CPT) SOUNDING

ENGINEERING SERVICES	GEOTECHNICAL SERVICES	STATE OF CALIFORNIA DEPARTMENT OF TRANSPORTATION	DIVISION OF ENGINEERING SERVICES STRUCTURE DESIGN	BRIDGE NO.	RETAINING WALL NO. 7
	PREPARED BY: I.G-Remmen, 9/09		DESIGN BRANCH	POST MILE 36.6/41.2	LOG OF TEST BORINGS 3 OF 4

GS LOTB SOIL LEGEND

ORIGINAL SCALE IN INCHES FOR REDUCED PLANS 0 1 2 3

CU 05
EA 330721

DISREGARD PRINTS BEARING EARLIER REVISION DATES →

REVISION DATES | SHEET | OF

FILE => 533072qa018.dgn

USERNAME => ttistrk DATE PLOTTED => 08-DEC-2009 TIME PLOTTED => 10:03

REFERENCE: CALTRANS SOIL & ROCK LOGGING, CLASSIFICATION, AND PRESENTATION MANUAL (JUNE 2007)

GROUP SYMBOLS AND NAMES

Graphic/Symbol	Group Names	Graphic/Symbol	Group Names
GW	Well-graded GRAVEL Well-graded GRAVEL with SAND	CL	Lean CLAY Lean CLAY with SAND Lean CLAY with GRAVEL SANDY lean CLAY SANDY lean CLAY with GRAVEL GRAVELLY lean CLAY GRAVELLY lean CLAY with SAND
GP	Poorly graded GRAVEL Poorly graded GRAVEL with SAND		
GW-GM	Well-graded GRAVEL with SILT Well-graded GRAVEL with SILT and SAND	CL-ML	SILTY CLAY SILTY CLAY with SAND SILTY CLAY with GRAVEL SANDY SILTY CLAY SANDY SILTY CLAY with GRAVEL GRAVELLY SILTY CLAY GRAVELLY SILTY CLAY with SAND
GW-GC	Well-graded GRAVEL with CLAY (or SILTY CLAY) Well-graded GRAVEL with CLAY and SAND (or SILTY CLAY and SAND)		
GP-GM	Poorly graded GRAVEL with SILT Poorly graded GRAVEL with SILT and SAND	ML	SILT SILT with SAND SILT with GRAVEL SANDY SILT SANDY SILT with GRAVEL GRAVELLY SILT GRAVELLY SILT with SAND
GP-GC	Poorly graded GRAVEL with CLAY (or SILTY CLAY) Poorly graded GRAVEL with CLAY and SAND (or SILTY CLAY and SAND)		
GM	SILTY GRAVEL SILTY GRAVEL with SAND	OL	ORGANIC lean CLAY ORGANIC lean CLAY with SAND ORGANIC lean CLAY with GRAVEL SANDY ORGANIC lean CLAY SANDY ORGANIC lean CLAY with GRAVEL GRAVELLY ORGANIC lean CLAY GRAVELLY ORGANIC lean CLAY with SAND
GC	CLAYEY GRAVEL CLAYEY GRAVEL with SAND		
GC-GM	SILTY, CLAYEY GRAVEL SILTY, CLAYEY GRAVEL with SAND	OL	ORGANIC SILT ORGANIC SILT with SAND ORGANIC SILT with GRAVEL SANDY ORGANIC SILT SANDY ORGANIC SILT with GRAVEL GRAVELLY ORGANIC SILT GRAVELLY ORGANIC SILT with SAND
SW	Well-graded SAND Well-graded SAND with GRAVEL		
SP	Poorly graded SAND Poorly graded SAND with GRAVEL	CH	Fat CLAY Fat CLAY with SAND Fat CLAY with GRAVEL SANDY fat CLAY SANDY fat CLAY with GRAVEL GRAVELLY fat CLAY GRAVELLY fat CLAY with SAND
SW-SM	Well-graded SAND with SILT Well-graded SAND with SILT and GRAVEL		
SW-SC	Well-graded SAND with CLAY (or SILTY CLAY) Well-graded SAND with CLAY and GRAVEL (or SILTY CLAY and GRAVEL)	MH	Elastic SILT Elastic SILT with SAND Elastic SILT with GRAVEL SANDY elastic SILT SANDY elastic SILT with GRAVEL GRAVELLY elastic SILT GRAVELLY elastic SILT with SAND
SP-SM	Poorly graded SAND with SILT Poorly graded SAND with SILT and GRAVEL		
SP-SC	Poorly graded SAND with CLAY (or SILTY CLAY) Poorly graded SAND with CLAY and GRAVEL (or SILTY CLAY and GRAVEL)	OH	ORGANIC fat CLAY ORGANIC fat CLAY with SAND ORGANIC fat CLAY with GRAVEL SANDY ORGANIC fat CLAY SANDY ORGANIC fat CLAY with GRAVEL GRAVELLY ORGANIC fat CLAY GRAVELLY ORGANIC fat CLAY with SAND
SM	SILTY SAND SILTY SAND with GRAVEL		
SC	CLAYEY SAND CLAYEY SAND with GRAVEL	OH	ORGANIC elastic SILT ORGANIC elastic SILT with SAND ORGANIC elastic SILT with GRAVEL SANDY ORGANIC elastic SILT SANDY ORGANIC elastic SILT with GRAVEL GRAVELLY ORGANIC elastic SILT GRAVELLY ORGANIC elastic SILT with SAND
SC-SM	SILTY, CLAYEY SAND SILTY, CLAYEY SAND with GRAVEL		
PT	PEAT	OL/OH	ORGANIC SOIL ORGANIC SOIL with SAND ORGANIC SOIL with GRAVEL SANDY ORGANIC SOIL SANDY ORGANIC SOIL with GRAVEL GRAVELLY ORGANIC SOIL GRAVELLY ORGANIC SOIL with SAND
	COBBLES COBBLES and BOULDERS BOULDERS		

FIELD AND LABORATORY TESTING

- (C) Consolidation (ASTM D 2435)
- (CL) Collapse Potential (ASTM D 5333)
- (CP) Compaction Curve (CTM 216)
- (CR) Corrosivity Testing (CTM 643, CTM 422, CTM 417)
- (CU) Consolidated Undrained Triaxial (ASTM D 4767)
- (DS) Direct Shear (ASTM D 3080)
- (EI) Expansion Index (ASTM D 4829)
- (M) Moisture Content (ASTM D 2216)
- (OC) Organic Content-% (ASTM D 2974)
- (P) Permeability (CTM 220)
- (PA) Particle Size Analysis (ASTM D 422)
- (PI) Plasticity Index (AASHTO T 90) Liquid Limit (AASHTO T 89)
- (PL) Point Load Index (ASTM D 5731)
- (PM) Pressure Meter
- (PP) Pocket Penetrometer
- (R) R-Value (CTM 301)
- (SE) Sand Equivalent (CTM 217)
- (SG) Specific Gravity (AASHTO T 100)
- (SL) Shrinkage Limit (ASTM D 427)
- (SW) Swell Potential (ASTM D 4546)
- (TV) Pocket Torvane
- (UC) Unconfined Compression-Soil (ASTM D 2166) Unconfined Compression-Rock (ASTM D 2938)
- (UU) Unconsolidated Undrained Triaxial (ASTM D 2850)
- (UW) Unit Weight (ASTM D 4767)
- (VS) Vane Shear (AASHTO T 223)

DIST	COUNTY	ROUTE	POST MILES TOTAL PROJECT	SHEET No	TOTAL SHEETS
05	SLO	46	36.6/41.2	477	595

Michael S. Finegan 9-25-09
REGISTERED CIVIL ENGINEER

12-7-09
PLANS APPROVAL DATE

REGISTERED PROFESSIONAL ENGINEER — Michael S. Finegan — No. C50138 — Exp. 6-30-11 — CIVIL — STATE OF CALIFORNIA

The State of California or its officers or agents shall not be responsible for the accuracy or completeness of electronic copies of this plan sheet.

APPARENT DENSITY OF COHESIONLESS SOILS

Description	SPT N_{60} (Blows / 12 inches)
Very loose	0 - 4
Loose	5 - 10
Medium Dense	11 - 30
Dense	31 - 50
Very Dense	> 50

MOISTURE

Description	Criteria
Dry	Absence of moisture, dusty, dry to the touch
Moist	Damp but no visible water
Wet	Visible free water, usually soil is below water table

PERCENT OR PROPORTION OF SOILS

Description	Criteria
Trace	Particles are present but estimated to be less than 5%
Few	5 to 10%
Little	15 to 25%
Some	30 to 45%
Mostly	50 to 100%

PARTICLE SIZE

Description		Size
Boulder		> 12"
Cobble		3" to 12"
Gravel	Coarse	3/4" to 3"
	Fine	No. 4 to 3/4"
Sand	Coarse	No. 10 to No. 4
	Medium	No. 40 to No. 10
	Fine	No. 200 to No. 40

ENGINEERING SERVICES	GEOTECHNICAL SERVICES	STATE OF CALIFORNIA DEPARTMENT OF TRANSPORTATION	DIVISION OF ENGINEERING SERVICES STRUCTURE DESIGN	BRIDGE NO.	RETAINING WALL NO. 7
	PREPARED BY: I.G-Remmen, 9/09		DESIGN BRANCH	POST MILE 36.6/41.2	LOG OF TEST BORINGS 4 OF 4

GS LOTB SOIL LEGEND

ORIGINAL SCALE IN INCHES FOR REDUCED PLANS 0 1 2 3

CU 05 EA 330721

DISREGARD PRINTS BEARING EARLIER REVISION DATES →

REVISION DATES | SHEET | OF

FILE => 533072qa019.dgn

USERNAME => ttstrk DATE PLOTTED => 08-DEC-2009 TIME PLOTTED => 10:03

Dist	COUNTY	ROUTE	POST MILES TOTAL PROJECT	SHEET No.	TOTAL SHEETS
05	SLO	46	36.6/41.2	478	595

LICENSED LANDSCAPE ARCHITECT

12-7-09
PLANS APPROVAL DATE

LICENSED LANDSCAPE ARCHITECT SCOTT P. DOWLAN No. 4410 Signature 9/30/10 Renewal Date 7/28/09 Date STATE OF CALIFORNIA

THE STATE OF CALIFORNIA OR ITS OFFICERS OR AGENTS SHALL NOT BE RESPONSIBLE FOR THE ACCURACY OR COMPLETENESS OF ELECTRONIC COPIES OF THIS PLAN SHEET.

NOTE: FOR ACCURATE RIGHT OF WAY AND ACCESS DATA, CONTACT RIGHT OF WAY ENGINEERING AT THE DISTRICT OFFICE.

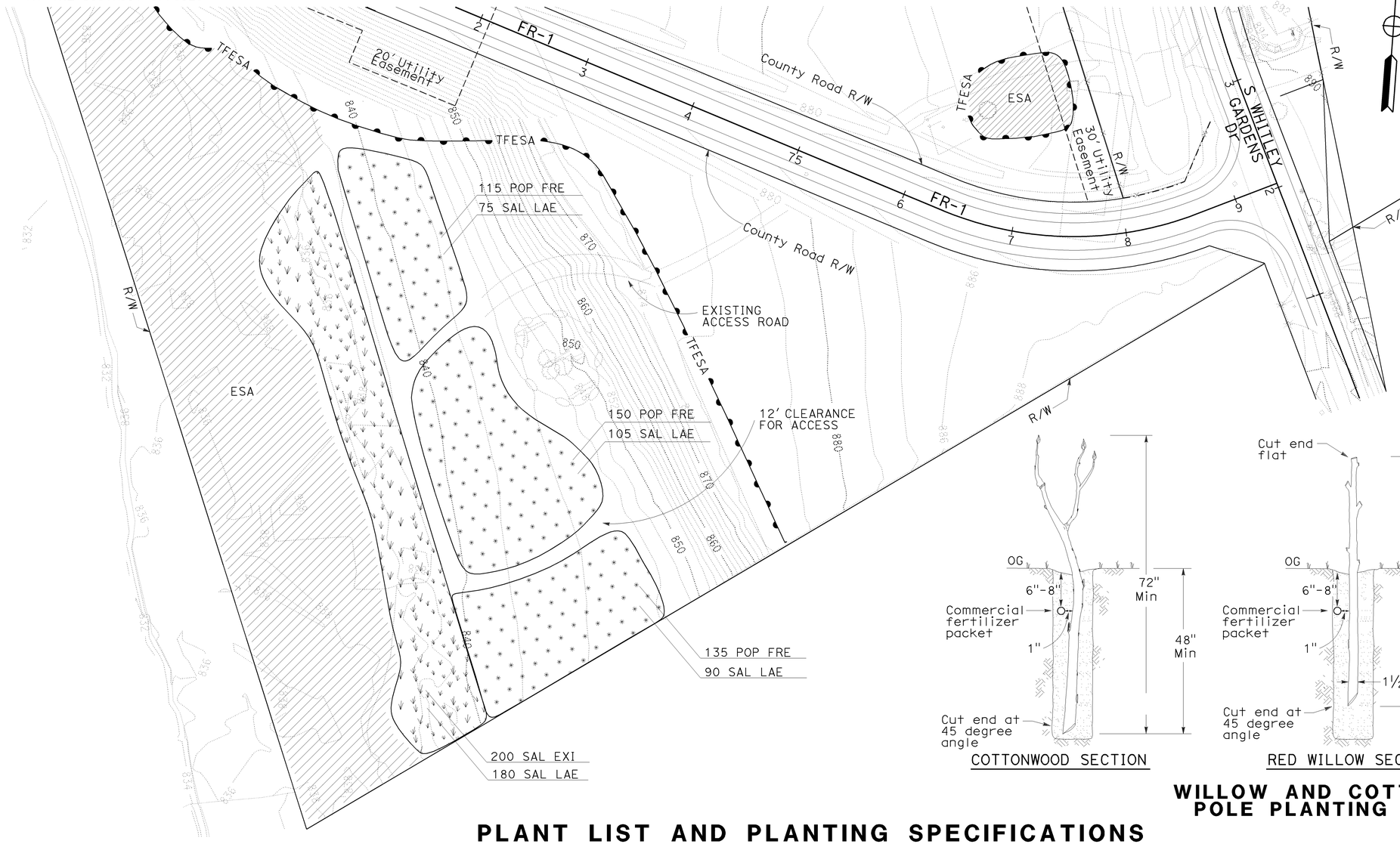

NOTE:
Willow and cottonwood cuttings must be planted randomly at the spacing shown to obtain a natural appearance.

LEGEND

ESA — ENVIRONMENTALLY SENSITIVE AREA

PLACE CHIPPED MATERIAL AND PLACE TREE TRUNKS

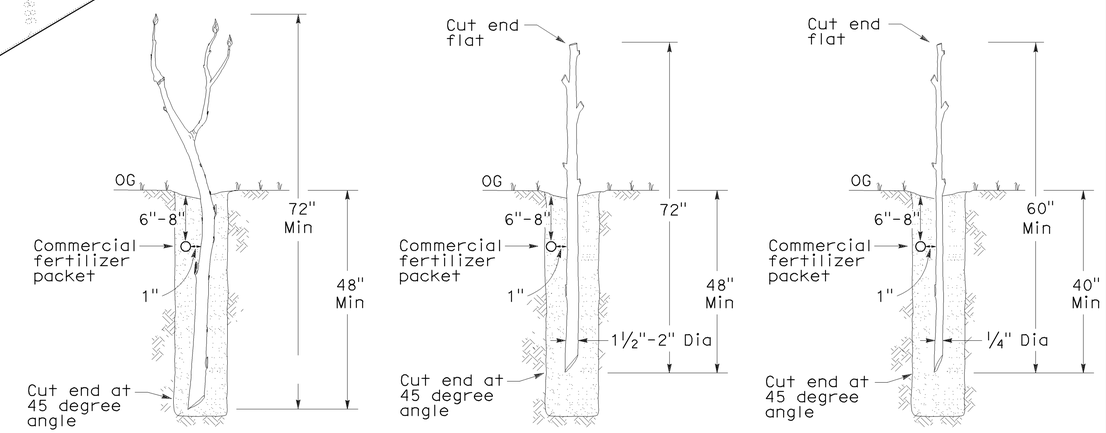

COTTONWOOD SECTION — RED WILLOW SECTION — SANDBAR WILLOW SECTION

WILLOW AND COTTONWOOD POLE PLANTING DETAILS

PLANT LIST AND PLANTING SPECIFICATIONS

PLANT GROUP	PLANT No.	SYMBOL	BOTANICAL NAME	COMMON NAME	SIZE	QUANTITY EACH	HOLE SIZE Dia	HOLE SIZE DEPTH	BASIN TYPE	IRON SULFATE	SOIL AMEND (CY) ①	① COMMERCIAL FERTILIZER PLANTING	① COMMERCIAL FERTILIZER PLT ESTB	BASIN MULCH (CY) ①	STAKING	PLANTING LIMITS MINIMUM DISTANCE (Ft) FROM TRVD WAY	Pvmt	FENCE	WALL	PAVED DITCH	EARTH DITCH	ON CENTER (Ft)	REMARKS
W	1		POPULUS FREMONTII	FREMONT COTTONWOOD	POLE CUTTING ②	400	②	③	-	-	-	②	-	-	-	-	-	-	-	-	-	10	TREE
	2		SALIX EXIGUA	SANDBAR WILLOW	POLE CUTTING ②	200	②	③	-	-	-	②	-	-	-	-	-	-	-	-	-	10	SHRUB
	3		SALIX LAEVIGATA	RED WILLOW	POLE CUTTING ②	450	②	③	-	-	-	②	-	-	-	-	-	-	-	-	-	10	TREE

APPLICABLE WHEN CIRCLED:
① - Quantities shown are "per cutting".
② - See Special Provisions.
③ - See Detail.

NOTE:
Underlined portions of botanical name indicate abbreviations used on Planting Plans.

THIS PLAN ACCURATE FOR PLANTING WORK ONLY.

PLANTING PLAN
SCALE: 1"=50' **PP-1**

STATE OF CALIFORNIA - DEPARTMENT OF TRANSPORTATION
Caltrans LANDSCAPE ARCHITECTURE
SENIOR LANDSCAPE ARCHITECT: DENNIS REEVES
CALCULATED-DESIGNED BY: SCOTT DOWLAN
CHECKED BY: KRISTEN LANGAGER
REVISED BY
DATE REVISED

LAST REVISION 08-24-09
DATE PLOTTED => 10-DEC-2009
TIME PLOTTED => 11:23

DIST	COUNTY	ROUTE	POST MILES TOTAL PROJECT	SHEET NO.	TOTAL SHEETS
05	SLO	46	36.6/41.2	479	595

Donald E. Howe
REGISTERED CIVIL ENGINEER

June 6, 2008
PLANS APPROVAL DATE

REGISTERED PROFESSIONAL ENGINEER — Donald E. Howe — No. C46402 — Exp. 3-31-09 — CIVIL — STATE OF CALIFORNIA

The State of California or its officers or agents shall not be responsible for the accuracy or completeness of electronic copies of this plan sheet.

To accompany plans dated 12-7-09

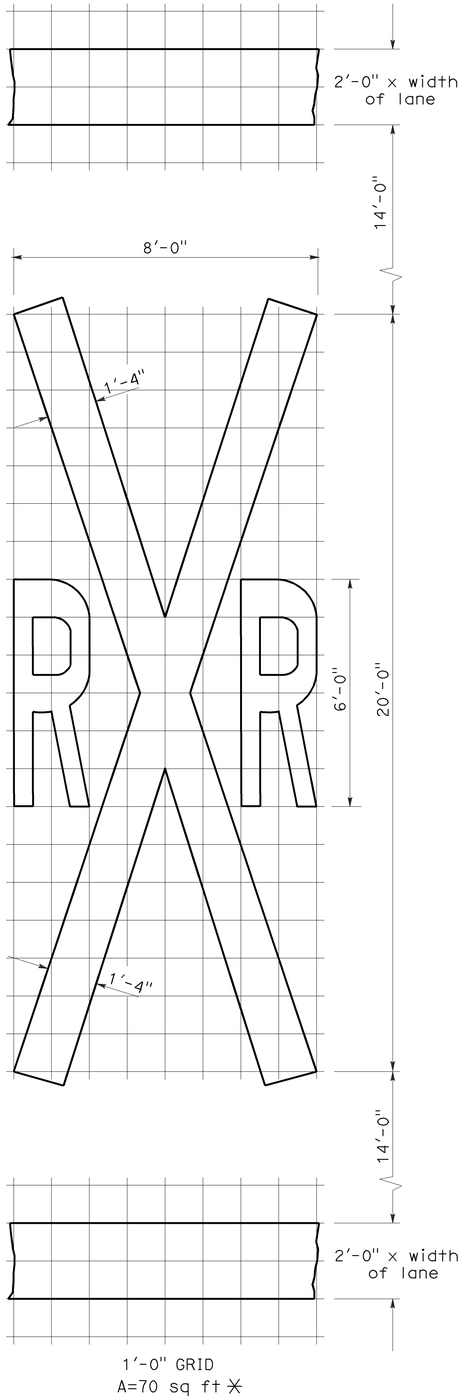

RAILROAD CROSSING SYMBOL

✳70 sq ft DOES NOT INCLUDE THE 2'-0" x VARIABLE WIDTH TRANSVERSE LINES.

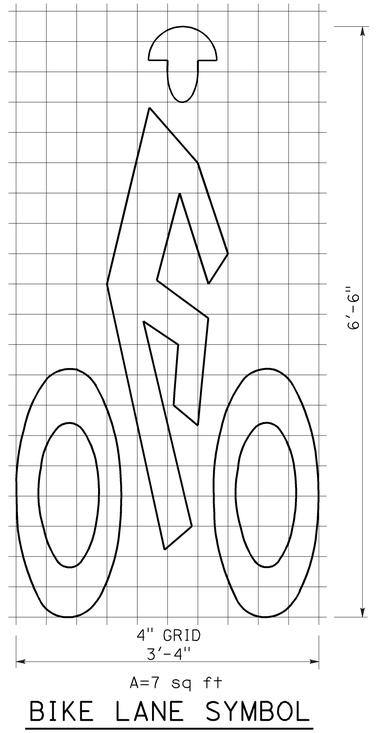

A=7 sq ft

BIKE LANE SYMBOL

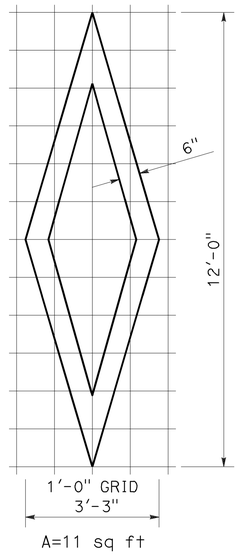

A=11 sq ft

DIAMOND SYMBOL

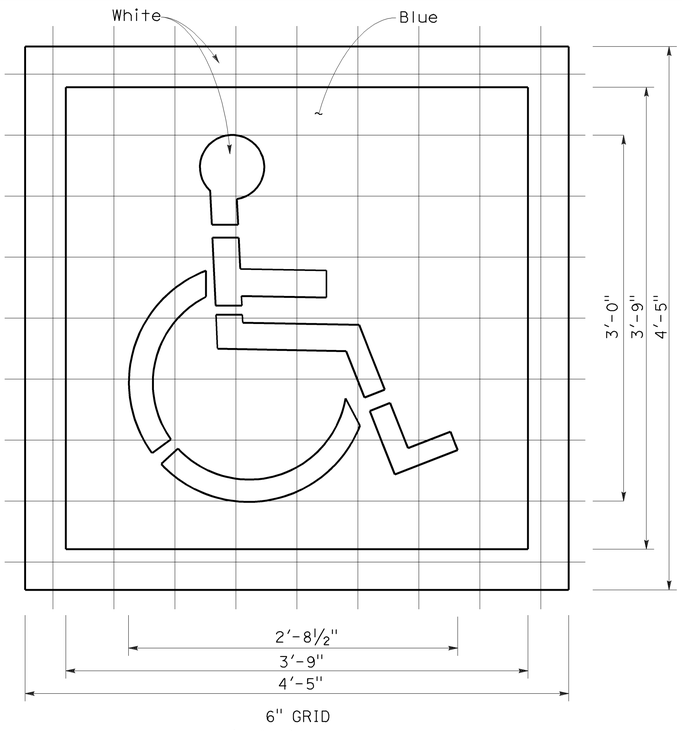

6" GRID
A (White) =9 sq ft
A (Blue) =14 sq ft

INTERNATIONAL SYMBOL OF ACCESSIBILITY MARKING

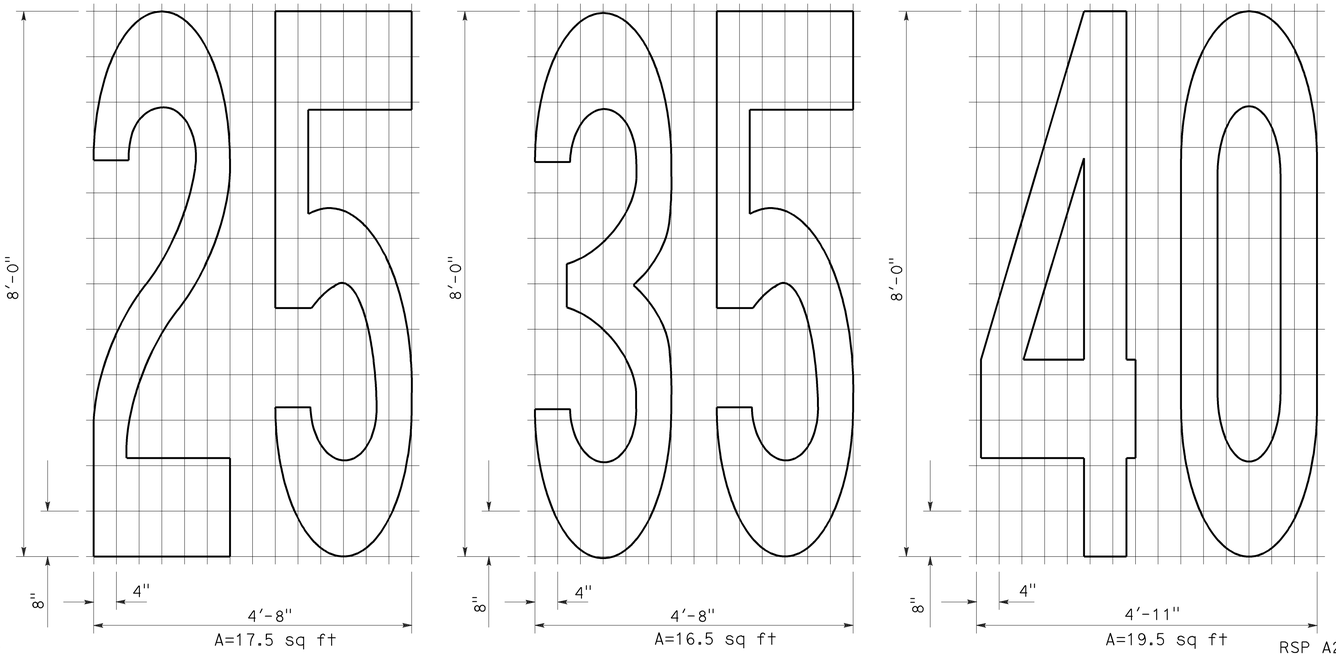

A=17.5 sq ft — A=16.5 sq ft — A=19.5 sq ft

NUMERALS

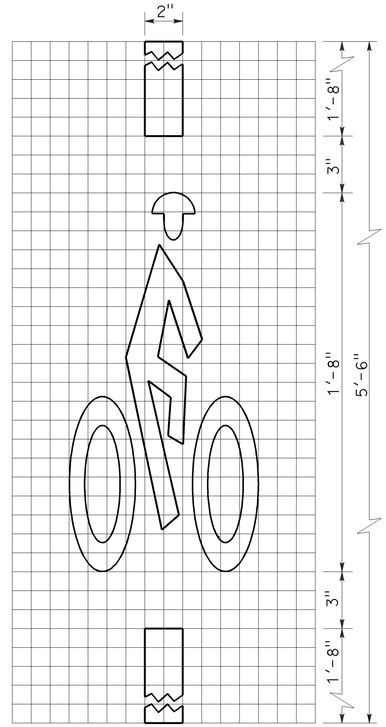

A=2 sq ft

BICYCLE LOOP DETECTOR SYMBOL

NOTE:

1. Minor variations in dimensions may be accepted by the Engineer.

STATE OF CALIFORNIA
DEPARTMENT OF TRANSPORTATION

PAVEMENT MARKINGS SYMBOLS AND NUMERALS

NO SCALE

RSP A24C DATED JUNE 6, 2008 SUPERSEDES STANDARD PLAN A24C DATED MAY 1, 2006 - PAGE 11 OF THE STANDARD PLANS BOOK DATED MAY 2006.

REVISED STANDARD PLAN RSP A24C

2006 REVISED STANDARD PLAN RSP A24C

5-27-08

DIST	COUNTY	ROUTE	POST MILES TOTAL PROJECT	SHEET NO.	TOTAL SHEETS
05	SLO	46	36.6/41.2	480	595

Dallas Forester
REGISTERED CIVIL ENGINEER

November 17, 2006
PLANS APPROVAL DATE

REGISTERED PROFESSIONAL ENGINEER
Dallas Forester
No. C37765
Exp. 12-31-06
CIVIL
STATE OF CALIFORNIA

The State of California or its officers or agents shall not be responsible for the accuracy or completeness of electronic copies of this plan sheet.

To accompany plans dated 12-7-09

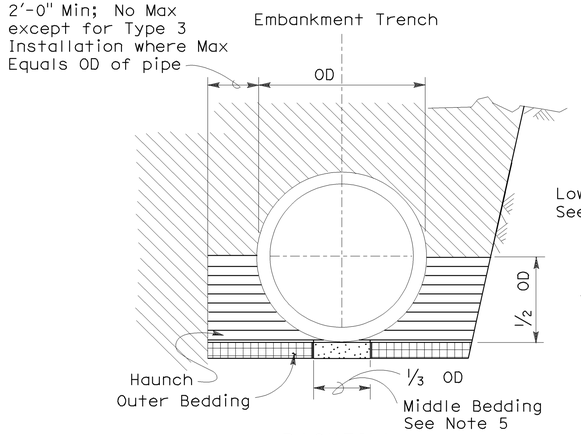

BACKFILL

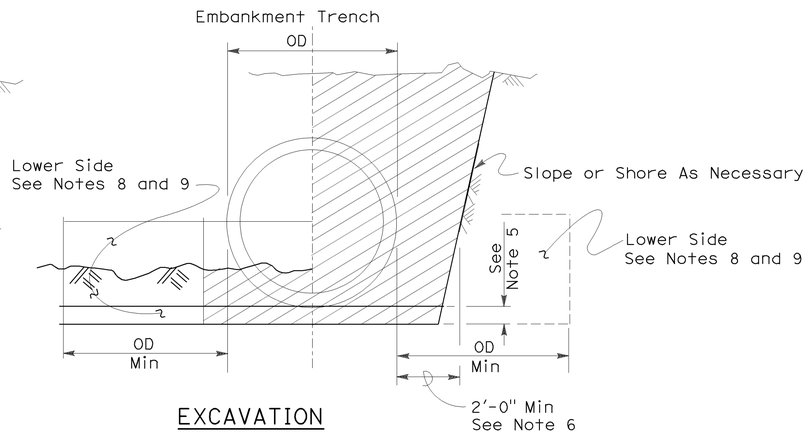

EXCAVATION

Roadway Embankment

Structure Backfill (Culvert) See Note 6

Structure Backfill (Culvert) See Note 6

Loose Backfill

Excavation Structure (Culvert)

TYPE 1 INSTALLATION:

The haunch and outer bedding shall be compacted to a minimum 90 percent relative compaction. In addition, the minimum sand equivalent in these areas shall be 30 and the maximum percentage passing the 75 μm sieve size shall be 12.

TYPE 2 INSTALLATION:

The haunch and outer bedding shall be compacted to a minimum 90 percent relative compaction. In addition, the minimum sand equivalent in these areas shall be 25.

TYPE 3 INSTALLATION:

The haunch and outer bedding shall be compacted to a minimum 85 percent relative compaction. 90 percent relative compaction will be required where the fill over the pipe is less than 4'-0" or 1/2 OD.

INSTALLATION TYPE 1

MINIMUM CLASS AND D-LOAD	COVER	
	108" Dia AND SMALLER	OVER 108" Dia
Class II 1000D	14.9'	12.9'
Class III 1350D	15.0' - 20.9'	13.0' - 18.9'
Class III Special 1700D	21.0' - 26.9'	19.0' - 24.9'
Class IV 2000D	27.0' - 31.9'	25.0' - 29.9'
Class IV Special 2500D	32.0' - 40.9'	30.0' - 38.9'
Class V 3000D	41.0' - 49.9'	39.0' - 46.9'
Class V Special 3600D	50.0' - 59.0'	47.0' - 58.0'

INSTALLATION TYPE 2

MINIMUM CLASS AND D-LOAD	COVER
Class II 1000D	9.9'
Class III 1350D	10.0'- 14.9'
Class III Special 1700D	15.0' - 19.9'
Class IV 2000D	20.0' - 24.9'
Class IV Special 2500D	25.0' - 31.9'
Class V 3000D	32.0' - 38.9'
Class V Special 3600D	39.0' - 47.0'

INSTALLATION TYPE 3

MINIMUM CLASS AND D-LOAD	COVER	
	48" Dia AND SMALLER	OVER 48" Dia
Class II 1000D	7.9'	5.9'
Class III 1350D	8.0' - 10.9'	6.0' - 8.9'
Class III Special 1700D	11.0' - 14.9'	9.0' - 12.9'
Class IV 2000D	15.0' - 17.9'	13.0' - 15.9'
Class IV Special 2500D	18.0' - 21.9'	16.0' - 19.9'
Class V 3000D	22.0' - 26.9'	20.0' - 24.9'
Class V Special 3600D	30.0' - 33.0'	25.0' - 31.0'

NOTES:

1. Unless otherwise shown on the plans or specified in the special provision, the Contractor shall have the option of selecting the class of RCP and the type of installation to be used, provided the height of cover does not exceed the value shown for the RCP selected.
   Example: 24" RCP culvert with maximum cover of 19'-0" the options are:
   a) Class III or stronger with Installation Type 1.
   b) Class III Special or stronger with Installation Type 2.
   c) Class IV Special or stronger with Installation Type 3.
   Cover is defined as the maximum vertical distance from top of the pipe to finished grade within the length of any given culvert.
2. The class of RCP and Installation Type selected shall be the same throughout the length of any given culvert.
3. The "length of any culvert" is defined as the culvert between:
   a) Successive drainage structure (inlets, junction boxes, headwalls, etc.).
   b) A drainage structure and the inlet or outlet end of the culvert.
   c) The inlet and outlet end of the culvert when there are no intervening drainage structures.
4. Oval and arch shaped RCP shall not be used.
5. 1/25 OD Min, not less than 3".
6. Slurry cement backfill may be substituted for backfill in the outer bedding and haunch areas. If slurry is used the outer and middle beddings shall be omitted. Prior to installation the soil under the middle 1/3 of the outside diameter of the pipe shall be softened by scarifying or other means to a minimum depth of 1/25 OD, but not less than 3". Where slurry cement backfill is used clear distance to trench wall may be reduced as set forth in Section 19-3.062 of the Standard Specifications.
7. Backfill shall be placed full width of excavation except where dimensions are shown for backfill width or thickness. Dimensions shown are minimums.
8. Lower side shall be suitable material as determined by the Engineer. Otherwise it shall be considered unsuitable as set forth in Section 19-2.02 of the Standard Specifications. See Note 9.
9. Where the pipe is placed in a trench, if the trench walls are sloped at 5 vertical to 1 horizontal or steeper for at least 90 percent of the trench height or up to not less than 12" from the grading plane, the firmness of the soil in the lower side need not be considered.
10. Non-reinforced precast concrete pipe sizes 3'-0" or smaller may be placed under installation Types 1, 2 or 3.

STATE OF CALIFORNIA
DEPARTMENT OF TRANSPORTATION

EXCAVATION AND BACKFILL CONCRETE PIPE CULVERTS

NO SCALE

RSP A62DA DATED NOVEMBER 17, 2006 SUPERSEDES STANDARD PLAN A62DA DATED MAY 1, 2006 - PAGE 20 OF THE STANDARD PLANS BOOK DATED MAY 2006.

REVISED STANDARD PLAN RSP A62DA

2006 REVISED STANDARD PLAN RSP A62DA

10-26-06

DIST	COUNTY	ROUTE	POST MILES TOTAL PROJECT	SHEET NO.	TOTAL SHEETS
05	SLO	46	36.6/41.2	481	595

Mark S. Turner
PROFESSIONAL LAND SURVEYOR

June 30, 2006
PLANS APPROVAL DATE

LICENSED LAND SURVEYOR
Mark S. Turner
No. 6228
Exp. 3-31-08
STATE OF CALIFORNIA

The State of California or its officers or agents shall not be responsible for the accuracy or completeness of electronic copies of this plan sheet.

To accompany plans dated 12-7-09

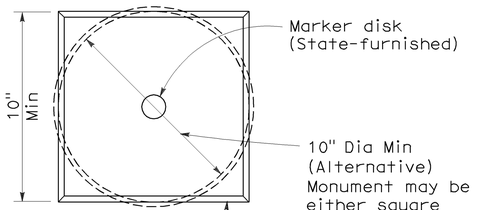

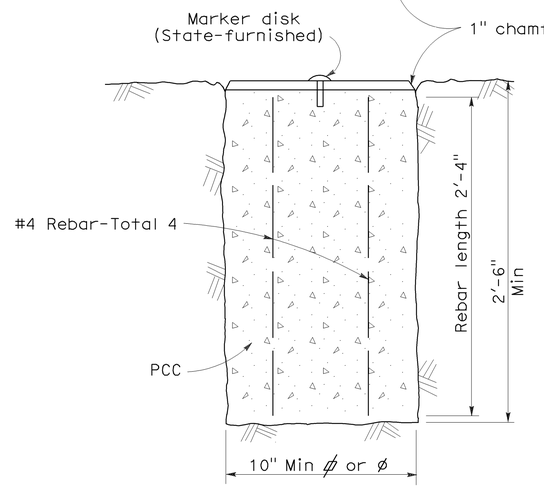

TYPE A

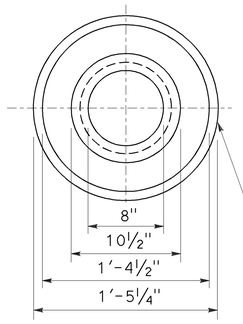

TOP VIEW OF
MONUMENT OF WELL RING

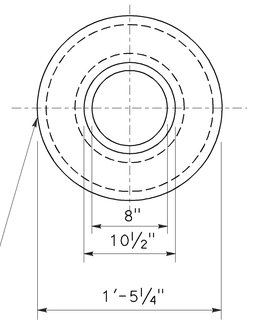

BOTTOM VIEW OF
MONUMENT OF WELL RING

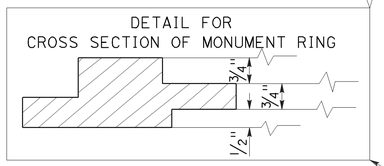

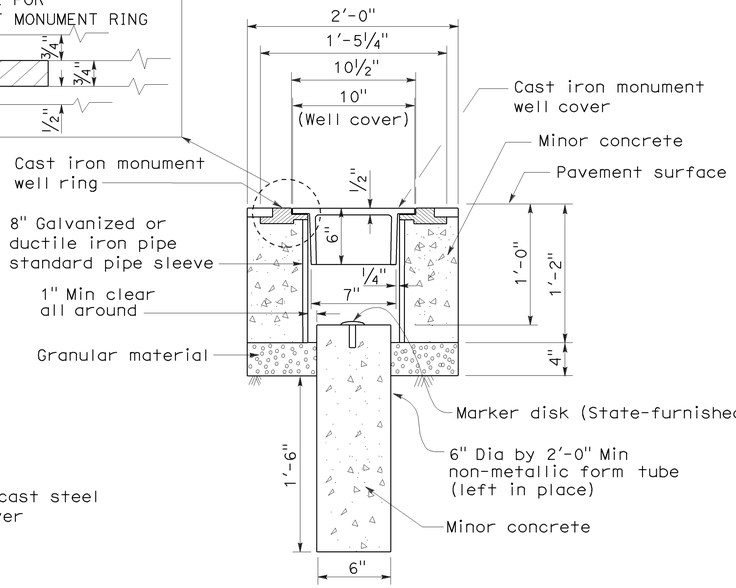

TYPE B

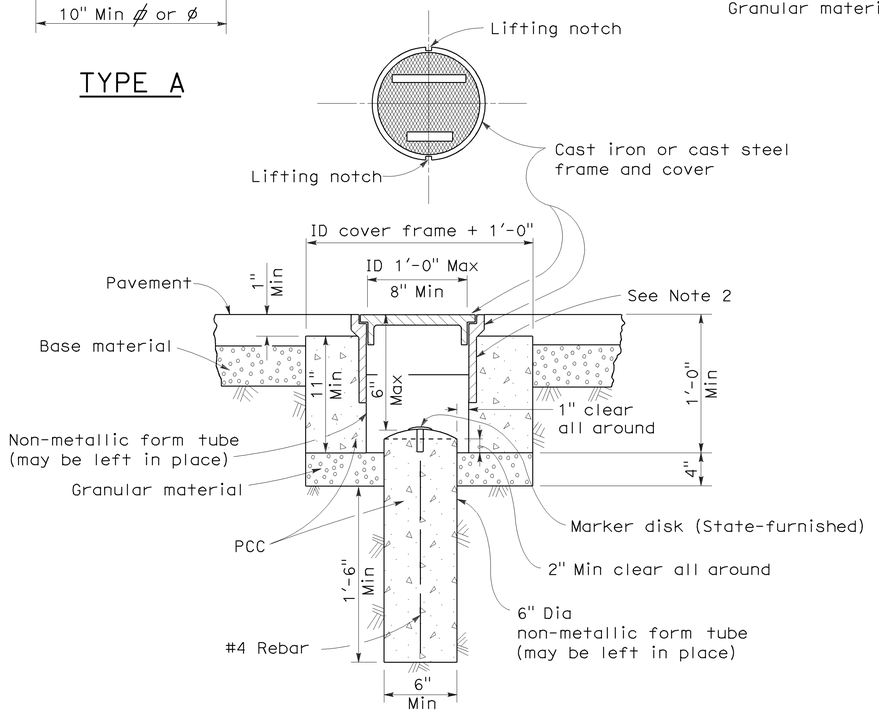

TYPE D
Alternative No. 1

NOTES:

1. The configuration of the cast iron or cast steel frame and cover may vary from that shown.
2. Frame shall be embedded in the concrete a minimum of 3".
3. Type D monument shall be either Alternative No. 1 or Alternative No. 2 at the contractor's option.
4. All portland cement concrete shall be Class 2 or minor concrete with 1" maximum aggregate.

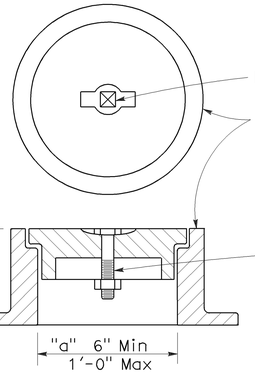

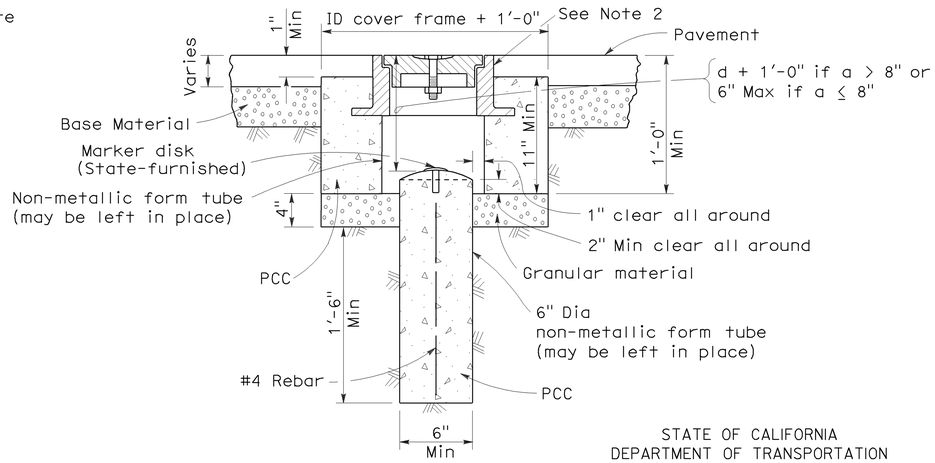

STATE OF CALIFORNIA
DEPARTMENT OF TRANSPORTATION

TYPE D
Alternative No. 2

SURVEY MONUMENTS

NO SCALE

RSP A74 DATED JUNE 30, 2006 SUPERSEDES STANDARD PLAN DATED MAY 1, 2006 - PAGE 28 OF THE STANDARD PLANS BOOK DATED MAY 2006.

REVISED STANDARD PLAN RSP A74

2006 REVISED STANDARD PLAN RSP A74

5-24-06

DIST	COUNTY	ROUTE	POST MILES TOTAL PROJECT	SHEET NO.	TOTAL SHEETS
05	SLO	46	36.6/41.2	482	595

Randell D. Hiatt
REGISTERED CIVIL ENGINEER

June 6, 2008
PLANS APPROVAL DATE

REGISTERED PROFESSIONAL ENGINEER
Randell D. Hiatt
No. C50200
Exp. 6-30-09
CIVIL
STATE OF CALIFORNIA

The State of California or its officers or agents shall not be responsible for the accuracy or completeness of electronic copies of this plan sheet.

To accompany plans dated 12-7-09

NOTES:

1. When necessary to place dike in front of face of guard railing, only Type C dike may be used. For dike details, see Standard Plan A87B.
2. For standard railing post embedment, see Standard Plans A77C3.
3. Guard railing delineation to be used where shown on the Project Plans.
4. When dike or curb is placed under guard railing, the maximum height of the dike or curb shall be 4". Mountable dike should not be used. For dike and curb details, see Revised Standard Plans RSP A87A and Standard Plan A87B.
5. For details of typical distance between the face of rail and hinge point, see Standard Plan A77C3.

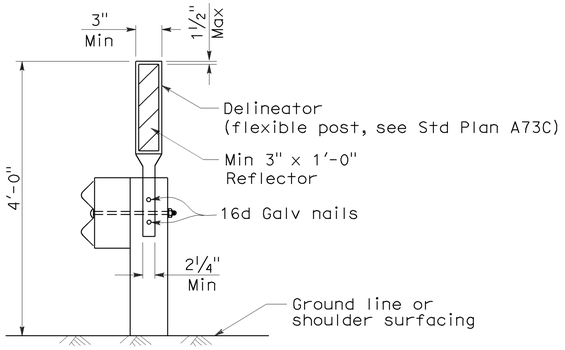

GUARD RAILING DELINEATION
See Note 3

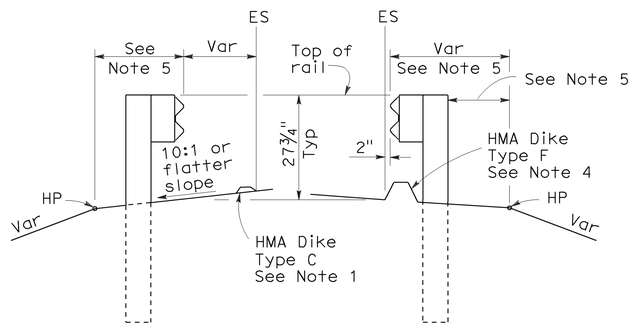

DIKE POSITIONING
See Note 1

STATE OF CALIFORNIA
DEPARTMENT OF TRANSPORTATION

METAL BEAM GUARD RAILING TYPICAL RAILING DELINEATION AND DIKE POSITIONING DETAILS

NO SCALE

RSP A77C4 DATED JUNE 6, 2008 SUPERSEDES STANDARD PLAN A77C4
DATED MAY 1, 2006 - PAGE 47 OF THE STANDARD PLANS BOOK DATED MAY 2006.

REVISED STANDARD PLAN RSP A77C4

2006 REVISED STANDARD PLAN RSP A77C4

12-10-07

DIST	COUNTY	ROUTE	POST MILES TOTAL PROJECT	SHEET NO.	TOTAL SHEETS
05	SLO	46	36.6/41.2	483	595

Randell D. Hiatt
REGISTERED CIVIL ENGINEER

October 20, 2006
PLANS APPROVAL DATE

REGISTERED PROFESSIONAL ENGINEER
Randell D. Hiatt
No. C50200
Exp. 6-30-07
CIVIL
STATE OF CALIFORNIA

The State of California or its officers or agents shall not be responsible for the accuracy or completeness of electronic copies of this plan sheet.

To accompany plans dated 12-7-09

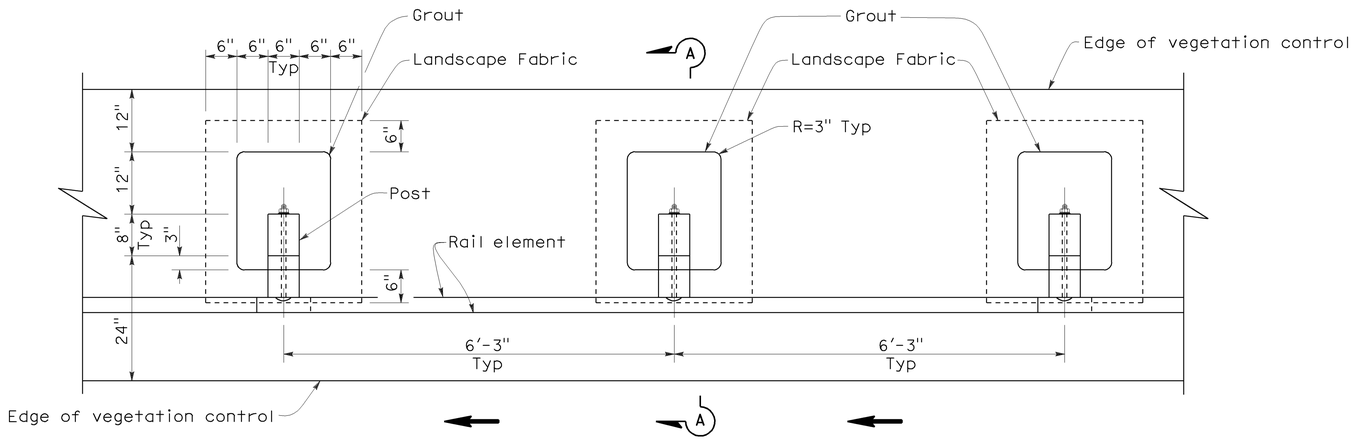

PLAN

NOTES:

1. Where the distance between back of post and hinge point is less than 24", vegetation control to be constructed flush with the back edge of the post.
2. Where dike is constructed under railing, construct vegetation control to back edge of dike. Where paved shoulder is constructed within 24" in front of the post, construct vegetation control to the edge of paved shoulder.
3. Direction of adjacent traffic indicated by ← .

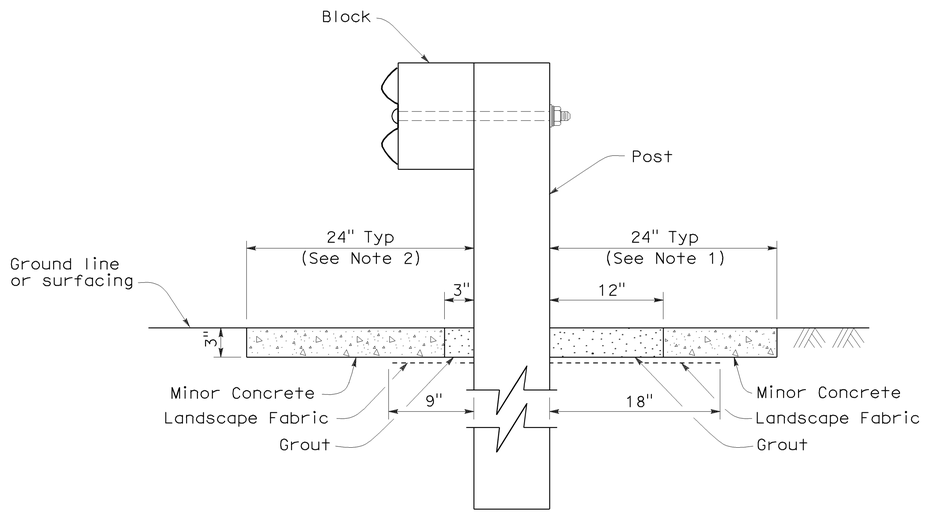

SECTION A-A

STATE OF CALIFORNIA
DEPARTMENT OF TRANSPORTATION

METAL BEAM GUARD RAILING
TYPICAL VEGETATION CONTROL
STANDARD RAILING SECTION

NO SCALE

NSP A77C5 DATED OCTOBER 20, 2006 SUPPLEMENTS THE STANDARD PLANS BOOK DATED MAY 2006.

NEW STANDARD PLAN NSP A77C5

2006 NEW STANDARD PLAN NSP A77C5

7-17-06

DIST	COUNTY	ROUTE	POST MILES TOTAL PROJECT	SHEET NO.	TOTAL SHEETS
05	SLO	46	36.6/41.2	484	595

Randell D. Hiatt
REGISTERED CIVIL ENGINEER

October 20, 2006
PLANS APPROVAL DATE

REGISTERED PROFESSIONAL ENGINEER
Randell D. Hiatt
No. C50200
Exp. 6-30-07
CIVIL
STATE OF CALIFORNIA

The State of California or its officers or agents shall not be responsible for the accuracy or completeness of electronic copies of this plan sheet.

To accompany plans dated 12-7-09

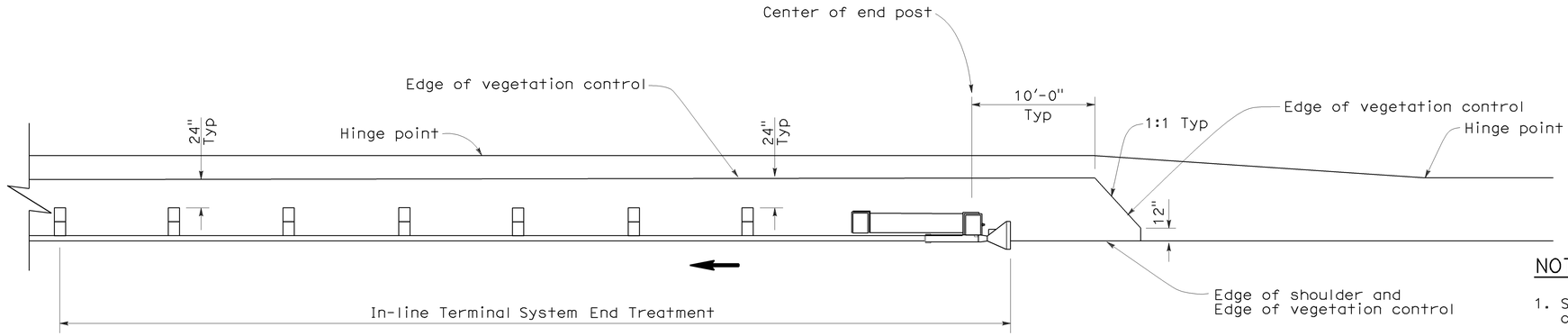

PLAN

NOTES:

1. See New Standard Plan NSP A77C5 for additional vegetation control details.
2. Where the distance between back of post and hinge point is less than 24", vegetation control to be constructed flush with the back edge of the post.
3. Where dike is constructed under railing, construct vegetation control to back edge of dike. Where paved shoulder is constructed within 24" in front of the post, construct vegetation control to the edge of paved shoulder.
4. Direction of adjacent traffic indicated by ←.

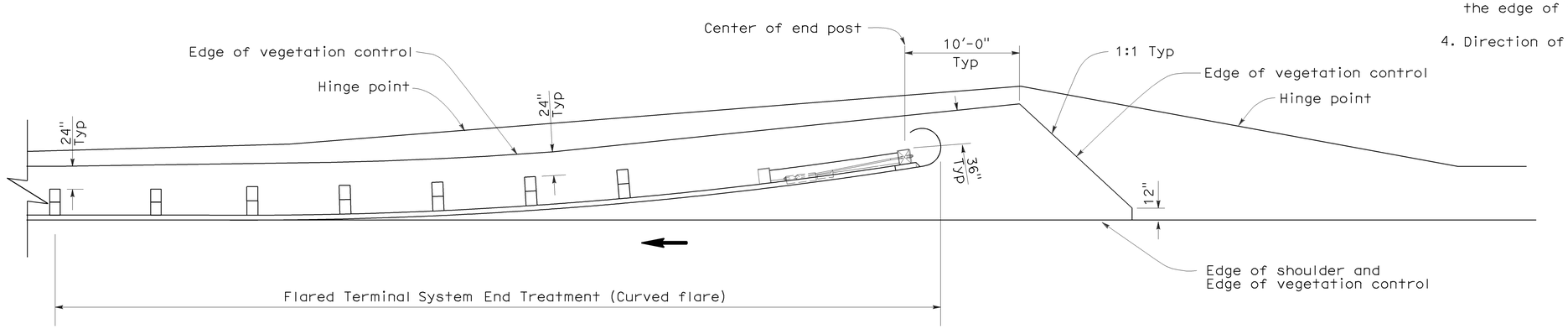

PLAN

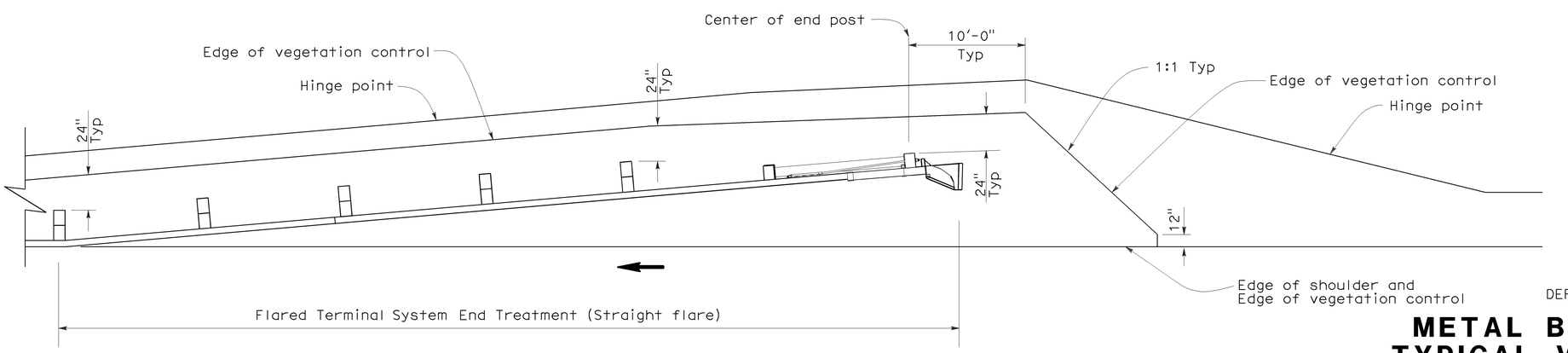

PLAN

STATE OF CALIFORNIA
DEPARTMENT OF TRANSPORTATION

METAL BEAM GUARD RAILING
TYPICAL VEGETATION CONTROL
FOR TERMINAL SYSTEM END TREATMENTS

NO SCALE

NSP A77C6 DATED OCTOBER 20, 2006 SUPPLEMENTS THE STANDARD PLANS BOOK DATED MAY 2006.

NEW STANDARD PLAN NSP A77C6

2006 NEW STANDARD PLAN NSP A77C6

7-17-06

DIST	COUNTY	ROUTE	POST MILES TOTAL PROJECT	SHEET NO.	TOTAL SHEETS
05	SLO	46	36.6/41.2	485	595

Randell D. Hiatt
REGISTERED CIVIL ENGINEER

October 20, 2006
PLANS APPROVAL DATE

REGISTERED PROFESSIONAL ENGINEER
Randell D. Hiatt
No. C50200
Exp. 6-30-07
CIVIL
STATE OF CALIFORNIA

The State of California or its officers or agents shall not be responsible for the accuracy or completeness of electronic copies of this plan sheet.

To accompany plans dated 12-7-09

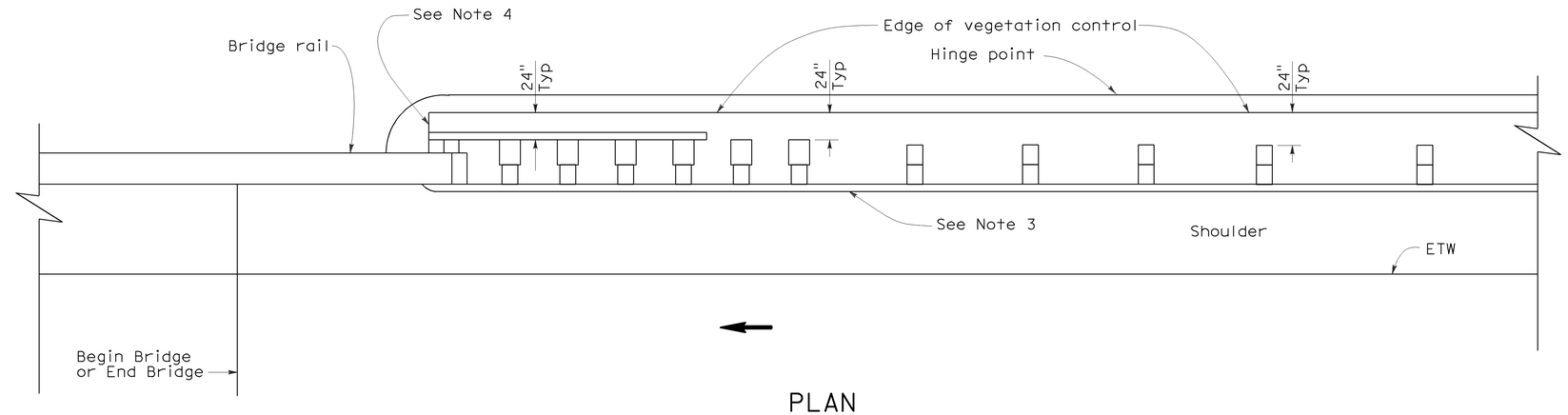

PLAN

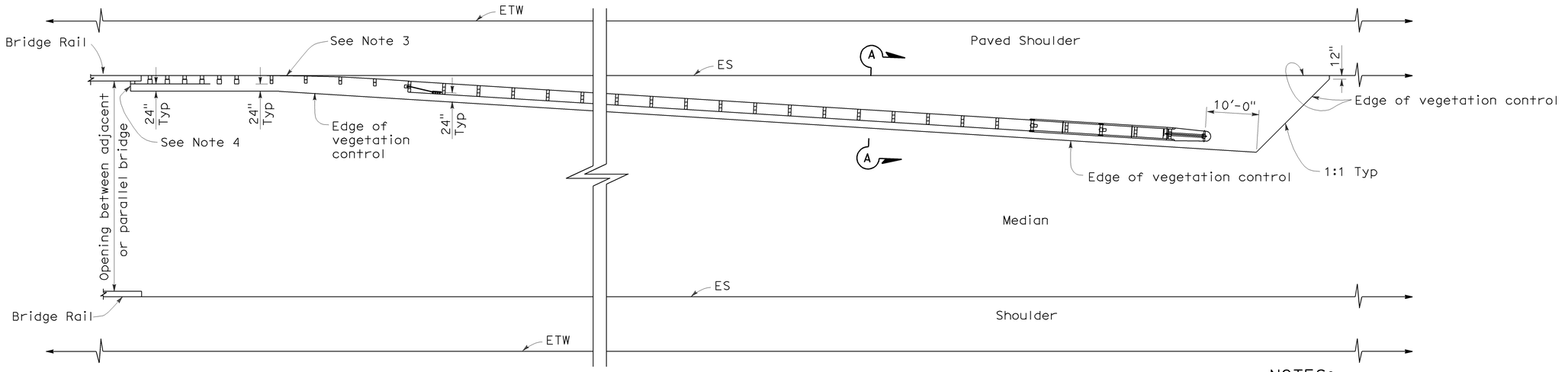

PLAN

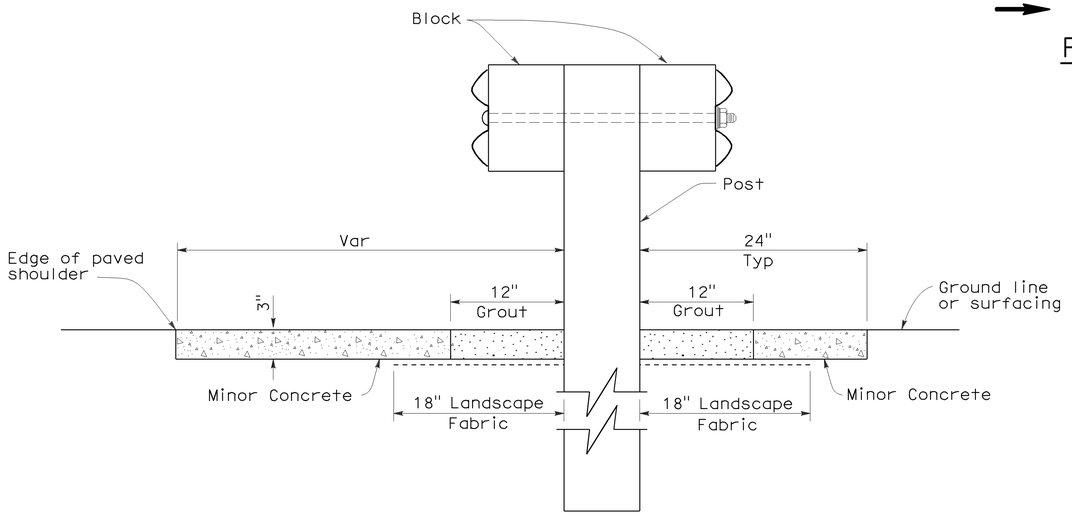

SECTION A-A

NOTES:

1. See New Standard Plan NSP A77C5 for additional vegetation control details.
2. Where the distance between back of post and hinge point is less than 24", vegetation control to be constructed flush with the back edge of the post.
3. Where dike is constructed under railing, construct vegetation control to back edge of dike. Where paved shoulder is constructed within 24" in front of the post, construct vegetation control to the edge of paved shoulder.
4. End vegetation control at end of backside rail element.
5. Direction of adjacent traffic indicated by ←.

STATE OF CALIFORNIA
DEPARTMENT OF TRANSPORTATION

METAL BEAM GUARD RAILING TYPICAL VEGETATION CONTROL AT STRUCTURE APPROACH AND DEPARTURE

NO SCALE

NSP A77C7 DATED OCTOBER 20, 2006 SUPPLEMENTS THE STANDARD PLANS BOOK DATED MAY 2006.

NEW STANDARD PLAN NSP A77C7

2006 NEW STANDARD PLAN NSP A77C7

7-17-06

DIST	COUNTY	ROUTE	POST MILES TOTAL PROJECT	SHEET NO.	TOTAL SHEETS
05	SLO	46	36.6/41.2	486	595

Randell D. Hiatt
REGISTERED CIVIL ENGINEER

October 20, 2006
PLANS APPROVAL DATE

REGISTERED PROFESSIONAL ENGINEER
Randell D. Hiatt
No. C50200
Exp. 6-30-07
CIVIL
STATE OF CALIFORNIA

The State of California or its officers or agents shall not be responsible for the accuracy or completeness of electronic copies of this plan sheet.

To accompany plans dated 12-7-09

NOTES:

1. See New Standard Plan NSP A77C5 for additional vegetation control details.
2. Where the distance between back of post and hinge point is less than 24", vegetation control to be constructed flush with the back edge of the post.
3. Where dike is constructed under railing, construct vegetation control to back edge of dike. Where paved shoulder is constructed within 24" in front of the post, construct vegetation control to the edge of paved shoulder.
4. Direction of adjacent traffic indicated by ←.

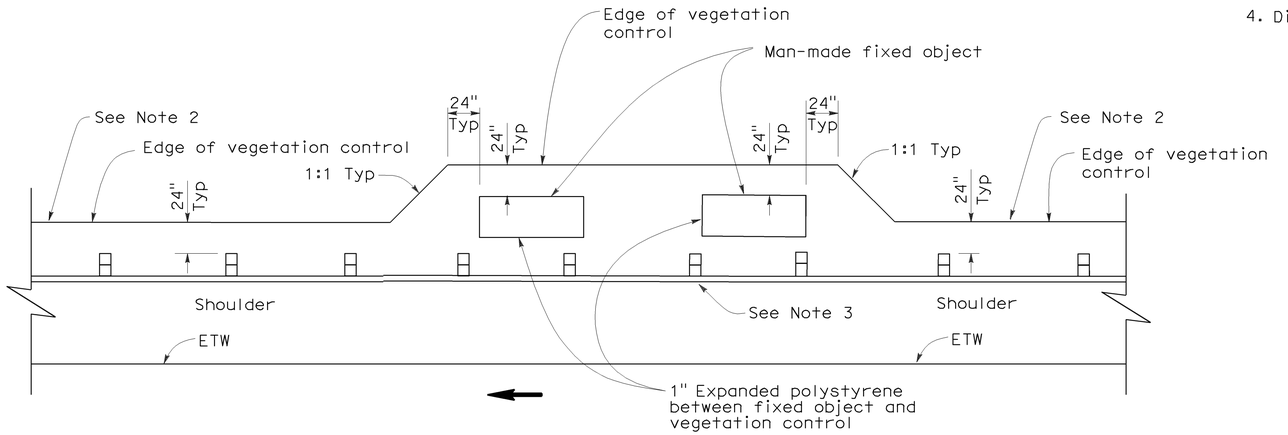

PLAN

FIXED OBJECT(S) ON SHOULDER

STATE OF CALIFORNIA
DEPARTMENT OF TRANSPORTATION

METAL BEAM GUARD RAILING
TYPICAL VEGETATION CONTROL AT FIXED OBJECT

NO SCALE

NSP A77C8 DATED OCTOBER 20, 2006 SUPPLEMENTS THE STANDARD PLANS BOOK DATED MAY 2006.

NEW STANDARD PLAN NSP A77C8

2006 NEW STANDARD PLAN NSP A77C8

7-17-06

NOTES:

1. See New Standard Plan NSP A77C5 for additional vegetation control details.
2. Where dike is constructed under railing, construct vegetation control to back edge of dike. Where paved shoulder is constructed within 24" in front of the post, construct vegetation control to the edge of paved shoulder.
3. Direction of adjacent traffic indicated by ← .

DIST	COUNTY	ROUTE	POST MILES TOTAL PROJECT	SHEET NO.	TOTAL SHEETS
05	SLO	46	36.6/41.2	487	595

Randell D. Hiatt
REGISTERED CIVIL ENGINEER

October 20, 2006
PLANS APPROVAL DATE

REGISTERED PROFESSIONAL ENGINEER
Randell D. Hiatt
No. C50200
Exp. 6-30-07
CIVIL
STATE OF CALIFORNIA

The State of California or its officers or agents shall not be responsible for the accuracy or completeness of electronic copies of this plan sheet.

To accompany plans dated 12-7-09

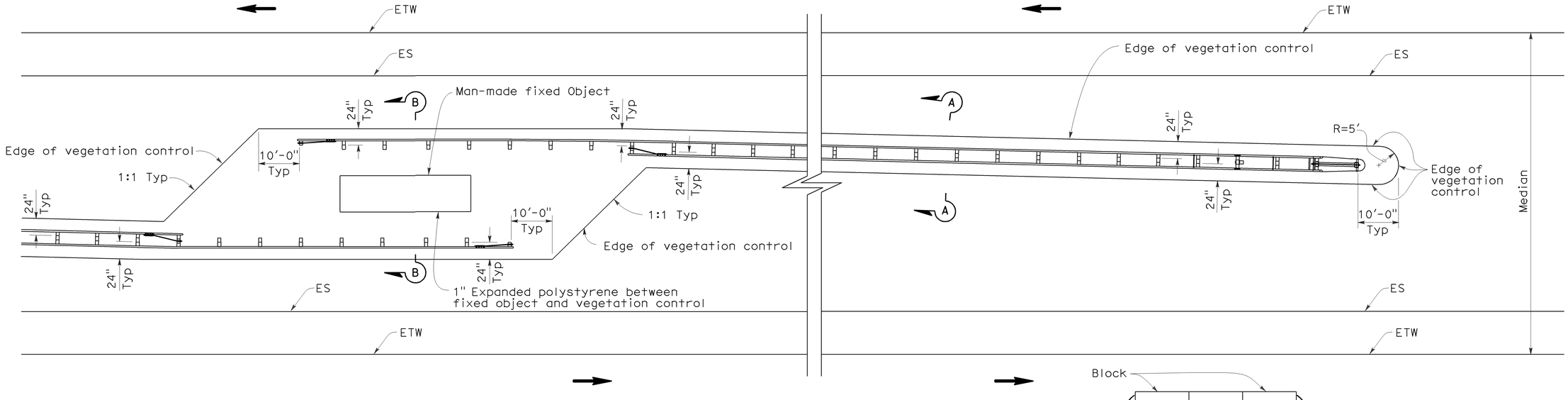

PLAN

FIXED OBJECT(S) IN MEDIAN

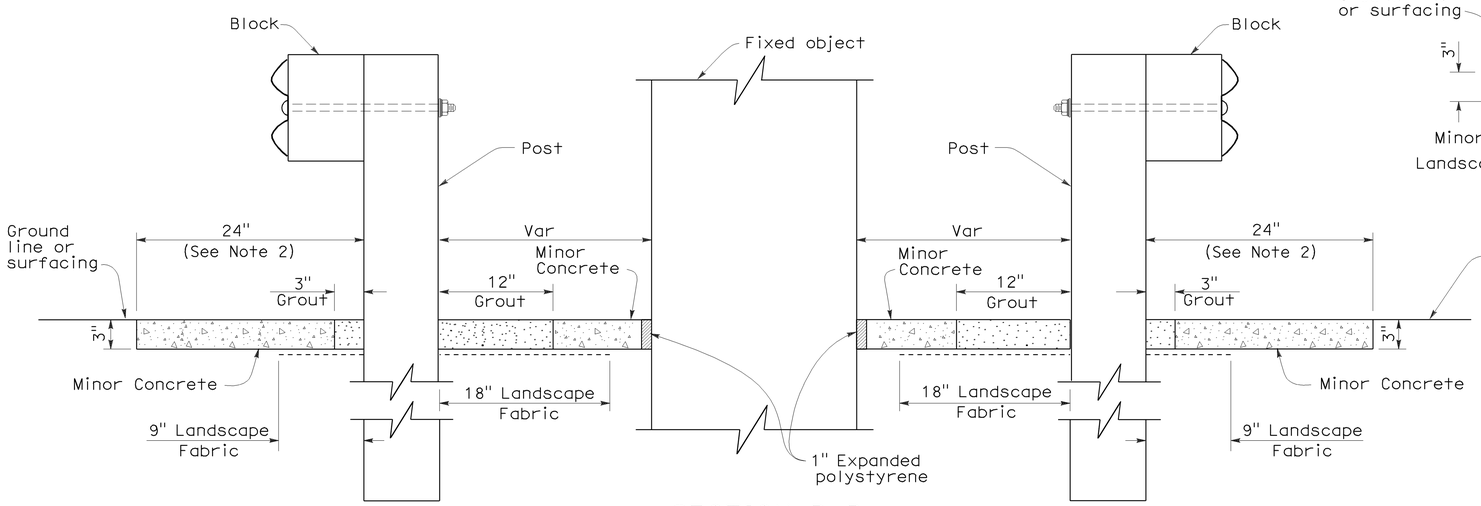

SECTION B-B

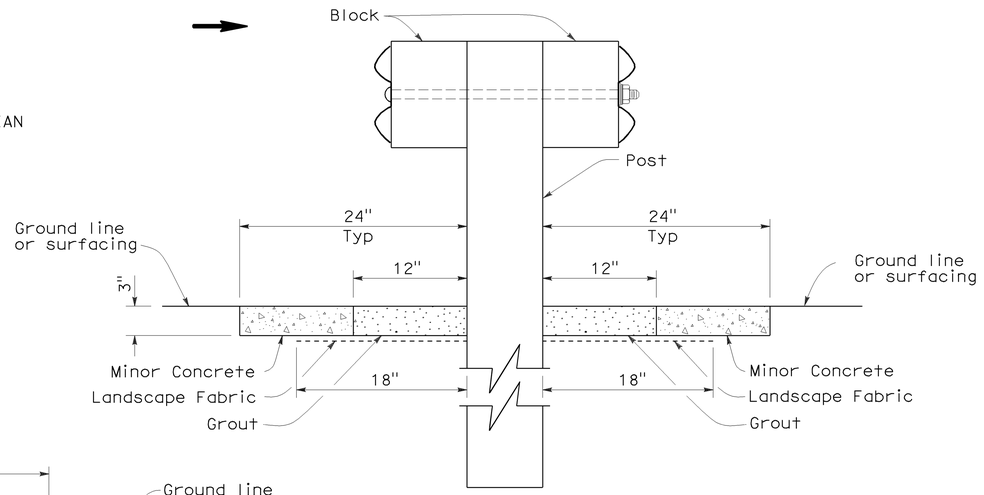

SECTION A-A

STATE OF CALIFORNIA
DEPARTMENT OF TRANSPORTATION

METAL BEAM GUARD RAILING TYPICAL VEGETATION CONTROL AT FIXED OBJECT

NO SCALE

NSP A77C9 DATED OCTOBER 20, 2006 SUPPLEMENTS THE STANDARD PLANS BOOK DATED MAY 2006.

NEW STANDARD PLAN NSP A77C9

2006 NEW STANDARD PLAN NSP A77C9

7-17-06

NOTES:

1. See New Standard Plan NSP A77C5 for additional vegetation control details.
2. Where dike is constructed under railing, construct vegetation control to back edge of dike. Where paved shoulder is constructed within 24" in front of the post, construct vegetation control to the edge of paved shoulder.
3. Direction of adjacent traffic indicated by ⟵.

DIST	COUNTY	ROUTE	POST MILES TOTAL PROJECT	SHEET NO.	TOTAL SHEETS
05	SLO	46	36.6/41.2	488	595

Randell D. Hiatt
REGISTERED CIVIL ENGINEER

October 20, 2006
PLANS APPROVAL DATE

REGISTERED PROFESSIONAL ENGINEER
Randell D. Hiatt
No. C50200
Exp. 6-30-07
CIVIL
STATE OF CALIFORNIA

The State of California or its officers or agents shall not be responsible for the accuracy or completeness of electronic copies of this plan sheet.

To accompany plans dated 12-7-09

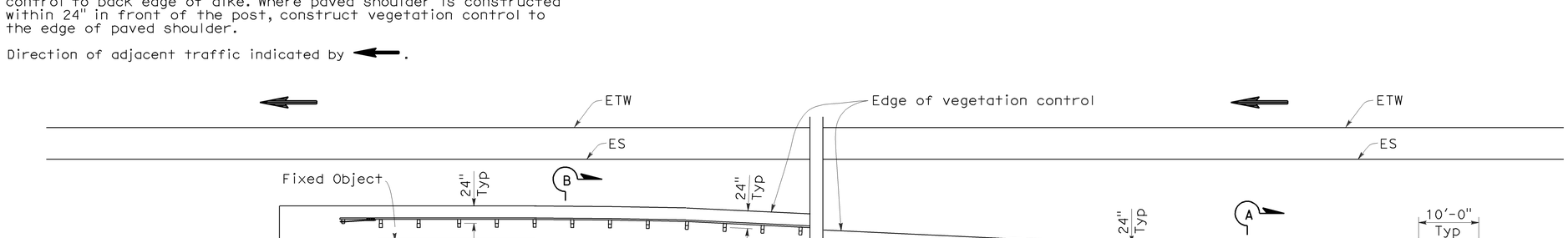

PLAN

FIXED OBJECT(S) BETWEEN SEPARATE ROADBEDS
(ONE-WAY TRAFFIC)

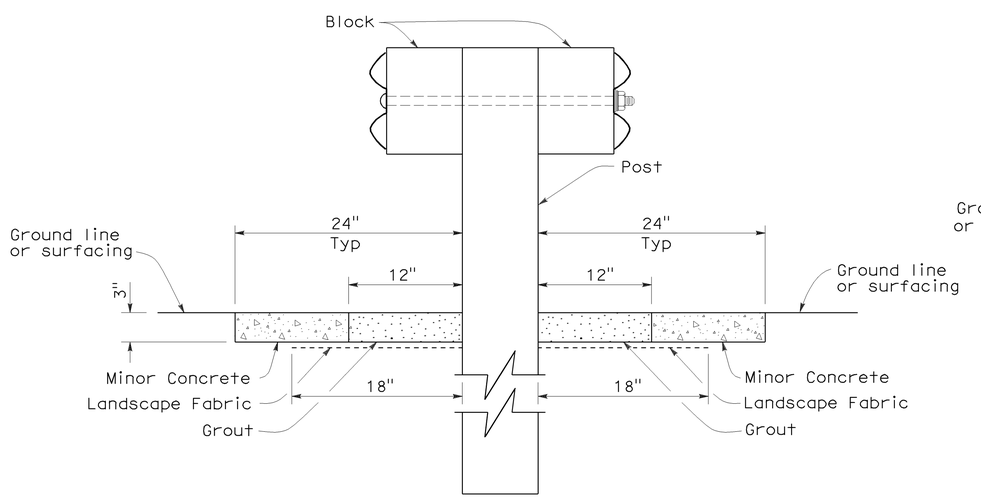

SECTION A-A

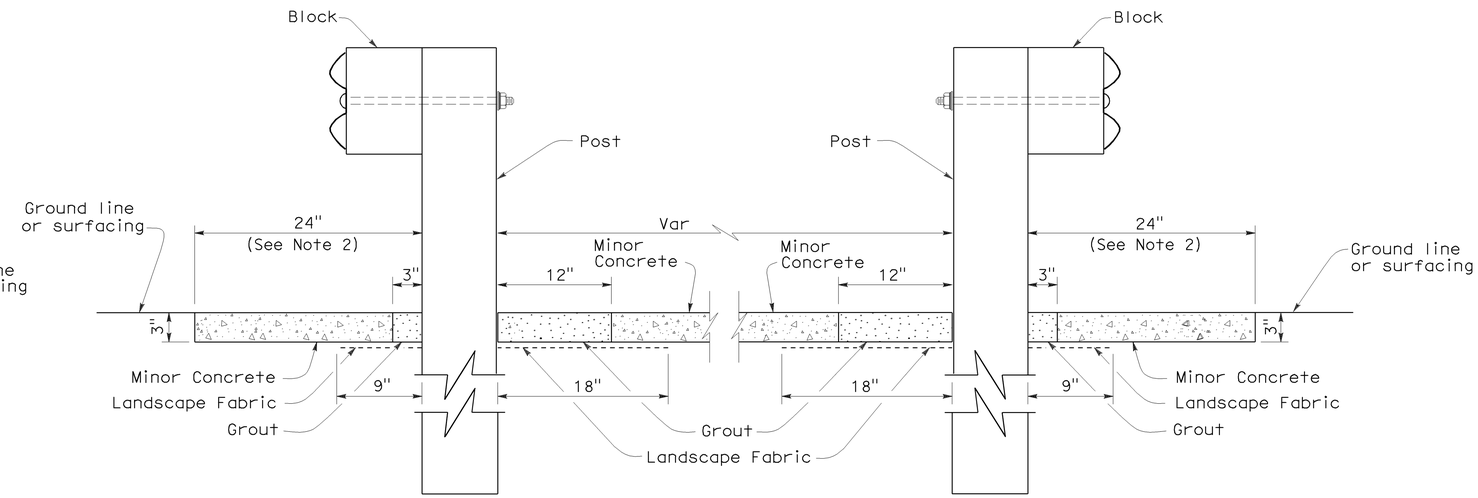

SECTION B-B

STATE OF CALIFORNIA
DEPARTMENT OF TRANSPORTATION

METAL BEAM GUARD RAILING TYPICAL VEGETATION CONTROL AT FIXED OBJECT

NO SCALE

NSP A77C10 DATED OCTOBER 20, 2006 SUPPLEMENTS THE STANDARD PLANS BOOK DATED MAY 2006.

NEW STANDARD PLAN NSP A77C10

2006 NEW STANDARD PLAN NSP A77C10

7-17-06

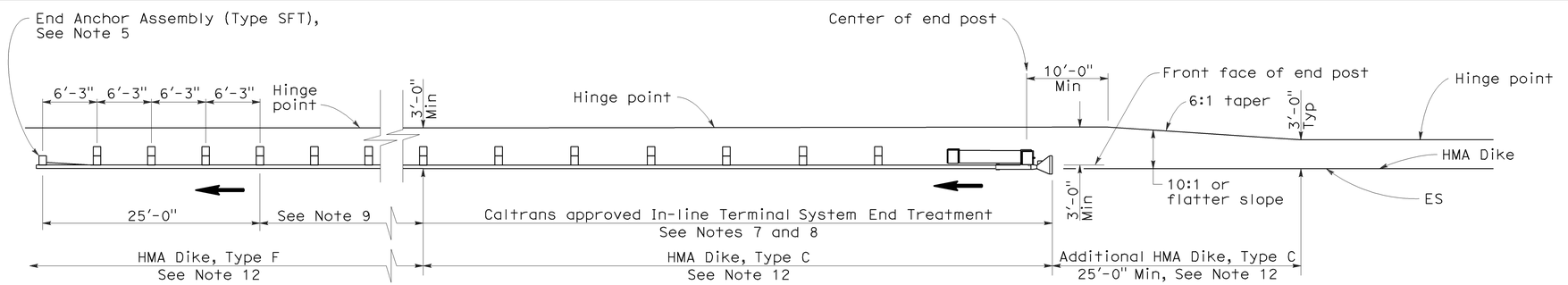

TYPE 11A LAYOUT

(EMBANKMENT GUARD INSTALLATION WITH IN-LINE END TREATMENT AT TRAFFIC APPROACH END OF RAILING)
See Note 6

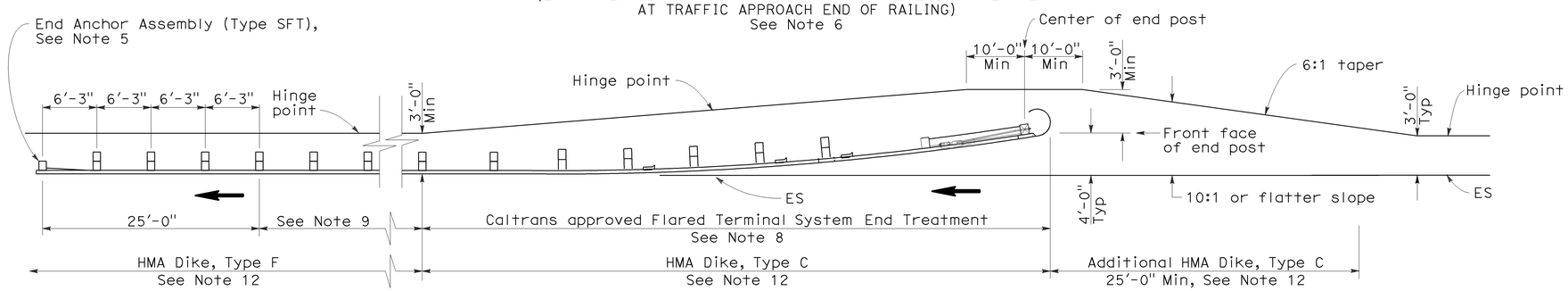

TYPE 11B LAYOUT

(EMBANKMENT GUARD RAILING INSTALLATION WITH FLARED END TREATMENT AT TRAFFIC APPROACH END OF RAILING)
See Note 6

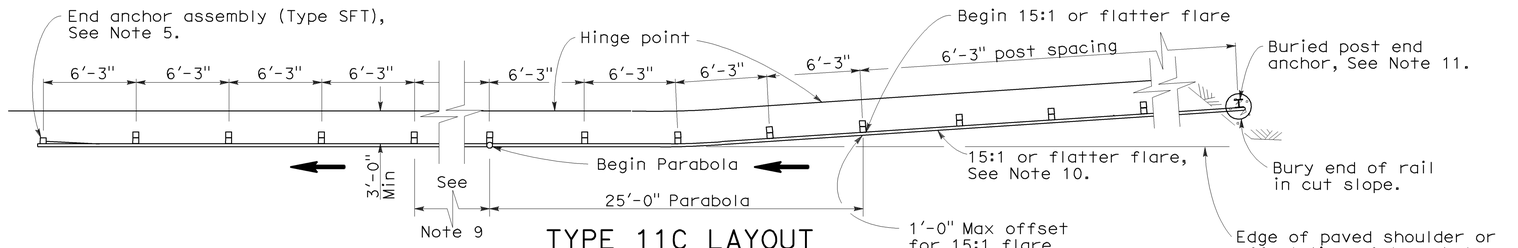

TYPE 11C LAYOUT

(EMBANKMENT GUARD RAILING INSTALLATION WITH BURIED END ANCHOR TREATMENT AT TRAFFIC APPROACH END OF RAILING)
See Notes 6 and 12

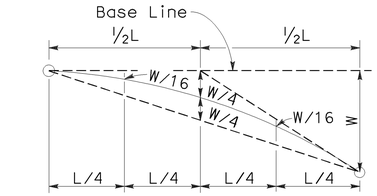

TYPICAL PARABOLIC LAYOUT

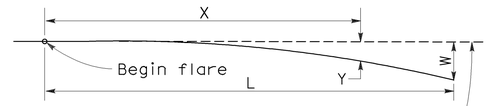

$$Y = \frac{WX^2}{L^2}$$

Y = Offset from base line
W = Maximum offset
X = Distance along base line
L = Length of flare

PARABOLIC FLARE OFFSETS

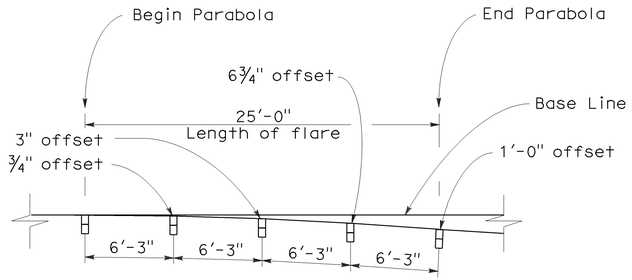

TYPICAL FLARE OFFSETS FOR 1 FOOT MAX END OFFSET

NOTES:

1. Line post, blocks and hardware to be used are shown on Standard Plans A77A1, A77A2, A77B1, A77C1, and A77C2.
2. Guard rail post spacing to be 6'-3" center to center, except as otherwise noted.
3. Except as noted, line posts are 6" x 8" x 6'-0" wood with 6" x 8" x 1'-2" wood blocks. W6 x 9 steel posts, 6'-0" in length, with 6" x 8" x 1'-2" notched wood blocks or recycled plastic blocks may be used for 6" x 8" x 6'-0" wood post with 6" x 8" x 1'-2" wood blocks where applicable and when specified.
4. Direction of adjacent traffic indicated by ➞.
5. For End Anchor Assembly (Type SFT) details, see Standard Plan A77H1.
6. Layout Types 11A, 11B or 11C are typically used where guard railing is recommended to shield embankment slopes and a crashworthy end treatment is required for only one direction of traffic.
7. In-line Terminal System End Treatments are used where site conditions will not accommodate a flared end treatment.
8. The type of terminal system end treatment to be used will be shown on the Project Plans.
9. Dependent on site conditions (embankment height and side slope), construction of additional guard railing (length equal to multiples of 12'-6" with 6'-3" post spacing) may be advisable.
10. The 15:1 or flatter flare used with buried end anchors is based on the edge of the paved shoulder or offset line of edge of the traveled way. The length of guard railing within the 15:1 or flatter flare is based on site conditions and should be a length equal to multiples of 12'-6".
11. For details of the buried post end anchor used with Type 11C Layout, see Standard Plan A77I2.
12. Where placement of dike is required with guard railing installations, see Revised Standard Plan RSP A77C4 for dike positioning details.

DIST	COUNTY	ROUTE	POST MILES TOTAL PROJECT	SHEET NO.	TOTAL SHEETS
05	SLO	46	36.6/41.2	489	595

Randell D. Hiatt
REGISTERED CIVIL ENGINEER

June 6, 2008
PLANS APPROVAL DATE

REGISTERED PROFESSIONAL ENGINEER — Randell D. Hiatt — No. C50200 — Exp. 6-30-09 — CIVIL — STATE OF CALIFORNIA

The State of California or its officers or agents shall not be responsible for the accuracy or completeness of electronic copies of this plan sheet.

To accompany plans dated 12-7-09

STATE OF CALIFORNIA
DEPARTMENT OF TRANSPORTATION

METAL BEAM GUARD RAILING TYPICAL LAYOUTS FOR EMBANKMENTS

NO SCALE

RSP A77E1 DATED JUNE 6, 2008 SUPERSEDES STANDARD PLAN A77E1
DATED MAY 1, 2006 - PAGE 48 OF THE STANDARD PLANS BOOK DATED MAY 2006.

REVISED STANDARD PLAN RSP A77E1

2006 REVISED STANDARD PLAN RSP A77E1

12-10-07

DIST	COUNTY	ROUTE	POST MILES TOTAL PROJECT	SHEET NO.	TOTAL SHEETS
05	SLO	46	36.6/41.2	490	595

Randell D. Hiatt
REGISTERED CIVIL ENGINEER

June 6, 2008
PLANS APPROVAL DATE

REGISTERED PROFESSIONAL ENGINEER
Randell D. Hiatt
No. C50200
Exp. 6-30-09
CIVIL
STATE OF CALIFORNIA

The State of California or its officers or agents shall not be responsible for the accuracy or completeness of electronic copies of this plan sheet.

To accompany plans dated 12-7-09

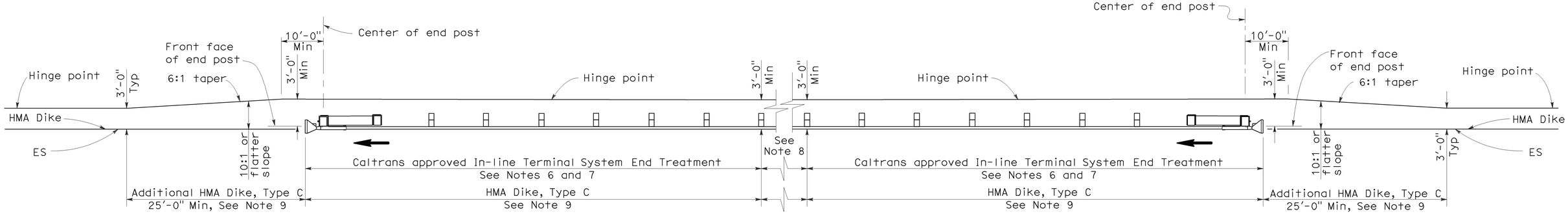

TYPE 11D LAYOUT

(EMBANKMENT GUARD RAILING INSTALLATION WITH IN-LINE END TREATMENT AT EACH END OF RAILING)
See Note 5

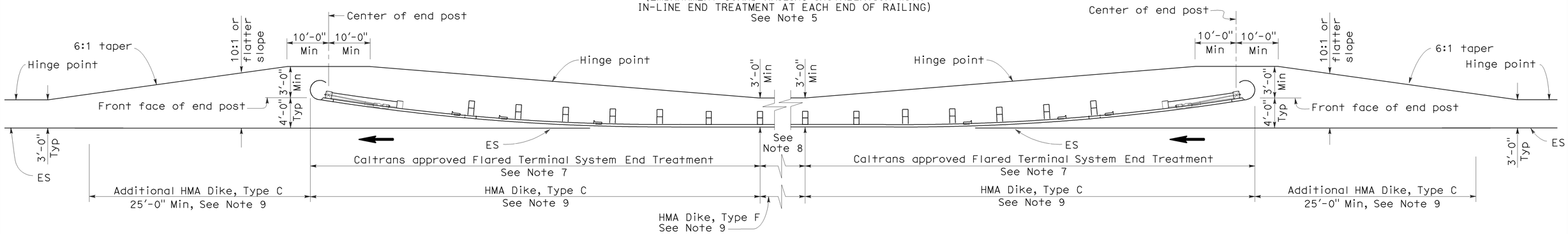

TYPE 11E LAYOUT

(EMBANKMENT GUARD RAILING INSTALLATION WITH FLARED END TREATMENT AT EACH END OF RAILING)
See Note 5

NOTES:

1. Line post, blocks and hardware to be used are shown on Standard Plans A77A1, A77A2, A77B1, A77C1 and A77C2.
2. Guard rail post spacing to be 6'-3" center to center, except as otherwise noted.
3. Except as noted, line posts are 6" x 8" x 6'-0" wood with 6" x 8" x 1'-2" wood blocks. W6 x 9 steel posts, 6'-0" in length, with 6" x 8" x 1'-2" notched wood blocks or plastic blocks may be used for 6" x 8" x 6'-0" wood post with 6" x 8" x 1'-2" wood blocks where applicable and when specified.
4. Direction of adjacent traffic indicated by ➡.
5. Layout Types 11D through 11L, shown on the A77E Series of Revised Standard Plans, are typically used where guard railing is recommended to shield embankment slopes and a crashworthy end treatment is required for both directions of traffic.
6. In-line Terminal System End Treatments are used where site conditions will not accommodate a flared end treatment.
7. The type of terminal system end treatment to be used will be shown on the Project Plans.
8. Dependent on site conditions (embankment height and side slope), construction of additional guard railing (length equal to multiples of 12'-6" with 6'-3" post spacing) may be advisable.
9. Where placement of dike is required with guard railing installations, see Revised Standard Plan RSP A77C4 for dike positioning details.

STATE OF CALIFORNIA
DEPARTMENT OF TRANSPORTATION

METAL BEAM GUARD RAILING TYPICAL LAYOUTS FOR EMBANKMENTS

NO SCALE

RSP A77E2 DATED JUNE 6, 2008 SUPERSEDES STANDARD PLAN A77E2
DATED MAY 1, 2006 - PAGE 49 OF THE STANDARD PLANS BOOK DATED MAY 2006.

REVISED STANDARD PLAN RSP A77E2

2006 REVISED STANDARD PLAN RSP A77E2

12-10-07

DIST	COUNTY	ROUTE	POST MILES TOTAL PROJECT	SHEET NO.	TOTAL SHEETS
05	SLO	46	36.6/41.2	491	595

Randell D. Hiatt
REGISTERED CIVIL ENGINEER

June 6, 2008
PLANS APPROVAL DATE

REGISTERED PROFESSIONAL ENGINEER
Randell D. Hiatt
No. C50200
Exp. 6-30-09
CIVIL
STATE OF CALIFORNIA

The State of California or its officers or agents shall not be responsible for the accuracy or completeness of electronic copies of this plan sheet.

To accompany plans dated 12-7-09

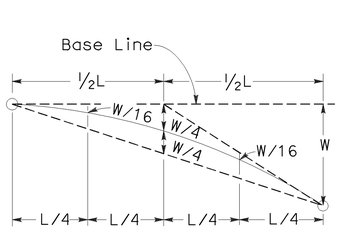

TYPICAL PARABOLIC LAYOUT

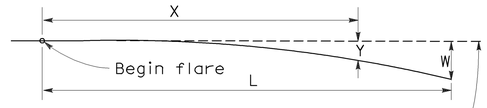

$$Y = \frac{WX^2}{L^2}$$

Y = Offset from base line
W = Maximum offset
X = Distance along base line
L = Length of flare

PARABOLIC FLARE OFFSETS

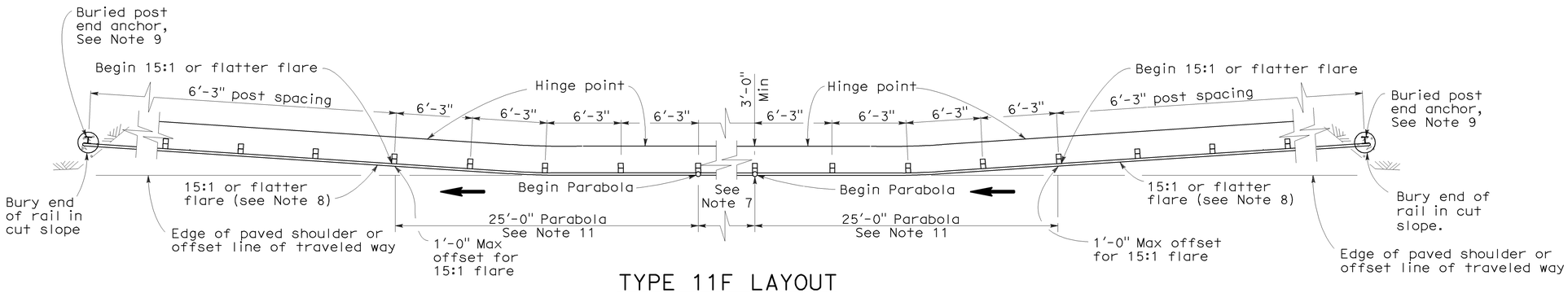

TYPE 11F LAYOUT

(EMBANKMENT GUARD RAILING INSTALLATION WITH A BURIED END ANCHOR TREATMENT AT EACH END OF RAILING)
See Notes 5 and 10

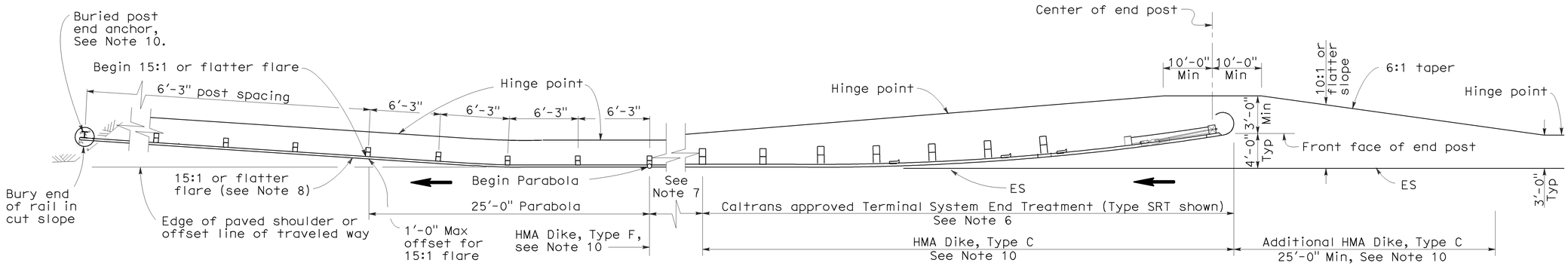

TYPE 11G LAYOUT

(EMBANKMENT GUARD RAILING INSTALLATION WITH FLARED END TREATMENT AND A BURIED END ANCHOR TREATMENT AT THE ENDS OF RAILING)
See Notes 5 and 10

NOTES:

1. Line post, blocks and hardware to be used are shown on Standard Plans A77A1, A77A2, A77B1, A77C1 and A77C2.
2. Guard rail post spacing to be 6'-3" center to center, except as otherwise noted.
3. Except as noted, line posts are 6" x 8" x 6'-0" wood with 6" x 8" x 1'-2" wood blocks. W6 x 9 steel posts, 6'-0" in length, with 6" x 8" x 1'-2" notched wood blocks or plastic blocks may be used for 6" x 8" x 6'-0" wood post with 6" x 8" x 1'-2" wood blocks where applicable and when specified.
4. Direction of adjacent traffic indicated by ➔.
5. Layout Types 11D through 11L, shown on the A77E Series of Revised Standard Plans, are typically used where guard railing is recommended to shield embankment slopes and a crashworthy end treatment is required for both directions of traffic.
6. The type of terminal system end treatment to be used will be shown on the Project Plans.
7. Dependent on site conditions (embankment height and side slope), construction of additional guard railing (length equal to multiples of 12'-6" with 6'-3" post spacing) may be advisable.
8. The 15:1 or flatter flare used with buried end anchors is based on the edge of the paved shoulder or offset line of edge of the traveled way. The length of guard railing within the 15:1 or flatter flare is based on site conditions and should be a length equal to multiples of 12'-6".
9. For details of the buried post end anchor used with Type 11F and 11G Layouts, see Standard Plan A77I2.
10. Where placement of dike is required with guard railing installations, see Revised Standard Plan RSP A77C4 for dike positioning details.
11. For typical flare offsets for 25'-0" length parabola with maximum offset of 1'-0", see Revised Standard Plan RSP A77E1.

STATE OF CALIFORNIA
DEPARTMENT OF TRANSPORTATION

METAL BEAM GUARD RAILING TYPICAL LAYOUTS FOR EMBANKMENTS

NO SCALE

RSP A77E3 DATED JUNE 6, 2008 SUPERSEDES STANDARD PLAN A77E3
DATED MAY 1, 2006 - PAGE 50 OF THE STANDARD PLANS BOOK DATED MAY 2006.

REVISED STANDARD PLAN RSP A77E3

2006 REVISED STANDARD PLAN RSP A77E3

12-10-07

DIST	COUNTY	ROUTE	POST MILES TOTAL PROJECT	SHEET NO.	TOTAL SHEETS
05	SLO	46	36.6/41.2	492	595

Randell D. Hiatt
REGISTERED CIVIL ENGINEER

June 6, 2008
PLANS APPROVAL DATE

REGISTERED PROFESSIONAL ENGINEER
Randell D. Hiatt
No. C50200
Exp. 6-30-09
CIVIL
STATE OF CALIFORNIA

The State of California or its officers or agents shall not be responsible for the accuracy or completeness of electronic copies of this plan sheet.

To accompany plans dated 12-7-09

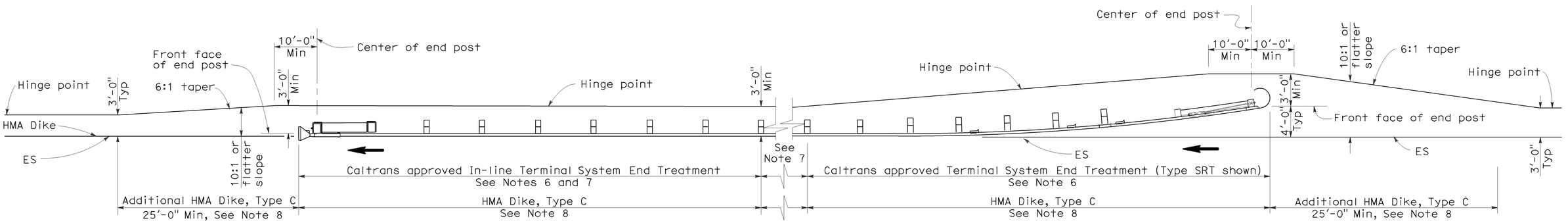

TYPE 11H LAYOUT

(EMBANKMENT GUARD RAILING INSTALLATION WITH FLARED END TREATMENT
AND AN IN-LINE TREATMENT AT THE ENDS OF RAILING)
See Notes 5 and 8

NOTES:

1. Line post, blocks and hardware to be used are shown on Standard Plans A77A1, A77A2, A77B1, A77C1 and A77C2.
2. Guard rail post spacing to be 6'-3" center to center, except as otherwise noted.
3. Except as noted, line posts are 6" x 8" x 6'-0" wood with 6" x 8" x 1'-2" wood blocks. W6 x 9 steel posts, 6'-0" in length, with 6" x 8" x 1'-2" notched wood blocks or plastic blocks may be used for 6" x 8" x 6'-0" wood post with 6" x 8" x 1'-2" wood blocks where applicable and when specified.
4. Direction of adjacent traffic indicated by ➞.
5. Layout Types 11D through 11L, shown on the A77E Series of Revised Standard Plans, are typically used where guard railing is recommended to shield embankment slopes and a crashworthy end treatment is required for both directions of traffic.
6. The type of terminal system end treatment to be used will be shown on the Project Plans.
7. Dependent on site conditions (embankment height and side slope), construction of additional guard railing (length equal to multiples of 12'-6" with 6'-3" post spacing) may be advisable.
8. Where placement of dike is required with guard railing installations, see Revised Standard Plan RSP A77C4 for dike positioning details.

STATE OF CALIFORNIA
DEPARTMENT OF TRANSPORTATION

METAL BEAM GUARD RAILING TYPICAL LAYOUTS FOR EMBANKMENTS

NO SCALE

RSP A77E4 DATED JUNE 6, 2008 SUPERSEDES STANDARD PLAN A77E4
DATED MAY 1, 2006 - PAGE 51 OF THE STANDARD PLANS BOOK DATED MAY 2006.

REVISED STANDARD PLAN RSP A77E4

2006 REVISED STANDARD PLAN RSP A77E4

12-10-07

DIST	COUNTY	ROUTE	POST MILES TOTAL PROJECT	SHEET NO.	TOTAL SHEETS
05	SLO	46	36.6/41.2	493	595

Randell D. Hiatt
REGISTERED CIVIL ENGINEER

June 6, 2008
PLANS APPROVAL DATE

REGISTERED PROFESSIONAL ENGINEER
Randell D. Hiatt
No. C50200
Exp. 6-30-09
CIVIL
STATE OF CALIFORNIA

The State of California or its officers or agents shall not be responsible for the accuracy or completeness of electronic copies of this plan sheet.

To accompany plans dated 12-7-09

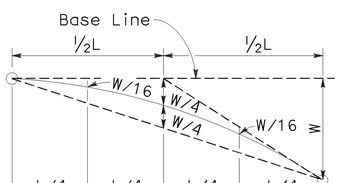

TYPICAL PARABOLIC LAYOUT

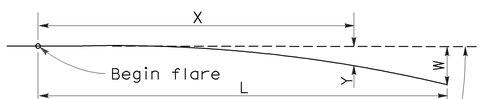

Base Line (Edge of paved shoulder or offset line of edge of traveled way)

$$Y = \frac{WX^2}{L^2}$$

Y = Offset from base line
W = Maximum offset
X = Distance along base line
L = Length of flare

PARABOLIC FLARE OFFSETS

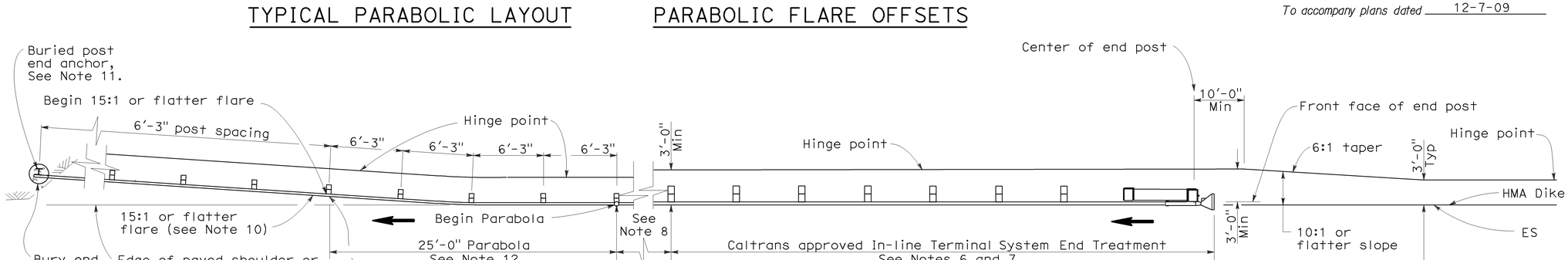

TYPE 11I LAYOUT

(EMBANKMENT GUARD RAILING INSTALLATION WITH IN-LINE END TREATMENT AND A BURIED END ANCHOR TREATMENT AT THE ENDS OF RAILING)
See Note 5

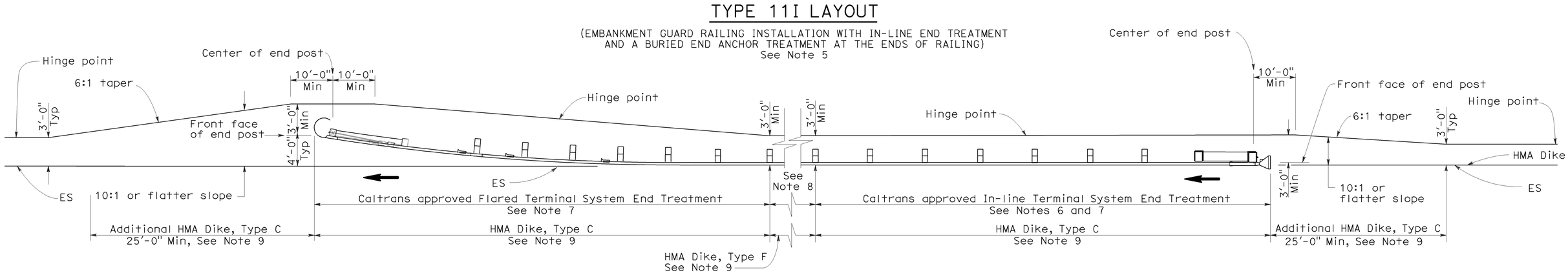

TYPE 11J LAYOUT

(EMBANKMENT GUARD RAILING INSTALLATION WITH IN-LINE END TREATMENT AND FLARED END TREATMENT AT THE ENDS OF RAILING)
See Note 5

NOTES:

1. Line post, blocks and hardware to be used are shown on Standard Plans A77A1, A77A2, A77B1, A77C1 and A77C2.
2. Guard rail post spacing to be 6'-3" center to center, except as otherwise noted.
3. Except as noted, line posts are 6" x 8" x 6'-0" wood with 6" x 8" x 1'-2" wood blocks. W6 x 9 steel posts, 6'-0" in length, with 6" x 8" x 1'-2" notched wood blocks or plastic blocks may be used for 6" x 8" x 6'-0" wood post with 6" x 8" x 1'-2" wood blocks where applicable and when specified.
4. Direction of adjacent traffic indicated by ➞.
5. Layout Types 11D through 11L, shown on the A77E Series of Revised Standard Plans, are typically used where guard railing is recommended to shield embamkment slopes and a crashworthy end treatment is required for both directions of traffic.
6. In-line Terminal System End Treatments are used where site conditions will not accommodate a flared end treatment.
7. The type of terminal system end treatment to be used will be shown on the Project Plans.
8. Dependent on site conditions (embankment height and side slope), construction of additional guard railing (length equal to multiples of 12'-6" with 6'-3" post spacing) may be advisable.
9. Where placement of dike is required with guard railing installations, see Revised Standard Plan RSP A77C4 for dike positioning details.
10. The 15:1 or flatter flare used with buried end anchors is based on the edge of the paved shoulder or offset line of edge of the traveled way. The length of guard railing within the 15:1 or flatter flare is based on site conditions and should be a length equal to multiples of 12'-6".
11. For details of the buried post end anchor used with Type 11I Layout, see Standard Plan A77I2.
12. For typical flare offsets for 25'-0" length parabola with maximum offset of 1'-0", see Revised Standard Plan RSP A77E1.

STATE OF CALIFORNIA
DEPARTMENT OF TRANSPORTATION

METAL BEAM GUARD RAILING TYPICAL LAYOUTS FOR EMBANKMENTS

NO SCALE

RSP A77E5 DATED JUNE 6, 2008 SUPERSEDES STANDARD PLAN A77E5 DATED MAY 1, 2006 - PAGE 52 OF THE STANDARD PLANS BOOK DATED MAY 2006.

REVISED STANDARD PLAN RSP A77E5

2006 REVISED STANDARD PLAN RSP A77E5

12-10-07

DIST	COUNTY	ROUTE	POST MILES TOTAL PROJECT	SHEET NO.	TOTAL SHEETS
05	SLO	46	36.6/41.2	494	595

Randell D. Hiatt
REGISTERED CIVIL ENGINEER

June 6, 2008
PLANS APPROVAL DATE

REGISTERED PROFESSIONAL ENGINEER
Randell D. Hiatt
No. C50200
Exp. 6-30-09
CIVIL
STATE OF CALIFORNIA

The State of California or its officers or agents shall not be responsible for the accuracy or completeness of electronic copies of this plan sheet.

To accompany plans dated 12-7-09

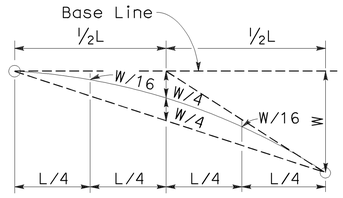

TYPICAL PARABOLIC LAYOUT

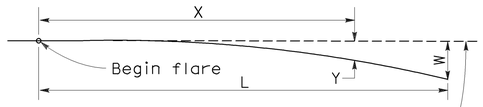

Base Line (Edge of paved shoulder or offset line of edge of traveled way)

$$Y = \frac{WX^2}{L^2}$$

Y = Offset from base line
W = Maximum offset
X = Distance along base line
L = Length of flare

PARABOLIC FLARE OFFSETS

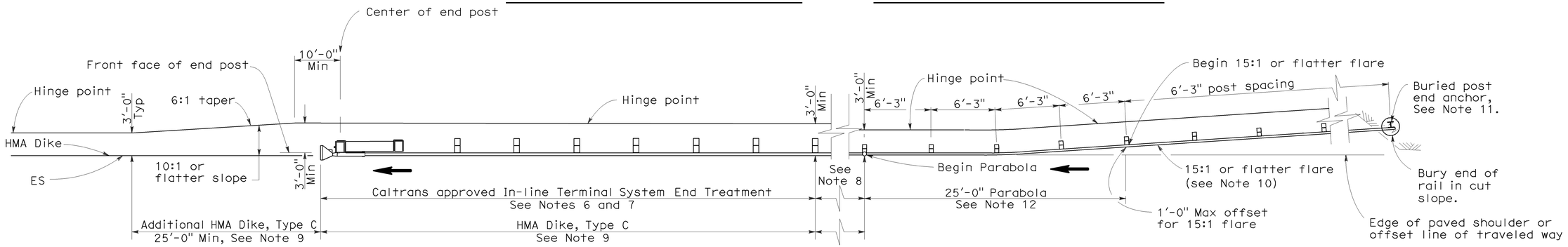

TYPE 11K LAYOUT

(EMBANKMENT GUARD RAILING INSTALLATION WITH A BURIED END ANCHOR TREATMENT AND AN IN-LINE END TREATMENT AT THE ENDS OF RAILING)
See Note 5

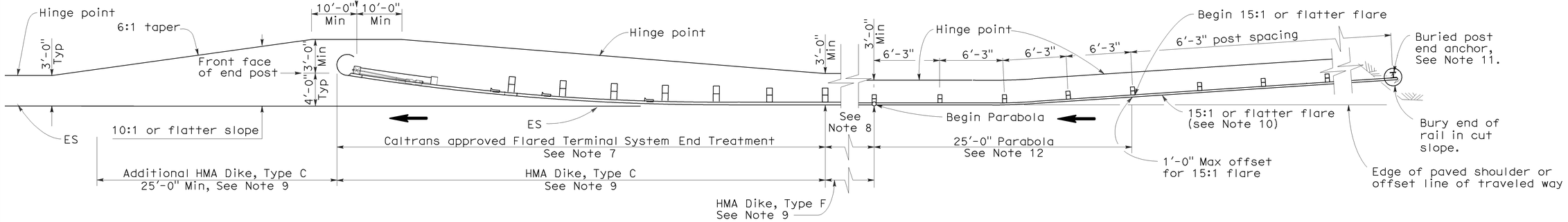

TYPE 11L LAYOUT

(EMBANKMENT GUARD RAILING INSTALLATION WITH A BURIED END ANCHOR TREATMENT AND A FLARED END TREATMENT AT THE ENDS OF RAILING)
See Note 5

NOTES:

1. Line post, blocks and hardware to be used are shown on Standard Plans A77A1, A77A2, A77B1, A77C1 and A77C2.
2. Guard rail post spacing to be 6'-3" center to center, except as otherwise noted.
3. Except as noted, line posts are 6" x 8" x 6'-0" wood with 6" x 8" x 1'-2" wood blocks. W6 x 9 steel posts, 6'-0" in length, with 6" x 8" x 1'-2" notched wood blocks or plastic blocks may be used for 6" x 8" x 6'-0" wood post with 6" x 8" x 1'-2" wood blocks where applicable and when specified.
4. Direction of adjacent traffic indicated by ➔.
5. Layout Types 11D through 11L, shown on the A77E Series of Revised Standard Plans, are typically used where guard railing is recommended to shield embamkment slopes and a crashworthy end treatment is required for both directions of traffic.
6. In-line Terminal System End Treatments are used where site conditions will not accommodate a flared end treatment.
7. The type of terminal system end treatment to be used will be shown on the Project Plans.
8. Dependent on site conditions (embankment height and side slope), construction of additional guard railing (length equal to multiples of 12'-6" with 6'-3" post spacing) may be advisable.
9. Where placement of dike is required with guard railing installations, see Revised Standard Plan RSP A77C4 for dike positioning details.
10. The 15:1 or flatter flare used with buried end anchors is based on the edge of the paved shoulder or offset line of edge of the traveled way. The length of guard railing within the 15:1 or flatter flare is based on site conditions and should be a length equal to multiples of 12'-6".
11. For details of the buried post end anchor used with Type 11K and 11L Layouts, see Standard Plan A77I2.
12. For typical flare offsets for 25'-0" length parabola with maximum offset of 1'-0", see Revised Standard Plan RSP A77E1.

STATE OF CALIFORNIA
DEPARTMENT OF TRANSPORTATION

METAL BEAM GUARD RAILING TYPICAL LAYOUTS FOR EMBANKMENTS

NO SCALE

RSP A77E6 DATED JUNE 6, 2008 SUPERSEDES STANDARD PLAN A77E6
DATED MAY 1, 2006 - PAGE 53 OF THE STANDARD PLANS BOOK DATED MAY 2006.

REVISED STANDARD PLAN RSP A77E6

2006 REVISED STANDARD PLAN RSP A77E6

12-10-07

DIST	COUNTY	ROUTE	POST MILES TOTAL PROJECT	SHEET NO.	TOTAL SHEETS
05	SLO	46	36.6/41.2	495	595

Randell D. Hiatt
REGISTERED CIVIL ENGINEER

June 6, 2008
PLANS APPROVAL DATE

REGISTERED PROFESSIONAL ENGINEER
Randell D. Hiatt
No. C50200
Exp. 6-30-09
CIVIL
STATE OF CALIFORNIA

The State of California or its officers or agents shall not be responsible for the accuracy or completeness of electronic copies of this plan sheet.

To accompany plans dated 12-7-09

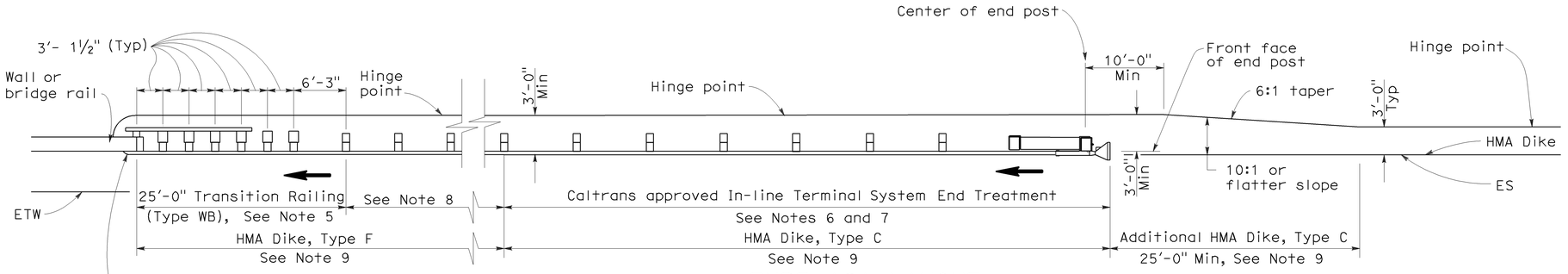

TYPE 12A LAYOUT

(GUARD RAILING INSTALLATION AT STRUCTURE APPROACH WITH AN IN-LINE END TREATMENT AT TRAFFIC APPROACH END OF RAILING)
See Notes 10

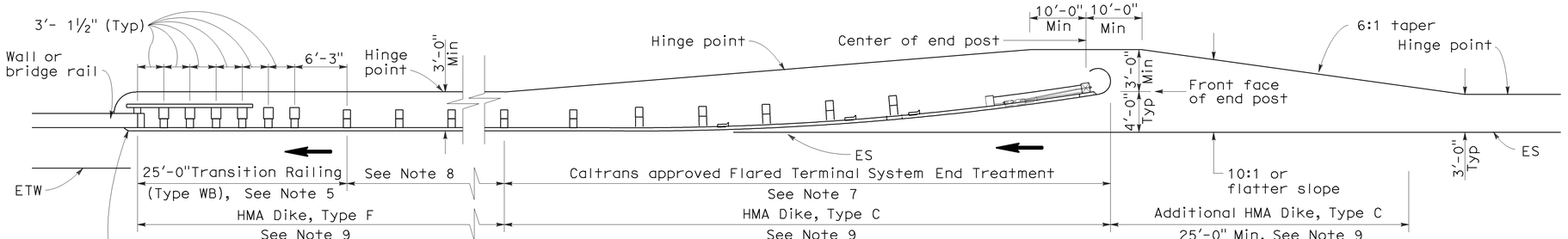

TYPE 12B LAYOUT

(GUARD RAILING INSTALLATION AT STRUCTURE APPROACH WITH A FLARED END TREATMENT AT TRAFFIC APPROACH END OF RAILING)
See Notes 10

NOTES:

1. Line post, blocks and hardware to be used are shown on Standard Plans A77A1, A77A2, A77B1, A77C1 and A77C2.
2. Guard rail post spacing to be 6'-3" center to center, except as otherwise noted.
3. Except as noted, line posts are 6" x 8" x 6'-0" wood with 6" x 8" x 1'-2" wood blocks. W6 x 9 steel posts, 6'-0" in length, with 6" x 8" x 1'-2" notched wood blocks or plastic blocks may be used for 6" x 8" x 6'-0" wood posts with 6" x 8" x 1'-2" wood blocks where applicable and when specified.
4. Direction of adjacent traffic indicated by ➔.
5. For Transition Railing (Type WB) details for Types 12A and 12B Layouts, see Standard Plan A77J4.
6. In-line Terminal System End Treatments are used where site conditions will not accommodate a flared end treatment.
7. The type of terminal system end treatment to be used will be shown on the Project Plans.
8. Dependent on site conditions (embankment height, side slopes, or other fixed objects), it may be advisable to construct additional guard railing (a length equal to multiples of 12'-6" with 6'-3" post spacing) between the transition railing and end treatment.
9. Where placement of dike is required with guard railing installations, see Revised Standard Plan RSP A77C4 for dike positioning details.
10. Type 12A or Type 12B Layouts are typically used:
    a. To the right of approaching traffic, at the end of a structure, on two-lane conventional highway where the roadbed width across the structure is less than 40 feet.
    b. To the left of approaching traffic, at the end of a structure, on two-lane conventional highway where the roadbed width across the structure is less than 40 feet.
    c. To the right of approaching traffic at the end of each structure on multilane freeways or expressways with separate adjacent or parallel bridges.
    d. To the right of approaching traffic at the end of the structure on multilane freeways or expressways with decked median on the bridge.
11. See Revised Standard Plan RSP A77F3 for typical layout used left of approaching traffic at the ends of each structure on multilane freeways or expressways with separate adjacent or parallel bridges.
12. For additional details of typical connections to bridge rail, see Connection Detail AA on Revised Standard Plans RSP A77J1 and RSP A77J2 and Connection Detail FF on Standard Plans A77K1 and A77K2.
13. For additional details of a typical connection to walls or abutments, see Standard Plan A77J3.

STATE OF CALIFORNIA
DEPARTMENT OF TRANSPORTATION

METAL BEAM GUARD RAILING TYPICAL LAYOUTS FOR STRUCTURE APPROACH

NO SCALE

RSP A77F1 DATED JUNE 6, 2008 SUPERSEDES STANDARD PLAN A77F1
DATED MAY 1, 2006 - PAGE 54 OF THE STANDARD PLANS BOOK DATED MAY 2006.

REVISED STANDARD PLAN RSP A77F1

2006 REVISED STANDARD PLAN RSP A77F1

12-10-07

DIST	COUNTY	ROUTE	POST MILES TOTAL PROJECT	SHEET NO.	TOTAL SHEETS
05	SLO	46	36.6/41.2	496	595

Randell D. Hiatt
REGISTERED CIVIL ENGINEER

June 6, 2008
PLANS APPROVAL DATE

REGISTERED PROFESSIONAL ENGINEER — Randell D. Hiatt — No. C50200 — Exp. 6-30-09 — CIVIL — STATE OF CALIFORNIA

The State of California or its officers or agents shall not be responsible for the accuracy or completeness of electronic copies of this plan sheet.

To accompany plans dated 12-7-09

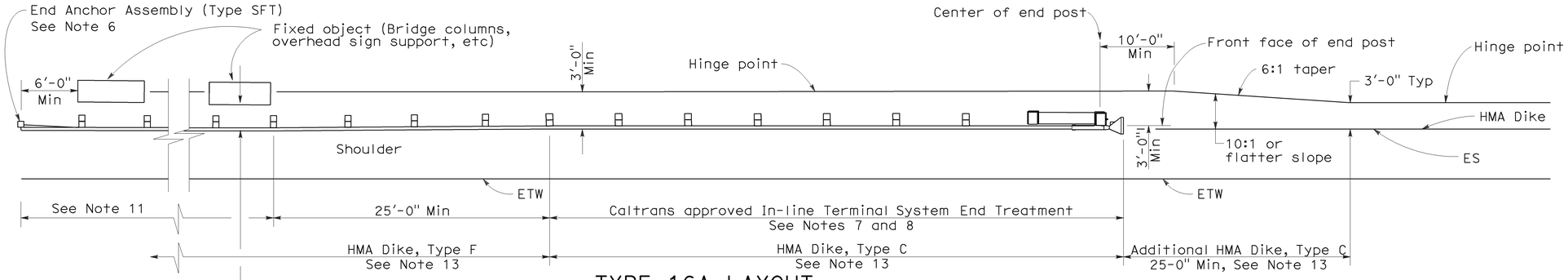

TYPE 16A LAYOUT

(GUARD RAILING INSTALLATION AT ROADSIDE FIXED OBJECT OR OBJECTS WITH AN IN-LINE END TREATMENT AT TRAFFIC APPROACH END OF RAILING)
See Notes 12 and 13

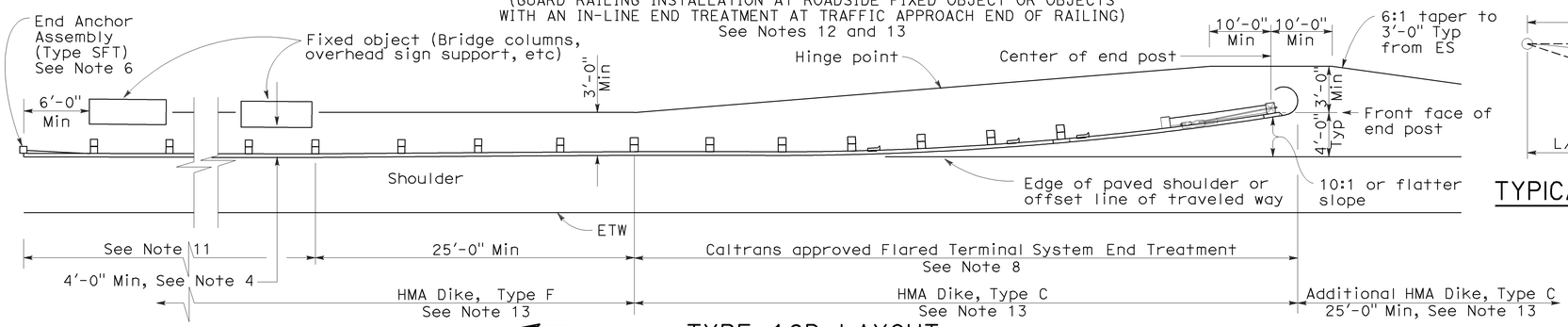

TYPE 16B LAYOUT

(GUARD RAILING INSTALLATION AT ROADSIDE FIXED OBJECT OR OBJECTS WITH A FLARED END TREATMENT AT TRAFFIC APPROACH END OF RAILING)
See Notes 12 and 13

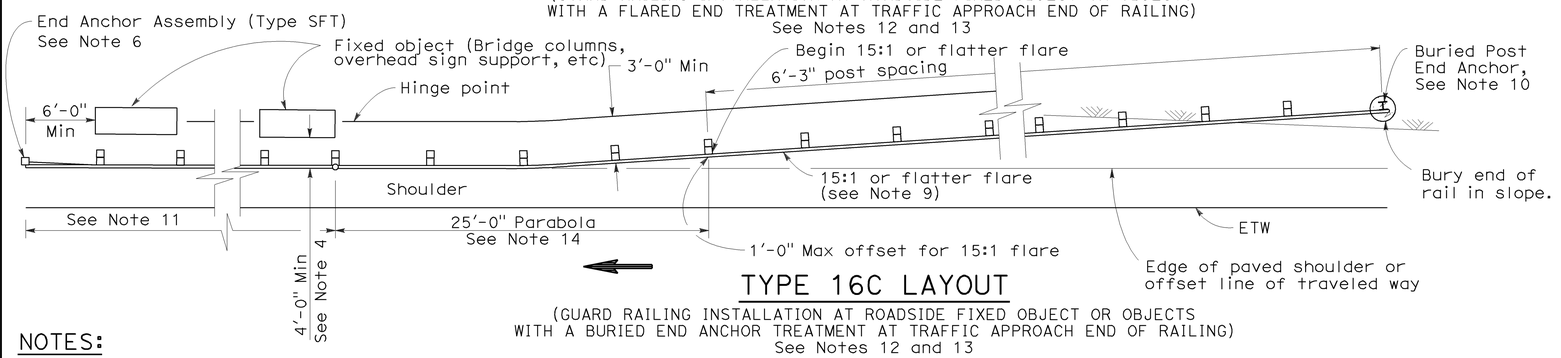

TYPE 16C LAYOUT

(GUARD RAILING INSTALLATION AT ROADSIDE FIXED OBJECT OR OBJECTS WITH A BURIED END ANCHOR TREATMENT AT TRAFFIC APPROACH END OF RAILING)
See Notes 12 and 13

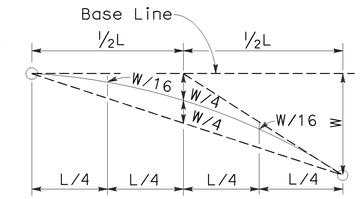

TYPICAL PARABOLIC LAYOUT

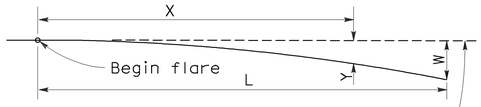

$$Y = \frac{WX^2}{L^2}$$

Y = Offset from base line
W = Maximum offset
X = Distance along base line
L = Length of flare

PARABOLIC FLARE OFFSETS

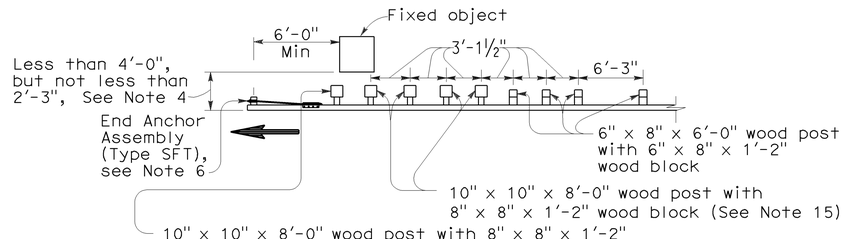

NOTE A: For a series of fixed objects (bridge columns, overhead sign supports, etc.) additional 10" x 10" x 8'-0" wood post with 8" x 8" x 1'-2" wood blocks at 3'-1½" center to center spacing are to be used between fixed objects.

STRENGTHENED RAILING SECTIONS FOR FIXED OBJECT

Use strengthened railing sections with Types 16A, 16B or 16C Layouts where minimum clearance between the face of the guard railing and fixed object(s) is less than 4'-0", but not less than 2'-3". See Note 4

NOTES:

1. Line post, blocks and hardware to be used are shown on Revised Standard Plans A77A1, A77A2, A77B1, A77C1 and A77C2.
2. Guard railing post spacing to be 6'-3" center to center, except as otherwise noted.
3. Except as noted, line posts are 6" x 8" x 6'-0" wood with 6" x 8" x 1'-2" wood blocks. W6 x 9 steel posts, 6'-0" in length, with 6" x 8" x 1'-2" notched wood blocks or notched recycled plastic blocks may be used for 6" x 8" x 6'-0" wood line posts with 6" x 8" x 1'-2" wood blocks where applicable and when specified.
4. A 4'-0" minimum clearance is required between the face of the railing and the face of a fixed object located directly behind standard guard railing sections with post spacing of 6'-3". Construct guard railing as shown in the detail "Strengthened Railing Sections for Fixed Objects" on this plan, where the clearance between the face of the railing and the face of a fixed object is less than 4'-0", but not less than 2'-3". Where the clearance is less than 2'-3", a concrete wall or barrier should be constructed to shield the fixed object(s).
5. Direction of adjacent traffic indicated by ➔.
6. For End Anchor Assembly (Type SFT) details, see Standard Plan A77H1.
7. In-line Terminal System End Treatments are used where site conditions will not accommodate a flared end treatment.
8. The type of terminal system to be used will be shown on the Project Plans.
9. The 15:1 or flatter flare used with Type 16C Layout is based on the edge of the paved shoulder or offset line of edge of the traveled way. The length of guard railing within the 15:1 or flatter flare is based on site conditions and should be a length equal to multiples of 12'-6".
10. For details of the Buried Post End Anchor used with Type 16C Layout, see Standard Plan A77I2.
11. As site conditions dictate, construct additional guard railing to shield fixed object(s). Additional guard railing length equal to multiples of 12'-6". Post spacing at 6'-3" except as specified in Note 4.
12. Layout Types 16A, 16B or 16C are typically used where guard railing is recommended to shield roadside fixed object(s) and a crashworthy end treatment is required for only one direction of traffic.
13. Where placement of dike is required with guard railing, see Revised Standard Plan RSP A77C4 for dike positioning details.
14. For typical flare offsets for 25'-0" length parabola with maximum offset of 1'-0", see Revised Standard Plan RSP A77E1.
15. W6 x 15 steel post, 8'-0" in length, with 8" x 8" x 1'-2" notched wood block or notched recycled plastic blocks may be used in place of the 10" x 10" x 8'-0" wood post with 8" x 8" x 1'-2" wood block shown in the "Strengthened Railing Sections Detail".

STATE OF CALIFORNIA
DEPARTMENT OF TRANSPORTATION

METAL BEAM GUARD RAILING TYPICAL LAYOUTS FOR ROADSIDE FIXED OBJECTS

NO SCALE

RSP A77G3 DATED JUNE 6, 2008 SUPERSEDES STANDARD PLAN A77G3 DATED MAY 1, 2006 - PAGE 61 OF THE STANDARD PLANS BOOK DATED MAY 2006.

REVISED STANDARD PLAN RSP A77G3

2006 REVISED STANDARD PLAN RSP A77G3

12-10-07

DIST	COUNTY	ROUTE	POST MILES TOTAL PROJECT	SHEET NO.	TOTAL SHEETS
05	SLO	46	36.6/41.2	497	595

Randell D. Hiatt
REGISTERED CIVIL ENGINEER

June 6, 2008
PLANS APPROVAL DATE

REGISTERED PROFESSIONAL ENGINEER — Randell D. Hiatt — No. C50200 — Exp. 6-30-09 — CIVIL — STATE OF CALIFORNIA

The State of California or its officers or agents shall not be responsible for the accuracy or completeness of electronic copies of this plan sheet.

To accompany plans dated 12-7-09

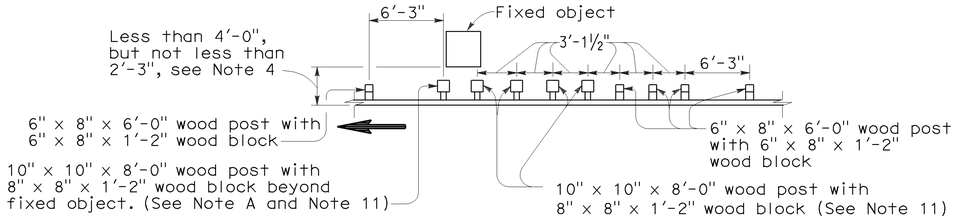

NOTE A: For a series of fixed objects (bridge columns, overhead sign supports, etc.) additional 10" x 10" x 8'-0" wood post with 8" x 8" x 1'-2" wood blocks at 3'-1½" center to center spacing are to be used between fixed object(s).

STRENGTHENED RAILING SECTIONS FOR FIXED OBJECT

Use strengthened railing sections with Layout Types 16D or 16E where minimum clearance between the guard railing and fixed object(s) is less than 4'-0", but not less than 2'-3". See Note 4.

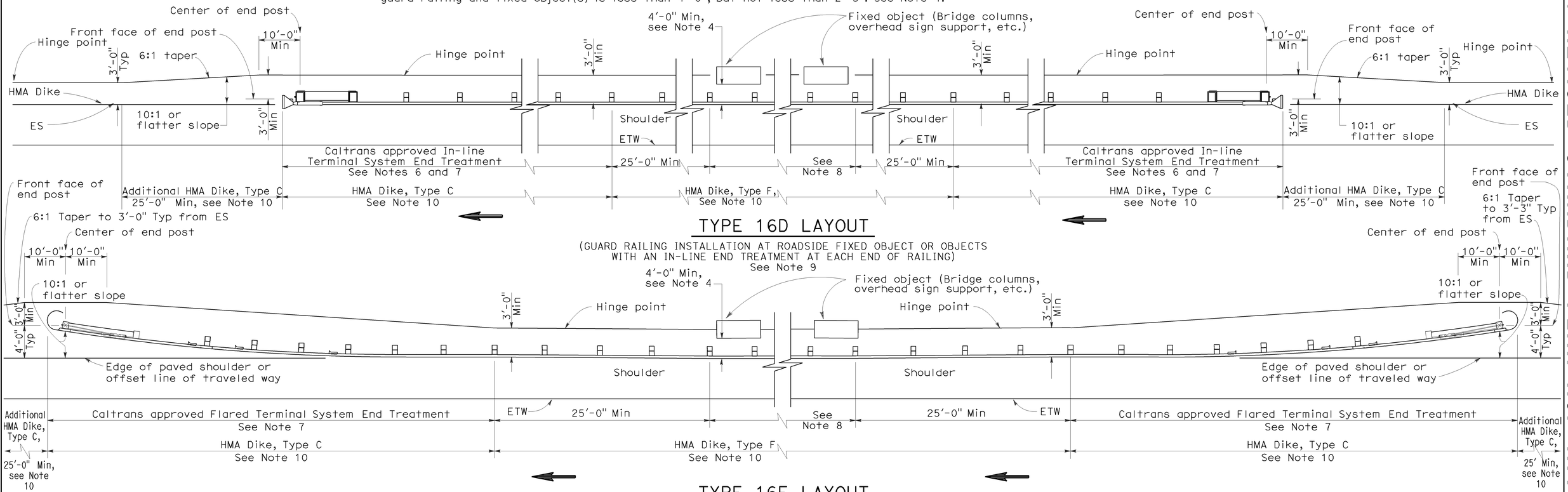

TYPE 16D LAYOUT

(GUARD RAILING INSTALLATION AT ROADSIDE FIXED OBJECT OR OBJECTS WITH AN IN-LINE END TREATMENT AT EACH END OF RAILING) See Note 9

TYPE 16E LAYOUT

(GUARD RAILING INSTALLATION AT ROADSIDE FIXED OBJECT OR OBJECTS WITH A FLARED END TREATMENT AT EACH END OF RAILING) See Note 9

NOTES:

1. Line post, blocks and hardware to be used are shown on Standard Plans A77A1, A77A2, A77B1, A77C1 and A77C2.
2. Guard railing post spacing to be 6'-3" center to center, except as otherwise noted.
3. Except as noted, line posts are 6" x 8" x 6'-0" wood with 6" x 8" x 1'-2" wood blocks. W6 x 9 steel posts, 6'-0" in length, with 6" x 8" x 1'-2" notched wood blocks or notched recycled plastic blocks may be used for 6" x 8" x 6'-0" wood line posts with 6" x 8" x 1'-2" wood blocks where applicable and when specified.
4. A 4'-0" minimum clearance is required between the face of the railing and the face of a fixed object located directly behind standard guard railing sections with post spacing at 6'-3". Construct guard railing as shown in the detail "Strengthened Railing Sections for Fixed Objects" on this plan, where the clearance between the face of the railing and the face of a fixed object is less than 4'-0", but not less than 2'-3". Where the clearance is less than 2'-3", a concrete wall or barrier should be constructed to shield the fixed object(s).
5. Direction of adjacent traffic indicated by ⟶.
6. In-line Terminal System End Treatments are used where site conditions will not accommodate a flared end treatment.
7. The type of terminal system to be used will be shown on the Project Plans.
8. As site conditions dictate, construct additional guard railing to shield fixed object(s). Additional guard railing length equal to multiples of 12'-6". Post spacing at 6'-3", except as specified in Note 4.
9. Layout Types 16D through 16L, shown on the A77G Series of Revised Standard Plans, are typically used where guard railing is recommended to shield roadside fixed object(s) and a crashworthy end treatment is required for both directions of traffic.
10. Where placement of dike is required with guard railing, see Revised Standard Plan RSP A77C4 for dike positioning details.
11. W6 x 15 steel post, 8'-0" in length, with 8" x 8" x 1'-2" notched wood block or notched recycled plastic block may be used in place of the 10" x 10" x 8'-0" wood post with 8" x 8" x 1'-2" wood block shown in the "Strengthened Railing Sections Detail."

STATE OF CALIFORNIA
DEPARTMENT OF TRANSPORTATION

METAL BEAM GUARD RAILING TYPICAL LAYOUTS FOR ROADSIDE FIXED OBJECTS

NO SCALE

RSP A77G4 DATED JUNE 6, 2008 SUPERSEDES STANDARD PLAN A77G4
DATED MAY 1, 2006 - PAGE 62 OF THE STANDARD PLANS BOOK DATED MAY 2006.

REVISED STANDARD PLAN RSP A77G4

2006 REVISED STANDARD PLAN RSP A77G4

12-10-07

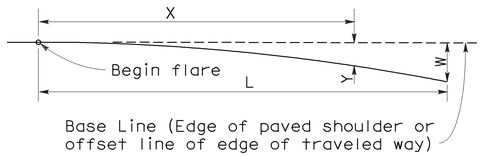

PARABOLIC FLARE OFFSETS

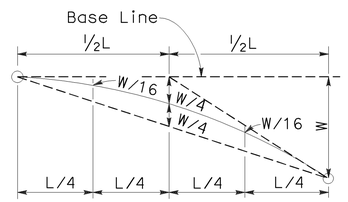

TYPICAL PARABOLIC LAYOUT

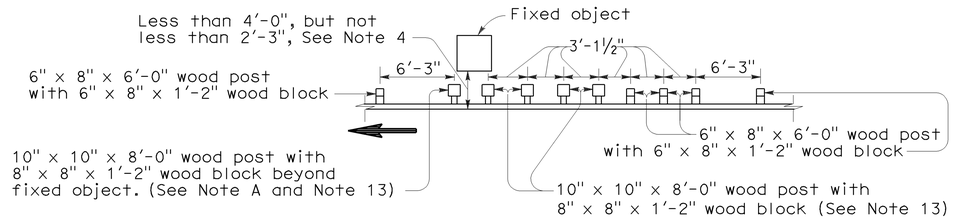

NOTE A: For a series of fixed objects (bridge columns, overhead sign supports, etc.) additional 10" x 10" x 8'-0" wood post with 8" x 8" x 1'-2" wood blocks at 3'-1½" center to center spacing are to be used between fixed object(s).

DIST	COUNTY	ROUTE	POST MILES TOTAL PROJECT	SHEET NO.	TOTAL SHEETS
05	SLO	46	36.6/41.2	498	595

Randell D. Hiatt
REGISTERED CIVIL ENGINEER

June 6, 2008
PLANS APPROVAL DATE

REGISTERED PROFESSIONAL ENGINEER — Randell D. Hiatt — No. C50200 — Exp. 6-30-09 CIVIL — STATE OF CALIFORNIA

The State of California or its officers or agents shall not be responsible for the accuracy or completeness of electronic copies of this plan sheet.

To accompany plans dated 12-7-09

STRENGTHENED RAILING SECTIONS FOR FIXED OBJECT

Use strengthened railing sections with Layout Types 16F or 16G where minimum clearance between the face of the guard railing and fixed object(s) is less than 4'-0", but not less than 2'-3". See Note 4.

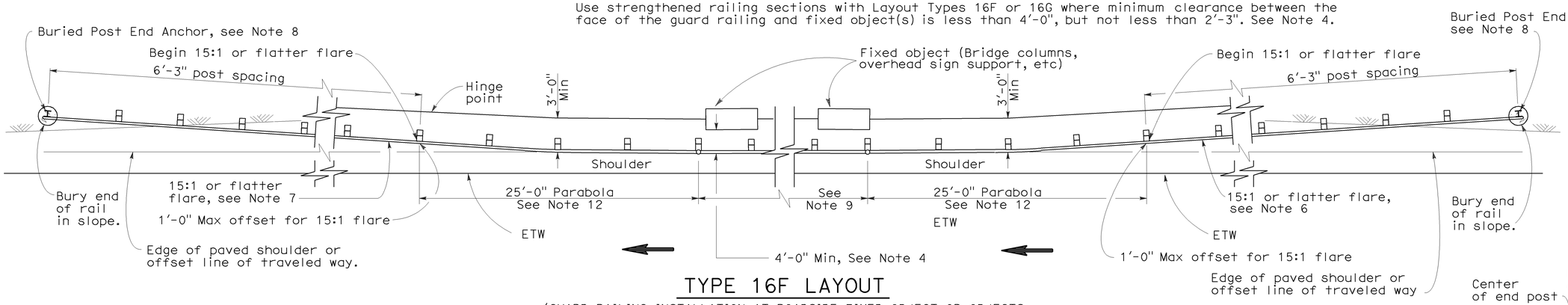

TYPE 16F LAYOUT

(GUARD RAILING INSTALLATION AT ROADSIDE FIXED OBJECT OR OBJECTS WITH A BURIED END ANCHOR TREATMENT AT EACH END OF RAILING)
See Notes 10 and 11

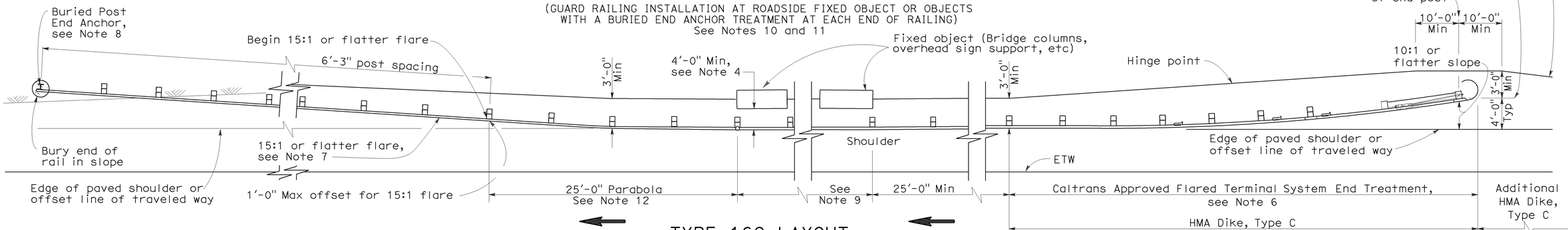

TYPE 16G LAYOUT

(GUARD RAILING INSTALLATION AT ROADSIDE FIXED OBJECT OR OBJECTS WITH A FLARED END TREATMENT AND A BURIED END ANCHOR TREATMENT AT THE ENDS OF RAILING)
See Notes 10 and 11

NOTES:

1. Line post, blocks and hardware to be used are shown on Standard Plans A77A1, A77A2, A77B1, A77C1 and A77C2.
2. Guard railing post spacing to be 6'-3" center to center, except as otherwise noted.
3. Except as noted, line posts are 6" x 8" x 6'-0" wood with 6" x 8" x 1'-2" wood blocks. W6 x 9 steel posts, 6'-0" in length, with 8" x 8" x 1'-2" notched wood blocks or notched recycled plastic blocks may be used for 6" x 8" x 6'-0" wood posts with 6" x 8" x 1'-2" wood blocks where applicable and when specified.
4. A 4'-0" minimum clearance is required between the face of the railing and the face of a fixed object located directly behind standard guard railing sections with post spacing at 6'-3". Construct guard railing as shown in the detail "Strengthened Railing Sections for Fixed Objects" on this plan, where the clearance between the face of the railing and the face of a fixed object is less than 4'-0", but not less than 2'-3". Where the clearance is less than 2'-3", a concrete wall or barrier should be constructed to shield the fixed object(s).
5. Direction of adjacent traffic indicated by ⟶.
6. The type of terminal system to be used will be shown on the Project Plans.
7. The 15:1 or flatter flare for the buried post anchor is based on the edge of the paved shoulder or offset line of edge of the traveled way. The length of guard railing within the 15:1 or flatter flare is based on site conditions and should be a length equal to multiples of 12'-6".
8. For details of the Buried Post End Anchor details, see Standard Plan A77I2.
9. As site conditions dictate, construct additional guard railing to shield fixed object(s). Additional guard railing length equal to multiples of 12'-6". Post spacing at 6'-3", except as specified in Note 4.
10. Layout Types 16D through 16L, shown on the A77G Series of Revised Standard Plans, are typically used on highways where guard railing is recommended to shield roadside fixed object(s) and a crashworthy end treatment is required for both directions of traffic.
11. Where placement of dike is required with guard railing, see Revised Standard Plan RSP A77C4 for dike positioning details.
12. For typical flare offsets for 25'-0" length parabola with maximum offset of 1'-0", see Revised Standard Plan RSP A77E1.
13. W6 x 15 steel post, 8'-0" in length, with 8" x 8" x 1'-2" notched wood block or notched recycled plastic blocks may be used in place of the 10" x 10" x 8'-0" wood post with 8" x 8" x 1'-2" wood block shown in the "Strengthened Railing Sections Detail".

STATE OF CALIFORNIA
DEPARTMENT OF TRANSPORTATION

METAL BEAM GUARD RAILING TYPICAL LAYOUTS FOR ROADSIDE FIXED OBJECTS

NO SCALE

RSP A77G5 DATED JUNE 6, 2008 SUPERSEDES STANDARD PLAN A77G5
DATED MAY 1, 2006 - PAGE 63 OF THE STANDARD PLANS BOOK DATED MAY 2006.

REVISED STANDARD PLAN RSP A77G5

2006 REVISED STANDARD PLAN RSP A77G5

12-10-07

DIST	COUNTY	ROUTE	POST MILES TOTAL PROJECT	SHEET NO.	TOTAL SHEETS
05	SLO	46	36.6/41.2	499	595

Randell D. Hiatt
REGISTERED CIVIL ENGINEER

June 6, 2008
PLANS APPROVAL DATE

REGISTERED PROFESSIONAL ENGINEER — Randell D. Hiatt — No. C50200 — Exp. 6-30-09 — CIVIL — STATE OF CALIFORNIA

The State of California or its officers or agents shall not be responsible for the accuracy or completeness of electronic copies of this plan sheet.

To accompany plans dated 12-7-09

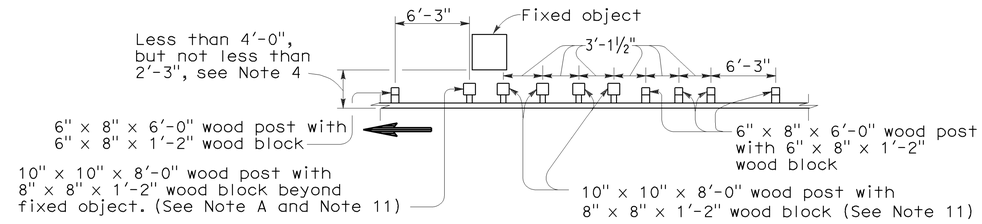

Note A. For a series of fixed objects (bridge columns, overhead sign supports, etc.) additional 10" x 10" x 8'-0" wood post with 8" x 8" x 1'-2" wood blocks at 3'-1½" center to center spacing are to be used between fixed object(s).

STRENGTHENED RAILING SECTIONS FOR FIXED OBJECT

Use strengthened railing sections with Layout Type 16H where minimum clearance between the face of the guard railing and fixed object(s) is less than 4'-0", but not less than 2'-3". See Note 4.

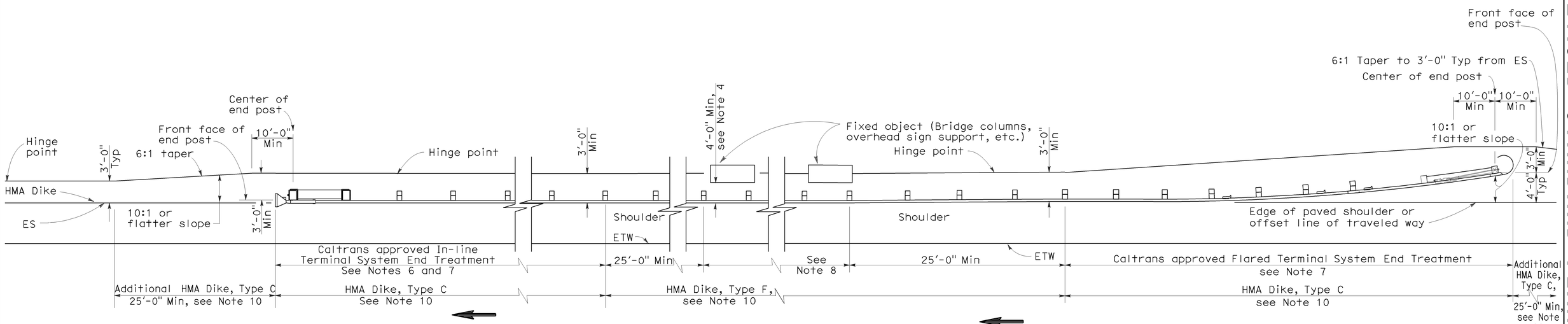

TYPE 16H LAYOUT

(GUARD RAILING INSTALLATION AT ROADSIDE FIXED OBJECT OR OBJECTS WITH A FLARED END TREATMENT AND AN IN-LINE TREATMENT AT THE ENDS OF RAILING)
See Note 9

NOTES:

1. Line post, blocks and hardware to be used are shown on Standard Plans A77A1, A77A2, A77B1, A77C1 and A77C2.
2. Guard railing post spacing to be 6'-3" center to center, except as otherwise noted.
3. Except as noted, line posts are 6" x 8" x 6'-0" wood with 6" x 8" x 1'-2" wood blocks. W6 x 9 steel posts, 6'-0" in length, with 6" x 8" x 1'-2" notched wood blocks or notched recycled plastic blocks may be used for 6" x 8" x 6'-0" wood posts with 6" x 8" x 1'-2" wood blocks where applicable and when specified.
4. A 4'-0" minimum clearance is required between the face of the railing and the face of a fixed object located directly behind standard guard railing sections with post spacing at 6'-3". Construct guard railing as shown in the detail "Strengthened Railing Sections for Fixed Objects" on this plan, where the clearance between the face of the railing and the face of a fixed object is less than 4'-0", but not less than 2'-3". Where the clearance is less than 2'-3", a concrete wall or barrier should be constructed to shield the fixed object(s).
5. Direction of adjacent traffic indicated by ⟶ .
6. In-line Terminal System End Treatments are used where site conditions will not accommodate a flared end treatment.
7. The type of terminal system to be used will be shown on the Project Plans.
8. As site conditions dictate, construct additional guard railing to shield fixed object(s). Additional guard railing length equal to multiples of 12'-6". Post spacing at 6'-3", except as specified in Note 4.
9. Layout Types 16D through 16L, shown on the A77G Series of Revised Standard PLans, typically used where guard railing is recommended to shield roadside fixed object(s) and a crashworthy end treatment is required for both directions of traffic.
10. Where placement of dike is required with guard railing, see Revised Standard Plan RSP A77C4 for dike positioning details.
11. W6 x 15 steel post, 8'-0" in length, with 8" x 8" x 1'-2" notched wood block or notched recycled plastic blocks may be used in place of the 10" x 10" x 8'-0" wood post with 8" x 8" x 1'-2" wood block shown in the "Strengthened Railing Sections Detail".

STATE OF CALIFORNIA
DEPARTMENT OF TRANSPORTATION

METAL BEAM GUARD RAILING TYPICAL LAYOUTS FOR ROADSIDE FIXED OBJECTS

NO SCALE

RSP A77G6 DATED JUNE 6, 2008 SUPERSEDES STANDARD PLAN A77G6
DATED MAY 1, 2006 - PAGE 64 OF THE STANDARD PLANS BOOK DATED MAY 2006.

REVISED STANDARD PLAN RSP A77G6

2006 REVISED STANDARD RSP A77G6

12-10-07

DIST	COUNTY	ROUTE	POST MILES TOTAL PROJECT	SHEET NO.	TOTAL SHEETS
05	SLO	46	36.6/41.2	500	595

Randell D. Hiatt
REGISTERED CIVIL ENGINEER

June 6, 2008
PLANS APPROVAL DATE

REGISTERED PROFESSIONAL ENGINEER — Randell D. Hiatt — No. C50200 — Exp. 6-30-09 CIVIL — STATE OF CALIFORNIA

The State of California or its officers or agents shall not be responsible for the accuracy or completeness of electronic copies of this plan sheet.

To accompany plans dated 12-7-09

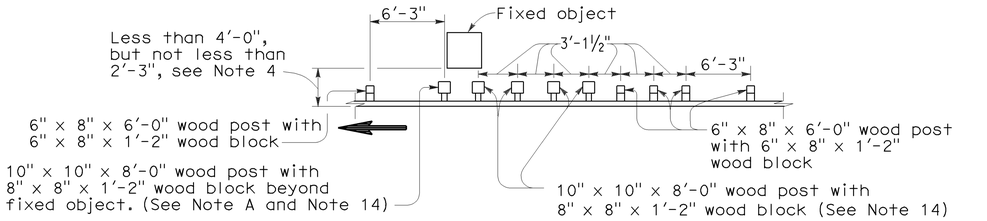

Note A. For a series of fixed objects (bridge columns, overhead sign supports, etc.) additional 10" x 10" x 8'-0" wood post with 8" x 8" x 1'-2" wood blocks at 3'-1½" center to center spacing are to be used between fixed object(s).

STRENGTHENED RAILING SECTIONS FOR FIXED OBJECT

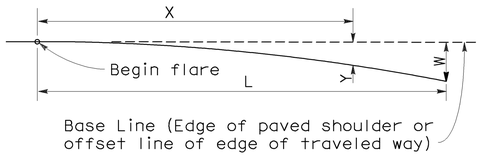

Base Line (Edge of paved shoulder or offset line of edge of traveled way)

$$Y = \frac{WX^2}{L^2}$$

Y = Offset from base line
W = Maximum offset
X = Distance along base line
L = Length of flare

PARABOLIC FLARE OFFSETS

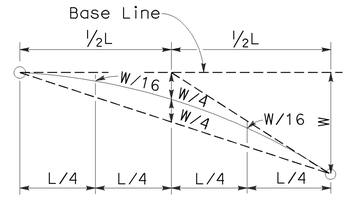

TYPICAL PARABOLIC LAYOUT

Use strengthened railing sections with Layout Types 16I or 16J Layouts where minimum clearance between the face of the guard railing and fixed object(s) is less than 4'-0", but not less than 2'-3". See Note 4.

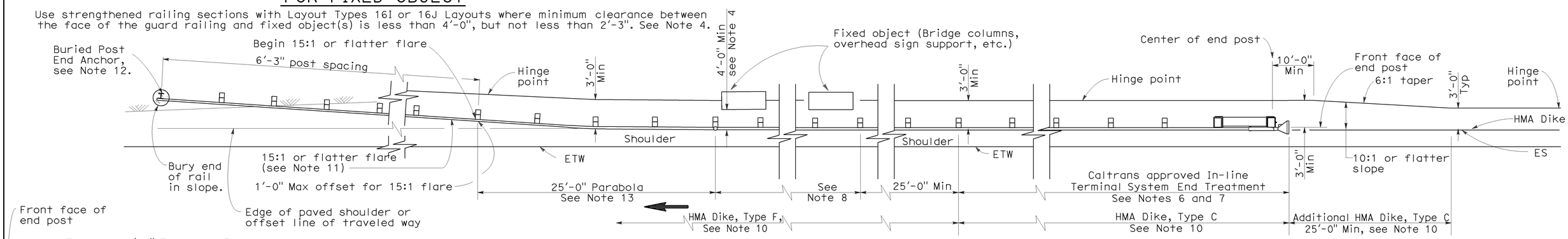

TYPE 16I LAYOUT

(GUARD RAILING INSTALLATION AT ROADSIDE FIXED OBJECT OR OBJECTS WITH AN IN-LINE END TREATMENT AND A BURIED END ANCHOR TREATMENT AT THE ENDS OF RAILING)
See Note 9

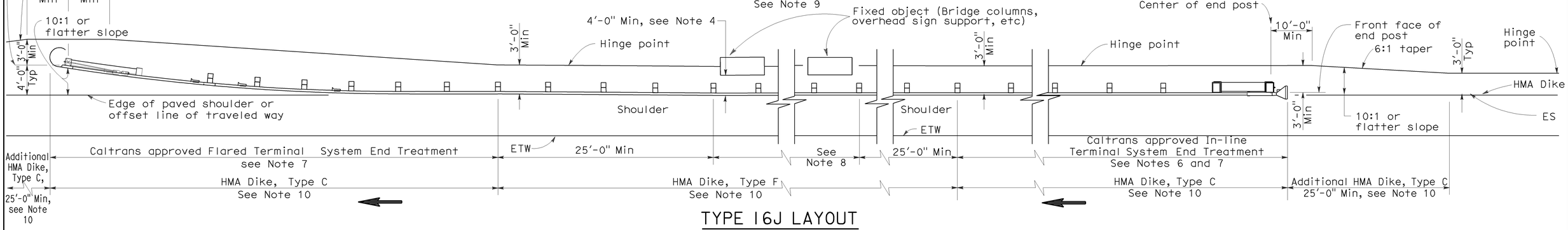

TYPE 16J LAYOUT

(GUARD RAILING INSTALLATION AT ROADSIDE FIXED OBJECT OR OBJECTS WITH AN IN-LINE END TREATMENT AND A FLARED END TREATMENT AT THE ENDS OF RAILING)
See Note 9

NOTES:

1. Line post, blocks and hardware to be used are shown on Standard Plans A77A1, A77A2, A77B1, A77C1 and A77C2.
2. Guard railing post spacing to be 6'-3" center to center, except as otherwise noted.
3. Except as noted, line posts are 6" x 8" x 6'-0" wood with 6" x 8" x 1'-2" wood blocks. W6 x 9 steel posts, 6'-0" in length, with 6" x 8" x 1'-2" notched wood blocks or notched recycled plastic blocks may be used for 6" x 8" x 6'-0" wood posts with 6" x 8" x 1'-2" wood blocks where applicable and when specified.
4. A 4'-0" minimum clearance is required between the face of the railing and the face of a fixed object located directly behind standard guard railing sections with post spacing at 6'-3". Construct guard railing as shown in the detail "Strengthened Railing Sections for Fixed Objects" on this plan, where the clearance between the face of the railing and the face of a fixed object is less than 4'-0", but not less than 2'-3". Where the clearance is less than 2'-3", a concrete wall or barrier should be constructed to shield the fixed object(s).
5. Direction of adjacent traffic indicated by ⟶ .
6. In-line Terminal System End Treatments are used where site conditions will not accommodate a flared end treatment.
7. The type of terminal system to be used will be shown on the Project Plans.
8. As site conditions dictate, construct additional guard railing to shield fixed object(s). Additional guard railing length equal to multiples of 12'-6". Post spacing at 6'-3", except as specified in Note 4.
9. Layout Types 16D through 16L, shown on the A77G Series of Revised Standard Plans, are typically used where guard railing is recommended to shield roadside fixed object(s) and a crashworthy end treatment is required for both directions of traffic.
10. Where placement of dike is required with guard railing, see Revised Standard Plan RSP A77C4 for dike positioning details.
11. The 15:1 or flatter flare for the buried post anchor is based on the edge of the paved shoulder or offset line of edge of the traveled way. The length of guard railing within the 15:1 or flatter flare is based on site conditions and should be a length equal to multiples of 12'-6".
12. For details of Buried Post End Anchor details, see Standard Plan A77I2.
13. For typical flare offsets for 25'-0" length parabola with maximum offset of 1'-0", see Revised Standard RSP Plan A77E1.
14. W6 x 15 steel post, 8'-0" in length, with 8" x 8" x 1'-2" notched wood block or notched recycled plastic blocks may be used in place of the 10" x 10" x 8'-0" wood post with 8" x 8" x 1'-2" wood block shown in the "Strengthened Railing Sections Detail".

STATE OF CALIFORNIA
DEPARTMENT OF TRANSPORTATION

METAL BEAM GUARD RAILING TYPICAL LAYOUTS FOR ROADSIDE FIXED OBJECTS

NO SCALE

RSP A77G7 DATED JUNE 6, 2008 SUPERSEDES STANDARD PLAN A77G7
DATED MAY 1, 2006 - PAGE 65 OF THE STANDARD PLANS BOOK DATED MAY 2006.

REVISED STANDARD PLAN RSP A77G7

2006 REVISED STANDARD PLAN RSP A77G7

12-10-07