Dist	COUNTY	ROUTE	POST MILES TOTAL PROJECT	SHEET No.	TOTAL SHEETS
05	SLO	46	36.6/41.2	101	595

REGISTERED CIVIL ENGINEER DATE 8-24-09

PLANS APPROVAL DATE 12-7-09

JOSE M. ARGUELLO No. 51321 Exp. 06-30-10 CIVIL

THE STATE OF CALIFORNIA OR ITS OFFICERS OR AGENTS SHALL NOT BE RESPONSIBLE FOR THE ACCURACY OR COMPLETENESS OF ELECTRONIC COPIES OF THIS PLAN SHEET.

NOTE: FOR ACCURATE RIGHT OF WAY AND ACCESS DATA, CONTACT RIGHT OF WAY ENGINEERING AT THE DISTRICT OFFICE.

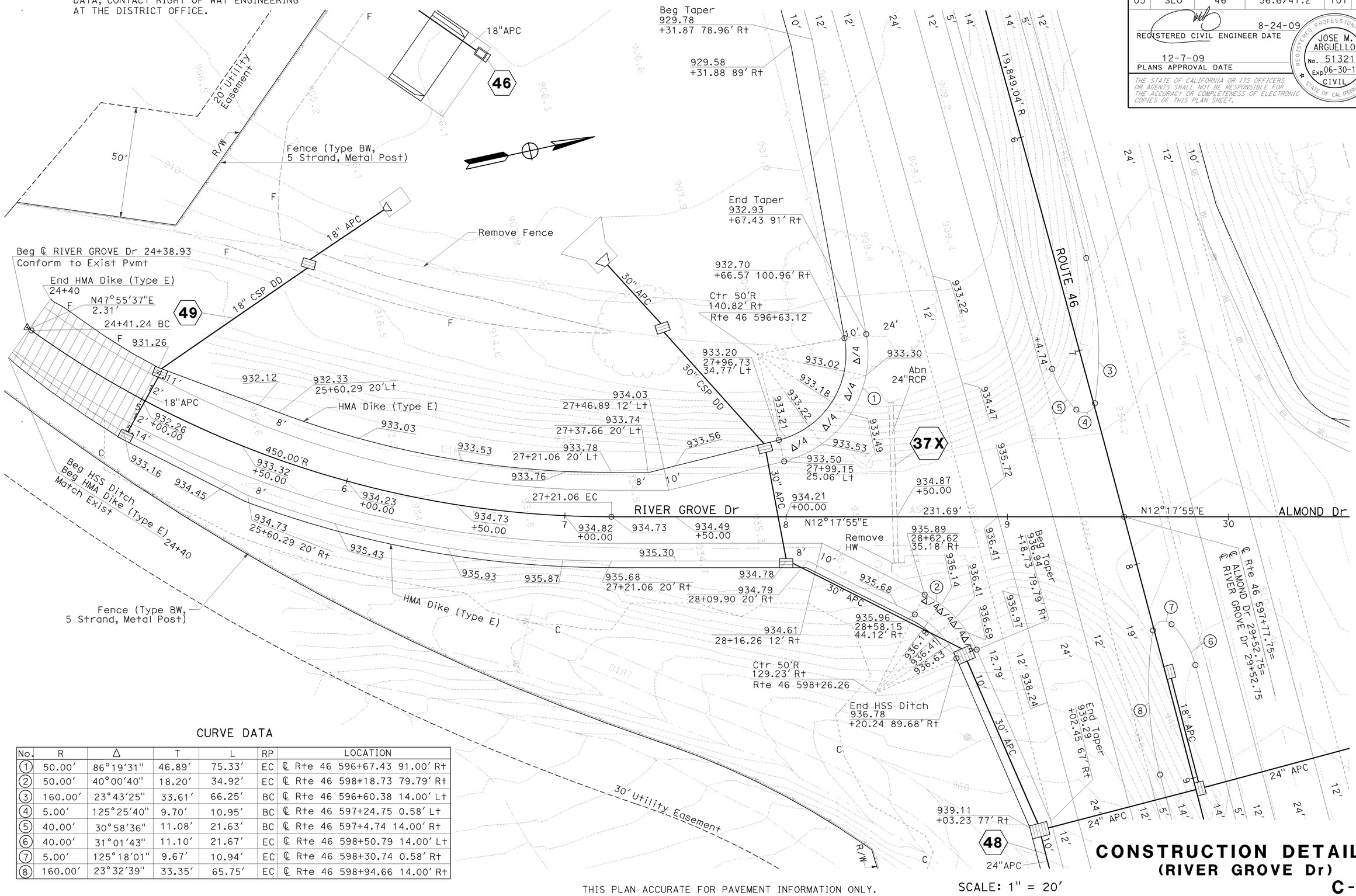

CURVE DATA

No.	R	Δ	T	L	RP	LOCATION
1	50.00'	86°19'31"	46.89'	75.33'	EC	℄ Rte 46 596+67.43 91.00' Rt
2	50.00'	40°00'40"	18.20'	34.92'	EC	℄ Rte 46 598+18.73 79.79' Rt
3	160.00'	23°43'25"	33.61'	66.25'	BC	℄ Rte 46 596+60.38 14.00' Lt
4	5.00'	125°25'40"	9.70'	10.95'	BC	℄ Rte 46 597+24.75 0.58' Lt
5	40.00'	30°58'36"	11.08'	21.63'	BC	℄ Rte 46 597+4.74 14.00' Rt
6	40.00'	31°01'43"	11.10'	21.67'	EC	℄ Rte 46 598+50.79 14.00' Lt
7	5.00'	125°18'01"	9.67'	10.94'	EC	℄ Rte 46 598+30.74 0.58' Rt
8	160.00'	23°32'39"	33.35'	65.75'	EC	℄ Rte 46 598+94.66 14.00' Rt

THIS PLAN ACCURATE FOR PAVEMENT INFORMATION ONLY.

SCALE: 1" = 20'

CONSTRUCTION DETAILS
(RIVER GROVE Dr)

C-11

STATE OF CALIFORNIA - DEPARTMENT OF TRANSPORTATION
Caltrans
06-DESIGN

FUNCTIONAL SUPERVISOR: JACK WALKER
CALCULATED-DESIGNED BY: JOSE ARGUELLO
CHECKED BY: JOSE BAUTISTA
REVISED BY
DATE REVISED

LAST REVISION 08-19-09
DATE PLOTTED => 08-DEC-2009
TIME PLOTTED => 09:57

BORDER LAST REVISED 3/1/2007
RELATIVE BORDER SCALE IS IN INCHES 0 1 2 3
USERNAME => trlim
DGN FILE => 533072ga011.dgn
CU 06220
EA 330721

NOTE: FOR ACCURATE RIGHT OF WAY AND ACCESS DATA, CONTACT RIGHT OF WAY ENGINEERING AT THE DISTRICT OFFICE.

Dist	COUNTY	ROUTE	POST MILES TOTAL PROJECT	SHEET No.	TOTAL SHEETS
05	SLO	46	36.6/41.2	102	595

REGISTERED CIVIL ENGINEER DATE 8-24-09

PLANS APPROVAL DATE 12-7-09

REGISTERED PROFESSIONAL ENGINEER JOSE M. ARGUELLO No. 51321 Exp. 06-30-10 CIVIL STATE OF CALIFORNIA

THE STATE OF CALIFORNIA OR ITS OFFICERS OR AGENTS SHALL NOT BE RESPONSIBLE FOR THE ACCURACY OR COMPLETENESS OF ELECTRONIC COPIES OF THIS PLAN SHEET.

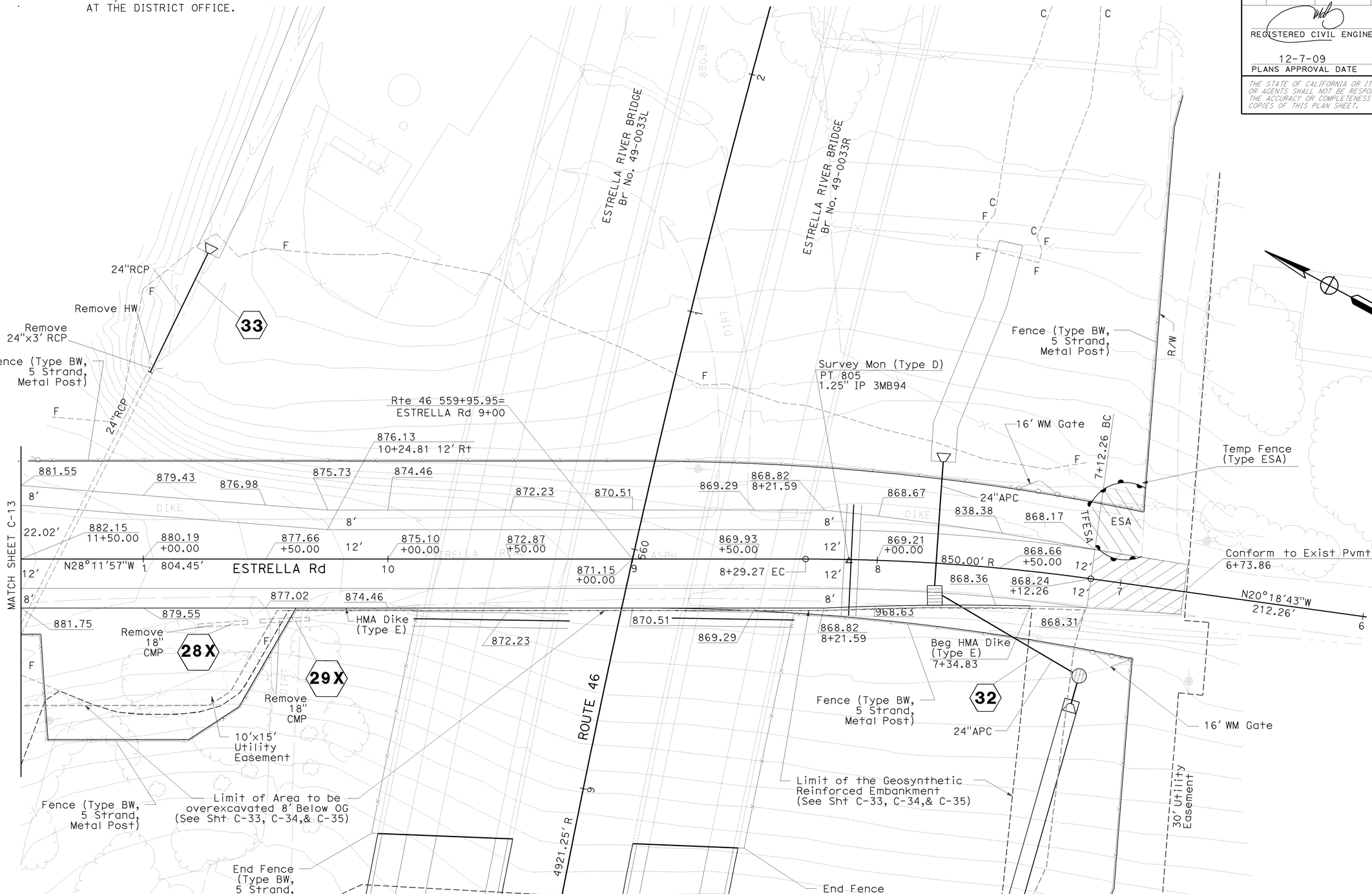

THIS PLAN IS ACCURATE FOR PAVEMENT INFORMATION ONLY.

SCALE: 1" = 20'

CONSTRUCTION DETAILS (ESTRELLA Rd)

C-12

STATE OF CALIFORNIA - DEPARTMENT OF TRANSPORTATION

Caltrans

06-DESIGN

FUNCTIONAL SUPERVISOR: JACK WALKER

CALCULATED-DESIGNED BY: JOSE ARGUELLO

CHECKED BY: JOSE BAUTISTA

REVISED BY

DATE REVISED

LAST REVISION 08-25-09

DATE PLOTTED => 08-DEC-2009

TIME PLOTTED => 09:57

NOTE: FOR ACCURATE RIGHT OF WAY AND ACCESS DATA, CONTACT RIGHT OF WAY ENGINEERING AT THE DISTRICT OFFICE.

CURVE DATA

No.	R	Δ	T	L	RP	LOCATION
①	100.00′	63°53′33"	62.36′	111.51′	BC	℄ ESTRELLA Rd 13+38.00 24.67′ Rt
②	100.00′	62°40′03"	60.88′	109.38′	BC	℄ ESTRELLA Rd 13+28.70 20.98′ Rt
③	50.00′	95°59′35"	55.52	83.77′	BC	℄ ESTRELLA Rd 11+59.50 22.78′ Rt

Dist	COUNTY	ROUTE	POST MILES TOTAL PROJECT	SHEET No.	TOTAL SHEETS
05	SLO	46	36.6/41.2	103	595

8-24-09
REGISTERED CIVIL ENGINEER DATE

12-7-09
PLANS APPROVAL DATE

JOSE M. ARGUELLO No. 51321 Exp 06-30-10 CIVIL — REGISTERED PROFESSIONAL ENGINEER — STATE OF CALIFORNIA

THE STATE OF CALIFORNIA OR ITS OFFICERS OR AGENTS SHALL NOT BE RESPONSIBLE FOR THE ACCURACY OR COMPLETENESS OF ELECTRONIC COPIES OF THIS PLAN SHEET.

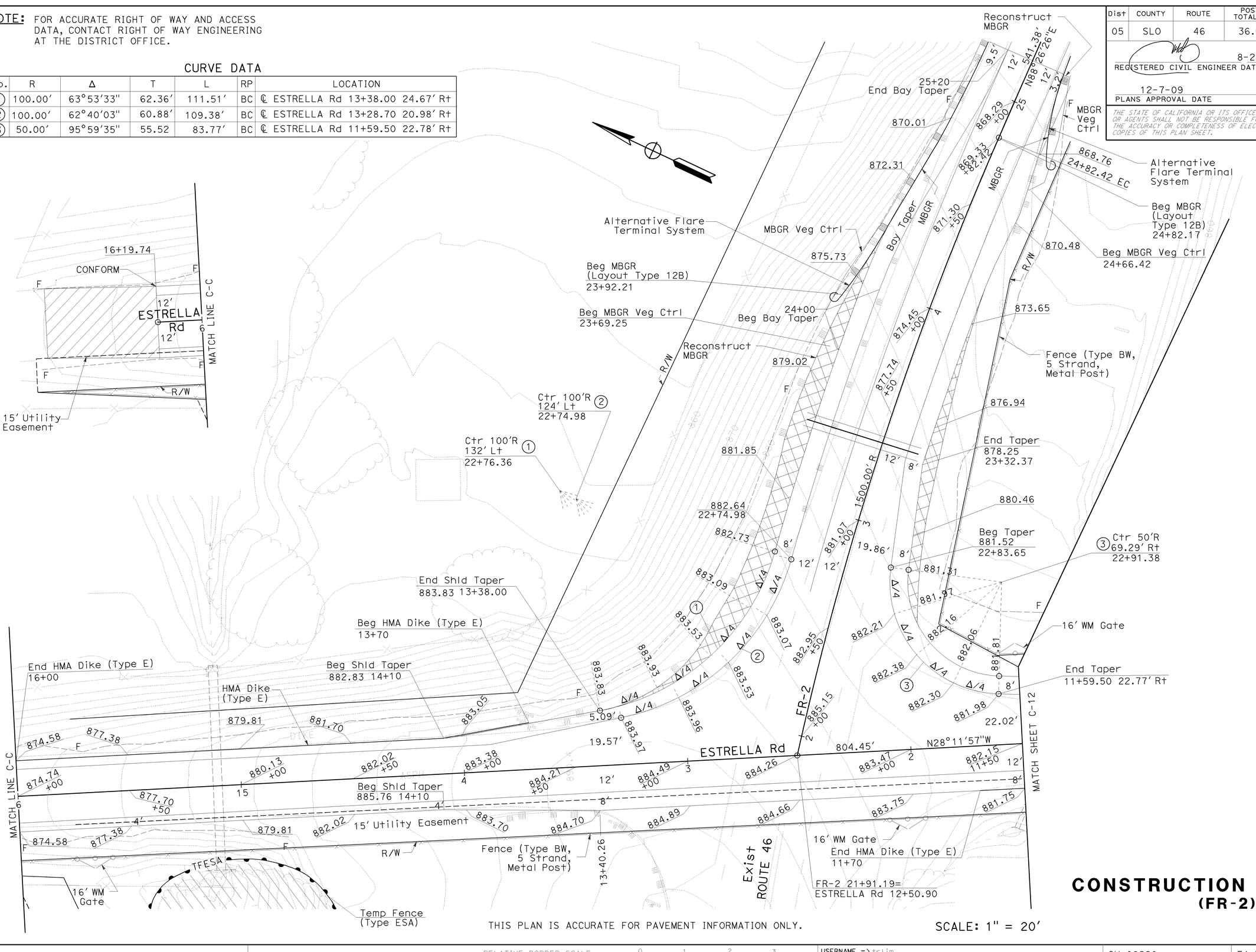

CONSTRUCTION DETAILS (FR-2)

THIS PLAN IS ACCURATE FOR PAVEMENT INFORMATION ONLY.

SCALE: 1" = 20′

C-13

STATE OF CALIFORNIA - DEPARTMENT OF TRANSPORTATION
06-DESIGN
FUNCTIONAL SUPERVISOR: JACK WALKER
CALCULATED-DESIGNED BY: JOSE ARGUELLO
CHECKED BY: JOSE BAUTISTA
REVISED BY
DATE REVISED
LAST REVISION DATE PLOTTED => 08-DEC-2009
TIME PLOTTED => 09:57
08-19-09

BORDER LAST REVISED 3/1/2007
RELATIVE BORDER SCALE IS IN INCHES 0 1 2 3
USERNAME => trlim
DGN FILE => 533072ga013.dgn
CU 06220
EA 330721

NOTE: FOR ACCURATE RIGHT OF WAY AND ACCESS DATA, CONTACT RIGHT OF WAY ENGINEERING AT THE DISTRICT OFFICE.

CURVE DATA

No.	R	Δ	T	L	RP	LOCATION
①	90.00′	105°58′10"	119.37′	166.46′	BC	℄ N WHITLEY GARDENS Dr 10+97.11
②	50.00′	53°57′34"	25.45′	47.09′	BC	℄ FR-2 30+35.76 35.54′ Lt
③	50.00′	101°41′39"	61.41′	88.74′	BC	℄ FR-2 31+89.78 36.00′ Lt
④	80.00′	94°55′21"	87.19′	132.54′	BC	℄ N WHITLEY GARDENS Dr 10+96.87 30.19′ Rt

Dist	COUNTY	ROUTE	POST MILES TOTAL PROJECT	SHEET No.	TOTAL SHEETS
05	SLO	46	36.6/41.2	104	595

8-24-09
REGISTERED CIVIL ENGINEER DATE

12-7-09
PLANS APPROVAL DATE

REGISTERED PROFESSIONAL ENGINEER
JOSE M. ARGUELLO
No. 51321
Exp 06-30-10
CIVIL
STATE OF CALIFORNIA

THE STATE OF CALIFORNIA OR ITS OFFICERS OR AGENTS SHALL NOT BE RESPONSIBLE FOR THE ACCURACY OR COMPLETENESS OF ELECTRONIC COPIES OF THIS PLAN SHEET.

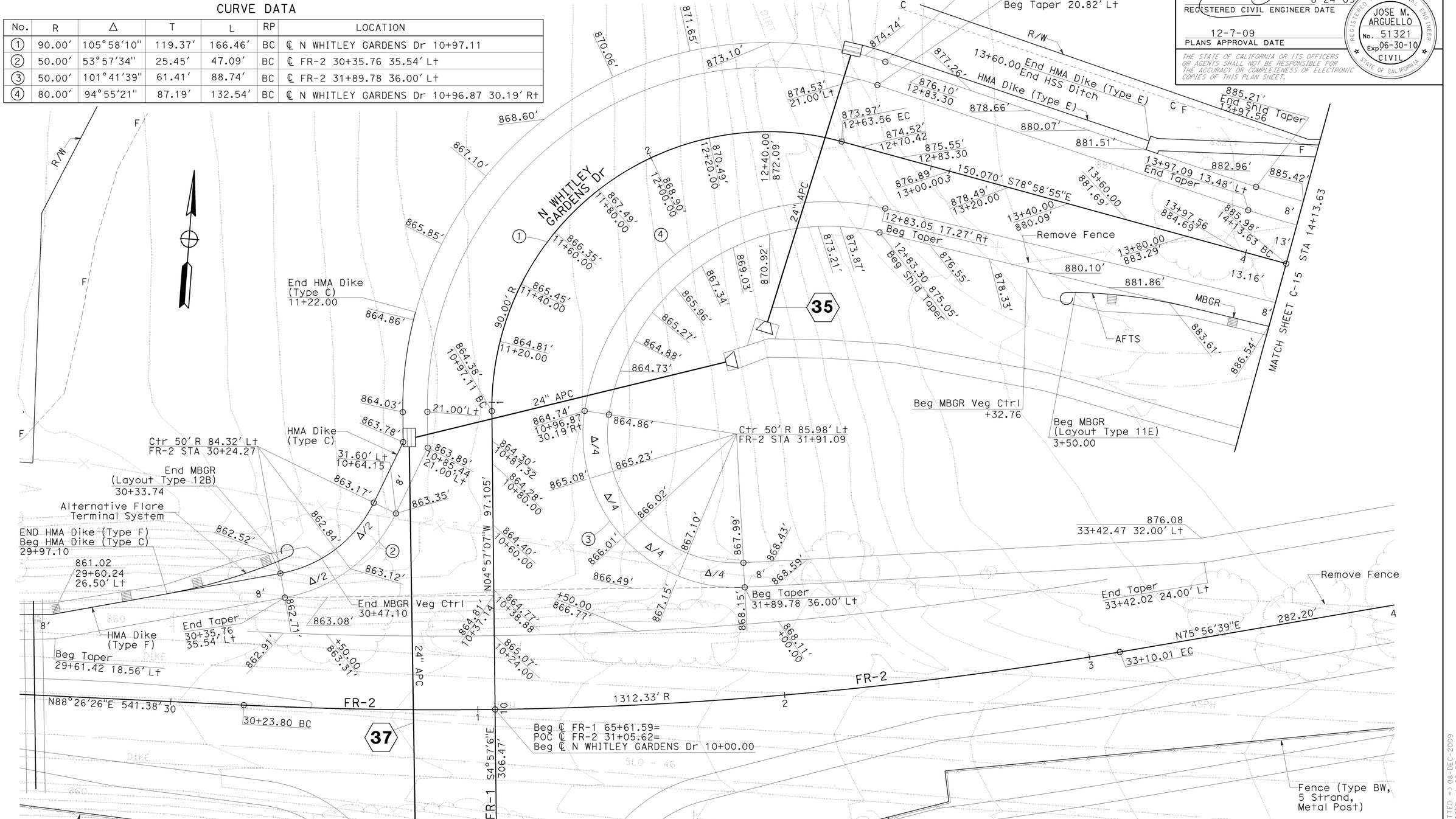

THIS PLAN ACCURATE FOR PAVEMENT INFORMATION ONLY.

SCALE: 1"= 15′

CONSTRUCTION DETAILS
(N WHITLEY GARDEN Dr)

C-14

CALCULATED-DESIGNED BY	WHECHIN LIU
CHECKED BY	JOSE BAUTISTA
FUNCTIONAL SUPERVISOR	JACK WALKER
STATE OF CALIFORNIA - DEPARTMENT OF TRANSPORTATION	06-DESIGN

REVISED BY / DATE REVISED

LAST REVISION DATE PLOTTED => 08-DEC-2009
TIME PLOTTED => 09:57
08-19-09

BORDER LAST REVISED 3/1/2007

RELATIVE BORDER SCALE IS IN INCHES 0 1 2 3

USERNAME => trliim
DGN FILE => 533072ga014.dgn

CU 06220

EA 330721

NOTE: FOR ACCURATE RIGHT OF WAY AND ACCESS DATA, CONTACT RIGHT OF WAY ENGINEERING AT THE DISTRICT OFFICE.

CURVE DATA

No.	R	Δ	T	L	RP	LOCATION
①	300.00	35°18'50"	95.49'	184.90'	BC	℄ N WHITLEY GARDENS Dr 14+13.63
②	50.00'	38°40'47"	17.55'	33.75'	BC	℄ N WHITLEY GARDENS Dr 16+65.35 25.00' Lt
③	250.00'	25°10'53"	55.84'	109.87'	BC	℄ N WHITLEY GARDENS Dr 17+49.58

Dist	COUNTY	ROUTE	POST MILES TOTAL PROJECT	SHEET No.	TOTAL SHEETS
05	SLO	46	36.6/41.2	105	595

8-24-09
REGISTERED CIVIL ENGINEER DATE

12-7-09
PLANS APPROVAL DATE

JOSE M. ARGUELLO No. 51321 Exp 06-30-10 CIVIL — REGISTERED PROFESSIONAL ENGINEER — STATE OF CALIFORNIA

THE STATE OF CALIFORNIA OR ITS OFFICERS OR AGENTS SHALL NOT BE RESPONSIBLE FOR THE ACCURACY OR COMPLETENESS OF ELECTRONIC COPIES OF THIS PLAN SHEET.

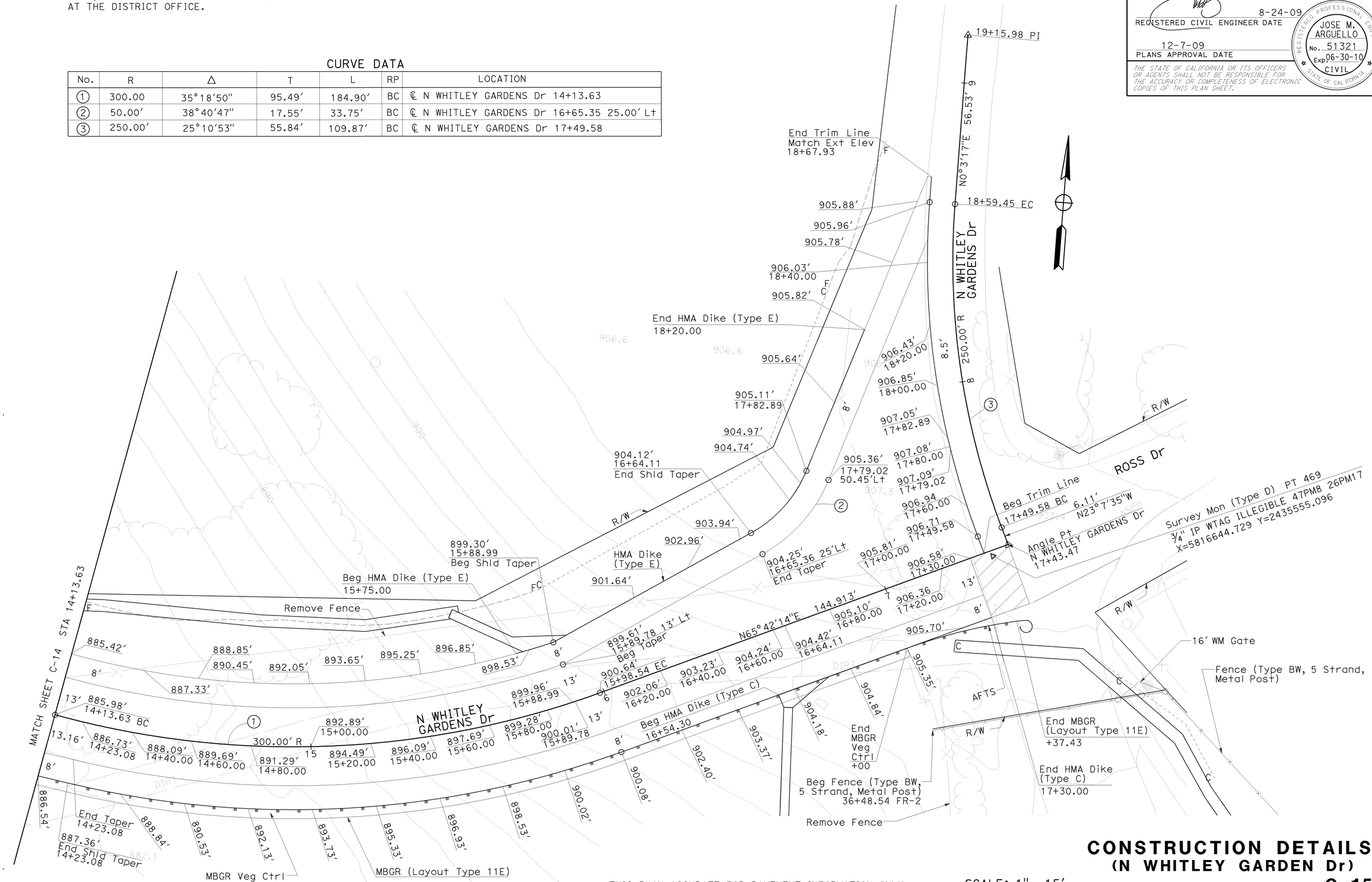

CONSTRUCTION DETAILS
(N WHITLEY GARDEN Dr)

THIS PLAN ACCURATE FOR PAVEMENT INFORMATION ONLY.

SCALE: 1"= 15'

C-15

STATE OF CALIFORNIA - DEPARTMENT OF TRANSPORTATION
Caltrans
06-DESIGN
FUNCTIONAL SUPERVISOR: JACK WALKER
CALCULATED-DESIGNED BY: WHECHIN LIU
CHECKED BY: JOSE BAUTISTA
REVISED BY
DATE REVISED

LAST REVISION | DATE PLOTTED => 08-DEC-2009
08-19-09 | TIME PLOTTED => 09:57

BORDER LAST REVISED 3/1/2007

RELATIVE BORDER SCALE IS IN INCHES 0 1 2 3

USERNAME => trlim
DGN FILE => 533072ga015.dgn

CU 06220

EA 330721

NOTE: FOR ACCURATE RIGHT OF WAY AND ACCESS DATA, CONTACT RIGHT OF WAY ENGINEERING AT THE DISTRICT OFFICE.

Dist	COUNTY	ROUTE	POST MILES TOTAL PROJECT	SHEET No.	TOTAL SHEETS
05	SLO	46	36.6/41.2	106	595

8-24-09
REGISTERED CIVIL ENGINEER DATE

12-7-09
PLANS APPROVAL DATE

REGISTERED PROFESSIONAL ENGINEER
JOSE M. ARGUELLO
No. 51321
Exp. 06-30-10
CIVIL
STATE OF CALIFORNIA

THE STATE OF CALIFORNIA OR ITS OFFICERS OR AGENTS SHALL NOT BE RESPONSIBLE FOR THE ACCURACY OR COMPLETENESS OF ELECTRONIC COPIES OF THIS PLAN SHEET.

CURVE DATA

No.	R	Δ	T	L	RP	LOCATION
1	50.00'	66°35'42"	32.84'	58.11'	BC	℄ FR-2 30+32.04 24.33' Rt
2	50.00'	48°16'34"	22.41'	42.13'	BC	℄ FR-2 31+69.73 24.64' Lt
3	1.00'	173°47'39"	18.45'	3.03'	BC	℄ FR-2 30+45.11 1.99' Lt

THIS PLAN ACCURATE FOR PAVEMENT INFORMATION ONLY.

SCALE: 1" = 20'

CONSTRUCTION DETAILS (FR-2)

C-16

STATE OF CALIFORNIA - DEPARTMENT OF TRANSPORTATION
Caltrans
06-DESIGN

FUNCTIONAL SUPERVISOR: JACK WALKER
CALCULATED-DESIGNED BY: JOSE ARGUELLO
CHECKED BY: JOSE BAUTISTA
REVISED BY
DATE REVISED

LAST REVISION 08-19-09
DATE PLOTTED => 08-DEC-2009
TIME PLOTTED => 09:58

BORDER LAST REVISED 3/1/2007
RELATIVE BORDER SCALE IS IN INCHES 0 1 2 3
USERNAME => trlim
DGN FILE => 533072ga016.dgn
CU 06220
EA 330721

NOTE: FOR ACCURATE RIGHT OF WAY AND ACCESS DATA, CONTACT RIGHT OF WAY ENGINEERING AT THE DISTRICT OFFICE.

Dist	COUNTY	ROUTE	POST MILES TOTAL PROJECT	SHEET No.	TOTAL SHEETS
05	SLO	46	36.6/41.2	107	595

8-24-09
REGISTERED CIVIL ENGINEER DATE

JOSE M. ARGUELLO No. 51321 Exp 06-30-10 CIVIL
REGISTERED PROFESSIONAL ENGINEER — STATE OF CALIFORNIA

12-7-09
PLANS APPROVAL DATE

THE STATE OF CALIFORNIA OR ITS OFFICERS OR AGENTS SHALL NOT BE RESPONSIBLE FOR THE ACCURACY OR COMPLETENESS OF ELECTRONIC COPIES OF THIS PLAN SHEET.

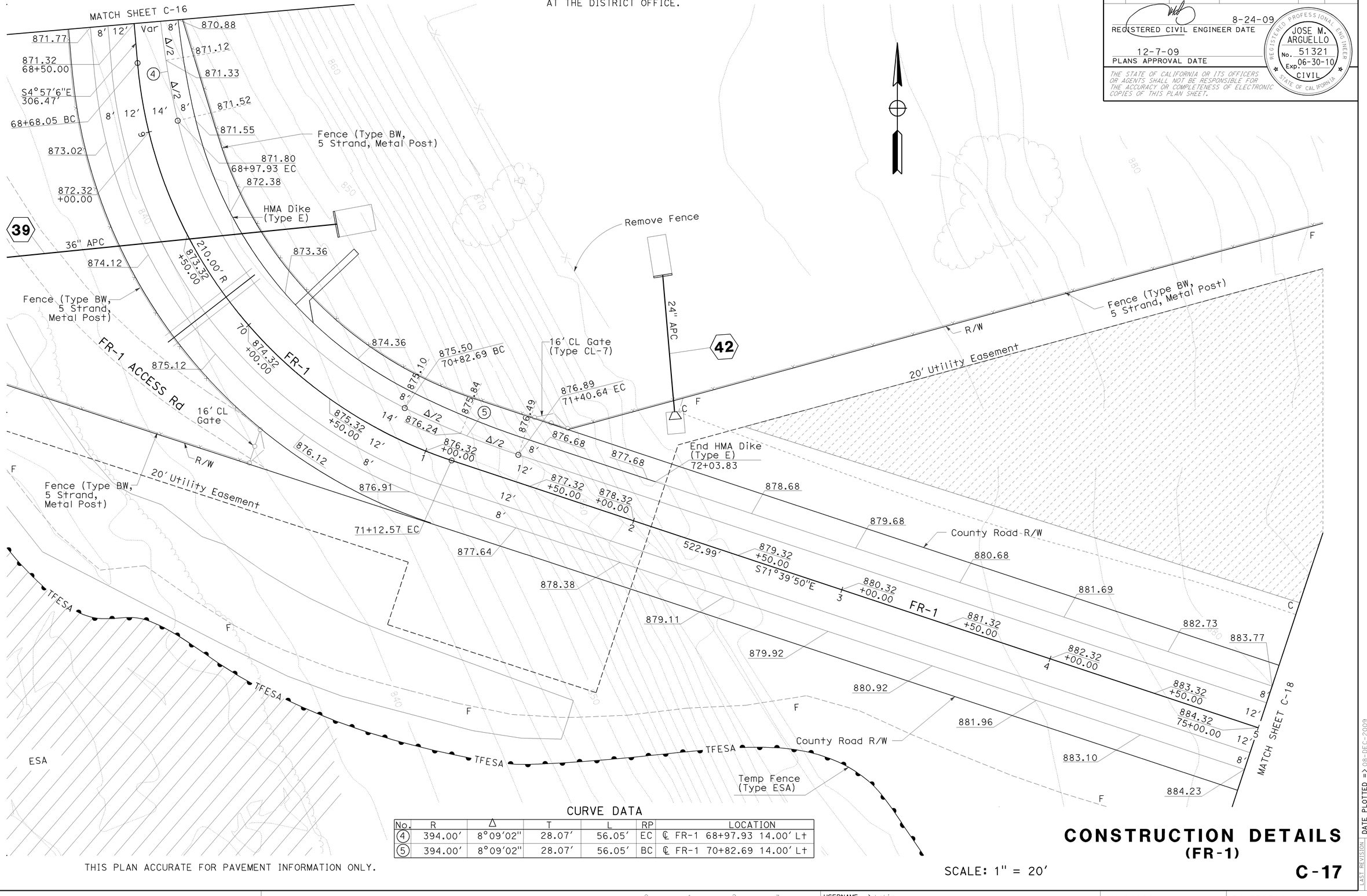

CURVE DATA

No.	R	Δ	T	L	RP	LOCATION
④	394.00′	8°09′02"	28.07′	56.05′	EC	℄ FR-1 68+97.93 14.00′ Lt
⑤	394.00′	8°09′02"	28.07′	56.05′	BC	℄ FR-1 70+82.69 14.00′ Lt

THIS PLAN ACCURATE FOR PAVEMENT INFORMATION ONLY.

SCALE: 1" = 20′

CONSTRUCTION DETAILS (FR-1)

C-17

STATE OF CALIFORNIA - DEPARTMENT OF TRANSPORTATION
Caltrans
06-DESIGN

FUNCTIONAL SUPERVISOR: JACK WALKER
CALCULATED-DESIGNED BY: JOSE ARGUELLO
CHECKED BY: JOSE BAUTISTA
REVISED BY
DATE REVISED

LAST REVISION | DATE PLOTTED => 08-DEC-2009
08-26-09 | TIME PLOTTED => 09:58

BORDER LAST REVISED 3/1/2007

RELATIVE BORDER SCALE IS IN INCHES 0 1 2 3

USERNAME => trliim
DGN FILE => 533072ga017.dgn

CU 06220

EA 330721

NOTE: FOR ACCURATE RIGHT OF WAY AND ACCESS DATA, CONTACT RIGHT OF WAY ENGINEERING AT THE DISTRICT OFFICE.

Dist	COUNTY	ROUTE	POST MILES TOTAL PROJECT	SHEET No.	TOTAL SHEETS
05	SLO	46	36.6/41.2	108	595

REGISTERED CIVIL ENGINEER DATE 8-24-09

PLANS APPROVAL DATE 12-7-09

REGISTERED PROFESSIONAL ENGINEER JOSE M. ARGUELLO No. 51321 Exp. 06-30-10 CIVIL STATE OF CALIFORNIA

THE STATE OF CALIFORNIA OR ITS OFFICERS OR AGENTS SHALL NOT BE RESPONSIBLE FOR THE ACCURACY OR COMPLETENESS OF ELECTRONIC COPIES OF THIS PLAN SHEET.

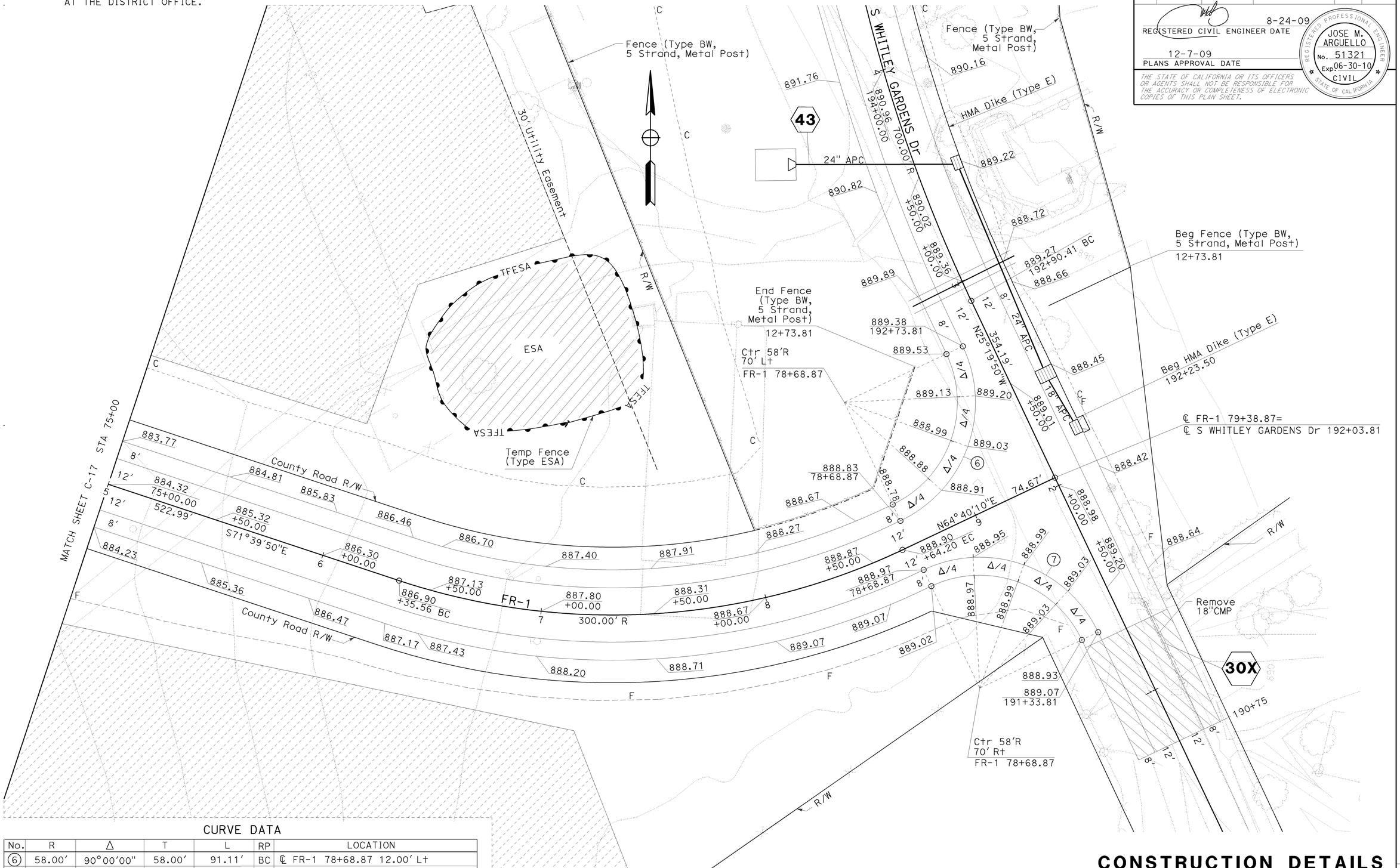

CURVE DATA

No.	R	Δ	T	L	RP	LOCATION
6	58.00'	90°00'00"	58.00'	91.11'	BC	℄ FR-1 78+68.87 12.00' Lt
7	58.00'	90°00'00"	58.00'	91.11'	BC	℄ FR-1 78+68.87 12.00' Rt

THIS PLAN ACCURATE FOR PAVEMENT INFORMATION ONLY.

SCALE: 1" = 20'

CONSTRUCTION DETAILS (FR-1)

C-18

STATE OF CALIFORNIA - DEPARTMENT OF TRANSPORTATION

Caltrans

06-DESIGN

FUNCTIONAL SUPERVISOR: JACK WALKER

CALCULATED-DESIGNED BY: JOSE ARGUELLO

CHECKED BY: JOSE BAUTISTA

REVISED BY

DATE REVISED

LAST REVISION 08-19-09

DATE PLOTTED => 08-DEC-2009

TIME PLOTTED => 09:58

BORDER LAST REVISED 3/1/2007

RELATIVE BORDER SCALE IS IN INCHES 0 1 2 3

USERNAME => trlim

DGN FILE => 533072ga018.dgn

CU 06220

EA 330721

Dist	COUNTY	ROUTE	POST MILES TOTAL PROJECT	SHEET No.	TOTAL SHEETS
05	SLO	46	36.6/41.2	109	595

8-24-09
REGISTERED CIVIL ENGINEER DATE

12-7-09
PLANS APPROVAL DATE

REGISTERED PROFESSIONAL ENGINEER
JOSE M. ARGUELLO
No. 51321
Exp 06-30-10
CIVIL
STATE OF CALIFORNIA

THE STATE OF CALIFORNIA OR ITS OFFICERS OR AGENTS SHALL NOT BE RESPONSIBLE FOR THE ACCURACY OR COMPLETENESS OF ELECTRONIC COPIES OF THIS PLAN SHEET.

NOTES:

1. COLD PLANED CROSS SLOPE TO MATCH FG CROSS SLOPE (SEE TYPICAL CROSS SECTIONS)
2. FOR TL LOCATIONS AND LIMITS, SEE TYPICAL CROSS SECTIONS AND LAYOUT SHEETS.

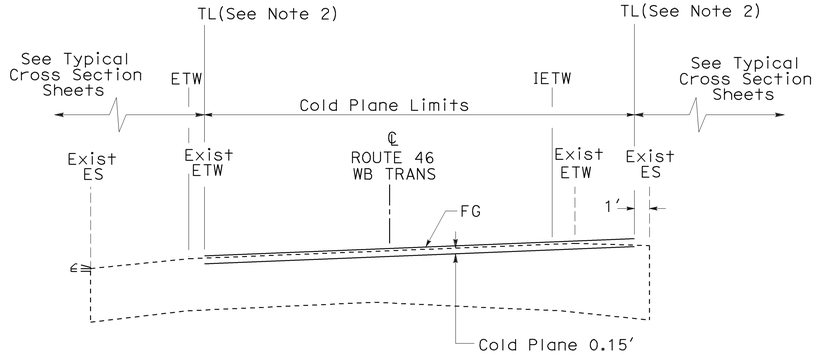

STA 398+42.20 TO STA 401+50

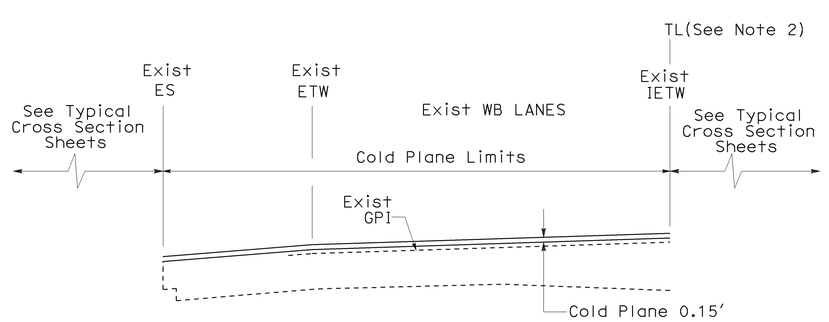

STA 395+00.00 TO STA 398+42.20

COLD PLANE ASPHALT CONCRETE PAVEMENT

NO SCALE

CONSTRUCTION DETAILS
C-19

CALCULATED-DESIGNED BY: JOSE ARGUELLO
CHECKED BY: SUMI HOODE
FUNCTIONAL SUPERVISOR: JACK WALKER
STATE OF CALIFORNIA - DEPARTMENT OF TRANSPORTATION
06-DESIGN
REVISED BY | DATE REVISED

LAST REVISION | DATE PLOTTED => 08-DEC-2009 | TIME PLOTTED => 09:58
07-20-09

BORDER LAST REVISED 3/1/2007
RELATIVE BORDER SCALE IS IN INCHES 0 1 2 3
USERNAME => trijm
DGN FILE => 533072ga019.dgn
CU 06220
EA 330721

Dist	COUNTY	ROUTE	POST MILES TOTAL PROJECT	SHEET No.	TOTAL SHEETS
05	SLO	46	36.6/41.2	110	595

8-24-09
REGISTERED CIVIL ENGINEER DATE

12-7-09
PLANS APPROVAL DATE

REGISTERED PROFESSIONAL ENGINEER
JOSE M. ARGUELLO
No. 51321
Exp 06-30-10
CIVIL
STATE OF CALIFORNIA

THE STATE OF CALIFORNIA OR ITS OFFICERS OR AGENTS SHALL NOT BE RESPONSIBLE FOR THE ACCURACY OR COMPLETENESS OF ELECTRONIC COPIES OF THIS PLAN SHEET.

Rte 46 / PUBLIC & PRIVATE Rd INTERSECTION

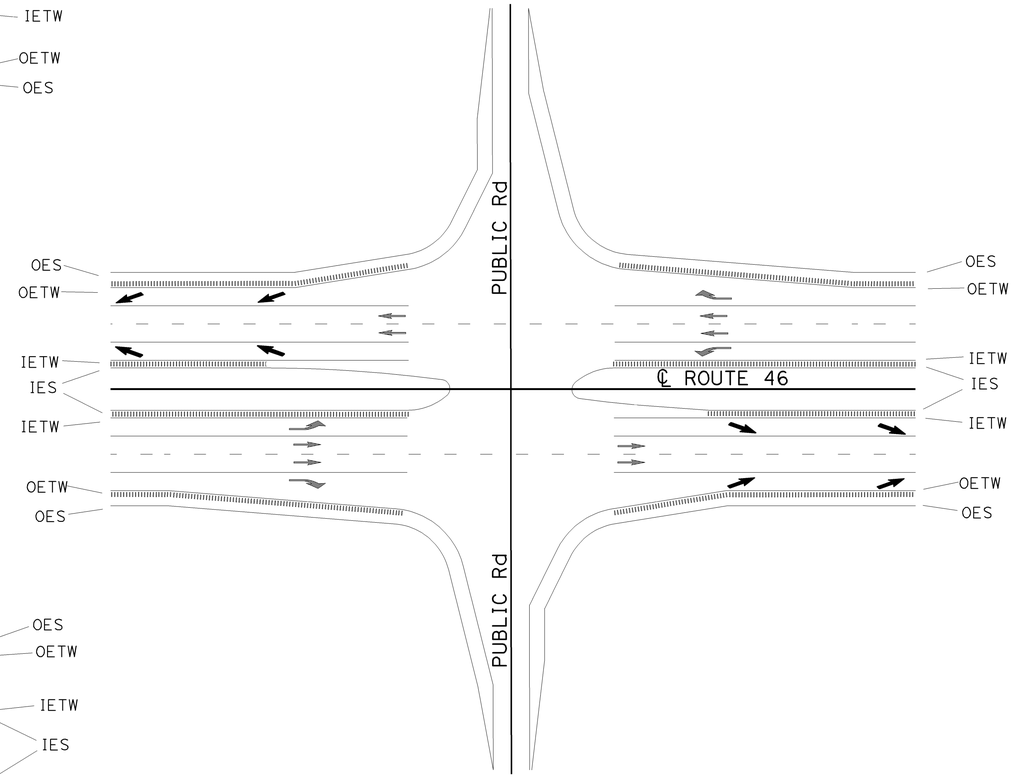

Rte 46 & PUBLIC Rd INTERSECTION

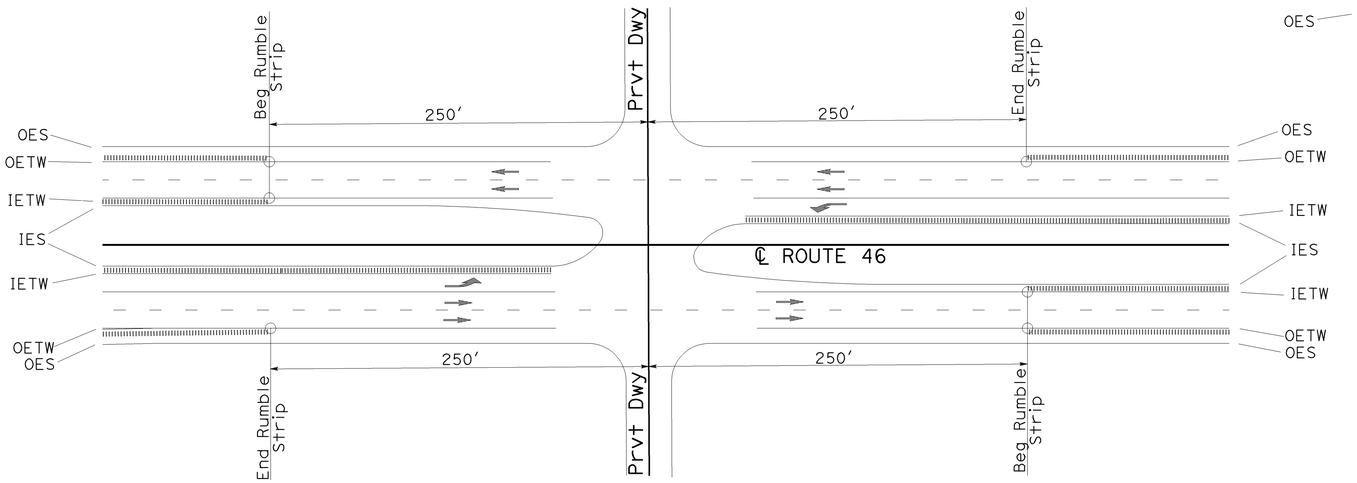

Rte 46 & PRIVATE Rd INTERSECTION

SHOULDER RUMBLE STRIP

CONSTRUCTION DETAILS

NO SCALE

C-20

WHECHIN LIU — CALCULATED-DESIGNED BY
SUMI HOODE — CHECKED BY
REVISED BY
DATE REVISED

FUNCTIONAL SUPERVISOR: JACK WALKER

STATE OF CALIFORNIA - DEPARTMENT OF TRANSPORTATION
06-DESIGN
Caltrans

LAST REVISION 05-19-09
DATE PLOTTED => 08-DEC-2009
TIME PLOTTED => 09:58

BORDER LAST REVISED 3/1/2007
RELATIVE BORDER SCALE IS IN INCHES 0 1 2 3
USERNAME => trliim
DGN FILE => 533072ga020.dgn
CU 06220
EA 330721

WW FLARE ANGLE	
ø1	50°51'28"
ø2	129°08'31"
ø3	129°08'14"
ø4	50°12'38"

Dist	COUNTY	ROUTE	POST MILES TOTAL PROJECT	SHEET No.	TOTAL SHEETS
05	SLO	46	36.6/41.2	111	595

8-24-09
REGISTERED CIVIL ENGINEER DATE

12-7-09
PLANS APPROVAL DATE

REGISTERED PROFESSIONAL ENGINEER
JOSE M. ARGUELLO
No. 51321
Exp 06-30-10
CIVIL
STATE OF CALIFORNIA

THE STATE OF CALIFORNIA OR ITS OFFICERS OR AGENTS SHALL NOT BE RESPONSIBLE FOR THE ACCURACY OR COMPLETENESS OF ELECTRONIC COPIES OF THIS PLAN SHEET.

WLX-1
3' @ 5% C12AB to ALLOW ANIMAL PASSAGE
2:1
OG
RSP (1/4 TON, METHOD B)
RSP (BACKING No.2, METHOD B)
RSP FABRIC (TYPE B)
Embankment

WLX-1 S ENTRANCE SECTION
NO SCALE

NOTES:

1. FOR COMPLETE RIGHT OF WAY AND ACCURATE ACCESS DATA, SEE RIGHT OF WAY ENGINEERING AT THE DISTRICT OFFICE.
2. FOR RETAINING WALL GUTTER DETAIL, SEE STANDARD PLAN B3-9.
3. FOR 0.25' HMA SLOPE PAVING, SEE RETAINING WALL PLANS.

Temp Fence (Type ESA)
TFESA
ESA
RW No.2 (Type 1) (SEE SHEETS R-1, R-6)
30' Utility Easement
R/W
11
Gutter (SEE NOTE 2)
℄ WLX-1 2+66.29
RW No.1 (Type 1) (SEE SHEETS R-1, R-6)
End BOX 2+38.09
4' Cutoff Wall
7X
8X
9X
12
940
950
960
970
980
990
HP
OES
OETW
IETW
IES
HMA Dike (Type F)
DI
SEE NOTE 3
End HMA Dike (Type F) +8.52
1.90' Parapet (Mod N)
256.29'
S37°44'42"E
12' x 12' x 193.76' RCB (SEE SHEET C-22)
Beg Taper +73.44
End Taper +93.44
14,927.81'
S88°36'10"E
ROUTE 46
℄ Rte 46 445+71.332 = ℄ WLX-1 1+37.33
Rte 46 446+45.67 BC
4960.62' R
HMA Dike (Type C)
End HMA Dike (Type C)
Beg HMA Dike (Type F) +00
Beg BOX 0+44.33
RSP 32.8'x9.8'
2.02' Parapet (Mod S)
RW No.3 (Type 1) (SEE SHEETS R-2, R-7)
RW No.4 (Type 1) (SEE SHEETS R-2, R-7)
RW No.5 (Type 1) (SEE SHEETS R-3, R-8)
℄ WLX-1 0+10.00
Drainage Easement

LEGEND
0.25' HMA Slope Paving

WILDLIFE CROSSING RCB1 (WLX-1)

SCALE: 1"= 20'

CONSTRUCTION DETAILS
C-21

STATE OF CALIFORNIA - DEPARTMENT OF TRANSPORTATION
06-DESIGN
FUNCTIONAL SUPERVISOR: JACK WALKER
CALCULATED-DESIGNED BY
CHECKED BY
REVISED BY
DATE REVISED
WHECHIN LIU
SUMI HOODE

LAST REVISION DATE PLOTTED => 08-DEC-2009
07-14-09 TIME PLOTTED => 09:58

BORDER LAST REVISED 3/1/2007
RELATIVE BORDER SCALE IS IN INCHES 0 1 2 3
USERNAME => trliim
DGN FILE => 533072ga021.dgn
CU 06220
EA 330721

Dist	COUNTY	ROUTE	POST MILES TOTAL PROJECT	SHEET No.	TOTAL SHEETS
05	SLO	46	36.6/41.2	112	595

8-24-09
REGISTERED CIVIL ENGINEER DATE

12-7-09
PLANS APPROVAL DATE

REGISTERED PROFESSIONAL ENGINEER
JOSE M. ARGUELLO
No. 51321
Exp 06-30-10
CIVIL
STATE OF CALIFORNIA

THE STATE OF CALIFORNIA OR ITS OFFICERS OR AGENTS SHALL NOT BE RESPONSIBLE FOR THE ACCURACY OR COMPLETENESS OF ELECTRONIC COPIES OF THIS PLAN SHEET.

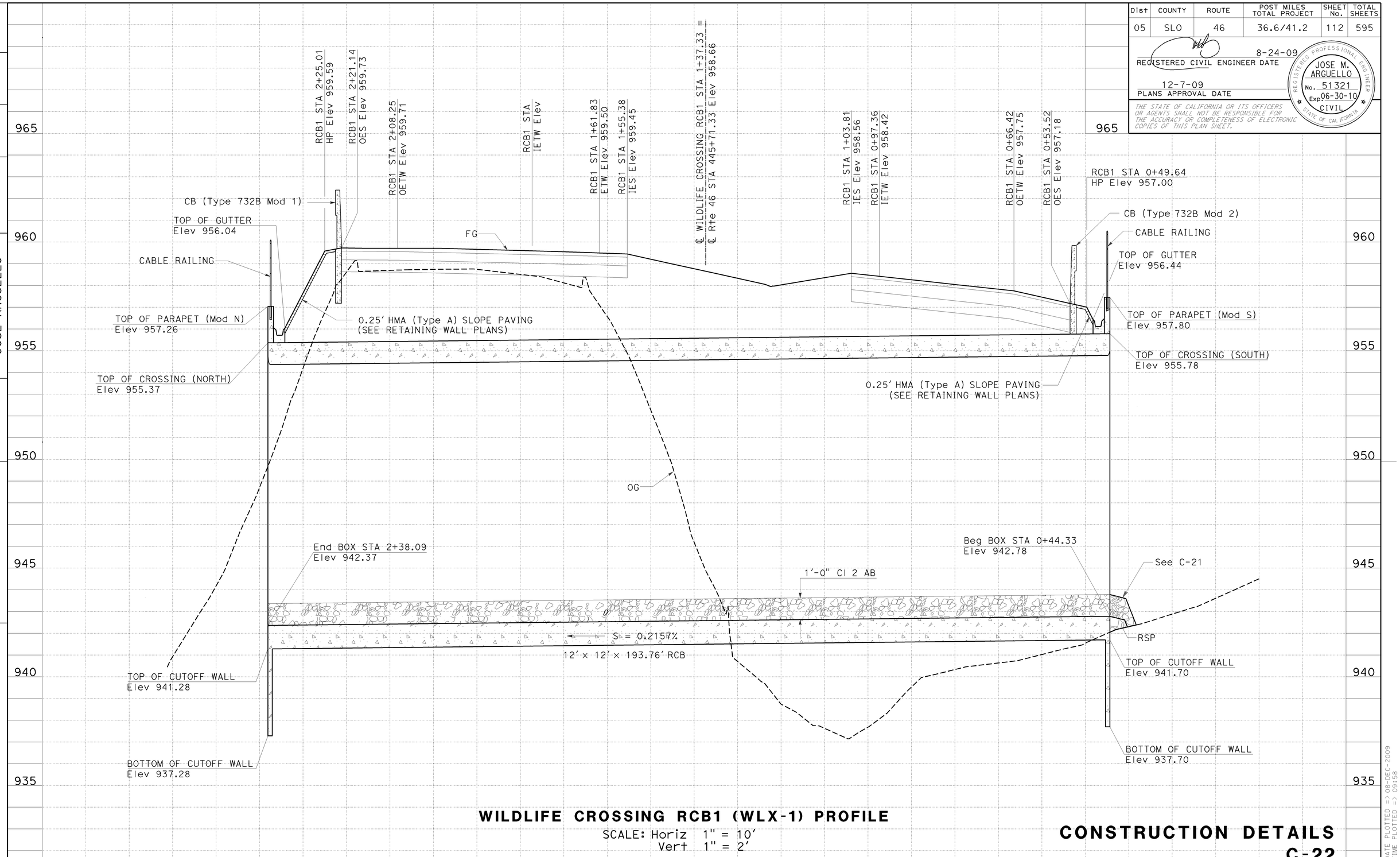

WILDLIFE CROSSING RCB1 (WLX-1) PROFILE

SCALE: Horiz 1" = 10'
Vert 1" = 2'

CONSTRUCTION DETAILS
C-22

CALCULATED-DESIGNED BY
CHECKED BY
REVISED BY
DATE REVISED
WHECHIN LIU
JOSE ARGUELLO
FUNCTIONAL SUPERVISOR
JACK WALKER
STATE OF CALIFORNIA - DEPARTMENT OF TRANSPORTATION
06-DESIGN
Caltrans

DATE PLOTTED => 08-DEC-2009
TIME PLOTTED => 09:58
05-08-09

BORDER LAST REVISED 3/1/2007
RELATIVE BORDER SCALE IS IN INCHES 0 1 2 3
USERNAME => trliim
DGN FILE => 533072ga022.dgn
CU 06220
EA 330721

Dist	COUNTY	ROUTE	POST MILES TOTAL PROJECT	SHEET No.	TOTAL SHEETS
05	SLO	46	36.6/41.2	113	595

8-24-09
REGISTERED CIVIL ENGINEER DATE

12-7-09
PLANS APPROVAL DATE

REGISTERED PROFESSIONAL ENGINEER
JOSE M. ARGUELLO
No. 51321
Exp 06-30-10
CIVIL
STATE OF CALIFORNIA

THE STATE OF CALIFORNIA OR ITS OFFICERS OR AGENTS SHALL NOT BE RESPONSIBLE FOR THE ACCURACY OR COMPLETENESS OF ELECTRONIC COPIES OF THIS PLAN SHEET.

NOTES:

1. FOR DETAILS NOT SHOWN, SEE STANDARD PLANS.
2. CB (TYPE 732B Mod 1) IS SIMILAR TO CB 732B EXCEPT AS NOTED, SEE STANDARD PLANS.
3. CB (TYPE 732B Mod 2) IS SIMILAR TO CB 732B EXCEPT AS NOTED, SEE STANDARD PLANS.
4. FOR REINFORCEMENT, SEE CB 732B ON STANDARD PLANS.
5. REINFORCEMENT SHOWN SHOULD BE IN PLACE BEFORE TOP OF RCB Conc.
6. FOR 0.25' HMA SLOPE PAVING, SEE RETAINING WALL PLANS.

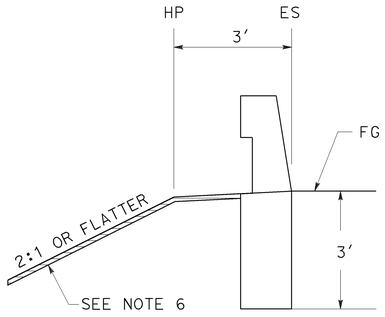

Conc BARRIER (Type 732B Mod 1)

(SEE NOTES 1,2 AND 4)

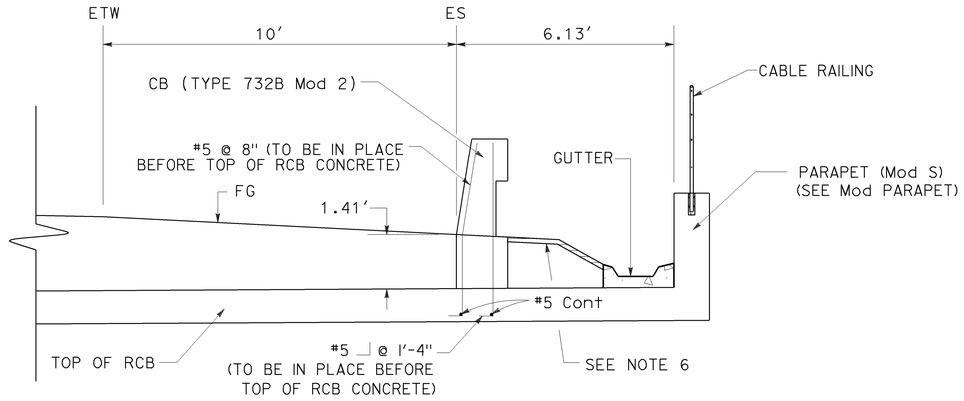

Conc BARRIER (Type 732B Mod 2)

(SEE NOTES 1,3 AND 4)

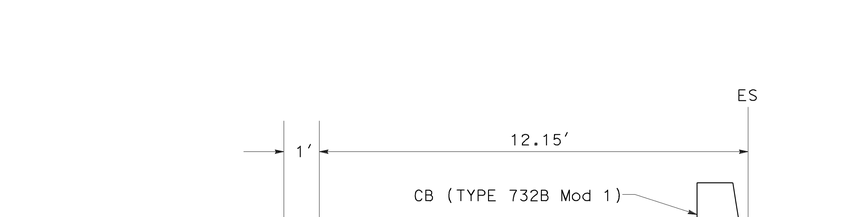

PARAPET (Mod N)

(SEE NOTE 5)

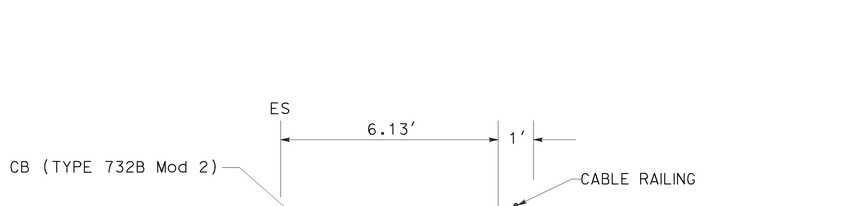

PARAPET (Mod S)

(SEE NOTE 5)

CONSTRUCTION DETAILS

NO SCALE

C-23

REVISED BY	DATE REVISED

CALCULATED-DESIGNED BY
CHECKED BY

JOSE ARGUELLO
SUMI HOODE

FUNCTIONAL SUPERVISOR
JACK WALKER

STATE OF CALIFORNIA - DEPARTMENT OF TRANSPORTATION
06-DESIGN

Caltrans

LAST REVISION DATE PLOTTED => 08-DEC-2009
TIME PLOTTED => 09:58
04-14-09

BORDER LAST REVISED 3/1/2007

RELATIVE BORDER SCALE IS IN INCHES 0 2 3

USERNAME => trliim
DGN FILE => 533072ga023.dgn

CU 06220

EA 330721

Dist	COUNTY	ROUTE	POST MILES TOTAL PROJECT	SHEET No.	TOTAL SHEETS
05	SLO	46	36.6/41.2	114	595

8-24-09
REGISTERED CIVIL ENGINEER DATE

12-7-09
PLANS APPROVAL DATE

REGISTERED PROFESSIONAL ENGINEER
JOSE M. ARGUELLO
No. 51321
Exp 06-30-10
CIVIL
STATE OF CALIFORNIA

THE STATE OF CALIFORNIA OR ITS OFFICERS OR AGENTS SHALL NOT BE RESPONSIBLE FOR THE ACCURACY OR COMPLETENESS OF ELECTRONIC COPIES OF THIS PLAN SHEET.

NOTE:

1. FOR DETAILS NOT SHOWN, SEE STANDARD PLAN A86.

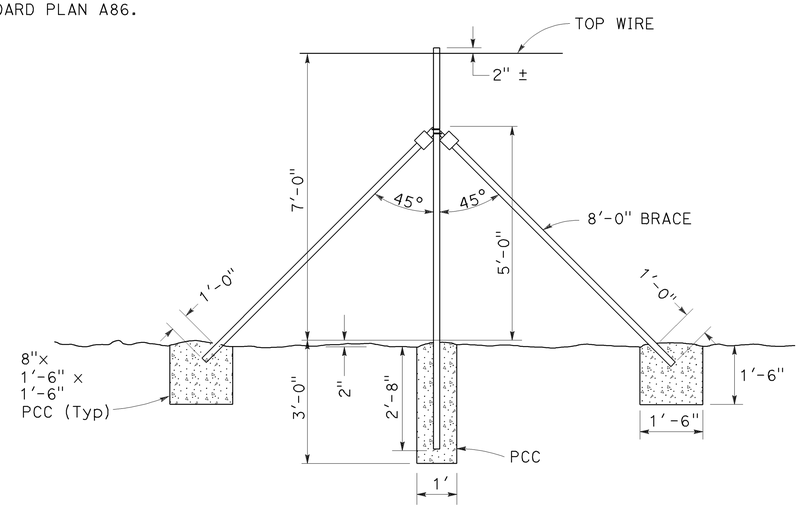

PULL POST ASSEMBLY

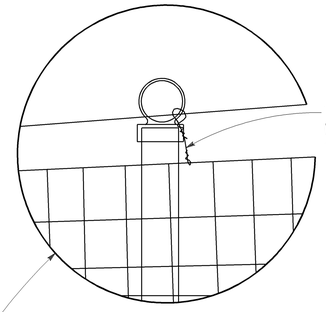

DETAIL APPLICABLE
FOR ALL POSTS

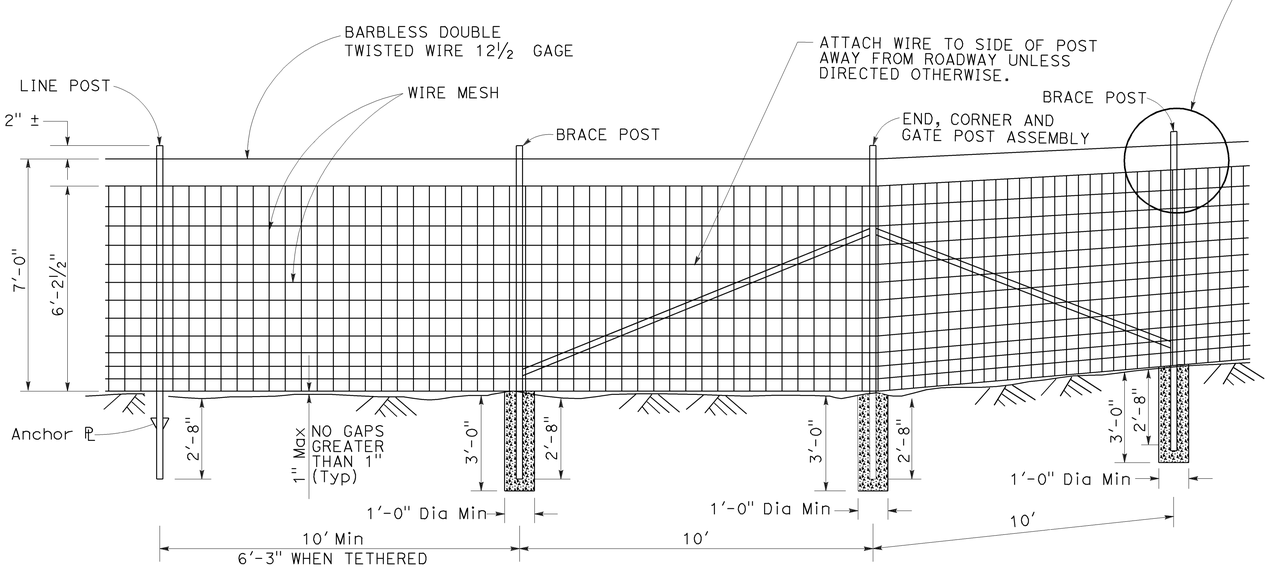

FENCE (TYPE WM, Mod)

CONSTRUCTION DETAILS

NO SCALE

C-24

WHECHIN LIU — CALCULATED-DESIGNED BY
SUMI HOODE — CHECKED BY
REVISED BY — DATE REVISED

FUNCTIONAL SUPERVISOR: JACK WALKER

STATE OF CALIFORNIA - DEPARTMENT OF TRANSPORTATION
06-DESIGN

Caltrans

LAST REVISION 01-07-09
DATE PLOTTED => 08-DEC-2009
TIME PLOTTED => 09:59

BORDER LAST REVISED 3/1/2007

RELATIVE BORDER SCALE IS IN INCHES 0 2 3

USERNAME => trliim
DGN FILE => 533072ga024.dgn

CU 06220

EA 330721

Dist	COUNTY	ROUTE	POST MILES TOTAL PROJECT	SHEET No.	TOTAL SHEETS
05	SLO	46	36.6/41.2	115	595

8-24-09
REGISTERED CIVIL ENGINEER DATE

12-7-09
PLANS APPROVAL DATE

REGISTERED PROFESSIONAL ENGINEER
JOSE M. ARGUELLO
No. 51321
Exp 06-30-10
CIVIL
STATE OF CALIFORNIA

THE STATE OF CALIFORNIA OR ITS OFFICERS OR AGENTS SHALL NOT BE RESPONSIBLE FOR THE ACCURACY OR COMPLETENESS OF ELECTRONIC COPIES OF THIS PLAN SHEET.

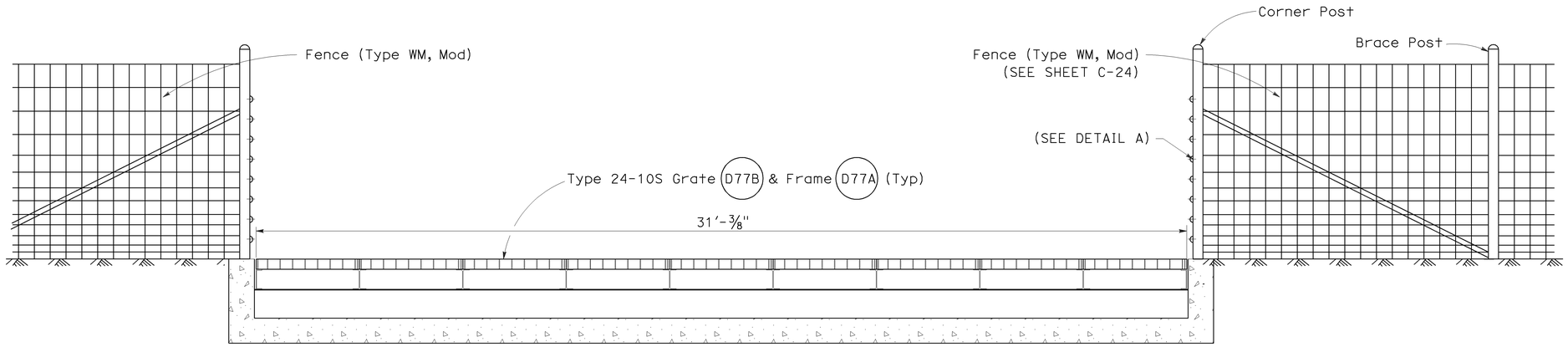

SECTION A-A

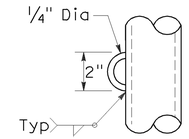

DETAIL "A"

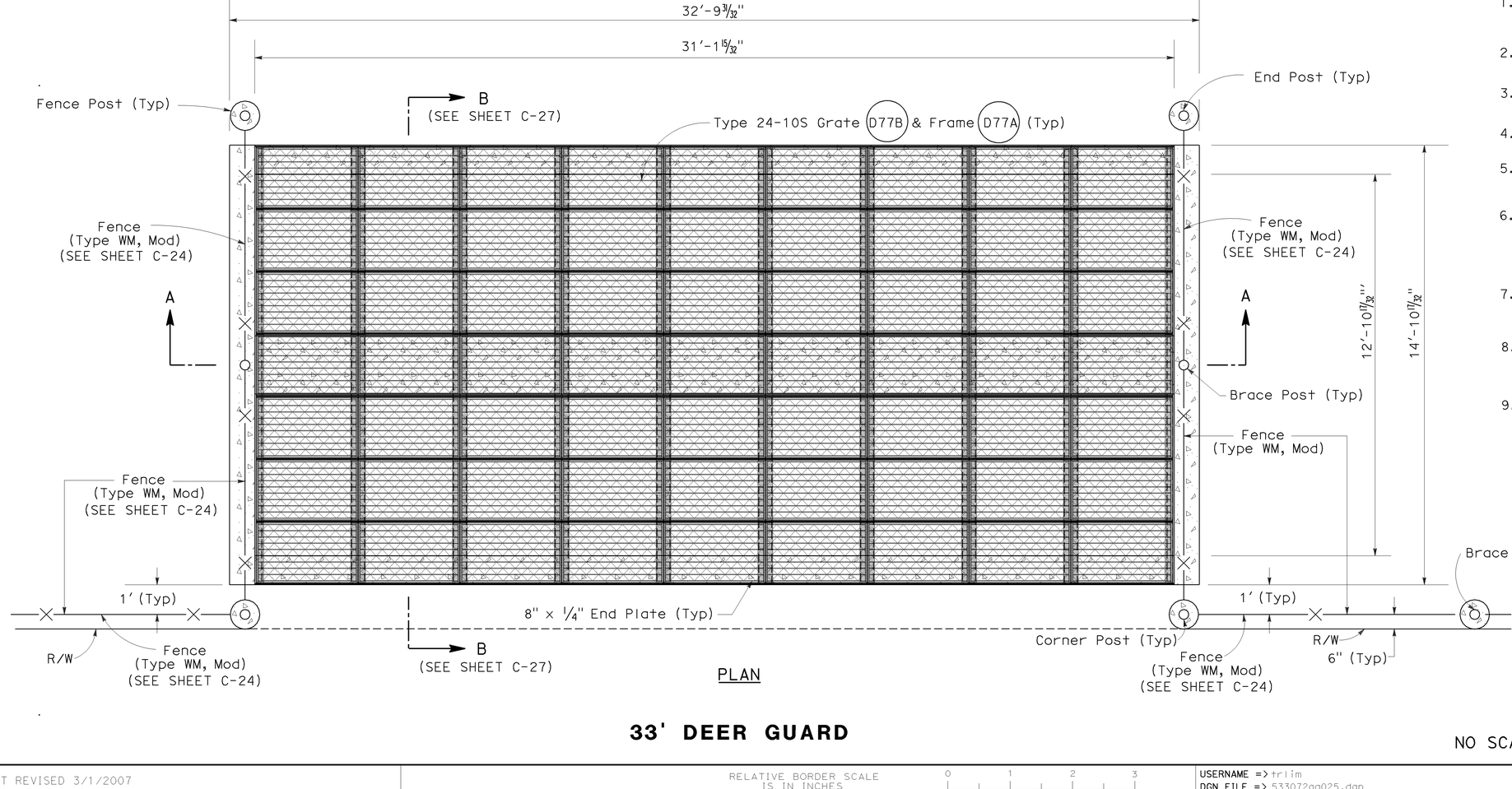

PLAN

NOTES:

1. 14'-10 17/32" x 32'-9 31/32" Nominal Size of Deer Guard to be constructed.
2. Live loading: HS20
3. All Bolts shall have one Nut and one Locknut.
4. All Bolts Assemblies shall be Galvanized.
5. Place PCC Slabs and Deer Guard on constant gradient or as directed by the Engineer.
6. Deer Guard to match the Crowned or Warped Crown approaches or as directed by the Engineer. Maximum crown section to be 2%. (See Sheet C-27)
7. See Bridge Standard Plans for additional details.
8. See Sheet C-24 and Standard Plan "A86" for additional fence details.
9. For Opening Locations See Drainage Details.

33' DEER GUARD

CONSTRUCTION DETAILS
C-25

NO SCALE

REVISED BY | DATE REVISED
CALCULATED-DESIGNED BY: JOSE ARGUELLO
CHECKED BY: SUMI HOODE
FUNCTIONAL SUPERVISOR: JACK WALKER
STATE OF CALIFORNIA - DEPARTMENT OF TRANSPORTATION
06-DESIGN
Caltrans

LAST REVISION | DATE PLOTTED => 08-DEC-2009
05-29-09 | TIME PLOTTED => 09:59

BORDER LAST REVISED 3/1/2007
RELATIVE BORDER SCALE IS IN INCHES 0 1 2 3
USERNAME => trlim
DGN FILE => 533072ga025.dgn
CU 06220
EA 330721

Dist	COUNTY	ROUTE	POST MILES TOTAL PROJECT	SHEET No.	TOTAL SHEETS
05	SLO	46	36.6/41.2	116	595

8-24-09
REGISTERED CIVIL ENGINEER DATE

12-7-09
PLANS APPROVAL DATE

REGISTERED PROFESSIONAL ENGINEER
JOSE M. ARGUELLO
No. 51321
Exp 06-30-10
CIVIL
STATE OF CALIFORNIA

THE STATE OF CALIFORNIA OR ITS OFFICERS OR AGENTS SHALL NOT BE RESPONSIBLE FOR THE ACCURACY OR COMPLETENESS OF ELECTRONIC COPIES OF THIS PLAN SHEET.

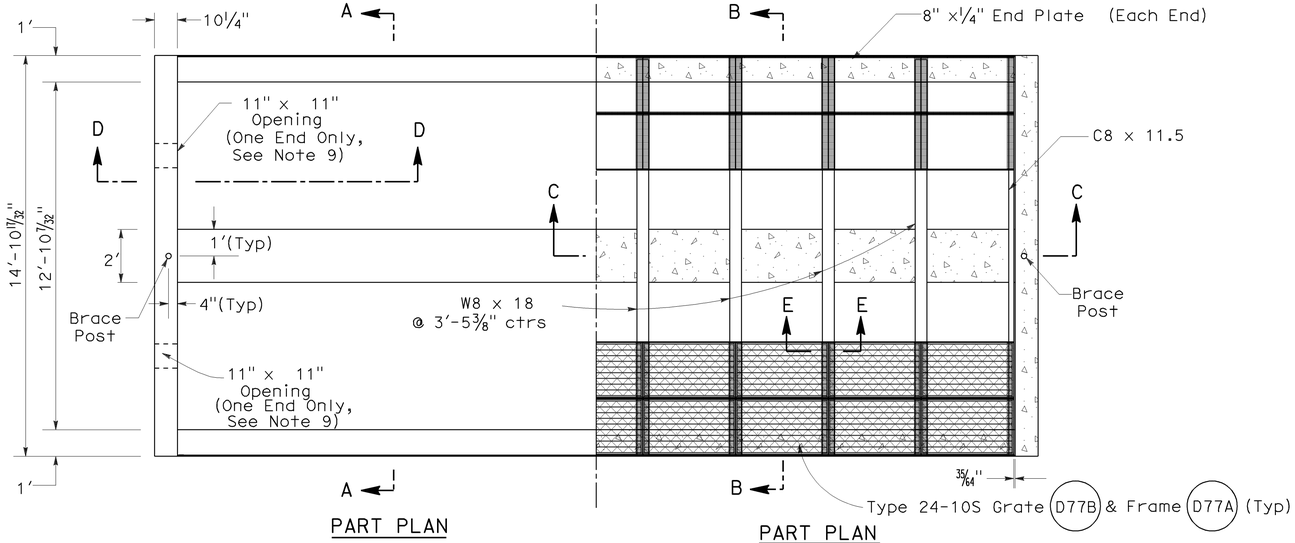

PART PLAN

SHOWING REINFORCEMENT IN WALLS AND SLAB (SEE SECTIONS)

PART PLAN

SHOWING STEEL DEER GUARD (SEE SECTIONS)

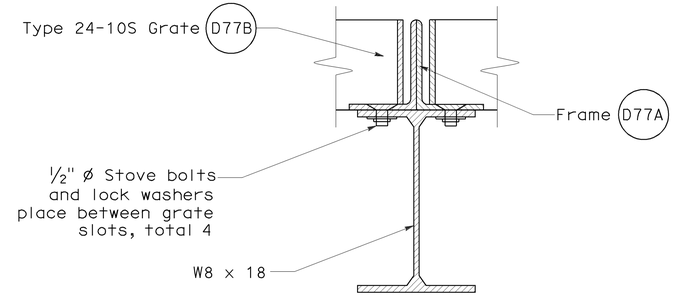

SECTION E-E

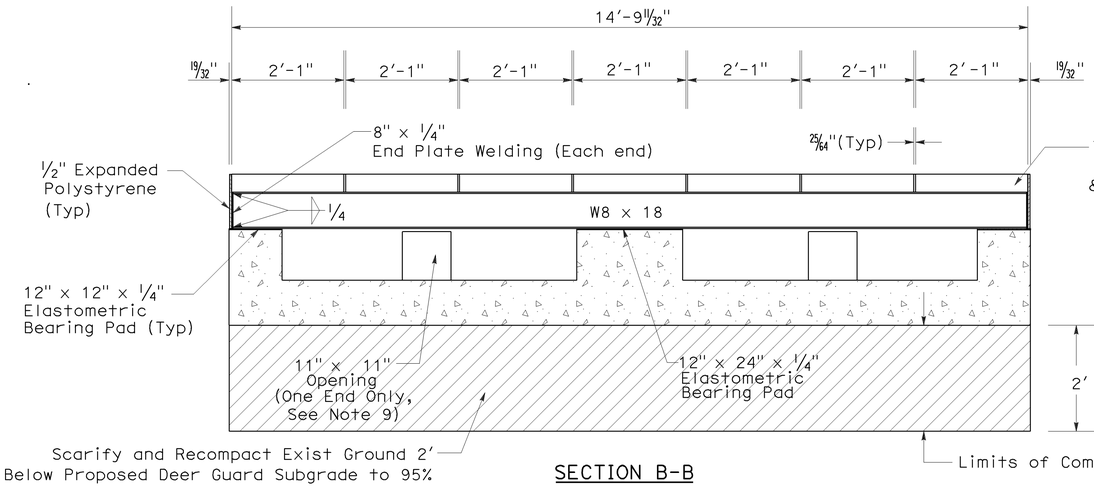

SECTION B-B

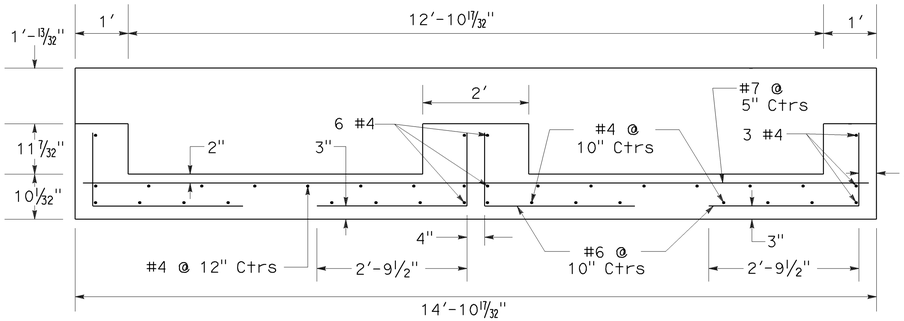

SECTION A-A

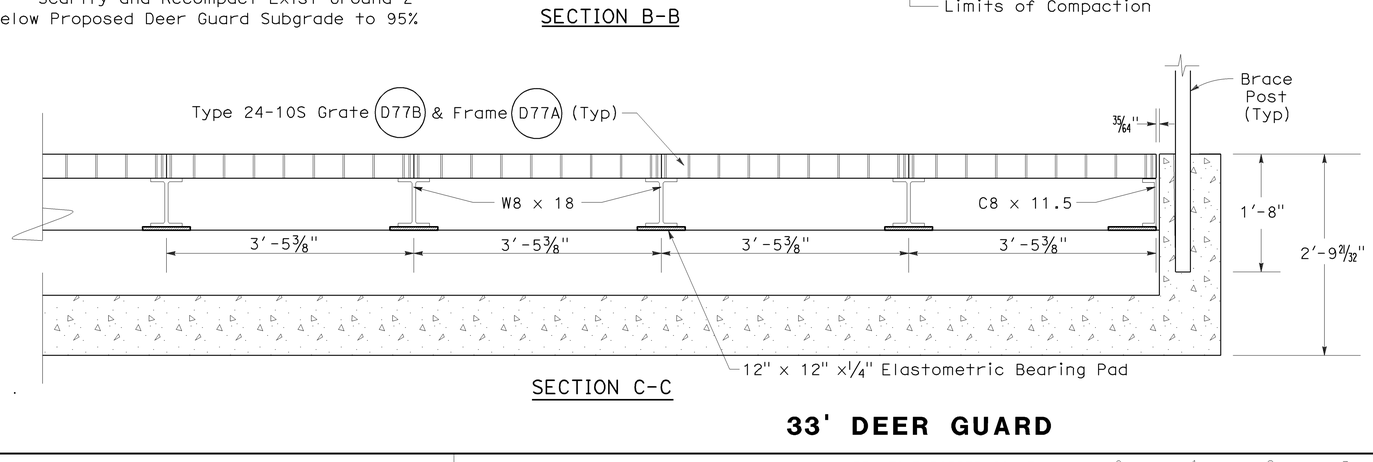

SECTION C-C

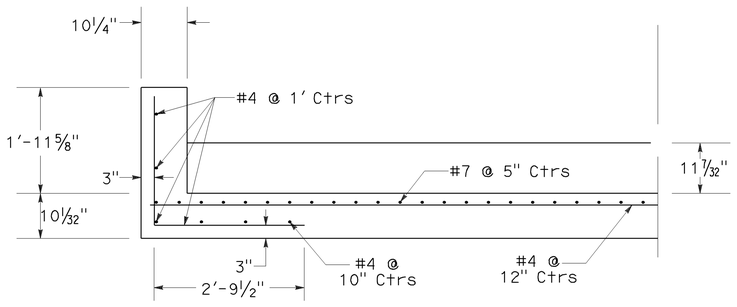

SECTION D-D

33' DEER GUARD

CONSTRUCTION DETAILS

NO SCALE

C-26

STATE OF CALIFORNIA - DEPARTMENT OF TRANSPORTATION
06-DESIGN
FUNCTIONAL SUPERVISOR: JACK WALKER
CALCULATED-DESIGNED BY: JOSE ARGUELLO
CHECKED BY: SUMI HOODE
REVISED BY
DATE REVISED

LAST REVISION DATE PLOTTED => 08-DEC-2009
TIME PLOTTED => 07:49

BORDER LAST REVISED 3/1/2007
RELATIVE BORDER SCALE IS IN INCHES 0 1 2 3
USERNAME => trstrk
DGN FILE => 533072ga026.dgn
CU 06220
EA 330721

Dist	COUNTY	ROUTE	POST MILES TOTAL PROJECT	SHEET No.	TOTAL SHEETS
05	SLO	46	36.6/41.2	117	595

8-24-09
REGISTERED CIVIL ENGINEER DATE

12-7-09
PLANS APPROVAL DATE

REGISTERED PROFESSIONAL ENGINEER
JOSE M. ARGUELLO
No. 51321
Exp 06-30-10
CIVIL
STATE OF CALIFORNIA

THE STATE OF CALIFORNIA OR ITS OFFICERS OR AGENTS SHALL NOT BE RESPONSIBLE FOR THE ACCURACY OR COMPLETENESS OF ELECTRONIC COPIES OF THIS PLAN SHEET.

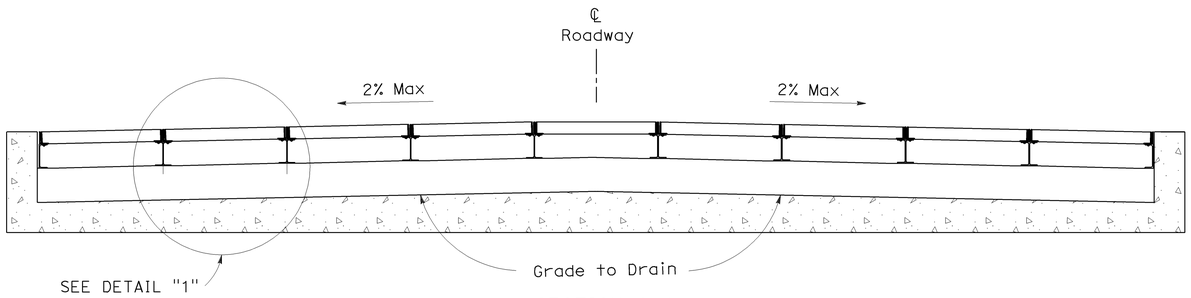

SECTION A-A
(CROWNED SECTION)
(SEE SHEET C-25)

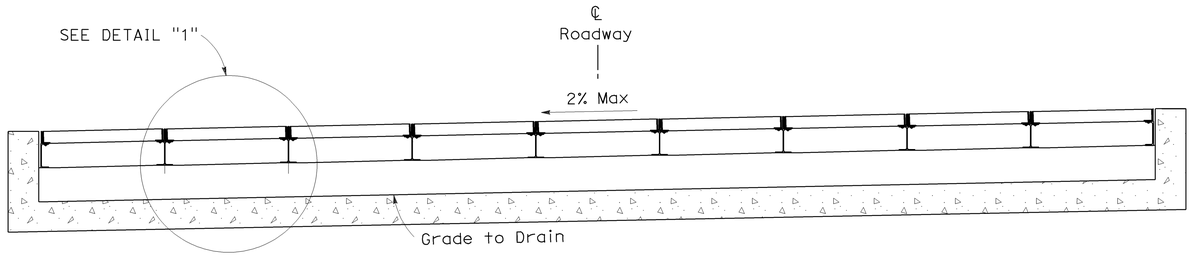

SECTION A-A
(WARPED CROWN SECTION)
(SEE SHEET C-25)

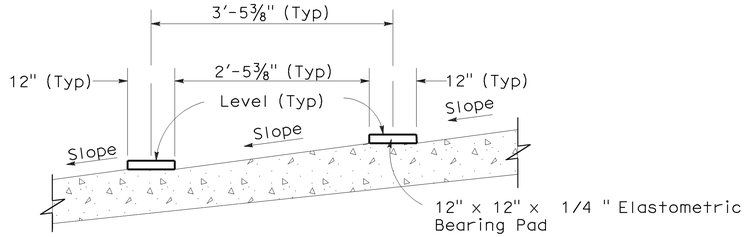

DETAIL "1"

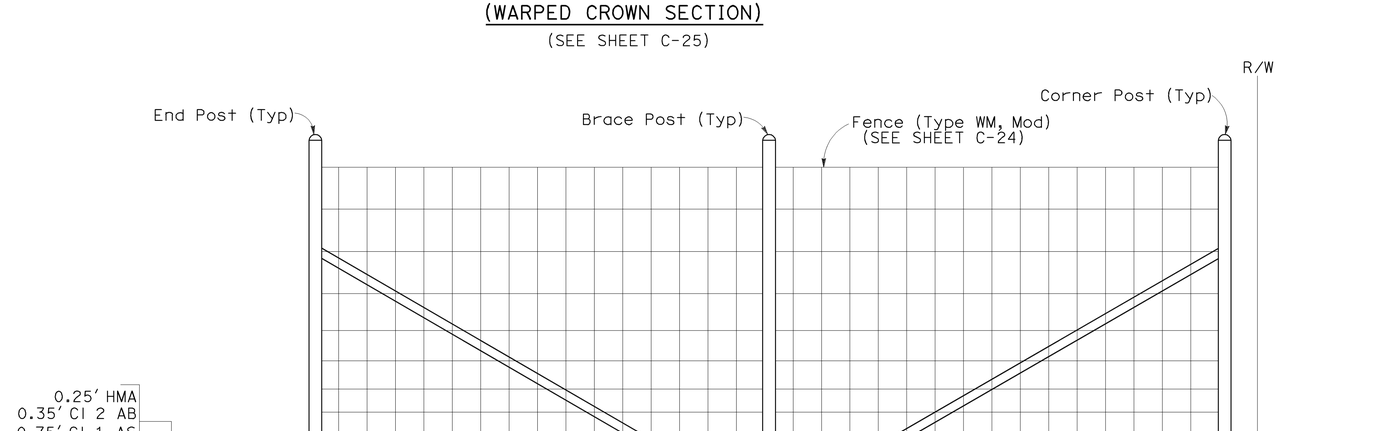

SECTION B-B
(SEE SHEET C-25)

33' DEER GUARD

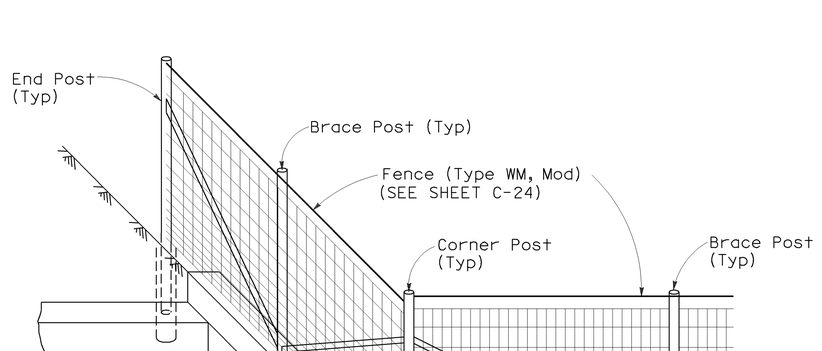

FENCE DETAIL

CONSTRUCTION DETAILS

NO SCALE

C-27

STATE OF CALIFORNIA - DEPARTMENT OF TRANSPORTATION
06-DESIGN
FUNCTIONAL SUPERVISOR: JACK WALKER
CALCULATED-DESIGNED BY: JOSE ARGUELLO
CHECKED BY: SUMI HOODE
REVISED BY
DATE REVISED

LAST REVISION | DATE PLOTTED => 08-DEC-2009
05-29-09 | TIME PLOTTED => 07:49

BORDER LAST REVISED 3/1/2007

RELATIVE BORDER SCALE IS IN INCHES 0 1 2 3

USERNAME => trstrk
DGN FILE => 533072ga027.dgn

CU 06220

EA 330721

Dist	COUNTY	ROUTE	POST MILES TOTAL PROJECT	SHEET No.	TOTAL SHEETS
05	SLO	46	36.6/41.2	118	595

LICENSED LANDSCAPE ARCHITECT

12-7-09
PLANS APPROVAL DATE

LICENSED LANDSCAPE ARCHITECT — SCOTT P. DOWLAN No. 4410 — Expiration Date 9/30/10 — Renewal Date 7/28/09 Date — STATE OF CALIFORNIA

THE STATE OF CALIFORNIA OR ITS OFFICERS OR AGENTS SHALL NOT BE RESPONSIBLE FOR THE ACCURACY OR COMPLETENESS OF ELECTRONIC COPIES OF THIS PLAN SHEET.

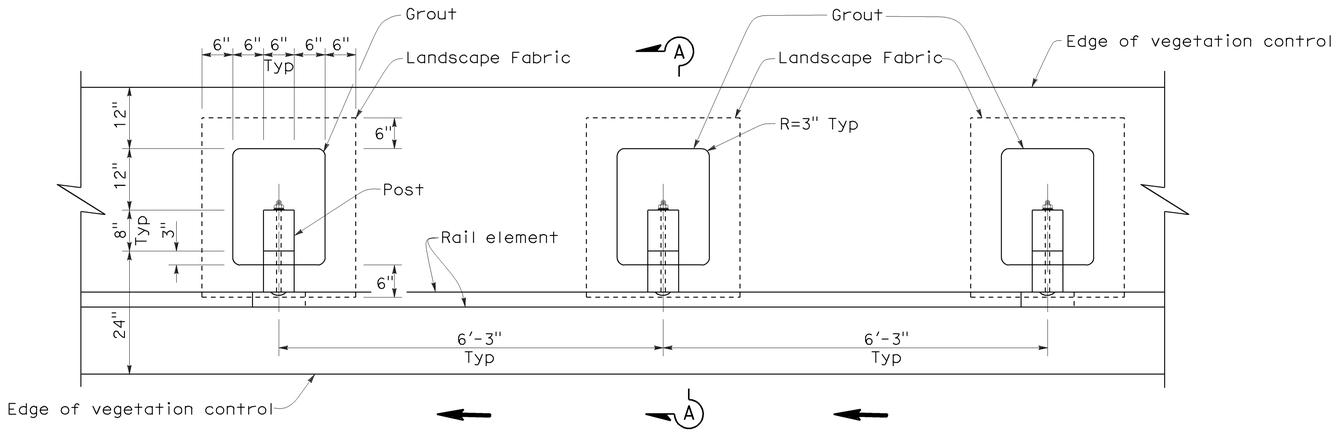

PLAN

NOTES:

1. Where the distance between back of post and hinge point is less than 24", vegetation control to be constructed flush with the back edge of the post, or hinge point, whichever is greater.
2. Where dike is constructed under railing, construct vegetation control to back edge of dike. Where paved shoulder is constructed within 24" in front of the post, construct vegetation control to the edge of paved shoulder.
3. Direction of adjacent traffic indicated by ← .

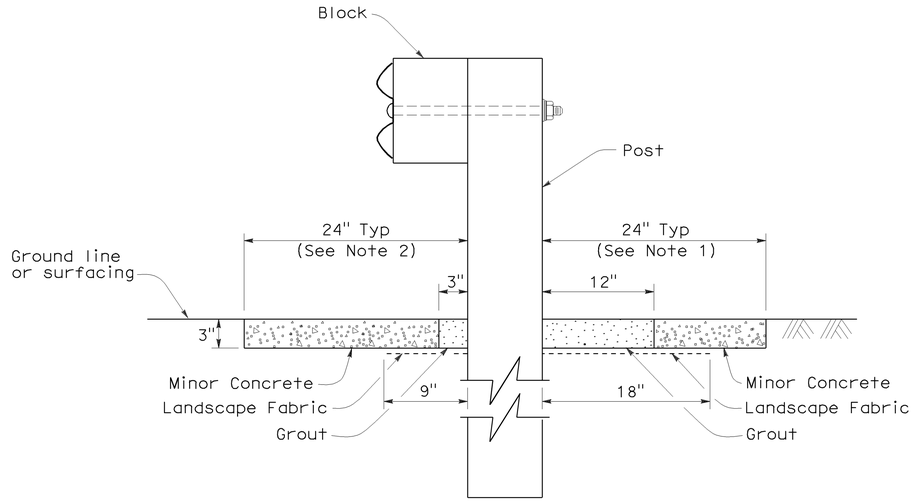

SECTION A-A

· THIS PLAN ACCURATE FOR EROSION CONTROL WORK ONLY.

VEGETATION CONTROL FOR STANDARD RAILING SECTION

CONSTRUCTION DETAILS

NO SCALE

C-28

STATE OF CALIFORNIA - DEPARTMENT OF TRANSPORTATION
Caltrans LANDSCAPE ARCHITECTURE
SENIOR LANDSCAPE ARCHITECT: DENNIS REEVES
CALCULATED-DESIGNED BY
CHECKED BY: KRISTEN LANGAGER
REVISED BY
DATE REVISED: SCOTT DOWLAN

LAST REVISION DATE PLOTTED => 08-DEC-2009
07-28-09 TIME PLOTTED => 07:49

BORDER LAST REVISED 3/1/2007

RELATIVE BORDER SCALE IS IN INCHES 0 1 2 3

USERNAME => trstrk
DGN FILE => 533072ga028.dgn

CU 05341

EA 330721

Dist	COUNTY	ROUTE	POST MILES TOTAL PROJECT	SHEET No.	TOTAL SHEETS
05	SLO	46	36.6/41.2	119	595

LICENSED LANDSCAPE ARCHITECT

12-7-09
PLANS APPROVAL DATE

THE STATE OF CALIFORNIA OR ITS OFFICERS OR AGENTS SHALL NOT BE RESPONSIBLE FOR THE ACCURACY OR COMPLETENESS OF ELECTRONIC COPIES OF THIS PLAN SHEET.

LICENSED LANDSCAPE ARCHITECT
SCOTT P. DOWLAN No. 4410
Expiration Date
9/30/10
Renewal Date
7/28/09
Date
STATE OF CALIFORNIA

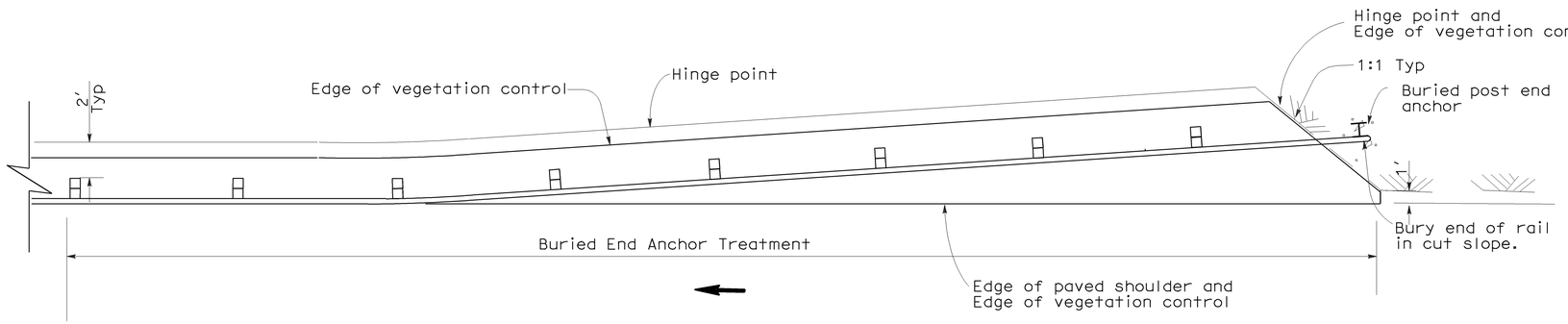

PLAN

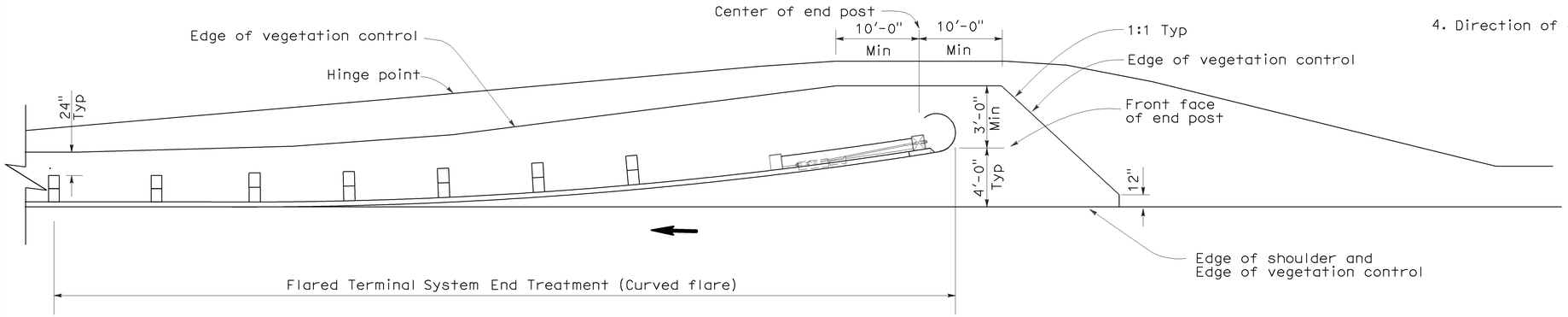

PLAN

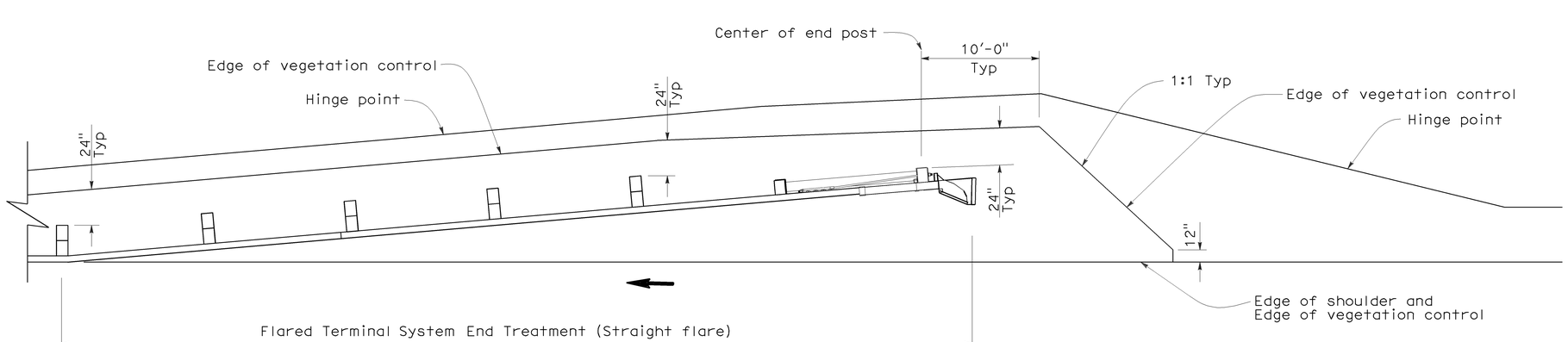

PLAN

NOTES:

1. See Vegetation Control for Standard Railing Section for additional vegetation control details.
2. Where the distance between back of post and hinge point is less than 24", vegetation control to be constructed flush with the back edge of the post or hinge point, whichever is greater.
3. Where dike is constructed under railing, construct vegetation control to back edge of dike. Where paved shoulder is constructed within 24" in front of the post, construct vegetation control to the edge of paved shoulder.
4. Direction of adjacent traffic indicated by ⟵.

THIS PLAN ACCURATE FOR EROSION CONTROL WORK ONLY.

VEGETATION CONTROL FOR TERMINAL SYSTEM END TREATMENTS

CONSTRUCTION DETAILS

NO SCALE

C-29

STATE OF CALIFORNIA - DEPARTMENT OF TRANSPORTATION
LANDSCAPE ARCHITECTURE
SENIOR LANDSCAPE ARCHITECT: DENNIS REEVES
CALCULATED-DESIGNED BY
CHECKED BY: KRISTEN LANGAGER
REVISED BY: SCOTT DOWLAN
DATE REVISED

LAST REVISION
DATE PLOTTED => 08-DEC-2009
TIME PLOTTED => 07:49
07-28-09

BORDER LAST REVISED 3/1/2007

RELATIVE BORDER SCALE IS IN INCHES 0 1 2 3

USERNAME => trstrk
DGN FILE => 533072ga029.dgn

CU 05341

EA 330721

Dist	COUNTY	ROUTE	POST MILES TOTAL PROJECT	SHEET No.	TOTAL SHEETS
05	SLO	46	36.6/41.2	120	595

LICENSED LANDSCAPE ARCHITECT

12-7-09
PLANS APPROVAL DATE

LICENSED LANDSCAPE ARCHITECT
SCOTT P. DOWLAN No. 4410
Expiration Date 9/30/10
Renewal Date 7/28/09
Date
STATE OF CALIFORNIA

THE STATE OF CALIFORNIA OR ITS OFFICERS OR AGENTS SHALL NOT BE RESPONSIBLE FOR THE ACCURACY OR COMPLETENESS OF ELECTRONIC COPIES OF THIS PLAN SHEET.

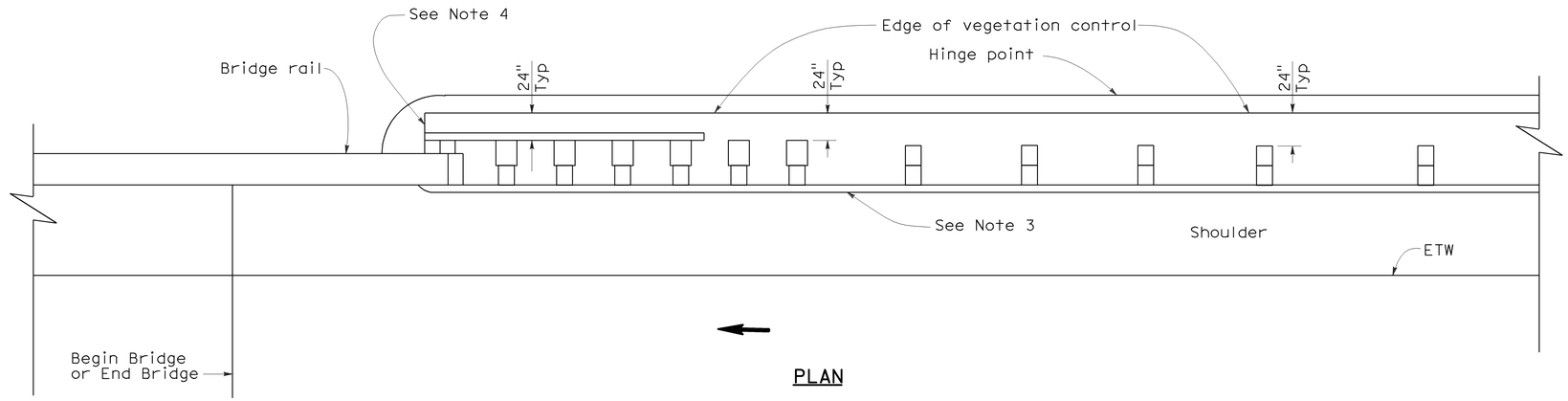

PLAN

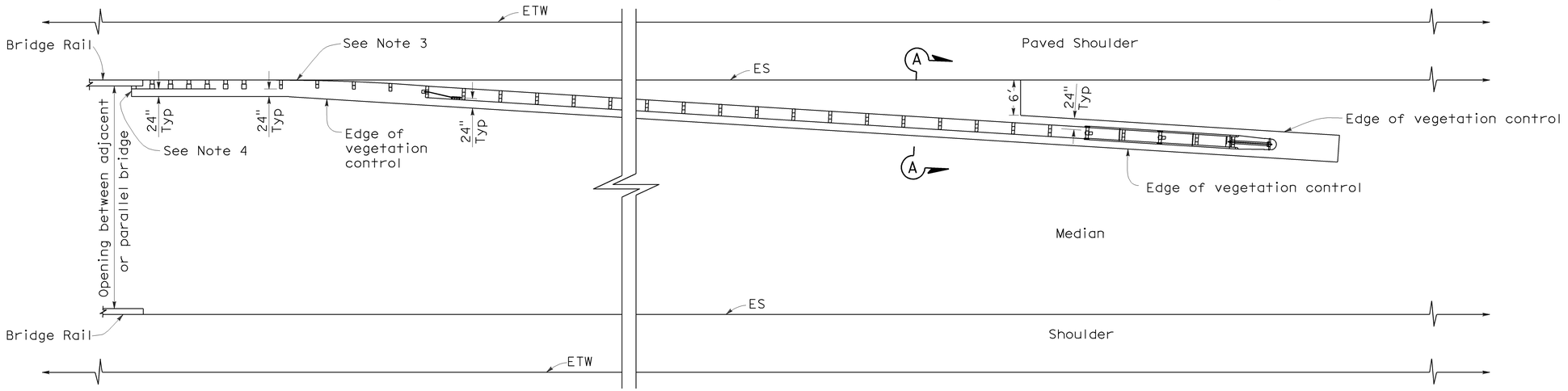

PLAN

SECTION A-A

NOTES:

1. See Vegetation Control for Standard Raining Section for additional vegetation control details.
2. Where the distance between back of post and hinge point is less than 24", vegetation control to be constructed flush with the back edge of the post, or hinge point, whichever is greater.
3. Where dike is constructed under railing, construct vegetation control to back edge of dike. Where paved shoulder is constructed within 24" in front of the post, construct vegetation control to the edge of paved shoulder.
4. End vegetation control at end of backside rail element.
5. Direction of adjacent traffic indicated by ←.

VEGETATION CONTROL AT STRUCTURE APPROACH AND DEPARTURE

THIS PLAN ACCURATE FOR EROSION CONTROL WORK ONLY.

CONSTRUCTION DETAILS

NO SCALE

C-30

LAST REVISION 07-28-09
DATE PLOTTED => 08-DEC-2009
TIME PLOTTED => 07:50

STATE OF CALIFORNIA - DEPARTMENT OF TRANSPORTATION
LANDSCAPE ARCHITECTURE
SENIOR LANDSCAPE ARCHITECT: DENNIS REEVES
CALCULATED-DESIGNED BY: SCOTT DOWLAN
CHECKED BY: KRISTEN LANGAGER
REVISED BY
DATE REVISED

BORDER LAST REVISED 3/1/2007
RELATIVE BORDER SCALE IS IN INCHES 0 1 2 3
USERNAME => trstrk
DGN FILE => 533072ga030.dgn
CU 05341
EA 330721

Dist	COUNTY	ROUTE	POST MILES TOTAL PROJECT	SHEET No.	TOTAL SHEETS
05	SLO	46	36.6/41.2	121	595

LICENSED LANDSCAPE ARCHITECT

12-7-09
PLANS APPROVAL DATE

THE STATE OF CALIFORNIA OR ITS OFFICERS OR AGENTS SHALL NOT BE RESPONSIBLE FOR THE ACCURACY OR COMPLETENESS OF ELECTRONIC COPIES OF THIS PLAN SHEET.

LICENSED LANDSCAPE ARCHITECT
SCOTT P. DOWLAN No. 4410
Signature
9/30/10
Renewal Date
7/28/09
Date
STATE OF CALIFORNIA

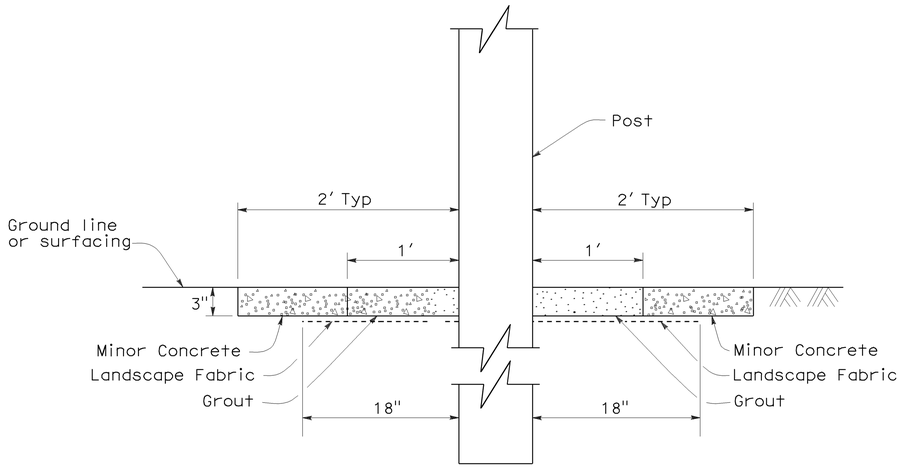

SECTION A-A

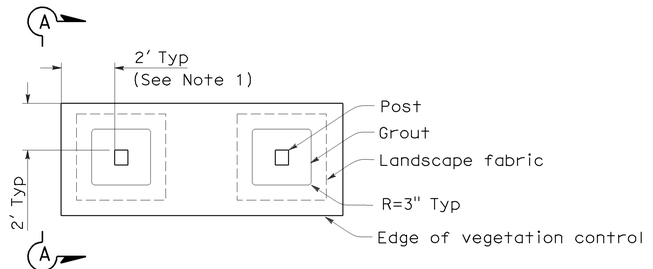

PLAN

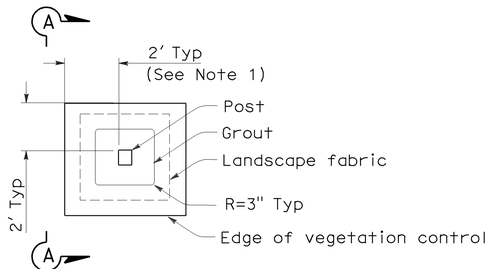

PLAN

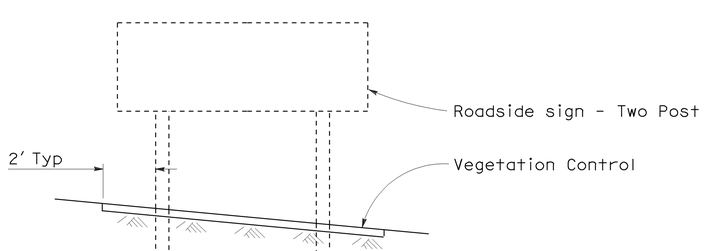

ELEVATION

TWO POST INSTALLATION

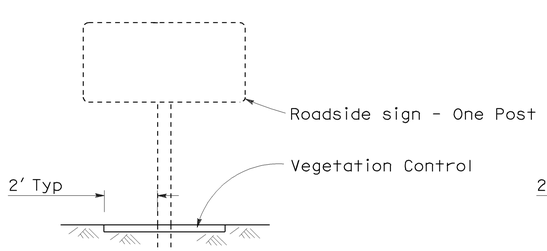

ELEVATION

SINGLE POST INSTALLATION

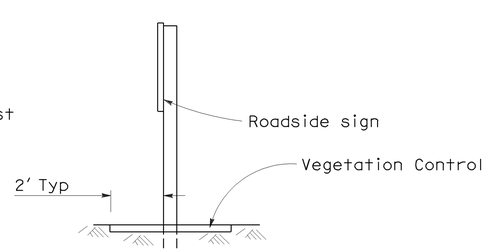

SIDE VIEW

VEGETATION CONTROL AT ROADSIDE SIGNS

NOTE:

1. Where dike is constructed within 2' of post, construct vegetation control to back edge of dike. Where paved shoulder is constructed within 2' of the post, construct vegetation control to the edge of paved shoulder.

THIS PLAN ACCURATE FOR EROSION CONTROL WORK ONLY.

CONSTRUCTION DETAILS

NO SCALE

C-31

LAST REVISION DATE PLOTTED => 08-DEC-2009
07-28-09 TIME PLOTTED => 07:50

STATE OF CALIFORNIA - DEPARTMENT OF TRANSPORTATION
Caltrans LANDSCAPE ARCHITECTURE
SENIOR LANDSCAPE ARCHITECT DENNIS REEVES
CALCULATED-DESIGNED BY KRISTEN LANGAGER
CHECKED BY SCOTT DOWLAN
REVISED BY
DATE REVISED

BORDER LAST REVISED 3/1/2007
RELATIVE BORDER SCALE IS IN INCHES 0 1 2 3
USERNAME => trstrk
DGN FILE => 533072ga031.dgn
CU 05341
EA 330721

Dist	COUNTY	ROUTE	POST MILES TOTAL PROJECT	SHEET No.	TOTAL SHEETS
05	SLO	46	36.6/41.2	122	595

8-24-09
REGISTERED CIVIL ENGINEER DATE

12-7-09
PLANS APPROVAL DATE

REGISTERED PROFESSIONAL ENGINEER
JOSE M. ARGUELLO
No. 51321
Exp 06-30-10
CIVIL
STATE OF CALIFORNIA

THE STATE OF CALIFORNIA OR ITS OFFICERS OR AGENTS SHALL NOT BE RESPONSIBLE FOR THE ACCURACY OR COMPLETENESS OF ELECTRONIC COPIES OF THIS PLAN SHEET.

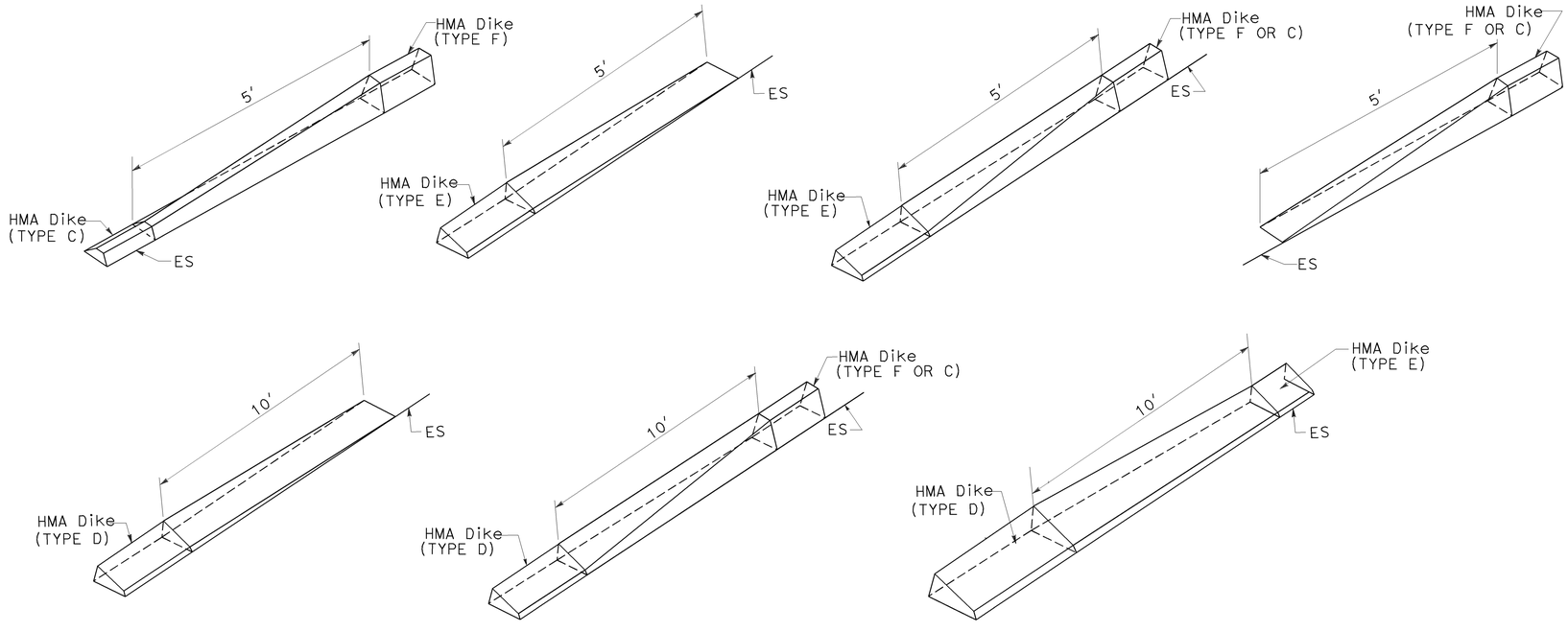

HMA DIKE TRANSITION DETAILS

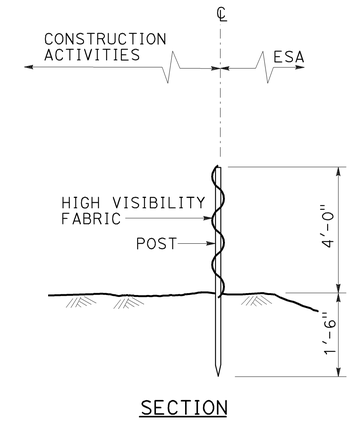

SECTION

TEMPORARY FENCE (TYPE ESA)

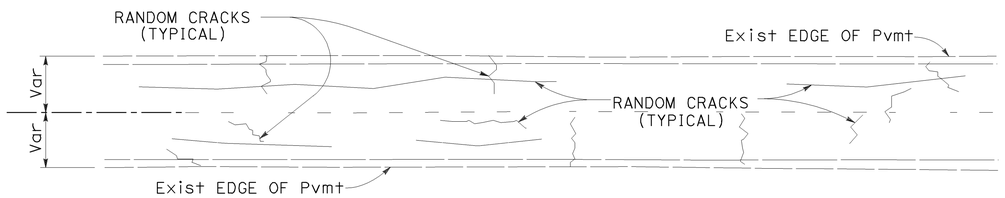

SEAL RANDOM CRACK DETAIL

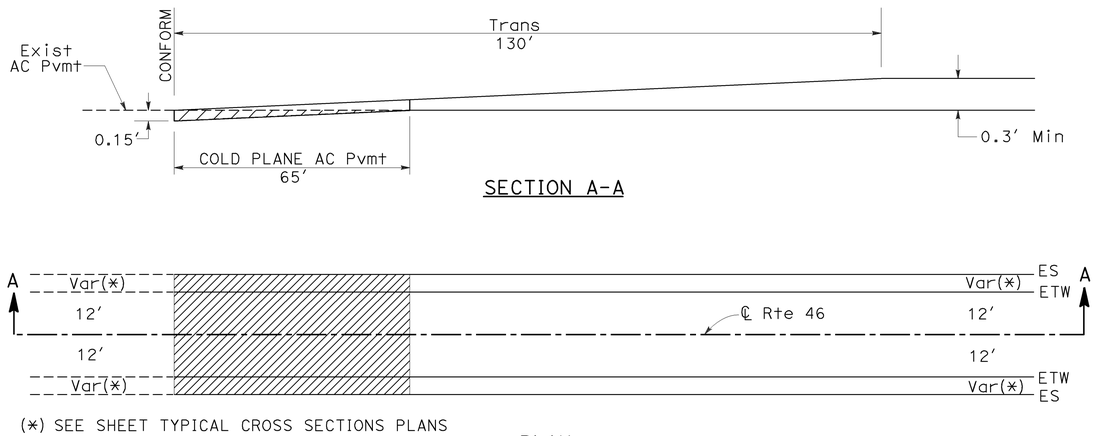

SECTION A-A

PLAN

LONGITUDINAL AC TRANSITION

CONSTRUCTION DETAILS

NO SCALE

C-32

STATE OF CALIFORNIA - DEPARTMENT OF TRANSPORTATION
Caltrans
06-DESIGN
FUNCTIONAL SUPERVISOR: JACK WALKER
CALCULATED-DESIGNED BY: JOSE ARGUELLO
CHECKED BY: SUMI HOODE
REVISED BY
DATE REVISED

LAST REVISION DATE PLOTTED => 06-DEC-2009
TIME PLOTTED => 07:50
05-29-09

BORDER LAST REVISED 3/1/2007
RELATIVE BORDER SCALE IS IN INCHES 0 1 2 3
USERNAME => trstrk
DGN FILE => 533072ga032.dgn
CU 06220
EA 330721

NOTES:

1. THIS PLAN ACCURATE FOR GEOSYNTHETIC REINFORCED EMBANKMENT ONLY.
2. OVEREXCAVATED MATERIAL TO BE USED AS EMBANKMENT AND PLACED AT LOCATIONS WHERE THE EMBANKMENT IS TO BE COMPACTED AT 90%.
3. FOR SECTIONS A-A AND B-B, SEE SHEET C-35.

Dist	COUNTY	ROUTE	POST MILES TOTAL PROJECT	SHEET No.	TOTAL SHEETS
05	SLO	46	36.6/41.2	123	595

8-24-09
REGISTERED CIVIL ENGINEER DATE

12-7-09
PLANS APPROVAL DATE

REGISTERED PROFESSIONAL ENGINEER
JOSE M. ARGUELLO
No. 51321
Exp 06-30-10
CIVIL
STATE OF CALIFORNIA

THE STATE OF CALIFORNIA OR ITS OFFICERS OR AGENTS SHALL NOT BE RESPONSIBLE FOR THE ACCURACY OR COMPLETENESS OF ELECTRONIC COPIES OF THIS PLAN SHEET.

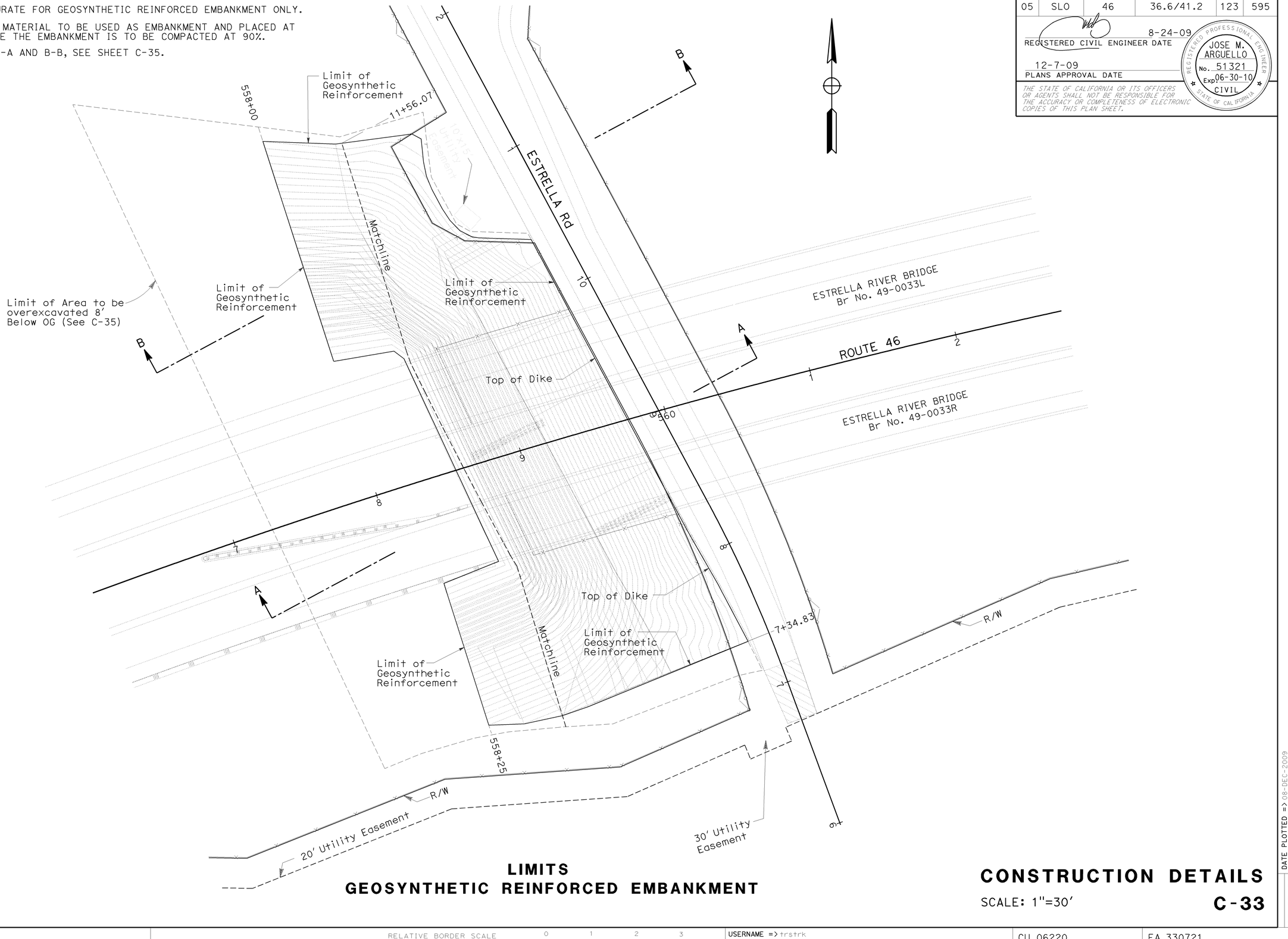

LIMITS
GEOSYNTHETIC REINFORCED EMBANKMENT

CONSTRUCTION DETAILS

SCALE: 1"=30'

C-33

DATE PLOTTED => 08-DEC-2009
TIME PLOTTED => 07:50
07-08-09

STATE OF CALIFORNIA - DEPARTMENT OF TRANSPORTATION
Caltrans
06-DESIGN

FUNCTIONAL SUPERVISOR: JACK WALKER

CALCULATED-DESIGNED BY: JOSE ARGUELLO
CHECKED BY: SUMI HOODE

REVISED BY | DATE REVISED

BORDER LAST REVISED 3/1/2007

RELATIVE BORDER SCALE IS IN INCHES 0 1 2 3

USERNAME => trstrk
DGN FILE => 533072ga033.dgn

CU 06220

EA 330721

Dist	COUNTY	ROUTE	POST MILES TOTAL PROJECT	SHEET No.	TOTAL SHEETS
05	SLO	46	36.6/41.2	124	595

8-24-09
REGISTERED CIVIL ENGINEER DATE

12-7-09
PLANS APPROVAL DATE

REGISTERED PROFESSIONAL ENGINEER
JOSE M. ARGUELLO
No. 51321
Exp 06-30-10
CIVIL
STATE OF CALIFORNIA

THE STATE OF CALIFORNIA OR ITS OFFICERS OR AGENTS SHALL NOT BE RESPONSIBLE FOR THE ACCURACY OR COMPLETENESS OF ELECTRONIC COPIES OF THIS PLAN SHEET.

NOTES:

1. THIS PLAN ACCURATE FOR GEOSYNTHETIC REINFORCED EMBANKMENT ONLY.
2. OVEREXCAVATED MATERIAL TO BE USED AS EMBANKMENT AND PLACED AT LOCATIONS WHERE THE EMBANKMENT IS TO BE COMPACTED AT 90%.
3. FOR SECTIONS A-A AND B-B, SEE SHEET C-35.

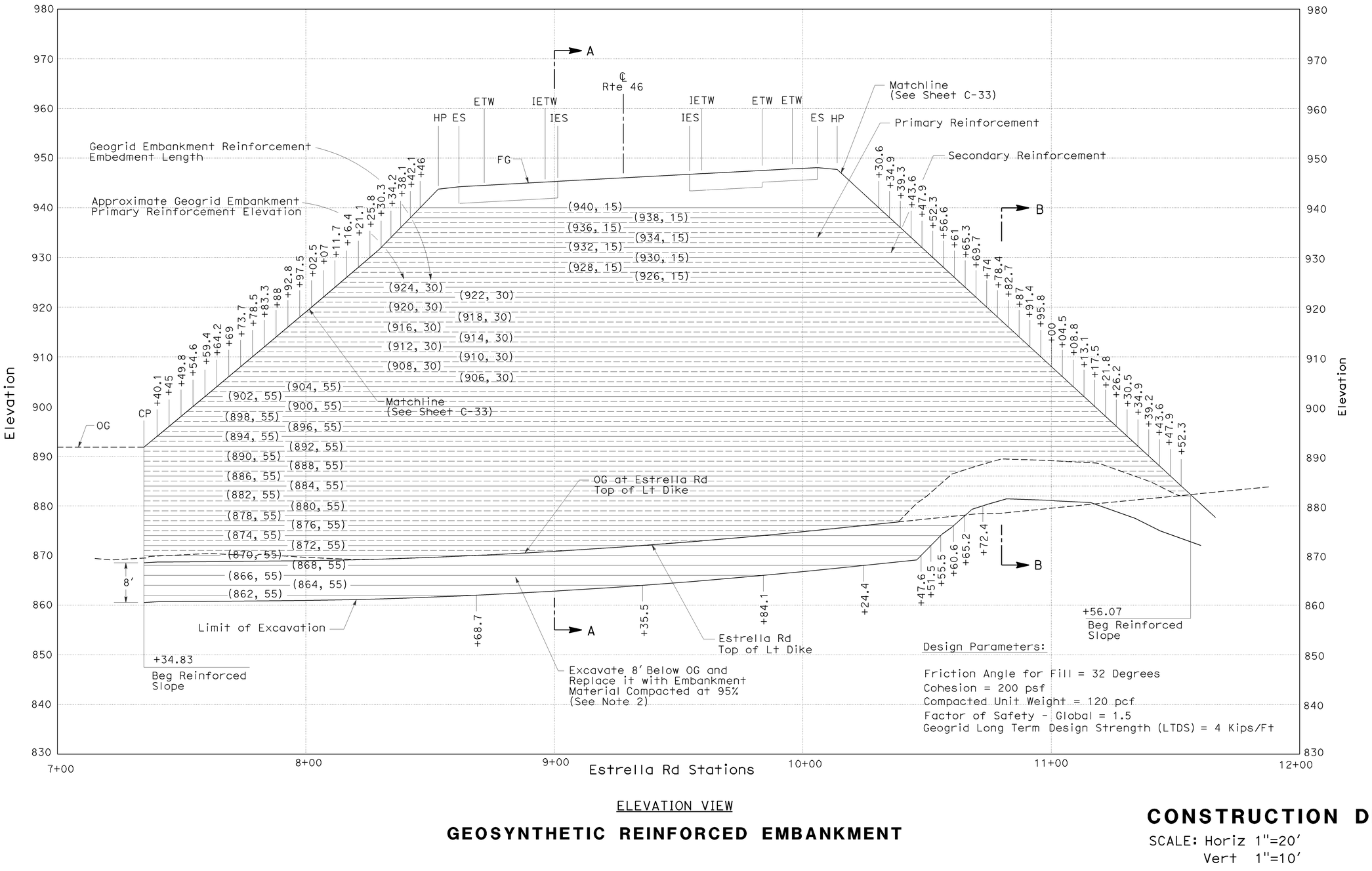

ELEVATION VIEW

GEOSYNTHETIC REINFORCED EMBANKMENT

CONSTRUCTION DETAILS

SCALE: Horiz 1"=20'
Vert 1"=10'

C-34

STATE OF CALIFORNIA - DEPARTMENT OF TRANSPORTATION
Caltrans
06-DESIGN
FUNCTIONAL SUPERVISOR: JACK WALKER
CALCULATED-DESIGNED BY: JOSE ARGUELLO
CHECKED BY: SUMI HOODE
REVISED BY
DATE REVISED

DATE PLOTTED => 08-DEC-2009
TIME PLOTTED => 07:50
05-29-09

BORDER LAST REVISED 3/1/2007
RELATIVE BORDER SCALE IS IN INCHES 0 1 2 3
USERNAME => trstrk
DGN FILE => 533072ga034.dgn
CU 06220
EA 330721

Dist	COUNTY	ROUTE	POST MILES TOTAL PROJECT	SHEET No.	TOTAL SHEETS
05	SLO	46	36.6/41.2	125	595

8-24-09
REGISTERED CIVIL ENGINEER DATE

12-7-09
PLANS APPROVAL DATE

REGISTERED PROFESSIONAL ENGINEER
JOSE M. ARGUELLO
No. 51321
Exp 06-30-10
CIVIL
STATE OF CALIFORNIA

THE STATE OF CALIFORNIA OR ITS OFFICERS OR AGENTS SHALL NOT BE RESPONSIBLE FOR THE ACCURACY OR COMPLETENESS OF ELECTRONIC COPIES OF THIS PLAN SHEET.

NOTES:

1. OVEREXCAVATED MATERIAL TO BE USED AS EMBANKMENT AND PLACED AT LOCATIONS WHERE THE EMBANKMENT IS TO BE COMPACTED AT 90%.

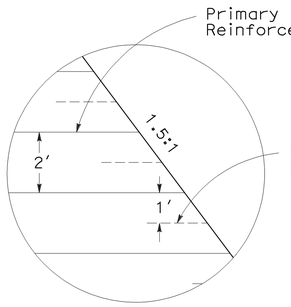

DETAIL "A" (Typ)
NO SCALE

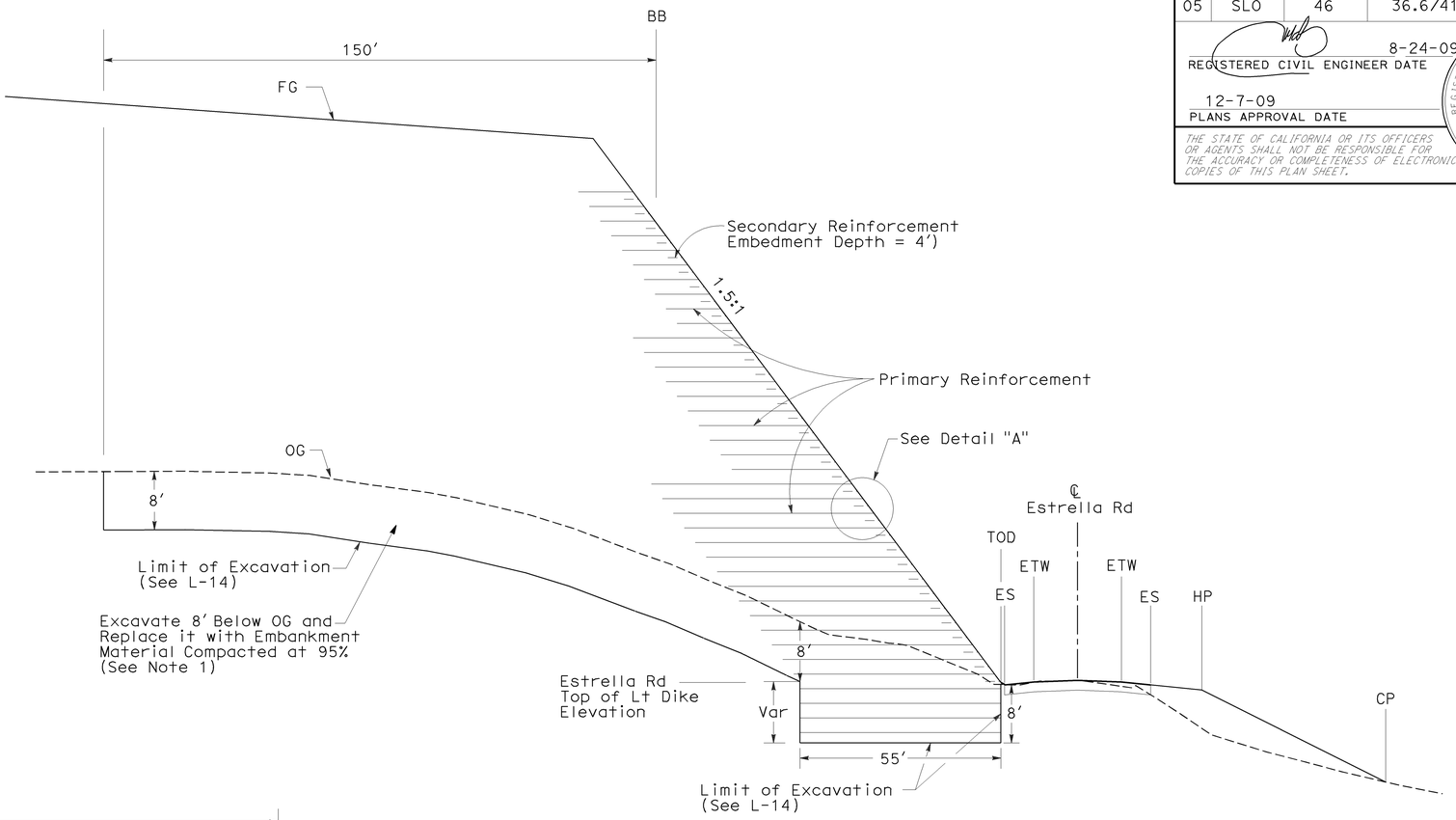

SECTION A-A

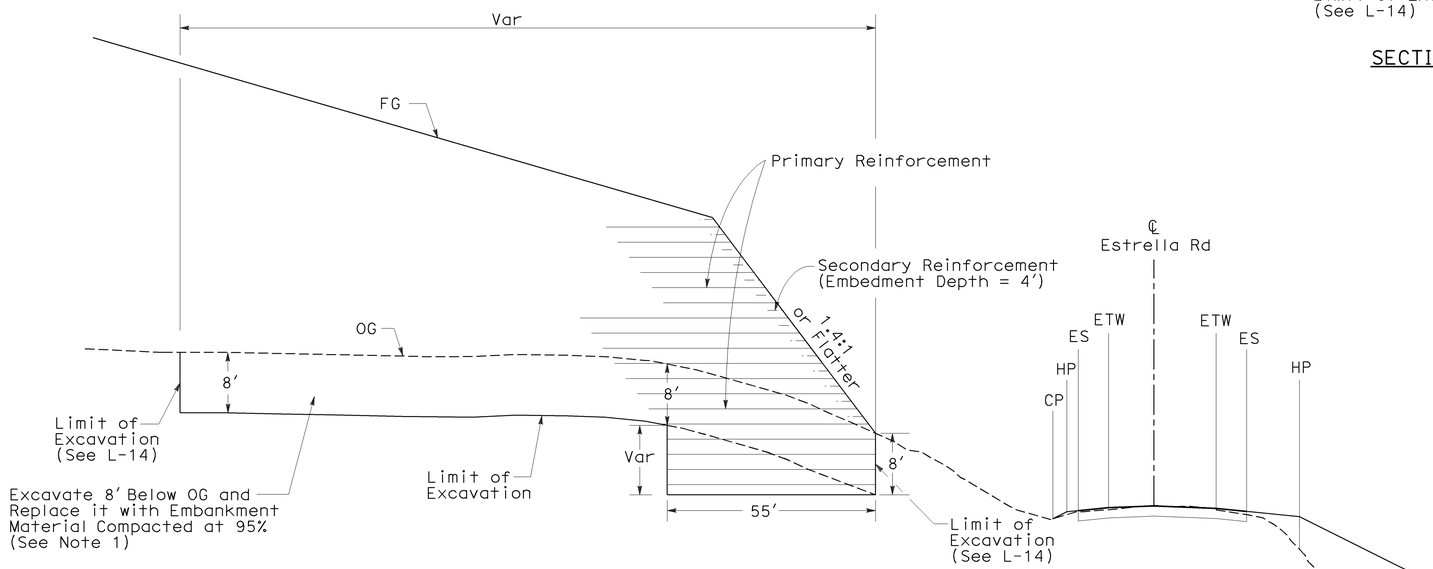

SECTION B-B

TYPICAL CROSS SECTIONS

GEOSYNTHETIC REINFORCED EMBANKMENT

CONSTRUCTION DETAILS

SCALE: Horiz 1"=20′
Vert 1"=10′

C-35

STATE OF CALIFORNIA - DEPARTMENT OF TRANSPORTATION
Caltrans
06-DESIGN
FUNCTIONAL SUPERVISOR: JACK WALKER
CALCULATED-DESIGNED BY: JOSE ARGUELLO
CHECKED BY: SUMI HOODE
REVISED BY
DATE REVISED

LAST REVISION | DATE PLOTTED => 08-DEC-2009
05-29-09 | TIME PLOTTED => 07:50

BORDER LAST REVISED 3/1/2007
RELATIVE BORDER SCALE IS IN INCHES 0 1 2 3
USERNAME => trstrk
DGN FILE => 533072ga035.dgn
CU 06220
EA 330721

Dist	COUNTY	ROUTE	POST MILES TOTAL PROJECT	SHEET No.	TOTAL SHEETS
05	SLO	46	36.6/41.2	126	595

8-24-09
REGISTERED CIVIL ENGINEER DATE

12-7-09
PLANS APPROVAL DATE

REGISTERED PROFESSIONAL ENGINEER
JOSE M. ARGUELLO
No. 51321
Exp 06-30-10
CIVIL
STATE OF CALIFORNIA

THE STATE OF CALIFORNIA OR ITS OFFICERS OR AGENTS SHALL NOT BE RESPONSIBLE FOR THE ACCURACY OR COMPLETENESS OF ELECTRONIC COPIES OF THIS PLAN SHEET.

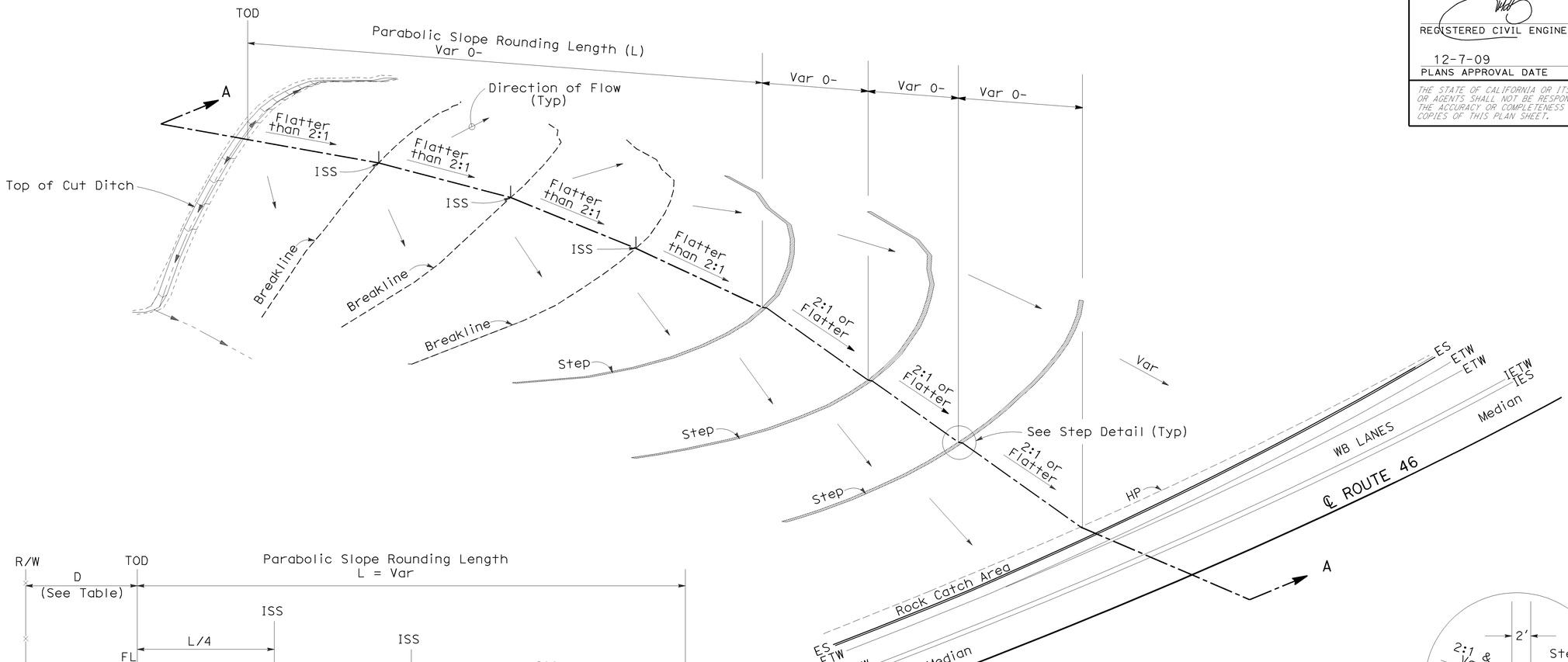

ISOMETRIC

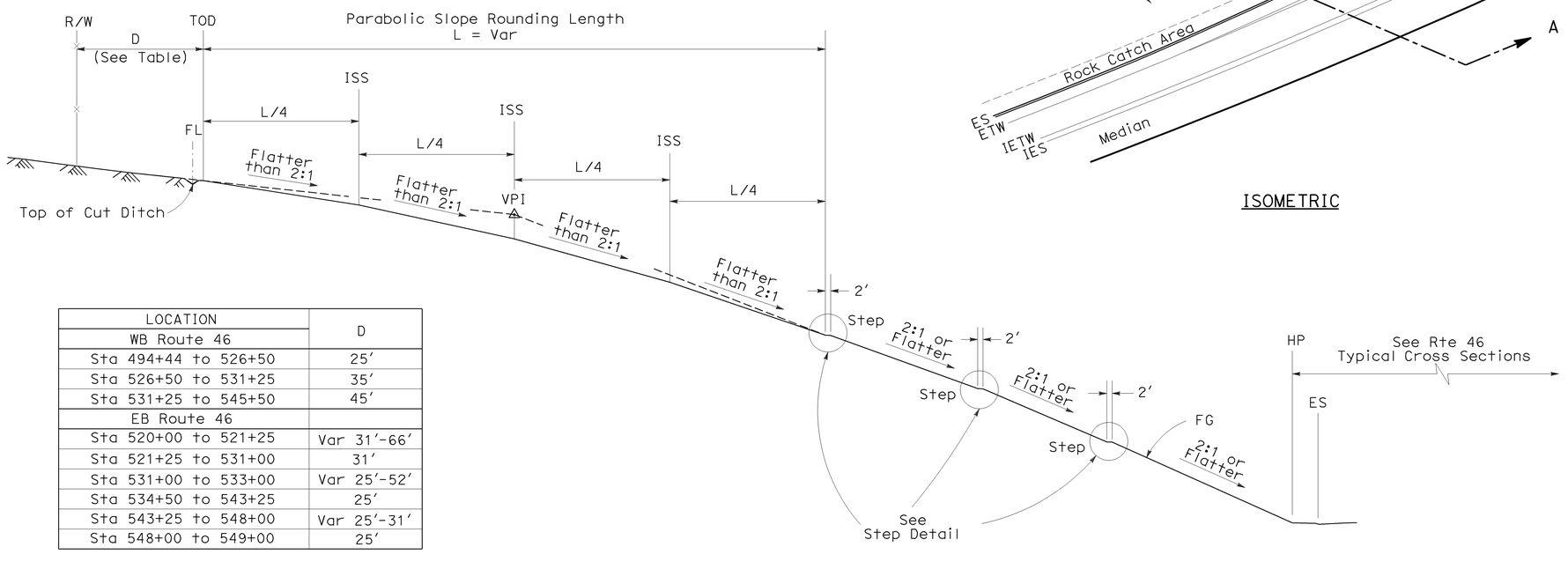

SECTION A-A

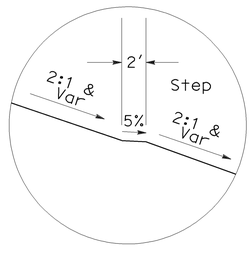

STEP DETAIL (TYPICAL)

LOCATION	D
WB Route 46	
Sta 494+44 to 526+50	25′
Sta 526+50 to 531+25	35′
Sta 531+25 to 545+50	45′
EB Route 46	
Sta 520+00 to 521+25	Var 31′-66′
Sta 521+25 to 531+00	31′
Sta 531+00 to 533+00	Var 25′-52′
Sta 534+50 to 543+25	25′
Sta 543+25 to 548+00	Var 25′-31′
Sta 548+00 to 549+00	25′

ROUTE 46 WB LANES
STA 494+44 TO STA 545+50

ROUTE 46 EB LANES
STA 520+00 TO STA 533+00

CONSTRUCTION DETAILS
(LANDFORM GRADING)

NO SCALE

C-36

CALCULATED-DESIGNED BY: JOSE ARGUELLO
CHECKED BY: SUMI HOODE
FUNCTIONAL SUPERVISOR: JACK WALKER
STATE OF CALIFORNIA - DEPARTMENT OF TRANSPORTATION
06-DESIGN
Caltrans
REVISED BY
DATE REVISED

LAST REVISION | DATE PLOTTED => 08-DEC-2009
05-29-09 | TIME PLOTTED => 07:50

BORDER LAST REVISED 3/1/2007
RELATIVE BORDER SCALE IS IN INCHES 0 1 2 3
USERNAME => trstrk
DGN FILE => 533072ga036.dgn
CU 06220
EA 330721

Dist	COUNTY	ROUTE	POST MILES TOTAL PROJECT	SHEET No.	TOTAL SHEETS
05	SLO	46	36.6/41.2	127	595

8-24-09
REGISTERED CIVIL ENGINEER DATE

12-7-09
PLANS APPROVAL DATE

REGISTERED PROFESSIONAL ENGINEER
JOSE M. ARGUELLO
No. 51321
Exp 06-30-10
CIVIL
STATE OF CALIFORNIA

THE STATE OF CALIFORNIA OR ITS OFFICERS OR AGENTS SHALL NOT BE RESPONSIBLE FOR THE ACCURACY OR COMPLETENESS OF ELECTRONIC COPIES OF THIS PLAN SHEET.

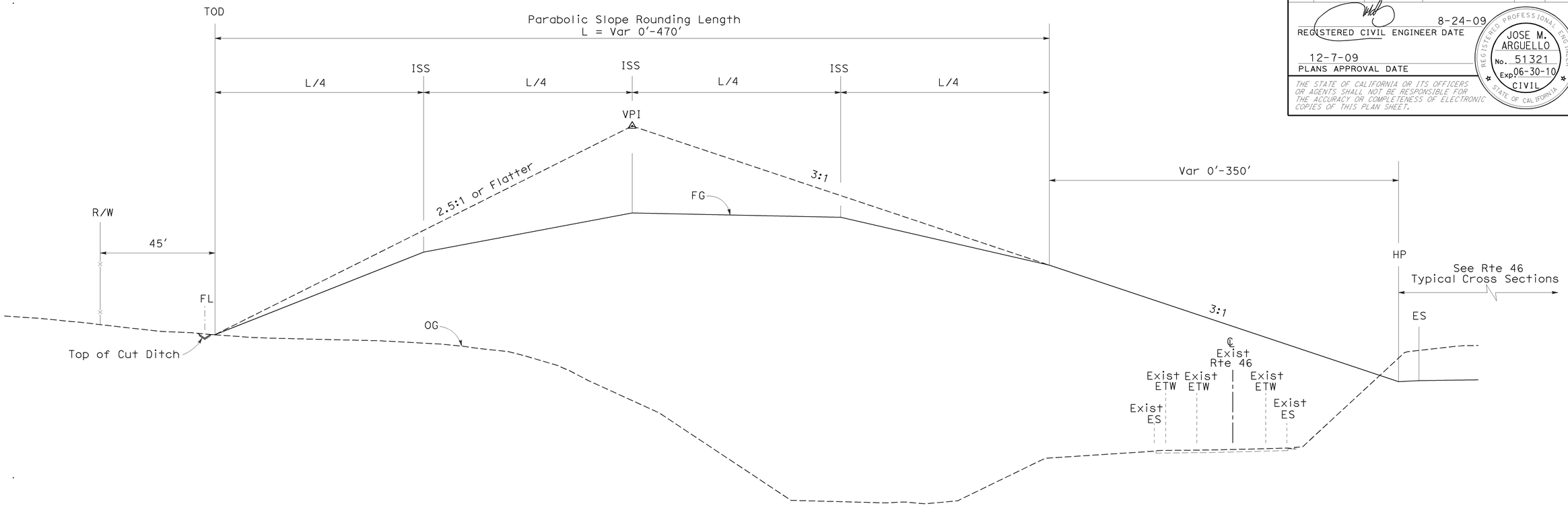

ROUTE 46 WB LANES
STA 545+50 TO STA 553+00

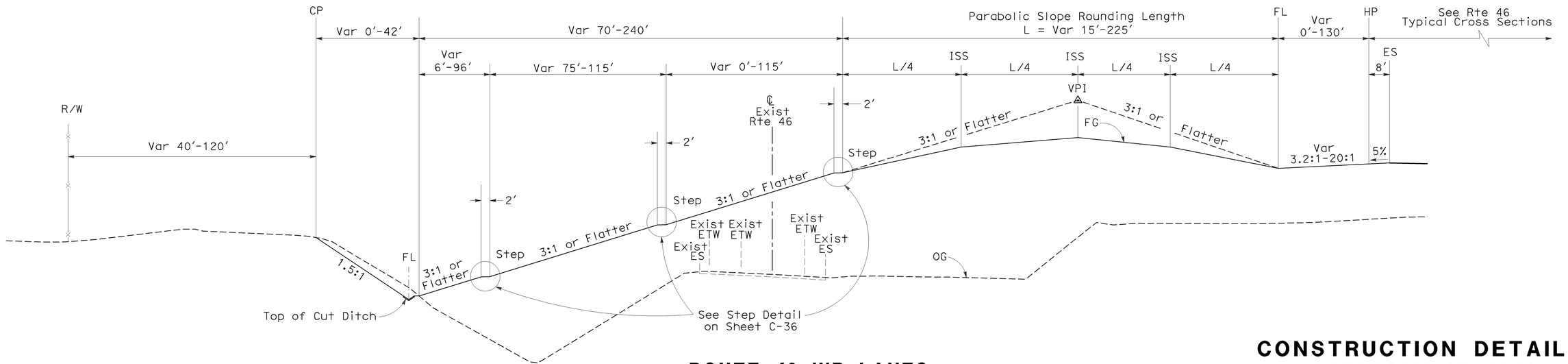

ROUTE 46 WB LANES
STA 553+00 TO STA 555+50

CONSTRUCTION DETAILS
(LANDFORM GRADING)

NO SCALE

C-37

STATE OF CALIFORNIA - DEPARTMENT OF TRANSPORTATION
Caltrans
06-DESIGN
FUNCTIONAL SUPERVISOR: JACK WALKER
CALCULATED-DESIGNED BY: JOSE ARGUELLO
CHECKED BY: SUMI HOODE
REVISED BY
DATE REVISED

LAST REVISION DATE PLOTTED => 08-DEC-2009
05-29-09 TIME PLOTTED => 08:04

BORDER LAST REVISED 3/1/2007
RELATIVE BORDER SCALE IS IN INCHES 0 1 2 3
USERNAME => trstrk
DGN FILE => 533072ga037.dgn
CU 06220
EA 330721

Dist	COUNTY	ROUTE	POST MILES TOTAL PROJECT	SHEET No.	TOTAL SHEETS
05	SLO	46	36.6/41.2	128	595

8-24-09
REGISTERED CIVIL ENGINEER DATE

12-7-09
PLANS APPROVAL DATE

REGISTERED PROFESSIONAL ENGINEER
JOSE M. ARGUELLO
No. 51321
Exp 06-30-10
CIVIL
STATE OF CALIFORNIA

THE STATE OF CALIFORNIA OR ITS OFFICERS OR AGENTS SHALL NOT BE RESPONSIBLE FOR THE ACCURACY OR COMPLETENESS OF ELECTRONIC COPIES OF THIS PLAN SHEET.

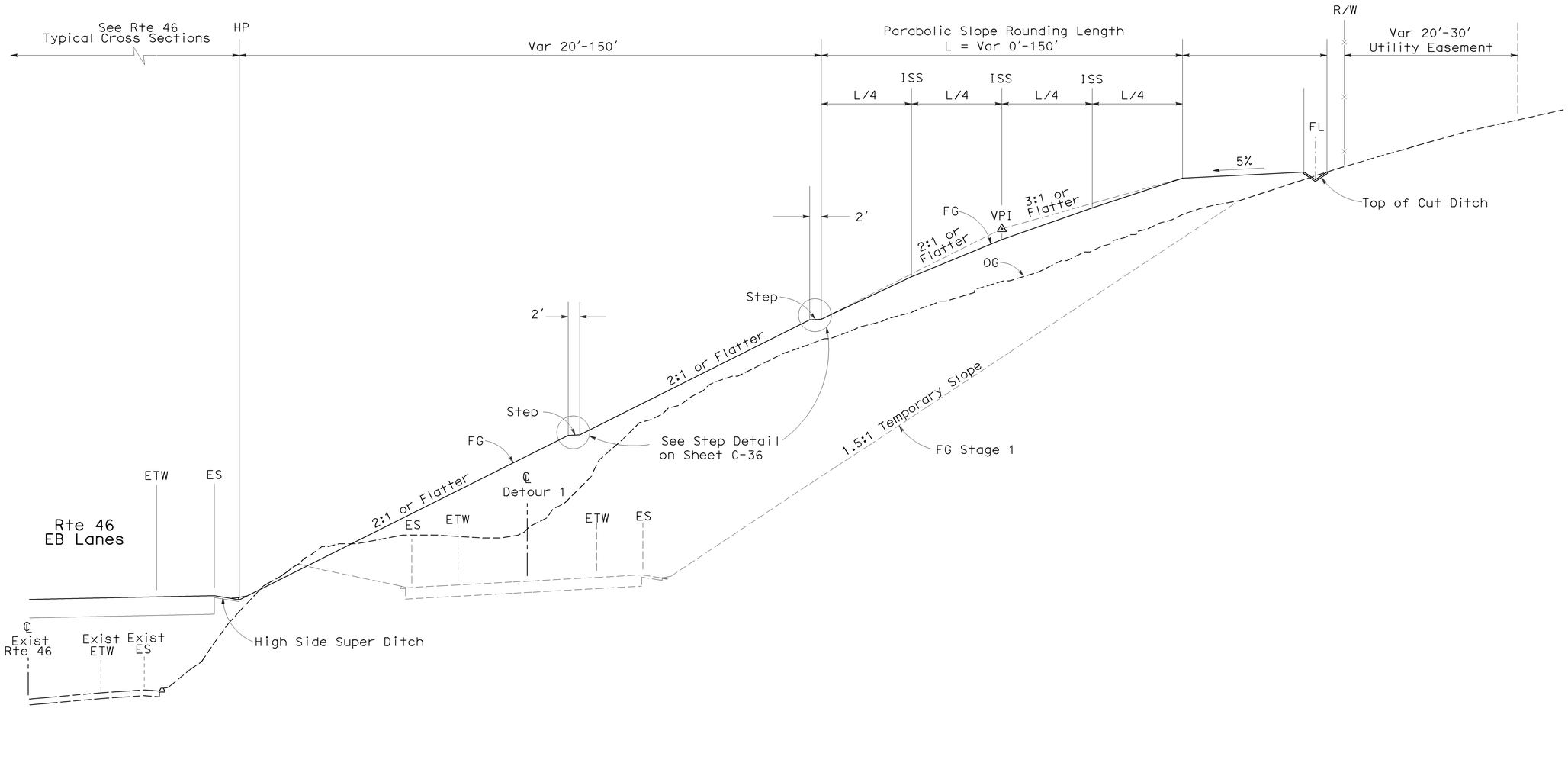

ROUTE 46 EB LANES

STA 534+25 TO STA 550+00

CONSTRUCTION DETAILS
(LANDFORM GRADING)

NO SCALE

C-38

CALCULATED-DESIGNED BY
CHECKED BY
REVISED BY
DATE REVISED
JOSE ARGUELLO
SUMI HOODE
FUNCTIONAL SUPERVISOR
JACK WALKER
STATE OF CALIFORNIA - DEPARTMENT OF TRANSPORTATION
06-DESIGN
Caltrans

LAST REVISION 05-29-09
DATE PLOTTED => 08-DEC-2009
TIME PLOTTED => 08:04

BORDER LAST REVISED 3/1/2007
RELATIVE BORDER SCALE IS IN INCHES 0 1 2 3
USERNAME => trstrk
DGN FILE => 533072ga038.dgn
CU 06220
EA 330721

Dist	COUNTY	ROUTE	POST MILES TOTAL PROJECT	SHEET No.	TOTAL SHEETS
05	SLO	46	36.6/41.2	129	595

8-24-09
REGISTERED CIVIL ENGINEER DATE

12-7-09
PLANS APPROVAL DATE

REGISTERED PROFESSIONAL ENGINEER
JOSE M. ARGUELLO
No. 51321
Exp 06-30-10
CIVIL
STATE OF CALIFORNIA

THE STATE OF CALIFORNIA OR ITS OFFICERS OR AGENTS SHALL NOT BE RESPONSIBLE FOR THE ACCURACY OR COMPLETENESS OF ELECTRONIC COPIES OF THIS PLAN SHEET.

NOTES:

1. USE CASE 1 OR CASE 2 WHEN ONE POST OMITTED.
2. USE CASE 3 WHEN TWO POSTS ARE OMITTED.
3. FOR OTHER DETAILS, SEE STANDARD PLANS A77A1, A77A2, B1 AND C2.

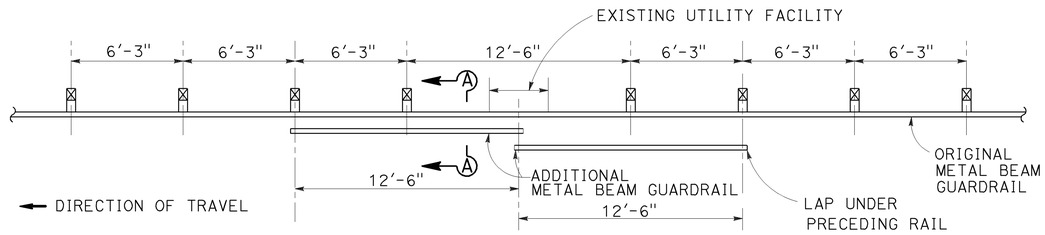

CASE 1
ONE POST OMITTED (SPLICE IN CENTER)

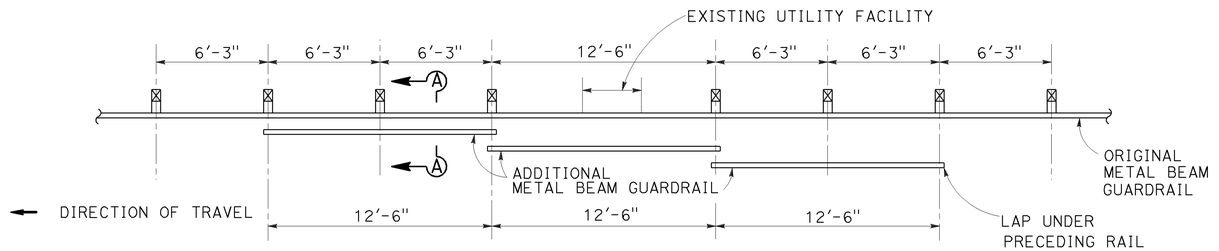

CASE 2
ONE POST OMITTED (SPLICE AT POSTS)

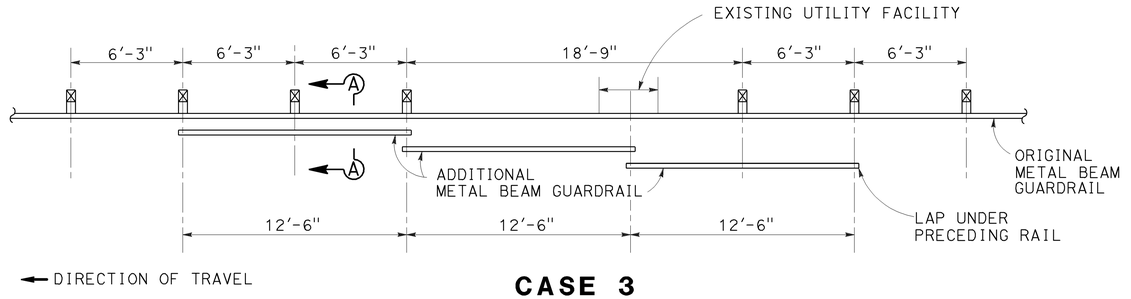

CASE 3
TWO POSTS OMITTED

LONG SPAN NESTED GUARDRAIL

CONSTRUCTION DETAILS

NO SCALE

C-39

REVISED BY	DATE REVISED

CALCULATED-DESIGNED BY: JOSE ARGUELLO
CHECKED BY: SUMI HOODE
FUNCTIONAL SUPERVISOR: JACK WALKER
STATE OF CALIFORNIA - DEPARTMENT OF TRANSPORTATION
Caltrans 06-DESIGN

LAST REVISION 03-20-09 | DATE PLOTTED => 08-DEC-2009 | TIME PLOTTED => 08:04

BORDER LAST REVISED 3/1/2007

RELATIVE BORDER SCALE IS IN INCHES 0 1 2 3

USERNAME => trstrk
DGN FILE => 533072ga039.dgn

CU 06220

EA 330721

Dist	COUNTY	ROUTE	POST MILES TOTAL PROJECT	SHEET No.	TOTAL SHEETS
05	SLO	46	36.6/41.2	130	595

8-24-09
REGISTERED CIVIL ENGINEER DATE

12-7-09
PLANS APPROVAL DATE

REGISTERED PROFESSIONAL ENGINEER
JOSE M. ARGUELLO
No. 51321
Exp 06-30-10
CIVIL
STATE OF CALIFORNIA

THE STATE OF CALIFORNIA OR ITS OFFICERS OR AGENTS SHALL NOT BE RESPONSIBLE FOR THE ACCURACY OR COMPLETENESS OF ELECTRONIC COPIES OF THIS PLAN SHEET.

NOTES:

1. INSTALLATION TO COMPLY WITH MANUFACTURER'S INSTRUCTIONS.
2. FOR ADDITIONAL INFORMATION, SEE MANUFACTURER'S PLANS.

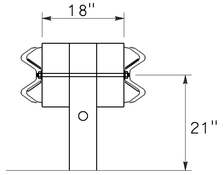

SECTION A-A

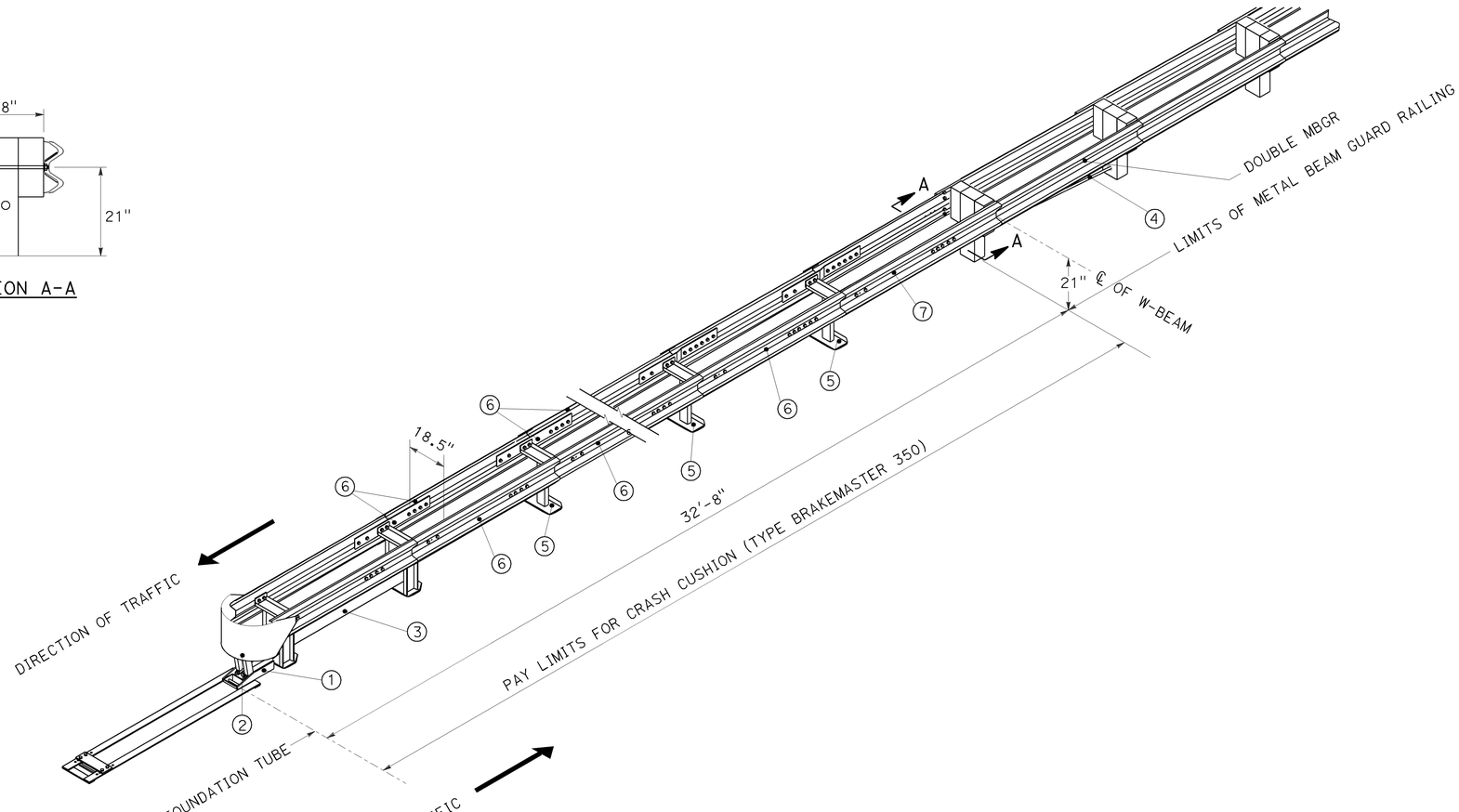

LEGEND

1. ANCHOR Assy, FOUNDATION TUBE
2. BREAKAWAY Assy
3. BRAKE/TENSION SUPPORT Assy
4. CABLE/BRAKE Assy
5. DIAPHRAGM
6. PANEL/STRAP Assy
7. TRANSITION STRAP Assy

CRASH CUSHION (TYPE BRAKEMASTER 350)

(BIDIRECTIONAL)

CONSTRUCTION DETAILS

NO SCALE

C-40

CALCULATED-DESIGNED BY
CHECKED BY
REVISED BY
DATE REVISED
JOSE ARGUELLO
SUMI HOODE
FUNCTIONAL SUPERVISOR
JACK WALKER
STATE OF CALIFORNIA - DEPARTMENT OF TRANSPORTATION
Caltrans
06-DESIGN

LAST REVISION DATE PLOTTED => 08-DEC-2009
TIME PLOTTED => 08:04
04-22-09

Dist	COUNTY	ROUTE	POST MILES TOTAL PROJECT	SHEET No.	TOTAL SHEETS
05	SLO	46	36.6/41.2	131	595

LICENSED LANDSCAPE ARCHITECT

12-7-09
PLANS APPROVAL DATE

THE STATE OF CALIFORNIA OR ITS OFFICERS OR AGENTS SHALL NOT BE RESPONSIBLE FOR THE ACCURACY OR COMPLETENESS OF ELECTRONIC COPIES OF THIS PLAN SHEET.

SCOTT F. DOWLAN No. 4410 — LICENSED LANDSCAPE ARCHITECT — Expiration Date 9/30/10 — Renewal Date 7/28/09 — STATE OF CALIFORNIA

LEGEND

- EROSION CONTROL (COMPOST BLANKET) - 1" THICK
  EROSION CONTROL (NETTING)
  EROSION CONTROL (TYPE D) - TYPE 1 - SEED MIX 1
  LANDFORM GRADING SLOPES
- EROSION CONTROL (COMPOST BLANKET) - 1" THICK
  EROSION CONTROL (TYPE D) - TYPE 2 - SEED MIX 1
  CUT/FILL SLOPES BETWEEN 2:1 AND 3:1
- EROSION CONTROL (TYPE D) - TYPE 1 - SEED MIX 1
  DISTURBED SOIL AREAS 1:4 AND FLATTER
- EROSION CONTROL (COMPOST BLANKET) - 1" THICK
  EROSION CONTROL (TYPE D) - TYPE 1 - SEED MIX 2
  DRAINAGE SWALES
- EROSION CONTROL (DRILL SEED) - SEED MIX 1
  MEDIAN/ROAD EDGE
- CULTIVATE (SOIL AMENDMENT)
  EROSION CONTROL (DRILL SEED) - SEED MIX 2
  BIOLOGICAL MITIGATION SITE
- EROSION CONTROL (TYPE D) - TYPE 1 - SEED MIX 2

- STEP (SEE LANDFORM GRADING AND DRAINAGE PLANS)
- TFESA — TEMPORARY FENCE (TYPE ESA)
- FIBER ROLL
- EROSION CONTROL (NATIVE GRASS SOD) CULTIVATE
- PLASTIC DRIP TAPE (IRRIGATION LINE)
- PLACE CHIPPED MATERIAL - 4" THICK
- PLACE TREE TRUNK
- EROSION CONTROL (NETTING)
- ESA — ENVIRONMENTALLY SENSITIVE AREA

COMPOST = EROSION CONTROL (COMPOST BLANKET)
NETTING = EROSION CONTROL (NETTING)
TYPE D1/SM1 = EROSION CONTROL (TYPE D) - TYPE 1 - SEED MIX 1
TYPE D1/SM2 = EROSION CONTROL (TYPE D) - TYPE 1 - SEED MIX 2
TYPE D2/SM1 = EROSION CONTROL (TYPE D) - TYPE 2 - SEED MIX 1
DRILL SEED 1 = EROSION CONTROL (DRILL SEED) - SEED MIX 1
DRILL SEED 2 = EROSION CONTROL (DRILL SEED) - SEED MIX 2
NATIVE GRASS SOD= EROSION CONTROL (NATIVE GRASS SOD)
CULTIVATE = CULTIVATE (SOIL AMENDMENT)

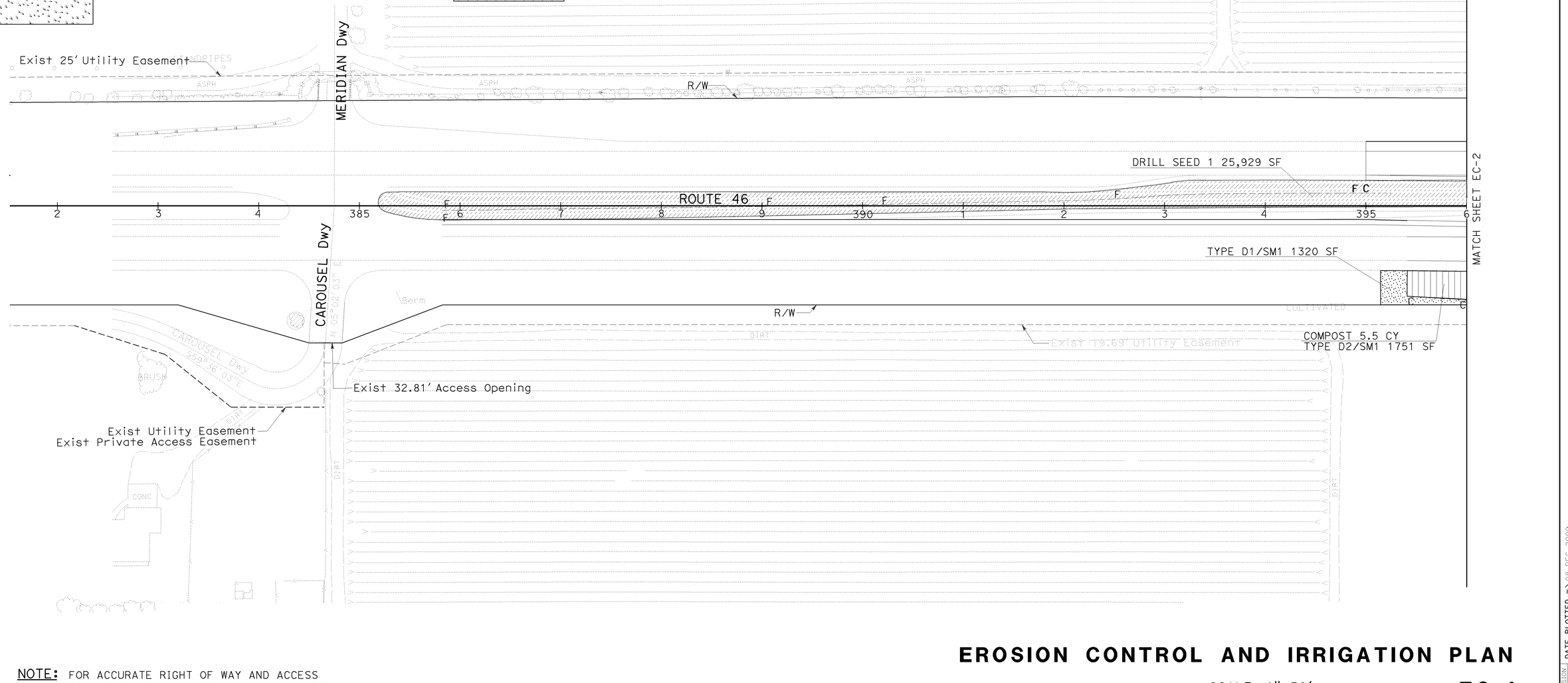

NOTE: FOR ACCURATE RIGHT OF WAY AND ACCESS DATA, CONTACT RIGHT OF WAY ENGINEERING AT THE DISTRICT OFFICE.

THIS PLAN ACCURATE FOR EROSION CONTROL AND IRRIGATION WORK ONLY.

EROSION CONTROL AND IRRIGATION PLAN

SCALE: 1"=50'

EC-1

REVISED BY | DATE REVISED

SCOTT DOWLAN | KRISTEN LANGAGER

CALCULATED-DESIGNED BY | CHECKED BY

SENIOR LANDSCAPE ARCHITECT | DENNIS REEVES

STATE OF CALIFORNIA - DEPARTMENT OF TRANSPORTATION
Caltrans LANDSCAPE ARCHITECTURE

LAST REVISION 07-14-09
DATE PLOTTED => 08-DEC-2009
TIME PLOTTED => 09:06

BORDER LAST REVISED 3/1/2007

RELATIVE BORDER SCALE IS IN INCHES 0 1 2 3

USERNAME => trstrk
DGN FILE => 533072ge001.dgn

CU 05341

EA 330721

Dist	COUNTY	ROUTE	POST MILES TOTAL PROJECT	SHEET No.	TOTAL SHEETS
05	SLO	46	36.6/41.2	132	595

LICENSED LANDSCAPE ARCHITECT

12-7-09
PLANS APPROVAL DATE

THE STATE OF CALIFORNIA OR ITS OFFICERS OR AGENTS SHALL NOT BE RESPONSIBLE FOR THE ACCURACY OR COMPLETENESS OF ELECTRONIC COPIES OF THIS PLAN SHEET.

LICENSED LANDSCAPE ARCHITECT — SCOTT P. DOWLAN No. 4410 — Expiration 9/30/10 — Renewal Date 7/28/09 Date — STATE OF CALIFORNIA

NOTE: FOR ACCURATE RIGHT OF WAY AND ACCESS DATA, CONTACT RIGHT OF WAY ENGINEERING AT THE DISTRICT OFFICE.

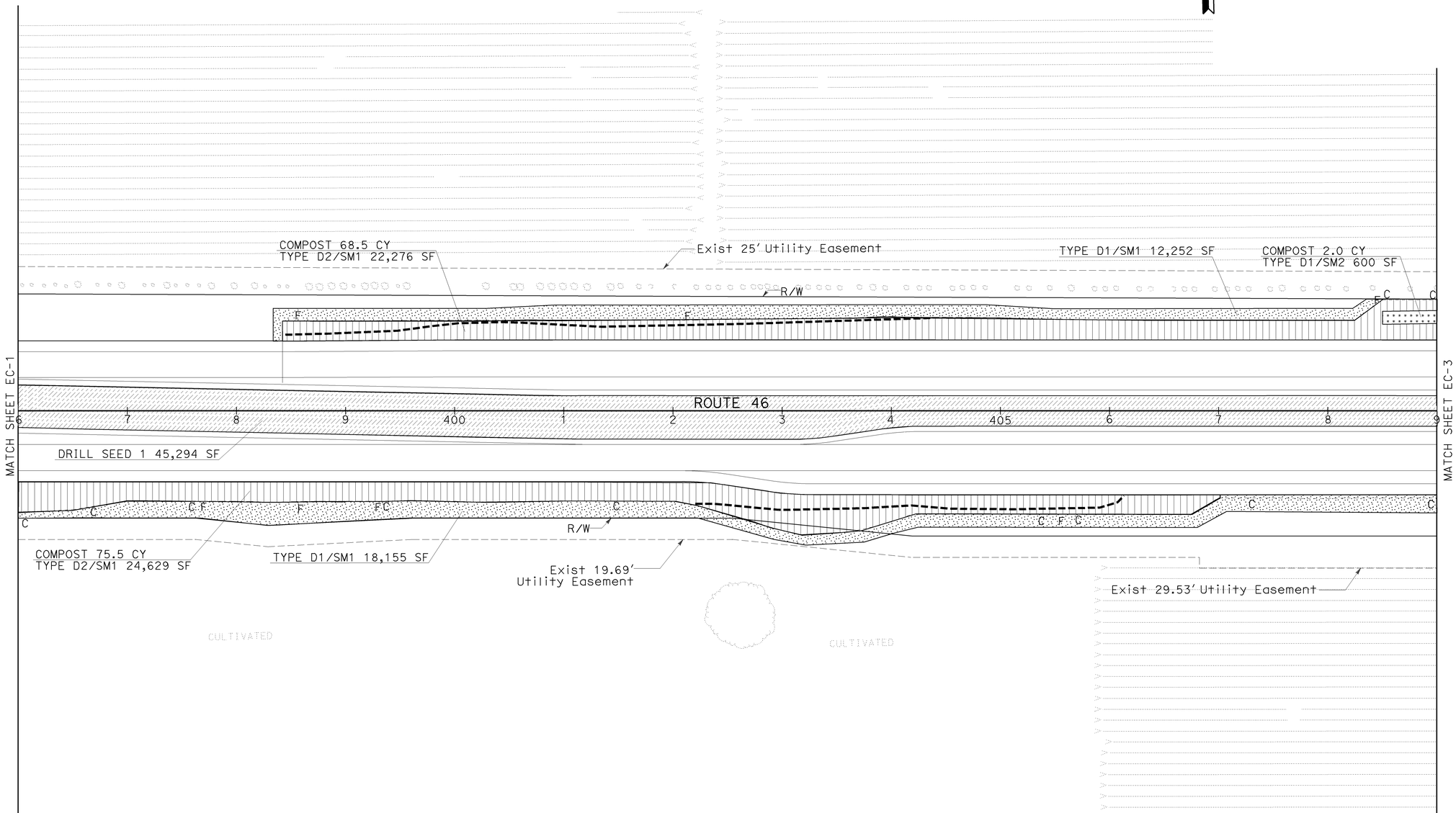

EROSION CONTROL AND IRRIGATION PLAN

SCALE: 1"=50'

EC-2

THIS PLAN ACCURATE FOR EROSION CONTROL AND IRRIGATION WORK ONLY.

REVISED BY	DATE REVISED

CALCULATED-DESIGNED BY
SCOTT DOWLAN

CHECKED BY
KRISTEN LANGAGER

SENIOR LANDSCAPE ARCHITECT
DENNIS REEVES

STATE OF CALIFORNIA - DEPARTMENT OF TRANSPORTATION
Caltrans **LANDSCAPE ARCHITECTURE**

LAST REVISION DATE PLOTTED => 08-DEC-2009
07-28-09 TIME PLOTTED => 09:06

BORDER LAST REVISED 3/1/2007

RELATIVE BORDER SCALE IS IN INCHES 0 1 2 3

USERNAME => trstrk
DGN FILE => 533072ge002.dgn

CU 05341

EA 330721

NOTE: FOR ACCURATE RIGHT OF WAY AND ACCESS DATA, CONTACT RIGHT OF WAY ENGINEERING AT THE DISTRICT OFFICE.

Dist	COUNTY	ROUTE	POST MILES TOTAL PROJECT	SHEET No.	TOTAL SHEETS
05	SLO	46	36.6/41.2	133	595

LICENSED LANDSCAPE ARCHITECT

12-7-09
PLANS APPROVAL DATE

THE STATE OF CALIFORNIA OR ITS OFFICERS OR AGENTS SHALL NOT BE RESPONSIBLE FOR THE ACCURACY OR COMPLETENESS OF ELECTRONIC COPIES OF THIS PLAN SHEET.

LICENSED LANDSCAPE ARCHITECT SCOTT P. DOWLAN No. 4410 — Signature — 9/30/10 Renewal Date — 7/28/09 Date — STATE OF CALIFORNIA

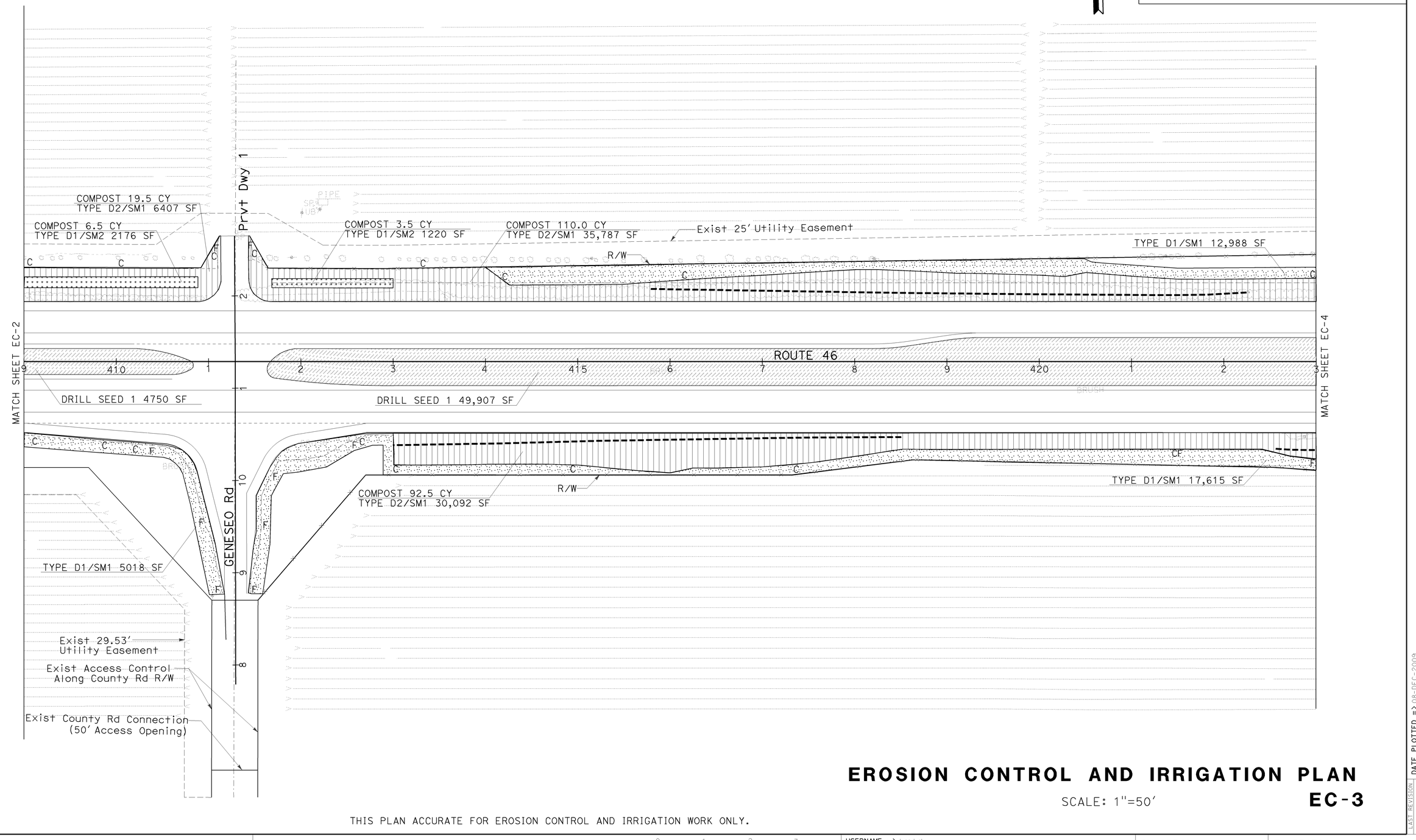

EROSION CONTROL AND IRRIGATION PLAN

SCALE: 1"=50'

EC-3

THIS PLAN ACCURATE FOR EROSION CONTROL AND IRRIGATION WORK ONLY.

CALCULATED-DESIGNED BY
CHECKED BY
REVISED BY
DATE REVISED
SCOTT DOWLAN
KRISTEN LANGAGER
SENIOR LANDSCAPE ARCHITECT
DENNIS REEVES
STATE OF CALIFORNIA - DEPARTMENT OF TRANSPORTATION
LANDSCAPE ARCHITECTURE

LAST REVISION 07-28-09
DATE PLOTTED => 08-DEC-2009
TIME PLOTTED => 09:06

BORDER LAST REVISED 3/1/2007
RELATIVE BORDER SCALE IS IN INCHES 0 1 2 3
USERNAME => trstrk
DGN FILE => 533072ge003.dgn
CU 05341
EA 330721

Dist	COUNTY	ROUTE	POST MILES TOTAL PROJECT	SHEET No.	TOTAL SHEETS
05	SLO	46	36.6/41.2	134	595

LICENSED LANDSCAPE ARCHITECT

12-7-09
PLANS APPROVAL DATE

LICENSED LANDSCAPE ARCHITECT
SCOTT P. DOWLAN No. 4410
Signature
9/30/10
Renewal Date
7/28/09
Date
STATE OF CALIFORNIA

THE STATE OF CALIFORNIA OR ITS OFFICERS OR AGENTS SHALL NOT BE RESPONSIBLE FOR THE ACCURACY OR COMPLETENESS OF ELECTRONIC COPIES OF THIS PLAN SHEET.

. **NOTE:** FOR ACCURATE RIGHT OF WAY AND ACCESS DATA, CONTACT RIGHT OF WAY ENGINEERING AT THE DISTRICT OFFICE.

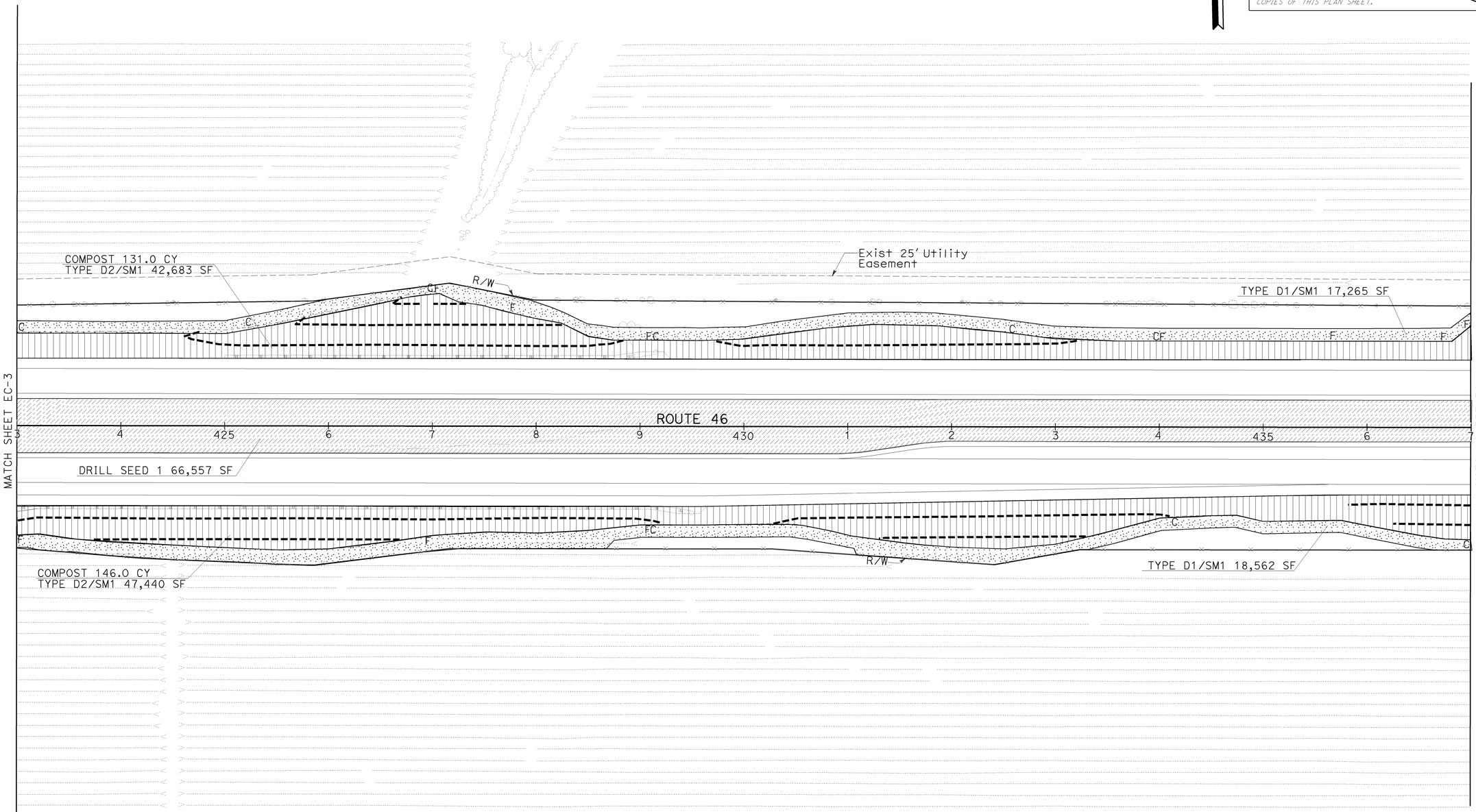

EROSION CONTROL AND IRRIGATION PLAN

SCALE: 1"=50'

EC-4

THIS PLAN ACCURATE FOR EROSION CONTROL AND IRRIGATION WORK ONLY.

CALCULATED-DESIGNED BY
CHECKED BY
REVISED BY
DATE REVISED

SCOTT DOWLAN
KRISTEN LANGAGER
DENNIS REEVES

SENIOR LANDSCAPE ARCHITECT

STATE OF CALIFORNIA - DEPARTMENT OF TRANSPORTATION
Caltrans LANDSCAPE ARCHITECTURE

LAST REVISION DATE PLOTTED => 08-DEC-2009
TIME PLOTTED => 09:06
07-28-09

BORDER LAST REVISED 3/1/2007

RELATIVE BORDER SCALE IS IN INCHES 0 1 2 3

USERNAME => trstrk
DGN FILE => 533072ge004.dgn

CU 05341

EA 330721

Dist	COUNTY	ROUTE	POST MILES TOTAL PROJECT	SHEET No.	TOTAL SHEETS
05	SLO	46	36.6/41.2	135	595

LICENSED LANDSCAPE ARCHITECT

12-7-09
PLANS APPROVAL DATE

THE STATE OF CALIFORNIA OR ITS OFFICERS OR AGENTS SHALL NOT BE RESPONSIBLE FOR THE ACCURACY OR COMPLETENESS OF ELECTRONIC COPIES OF THIS PLAN SHEET.

LICENSED LANDSCAPE ARCHITECT
SCOTT P. DOWLAN No. 4410
Expires
9/30/10
Renewal Date
7/28/09
Date
STATE OF CALIFORNIA

NOTE: FOR ACCURATE RIGHT OF WAY AND ACCESS DATA, CONTACT RIGHT OF WAY ENGINEERING AT THE DISTRICT OFFICE.

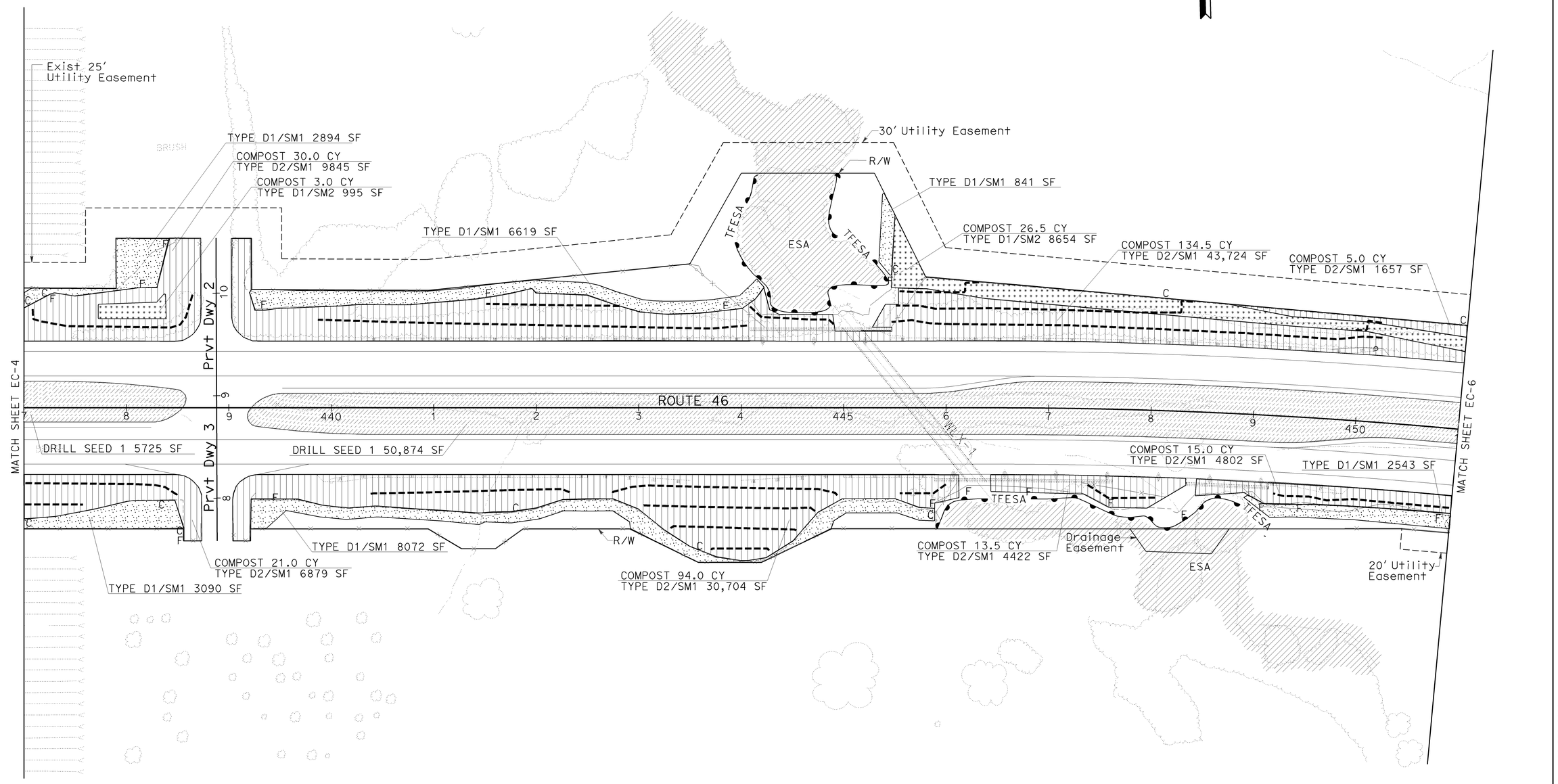

EROSION CONTROL AND IRRIGATION PLAN

SCALE: 1"=50'

EC-5

THIS PLAN ACCURATE FOR EROSION CONTROL AND IRRIGATION WORK ONLY.

STATE OF CALIFORNIA - DEPARTMENT OF TRANSPORTATION
LANDSCAPE ARCHITECTURE
SENIOR LANDSCAPE ARCHITECT: DENNIS REEVES
CALCULATED-DESIGNED BY: KRISTEN LANGAGER
CHECKED BY: SCOTT DOWLAN
REVISED BY
DATE REVISED

LAST REVISION DATE PLOTTED => 08-DEC-2009
07-28-09 TIME PLOTTED => 09:06

BORDER LAST REVISED 3/1/2007

RELATIVE BORDER SCALE IS IN INCHES 0 1 2 3

USERNAME => trstrk
DGN FILE => 533072ge005.dgn

CU 05341

EA 330721

Dist	COUNTY	ROUTE	POST MILES TOTAL PROJECT	SHEET No.	TOTAL SHEETS
05	SLO	46	36.6/41.2	136	595

LICENSED LANDSCAPE ARCHITECT

12-7-09
PLANS APPROVAL DATE

LICENSED LANDSCAPE ARCHITECT
SCOTT P. DOWLAN No. 4410
Signature
9/30/10
Renewal Date
7/28/09
Date
STATE OF CALIFORNIA

THE STATE OF CALIFORNIA OR ITS OFFICERS OR AGENTS SHALL NOT BE RESPONSIBLE FOR THE ACCURACY OR COMPLETENESS OF ELECTRONIC COPIES OF THIS PLAN SHEET.

NOTE: FOR ACCURATE RIGHT OF WAY AND ACCESS DATA, CONTACT RIGHT OF WAY ENGINEERING AT THE DISTRICT OFFICE.

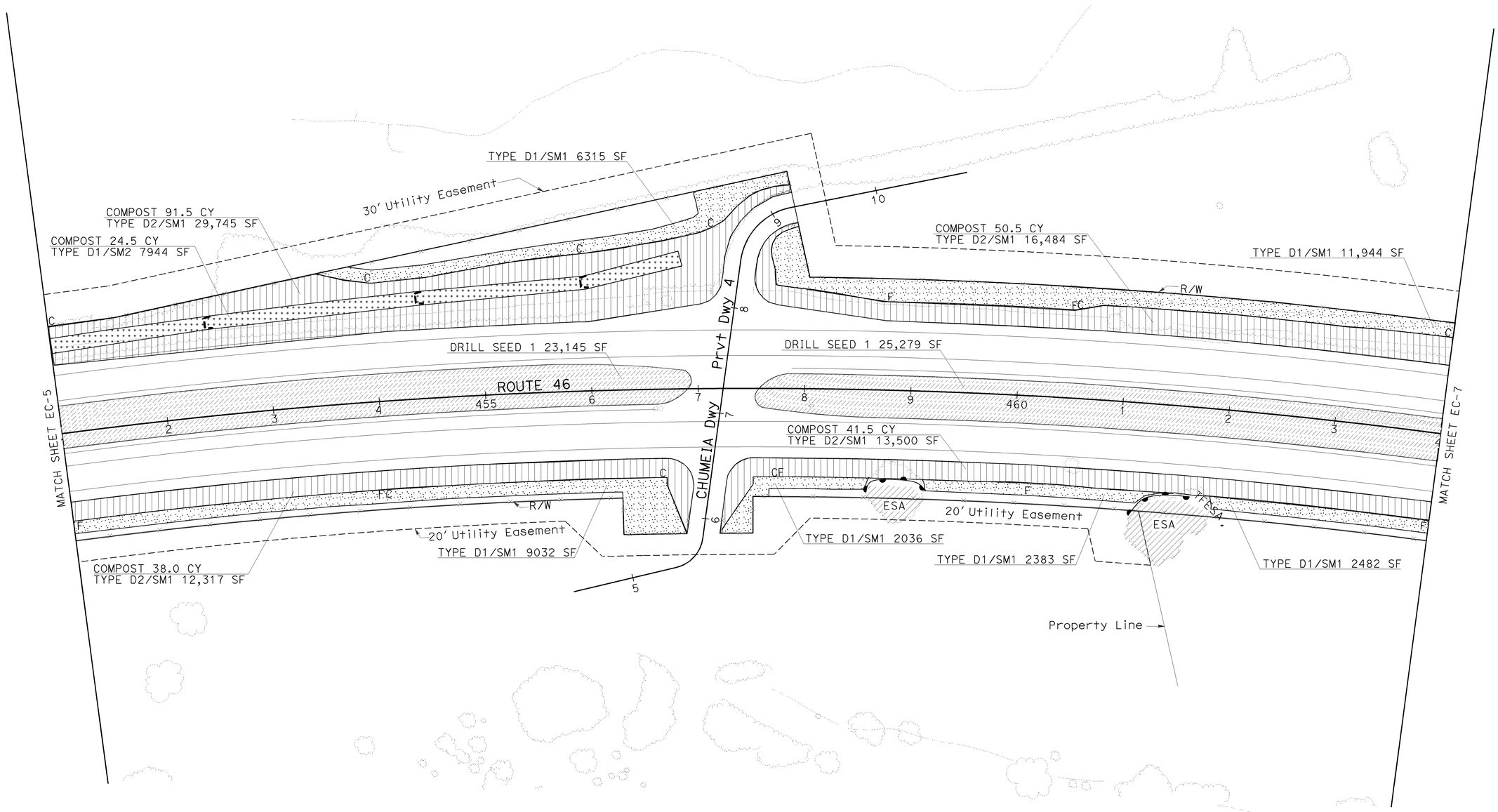

EROSION CONTROL AND IRRIGATION PLAN

SCALE: 1"=50'

EC-6

THIS PLAN ACCURATE FOR EROSION CONTROL AND IRRIGATION WORK ONLY.

STATE OF CALIFORNIA - DEPARTMENT OF TRANSPORTATION
Caltrans LANDSCAPE ARCHITECTURE

SENIOR LANDSCAPE ARCHITECT: DENNIS REEVES
CALCULATED-DESIGNED BY: SCOTT DOWLAN
CHECKED BY: KRISTEN LANGAGER
REVISED BY
DATE REVISED

LAST REVISION 07-28-09
DATE PLOTTED => 08-DEC-2009
TIME PLOTTED => 08:06

Dist	COUNTY	ROUTE	POST MILES TOTAL PROJECT	SHEET No.	TOTAL SHEETS
05	SLO	46	36.6/41.2	137	595

LICENSED LANDSCAPE ARCHITECT

12-7-09
PLANS APPROVAL DATE

THE STATE OF CALIFORNIA OR ITS OFFICERS OR AGENTS SHALL NOT BE RESPONSIBLE FOR THE ACCURACY OR COMPLETENESS OF ELECTRONIC COPIES OF THIS PLAN SHEET.

LICENSED LANDSCAPE ARCHITECT — SCOTT P. DOWLAN No. 4410 — STATE OF CALIFORNIA
Expiration Date 9/30/10
Renewal Date 7/28/09
Date

NOTE: FOR ACCURATE RIGHT OF WAY AND ACCESS DATA, CONTACT RIGHT OF WAY ENGINEERING AT THE DISTRICT OFFICE.

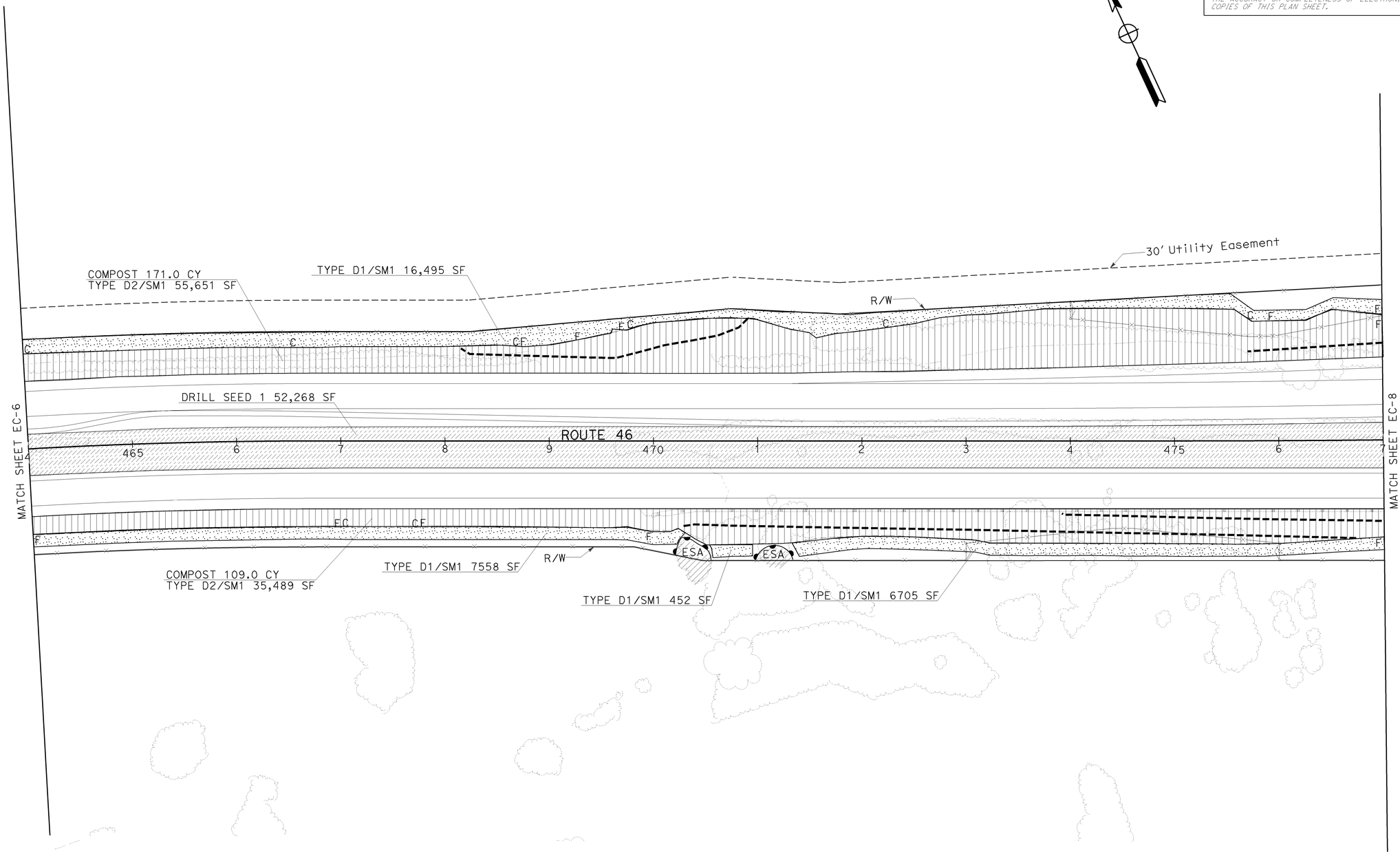

EROSION CONTROL AND IRRIGATION PLAN

SCALE: 1"=50'

EC-7

THIS PLAN ACCURATE FOR EROSION CONTROL AND IRRIGATION WORK ONLY.

CALCULATED-DESIGNED BY	REVISED BY
CHECKED BY	DATE REVISED

SCOTT DOWLAN
KRISTEN LANGAGER

SENIOR LANDSCAPE ARCHITECT
DENNIS REEVES

STATE OF CALIFORNIA - DEPARTMENT OF TRANSPORTATION
Caltrans LANDSCAPE ARCHITECTURE

LAST REVISION DATE PLOTTED => 08-DEC-2009
07-28-09 TIME PLOTTED => 08:06

BORDER LAST REVISED 3/1/2007

RELATIVE BORDER SCALE IS IN INCHES 0 1 2 3

USERNAME => trlenard
DGN FILE => 533072ge007.dgn

CU 05341

EA 330721

NOTE: FOR ACCURATE RIGHT OF WAY AND ACCESS DATA, CONTACT RIGHT OF WAY ENGINEERING AT THE DISTRICT OFFICE.

Dist	COUNTY	ROUTE	POST MILES TOTAL PROJECT	SHEET No.	TOTAL SHEETS
05	SLO	46	36.6/41.2	138	595

LICENSED LANDSCAPE ARCHITECT

12-7-09
PLANS APPROVAL DATE

THE STATE OF CALIFORNIA OR ITS OFFICERS OR AGENTS SHALL NOT BE RESPONSIBLE FOR THE ACCURACY OR COMPLETENESS OF ELECTRONIC COPIES OF THIS PLAN SHEET.

LICENSED LANDSCAPE ARCHITECT — SCOTT P. DOWLAN No. 4410 — STATE OF CALIFORNIA
Expiration Date 9/30/10
Renewal Date 7/28/09
Date

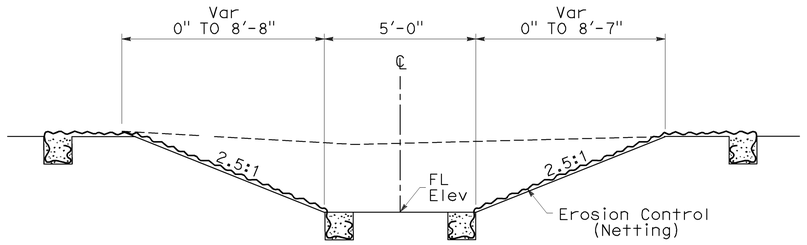

SWALE-R ALIGNMENT DETAIL

CROSS SECTION
STA 479+00.00 TO 480+70.00
NO SCALE

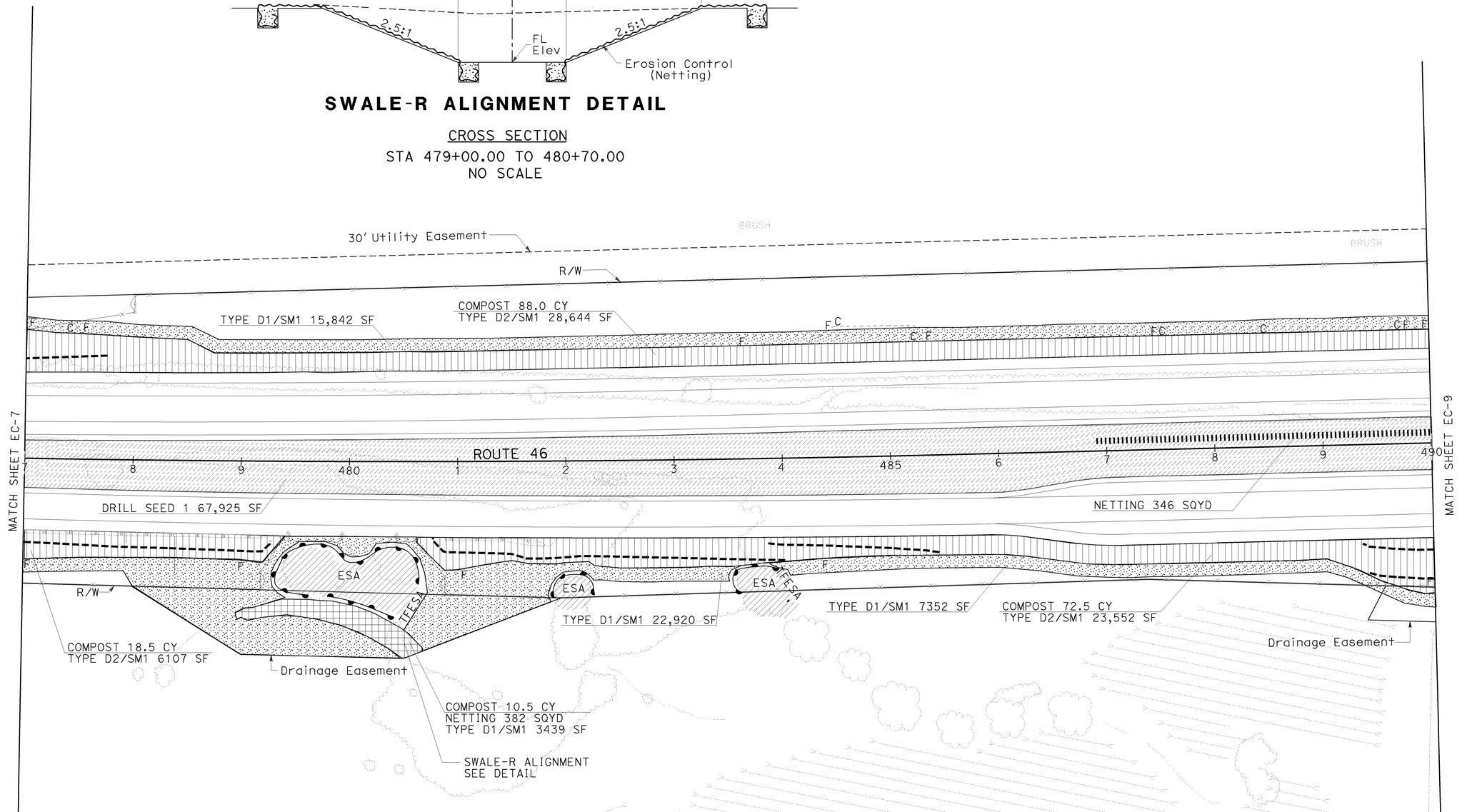

EROSION CONTROL AND IRRIGATION PLAN

SCALE: 1"=50'

EC-8

THIS PLAN ACCURATE FOR EROSION CONTROL AND IRRIGATION WORK ONLY.

STATE OF CALIFORNIA - DEPARTMENT OF TRANSPORTATION
Caltrans LANDSCAPE ARCHITECTURE
SENIOR LANDSCAPE ARCHITECT: DENNIS REEVES
CALCULATED-DESIGNED BY
CHECKED BY: KRISTEN LANGAGER
DRAWN BY: SCOTT DOWLAN
REVISED BY
DATE REVISED

LAST REVISION DATE PLOTTED => 08-DEC-2009
07-28-09 TIME PLOTTED => 08:06

Dist	COUNTY	ROUTE	POST MILES TOTAL PROJECT	SHEET No.	TOTAL SHEETS
05	SLO	46	36.6/41.2	139	595

LICENSED LANDSCAPE ARCHITECT

12-7-09
PLANS APPROVAL DATE

LICENSED LANDSCAPE ARCHITECT
SCOTT P. DOWLAN No. 4410
Expiration Date
9/30/10
Renewal Date
7/28/09
Date
STATE OF CALIFORNIA

THE STATE OF CALIFORNIA OR ITS OFFICERS OR AGENTS SHALL NOT BE RESPONSIBLE FOR THE ACCURACY OR COMPLETENESS OF ELECTRONIC COPIES OF THIS PLAN SHEET.

NOTE: FOR ACCURATE RIGHT OF WAY AND ACCESS DATA, CONTACT RIGHT OF WAY ENGINEERING AT THE DISTRICT OFFICE.

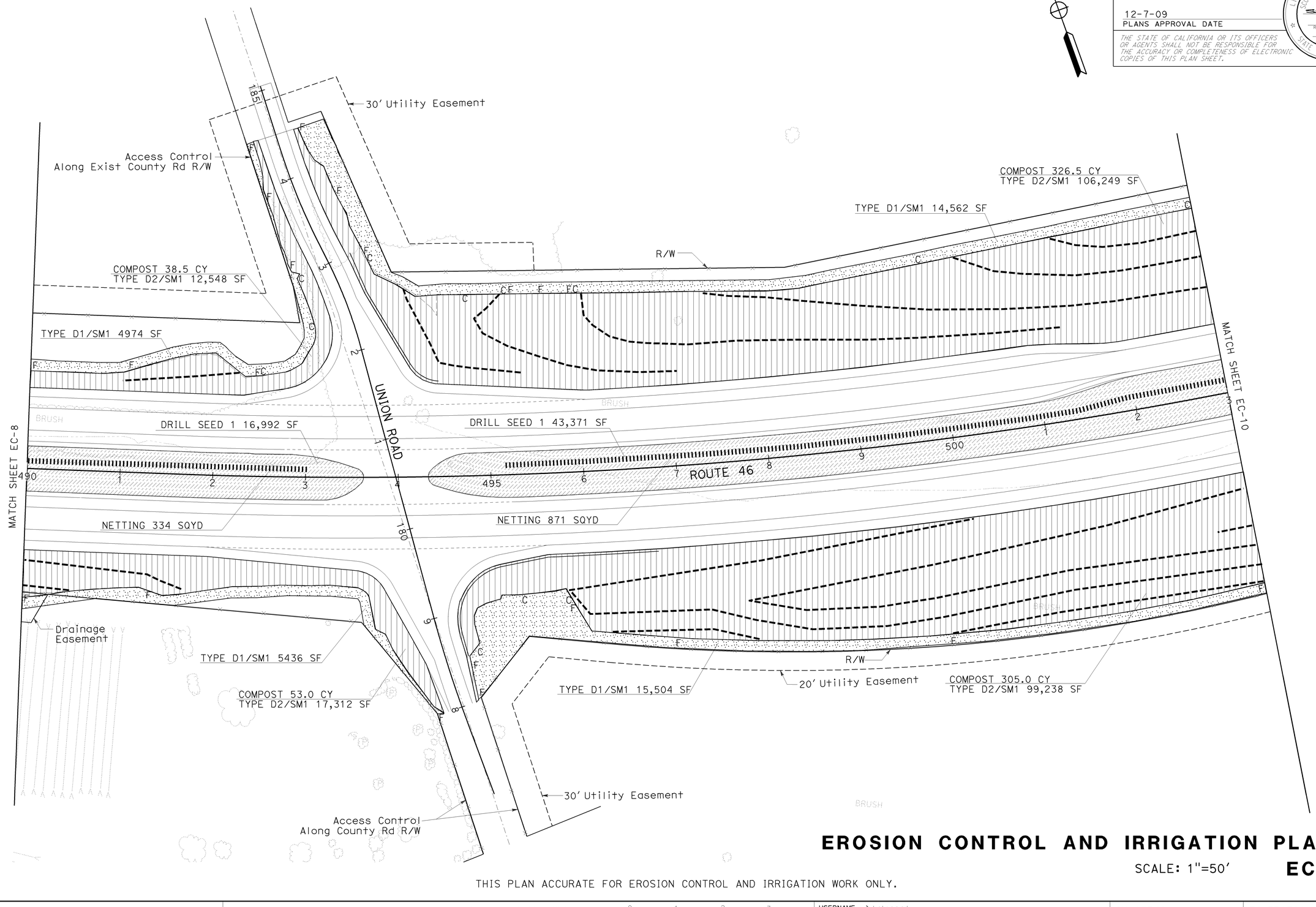

EROSION CONTROL AND IRRIGATION PLAN

SCALE: 1"=50'

EC-9

THIS PLAN ACCURATE FOR EROSION CONTROL AND IRRIGATION WORK ONLY.

REVISED BY | DATE REVISED

CALCULATED-DESIGNED BY: SCOTT DOWLAN
CHECKED BY: KRISTEN LANGAGER
SENIOR LANDSCAPE ARCHITECT: DENNIS REEVES

STATE OF CALIFORNIA - DEPARTMENT OF TRANSPORTATION
Caltrans LANDSCAPE ARCHITECTURE

LAST REVISION | DATE PLOTTED => 08-DEC-2009 | TIME PLOTTED => 08:06
07-28-09

BORDER LAST REVISED 3/1/2007

RELATIVE BORDER SCALE IS IN INCHES 0 1 2 3

USERNAME => trlenard
DGN FILE => 533072ge009.dgn

CU 05341

EA 330721

NOTE: FOR ACCURATE RIGHT OF WAY AND ACCESS DATA, CONTACT RIGHT OF WAY ENGINEERING AT THE DISTRICT OFFICE.

Dist	COUNTY	ROUTE	POST MILES TOTAL PROJECT	SHEET No.	TOTAL SHEETS
05	SLO	46	36.6/41.2	140	595

LICENSED LANDSCAPE ARCHITECT

12-7-09
PLANS APPROVAL DATE

THE STATE OF CALIFORNIA OR ITS OFFICERS OR AGENTS SHALL NOT BE RESPONSIBLE FOR THE ACCURACY OR COMPLETENESS OF ELECTRONIC COPIES OF THIS PLAN SHEET.

LICENSED LANDSCAPE ARCHITECT SCOTT P. DOWLAN No. 4410 STATE OF CALIFORNIA
Expires: 9/30/10
Renewal Date: 7/28/09
Date

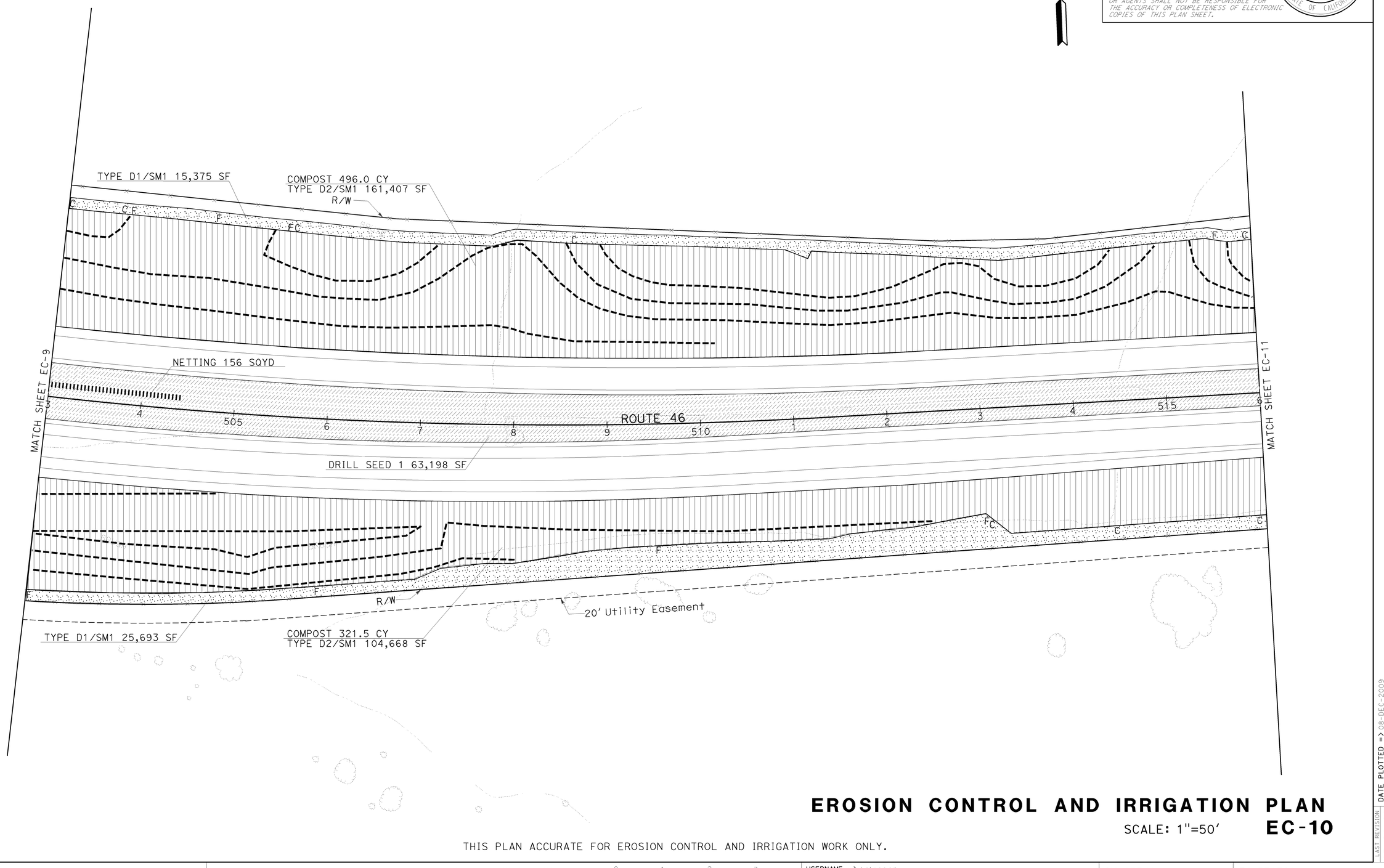

EROSION CONTROL AND IRRIGATION PLAN

SCALE: 1"=50'

EC-10

THIS PLAN ACCURATE FOR EROSION CONTROL AND IRRIGATION WORK ONLY.

CALCULATED-DESIGNED BY
CHECKED BY
REVISED BY
DATE REVISED

SCOTT DOWLAN
KRISTEN LANGAGER

SENIOR LANDSCAPE ARCHITECT
DENNIS REEVES

STATE OF CALIFORNIA - DEPARTMENT OF TRANSPORTATION
Caltrans LANDSCAPE ARCHITECTURE

LAST REVISION DATE PLOTTED => 08-DEC-2009
TIME PLOTTED => 08:06
07-28-09

BORDER LAST REVISED 3/1/2007

RELATIVE BORDER SCALE IS IN INCHES 0 1 2 3

USERNAME => trlenard
DGN FILE => 533072ge010.dgn

CU 05341

EA 330721

Dist	COUNTY	ROUTE	POST MILES TOTAL PROJECT	SHEET No.	TOTAL SHEETS
05	SLO	46	36.6/41.2	141	595

LICENSED LANDSCAPE ARCHITECT

12-7-09
PLANS APPROVAL DATE

THE STATE OF CALIFORNIA OR ITS OFFICERS OR AGENTS SHALL NOT BE RESPONSIBLE FOR THE ACCURACY OR COMPLETENESS OF ELECTRONIC COPIES OF THIS PLAN SHEET.

LICENSED LANDSCAPE ARCHITECT — SCOTT P. DOWLAN No. 4410 — License Date 9/30/10 — Renewal Date 7/28/09 — Date — STATE OF CALIFORNIA

NOTE: FOR ACCURATE RIGHT OF WAY AND ACCESS DATA, CONTACT RIGHT OF WAY ENGINEERING AT THE DISTRICT OFFICE.

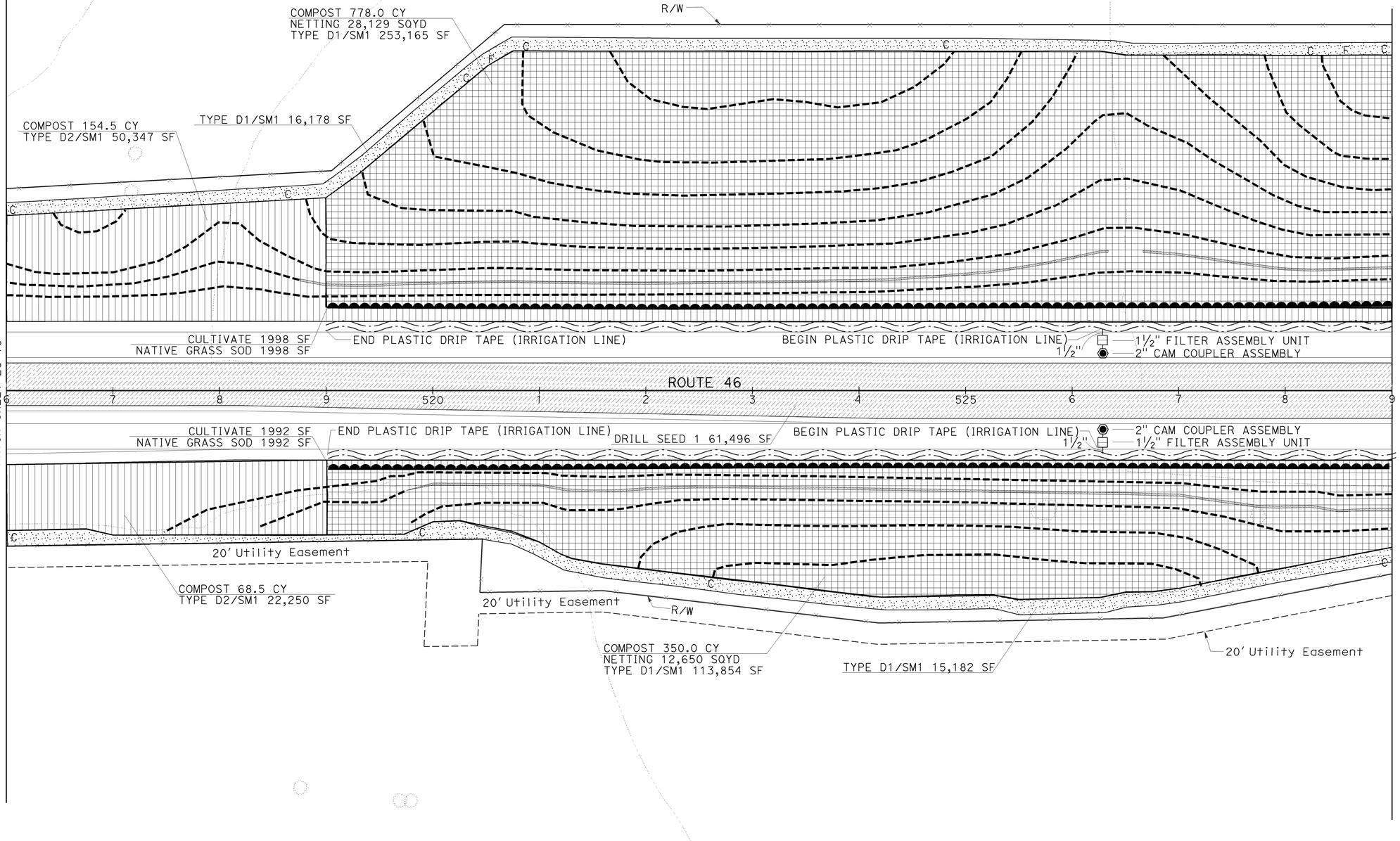

EROSION CONTROL AND IRRIGATION PLAN

SCALE: 1"=50' **EC-11**

THIS PLAN ACCURATE FOR EROSION CONTROL AND IRRIGATION WORK ONLY.

REVISED BY	DATE REVISED

CALCULATED-DESIGNED BY: SCOTT DOWLAN
CHECKED BY: KRISTEN LANGAGER
SENIOR LANDSCAPE ARCHITECT: DENNIS REEVES

STATE OF CALIFORNIA - DEPARTMENT OF TRANSPORTATION
Caltrans LANDSCAPE ARCHITECTURE

LAST REVISION 07-28-09
DATE PLOTTED => 08-DEC-2009
TIME PLOTTED => 08:06

BORDER LAST REVISED 3/1/2007
RELATIVE BORDER SCALE IS IN INCHES 0 1 2 3
USERNAME => trlenard
DGN FILE => 533072ge011.dgn
CU 05341
EA 330721

Dist	COUNTY	ROUTE	POST MILES TOTAL PROJECT	SHEET No.	TOTAL SHEETS
05	SLO	46	36.6/41.2	142	595

LICENSED LANDSCAPE ARCHITECT

12-7-09
PLANS APPROVAL DATE

THE STATE OF CALIFORNIA OR ITS OFFICERS OR AGENTS SHALL NOT BE RESPONSIBLE FOR THE ACCURACY OR COMPLETENESS OF ELECTRONIC COPIES OF THIS PLAN SHEET.

LICENSED LANDSCAPE ARCHITECT — SCOTT F. DOWLAN No. 4410 — Expiration Date 9/30/10 — Renewal Date 7/28/09 Date — STATE OF CALIFORNIA

NOTE: FOR ACCURATE RIGHT OF WAY AND ACCESS DATA, CONTACT RIGHT OF WAY ENGINEERING AT THE DISTRICT OFFICE.

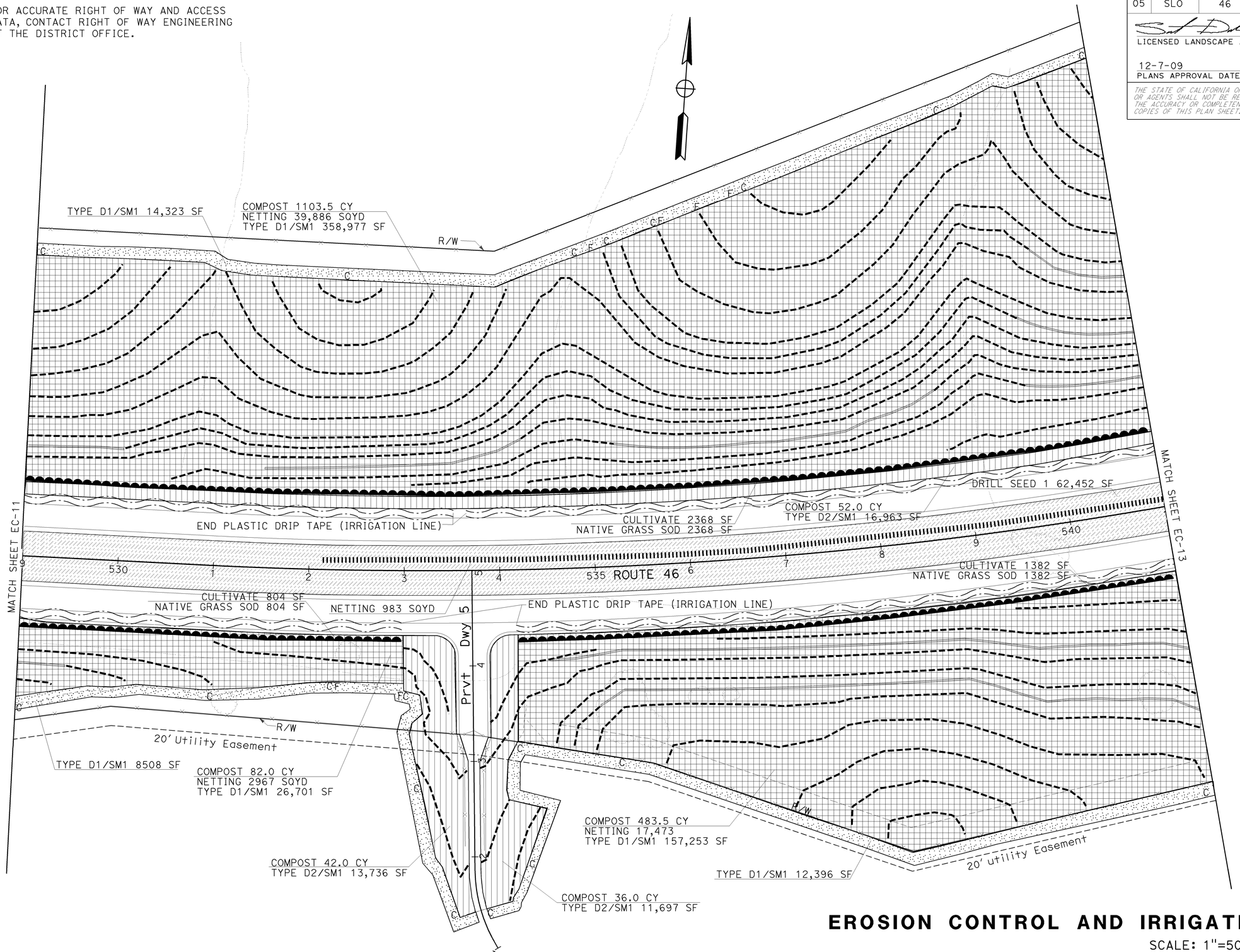

EROSION CONTROL AND IRRIGATION PLAN

SCALE: 1"=50'

EC-12

THIS PLAN ACCURATE FOR EROSION CONTROL AND IRRIGATION WORK ONLY.

STATE OF CALIFORNIA - DEPARTMENT OF TRANSPORTATION
Caltrans LANDSCAPE ARCHITECTURE

SENIOR LANDSCAPE ARCHITECT: DENNIS REEVES
CALCULATED-DESIGNED BY: KRISTEN LANGAGER
CHECKED BY: SCOTT DOWLAN
REVISED BY
DATE REVISED

LAST REVISION: DATE PLOTTED => 08-DEC-2009; TIME PLOTTED => 08:06; 07-28-09

BORDER LAST REVISED 3/1/2007 | RELATIVE BORDER SCALE IS IN INCHES 0 1 2 3 | USERNAME => trlenard | DGN FILE => 533072ge012.dgn | CU 05341 | EA 330721

Dist	COUNTY	ROUTE	POST MILES TOTAL PROJECT	SHEET No.	TOTAL SHEETS
05	SLO	46	36.6/41.2	143	595

LICENSED LANDSCAPE ARCHITECT

12-7-09
PLANS APPROVAL DATE

THE STATE OF CALIFORNIA OR ITS OFFICERS OR AGENTS SHALL NOT BE RESPONSIBLE FOR THE ACCURACY OR COMPLETENESS OF ELECTRONIC COPIES OF THIS PLAN SHEET.

LICENSED LANDSCAPE ARCHITECT
SCOTT F. DOWLAN No. 4410
Expiration Date 9/30/10
Renewal Date 7/28/09
Date
STATE OF CALIFORNIA

NOTE: FOR ACCURATE RIGHT OF WAY AND ACCESS DATA, CONTACT RIGHT OF WAY ENGINEERING AT THE DISTRICT OFFICE.

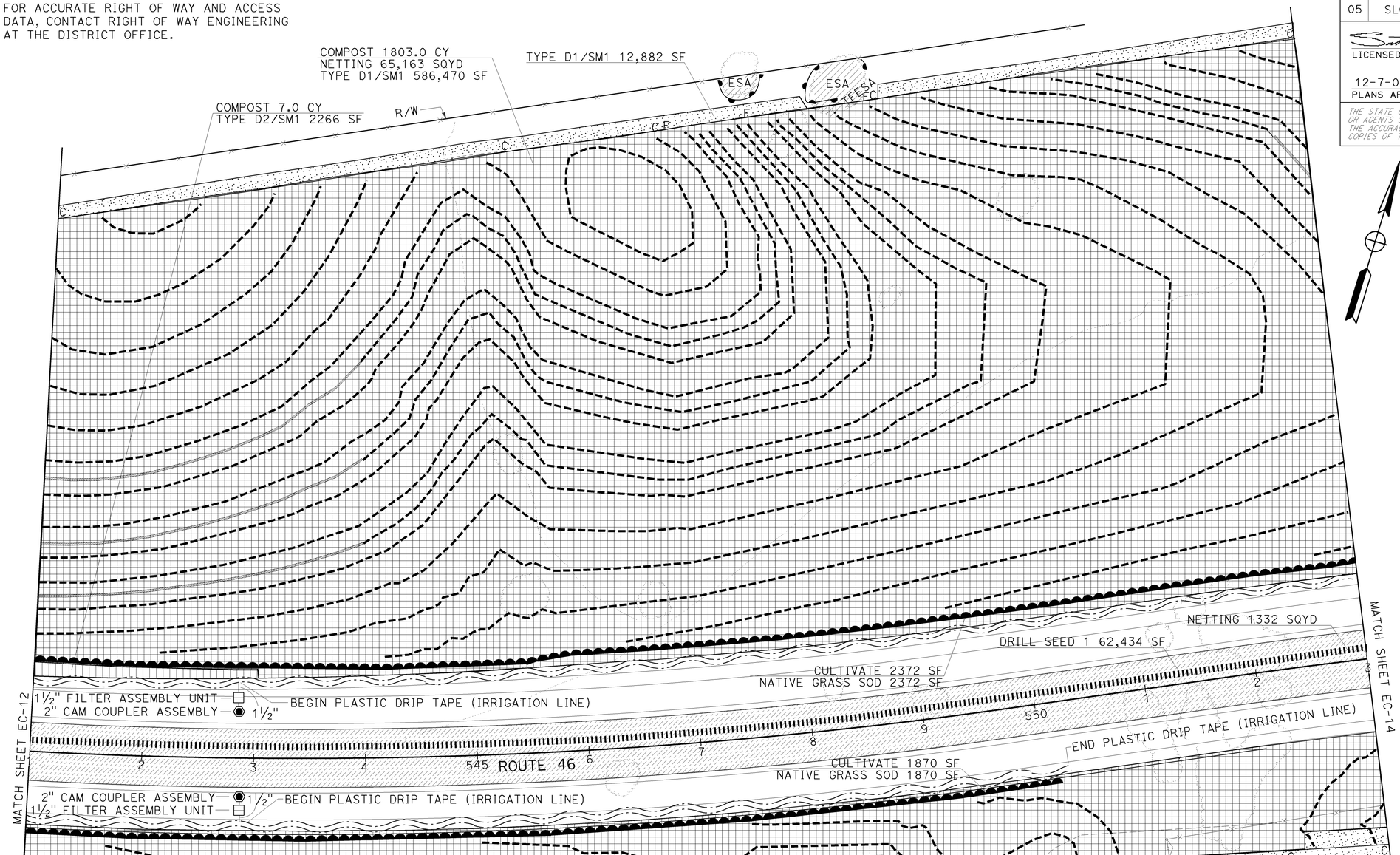

EROSION CONTROL AND IRRIGATION PLAN

SCALE: 1"=50' **EC-13**

THIS PLAN ACCURATE FOR EROSION CONTROL AND IRRIGATION WORK ONLY.

CALCULATED-DESIGNED BY
CHECKED BY

SCOTT DOWLAN
KRISTEN LANGAGER

REVISED BY
DATE REVISED

SENIOR LANDSCAPE ARCHITECT
DENNIS REEVES

STATE OF CALIFORNIA - DEPARTMENT OF TRANSPORTATION
LANDSCAPE ARCHITECTURE

LAST REVISION 07-28-09
DATE PLOTTED => 08-DEC-2009
TIME PLOTTED => 08:06

BORDER LAST REVISED 3/1/2007

RELATIVE BORDER SCALE IS IN INCHES 0 1 2 3

USERNAME => trlenard
DGN FILE => 533072ge013.dgn

CU 05341

EA 330721

Dist	COUNTY	ROUTE	POST MILES TOTAL PROJECT	SHEET No.	TOTAL SHEETS
05	SLO	46	36.6/41.2	144	595

LICENSED LANDSCAPE ARCHITECT

12-7-09
PLANS APPROVAL DATE

THE STATE OF CALIFORNIA OR ITS OFFICERS OR AGENTS SHALL NOT BE RESPONSIBLE FOR THE ACCURACY OR COMPLETENESS OF ELECTRONIC COPIES OF THIS PLAN SHEET.

LICENSED LANDSCAPE ARCHITECT
SCOTT P. DOWLAN No. 4410
Date
9/30/10
Renewal Date
7/28/09
Date
STATE OF CALIFORNIA

NOTE: FOR ACCURATE RIGHT OF WAY AND ACCESS DATA, CONTACT RIGHT OF WAY ENGINEERING AT THE DISTRICT OFFICE.

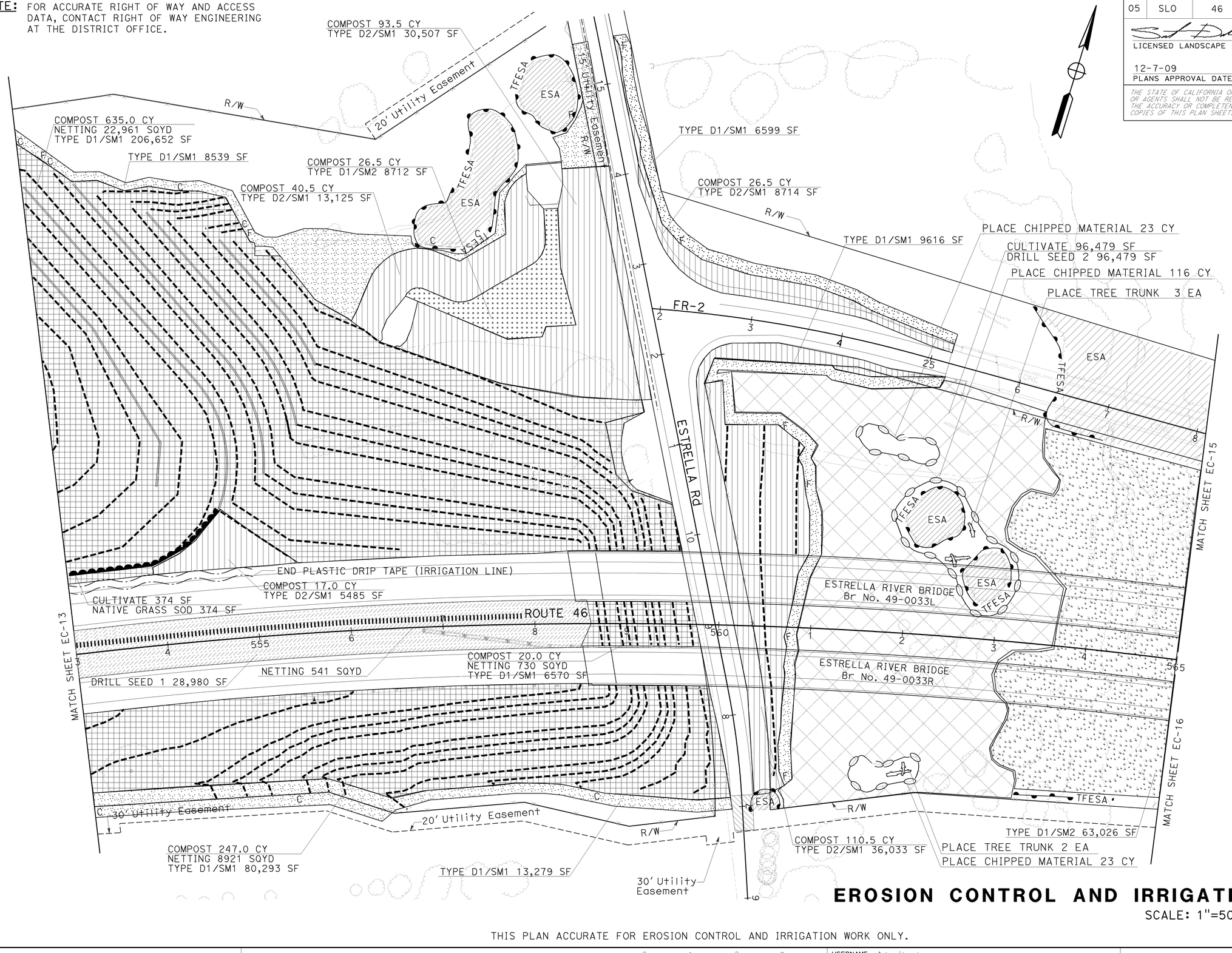

EROSION CONTROL AND IRRIGATION PLAN

SCALE: 1"=50'

EC-14

THIS PLAN ACCURATE FOR EROSION CONTROL AND IRRIGATION WORK ONLY.

STATE OF CALIFORNIA - DEPARTMENT OF TRANSPORTATION
LANDSCAPE ARCHITECTURE
SENIOR LANDSCAPE ARCHITECT: DENNIS REEVES
CALCULATED-DESIGNED BY: SCOTT DOWLAN
CHECKED BY: KRISTEN LANGAGER
REVISED BY
DATE REVISED

LAST REVISION DATE PLOTTED => 10-DEC-2009
07-14-09 TIME PLOTTED => 06:40

BORDER LAST REVISED 3/1/2007
RELATIVE BORDER SCALE IS IN INCHES 0 1 2 3
USERNAME => trmikesl
DGN FILE => 533072ge014.dgn
CU 05341
EA 330721

Dist	COUNTY	ROUTE	POST MILES TOTAL PROJECT	SHEET No.	TOTAL SHEETS
05	SLO	46	36.6/41.2	145	595

LICENSED LANDSCAPE ARCHITECT

12-7-09
PLANS APPROVAL DATE

LICENSED LANDSCAPE ARCHITECT SCOTT P. DOWLAN No. 4410 Signature 9/30/10 Renewal Date 7/28/09 Date STATE OF CALIFORNIA

THE STATE OF CALIFORNIA OR ITS OFFICERS OR AGENTS SHALL NOT BE RESPONSIBLE FOR THE ACCURACY OR COMPLETENESS OF ELECTRONIC COPIES OF THIS PLAN SHEET.

NOTE: FOR ACCURATE RIGHT OF WAY AND ACCESS DATA, CONTACT RIGHT OF WAY ENGINEERING AT THE DISTRICT OFFICE.

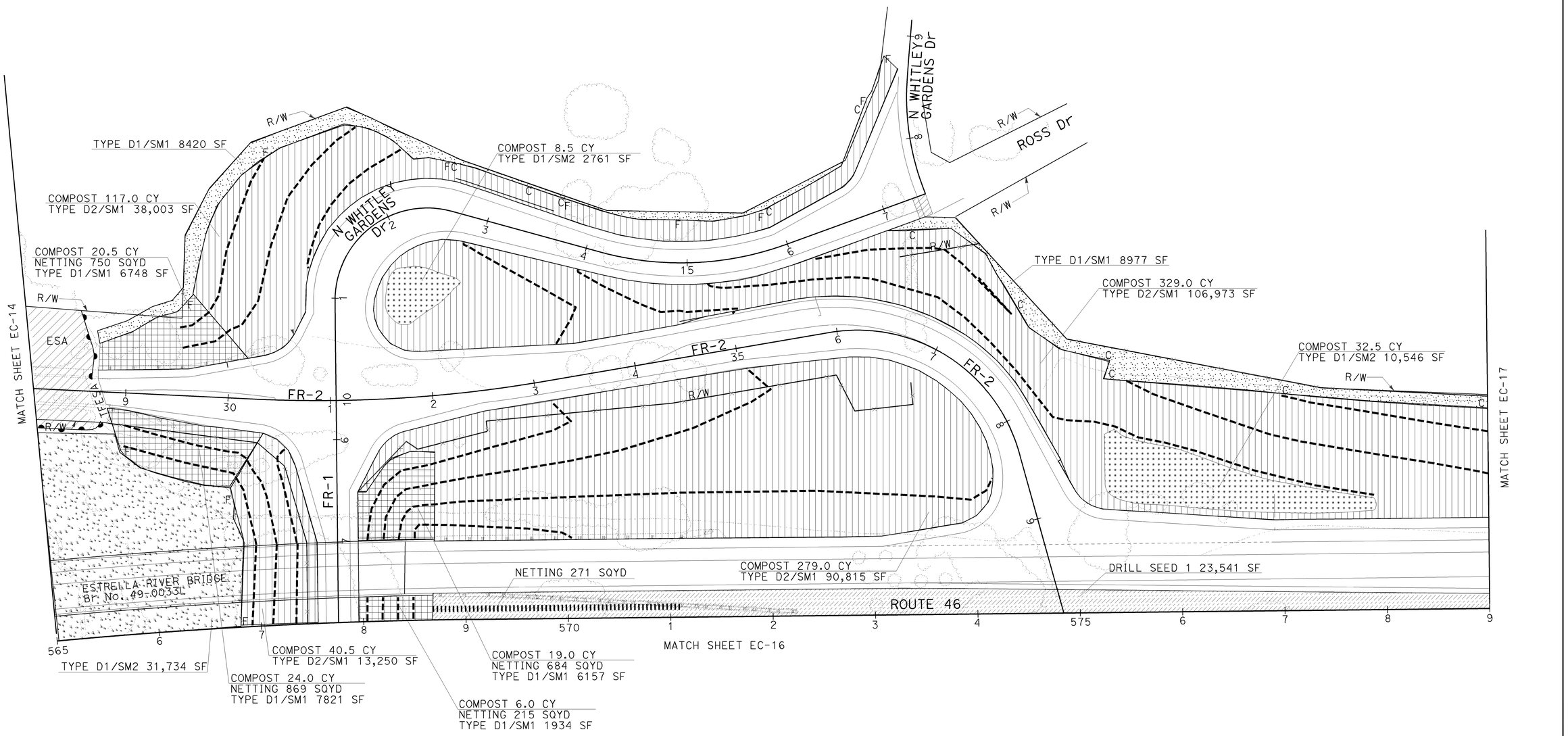

EROSION CONTROL AND IRRIGATION PLAN

SCALE: 1"=50'

EC-15

THIS PLAN ACCURATE FOR EROSION CONTROL AND IRRIGATION WORK ONLY.

STATE OF CALIFORNIA - DEPARTMENT OF TRANSPORTATION
Caltrans LANDSCAPE ARCHITECTURE

SENIOR LANDSCAPE ARCHITECT: DENNIS REEVES
CALCULATED-DESIGNED BY: SCOTT DOWLAN
CHECKED BY: KRISTEN LANGAGER
REVISED BY
DATE REVISED

LAST REVISION 07-22-09
DATE PLOTTED => 08-DEC-2009
TIME PLOTTED => 08:07

NOTE: FOR ACCURATE RIGHT OF WAY AND ACCESS DATA, CONTACT RIGHT OF WAY ENGINEERING AT THE DISTRICT OFFICE.

Dist	COUNTY	ROUTE	POST MILES TOTAL PROJECT	SHEET No.	TOTAL SHEETS
05	SLO	46	36.6/41.2	146	595

LICENSED LANDSCAPE ARCHITECT

12-7-09
PLANS APPROVAL DATE

THE STATE OF CALIFORNIA OR ITS OFFICERS OR AGENTS SHALL NOT BE RESPONSIBLE FOR THE ACCURACY OR COMPLETENESS OF ELECTRONIC COPIES OF THIS PLAN SHEET.

LICENSED LANDSCAPE ARCHITECT — SCOTT F. DOWLAN No. 4410 — Signature — 9/30/10 Renewal Date — 7/28/09 Date — STATE OF CALIFORNIA

COMPOST 216.5 CY
TYPE D2/SM1 70,475 SF

COMPOST 6.0 CY
NETTING 213 SQYD
TYPE D1/SM1 1917 SF

COMPOST 18.5 CY
NETTING 664 SQYD
TYPE D1/SM1 5972 SF

TYPE D1/SM2 22,262 SF

MATCH SHEET EC-15

ROUTE 46

COMPOST 18.0 CY
TYPE D1/SM2 5802 SF

COMPOST 528.5 CY
TYPE D2/SM1 171,944 SF

DRILL SEED 1 26,791 SF

Br No. 49-0033R
ESTRELLA RIVER BRIDGE

MATCH SHEET EC-14

20' Utility Easement

R/W

TFESA

ESA

20' Utility Easement

COMPOST 3.5 CY
TYPE D1/SM2 1117 SF

County Road R/W

FR-1

TFESA

ESA

TFESA

County Road R/W

PLACE CHIPPED MATERIAL 50.5 CY
PLACE TREE TRUNK 3 EA

CULTIVATE 84,808 SF
DRILL SEED 2 84,808 SF

MATCH TO ABOVE

20' Utility Easement

R/W

50' 50'

30' Utility Easement

S WHITLEY GARDENS DR

TFESA

ESA

R/W

20' Utility Easement

R/W

COMPOST 29.5 CY
TYPE D2/SM1 9574 SF

TYPE D1/SM1 27,503 SF

MATCH SHEET EC-17

TYPE D1/SM1 24,224 SF

MATCH TO BELOW

R/W

CULTIVATE 18,751 SF
DRILL SEED 2 18,751 SF

EROSION CONTROL AND IRRIGATION PLAN

SCALE: 1"=50'

EC-16

THIS PLAN ACCURATE FOR EROSION CONTROL AND IRRIGATION WORK ONLY.

REVISED BY	DATE REVISED
SCOTT DOWLAN	07-14-09
KRISTEN LANGAGER	

CALCULATED-DESIGNED BY
CHECKED BY

SENIOR LANDSCAPE ARCHITECT
DENNIS REEVES

STATE OF CALIFORNIA - DEPARTMENT OF TRANSPORTATION
Caltrans LANDSCAPE ARCHITECTURE

LAST REVISION
DATE PLOTTED => 10-DEC-2009
TIME PLOTTED => 06:41

BORDER LAST REVISED 3/1/2007

RELATIVE BORDER SCALE IS IN INCHES 0 1 2 3

USERNAME => trmikesl
DGN FILE => 533072ge016.dgn

CU 05341

EA 330721

Dist	COUNTY	ROUTE	POST MILES TOTAL PROJECT	SHEET No.	TOTAL SHEETS
05	SLO	46	36.6/41.2	147	595

LICENSED LANDSCAPE ARCHITECT

12-7-09
PLANS APPROVAL DATE

THE STATE OF CALIFORNIA OR ITS OFFICERS OR AGENTS SHALL NOT BE RESPONSIBLE FOR THE ACCURACY OR COMPLETENESS OF ELECTRONIC COPIES OF THIS PLAN SHEET.

LICENSED LANDSCAPE ARCHITECT
SCOTT P. DOWLAN No. 4410
Expiration Date
9/30/10
Renewal Date
7/28/09
Date
STATE OF CALIFORNIA

NOTE: FOR ACCURATE RIGHT OF WAY AND ACCESS DATA, CONTACT RIGHT OF WAY ENGINEERING AT THE DISTRICT OFFICE.

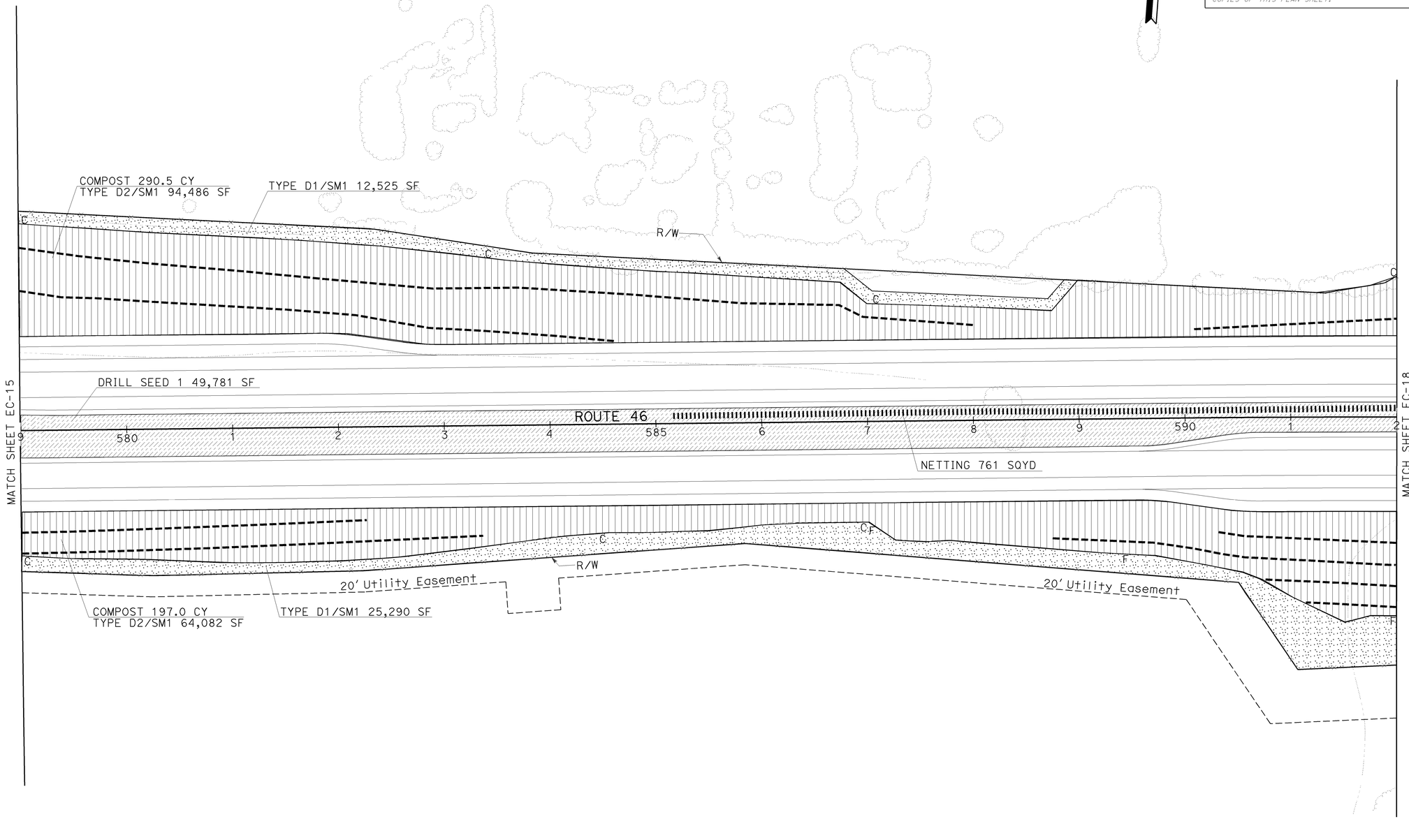

EROSION CONTROL AND IRRIGATION PLAN

SCALE: 1"=50'

EC-17

THIS PLAN ACCURATE FOR EROSION CONTROL AND IRRIGATION WORK ONLY.

STATE OF CALIFORNIA - DEPARTMENT OF TRANSPORTATION
LANDSCAPE ARCHITECTURE
SENIOR LANDSCAPE ARCHITECT: DENNIS REEVES
CALCULATED-DESIGNED BY: KRISTEN LANGAGER
CHECKED BY: SCOTT DOWLAN
REVISED BY
DATE REVISED

LAST REVISION 07-28-09
DATE PLOTTED => 08-DEC-2009
TIME PLOTTED => 08:07

BORDER LAST REVISED 3/1/2007
RELATIVE BORDER SCALE IS IN INCHES 0 1 2 3
USERNAME => trienard
DGN FILE => 533072ge017.dgn
CU 05341
EA 330721

Dist	COUNTY	ROUTE	POST MILES TOTAL PROJECT	SHEET No.	TOTAL SHEETS
05	SLO	46	36.6/41.2	148	595

LICENSED LANDSCAPE ARCHITECT

12-7-09
PLANS APPROVAL DATE

THE STATE OF CALIFORNIA OR ITS OFFICERS OR AGENTS SHALL NOT BE RESPONSIBLE FOR THE ACCURACY OR COMPLETENESS OF ELECTRONIC COPIES OF THIS PLAN SHEET.

LICENSED LANDSCAPE ARCHITECT
SCOTT F. DOWLAN No. 4410
Expiration Date 9/30/10
Renewal Date 7/28/09
Date
STATE OF CALIFORNIA

NOTE: FOR ACCURATE RIGHT OF WAY AND ACCESS DATA, CONTACT RIGHT OF WAY ENGINEERING AT THE DISTRICT OFFICE.

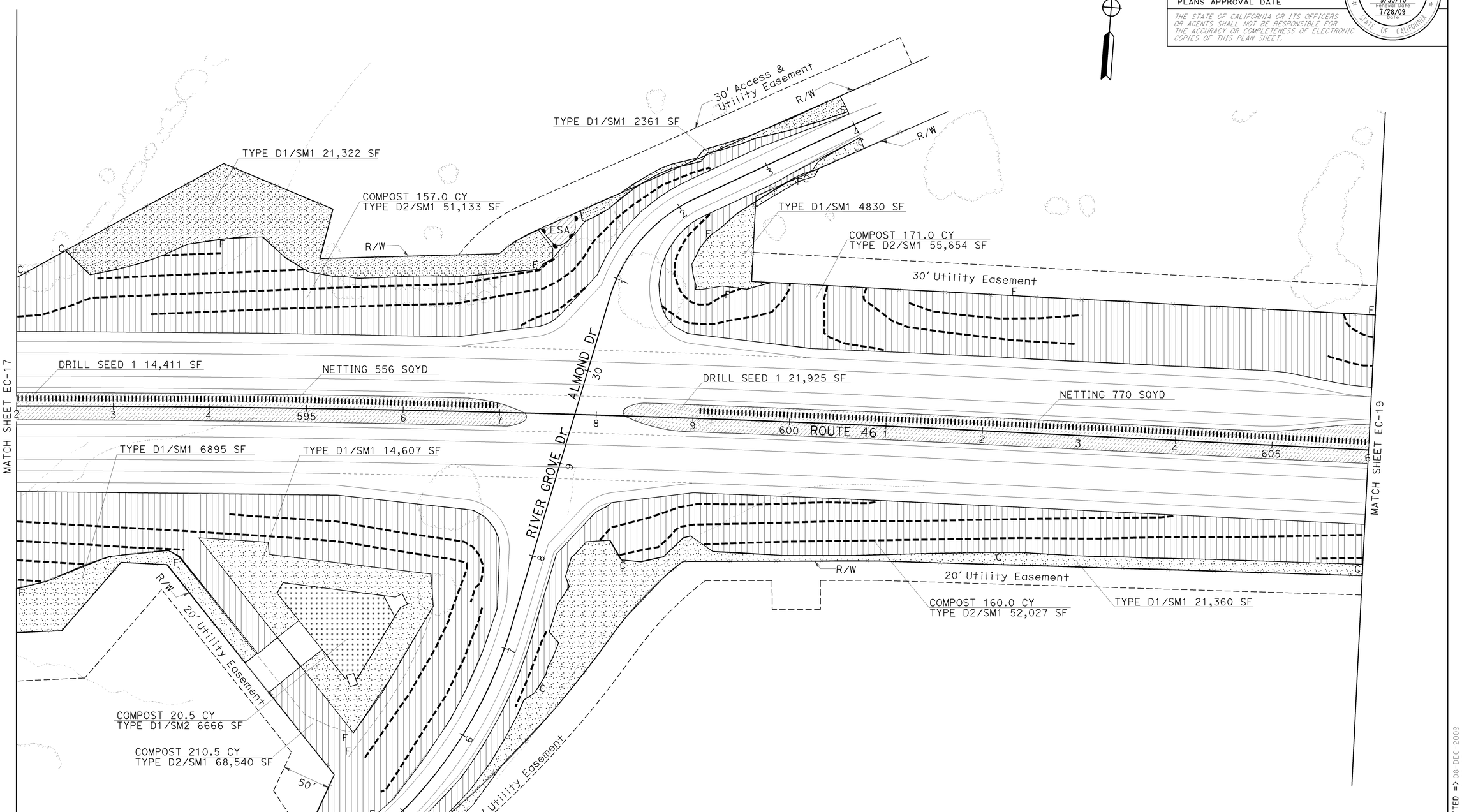

EROSION CONTROL AND IRRIGATION PLAN

SCALE: 1"=50' **EC-18**

THIS PLAN ACCURATE FOR EROSION CONTROL AND IRRIGATION WORK ONLY.

STATE OF CALIFORNIA - DEPARTMENT OF TRANSPORTATION
LANDSCAPE ARCHITECTURE
SENIOR LANDSCAPE ARCHITECT: DENNIS REEVES
CALCULATED-DESIGNED BY: KRISTEN LANGAGER
CHECKED BY: SCOTT DOWLAN
REVISED BY
DATE REVISED

LAST REVISION 07-28-09
DATE PLOTTED => 08-DEC-2009
TIME PLOTTED => 08:07

BORDER LAST REVISED 3/1/2007
RELATIVE BORDER SCALE IS IN INCHES 0 1 2 3
USERNAME => trlenard
DGN FILE => 533072ge018.dgn
CU 05341
EA 330721

Dist	COUNTY	ROUTE	POST MILES TOTAL PROJECT	SHEET No.	TOTAL SHEETS
05	SLO	46	36.6/41.2	149	595

LICENSED LANDSCAPE ARCHITECT

12-7-09
PLANS APPROVAL DATE

THE STATE OF CALIFORNIA OR ITS OFFICERS OR AGENTS SHALL NOT BE RESPONSIBLE FOR THE ACCURACY OR COMPLETENESS OF ELECTRONIC COPIES OF THIS PLAN SHEET.

LICENSED LANDSCAPE ARCHITECT
SCOTT P. DOWLAN No. 4410
Expiration Date
9/30/10
Renewal Date
7/28/09
Date
STATE OF CALIFORNIA

NOTE: FOR ACCURATE RIGHT OF WAY AND ACCESS DATA, CONTACT RIGHT OF WAY ENGINEERING AT THE DISTRICT OFFICE.

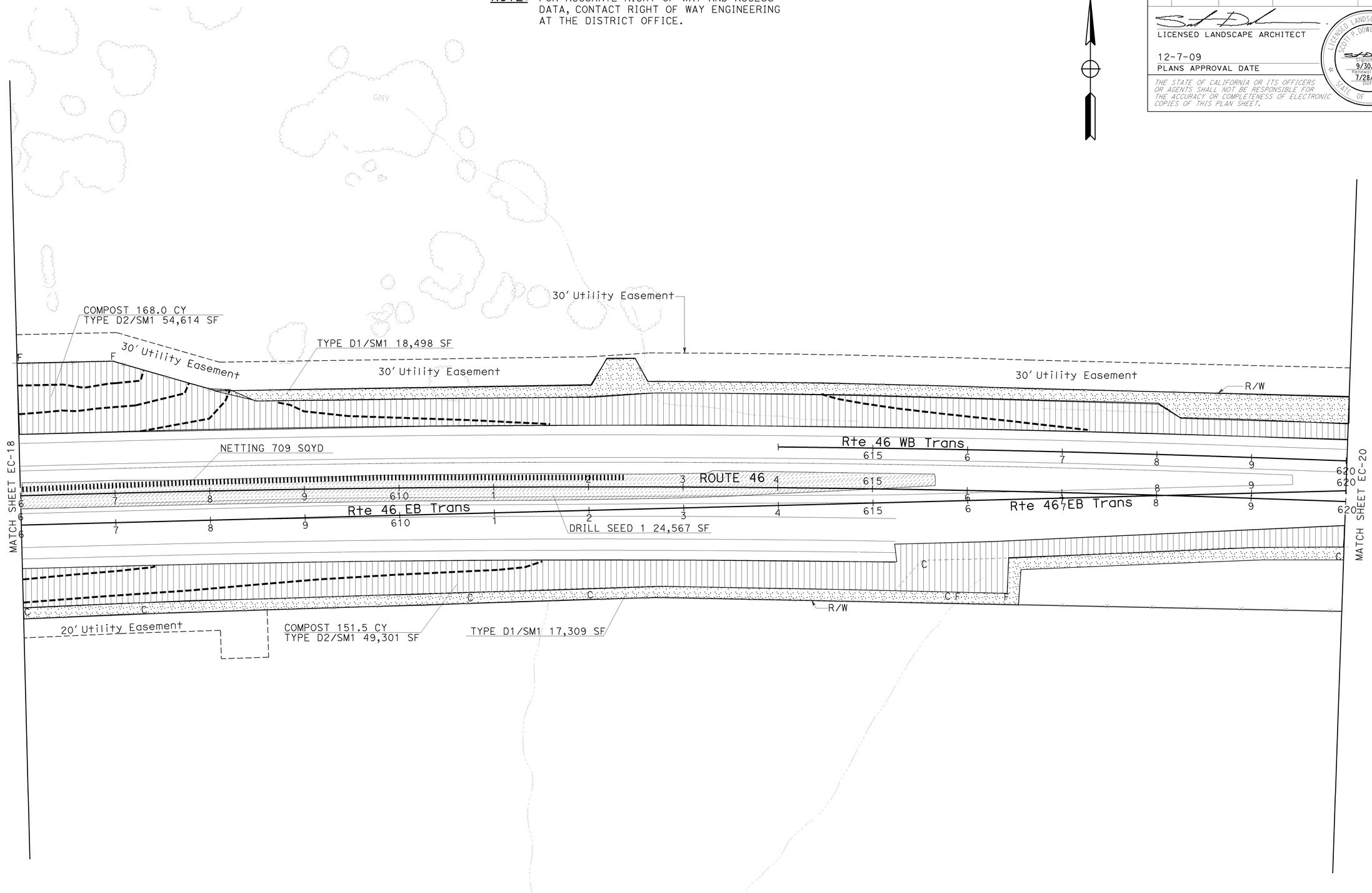

EROSION CONTROL AND IRRIGATION PLAN

SCALE: 1"=50'

EC-19

THIS PLAN ACCURATE FOR EROSION CONTROL AND IRRIGATION WORK ONLY.

CALCULATED-DESIGNED BY: SCOTT DOWLAN
CHECKED BY: KRISTEN LANGAGER
REVISED BY
DATE REVISED
SENIOR LANDSCAPE ARCHITECT: DENNIS REEVES

STATE OF CALIFORNIA - DEPARTMENT OF TRANSPORTATION
Caltrans LANDSCAPE ARCHITECTURE

LAST REVISION
DATE PLOTTED => 08-DEC-2009
TIME PLOTTED => 08:07
07-28-09

BORDER LAST REVISED 3/1/2007
RELATIVE BORDER SCALE IS IN INCHES 0 1 2 3
USERNAME => trlenard
DGN FILE => 533072ge019.dgn
CU 05341
EA 330721

NOTE: FOR ACCURATE RIGHT OF WAY AND ACCESS DATA, CONTACT RIGHT OF WAY ENGINEERING AT THE DISTRICT OFFICE.

Dist	COUNTY	ROUTE	POST MILES TOTAL PROJECT	SHEET No.	TOTAL SHEETS
05	SLO	46	36.6/41.2	150	595

LICENSED LANDSCAPE ARCHITECT

12-7-09
PLANS APPROVAL DATE

LICENSED LANDSCAPE ARCHITECT
SCOTT P. DOWLAN No. 4410
Expiration Date
9/30/10
Renewal Date
7/28/09
Date
STATE OF CALIFORNIA

THE STATE OF CALIFORNIA OR ITS OFFICERS OR AGENTS SHALL NOT BE RESPONSIBLE FOR THE ACCURACY OR COMPLETENESS OF ELECTRONIC COPIES OF THIS PLAN SHEET.

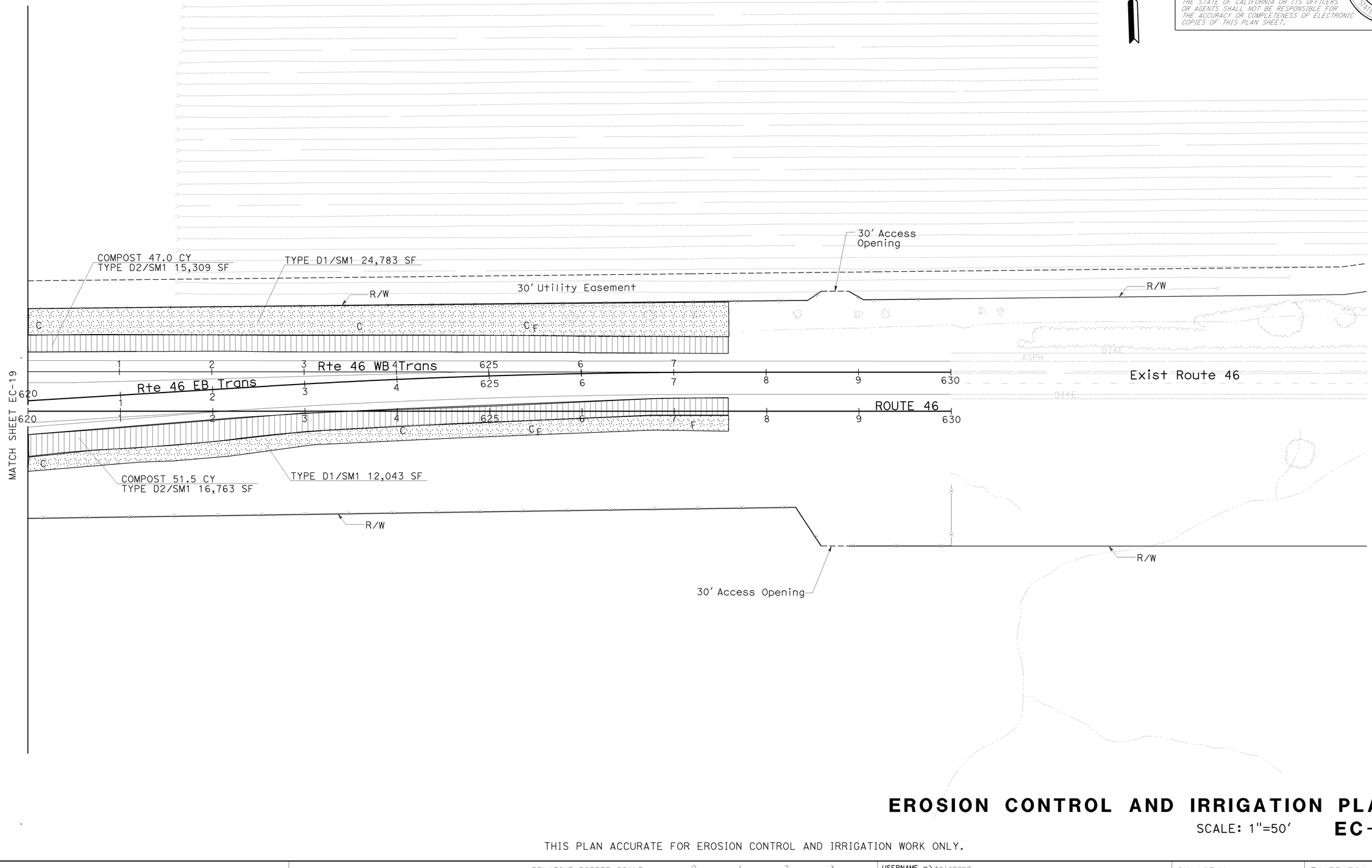

EROSION CONTROL AND IRRIGATION PLAN

SCALE: 1"=50'

EC-20

THIS PLAN ACCURATE FOR EROSION CONTROL AND IRRIGATION WORK ONLY.

STATE OF CALIFORNIA - DEPARTMENT OF TRANSPORTATION
LANDSCAPE ARCHITECTURE
SENIOR LANDSCAPE ARCHITECT: DENNIS REEVES
CALCULATED-DESIGNED BY: KRISTEN LANGAGER
CHECKED BY: SCOTT DOWLAN
REVISED BY
DATE REVISED

LAST REVISION DATE PLOTTED => 08-DEC-2009
TIME PLOTTED => 08:07
07-28-09

BORDER LAST REVISED 3/1/2007
RELATIVE BORDER SCALE IS IN INCHES 0 1 2 3
USERNAME => trlenard
DGN FILE => 533072ge020.dgn
CU 05341
EA 330721

Dist	COUNTY	ROUTE	POST MILES TOTAL PROJECT	SHEET No.	TOTAL SHEETS
05	SLO	46	36.6/41.2	151	595

LICENSED LANDSCAPE ARCHITECT

12-7-09
PLANS APPROVAL DATE

LICENSED LANDSCAPE ARCHITECT SCOTT P. DOWLAN No. 4410 Signature 9/30/10 Renewal Date 7/28/09 Date STATE OF CALIFORNIA

THE STATE OF CALIFORNIA OR ITS OFFICERS OR AGENTS SHALL NOT BE RESPONSIBLE FOR THE ACCURACY OR COMPLETENESS OF ELECTRONIC COPIES OF THIS PLAN SHEET.

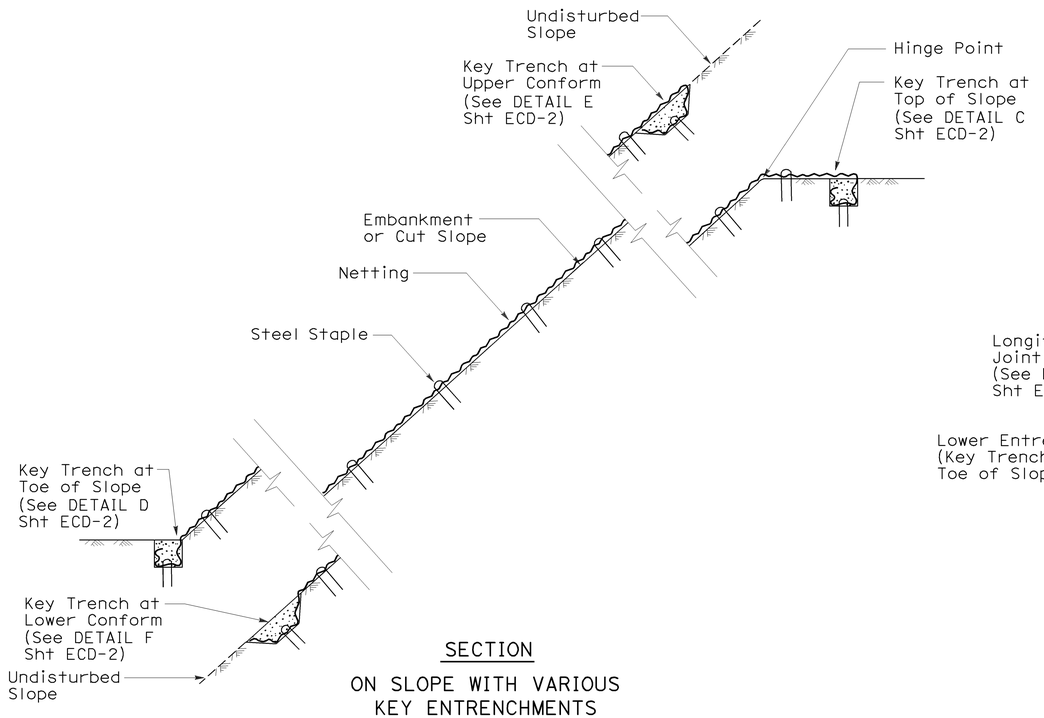

SECTION

ON SLOPE WITH VARIOUS KEY ENTRENCHMENTS

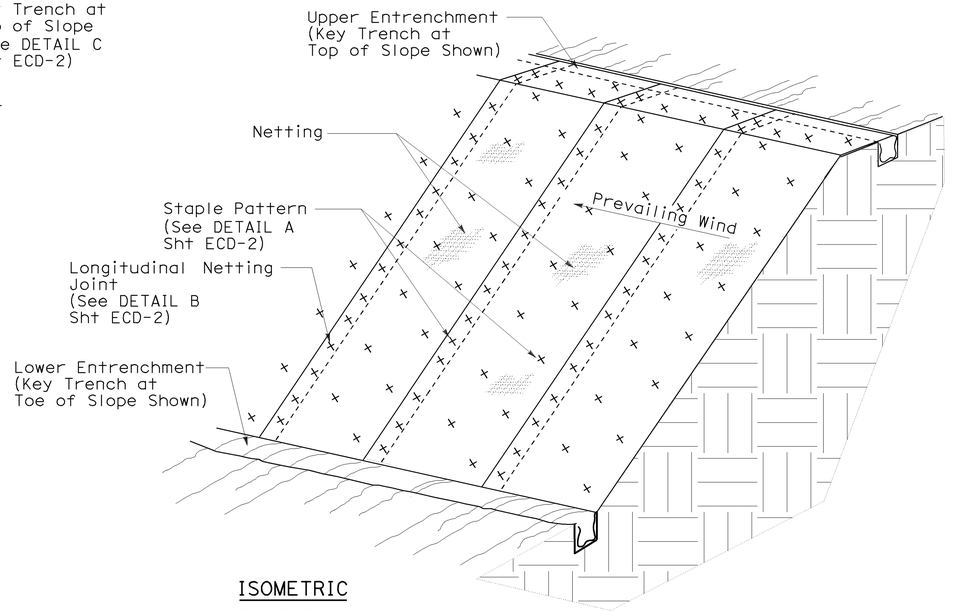

ISOMETRIC

ON SLOPE

NOTES:

1. For clarity, perspective view does not show all staples.
2. Install at swale.

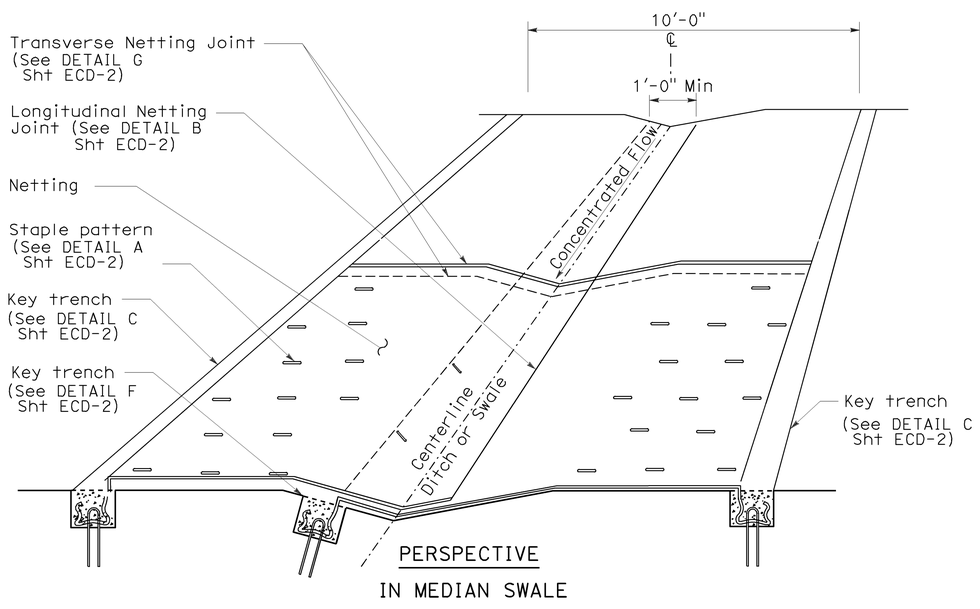

PERSPECTIVE

IN MEDIAN SWALE

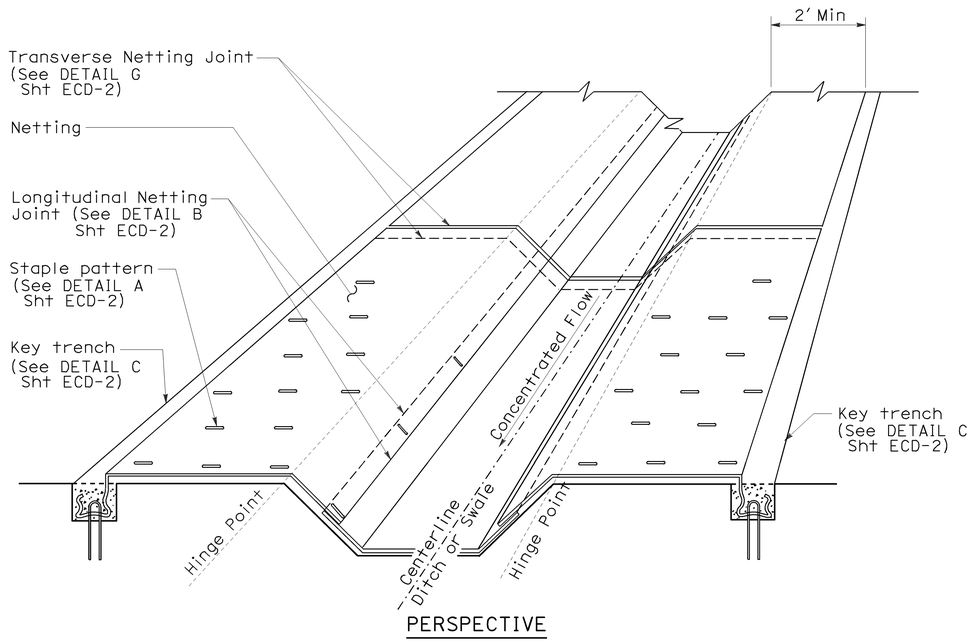

PERSPECTIVE

IN TRAPAZOIDAL DITCH OR SWALE

EROSION CONTROL (NETTING)

EROSION CONTROL AND IRRIGATION DETAILS

NO SCALE

ECD-1

THIS PLAN ACCURATE FOR EROSION CONTROL AND IRRIGATION WORK ONLY.

STATE OF CALIFORNIA - DEPARTMENT OF TRANSPORTATION
Caltrans LANDSCAPE ARCHITECTURE
SENIOR LANDSCAPE ARCHITECT: DENNIS REEVES
CALCULATED-DESIGNED BY: LINDA BAKER
CHECKED BY: KRISTEN LANGAGER
REVISED BY
DATE REVISED

LAST REVISION 07-28-09
DATE PLOTTED => 08-DEC-2009
TIME PLOTTED => 08:57

Dist	COUNTY	ROUTE	POST MILES TOTAL PROJECT	SHEET No.	TOTAL SHEETS
05	SLO	46	36.6/41.2	152	595

LICENSED LANDSCAPE ARCHITECT

12-7-09
PLANS APPROVAL DATE

LICENSED LANDSCAPE ARCHITECT SCOTT P. DOWLAN No. 4410 Signature 9/30/10 Renewal Date 7/28/09 Date STATE OF CALIFORNIA

THE STATE OF CALIFORNIA OR ITS OFFICERS OR AGENTS SHALL NOT BE RESPONSIBLE FOR THE ACCURACY OR COMPLETENESS OF ELECTRONIC COPIES OF THIS PLAN SHEET.

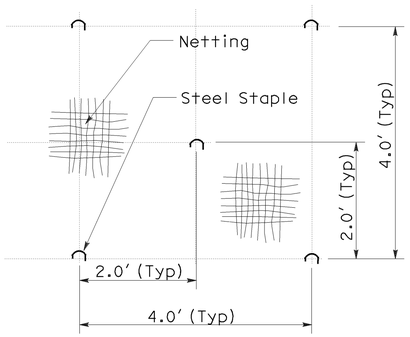

PLAN
DETAIL A
STAPLE PATTERN

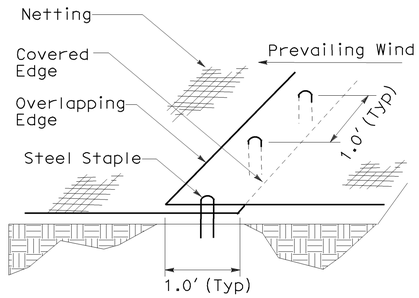

PERSPECTIVE
DETAIL B
LONGITUDINAL NETTING JOINT

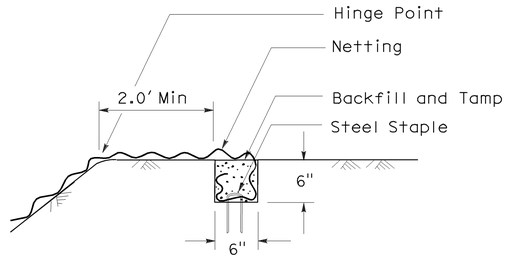

SECTION
DETAIL C
KEY TRENCH AT TOP OF SLOPE

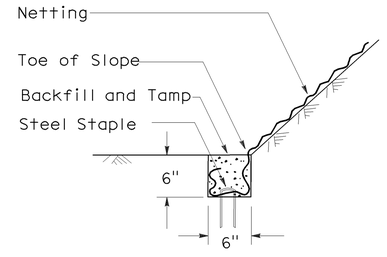

SECTION
DETAIL D
KEY TRENCH AT TOE OF SLOPE

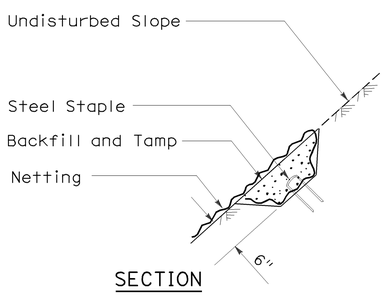

SECTION
DETAIL E
KEY TRENCH AT UPPER CONFORM

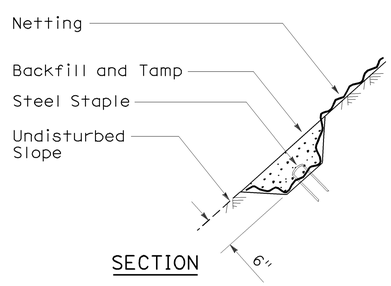

SECTION
DETAIL F
KEY TRENCH AT LOWER CONFORM

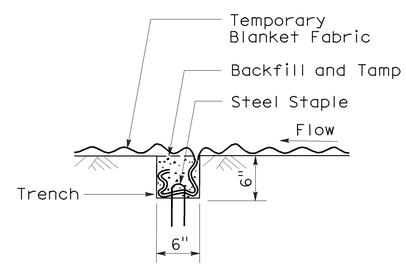

SECTION
DETAIL G
TRANSVERSE NETTING JOINT

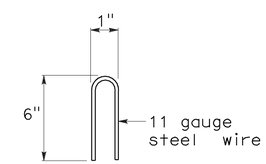

SECTION
STAPLE DETAIL

EROSION CONTROL (NETTING)

EROSION CONTROL AND IRRIGATION DETAILS

NO SCALE

ECD-2

THIS PLAN ACCURATE FOR EROSION CONTROL AND IRRIGATION WORK ONLY.

STATE OF CALIFORNIA - DEPARTMENT OF TRANSPORTATION
Caltrans LANDSCAPE ARCHITECTURE

SENIOR LANDSCAPE ARCHITECT: DENNIS REEVES
CALCULATED-DESIGNED BY: SCOTT DOWLAN
CHECKED BY: KRISTEN LANGAGER
REVISED BY
DATE REVISED

LAST REVISION 07-28-09
DATE PLOTTED => 08-DEC-2009
TIME PLOTTED => 08:57

Dist	COUNTY	ROUTE	POST MILES TOTAL PROJECT	SHEET No.	TOTAL SHEETS
05	SLO	46	36.6/41.2	153	595

LICENSED LANDSCAPE ARCHITECT

12-7-09
PLANS APPROVAL DATE

THE STATE OF CALIFORNIA OR ITS OFFICERS OR AGENTS SHALL NOT BE RESPONSIBLE FOR THE ACCURACY OR COMPLETENESS OF ELECTRONIC COPIES OF THIS PLAN SHEET.

LICENSED LANDSCAPE ARCHITECT
SCOTT P. DOWLAN No. 4410
Expiration Date
9/30/10
Renewal Date
7/28/09
Date
STATE OF CALIFORNIA

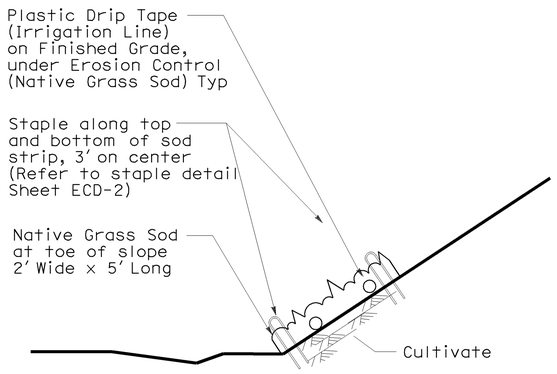

SECTION

EROSION CONTROL (NATIVE GRASS SOD) PLASTIC DRIP TAPE (IRRIGATION) LAYOUT

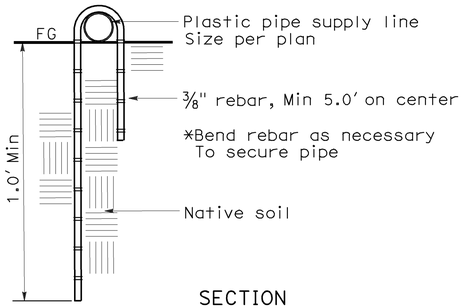

SECTION

PLASTIC PIPE ANCHOR

NOTE:

1. Install at swale.

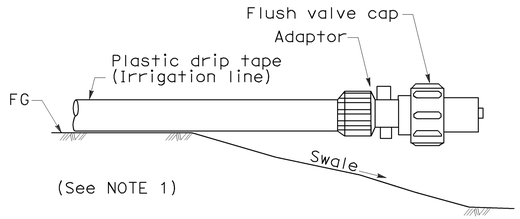

ELEVATION

DRIP TAPE FLUSH VALVE

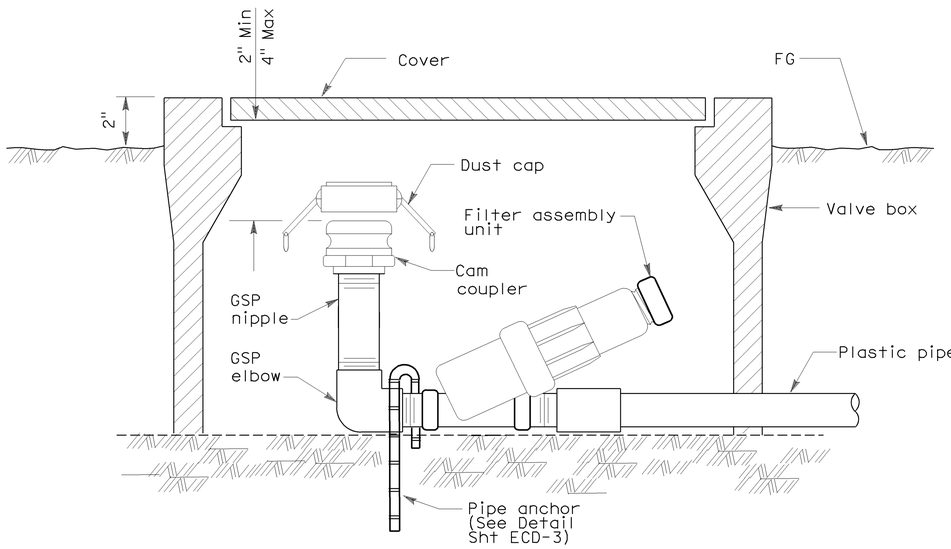

SECTION

CAM COUPLER, FILTER ASSEMBLY UNIT, AND VALVE BOX

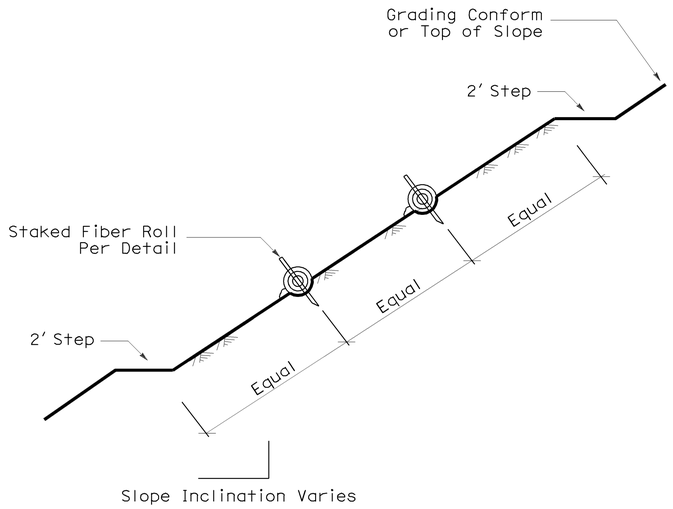

SECTION

FIBER ROLL LAYOUT ON LANDFORM GRADED SLOPES

EROSION CONTROL AND IRRIGATION DETAILS

NO SCALE

ECD-3

THIS PLAN ACCURATE FOR EROSION CONTROL AND IRRIGATION WORK ONLY.

STATE OF CALIFORNIA - DEPARTMENT OF TRANSPORTATION
Caltrans LANDSCAPE ARCHITECTURE
SENIOR LANDSCAPE ARCHITECT: DENNIS REEVES
CALCULATED-DESIGNED BY
CHECKED BY: KRISTEN LANGAGER
REVISED BY: SCOTT DOWLAN
DATE REVISED

LAST REVISION DATE PLOTTED => 08-DEC-2009
07-28-09 TIME PLOTTED => 08:57

BORDER LAST REVISED 3/1/2007
RELATIVE BORDER SCALE IS IN INCHES 0 2 3
USERNAME => trmnguye
DGN FILE => 533072gf003.dgn
CU 05341
EA 330721

Dist	COUNTY	ROUTE	POST MILES TOTAL PROJECT	SHEET No.	TOTAL SHEETS
05	SLO	46	36.6/41.2	154	595

LICENSED LANDSCAPE ARCHITECT

12-7-09
PLANS APPROVAL DATE

LICENSED LANDSCAPE ARCHITECT SCOTT P. DOWLAN No. 4410 — Original Date 9/30/10 — Renewal Date 7/28/09 — Date — STATE OF CALIFORNIA

THE STATE OF CALIFORNIA OR ITS OFFICERS OR AGENTS SHALL NOT BE RESPONSIBLE FOR THE ACCURACY OR COMPLETENESS OF ELECTRONIC COPIES OF THIS PLAN SHEET.

PLACE CHIPPED MATERIAL AND TREE TRUNK

LOCATION			SIDE		PLACE CHIPPED MATERIAL	PLACE TREE TRUNK
SHEET	LINE	STATION	L†	R†	CY	EA
EC-14	SR-46	561+75		X	23	2
EC-14	SR-46	561+75	X		23	0
EC-14	SR-46	562+50	X		116	3
EC-16	FR-1	74+00		X	50.5	3
				TOTAL	212.5	8

LINE
FR-1 - FRONTAGE ROAD 1
SR-46 -STATE ROUTE 46

EROSION CONTROL QUANTITIES

SHEET	EROSION CONTROL (COMPOST BLANKET)	EROSION CONTROL (NETTING)		EROSION CONTROL (TYPE D)-TYPE 1 SEED MIX 1		EROSION CONTROL (TYPE D)-TYPE 1 SEED MIX 2		EROSION CONTROL (TYPE D)-TYPE 2 SEED MIX 1		EROSION CONTROL (DRILL SEED) SEED MIX 1		EROSION CONTROL (DRILL SEED) SEED MIX 2		FIBER ROLLS	EROSION CONTROL (NATIVE GRASS SOD)	CULTIVATE (SOIL AMENDMENT)	
	CY	SQYD	ACRE (N)	SQFT (N)	ACRE	SQFT (N)	ACRE	SQFT (N)	ACRE	SQFT (N)	ACRE	SQFT (N)	ACRE	LF	SQFT	SQFT (N)	ACRE
EC-1	5.5	-	-	1320	0.1	-	-	1751	0.1	25,929	0.6	-	-	-	-	-	-
EC-2	146.0	-	-	30,407	0.7	600	0.1	46,905	1.1	45,294	1.0	-	-	991	-	-	-
EC-3	232.0	-	-	35,621	0.8	3396	0.1	72,286	1.7	54,657	1.3	-	-	1243	-	-	-
EC-4	277.0	-	-	35,827	0.8	-	-	90,123	2.1	66,557	1.5	-	-	2815	-	-	-
EC-5	342.5	-	-	24,059	0.6	9649	0.2	102,033	2.3	56,599	1.3	-	-	2996	-	-	-
EC-6	246.0	-	-	34,192	0.8	7944	0.2	72,046	1.7	48,424	1.1	-	-	67	-	-	-
EC-7	280.0	-	-	31,210	0.7	-	-	91,140	2.0	52,268	1.2	-	-	1368	-	-	-
EC-8	189.5	728	0.2	49,553	1.1	-	-	58,303	1.3	67,925	1.6	-	-	927	-	-	-
EC-9	723.0	1205	0.3	40,476	0.9	-	-	235,347	5.4	60,363	1.4	-	-	5172	-	-	-
EC-10	817.5	156	0.1	41,068	0.9	-	-	266,075	6.1	63,198	1.5	-	-	6301	-	-	-
EC-11	1351.0	40,779	8.4	398,379	9.1	-	-	72,597	1.7	61,496	1.4	-	-	10,565	3990	3990	0.1
EC-12	1799.0	61,309	12.7	578,158	13.3	-	-	42,396	1.0	62,452	1.4	-	-	17,639	4554	4554	0.1
EC-13	2495.5	91,267	18.9	838,433	19.2	-	-	2266	0.1	62,434	1.4	-	-	24,377	4242	4242	0.1
EC-14	1216.5	33,153	6.8	331,548	7.6	71,738	1.6	93,864	2.2	28,980	0.7	96,479	2.2	13,685	374	96,853	2.2
EC-15	876.0	2789	0.5	40,057	0.9	45,041	1.0	249,041	5.7	23,541	0.5	-	-	4875	-	-	-
EC-16	820.5	877	0.2	59,616	1.4	29,181	0.7	251,993	6.9	26,791	0.6	103,559	2.4	4805	-	103,559	2.4
EC-17	487.5	761	0.2	37,815	0.9	-	-	158,568	3.6	49,781	1.1	-	-	3132	-	-	-
EC-18	719.0	1326	0.3	71,375	1.6	6666	0.2	227,354	5.2	36,336	0.8	-	-	5697	-	-	-
EC-19	319.5	709	0.1	35,807	0.8	-	-	103,915	2.4	24,567	0.6	-	-	1705	-	-	-
EC-20	98.5	-	-	36,826	0.8	-	-	32,072	0.7	-	-	-	-	-	-	-	-
TOTAL	13,442	235,059	-	-	63	-	4.1	-	53.3	-	21	-	4.6	108,360	13,160	-	4.9

THIS PLAN ACCURATE FOR EROSION CONTROL AND IRRIGATION WORK ONLY.

EROSION CONTROL QUANTITIES
ECQ-1

CALCULATED-DESIGNED BY
CHECKED BY
REVISED BY
DATE REVISED

SCOTT DOWLAN
KRISTEN LANGAGER

SENIOR LANDSCAPE ARCHITECT
DENNIS REEVES

STATE OF CALIFORNIA - DEPARTMENT OF TRANSPORTATION
Caltrans LANDSCAPE ARCHITECTURE

LAST REVISION DATE PLOTTED => 10-DEC-2009
07-28-09 TIME PLOTTED => 06:41

NOTE: FOR ACCURATE RIGHT OF WAY AND ACCESS DATA, CONTACT RIGHT OF WAY ENGINEERING AT THE DISTRICT OFFICE.

ABBREVIATIONS:

Prvt	PRIVATE
IETW	INSIDE EDGE OF TRAVELED WAY
HSS	HIGH SIDE SUPER
CHDPE	CORRUGATED HIGH DENSITY POLYETHYLENE PIPE
Veg Ctrl	VEGETATION CONTROL
ESA	ENVIRONMENTALLY SENSITIVE AREA
AFTS	ALTERNATIVE FLARE TERMINAL SYSTEM

LEGEND

- DRAINAGE SYSTEM No.
- DRAINAGE UNIT No.
- 1X — EXISTING DRAINAGE SYSTEM No.
- T1 — TEMPORARY DRAINAGE SYSTEM No.

Dist	COUNTY	ROUTE	POST MILES TOTAL PROJECT	SHEET No.	TOTAL SHEETS
05	SLO	46	36.6/41.2	155	595

8-24-09
REGISTERED CIVIL ENGINEER DATE

12-7-09
PLANS APPROVAL DATE

JOSE M. ARGUELLO No. 51321 Exp 06-30-10 CIVIL — REGISTERED PROFESSIONAL ENGINEER — STATE OF CALIFORNIA

THE STATE OF CALIFORNIA OR ITS OFFICERS OR AGENTS SHALL NOT BE RESPONSIBLE FOR THE ACCURACY OR COMPLETENESS OF ELECTRONIC COPIES OF THIS PLAN SHEET.

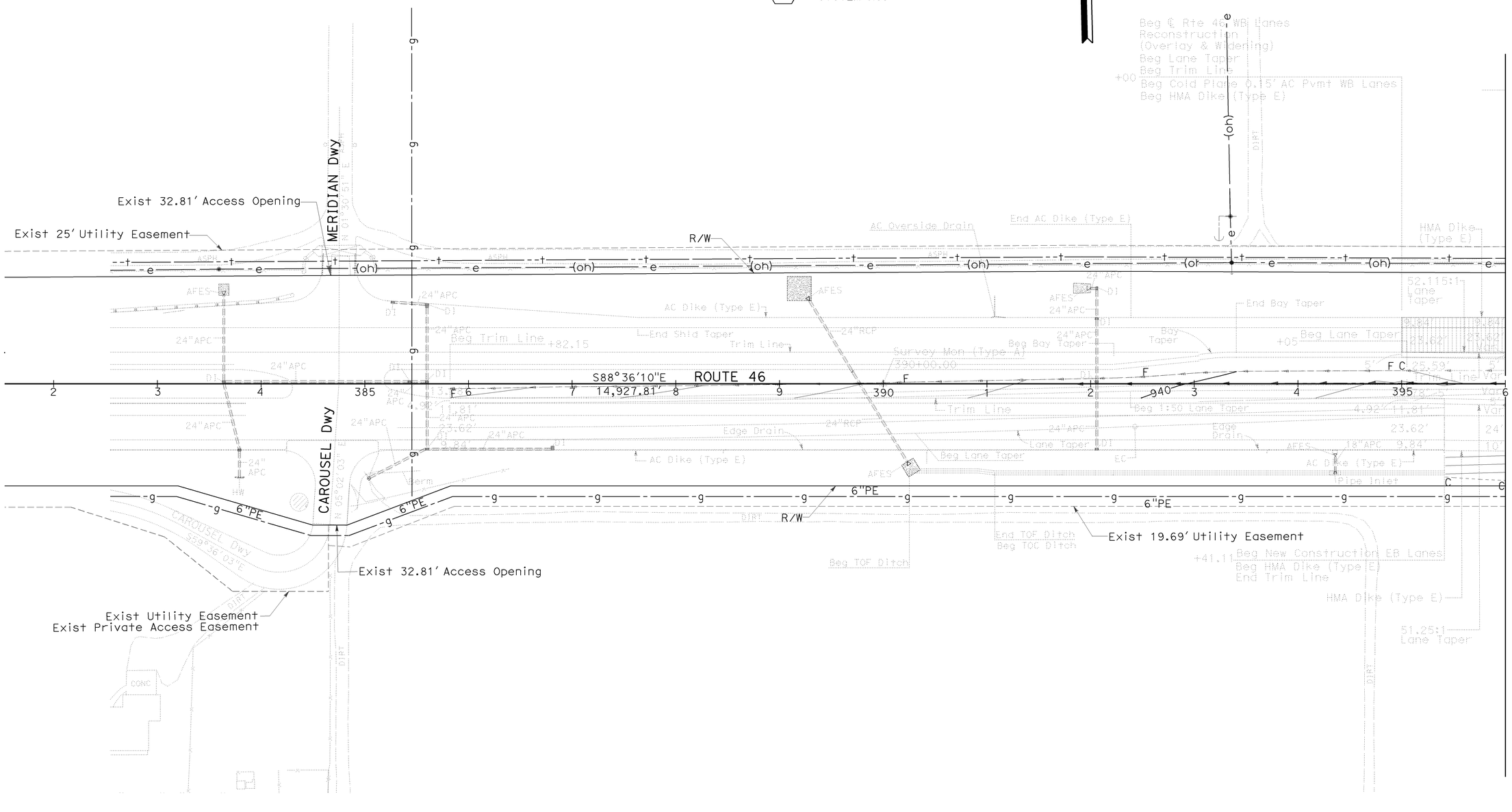

THIS PLAN ACCURATE FOR DRAINAGE, CONTOUR GRADING, AND UTILITY WORK ONLY.

SCALE: 1"=50'

DRAINAGE, CONTOUR GRADING AND UTILITY PLAN

D-1

STATE OF CALIFORNIA - DEPARTMENT OF TRANSPORTATION
Caltrans
06-DESIGN
FUNCTIONAL SUPERVISOR: JACK WALKER
CALCULATED-DESIGNED BY: JIM MILLS
CHECKED BY: JOHN CLARKE
REVISED BY
DATE REVISED

LAST REVISION DATE PLOTTED => 08-DEC-2009
TIME PLOTTED => 08:57
08-25-09

BORDER LAST REVISED 3/1/2007
RELATIVE BORDER SCALE IS IN INCHES 0 1 2 3
USERNAME => trmnguye
DGN FILE => 5330721a001.dgn
CU 06220
EA 330721

Dist	COUNTY	ROUTE	POST MILES TOTAL PROJECT	SHEET No.	TOTAL SHEETS
05	SLO	46	36.6/41.2	156	595

8-24-09
REGISTERED CIVIL ENGINEER DATE

12-7-09
PLANS APPROVAL DATE

REGISTERED PROFESSIONAL ENGINEER
JOSE M. ARGUELLO
No. 51321
Exp 06-30-10
CIVIL
STATE OF CALIFORNIA

THE STATE OF CALIFORNIA OR ITS OFFICERS OR AGENTS SHALL NOT BE RESPONSIBLE FOR THE ACCURACY OR COMPLETENESS OF ELECTRONIC COPIES OF THIS PLAN SHEET.

. **NOTE:** FOR ACCURATE RIGHT OF WAY AND ACCESS DATA, CONTACT RIGHT OF WAY ENGINEERING AT THE DISTRICT OFFICE.

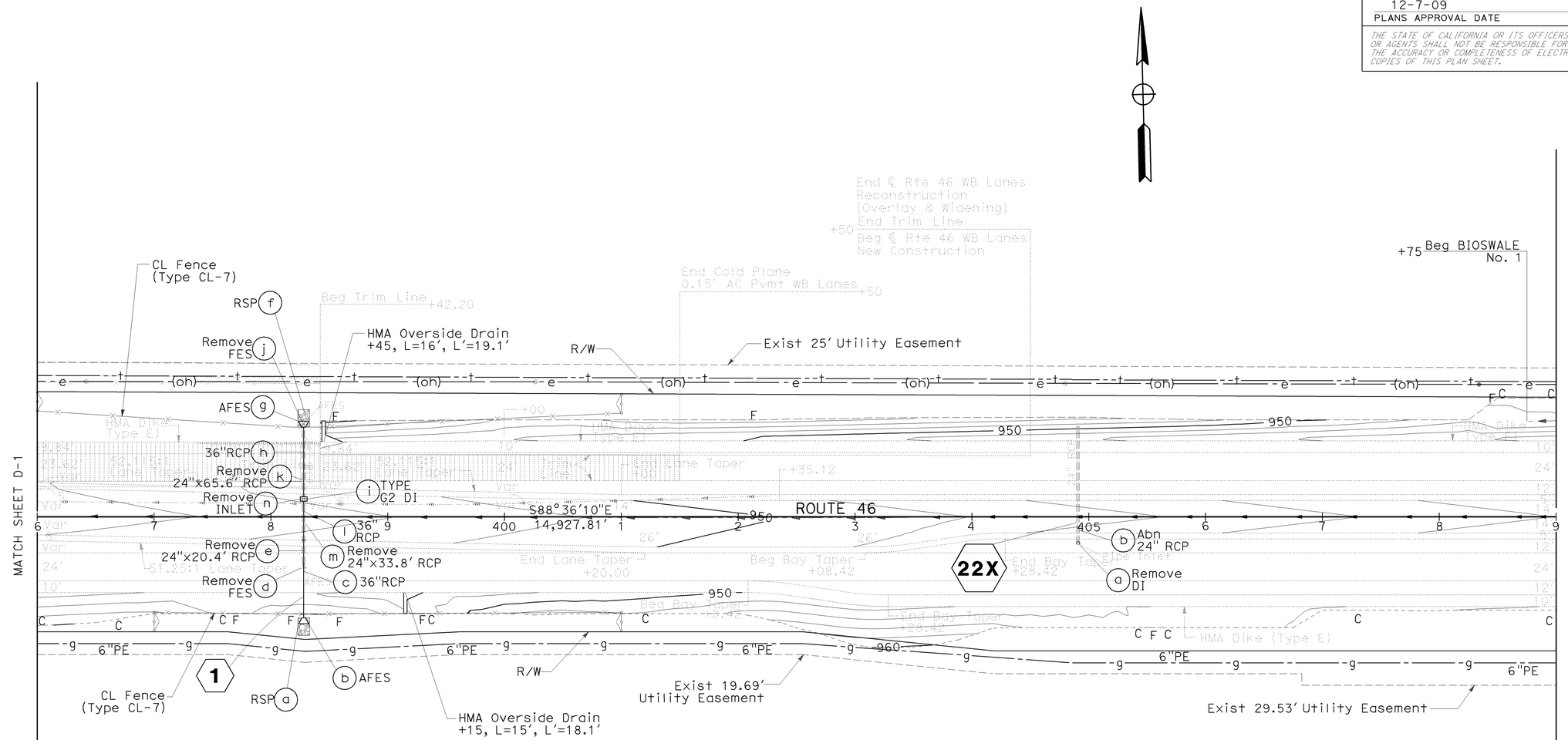

THIS PLAN ACCURATE FOR DRAINAGE, CONTOUR GRADING, AND UTILITY WORK ONLY.

SCALE: 1"=50'

DRAINAGE, CONTOUR GRADING AND UTILITY PLAN

D-2

CALCULATED-DESIGNED BY: JIM MILLS
CHECKED BY: JOHN CLARKE
REVISED BY
DATE REVISED
FUNCTIONAL SUPERVISOR: JACK WALKER
STATE OF CALIFORNIA - DEPARTMENT OF TRANSPORTATION
06-DESIGN
Caltrans

LAST REVISION | DATE PLOTTED => 08-DEC-2009 | 08-25-09 | TIME PLOTTED => 08:58

BORDER LAST REVISED 3/1/2007

RELATIVE BORDER SCALE IS IN INCHES 0 1 2 3

USERNAME => trmnguye
DGN FILE => 533072ia002.dgn

CU 06220

EA 330721

Dist	COUNTY	ROUTE	POST MILES TOTAL PROJECT	SHEET No.	TOTAL SHEETS
05	SLO	46	36.6/41.2	157	595

8-24-09
REGISTERED CIVIL ENGINEER DATE

12-7-09
PLANS APPROVAL DATE

REGISTERED PROFESSIONAL ENGINEER
JOSE M. ARGUELLO
No. 51321
Exp 06-30-10
CIVIL
STATE OF CALIFORNIA

THE STATE OF CALIFORNIA OR ITS OFFICERS OR AGENTS SHALL NOT BE RESPONSIBLE FOR THE ACCURACY OR COMPLETENESS OF ELECTRONIC COPIES OF THIS PLAN SHEET.

NOTE: FOR ACCURATE RIGHT OF WAY AND ACCESS DATA, CONTACT RIGHT OF WAY ENGINEERING AT THE DISTRICT OFFICE.

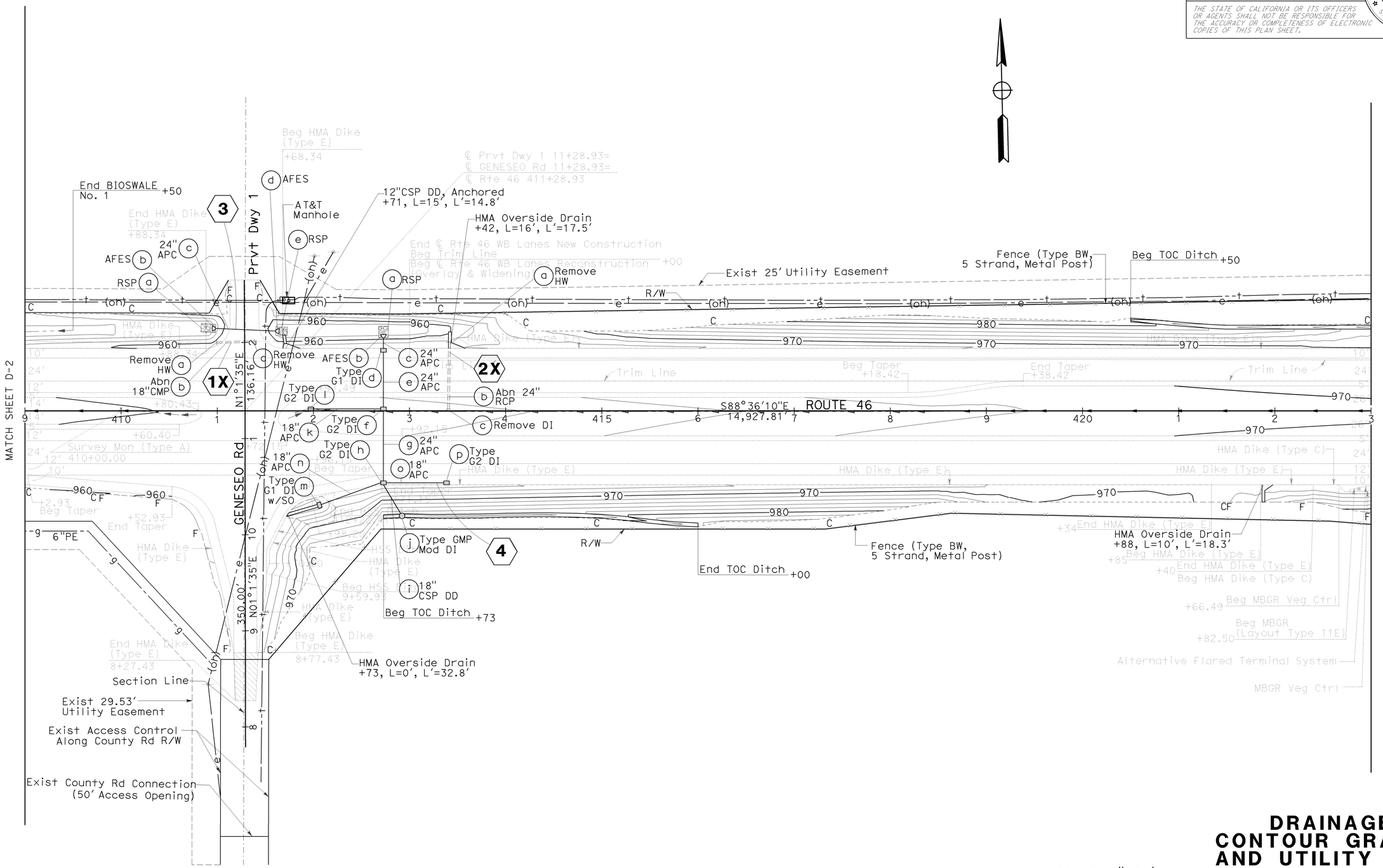

THIS PLAN ACCURATE FOR DRAINAGE, CONTOUR GRADING, AND UTILITY WORK ONLY.

SCALE: 1"=50'

DRAINAGE, CONTOUR GRADING AND UTILITY PLAN

D-3

LAST REVISION | DATE PLOTTED => 08-DEC-2009
08-25-09 | TIME PLOTTED => 08:58

STATE OF CALIFORNIA - DEPARTMENT OF TRANSPORTATION
Caltrans
06-DESIGN
FUNCTIONAL SUPERVISOR: JACK WALKER
CALCULATED-DESIGNED BY: JIM MILLS
CHECKED BY: JOHN CLARKE
REVISED BY
DATE REVISED

BORDER LAST REVISED 3/1/2007

RELATIVE BORDER SCALE IS IN INCHES 0 1 2 3

USERNAME => trmnguye
DGN FILE => 533072ia003.dgn

CU 06220

EA 330721

Dist	COUNTY	ROUTE	POST MILES TOTAL PROJECT	SHEET No.	TOTAL SHEETS
05	SLO	46	36.6/41.2	158	595

8-24-09
REGISTERED CIVIL ENGINEER DATE

12-7-09
PLANS APPROVAL DATE

JOSE M. ARGUELLO
No. 51321
Exp 06-30-10
CIVIL
REGISTERED PROFESSIONAL ENGINEER
STATE OF CALIFORNIA

THE STATE OF CALIFORNIA OR ITS OFFICERS OR AGENTS SHALL NOT BE RESPONSIBLE FOR THE ACCURACY OR COMPLETENESS OF ELECTRONIC COPIES OF THIS PLAN SHEET.

NOTE: FOR ACCURATE RIGHT OF WAY AND ACCESS DATA, CONTACT RIGHT OF WAY ENGINEERING AT THE DISTRICT OFFICE.

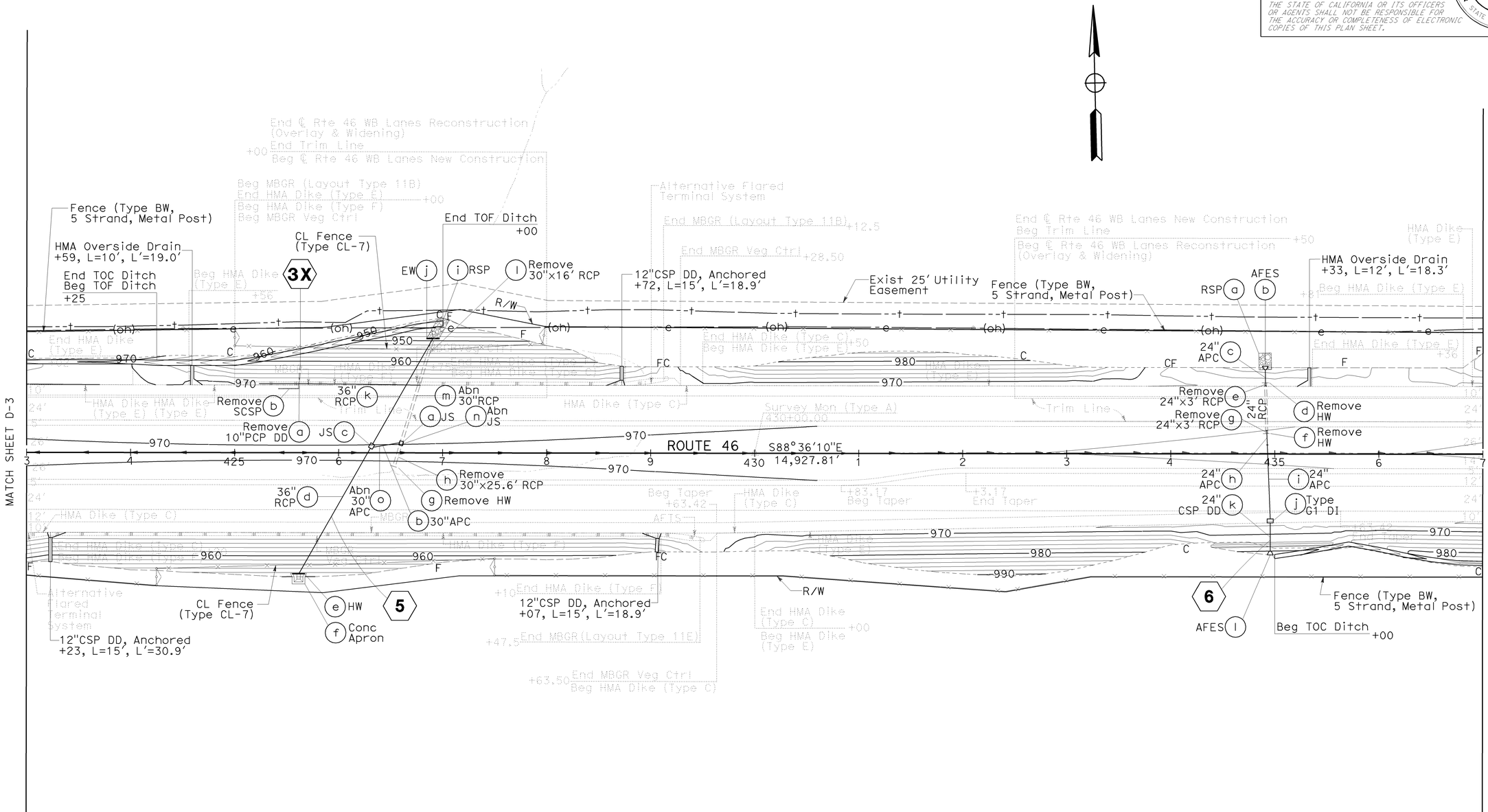

THIS PLAN ACCURATE FOR DRAINAGE, CONTOUR GRADING, AND UTILITY WORK ONLY.

SCALE: 1"=50'

DRAINAGE, CONTOUR GRADING AND UTILITY PLAN

D-4

REVISED BY | DATE REVISED

CALCULATED-DESIGNED BY: JIM MILLS
CHECKED BY: JOHN CLARKE
FUNCTIONAL SUPERVISOR: JACK WALKER

STATE OF CALIFORNIA - DEPARTMENT OF TRANSPORTATION
06-DESIGN

LAST REVISION | DATE PLOTTED => 08-DEC-2009
07-28-09 | TIME PLOTTED => 08:58

BORDER LAST REVISED 3/1/2007

RELATIVE BORDER SCALE IS IN INCHES 0 1 2 3

USERNAME => trmnguye
DGN FILE => 533072ia004.dgn

CU 06220

EA 330721

Dist	COUNTY	ROUTE	POST MILES TOTAL PROJECT	SHEET No.	TOTAL SHEETS
05	SLO	46	36.6/41.2	159	595

8-24-09
REGISTERED CIVIL ENGINEER DATE

12-7-09
PLANS APPROVAL DATE

REGISTERED PROFESSIONAL ENGINEER No. Exp. CIVIL STATE OF CALIFORNIA

THE STATE OF CALIFORNIA OR ITS OFFICERS OR AGENTS SHALL NOT BE RESPONSIBLE FOR THE ACCURACY OR COMPLETENESS OF ELECTRONIC COPIES OF THIS PLAN SHEET.

NOTE: FOR ACCURATE RIGHT OF WAY AND ACCESS DATA, CONTACT RIGHT OF WAY ENGINEERING AT THE DISTRICT OFFICE.

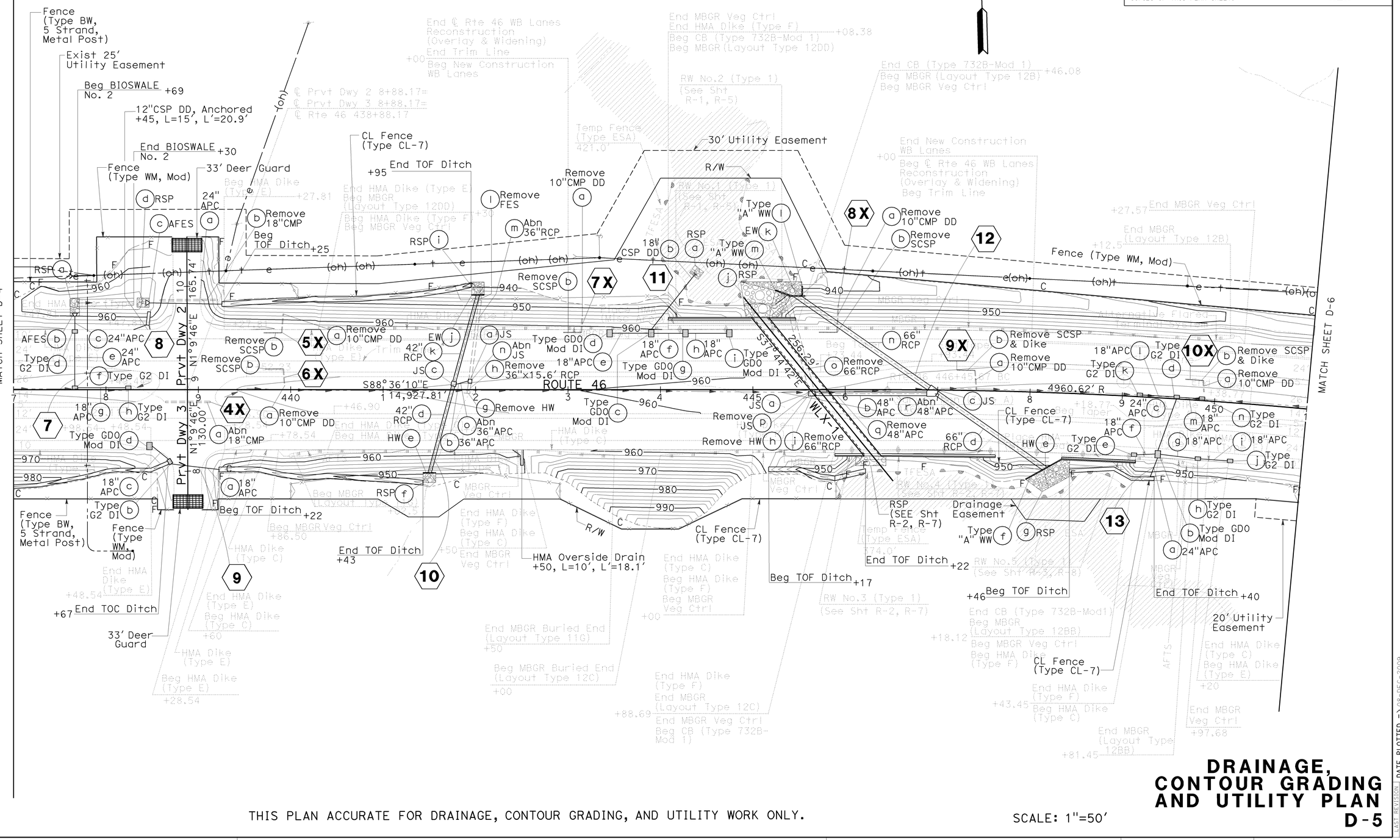

THIS PLAN ACCURATE FOR DRAINAGE, CONTOUR GRADING, AND UTILITY WORK ONLY.

SCALE: 1"=50'

DRAINAGE, CONTOUR GRADING AND UTILITY PLAN

D-5

REVISED BY	DATE REVISED

CALCULATED-DESIGNED BY: JIM MILLS
CHECKED BY: JOHN CLARKE
FUNCTIONAL SUPERVISOR: JACK WALKER

STATE OF CALIFORNIA - DEPARTMENT OF TRANSPORTATION
06-DESIGN
Caltrans

LAST REVISION | DATE PLOTTED => 08-DEC-2009
07-28-09 | TIME PLOTTED => 08:58

BORDER LAST REVISED 3/1/2007

RELATIVE BORDER SCALE IS IN INCHES 0 1 2 3

USERNAME => trmnguye
DGN FILE => 533072ia005.dgn

CU 06220

EA 330721

Dist	COUNTY	ROUTE	POST MILES TOTAL PROJECT	SHEET No.	TOTAL SHEETS
05	SLO	46	36.6/41.2	160	595

8-24-09
REGISTERED CIVIL ENGINEER DATE

12-7-09
PLANS APPROVAL DATE

REGISTERED PROFESSIONAL ENGINEER
JOSE M. ARGUELLO
No. 51321
Exp. 06-30-10
CIVIL
STATE OF CALIFORNIA

THE STATE OF CALIFORNIA OR ITS OFFICERS OR AGENTS SHALL NOT BE RESPONSIBLE FOR THE ACCURACY OR COMPLETENESS OF ELECTRONIC COPIES OF THIS PLAN SHEET.

NOTE: FOR ACCURATE RIGHT OF WAY AND ACCESS DATA, CONTACT RIGHT OF WAY ENGINEERING AT THE DISTRICT OFFICE.

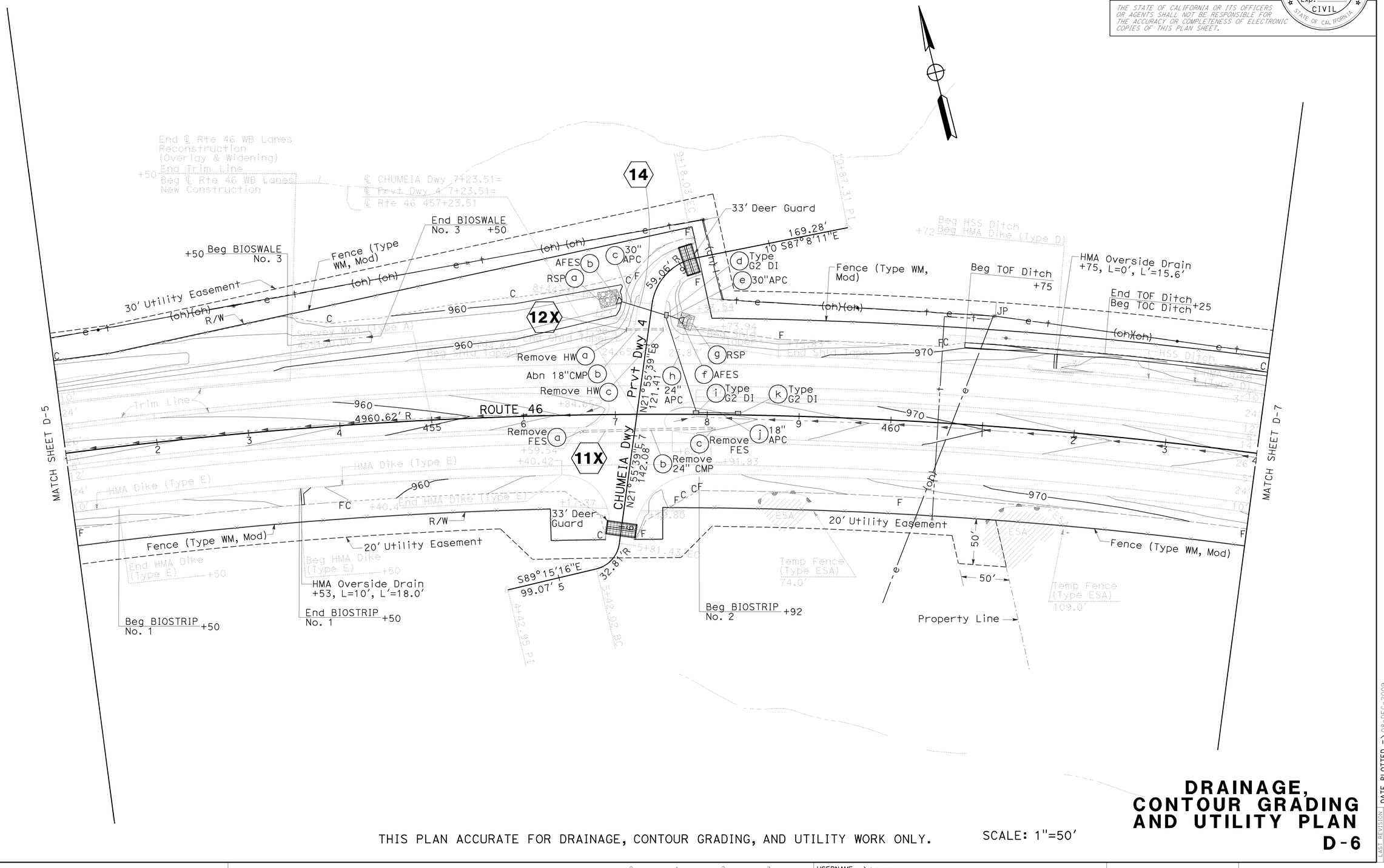

THIS PLAN ACCURATE FOR DRAINAGE, CONTOUR GRADING, AND UTILITY WORK ONLY.

SCALE: 1"=50'

DRAINAGE, CONTOUR GRADING AND UTILITY PLAN

D-6

REVISED BY | DATE REVISED
JIM MILLS | JOHN CLARKE
CALCULATED-DESIGNED BY | CHECKED BY
FUNCTIONAL SUPERVISOR: JACK WALKER
STATE OF CALIFORNIA - DEPARTMENT OF TRANSPORTATION
06-DESIGN
Caltrans

LAST REVISION 07-28-09
DATE PLOTTED => 08-DEC-2009
TIME PLOTTED => 08:58

BORDER LAST REVISED 3/1/2007
RELATIVE BORDER SCALE IS IN INCHES 0 1 2 3
USERNAME => trmnguye
DGN FILE => 5330721a006.dgn
CU 06220
EA 330721

Dist	COUNTY	ROUTE	POST MILES TOTAL PROJECT	SHEET No.	TOTAL SHEETS
05	SLO	46	36.6/41.2	161	595

8-24-09
REGISTERED CIVIL ENGINEER DATE

12-7-09
PLANS APPROVAL DATE

REGISTERED PROFESSIONAL ENGINEER
JOSE M. ARGUELLO
No. 51321
Exp. 06-30-10
CIVIL
STATE OF CALIFORNIA

THE STATE OF CALIFORNIA OR ITS OFFICERS OR AGENTS SHALL NOT BE RESPONSIBLE FOR THE ACCURACY OR COMPLETENESS OF ELECTRONIC COPIES OF THIS PLAN SHEET.

NOTE: FOR ACCURATE RIGHT OF WAY AND ACCESS DATA, CONTACT RIGHT OF WAY ENGINEERING AT THE DISTRICT OFFICE.

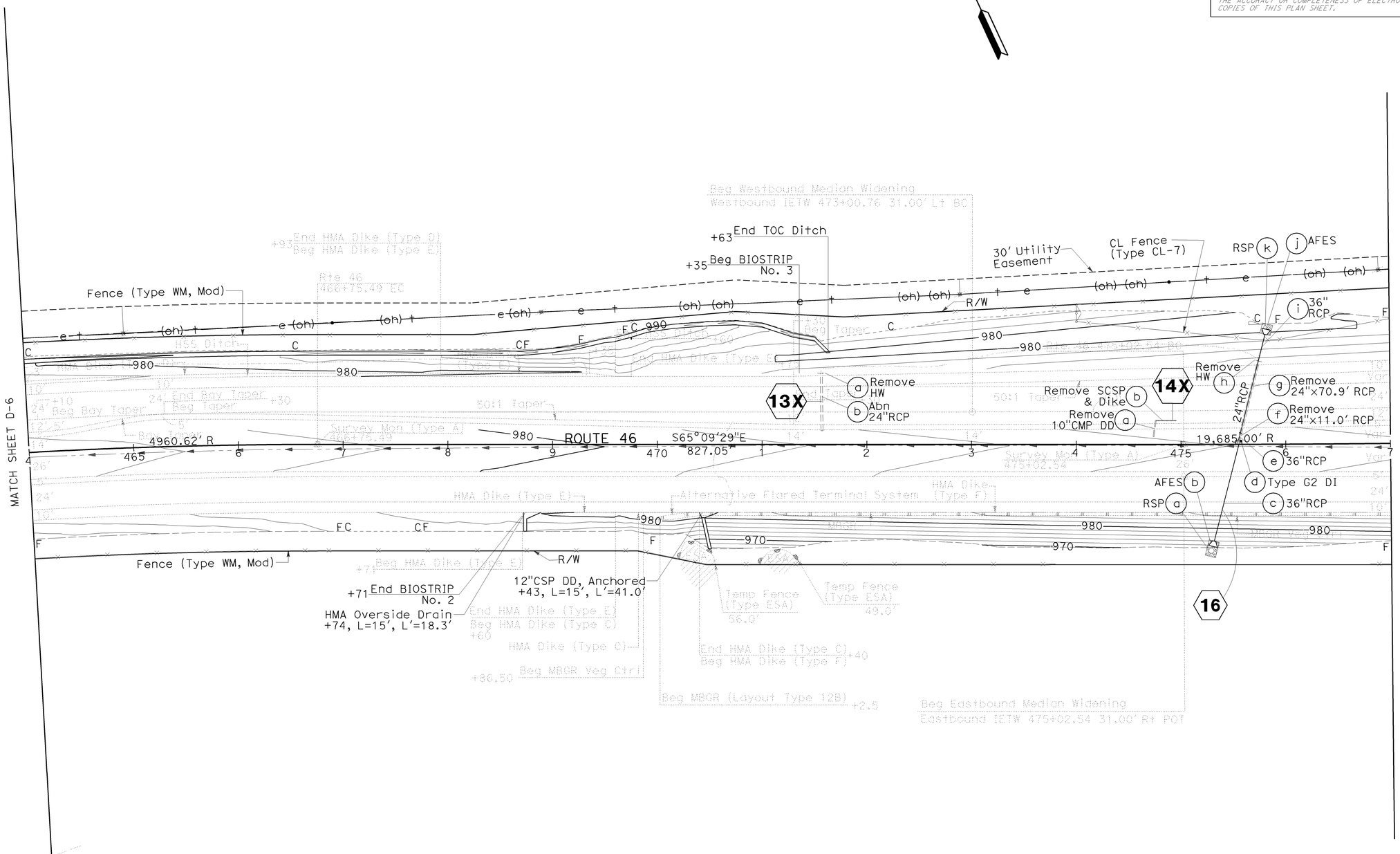

DRAINAGE, CONTOUR GRADING AND UTILITY PLAN

THIS PLAN ACCURATE FOR DRAINAGE, CONTOUR GRADING, AND UTILITY WORK ONLY.

SCALE: 1"=50'

D-7

LAST REVISION DATE PLOTTED => 08-DEC-2009
TIME PLOTTED => 08:58

STATE OF CALIFORNIA - DEPARTMENT OF TRANSPORTATION
Caltrans
06-DESIGN
FUNCTIONAL SUPERVISOR: JACK WALKER
CALCULATED-DESIGNED BY: JIM MILLS
CHECKED BY: JOHN CLARKE
REVISED BY
DATE REVISED

BORDER LAST REVISED 3/1/2007

RELATIVE BORDER SCALE IS IN INCHES 0 1 2 3

USERNAME => trmnguye
DGN FILE => 5330721a007.dgn

CU 06220

EA 330721

Dist	COUNTY	ROUTE	POST MILES TOTAL PROJECT	SHEET No.	TOTAL SHEETS
05	SLO	46	36.6/41.2	162	595

8-24-09
REGISTERED CIVIL ENGINEER DATE

12-7-09
PLANS APPROVAL DATE

REGISTERED PROFESSIONAL ENGINEER
JOSE M. ARGUELLO
No. 51321
Exp 06-30-10
CIVIL
STATE OF CALIFORNIA

THE STATE OF CALIFORNIA OR ITS OFFICERS OR AGENTS SHALL NOT BE RESPONSIBLE FOR THE ACCURACY OR COMPLETENESS OF ELECTRONIC COPIES OF THIS PLAN SHEET.

NOTE: FOR ACCURATE RIGHT OF WAY AND ACCESS DATA, CONTACT RIGHT OF WAY ENGINEERING AT THE DISTRICT OFFICE.

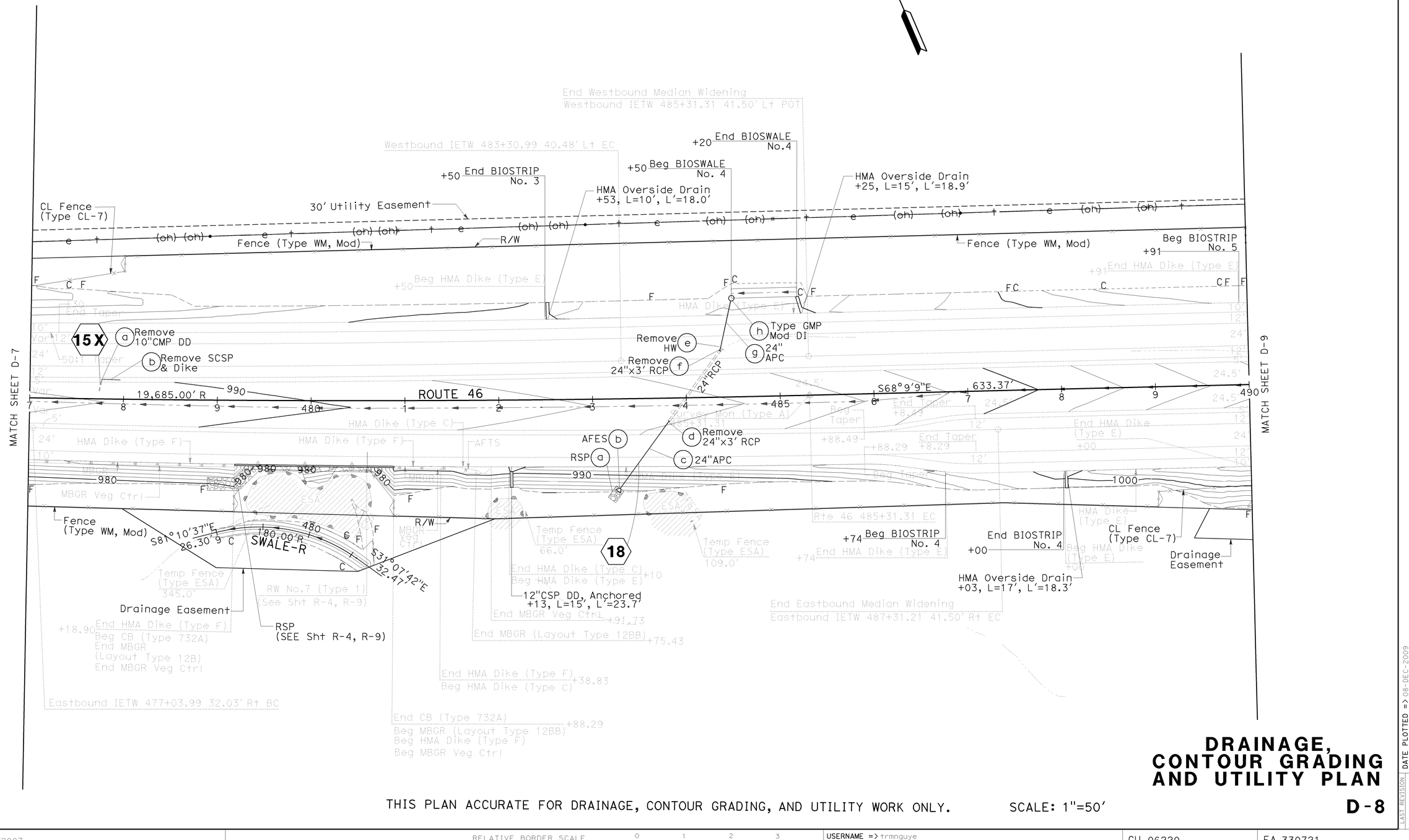

DRAINAGE, CONTOUR GRADING AND UTILITY PLAN

THIS PLAN ACCURATE FOR DRAINAGE, CONTOUR GRADING, AND UTILITY WORK ONLY. SCALE: 1"=50'

D-8

STATE OF CALIFORNIA - DEPARTMENT OF TRANSPORTATION
Caltrans
06-DESIGN
FUNCTIONAL SUPERVISOR: JACK WALKER
CALCULATED-DESIGNED BY: JIM MILLS
CHECKED BY: JOHN CLARKE
REVISED BY
DATE REVISED

LAST REVISION DATE PLOTTED => 08-DEC-2009
TIME PLOTTED => 08:58
07-28-09

BORDER LAST REVISED 3/1/2007
RELATIVE BORDER SCALE IS IN INCHES 0 1 2 3
USERNAME => trmnguye
DGN FILE => 5330721a008.dgn
CU 06220
EA 330721

NOTE: FOR ACCURATE RIGHT OF WAY AND ACCESS DATA, CONTACT RIGHT OF WAY ENGINEERING AT THE DISTRICT OFFICE.

Dist	COUNTY	ROUTE	POST MILES TOTAL PROJECT	SHEET No.	TOTAL SHEETS
05	SLO	46	36.6/41.2	163	595

8-24-09
REGISTERED CIVIL ENGINEER DATE

12-7-09
PLANS APPROVAL DATE

REGISTERED PROFESSIONAL ENGINEER
JOSE M. ARGUELLO
No. 51321
Exp 06-30-10
CIVIL
STATE OF CALIFORNIA

THE STATE OF CALIFORNIA OR ITS OFFICERS OR AGENTS SHALL NOT BE RESPONSIBLE FOR THE ACCURACY OR COMPLETENESS OF ELECTRONIC COPIES OF THIS PLAN SHEET.

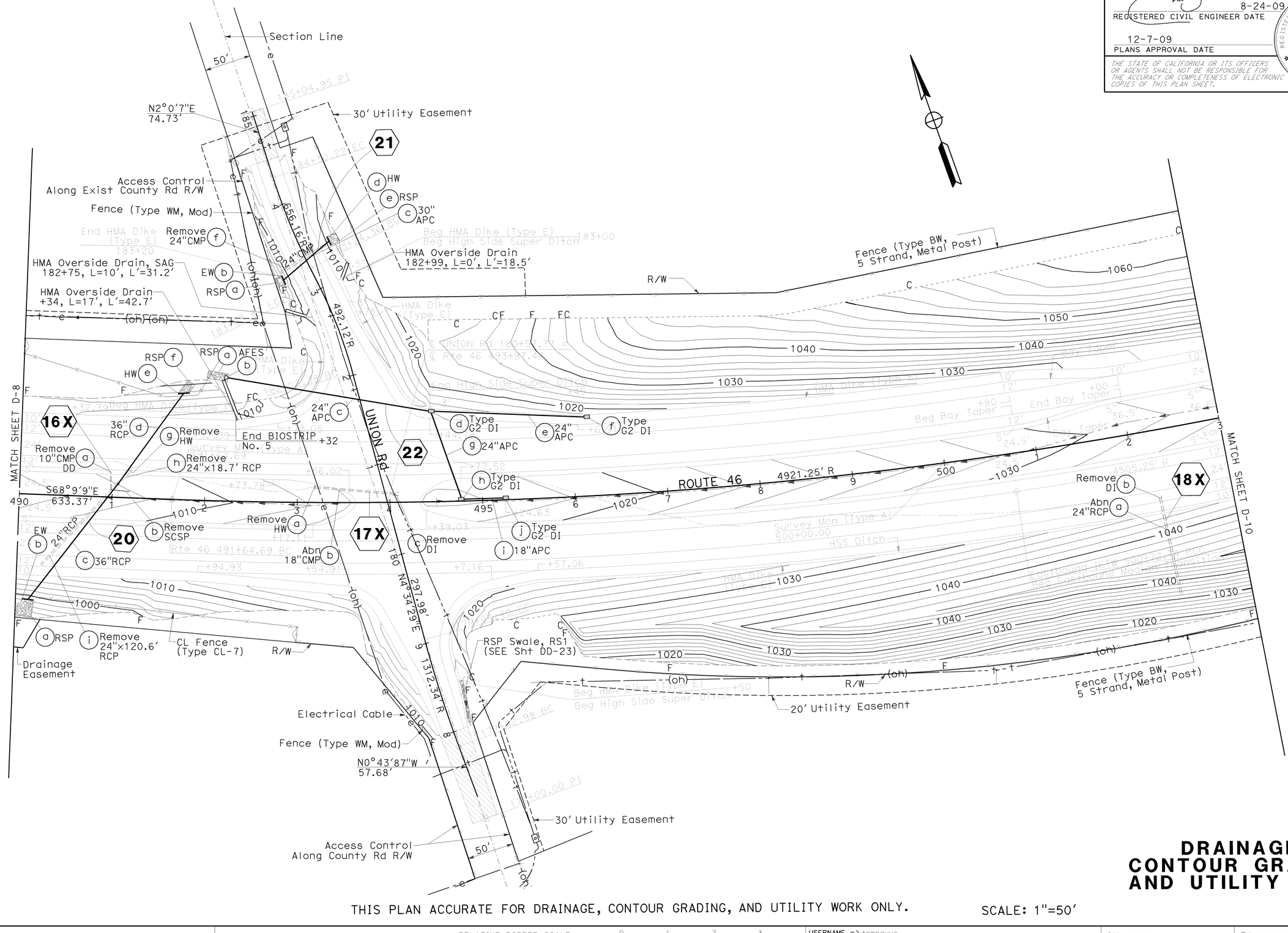

THIS PLAN ACCURATE FOR DRAINAGE, CONTOUR GRADING, AND UTILITY WORK ONLY.

SCALE: 1"=50'

DRAINAGE, CONTOUR GRADING AND UTILITY PLAN

D-9

STATE OF CALIFORNIA - DEPARTMENT OF TRANSPORTATION
Caltrans
06-DESIGN
FUNCTIONAL SUPERVISOR: JACK WALKER
CALCULATED-DESIGNED BY: JIM MILLS
CHECKED BY: JOHN CLARKE
REVISED BY
DATE REVISED

LAST REVISION DATE PLOTTED => 08-DEC-2009
TIME PLOTTED => 08:58

BORDER LAST REVISED 3/1/2007
RELATIVE BORDER SCALE IS IN INCHES 0 1 2 3
USERNAME => trmnguye
DGN FILE => 5330721a009.dgn
CU 06220
EA 330721

Dist	COUNTY	ROUTE	POST MILES TOTAL PROJECT	SHEET No.	TOTAL SHEETS
05	SLO	46	36.6/41.2	164	595

8-24-09
REGISTERED CIVIL ENGINEER DATE

12-7-09
PLANS APPROVAL DATE

JOSE M. ARGUELLO
No. 51321
Exp. 06-30-10
CIVIL
REGISTERED PROFESSIONAL ENGINEER
STATE OF CALIFORNIA

THE STATE OF CALIFORNIA OR ITS OFFICERS OR AGENTS SHALL NOT BE RESPONSIBLE FOR THE ACCURACY OR COMPLETENESS OF ELECTRONIC COPIES OF THIS PLAN SHEET.

NOTE: FOR ACCURATE RIGHT OF WAY AND ACCESS DATA, CONTACT RIGHT OF WAY ENGINEERING AT THE DISTRICT OFFICE.

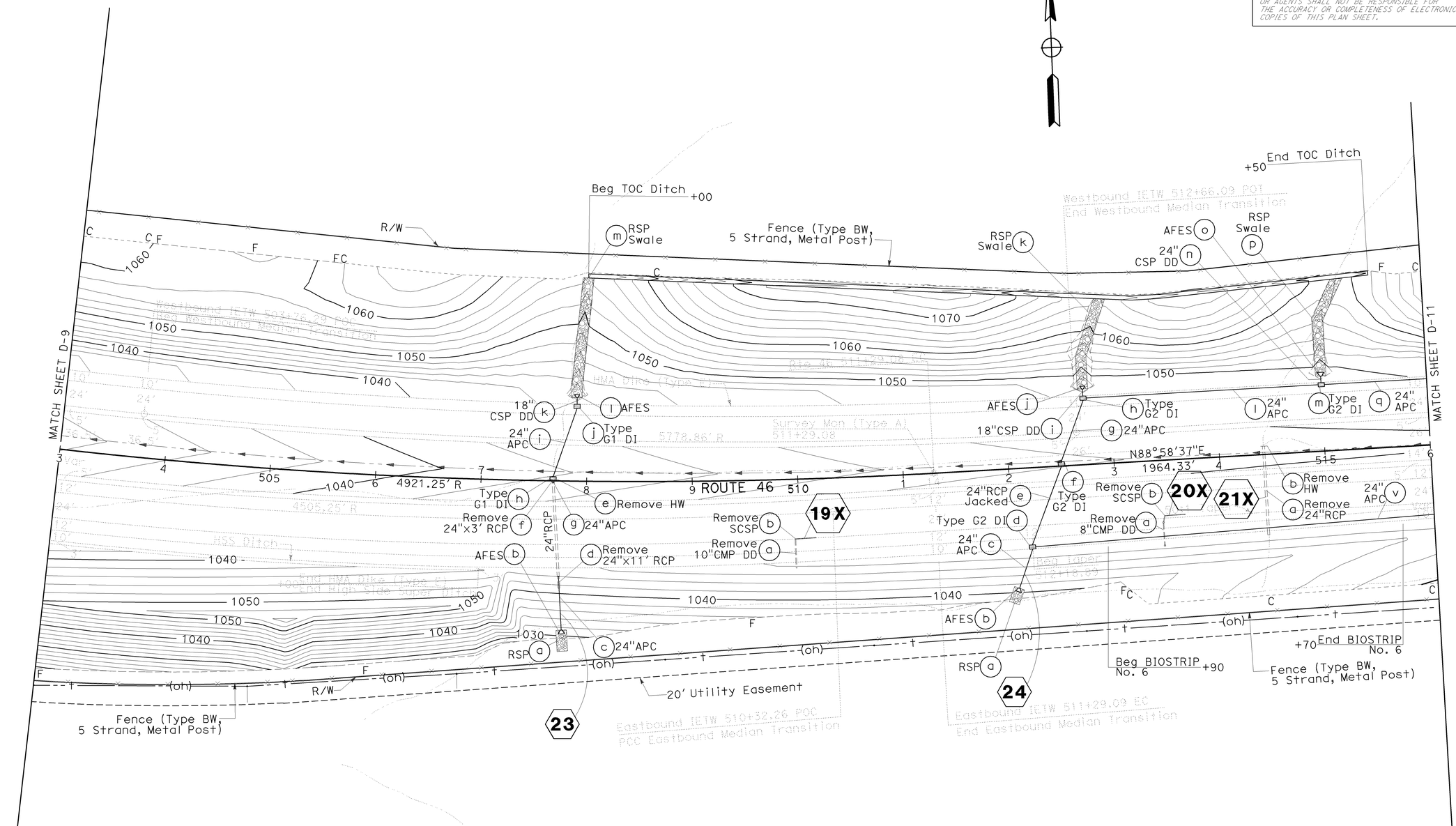

THIS PLAN ACCURATE FOR DRAINAGE, CONTOUR GRADING, AND UTILITY WORK ONLY.

SCALE: 1"=50'

DRAINAGE, CONTOUR GRADING AND UTILITY PLAN

D-10

CALCULATED-DESIGNED BY: JIM MILLS
CHECKED BY: JOHN CLARKE
REVISED BY
DATE REVISED
FUNCTIONAL SUPERVISOR: JACK WALKER
STATE OF CALIFORNIA - DEPARTMENT OF TRANSPORTATION
06-DESIGN
Caltrans

LAST REVISION 08-15-09
DATE PLOTTED => 08-DEC-2009
TIME PLOTTED => 08:58

BORDER LAST REVISED 3/1/2007
RELATIVE BORDER SCALE IS IN INCHES 0 1 2 3
USERNAME => trmnguye
DGN FILE => 533072ia010.dgn
CU 06220
EA 330721

Dist	COUNTY	ROUTE	POST MILES TOTAL PROJECT	SHEET No.	TOTAL SHEETS
05	SLO	46	36.6/41.2	165	595

8-24-09
REGISTERED CIVIL ENGINEER DATE

12-7-09
PLANS APPROVAL DATE

REGISTERED PROFESSIONAL ENGINEER
JOSE M. ARGUELLO
No. 51321
Exp 06-30-10
CIVIL
STATE OF CALIFORNIA

THE STATE OF CALIFORNIA OR ITS OFFICERS OR AGENTS SHALL NOT BE RESPONSIBLE FOR THE ACCURACY OR COMPLETENESS OF ELECTRONIC COPIES OF THIS PLAN SHEET.

NOTES: 1. FOR ACCURATE RIGHT OF WAY AND ACCESS DATA, CONTACT RIGHT OF WAY ENGINEERING AT THE DISTRICT OFFICE.

2. FOR LANDFORM GRADING, SEE SHEETS C-36, C-37 & C-38.

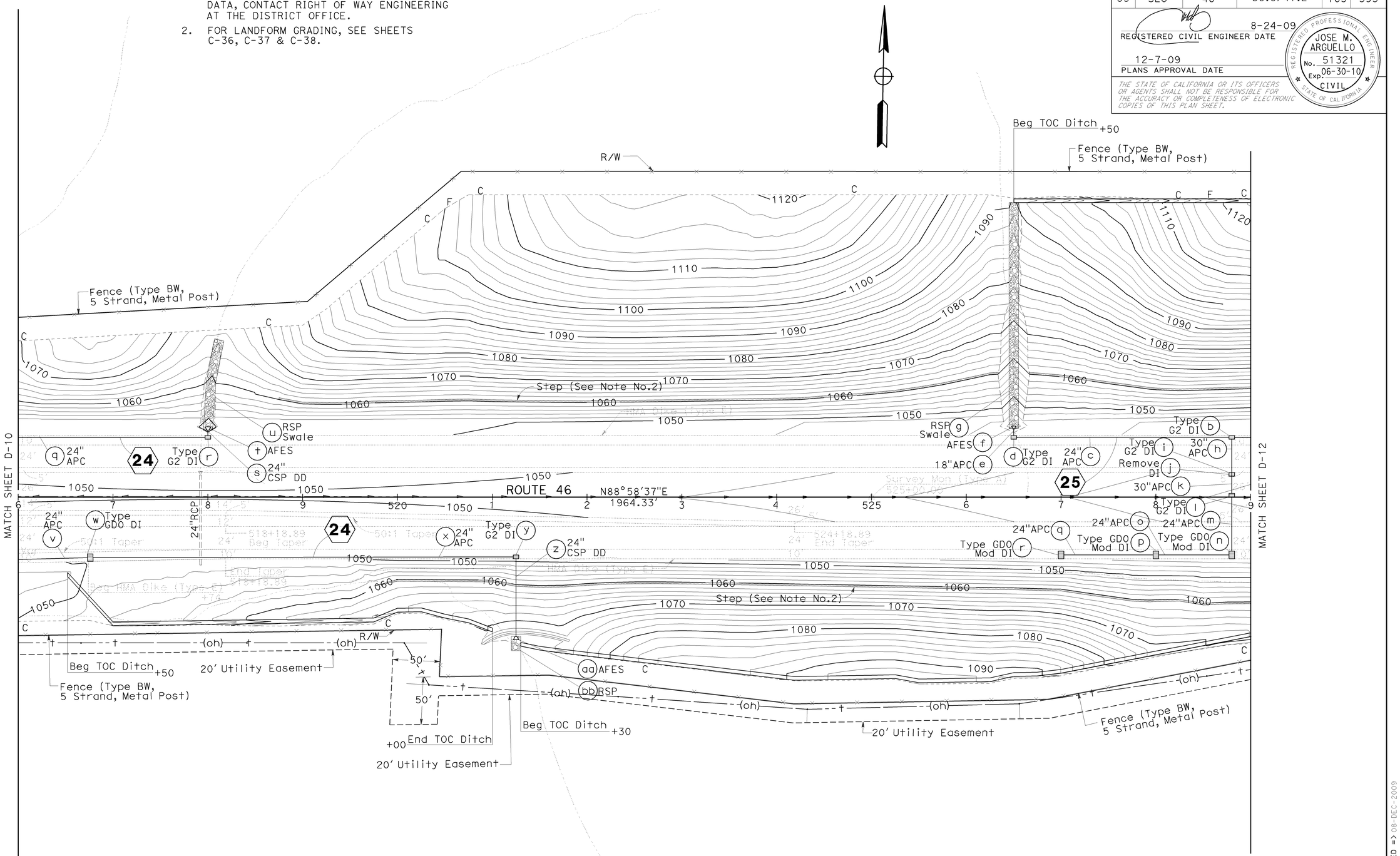

THIS PLAN ACCURATE FOR DRAINAGE, CONTOUR GRADING, AND UTILITY WORK ONLY.

SCALE: 1"=50'

DRAINAGE, CONTOUR GRADING AND UTILITY PLAN

D-11

STATE OF CALIFORNIA - DEPARTMENT OF TRANSPORTATION
06-DESIGN
FUNCTIONAL SUPERVISOR: JACK WALKER
CALCULATED-DESIGNED BY: JIM MILLS
CHECKED BY: JOHN CLARKE
REVISED BY
DATE REVISED
Gallans

LAST REVISION 07-28-09
DATE PLOTTED => 08-DEC-2009
TIME PLOTTED => 08:58

BORDER LAST REVISED 3/1/2007
RELATIVE BORDER SCALE IS IN INCHES 0 1 2 3
USERNAME => trmnguye
DGN FILE => 5330721a011.dgn
CU 06220
EA 330721

NOTES:
1. FOR ACCURATE RIGHT OF WAY AND ACCESS DATA, CONTACT RIGHT OF WAY ENGINEERING AT THE DISTRICT OFFICE.
2. FOR LANDFORM GRADING, SEE SHEETS C-36, C-37 & C-38.

Dist	COUNTY	ROUTE	POST MILES TOTAL PROJECT	SHEET No.	TOTAL SHEETS
05	SLO	46	36.6/41.2	166	595

8-24-09
REGISTERED CIVIL ENGINEER DATE

12-7-09
PLANS APPROVAL DATE

REGISTERED PROFESSIONAL ENGINEER
JOSE M. ARGUELLO
No. 51321
Exp 06-30-10
CIVIL
STATE OF CALIFORNIA

THE STATE OF CALIFORNIA OR ITS OFFICERS OR AGENTS SHALL NOT BE RESPONSIBLE FOR THE ACCURACY OR COMPLETENESS OF ELECTRONIC COPIES OF THIS PLAN SHEET.

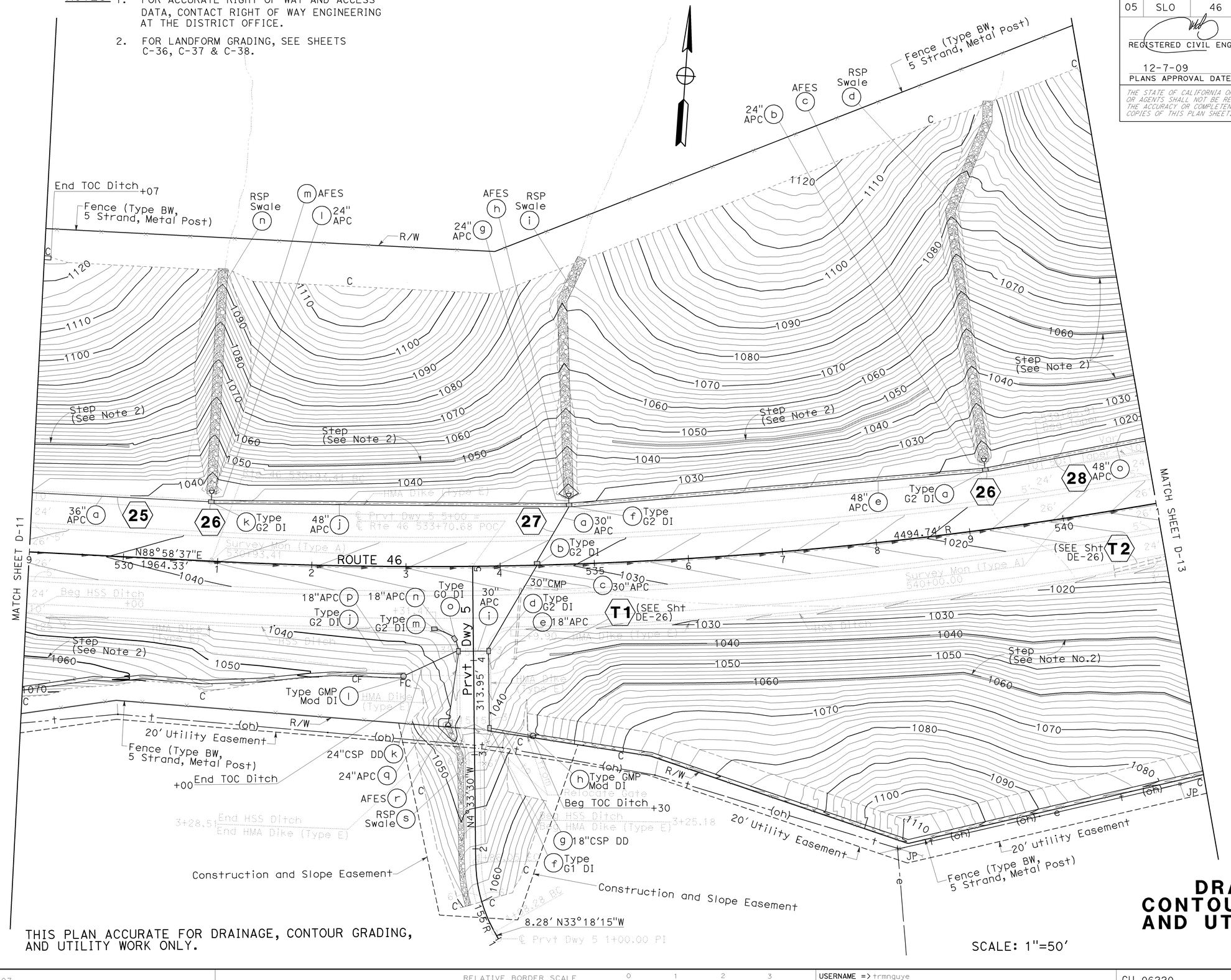

THIS PLAN ACCURATE FOR DRAINAGE, CONTOUR GRADING, AND UTILITY WORK ONLY.

SCALE: 1"=50'

DRAINAGE, CONTOUR GRADING AND UTILITY PLAN

D-12

LAST REVISION DATE PLOTTED => 08-DEC-2009
TIME PLOTTED => 08:59
07-29-09

STATE OF CALIFORNIA - DEPARTMENT OF TRANSPORTATION
Caltrans
06-DESIGN
FUNCTIONAL SUPERVISOR: JACK WALKER
CALCULATED-DESIGNED BY: JIM MILLS
CHECKED BY: JOHN CLARKE
REVISED BY
DATE REVISED

BORDER LAST REVISED 3/1/2007
RELATIVE BORDER SCALE IS IN INCHES 0 1 2 3
USERNAME => trmnguye
DGN FILE => 533072ia012.dgn
CU 06220
EA 330721

Dist	COUNTY	ROUTE	POST MILES TOTAL PROJECT	SHEET No.	TOTAL SHEETS
05	SLO	46	36.6/41.2	167	595

8-24-09
REGISTERED CIVIL ENGINEER DATE

12-7-09
PLANS APPROVAL DATE

REGISTERED PROFESSIONAL ENGINEER
JOSE M. ARGUELLO
No. 51321
Exp 06-30-10
CIVIL
STATE OF CALIFORNIA

THE STATE OF CALIFORNIA OR ITS OFFICERS OR AGENTS SHALL NOT BE RESPONSIBLE FOR THE ACCURACY OR COMPLETENESS OF ELECTRONIC COPIES OF THIS PLAN SHEET.

NOTES:

1. FOR ACCURATE RIGHT OF WAY AND ACCESS DATA, CONTACT RIGHT OF WAY ENGINEERING AT THE DISTRICT OFFICE.
2. FOR LANDFORM GRADING, SEE SHEETS C-36, C-37 & C-38.

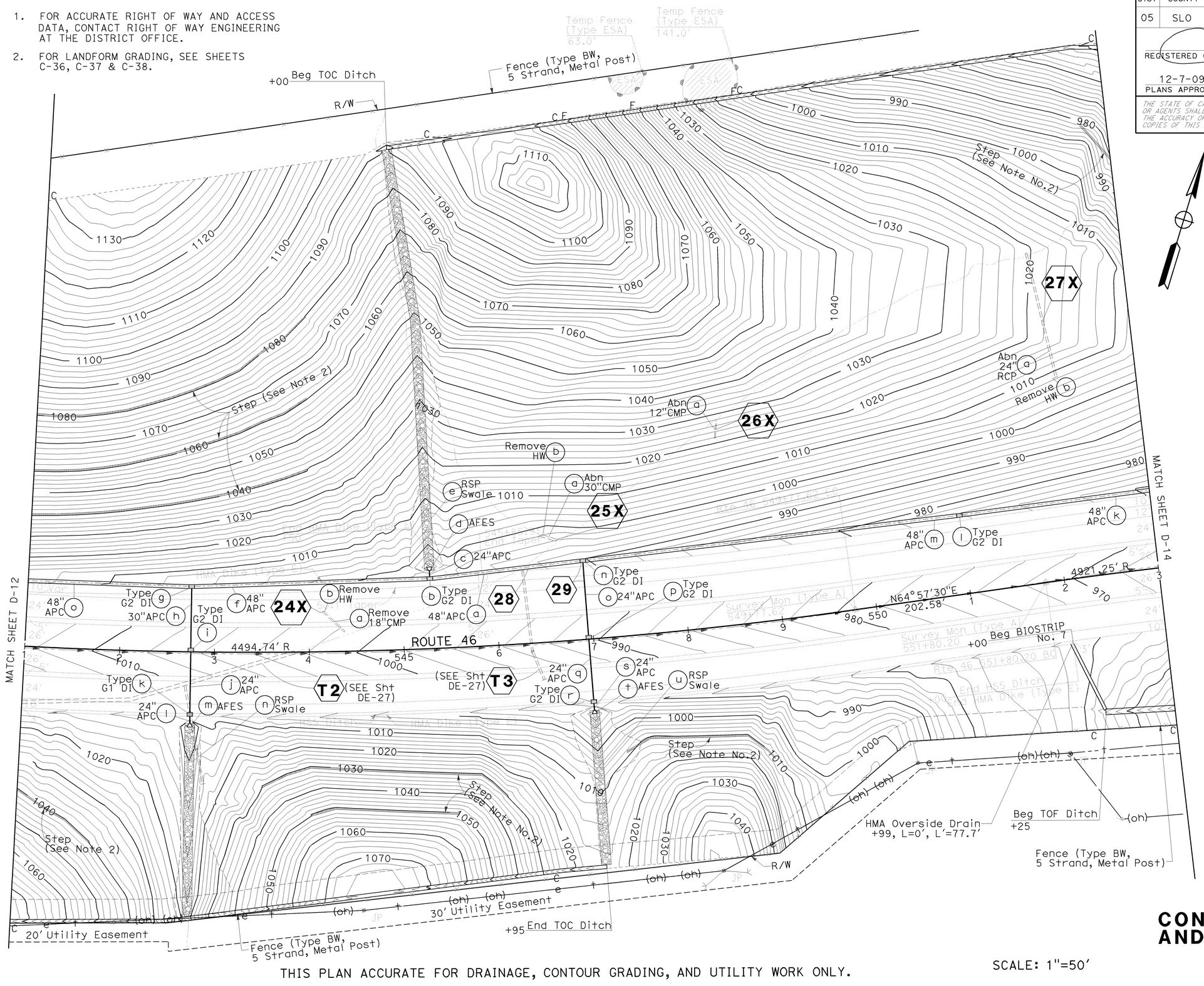

THIS PLAN ACCURATE FOR DRAINAGE, CONTOUR GRADING, AND UTILITY WORK ONLY.

SCALE: 1"=50'

DRAINAGE, CONTOUR GRADING AND UTILITY PLAN

D-13

REVISED BY	DATE REVISED
JIM MILLS	
JOHN CLARKE	

CALCULATED-DESIGNED BY
CHECKED BY

FUNCTIONAL SUPERVISOR: JACK WALKER

STATE OF CALIFORNIA - DEPARTMENT OF TRANSPORTATION
06-DESIGN

Caltrans

LAST REVISION => DATE PLOTTED => 08-DEC-2009
08-11-09 TIME PLOTTED => 08:59

BORDER LAST REVISED 3/1/2007

RELATIVE BORDER SCALE IS IN INCHES 0 1 2 3

USERNAME => trmnguye
DGN FILE => 533072ia013.dgn

CU 06220

EA 330721

Dist	COUNTY	ROUTE	POST MILES TOTAL PROJECT	SHEET No.	TOTAL SHEETS
05	SLO	46	36.6/41.2	168	595

8-24-09
REGISTERED CIVIL ENGINEER DATE

12-7-09
PLANS APPROVAL DATE

REGISTERED PROFESSIONAL ENGINEER
JOSE M. ARGUELLO
No. 51321
Exp 06-30-10
CIVIL
STATE OF CALIFORNIA

THE STATE OF CALIFORNIA OR ITS OFFICERS OR AGENTS SHALL NOT BE RESPONSIBLE FOR THE ACCURACY OR COMPLETENESS OF ELECTRONIC COPIES OF THIS PLAN SHEET.

NOTES:
1. FOR ACCURATE RIGHT OF WAY AND ACCESS DATA, CONTACT RIGHT OF WAY ENGINEERING AT THE DISTRICT OFFICE.
2. FOR LANDFORM GRADING, SEE SHEETS C-36, C-37 & C-38.

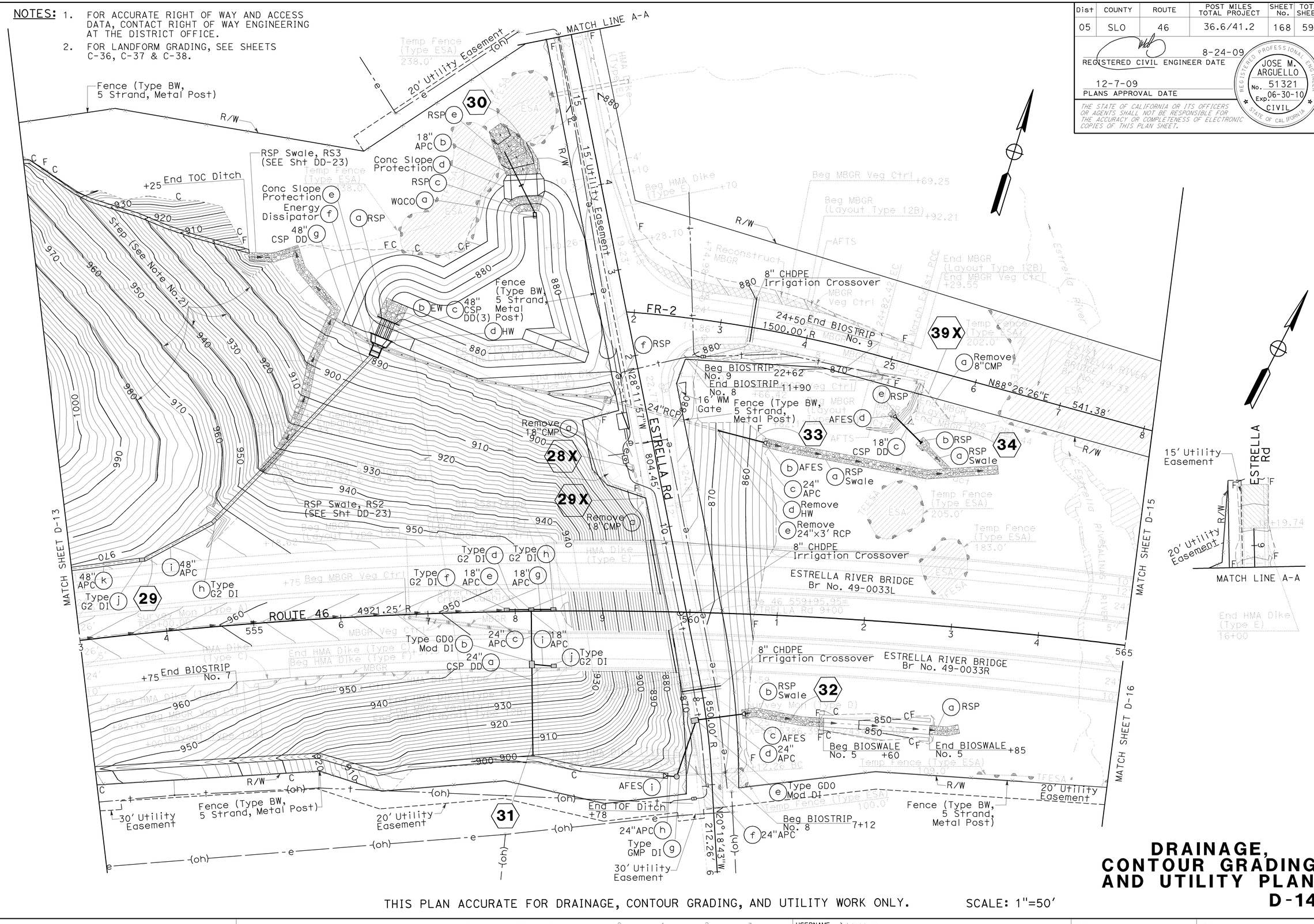

DRAINAGE, CONTOUR GRADING AND UTILITY PLAN
D-14

THIS PLAN ACCURATE FOR DRAINAGE, CONTOUR GRADING, AND UTILITY WORK ONLY. SCALE: 1"=50'

STATE OF CALIFORNIA - DEPARTMENT OF TRANSPORTATION
Caltrans 06-DESIGN
FUNCTIONAL SUPERVISOR: JACK WALKER
CALCULATED-DESIGNED BY: JIM MILLS
CHECKED BY: JOHN CLARKE
REVISED BY
DATE REVISED

LAST REVISION | DATE PLOTTED => 08-DEC-2009 | TIME PLOTTED => 09:00
08-25-09

BORDER LAST REVISED 3/1/2007 | RELATIVE BORDER SCALE IS IN INCHES 0 1 2 3 | USERNAME => trmnguye | DGN FILE => 5330721a014.dgn | CU 06220 | EA 330721

NOTE: FOR ACCURATE RIGHT OF WAY AND ACCESS DATA, CONTACT RIGHT OF WAY ENGINEERING AT THE DISTRICT OFFICE.

Dist	COUNTY	ROUTE	POST MILES TOTAL PROJECT	SHEET No.	TOTAL SHEETS
05	SLO	46	36.6/41.2	169	595

8-24-09
REGISTERED CIVIL ENGINEER DATE

12-7-09
PLANS APPROVAL DATE

JOSE M. ARGUELLO No. 51321 Exp. 06-30-10 CIVIL — REGISTERED PROFESSIONAL ENGINEER — STATE OF CALIFORNIA

THE STATE OF CALIFORNIA OR ITS OFFICERS OR AGENTS SHALL NOT BE RESPONSIBLE FOR THE ACCURACY OR COMPLETENESS OF ELECTRONIC COPIES OF THIS PLAN SHEET.

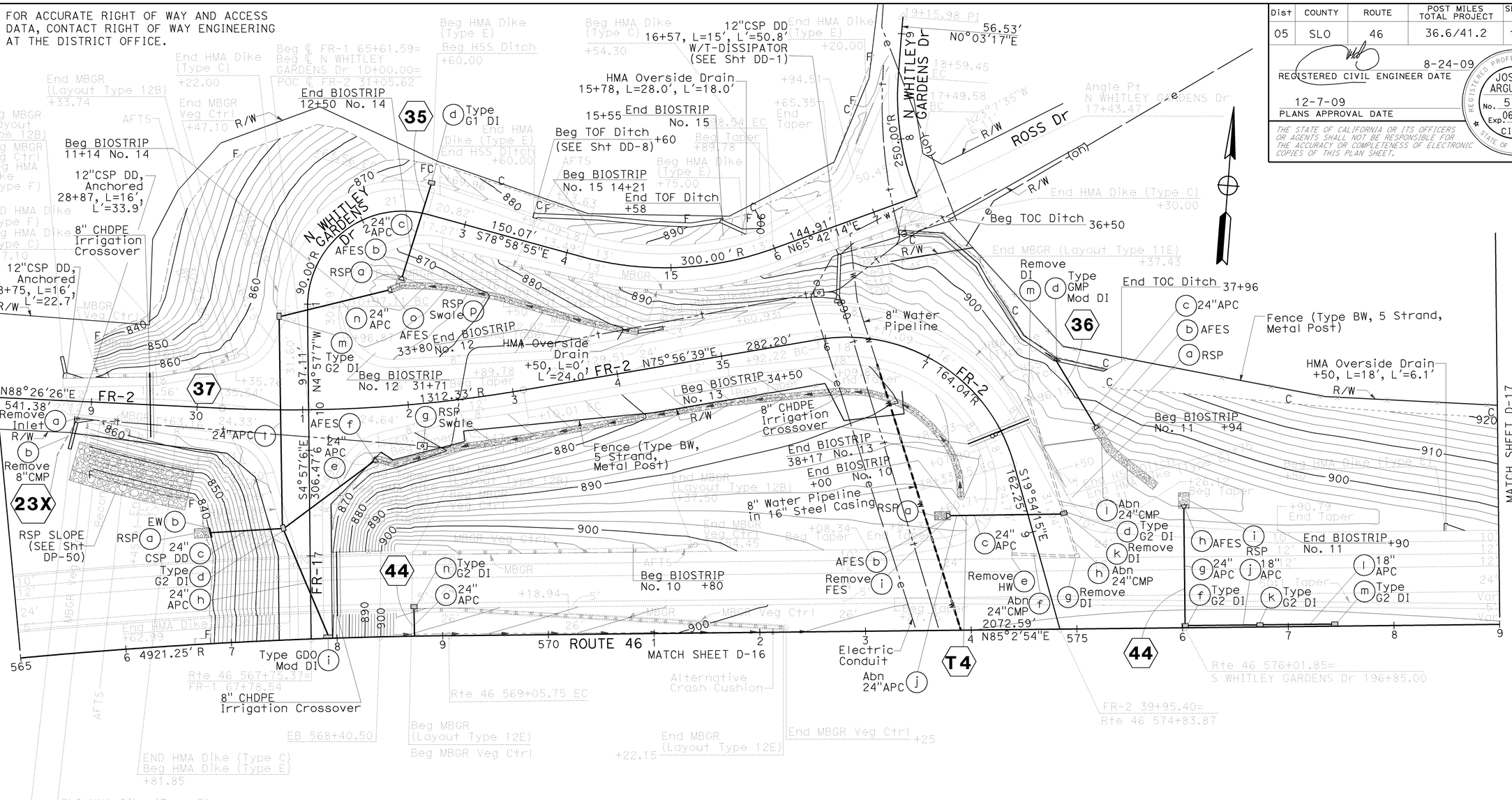

THIS PLAN ACCURATE FOR DRAINAGE, CONTOUR GRADING, AND UTILITY WORK ONLY.

SCALE: 1"=50'

DRAINAGE, CONTOUR GRADING AND UTILITY PLAN

D-15

REVISED BY | DATE REVISED
CALCULATED-DESIGNED BY: JIM MILLS
CHECKED BY: JOHN CLARKE
FUNCTIONAL SUPERVISOR: JACK WALKER
STATE OF CALIFORNIA - DEPARTMENT OF TRANSPORTATION
06-DESIGN
Caltrans

LAST REVISION | DATE PLOTTED => 08-DEC-2009
08-25-09 | TIME PLOTTED => 09:00

BORDER LAST REVISED 3/1/2007 | RELATIVE BORDER SCALE IS IN INCHES 0 1 2 3 | USERNAME => trmnguye | DGN FILE => 533072ia015.dgn | CU 06220 | EA 330721

NOTE: FOR ACCURATE RIGHT OF WAY AND ACCESS DATA, CONTACT RIGHT OF WAY ENGINEERING AT THE DISTRICT OFFICE.

Dist	COUNTY	ROUTE	POST MILES TOTAL PROJECT	SHEET No.	TOTAL SHEETS
05	SLO	46	36.6/41.2	170	595

8-24-09
REGISTERED CIVIL ENGINEER DATE

12-7-09
PLANS APPROVAL DATE

REGISTERED PROFESSIONAL ENGINEER
JOSE M. ARGUELLO
No. 51321
Exp 06-30-10
CIVIL
STATE OF CALIFORNIA

THE STATE OF CALIFORNIA OR ITS OFFICERS OR AGENTS SHALL NOT BE RESPONSIBLE FOR THE ACCURACY OR COMPLETENESS OF ELECTRONIC COPIES OF THIS PLAN SHEET.

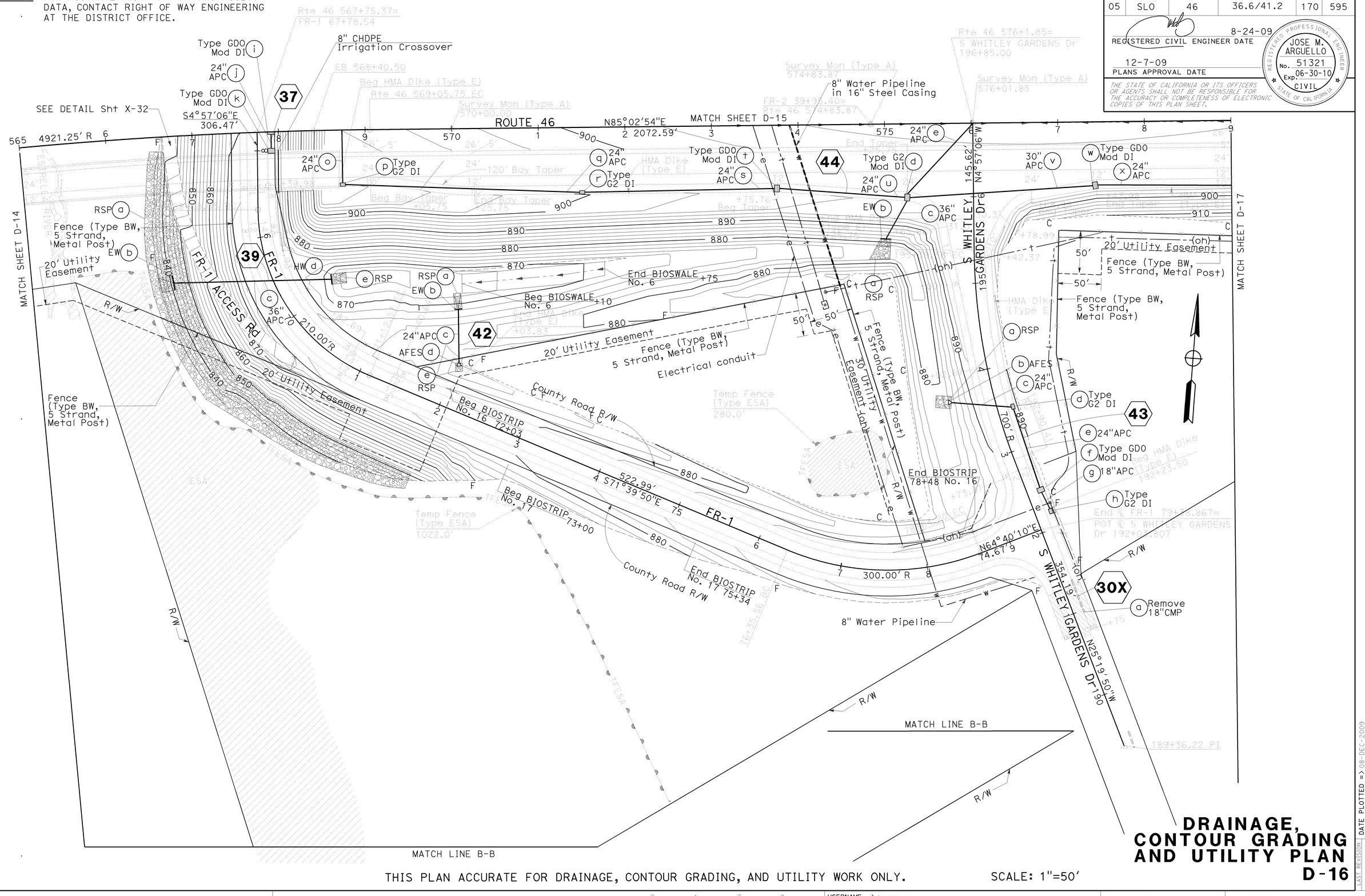

DRAINAGE, CONTOUR GRADING AND UTILITY PLAN D-16

THIS PLAN ACCURATE FOR DRAINAGE, CONTOUR GRADING, AND UTILITY WORK ONLY.

SCALE: 1"=50'

REVISED BY | DATE REVISED

CALCULATED-DESIGNED BY: JIM MILLS
CHECKED BY: JOHN CLARKE
FUNCTIONAL SUPERVISOR: JACK WALKER

STATE OF CALIFORNIA - DEPARTMENT OF TRANSPORTATION
Caltrans
06-DESIGN

LAST REVISION | DATE PLOTTED => 08-DEC-2009 | TIME PLOTTED => 09:00
08-17-09

BORDER LAST REVISED 3/1/2007

RELATIVE BORDER SCALE IS IN INCHES 0 1 2 3

USERNAME => trmnguye
DGN FILE => 533072ia016.dgn

CU 06220

EA 330721

NOTE: FOR ACCURATE RIGHT OF WAY AND ACCESS DATA, CONTACT RIGHT OF WAY ENGINEERING AT THE DISTRICT OFFICE.

Dist	COUNTY	ROUTE	POST MILES TOTAL PROJECT	SHEET No.	TOTAL SHEETS
05	SLO	46	36.6/41.2	171	595

8-24-09
REGISTERED CIVIL ENGINEER DATE

12-7-09
PLANS APPROVAL DATE

REGISTERED PROFESSIONAL ENGINEER
JOSE M. ARGUELLO
No. 51321
Exp 06-30-10
CIVIL
STATE OF CALIFORNIA

THE STATE OF CALIFORNIA OR ITS OFFICERS OR AGENTS SHALL NOT BE RESPONSIBLE FOR THE ACCURACY OR COMPLETENESS OF ELECTRONIC COPIES OF THIS PLAN SHEET.

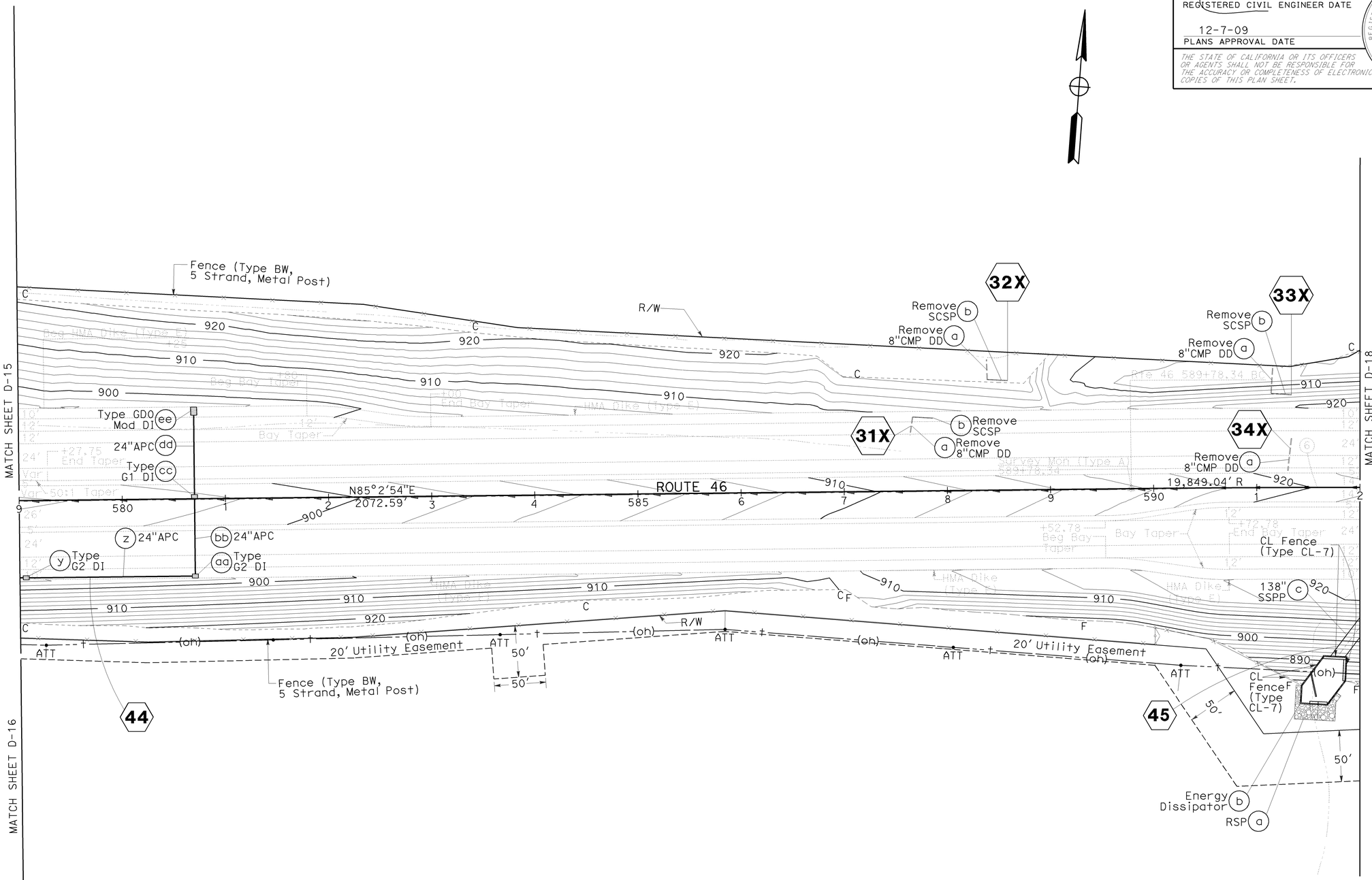

THIS PLAN ACCURATE FOR DRAINAGE, CONTOUR GRADING, AND UTILITY WORK ONLY.

SCALE: 1"=50'

DRAINAGE, CONTOUR GRADING AND UTILITY PLAN

D-17

CALCULATED-DESIGNED BY: JIM MILLS
CHECKED BY: JOHN CLARKE
REVISED BY
DATE REVISED
FUNCTIONAL SUPERVISOR: JACK WALKER
STATE OF CALIFORNIA - DEPARTMENT OF TRANSPORTATION
06-DESIGN
Caltrans

LAST REVISION DATE PLOTTED => 08-DEC-2009
TIME PLOTTED => 09:00

BORDER LAST REVISED 3/1/2007
RELATIVE BORDER SCALE IS IN INCHES 0 1 2 3
USERNAME => trmnguye
DGN FILE => 533072ia017.dgn
CU 06220
EA 330721

Dist	COUNTY	ROUTE	POST MILES TOTAL PROJECT	SHEET No.	TOTAL SHEETS
05	SLO	46	36.6/41.2	172	595

8-24-09
REGISTERED CIVIL ENGINEER DATE

12-7-09
PLANS APPROVAL DATE

REGISTERED PROFESSIONAL ENGINEER
JOSE M. ARGUELLO
No. 51321
Exp 06-30-10
CIVIL
STATE OF CALIFORNIA

THE STATE OF CALIFORNIA OR ITS OFFICERS OR AGENTS SHALL NOT BE RESPONSIBLE FOR THE ACCURACY OR COMPLETENESS OF ELECTRONIC COPIES OF THIS PLAN SHEET.

NOTE: FOR ACCURATE RIGHT OF WAY AND ACCESS DATA, CONTACT RIGHT OF WAY ENGINEERING AT THE DISTRICT OFFICE.

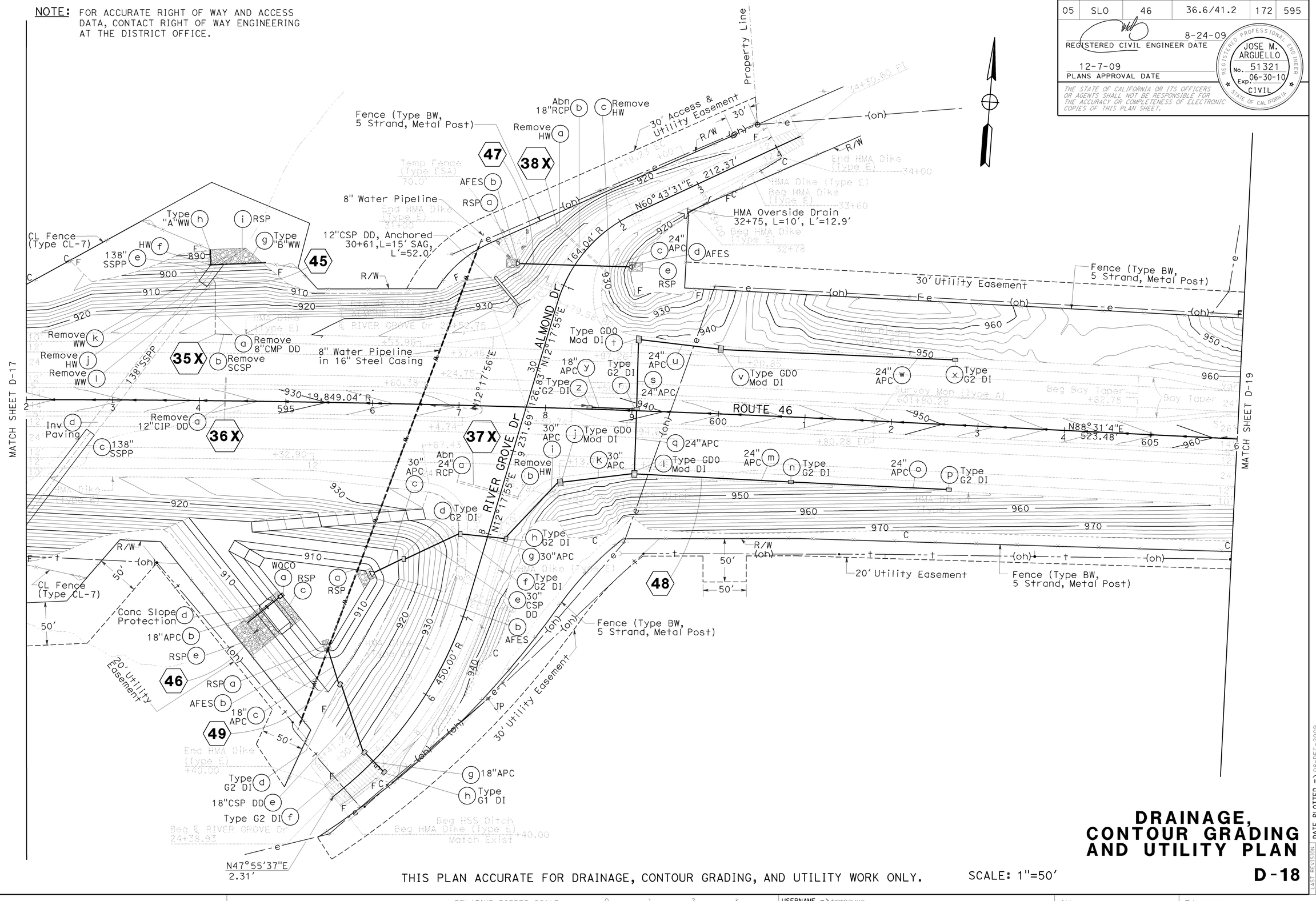

THIS PLAN ACCURATE FOR DRAINAGE, CONTOUR GRADING, AND UTILITY WORK ONLY.

SCALE: 1"=50'

DRAINAGE, CONTOUR GRADING AND UTILITY PLAN

D-18

LAST REVISION | DATE PLOTTED => 08-DEC-2009
08-25-09 | TIME PLOTTED => 09:00

STATE OF CALIFORNIA - DEPARTMENT OF TRANSPORTATION
Caltrans
06-DESIGN
FUNCTIONAL SUPERVISOR: JACK WALKER
CALCULATED-DESIGNED BY: JIM MILLS
CHECKED BY: JOHN CLARKE
REVISED BY
DATE REVISED

BORDER LAST REVISED 3/1/2007

RELATIVE BORDER SCALE IS IN INCHES 0 1 2 3

USERNAME => trmnguye
DGN FILE => 533072ia018.dgn

CU 06220

EA 330721

Dist	COUNTY	ROUTE	POST MILES TOTAL PROJECT	SHEET No.	TOTAL SHEETS
05	SLO	46	36.6/41.2	173	595

8-24-09
REGISTERED CIVIL ENGINEER DATE

12-7-09
PLANS APPROVAL DATE

REGISTERED PROFESSIONAL ENGINEER
JOSE M. ARGUELLO
No. 51321
Exp. 06-30-10
CIVIL
STATE OF CALIFORNIA

THE STATE OF CALIFORNIA OR ITS OFFICERS OR AGENTS SHALL NOT BE RESPONSIBLE FOR THE ACCURACY OR COMPLETENESS OF ELECTRONIC COPIES OF THIS PLAN SHEET.

NOTE: FOR ACCURATE RIGHT OF WAY AND ACCESS DATA, CONTACT RIGHT OF WAY ENGINEERING AT THE DISTRICT OFFICE.

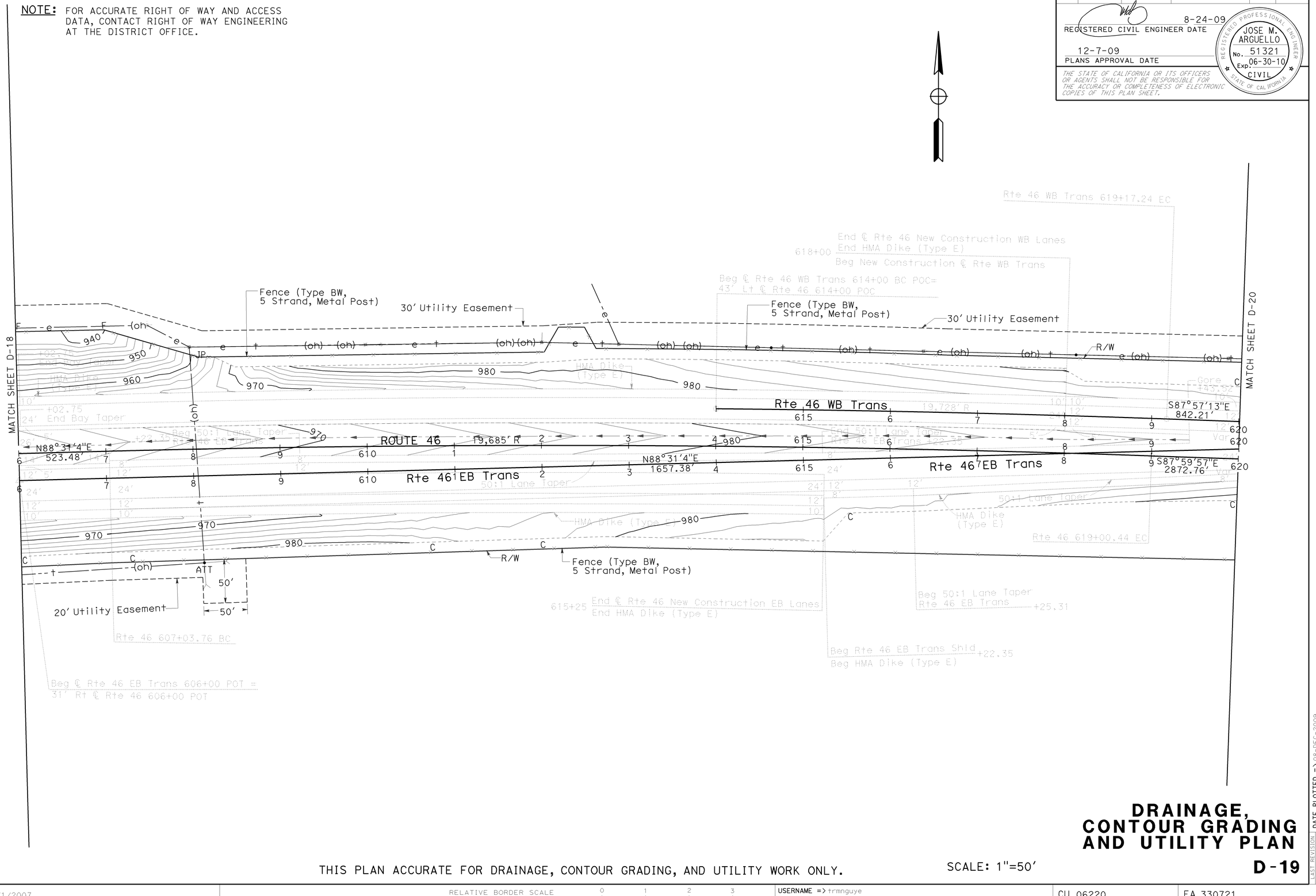

DRAINAGE, CONTOUR GRADING AND UTILITY PLAN

THIS PLAN ACCURATE FOR DRAINAGE, CONTOUR GRADING, AND UTILITY WORK ONLY.

SCALE: 1"=50'

D-19

CALCULATED-DESIGNED BY: JIM MILLS
CHECKED BY: JOHN CLARKE
REVISED BY
DATE REVISED
FUNCTIONAL SUPERVISOR: JACK WALKER
STATE OF CALIFORNIA - DEPARTMENT OF TRANSPORTATION
06-DESIGN
Caltrans

LAST REVISION => DATE PLOTTED => 08-DEC-2009
08-25-09 TIME PLOTTED => 09:00

BORDER LAST REVISED 3/1/2007
RELATIVE BORDER SCALE IS IN INCHES 0 1 2 3
USERNAME => trmnguye
DGN FILE => 533072ia019.dgn
CU 06220
EA 330721

Dist	COUNTY	ROUTE	POST MILES TOTAL PROJECT	SHEET No.	TOTAL SHEETS
05	SLO	46	36.6/41.2	174	595

8-24-09
REGISTERED CIVIL ENGINEER DATE

12-7-09
PLANS APPROVAL DATE

REGISTERED PROFESSIONAL ENGINEER
JOSE M. ARGUELLO
No. 51321
Exp 06-30-10
CIVIL
STATE OF CALIFORNIA

THE STATE OF CALIFORNIA OR ITS OFFICERS OR AGENTS SHALL NOT BE RESPONSIBLE FOR THE ACCURACY OR COMPLETENESS OF ELECTRONIC COPIES OF THIS PLAN SHEET.

NOTE: FOR ACCURATE RIGHT OF WAY AND ACCESS DATA, CONTACT RIGHT OF WAY ENGINEERING AT THE DISTRICT OFFICE.

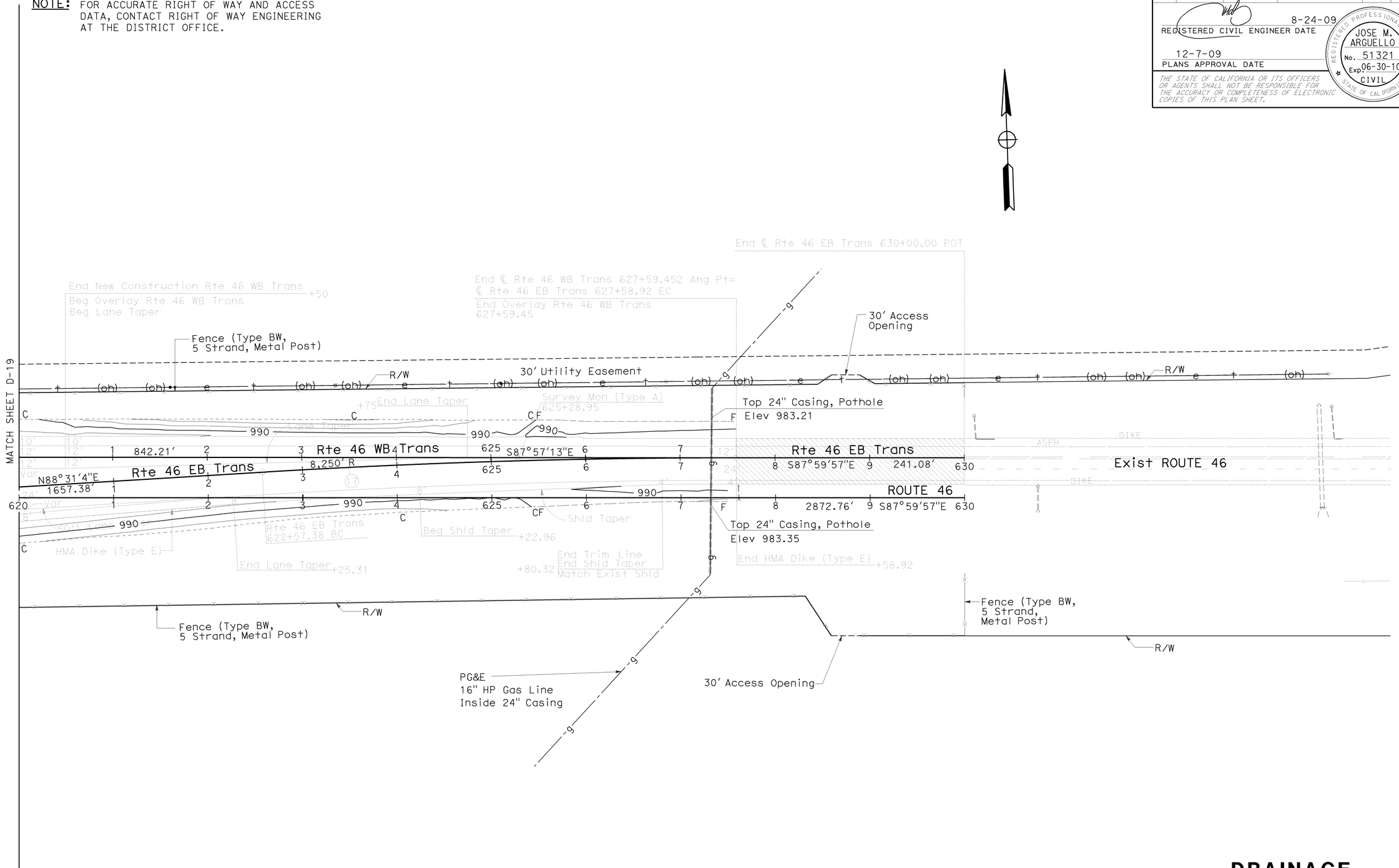

THIS PLAN ACCURATE FOR DRAINAGE, CONTOUR GRADING, AND UTILITY WORK ONLY.

SCALE: 1"=50'

DRAINAGE, CONTOUR GRADING AND UTILITY PLAN

D-20

CALCULATED-DESIGNED BY: JIM MILLS
CHECKED BY: JOHN CLARKE
REVISED BY
DATE REVISED
FUNCTIONAL SUPERVISOR: JACK WALKER

STATE OF CALIFORNIA - DEPARTMENT OF TRANSPORTATION
06-DESIGN
Caltrans

LAST REVISION DATE PLOTTED => 08-DEC-2009
TIME PLOTTED => 09:00
08-25-09

BORDER LAST REVISED 3/1/2007
RELATIVE BORDER SCALE IS IN INCHES 0 1 2 3
USERNAME => trmnguye
DGN FILE => 5330721a020.dgn
CU 06220
EA 330721

Dist	COUNTY	ROUTE	POST MILES TOTAL PROJECT	SHEET No.	TOTAL SHEETS
05	SLO	46	36.6/41.2	175	595

8-24-09
REGISTERED CIVIL ENGINEER DATE

12-7-09
PLANS APPROVAL DATE

REGISTERED PROFESSIONAL ENGINEER
JOSE M. ARGUELLO
No. 51321
Exp. 06-30-10
CIVIL
STATE OF CALIFORNIA

THE STATE OF CALIFORNIA OR ITS OFFICERS OR AGENTS SHALL NOT BE RESPONSIBLE FOR THE ACCURACY OR COMPLETENESS OF ELECTRONIC COPIES OF THIS PLAN SHEET.

NOTES:

1. ALL DRAINAGE STRUCTURES ARE RADIAL TO THE REFERENCED ALIGNMENT UNLESS OTHERWISE SHOWN.
2. ALL STATION, OFFSETS, AND CORRESPONDING SHOWN LEADER LINES ARE TO THE CENTER OF BOX (COB) OR FLOW LINE AT CURB (FLC) UNLESS OTHERWISE SHOWN.

ABBREVIATIONS:

COB	CENTER OF BOX
COG	CENTER OF GRATE
FLC	FLOW LINE AT CURB
FLS	FLOW LINE AT SWALE
S	STAGE
P	PHASE
Prvt	Private

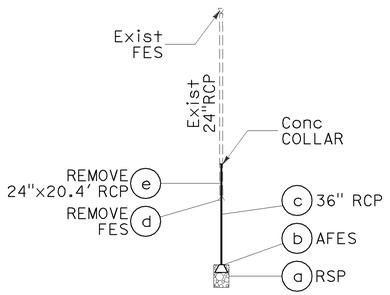

STAGE 1 - PHASE 1

NO SCALE

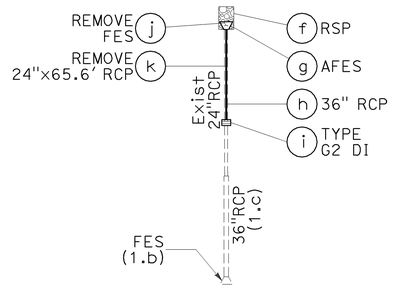

STAGE 2 - PHASE 1

NO SCALE

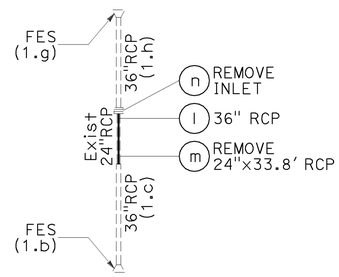

STAGE 3

NO SCALE

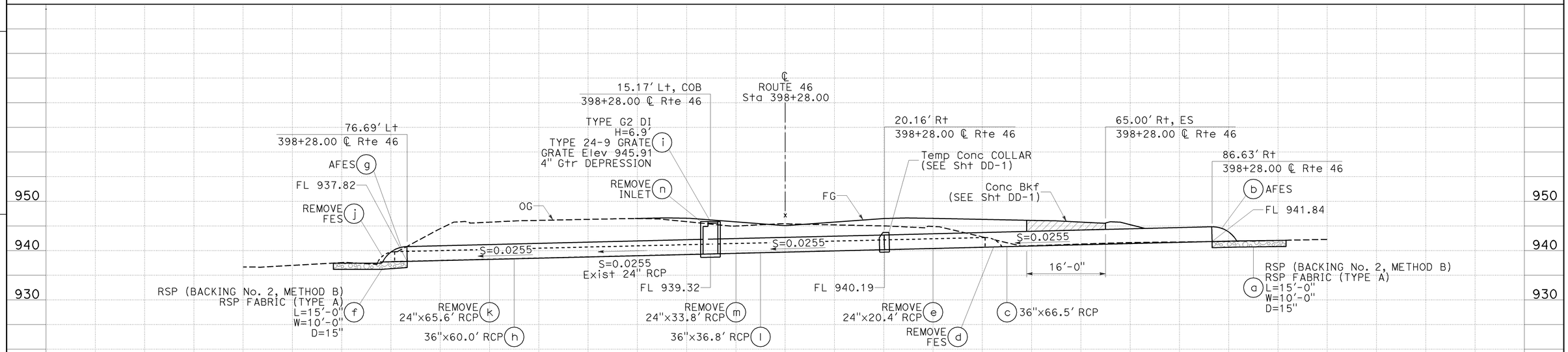

DRAINAGE SYSTEM No. 1

AND KIT FOX CROSSING

DRAINAGE PROFILES

SCALE: Horiz 1" = 10'
Vert 1" = 10'

DP-1

STATION | TOTAL
CY Exc
Emb

STATE OF CALIFORNIA - DEPARTMENT OF TRANSPORTATION
Caltrans
06-DESIGN
FUNCTIONAL SUPERVISOR: JACK WALKER
CALCULATED-DESIGNED BY: JIM MILLS
CHECKED BY: JOHN CLARKE
REVISED BY
DATE REVISED

DATE PLOTTED => 08-DEC-2009
TIME PLOTTED => 09:00
LAST REVISION 08-12-09

Dist	COUNTY	ROUTE	POST MILES TOTAL PROJECT	SHEET No.	TOTAL SHEETS
05	SLO	46	36.6/41.2	176	595

8-24-09
REGISTERED CIVIL ENGINEER DATE

12-7-09
PLANS APPROVAL DATE

REGISTERED PROFESSIONAL ENGINEER
JOSE M. ARGUELLO
No. 51321
Exp 06-30-10
CIVIL
STATE OF CALIFORNIA

THE STATE OF CALIFORNIA OR ITS OFFICERS OR AGENTS SHALL NOT BE RESPONSIBLE FOR THE ACCURACY OR COMPLETENESS OF ELECTRONIC COPIES OF THIS PLAN SHEET.

DRAINAGE SYSTEM No. 2 NOT USED

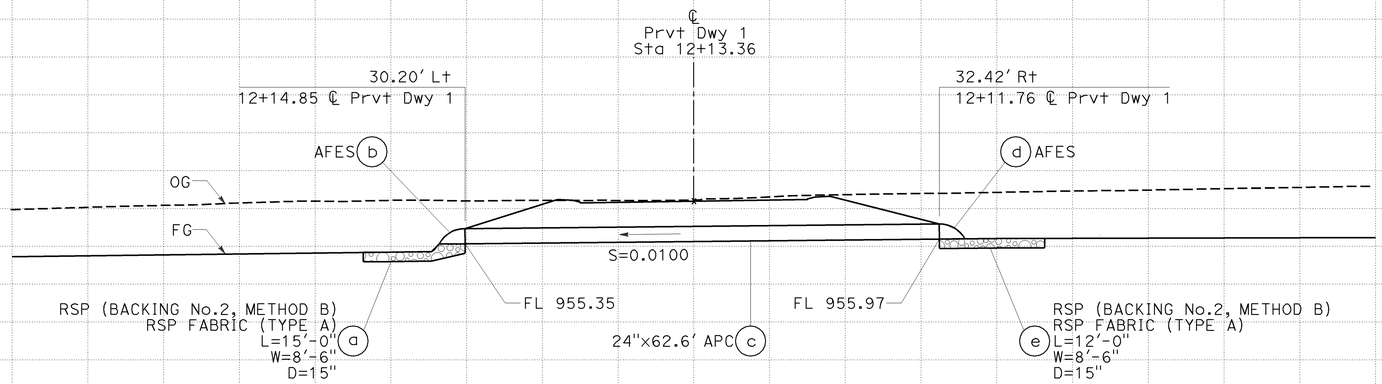

DRAINAGE SYSTEM No. 3

DRAINAGE PROFILES

SCALE: Horiz 1" = 10'
Vert 1" = 10'

DP-2

JIM MILLS — CALCULATED-DESIGNED BY
JOHN CLARKE — CHECKED BY
REVISED BY
DATE REVISED
FUNCTIONAL SUPERVISOR: JACK WALKER
STATE OF CALIFORNIA - DEPARTMENT OF TRANSPORTATION
Caltrans 06-DESIGN

STATION.
CY Exc
Emb
TOTAL

LAST REVISION DATE PLOTTED => 08-DEC-2009
TIME PLOTTED => 09:00
05-21-09

BORDER LAST REVISED 3/1/2007
RELATIVE BORDER SCALE IS IN INCHES 0 1 2 3
USERNAME => trmnguye
DGN FILE => 533072ib002.dgn
CU 06220
EA 330721

Dist	COUNTY	ROUTE	POST MILES TOTAL PROJECT	SHEET No.	TOTAL SHEETS
05	SLO	46	36.6/41.2	177	595

8-24-09
REGISTERED CIVIL ENGINEER DATE

12-7-09
PLANS APPROVAL DATE

REGISTERED PROFESSIONAL ENGINEER
JOSE M. ARGUELLO
No. 51321
Exp 06-30-10
CIVIL
STATE OF CALIFORNIA

THE STATE OF CALIFORNIA OR ITS OFFICERS OR AGENTS SHALL NOT BE RESPONSIBLE FOR THE ACCURACY OR COMPLETENESS OF ELECTRONIC COPIES OF THIS PLAN SHEET.

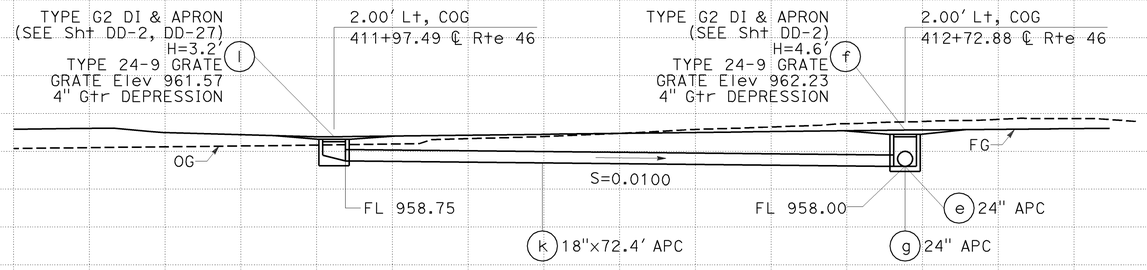

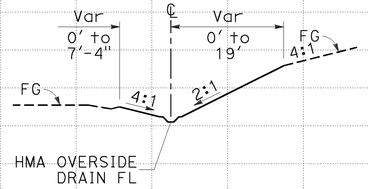

SECTION A-A

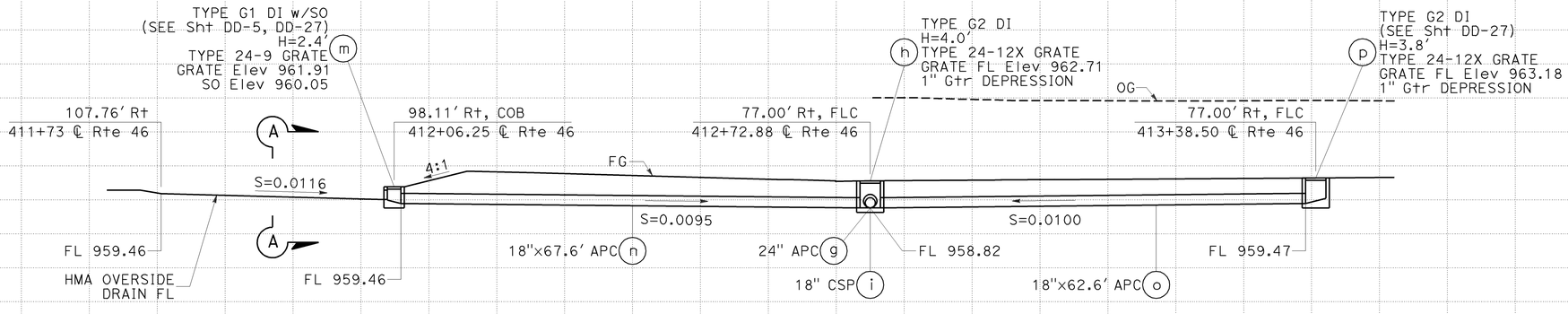

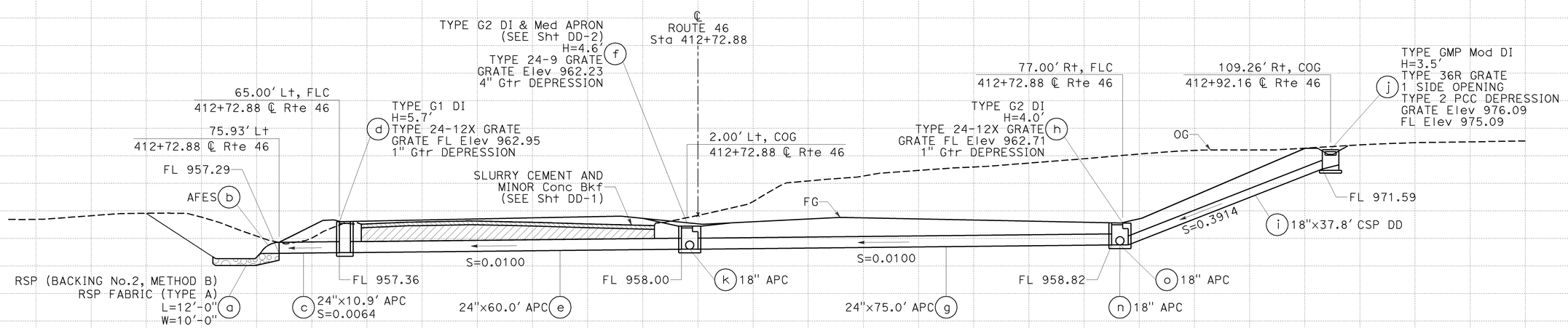

DRAINAGE SYSTEM No. 4

DRAINAGE PROFILES

SCALE: Horiz 1" = 10'
Vert 1" = 10'

DP-3

STATION.		TOTAL
CY	Exc	
	Emb	

STATE OF CALIFORNIA - DEPARTMENT OF TRANSPORTATION
Caltrans
06-DESIGN
FUNCTIONAL SUPERVISOR: JACK WALKER
CALCULATED-DESIGNED BY: JOHN CLARKE
CHECKED BY: JIM MILLS
REVISED BY
DATE REVISED

LAST REVISION DATE PLOTTED => 08-DEC-2009
08-24-09 TIME PLOTTED => 09:00

BORDER LAST REVISED 3/1/2007

RELATIVE BORDER SCALE IS IN INCHES 0 1 2 3

USERNAME => trmnguye
DGN FILE => 533072ib003.dgn

CU 06220

EA 330721

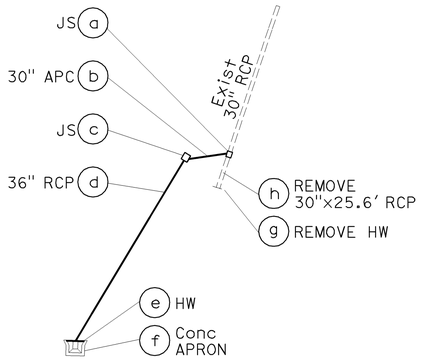

STAGE 1 - PHASE 1

NO SCALE

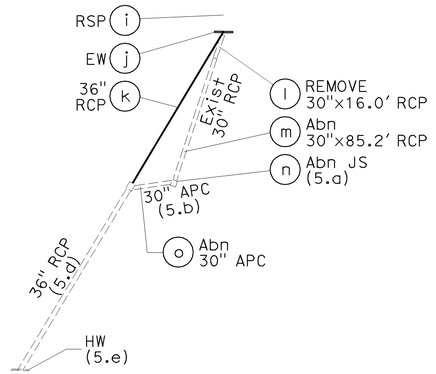

STAGE 2 - PHASE 1

NO SCALE

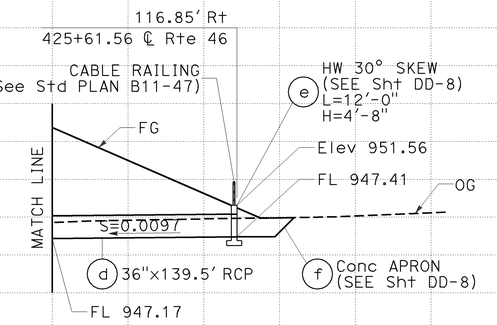

Dist	COUNTY	ROUTE	POST MILES TOTAL PROJECT	SHEET No.	TOTAL SHEETS
05	SLO	46	36.6/41.2	178	595

8-24-09
REGISTERED CIVIL ENGINEER DATE

12-7-09
PLANS APPROVAL DATE

REGISTERED PROFESSIONAL ENGINEER
JOSE M. ARGUELLO
No. 51321
Exp 06-30-10
CIVIL
STATE OF CALIFORNIA

THE STATE OF CALIFORNIA OR ITS OFFICERS OR AGENTS SHALL NOT BE RESPONSIBLE FOR THE ACCURACY OR COMPLETENESS OF ELECTRONIC COPIES OF THIS PLAN SHEET.

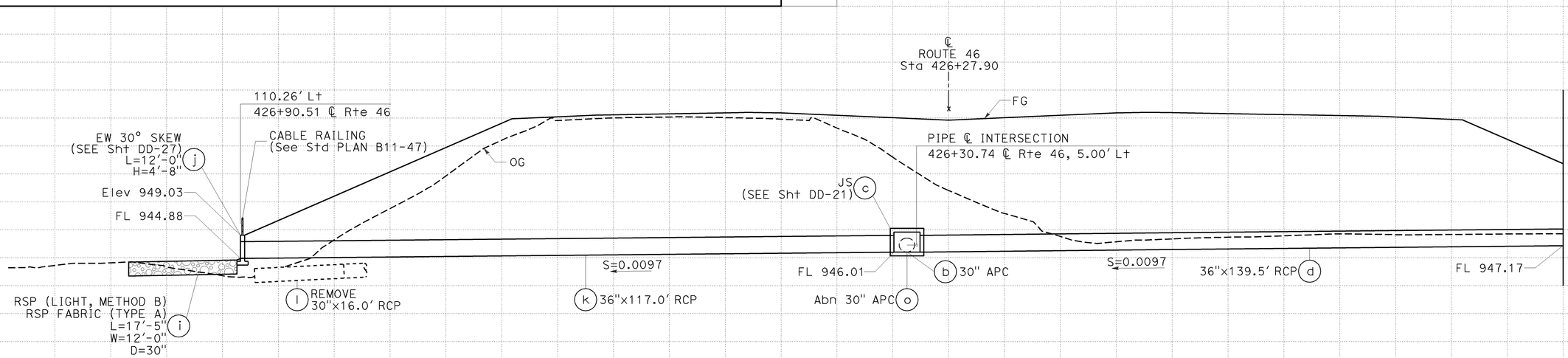

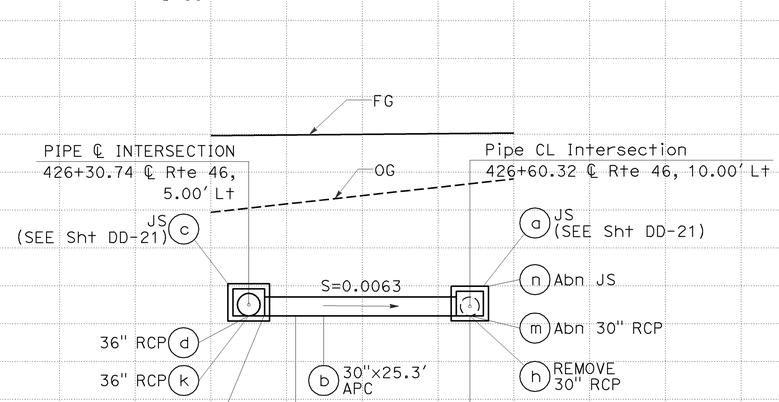

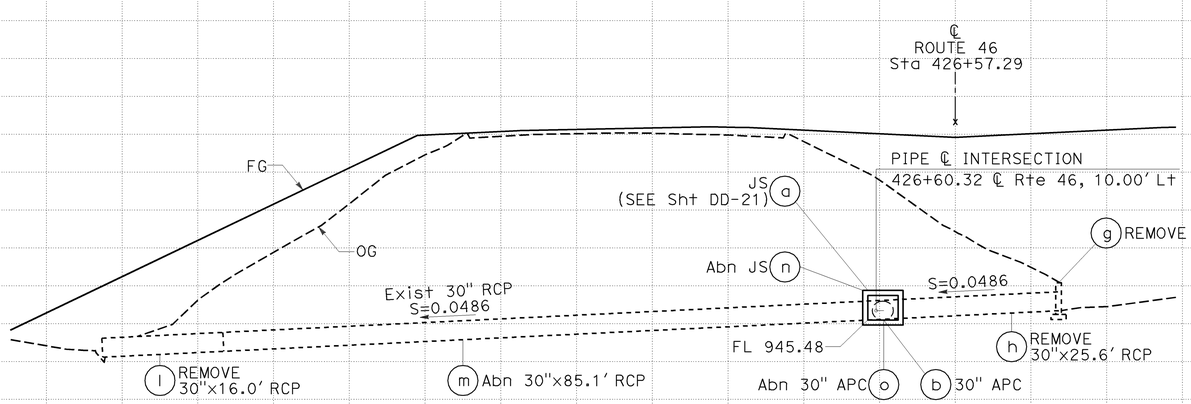

DRAINAGE SYSTEM No. 5

AND KIT FOX CROSSING

DRAINAGE PROFILES

SCALE: Horiz 1" = 10'
Vert 1" = 10'

DP-4

JIM MILLS — CALCULATED-DESIGNED BY
JOHN CLARKE — CHECKED BY
JACK WALKER — FUNCTIONAL SUPERVISOR
REVISED BY — DATE REVISED
STATE OF CALIFORNIA - DEPARTMENT OF TRANSPORTATION
06-DESIGN
Caltrans

STATION. TOTAL
CY Exc
Emb

LAST REVISION DATE PLOTTED => 08-DEC-2009
TIME PLOTTED => 09:01
08-24-09

BORDER LAST REVISED 3/1/2007

RELATIVE BORDER SCALE IS IN INCHES 0 1 2 3

USERNAME => trmnguye
DGN FILE => 533072ib004.dgn

CU 06220

EA 330721

Dist	COUNTY	ROUTE	POST MILES TOTAL PROJECT	SHEET No.	TOTAL SHEETS
05	SLO	46	36.6/41.2	179	595

8-24-09
REGISTERED CIVIL ENGINEER DATE

12-7-09
PLANS APPROVAL DATE

REGISTERED PROFESSIONAL ENGINEER
JOSE M. ARGUELLO
No. 51321
Exp 06-30-10
CIVIL
STATE OF CALIFORNIA

THE STATE OF CALIFORNIA OR ITS OFFICERS OR AGENTS SHALL NOT BE RESPONSIBLE FOR THE ACCURACY OR COMPLETENESS OF ELECTRONIC COPIES OF THIS PLAN SHEET.

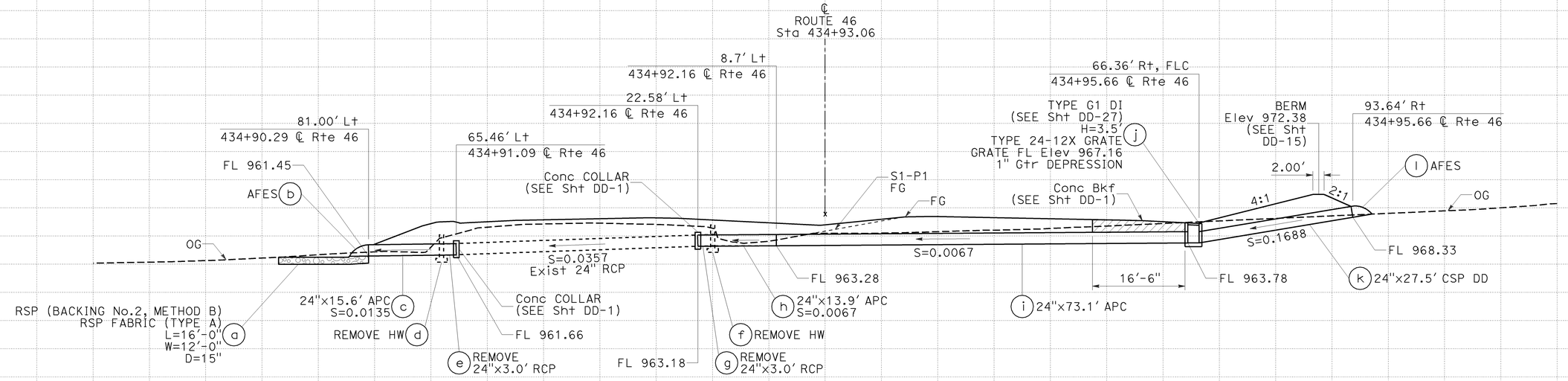

DRAINAGE SYSTEM No. 6

DRAINAGE PROFILES

SCALE: Horiz 1" = 10'
Vert 1" = 10'

DP-5

CALCULATED-DESIGNED BY
CHECKED BY
JIM MILLS
JOHN CLARKE
REVISED BY
DATE REVISED
FUNCTIONAL SUPERVISOR
JACK WALKER
STATE OF CALIFORNIA - DEPARTMENT OF TRANSPORTATION
06-DESIGN
Caltrans
STATION.
CY Exc
Emb
TOTAL

LAST REVISION DATE PLOTTED => 08-DEC-2009
03-13-09 TIME PLOTTED => 09:01

BORDER LAST REVISED 3/1/2007
RELATIVE BORDER SCALE IS IN INCHES 0 1 2 3
USERNAME => trmnguye
DGN FILE => 533072ib005.dgn
CU 06220
EA 330721

Dist	COUNTY	ROUTE	POST MILES TOTAL PROJECT	SHEET No.	TOTAL SHEETS
05	SLO	46	36.6/41.2	180	595

8-24-09
REGISTERED CIVIL ENGINEER DATE

12-7-09
PLANS APPROVAL DATE

REGISTERED PROFESSIONAL ENGINEER
JOSE M. ARGUELLO
No. 51321
Exp 06-30-10
CIVIL
STATE OF CALIFORNIA

THE STATE OF CALIFORNIA OR ITS OFFICERS OR AGENTS SHALL NOT BE RESPONSIBLE FOR THE ACCURACY OR COMPLETENESS OF ELECTRONIC COPIES OF THIS PLAN SHEET.

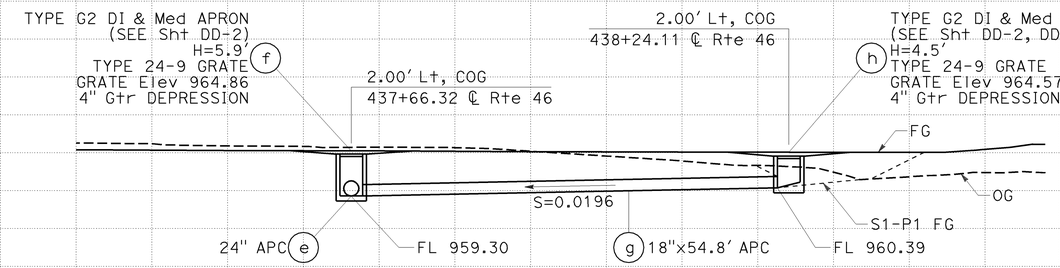

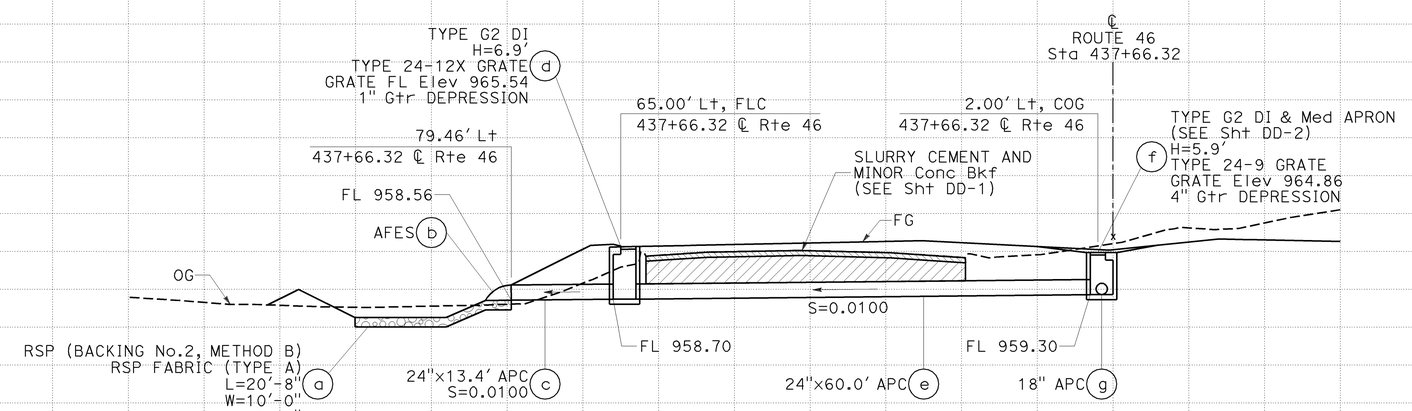

DRAINAGE SYSTEM No. 7

DRAINAGE PROFILES

SCALE: Horiz 1" = 10'
Vert 1" = 10'

DP-6

STATE OF CALIFORNIA - DEPARTMENT OF TRANSPORTATION
Caltrans
06-DESIGN
FUNCTIONAL SUPERVISOR: JACK WALKER
CALCULATED-DESIGNED BY: JIM MILLS
CHECKED BY: JOHN CLARKE
REVISED BY
DATE REVISED

STATION | TOTAL
CY Exc
CY Emb

LAST REVISION DATE PLOTTED => 08-DEC-2009
TIME PLOTTED => 09:01
03-13-09

BORDER LAST REVISED 3/1/2007
RELATIVE BORDER SCALE IS IN INCHES 0 1 2 3
USERNAME => trmnguye
DGN FILE => 533072ib006.dgn
CU 06220
EA 330721

Dist	COUNTY	ROUTE	POST MILES TOTAL PROJECT	SHEET No.	TOTAL SHEETS
05	SLO	46	36.6/41.2	181	595

8-24-09
REGISTERED CIVIL ENGINEER DATE

12-7-09
PLANS APPROVAL DATE

REGISTERED PROFESSIONAL ENGINEER
JOSE M. ARGUELLO
No. 51321
Exp 06-30-10
CIVIL
STATE OF CALIFORNIA

THE STATE OF CALIFORNIA OR ITS OFFICERS OR AGENTS SHALL NOT BE RESPONSIBLE FOR THE ACCURACY OR COMPLETENESS OF ELECTRONIC COPIES OF THIS PLAN SHEET.

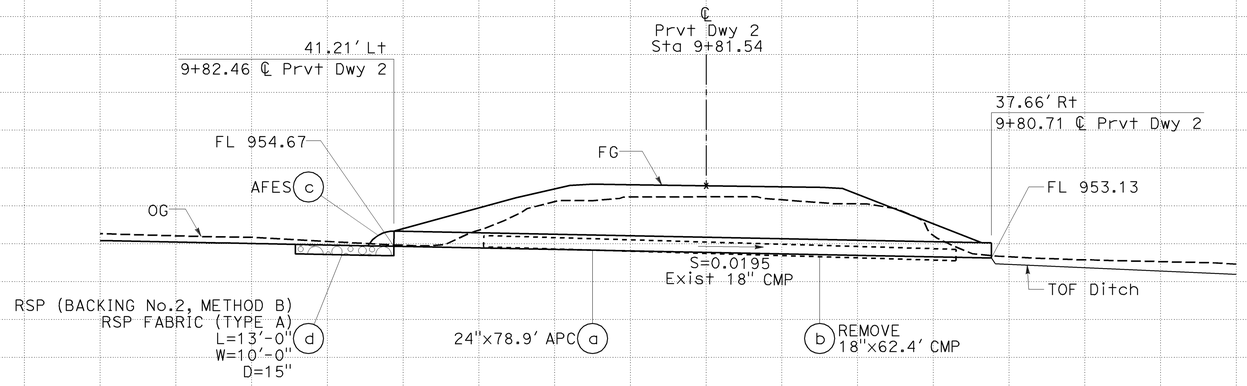

DRAINAGE SYSTEM No. 8

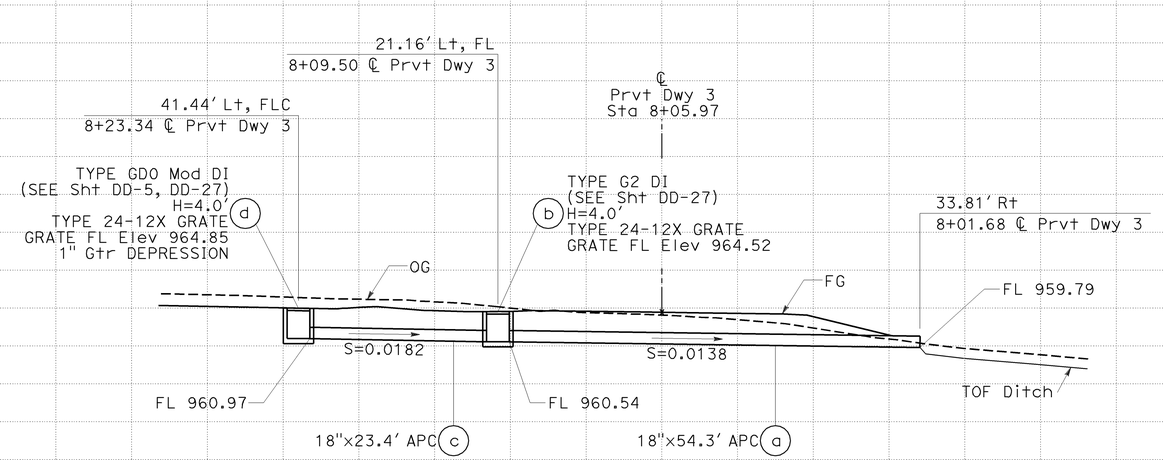

DRAINAGE SYSTEM No. 9

DRAINAGE PROFILES

SCALE: Horiz 1" = 10'
Vert 1" = 10'

DP-7

STATION
CY Exc
Emb
TOTAL

REVISED BY | DATE REVISED
JIM MILLS | JOHN CLARKE
CALCULATED-DESIGNED BY | CHECKED BY
FUNCTIONAL SUPERVISOR: JACK WALKER
STATE OF CALIFORNIA - DEPARTMENT OF TRANSPORTATION
06-DESIGN
Caltrans

LAST REVISION | DATE PLOTTED => 08-DEC-2009
TIME PLOTTED => 09:01
08-24-09

BORDER LAST REVISED 3/1/2007
RELATIVE BORDER SCALE IS IN INCHES 0 1 2 3
USERNAME => trmnguye
DGN FILE => 533072ib007.dgn
CU 06220
EA 330721

Dist	COUNTY	ROUTE	POST MILES TOTAL PROJECT	SHEET No.	TOTAL SHEETS
05	SLO	46	36.6/41.2	182	595

REGISTERED CIVIL ENGINEER DATE 8-24-09

PLANS APPROVAL DATE 12-7-09

REGISTERED PROFESSIONAL ENGINEER JOSE M. ARGUELLO No. 51321 Exp. 06-30-10 CIVIL STATE OF CALIFORNIA

THE STATE OF CALIFORNIA OR ITS OFFICERS OR AGENTS SHALL NOT BE RESPONSIBLE FOR THE ACCURACY OR COMPLETENESS OF ELECTRONIC COPIES OF THIS PLAN SHEET.

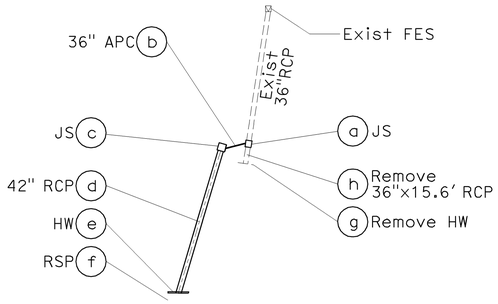

STAGE 1 - PHASE 1

NO SCALE

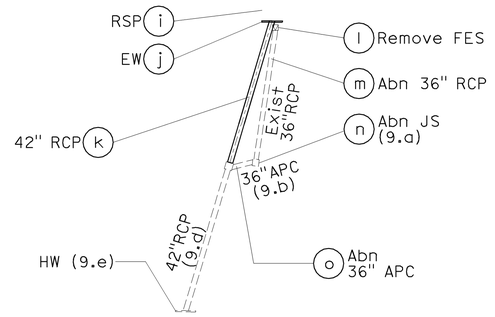

STAGE 2 - PHASE 1

NO SCALE

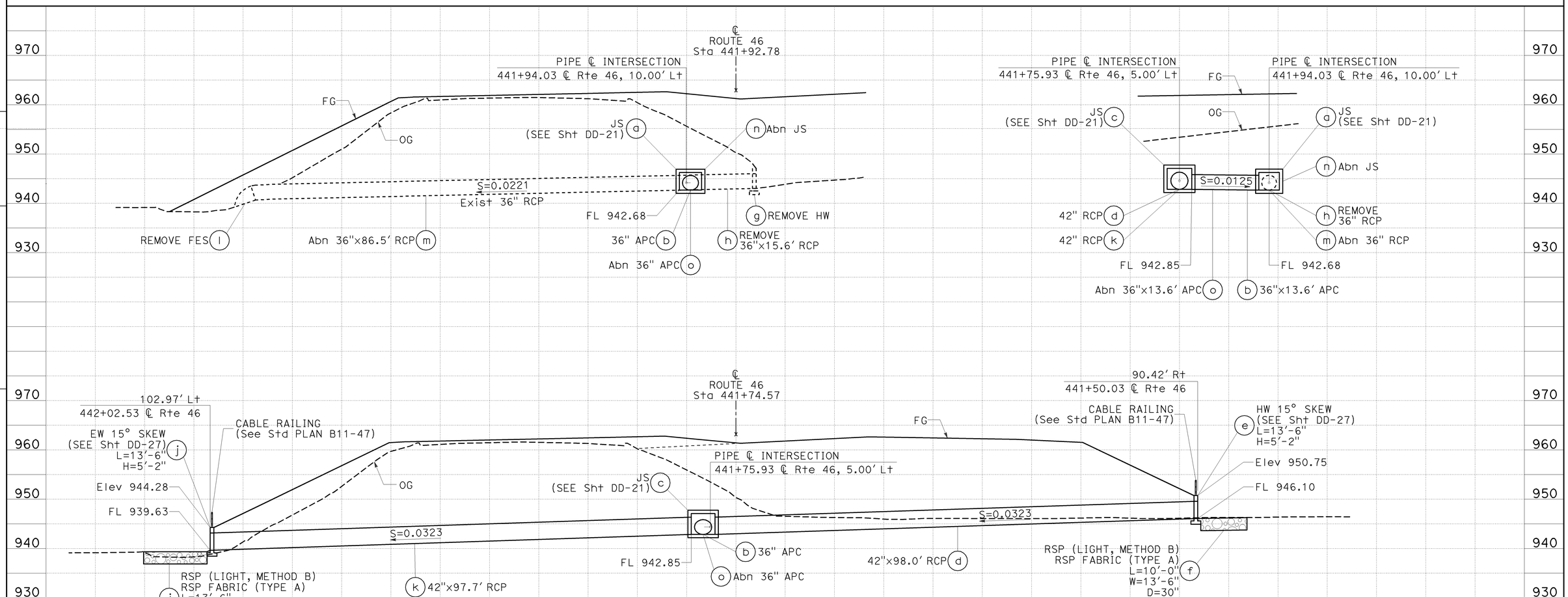

DRAINAGE SYSTEM No. 10

AND KIT FOX CROSSING

DRAINAGE PROFILES

SCALE: Horiz 1" = 10'
Vert 1" = 10'

DP-8

STATION | TOTAL

CY Exc | Emb

STATE OF CALIFORNIA - DEPARTMENT OF TRANSPORTATION

Caltrans

06-DESIGN

FUNCTIONAL SUPERVISOR JACK WALKER

CALCULATED-DESIGNED BY JIM MILLS

CHECKED BY JOHN CLARKE

REVISED BY | DATE REVISED

LAST REVISION 07-01-09 DATE PLOTTED => 08-DEC-2009 TIME PLOTTED => 09:01

Dist	COUNTY	ROUTE	POST MILES TOTAL PROJECT	SHEET No.	TOTAL SHEETS
05	SLO	46	36.6/41.2	183	595

8-24-09
REGISTERED CIVIL ENGINEER DATE

12-7-09
PLANS APPROVAL DATE

JOSE M. ARGUELLO
No. 51321
Exp 06-30-10
CIVIL
REGISTERED PROFESSIONAL ENGINEER
STATE OF CALIFORNIA

THE STATE OF CALIFORNIA OR ITS OFFICERS OR AGENTS SHALL NOT BE RESPONSIBLE FOR THE ACCURACY OR COMPLETENESS OF ELECTRONIC COPIES OF THIS PLAN SHEET.

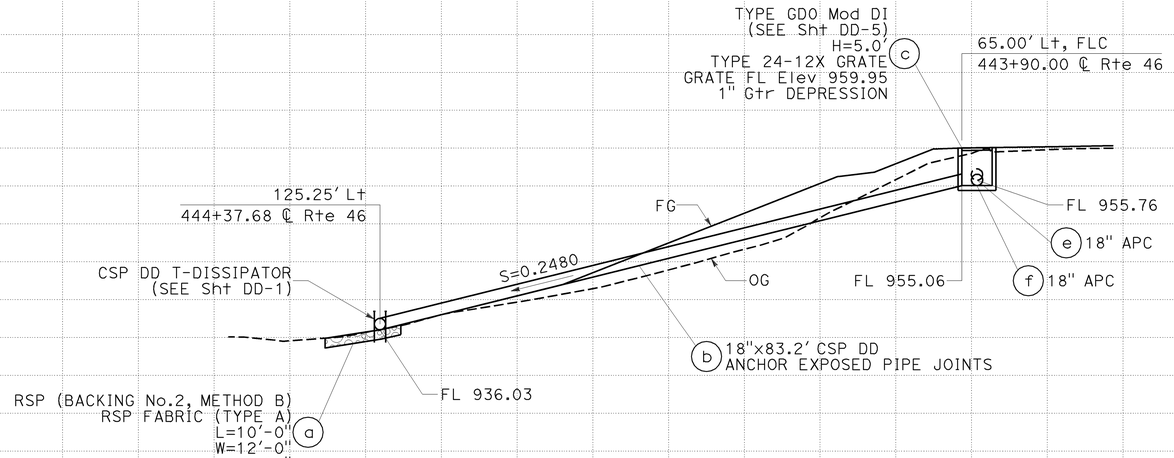

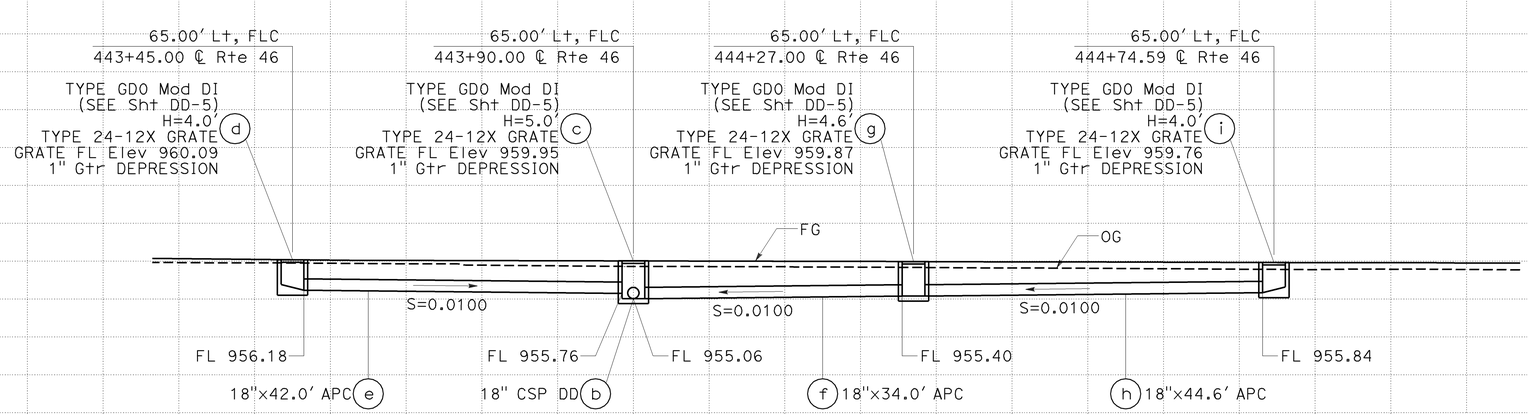

DRAINAGE SYSTEM No. 11

DRAINAGE PROFILES

SCALE: Horiz 1" = 10'
Vert 1" = 10'

DP-9

REVISED BY | DATE REVISED
JIM MILLS | JOHN CLARKE
CALCULATED-DESIGNED BY | CHECKED BY
FUNCTIONAL SUPERVISOR: JACK WALKER
STATE OF CALIFORNIA - DEPARTMENT OF TRANSPORTATION
Caltrans 06-DESIGN

STATION | TOTAL
CY Exc | Emb

LAST REVISION DATE PLOTTED => 08-DEC-2009
TIME PLOTTED => 09:01
07-06-09

BORDER LAST REVISED 3/1/2007
RELATIVE BORDER SCALE IS IN INCHES 0 1 2 3
USERNAME => trmnguye
DGN FILE => 533072ib009.dgn
CU 06220
EA 330721

Dist	COUNTY	ROUTE	POST MILES TOTAL PROJECT	SHEET No.	TOTAL SHEETS
05	SLO	46	36.6/41.2	184	595

8-24-09
REGISTERED CIVIL ENGINEER DATE

12-7-09
PLANS APPROVAL DATE

REGISTERED PROFESSIONAL ENGINEER
JOSE M. ARGUELLO
No. 51321
Exp 06-30-10
CIVIL
STATE OF CALIFORNIA

THE STATE OF CALIFORNIA OR ITS OFFICERS OR AGENTS SHALL NOT BE RESPONSIBLE FOR THE ACCURACY OR COMPLETENESS OF ELECTRONIC COPIES OF THIS PLAN SHEET.

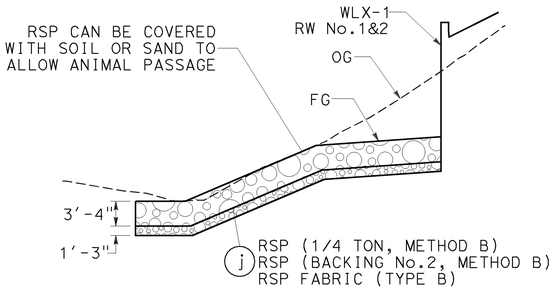

SECTION A-A
NO SCALE

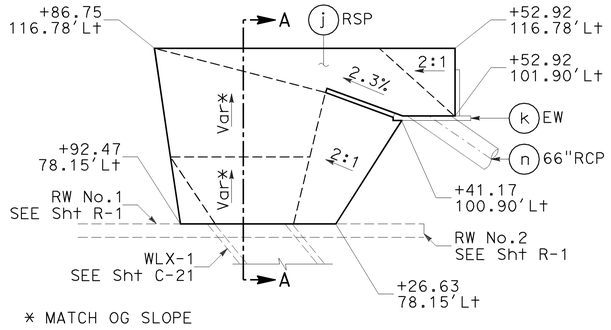

OUTLET PLAN VIEW
NO SCALE

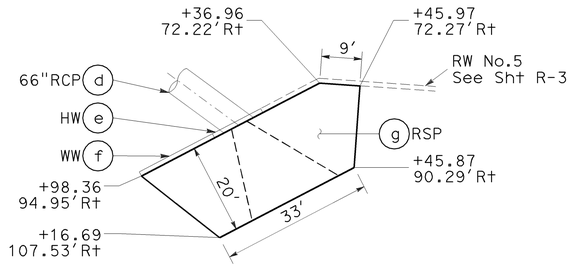

INLET PLAN VIEW
NO SCALE

RSP DETAIL

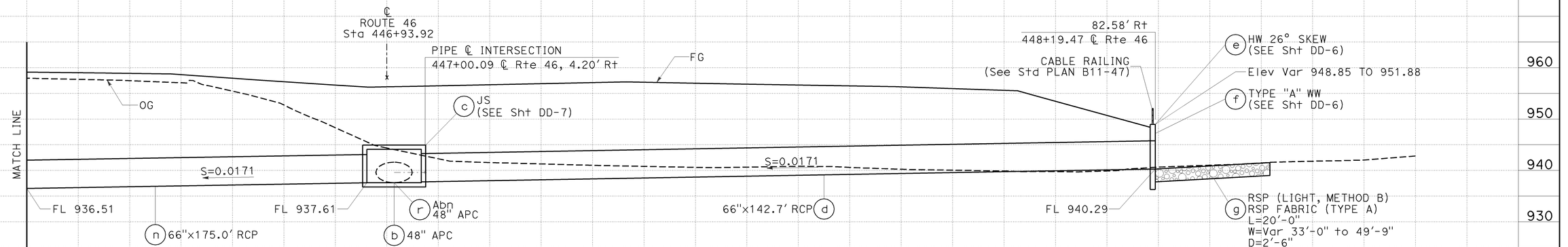

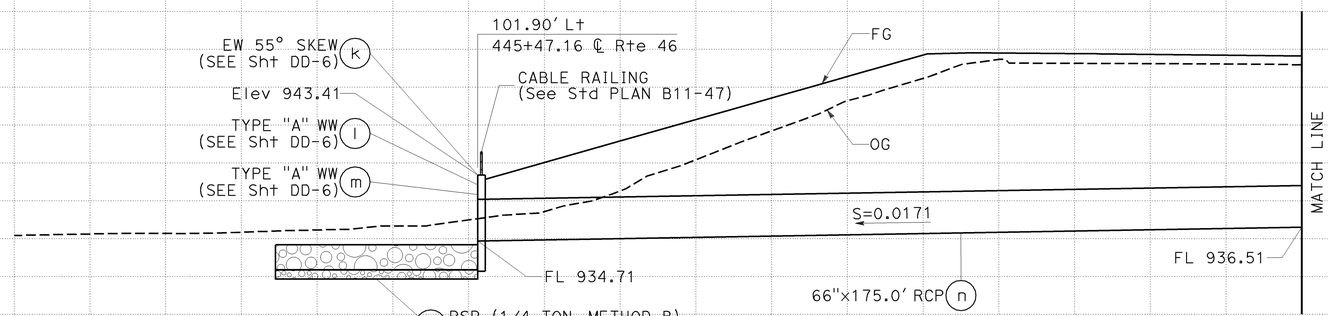

DRAINAGE SYSTEM No. 12

AND KIT FOX CROSSING

DRAINAGE PROFILES

SCALE: Horiz 1" = 10'
Vert 1" = 10'

DP-10

STATION
CY Exc
Emb
TOTAL

DATE PLOTTED => 08-DEC-2009
TIME PLOTTED => 09:10
LAST REVISION 07-21-09

STATE OF CALIFORNIA - DEPARTMENT OF TRANSPORTATION
Caltrans
06-DESIGN
FUNCTIONAL SUPERVISOR: JACK WALKER
CALCULATED-DESIGNED BY: JOHN CLARKE
CHECKED BY: JIM MILLS
REVISED BY
DATE REVISED

BORDER LAST REVISED 3/1/2007
RELATIVE BORDER SCALE IS IN INCHES 0 1 2 3
USERNAME => trmnguye
DGN FILE => 533072ib010.dgn
CU 06220
EA 330721

Dist	COUNTY	ROUTE	POST MILES TOTAL PROJECT	SHEET No.	TOTAL SHEETS
05	SLO	46	36.6/41.2	185	595

8-24-09
REGISTERED CIVIL ENGINEER DATE

12-7-09
PLANS APPROVAL DATE

REGISTERED PROFESSIONAL ENGINEER
JOSE M. ARGUELLO
No. 51321
Exp 06-30-10
CIVIL
STATE OF CALIFORNIA

THE STATE OF CALIFORNIA OR ITS OFFICERS OR AGENTS SHALL NOT BE RESPONSIBLE FOR THE ACCURACY OR COMPLETENESS OF ELECTRONIC COPIES OF THIS PLAN SHEET.

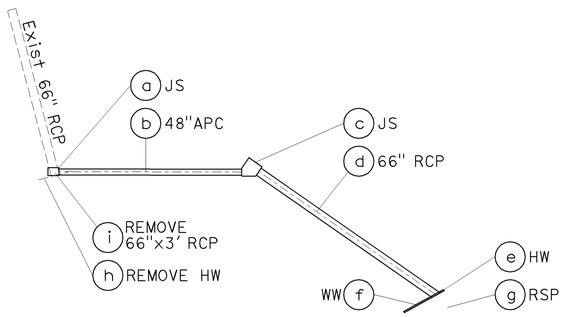

STAGE 1 - PHASE 1
NO SCALE

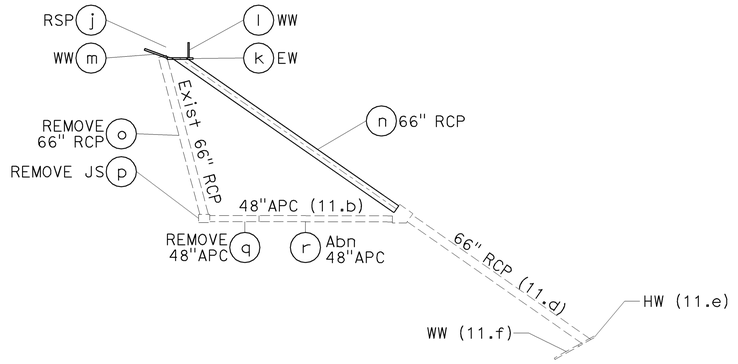

STAGE 2 - PHASE 1
NO SCALE

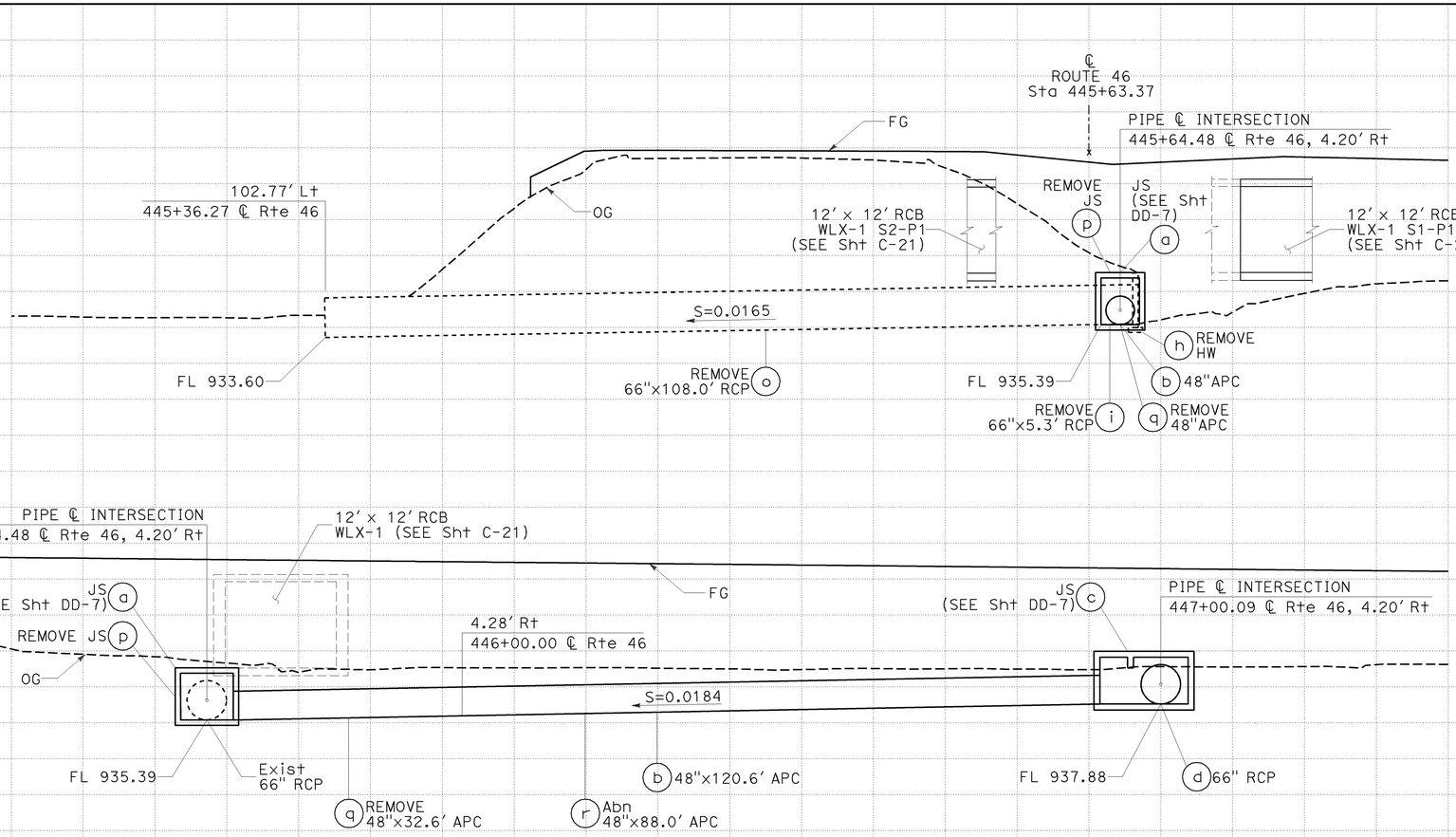

(CONTINUED) DRAINAGE SYSTEM No. 12
AND KIT FOX CROSSING

DRAINAGE PROFILES
SCALE: Horiz 1" = 10'
Vert 1" = 10'

DP-11

JIM MILLS — CALCULATED-DESIGNED BY
JOHN CLARKE — CHECKED BY
REVISED BY — DATE REVISED
FUNCTIONAL SUPERVISOR: JACK WALKER
STATE OF CALIFORNIA - DEPARTMENT OF TRANSPORTATION
06-DESIGN
Caltrans

STATION.
CY Exc
Emb
TOTAL

LAST REVISION DATE PLOTTED => 08-DEC-2009
TIME PLOTTED => 09:01
07-21-09

BORDER LAST REVISED 3/1/2007
RELATIVE BORDER SCALE IS IN INCHES 0 1 2 3
USERNAME => trmnguye
DGN FILE => 533072ib011.dgn
CU 06220
EA 330721

Dist	COUNTY	ROUTE	POST MILES TOTAL PROJECT	SHEET No.	TOTAL SHEETS
05	SLO	46	36.6/41.2	186	595

8-24-09
REGISTERED CIVIL ENGINEER DATE

12-7-09
PLANS APPROVAL DATE

JOSE M. ARGUELLO
No. 51321
Exp 06-30-10
CIVIL
REGISTERED PROFESSIONAL ENGINEER
STATE OF CALIFORNIA

THE STATE OF CALIFORNIA OR ITS OFFICERS OR AGENTS SHALL NOT BE RESPONSIBLE FOR THE ACCURACY OR COMPLETENESS OF ELECTRONIC COPIES OF THIS PLAN SHEET.

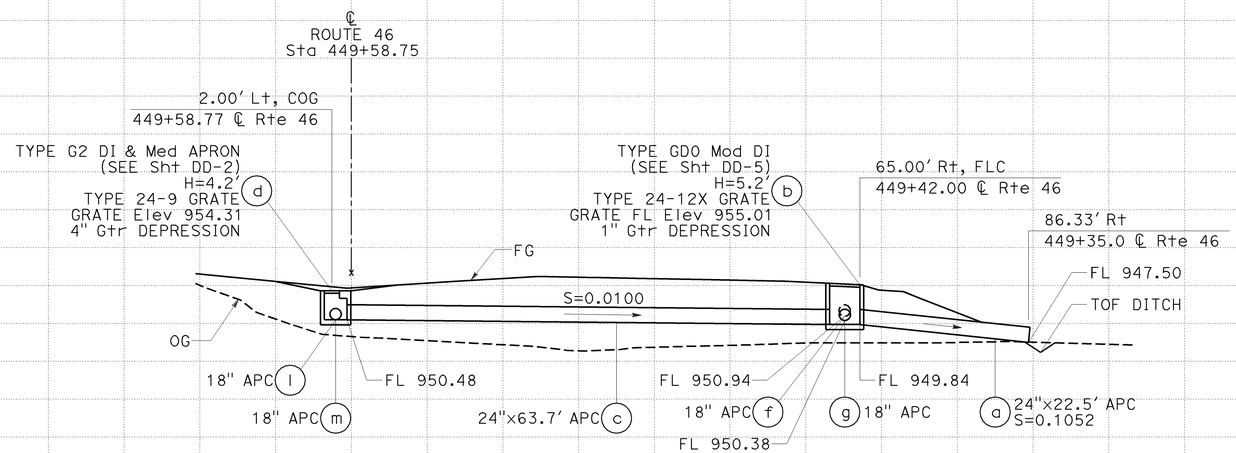

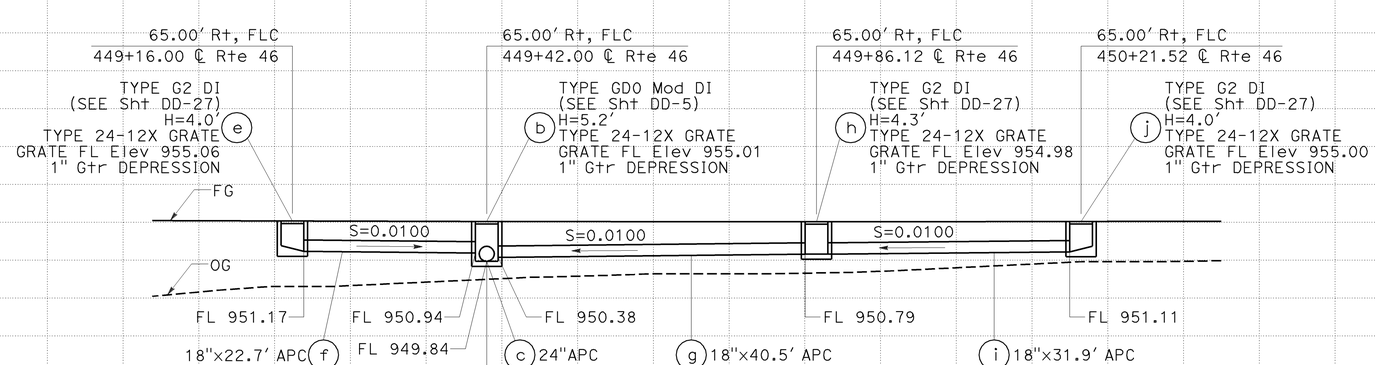

DRAINAGE SYSTEM No. 13

DRAINAGE PROFILES

SCALE: Horiz 1" = 10'
Vert 1" = 10'

DP-12

STATE OF CALIFORNIA - DEPARTMENT OF TRANSPORTATION
Caltrans
06-DESIGN
FUNCTIONAL SUPERVISOR: JACK WALKER
CALCULATED-DESIGNED BY: JIM MILLS
CHECKED BY: JOHN CLARKE
REVISED BY / DATE REVISED

STATION | TOTAL
CY Exc
CY Emb

LAST REVISION DATE PLOTTED => 08-DEC-2009
LAST REVISION TIME PLOTTED => 09:01
03-13-09

BORDER LAST REVISED 3/1/2007
RELATIVE BORDER SCALE IS IN INCHES 0 1 2 3
USERNAME => trmnguye
DGN FILE => 533072ib012.dgn
CU 06220
EA 330721

Dist	COUNTY	ROUTE	POST MILES TOTAL PROJECT	SHEET No.	TOTAL SHEETS
05	SLO	46	36.6/41.2	187	595

8-24-09
REGISTERED CIVIL ENGINEER DATE

12-7-09
PLANS APPROVAL DATE

REGISTERED PROFESSIONAL ENGINEER
JOSE M. ARGUELLO
No. 51321
Exp 06-30-10
CIVIL
STATE OF CALIFORNIA

THE STATE OF CALIFORNIA OR ITS OFFICERS OR AGENTS SHALL NOT BE RESPONSIBLE FOR THE ACCURACY OR COMPLETENESS OF ELECTRONIC COPIES OF THIS PLAN SHEET.

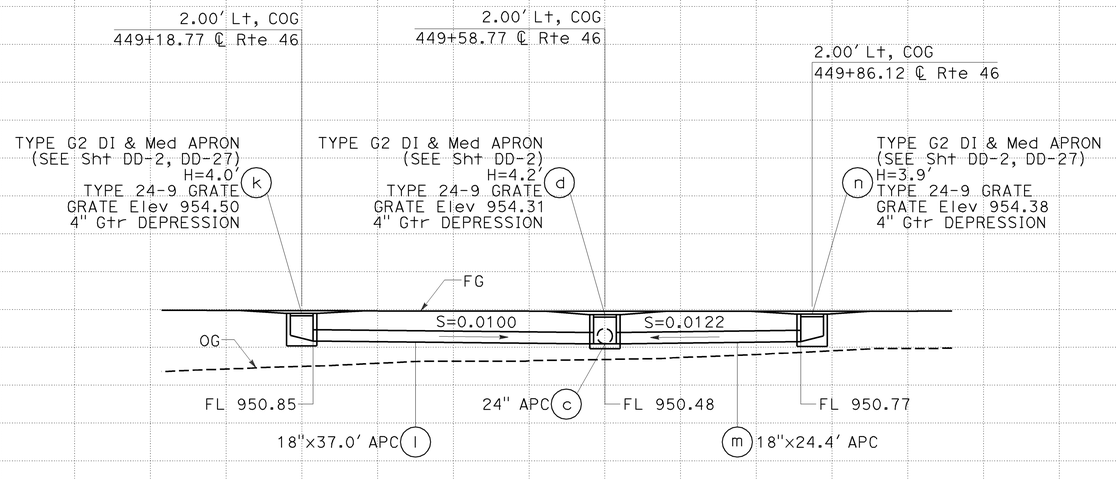

(CONTINUED)
DRAINAGE SYSTEM No. 13

DRAINAGE PROFILES

SCALE: Horiz 1" = 10'
Vert 1" = 10'

DP-13

JIM MILLS
JOHN CLARKE
CALCULATED-DESIGNED BY
CHECKED BY
REVISED BY
DATE REVISED

FUNCTIONAL SUPERVISOR
JACK WALKER

STATE OF CALIFORNIA - DEPARTMENT OF TRANSPORTATION
06-DESIGN
Caltrans

STATION
CY Exc
Emb
TOTAL

LAST REVISION
DATE PLOTTED => 08-DEC-2009
TIME PLOTTED => 09:01
02-25-09

BORDER LAST REVISED 3/1/2007

RELATIVE BORDER SCALE IS IN INCHES
0 1 2 3

USERNAME => trmnguye
DGN FILE => 533072ib013.dgn

CU 06220

EA 330721

Dist	COUNTY	ROUTE	POST MILES TOTAL PROJECT	SHEET No.	TOTAL SHEETS
05	SLO	46	36.6/41.2	188	595

8-24-09
REGISTERED CIVIL ENGINEER DATE

12-7-09
PLANS APPROVAL DATE

REGISTERED PROFESSIONAL ENGINEER
JOSE M. ARGUELLO
No. 51321
Exp 06-30-10
CIVIL
STATE OF CALIFORNIA

THE STATE OF CALIFORNIA OR ITS OFFICERS OR AGENTS SHALL NOT BE RESPONSIBLE FOR THE ACCURACY OR COMPLETENESS OF ELECTRONIC COPIES OF THIS PLAN SHEET.

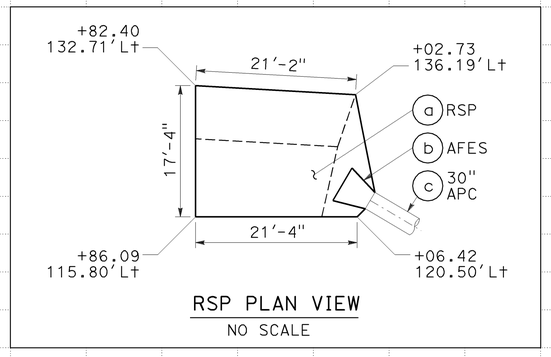

RSP PLAN VIEW
NO SCALE

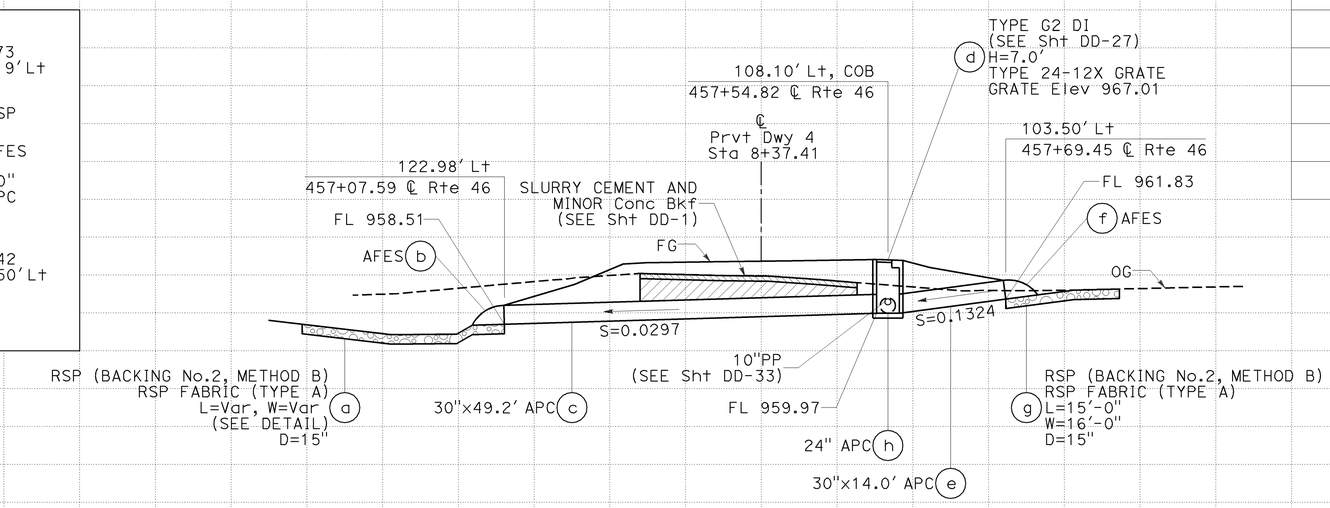

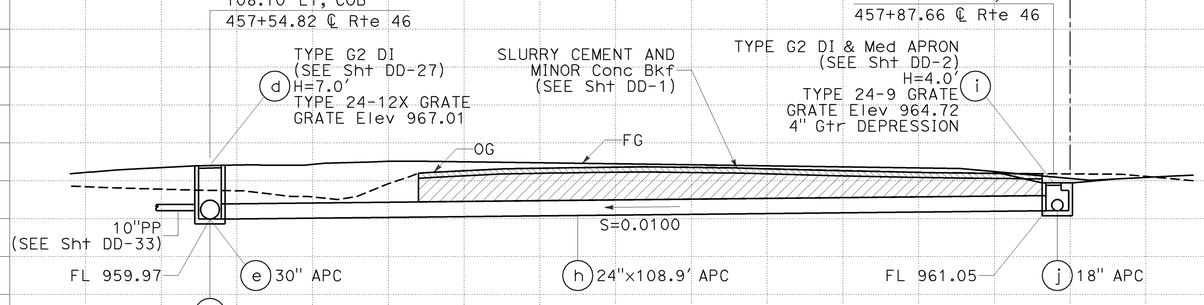

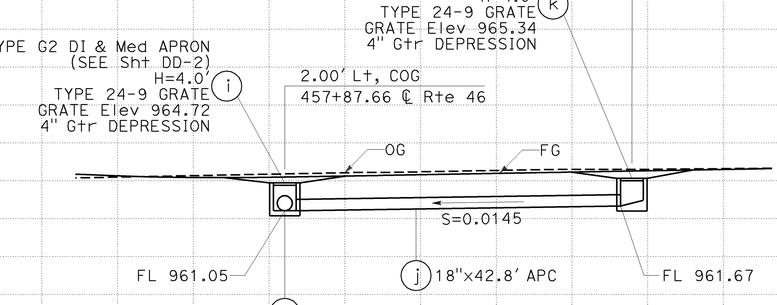

DRAINAGE SYSTEM No. 14

DRAINAGE SYSTEM No. 15 NOT USED

DRAINAGE PROFILES

SCALE: Horiz 1" = 10'
Vert 1" = 10'

DP-14

STATE OF CALIFORNIA - DEPARTMENT OF TRANSPORTATION
06-DESIGN
FUNCTIONAL SUPERVISOR: JACK WALKER
CALCULATED-DESIGNED BY: JOHN CLARKE
CHECKED BY: JIM MILLS
REVISED BY | DATE REVISED

STATION | TOTAL
CY Exc
CY Emb

LAST REVISION DATE PLOTTED => 08-DEC-2009
LAST REVISION TIME PLOTTED => 09:01
05-21-09

BORDER LAST REVISED 3/1/2007
RELATIVE BORDER SCALE IS IN INCHES 0 1 2 3
USERNAME => trmnguye
DGN FILE => 533072ib014.dgn
CU 06220
EA 330721

Dist	COUNTY	ROUTE	POST MILES TOTAL PROJECT	SHEET No.	TOTAL SHEETS
05	SLO	46	36.6/41.2	189	595

8-24-09
REGISTERED CIVIL ENGINEER DATE

12-7-09
PLANS APPROVAL DATE

JOSE M. ARGUELLO No. 51321 Exp 06-30-10 CIVIL — REGISTERED PROFESSIONAL ENGINEER — STATE OF CALIFORNIA

THE STATE OF CALIFORNIA OR ITS OFFICERS OR AGENTS SHALL NOT BE RESPONSIBLE FOR THE ACCURACY OR COMPLETENESS OF ELECTRONIC COPIES OF THIS PLAN SHEET.

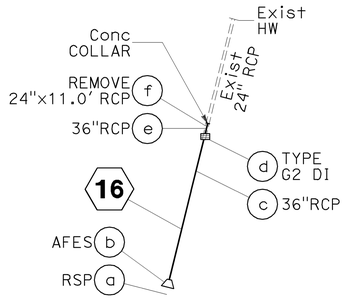

STAGE 1 - PHASE 1

NO SCALE

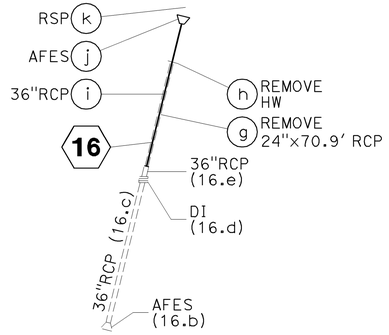

STAGE 2 - PHASE 1

NO SCALE

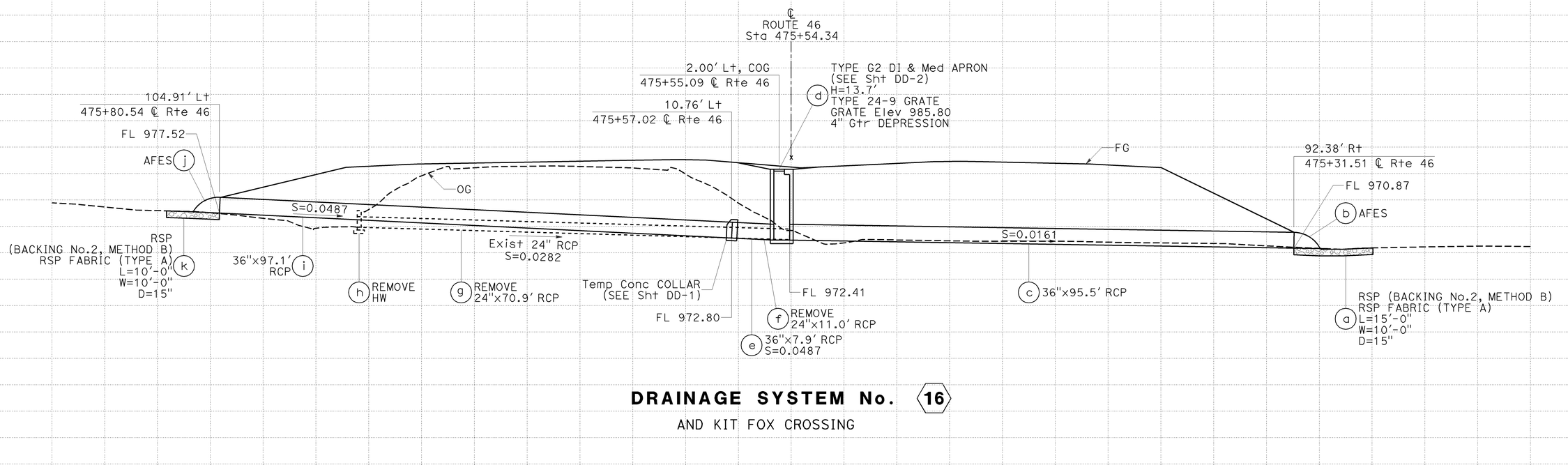

DRAINAGE SYSTEM No. 16

AND KIT FOX CROSSING

DRAINAGE PROFILES

SCALE: Horiz 1" = 10'
Vert 1" = 10'

DP-15

JIM MILLS — CALCULATED-DESIGNED BY
JOHN CLARKE — CHECKED BY
JACK WALKER — FUNCTIONAL SUPERVISOR
REVISED BY — DATE REVISED

STATE OF CALIFORNIA - DEPARTMENT OF TRANSPORTATION
06-DESIGN
Caltrans

STATION.
CY Exc
Emb
TOTAL

LAST REVISION | DATE PLOTTED => 08-DEC-2009
04-13-09 | TIME PLOTTED => 09:02

BORDER LAST REVISED 3/1/2007

RELATIVE BORDER SCALE IS IN INCHES 0 1 2 3

USERNAME => trmnguye
DGN FILE => 533072ib015.dgn

CU 06220

EA 330721

Dist	COUNTY	ROUTE	POST MILES TOTAL PROJECT	SHEET No.	TOTAL SHEETS
05	SLO	46	36.6/41.2	190	595

8-24-09
REGISTERED CIVIL ENGINEER DATE

12-7-09
PLANS APPROVAL DATE

REGISTERED PROFESSIONAL ENGINEER
JOSE M. ARGUELLO
No. 51321
Exp 06-30-10
CIVIL
STATE OF CALIFORNIA

THE STATE OF CALIFORNIA OR ITS OFFICERS OR AGENTS SHALL NOT BE RESPONSIBLE FOR THE ACCURACY OR COMPLETENESS OF ELECTRONIC COPIES OF THIS PLAN SHEET.

DRAINAGE SYSTEM No. 17 NOT USED

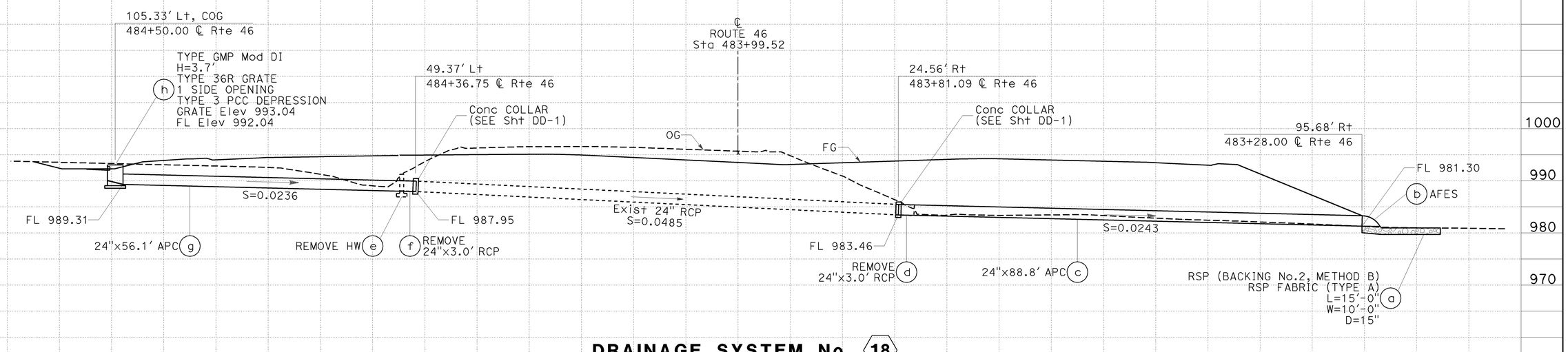

DRAINAGE SYSTEM No. 18

DRAINAGE SYSTEM No. 19 NOT USED

DRAINAGE PROFILES

SCALE: Horiz 1" = 10'
Vert 1" = 10'

DP-16

JIM MILLS — REVISED BY
JOHN CLARKE — DATE REVISED
CALCULATED-DESIGNED BY
CHECKED BY
FUNCTIONAL SUPERVISOR
JACK WALKER
STATE OF CALIFORNIA - DEPARTMENT OF TRANSPORTATION
06-DESIGN
Caltrans

STATION
CY Exc
Emb
TOTAL

LAST REVISION DATE PLOTTED => 08-DEC-2009
TIME PLOTTED => 09:02
05-21-09

BORDER LAST REVISED 3/1/2007
RELATIVE BORDER SCALE IS IN INCHES 0 1 2 3
USERNAME => trmnguye
DGN FILE => 533072ib016.dgn
CU 06220
EA 330721

Dist	COUNTY	ROUTE	POST MILES TOTAL PROJECT	SHEET No.	TOTAL SHEETS
05	SLO	46	36.6/41.2	191	595

8-24-09
REGISTERED CIVIL ENGINEER DATE

12-7-09
PLANS APPROVAL DATE

REGISTERED PROFESSIONAL ENGINEER
JOSE M. ARGUELLO
No. 51321
Exp 06-30-10
CIVIL
STATE OF CALIFORNIA

THE STATE OF CALIFORNIA OR ITS OFFICERS OR AGENTS SHALL NOT BE RESPONSIBLE FOR THE ACCURACY OR COMPLETENESS OF ELECTRONIC COPIES OF THIS PLAN SHEET.

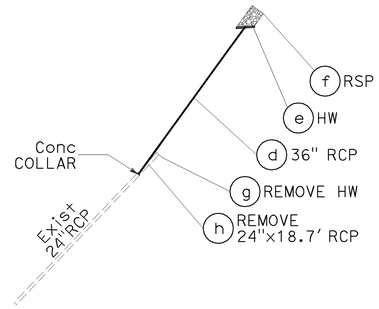

STAGE 2 - PHASE 1

NO SCALE

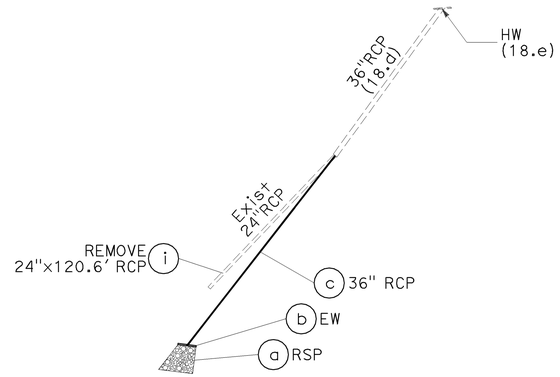

STAGE 3

NO SCALE

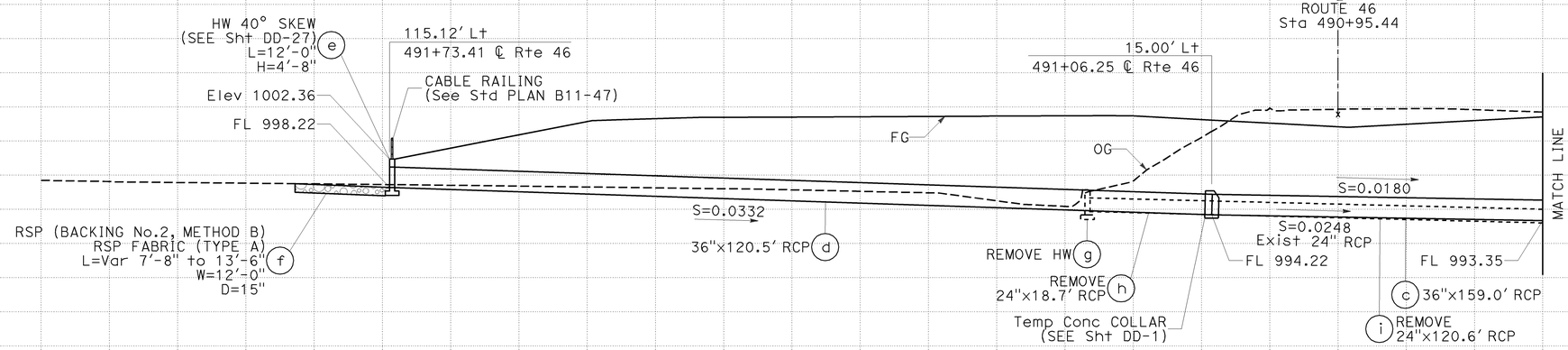

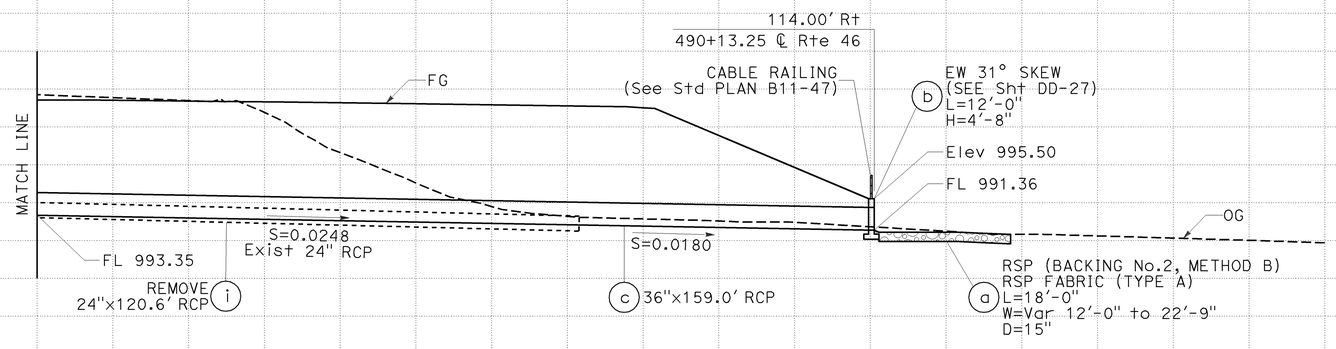

DRAINAGE SYSTEM No. 20

AND KIT FOX CROSSING

DRAINAGE PROFILES

SCALE: Horiz 1" = 10'
Vert 1" = 10'

DP-17

DATE PLOTTED => 06-DEC-2009
TIME PLOTTED => 08:35

LAST REVISION 08-24-09

STATION
CY Exc
Emb
TOTAL

STATE OF CALIFORNIA - DEPARTMENT OF TRANSPORTATION
Caltrans
06-DESIGN
FUNCTIONAL SUPERVISOR: JACK WALKER
CALCULATED-DESIGNED BY: JIM MILLS
CHECKED BY: JOHN CLARKE
REVISED BY
DATE REVISED

BORDER LAST REVISED 3/1/2007

RELATIVE BORDER SCALE IS IN INCHES 0 1 2 3

USERNAME => trphils
DGN FILE => 533072ib017.dgn

CU 06220

EA 330721

Dist	COUNTY	ROUTE	POST MILES TOTAL PROJECT	SHEET No.	TOTAL SHEETS
05	SLO	46	36.6/41.2	192	595

8-24-09
REGISTERED CIVIL ENGINEER DATE

12-7-09
PLANS APPROVAL DATE

REGISTERED PROFESSIONAL ENGINEER
JOSE M. ARGUELLO
No. 51321
Exp 06-30-10
CIVIL
STATE OF CALIFORNIA

THE STATE OF CALIFORNIA OR ITS OFFICERS OR AGENTS SHALL NOT BE RESPONSIBLE FOR THE ACCURACY OR COMPLETENESS OF ELECTRONIC COPIES OF THIS PLAN SHEET.

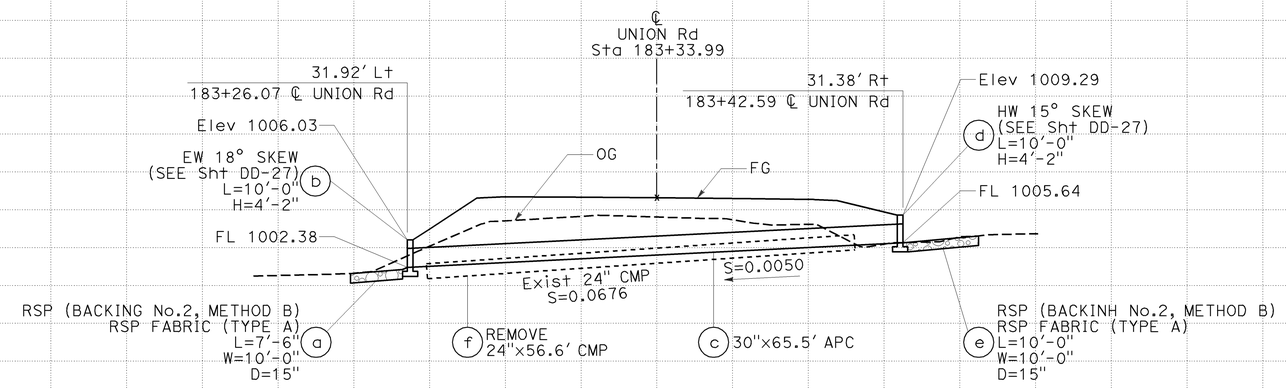

DRAINAGE SYSTEM No. 21

DRAINAGE PROFILES

SCALE: Horiz 1" = 10'
Vert 1" = 10'

DP-18

STATE OF CALIFORNIA - DEPARTMENT OF TRANSPORTATION
06-DESIGN
FUNCTIONAL SUPERVISOR: JACK WALKER
CALCULATED-DESIGNED BY: JIM MILLS
CHECKED BY: JOHN CLARKE
REVISED BY
DATE REVISED

STATION
CY Exc
Emb
TOTAL

LAST REVISION DATE PLOTTED => 08-DEC-2009
TIME PLOTTED => 08:35
04-13-09

BORDER LAST REVISED 3/1/2007
RELATIVE BORDER SCALE IS IN INCHES 0 1 2 3
USERNAME => trphils
DGN FILE => 533072ib018.dgn
CU 06220
EA 330721

Dist	COUNTY	ROUTE	POST MILES TOTAL PROJECT	SHEET No.	TOTAL SHEETS
05	SLO	46	36.6/41.2	193	595

8-24-09
REGISTERED CIVIL ENGINEER DATE

12-7-09
PLANS APPROVAL DATE

REGISTERED PROFESSIONAL ENGINEER
JOSE M. ARGUELLO
No. 51321
Exp 06-30-10
CIVIL
STATE OF CALIFORNIA

THE STATE OF CALIFORNIA OR ITS OFFICERS OR AGENTS SHALL NOT BE RESPONSIBLE FOR THE ACCURACY OR COMPLETENESS OF ELECTRONIC COPIES OF THIS PLAN SHEET.

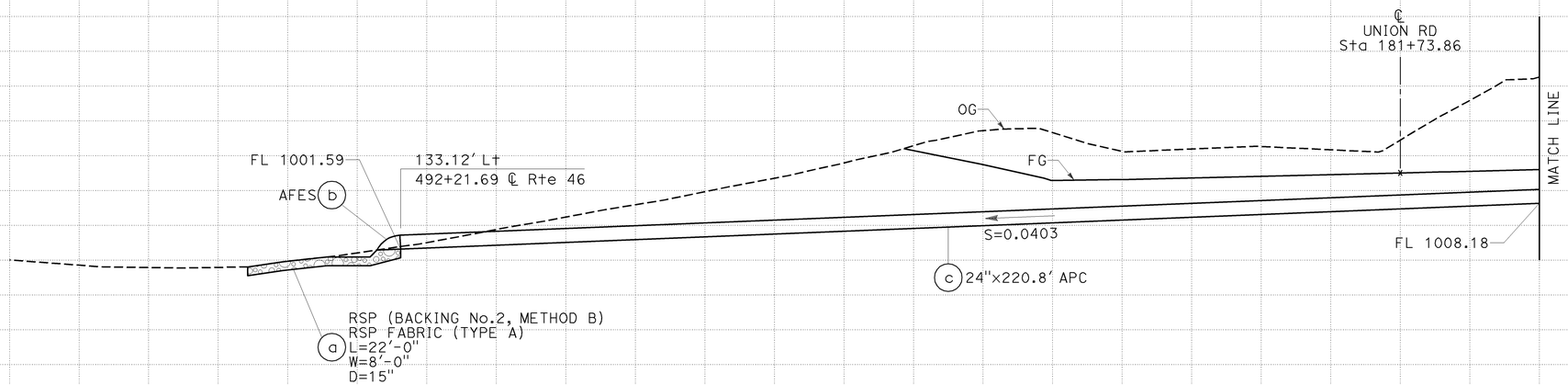

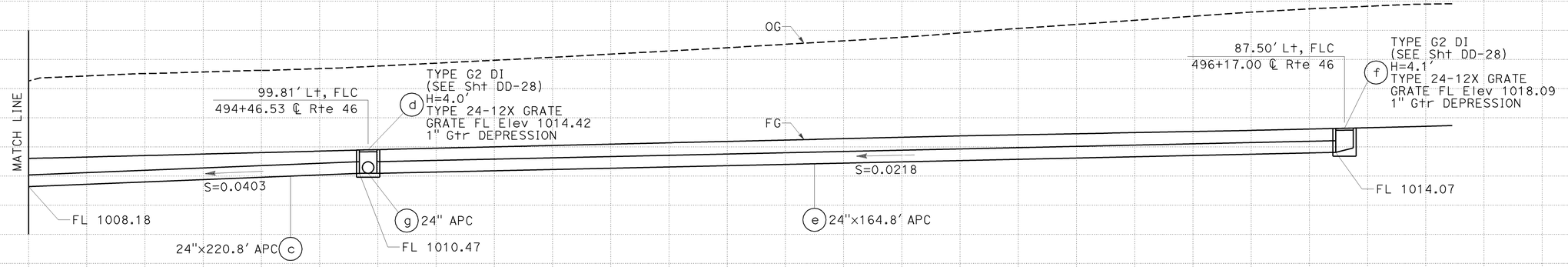

DRAINAGE SYSTEM No. 22

DRAINAGE PROFILES

SCALE: Horiz 1" = 10′
Vert 1" = 10′

DP-19

JIM MILLS — DESIGNED BY
JOHN CLARKE — CALCULATED-DESIGNED BY
CHECKED BY
REVISED BY
DATE REVISED

FUNCTIONAL SUPERVISOR: JACK WALKER

STATE OF CALIFORNIA - DEPARTMENT OF TRANSPORTATION
06-DESIGN
Caltrans

STATION.
CY Exc
Emb
TOTAL

LAST REVISION DATE PLOTTED => 08-DEC-2009
TIME PLOTTED => 08:35
07-08-09

BORDER LAST REVISED 3/1/2007

RELATIVE BORDER SCALE IS IN INCHES 0 1 2 3

USERNAME => trphils
DGN FILE => 533072ib019.dgn

CU 06220

EA 330721

Dist	COUNTY	ROUTE	POST MILES TOTAL PROJECT	SHEET No.	TOTAL SHEETS
05	SLO	46	36.6/41.2	194	595

8-24-09
REGISTERED CIVIL ENGINEER DATE

12-7-09
PLANS APPROVAL DATE

REGISTERED PROFESSIONAL ENGINEER
JOSE M. ARGUELLO
No. 51321
Exp 06-30-10
CIVIL
STATE OF CALIFORNIA

THE STATE OF CALIFORNIA OR ITS OFFICERS OR AGENTS SHALL NOT BE RESPONSIBLE FOR THE ACCURACY OR COMPLETENESS OF ELECTRONIC COPIES OF THIS PLAN SHEET.

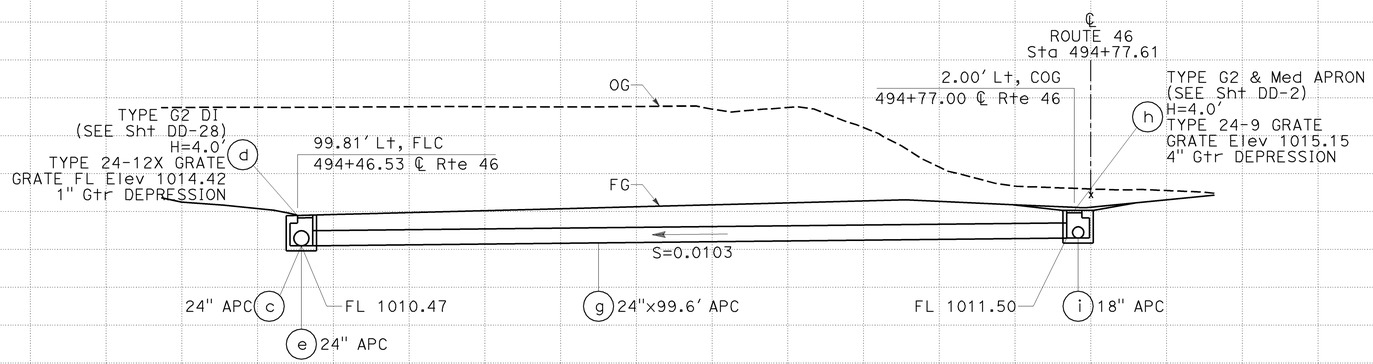

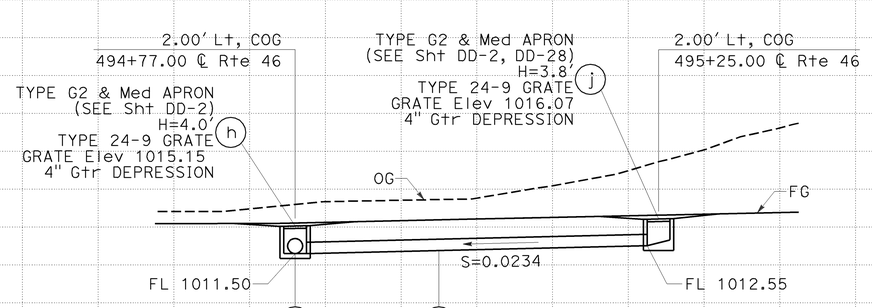

(CONTINUED) DRAINAGE SYSTEM No. 22

DRAINAGE PROFILES

SCALE: Horiz 1" = 10′
Vert 1" = 10′

DP-20

REVISED BY | DATE REVISED
JIM MILLS | JOHN CLARKE
CALCULATED-DESIGNED BY | CHECKED BY
FUNCTIONAL SUPERVISOR: JACK WALKER
STATE OF CALIFORNIA - DEPARTMENT OF TRANSPORTATION
Caltrans 06-DESIGN

STATION. | TOTAL
CY Exc | Emb

LAST REVISION | DATE PLOTTED => 08-DEC-2009 | TIME PLOTTED => 08:35
04-13-09

BORDER LAST REVISED 3/1/2007
RELATIVE BORDER SCALE IS IN INCHES 0 1 2 3
USERNAME => trphils
DGN FILE => 533072ib020.dgn
CU 06220
EA 330721

Dist	COUNTY	ROUTE	POST MILES TOTAL PROJECT	SHEET No.	TOTAL SHEETS
05	SLO	46	36.6/41.2	195	595

8-24-09
REGISTERED CIVIL ENGINEER DATE

12-7-09
PLANS APPROVAL DATE

JOSE M. ARGUELLO
No. 51321
Exp 06-30-10
CIVIL
REGISTERED PROFESSIONAL ENGINEER
STATE OF CALIFORNIA

THE STATE OF CALIFORNIA OR ITS OFFICERS OR AGENTS SHALL NOT BE RESPONSIBLE FOR THE ACCURACY OR COMPLETENESS OF ELECTRONIC COPIES OF THIS PLAN SHEET.

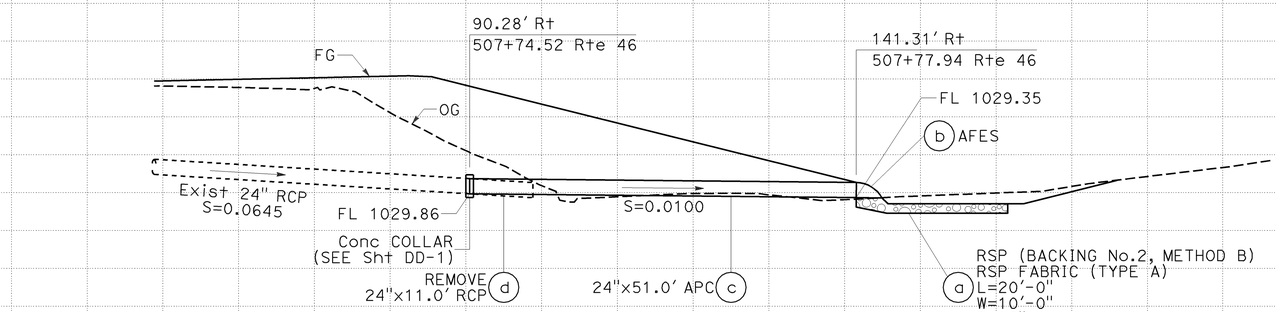

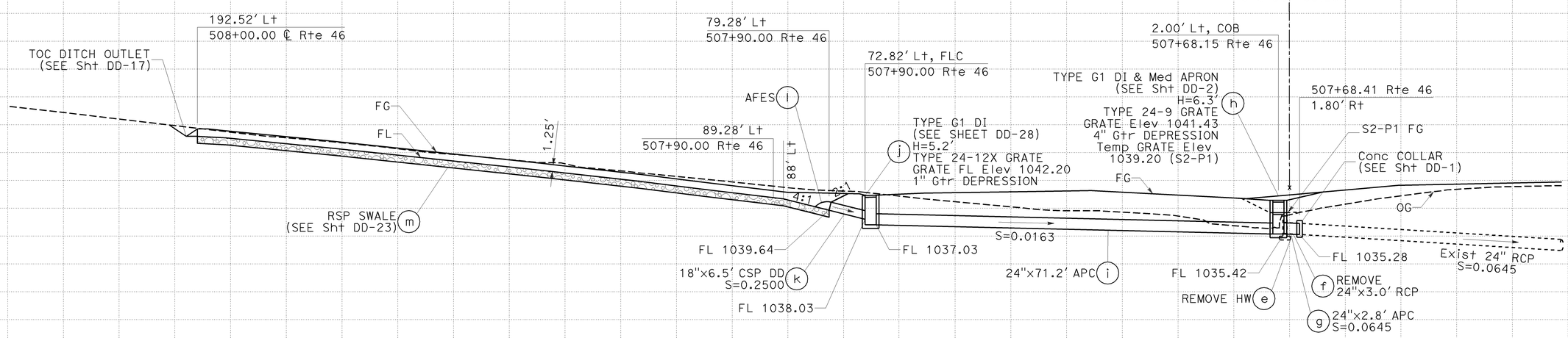

DRAINAGE SYSTEM No. 23

DRAINAGE PROFILES

SCALE: Horiz 1" = 10'
Vert 1" = 10'

DP-21

REVISED BY | DATE REVISED
JIM MILLS | JOHN CLARKE
CALCULATED-DESIGNED BY | CHECKED BY
FUNCTIONAL SUPERVISOR: JACK WALKER
STATE OF CALIFORNIA - DEPARTMENT OF TRANSPORTATION
06-DESIGN
Caltrans

STATION | TOTAL
CY Exc
Emb

LAST REVISION | DATE PLOTTED => 08-DEC-2009
04-13-09 | TIME PLOTTED => 08:36

BORDER LAST REVISED 3/1/2007

RELATIVE BORDER SCALE IS IN INCHES 0 1 2 3

USERNAME => trphils
DGN FILE => 533072ib021.dgn

CU 06220

EA 330721

Dist	COUNTY	ROUTE	POST MILES TOTAL PROJECT	SHEET No.	TOTAL SHEETS
05	SLO	46	36.6/41.2	196	595

8-24-09
REGISTERED CIVIL ENGINEER DATE

12-7-09
PLANS APPROVAL DATE

REGISTERED PROFESSIONAL ENGINEER
JOSE M. ARGUELLO
No. 51321
Exp 06-30-10
CIVIL
STATE OF CALIFORNIA

THE STATE OF CALIFORNIA OR ITS OFFICERS OR AGENTS SHALL NOT BE RESPONSIBLE FOR THE ACCURACY OR COMPLETENESS OF ELECTRONIC COPIES OF THIS PLAN SHEET.

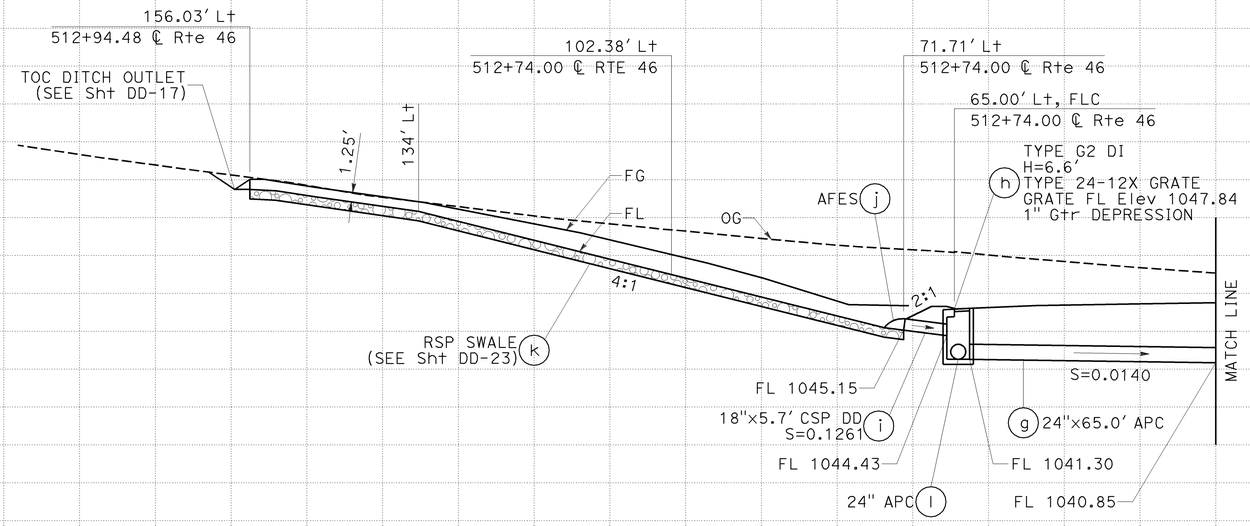

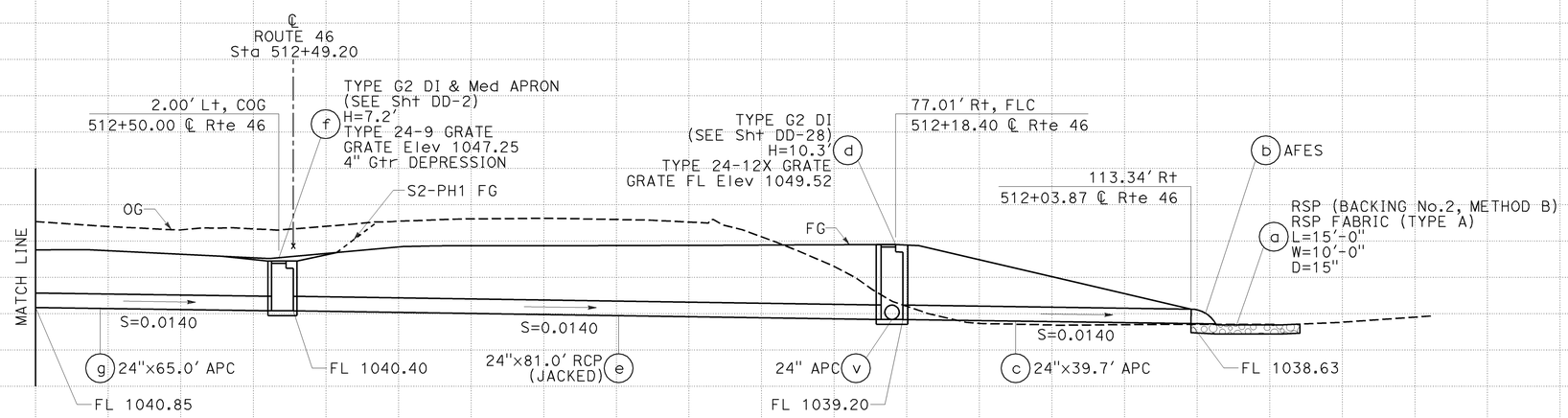

DRAINAGE SYSTEM No. 24

DRAINAGE PROFILES

SCALE: Horiz 1" = 10'
Vert 1" = 10'

DP-22

STATE OF CALIFORNIA - DEPARTMENT OF TRANSPORTATION
06-DESIGN
FUNCTIONAL SUPERVISOR: JACK WALKER
CALCULATED-DESIGNED BY: JIM MILLS
CHECKED BY: JOHN CLARKE
REVISED BY
DATE REVISED
STATION
CY Exc
Emb
TOTAL

LAST REVISION DATE PLOTTED => 08-DEC-2009
TIME PLOTTED => 08:36
07-08-09

BORDER LAST REVISED 3/1/2007
RELATIVE BORDER SCALE IS IN INCHES 0 1 2 3
USERNAME => trphils
DGN FILE => 533072ib022.dgn
CU 06220
EA 330721

Dist	COUNTY	ROUTE	POST MILES TOTAL PROJECT	SHEET No.	TOTAL SHEETS
05	SLO	46	36.6/41.2	197	595

8-24-09
REGISTERED CIVIL ENGINEER DATE

12-7-09
PLANS APPROVAL DATE

REGISTERED PROFESSIONAL ENGINEER
JOSE M. ARGUELLO
No. 51321
Exp 06-30-10
CIVIL
STATE OF CALIFORNIA

THE STATE OF CALIFORNIA OR ITS OFFICERS OR AGENTS SHALL NOT BE RESPONSIBLE FOR THE ACCURACY OR COMPLETENESS OF ELECTRONIC COPIES OF THIS PLAN SHEET.

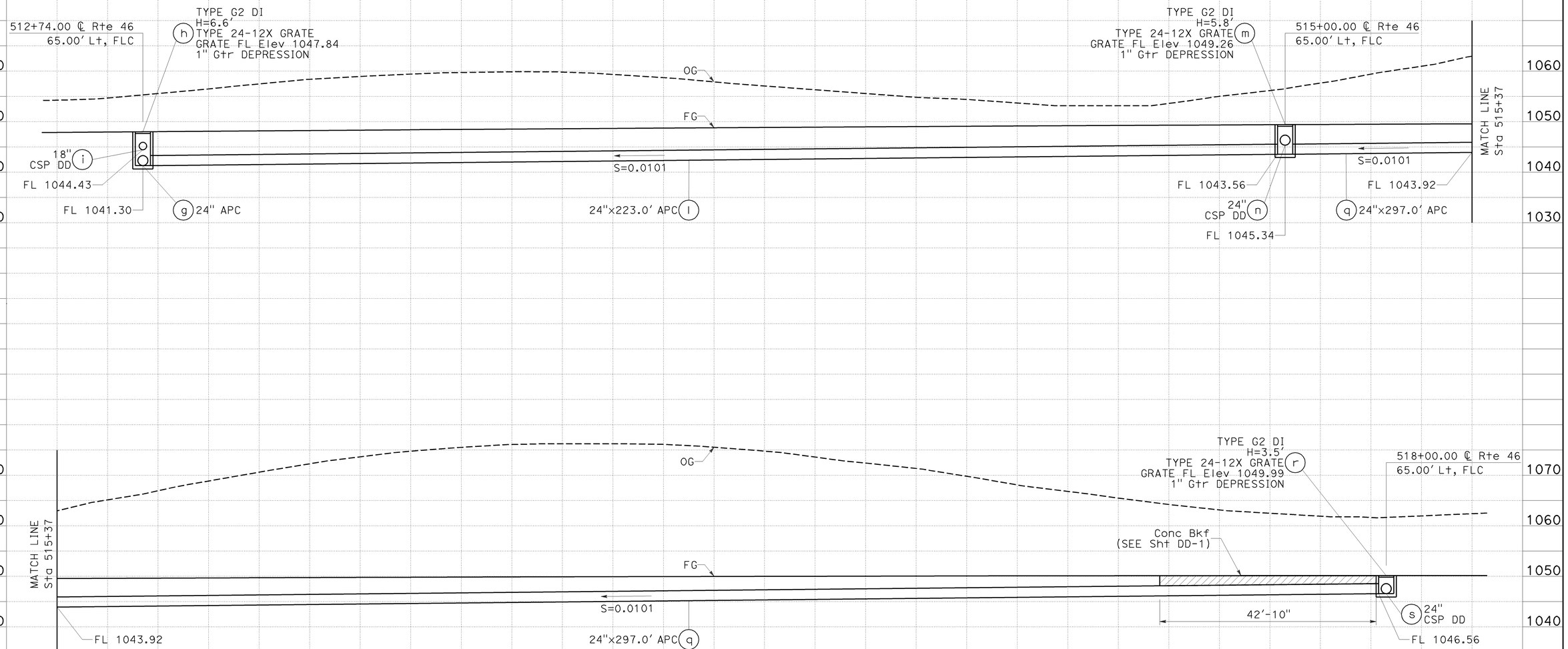

(CONTINUED) DRAINAGE SYSTEM No. 24

DRAINAGE PROFILES

SCALE: Horiz 1" = 10'
Vert 1" = 10'

DP-23

REVISED BY | DATE REVISED
JIM MILLS | JOHN CLARKE
CALCULATED-DESIGNED BY | CHECKED BY
FUNCTIONAL SUPERVISOR: JACK WALKER
STATE OF CALIFORNIA - DEPARTMENT OF TRANSPORTATION
Caltrans 06-DESIGN

STATION. | TOTAL
CY Exc | Emb

LAST REVISION DATE PLOTTED => 08-DEC-2009
TIME PLOTTED => 08:36
07-08-09

BORDER LAST REVISED 3/1/2007
RELATIVE BORDER SCALE IS IN INCHES 0 1 2 3
USERNAME => trphils
DGN FILE => 533072ib023.dgn
CU 06220
EA 330721

Dist	COUNTY	ROUTE	POST MILES TOTAL PROJECT	SHEET No.	TOTAL SHEETS
05	SLO	46	36.6/41.2	198	595

8-24-09
REGISTERED CIVIL ENGINEER DATE

12-7-09
PLANS APPROVAL DATE

REGISTERED PROFESSIONAL ENGINEER
JOSE M. ARGUELLO
No. 51321
Exp 06-30-10
CIVIL
STATE OF CALIFORNIA

THE STATE OF CALIFORNIA OR ITS OFFICERS OR AGENTS SHALL NOT BE RESPONSIBLE FOR THE ACCURACY OR COMPLETENESS OF ELECTRONIC COPIES OF THIS PLAN SHEET.

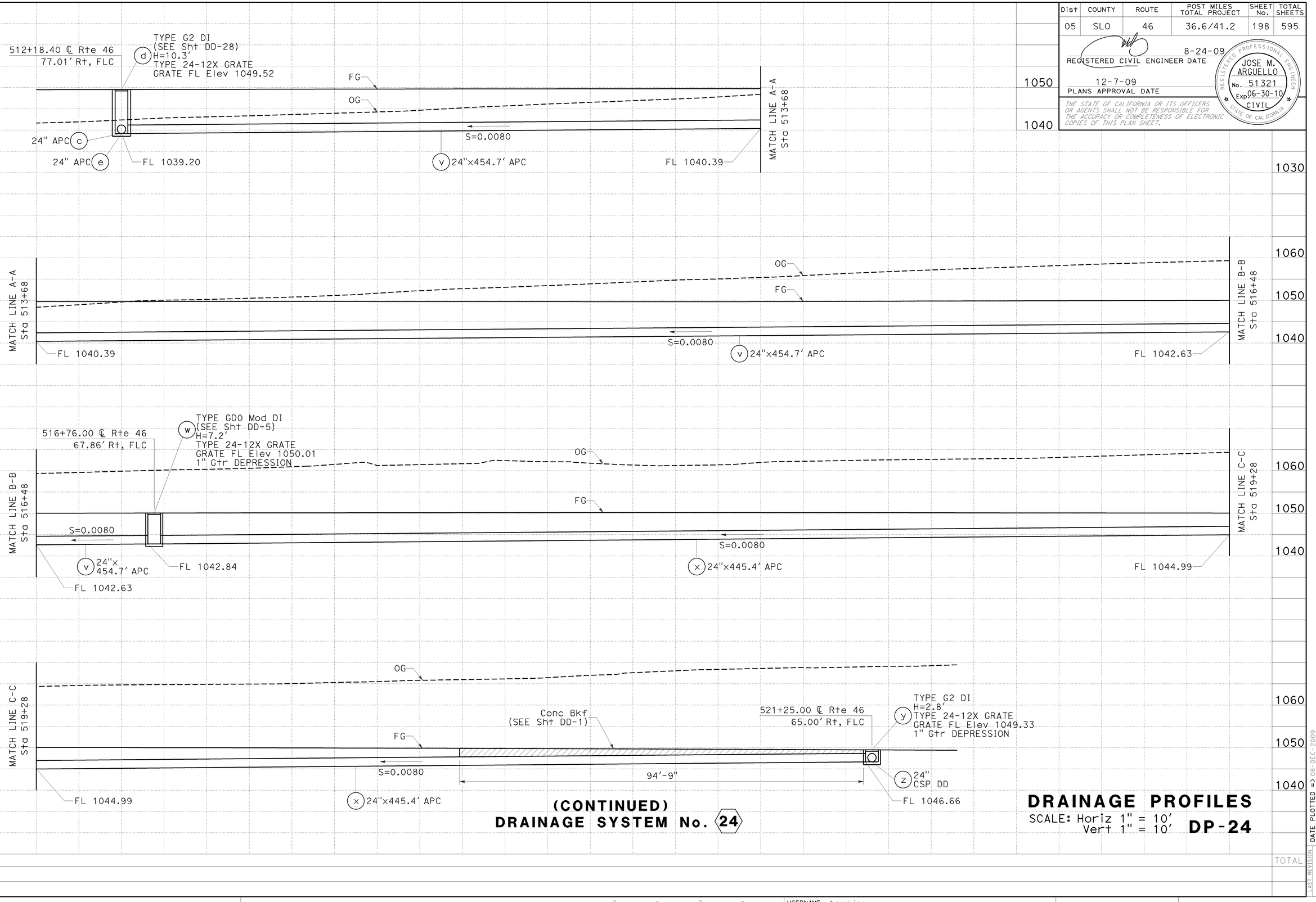

(CONTINUED) DRAINAGE SYSTEM No. 24

DRAINAGE PROFILES

SCALE: Horiz 1" = 10'
Vert 1" = 10'

DP-24

JIM MILLS — DESIGNED BY
JOHN CLARKE — CALCULATED-
CHECKED BY

JACK WALKER — FUNCTIONAL SUPERVISOR

REVISED BY | DATE REVISED

STATE OF CALIFORNIA - DEPARTMENT OF TRANSPORTATION
06-DESIGN
Caltrans

STATION
CY Exc
Emb
TOTAL

LAST REVISION | DATE PLOTTED => 08-DEC-2009
04-13-09 | TIME PLOTTED => 08:36

BORDER LAST REVISED 3/1/2007

RELATIVE BORDER SCALE IS IN INCHES 0 1 2 3

USERNAME => trphils
DGN FILE => 533072ib024.dgn

CU 06220

EA 330721

Dist	COUNTY	ROUTE	POST MILES TOTAL PROJECT	SHEET No.	TOTAL SHEETS
05	SLO	46	36.6/41.2	199	595

8-24-09
REGISTERED CIVIL ENGINEER DATE

12-7-09
PLANS APPROVAL DATE

JOSE M. ARGUELLO No. 51321 Exp 06-30-10 CIVIL — REGISTERED PROFESSIONAL ENGINEER — STATE OF CALIFORNIA

THE STATE OF CALIFORNIA OR ITS OFFICERS OR AGENTS SHALL NOT BE RESPONSIBLE FOR THE ACCURACY OR COMPLETENESS OF ELECTRONIC COPIES OF THIS PLAN SHEET.

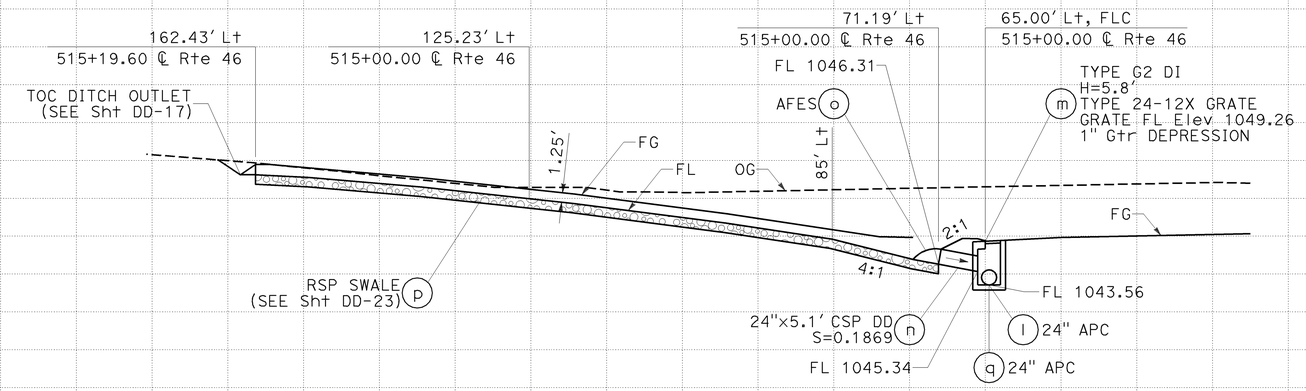

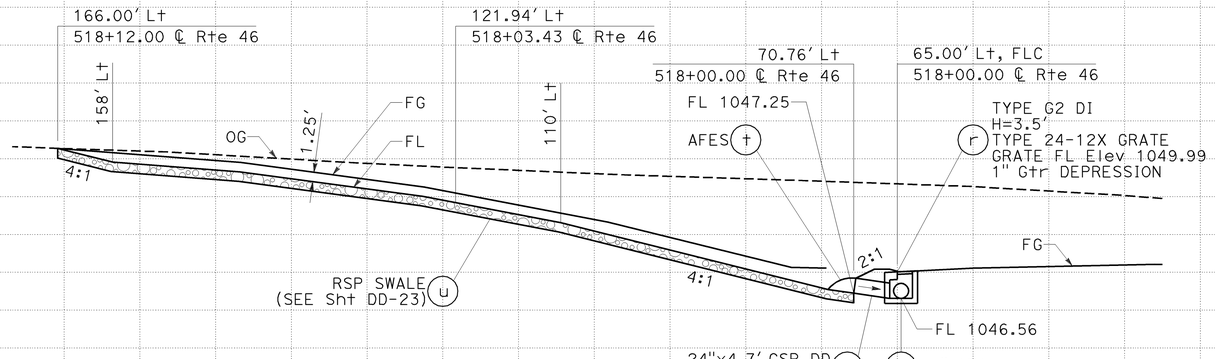

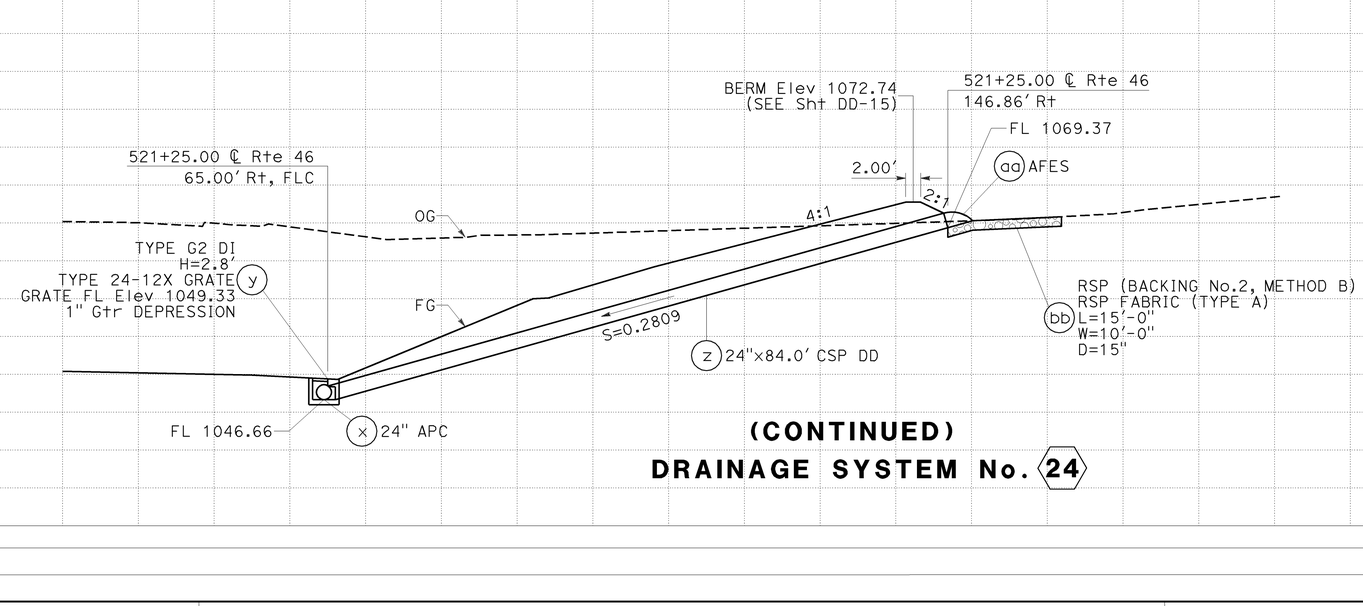

(CONTINUED)
DRAINAGE SYSTEM No. 24

DRAINAGE PROFILES

SCALE: Horiz 1" = 10'
Vert 1" = 10'

DP-25

REVISED BY	DATE REVISED

CALCULATED-DESIGNED BY: JIM MILLS
CHECKED BY: JOHN CLARKE
FUNCTIONAL SUPERVISOR: JACK WALKER

STATE OF CALIFORNIA - DEPARTMENT OF TRANSPORTATION
06-DESIGN

STATION.
CY Exc
Emb
TOTAL

LAST REVISION DATE PLOTTED => 08-DEC-2009
04-13-09 TIME PLOTTED => 08:36

BORDER LAST REVISED 3/1/2007

RELATIVE BORDER SCALE IS IN INCHES 0 1 2 3

USERNAME => trphils
DGN FILE => 533072ib025.dgn

CU 06220

EA 330721

Dist	COUNTY	ROUTE	POST MILES TOTAL PROJECT	SHEET No.	TOTAL SHEETS
05	SLO	46	36.6/41.2	200	595

8-24-09
REGISTERED CIVIL ENGINEER DATE

12-7-09
PLANS APPROVAL DATE

REGISTERED PROFESSIONAL ENGINEER
JOSE M. ARGUELLO
No. 51321
Exp 06-30-10
CIVIL
STATE OF CALIFORNIA

THE STATE OF CALIFORNIA OR ITS OFFICERS OR AGENTS SHALL NOT BE RESPONSIBLE FOR THE ACCURACY OR COMPLETENESS OF ELECTRONIC COPIES OF THIS PLAN SHEET.

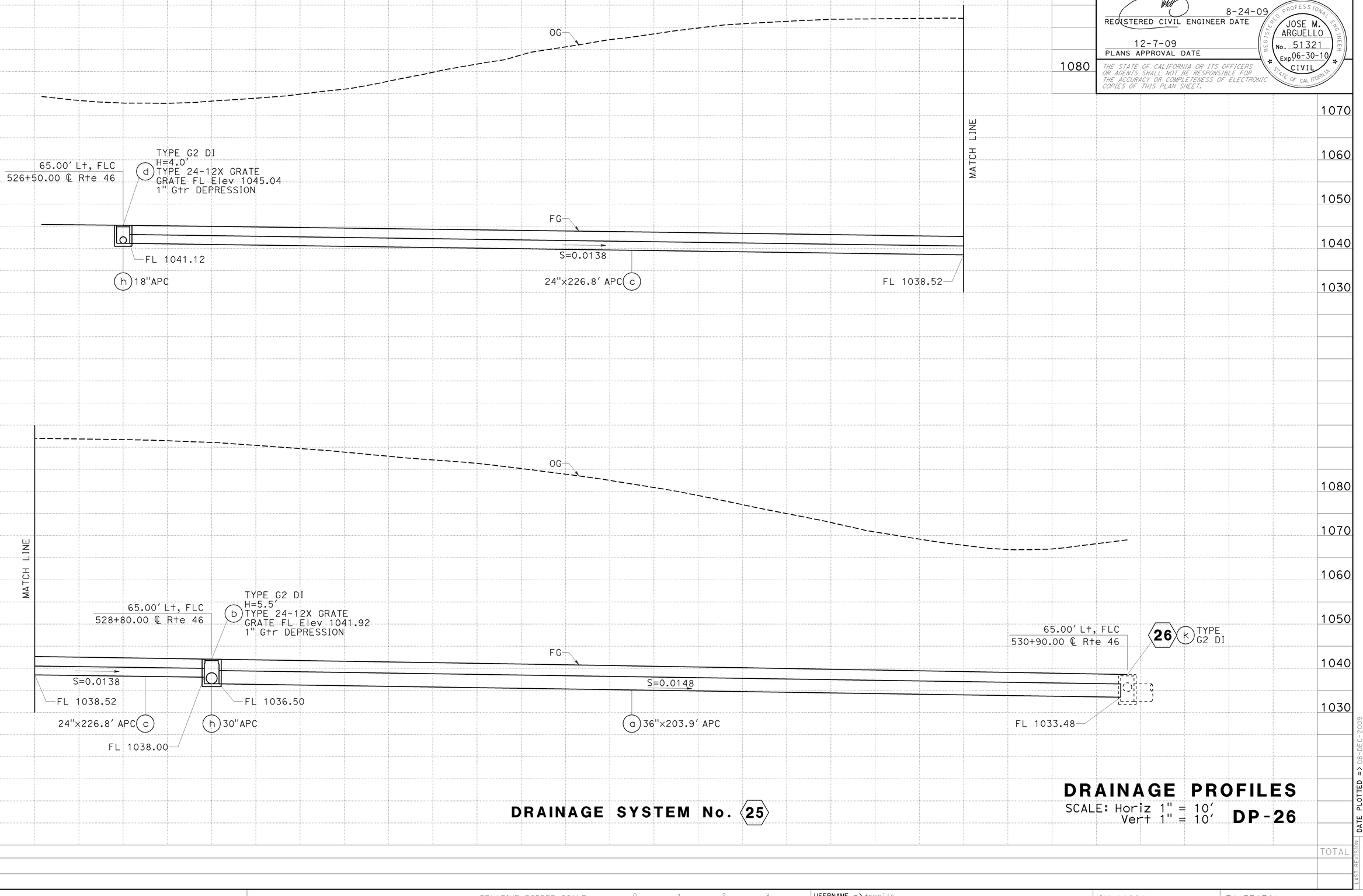

DRAINAGE SYSTEM No. 25

DRAINAGE PROFILES

SCALE: Horiz 1" = 10'
Vert 1" = 10'

DP-26

JIM MILLS — DESIGNED BY
JOHN CLARKE — CHECKED BY
JACK WALKER — FUNCTIONAL SUPERVISOR
06-DESIGN
STATE OF CALIFORNIA - DEPARTMENT OF TRANSPORTATION
Caltrans

REVISED BY | DATE REVISED

STATION. | TOTAL
CY Exc
Emb

LAST REVISION DATE PLOTTED => 08-DEC-2009
TIME PLOTTED => 08:36
07-08-09

BORDER LAST REVISED 3/1/2007

RELATIVE BORDER SCALE IS IN INCHES 0 1 2 3

USERNAME => trphils
DGN FILE => 533072ib026.dgn

CU 06220

EA 330721