Dist	COUNTY	ROUTE	POST MILES TOTAL PROJECT	SHEET No.	TOTAL SHEETS
05	SLO	46	36.6/41.2	1	595

ACSTPE-P046(043)E
HPLU-6205(015)E

STATE OF CALIFORNIA
DEPARTMENT OF TRANSPORTATION

PROJECT PLANS FOR CONSTRUCTION ON
STATE HIGHWAY
IN SAN LUIS OBISPO COUNTY
IN AND NEAR PASO ROBLES
FROM 0.5 MILE WEST OF GENESEO ROAD
TO 0.6 MILE EAST OF ALMOND DRIVE

TO BE SUPPLEMENTED BY STANDARD PLANS DATED MAY 2006

INDEX OF PLANS

SHEET No.	DESCRIPTION
1	TITLE AND LOCATION MAP
2-33	TYPICAL CROSS SECTIONS
34	KEY MAP AND LINE INDEX
35-54	LAYOUTS
55-90	PROFILES, AND SUPERELEVATION DIAGRAMS
91-130	CONSTRUCTION DETAILS
131-154	EROSION CONTROL
155-295	DRAINAGE PLANS, PROFILES, DETAILS AND QUANTITIES
296-297	CONSTRUCTION AREA SIGNS
298-323	STAGE CONSTRUCTION PLANS
324-373	TRAFFIC HANDLING PLANS
374-402	DETOUR LAYOUTS
403-429	PAVEMENT DELINEATION PLANS, DETAILS AND QUANTITIES
430-435	SIGN PLANS, DETAILS AND QUANTITIES
436-458	SUMMARY OF QUANTITIES
459-477	RETAINING WALL PLANS
478	HIGHWAY PLANTING
479-535	REVISED AND NEW STANDARD PLANS

STRUCTURE PLANS

536-595	ESTRELLA RIVER BRIDGES Br No. 49-0033L/R

THE STANDARD PLANS LIST APPLICABLE TO THIS CONTRACT IS INCLUDED IN THE NOTICE TO BIDDERS AND SPECIAL PROVISIONS BOOK.

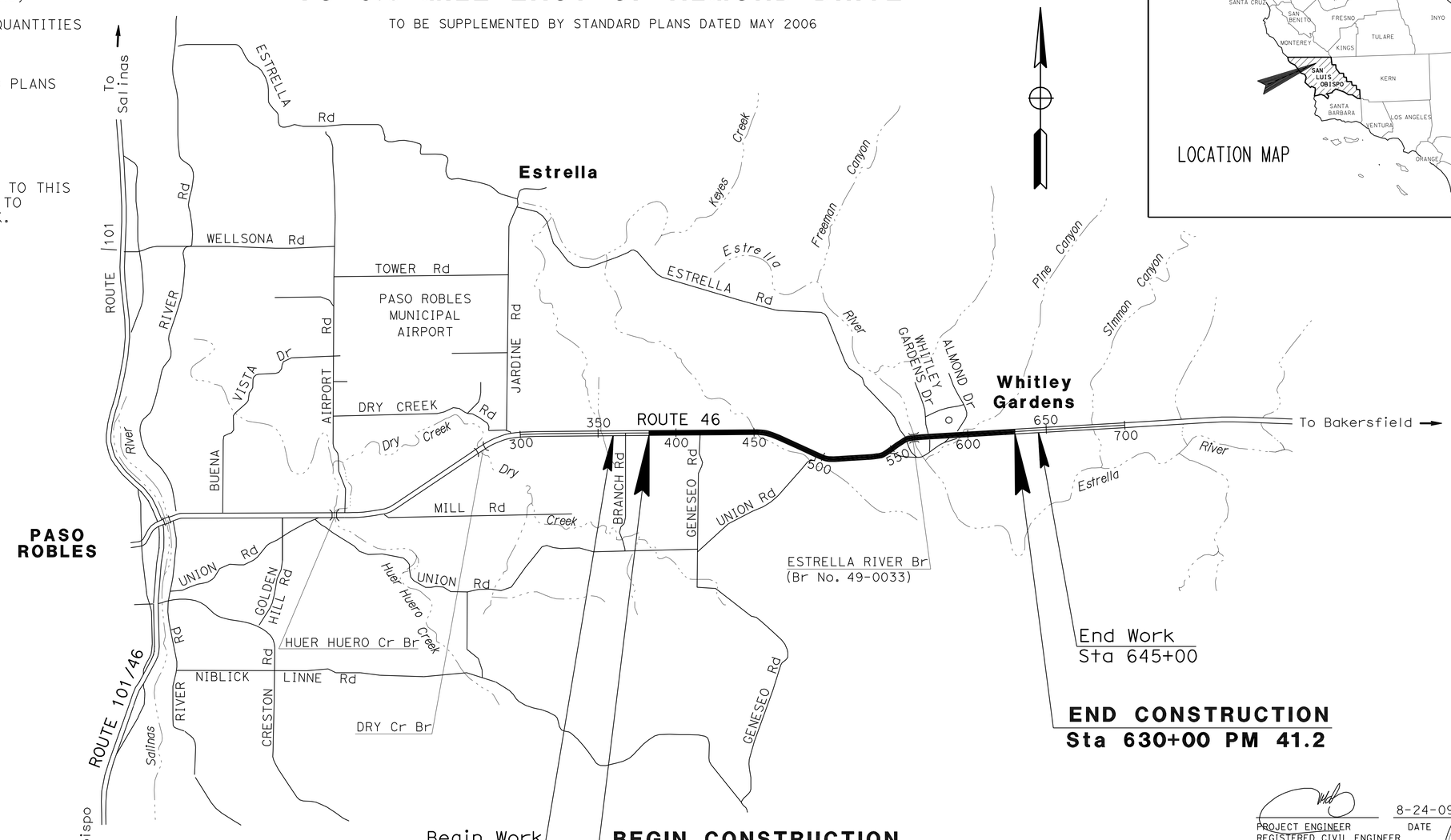

NO SCALE

LOCATION MAP

Caltrans

PROJECT MANAGER: JOHN LUCHETTA
DESIGN ENGINEER: JACK WALKER

THE CONTRACTOR SHALL POSSESS THE CLASS (OR CLASSES) OF LICENSE AS SPECIFIED IN THE "NOTICE TO BIDDERS."

8-24-09
PROJECT ENGINEER REGISTERED CIVIL ENGINEER — DATE

REGISTERED PROFESSIONAL ENGINEER
JOSE M. ARGUELLO
No. 51321
Exp. 06-30-10
CIVIL
STATE OF CALIFORNIA

December 7, 2009
PLANS APPROVAL DATE

THE STATE OF CALIFORNIA OR ITS OFFICERS OR AGENTS SHALL NOT BE RESPONSIBLE FOR THE ACCURACY OR COMPLETENESS OF ELECTRONIC COPIES OF THIS PLAN SHEET.

LAST REVISION 08-24-09
DATE PLOTTED => 23-APR-2010
TIME PLOTTED => 05:38

CONTRACT No. 05-330724

Dist	COUNTY	ROUTE	POST MILES TOTAL PROJECT	SHEET No.	TOTAL SHEETS
05	SLO	46	36.6/41.2	2	595

REGISTERED CIVIL ENGINEER DATE 8-24-09

12-7-09
PLANS APPROVAL DATE

REGISTERED PROFESSIONAL ENGINEER JOSE M. ARGUELLO No. 51321 Exp. 06-30-10 CIVIL STATE OF CALIFORNIA

THE STATE OF CALIFORNIA OR ITS OFFICERS OR AGENTS SHALL NOT BE RESPONSIBLE FOR THE ACCURACY OR COMPLETENESS OF ELECTRONIC COPIES OF THIS PLAN SHEET.

NOTES:

1. DIMENSIONS OF THE PAVEMENT STRUCTURES (STRUCTURAL SECTIONS) ARE SUBJECT TO TOLERANCES SPECIFIED IN THE STANDARD SPECIFICATIONS.
2. SUPERELEVATION AS SHOWN OR AS DIRECTED BY THE ENGINEER.
3. SEE SUPERELEVATION DIAGRAM FOR "Var" PAVEMENT CROSS SLOPE.
4. FOR AC DIKE AND MBGR LOCATIONS, SEE LAYOUT SHEETS.
5. FOR COLD PLANE LIMITS AND LOCATIONS, SEE LAYOUTS AND SHEET C-19.
6. SEE DRAINAGE DETAIL SHEETS FOR TYPICAL SECTIONS OF DRAINAGE BASINS, AND SWALES.
7. FOR MEDIAN GRADING, SEE SHEETS X-12 TO X-20.
8. SEE COUNTY ROADS AND PRIVATE Dwy TYPICAL CROSS SECTIONS.
9. STAGE 1 OR 2 PG IS 0.15′ BELOW ULTIMATE PG Elev.
10. FOR MEDIAN CROSSOVER STRUCTURAL SECTION AND LIMITS, SEE SHEET X-9.
11. WHERE Exist SURFACING OUTSIDE OF THE AREA TO BE EXCAVATED IS SHOWN TO BE REMOVED, Exist SURFACING SHALL BE SCARIFIED ACCORDANCE WITH THE STANDARD SPECIFICATIONS.
12. EXTEND TOP 0.30′ OF HMA OR RHMA PLACED ON THE SHOULDER UNDER THE DIKE WITH NO JOINT AT THE ES.
13. FOR MBGR Veg Ctrl LIMITS AND DETAILS, SEE LAYOUTS AND CONSTRUCTION DETAILS.
14. DENOTES LINEAR SLOPE TRANSITION RATE (%)
15. FOR LANDFORM GRADING, SEE SHEETS C-36 TO C-38.
16. FOR LIMITS OF 0.25′ HMA SLOPE PAVING , SEE RETAINING WALL PLANS.
17. FOR RUMBLE STRIP LIMITS AND LOCATIONS, SEE SHEETS C-20 AND Q-16.

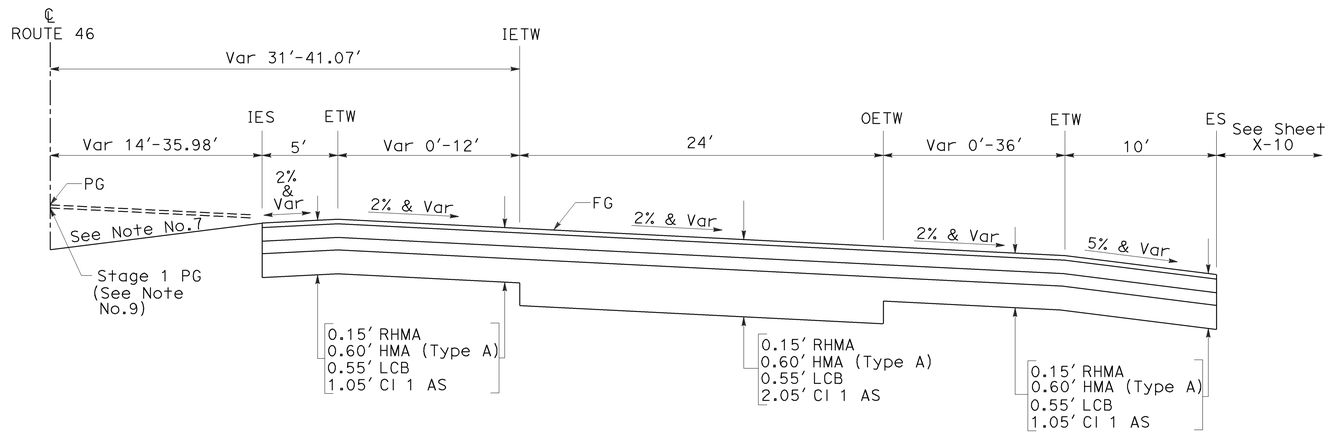

ROUTE 46 EB LANES

Sta 403+08.42 TO Sta 410+52.93
Sta 430+83.17 TO Sta 435+63.42
Sta 485+88.49 TO Sta 486+00.00

Sta 589+52.78 TO Sta 596+67.43
Sta 598+18.73 TO Sta 613+04.16

ABBREVIATIONS:

IES	INSIDE EDGE OF Shld
IETW	INSIDE EDGE OF TRAVELED WAY
OETW	OUTSIDE EDGE OF TRAVELED WAY
LL	LANE LINE
TL	TRIM LINE
CP	CATCH POINT
Veg Ctrl	VEGETATION CONTROL
HSS	HIGH SIDE SUPER
RHMA	RUBBERIZED HOT MIX ASPHALT
GPI	GEOSYNTHETIC Pvmt INTERLAYER

LEGEND

REMOVE AC Pvmt

DESIGN DESIGNATION (Rte 46)

2010 ADT =	19,280	D = 65%
2030 ADT =	32,400	T = 19%
DHV = 3898		V = 80 mph

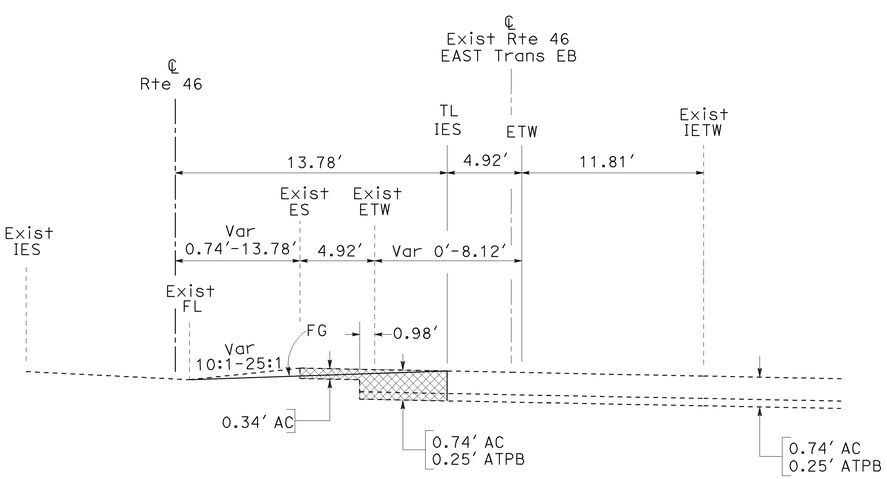

ROUTE 46 EB LANES

Sta 385+82.15 TO Sta 395+41.11

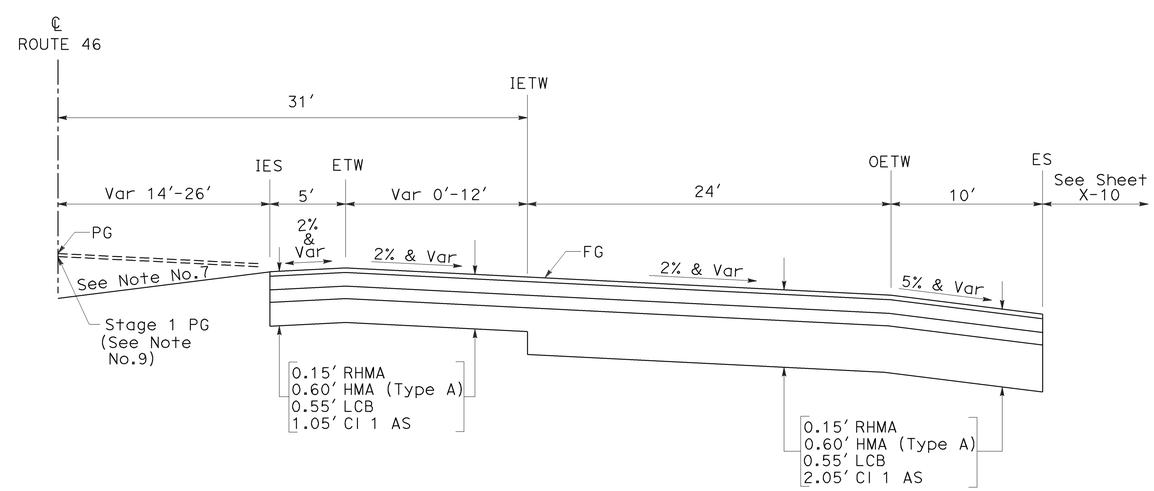

ROUTE 46 EB LANES

Sta 395+41.11 TO Sta 401+20.00
Sta 435+63.42 TO Sta 438+48.54
Sta 449+18.77 TO Sta 456+69.30

TYPICAL CROSS SECTIONS

NO SCALE

X-1

REVISED BY | DATE REVISED
JOSE ARGUELLO | SUMI HOODE
CALCULATED-DESIGNED BY | CHECKED BY
FUNCTIONAL SUPERVISOR | JACK WALKER
STATE OF CALIFORNIA - DEPARTMENT OF TRANSPORTATION | 06-DESIGN
Caltrans

LAST REVISION 07-09-09 | DATE PLOTTED => 08-DEC-2009 | TIME PLOTTED => 08:03

Dist	COUNTY	ROUTE	POST MILES TOTAL PROJECT	SHEET No.	TOTAL SHEETS
05	SLO	46	36.6/41.2	3	595

REGISTERED CIVIL ENGINEER DATE 8-24-09

12-7-09
PLANS APPROVAL DATE

REGISTERED PROFESSIONAL ENGINEER JOSE M. ARGUELLO No. 51321 Exp 06-30-10 CIVIL STATE OF CALIFORNIA

THE STATE OF CALIFORNIA OR ITS OFFICERS OR AGENTS SHALL NOT BE RESPONSIBLE FOR THE ACCURACY OR COMPLETENESS OF ELECTRONIC COPIES OF THIS PLAN SHEET.

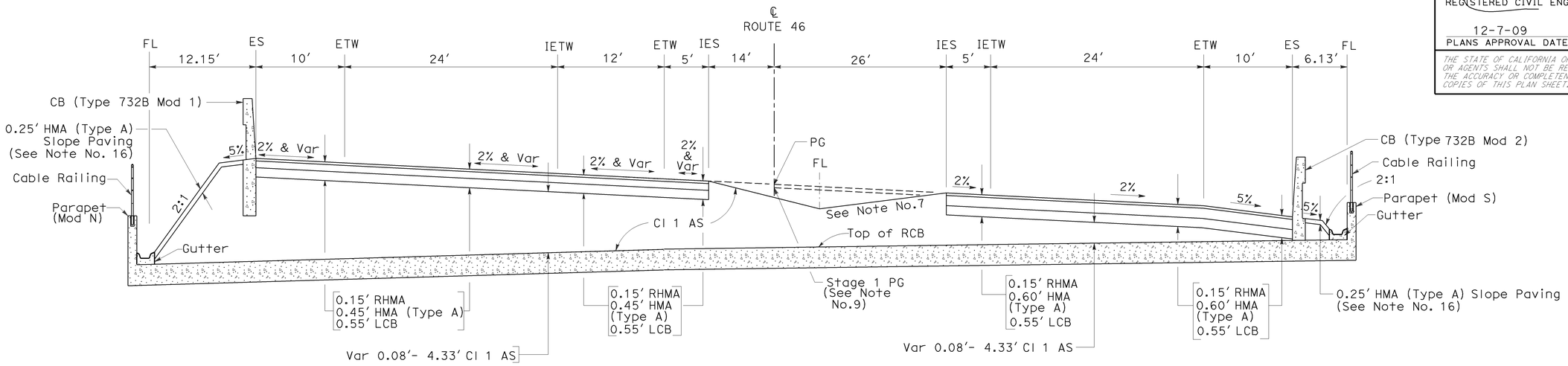

ROUTE 46 WB LANES **ROUTE 46 EB LANES**

STRUCTURAL SECTION ABOVE WLX-1

Sta 445+10 TO Sta 446+34
(RCB AT SKEW; LENGTH OF RCB ALONG STATIONS VARIES BASED ON THE SKEW)

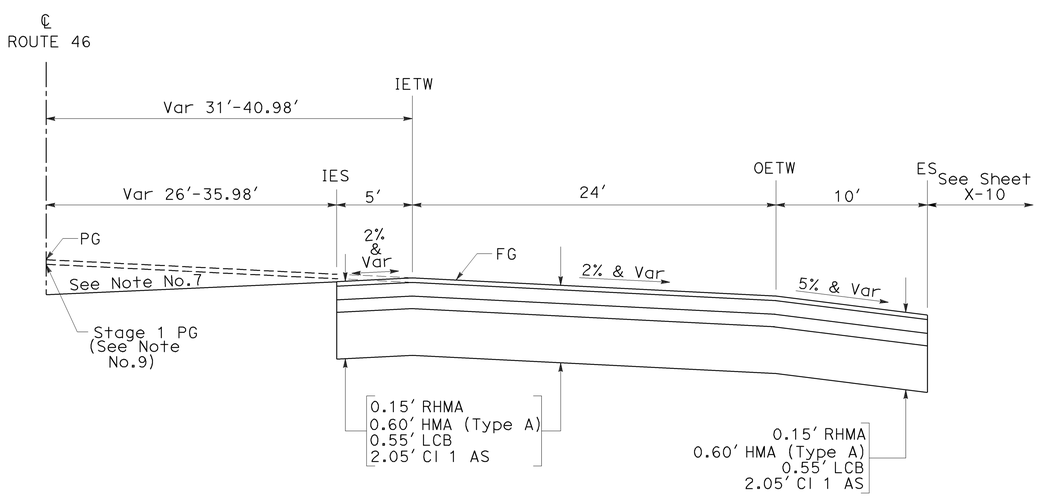

ROUTE 46 EB LANES

(For Structural Section Above WLX-1, See Above)

Sta 401+20.00 TO Sta 402+08.42
Sta 439+28.54 TO Sta 449+18.77

Sta 457+51.63 TO Sta 485+88.49
Sta 554+00.00 TO Sta 558+52.69

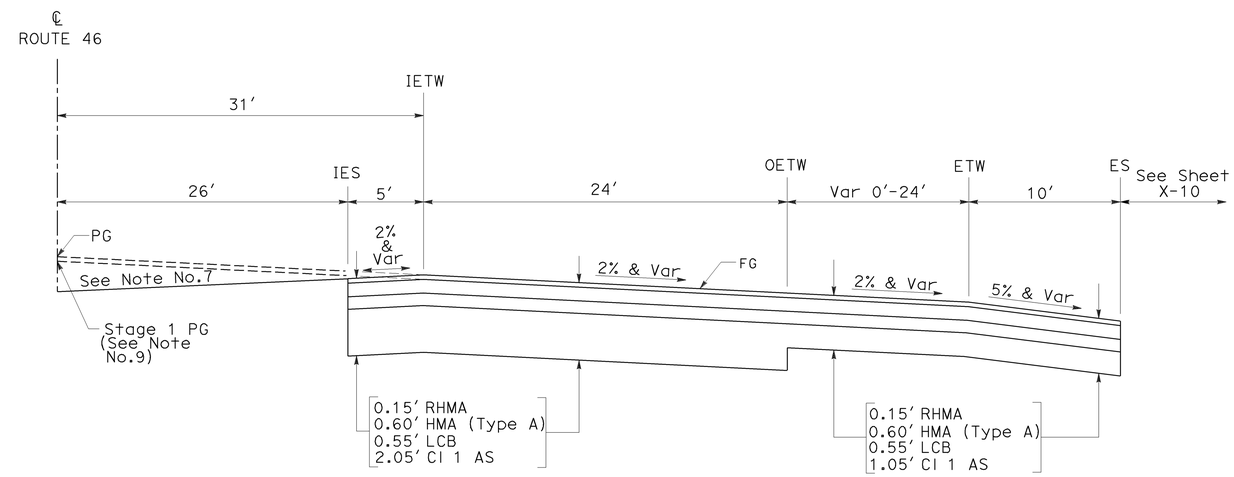

ROUTE 46 EB LANES

Sta 402+08.42 TO Sta 403+08.42
Sta 411+96.15 TO Sta 430+83.17
Sta 568+68.45 TO Sta 575+25.75
Sta 576+68.98 TO Sta 589+52.78

TYPICAL CROSS SECTIONS

NO SCALE **X-2**

REVISED BY | DATE REVISED
JOSE ARGUELLO | SUMI HOODE
CALCULATED-DESIGNED BY | CHECKED BY
FUNCTIONAL SUPERVISOR: JACK WALKER
STATE OF CALIFORNIA - DEPARTMENT OF TRANSPORTATION
Caltrans 06-DESIGN

LAST REVISION 05-27-09 | DATE PLOTTED => 08-DEC-2009 | TIME PLOTTED => 08:03

Dist	COUNTY	ROUTE	POST MILES TOTAL PROJECT	SHEET No.	TOTAL SHEETS
05	SLO	46	36.6/41.2	4	595

REGISTERED CIVIL ENGINEER DATE 8-24-09

PLANS APPROVAL DATE 12-7-09

REGISTERED PROFESSIONAL ENGINEER JOSE M. ARGUELLO No. 51321 Exp. 06-30-10 CIVIL STATE OF CALIFORNIA

THE STATE OF CALIFORNIA OR ITS OFFICERS OR AGENTS SHALL NOT BE RESPONSIBLE FOR THE ACCURACY OR COMPLETENESS OF ELECTRONIC COPIES OF THIS PLAN SHEET.

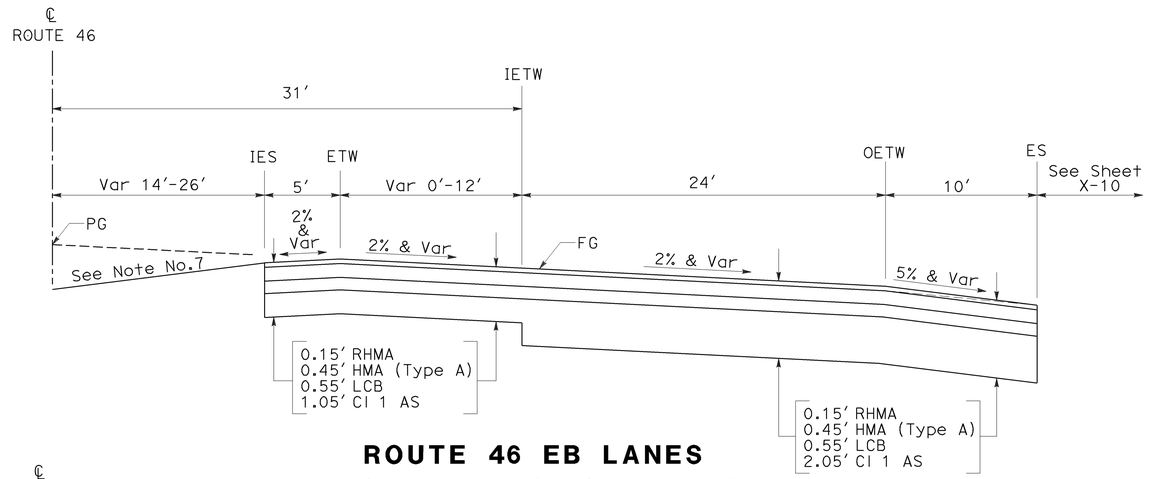

ROUTE 46 EB LANES

Sta 518+18.89 TO Sta 524+18.89

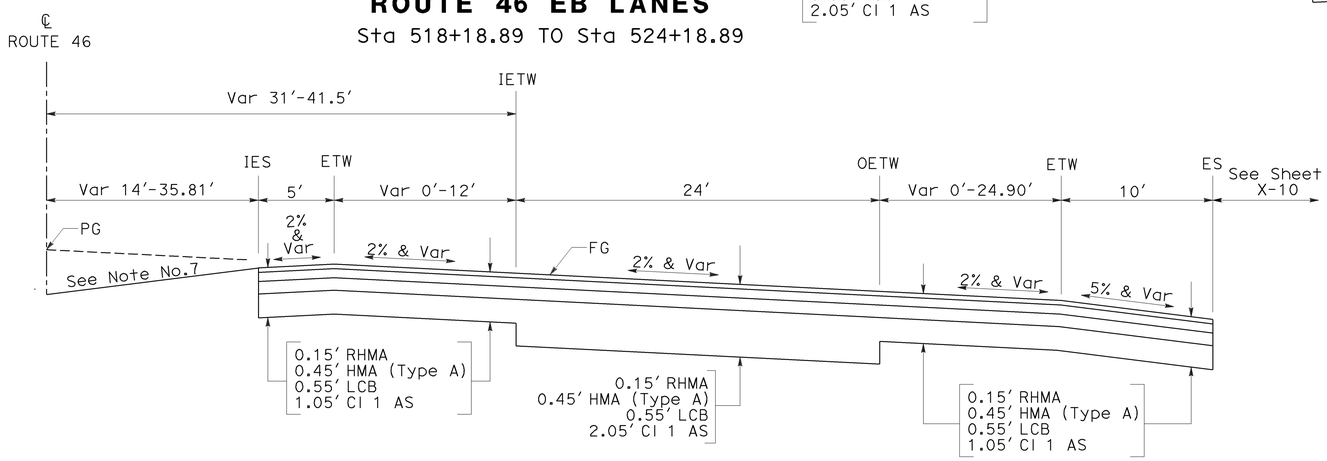

ROUTE 46 EB LANES

Sta 486+00.00 TO Sta 493+54.91
Sta 495+07.16 TO Sta 518+18.89

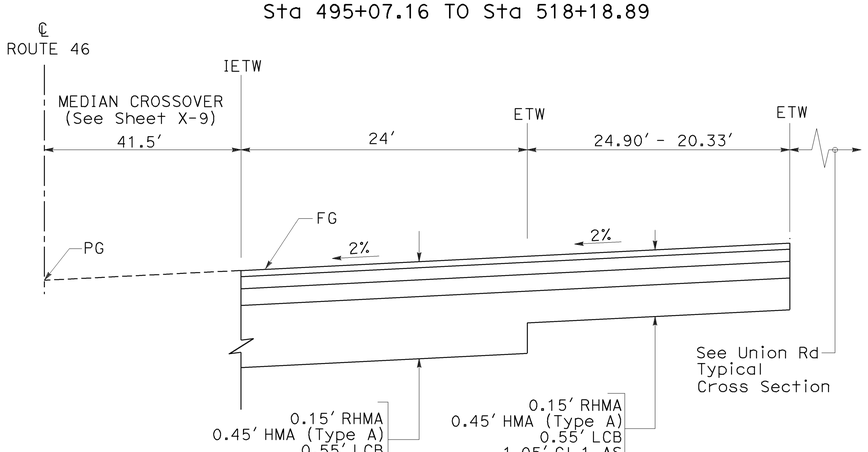

ROUTE 46 EB LANES

Sta 493+54.91 TO Sta 495+07.16

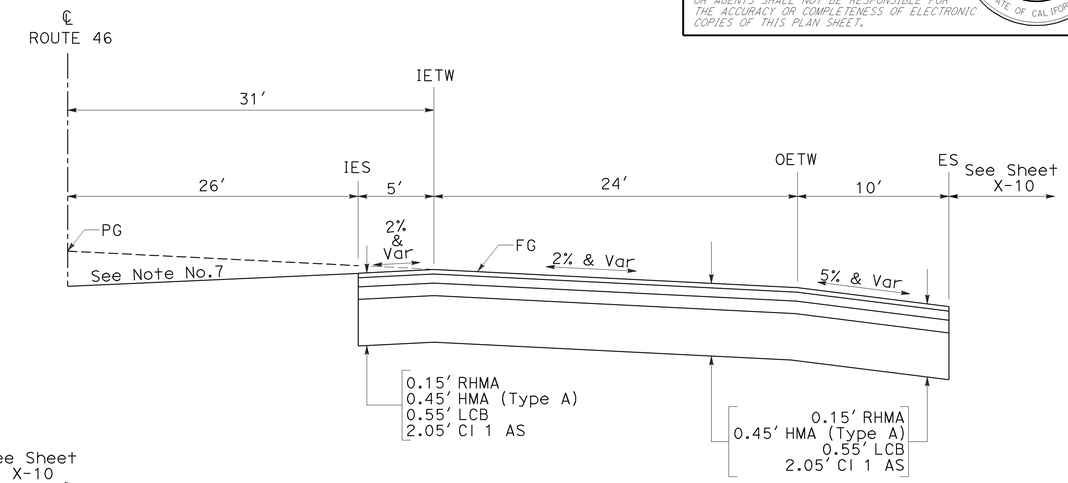

ROUTE 46 EB LANES

Sta 524+18.89 TO Sta 554+00.00

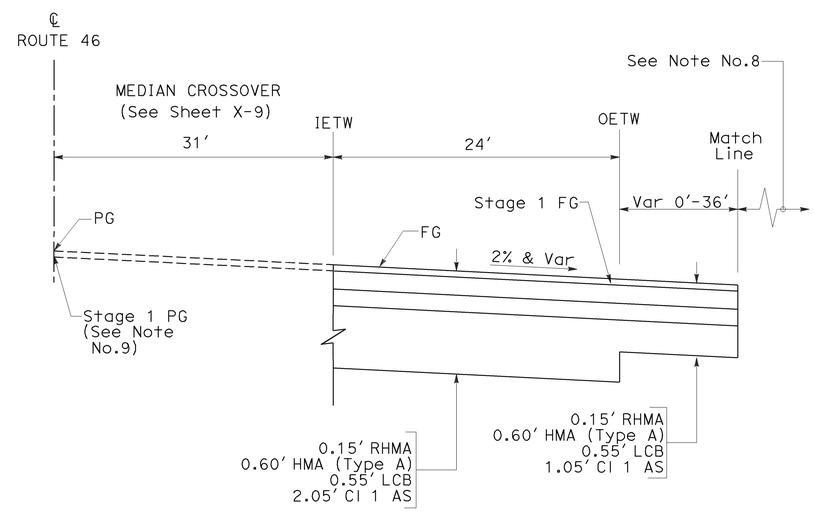

ROUTE 46 EB LANES

Sta 410+52.93 TO Sta 411+96.15
Sta 438+48.54 TO Sta 439+28.54
Sta 456+69.30 TO Sta 457+51.63

Sta 575+25.75 TO Sta 576+68.98
Sta 596+67.43 TO Sta 598+18.73

TYPICAL CROSS SECTIONS

NO SCALE

X-3

STATE OF CALIFORNIA - DEPARTMENT OF TRANSPORTATION
Caltrans
06-DESIGN
FUNCTIONAL SUPERVISOR: JACK WALKER
CALCULATED-DESIGNED BY: JOSE ARGUELLO
CHECKED BY: SUMI HOODE
REVISED BY
DATE REVISED

LAST REVISION 04-14-09
DATE PLOTTED => 08-DEC-2009
TIME PLOTTED => 08:03

Dist	COUNTY	ROUTE	POST MILES TOTAL PROJECT	SHEET No.	TOTAL SHEETS
05	SLO	46	36.6/41.2	5	595

REGISTERED CIVIL ENGINEER DATE 8-24-09

12-7-09
PLANS APPROVAL DATE

REGISTERED PROFESSIONAL ENGINEER JOSE M. ARGUELLO No. 51321 Exp 06-30-10 CIVIL STATE OF CALIFORNIA

THE STATE OF CALIFORNIA OR ITS OFFICERS OR AGENTS SHALL NOT BE RESPONSIBLE FOR THE ACCURACY OR COMPLETENESS OF ELECTRONIC COPIES OF THIS PLAN SHEET.

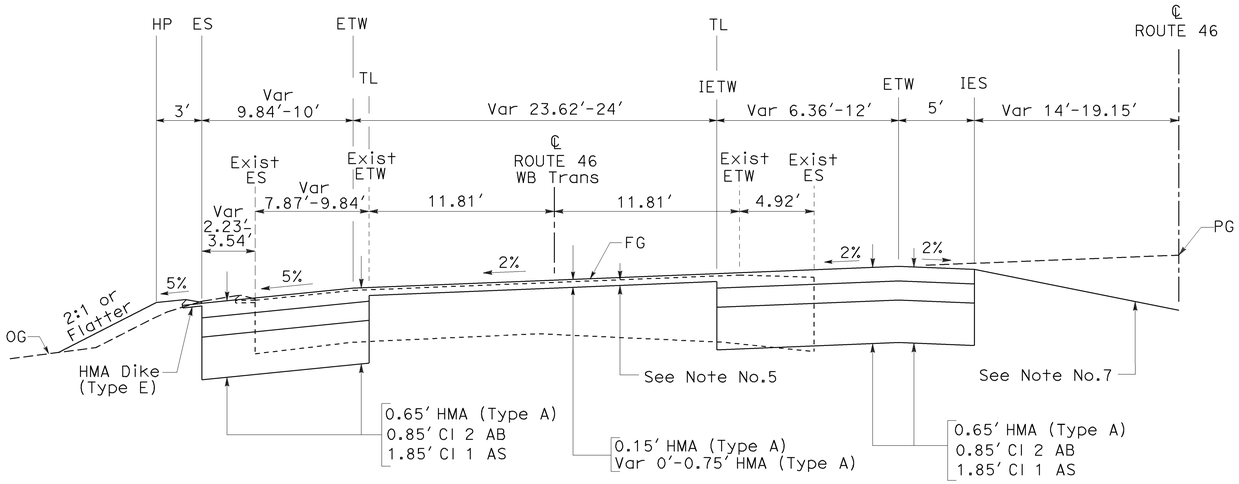

ROUTE 46 WB LANES
Sta 398+42.20 TO Sta 402+35.12

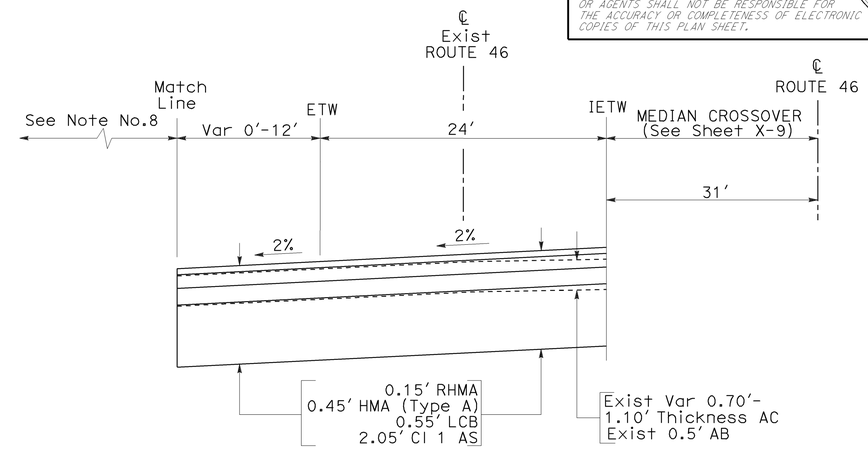

ROUTE 46 WB LANES
Sta 410+88.34 TO Sta 411+68.34

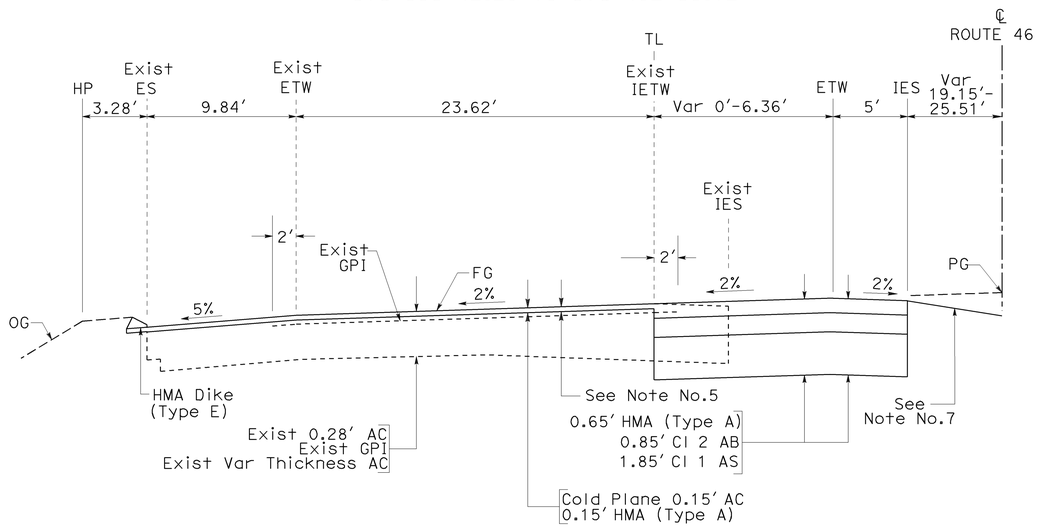

ROUTE 46 WB LANES
Sta 395+00.00 TO Sta 398+42.20

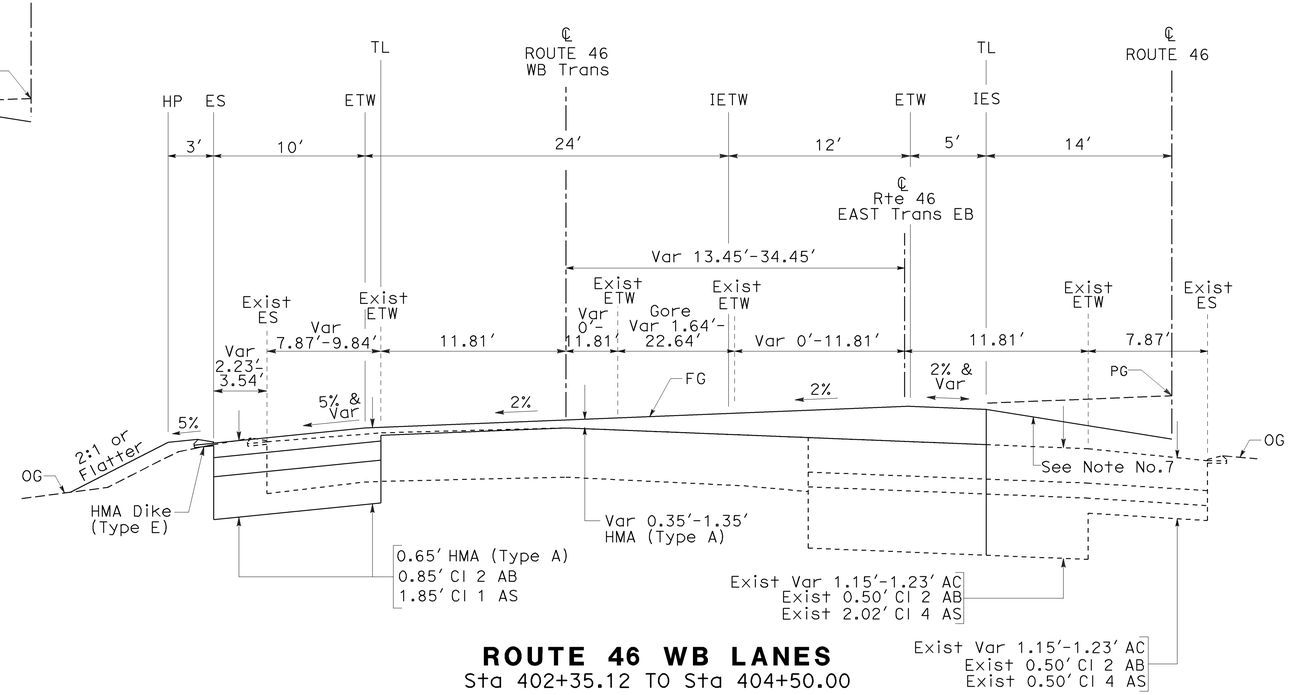

ROUTE 46 WB LANES
Sta 402+35.12 TO Sta 404+50.00

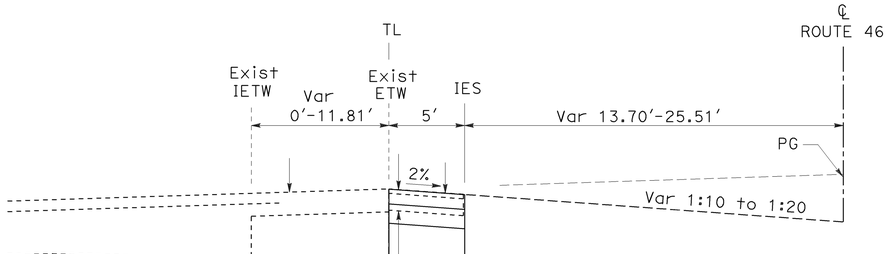

ROUTE 46 WB LANES
Sta 392+22.52 TO Sta 395+00.00

TYPICAL CROSS SECTIONS

NO SCALE

X-4

STATE OF CALIFORNIA - DEPARTMENT OF TRANSPORTATION
Caltrans
06-DESIGN
FUNCTIONAL SUPERVISOR JACK WALKER
CALCULATED-DESIGNED BY JOSE ARGUELLO
CHECKED BY SUMI HOODE
REVISED BY
DATE REVISED

DATE PLOTTED => 08-DEC-2009
TIME PLOTTED => 08:03
08-25-09

Dist	COUNTY	ROUTE	POST MILES TOTAL PROJECT	SHEET No.	TOTAL SHEETS
05	SLO	46	36.6/41.2	6	595

8-24-09
REGISTERED CIVIL ENGINEER DATE

12-7-09
PLANS APPROVAL DATE

REGISTERED PROFESSIONAL ENGINEER JOSE M. ARGUELLO No. 51321 Exp 06-30-10 CIVIL STATE OF CALIFORNIA

THE STATE OF CALIFORNIA OR ITS OFFICERS OR AGENTS SHALL NOT BE RESPONSIBLE FOR THE ACCURACY OR COMPLETENESS OF ELECTRONIC COPIES OF THIS PLAN SHEET.

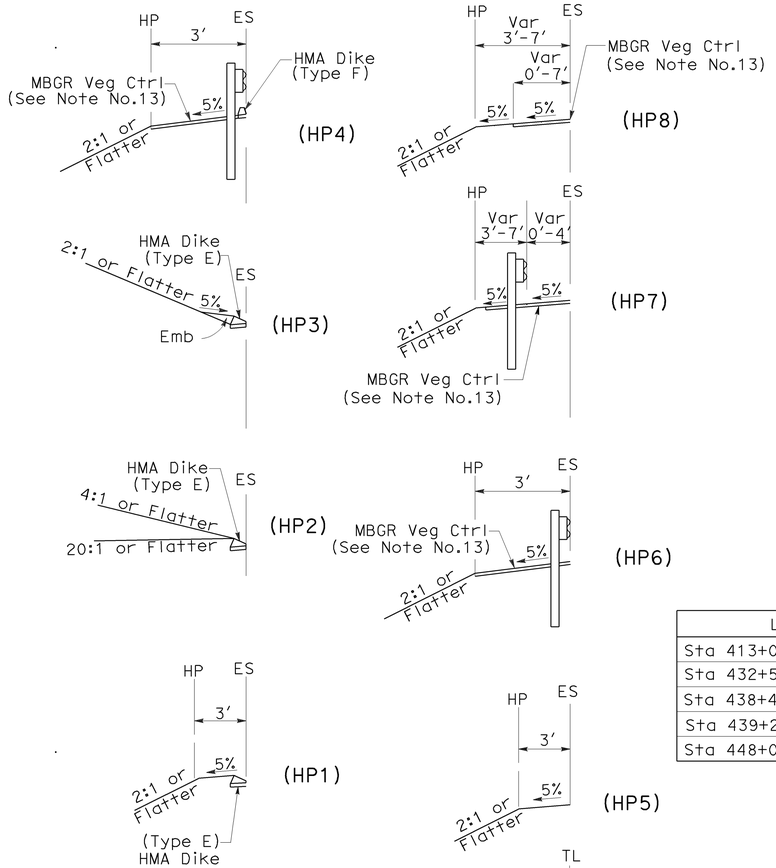

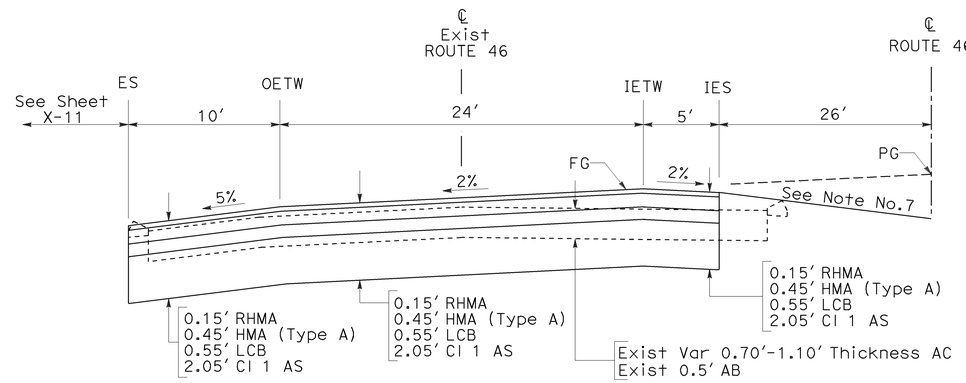

ROUTE 46 WB LANES

Sta 428+00.00 TO Sta 432+50.00

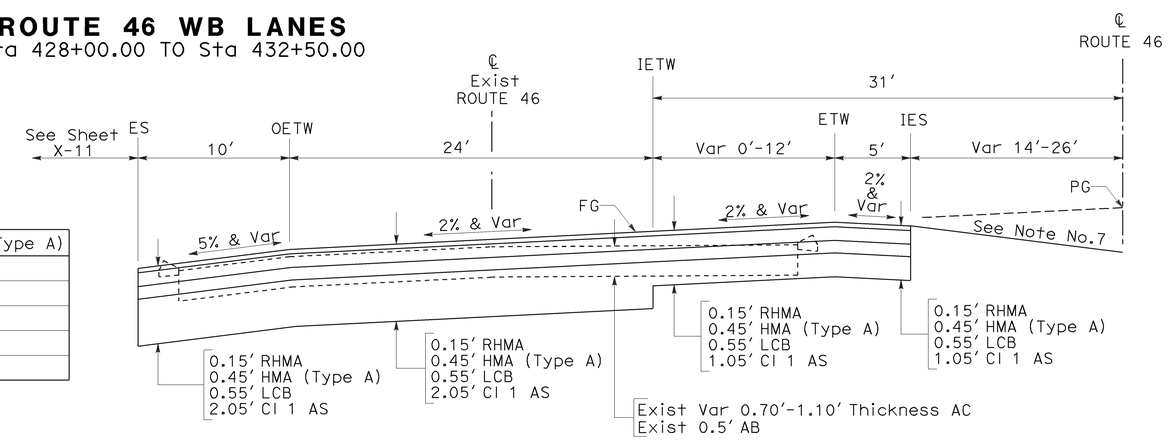

ROUTE 46 WB LANES

(For Structural Section Above WLX-1, See Sheet X-2.
For New HP Type, See Sheet X-11)

Sta 404+50.00 TO Sta 410+88.34
Sta 411+68.34 TO Sta 413+00.00
Sta 443+00.00 TO Sta 448+00

Rte 46 WESTBOUND DIRECTION

LOCATION	Var THICKNESS HMA (Type A)
Sta 413+00 TO Sta 428+00	0.25' - 1.06'
Sta 432+50 TO Sta 438+47.81	0.26' - 1.35'
Sta 438+47.81 TO Sta 439+27.81	0.96' - 1.43'
Sta 439+27.81 TO Sta 442+50	0.25' - 1.24'
Sta 448+00 TO Sta 452+00	0.60' - 1.27'

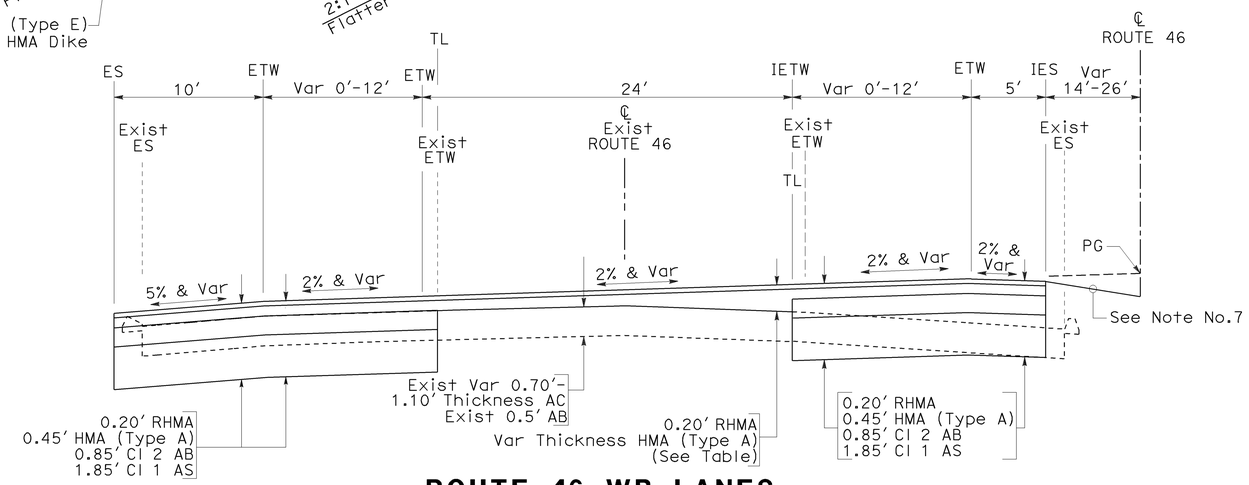

ROUTE 46 WB LANES

(HP1)	Sta 413+00.00 TO Sta 414+00.00		(HP1)	Sta 434+25.00 TO Sta 435+36.00	
(HP2)	Sta 414+00.00 TO Sta 414+75.00		(HP5)	Sta 435+36.00 TO Sta 436+81.00	
(HP3)	Sta 414+75.00 TO Sta 422+40.00		(HP1)	Sta 436+81.00 TO Sta 438+47.81	
(HP2)	Sta 422+40.00 TO Sta 424+02.00		(HP1)	Sta 439+27.81 TO Sta 440+30.00	
(HP5)	Sta 424+02.00 TO Sta 424+56.00		(HP4)	Sta 440+30.00 TO Sta 442+50.00	
(HP1)	Sta 424+56.00 TO Sta 425+00.00		(HP6)	Sta 448+00.00 TO Sta 449+75.00	
(HP4)	Sta 425+00.00 TO Sta 428+00.00		(HP7)	Sta 449+75.00 TO Sta 450+12.50	
(HP3)	Sta 432+50.00 TO Sta 433+25.00		(HP8)	Sta 450+12.50 TO Sta 450+60.00	
(HP2)	Sta 433+25.00 TO Sta 434+25.00		(HP5)	Sta 450+60.00 TO Sta 452+00.00	

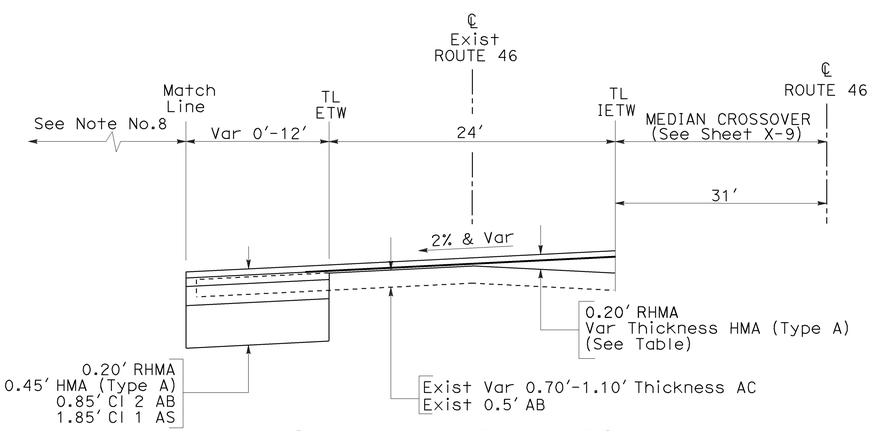

ROUTE 46 WB LANES

Sta 438+47.81 TO Sta 439+27.81

TYPICAL CROSS SECTIONS

NO SCALE

X-5

STATE OF CALIFORNIA - DEPARTMENT OF TRANSPORTATION
Caltrans
06-DESIGN
FUNCTIONAL SUPERVISOR: JACK WALKER
CALCULATED-DESIGNED BY: JOSE ARGUELLO
CHECKED BY: SUMI HOODE
REVISED BY
DATE REVISED

LAST REVISION DATE PLOTTED => 08-DEC-2009
07-09-09 TIME PLOTTED => 08:03

Dist	COUNTY	ROUTE	POST MILES TOTAL PROJECT	SHEET No.	TOTAL SHEETS
05	SLO	46	36.6/41.2	7	595

REGISTERED CIVIL ENGINEER DATE 8-24-09

12-7-09
PLANS APPROVAL DATE

REGISTERED PROFESSIONAL ENGINEER JOSE M. ARGUELLO No. 51321 Exp 06-30-10 CIVIL STATE OF CALIFORNIA

THE STATE OF CALIFORNIA OR ITS OFFICERS OR AGENTS SHALL NOT BE RESPONSIBLE FOR THE ACCURACY OR COMPLETENESS OF ELECTRONIC COPIES OF THIS PLAN SHEET.

Rte 46 WESTBOUND DIRECTION

LOCATION	Var THICKNESS HMA (TYPE A)
Sta 442+50 TO Sta 443+00	0.15′ - 0.70′
Sta 452+00 TO Sta 453+50	0.31′ - 0.61′

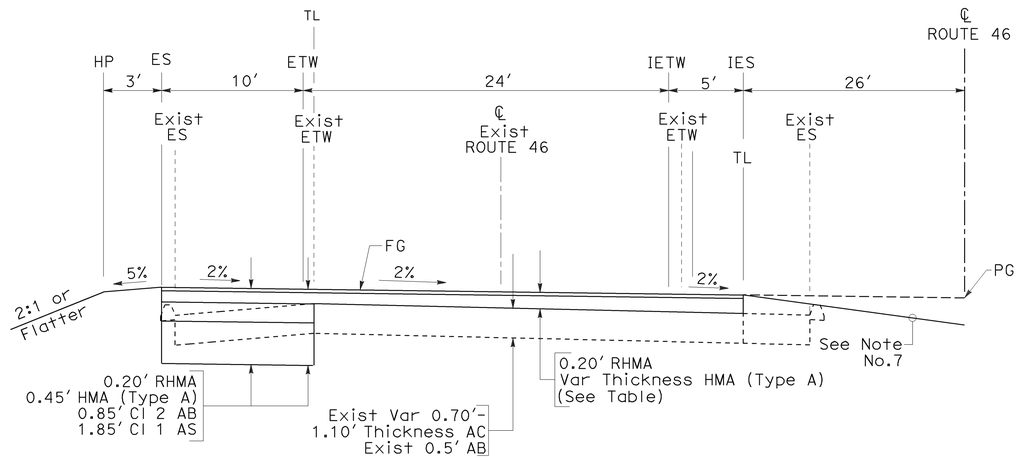

ROUTE 46 WB LANES

Sta 452+00.00 TO Sta 453+50.00

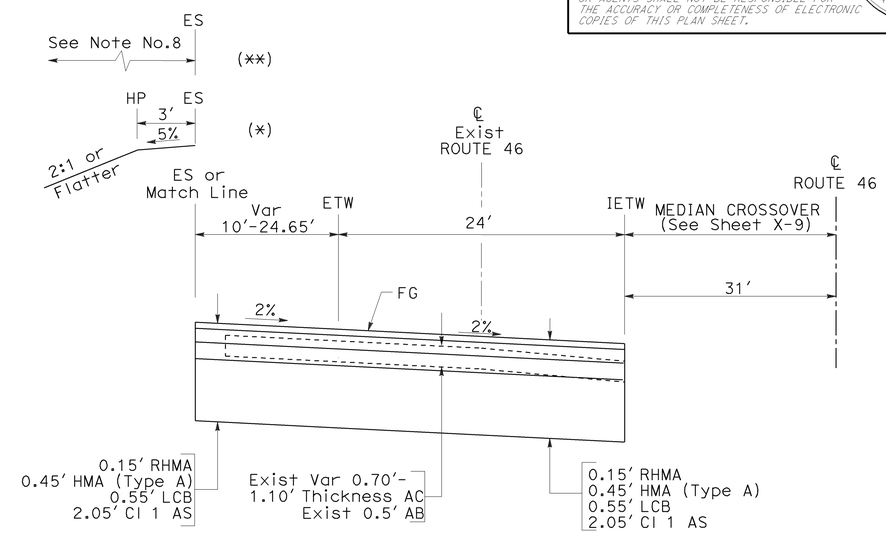

ROUTE 46 WB LANES

(*) Sta 455+94.82 TO Sta 457+01.98 (**) Sta 457+01.98 TO Sta 457+73.94

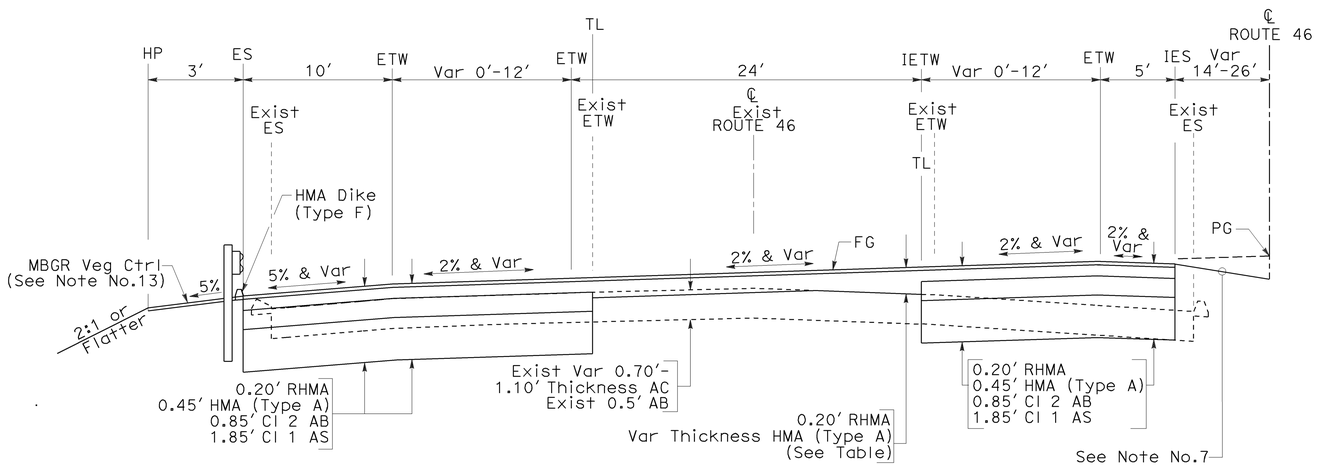

ROUTE 46 WB LANES

Sta 442+50.00 TO Sta 443+00.00

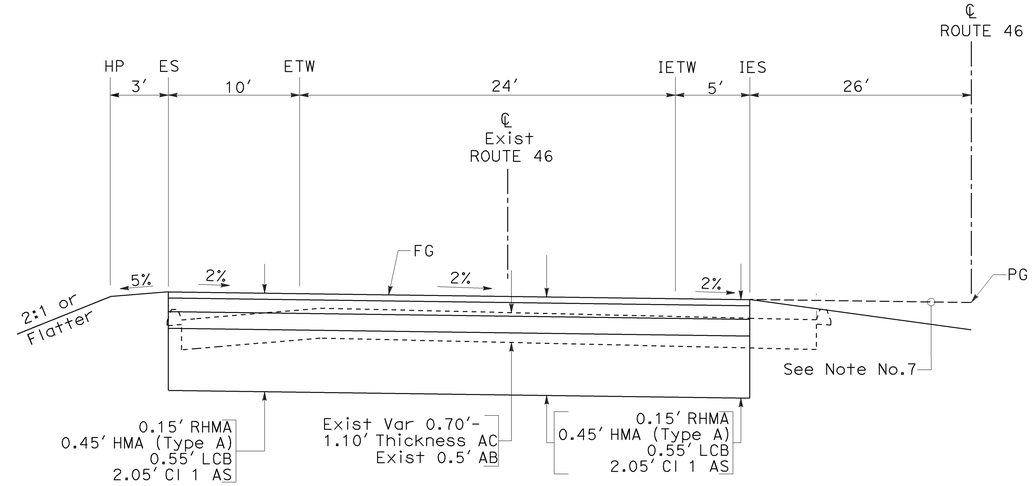

ROUTE 46 WB LANES

Sta 453+50.00 TO Sta 455+94.82

TYPICAL CROSS SECTIONS

NO SCALE

X-6

STATE OF CALIFORNIA - DEPARTMENT OF TRANSPORTATION
Caltrans
06-DESIGN
FUNCTIONAL SUPERVISOR JACK WALKER
CALCULATED-DESIGNED BY JOSE ARGUELLO
CHECKED BY SUMI HOODE
REVISED BY
DATE REVISED

LAST REVISION 07-13-09
DATE PLOTTED => 08-DEC-2009
TIME PLOTTED => 08:03

Dist	COUNTY	ROUTE	POST MILES TOTAL PROJECT	SHEET No.	TOTAL SHEETS
05	SLO	46	36.6/41.2	8	595

REGISTERED CIVIL ENGINEER DATE 8-24-09

12-7-09
PLANS APPROVAL DATE

REGISTERED PROFESSIONAL ENGINEER JOSE M. ARGUELLO No. 51321 Exp 06-30-10 CIVIL STATE OF CALIFORNIA

THE STATE OF CALIFORNIA OR ITS OFFICERS OR AGENTS SHALL NOT BE RESPONSIBLE FOR THE ACCURACY OR COMPLETENESS OF ELECTRONIC COPIES OF THIS PLAN SHEET.

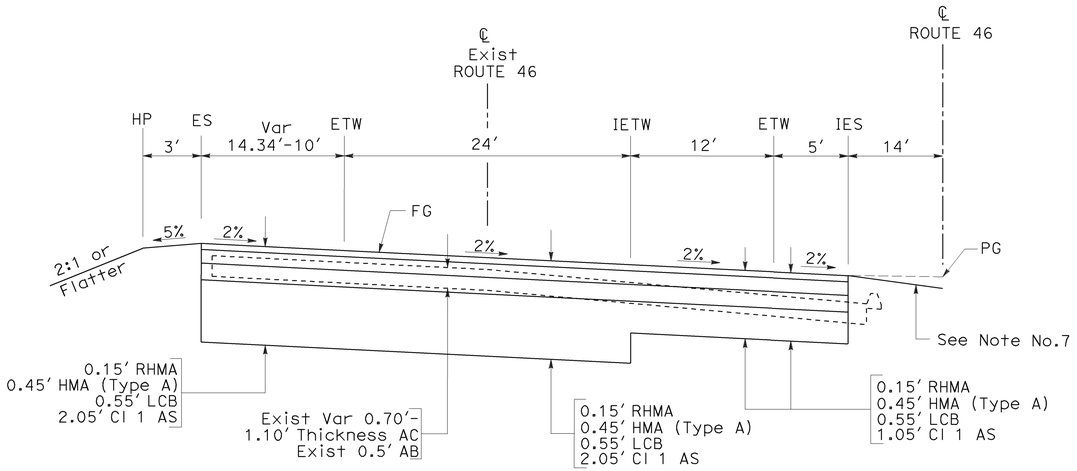

ROUTE 46 WB LANES

Sta 458+50.00 TO Sta 458+75.83

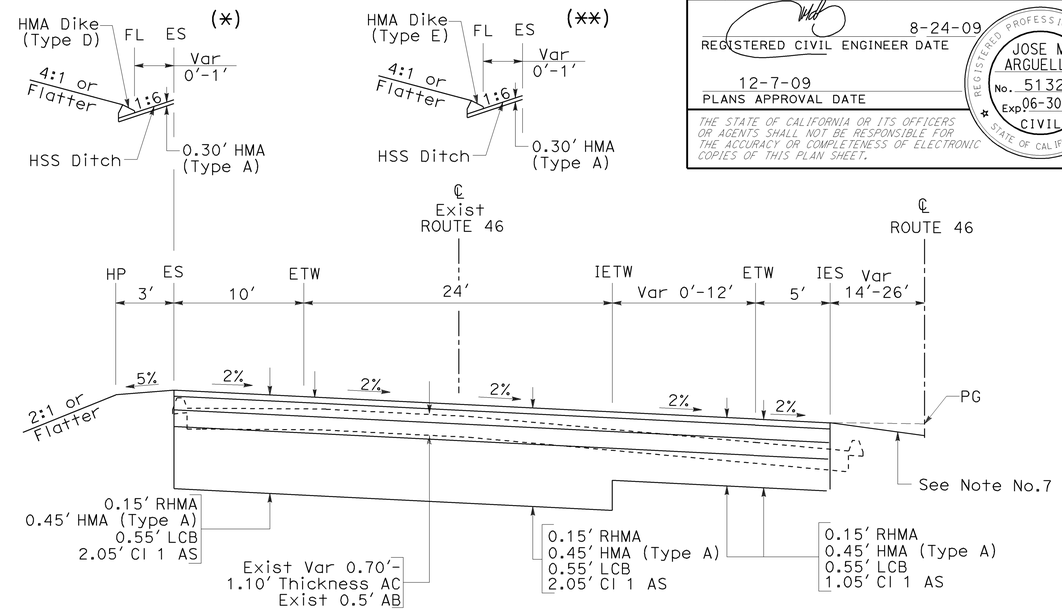

ROUTE 46 WB LANES

Sta 458+75.83 TO Sta 461+50.00
(*) Sta 462+50.00 TO Sta 467+93.00
(**) Sta 467+93.00 TO Sta 468+00.00

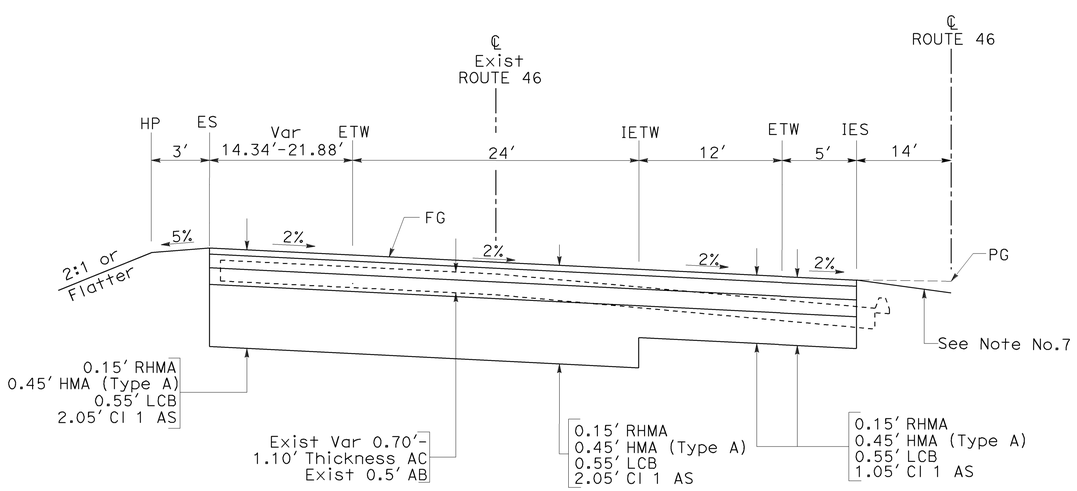

ROUTE 46 WB LANES

Sta 457+73.94 TO Sta 458+50.00

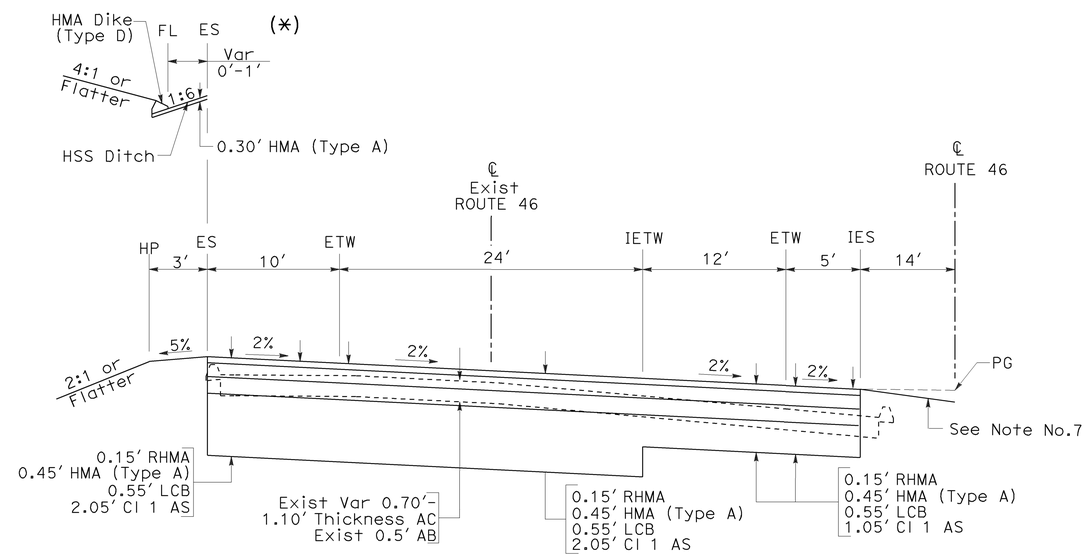

ROUTE 46 WB LANES

Sta 461+50.00 TO Sta 461+72.00 (*) Sta 461+72.00 TO Sta 462+50.00

TYPICAL CROSS SECTIONS

NO SCALE

X-7

STATE OF CALIFORNIA - DEPARTMENT OF TRANSPORTATION
Caltrans
06-DESIGN
FUNCTIONAL SUPERVISOR: JACK WALKER
CALCULATED-DESIGNED BY: JOSE ARGUELLO
CHECKED BY: SUMI HOODE
REVISED BY
DATE REVISED

LAST REVISION 07-14-09
DATE PLOTTED => 08-DEC-2009
TIME PLOTTED => 08:03

Dist	COUNTY	ROUTE	POST MILES TOTAL PROJECT	SHEET No.	TOTAL SHEETS
05	SLO	46	36.6/41.2	9	595

REGISTERED CIVIL ENGINEER DATE 8-24-09

12-7-09
PLANS APPROVAL DATE

REGISTERED PROFESSIONAL ENGINEER JOSE M. ARGUELLO No. 51321 Exp 06-30-10 CIVIL STATE OF CALIFORNIA

THE STATE OF CALIFORNIA OR ITS OFFICERS OR AGENTS SHALL NOT BE RESPONSIBLE FOR THE ACCURACY OR COMPLETENESS OF ELECTRONIC COPIES OF THIS PLAN SHEET.

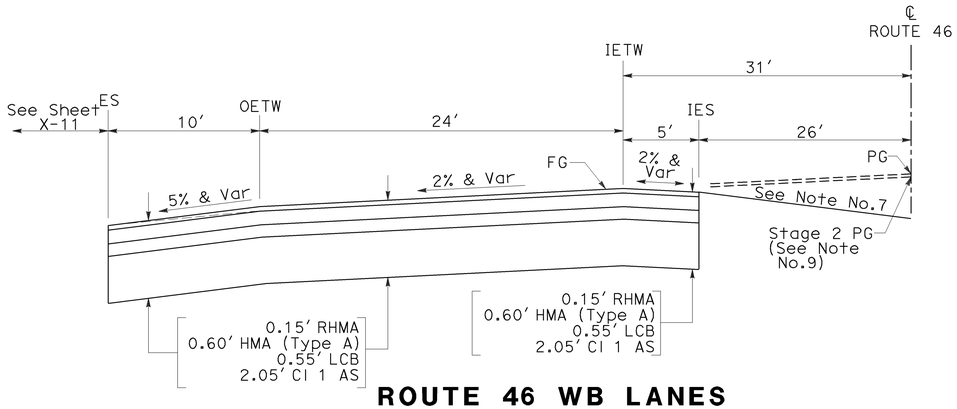

ROUTE 46 WB LANES

Sta 606+02.75 TO Sta 618+00

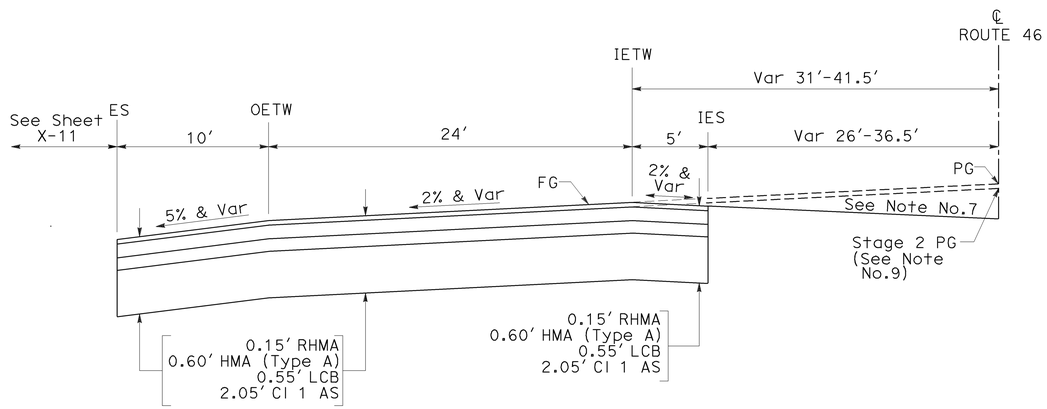

ROUTE 46 WB LANES

Sta 502+00.00 TO Sta 539+85.91

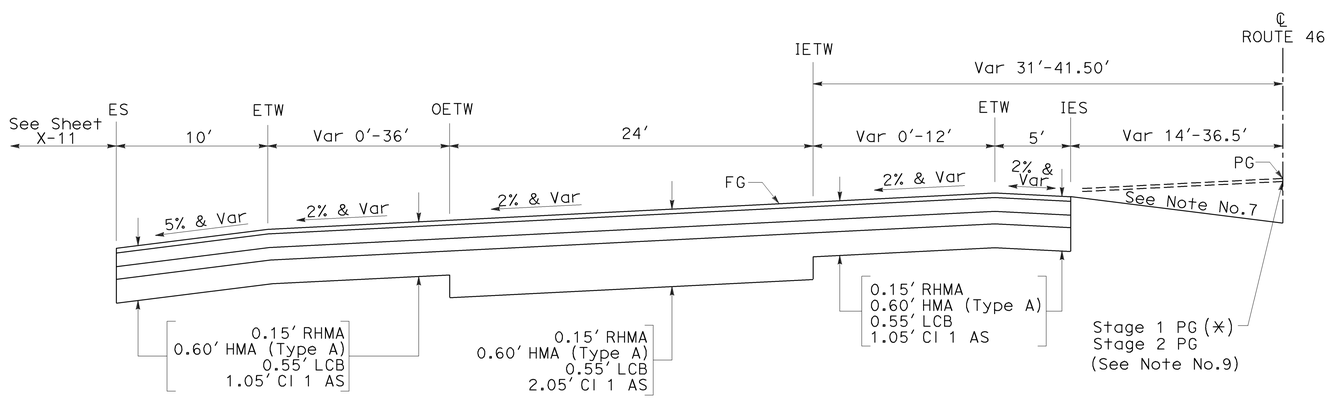

ROUTE 46 WB LANES

Sta 468+00.00 TO Sta 492+78.05
Sta 494+44.78 TO Sta 502+00.00
Sta 573+27.75 TO Sta 573+83.34

Sta 575+26.12 TO Sta 585+00.00 (*)
Sta 585+00.00 TO Sta 597+37.46
Sta 598+97.26 TO Sta 606+02.75

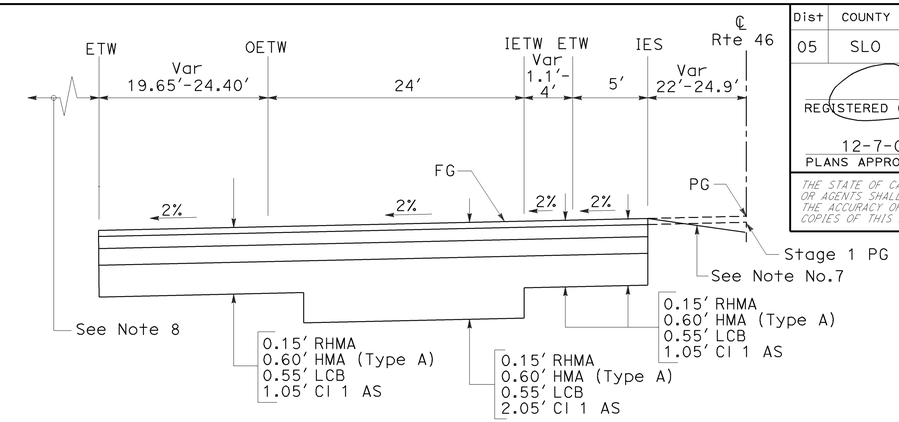

ROUTE 46 WB LANES

Sta 573+83.34 TO Sta 575+26.12

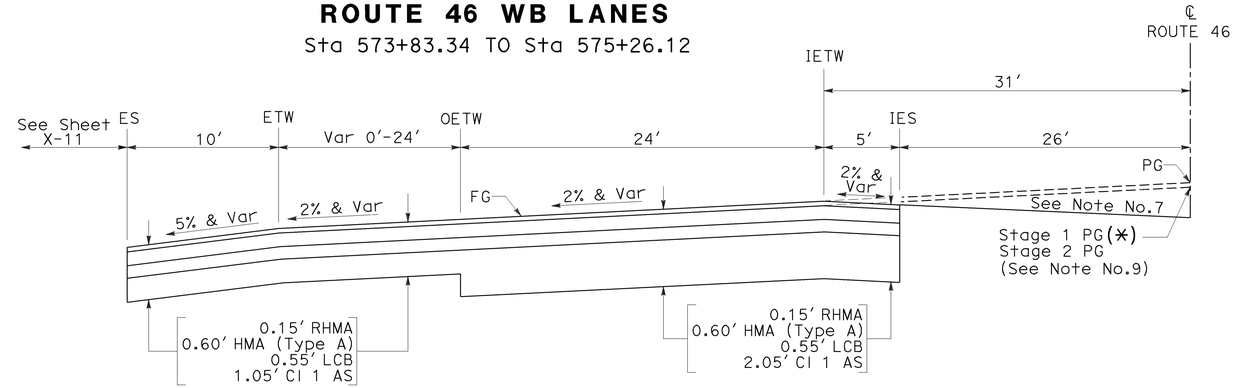

ROUTE 46 WB LANES

Sta 539+85.91 TO Sta 554+00.00
Sta 554+00.00 TO Sta 558+43.72 (*)
Sta 568+75.64 TO Sta 573+27.75 (*)

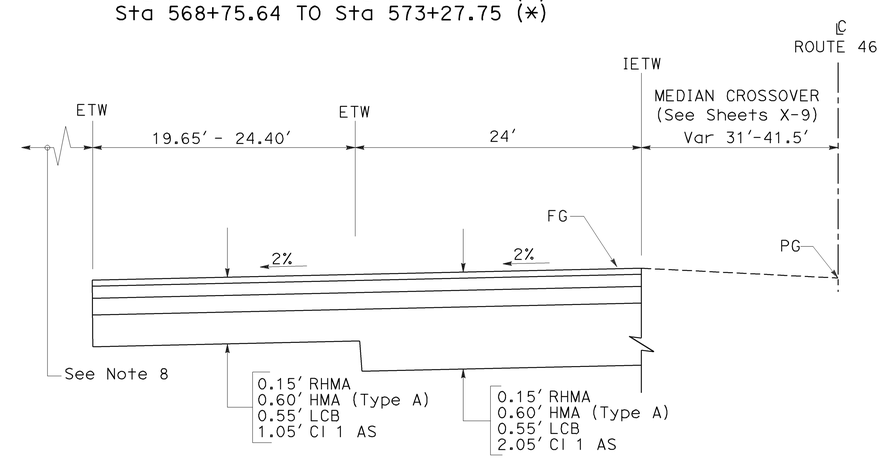

ROUTE 46 WB LANES

Sta 492+78.05 TO Sta 494+44.78
Sta 597+37.46 TO Sta 598+97.26

TYPICAL CROSS SECTIONS

NO SCALE

X-8

REVISED BY	DATE REVISED

CALCULATED-DESIGNED BY: JOSE ARGUELLO
CHECKED BY: SUMI HOODE
FUNCTIONAL SUPERVISOR: JACK WALKER

STATE OF CALIFORNIA - DEPARTMENT OF TRANSPORTATION
Caltrans 06-DESIGN

LAST REVISION 05-15-09
DATE PLOTTED => 08-DEC-2009
TIME PLOTTED => 08:03

Dist	COUNTY	ROUTE	POST MILES TOTAL PROJECT	SHEET No.	TOTAL SHEETS
05	SLO	46	36.6/41.2	10	595

REGISTERED CIVIL ENGINEER DATE 8-24-09

12-7-09
PLANS APPROVAL DATE

REGISTERED PROFESSIONAL ENGINEER JOSE M. ARGUELLO No. 51321 Exp 06-30-10 CIVIL STATE OF CALIFORNIA

THE STATE OF CALIFORNIA OR ITS OFFICERS OR AGENTS SHALL NOT BE RESPONSIBLE FOR THE ACCURACY OR COMPLETENESS OF ELECTRONIC COPIES OF THIS PLAN SHEET.

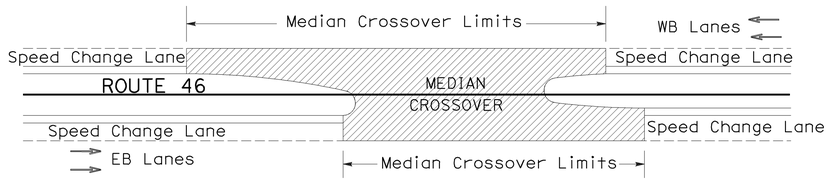

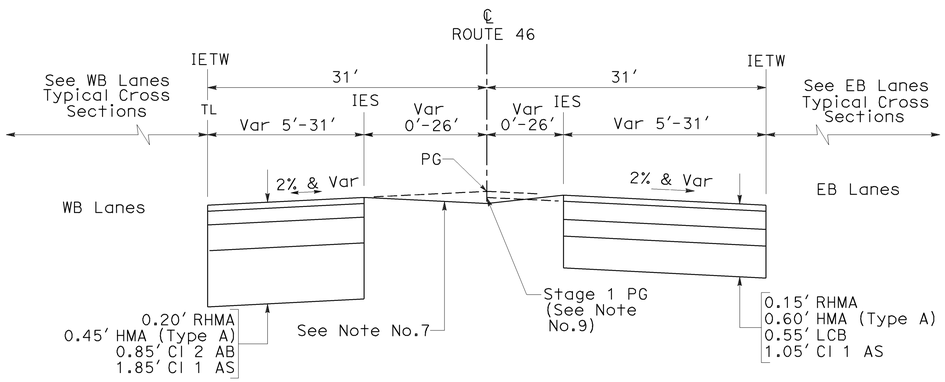

Rte 46
WB LIMITS

Sta 437+29.44 TO Sta 439+52.23

Rte 46
EB LIMITS

Sta 438+24.11 TO Sta 440+46.90

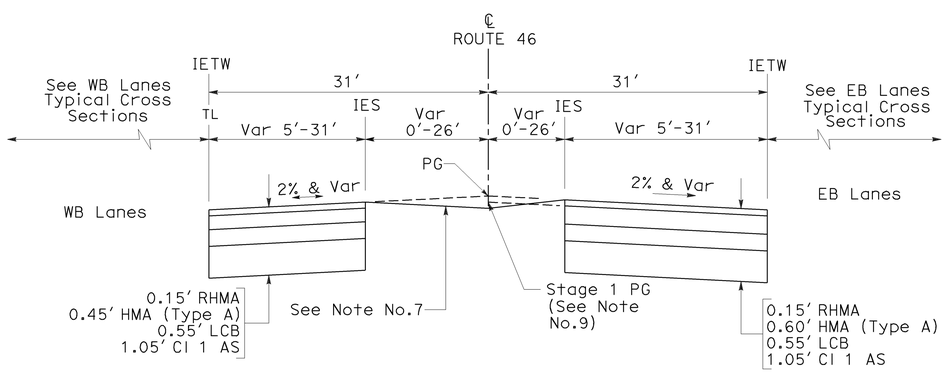

Rte 46
WB LIMITS

Sta 410+16.29 TO Sta 411+97.49
Sta 455+65.18 TO Sta 457+87.66

Rte 46
EB LIMITS

Sta 410+60.40 TO Sta 412+92.15
Sta 456+59.54 TO Sta 458+82.65

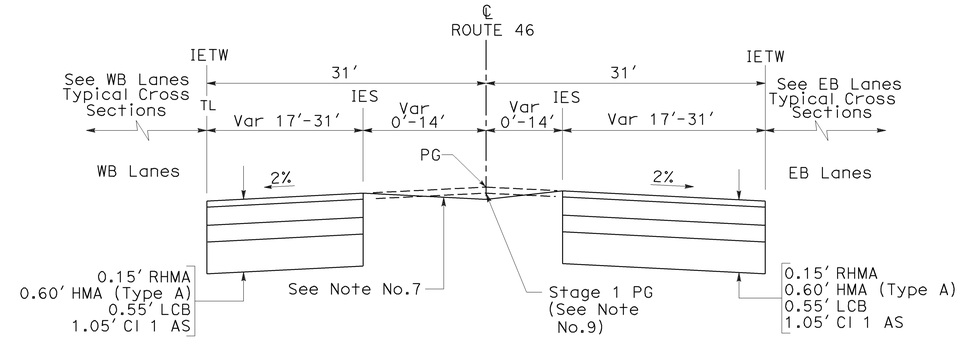

Rte 46
WB LIMITS

Sta 596+60.38 TO Sta 598+50.79

Rte 46
EB LIMITS

Sta 597+04.74 TO Sta 598+94.66

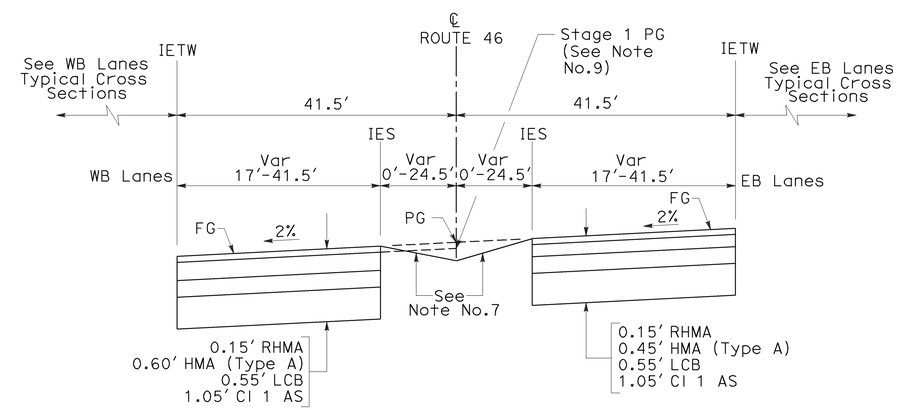

Rte 46
WB LIMITS

Sta 492+73.78 TO Sta 494+77.52

Rte 46
EB LIMITS

Sta 493+17.11 TO Sta 495+24.63

ROUTE 46
MEDIAN CROSSOVER

TYPICAL CROSS SECTIONS

NO SCALE

X-9

STATE OF CALIFORNIA - DEPARTMENT OF TRANSPORTATION
Caltrans
06-DESIGN
FUNCTIONAL SUPERVISOR: JACK WALKER
CALCULATED-DESIGNED BY: JOSE ARGUELLO
CHECKED BY: SUMI HOODE
REVISED BY
DATE REVISED

LAST REVISION 05-15-09
DATE PLOTTED => 08-DEC-2009
TIME PLOTTED => 08:03

Dist	COUNTY	ROUTE	POST MILES TOTAL PROJECT	SHEET No.	TOTAL SHEETS
05	SLO	46	36.6/41.2	11	595

REGISTERED CIVIL ENGINEER DATE 8-24-09

12-7-09
PLANS APPROVAL DATE

REGISTERED PROFESSIONAL ENGINEER JOSE M. ARGUELLO No. 51321 Exp 06-30-10 CIVIL STATE OF CALIFORNIA

THE STATE OF CALIFORNIA OR ITS OFFICERS OR AGENTS SHALL NOT BE RESPONSIBLE FOR THE ACCURACY OR COMPLETENESS OF ELECTRONIC COPIES OF THIS PLAN SHEET.

EB LANES NEW CONSTRUCTION

LOCATION		HP TYPE
Sta 395+41.11 TO Sta 397+75	(See Note No.12)	HP-2
Sta 397+75 TO Sta 399+00	(See Note No.12)	HP-3
Sta 399+00 TO Sta 407+00	(See Note No.12)	HP-2
Sta 407+00 TO Sta 410+52.93	(See Note No.12)	HP-9
Sta 411+96.15 TO Sta 413+00	(See Note No.12)	HP-2
Sta 413+00 to Sta 419+00	(See Note No.12)	HP-1
Sta 419+00 to Sta 421+34	(See Note No.12)	HP-2
Sta 421+34 to Sta 421+85		HP-7
Sta 421+85 to Sta 422+40	(See Note No.12)	HP-3
Sta 422+40 to Sta 422+82.5	(See Note No.12)	HP-14
Sta 422+82.5 to Sta 423+20	(See Note No.12)	HP-5
Sta 423+20 to Sta 429+10	(See Note No.12)	HP-6
Sta 429+10 to Sta 429+47.5		HP-4
Sta 429+47.5to Sta 429+63.5	(See Note No.12)	HP-16
Sta 429+63.5 to Sta 430+00	(See Note No.12)	HP-17
Sta 430+00 to Sta 434+50	(See Note No.12)	HP-1
Sta 434+50 to Sta 435+50	(See Note No.12)	HP-2
Sta 435+50 to Sta 438+30	(See Note No.12)	HP-1
Sta 438+30 to Sta 438+48.541	(See Note No.12)	HP-2
Sta 439+28.542 to Sta 439+60	(See Note No.12)	HP-3
Sta 439+60 to Sta 440+02.5	(See Note No.12)	HP-14
Sta 440+02.5 to Sta 440+40	(See Note No.12)	HP-5
Sta 440+40 to Sta 442+50	(See Note No.12)	HP-6
Sta 442+50 to Sta 445+00	(See Note No.12)	HP-1
Sta 445+00 to Sta 445+88.69	(See Note No.12)	HP-6
Sta 445+88.69 to Sta 449+18.12	(*)	HP-8
Sta 449+18.12 to Sta 449+43.45	(See Note No.12)	HP-6
Sta 449+43.45 to Sta 449+81.45	(See Note No.12)	HP-5
Sta 449+81.45 to Sta 450+20	(See Note No.12)	HP-14
Sta 450+20 to Sta 451+50	(See Note No.12)	HP-3
Sta 451+50 to Sta 453+50		HP-7
Sta 453+50 to Sta 456+69.3	(See Note No.12)	HP-2
Sta 457+51.627 to Sta 468+71		HP-7
Sta 468+71 to Sta 469+60	(See Note No.12)	HP-3
Sta 469+60 to Sta 470+02.5	(See Note No.12)	HP-14
Sta 470+02.5 to Sta 470+40	(See Note No.12)	HP-5
Sta 470+40 to Sta 479+18.9	(See Note No.12)	HP-6
Sta 479+18.9 to Sta 480+88.29		HP-18
Sta 480+88.29 to Sta 481+38.83	(See Note No.12)	HP-6
Sta 481+38.83 to Sta 481+75.43	(See Note No.12)	HP-5
Sta 481+75.43 to Sta 482+10	(See Note No.12)	HP-14
Sta 482+10 to Sta 486+74	(See Note No.12)	HP-3
Sta 486+74 to Sta 488+00		HP-7
Sta 488+00 to Sta 490+00	(See Note No.12)	HP-3
Sta 490+00 TO Sta 493+54.91		HP-7
Sta 495+07.17 TO Sta 496+75	(See Note No.12 & 15)	HP-10
Sta 496+75 TO Sta 504+75	(See Note No.15)	HP-11
Sta 504+75 TO Sta 516+50	(See Note No.15)	HP-7
Sta 516+50 TO Sta 519+50	(See Note No.12 & 15)	HP-2
Sta 519+50 TO Sta 529+00	(See Note No.12 & 15)	HP-1
Sta 529+50 TO Sta 530+93.42	(See Note No.12 & 15)	HP-10
Sta 530+93.42 TO Sta 533+00	(See Note No.12 & 15)	HP-12
Sta 534+25 TO Sta 534+75	(See Note No.15)	HP-12
Sta 534+75 TO Sta 541+25	(See Note No.12 & 15)	HP-10
Sta 541+25 TO Sta 543+25	(See Note No.15)	HP-12
Sta 543+25 TO Sta 546+50	(See Note No.12 & 15)	HP-10
Sta 546+50 TO Sta 547+25	(See Note No.15)	HP-12
Sta 547+25 TO Sta 549+00	(See Note No.12 & 15)	HP-10
Sta 549+00 TO Sta 549+75	(See Note No.15)	HP-12

EB LANES NEW CONSTRUCTION

LOCATION		HP TYPE
Sta 549+75 TO Sta 550+50	(See Note No.12 & 15)	HP-10
Sta 550+50 TO Sta 552+00	(See Note No.12 & 15)	HP-12
Sta 552+00 TO Sta 554+75	(See Note No.15)	HP-13
Sta 554+75 TO Sta 555+00	(See Note No.12 & 15)	HP-14
Sta 555+00 TO Sta 555+37.50	(See Note No.12 & 15)	HP-5
Sta 555+37.50 TO Sta 558+47.38	(See Note No.12 &1 5)	HP-6
Sta 568+70.50 TO Sta 575+25.75		HP-15
Sta 576+68.99 TO Sta 587+25	(See Note No.12)	HP-1
Sta 587+25 TO Sta 596+67.43		HP-15
Sta 598+18.73 TO Sta 610+50	(See Note No.12)	HP-1
Sta 610+50 TO Sta 616+46.57	(See Note No.12)	HP-2

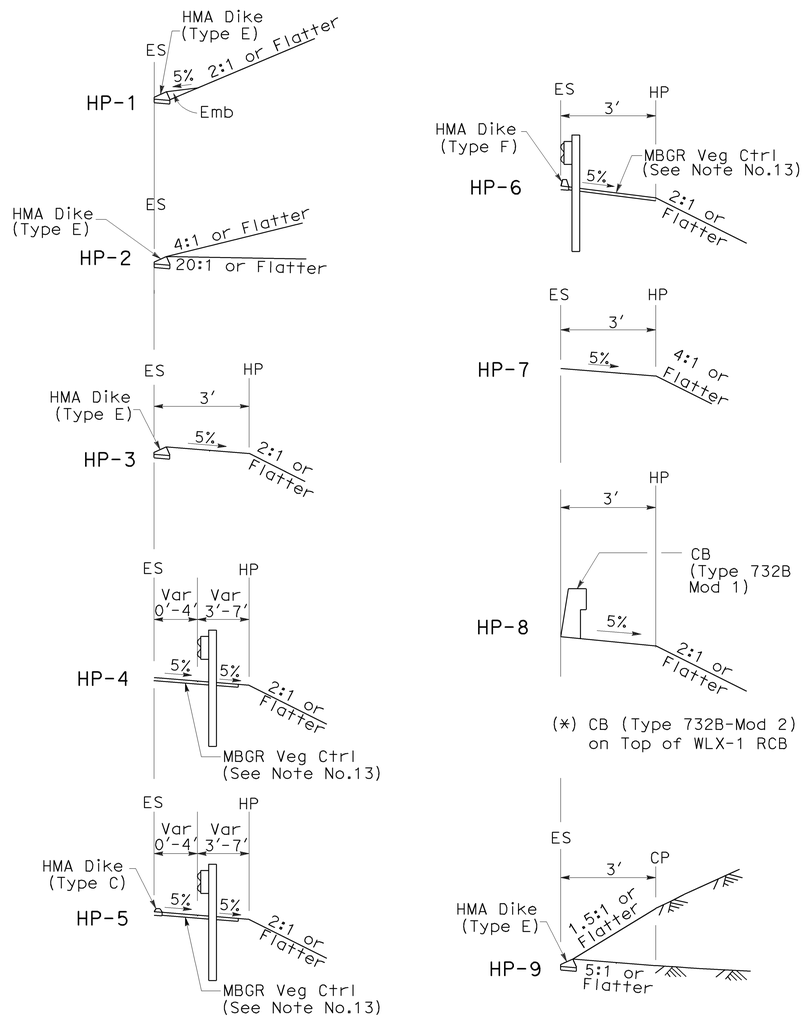

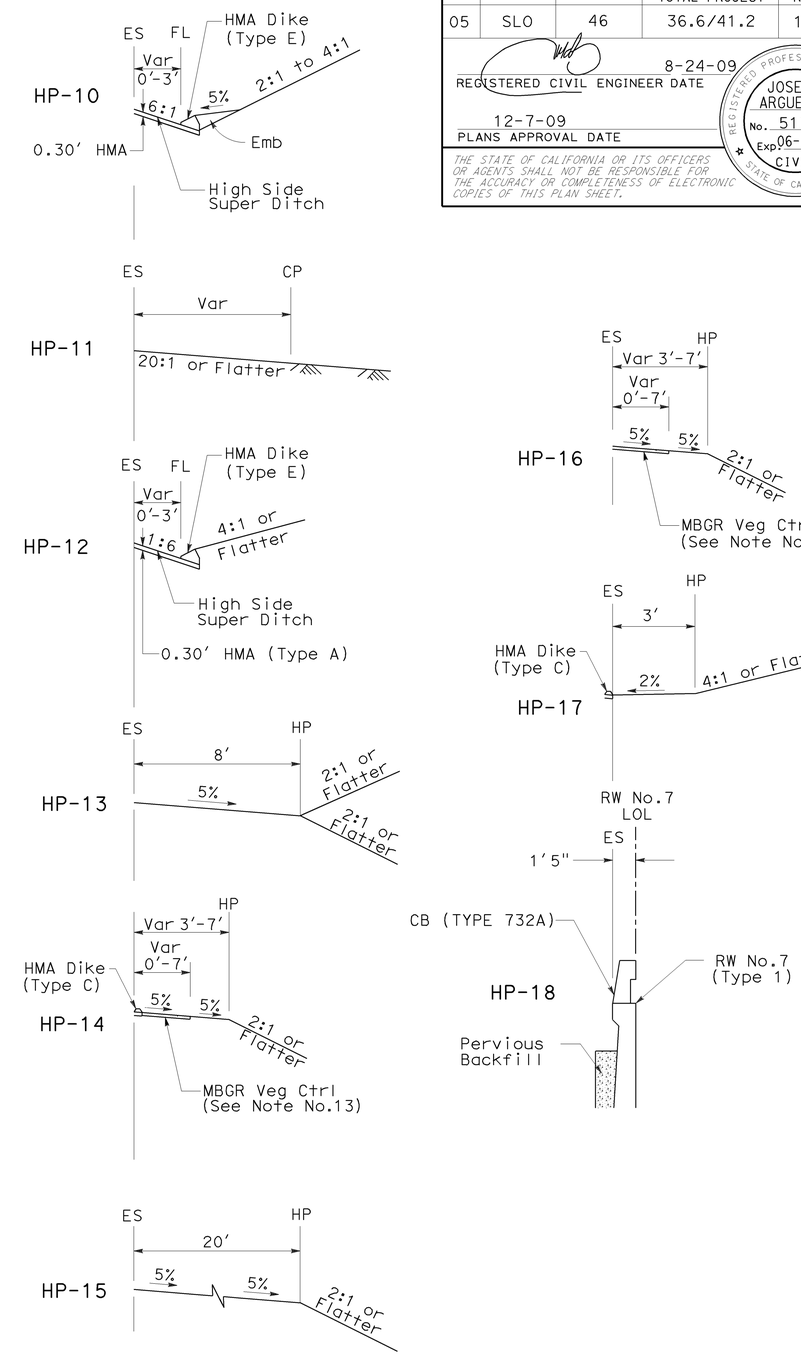

ROUTE 46 HP TYPES - EB NEW CONSTRUCTION

TYPICAL CROSS SECTIONS

NO SCALE

X-10

STATE OF CALIFORNIA - DEPARTMENT OF TRANSPORTATION
Caltrans
06-DESIGN
FUNCTIONAL SUPERVISOR: JACK WALKER
CALCULATED-DESIGNED BY: JOSE ARGUELLO
CHECKED BY: SUMI HOODE
REVISED BY
DATE REVISED

LAST REVISION 05-27-09
DATE PLOTTED => 08-DEC-2009
TIME PLOTTED => 08:03

Dist	COUNTY	ROUTE	POST MILES TOTAL PROJECT	SHEET No.	TOTAL SHEETS
05	SLO	46	36.6/41.2	12	595

REGISTERED CIVIL ENGINEER DATE 8-24-09

12-7-09
PLANS APPROVAL DATE

REGISTERED PROFESSIONAL ENGINEER JOSE M. ARGUELLO No. 51321 Exp 06-30-10 CIVIL STATE OF CALIFORNIA

THE STATE OF CALIFORNIA OR ITS OFFICERS OR AGENTS SHALL NOT BE RESPONSIBLE FOR THE ACCURACY OR COMPLETENESS OF ELECTRONIC COPIES OF THIS PLAN SHEET.

WB LANES NEW CONSTRUCTION

LOCATION		HP TYPE
Sta 404+50 TO Sta 410+88.34		HP-3
Sta 411+68.34 TO Sta 413+00		HP-3
Sta 428+00 TO Sta 428+75		HP-4
Sta 428+75 TO Sta 429+12.50		HP-13
Sta 429+12.50 TO Sta 429+50		HP-14
Sta 429+50 TO Sta 430+00		HP-2
Sta 430+00 TO Sta 432+50		HP-1
Sta 443+00 TO Sta 444+00		HP-4
Sta 444+00 TO Sta 444+08.38		HP-4
Sta 444+08.38 TO Sta 445+46.08		HP-6
Sta 445+46.08 TO Sta 448+00		HP-4
Sta 453+50 TO Sta 455+94.82		HP-15
Sta 457+73.94 TO Sta 458+50		HP-15
Sta 458+50 TO Sta 458+75.83		HP-15
Sta 458+75.83 TO Sta 461+50		HP-15
Sta 461+50 TO Sta 461+72		HP-15
Sta 461+72 TO Sta 462+50		HP-16
Sta 462+50 TO Sta 465+00		HP-16
Sta 465+00 TO Sta 467+93		HP-16
Sta 467+93 TO Sta 468+00		HP-17
Sta 468+00 TO Sta 469+60	(See Note No.12)	HP-8
Sta 469+60 TO Sta 482+50		HP-5
Sta 482+50 TO Sta 484+50	(See Note No.12)	HP-2
Sta 484+50 TO Sta 485+50	(See Note No.12)	HP-3
Sta 485+50 TO Sta 489+91	(See Note No.12)	HP-2
Sta 489+91 TO Sta 490+25		HP-7
Sta 490+25 TO Sta 492+32.39		HP-5
Sta 492+32.39 TO Sta 492+78.05	(See Note No.12)	HP-10
Sta 494+44.79 TO Sta 495+24.65	(See Note No.12)	HP-2
Sta 495+24.65 TO Sta 500+80	(See Note No.12)	HP-1
Sta 500+80 TO Sta 545+50	(See Note No.12 & 15)	HP-11
Sta 545+50 TO Sta 558+47.71	(See Note No.15)	HP-9
Sta 568+57.93 TO Sta 573+83.35		HP-9
Sta 575+26.13 TO Sta 579+25	(See Note No.12)	HP-5
Sta 579+25 TO Sta 579+50	(See Note No.12)	HP-2
Sta 579+50 TO Sta 583+50	(See Note No.12)	HP-1
Sta 583+50 TO Sta 589+00	(See Note No.12)	HP-2
Sta 589+00 TO Sta 592+25	(See Note No.12)	HP-3
Sta 592+25 TO Sta 595+00	(See Note No.12)	HP-12
Sta 595+00 TO Sta 597+37.46	(See Note No.12)	HP-18
Sta 598+97.27 TO Sta 600+20.85	(See Note No.12)	HP-3
Sta 600+20.85 TO Sta 601+00	(See Note No.12)	HP-2
Sta 601+00 TO Sta 603+00	(See Note No.12)	HP-1
Sta 603+00 TO Sta 604+50	(See Note No.12)	HP-2
Sta 604+50 TO Sta 607+03.76	(See Note No.12)	HP-3

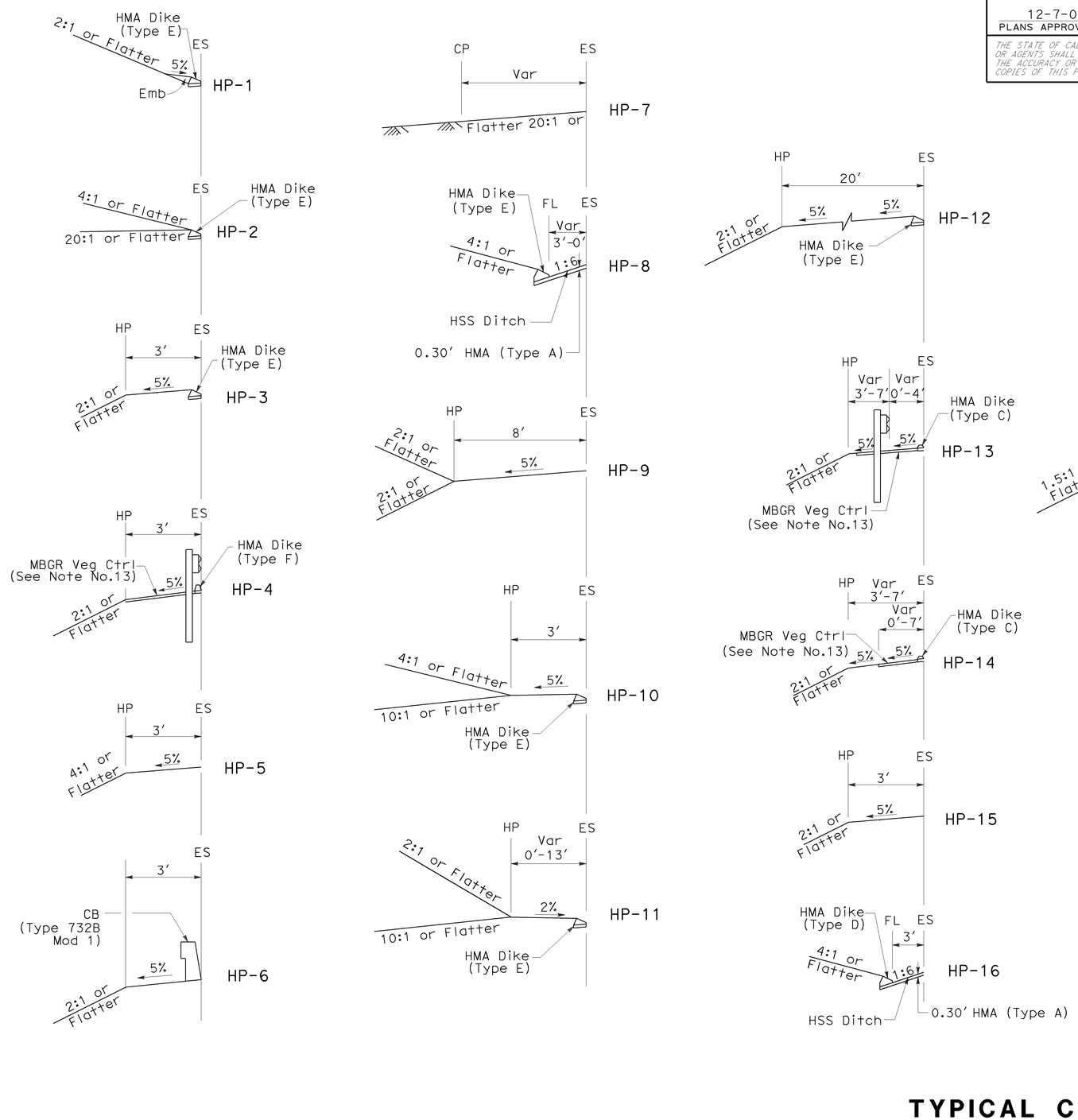

ROUTE 46 HP TYPES - WB NEW CONSTRUCTION

TYPICAL CROSS SECTIONS

NO SCALE

X-11

STATE OF CALIFORNIA - DEPARTMENT OF TRANSPORTATION
Caltrans
06-DESIGN
FUNCTIONAL SUPERVISOR JACK WALKER
CALCULATED-DESIGNED BY JOSE ARGUELLO
CHECKED BY SUMI HOODE
REVISED BY
DATE REVISED

LAST REVISION 07-14-09
DATE PLOTTED => 08-DEC-2009
TIME PLOTTED => 08:03

Dist	COUNTY	ROUTE	POST MILES TOTAL PROJECT	SHEET No.	TOTAL SHEETS
05	SLO	46	36.6/41.2	13	595

REGISTERED CIVIL ENGINEER DATE 8-24-09

PLANS APPROVAL DATE 12-7-09

REGISTERED PROFESSIONAL ENGINEER JOSE M. ARGUELLO No. 51321 Exp 06-30-10 CIVIL STATE OF CALIFORNIA

THE STATE OF CALIFORNIA OR ITS OFFICERS OR AGENTS SHALL NOT BE RESPONSIBLE FOR THE ACCURACY OR COMPLETENESS OF ELECTRONIC COPIES OF THIS PLAN SHEET.

NOTE:

** SEE NOTE No.14 ON SHEET X-1

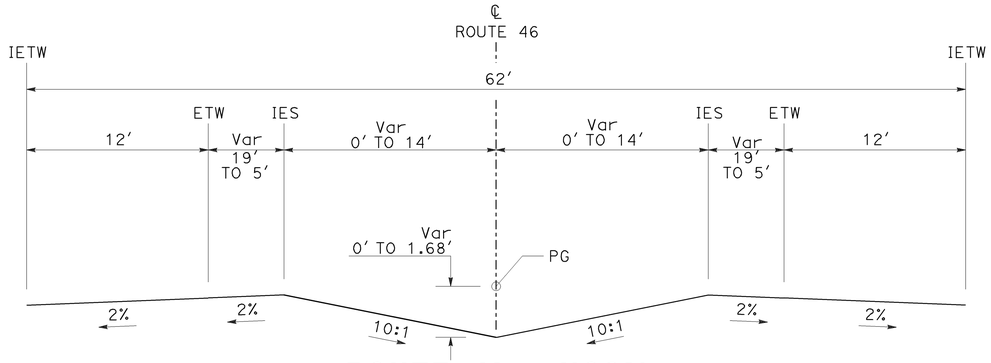

ROUTE 46 - NC38i

Sta 409+44.80 TO Sta 411+28.93
Sta 596+00.00 TO Sta 600+00.00

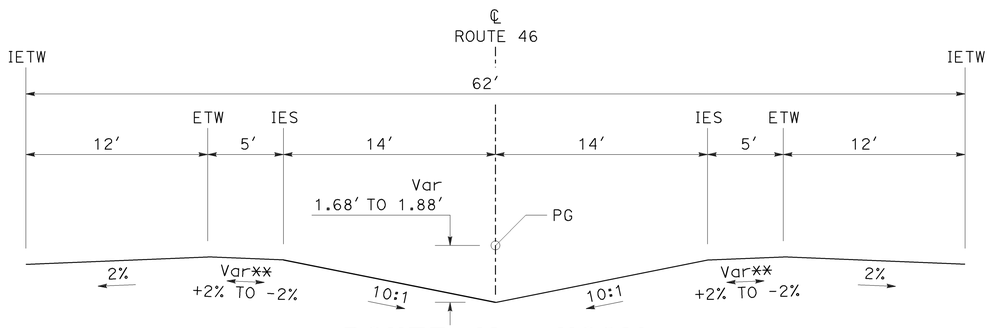

ROUTE 46 - NC38t

Sta 408+79.18 TO Sta 409+44.80
Sta 593+30.00 TO Sta 596+00.00
Sta 600+00.00 TO Sta 602+70.00

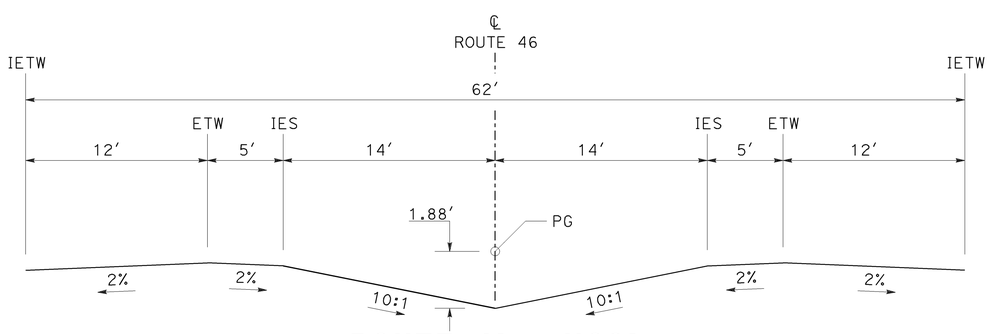

ROUTE 46 - NC38

Sta 404+28.42 TO Sta 408+79.18
Sta 590+72.78 TO Sta 593+30.00
Sta 602+70.00 TO Sta 604+82.75

LOCATION DATA

STATION	SECTION	SHEET No. & COMMENT
	Beg NEW CONSTRUCTION	
395+00.00	NC49	X-13
401+00.00	NC50-49	X-13
401+20.00	NC50	X-13
403+08.42	NC38-50	X-13, Bay Taper
404+28.42	NC38	X-12
408+79.18	NC38t	X-12
409+44.80	NC38i	X-12
411+28.93		
	℄ Prvt Dwy 1 / Geneseo Rd	
411+28.93	NC50i	X-13
412+72.88	NC50t	X-14, Mirror
413+38.50	NC50	X-13
418+18.42	NC50-62	X-14, Bay Taper, Mirror
419+38.42	NC62	X-14
430+83.17	NC50-62	X-14, Bay Taper
432+03.17	NC50	X-13, Mirror
437+00.70	NC50t	X-14
437+66.32	NC50i	X-13, Mirror
438+88.17		
	℄ Prvt Dwy 2 & 3	
438+88.17	NC50i	X-13
443+50.39	SE50i-62ns	X-14
445+73.44	SE50	X-14
445+73.44	SE50i-62ns	X-14, Bay Taper
447+04.72	SE62	X-15
449+18.77	SE62-50h	X-15, Bay Taper
450+38.77	SE50h	X-15
457+23.51		
	℄ Chumeia Dwy / Prvt Dwy 4	
457+23.51	SE50l	X-15
464+10.00	SE62-50l	X-15, Bay Taper
465+30.00	SE62-60	X-16
466+16.44	SE60-53ns	X-16
469+70.77	NC53-50	X-16
471+30.00	NC50	X-13
473+00.76	NC50-61	X-17
480+20.88	NC61-70	X-17
485+88.49	NC70-59	X-17, Bay Taper
487+08.49	NC59	X-18
487+70.00	SE59ns	X-18
492+50.00	SE59	X-18
493+97.44		
	℄ Union Rd	

LOCATION DATA

STATION	SECTION	SHEET No. & COMMENT
	℄ Union Rd	
493+97.44	SE59	X-18
500+80.00	SE59-71	X-19, Bay Taper
502+00.00	SE71-54	X-19
510+50.00	SE54-50ns	X-19
515+30.00	NC50	X-13, Mirror
518+18.89	NC50-62	X-14
524+18.89	NC62	X-14
527+90.00	SE62ns	X-20
531+50.00	SE62	X-15, Mirror
549+00.00	SE62ss	X-20
552+60.00	SE62	X-15
558+78.00		
	Estrella River Bridge 49-0033R/L	
568+40.50	SE62	X-15
569+00.00	SE62i.ns	X-17
572+60.00	NC62i	X-17
573+27.75	NC62-53	X-20
574+83.87		
	℄ S Whitley Gardens Dr	
576+01.85	NC62-53	X-20
578+00.00	NC53t-50z	X-20
579+28.07	NC50z	X-20
580+70.00	NC50	X-13
589+52.78	NC38-50	X-13, Bay Taper
590+72.78	NC38	X-12
593+30.00	NC38t	X-12
596+00.00	NC38i	X-12
597+77.75		
	℄ River Grove / Almond Dr	
597+77.75	NC38i	X-12
600+00.00	NC38t	X-12
602+70.00	NC38	X-12
604+82.75		

MEDIAN GRADING

TYPICAL CROSS SECTIONS

NO SCALE

X-12

STATE OF CALIFORNIA - DEPARTMENT OF TRANSPORTATION
Caltrans 06-DESIGN

FUNCTIONAL SUPERVISOR JACK WALKER

CALCULATED-DESIGNED BY JOSE ARGUELLO
CHECKED BY JOHN CLARKE

REVISED BY
DATE REVISED

LAST REVISION 08-24-09
DATE PLOTTED => 08-DEC-2009
TIME PLOTTED => 08:04

Dist	COUNTY	ROUTE	POST MILES TOTAL PROJECT	SHEET No.	TOTAL SHEETS
05	SLO	46	36.6/41.2	14	595

REGISTERED CIVIL ENGINEER DATE 8-24-09

12-7-09
PLANS APPROVAL DATE

REGISTERED PROFESSIONAL ENGINEER JOSE M. ARGUELLO No. 51321 Exp 06-30-10 CIVIL STATE OF CALIFORNIA

THE STATE OF CALIFORNIA OR ITS OFFICERS OR AGENTS SHALL NOT BE RESPONSIBLE FOR THE ACCURACY OR COMPLETENESS OF ELECTRONIC COPIES OF THIS PLAN SHEET.

NOTE:

** SEE NOTE No.14 ON SHEET X-1

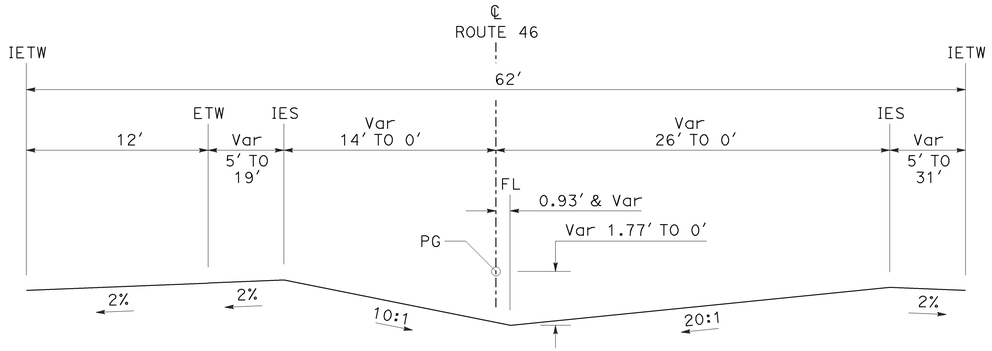

ROUTE 46 - NC50i

Sta 411+28.93 TO Sta 412+72.88
Sta 438+88.17 TO Sta 443+50.39

Sta 437+66.32 TO Sta 438+88.17 Mirror

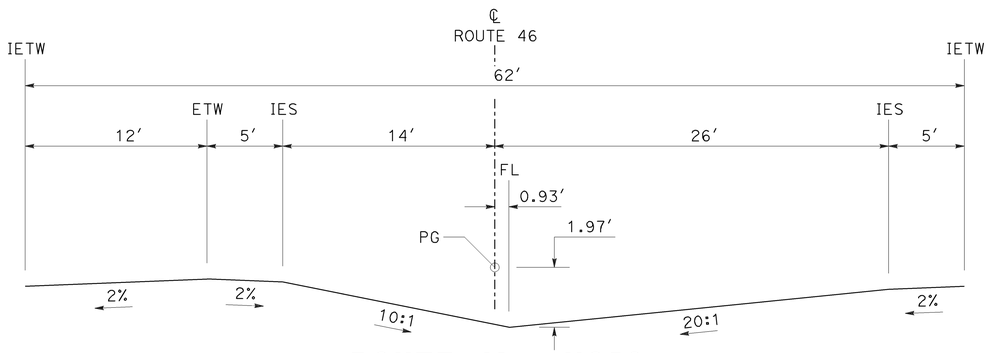

ROUTE 46 - NC50

Sta 401+20.00 TO Sta 403+08.42
Sta 413+38.50 TO Sta 418+18.42
Sta 471+30.00 TO Sta 473+00.76
Sta 580+70.00 TO Sta 589+52.78

Sta 432+03.17 TO Sta 437+00.70 Mirror
Sta 515+30.00 TO Sta 518+18.89 Mirror

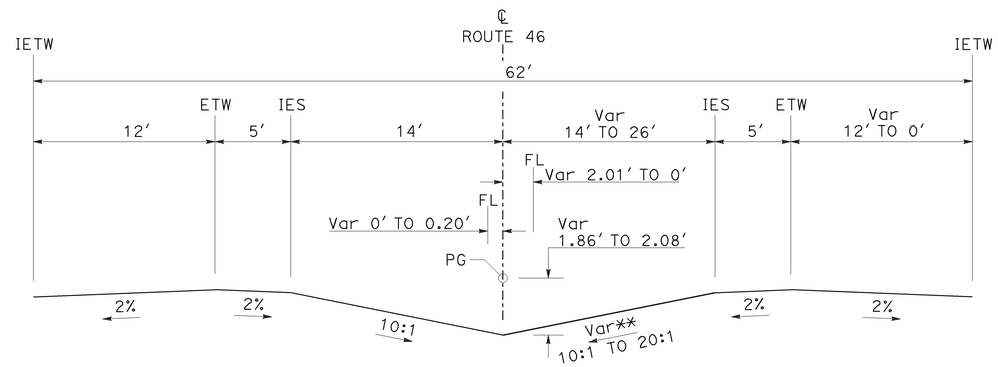

ROUTE 46 - NC38-50

Sta 403+08.42 TO Sta 404+28.42
Sta 589+52.78 TO Sta 590+72.78

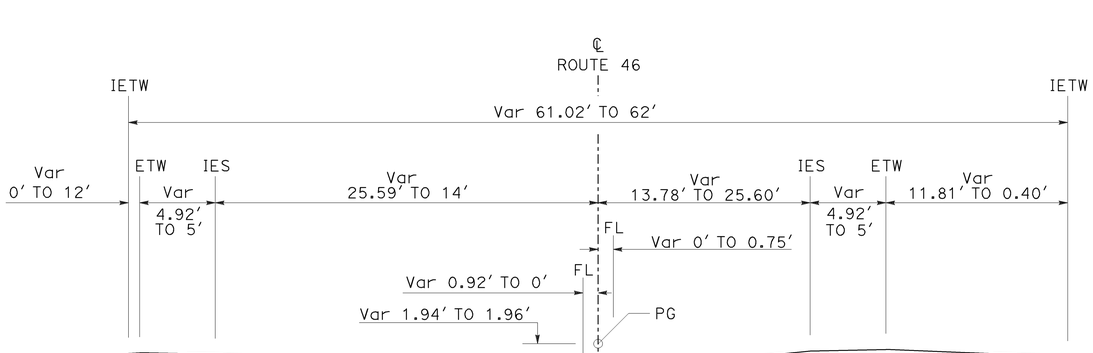

ROUTE 46 - NC49

Sta 395+00.00 TO Sta 401+00.00

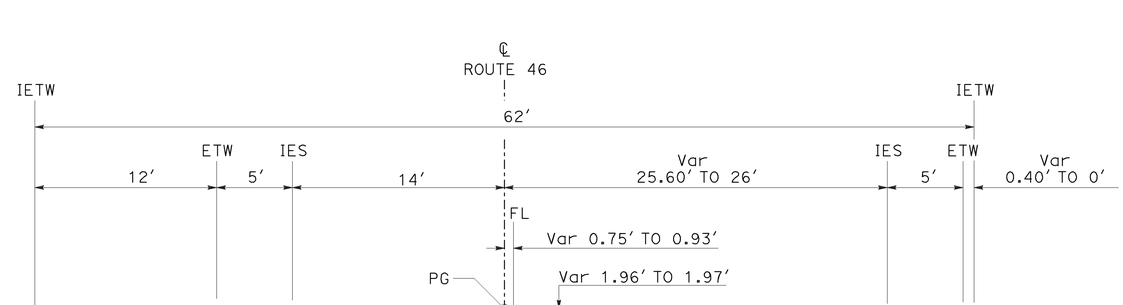

ROUTE 46 - NC50-49

Sta 401+00.00 TO Sta 401+20.00

MEDIAN GRADING

TYPICAL CROSS SECTIONS

NO SCALE

X-13

STATE OF CALIFORNIA - DEPARTMENT OF TRANSPORTATION
Caltrans
06-DESIGN
FUNCTIONAL SUPERVISOR: JACK WALKER
CALCULATED-DESIGNED BY: JOSE ARGUELLO
CHECKED BY: JOHN CLARKE
REVISED BY
DATE REVISED

LAST REVISION DATE PLOTTED => 08-DEC-2009
TIME PLOTTED => 08:04
07-20-09

Dist	COUNTY	ROUTE	POST MILES TOTAL PROJECT	SHEET No.	TOTAL SHEETS
05	SLO	46	36.6/41.2	15	595

REGISTERED CIVIL ENGINEER DATE 8-24-09

12-7-09
PLANS APPROVAL DATE

REGISTERED PROFESSIONAL ENGINEER JOSE M. ARGUELLO No. 51321 Exp. 06-30-10 CIVIL STATE OF CALIFORNIA

THE STATE OF CALIFORNIA OR ITS OFFICERS OR AGENTS SHALL NOT BE RESPONSIBLE FOR THE ACCURACY OR COMPLETENESS OF ELECTRONIC COPIES OF THIS PLAN SHEET.

NOTE:

** SEE NOTE No.14 ON SHEET X-1

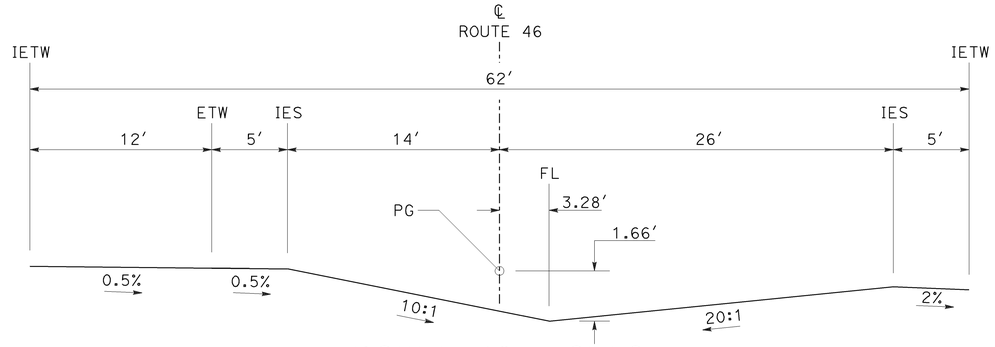

ROUTE 46 - SE50

Sta 445+73.44

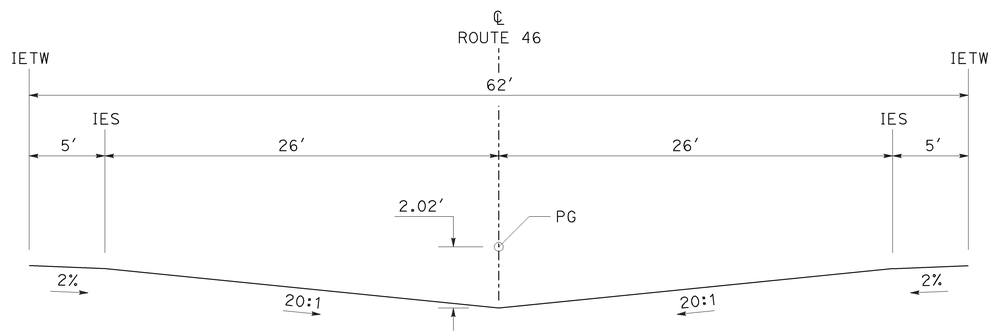

ROUTE 46 - NC62

Sta 419+38.42 TO Sta 430+83.17
Sta 524+18.89 TO Sta 527+90.00

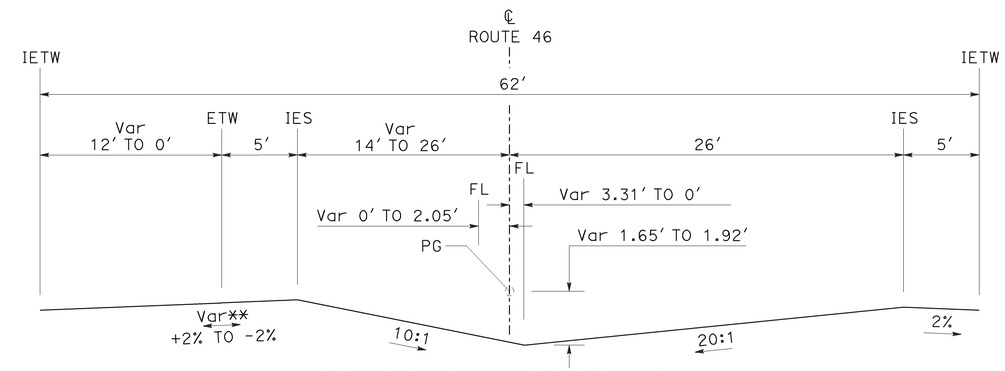

ROUTE 46 - SE50i-62ns

Sta 443+50.39 TO Sta 447+04.72

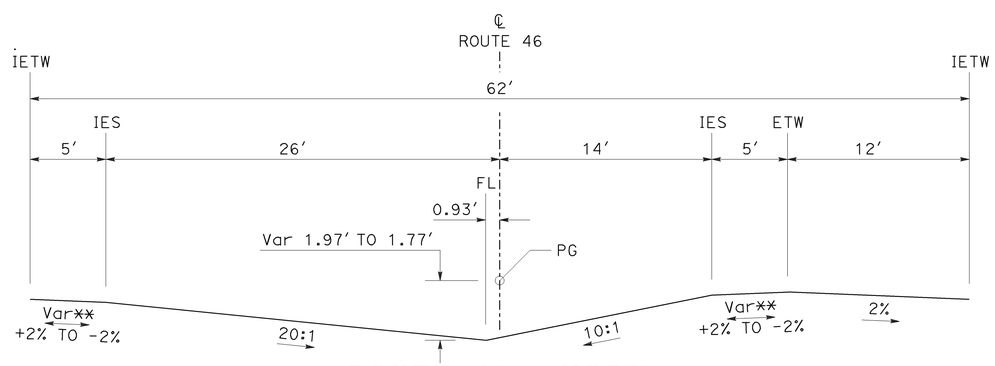

ROUTE 46 - NC50t

Sta 412+72.88 TO Sta 413+38.50 Mirror Sta 437+00.70 TO Sta 437+66.32

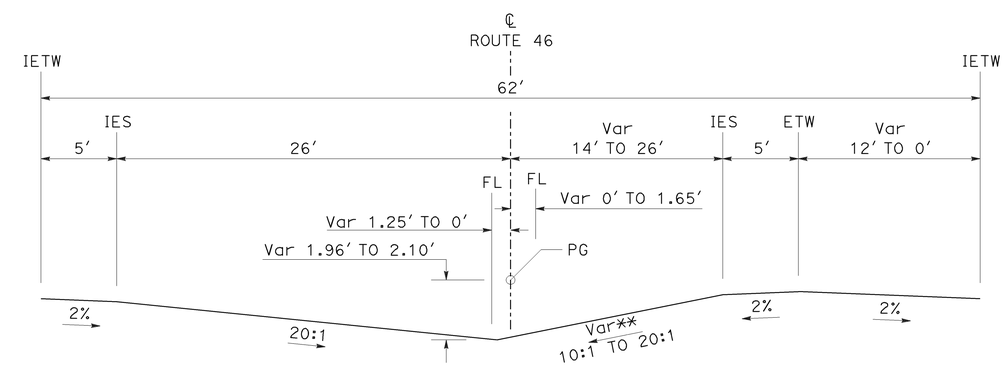

ROUTE 46 - NC50-62

Sta 418+18.42 TO Sta 419+38.42 Mirror Sta 430+83.17 TO Sta 432+03.17
Sta 518+18.89 TO Sta 524+18.89

MEDIAN GRADING

TYPICAL CROSS SECTIONS

NO SCALE

X-14

REVISED BY | DATE REVISED
JOHN CLARKE | JOSE ARGUELLO
CALCULATED-DESIGNED BY | CHECKED BY
FUNCTIONAL SUPERVISOR | JACK WALKER
STATE OF CALIFORNIA - DEPARTMENT OF TRANSPORTATION | 06-DESIGN | Caltrans

LAST REVISION 07-20-09 | DATE PLOTTED => 08-DEC-2009 | TIME PLOTTED => 08:04

Dist	COUNTY	ROUTE	POST MILES TOTAL PROJECT	SHEET No.	TOTAL SHEETS
05	SLO	46	36.6/41.2	16	595

REGISTERED CIVIL ENGINEER DATE 8-24-09

12-7-09
PLANS APPROVAL DATE

REGISTERED PROFESSIONAL ENGINEER JOSE M. ARGUELLO No. 51321 Exp 06-30-10 CIVIL STATE OF CALIFORNIA

THE STATE OF CALIFORNIA OR ITS OFFICERS OR AGENTS SHALL NOT BE RESPONSIBLE FOR THE ACCURACY OR COMPLETENESS OF ELECTRONIC COPIES OF THIS PLAN SHEET.

NOTE:

** SEE NOTE No.14 ON SHEET X-1

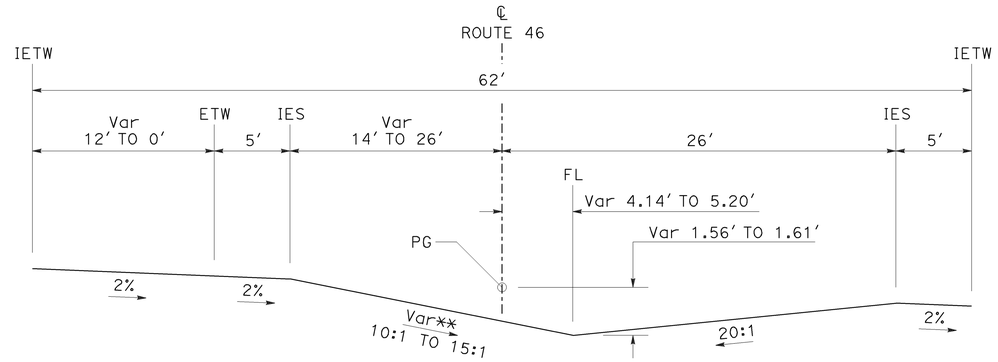

ROUTE 46 - SE62-50l

Sta 464+10.00 TO Sta 465+30.00

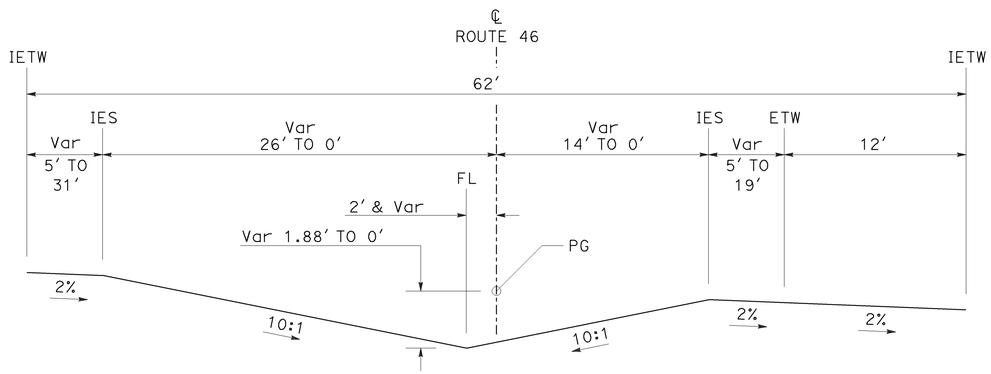

ROUTE 46 - SE50h

Sta 450+38.77 TO Sta 457+23.51

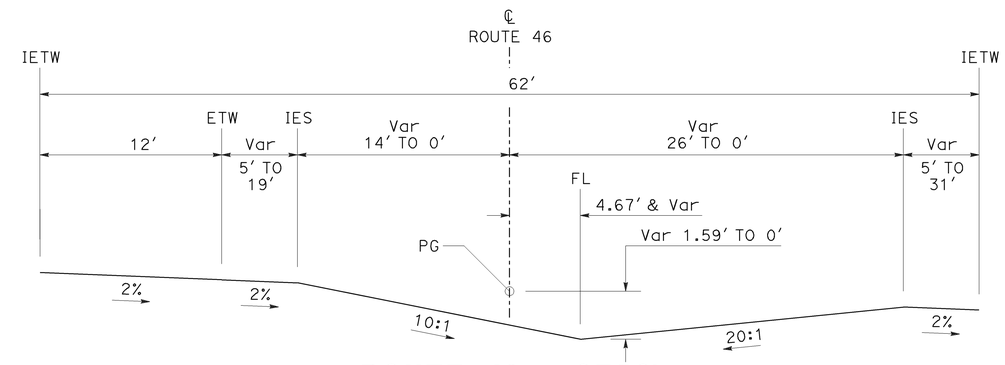

ROUTE 46 - SE50l

Sta 457+23.51 TO Sta 464+10.00

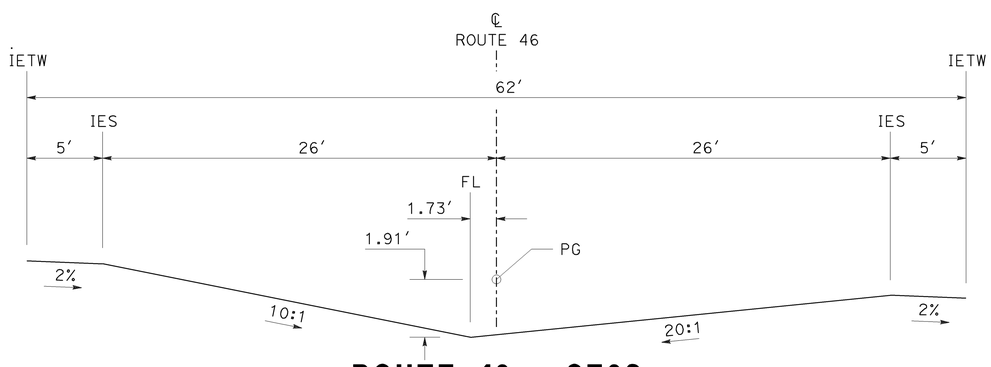

ROUTE 46 - SE62

Sta 447+04.72 TO Sta 449+18.77
Sta 552+60.00 TO Sta 558+78.00
Sta 568+40.50 TO Sta 569+00.00
Sta 531+50.00 TO Sta 549+00.00 Mirror

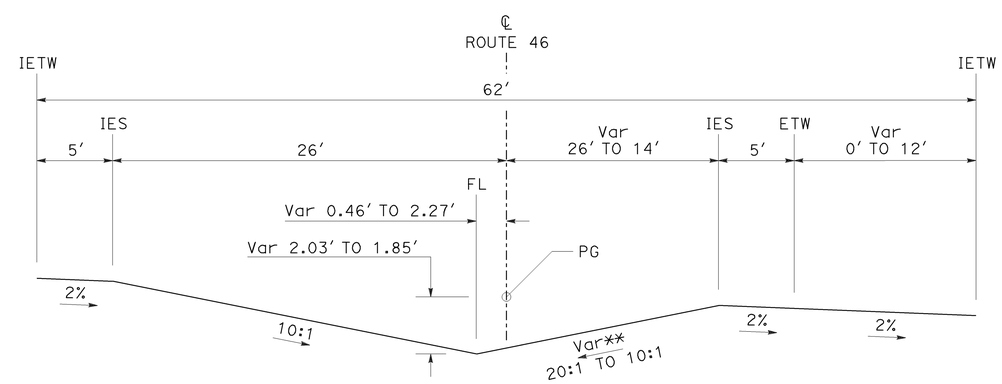

ROUTE 46 - SE62-50h

Sta 449+18.77 TO Sta 450+38.77

MEDIAN GRADING

TYPICAL CROSS SECTIONS

NO SCALE

X-15

STATE OF CALIFORNIA - DEPARTMENT OF TRANSPORTATION
Caltrans
06-DESIGN

FUNCTIONAL SUPERVISOR: JACK WALKER
CALCULATED-DESIGNED BY: JOSE ARGUELLO
CHECKED BY: JOHN CLARKE
REVISED BY
DATE REVISED

LAST REVISION 07-20-09
DATE PLOTTED => 08-DEC-2009
TIME PLOTTED => 08:04

Dist	COUNTY	ROUTE	POST MILES TOTAL PROJECT	SHEET No.	TOTAL SHEETS
05	SLO	46	36.6/41.2	17	595

REGISTERED CIVIL ENGINEER 8-24-09 DATE

12-7-09
PLANS APPROVAL DATE

REGISTERED PROFESSIONAL ENGINEER JOSE M. ARGUELLO No. 51321 Exp 06-30-10 CIVIL STATE OF CALIFORNIA

THE STATE OF CALIFORNIA OR ITS OFFICERS OR AGENTS SHALL NOT BE RESPONSIBLE FOR THE ACCURACY OR COMPLETENESS OF ELECTRONIC COPIES OF THIS PLAN SHEET.

NOTE:
** SEE NOTE No.14 ON SHEET X-1

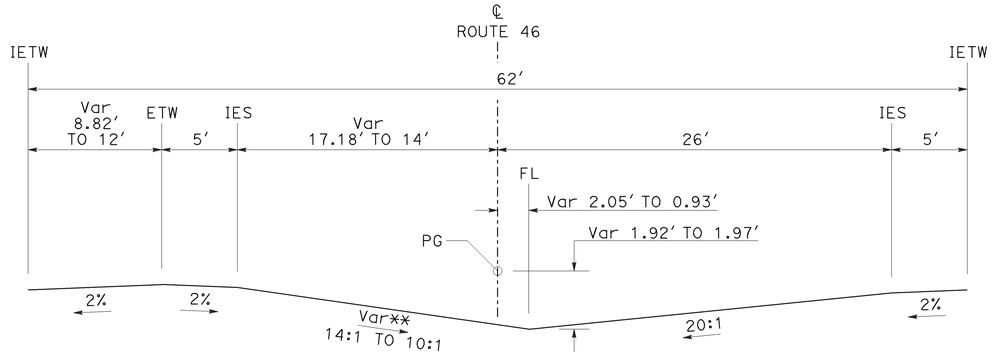

ROUTE 46 - NC53-50
Sta 469+70.77 TO Sta 471+30.00

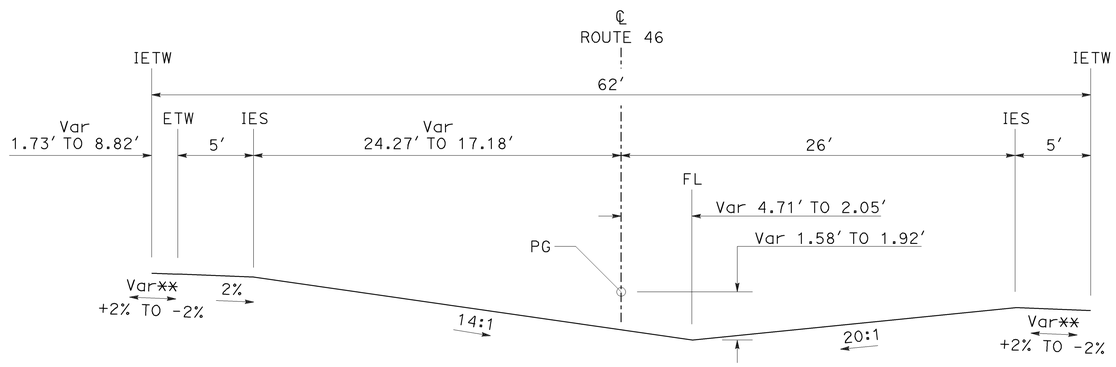

ROUTE 46 - SE60-53ns
Sta 466+16.44 TO Sta 469+70.77

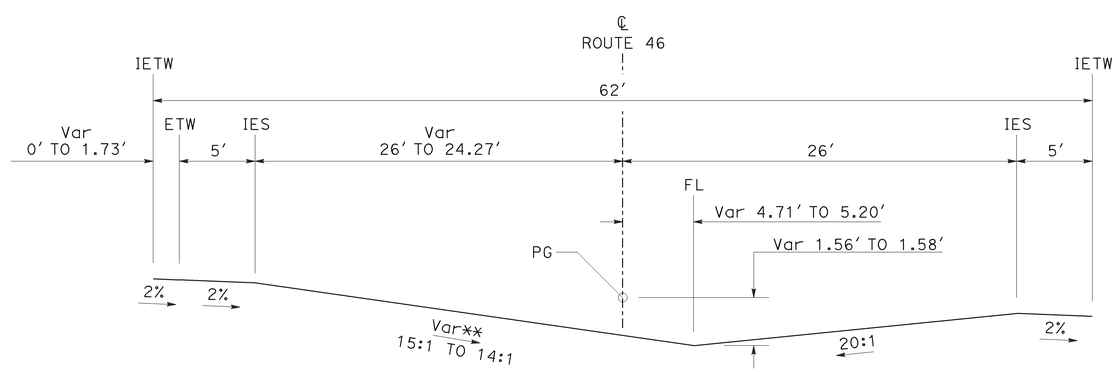

ROUTE 46 - SE62-60
Sta 465+30.00 TO Sta 466+16.44

MEDIAN GRADING

TYPICAL CROSS SECTIONS

NO SCALE

X-16

JOHN CLARKE	REVISED BY
JOSE ARGUELLO	DATE REVISED
CALCULATED-DESIGNED BY	
CHECKED BY	
FUNCTIONAL SUPERVISOR	JACK WALKER
STATE OF CALIFORNIA - DEPARTMENT OF TRANSPORTATION	06-DESIGN
Caltrans	

LAST REVISION 07-20-09 | DATE PLOTTED => 08-DEC-2009 | TIME PLOTTED => 08:04

Dist	COUNTY	ROUTE	POST MILES TOTAL PROJECT	SHEET No.	TOTAL SHEETS
05	SLO	46	36.6/41.2	18	595

REGISTERED CIVIL ENGINEER DATE 8-24-09

PLANS APPROVAL DATE 12-7-09

REGISTERED PROFESSIONAL ENGINEER JOSE M. ARGUELLO No. 51321 Exp 06-30-10 CIVIL STATE OF CALIFORNIA

THE STATE OF CALIFORNIA OR ITS OFFICERS OR AGENTS SHALL NOT BE RESPONSIBLE FOR THE ACCURACY OR COMPLETENESS OF ELECTRONIC COPIES OF THIS PLAN SHEET.

NOTE:

** SEE NOTE No.14 ON SHEET X-1

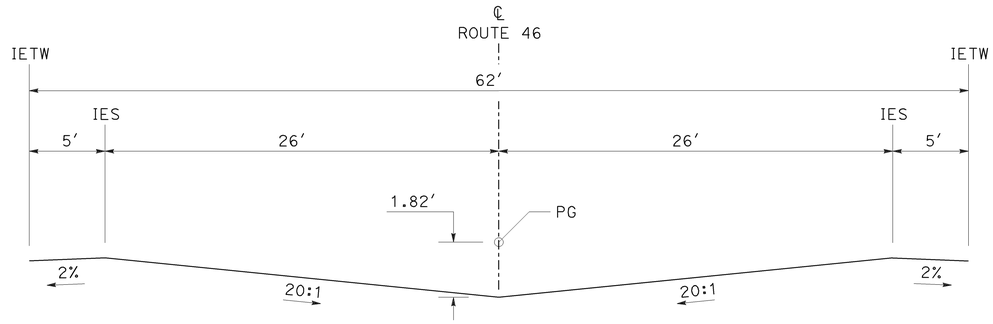

ROUTE 46 - NC62i

Sta 572+60.00 TO Sta 573+27.75

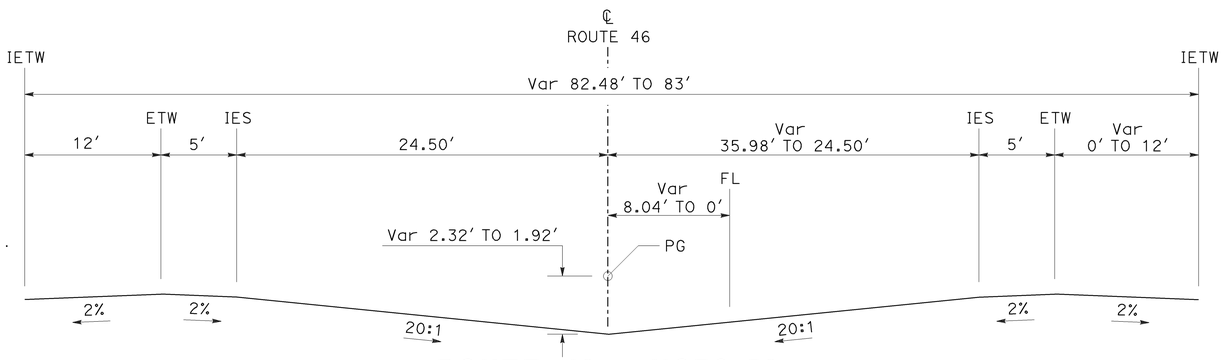

ROUTE 46 - NC70-59

Sta 485+88.49 TO Sta 487+08.49

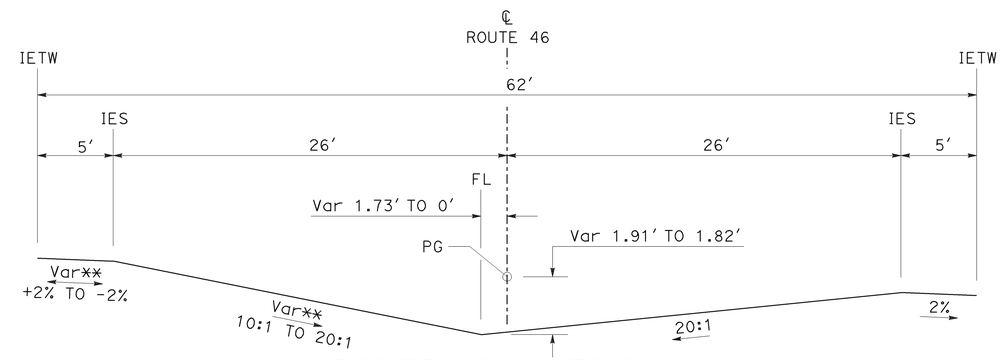

ROUTE 46 - SE62i.ns

Sta 569+00.00 TO Sta 572+60.00

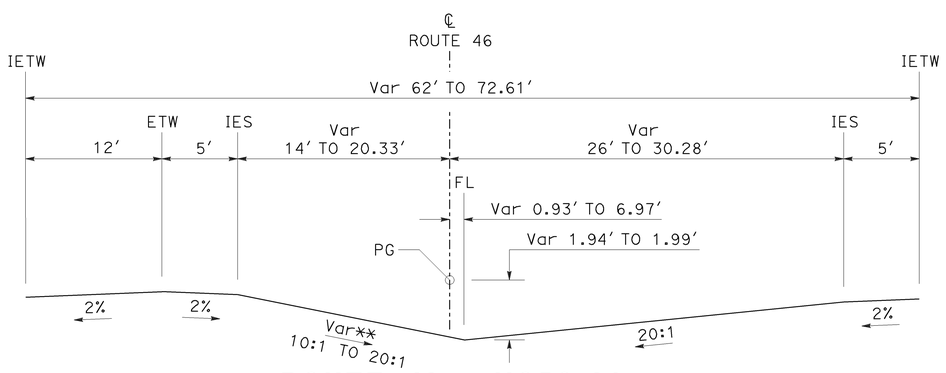

ROUTE 46 - NC50-61

Sta 473+00.76 TO Sta 480+20.88

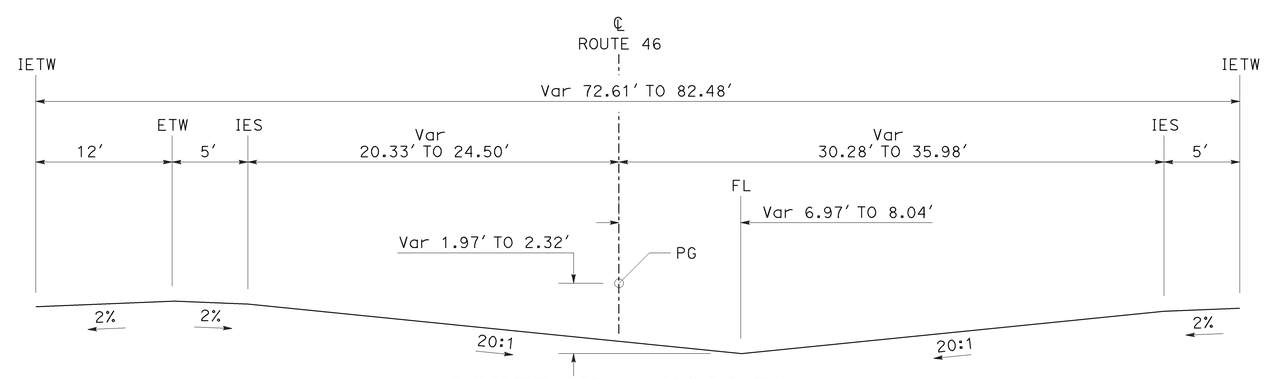

ROUTE 46 - NC61-70

Sta 480+20.88 TO Sta 485+88.49

MEDIAN GRADING

TYPICAL CROSS SECTIONS

NO SCALE

X-17

STATE OF CALIFORNIA - DEPARTMENT OF TRANSPORTATION

Caltrans

06-DESIGN

FUNCTIONAL SUPERVISOR JACK WALKER

CALCULATED-DESIGNED BY JOSE ARGUELLO

CHECKED BY JOHN CLARKE

REVISED BY

DATE REVISED

LAST REVISION 07-20-09

DATE PLOTTED => 08-DEC-2009

TIME PLOTTED => 08:04

Dist	COUNTY	ROUTE	POST MILES TOTAL PROJECT	SHEET No.	TOTAL SHEETS
05	SLO	46	36.6/41.2	19	595

REGISTERED CIVIL ENGINEER DATE 8-24-09

12-7-09
PLANS APPROVAL DATE

REGISTERED PROFESSIONAL ENGINEER JOSE M. ARGUELLO No. 51321 Exp 06-30-10 CIVIL STATE OF CALIFORNIA

THE STATE OF CALIFORNIA OR ITS OFFICERS OR AGENTS SHALL NOT BE RESPONSIBLE FOR THE ACCURACY OR COMPLETENESS OF ELECTRONIC COPIES OF THIS PLAN SHEET.

NOTE:
** SEE NOTE No.14 ON SHEET X-1

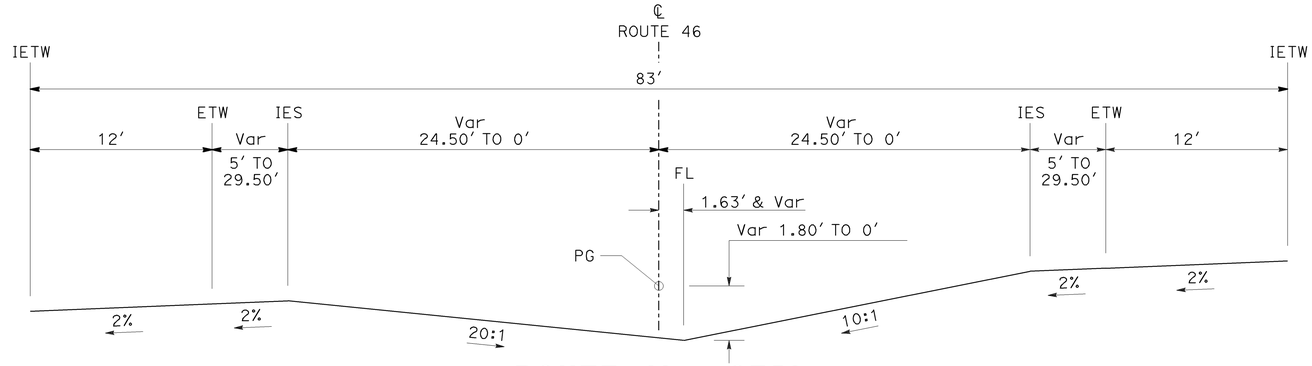

ROUTE 46 - SE59
Sta 492+50.00 TO Sta 500+80.00

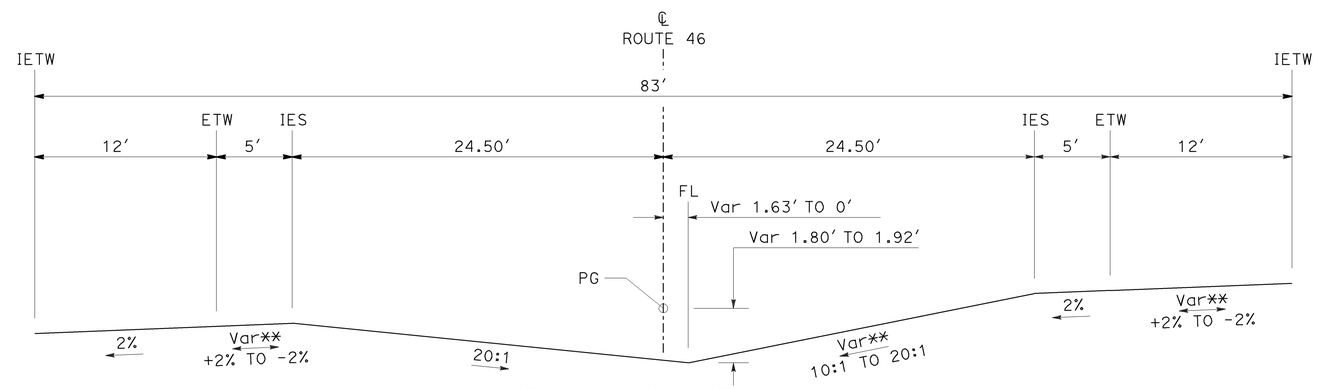

ROUTE 46 - SE59ns
Sta 487+70.00 TO Sta 492+50.00

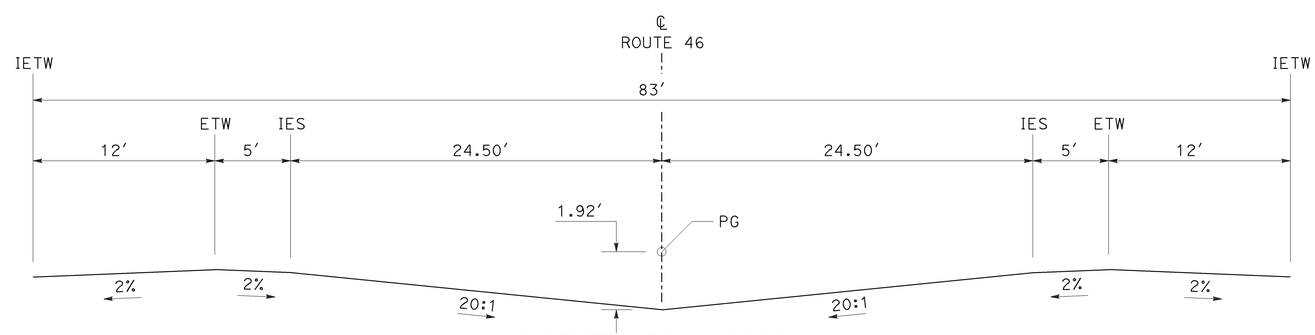

ROUTE 46 - NC59
Sta 487+08.49 TO Sta 487+70.00

MEDIAN GRADING

TYPICAL CROSS SECTIONS

NO SCALE

X-18

STATE OF CALIFORNIA - DEPARTMENT OF TRANSPORTATION
Caltrans
06-DESIGN
FUNCTIONAL SUPERVISOR JACK WALKER
CALCULATED-DESIGNED BY JOHN CLARKE
CHECKED BY JOSE ARGUELLO
REVISED BY
DATE REVISED

LAST REVISION 07-20-09
DATE PLOTTED => 08-DEC-2009
TIME PLOTTED => 08:04

Dist	COUNTY	ROUTE	POST MILES TOTAL PROJECT	SHEET No.	TOTAL SHEETS
05	SLO	46	36.6/41.2	20	595

REGISTERED CIVIL ENGINEER DATE 8-24-09

12-7-09
PLANS APPROVAL DATE

REGISTERED PROFESSIONAL ENGINEER JOSE M. ARGUELLO No. 51321 Exp 06-30-10 CIVIL STATE OF CALIFORNIA

THE STATE OF CALIFORNIA OR ITS OFFICERS OR AGENTS SHALL NOT BE RESPONSIBLE FOR THE ACCURACY OR COMPLETENESS OF ELECTRONIC COPIES OF THIS PLAN SHEET.

NOTE:

** SEE NOTE No.14 ON SHEET X-1

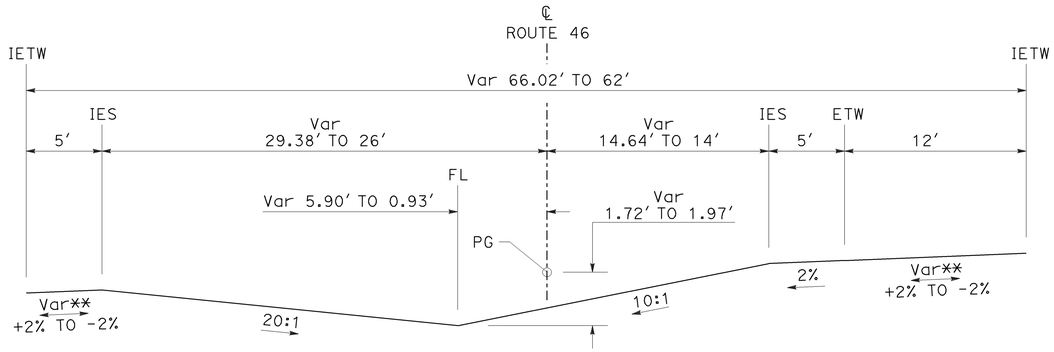

ROUTE 46 - SE54-50ns

Sta 510+50.00 TO Sta 515+30.00

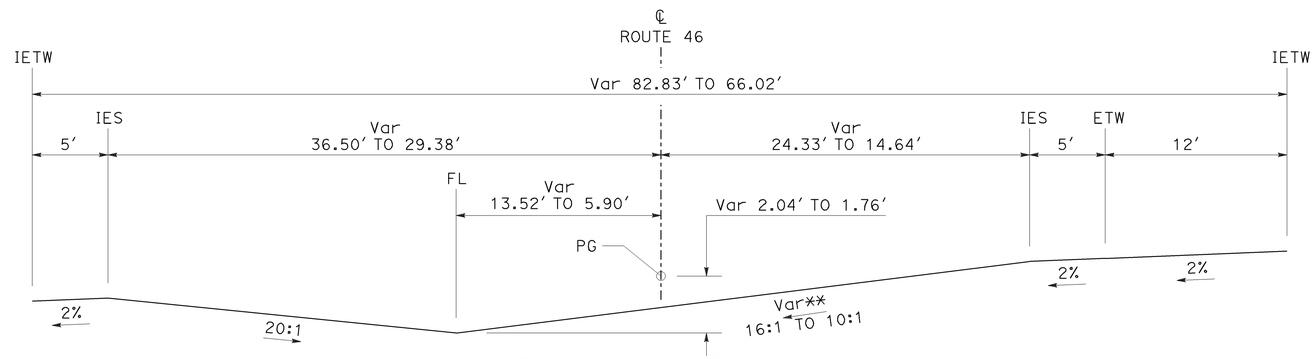

ROUTE 46 - SE71-54

Sta 502+00.00 TO Sta 510+50.00

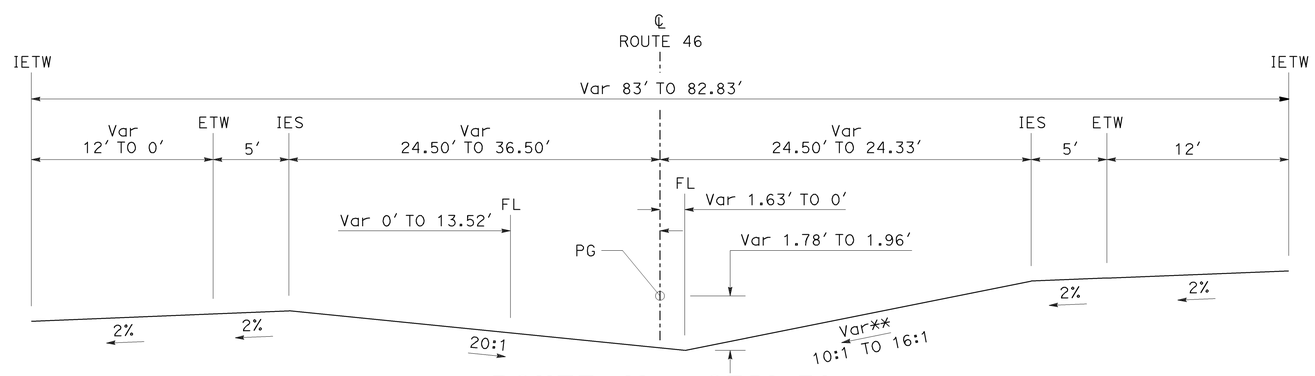

ROUTE 46 - SE59-71

Sta 500+80.00 TO Sta 502+00.00

MEDIAN GRADING

TYPICAL CROSS SECTIONS

NO SCALE

X-19

STATE OF CALIFORNIA - DEPARTMENT OF TRANSPORTATION
Caltrans
06-DESIGN

FUNCTIONAL SUPERVISOR: JACK WALKER

CALCULATED-DESIGNED BY: JOSE ARGUELLO
CHECKED BY: JOHN CLARKE

REVISED BY
DATE REVISED

LAST REVISION DATE PLOTTED => 08-DEC-2009
07-20-09 TIME PLOTTED => 08:04

Dist	COUNTY	ROUTE	POST MILES TOTAL PROJECT	SHEET No.	TOTAL SHEETS
05	SLO	46	36.6/41.2	21	595

REGISTERED CIVIL ENGINEER DATE 8-24-09

12-7-09
PLANS APPROVAL DATE

REGISTERED PROFESSIONAL ENGINEER JOSE M. ARGUELLO No. 51321 Exp 06-30-10 CIVIL STATE OF CALIFORNIA

THE STATE OF CALIFORNIA OR ITS OFFICERS OR AGENTS SHALL NOT BE RESPONSIBLE FOR THE ACCURACY OR COMPLETENESS OF ELECTRONIC COPIES OF THIS PLAN SHEET.

NOTE:

** SEE NOTE No.14 ON SHEET X-1

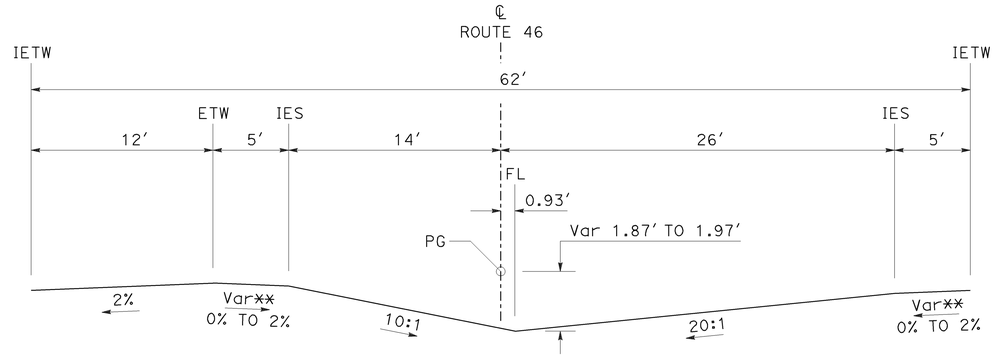

ROUTE 46 - NC50z

Sta 579+28.07 TO Sta 580+70.00

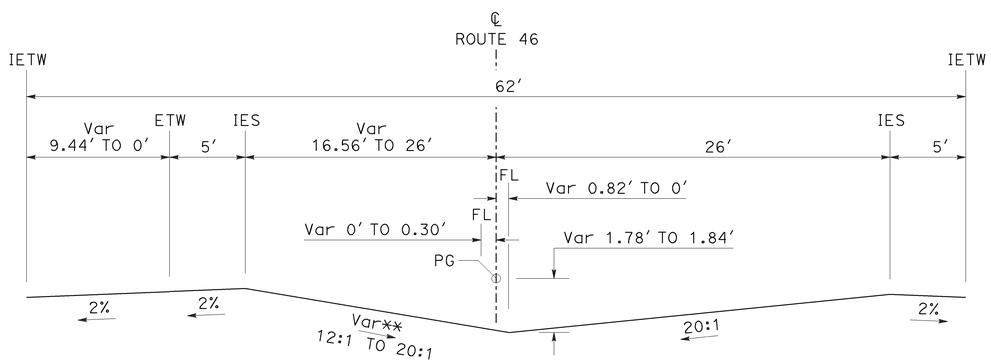

ROUTE 46 - NC62-53

Sta 573+27.75 TO Sta 578+00.00

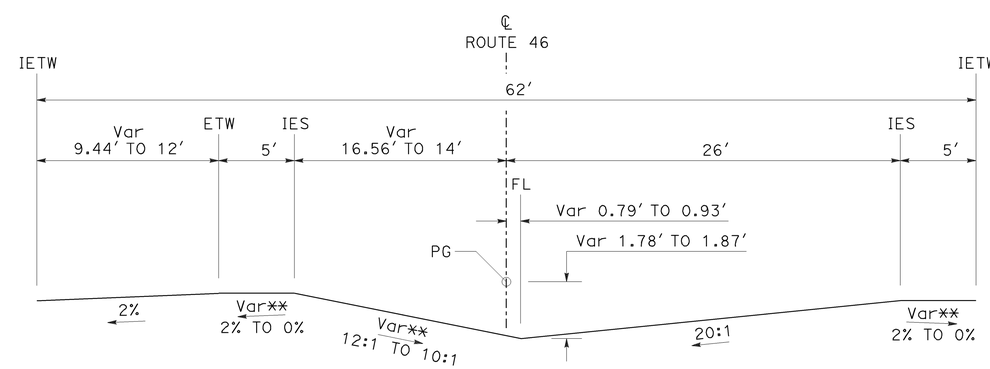

ROUTE 46 - NC53t-50z

Sta 578+00.00 TO Sta 579+28.07

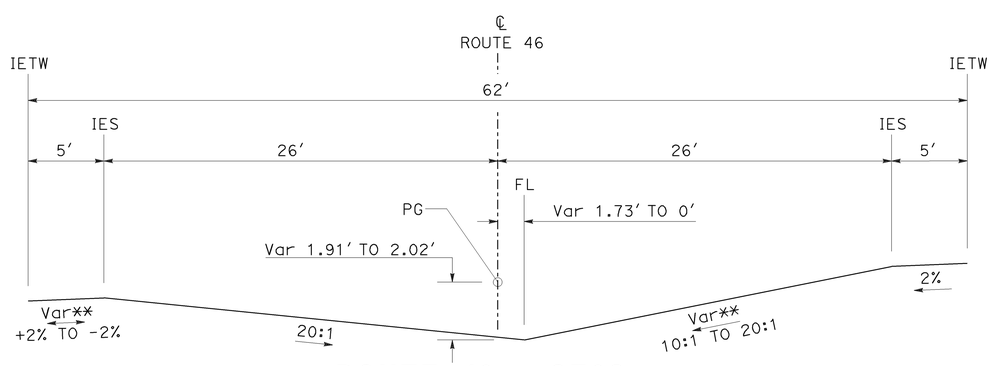

ROUTE 46 - SE62ns

Sta 527+90.00 TO Sta 531+50.00

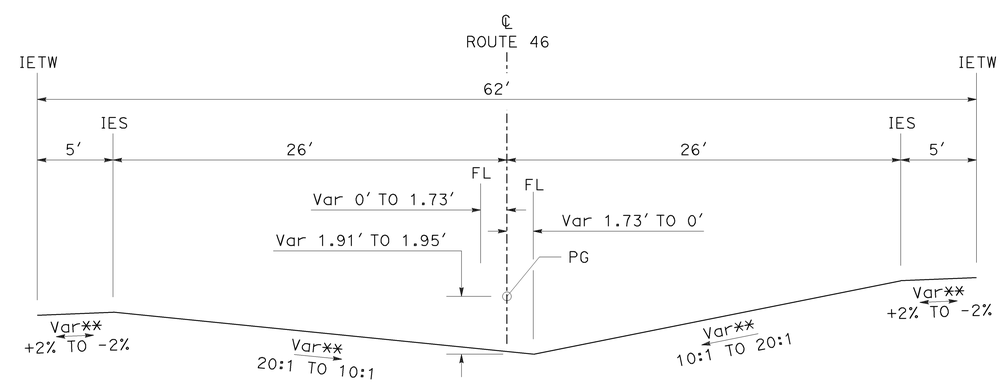

ROUTE 46 - SE62ss

Sta 549+00.00 TO Sta 552+60.00

MEDIAN GRADING

TYPICAL CROSS SECTIONS

NO SCALE

X-20

STATE OF CALIFORNIA - DEPARTMENT OF TRANSPORTATION

Caltrans

06-DESIGN

FUNCTIONAL SUPERVISOR: JACK WALKER

CALCULATED-DESIGNED BY: JOHN CLARKE

CHECKED BY: JOSE ARGUELLO

REVISED BY

DATE REVISED

LAST REVISION 07-20-09

DATE PLOTTED => 08-DEC-2009

TIME PLOTTED => 08:04

Dist	COUNTY	ROUTE	POST MILES TOTAL PROJECT	SHEET No.	TOTAL SHEETS
05	SLO	46	36.6/41.2	22	595

REGISTERED CIVIL ENGINEER DATE 8-24-09

PLANS APPROVAL DATE 12-7-09

REGISTERED PROFESSIONAL ENGINEER JOSE M. ARGUELLO No. 51321 Exp. 06-30-10 CIVIL STATE OF CALIFORNIA

THE STATE OF CALIFORNIA OR ITS OFFICERS OR AGENTS SHALL NOT BE RESPONSIBLE FOR THE ACCURACY OR COMPLETENESS OF ELECTRONIC COPIES OF THIS PLAN SHEET.

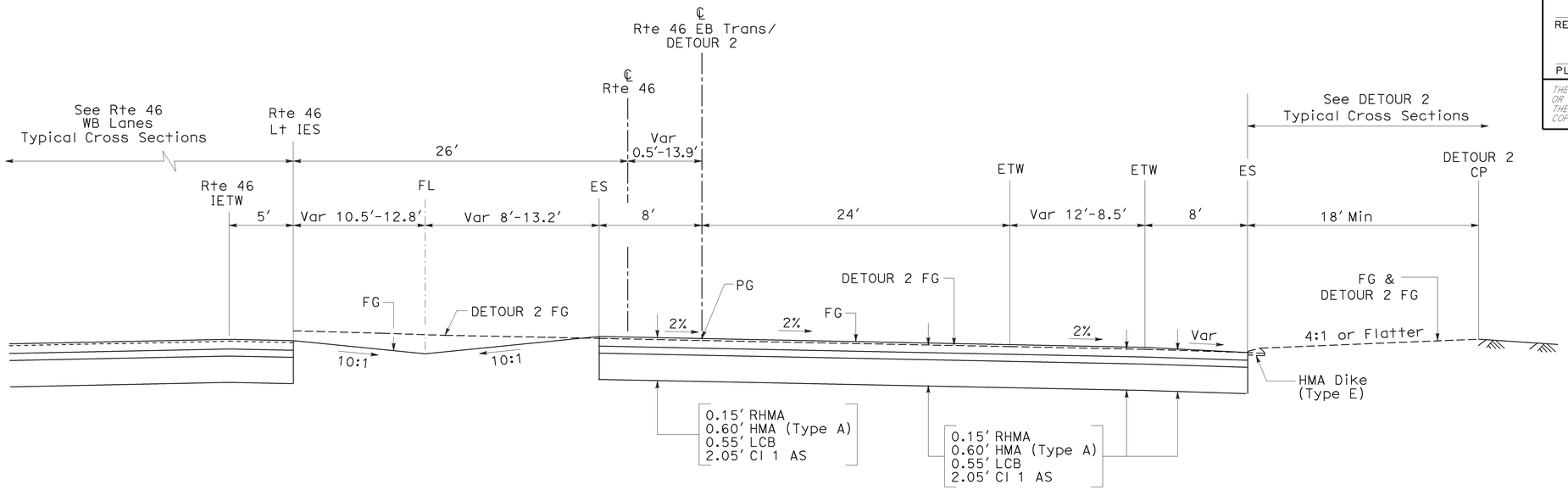

ROUTE 46 EB Trans

Sta 615+22.35 TO Sta 618+00.00

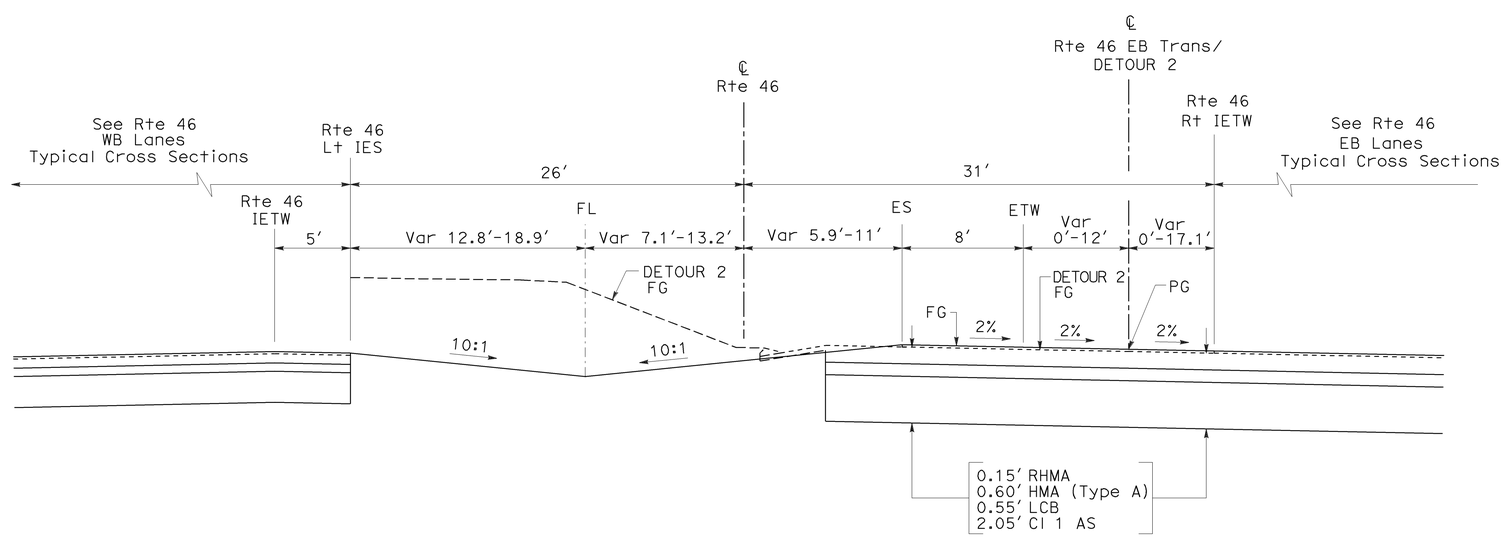

ROUTE 46 EB Trans

Sta 607+04.16 TO Sta 615+22.35

TYPICAL CROSS SECTIONS

NO SCALE

X-21

STATE OF CALIFORNIA - DEPARTMENT OF TRANSPORTATION

Caltrans

06-DESIGN

FUNCTIONAL SUPERVISOR: JACK WALKER

CALCULATED-DESIGNED BY: JOSE ARGUELLO

CHECKED BY: SUMI HOODE

REVISED BY | DATE REVISED

LAST REVISION 05-27-09

DATE PLOTTED => 08-DEC-2009

TIME PLOTTED => 08:05

Dist	COUNTY	ROUTE	POST MILES TOTAL PROJECT	SHEET No.	TOTAL SHEETS
05	SLO	46	36.6/41.2	23	595

REGISTERED CIVIL ENGINEER DATE 8-24-09

PLANS APPROVAL DATE 12-7-09

REGISTERED PROFESSIONAL ENGINEER JOSE M. ARGUELLO No. 51321 Exp 06-30-10 CIVIL STATE OF CALIFORNIA

THE STATE OF CALIFORNIA OR ITS OFFICERS OR AGENTS SHALL NOT BE RESPONSIBLE FOR THE ACCURACY OR COMPLETENESS OF ELECTRONIC COPIES OF THIS PLAN SHEET.

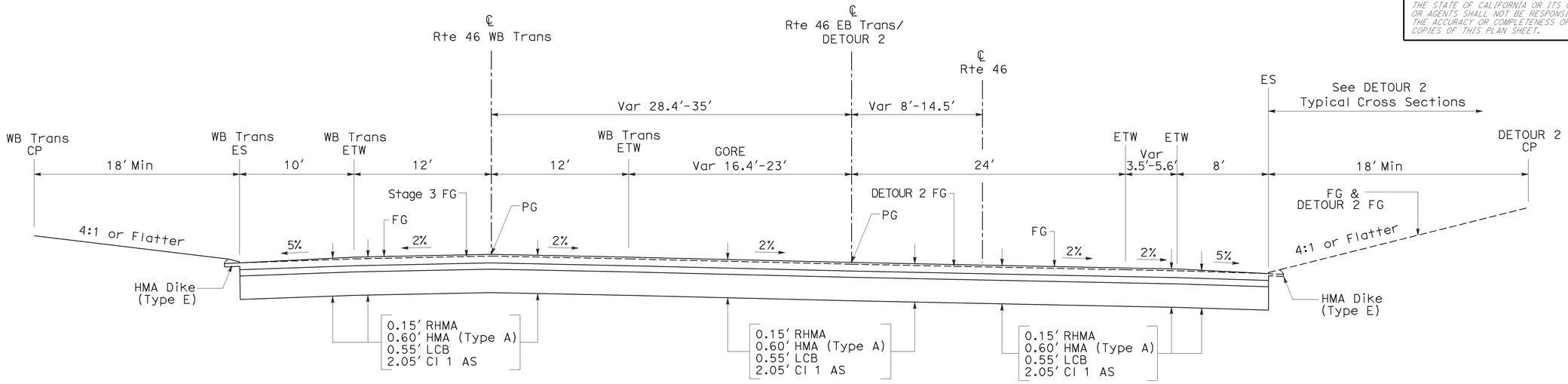

ROUTE 46 WB Trans
Sta 619+43.85 TO Sta 620+50.00

ROUTE 46 EB Trans
Sta 619+43.52 TO Sta 620+50.50

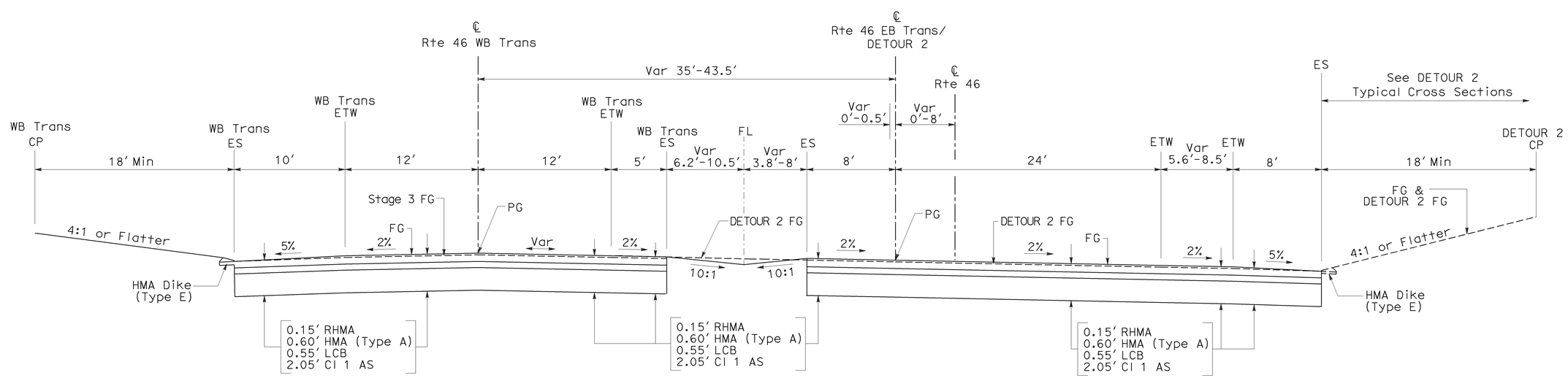

ROUTE 46 WB Trans
Sta 618+00.00 TO Sta 619+43.85

ROUTE 46 EB Trans
Sta 618+00.00 TO Sta 619+43.52

TYPICAL CROSS SECTIONS

NO SCALE **X-22**

STATE OF CALIFORNIA - DEPARTMENT OF TRANSPORTATION
Caltrans 06-DESIGN
FUNCTIONAL SUPERVISOR JACK WALKER
CALCULATED-DESIGNED BY JOSE ARGUELLO
CHECKED BY SUMI HOODE
REVISED BY
DATE REVISED

LAST REVISION 05-18-09
DATE PLOTTED => 08-DEC-2009
TIME PLOTTED => 08:05

Dist	COUNTY	ROUTE	POST MILES TOTAL PROJECT	SHEET No.	TOTAL SHEETS
05	SLO	46	36.6/41.2	24	595

REGISTERED CIVIL ENGINEER DATE 8-24-09

12-7-09
PLANS APPROVAL DATE

REGISTERED PROFESSIONAL ENGINEER JOSE M. ARGUELLO No. 51321 Exp. 06-30-10 CIVIL STATE OF CALIFORNIA

THE STATE OF CALIFORNIA OR ITS OFFICERS OR AGENTS SHALL NOT BE RESPONSIBLE FOR THE ACCURACY OR COMPLETENESS OF ELECTRONIC COPIES OF THIS PLAN SHEET.

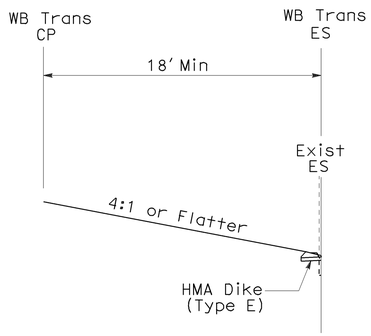

Sta 624+00.00 TO Sta 625+75.00

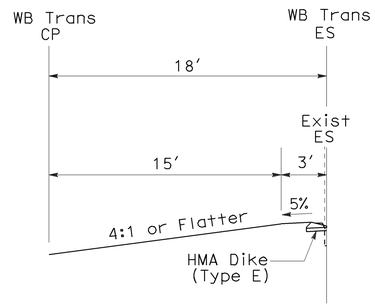

Sta 625+75.00 TO Sta 627+59.45

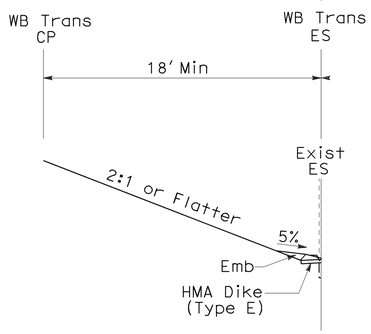

Sta 620+49.50 TO Sta 624+00.00

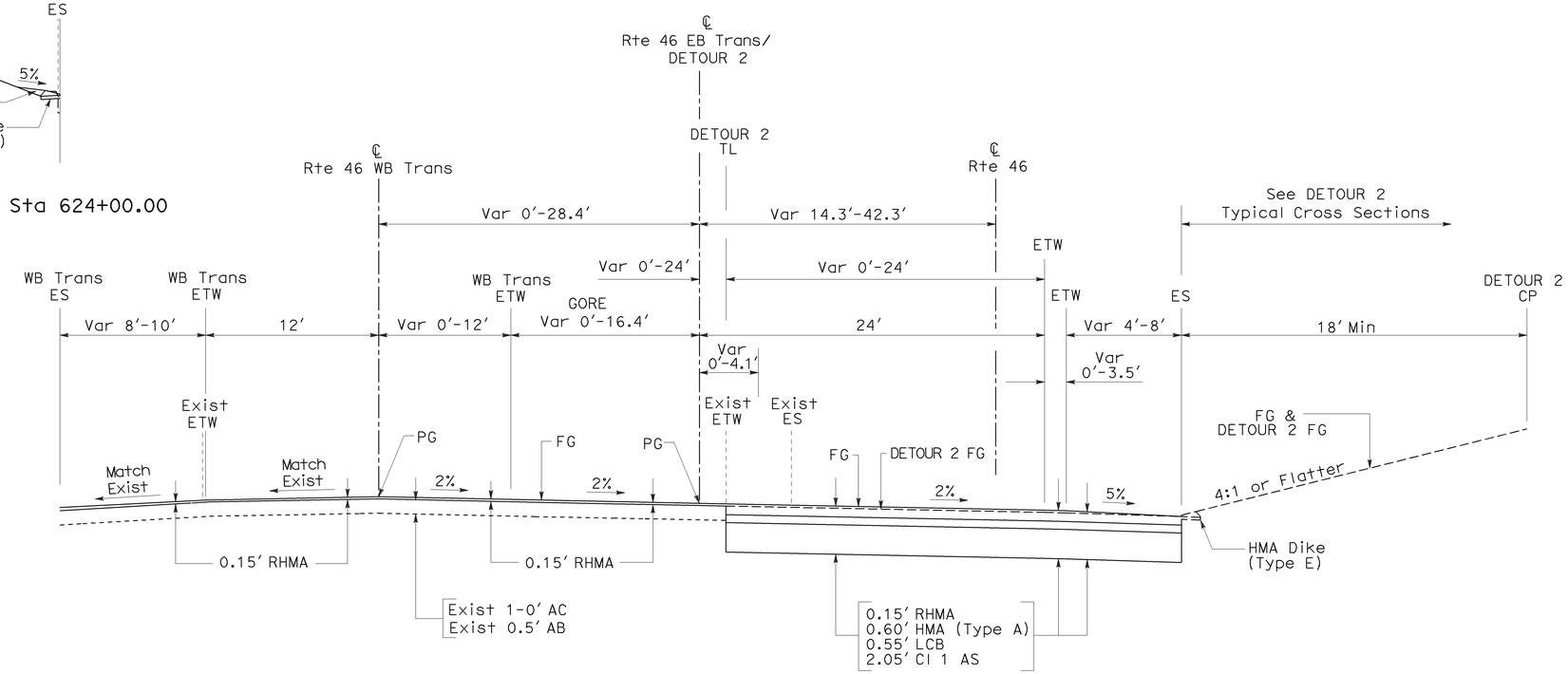

ROUTE 46 WB Trans
Sta 620+49.50 TO Sta 627+59.45

ROUTE 46 EB Trans
Sta 620+50.00 TO Sta 627+58.92

TYPICAL CROSS SECTIONS

NO SCALE

X-23

STATE OF CALIFORNIA - DEPARTMENT OF TRANSPORTATION
Caltrans
06-DESIGN
FUNCTIONAL SUPERVISOR: JACK WALKER
CALCULATED-DESIGNED BY: JOSE ARGUELLO
CHECKED BY: SUMI HOODE
REVISED BY
DATE REVISED

LAST REVISION 05-29-09 | DATE PLOTTED => 08-DEC-2009 | TIME PLOTTED => 08:05

Dist	COUNTY	ROUTE	POST MILES TOTAL PROJECT	SHEET No.	TOTAL SHEETS
05	SLO	46	36.6/41.2	25	595

REGISTERED CIVIL ENGINEER DATE 8-24-09

PLANS APPROVAL DATE 12-7-09

REGISTERED PROFESSIONAL ENGINEER JOSE M. ARGUELLO No. 51321 Exp. 06-30-10 CIVIL STATE OF CALIFORNIA

THE STATE OF CALIFORNIA OR ITS OFFICERS OR AGENTS SHALL NOT BE RESPONSIBLE FOR THE ACCURACY OR COMPLETENESS OF ELECTRONIC COPIES OF THIS PLAN SHEET.

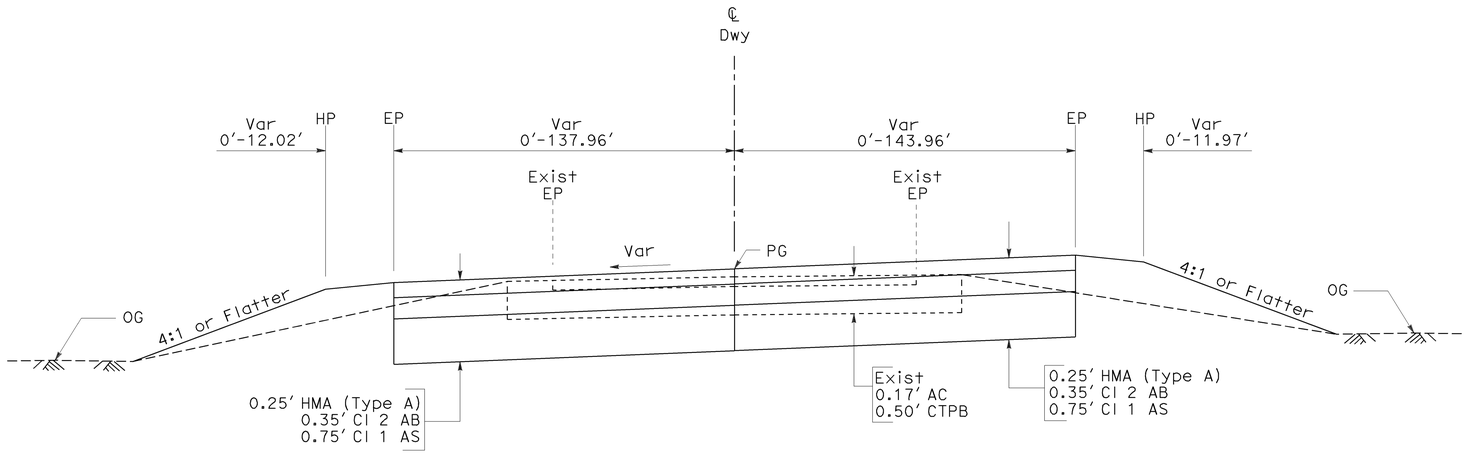

PAVED DRIVEWAYS

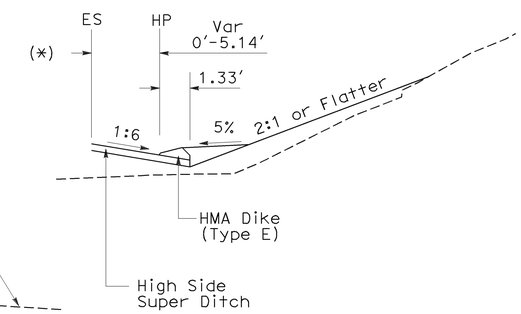

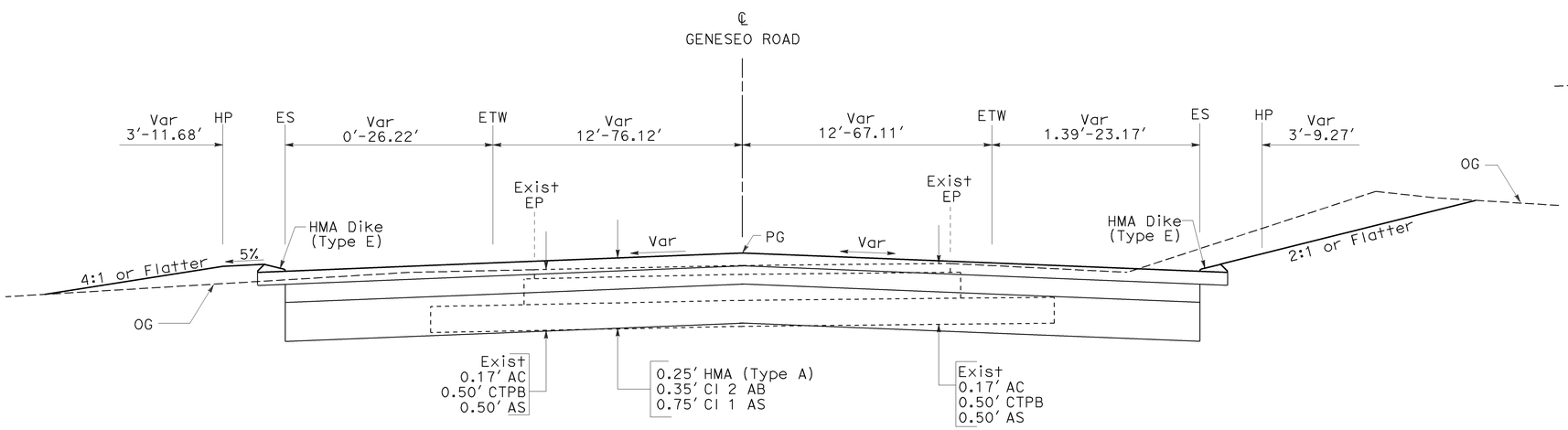

GENESEO ROAD

Sta 8+27.43 TO Sta 9+70.00

(*)Sta 9+70.00 TO Sta 10+50.03

TYPICAL CROSS SECTIONS

NO SCALE

X-24

STATE OF CALIFORNIA - DEPARTMENT OF TRANSPORTATION

Caltrans

06-DESIGN

FUNCTIONAL SUPERVISOR: JACK WALKER

CALCULATED-DESIGNED BY: JOSE ARGUELLO

CHECKED BY: JOSE BAUTISTA

REVISED BY

DATE REVISED

LAST REVISION 08-13-09

DATE PLOTTED => 08-DEC-2009

TIME PLOTTED => 08:05

Dist	COUNTY	ROUTE	POST MILES TOTAL PROJECT	SHEET No.	TOTAL SHEETS
05	SLO	46	36.6/41.2	26	595

REGISTERED CIVIL ENGINEER DATE 8-24-09

PLANS APPROVAL DATE 12-7-09

REGISTERED PROFESSIONAL ENGINEER JOSE M. ARGUELLO No. 51321 Exp. 06-30-10 CIVIL STATE OF CALIFORNIA

THE STATE OF CALIFORNIA OR ITS OFFICERS OR AGENTS SHALL NOT BE RESPONSIBLE FOR THE ACCURACY OR COMPLETENESS OF ELECTRONIC COPIES OF THIS PLAN SHEET.

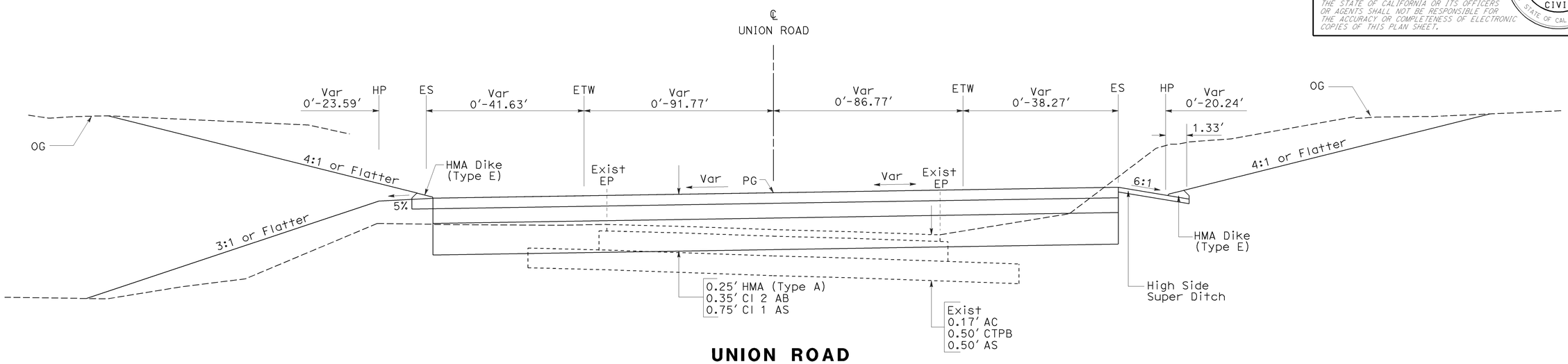

UNION ROAD

Sta 178+50.00 TO Sta 179+85.77
Sta 181+42.85 TO Sta 183+00.00

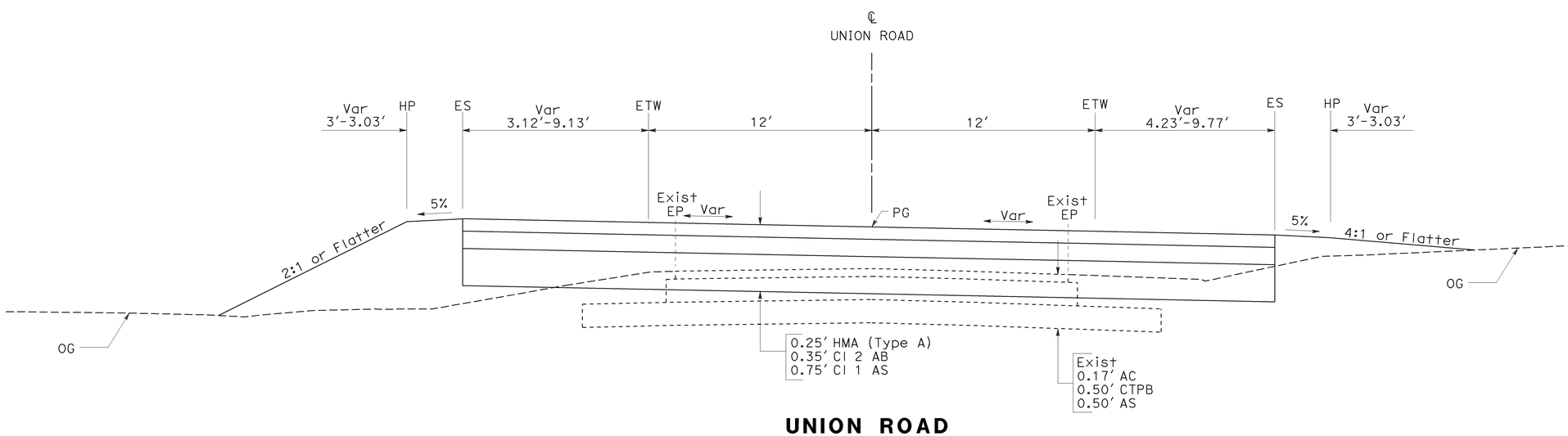

UNION ROAD

Sta 178+00.00 TO Sta 178+50.00
Sta 183+00.00 TO Sta 184+50.00

TYPICAL CROSS SECTIONS

NO SCALE

X-25

REVISED BY	DATE REVISED

CALCULATED-DESIGNED BY	CHECKED BY
JOSE ARGUELLO	JOSE BAUTISTA

FUNCTIONAL SUPERVISOR: JACK WALKER

STATE OF CALIFORNIA - DEPARTMENT OF TRANSPORTATION
Caltrans 06-DESIGN

LAST REVISION 08-13-09 | DATE PLOTTED => 08-DEC-2009 | TIME PLOTTED => 08:05

Dist	COUNTY	ROUTE	POST MILES TOTAL PROJECT	SHEET No.	TOTAL SHEETS
05	SLO	46	36.6/41.2	27	595

REGISTERED CIVIL ENGINEER DATE 8-24-09

PLANS APPROVAL DATE 12-7-09

REGISTERED PROFESSIONAL ENGINEER JOSE M. ARGUELLO No. 51321 Exp. 06-30-10 CIVIL STATE OF CALIFORNIA

THE STATE OF CALIFORNIA OR ITS OFFICERS OR AGENTS SHALL NOT BE RESPONSIBLE FOR THE ACCURACY OR COMPLETENESS OF ELECTRONIC COPIES OF THIS PLAN SHEET.

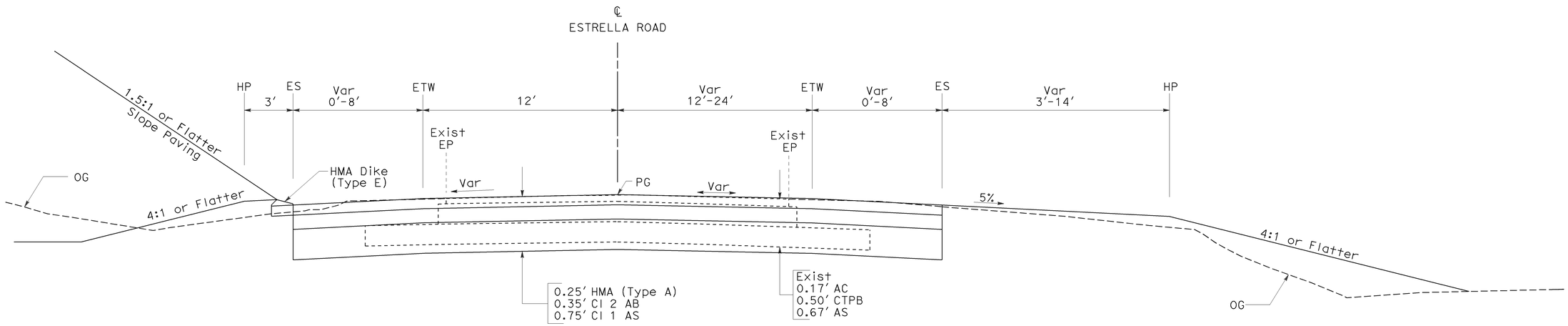

ESTRELLA ROAD

Sta 7+34.83 TO Sta 11+70.00

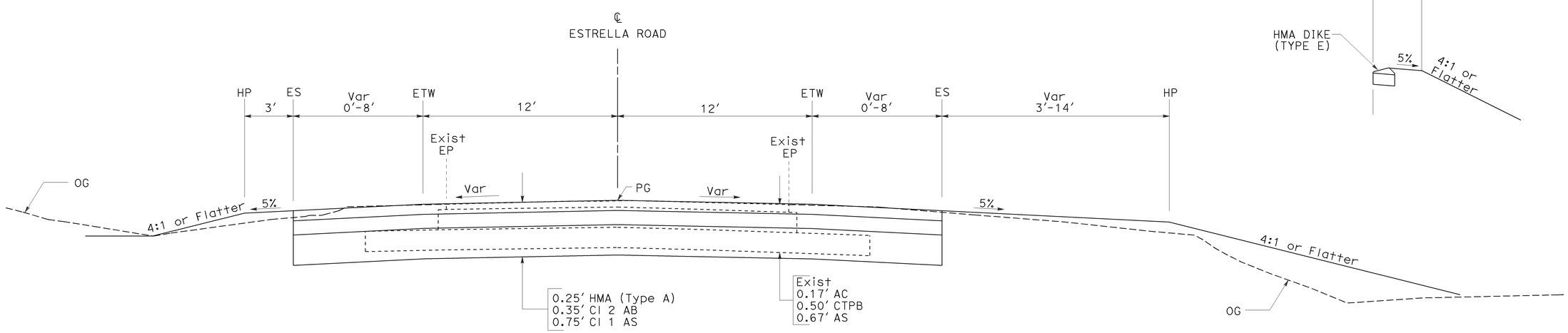

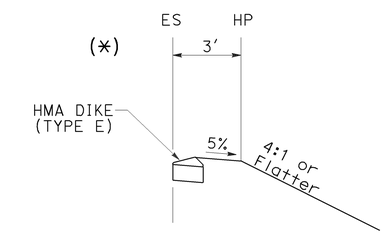

ESTRELLA ROAD

Sta 16+00.00 TO Sta 16+19.74
(*) Sta 13+70.00 TO Sta 16+00.00
Sta 11+70.00 TO Sta 13+70.00
Sta 7+12.26 TO Sta 7+34.83

TYPICAL CROSS SECTIONS

NO SCALE

X-26

STATE OF CALIFORNIA - DEPARTMENT OF TRANSPORTATION
Caltrans
06-DESIGN
FUNCTIONAL SUPERVISOR: JACK WALKER
CALCULATED-DESIGNED BY: JOSE ARGUELLO
CHECKED BY: JOSE BAUTISTA
REVISED BY
DATE REVISED

LAST REVISION 08-13-09
DATE PLOTTED => 08-DEC-2009
TIME PLOTTED => 08:05

Dist	COUNTY	ROUTE	POST MILES TOTAL PROJECT	SHEET No.	TOTAL SHEETS
05	SLO	46	36.6/41.2	28	595

REGISTERED CIVIL ENGINEER DATE 8-24-09

PLANS APPROVAL DATE 12-7-09

REGISTERED PROFESSIONAL ENGINEER JOSE M. ARGUELLO No. 51321 Exp. 06-30-10 CIVIL STATE OF CALIFORNIA

THE STATE OF CALIFORNIA OR ITS OFFICERS OR AGENTS SHALL NOT BE RESPONSIBLE FOR THE ACCURACY OR COMPLETENESS OF ELECTRONIC COPIES OF THIS PLAN SHEET.

N WHITLEY GARDENS DRIVE

LOCATION	HP TYPE
Sta 10+45.36 TO Sta 10+50.58	TYPE-1
Sta 10+50.58 TO Sta 11+22.00	TYPE-2
Sta 11+22.00 TO Sta 12+60	TYPE-3
Sta 12+60 TO Sta 13+60	TYPE-4
Sta 13+60 TO Sta 15+75	TYPE-3
Sta 15+75 TO Sta 18+20.00	TYPE-5
Sta 18+20.00 TO Sta 18+78.65	TYPE-3
Sta 10+46.87 TO Sta 13+32.76	TYPE-6
Sta 13+32.76 TO Sta 13+50.00	TYPE-7
Sta 13+50.00 TO Sta 16+54.30	TYPE-8
Sta 16+54.30 TO Sta 17+00.00	TYPE-9
Sta 17+00.00 TO Sta 17+30.00	TYPE-10

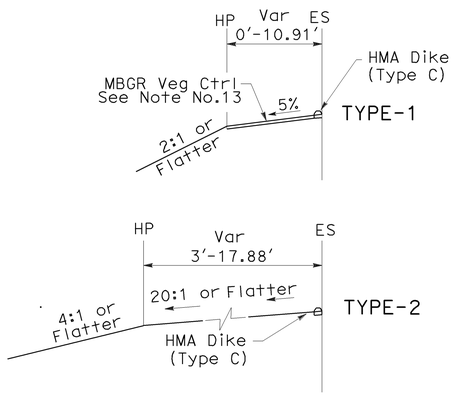

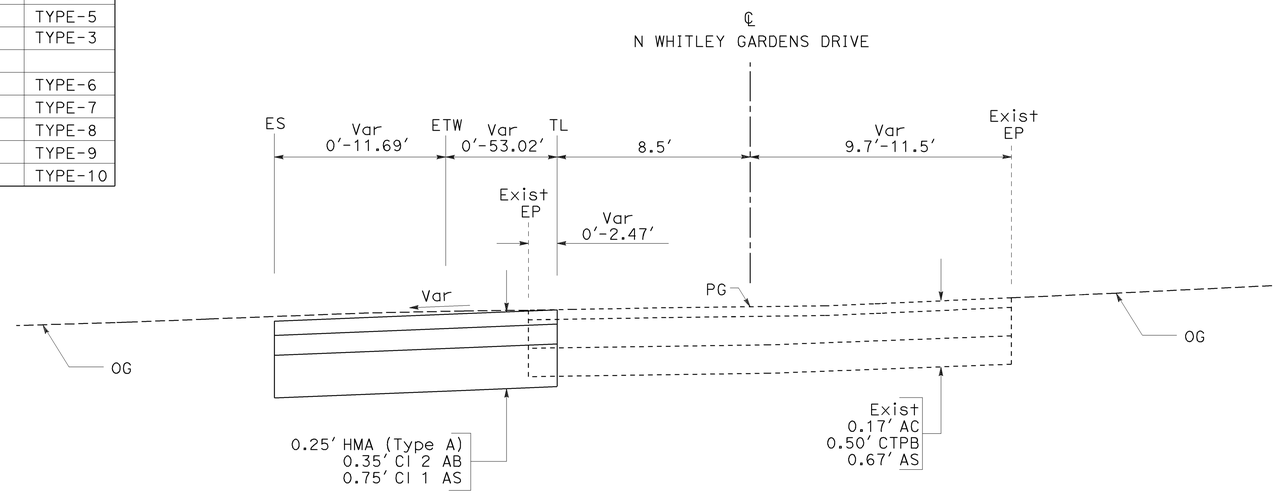

N WHITLEY GARDENS DRIVE

Sta 17+30.00 TO Sta 18+67.93

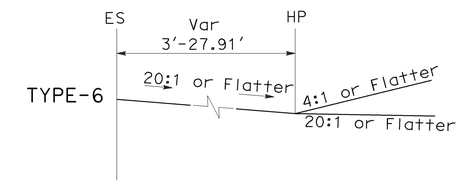

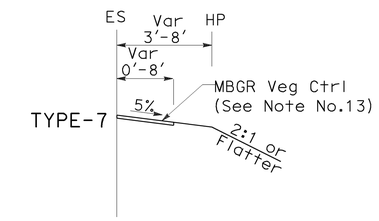

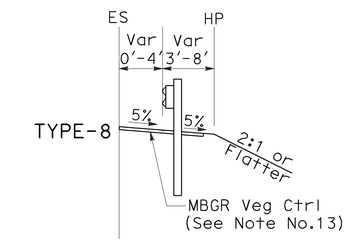

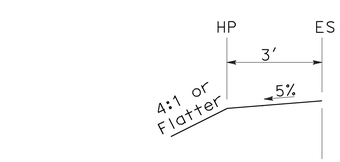

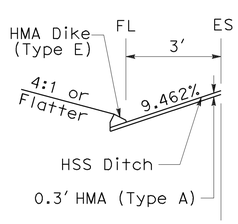

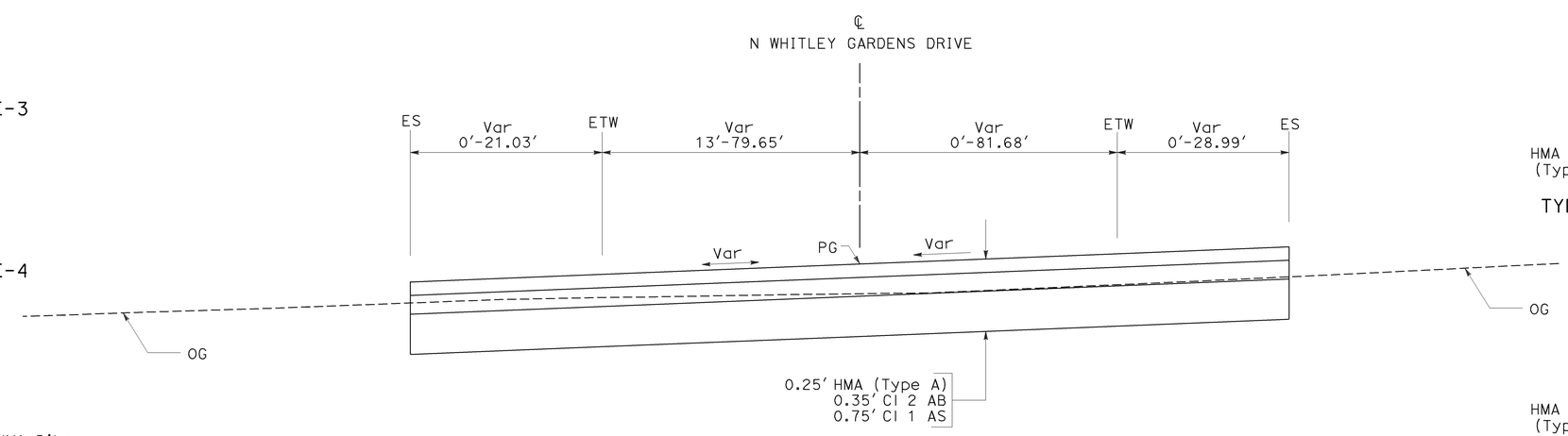

N WHITLEY GARDENS DRIVE

Sta 10+37.14 TO Sta 17+30.00

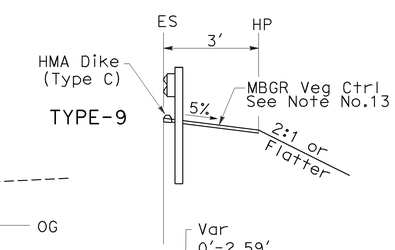

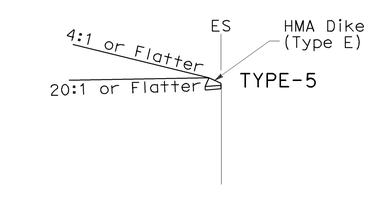

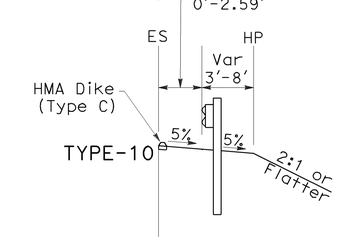

TYPICAL CROSS SECTIONS

NO SCALE

X-27

STATE OF CALIFORNIA - DEPARTMENT OF TRANSPORTATION

Caltrans 06-DESIGN

FUNCTIONAL SUPERVISOR JACK WALKER

CALCULATED-DESIGNED BY JOSE ARGUELLO

CHECKED BY JOSE BAUTISTA

REVISED BY

DATE REVISED

LAST REVISION 08-13-09

DATE PLOTTED => 08-DEC-2009

TIME PLOTTED => 08:05

Dist	COUNTY	ROUTE	POST MILES TOTAL PROJECT	SHEET No.	TOTAL SHEETS
05	SLO	46	36.6/41.2	29	595

REGISTERED CIVIL ENGINEER DATE 8-24-09

PLANS APPROVAL DATE 12-7-09

REGISTERED PROFESSIONAL ENGINEER JOSE M. ARGUELLO No. 51321 Exp. 06-30-10 CIVIL STATE OF CALIFORNIA

THE STATE OF CALIFORNIA OR ITS OFFICERS OR AGENTS SHALL NOT BE RESPONSIBLE FOR THE ACCURACY OR COMPLETENESS OF ELECTRONIC COPIES OF THIS PLAN SHEET.

FR-1

LOCATION	HP TYPE
Sta 65+92.58 TO Sta 66+51.20	TYPE-1
Sta 66+51.20 TO Sta 66+91.65	TYPE-2
Sta 66+93.03 TO Sta 67+60.05	TYPE-3
Sta 67+60.05 TO Sta 67+96.06	TYPE-2
Sta 67+96.06 TO Sta 69+53.87	TYPE-3
Sta 69+53.87 TO Sta 72+03.83	TYPE-4
Sta 72+03.83 TO Sta 79+18.87	TYPE-5
Sta 65+92.08 TO Sta 67+62.99	TYPE-6
Sta 67+62.99 TO Sta 67+77.09	TYPE-7
Sta 67+77.09 TO Sta 70+34.07	TYPE-8
Sta 70+34.07 TO Sta 72+75.00	TYPE-7
Sta 72+75.00 TO Sta 79+18.87	TYPE-9

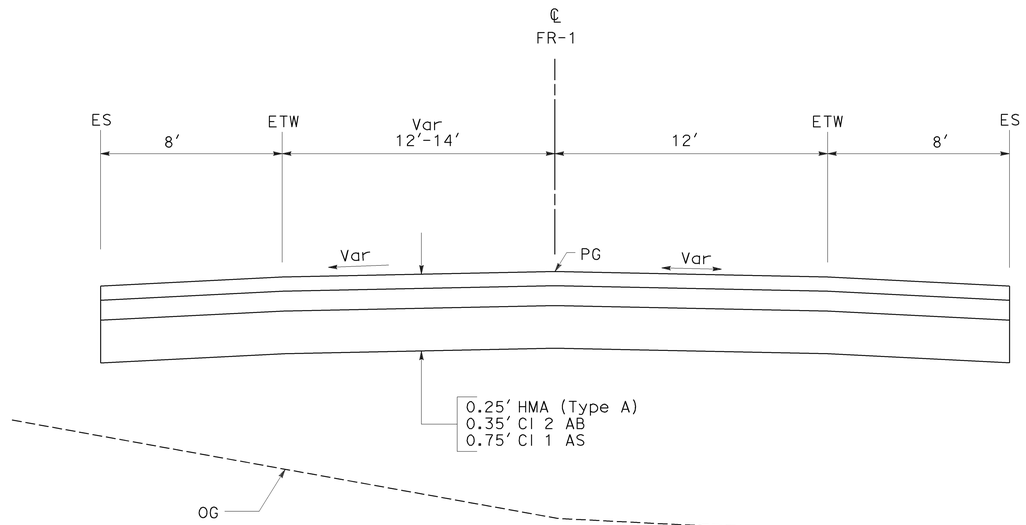

FR-1
Sta 67+62.99 TO Sta 67+77.09

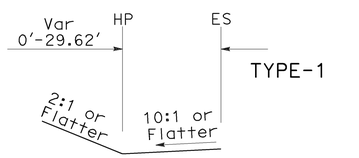

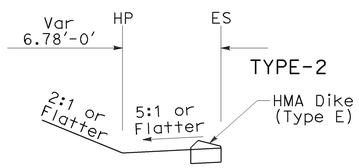

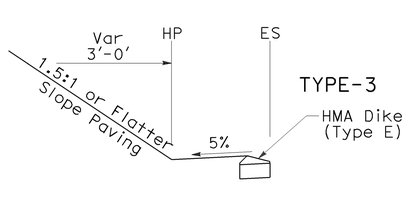

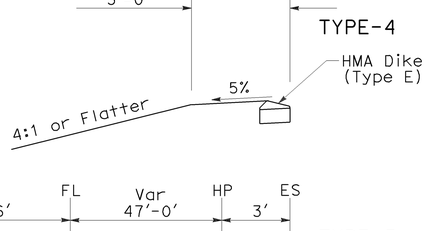

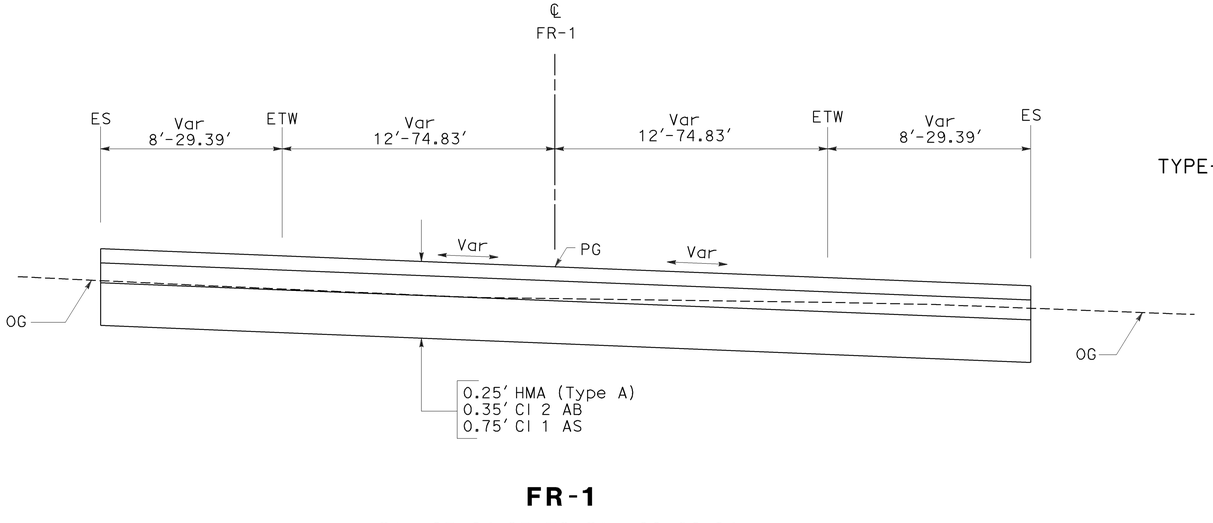

FR-1
Sta 65+84.05 TO Sta 66+98.84
Sta 78+68.87 TO Sta 79+18.87

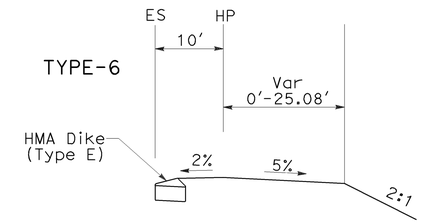

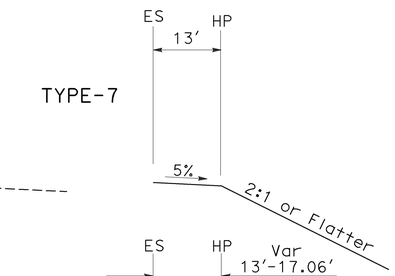

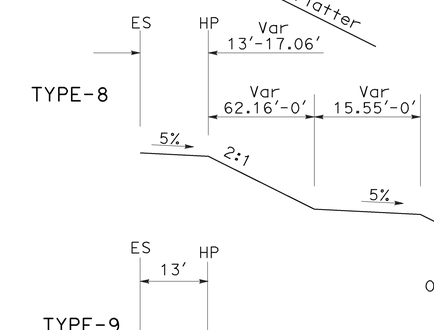

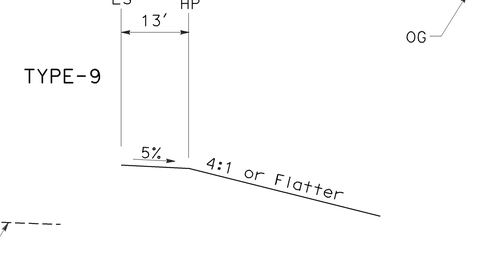

TYPICAL CROSS SECTIONS

NO SCALE

X-28

STATE OF CALIFORNIA - DEPARTMENT OF TRANSPORTATION
Caltrans 06-DESIGN

FUNCTIONAL SUPERVISOR: JACK WALKER
CALCULATED-DESIGNED BY: JOSE ARGUELLO
CHECKED BY: JOSE BAUTISTA
REVISED BY / DATE REVISED

LAST REVISION 08-13-09
DATE PLOTTED => 08-DEC-2009
TIME PLOTTED => 08:05

Dist	COUNTY	ROUTE	POST MILES TOTAL PROJECT	SHEET No.	TOTAL SHEETS
05	SLO	46	36.6/41.2	30	595

REGISTERED CIVIL ENGINEER DATE 8-24-09

12-7-09
PLANS APPROVAL DATE

REGISTERED PROFESSIONAL ENGINEER JOSE M. ARGUELLO No. 51321 Exp 06-30-10 CIVIL STATE OF CALIFORNIA

THE STATE OF CALIFORNIA OR ITS OFFICERS OR AGENTS SHALL NOT BE RESPONSIBLE FOR THE ACCURACY OR COMPLETENESS OF ELECTRONIC COPIES OF THIS PLAN SHEET.

FR-2

LOCATION	HP TYPE
Sta 21+95.50 TO Sta 23+69.25	TYPE-1
Sta 23+69.25 TO Sta 23+92.22	TYPE-2
Sta 23+92.22 TO Sta 25+20.00	TYPE-3
Sta 28+71.92 TO Sta 29+97.10	TYPE-4
Sta 29+97.10 TO Sta 30+33.74	TYPE-5
Sta 31+89.78 TO Sta 34+50.00	TYPE-6
Sta 34+50.00 TO Sta 36+50.00	TYPE-7
*Sta 36+50.00 TO Sta 37+96.00	TYPE-7
Sta 37+96.00 TO Sta 38+75.00	TYPE-7

FR-2

LOCATION	HP TYPE
Sta 22+83.65 TO Sta 24+66.07	TYPE-8
Sta 24+66.42 TO Sta 24+82.17	TYPE-9
Sta 24+82.17 TO Sta 25+20.00	TYPE-10
Sta 28+84.55 TO Sta 29+09.01	TYPE-11
Sta 29+09.01 TO Sta 29+45.91	TYPE-10
(*)Sta 29+45.91 TO Sta 29+63.16	TYPE-12
Sta 29+63.16 TO Sta 29+81.85	TYPE-12
(**)Sta 29+81.85 TO Sta 30+32.04	TYPE-13
Sta 30+32.04 TO Sta 38+83.19	TYPE-13

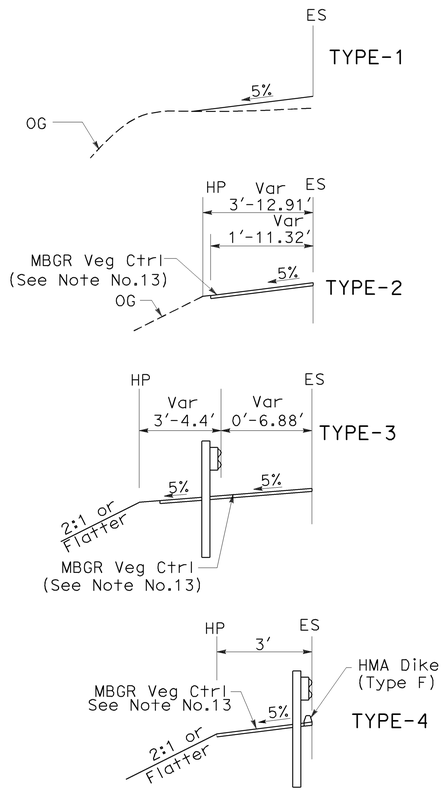

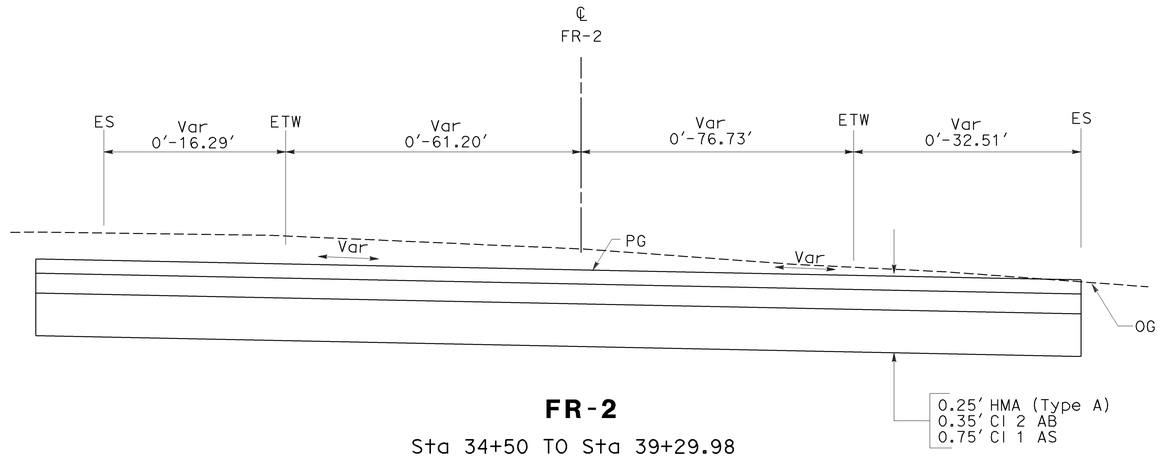

FR-2

Sta 34+50 TO Sta 39+29.98

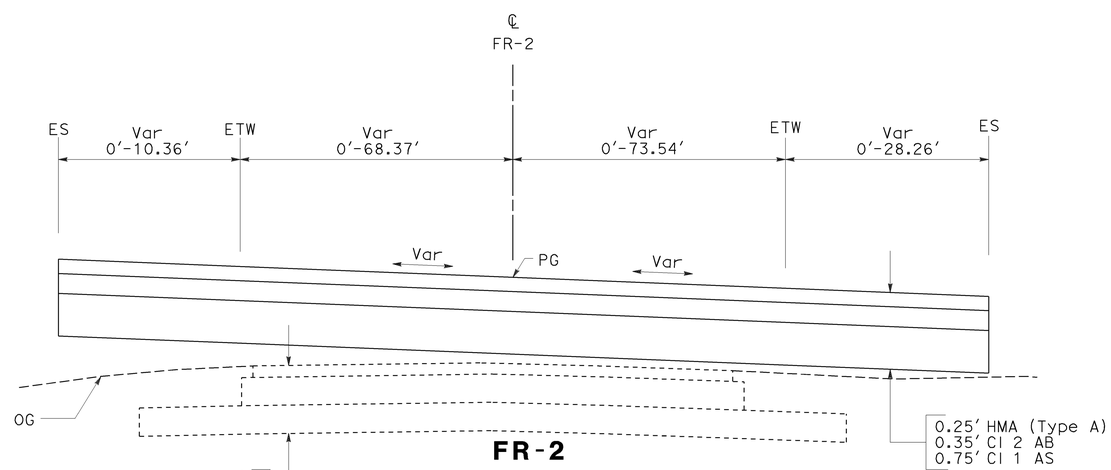

FR-2

Sta 29+00 TO Sta 34+50
Sta 21+96.86 TO Sta 25+20

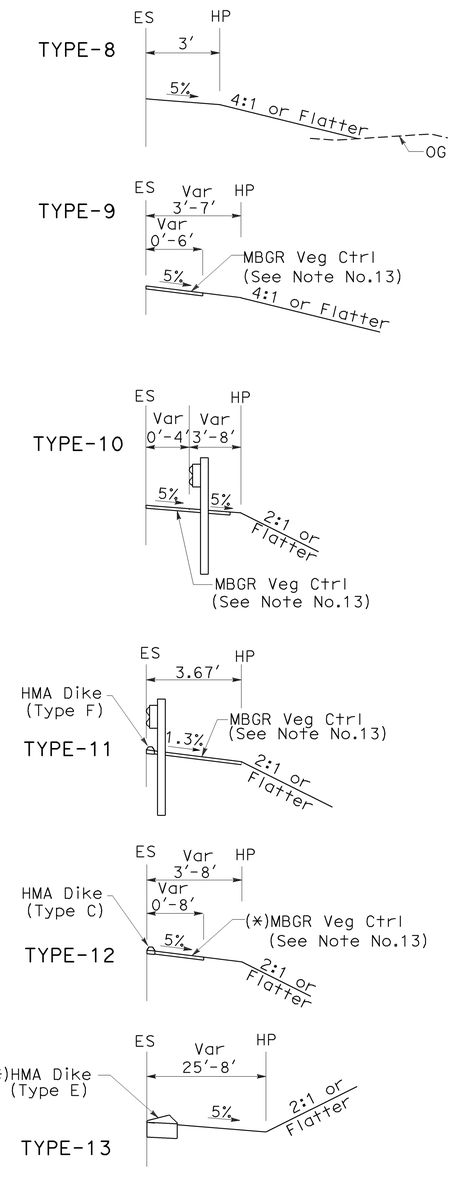

TYPICAL CROSS SECTIONS

NO SCALE

X-29

STATE OF CALIFORNIA - DEPARTMENT OF TRANSPORTATION
Caltrans
06-DESIGN
FUNCTIONAL SUPERVISOR: JACK WALKER
CALCULATED-DESIGNED BY: JOSE ARGUELLO
CHECKED BY: JOSE BAUTISTA
REVISED BY
DATE REVISED

LAST REVISION 08-13-09
DATE PLOTTED => 08-DEC-2009
TIME PLOTTED => 08:05

Dist	COUNTY	ROUTE	POST MILES TOTAL PROJECT	SHEET No.	TOTAL SHEETS
05	SLO	46	36.6/41.2	31	595

REGISTERED CIVIL ENGINEER DATE 8-24-09

PLANS APPROVAL DATE 12-7-09

REGISTERED PROFESSIONAL ENGINEER JOSE M. ARGUELLO No. 51321 Exp. 06-30-10 CIVIL STATE OF CALIFORNIA

THE STATE OF CALIFORNIA OR ITS OFFICERS OR AGENTS SHALL NOT BE RESPONSIBLE FOR THE ACCURACY OR COMPLETENESS OF ELECTRONIC COPIES OF THIS PLAN SHEET.

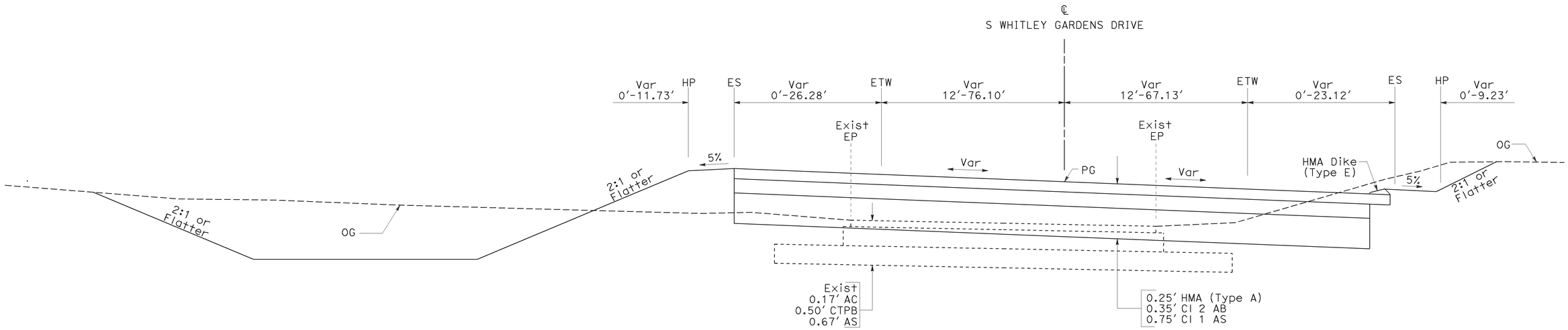

S WHITLEY GARDENS DRIVE

Sta 192+23.50 TO Sta 196+06.00

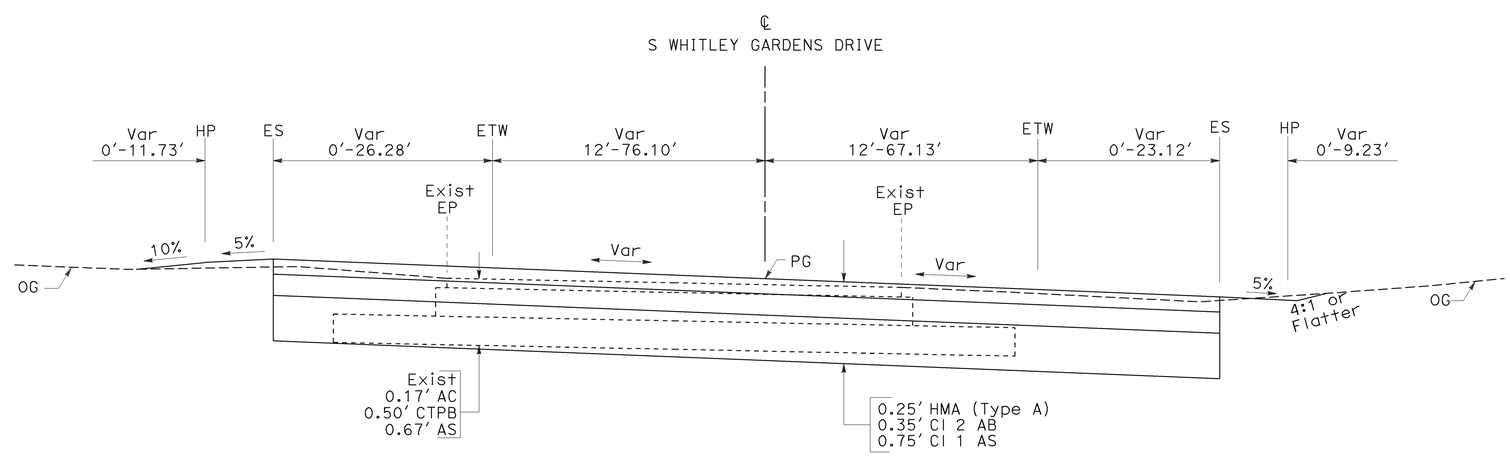

S WHITLEY GARDENS DRIVE

Sta 191+30.00 TO Sta 192+23.50

TYPICAL CROSS SECTIONS

NO SCALE

X-30

STATE OF CALIFORNIA - DEPARTMENT OF TRANSPORTATION

Caltrans

06-DESIGN

FUNCTIONAL SUPERVISOR: JACK WALKER

CALCULATED-DESIGNED BY: JOSE ARGUELLO

CHECKED BY: JOSE BAUTISTA

REVISED BY

DATE REVISED

LAST REVISION 08-17-09

DATE PLOTTED => 08-DEC-2009

TIME PLOTTED => 08:05

Dist	COUNTY	ROUTE	POST MILES TOTAL PROJECT	SHEET No.	TOTAL SHEETS
05	SLO	46	36.6/41.2	32	595

REGISTERED CIVIL ENGINEER DATE 8-24-09

PLANS APPROVAL DATE 12-7-09

REGISTERED PROFESSIONAL ENGINEER JOSE M. ARGUELLO No. 51321 Exp. 06-30-10 CIVIL STATE OF CALIFORNIA

THE STATE OF CALIFORNIA OR ITS OFFICERS OR AGENTS SHALL NOT BE RESPONSIBLE FOR THE ACCURACY OR COMPLETENESS OF ELECTRONIC COPIES OF THIS PLAN SHEET.

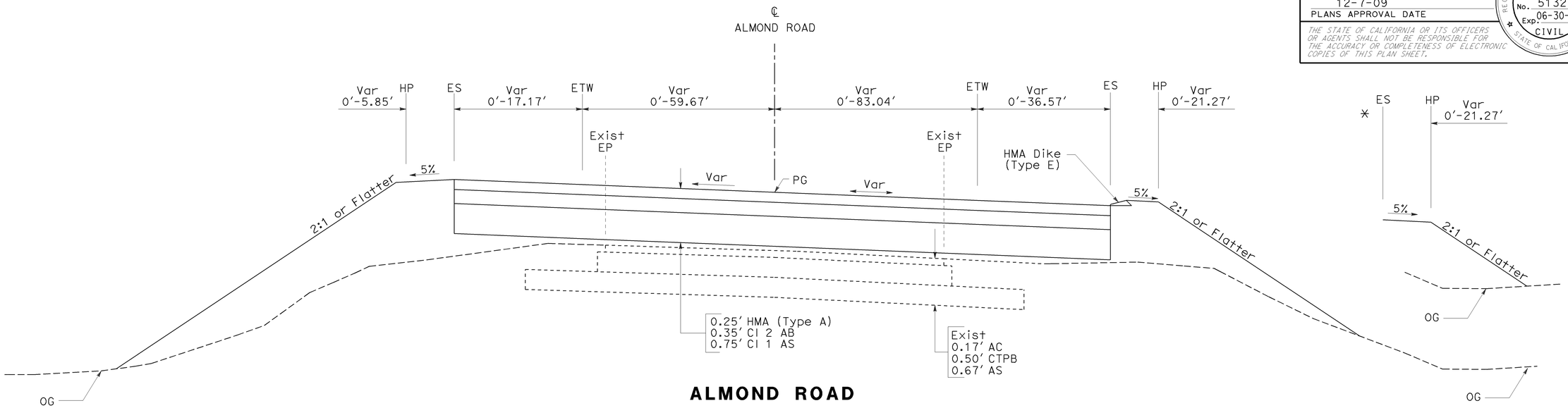

ALMOND ROAD

*Sta 32+78.00 TO Sta 34+00.00
Sta 31+00.00 TO Sta 32+78.00

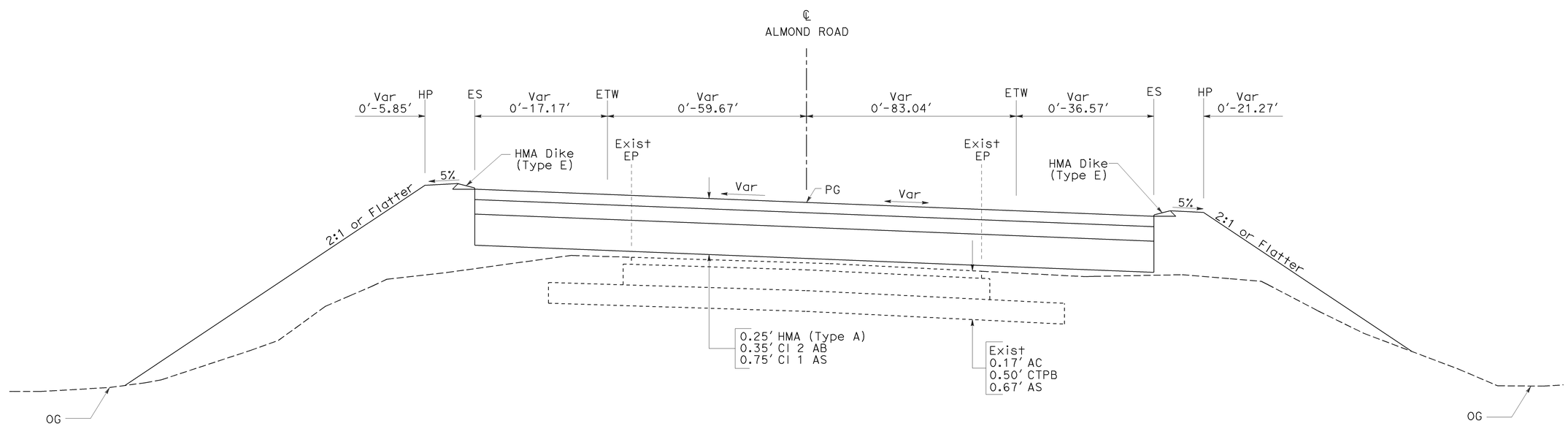

ALMOND ROAD

Sta 30+19.45 TO Sta 31+00.00

TYPICAL CROSS SECTIONS

NO SCALE **X-31**

STATE OF CALIFORNIA - DEPARTMENT OF TRANSPORTATION
Caltrans 06-DESIGN

FUNCTIONAL SUPERVISOR JACK WALKER

CALCULATED-DESIGNED BY JOSE ARGUELLO
CHECKED BY JOSE BAUTISTA

REVISED BY | DATE REVISED

LAST REVISION 08-17-09 | DATE PLOTTED => 08-DEC-2009 | TIME PLOTTED => 08:05

Dist	COUNTY	ROUTE	POST MILES TOTAL PROJECT	SHEET No.	TOTAL SHEETS
05	SLO	46	36.6/41.2	33	595

REGISTERED CIVIL ENGINEER DATE 8-24-09

PLANS APPROVAL DATE 12-7-09

REGISTERED PROFESSIONAL ENGINEER JOSE M. ARGUELLO No. 51321 Exp. 06-30-10 CIVIL STATE OF CALIFORNIA

THE STATE OF CALIFORNIA OR ITS OFFICERS OR AGENTS SHALL NOT BE RESPONSIBLE FOR THE ACCURACY OR COMPLETENESS OF ELECTRONIC COPIES OF THIS PLAN SHEET.

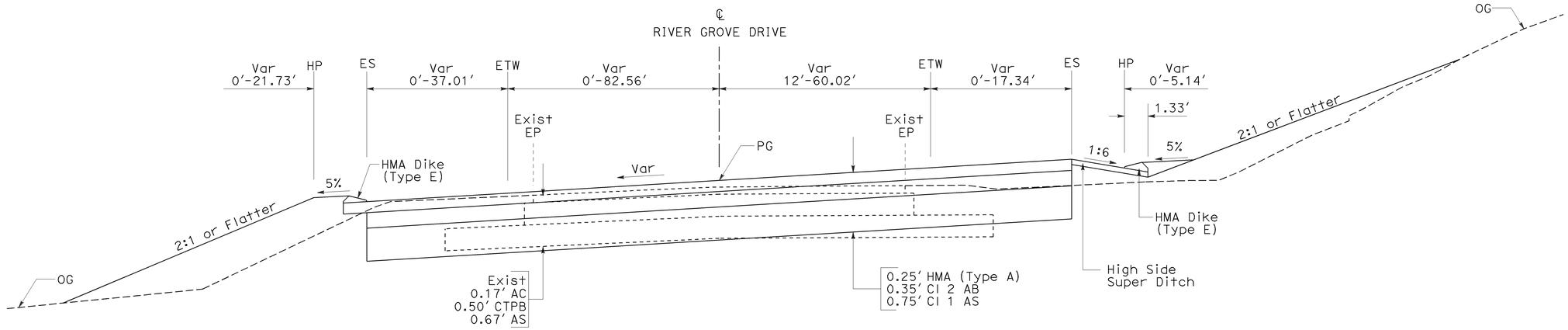

RIVER GROVE DRIVE

Sta 25+00.00 TO Sta 28+86.13

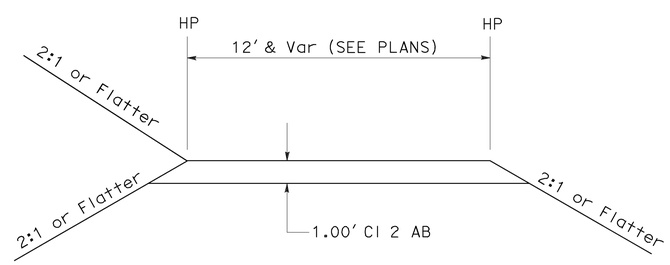

ACCESS ROADS

FR-1

ESTRELLA DRAINAGE BASIN

PINE DRAINAGE BASIN

TYPICAL CROSS SECTIONS

NO SCALE

X-32

STATE OF CALIFORNIA - DEPARTMENT OF TRANSPORTATION

Caltrans 06-DESIGN

FUNCTIONAL SUPERVISOR JACK WALKER

CALCULATED-DESIGNED BY JOSE ARGUELLO

CHECKED BY JOSE BAUTISTA

REVISED BY

DATE REVISED

LAST REVISION 08-17-09

DATE PLOTTED => 08-DEC-2009

TIME PLOTTED => 08:05

Dist	COUNTY	ROUTE	POST MILES TOTAL PROJECT	SHEET No.	TOTAL SHEETS
05	SLO	46	36.6/41.2	34	595

REGISTERED CIVIL ENGINEER DATE 8-24-09

PLANS APPROVAL DATE 12-7-09

REGISTERED PROFESSIONAL ENGINEER JOSE M. ARGUELLO No. 51321 Exp. 06-30-10 CIVIL STATE OF CALIFORNIA

THE STATE OF CALIFORNIA OR ITS OFFICERS OR AGENTS SHALL NOT BE RESPONSIBLE FOR THE ACCURACY OR COMPLETENESS OF ELECTRONIC COPIES OF THIS PLAN SHEET.

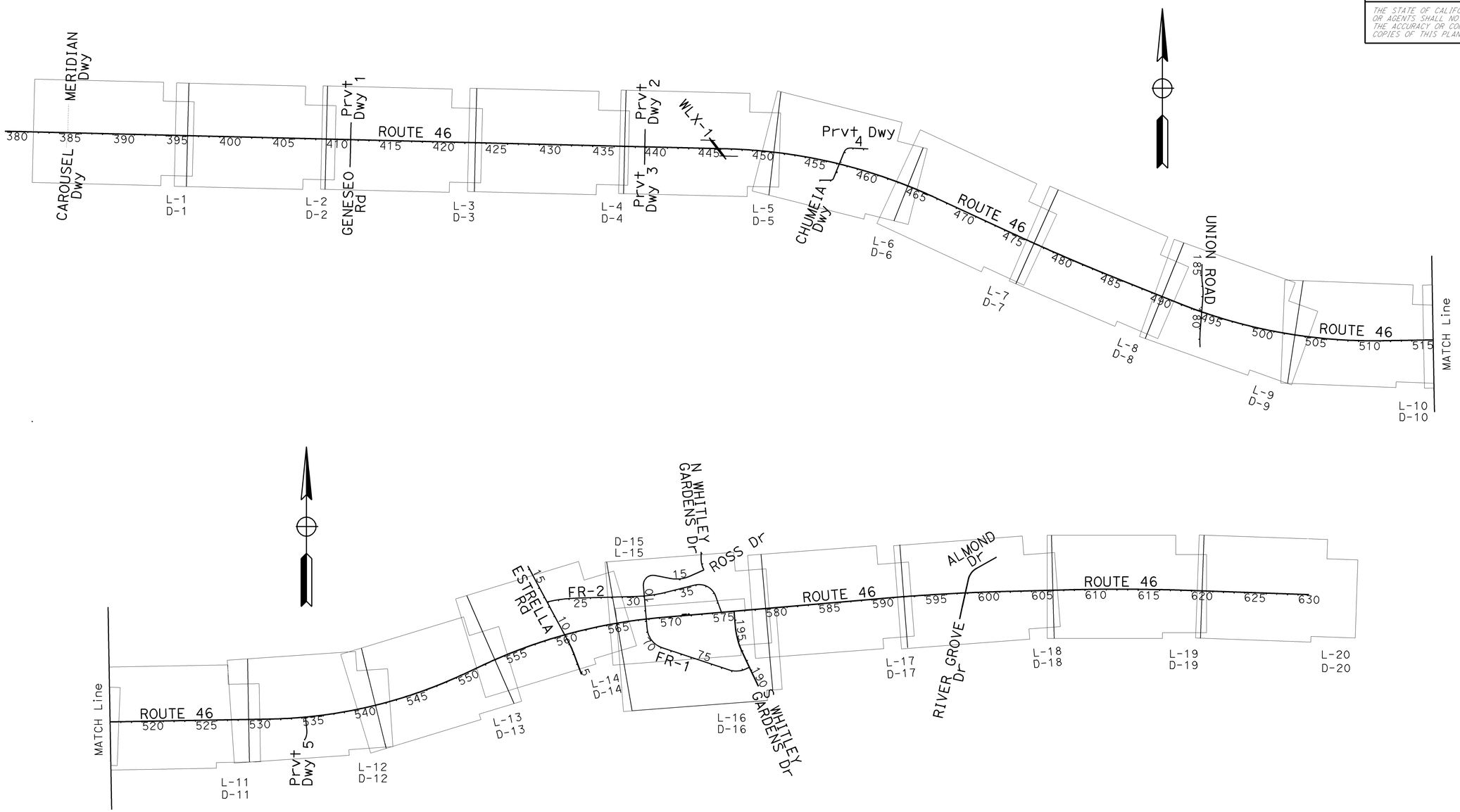

KEY MAP AND LINE INDEX

NO SCALE

K-1

STATE OF CALIFORNIA - DEPARTMENT OF TRANSPORTATION

Caltrans

06-DESIGN

FUNCTIONAL SUPERVISOR: JACK WALKER

CALCULATED-DESIGNED BY: JOSE ARGUELLO

CHECKED BY: SUMI HOODE

REVISED BY

DATE REVISED

LAST REVISION 07-13-09

DATE PLOTTED => 08-DEC-2009

TIME PLOTTED => 07:29

BORDER LAST REVISED 3/1/2007

RELATIVE BORDER SCALE IS IN INCHES 0 1 2 3

USERNAME => trmnguye

DGN FILE => 533072da001.dgn

CU 06220

EA 330721

Dist	COUNTY	ROUTE	POST MILES TOTAL PROJECT	SHEET No.	TOTAL SHEETS
05	SLO	46	36.6/41.2	35	595

REGISTERED CIVIL ENGINEER DATE 8-24-09

12-7-09
PLANS APPROVAL DATE

REGISTERED PROFESSIONAL ENGINEER JOSE M. ARGUELLO No. 51321 Exp 06-30-10 CIVIL STATE OF CALIFORNIA

THE STATE OF CALIFORNIA OR ITS OFFICERS OR AGENTS SHALL NOT BE RESPONSIBLE FOR THE ACCURACY OR COMPLETENESS OF ELECTRONIC COPIES OF THIS PLAN SHEET.

LEGEND

- CONFORM TO Exist
- REMOVE BASE AND SURFACING
- COLD PLANE AC Pvmt
- 0.25' HMA SLOPE PAVING
- AREA FOR THE CONTRACTOR USE
- TFESA / ESA — ENVIRONMENTALLY SENSITIVE AREA (ESA)
- DEER GUARD (SEE SHEETS C-25 TO C-27)

ABBREVIATIONS:

Prvt	PRIVATE
IETW	INSIDE EDGE OF TRAVELED WAY
HSS	HIGH SIDE SUPER
Veg Ctrl	VEGETATION CONTROL
ESA	ENVIRONMENTALLY SENSITIVE AREA
AFTS	ALTERNATIVE FLARE TERMINAL SYSTEM

NOTES:

1. FOR ACCURATE RIGHT OF WAY AND ACCESS DATA, CONTACT RIGHT OF WAY ENGINEERING AT THE DISTRICT OFFICE.
2. FOR REMOVE FENCE LIMITS, SEE "REMOVE FENCE" ON SUMMARY OF QUANTITIES SHEETS.
3. FOR SIZE AND LENGTH OF HMA OVERSIDE DRAIN AND CSP DD, SEE DRAINAGE PLAN SHEETS.
4. FOR 0.25' SLOPE PAVING, SEE RETAINING WALL PLANS.

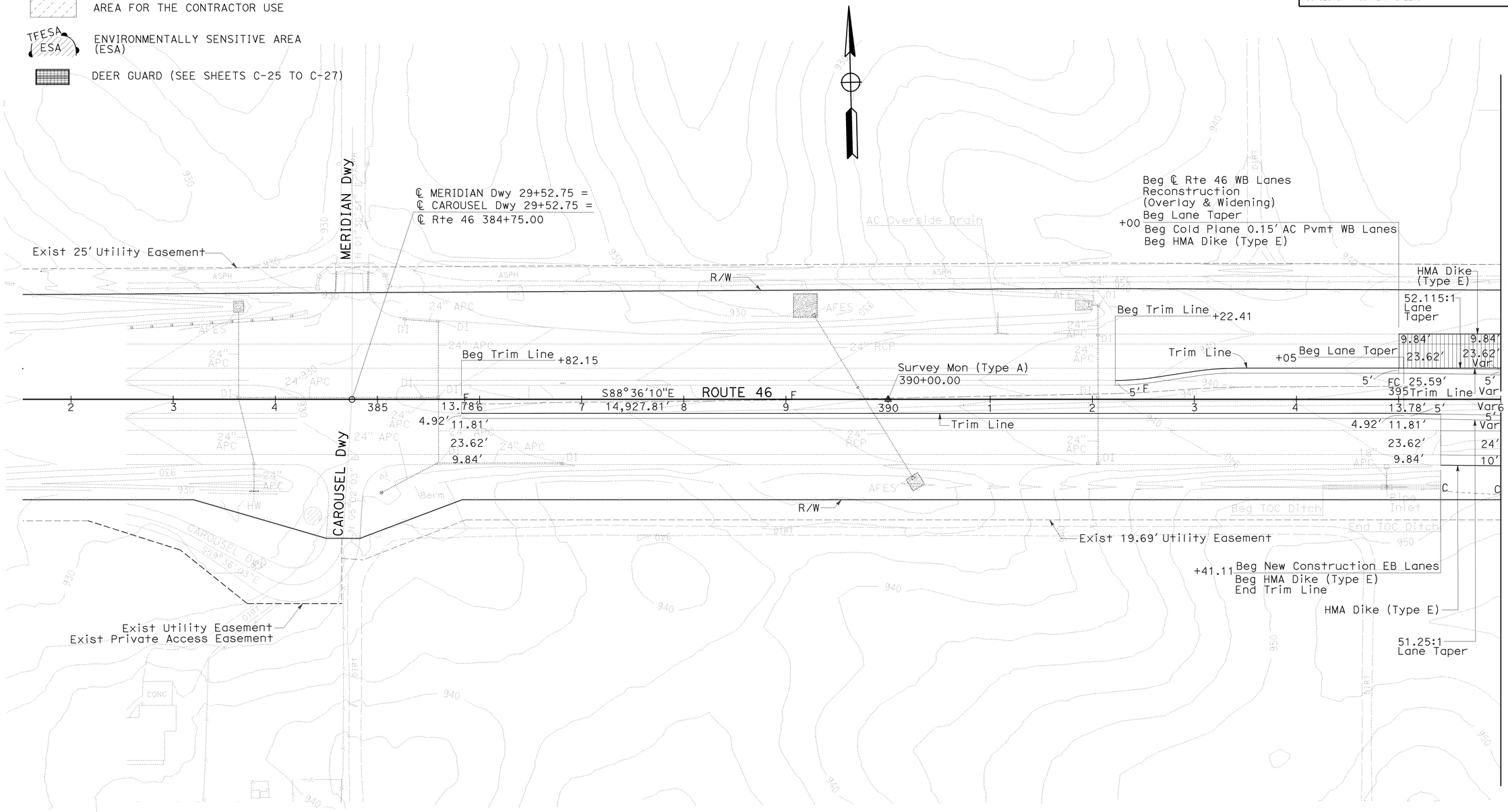

SCALE: 1"=50'

LAYOUT L-1

STATE OF CALIFORNIA - DEPARTMENT OF TRANSPORTATION
Caltrans
06-DESIGN
FUNCTIONAL SUPERVISOR: JACK WALKER
CALCULATED-DESIGNED BY: JOSE ARGUELLO
CHECKED BY: SUMI HOODE
REVISED BY
DATE REVISED

LAST REVISION 08-15-09
DATE PLOTTED => 08-DEC-2009
TIME PLOTTED => 07:26

Dist	COUNTY	ROUTE	POST MILES TOTAL PROJECT	SHEET No.	TOTAL SHEETS
05	SLO	46	36.6/41.2	36	595

REGISTERED CIVIL ENGINEER DATE 8-24-09

PLANS APPROVAL DATE 12-7-09

REGISTERED PROFESSIONAL ENGINEER JOSE M. ARGUELLO No. 51321 Exp. 06-30-10 CIVIL STATE OF CALIFORNIA

THE STATE OF CALIFORNIA OR ITS OFFICERS OR AGENTS SHALL NOT BE RESPONSIBLE FOR THE ACCURACY OR COMPLETENESS OF ELECTRONIC COPIES OF THIS PLAN SHEET.

NOTE: FOR ACCURATE RIGHT OF WAY AND ACCESS DATA, CONTACT RIGHT OF WAY ENGINEERING AT THE DISTRICT OFFICE.

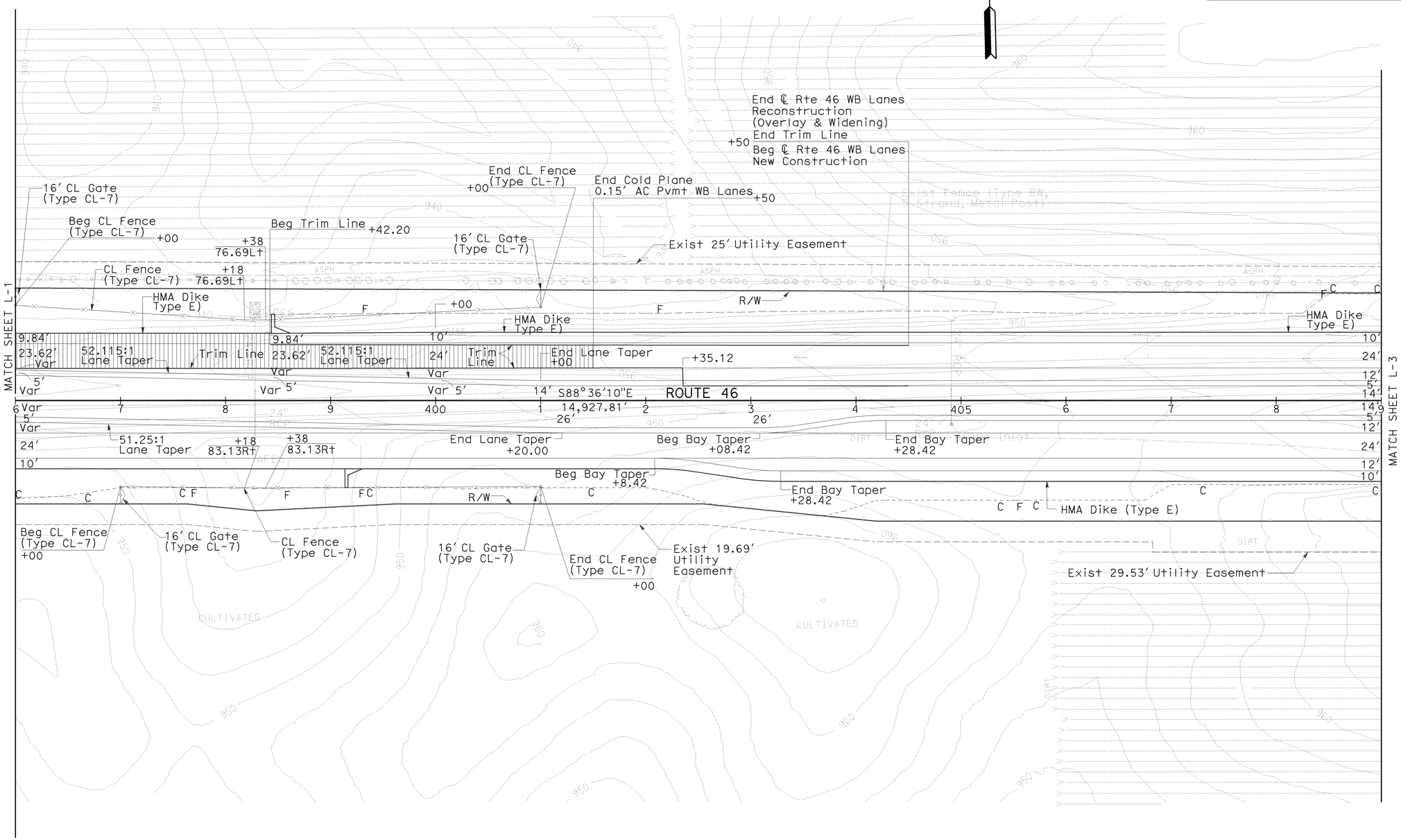

SCALE: 1"=50'

LAYOUT L-2

REVISED BY	DATE REVISED

CALCULATED-DESIGNED BY: JOSE ARGUELLO
CHECKED BY: SUMI HOODE
FUNCTIONAL SUPERVISOR: JACK WALKER

STATE OF CALIFORNIA - DEPARTMENT OF TRANSPORTATION
Caltrans
06-DESIGN

LAST REVISION 07-14-09 | DATE PLOTTED => 08-DEC-2009 | TIME PLOTTED => 07:26

Dist	COUNTY	ROUTE	POST MILES TOTAL PROJECT	SHEET No.	TOTAL SHEETS
05	SLO	46	36.6/41.2	37	595

REGISTERED CIVIL ENGINEER DATE 8-24-09

12-7-09
PLANS APPROVAL DATE

REGISTERED PROFESSIONAL ENGINEER JOSE M. ARGUELLO No. 51321 Exp. 06-30-10 CIVIL STATE OF CALIFORNIA

THE STATE OF CALIFORNIA OR ITS OFFICERS OR AGENTS SHALL NOT BE RESPONSIBLE FOR THE ACCURACY OR COMPLETENESS OF ELECTRONIC COPIES OF THIS PLAN SHEET.

NOTE: FOR ACCURATE RIGHT OF WAY AND ACCESS DATA, CONTACT RIGHT OF WAY ENGINEERING AT THE DISTRICT OFFICE.

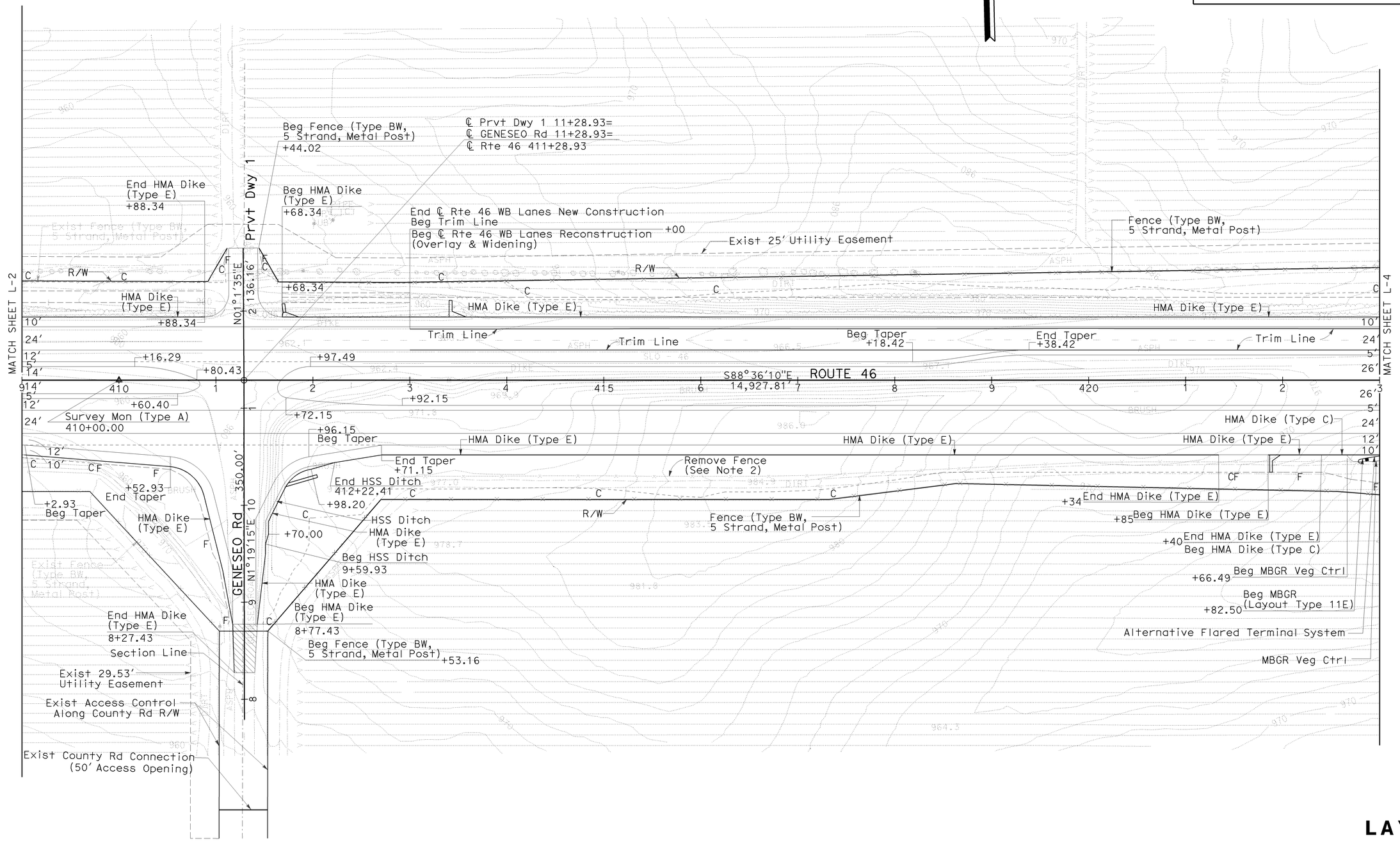

SCALE: 1"=50'

LAYOUT L-3

CALCULATED- DESIGNED BY	JOSE ARGUELLO
CHECKED BY	SUMI HOODE
FUNCTIONAL SUPERVISOR	JACK WALKER
REVISED BY	
DATE REVISED	

STATE OF CALIFORNIA - DEPARTMENT OF TRANSPORTATION
Caltrans 06-DESIGN

LAST REVISION 08-13-09 | DATE PLOTTED => 08-DEC-2009 | TIME PLOTTED => 07:26

Dist	COUNTY	ROUTE	POST MILES TOTAL PROJECT	SHEET No.	TOTAL SHEETS
05	SLO	46	36.6/41.2	38	595

REGISTERED CIVIL ENGINEER DATE 8-24-09

12-7-09
PLANS APPROVAL DATE

REGISTERED PROFESSIONAL ENGINEER JOSE M. ARGUELLO No. 51321 Exp. 06-30-10 CIVIL STATE OF CALIFORNIA

THE STATE OF CALIFORNIA OR ITS OFFICERS OR AGENTS SHALL NOT BE RESPONSIBLE FOR THE ACCURACY OR COMPLETENESS OF ELECTRONIC COPIES OF THIS PLAN SHEET.

NOTE: FOR ACCURATE RIGHT OF WAY AND ACCESS DATA, CONTACT RIGHT OF WAY ENGINEERING AT THE DISTRICT OFFICE.

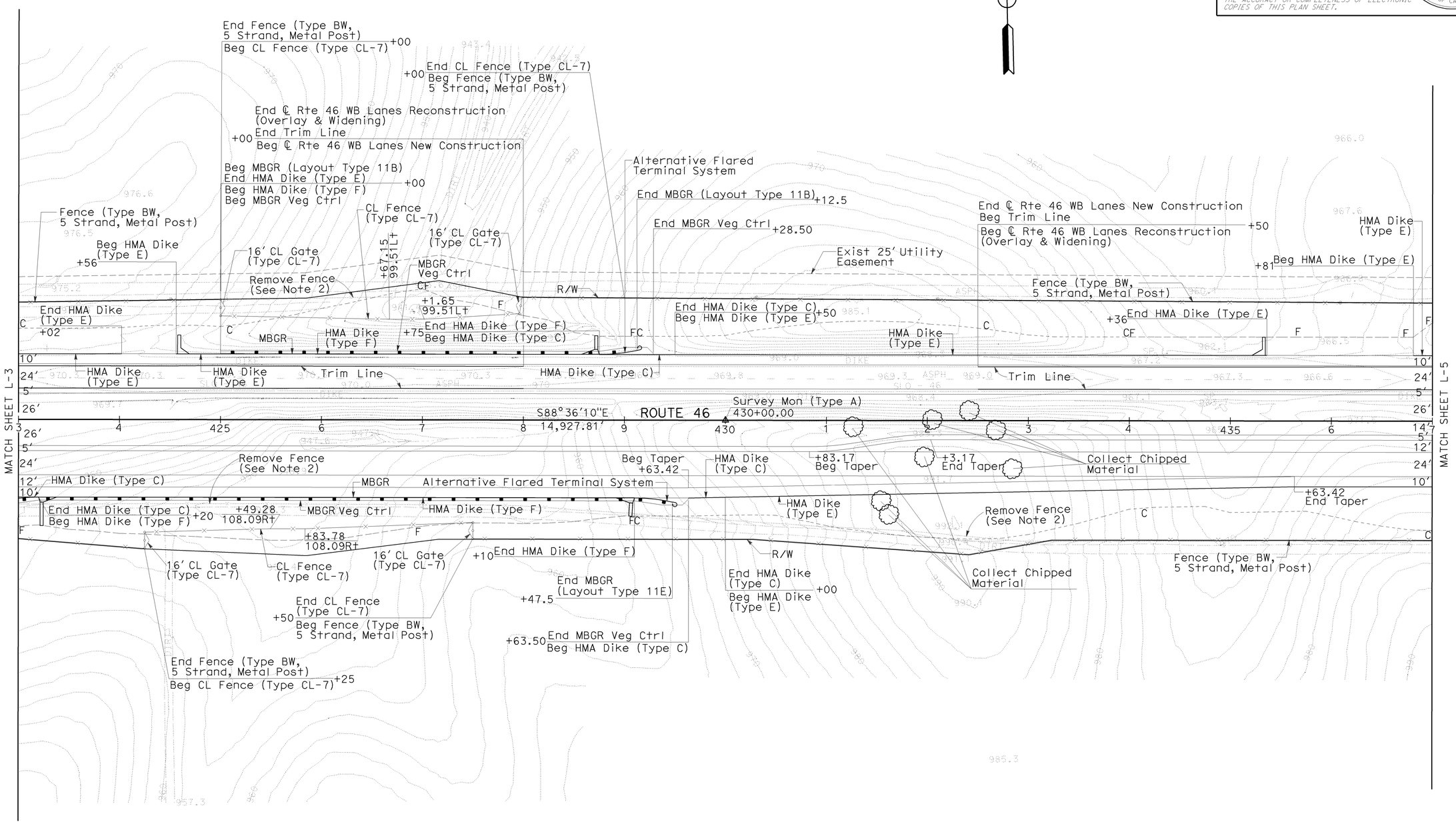

LAYOUT L-4

SCALE: 1"=50'

STATE OF CALIFORNIA - DEPARTMENT OF TRANSPORTATION
Caltrans 06-DESIGN
FUNCTIONAL SUPERVISOR JACK WALKER
CALCULATED-DESIGNED BY SUMI HOODE
CHECKED BY JOSE ARGUELLO
REVISED BY
DATE REVISED

LAST REVISION 07-14-09
DATE PLOTTED => 08-DEC-2009
TIME PLOTTED => 07:26

Dist	COUNTY	ROUTE	POST MILES TOTAL PROJECT	SHEET No.	TOTAL SHEETS
05	SLO	46	36.6/41.2	39	595

REGISTERED CIVIL ENGINEER DATE 8-24-09

12-7-09
PLANS APPROVAL DATE

REGISTERED PROFESSIONAL ENGINEER JOSE M. ARGUELLO No. 51321 Exp. 06-30-10 CIVIL STATE OF CALIFORNIA

THE STATE OF CALIFORNIA OR ITS OFFICERS OR AGENTS SHALL NOT BE RESPONSIBLE FOR THE ACCURACY OR COMPLETENESS OF ELECTRONIC COPIES OF THIS PLAN SHEET.

NOTE: FOR ACCURATE RIGHT OF WAY AND ACCESS DATA, CONTACT RIGHT OF WAY ENGINEERING AT THE DISTRICT OFFICE.

CURVE DATA

No.	R	Δ	T	L	RP	LOCATION
1	4960.62′	23°26′41″	1029.31′	2029.82′	BC	℄ Rte 46 446+45.67

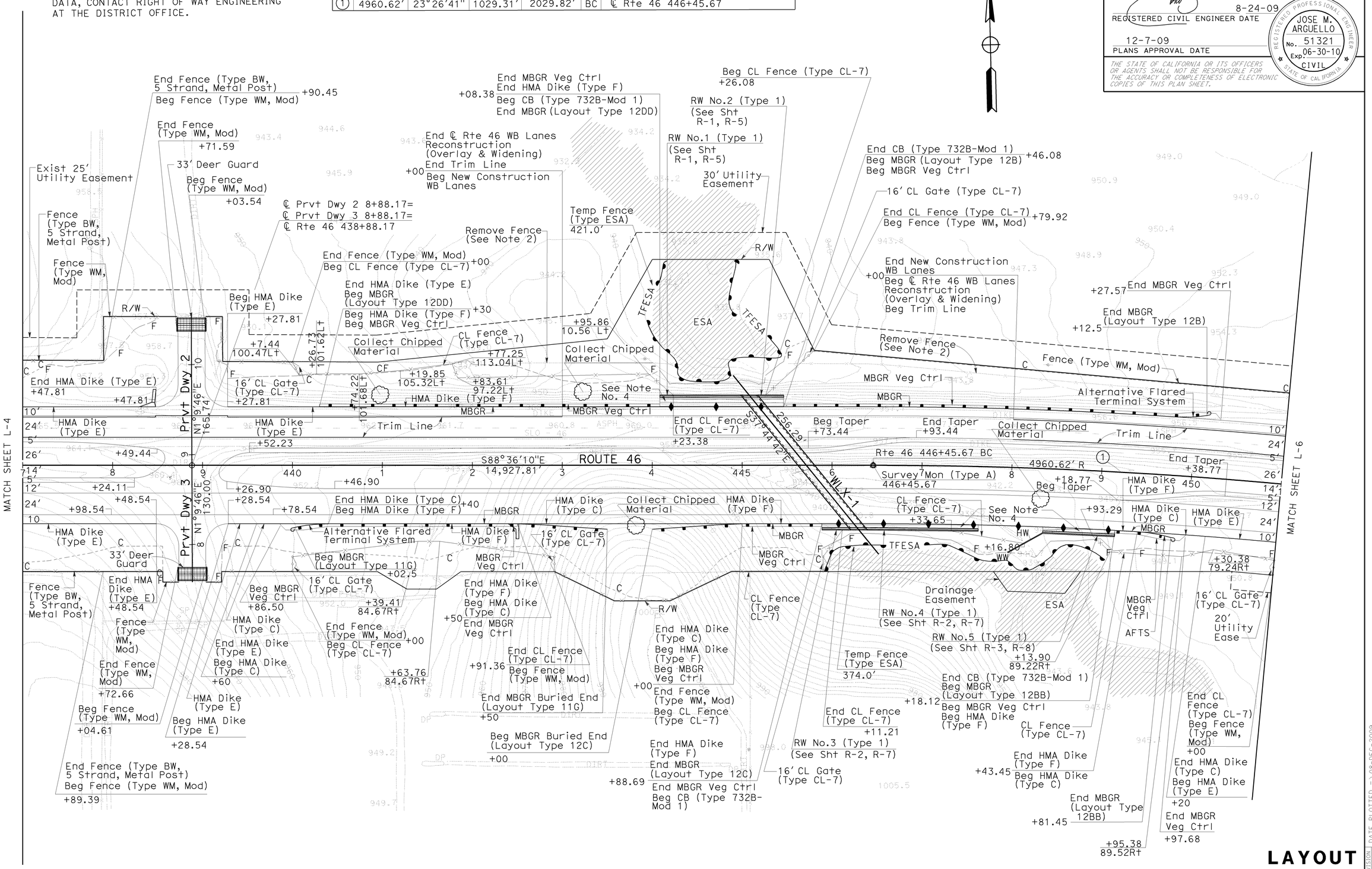

LAYOUT L-5

SCALE: 1″=50′

FUNCTIONAL SUPERVISOR	JACK WALKER
CALCULATED-DESIGNED BY	JOSE ARGUELLO
CHECKED BY	SUMI HOODE
REVISED BY	
DATE REVISED	

STATE OF CALIFORNIA - DEPARTMENT OF TRANSPORTATION
Caltrans 06-DESIGN

LAST REVISION 08-24-09 | DATE PLOTTED => 08-DEC-2009 TIME PLOTTED => 07:26

Dist	COUNTY	ROUTE	POST MILES TOTAL PROJECT	SHEET No.	TOTAL SHEETS
05	SLO	46	36.6/41.2	40	595

REGISTERED CIVIL ENGINEER DATE 8-24-09

12-7-09
PLANS APPROVAL DATE

REGISTERED PROFESSIONAL ENGINEER JOSE M. ARGUELLO No. 51321 Exp. 06-30-10 CIVIL STATE OF CALIFORNIA

THE STATE OF CALIFORNIA OR ITS OFFICERS OR AGENTS SHALL NOT BE RESPONSIBLE FOR THE ACCURACY OR COMPLETENESS OF ELECTRONIC COPIES OF THIS PLAN SHEET.

NOTE: FOR ACCURATE RIGHT OF WAY AND ACCESS DATA, CONTACT RIGHT OF WAY ENGINEERING AT THE DISTRICT OFFICE.

CURVE DATA

No.	R	Δ	T	L	RP	LOCATION
1	4960.62′	23°26′41"	1029.31′	2029.82′	BC	℄ Rte 46 446+45.67
21	59.06′	70°56′10"	42.07′	73.11′	BC	℄ Prvt Dwy 4 8+44.02
22	32.81′	68°49′05"	22.47′	39.41′	BC	℄ CHUMEIA Dwy 5+42.02

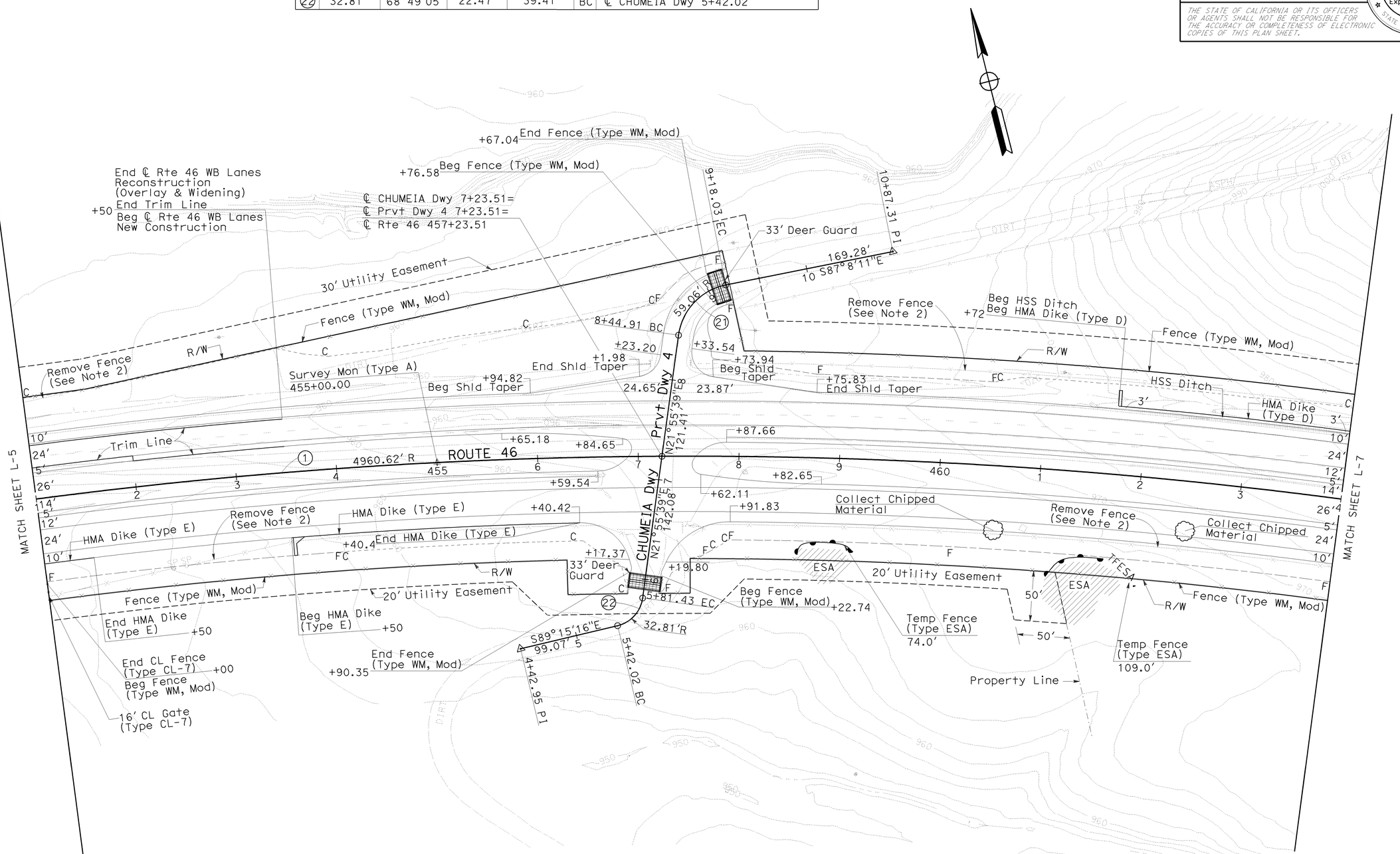

LAYOUT L-6

SCALE: 1"=50′

STATE OF CALIFORNIA - DEPARTMENT OF TRANSPORTATION
Caltrans 06-DESIGN
FUNCTIONAL SUPERVISOR JACK WALKER
CALCULATED-DESIGNED BY JOSE ARGUELLO
CHECKED BY SUMI HOODE
REVISED BY
DATE REVISED

LAST REVISION 07-14-09
DATE PLOTTED => 08-DEC-2009
TIME PLOTTED => 07:27

BORDER LAST REVISED 3/1/2007
RELATIVE BORDER SCALE IS IN INCHES 0 1 2 3
USERNAME => trmnguye
DGN FILE => 533072ea006.dgn
CU 06220
EA 330721

Dist	COUNTY	ROUTE	POST MILES TOTAL PROJECT	SHEET No.	TOTAL SHEETS
05	SLO	46	36.6/41.2	41	595

REGISTERED CIVIL ENGINEER DATE 8-24-09

12-7-09
PLANS APPROVAL DATE

REGISTERED PROFESSIONAL ENGINEER JOSE M. ARGUELLO No. 51321 Exp. 06-30-10 CIVIL STATE OF CALIFORNIA

THE STATE OF CALIFORNIA OR ITS OFFICERS OR AGENTS SHALL NOT BE RESPONSIBLE FOR THE ACCURACY OR COMPLETENESS OF ELECTRONIC COPIES OF THIS PLAN SHEET.

NOTE: FOR ACCURATE RIGHT OF WAY AND ACCESS DATA, CONTACT RIGHT OF WAY ENGINEERING AT THE DISTRICT OFFICE.

CURVE DATA

No.	R	Δ	T	L	RP	LOCATION
1	4960.62′	23°26′41″	1029.31′	2029.82′	EC	℄ Rte 46 466+75.49
2	19,685.00′	02°59′40″	514.51′	1028.78′	BC	℄ Rte 46 475+02.54
11	19,684.51′	02°59′40″	514.49′	1028.75′	BC	Westbound IETW 473+00.76 31.00′ Lt

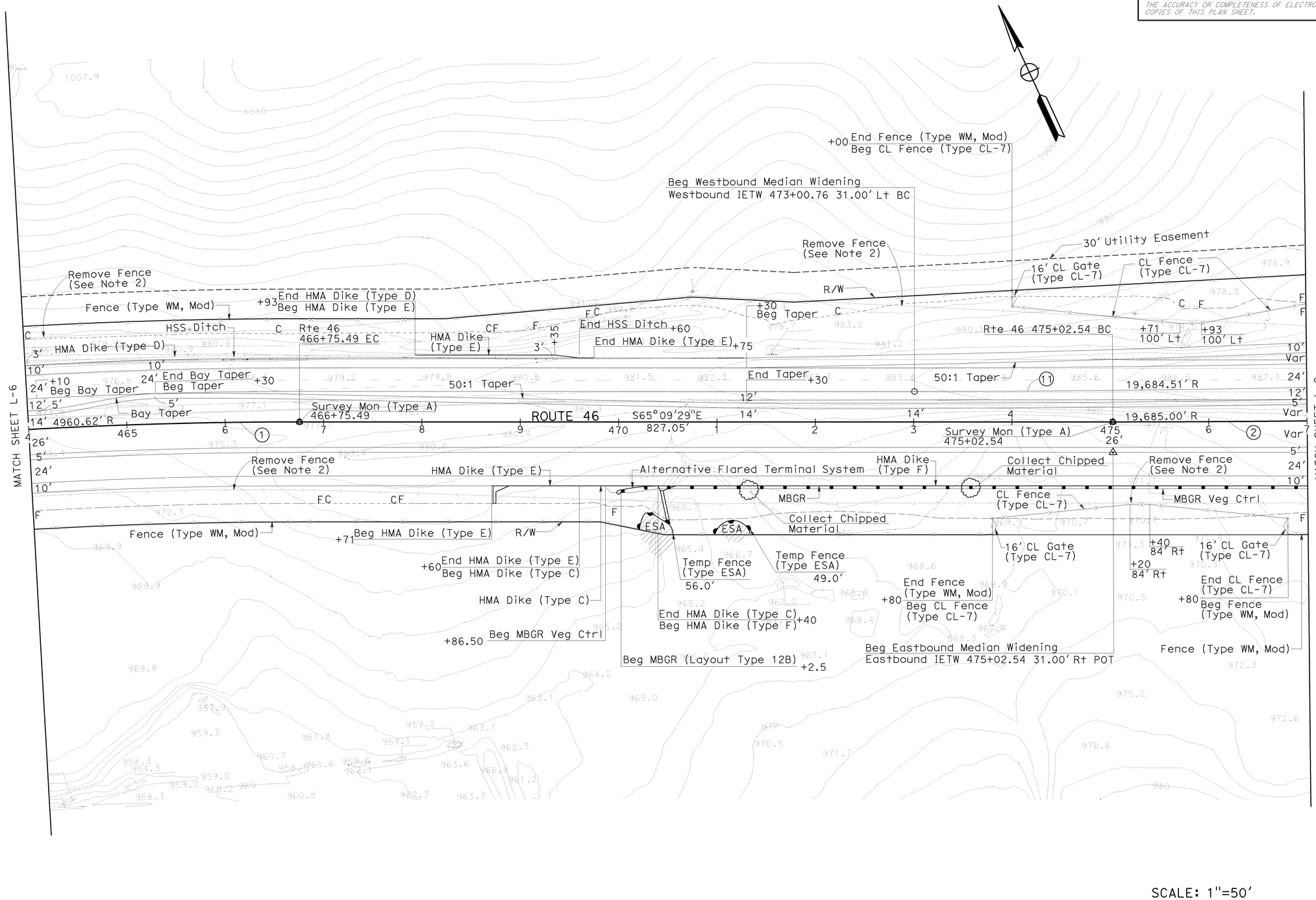

LAYOUT L-7

SCALE: 1″=50′

STATE OF CALIFORNIA - DEPARTMENT OF TRANSPORTATION
Caltrans
06-DESIGN
FUNCTIONAL SUPERVISOR: JACK WALKER
CALCULATED-DESIGNED BY: JOSE ARGUELLO
CHECKED BY: SUMI HOODE
REVISED BY
DATE REVISED

LAST REVISION 07-14-09
DATE PLOTTED => 08-DEC-2009
TIME PLOTTED => 07:27

Dist	COUNTY	ROUTE	POST MILES TOTAL PROJECT	SHEET No.	TOTAL SHEETS
05	SLO	46	36.6/41.2	42	595

REGISTERED CIVIL ENGINEER DATE 8-24-09

12-7-09
PLANS APPROVAL DATE

REGISTERED PROFESSIONAL ENGINEER JOSE M. ARGUELLO No. 51321 Exp. 06-30-10 CIVIL STATE OF CALIFORNIA

THE STATE OF CALIFORNIA OR ITS OFFICERS OR AGENTS SHALL NOT BE RESPONSIBLE FOR THE ACCURACY OR COMPLETENESS OF ELECTRONIC COPIES OF THIS PLAN SHEET.

NOTE: FOR ACCURATE RIGHT OF WAY AND ACCESS DATA, CONTACT RIGHT OF WAY ENGINEERING AT THE DISTRICT OFFICE.

CURVE DATA

No.	R	Δ	T	L	RP	LOCATION
2	19,685.00′	02°59′40″	514.51′	1028.78′	EC	℄ Rte 46 485+31.31
11	19,684.51′	2°59′40″	514.49′	1028.75′	EC	Westbound IETW 485+31.31 41.50′ Lt
12	19,685.49′	2°59′40″	514.51′	1028.79′	EC	Eastbound IETW 487+31.21 41.50′ Rt

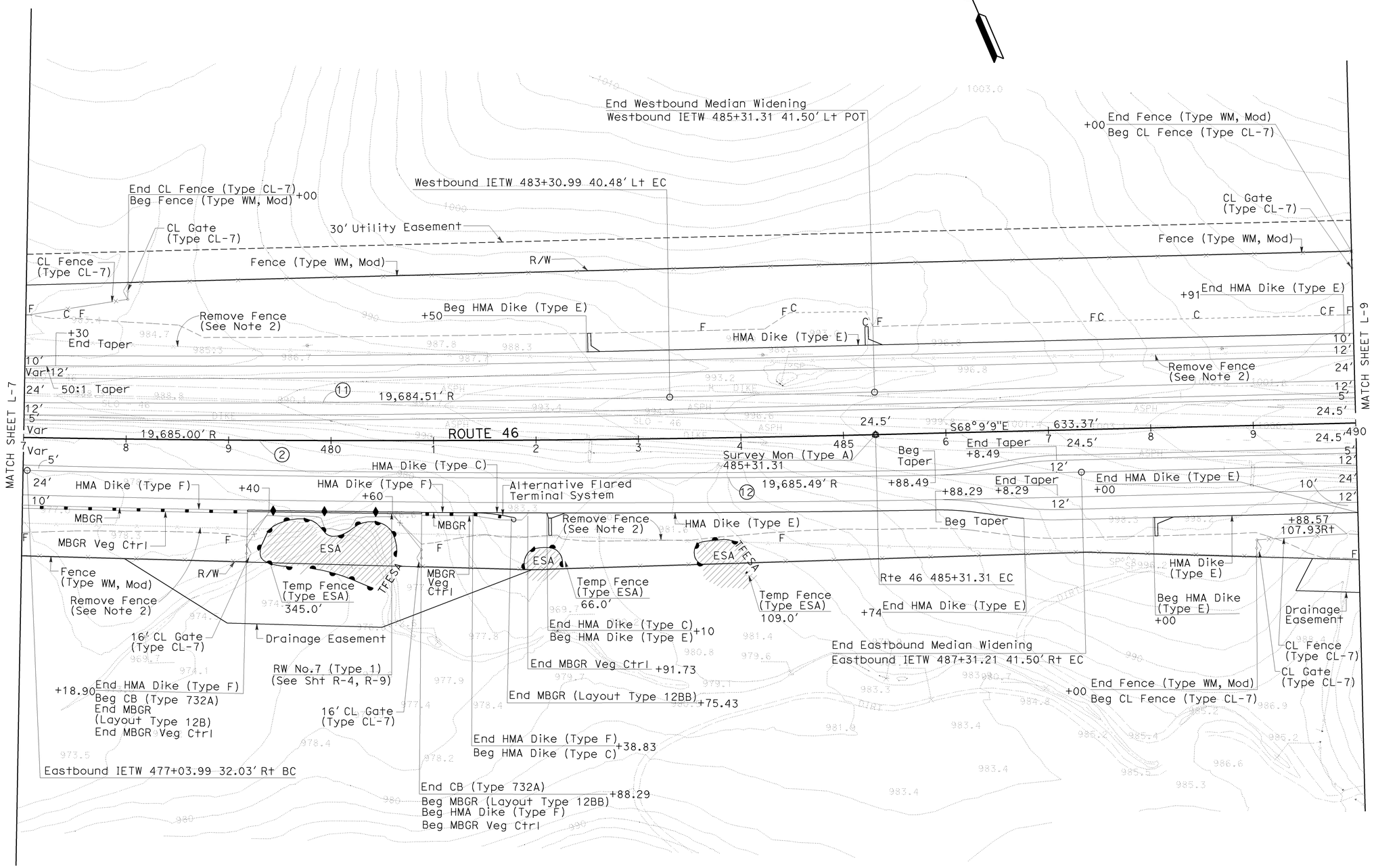

SCALE: 1″=50′

LAYOUT L-8

STATE OF CALIFORNIA - DEPARTMENT OF TRANSPORTATION
Caltrans 06-DESIGN
FUNCTIONAL SUPERVISOR JACK WALKER
CALCULATED-DESIGNED BY SUMI HOODE
CHECKED BY JOSE ARGUELLO
REVISED BY
DATE REVISED

LAST REVISION 07-14-09 DATE PLOTTED => 08-DEC-2009 TIME PLOTTED => 07:27

Dist	COUNTY	ROUTE	POST MILES TOTAL PROJECT	SHEET No.	TOTAL SHEETS
05	SLO	46	36.6/41.2	43	595

REGISTERED CIVIL ENGINEER DATE 8-24-09

12-7-09
PLANS APPROVAL DATE

REGISTERED PROFESSIONAL ENGINEER JOSE M. ARGUELLO No. 51321 Exp. 06-30-10 CIVIL STATE OF CALIFORNIA

THE STATE OF CALIFORNIA OR ITS OFFICERS OR AGENTS SHALL NOT BE RESPONSIBLE FOR THE ACCURACY OR COMPLETENESS OF ELECTRONIC COPIES OF THIS PLAN SHEET.

NOTE: FOR ACCURATE RIGHT OF WAY AND ACCESS DATA, CONTACT RIGHT OF WAY ENGINEERING AT THE DISTRICT OFFICE.

CURVE DATA

No.	R	Δ	T	L	RP	LOCATION
3	4921.25′	22°52′14″	995.45′	1964.40′	BC	℄ Rte 46 491+64.69
13	4505.25′	20°17′55″	485.39′	967.05′	BC	℄ Rte 46 500+72.74 41.50′ Rt
23	492.12′	11°48′59″	50.93′	101.50′	BC	℄ UNION Rd 182+02.38
24	656.16′	9°14′36″	53.04′	105.86′	BC	℄ UNION Rd 183+24.36
25	1312.34′	5°18′03″	60.75′	121.41′	BC	℄ UNION Rd 177+82.98

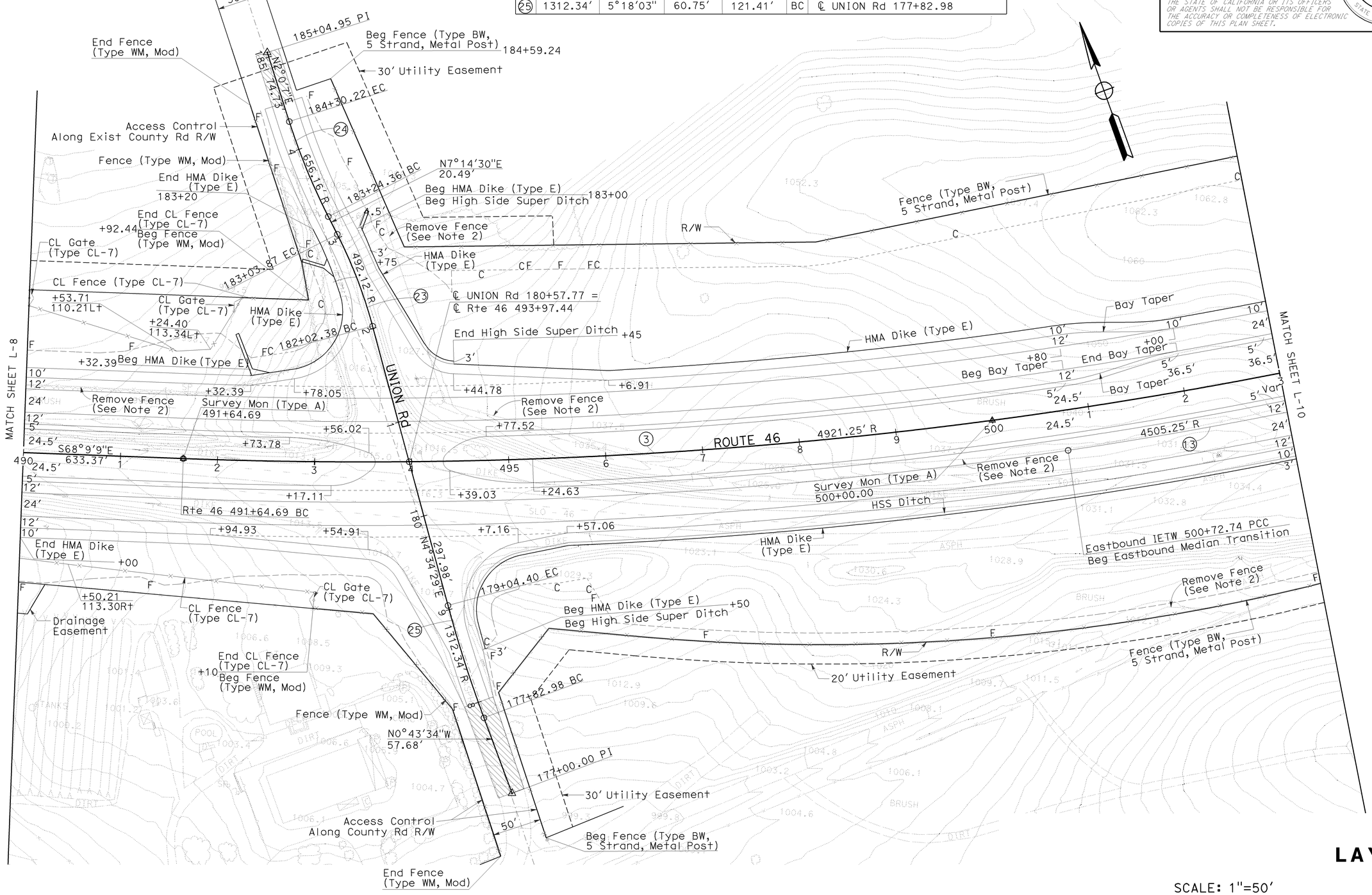

SCALE: 1″=50′

LAYOUT
L-9

STATE OF CALIFORNIA - DEPARTMENT OF TRANSPORTATION
Caltrans 06-DESIGN
FUNCTIONAL SUPERVISOR JACK WALKER
CALCULATED-DESIGNED BY JOSE ARGUELLO
CHECKED BY SUMI HOODE
REVISED BY
DATE REVISED

LAST REVISION 08-24-09
DATE PLOTTED => 08-DEC-2009
TIME PLOTTED => 07:27

Dist	COUNTY	ROUTE	POST MILES TOTAL PROJECT	SHEET No.	TOTAL SHEETS
05	SLO	46	36.6/41.2	44	595

8-24-09
REGISTERED CIVIL ENGINEER DATE

12-7-09
PLANS APPROVAL DATE

REGISTERED PROFESSIONAL ENGINEER JOSE M. ARGUELLO No. 51321 Exp. 06-30-10 CIVIL STATE OF CALIFORNIA

THE STATE OF CALIFORNIA OR ITS OFFICERS OR AGENTS SHALL NOT BE RESPONSIBLE FOR THE ACCURACY OR COMPLETENESS OF ELECTRONIC COPIES OF THIS PLAN SHEET.

NOTE: FOR ACCURATE RIGHT OF WAY AND ACCESS DATA, CONTACT RIGHT OF WAY ENGINEERING AT THE DISTRICT OFFICE.

CURVE DATA

No.	R	Δ	T	L	RP	LOCATION
3	4921.25′	22°52′14"	995.45′	1964.40′	EC	℄ Rte 46 511+29.09
13	4505.25′	20°17′55"	485.39′	967.05′	EC	℄ Rte 46 510+32.26 31.96′ Rt
14	5778.86′	08°45′52"	442.86′	883.99′	BC	℄ Rte 46 503+76.29 41.50′ Lt

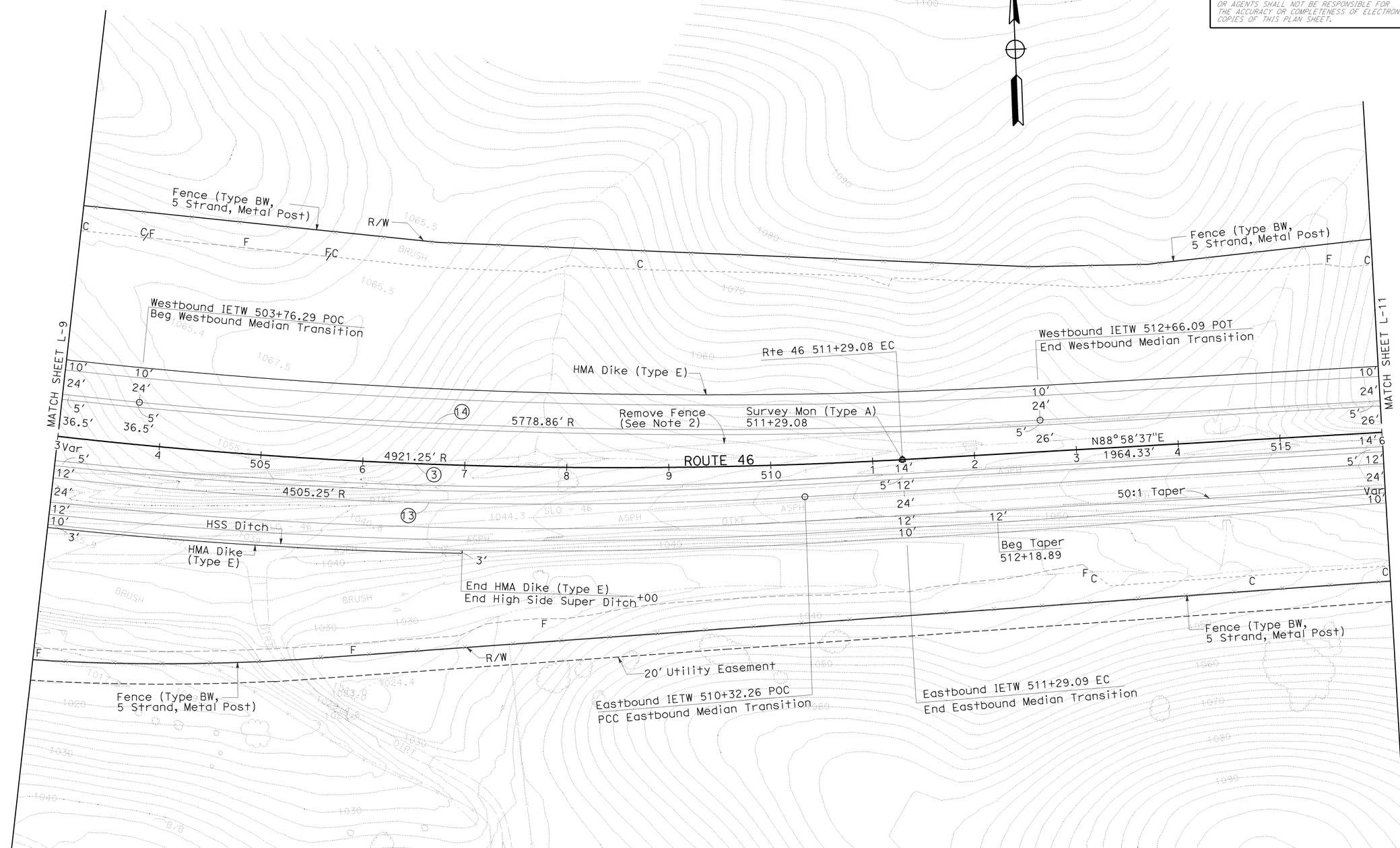

LAYOUT L-10

SCALE: 1" = 50′

STATE OF CALIFORNIA - DEPARTMENT OF TRANSPORTATION
Caltrans 06-DESIGN
FUNCTIONAL SUPERVISOR JACK WALKER
CALCULATED-DESIGNED BY JOSE ARGUELLO
CHECKED BY SUMI HOODE
REVISED BY
DATE REVISED

LAST REVISION 08-17-08
DATE PLOTTED => 08-DEC-2009
TIME PLOTTED => 07:32

Dist	COUNTY	ROUTE	POST MILES TOTAL PROJECT	SHEET No.	TOTAL SHEETS
05	SLO	46	36.6/41.2	45	595

REGISTERED CIVIL ENGINEER DATE 8-24-09

12-7-09
PLANS APPROVAL DATE

REGISTERED PROFESSIONAL ENGINEER JOSE M. ARGUELLO No. 51321 Exp. 06-30-10 CIVIL STATE OF CALIFORNIA

THE STATE OF CALIFORNIA OR ITS OFFICERS OR AGENTS SHALL NOT BE RESPONSIBLE FOR THE ACCURACY OR COMPLETENESS OF ELECTRONIC COPIES OF THIS PLAN SHEET.

NOTE: FOR ACCURATE RIGHT OF WAY AND ACCESS DATA, CONTACT RIGHT OF WAY ENGINEERING AT THE DISTRICT OFFICE.

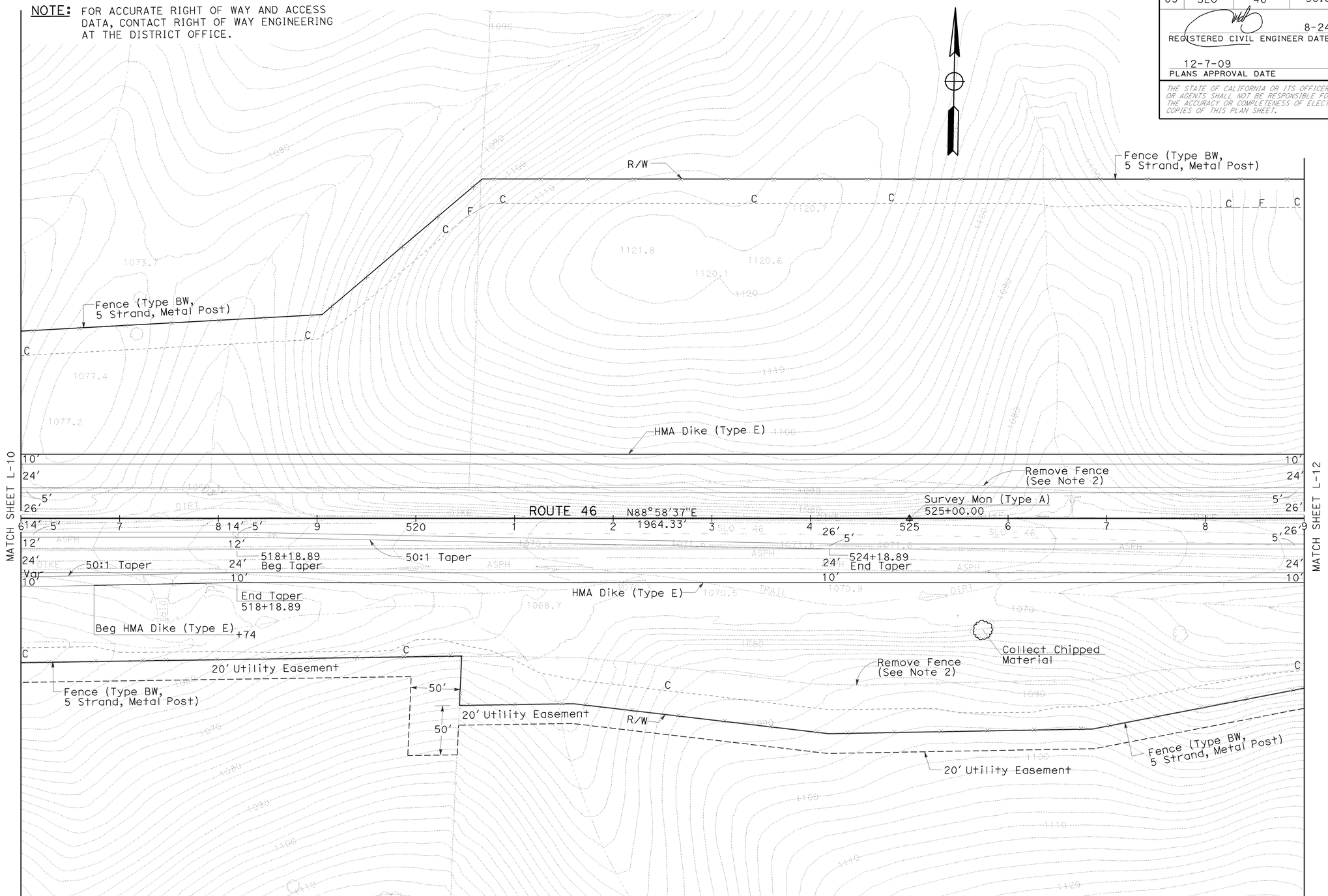

SCALE: 1" = 50'

LAYOUT L-11

STATE OF CALIFORNIA - DEPARTMENT OF TRANSPORTATION
Caltrans 06-DESIGN

FUNCTIONAL SUPERVISOR: JACK WALKER
CALCULATED-DESIGNED BY: JOSE ARGUELLO
CHECKED BY: SUMI HOODE
REVISED BY
DATE REVISED

LAST REVISION DATE PLOTTED => 08-DEC-2009
TIME PLOTTED => 07:32
07-14-09

BORDER LAST REVISED 3/1/2007
RELATIVE BORDER SCALE IS IN INCHES 0 1 2 3
USERNAME => trmariak
DGN FILE => 533072ea011.dgn
CU 06220
EA 330721

Dist	COUNTY	ROUTE	POST MILES TOTAL PROJECT	SHEET No.	TOTAL SHEETS
05	SLO	46	36.6/41.2	46	595

REGISTERED CIVIL ENGINEER DATE 8-24-09

12-7-09
PLANS APPROVAL DATE

REGISTERED PROFESSIONAL ENGINEER JOSE M. ARGUELLO No. 51321 Exp. 06-30-10 CIVIL STATE OF CALIFORNIA

THE STATE OF CALIFORNIA OR ITS OFFICERS OR AGENTS SHALL NOT BE RESPONSIBLE FOR THE ACCURACY OR COMPLETENESS OF ELECTRONIC COPIES OF THIS PLAN SHEET.

NOTE: FOR ACCURATE RIGHT OF WAY AND ACCESS DATA, CONTACT RIGHT OF WAY ENGINEERING AT THE DISTRICT OFFICE.

CURVE DATA

No.	R	Δ	T	L	RP	LOCATION
4	4494.74′	24°1′7"	956.15′	1884.20′	BC	℄ Rte 46 530+93.41
26	155.00′	28°44′44"	39.72′	77.77′	BC	℄ Prvt Dwy 5 1+08.28

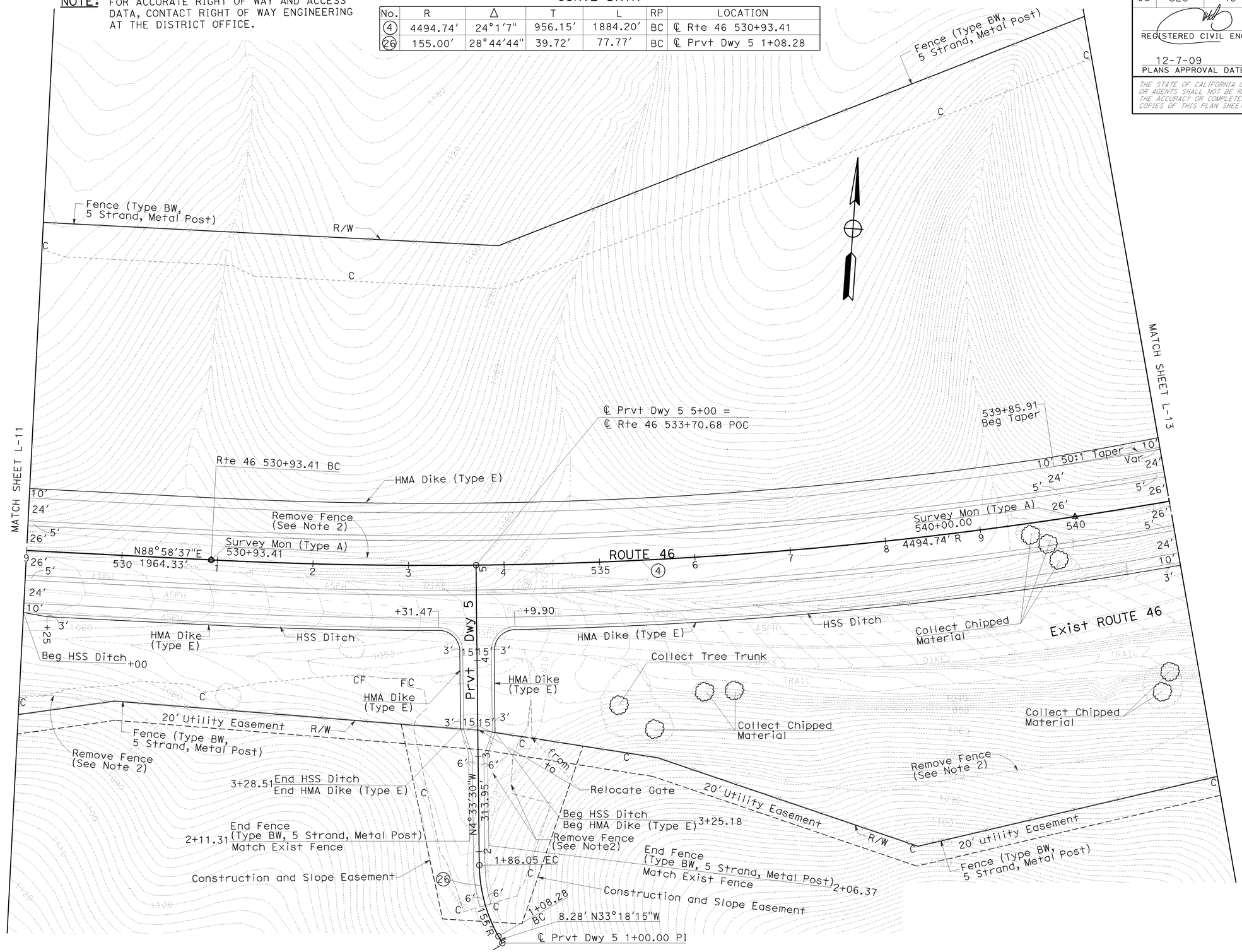

LAYOUT

SCALE: 1" = 50′

L-12

STATE OF CALIFORNIA - DEPARTMENT OF TRANSPORTATION
Caltrans 06-DESIGN

FUNCTIONAL SUPERVISOR JACK WALKER

CALCULATED-DESIGNED BY JOSE ARGUELLO
CHECKED BY SUMI HOODE

REVISED BY
DATE REVISED

LAST REVISION 07-29-09
DATE PLOTTED => 10-DEC-2009
TIME PLOTTED => 06:40

NOTE: FOR ACCURATE RIGHT OF WAY AND ACCESS DATA, CONTACT RIGHT OF WAY ENGINEERING AT THE DISTRICT OFFICE.

CURVE DATA

No.	R	Δ	T	L	RP	LOCATION
4	4494.74′	24°01′07″	956.15′	1884.20′	EC	℄ Rte 46 549+77.62
5	4921.25′	20°05′23″	871.73′	1725.55′	BC	℄ Rte 46 551+80.20

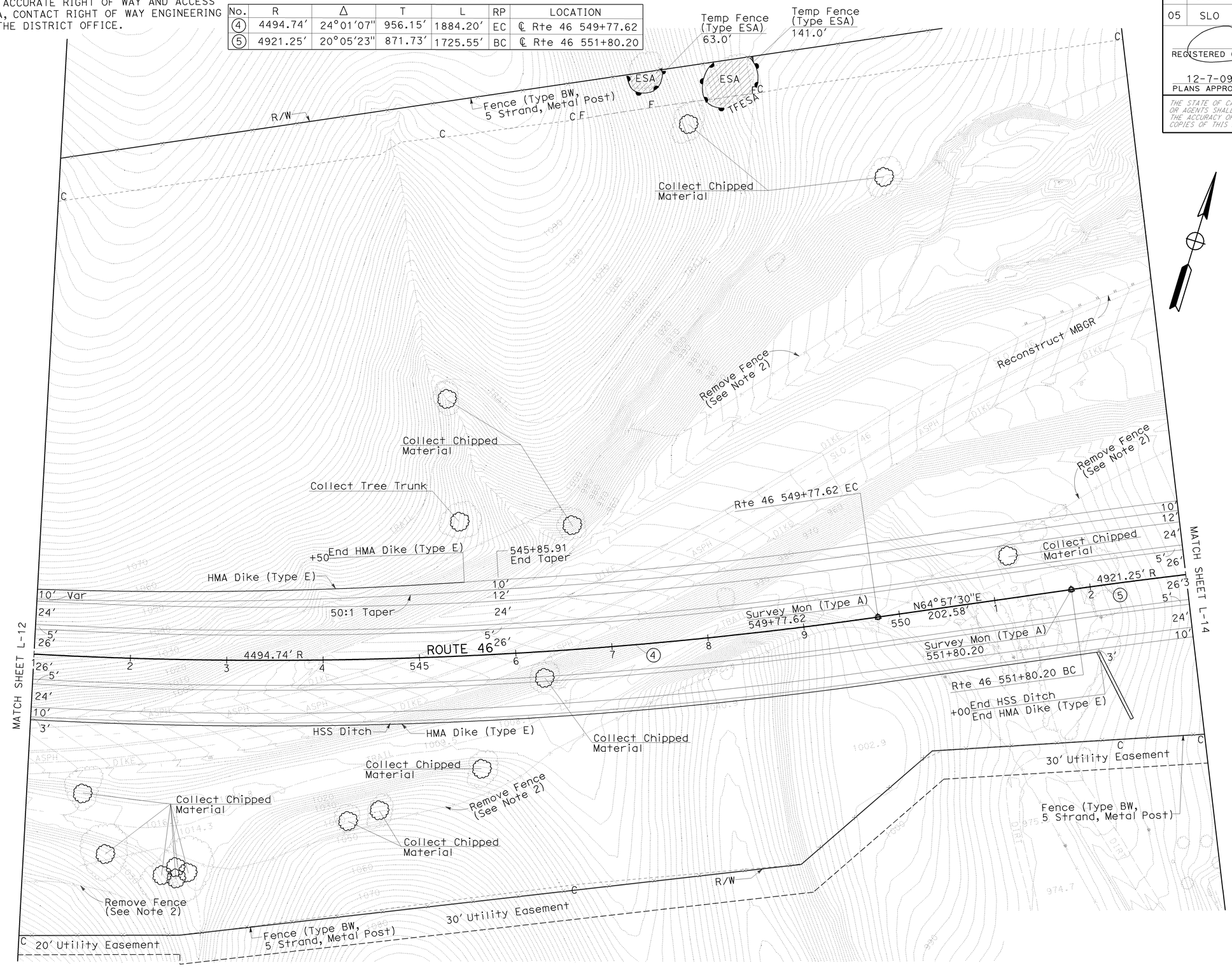

Dist	COUNTY	ROUTE	POST MILES TOTAL PROJECT	SHEET No.	TOTAL SHEETS
05	SLO	46	36.6/41.2	47	595

8-24-09
REGISTERED CIVIL ENGINEER DATE

12-7-09
PLANS APPROVAL DATE

REGISTERED PROFESSIONAL ENGINEER JOSE M. ARGUELLO No. 51321 Exp. 06-30-10 CIVIL STATE OF CALIFORNIA

THE STATE OF CALIFORNIA OR ITS OFFICERS OR AGENTS SHALL NOT BE RESPONSIBLE FOR THE ACCURACY OR COMPLETENESS OF ELECTRONIC COPIES OF THIS PLAN SHEET.

REVISED BY | DATE REVISED
JOSE ARGUELLO | SUMI HOODE
CALCULATED-DESIGNED BY | CHECKED BY
FUNCTIONAL SUPERVISOR: JACK WALKER
STATE OF CALIFORNIA - DEPARTMENT OF TRANSPORTATION
Caltrans 06-DESIGN

LAYOUT L-13

SCALE: 1" = 50′

LAST REVISION 07-29-09 | DATE PLOTTED => 10-DEC-2009 | TIME PLOTTED => 06:40

Dist	COUNTY	ROUTE	POST MILES TOTAL PROJECT	SHEET No.	TOTAL SHEETS
05	SLO	46	36.6/41.2	48	595

REGISTERED CIVIL ENGINEER DATE 8-24-09

12-7-09
PLANS APPROVAL DATE

REGISTERED PROFESSIONAL ENGINEER JOSE M. ARGUELLO No. 51321 Exp. 06-30-10 CIVIL STATE OF CALIFORNIA

THE STATE OF CALIFORNIA OR ITS OFFICERS OR AGENTS SHALL NOT BE RESPONSIBLE FOR THE ACCURACY OR COMPLETENESS OF ELECTRONIC COPIES OF THIS PLAN SHEET.

NOTE: FOR ACCURATE RIGHT OF WAY AND ACCESS DATA, CONTACT RIGHT OF WAY ENGINEERING AT THE DISTRICT OFFICE.

CURVE DATA

No.	R	Δ	T	L	RP	LOCATION
5	4921.25′	20°05′23″	871.73′	1725.55′	EC	℄ Rte 46 569+05.75
27	850.00′	07°53′13″	58.60′	117.01′	EC	℄ ESTRELLA Rd 8+29.27
28	1500.00′	11°07′26″	146.07′	291.22′	EC	℄ FR-2 24+82.42

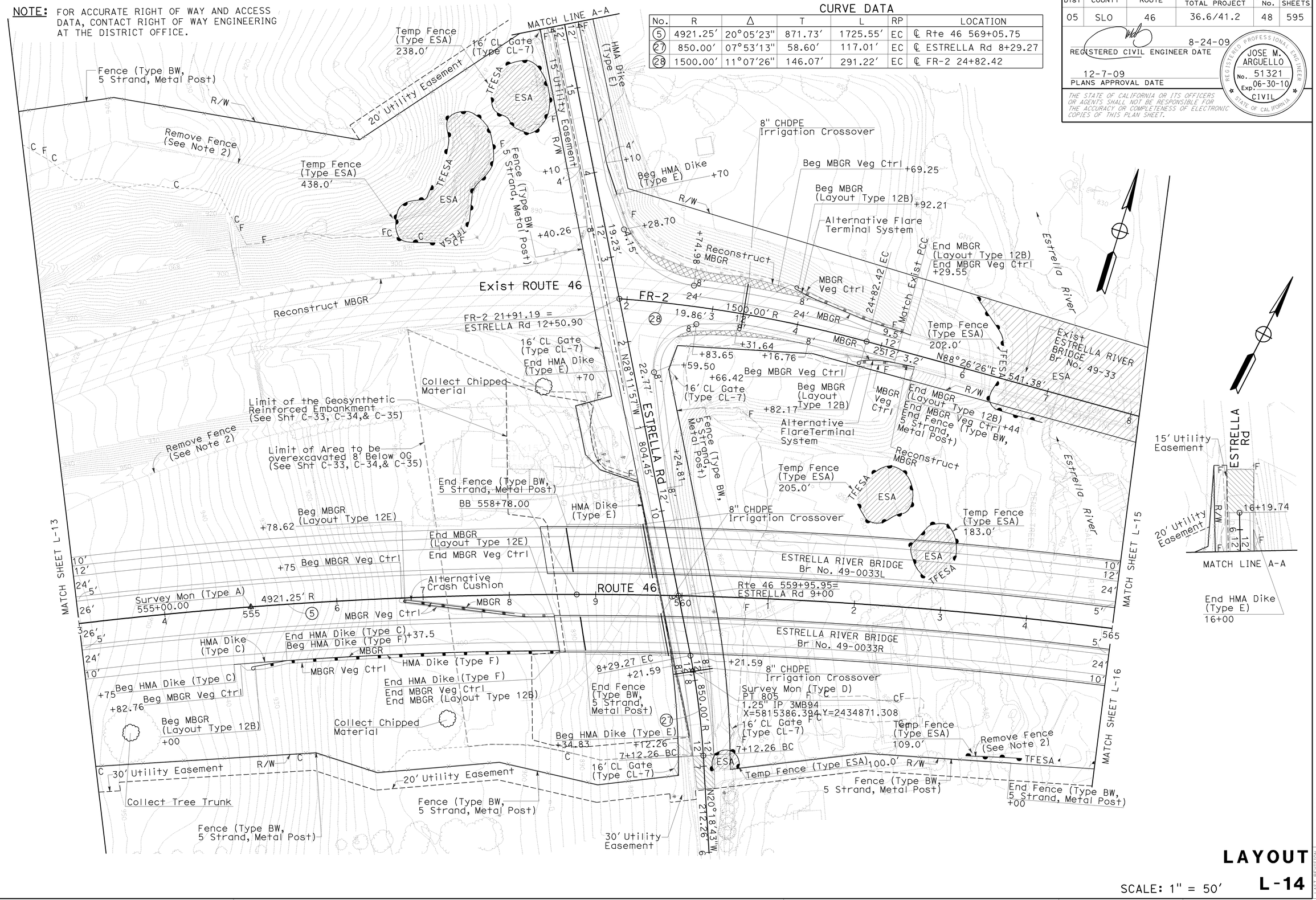

LAYOUT L-14

SCALE: 1" = 50′

STATE OF CALIFORNIA - DEPARTMENT OF TRANSPORTATION
Caltrans 06-DESIGN
FUNCTIONAL SUPERVISOR JACK WALKER
CALCULATED-DESIGNED BY JOSE ARGUELLO
CHECKED BY SUMI HOODE
REVISED BY
DATE REVISED

LAST REVISION 08-27-09
DATE PLOTTED => 10-DEC-2009
TIME PLOTTED => 06:40

Dist	COUNTY	ROUTE	POST MILES TOTAL PROJECT	SHEET No.	TOTAL SHEETS
05	SLO	46	36.6/41.2	49	595

REGISTERED CIVIL ENGINEER DATE 8-24-09

12-7-09
PLANS APPROVAL DATE

REGISTERED PROFESSIONAL ENGINEER JOSE M. ARGUELLO No. 51321 Exp. 06-30-10 CIVIL STATE OF CALIFORNIA

THE STATE OF CALIFORNIA OR ITS OFFICERS OR AGENTS SHALL NOT BE RESPONSIBLE FOR THE ACCURACY OR COMPLETENESS OF ELECTRONIC COPIES OF THIS PLAN SHEET.

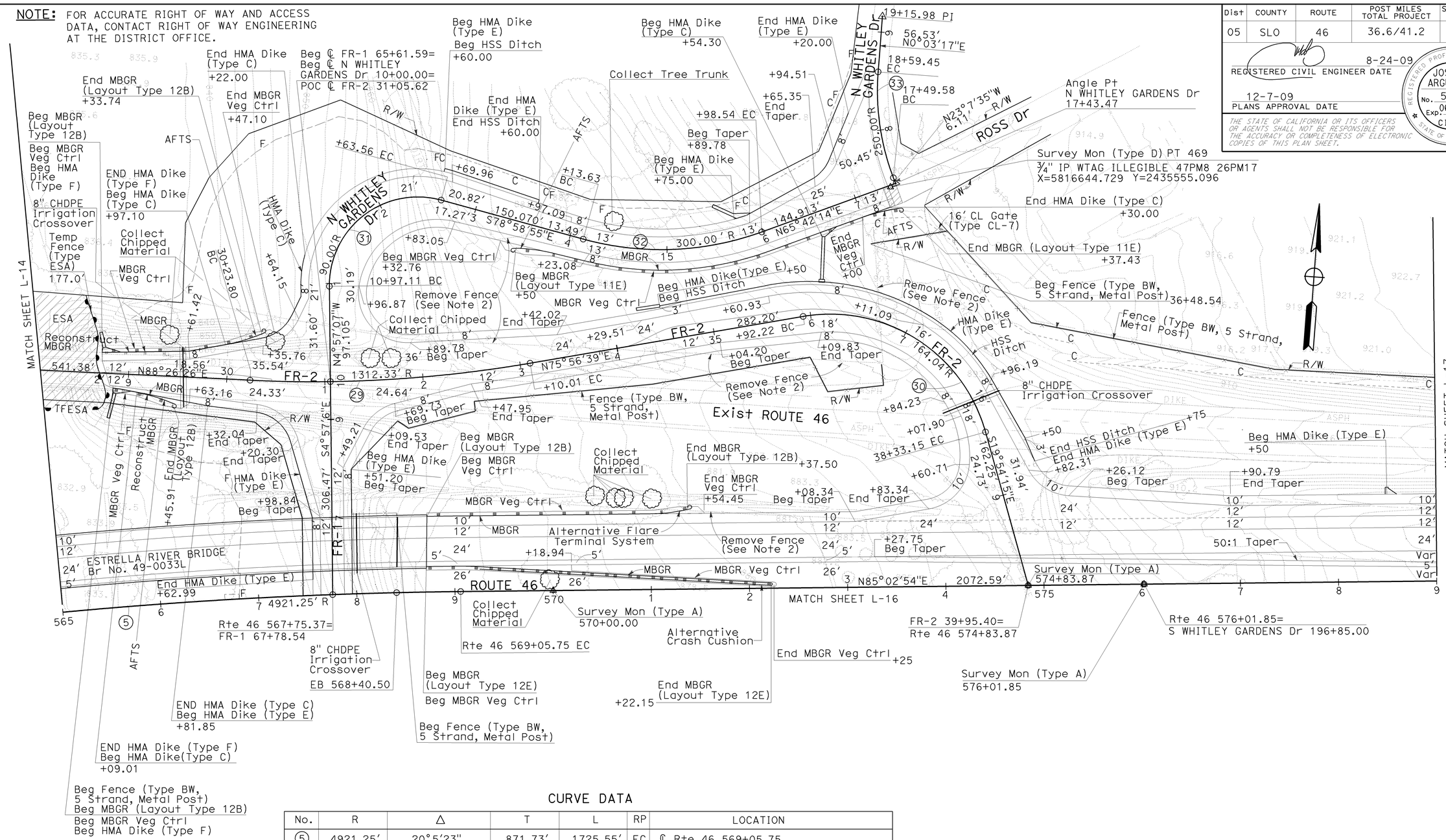

CURVE DATA

No.	R	Δ	T	L	RP	LOCATION
5	4921.25′	20°5′23"	871.73′	1725.55′	EC	℄ Rte 46 569+05.75
29	1312.33′	12°29′47"	143.68′	286.22′	BC	℄ FR-2 30+23.80
30	164.04′	84°9′6"	148.10′	240.93′	BC	℄ FR-2 35+92.22
31	90.00′	105°58′10"	119.37′	166.46′	BC	℄ N WHITLEY GARDENS Dr 10+97.11
32	300.00	35°18′50"	95.49′	184.90′	BC	℄ N WHITLEY GARDENS Dr 14+13.63
33	250.00′	25°10′53"	55.84′	109.87′	BC	℄ N WHITLEY GARDENS Dr 17+49.58

LAYOUT

SCALE: 1" = 50′

L-15

STATE OF CALIFORNIA - DEPARTMENT OF TRANSPORTATION
Caltrans
06-DESIGN
FUNCTIONAL SUPERVISOR: JACK WALKER
CALCULATED-DESIGNED BY: JOSE ARGUELLO
CHECKED BY: SUMI HOODE
REVISED BY
DATE REVISED

LAST REVISION 08-25-09
DATE PLOTTED => 10-DEC-2009
TIME PLOTTED => 06:40

NOTE: FOR ACCURATE RIGHT OF WAY AND ACCESS DATA, CONTACT RIGHT OF WAY ENGINEERING AT THE DISTRICT OFFICE.

CURVE DATA

No.	R	Δ	T	L	RP	LOCATION
5	4921.25′	20°05′23"	871.73′	1725.55′	EC	℄ Rte 46 569+05.75
34	210.00′	66°42′44"	138.24′	244.41′	BC	℄ FR-1 68+68.05
35	300.00′	43°40′00"	120.19′	228.64′	BC	℄ FR-1 76+35.56
36	700.00′	20°22′43"	125.82′	248.97′	BC	℄ S WHITLEY GARDENS Dr 192+90.41

Dist	COUNTY	ROUTE	POST MILES TOTAL PROJECT	SHEET No.	TOTAL SHEETS
05	SLO	46	36.6/41.2	50	595

REGISTERED CIVIL ENGINEER DATE 8-24-09

12-7-09
PLANS APPROVAL DATE

REGISTERED PROFESSIONAL ENGINEER JOSE M. ARGUELLO No. 51321 Exp. 06-30-10 CIVIL STATE OF CALIFORNIA

THE STATE OF CALIFORNIA OR ITS OFFICERS OR AGENTS SHALL NOT BE RESPONSIBLE FOR THE ACCURACY OR COMPLETENESS OF ELECTRONIC COPIES OF THIS PLAN SHEET.

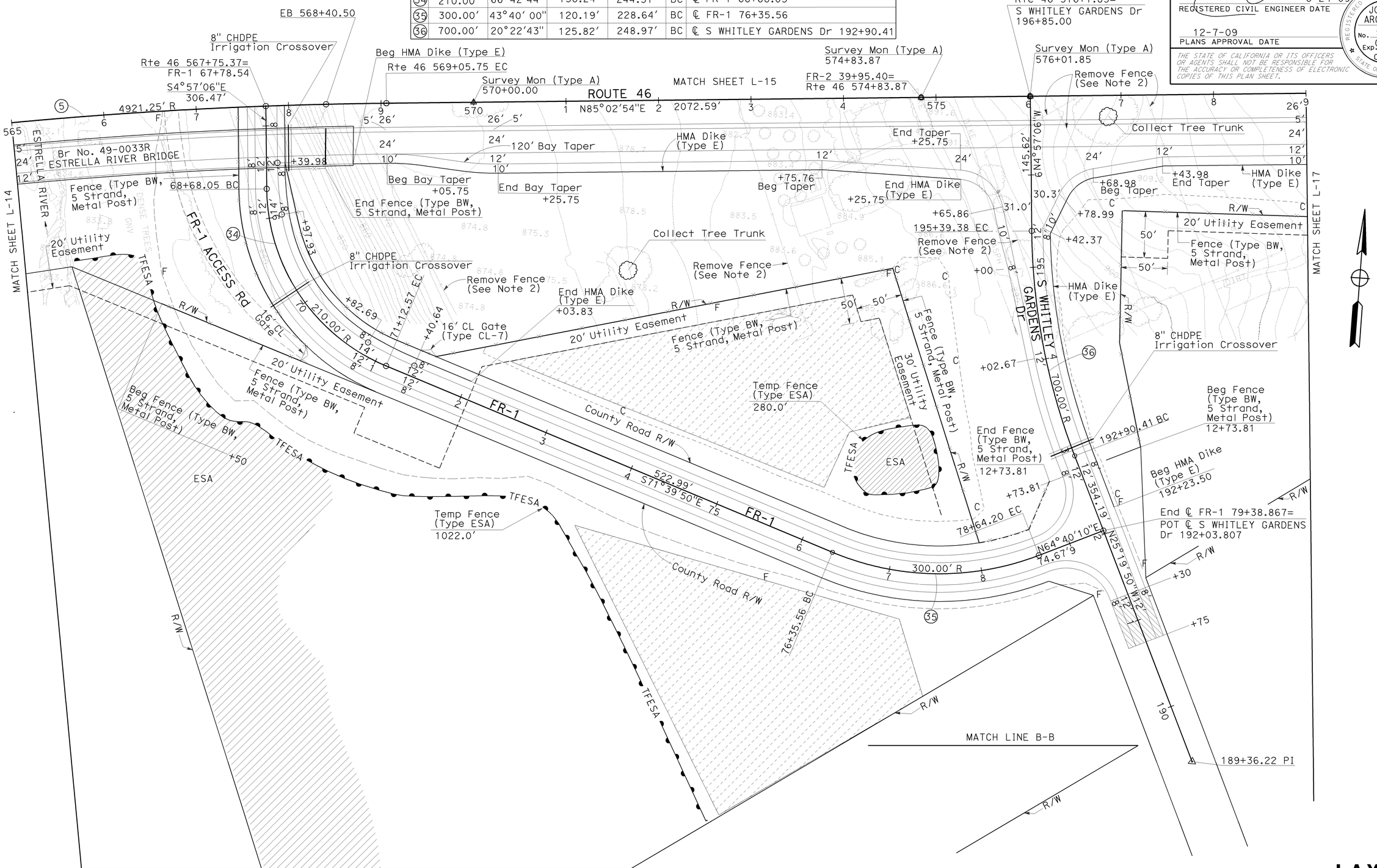

SCALE: 1" = 50′

LAYOUT L-16

STATE OF CALIFORNIA - DEPARTMENT OF TRANSPORTATION
Caltrans 06-DESIGN

FUNCTIONAL SUPERVISOR: JACK WALKER
CALCULATED-DESIGNED BY: JOSE ARGUELLO
CHECKED BY: SUMI HOODE
REVISED BY / DATE REVISED

LAST REVISION 08-17-09 | DATE PLOTTED => 10-DEC-2009 | TIME PLOTTED => 06:40

Dist	COUNTY	ROUTE	POST MILES TOTAL PROJECT	SHEET No.	TOTAL SHEETS
05	SLO	46	36.6/41.2	51	595

REGISTERED CIVIL ENGINEER DATE 8-24-09

12-7-09
PLANS APPROVAL DATE

REGISTERED PROFESSIONAL ENGINEER JOSE M. ARGUELLO No. 51321 Exp. 06-30-10 CIVIL STATE OF CALIFORNIA

THE STATE OF CALIFORNIA OR ITS OFFICERS OR AGENTS SHALL NOT BE RESPONSIBLE FOR THE ACCURACY OR COMPLETENESS OF ELECTRONIC COPIES OF THIS PLAN SHEET.

NOTE: FOR ACCURATE RIGHT OF WAY AND ACCESS DATA, CONTACT RIGHT OF WAY ENGINEERING AT THE DISTRICT OFFICE.

CURVE DATA

No.	R	Δ	T	L	RP	LOCATION
6	19,849.04′	03°28′10″	601.15′	1201.94′	BC	℄ Rte 46 589+78.34

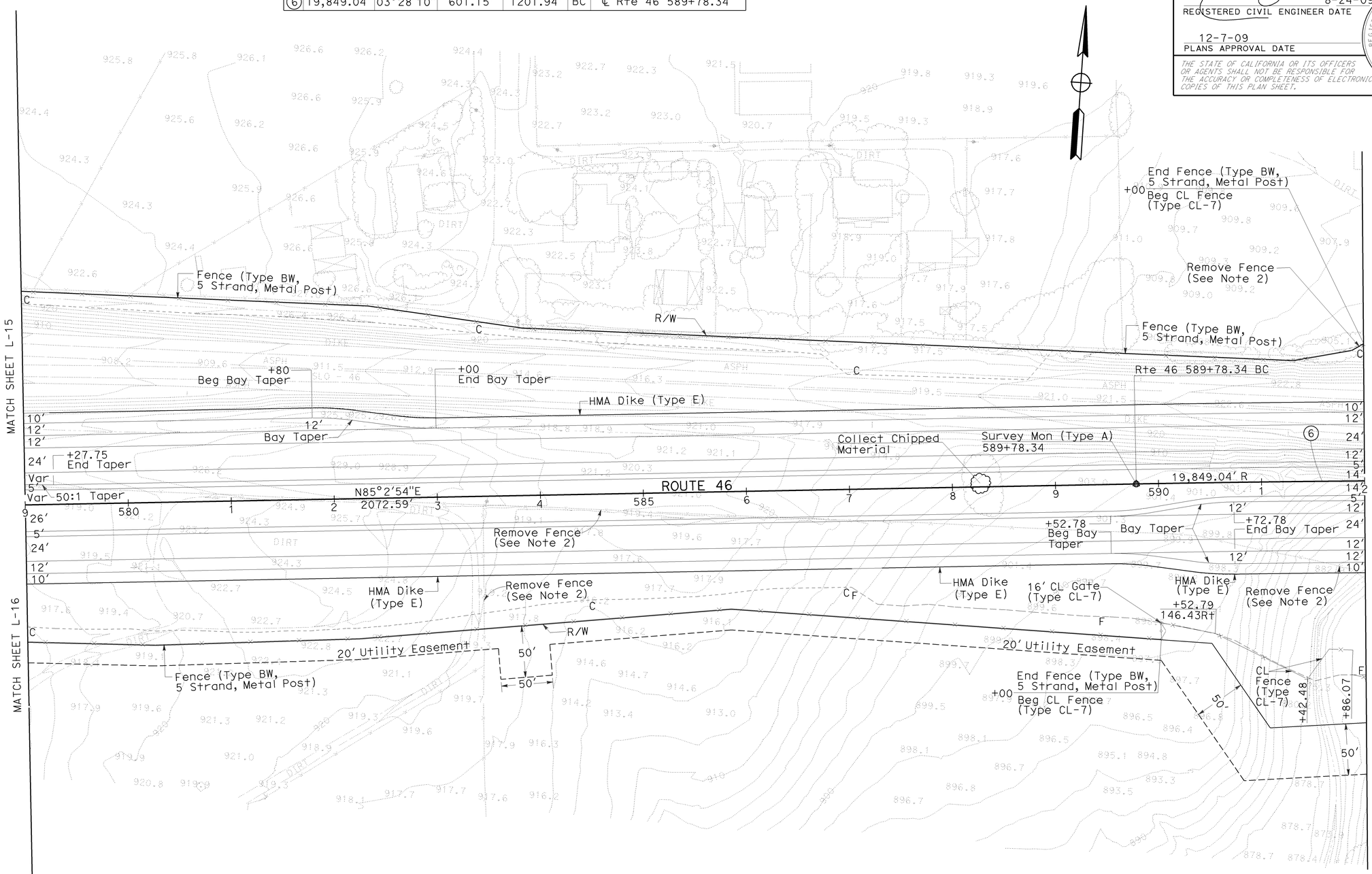

LAYOUT L-17

SCALE: 1" = 50′

STATE OF CALIFORNIA - DEPARTMENT OF TRANSPORTATION
Caltrans 06-DESIGN

FUNCTIONAL SUPERVISOR: JACK WALKER
CALCULATED-DESIGNED BY: JOSE ARGUELLO
CHECKED BY: SUMI HOODE
REVISED BY
DATE REVISED

LAST REVISION 07-14-09
DATE PLOTTED => 08-DEC-2009
TIME PLOTTED => 07:33

Dist	COUNTY	ROUTE	POST MILES TOTAL PROJECT	SHEET No.	TOTAL SHEETS
05	SLO	46	36.6/41.2	52	595

REGISTERED CIVIL ENGINEER DATE 8-24-09

12-7-09
PLANS APPROVAL DATE

REGISTERED PROFESSIONAL ENGINEER JOSE M. ARGUELLO No. 51321 Exp 06-30-10 CIVIL STATE OF CALIFORNIA

THE STATE OF CALIFORNIA OR ITS OFFICERS OR AGENTS SHALL NOT BE RESPONSIBLE FOR THE ACCURACY OR COMPLETENESS OF ELECTRONIC COPIES OF THIS PLAN SHEET.

NOTE: FOR ACCURATE RIGHT OF WAY AND ACCESS DATA, CONTACT RIGHT OF WAY ENGINEERING AT THE DISTRICT OFFICE.

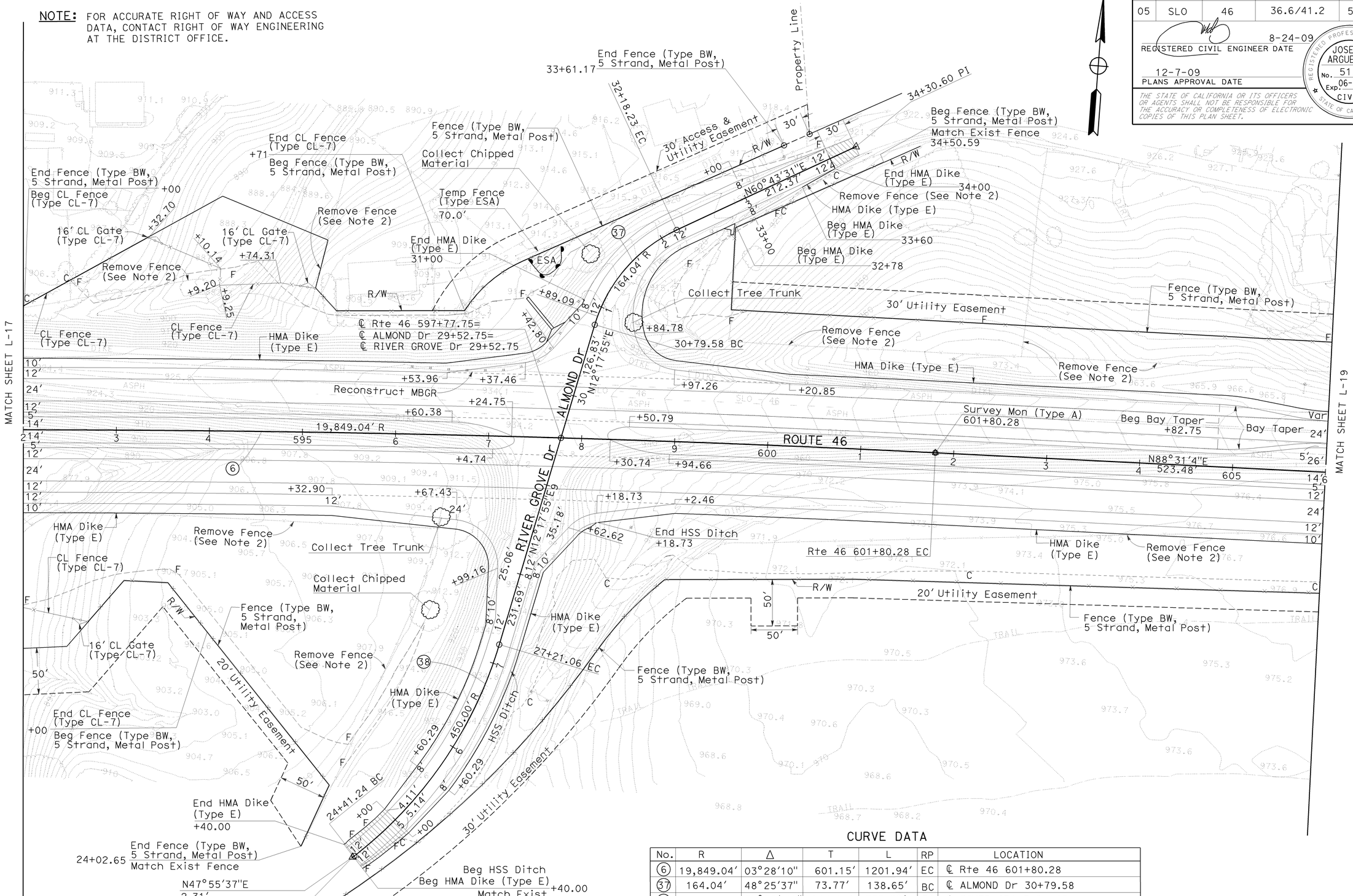

CURVE DATA

No.	R	Δ	T	L	RP	LOCATION
6	19,849.04'	03°28'10"	601.15'	1201.94'	EC	℄ Rte 46 601+80.28
37	164.04'	48°25'37"	73.77'	138.65'	BC	℄ ALMOND Dr 30+79.58
38	450.00'	35°37'41"	144.60'	279.82'	EC	℄ RIVER GROVE Dr 27+21.06

SCALE: 1" = 50'

LAYOUT L-18

REVISED BY	
DATE REVISED	
CALCULATED-DESIGNED BY	JOSE ARGUELLO
CHECKED BY	SUMI HOODE
FUNCTIONAL SUPERVISOR	JACK WALKER

STATE OF CALIFORNIA - DEPARTMENT OF TRANSPORTATION
Caltrans 06-DESIGN

DATE PLOTTED => 10-DEC-2009
TIME PLOTTED => 06:40
07-14-09

Dist	COUNTY	ROUTE	POST MILES TOTAL PROJECT	SHEET No.	TOTAL SHEETS
05	SLO	46	36.6/41.2	53	595

REGISTERED CIVIL ENGINEER DATE 8-24-09

12-7-09
PLANS APPROVAL DATE

REGISTERED PROFESSIONAL ENGINEER JOSE M. ARGUELLO No. 51321 Exp. 06-30-10 CIVIL STATE OF CALIFORNIA

THE STATE OF CALIFORNIA OR ITS OFFICERS OR AGENTS SHALL NOT BE RESPONSIBLE FOR THE ACCURACY OR COMPLETENESS OF ELECTRONIC COPIES OF THIS PLAN SHEET.

NOTE: FOR ACCURATE RIGHT OF WAY AND ACCESS DATA, CONTACT RIGHT OF WAY ENGINEERING AT THE DISTRICT OFFICE.

CURVE DATA

No.	R	Δ	T	L	RP	LOCATION
7	19,685.00′	03°28′59″	598.52′	1196.68′	BC	℄ Rte 46 607+03.76
16	19,728.00′	01°30′08″	258.64′	517.24′	BC	℄ Rte 46 WB Trans 614+00

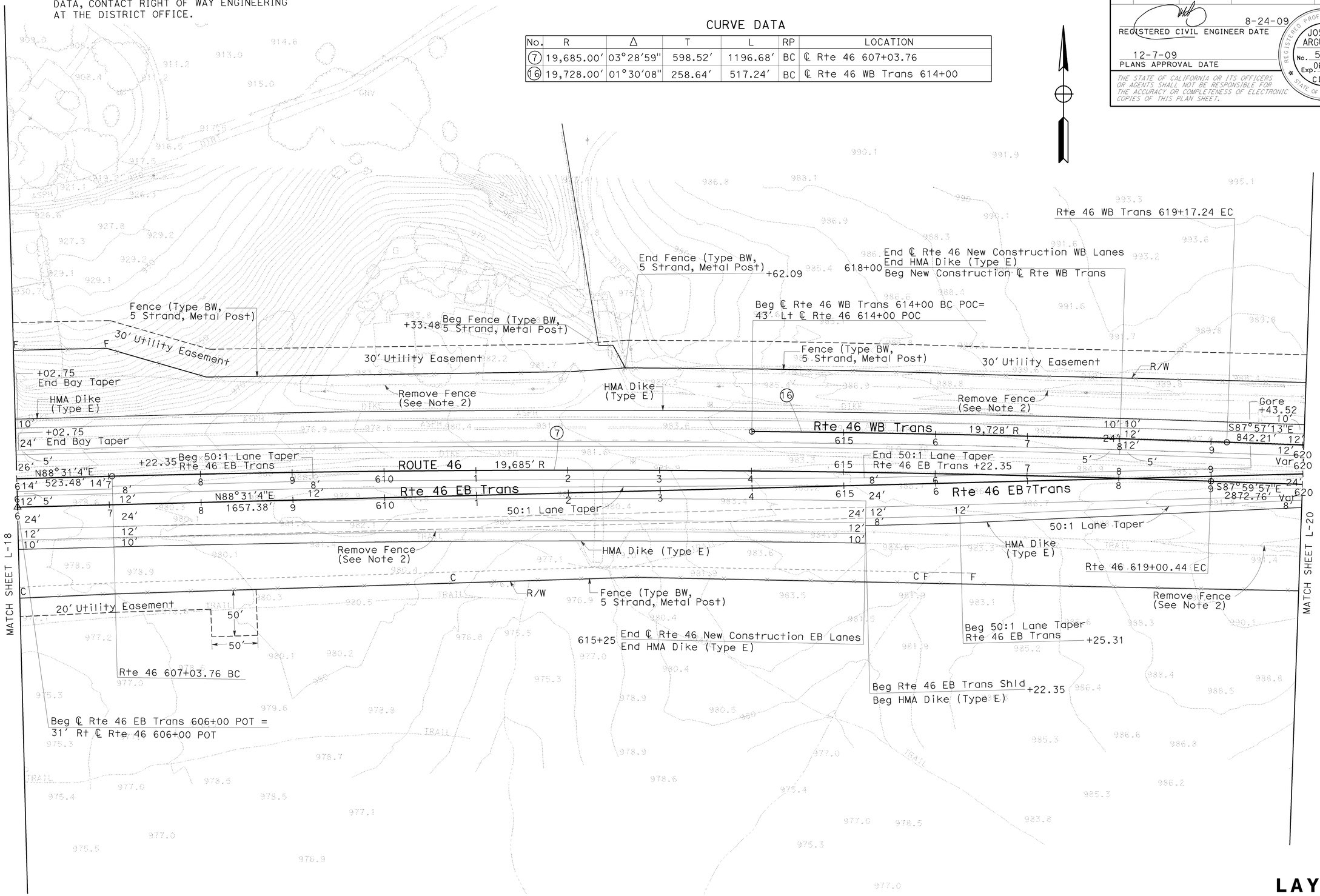

SCALE: 1″ = 50′

LAYOUT L-19

REVISED BY	DATE REVISED

CALCULATED-DESIGNED BY: JOSE ARGUELLO
CHECKED BY: SUMI HOODE
FUNCTIONAL SUPERVISOR: JACK WALKER

STATE OF CALIFORNIA - DEPARTMENT OF TRANSPORTATION
Caltrans
06-DESIGN

LAST REVISION 08-26-09
DATE PLOTTED => 08-DEC-2009
TIME PLOTTED => 07:33

Dist	COUNTY	ROUTE	POST MILES TOTAL PROJECT	SHEET No.	TOTAL SHEETS
05	SLO	46	36.6/41.2	54	595

REGISTERED CIVIL ENGINEER DATE 8-24-09

12-7-09
PLANS APPROVAL DATE

REGISTERED PROFESSIONAL ENGINEER JOSE M. ARGUELLO No. 51321 Exp. 06-30-10 CIVIL STATE OF CALIFORNIA

THE STATE OF CALIFORNIA OR ITS OFFICERS OR AGENTS SHALL NOT BE RESPONSIBLE FOR THE ACCURACY OR COMPLETENESS OF ELECTRONIC COPIES OF THIS PLAN SHEET.

NOTE: FOR ACCURATE RIGHT OF WAY AND ACCESS DATA, CONTACT RIGHT OF WAY ENGINEERING AT THE DISTRICT OFFICE.

CURVE DATA

No.	R	Δ	T	L	RP	LOCATION
17	8250.00′	03°28′59″	250.85′	501.54′	EC	℄ Rte 46 EB Trans 627+58.92

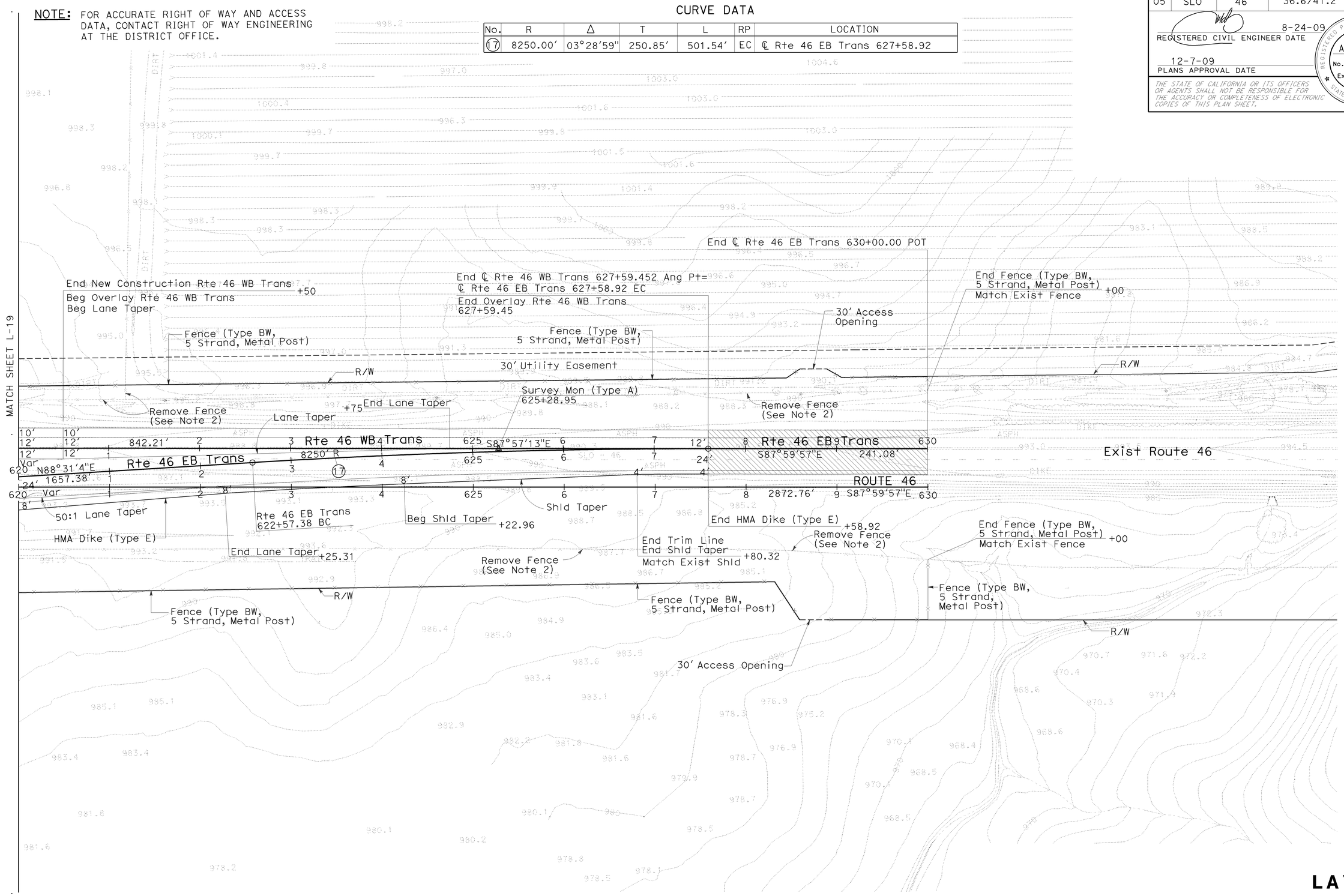

SCALE: 1" = 50′

LAYOUT
L-20

STATE OF CALIFORNIA - DEPARTMENT OF TRANSPORTATION
Caltrans 06-DESIGN
FUNCTIONAL SUPERVISOR JACK WALKER
CALCULATED-DESIGNED BY JOSE ARGUELLO
CHECKED BY SUMI HOODE
REVISED BY
DATE REVISED

LAST REVISION 07-14-09
DATE PLOTTED => 08-DEC-2009
TIME PLOTTED => 07:53

Dist	COUNTY	ROUTE	POST MILES TOTAL PROJECT	SHEET No.	TOTAL SHEETS
05	SLO	46	36.6/41.2	55	595

REGISTERED CIVIL ENGINEER DATE 8-24-09

PLANS APPROVAL DATE 12-7-09

REGISTERED PROFESSIONAL ENGINEER JOSE M. ARGUELLO No. 51321 Exp 06-30-10 CIVIL STATE OF CALIFORNIA

THE STATE OF CALIFORNIA OR ITS OFFICERS OR AGENTS SHALL NOT BE RESPONSIBLE FOR THE ACCURACY OR COMPLETENESS OF ELECTRONIC COPIES OF THIS PLAN SHEET.

ABBREVIATIONS:

Prvt	PRIVATE
ST	STAGE
PH	PHASE

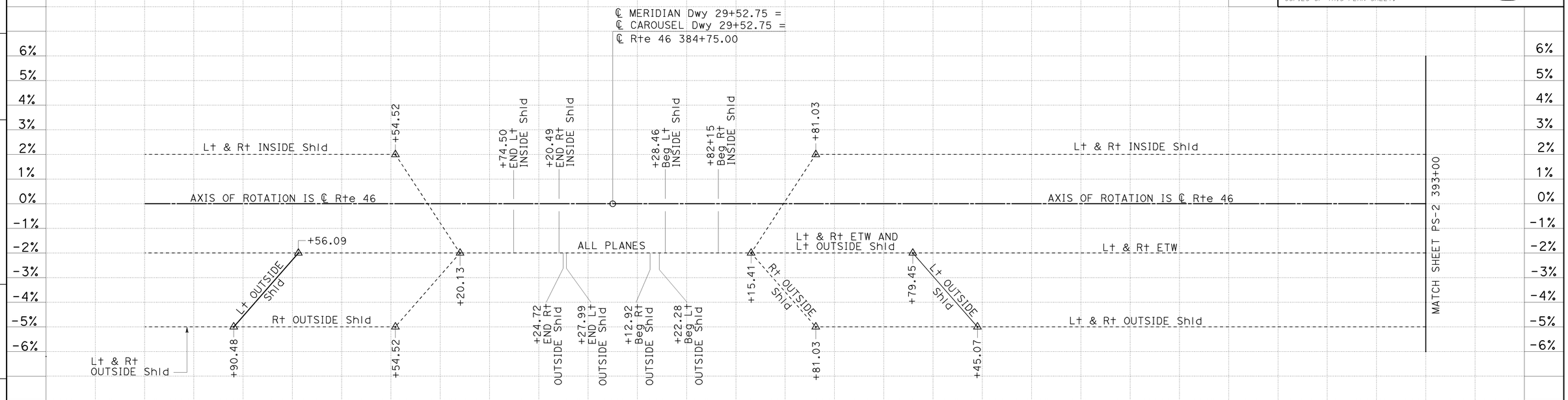

SUPERELEVATION DIAGRAM

SCALE: Horiz 1" = 50'

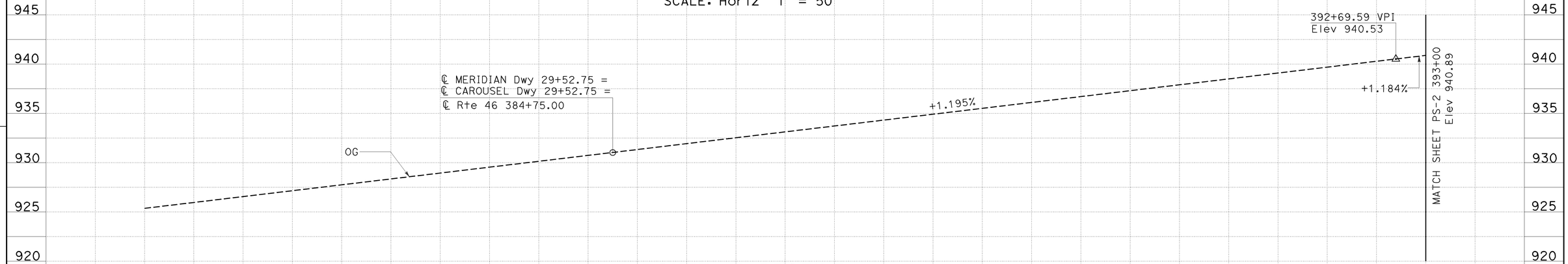

ROUTE 46 PROFILE

SCALE: Horiz 1" = 50'
Vert 1" = 5'

PROFILE AND SUPERELEVATION DIAGRAM

SCALE: AS SHOWN

PS-1

Station	380	1	2	3	4	385	6	7	8	9	390	1	2	3	Sheet Total
CY Exc							128								128
CY Emb							1								1

REVISED BY | DATE REVISED

CALCULATED-DESIGNED BY JOSE ARGUELLO | CHECKED BY SUMI HOODE

FUNCTIONAL SUPERVISOR JACK WALKER

STATE OF CALIFORNIA - DEPARTMENT OF TRANSPORTATION 06-DESIGN

Caltrans

LAST REVISION 06-08-09 | DATE PLOTTED => 08-DEC-2009 TIME PLOTTED => 07:33

Dist	COUNTY	ROUTE	POST MILES TOTAL PROJECT	SHEET No.	TOTAL SHEETS
05	SLO	46	36.6/41.2	56	595

REGISTERED CIVIL ENGINEER DATE 8-24-09

12-7-09
PLANS APPROVAL DATE

REGISTERED PROFESSIONAL ENGINEER
JOSE M. ARGUELLO
No. 51321
Exp 06-30-10
CIVIL
STATE OF CALIFORNIA

THE STATE OF CALIFORNIA OR ITS OFFICERS OR AGENTS SHALL NOT BE RESPONSIBLE FOR THE ACCURACY OR COMPLETENESS OF ELECTRONIC COPIES OF THIS PLAN SHEET.

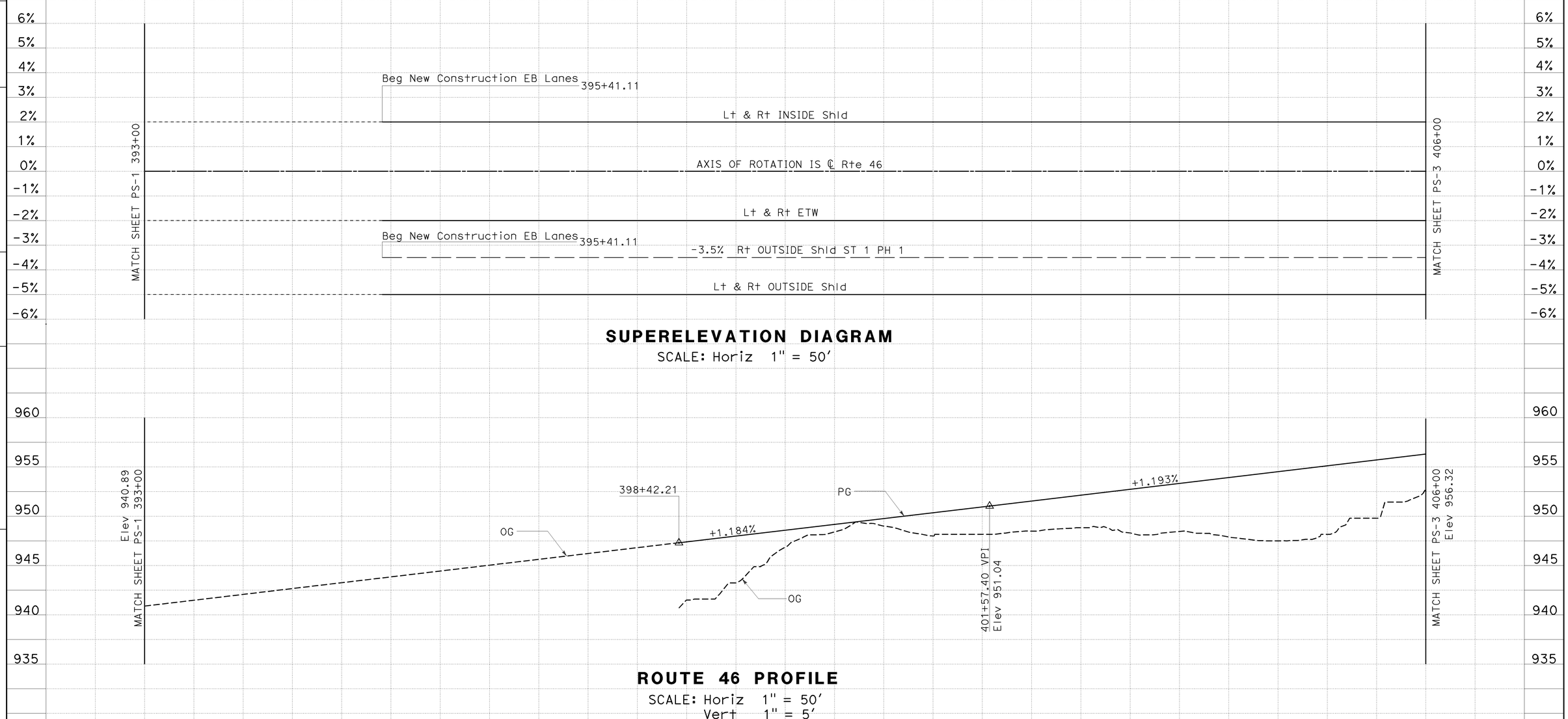

SUPERELEVATION DIAGRAM

SCALE: Horiz 1" = 50'

ROUTE 46 PROFILE

SCALE: Horiz 1" = 50'
Vert 1" = 5'

Station	3	4	395	6	7	8	9	400	1	2	3	4	405	6	Sheet Total
CY Exc	10,097														10,097
CY Emb	1973														1973

PROFILE AND SUPERELEVATION DIAGRAM

SCALE: AS SHOWN **PS-2**

REVISED BY | DATE REVISED

JOSE ARGUELLO | SUMI HOODE

CALCULATED-DESIGNED BY | CHECKED BY

FUNCTIONAL SUPERVISOR: JACK WALKER

STATE OF CALIFORNIA - DEPARTMENT OF TRANSPORTATION
Caltrans 06-DESIGN

LAST REVISION 06-08-09 | DATE PLOTTED => 08-DEC-2009 TIME PLOTTED => 07:33

Dist	COUNTY	ROUTE	POST MILES TOTAL PROJECT	SHEET No.	TOTAL SHEETS
05	SLO	46	36.6/41.2	57	595

REGISTERED CIVIL ENGINEER DATE 8-24-09

PLANS APPROVAL DATE 12-7-09

REGISTERED PROFESSIONAL ENGINEER JOSE M. ARGUELLO No. 51321 Exp 06-30-10 CIVIL STATE OF CALIFORNIA

THE STATE OF CALIFORNIA OR ITS OFFICERS OR AGENTS SHALL NOT BE RESPONSIBLE FOR THE ACCURACY OR COMPLETENESS OF ELECTRONIC COPIES OF THIS PLAN SHEET.

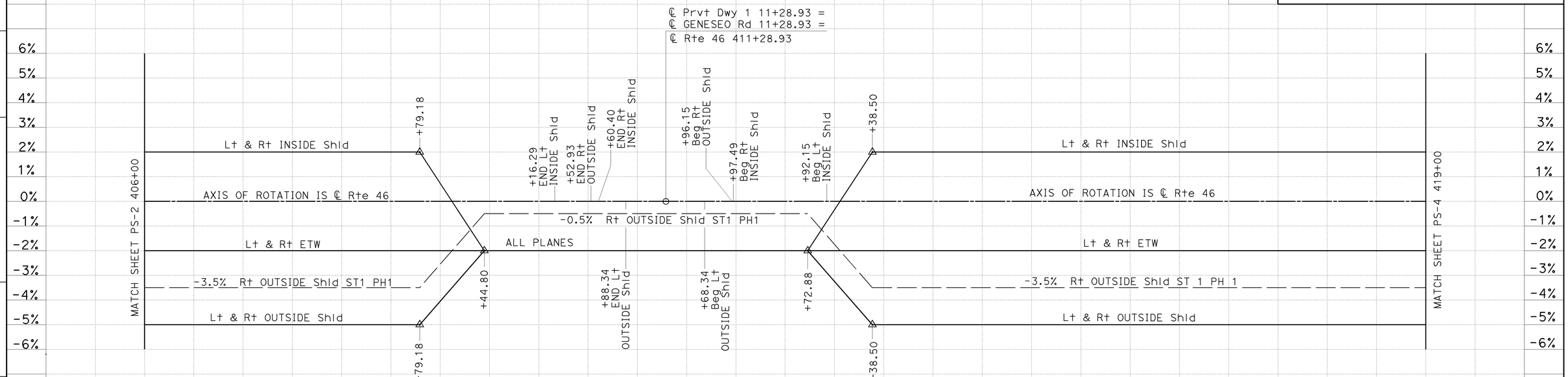

SUPERELEVATION DIAGRAM

SCALE: Horiz 1" = 50'

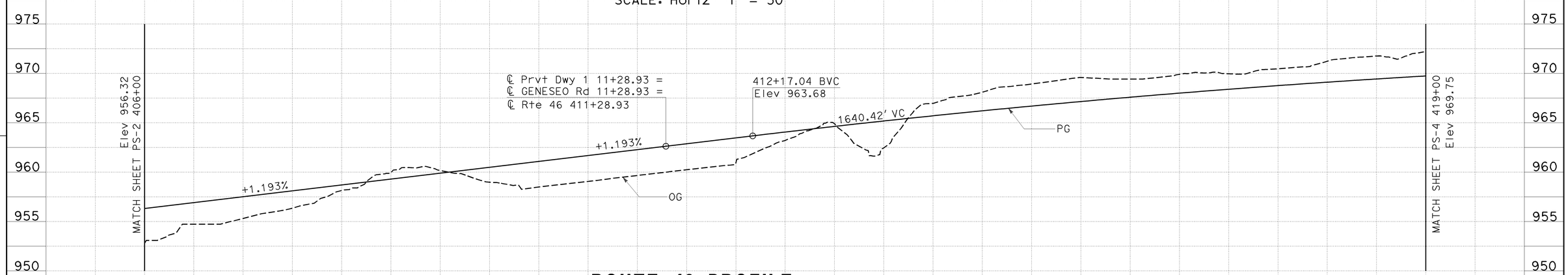

ROUTE 46 PROFILE

SCALE: Horiz 1" = 50'
Vert 1" = 5'

PROFILE AND SUPERELEVATION DIAGRAM

SCALE: AS SHOWN **PS-3**

Station	6	7	8	9	410	1	2	3	4	5	6	7	8	9	Sheet Total
CY Exc					12,998						30,280				43,278
CY Emb					707						267				974

STATE OF CALIFORNIA - DEPARTMENT OF TRANSPORTATION
Caltrans 06-DESIGN
FUNCTIONAL SUPERVISOR JACK WALKER
CALCULATED-DESIGNED BY JOSE ARGUELLO
CHECKED BY SUMI HOODE
REVISED BY
DATE REVISED

LAST REVISION 06-08-09
DATE PLOTTED => 08-DEC-2009
TIME PLOTTED => 07:33

Dist	COUNTY	ROUTE	POST MILES TOTAL PROJECT	SHEET No.	TOTAL SHEETS
05	SLO	46	36.6/41.2	58	595

REGISTERED CIVIL ENGINEER DATE 8-24-09

PLANS APPROVAL DATE 12-7-09

REGISTERED PROFESSIONAL ENGINEER JOSE M. ARGUELLO No. 51321 Exp 06-30-10 CIVIL STATE OF CALIFORNIA

THE STATE OF CALIFORNIA OR ITS OFFICERS OR AGENTS SHALL NOT BE RESPONSIBLE FOR THE ACCURACY OR COMPLETENESS OF ELECTRONIC COPIES OF THIS PLAN SHEET.

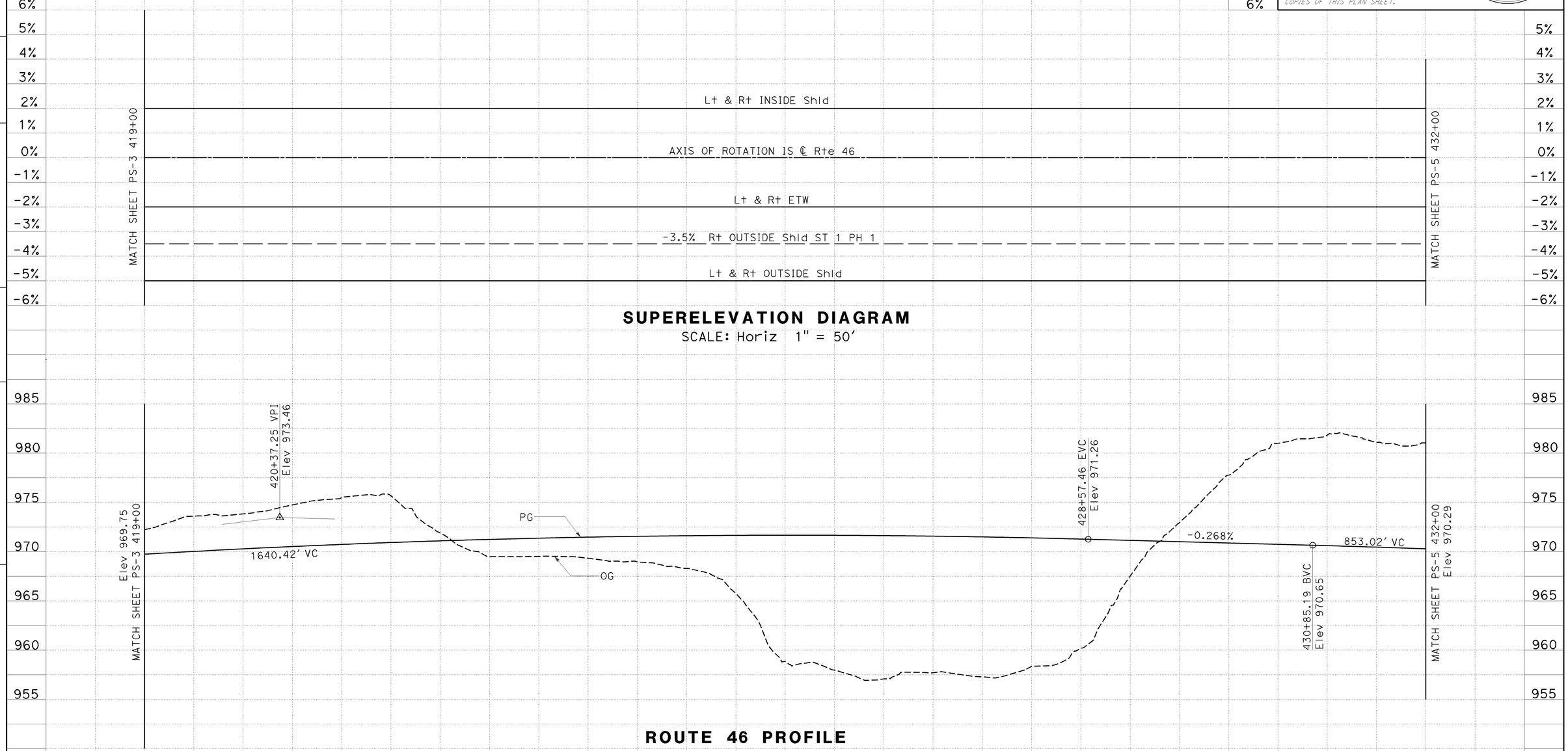

SUPERELEVATION DIAGRAM

SCALE: Horiz 1" = 50'

ROUTE 46 PROFILE

SCALE: Horiz 1" = 50'
Vert 1" = 5'

PROFILE AND SUPERELEVATION DIAGRAM

SCALE: AS SHOWN

PS-4

STATE OF CALIFORNIA - DEPARTMENT OF TRANSPORTATION
Caltrans
06-DESIGN

FUNCTIONAL SUPERVISOR: JACK WALKER

CALCULATED-DESIGNED BY: JOSE ARGUELLO
CHECKED BY: SUMI HOODE
REVISED BY
DATE REVISED

LAST REVISION 06-03-09
DATE PLOTTED => 08-DEC-2009
TIME PLOTTED => 07:33

Dist	COUNTY	ROUTE	POST MILES TOTAL PROJECT	SHEET No.	TOTAL SHEETS
05	SLO	46	36.6/41.2	59	595

REGISTERED CIVIL ENGINEER DATE 8-24-09

12-7-09
PLANS APPROVAL DATE

REGISTERED PROFESSIONAL ENGINEER JOSE M. ARGUELLO No. 51321 Exp 06-30-10 CIVIL STATE OF CALIFORNIA

THE STATE OF CALIFORNIA OR ITS OFFICERS OR AGENTS SHALL NOT BE RESPONSIBLE FOR THE ACCURACY OR COMPLETENESS OF ELECTRONIC COPIES OF THIS PLAN SHEET.

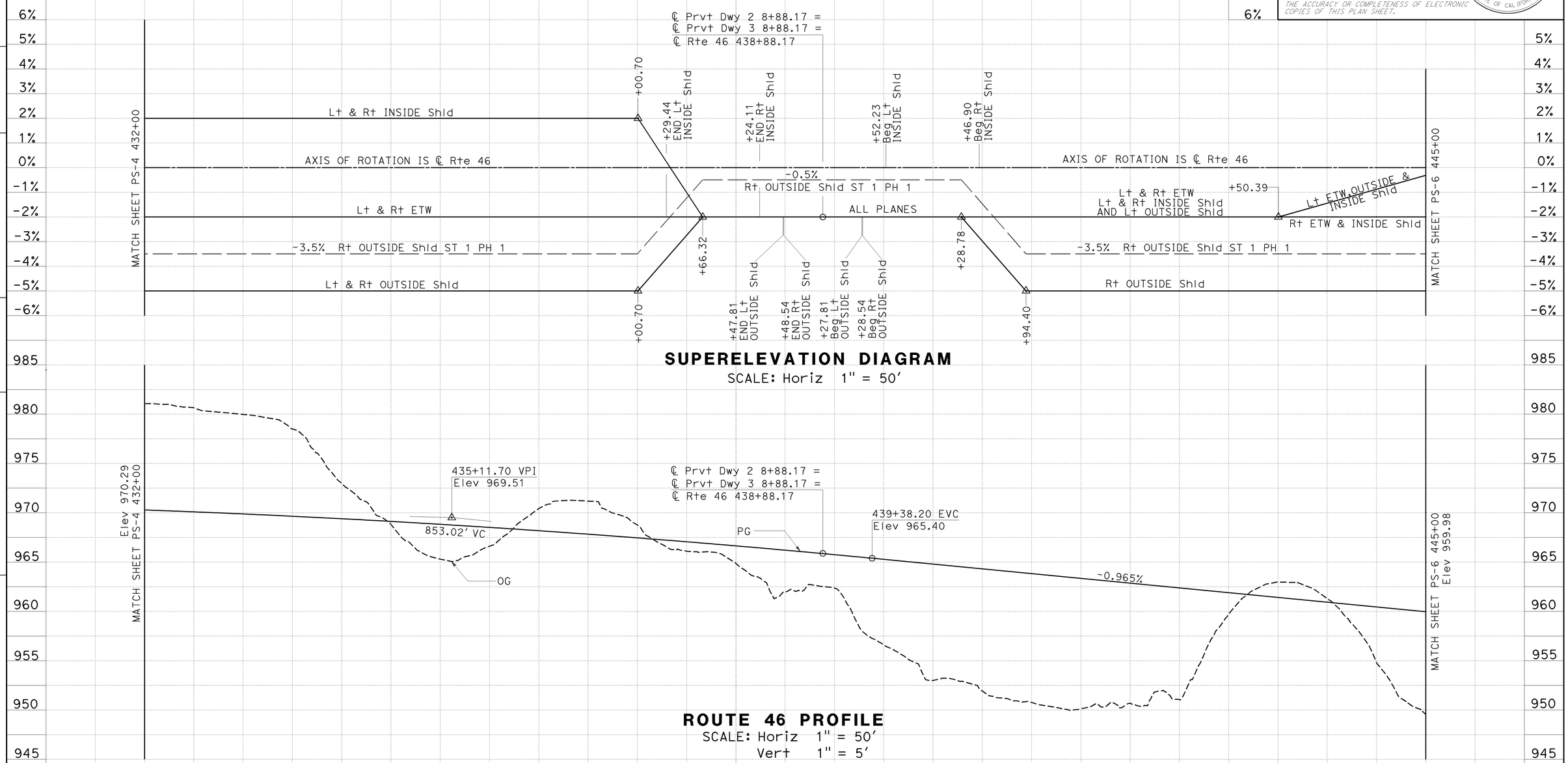

PROFILE AND SUPERELEVATION DIAGRAM

SCALE: AS SHOWN

PS-5

Sheet Total

STATE OF CALIFORNIA - DEPARTMENT OF TRANSPORTATION

Caltrans

06-DESIGN

FUNCTIONAL SUPERVISOR: JACK WALKER

CALCULATED-DESIGNED BY: JOSE ARGUELLO

CHECKED BY: SUMI HOODE

REVISED BY

DATE REVISED

LAST REVISION 06-03-09

DATE PLOTTED => 08-DEC-2009
TIME PLOTTED => 07:34

Dist	COUNTY	ROUTE	POST MILES TOTAL PROJECT	SHEET No.	TOTAL SHEETS
05	SLO	46	36.6/41.2	60	595

REGISTERED CIVIL ENGINEER DATE 8-24-09

PLANS APPROVAL DATE 12-7-09

REGISTERED PROFESSIONAL ENGINEER JOSE M. ARGUELLO No. 51321 Exp 06-30-10 CIVIL STATE OF CALIFORNIA

THE STATE OF CALIFORNIA OR ITS OFFICERS OR AGENTS SHALL NOT BE RESPONSIBLE FOR THE ACCURACY OR COMPLETENESS OF ELECTRONIC COPIES OF THIS PLAN SHEET.

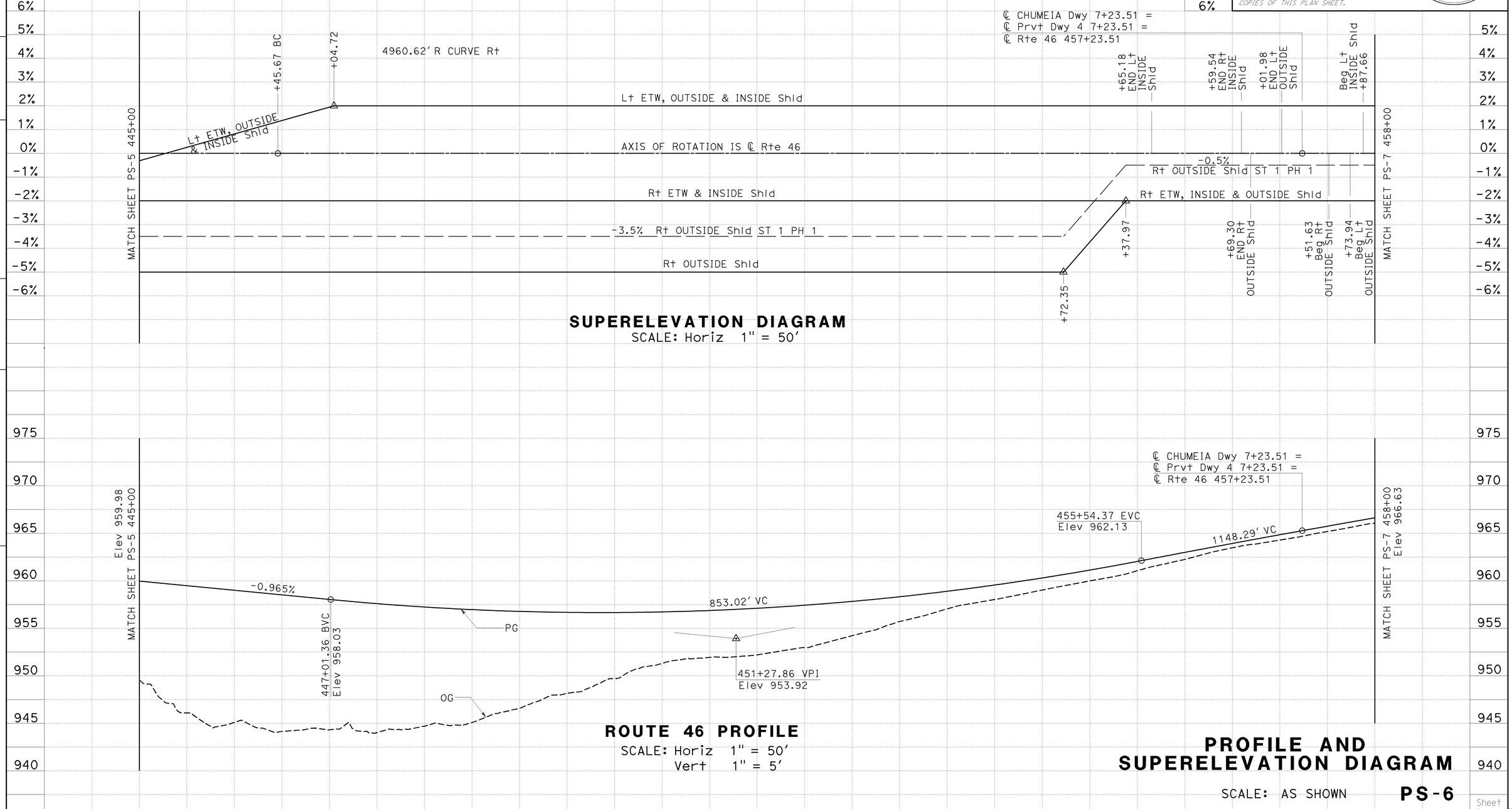

SUPERELEVATION DIAGRAM

SCALE: Horiz 1" = 50'

ROUTE 46 PROFILE

SCALE: Horiz 1" = 50'
Vert 1" = 5'

PROFILE AND SUPERELEVATION DIAGRAM

SCALE: AS SHOWN

PS-6

Station	445	6	7	8	9	450	1	2	3	4	455	6	7	8	Sheet Total
CY Exc	8669														8669
CY Emb	22,531														22,531

STATE OF CALIFORNIA - DEPARTMENT OF TRANSPORTATION
Caltrans
06-DESIGN
FUNCTIONAL SUPERVISOR JACK WALKER
CALCULATED-DESIGNED BY JOSE ARGUELLO
CHECKED BY SUMI HOODE
REVISED BY
DATE REVISED

LAST REVISION 06-03-09
DATE PLOTTED => 08-DEC-2009
TIME PLOTTED => 07:34

Dist	COUNTY	ROUTE	POST MILES TOTAL PROJECT	SHEET No.	TOTAL SHEETS
05	SLO	46	36.6/41.2	61	595

REGISTERED CIVIL ENGINEER DATE 8-24-09

12-7-09
PLANS APPROVAL DATE

REGISTERED PROFESSIONAL ENGINEER JOSE M. ARGUELLO No. 51321 Exp 06-30-10 CIVIL STATE OF CALIFORNIA

THE STATE OF CALIFORNIA OR ITS OFFICERS OR AGENTS SHALL NOT BE RESPONSIBLE FOR THE ACCURACY OR COMPLETENESS OF ELECTRONIC COPIES OF THIS PLAN SHEET.

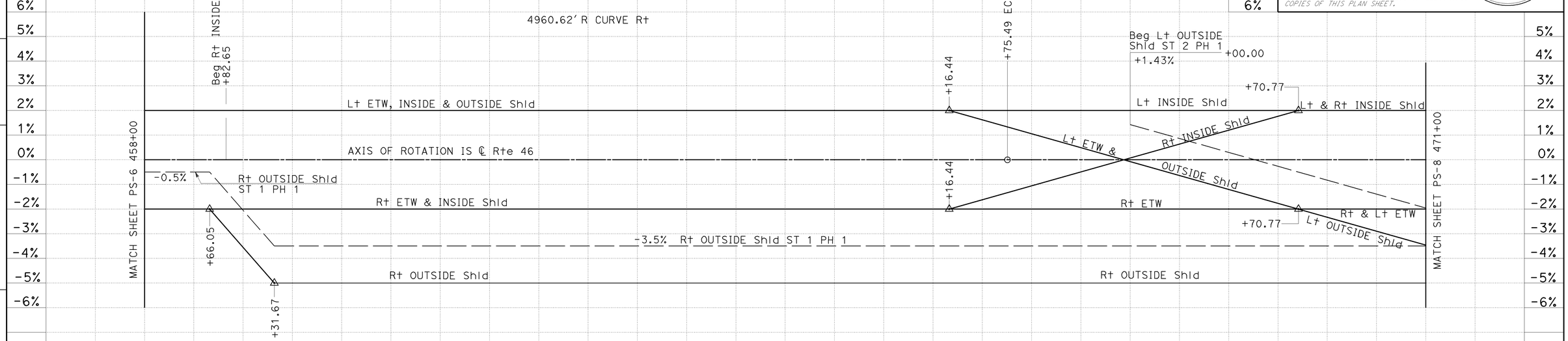

SUPERELEVATION DIAGRAM

SCALE: Horiz 1" = 50'

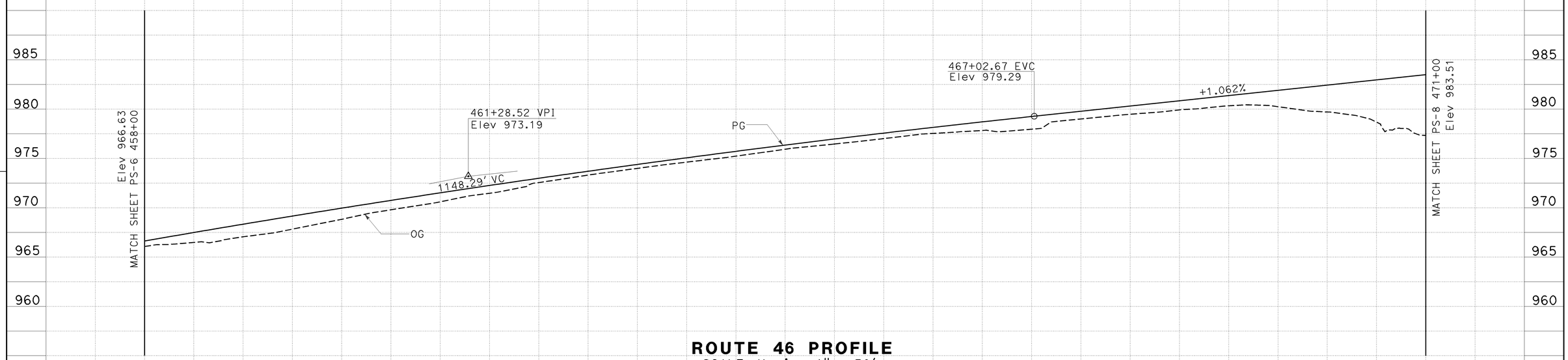

ROUTE 46 PROFILE

SCALE: Horiz 1" = 50'
Vert 1" = 5'

PROFILE AND SUPERELEVATION DIAGRAM

SCALE: AS SHOWN **PS-7**

Station	8	9	460	1	2	3	4	465	6	7	8	9	470	1	Sheet Total
CY Exc	8731														8731
CY Emb	4682														4682

STATE OF CALIFORNIA - DEPARTMENT OF TRANSPORTATION
Caltrans
06-DESIGN
FUNCTIONAL SUPERVISOR JACK WALKER
CALCULATED-DESIGNED BY JOSE ARGUELLO
CHECKED BY SUMI HOODE
REVISED BY
DATE REVISED

LAST REVISION 06-11-09
DATE PLOTTED => 08-DEC-2009
TIME PLOTTED => 07:34

Dist	COUNTY	ROUTE	POST MILES TOTAL PROJECT	SHEET No.	TOTAL SHEETS
05	SLO	46	36.6/41.2	62	595

REGISTERED CIVIL ENGINEER DATE 8-24-09

PLANS APPROVAL DATE 12-7-09

REGISTERED PROFESSIONAL ENGINEER JOSE M. ARGUELLO No. 51321 Exp 06-30-10 CIVIL STATE OF CALIFORNIA

THE STATE OF CALIFORNIA OR ITS OFFICERS OR AGENTS SHALL NOT BE RESPONSIBLE FOR THE ACCURACY OR COMPLETENESS OF ELECTRONIC COPIES OF THIS PLAN SHEET.

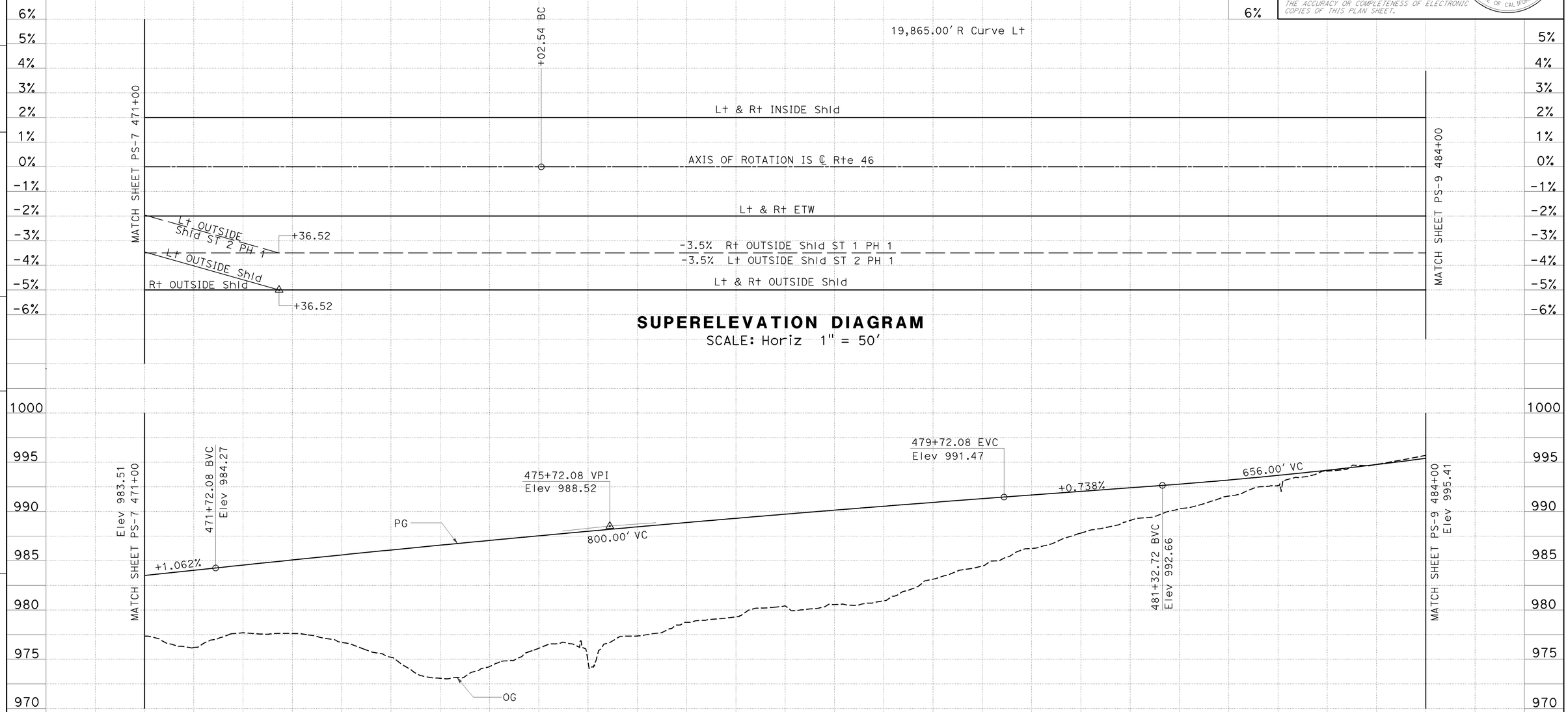

SUPERELEVATION DIAGRAM

SCALE: Horiz 1" = 50'

ROUTE 46 PROFILE

SCALE: Horiz 1" = 50'
Vert 1" = 5'

PROFILE AND SUPERELEVATION DIAGRAM

SCALE: AS SHOWN

PS-8

Station	1	2	3	4	475	6	7	8	9	480	1	2	3	4	Sheet Total
CY Exc	5658														5658
CY Emb	39,226														39,226

STATE OF CALIFORNIA - DEPARTMENT OF TRANSPORTATION
Caltrans
06-DESIGN
FUNCTIONAL SUPERVISOR JACK WALKER
CALCULATED-DESIGNED BY JOSE ARGUELLO
CHECKED BY SUMI HOODE
REVISED BY
DATE REVISED

LAST REVISION 06-03-09
DATE PLOTTED => 08-DEC-2009
TIME PLOTTED => 07:34

Dist	COUNTY	ROUTE	POST MILES TOTAL PROJECT	SHEET No.	TOTAL SHEETS
05	SLO	46	36.6/41.2	63	595

REGISTERED CIVIL ENGINEER DATE 8-24-09

PLANS APPROVAL DATE 12-7-09

REGISTERED PROFESSIONAL ENGINEER JOSE M. ARGUELLO No. 51321 Exp 06-30-10 CIVIL STATE OF CALIFORNIA

THE STATE OF CALIFORNIA OR ITS OFFICERS OR AGENTS SHALL NOT BE RESPONSIBLE FOR THE ACCURACY OR COMPLETENESS OF ELECTRONIC COPIES OF THIS PLAN SHEET.

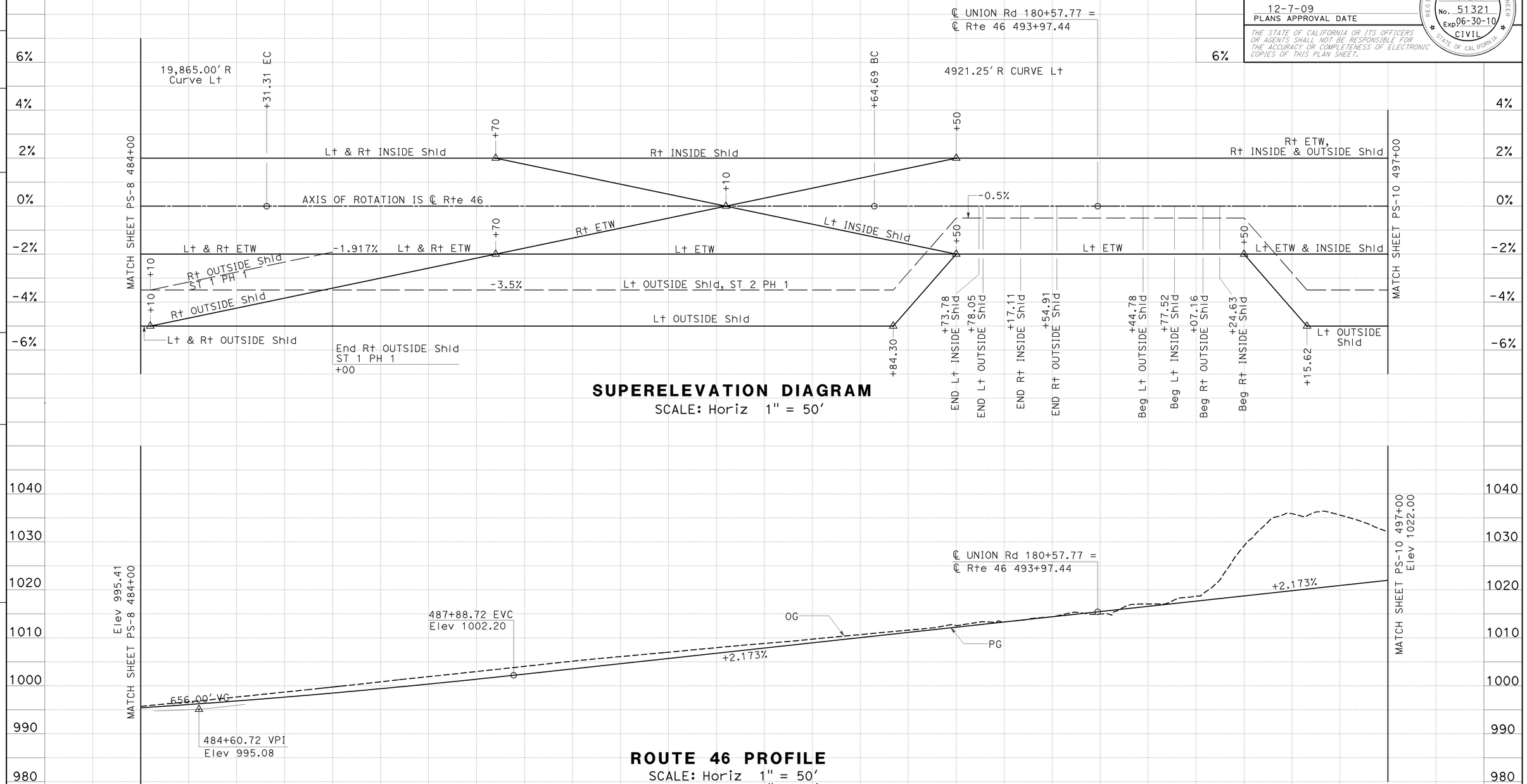

SUPERELEVATION DIAGRAM

SCALE: Horiz 1" = 50'

ROUTE 46 PROFILE

SCALE: Horiz 1" = 50'
Vert 1" = 10'

PROFILE AND SUPERELEVATION DIAGRAM

SCALE: AS SHOWN

PS-9

Station	4	485	6	7	8	9	490	1	2	3	4	495	6	7	Sheet Total
CY Exc	7825							30,760							38,585
CY Emb	6828							4657							11,485

STATE OF CALIFORNIA - DEPARTMENT OF TRANSPORTATION
Caltrans
06-DESIGN
FUNCTIONAL SUPERVISOR JACK WALKER
CALCULATED-DESIGNED BY JOSE ARGUELLO
CHECKED BY SUMI HOODE
REVISED BY
DATE REVISED

LAST REVISION 06-03-09
DATE PLOTTED => 08-DEC-2009
TIME PLOTTED => 07:34

BORDER LAST REVISED 3/1/2007
RELATIVE BORDER SCALE IS IN INCHES 0 1 2 3
USERNAME => trmariak
DGN FILE => 533072fb009.dgn
CU 06220
EA 330721

Dist	COUNTY	ROUTE	POST MILES TOTAL PROJECT	SHEET No.	TOTAL SHEETS
05	SLO	46	36.6/41.2	64	595

REGISTERED CIVIL ENGINEER DATE 8-24-09

PLANS APPROVAL DATE 12-7-09

REGISTERED PROFESSIONAL ENGINEER JOSE M. ARGUELLO No. 51321 Exp 06-30-10 CIVIL STATE OF CALIFORNIA

THE STATE OF CALIFORNIA OR ITS OFFICERS OR AGENTS SHALL NOT BE RESPONSIBLE FOR THE ACCURACY OR COMPLETENESS OF ELECTRONIC COPIES OF THIS PLAN SHEET.

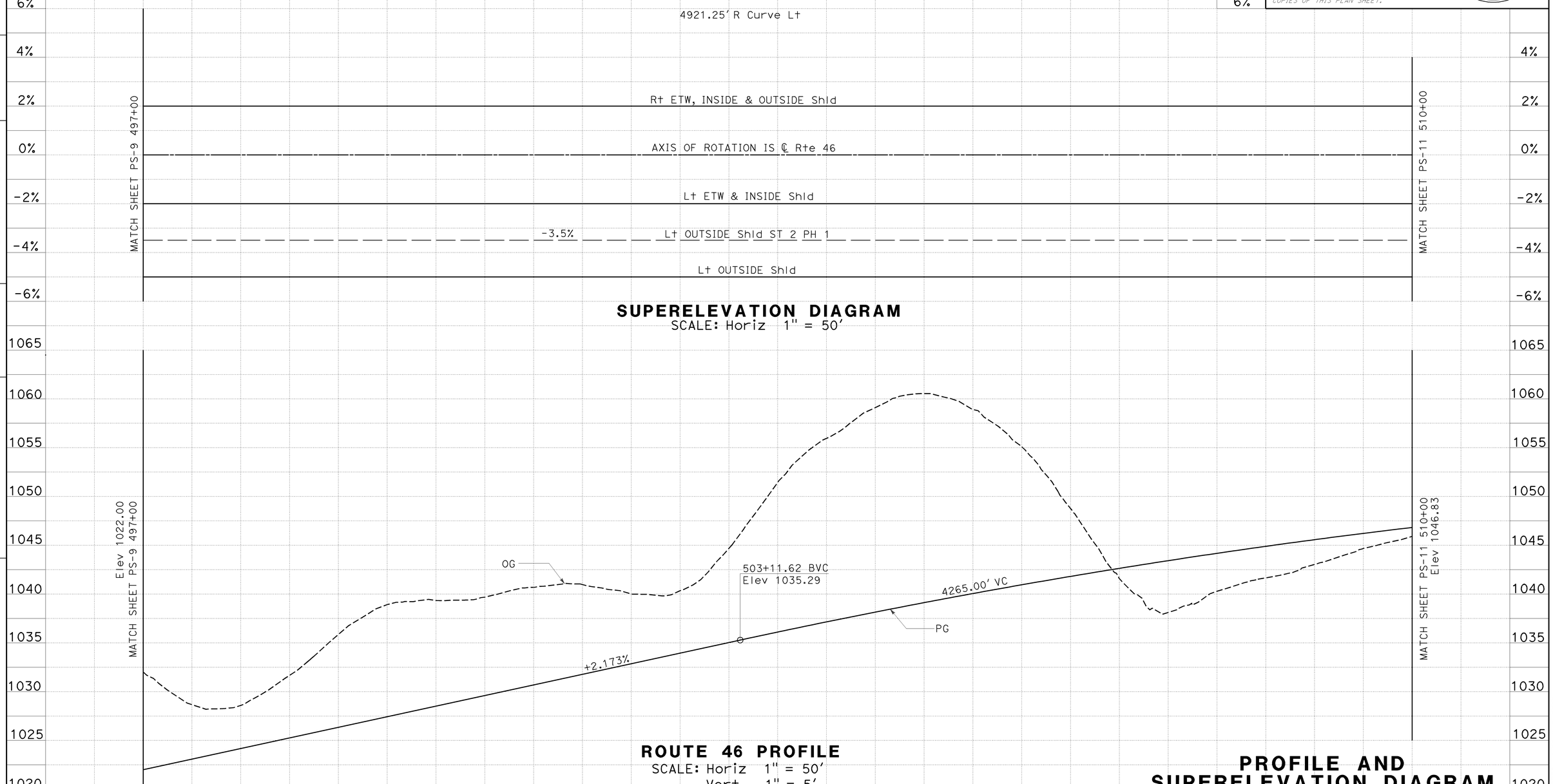

PROFILE AND SUPERELEVATION DIAGRAM

SCALE: AS SHOWN **PS-10**

REVISED BY | DATE REVISED

CALCULATED-DESIGNED BY: JOSE ARGUELLO

CHECKED BY: SUMI HOODE

FUNCTIONAL SUPERVISOR: JACK WALKER

STATE OF CALIFORNIA - DEPARTMENT OF TRANSPORTATION

Caltrans 06-DESIGN

LAST REVISION 05-26-09

DATE PLOTTED => 08-DEC-2009

TIME PLOTTED => 07:34

Dist	COUNTY	ROUTE	POST MILES TOTAL PROJECT	SHEET No.	TOTAL SHEETS
05	SLO	46	36.6/41.2	65	595

REGISTERED CIVIL ENGINEER DATE 8-24-09

PLANS APPROVAL DATE 12-7-09

REGISTERED PROFESSIONAL ENGINEER JOSE M. ARGUELLO No. 51321 Exp 06-30-10 CIVIL STATE OF CALIFORNIA

THE STATE OF CALIFORNIA OR ITS OFFICERS OR AGENTS SHALL NOT BE RESPONSIBLE FOR THE ACCURACY OR COMPLETENESS OF ELECTRONIC COPIES OF THIS PLAN SHEET.

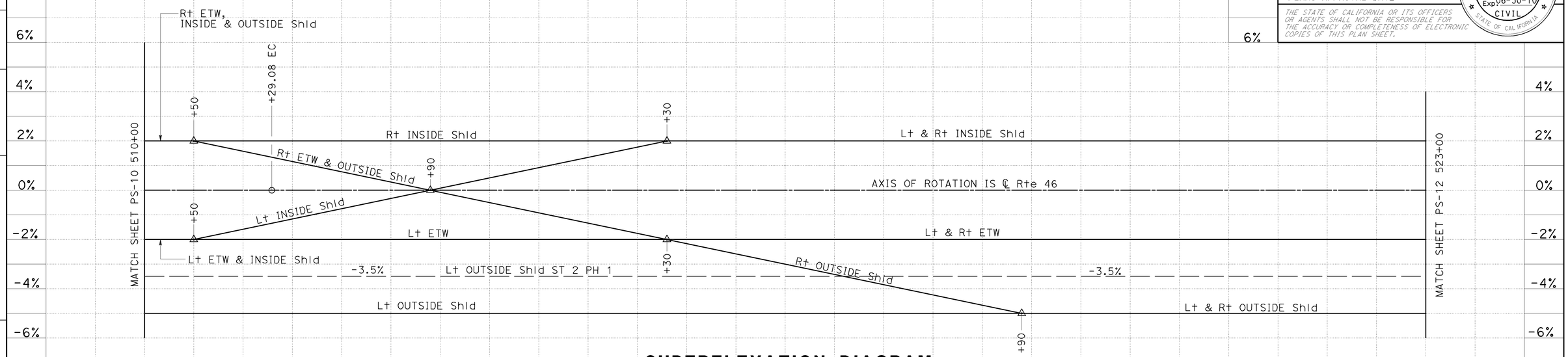

SUPERELEVATION DIAGRAM

SCALE: Horiz 1" = 50'

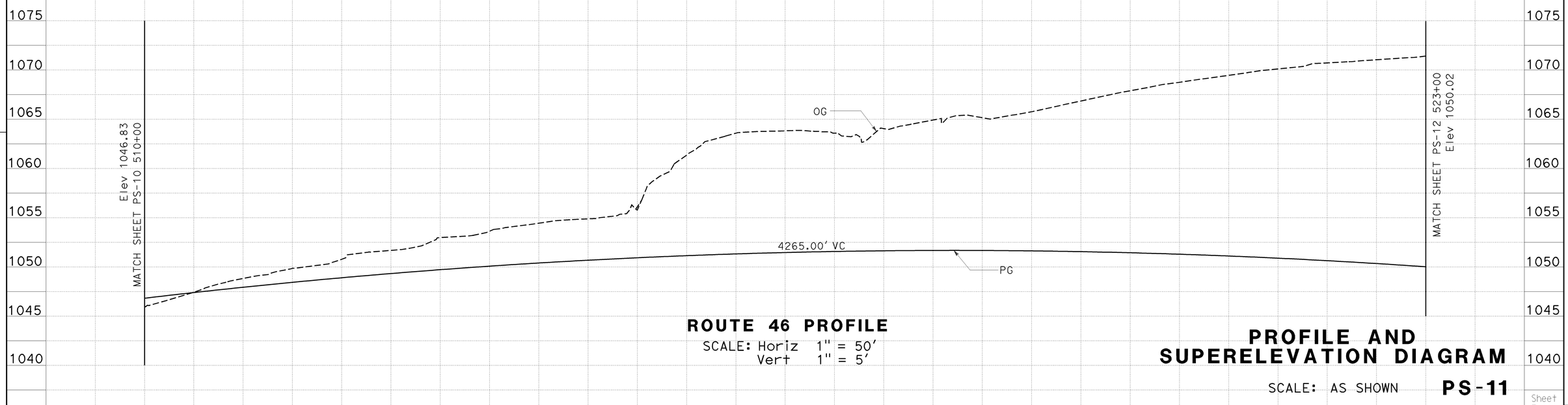

ROUTE 46 PROFILE

SCALE: Horiz 1" = 50'
Vert 1" = 5'

PROFILE AND SUPERELEVATION DIAGRAM

SCALE: AS SHOWN

PS-11

Sheet Total

STATE OF CALIFORNIA - DEPARTMENT OF TRANSPORTATION
Caltrans
06-DESIGN
FUNCTIONAL SUPERVISOR JACK WALKER
CALCULATED-DESIGNED BY JOSE ARGUELLO
CHECKED BY SUMI HOODE
REVISED BY
DATE REVISED

LAST REVISION 05-26-09
DATE PLOTTED => 08-DEC-2009
TIME PLOTTED => 07:46

Dist	COUNTY	ROUTE	POST MILES TOTAL PROJECT	SHEET No.	TOTAL SHEETS
05	SLO	46	36.6/41.2	66	595

REGISTERED CIVIL ENGINEER DATE 8-24-09

12-7-09
PLANS APPROVAL DATE

REGISTERED PROFESSIONAL ENGINEER JOSE M. ARGUELLO No. 51321 Exp 06-30-10 CIVIL STATE OF CALIFORNIA

THE STATE OF CALIFORNIA OR ITS OFFICERS OR AGENTS SHALL NOT BE RESPONSIBLE FOR THE ACCURACY OR COMPLETENESS OF ELECTRONIC COPIES OF THIS PLAN SHEET.

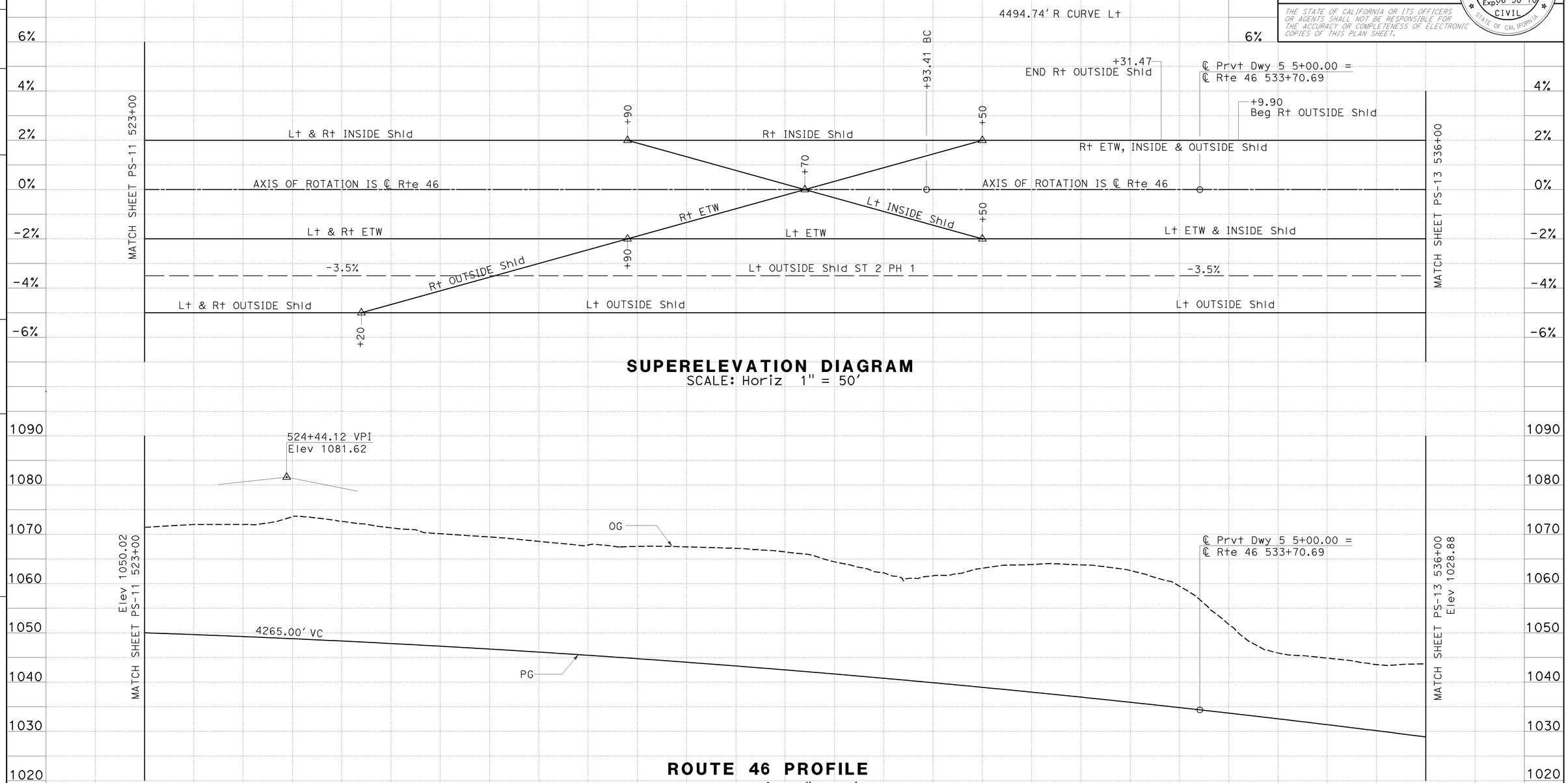

SUPERELEVATION DIAGRAM
SCALE: Horiz 1" = 50'

ROUTE 46 PROFILE
SCALE: Horiz 1" = 50'
Vert 1" = 10'

PROFILE AND SUPERELEVATION DIAGRAM
SCALE: AS SHOWN **PS-12**

Station	3	4	525	6	7	8	9	530	1	2	3	4	535	6	Sheet Total
CY Exc	207,323							192,803							400,126
CY Emb	93							5823							5916

STATE OF CALIFORNIA - DEPARTMENT OF TRANSPORTATION
Caltrans
06-DESIGN
FUNCTIONAL SUPERVISOR JACK WALKER
CALCULATED-DESIGNED BY JOSE ARGUELLO
CHECKED BY SUMI HOODE
REVISED BY
DATE REVISED

LAST REVISION 05-26-09
DATE PLOTTED => 08-DEC-2009
TIME PLOTTED => 07:46

Dist	COUNTY	ROUTE	POST MILES TOTAL PROJECT	SHEET No.	TOTAL SHEETS
05	SLO	46	36.6/41.2	67	595

REGISTERED CIVIL ENGINEER DATE 8-24-09

PLANS APPROVAL DATE 12-7-09

REGISTERED PROFESSIONAL ENGINEER JOSE M. ARGUELLO No. 51321 Exp 06-30-10 CIVIL STATE OF CALIFORNIA

THE STATE OF CALIFORNIA OR ITS OFFICERS OR AGENTS SHALL NOT BE RESPONSIBLE FOR THE ACCURACY OR COMPLETENESS OF ELECTRONIC COPIES OF THIS PLAN SHEET.

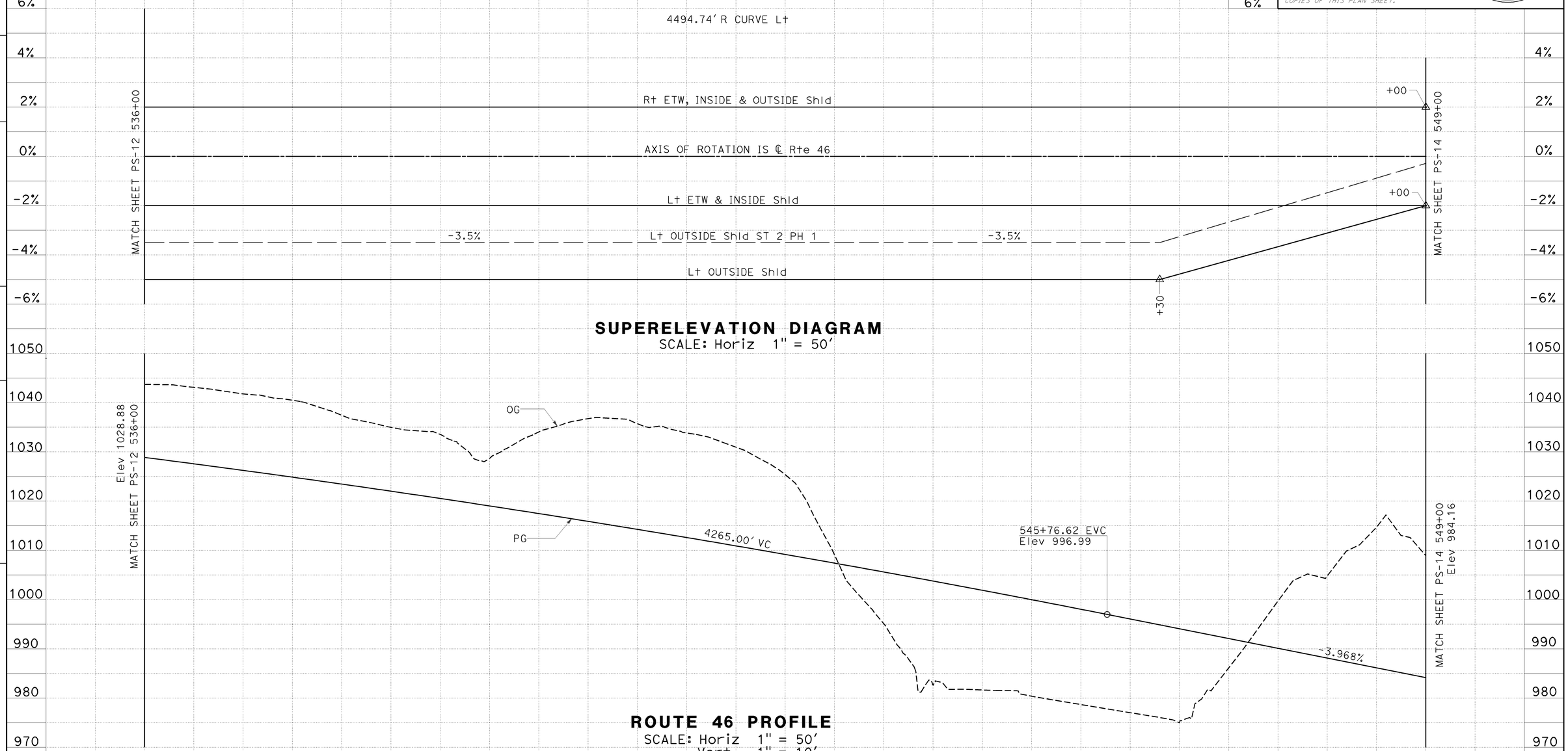

SUPERELEVATION DIAGRAM

SCALE: Horiz 1" = 50'

ROUTE 46 PROFILE

SCALE: Horiz 1" = 50'
Vert 1" = 10'

Station	6	7	8	9	540	1	2	3	4	545	6	7	8	9	Sheet Total
CY Exc	352,935														352,935
CY Emb	299,302														299,302

PROFILE AND SUPERELEVATION DIAGRAM

SCALE: AS SHOWN **PS-13**

STATE OF CALIFORNIA - DEPARTMENT OF TRANSPORTATION
Caltrans 06-DESIGN
FUNCTIONAL SUPERVISOR JACK WALKER
CALCULATED-DESIGNED BY JOSE ARGUELLO
CHECKED BY SUMI HOODE
REVISED BY
DATE REVISED

LAST REVISION 05-27-09
DATE PLOTTED => 08-DEC-2009
TIME PLOTTED => 07:46

Dist	COUNTY	ROUTE	POST MILES TOTAL PROJECT	SHEET No.	TOTAL SHEETS
05	SLO	46	36.6/41.2	68	595

REGISTERED CIVIL ENGINEER DATE 8-24-09

PLANS APPROVAL DATE 12-7-09

REGISTERED PROFESSIONAL ENGINEER JOSE M. ARGUELLO No. 51321 Exp 06-30-10 CIVIL STATE OF CALIFORNIA

THE STATE OF CALIFORNIA OR ITS OFFICERS OR AGENTS SHALL NOT BE RESPONSIBLE FOR THE ACCURACY OR COMPLETENESS OF ELECTRONIC COPIES OF THIS PLAN SHEET.

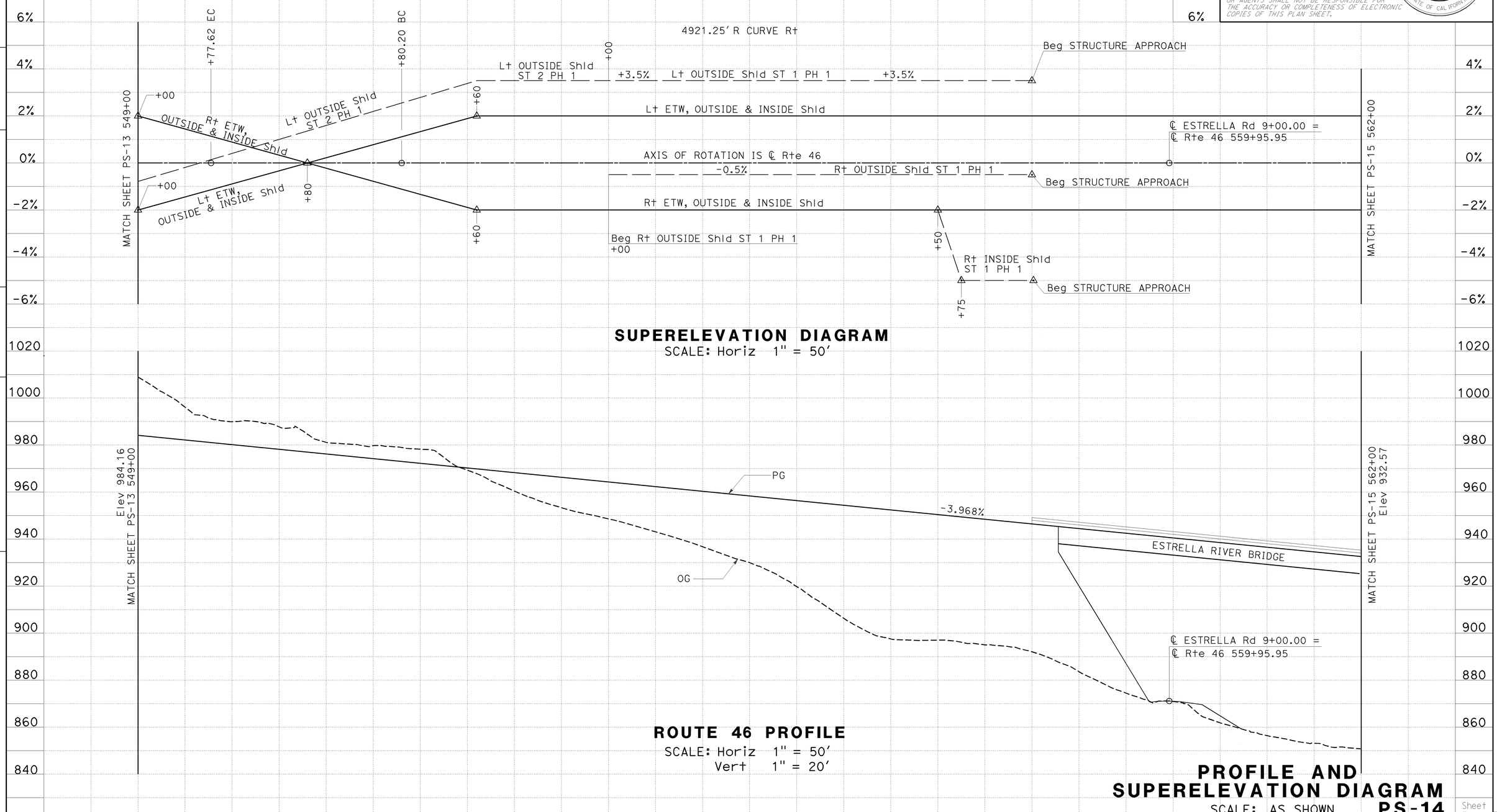

PROFILE AND SUPERELEVATION DIAGRAM

SCALE: AS SHOWN **PS-14**

STATE OF CALIFORNIA - DEPARTMENT OF TRANSPORTATION

Caltrans

06-DESIGN

FUNCTIONAL SUPERVISOR JACK WALKER

CALCULATED-DESIGNED BY JOSE ARGUELLO

CHECKED BY SUMI HOODE

REVISED BY

DATE REVISED

LAST REVISION 06-29-09

DATE PLOTTED => 08-DEC-2009

TIME PLOTTED => 07:46

BORDER LAST REVISED 3/1/2007

RELATIVE BORDER SCALE IS IN INCHES 0 1 2 3

USERNAME => trmnguye

DGN FILE => 533072fb014.dgn

CU 06220

EA 330721

Dist	COUNTY	ROUTE	POST MILES TOTAL PROJECT	SHEET No.	TOTAL SHEETS
05	SLO	46	36.6/41.2	69	595

REGISTERED CIVIL ENGINEER DATE 8-24-09

PLANS APPROVAL DATE 12-7-09

REGISTERED PROFESSIONAL ENGINEER JOSE M. ARGUELLO No. 51321 Exp 06-30-10 CIVIL STATE OF CALIFORNIA

THE STATE OF CALIFORNIA OR ITS OFFICERS OR AGENTS SHALL NOT BE RESPONSIBLE FOR THE ACCURACY OR COMPLETENESS OF ELECTRONIC COPIES OF THIS PLAN SHEET.

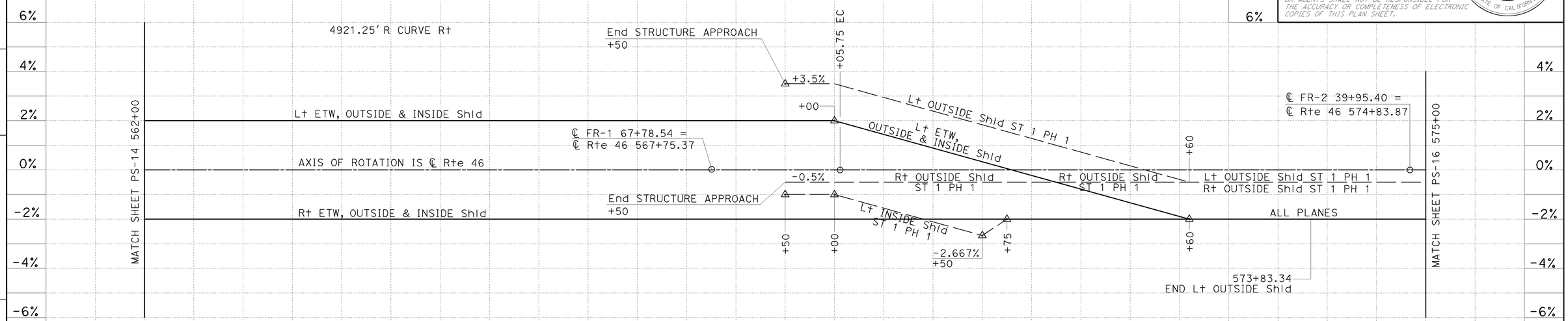

SUPERELEVATION DIAGRAM

SCALE: Horiz 1" = 50'

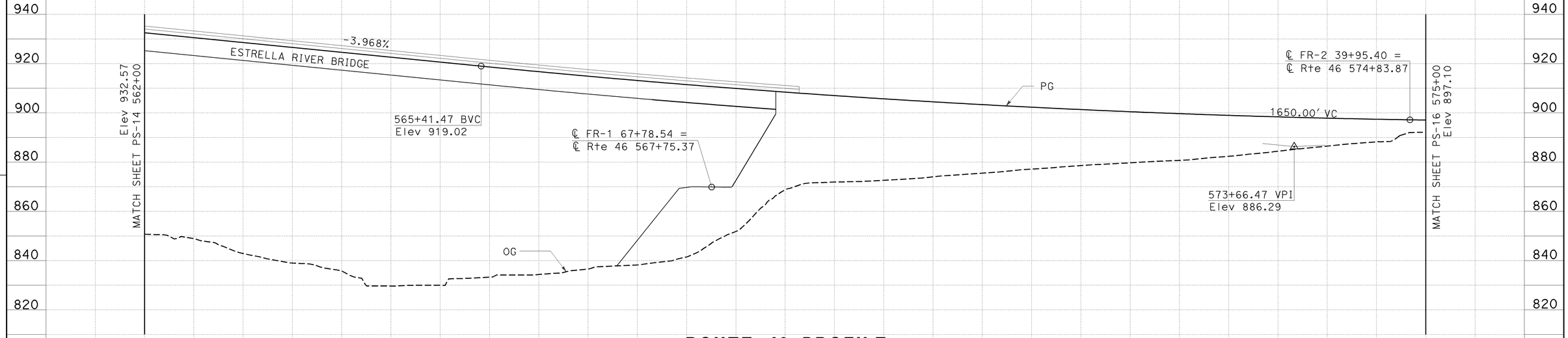

ROUTE 46 PROFILE

SCALE: Horiz 1" = 50'
Vert 1" = 20'

PROFILE AND SUPERELEVATION DIAGRAM

SCALE: AS SHOWN **PS-15**

Station	2	3	4	565	6	7	8	9	570	1	2	3	4	575	Sheet Total
CY Exc								7143							7143
CY Emb								123,514							123,514

STATE OF CALIFORNIA - DEPARTMENT OF TRANSPORTATION
Caltrans 06-DESIGN
FUNCTIONAL SUPERVISOR JACK WALKER
CALCULATED-DESIGNED BY JOSE ARGUELLO
CHECKED BY SUMI HOODE
REVISED BY
DATE REVISED

LAST REVISION 07-06-09
DATE PLOTTED => 08-DEC-2009
TIME PLOTTED => 07:46

Dist	COUNTY	ROUTE	POST MILES TOTAL PROJECT	SHEET No.	TOTAL SHEETS
05	SLO	46	36.6/41.2	70	595

REGISTERED CIVIL ENGINEER DATE 8-24-09

PLANS APPROVAL DATE 12-7-09

REGISTERED PROFESSIONAL ENGINEER JOSE M. ARGUELLO No. 51321 Exp 06-30-10 CIVIL STATE OF CALIFORNIA

THE STATE OF CALIFORNIA OR ITS OFFICERS OR AGENTS SHALL NOT BE RESPONSIBLE FOR THE ACCURACY OR COMPLETENESS OF ELECTRONIC COPIES OF THIS PLAN SHEET.

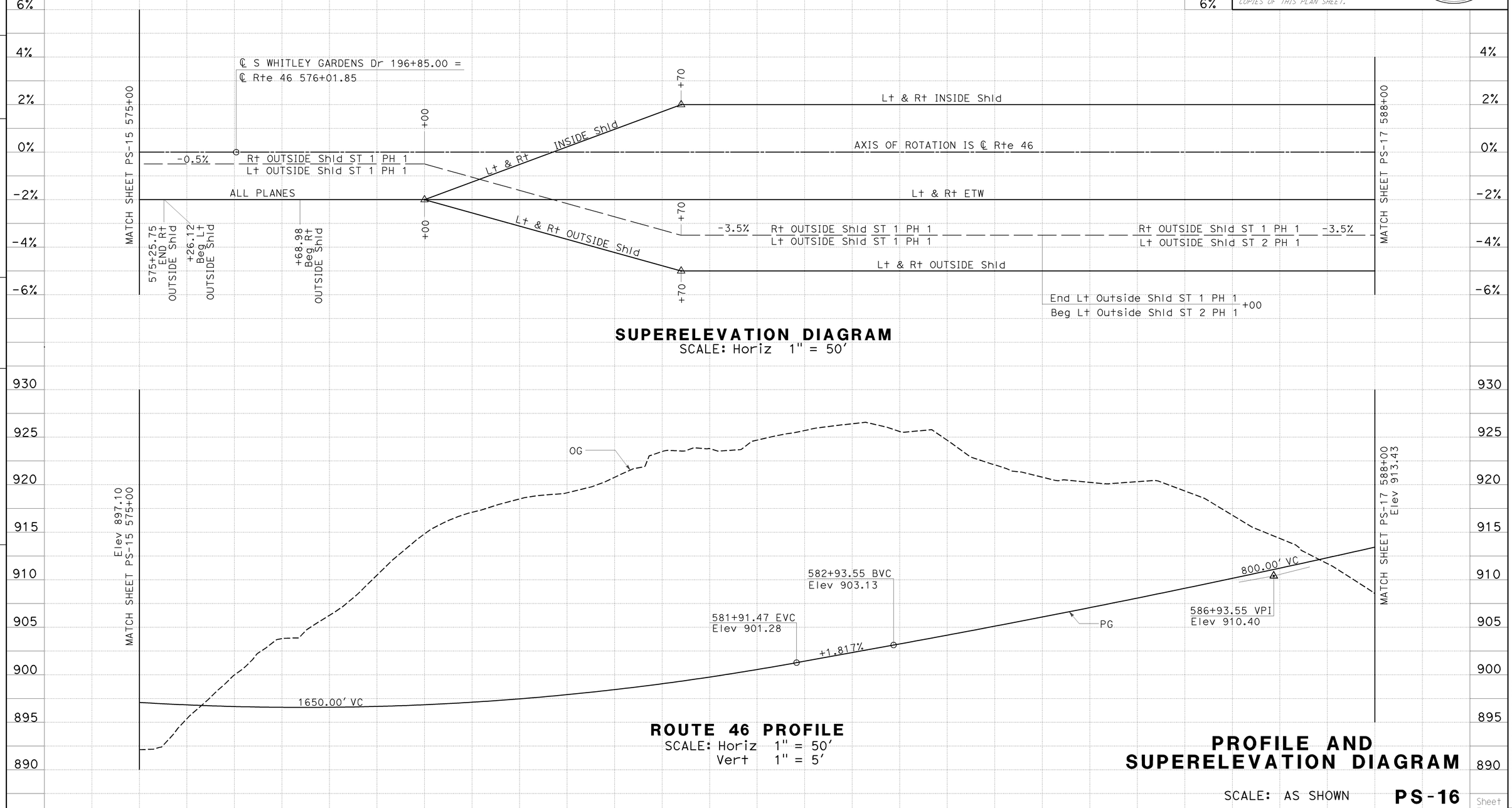

SUPERELEVATION DIAGRAM
SCALE: Horiz 1" = 50'

ROUTE 46 PROFILE
SCALE: Horiz 1" = 50'
Vert 1" = 5'

PROFILE AND SUPERELEVATION DIAGRAM
SCALE: AS SHOWN

PS-16

Sheet Total

STATE OF CALIFORNIA - DEPARTMENT OF TRANSPORTATION
Caltrans
06-DESIGN
FUNCTIONAL SUPERVISOR JACK WALKER
CALCULATED-DESIGNED BY JOSE ARGUELLO
CHECKED BY SUMI HOODE
REVISED BY
DATE REVISED

LAST REVISION 06-01-09
DATE PLOTTED => 08-DEC-2009
TIME PLOTTED => 07:46

Dist	COUNTY	ROUTE	POST MILES TOTAL PROJECT	SHEET No.	TOTAL SHEETS
05	SLO	46	36.6/41.2	71	595

REGISTERED CIVIL ENGINEER DATE 8-24-09

12-7-09
PLANS APPROVAL DATE

REGISTERED PROFESSIONAL ENGINEER JOSE M. ARGUELLO No. 51321 Exp 06-30-10 CIVIL STATE OF CALIFORNIA

THE STATE OF CALIFORNIA OR ITS OFFICERS OR AGENTS SHALL NOT BE RESPONSIBLE FOR THE ACCURACY OR COMPLETENESS OF ELECTRONIC COPIES OF THIS PLAN SHEET.

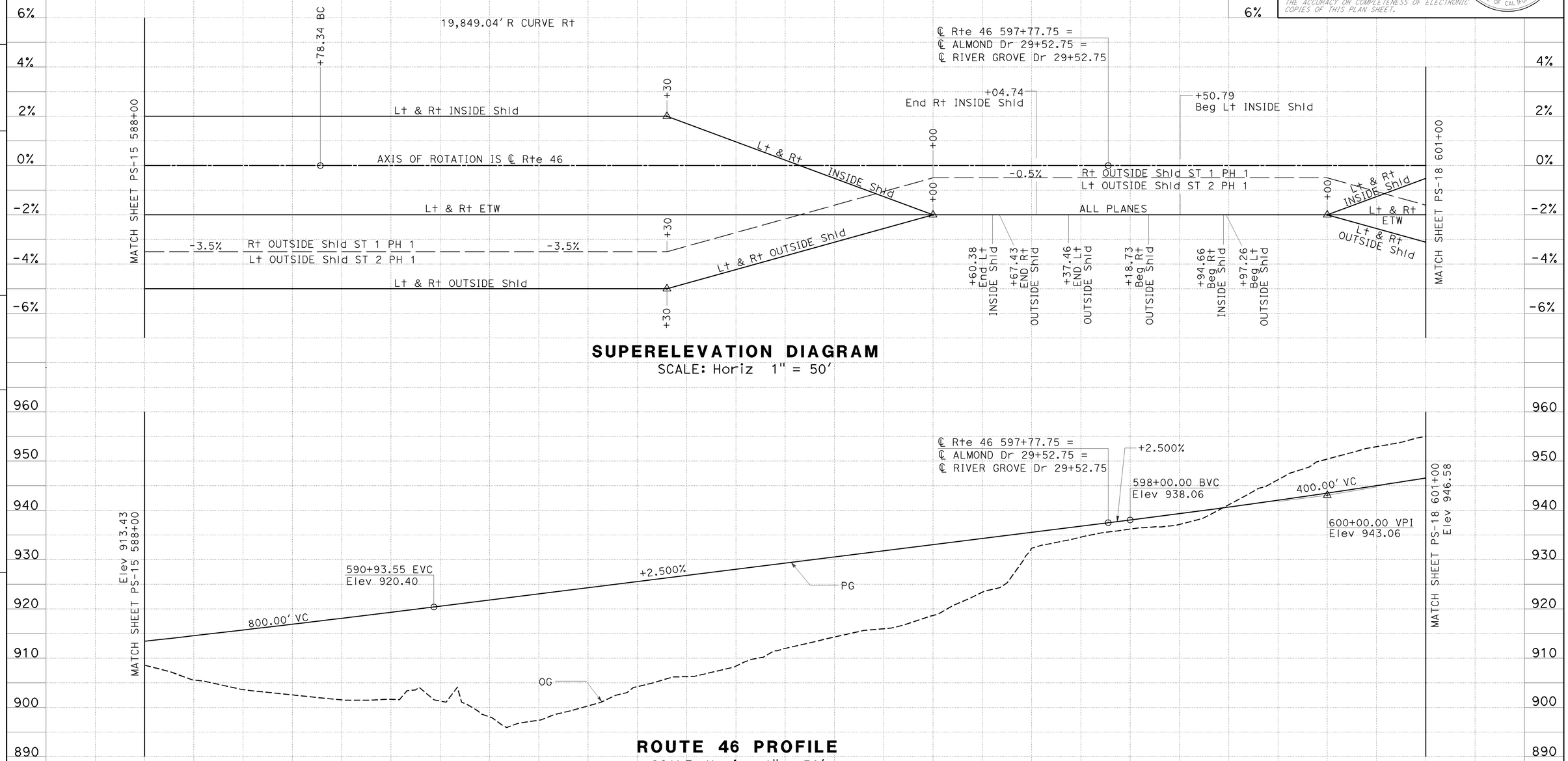

SUPERELEVATION DIAGRAM

SCALE: Horiz 1" = 50'

ROUTE 46 PROFILE

SCALE: Horiz 1" = 50'
Vert 1" = 10'

PROFILE AND SUPERELEVATION DIAGRAM

SCALE: AS SHOWN **PS-17**

Station	8	9	590	1	2	3	4	595	6	7	8	9	600	1	Sheet Total
CY Exc	41,761														41,761
CY Emb	114,693														114,693

STATE OF CALIFORNIA - DEPARTMENT OF TRANSPORTATION
Caltrans
06-DESIGN
FUNCTIONAL SUPERVISOR: JACK WALKER
CALCULATED-DESIGNED BY: JOSE ARGUELLO
CHECKED BY: SUMI HOODE
REVISED BY / DATE REVISED

LAST REVISION 08-25-09
DATE PLOTTED => 08-DEC-2009
TIME PLOTTED => 07:46

Dist	COUNTY	ROUTE	POST MILES TOTAL PROJECT	SHEET No.	TOTAL SHEETS
05	SLO	46	36.6/41.2	72	595

REGISTERED CIVIL ENGINEER DATE 8-24-09

PLANS APPROVAL DATE 12-7-09

REGISTERED PROFESSIONAL ENGINEER JOSE M. ARGUELLO No. 51321 Exp 06-30-10 CIVIL STATE OF CALIFORNIA

THE STATE OF CALIFORNIA OR ITS OFFICERS OR AGENTS SHALL NOT BE RESPONSIBLE FOR THE ACCURACY OR COMPLETENESS OF ELECTRONIC COPIES OF THIS PLAN SHEET.

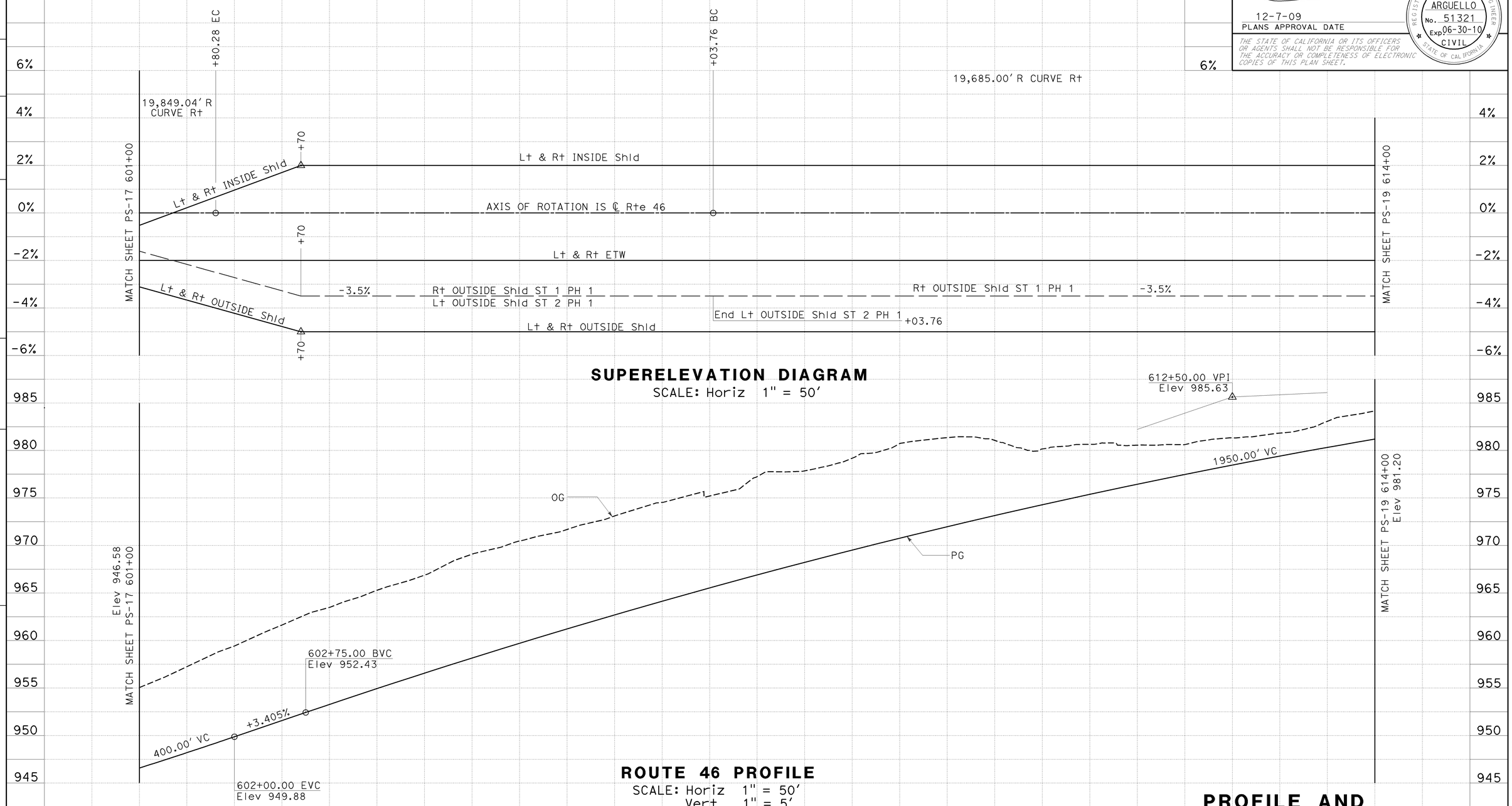

SUPERELEVATION DIAGRAM

SCALE: Horiz 1" = 50'

ROUTE 46 PROFILE

SCALE: Horiz 1" = 50'
Vert 1" = 5'

Station	1	2	3	4	605	6	7	8	9	610	1	2	3	4	Sheet Total
CY Exc	97,926														97,926
CY Emb	17														17

PROFILE AND SUPERELEVATION DIAGRAM

SCALE: AS SHOWN **PS-18**

STATE OF CALIFORNIA - DEPARTMENT OF TRANSPORTATION
Caltrans 06-DESIGN
FUNCTIONAL SUPERVISOR JACK WALKER
CALCULATED-DESIGNED BY JOSE ARGUELLO
CHECKED BY SUMI HOODE
REVISED BY
DATE REVISED

LAST REVISION 06-01-09 DATE PLOTTED => 08-DEC-2009 TIME PLOTTED => 07:46

Dist	COUNTY	ROUTE	POST MILES TOTAL PROJECT	SHEET No.	TOTAL SHEETS
05	SLO	46	36.6/41.2	73	595

REGISTERED CIVIL ENGINEER DATE 8-24-09

12-7-09
PLANS APPROVAL DATE

REGISTERED PROFESSIONAL ENGINEER JOSE M. ARGUELLO No. 51321 Exp 06-30-10 CIVIL STATE OF CALIFORNIA

THE STATE OF CALIFORNIA OR ITS OFFICERS OR AGENTS SHALL NOT BE RESPONSIBLE FOR THE ACCURACY OR COMPLETENESS OF ELECTRONIC COPIES OF THIS PLAN SHEET.

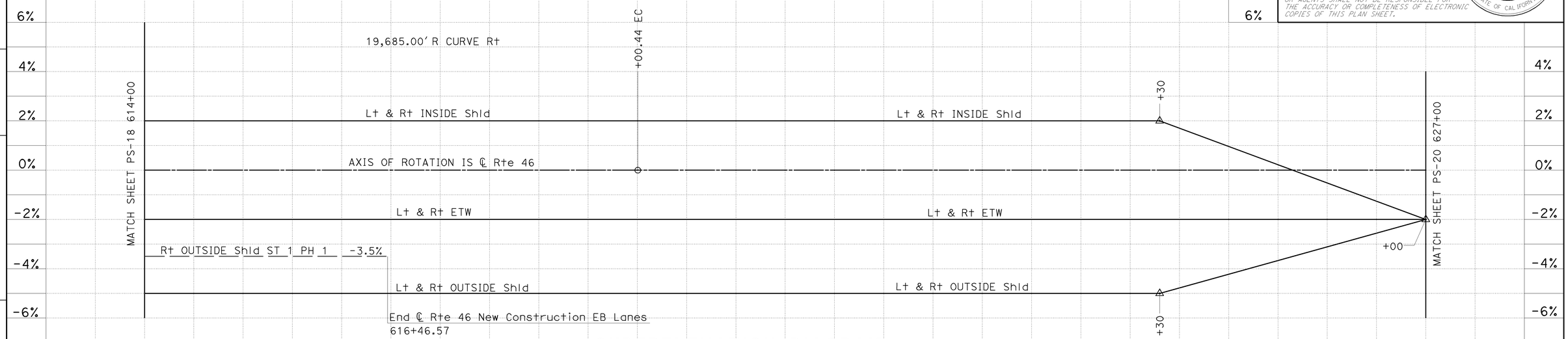

SUPERELEVATION DIAGRAM

SCALE: Horiz 1" = 50'

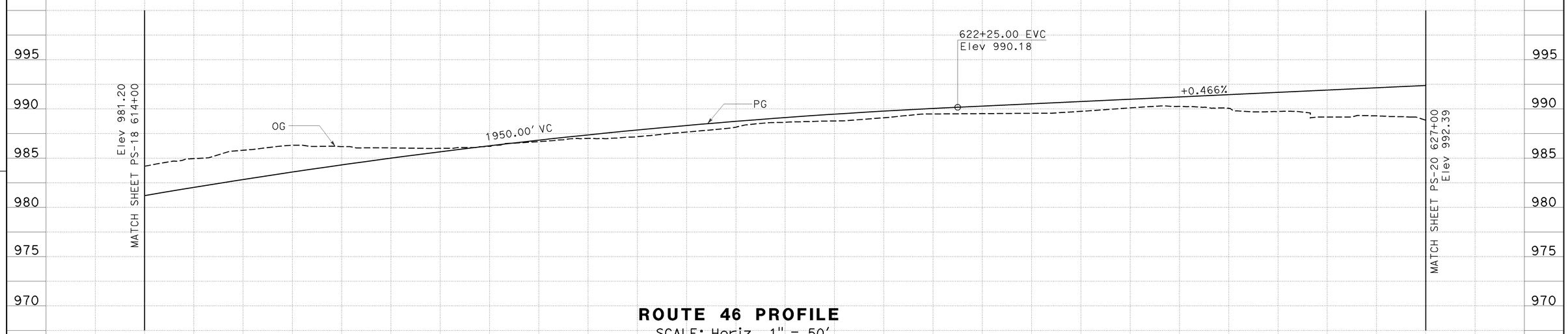

ROUTE 46 PROFILE

SCALE: Horiz 1" = 50'
Vert 1" = 5'

PROFILE AND SUPERELEVATION DIAGRAM

SCALE: AS SHOWN **PS-19**

Station	4	615	6	7	8	9	620	1	2	3	4	625	6	7	Sheet Total
CY Exc	5787				0										5787
CY Emb	1				0										1

STATE OF CALIFORNIA - DEPARTMENT OF TRANSPORTATION
Caltrans
06-DESIGN
FUNCTIONAL SUPERVISOR: JACK WALKER
CALCULATED-DESIGNED BY: JOSE ARGUELLO
CHECKED BY: SUMI HOODE
REVISED BY
DATE REVISED

LAST REVISION 07-20-09
DATE PLOTTED => 08-DEC-2009
TIME PLOTTED => 07:46

Dist	COUNTY	ROUTE	POST MILES TOTAL PROJECT	SHEET No.	TOTAL SHEETS
05	SLO	46	36.6/41.2	74	595

REGISTERED CIVIL ENGINEER DATE 8-24-09

PLANS APPROVAL DATE 12-7-09

REGISTERED PROFESSIONAL ENGINEER JOSE M. ARGUELLO No. 51321 Exp 06-30-10 CIVIL STATE OF CALIFORNIA

THE STATE OF CALIFORNIA OR ITS OFFICERS OR AGENTS SHALL NOT BE RESPONSIBLE FOR THE ACCURACY OR COMPLETENESS OF ELECTRONIC COPIES OF THIS PLAN SHEET.

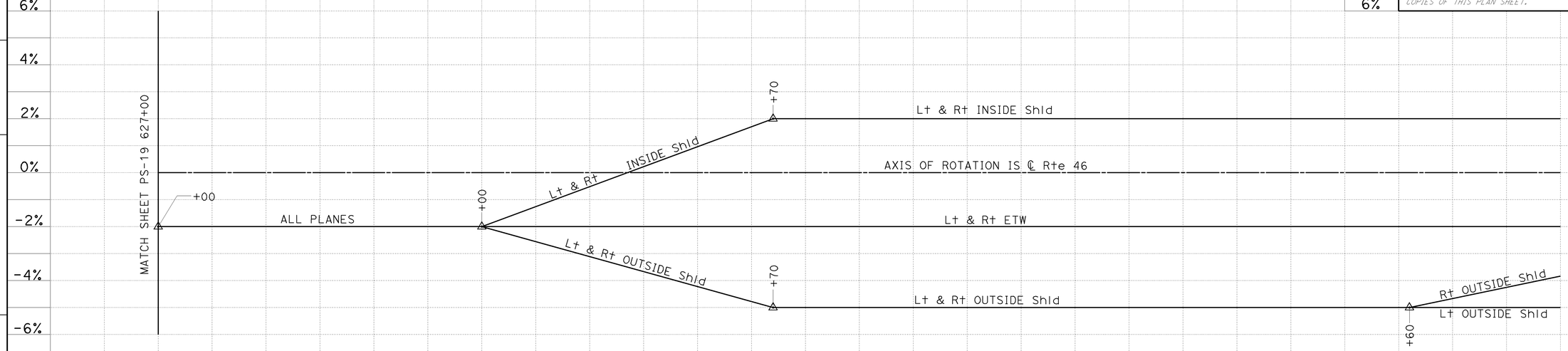

SUPERELEVATION DIAGRAM

SCALE: Horiz 1" = 50'

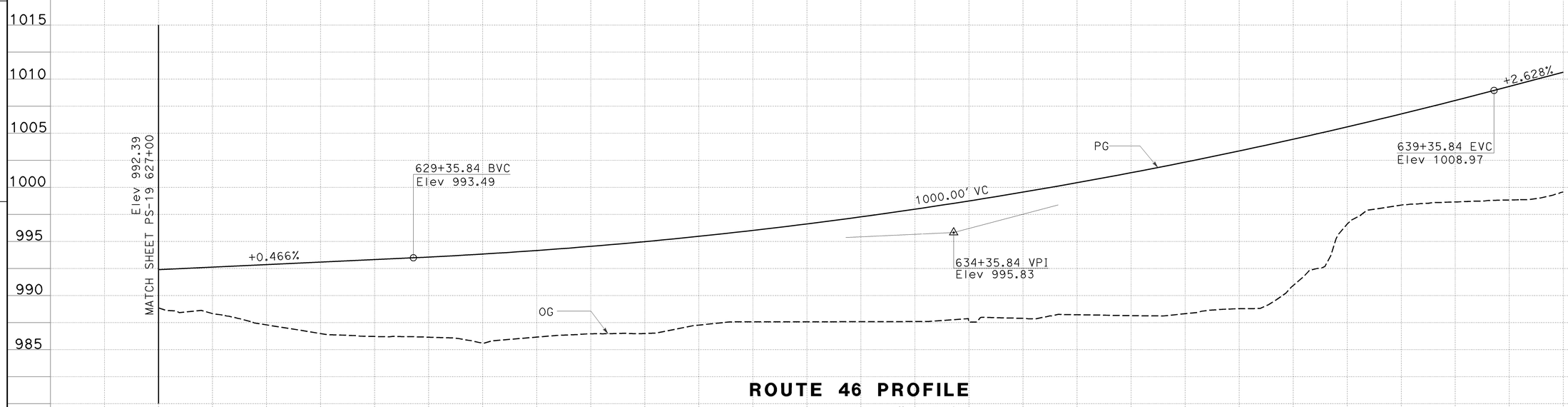

ROUTE 46 PROFILE

SCALE: Horiz 1" = 50'
Vert 1" = 5'

PROFILE AND SUPERELEVATION DIAGRAM

SCALE: AS SHOWN **PS-20**

Station	7	8	9	630	1	2	3	4	635	6	7	8	9	640	Sheet Total
CY Exc	0														0
CY Emb	0														0

STATE OF CALIFORNIA - DEPARTMENT OF TRANSPORTATION
Caltrans
06-DESIGN
FUNCTIONAL SUPERVISOR JACK WALKER
CALCULATED-DESIGNED BY JOSE ARGUELLO
CHECKED BY SUMI HOODE
REVISED BY
DATE REVISED

LAST REVISION 07-20-09
DATE PLOTTED => 08-DEC-2009
TIME PLOTTED => 07:46

Dist	COUNTY	ROUTE	POST MILES TOTAL PROJECT	SHEET No.	TOTAL SHEETS
05	SLO	46	36.6/41.2	75	595

REGISTERED CIVIL ENGINEER DATE 8-24-09

PLANS APPROVAL DATE 12-7-09

REGISTERED PROFESSIONAL ENGINEER JOSE M. ARGUELLO No. 51321 Exp 06-30-10 CIVIL STATE OF CALIFORNIA

THE STATE OF CALIFORNIA OR ITS OFFICERS OR AGENTS SHALL NOT BE RESPONSIBLE FOR THE ACCURACY OR COMPLETENESS OF ELECTRONIC COPIES OF THIS PLAN SHEET.

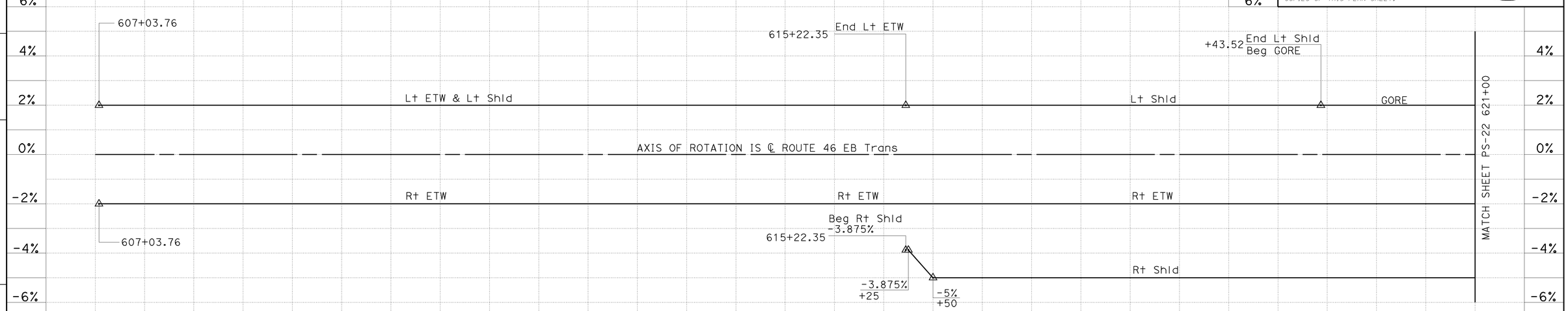

SUPERELEVATION DIAGRAM

SCALE: Horiz 1" = 50'

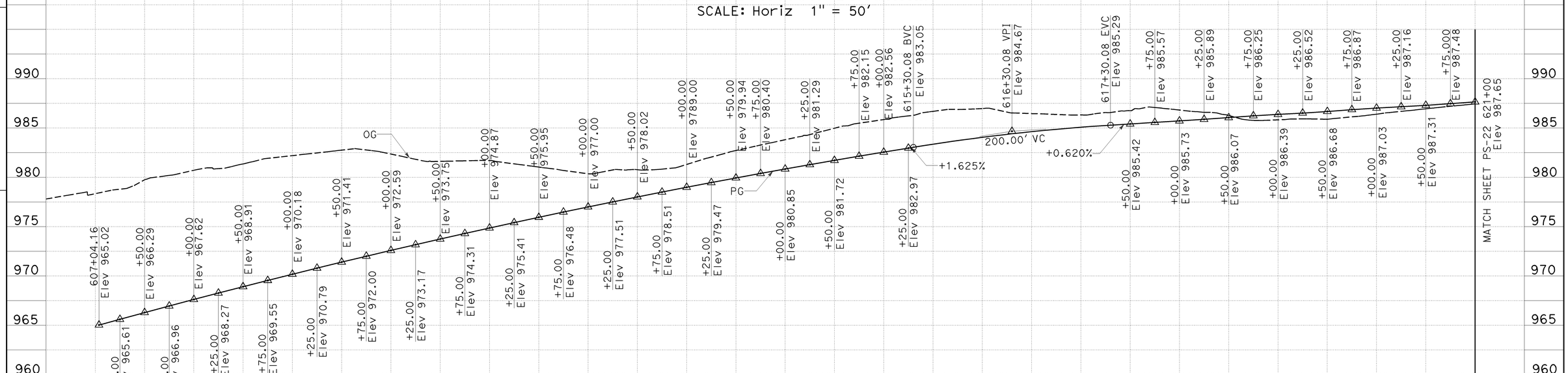

ROUTE 46 EB Trans PROFILE

SCALE: Horiz 1" = 50'
Vert 1" = 5'

PROFILE AND SUPERELEVATION DIAGRAM

SCALE: AS SHOWN **PS-21**

Station	7	8	9	610	1	2	3	4	615	6	7	8	9	620	1	Sheet Total
CY Exc	10															10
CY Emb	5															5

STATE OF CALIFORNIA - DEPARTMENT OF TRANSPORTATION
Caltrans
06-DESIGN
FUNCTIONAL SUPERVISOR JACK WALKER
CALCULATED-DESIGNED BY JOSE ARGUELLO
CHECKED BY SUMI HOODE
REVISED BY
DATE REVISED

LAST REVISION 08-20-09
DATE PLOTTED => 08-DEC-2009
TIME PLOTTED => 07:47

Dist	COUNTY	ROUTE	POST MILES TOTAL PROJECT	SHEET No.	TOTAL SHEETS
05	SLO	46	36.6/41.2	76	595

REGISTERED CIVIL ENGINEER DATE 8-24-09

PLANS APPROVAL DATE 12-7-09

REGISTERED PROFESSIONAL ENGINEER JOSE M. ARGUELLO No. 51321 Exp 06-30-10 CIVIL STATE OF CALIFORNIA

THE STATE OF CALIFORNIA OR ITS OFFICERS OR AGENTS SHALL NOT BE RESPONSIBLE FOR THE ACCURACY OR COMPLETENESS OF ELECTRONIC COPIES OF THIS PLAN SHEET.

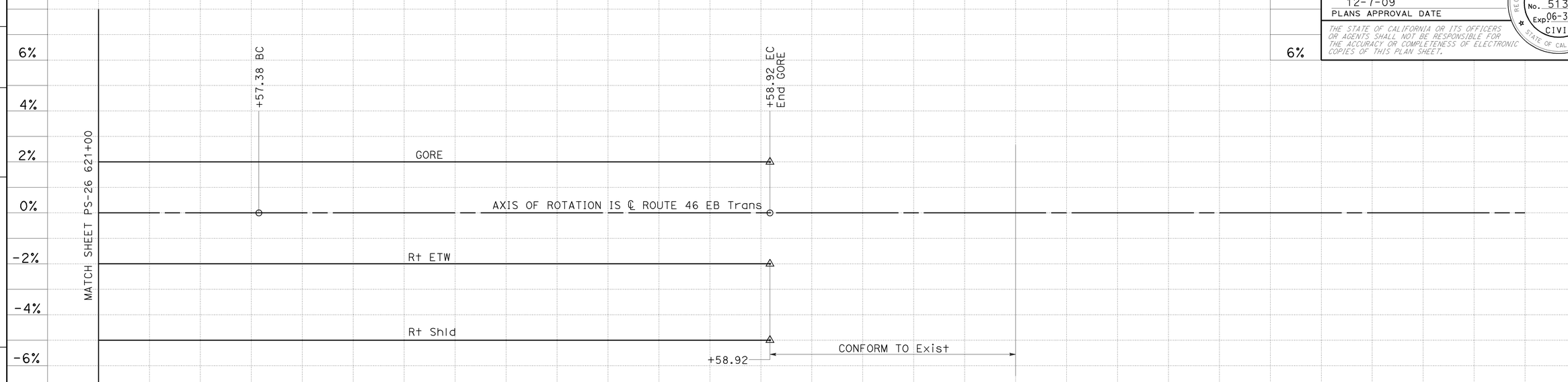

SUPERELEVATION DIAGRAM

SCALE: Horiz 1" = 50'

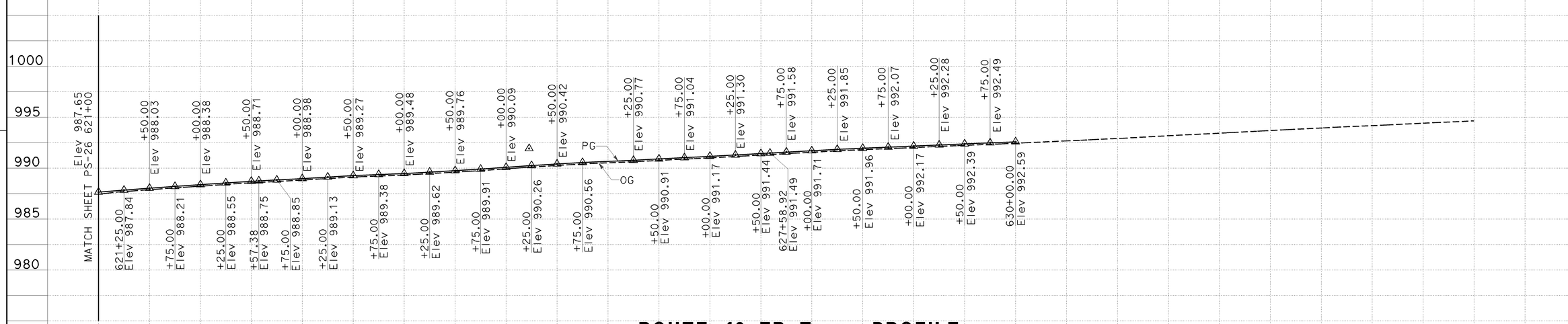

ROUTE 46 EB Trans PROFILE

SCALE: Horiz 1" = 50'
Vert 1" = 5'

PROFILE AND SUPERELEVATION DIAGRAM

SCALE: AS SHOWN

PS-22

Sheet Total

Station	1	2	3	4	625	6	7	8	9	630	1	2	3	4	635
CY Exc	10														10
CY Emb	20														20

STATE OF CALIFORNIA - DEPARTMENT OF TRANSPORTATION
Caltrans
06-DESIGN
FUNCTIONAL SUPERVISOR JACK WALKER
CALCULATED-DESIGNED BY JOSE ARGUELLO
CHECKED BY SUMI HOODE
REVISED BY
DATE REVISED

LAST REVISION 08-20-09
DATE PLOTTED => 08-DEC-2009
TIME PLOTTED => 07:47

Dist	COUNTY	ROUTE	POST MILES TOTAL PROJECT	SHEET No.	TOTAL SHEETS
05	SLO	46	36.6/41.2	77	595

REGISTERED CIVIL ENGINEER DATE 8-24-09

12-7-09
PLANS APPROVAL DATE

REGISTERED PROFESSIONAL ENGINEER JOSE M. ARGUELLO No. 51321 Exp 06-30-10 CIVIL STATE OF CALIFORNIA

THE STATE OF CALIFORNIA OR ITS OFFICERS OR AGENTS SHALL NOT BE RESPONSIBLE FOR THE ACCURACY OR COMPLETENESS OF ELECTRONIC COPIES OF THIS PLAN SHEET.

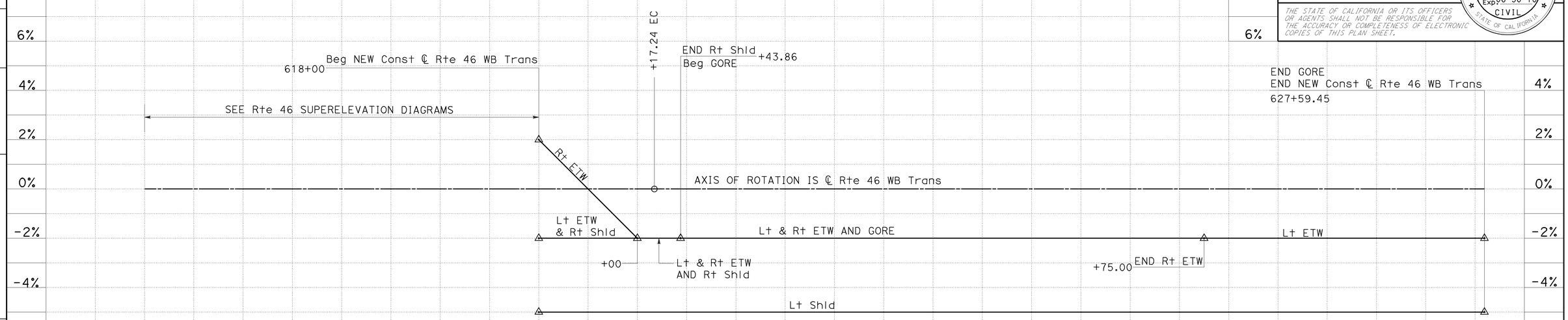

SUPERELEVATION DIAGRAM

SCALE: Horiz 1" = 50'

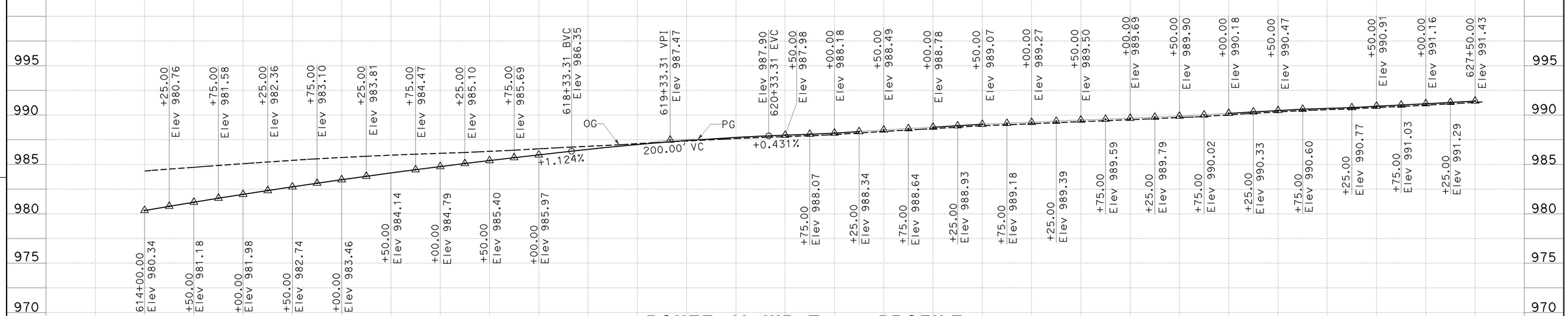

ROUTE 46 WB Trans PROFILE

SCALE: Horiz 1" = 50'
Vert 1" = 5'

PROFILE AND SUPERELEVATION DIAGRAM

SCALE: AS SHOWN **PS-23**

Station	4	615	6	7	8	9	620	1	2	3	4	625	6	7	Sheet Total
CY Exc	10														10
CY Emb	9														9

STATE OF CALIFORNIA - DEPARTMENT OF TRANSPORTATION
Caltrans
06-DESIGN
FUNCTIONAL SUPERVISOR JACK WALKER
CALCULATED-DESIGNED BY JOSE ARGUELLO
CHECKED BY SUMI HOODE
REVISED BY
DATE REVISED

LAST REVISION 08-20-09
DATE PLOTTED => 08-DEC-2009
TIME PLOTTED => 07:47

Dist	COUNTY	ROUTE	POST MILES TOTAL PROJECT	SHEET No.	TOTAL SHEETS
05	SLO	46	36.6/41.2	78	595

REGISTERED CIVIL ENGINEER DATE 8-24-09

PLANS APPROVAL DATE 12-7-09

REGISTERED PROFESSIONAL ENGINEER JOSE M. ARGUELLO No. 51321 Exp 06-30-10 CIVIL STATE OF CALIFORNIA

THE STATE OF CALIFORNIA OR ITS OFFICERS OR AGENTS SHALL NOT BE RESPONSIBLE FOR THE ACCURACY OR COMPLETENESS OF ELECTRONIC COPIES OF THIS PLAN SHEET.

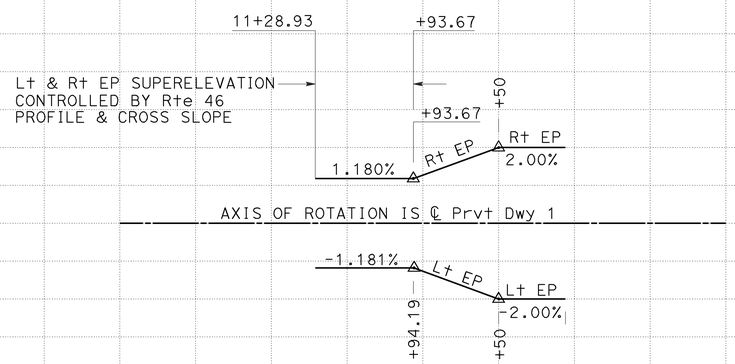

SUPERELEVATION DIAGRAM
Prvt Dwy 1
SCALE: Horiz 1" = 50'

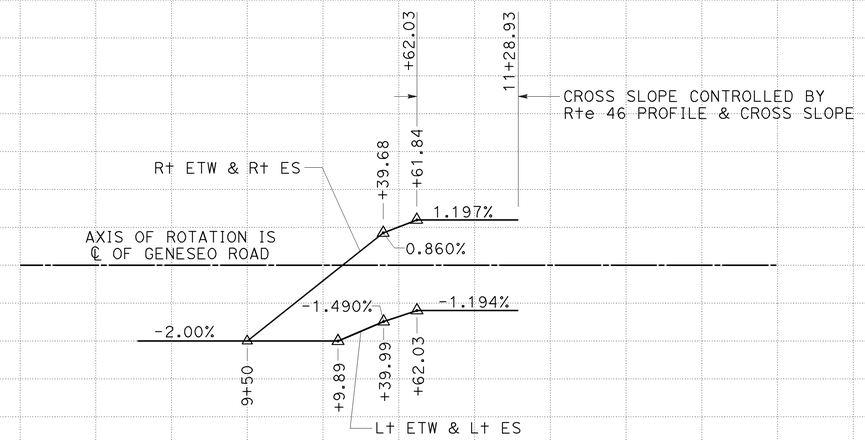

SUPERELEVATION DIAGRAM
GENESEO ROAD
SCALE: Horiz 1" = 50'

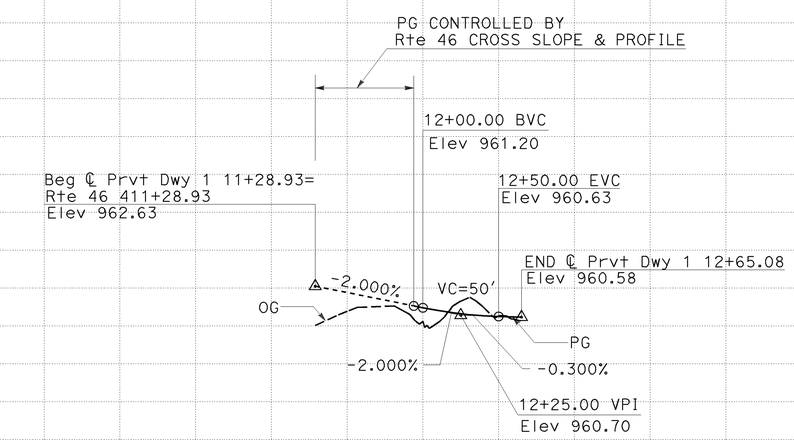

Prvt Dwy 1 PROFILE
SCALE: Horiz 1" = 50'
Vert 1" = 5'

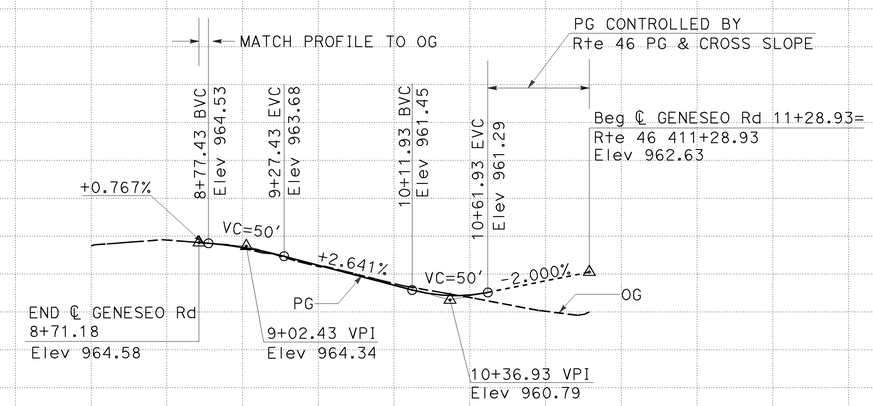

GENESEO ROAD PROFILE
SCALE: Horiz 1" = 50'
Vert 1" = 5'

PROFILE AND SUPERELEVATION DIAGRAM

SCALE: AS SHOWN

PS-24

																								Sheet Total
Station			10		1		2		3		4		8		9		10		1		2		3	
CY	Exc						230								1972									2202
	Emb						40								2									42

STATE OF CALIFORNIA - DEPARTMENT OF TRANSPORTATION
Caltrans
06-DESIGN
FUNCTIONAL SUPERVISOR: JACK WALKER
CALCULATED-DESIGNED BY: JOSE BAUTISTA
CHECKED BY: JOSE ARGUELLO
REVISED BY
DATE REVISED

LAST REVISION 08-12-09
DATE PLOTTED => 08-DEC-2009
TIME PLOTTED => 07:47

Dist	COUNTY	ROUTE	POST MILES TOTAL PROJECT	SHEET No.	TOTAL SHEETS
05	SLO	46	36.6/41.2	79	595

REGISTERED CIVIL ENGINEER DATE 8-24-09

12-7-09
PLANS APPROVAL DATE

REGISTERED PROFESSIONAL ENGINEER JOSE M. ARGUELLO No. 51321 Exp 06-30-10 CIVIL STATE OF CALIFORNIA

THE STATE OF CALIFORNIA OR ITS OFFICERS OR AGENTS SHALL NOT BE RESPONSIBLE FOR THE ACCURACY OR COMPLETENESS OF ELECTRONIC COPIES OF THIS PLAN SHEET.

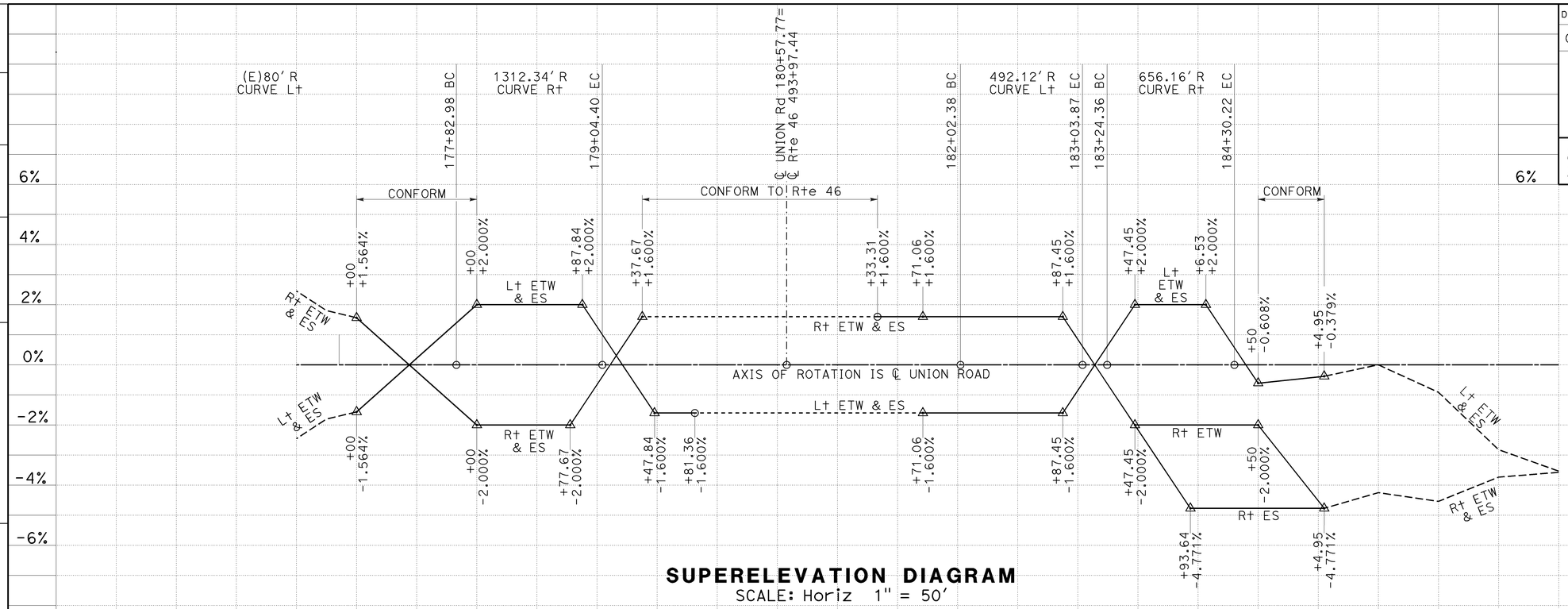

SUPERELEVATION DIAGRAM

SCALE: Horiz 1" = 50'

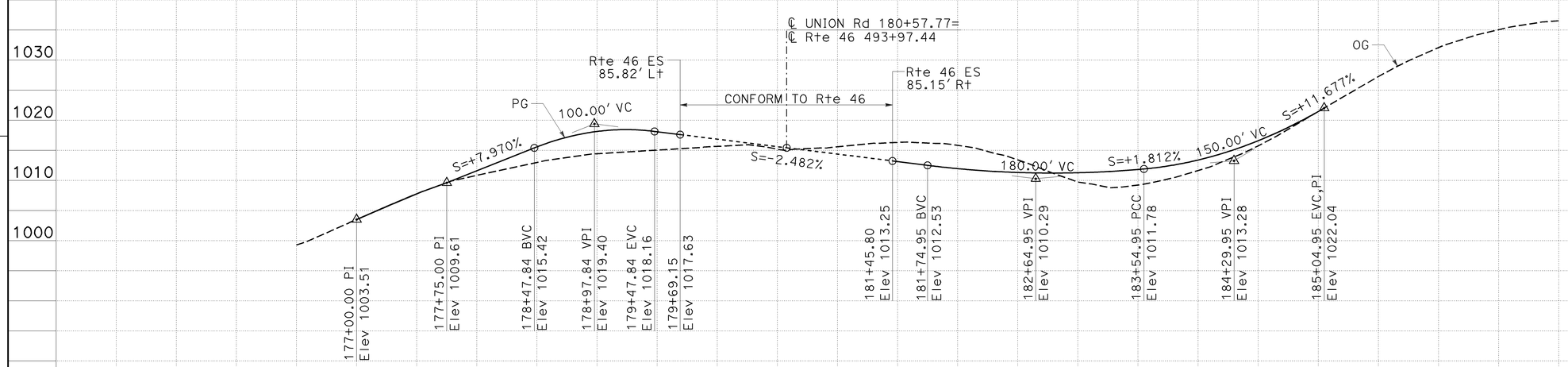

UNION ROAD PROFILE

SCALE: Horiz 1" = 50'
Vert 1" = 10'

PROFILE AND SUPERELEVATION DIAGRAM

SCALE: AS SHOWN **PS-25**

Station	6	7	8	9	180	1	2	3	4	185	6	7	Sheet Total
CY Exc		5214											5214
CY Emb		1465											1465

STATE OF CALIFORNIA - DEPARTMENT OF TRANSPORTATION
Caltrans
06-DESIGN
FUNCTIONAL SUPERVISOR JACK WALKER
CALCULATED-DESIGNED BY JOSE ARGUELLO
CHECKED BY JOHN CLARK
REVISED BY
DATE REVISED

LAST REVISION 08-12-09 DATE PLOTTED => 08-DEC-2009 TIME PLOTTED => 07:47

Dist	COUNTY	ROUTE	POST MILES TOTAL PROJECT	SHEET No.	TOTAL SHEETS
05	SLO	46	36.6/41.2	80	595

REGISTERED CIVIL ENGINEER DATE 8-24-09

PLANS APPROVAL DATE 12-7-09

REGISTERED PROFESSIONAL ENGINEER JOSE M. ARGUELLO No. 51321 Exp 06-30-10 CIVIL STATE OF CALIFORNIA

THE STATE OF CALIFORNIA OR ITS OFFICERS OR AGENTS SHALL NOT BE RESPONSIBLE FOR THE ACCURACY OR COMPLETENESS OF ELECTRONIC COPIES OF THIS PLAN SHEET.

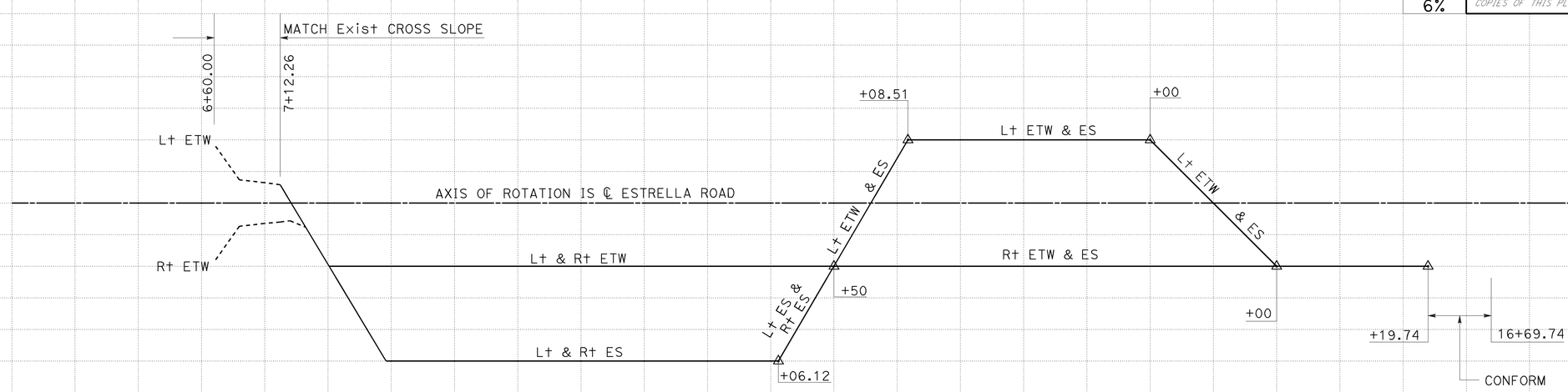

SUPERELEVATION DIAGRAM

SCALE: Horiz 1" = 50'

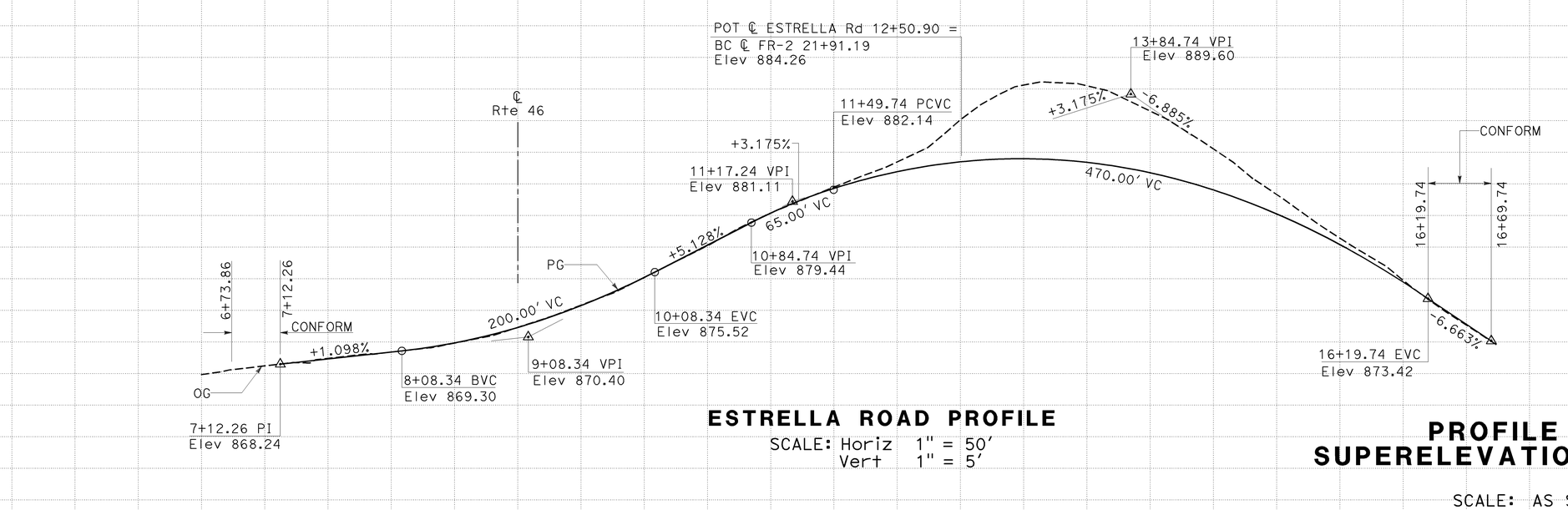

ESTRELLA ROAD PROFILE

SCALE: Horiz 1" = 50'
Vert 1" = 5'

PROFILE AND SUPERELEVATION DIAGRAM

SCALE: AS SHOWN **PS-26**

Station	6	7	8	9	10	1	2	3	4	15	16	17	Sheet Total
CY Exc		7650											7650
CY Emb		35,988											35,988

REVISED BY | DATE REVISED

JOSE ARGUELLO | SUMI HOODE

CALCULATED-DESIGNED BY | CHECKED BY

FUNCTIONAL SUPERVISOR: JACK WALKER

STATE OF CALIFORNIA - DEPARTMENT OF TRANSPORTATION

06-DESIGN

Caltrans

LAST REVISION 08-13-09 | DATE PLOTTED => 08-DEC-2009 | TIME PLOTTED => 09:55

Dist	COUNTY	ROUTE	POST MILES TOTAL PROJECT	SHEET No.	TOTAL SHEETS
05	SLO	46	36.6/41.2	81	595

REGISTERED CIVIL ENGINEER DATE 8-24-09

PLANS APPROVAL DATE 12-7-09

REGISTERED PROFESSIONAL ENGINEER JOSE M. ARGUELLO No. 51321 Exp 06-30-10 CIVIL STATE OF CALIFORNIA

THE STATE OF CALIFORNIA OR ITS OFFICERS OR AGENTS SHALL NOT BE RESPONSIBLE FOR THE ACCURACY OR COMPLETENESS OF ELECTRONIC COPIES OF THIS PLAN SHEET.

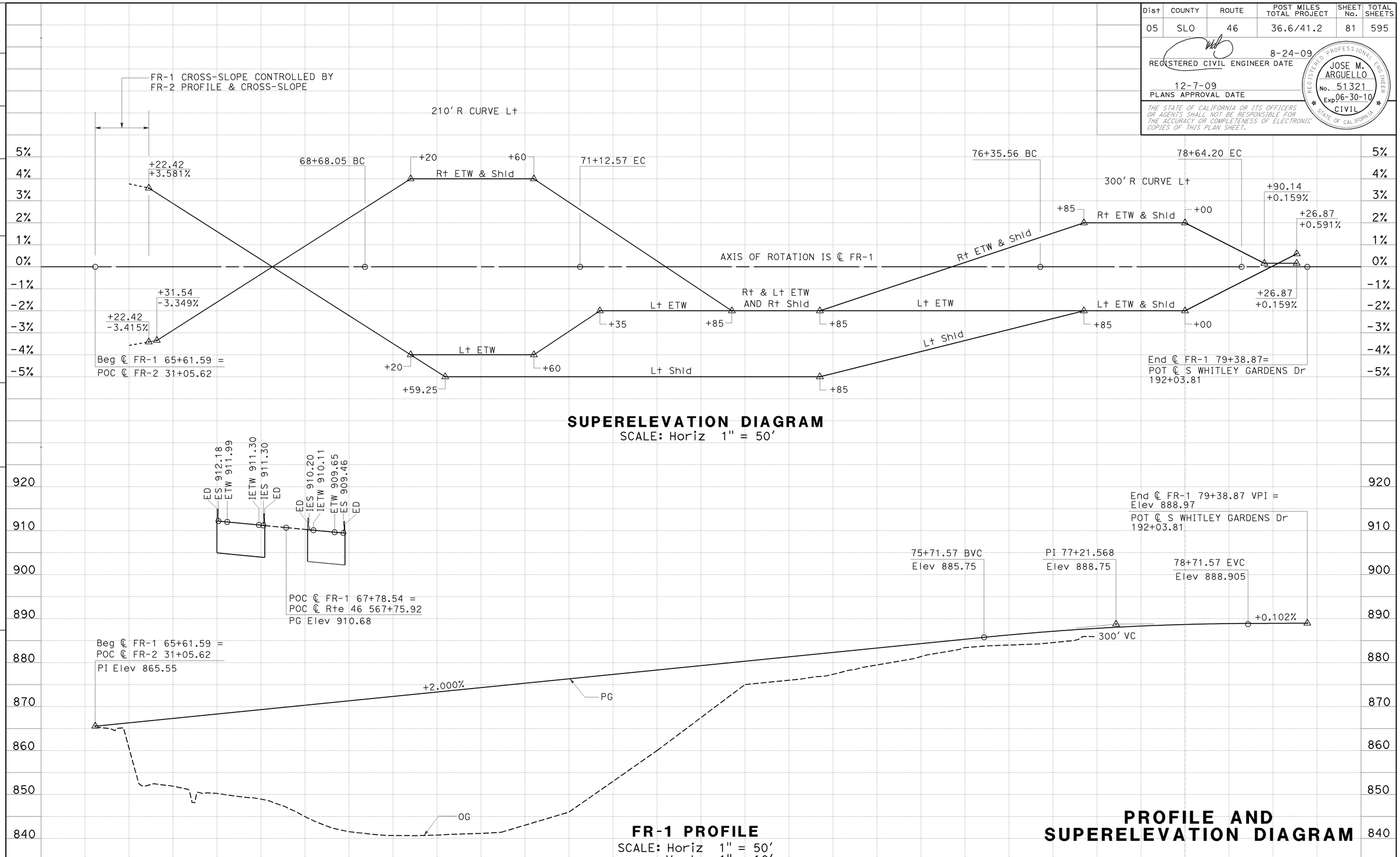

PROFILE AND SUPERELEVATION DIAGRAM

SCALE: AS SHOWN

PS-27

Sheet Total

STATE OF CALIFORNIA - DEPARTMENT OF TRANSPORTATION

Caltrans 06-DESIGN

FUNCTIONAL SUPERVISOR JACK WALKER

CALCULATED-DESIGNED BY JOSE ARGUELLO

CHECKED BY SUMI HOODE

REVISED BY

DATE REVISED

LAST REVISION 08-13-09 DATE PLOTTED => 08-DEC-2009 TIME PLOTTED => 09:55

Dist	COUNTY	ROUTE	POST MILES TOTAL PROJECT	SHEET No.	TOTAL SHEETS
05	SLO	46	36.6/41.2	82	595

REGISTERED CIVIL ENGINEER DATE 8-24-09

PLANS APPROVAL DATE 12-7-09

REGISTERED PROFESSIONAL ENGINEER JOSE M. ARGUELLO No. 51321 Exp 06-30-10 CIVIL STATE OF CALIFORNIA

THE STATE OF CALIFORNIA OR ITS OFFICERS OR AGENTS SHALL NOT BE RESPONSIBLE FOR THE ACCURACY OR COMPLETENESS OF ELECTRONIC COPIES OF THIS PLAN SHEET.

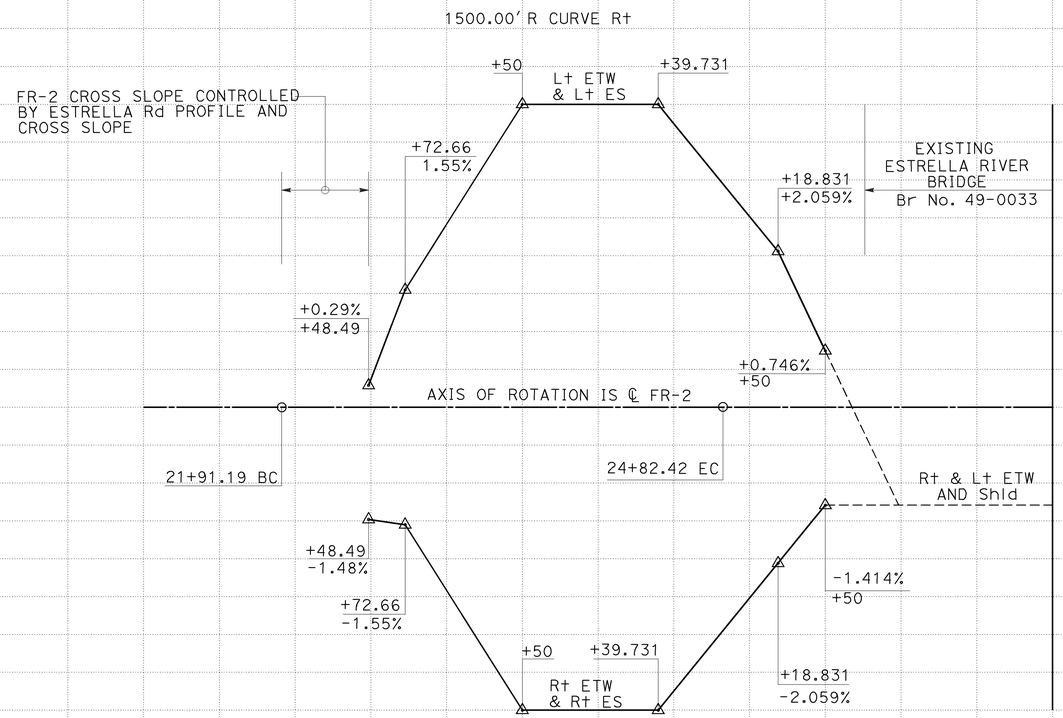

SUPERELEVATION DIAGRAM

SCALE: Horiz 1" = 50'

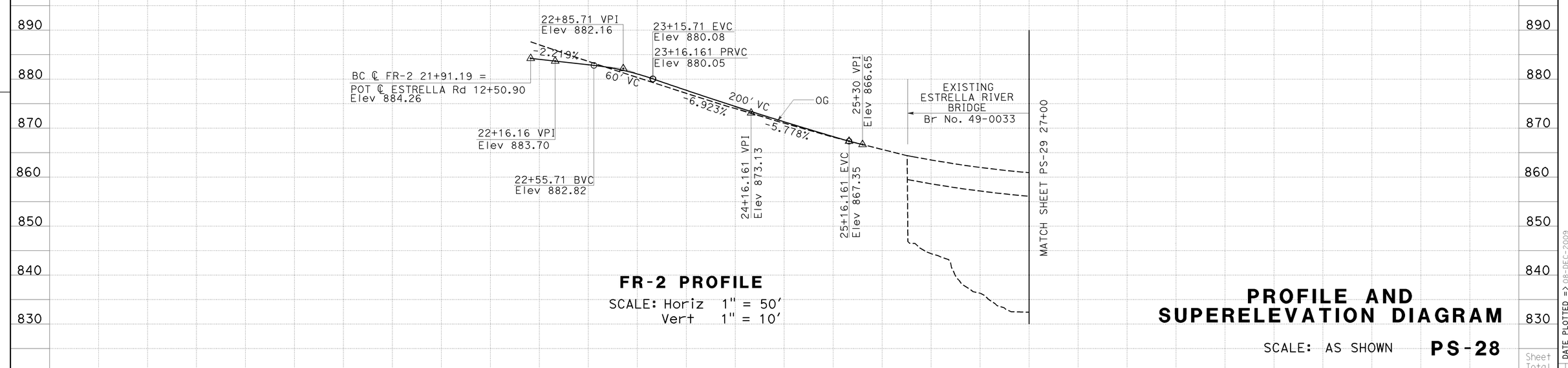

FR-2 PROFILE

SCALE: Horiz 1" = 50'
Vert 1" = 10'

PROFILE AND SUPERELEVATION DIAGRAM

SCALE: AS SHOWN **PS-28**

Station	1	2	3	4	25	6	7	8	Sheet Total
CY Exc		1237							1237
CY Emb		201							201

STATE OF CALIFORNIA - DEPARTMENT OF TRANSPORTATION
06-DESIGN
Caltrans

FUNCTIONAL SUPERVISOR: JACK WALKER
CALCULATED-DESIGNED BY: JOSE ARGUELLO
CHECKED BY: SUMI HOODE
REVISED BY / DATE REVISED

LAST REVISION 08-13-09
DATE PLOTTED => 08-DEC-2009
TIME PLOTTED => 09:55

Dist	COUNTY	ROUTE	POST MILES TOTAL PROJECT	SHEET No.	TOTAL SHEETS
05	SLO	46	36.6/41.2	83	595

REGISTERED CIVIL ENGINEER DATE 8-24-09

PLANS APPROVAL DATE 12-7-09

REGISTERED PROFESSIONAL ENGINEER JOSE M. ARGUELLO No. 51321 Exp 06-30-10 CIVIL STATE OF CALIFORNIA

THE STATE OF CALIFORNIA OR ITS OFFICERS OR AGENTS SHALL NOT BE RESPONSIBLE FOR THE ACCURACY OR COMPLETENESS OF ELECTRONIC COPIES OF THIS PLAN SHEET.

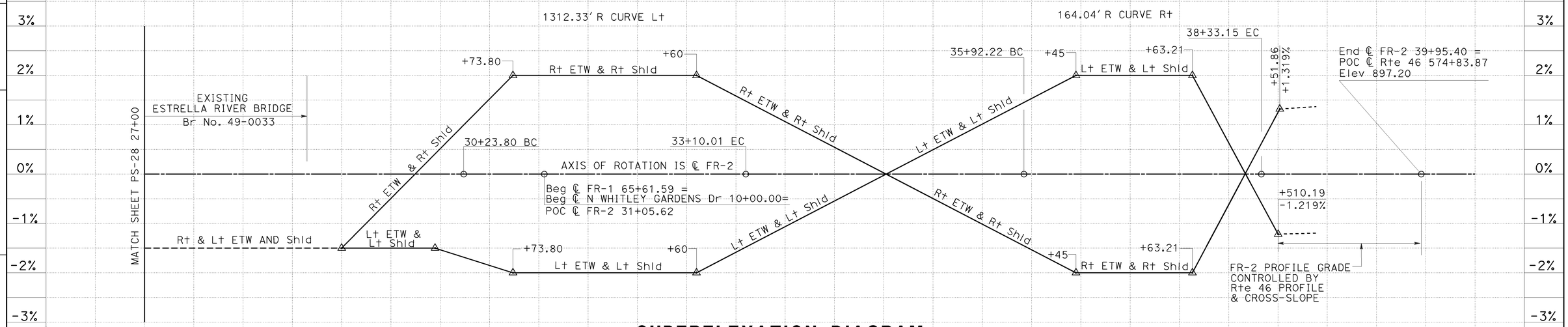

SUPERELEVATION DIAGRAM

SCALE: Horiz 1" = 50'

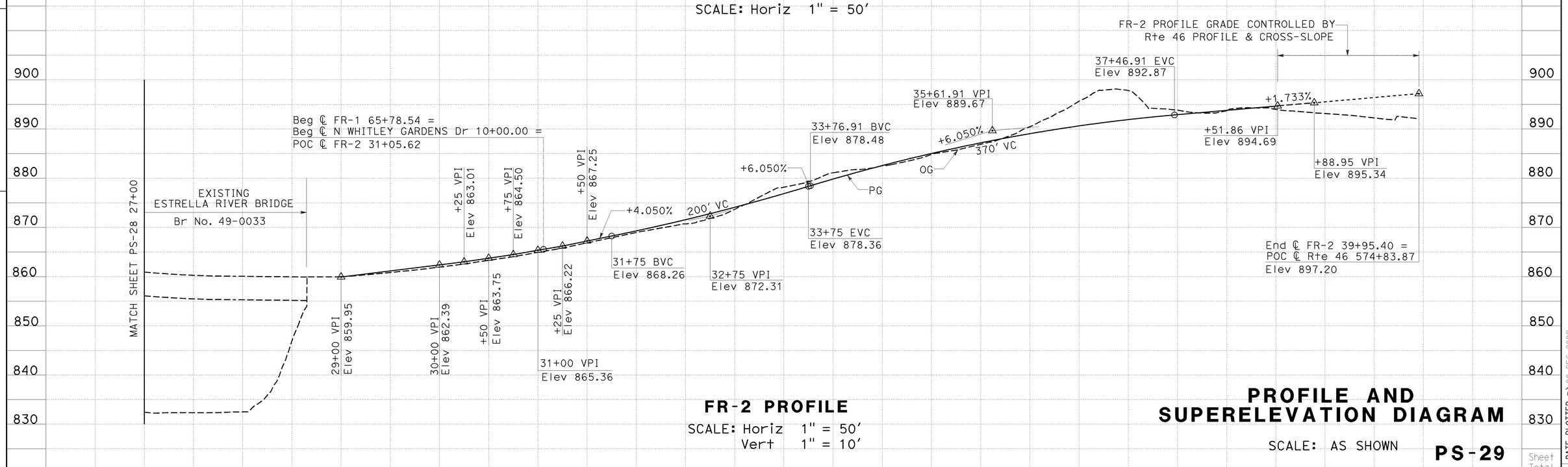

FR-2 PROFILE

SCALE: Horiz 1" = 50'
Vert 1" = 10'

PROFILE AND SUPERELEVATION DIAGRAM

SCALE: AS SHOWN

PS-29

Station	7	8	9	30	1	2	3	4	35	6	7	8	9	40	Sheet Total
CY Exc	7799														7799
CY Emb	6155														6155

STATE OF CALIFORNIA - DEPARTMENT OF TRANSPORTATION
Caltrans 06-DESIGN

FUNCTIONAL SUPERVISOR JACK WALKER

CALCULATED-DESIGNED BY JOSE ARGUELLO
CHECKED BY SUMI HOODE

REVISED BY | DATE REVISED

LAST REVISION 08-13-09 DATE PLOTTED => 08-DEC-2009 TIME PLOTTED => 09:55

Dist	COUNTY	ROUTE	POST MILES TOTAL PROJECT	SHEET No.	TOTAL SHEETS
05	SLO	46	36.6/41.2	84	595

REGISTERED CIVIL ENGINEER DATE 8-24-09

12-7-09
PLANS APPROVAL DATE

REGISTERED PROFESSIONAL ENGINEER JOSE M. ARGUELLO No. 51321 Exp 06-30-10 CIVIL STATE OF CALIFORNIA

THE STATE OF CALIFORNIA OR ITS OFFICERS OR AGENTS SHALL NOT BE RESPONSIBLE FOR THE ACCURACY OR COMPLETENESS OF ELECTRONIC COPIES OF THIS PLAN SHEET.

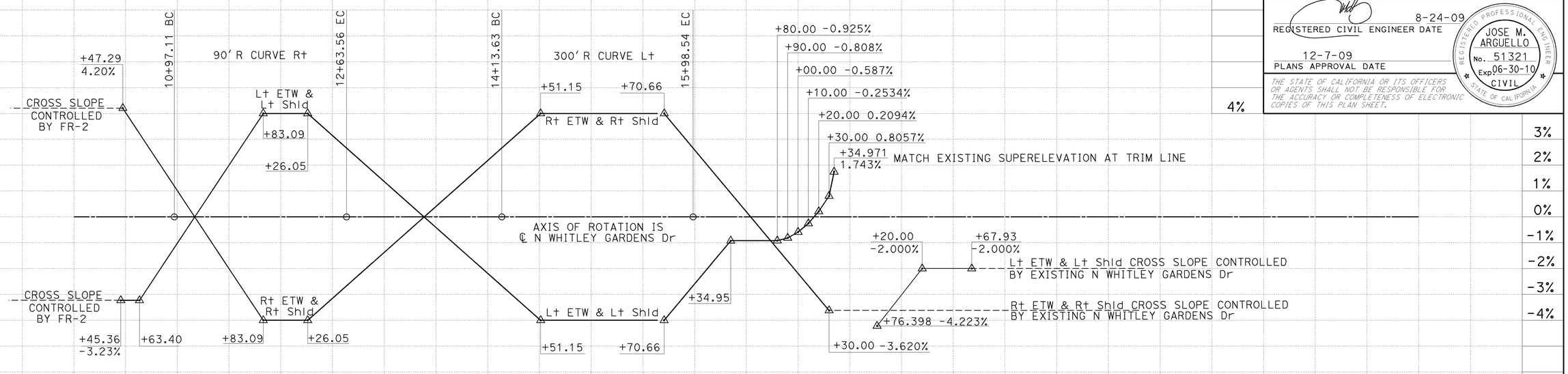

SUPERELEVATION DIAGRAM

SCALE: Horiz 1" = 50'

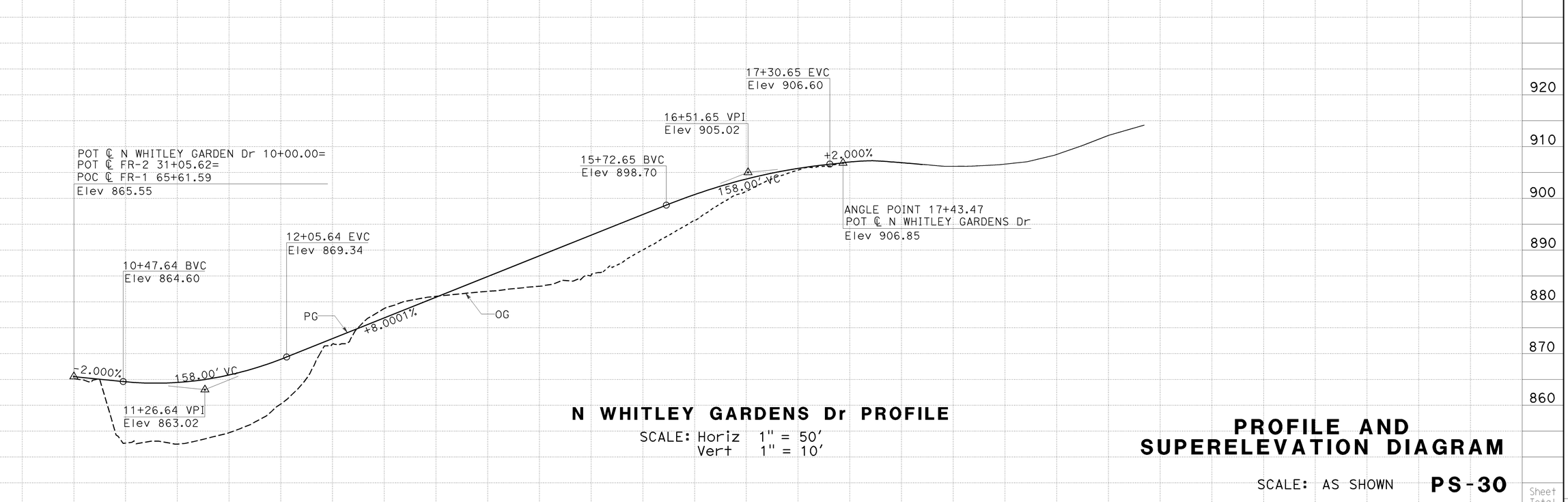

N WHITLEY GARDENS Dr PROFILE

SCALE: Horiz 1" = 50'
Vert 1" = 10'

PROFILE AND SUPERELEVATION DIAGRAM

SCALE: AS SHOWN **PS-30**

Station	10	11	12	13	14	15	16	17	18	19	20	Sheet Total
CY Exc			1153									1153
CY Emb			12,355									12,355

STATE OF CALIFORNIA - DEPARTMENT OF TRANSPORTATION
Caltrans
06-DESIGN
FUNCTIONAL SUPERVISOR JACK WALKER
CALCULATED-DESIGNED BY WHECHIN LIU
CHECKED BY SUMI HOODE
REVISED BY
DATE REVISED

LAST REVISION 08-13-09
DATE PLOTTED => 08-DEC-2009
TIME PLOTTED => 09:55

Dist	COUNTY	ROUTE	POST MILES TOTAL PROJECT	SHEET No.	TOTAL SHEETS
05	SLO	46	36.6/41.2	85	595

REGISTERED CIVIL ENGINEER DATE 8-24-09

12-7-09
PLANS APPROVAL DATE

REGISTERED PROFESSIONAL ENGINEER JOSE M. ARGUELLO No. 51321 Exp 06-30-10 CIVIL STATE OF CALIFORNIA

THE STATE OF CALIFORNIA OR ITS OFFICERS OR AGENTS SHALL NOT BE RESPONSIBLE FOR THE ACCURACY OR COMPLETENESS OF ELECTRONIC COPIES OF THIS PLAN SHEET.

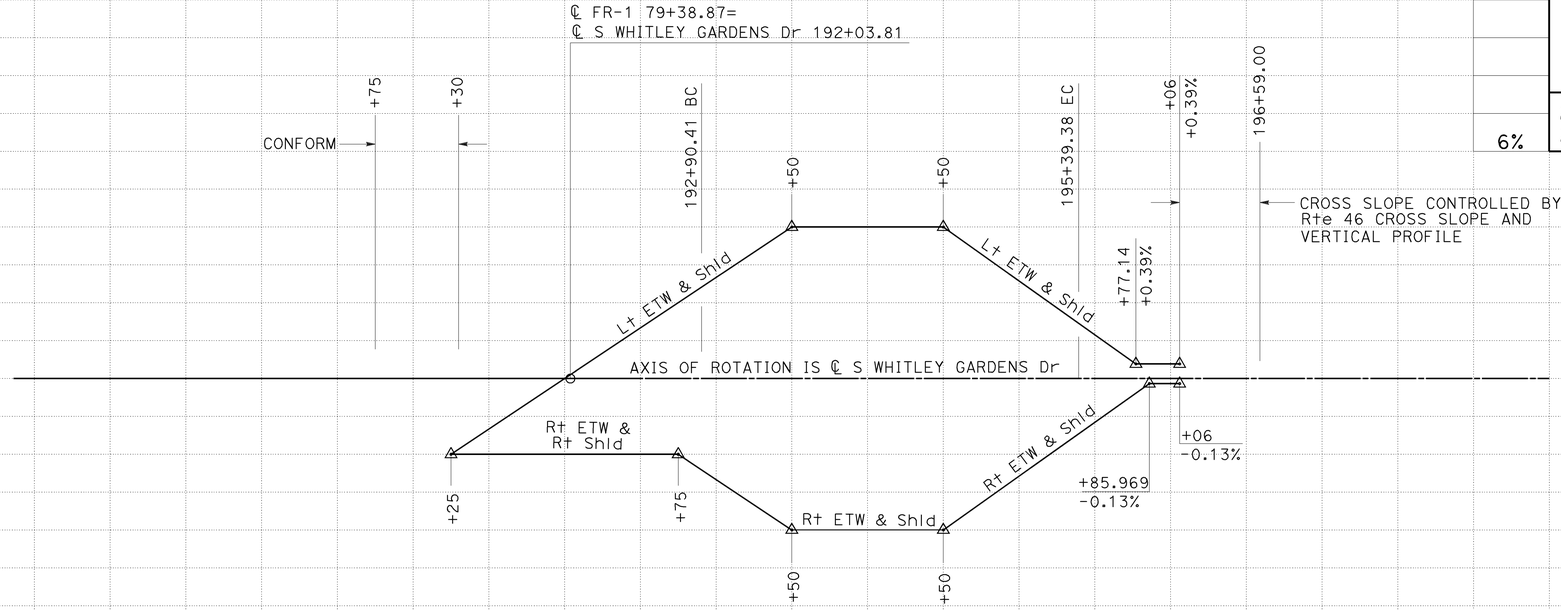

SUPERELEVATION DIAGRAM

SCALE: Horiz 1" = 50'

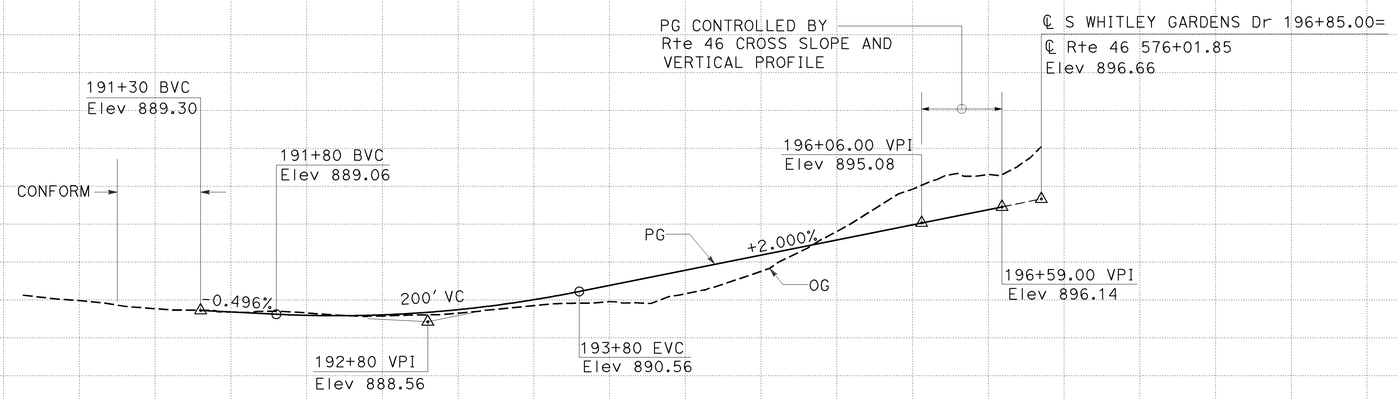

S WHITLEY GARDENS Dr PROFILE

SCALE: Horiz 1" = 50'
Vert 1" = 5'

PROFILE AND SUPERELEVATION DIAGRAM

SCALE: AS SHOWN **PS-31**

Station.	188	189	190	191	192	193	194	195	196	197	Sheet Total
CY Exc					4678						4678
CY Emb					637						637

STATE OF CALIFORNIA - DEPARTMENT OF TRANSPORTATION
Caltrans
06-DESIGN
FUNCTIONAL SUPERVISOR: JACK WALKER
CALCULATED-DESIGNED BY: JOSE ARGUELLO
CHECKED BY: SUMI HOODE
REVISED BY
DATE REVISED

LAST REVISION 08-13-09
DATE PLOTTED => 08-DEC-2009
TIME PLOTTED => 09:55

Dist	COUNTY	ROUTE	POST MILES TOTAL PROJECT	SHEET No.	TOTAL SHEETS
05	SLO	46	36.6/41.2	86	595

REGISTERED CIVIL ENGINEER DATE 8-24-09

PLANS APPROVAL DATE 12-7-09

REGISTERED PROFESSIONAL ENGINEER JOSE M. ARGUELLO No. 51321 Exp 06-30-10 CIVIL STATE OF CALIFORNIA

THE STATE OF CALIFORNIA OR ITS OFFICERS OR AGENTS SHALL NOT BE RESPONSIBLE FOR THE ACCURACY OR COMPLETENESS OF ELECTRONIC COPIES OF THIS PLAN SHEET.

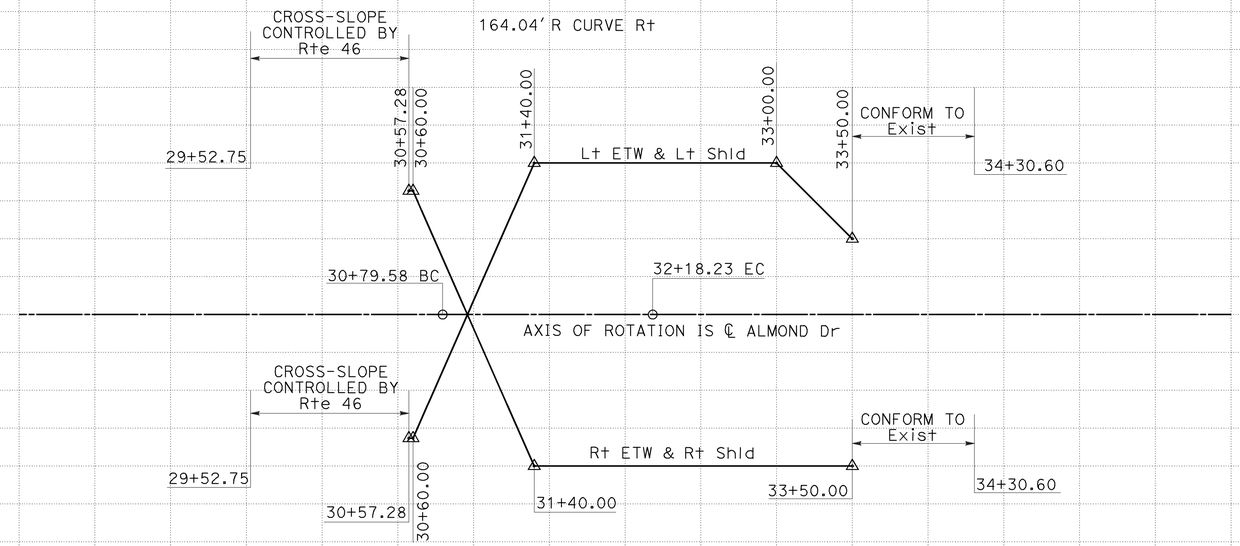

SUPERELEVATION DIAGRAM

SCALE: Horiz 1" = 50'

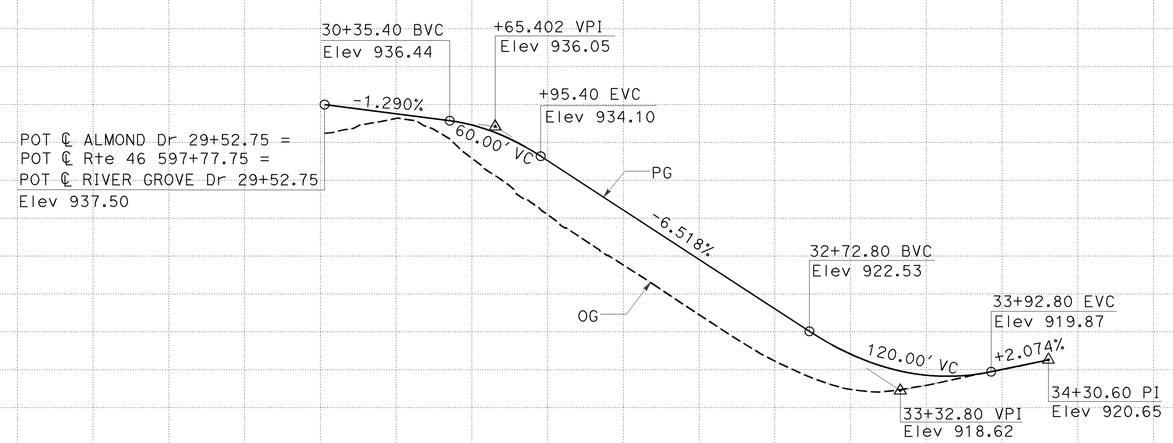

ALMOND DRIVE PROFILE

SCALE: Horiz 1" = 50'
Vert 1" = 5'

PROFILE AND SUPERELEVATION DIAGRAM

SCALE: AS SHOWN **PS-32**

Station	9	30	1	2	3	4	35	Sheet Total
CY Exc			73					73
CY Emb			4343					4343

STATE OF CALIFORNIA - DEPARTMENT OF TRANSPORTATION
Caltrans 06-DESIGN
FUNCTIONAL SUPERVISOR JACK WALKER
CALCULATED-DESIGNED BY JOSE ARGUELLO
CHECKED BY SUMI HOODE
REVISED BY
DATE REVISED

LAST REVISION 08-13-09 DATE PLOTTED => 08-DEC-2009 TIME PLOTTED => 09:56

Dist	COUNTY	ROUTE	POST MILES TOTAL PROJECT	SHEET No.	TOTAL SHEETS
05	SLO	46	36.6/41.2	87	595

REGISTERED CIVIL ENGINEER DATE 8-24-09

PLANS APPROVAL DATE 12-7-09

REGISTERED PROFESSIONAL ENGINEER JOSE M. ARGUELLO No. 51321 Exp 06-30-10 CIVIL STATE OF CALIFORNIA

THE STATE OF CALIFORNIA OR ITS OFFICERS OR AGENTS SHALL NOT BE RESPONSIBLE FOR THE ACCURACY OR COMPLETENESS OF ELECTRONIC COPIES OF THIS PLAN SHEET.

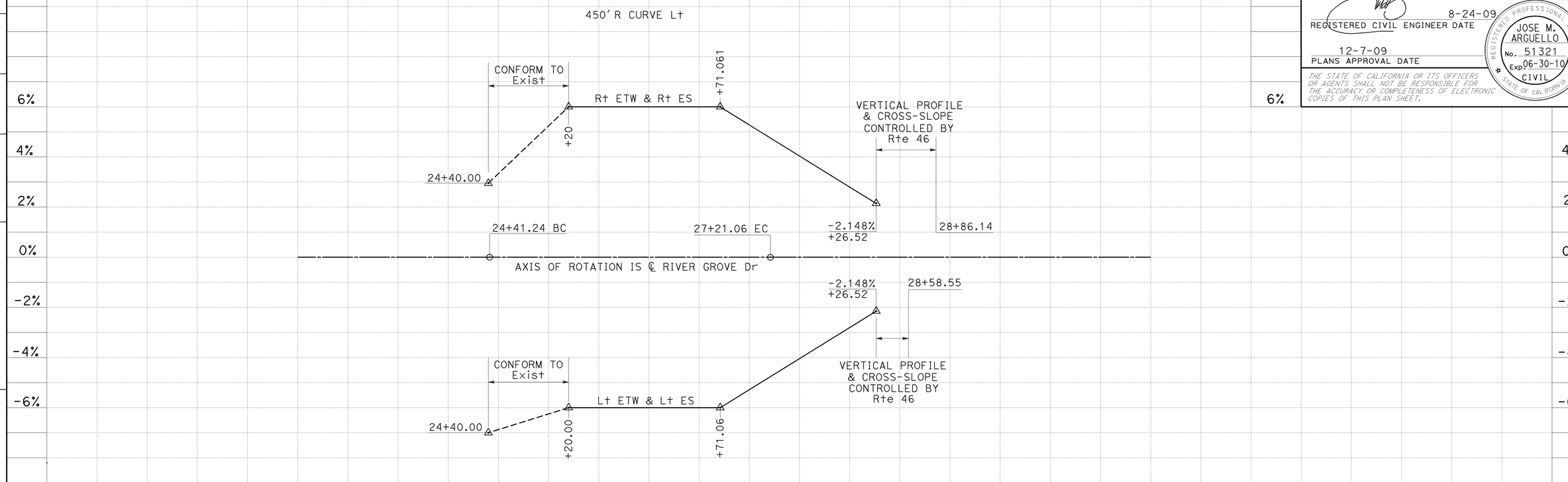

SUPERELEVATION DIAGRAM

SCALE: Horiz 1" = 50'

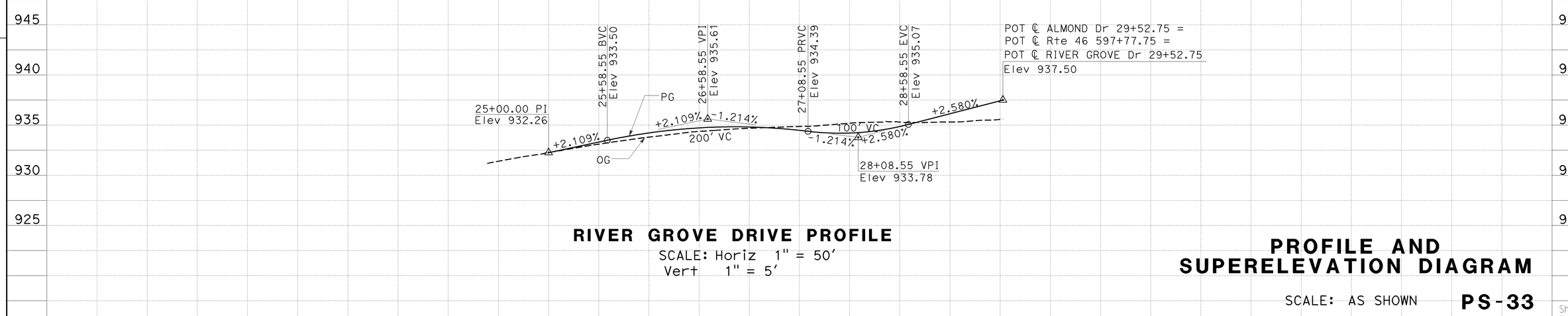

RIVER GROVE DRIVE PROFILE

SCALE: Horiz 1" = 50'
Vert 1" = 5'

PROFILE AND SUPERELEVATION DIAGRAM

SCALE: AS SHOWN **PS-33**

Station	4	25	6	7	8	9	30	Sheet Total
CY Exc	1202							1202
CY Emb	3088							3088

STATE OF CALIFORNIA - DEPARTMENT OF TRANSPORTATION
Caltrans
06-DESIGN
FUNCTIONAL SUPERVISOR: JACK WALKER
CALCULATED-DESIGNED BY: JOSE ARGUELLO
CHECKED BY: SUMI HOODE
REVISED BY / DATE REVISED

LAST REVISION 08-13-09 DATE PLOTTED => 08-DEC-2009 TIME PLOTTED => 09:56

Dist	COUNTY	ROUTE	POST MILES TOTAL PROJECT	SHEET No.	TOTAL SHEETS
05	SLO	46	36.6/41.2	88	595

REGISTERED CIVIL ENGINEER DATE 8-24-09

PLANS APPROVAL DATE 12-7-09

REGISTERED PROFESSIONAL ENGINEER JOSE M. ARGUELLO No. 51321 Exp 06-30-10 CIVIL STATE OF CALIFORNIA

THE STATE OF CALIFORNIA OR ITS OFFICERS OR AGENTS SHALL NOT BE RESPONSIBLE FOR THE ACCURACY OR COMPLETENESS OF ELECTRONIC COPIES OF THIS PLAN SHEET.

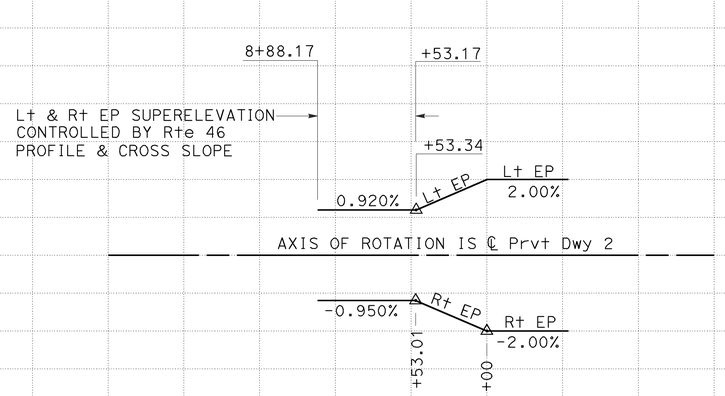

SUPERELEVATION DIAGRAM
Prvt Dwy 2
SCALE: Horiz 1" = 50'

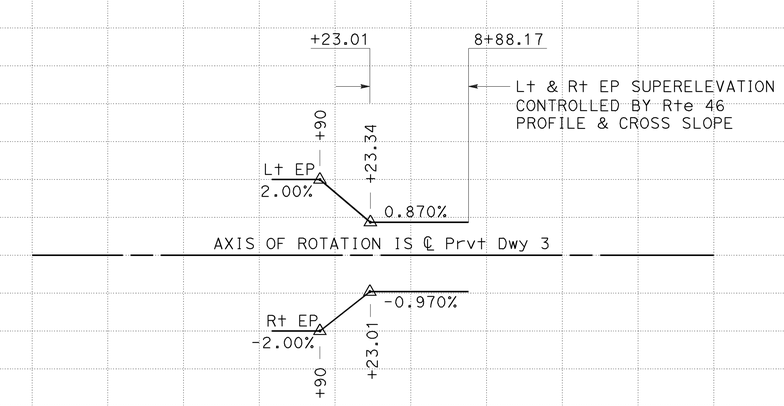

SUPERELEVATION DIAGRAM
Prvt Dwy 3
SCALE: Horiz 1" = 50'

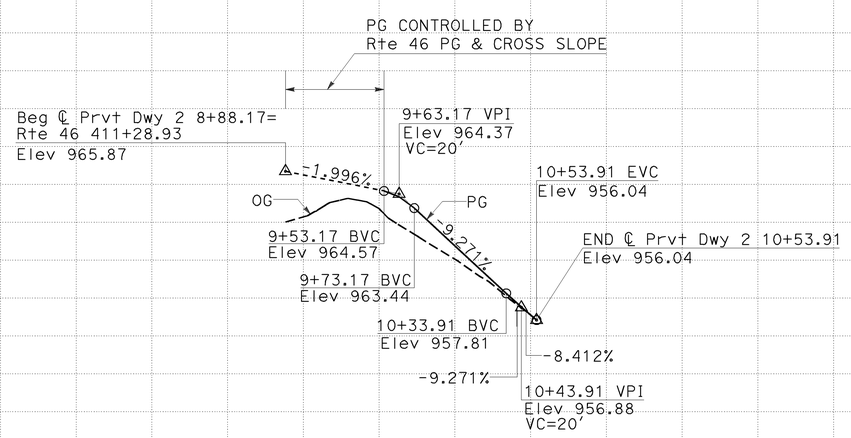

Prvt Dwy 2 PROFILE
SCALE: Horiz 1" = 50'
Vert 1" = 5'

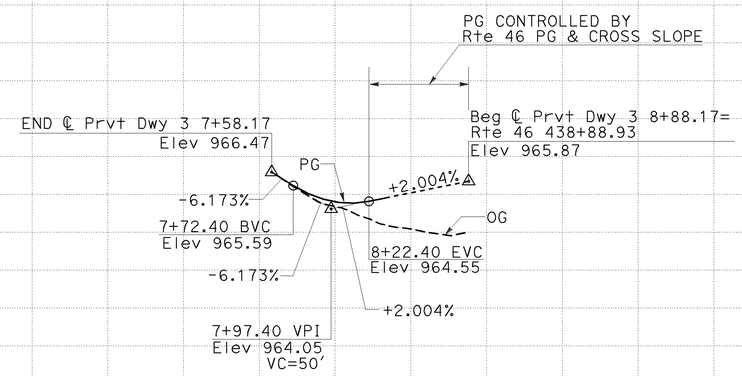

Prvt Dwy 3 PROFILE
SCALE: Horiz 1" = 50'
Vert 1" = 5'

PROFILE AND SUPERELEVATION DIAGRAM
SCALE: AS SHOWN **PS-34**

Station	8	9	10	1	2	6	7	8	9	10	11	Sheet Total
CY Exc			68					122				190
CY Emb			185					98				283

STATE OF CALIFORNIA - DEPARTMENT OF TRANSPORTATION
Caltrans
06-DESIGN
FUNCTIONAL SUPERVISOR JACK WALKER
CALCULATED-DESIGNED BY JOSE BAUTISTA
CHECKED BY JOSE ARGUELLO
REVISED BY
DATE REVISED

LAST REVISION 08-13-09
DATE PLOTTED => 08-DEC-2009
TIME PLOTTED => 09:56

Dist	COUNTY	ROUTE	POST MILES TOTAL PROJECT	SHEET No.	TOTAL SHEETS
05	SLO	46	36.6/41.2	89	595

REGISTERED CIVIL ENGINEER DATE 8-24-09

PLANS APPROVAL DATE 12-7-09

REGISTERED PROFESSIONAL ENGINEER JOSE M. ARGUELLO No. 51321 Exp 06-30-10 CIVIL STATE OF CALIFORNIA

THE STATE OF CALIFORNIA OR ITS OFFICERS OR AGENTS SHALL NOT BE RESPONSIBLE FOR THE ACCURACY OR COMPLETENESS OF ELECTRONIC COPIES OF THIS PLAN SHEET.

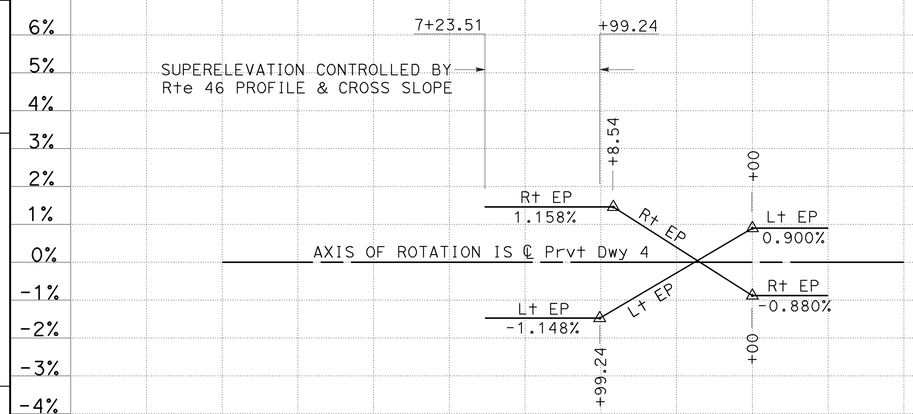

SUPERELEVATION DIAGRAM
Prvt Dwy 4
SCALE: Horiz 1" = 50'

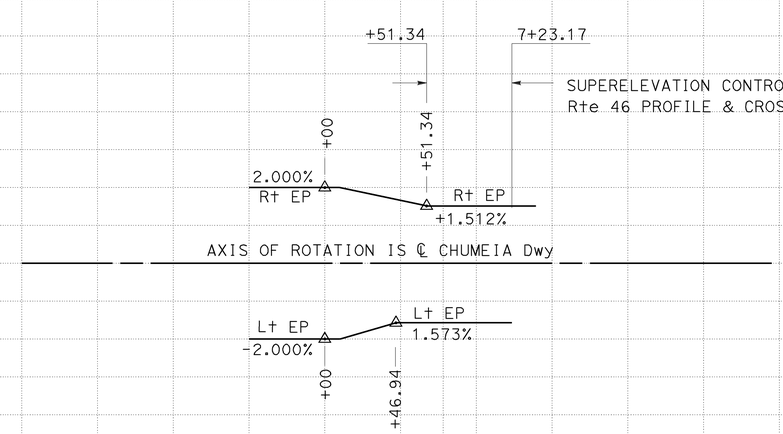

SUPERELEVATION DIAGRAM
CHUMEIA Dwy
SCALE: Horiz 1" = 50'

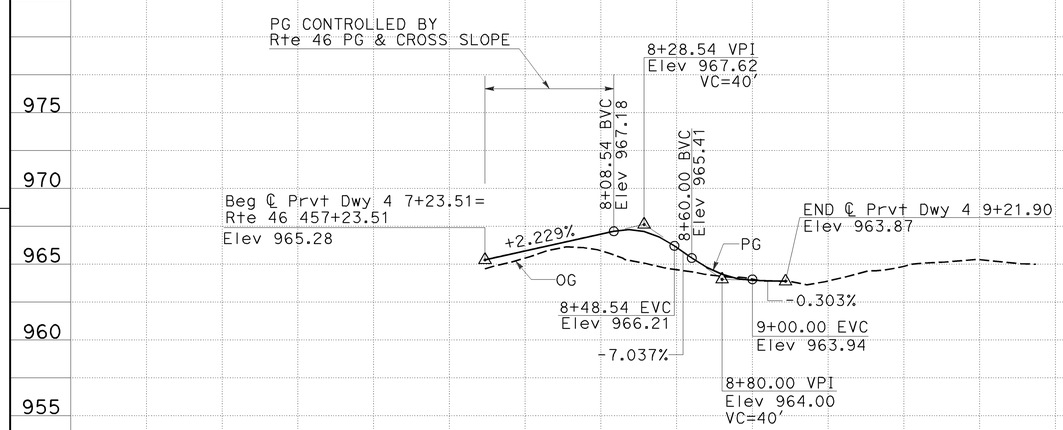

Prvt Dwy 4 PROFILE
SCALE: Horiz 1" = 50'
Vert 1" = 5'

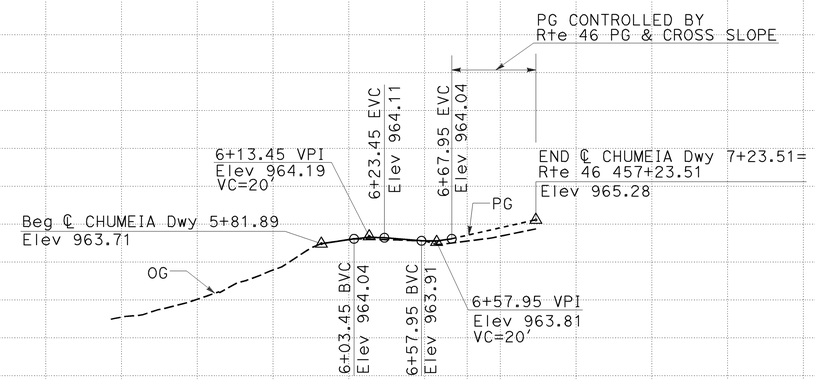

CHUMEIA Dwy PROFILE
SCALE: Horiz 1" = 50'
Vert 1" = 5'

PROFILE AND SUPERELEVATION DIAGRAM

SCALE: AS SHOWN **PS-35**

Station	6	7	8	9	10	4	5	6	7	8	9	Sheet Total
CY Exc			160					284				444
CY Emb			170					7				177

STATE OF CALIFORNIA - DEPARTMENT OF TRANSPORTATION
Caltrans 06-DESIGN
FUNCTIONAL SUPERVISOR JACK WALKER
CALCULATED-DESIGNED BY JOSE BAUTISTA
CHECKED BY JOSE ARGUELLO
REVISED BY
DATE REVISED

LAST REVISION 08-13-09
DATE PLOTTED => 08-DEC-2009
TIME PLOTTED => 09:56

Dist	COUNTY	ROUTE	POST MILES TOTAL PROJECT	SHEET No.	TOTAL SHEETS
05	SLO	46	36.6/41.2	90	595

REGISTERED CIVIL ENGINEER DATE 8-24-09

12-7-09
PLANS APPROVAL DATE

REGISTERED PROFESSIONAL ENGINEER JOSE M. ARGUELLO No. 51321 Exp 06-30-10 CIVIL STATE OF CALIFORNIA

THE STATE OF CALIFORNIA OR ITS OFFICERS OR AGENTS SHALL NOT BE RESPONSIBLE FOR THE ACCURACY OR COMPLETENESS OF ELECTRONIC COPIES OF THIS PLAN SHEET.

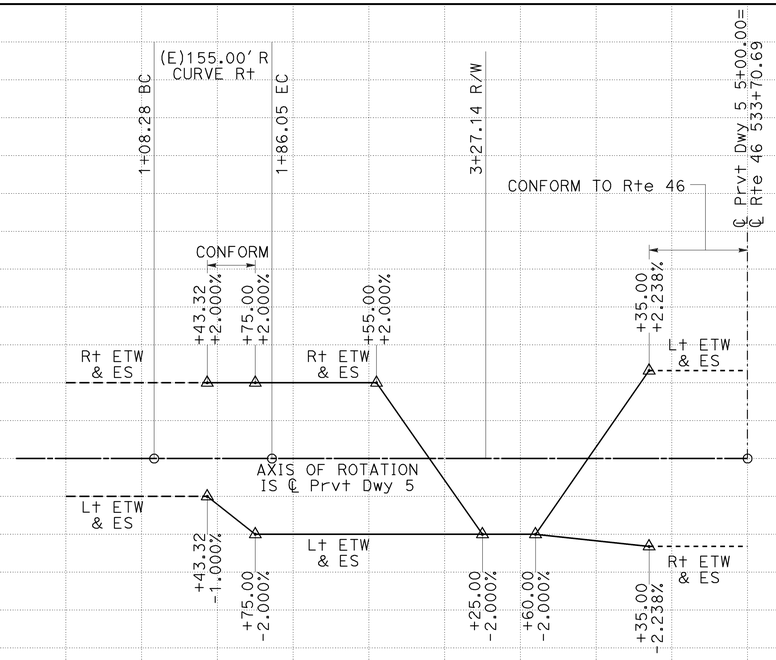

SUPERELEVATION DIAGRAM

SCALE: Horiz 1" = 50'

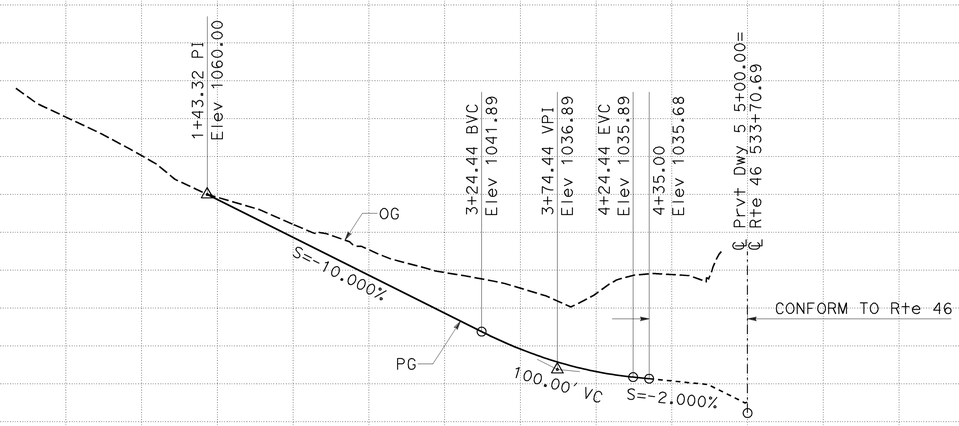

Prvt Dwy 5 PROFILE

SCALE: Horiz 1" = 50'
Vert 1" = 10'

PROFILE AND SUPERELEVATION DIAGRAM

SCALE: AS SHOWN **PS-36**

													Sheet Total
Station			0	1	2	3	4	5	6				
CY	Exc				5766								5766
	Emb				8								8

STATE OF CALIFORNIA - DEPARTMENT OF TRANSPORTATION
Caltrans
06-DESIGN
FUNCTIONAL SUPERVISOR: JACK WALKER
CALCULATED-DESIGNED BY: JOSE ARGUELLO
CHECKED BY: JOHN CLARK
REVISED BY / DATE REVISED

LAST REVISION 08-13-09 DATE PLOTTED => 08-DEC-2009 TIME PLOTTED => 09:56

Dist	COUNTY	ROUTE	POST MILES TOTAL PROJECT	SHEET No.	TOTAL SHEETS
05	SLO	46	36.6/41.2	91	595

REGISTERED CIVIL ENGINEER DATE 8-24-09

12-7-09
PLANS APPROVAL DATE

REGISTERED PROFESSIONAL ENGINEER JOSE M. ARGUELLO No. 51321 Exp 06-30-10 CIVIL STATE OF CALIFORNIA

THE STATE OF CALIFORNIA OR ITS OFFICERS OR AGENTS SHALL NOT BE RESPONSIBLE FOR THE ACCURACY OR COMPLETENESS OF ELECTRONIC COPIES OF THIS PLAN SHEET.

LEGEND

- CONFORM TO Exist
- REMOVE AC Pvmt
- COLD PLANE AC Pvmt
- 0.25' HMA SLOPE PAVING
- AREA FOR THE CONTRACTOR USE
- DEER GUARD
- DRAINAGE SYSTEM No.
- 1X INDICATE EXISTING DRAINAGE SYSTEM No.
- T1 INDICATE TEMPORARY DRAINAGE SYSTEM No.
- XXXX STANDARD PLAN No.

ABBREVIATIONS:

Prvt	PRIVATE	ISS	INTERMEDIATE SLOPE STAKE
IES	INSIDE ES	AFTS	ALTERNATIVE FLARE TERMINAL SYSTEM
IETW	INSIDE ETW	ESA	ENVIRONMENTALLY SENSITIVE AREA
OES	OUTSIDE ES	GPI	GEOSYNTHETIC Pvmt INTERLAYER
OETW	OUTSIDE ETW		
TL	TRIM LINE		
TOD	TOP OF DITCH		
HSS	HIGH SIDE SUPER		

NOTE: FOR ACCURATE RIGHT OF WAY AND ACCESS DATA, CONTACT RIGHT OF WAY ENGINEERING AT THE DISTRICT OFFICE.

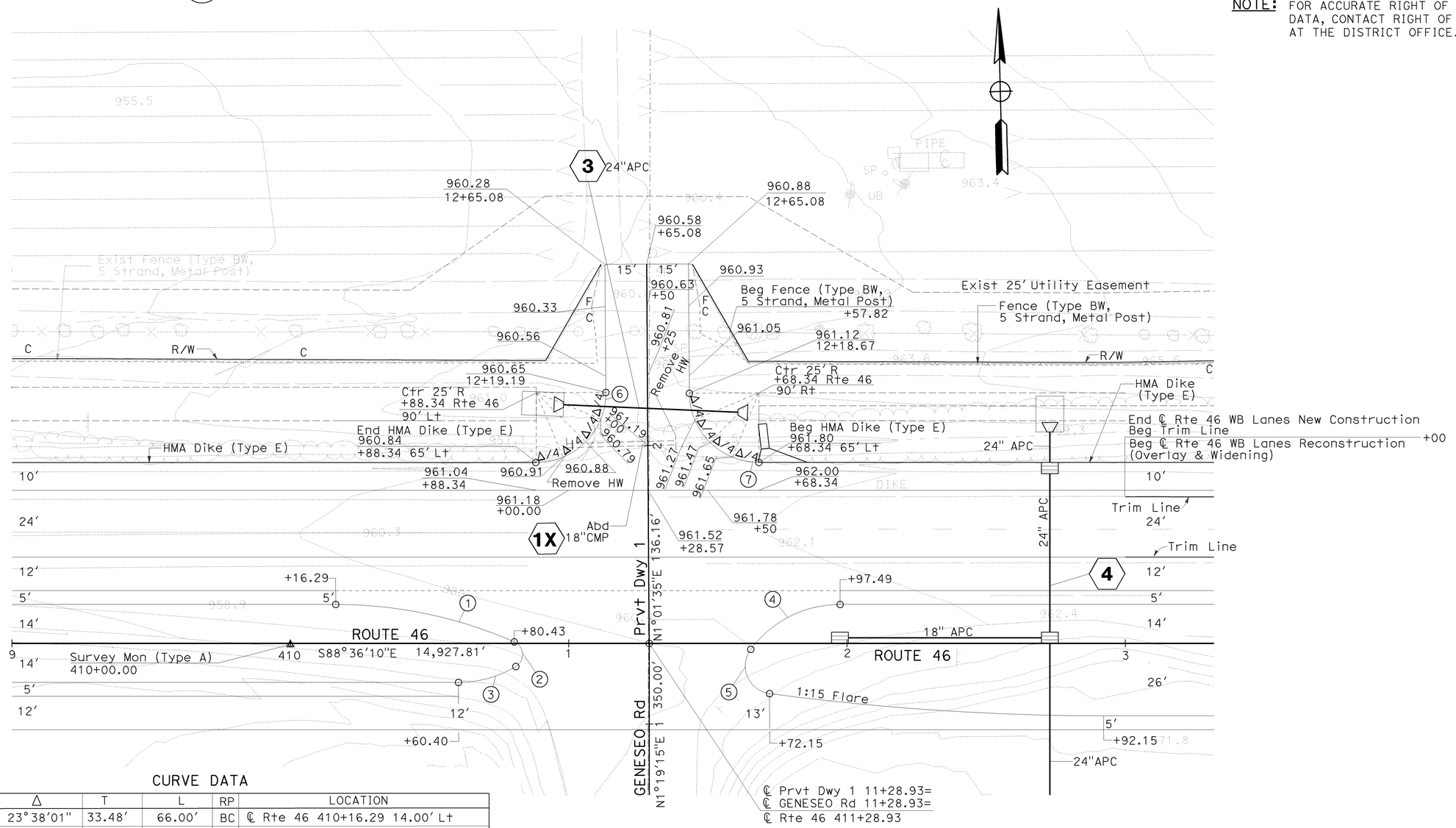

CURVE DATA

No.	R	Δ	T	L	RP	LOCATION
1	160.00'	23°38'01"	33.48'	66.00'	BC	℄ Rte 46 410+16.29 14.00' Lt
2	5.00'	125°21'50"	9.68'	10.94'	BC	℄ Rte 46 410+80.43 0.58' Lt
3	40.00'	31°00'11"	11.09'	21.64'	BC	℄ Rte 46 410+60.40 14.00' Rt
4	40.00'	53°19'24"	20.08'	37.23'	EC	℄ Rte 46 411+97.49 14.00' Lt
5	10.00'	119°22'57"	17.11'	20.84'	EC	℄ Rte 46 411+72.15 18.00' Rt
6	25.00'	90°09'34"	25.07'	39.34'	BC	℄ Rte 46 410+88.34 65.00' Lt
7	25.00'	89°50'26"	24.93'	39.20'	EC	℄ Rte 46 411+68.34 65.00' Lt

THIS PLAN ACCURATE FOR PAVEMENT INFORMATION ONLY.

SCALE: 1" = 20'

CONSTRUCTION DETAILS
(Prvt Dwy 1)

C-1

STATE OF CALIFORNIA - DEPARTMENT OF TRANSPORTATION
Caltrans 06-DESIGN
FUNCTIONAL SUPERVISOR JACK WALKER
CALCULATED-DESIGNED BY JOSE ARGUELLO
CHECKED BY JOSE BAUTISTA
REVISED BY
DATE REVISED

LAST REVISION 08-25-09
DATE PLOTTED => 08-DEC-2009
TIME PLOTTED => 09:56

NOTE: FOR ACCURATE RIGHT OF WAY AND ACCESS DATA, CONTACT RIGHT OF WAY ENGINEERING AT THE DISTRICT OFFICE.

Dist	COUNTY	ROUTE	POST MILES TOTAL PROJECT	SHEET No.	TOTAL SHEETS
05	SLO	46	36.6/41.2	92	595

REGISTERED CIVIL ENGINEER 8-24-09 DATE

12-7-09
PLANS APPROVAL DATE

REGISTERED PROFESSIONAL ENGINEER JOSE M. ARGUELLO No. 51321 Exp 06-30-10 CIVIL STATE OF CALIFORNIA

THE STATE OF CALIFORNIA OR ITS OFFICERS OR AGENTS SHALL NOT BE RESPONSIBLE FOR THE ACCURACY OR COMPLETENESS OF ELECTRONIC COPIES OF THIS PLAN SHEET.

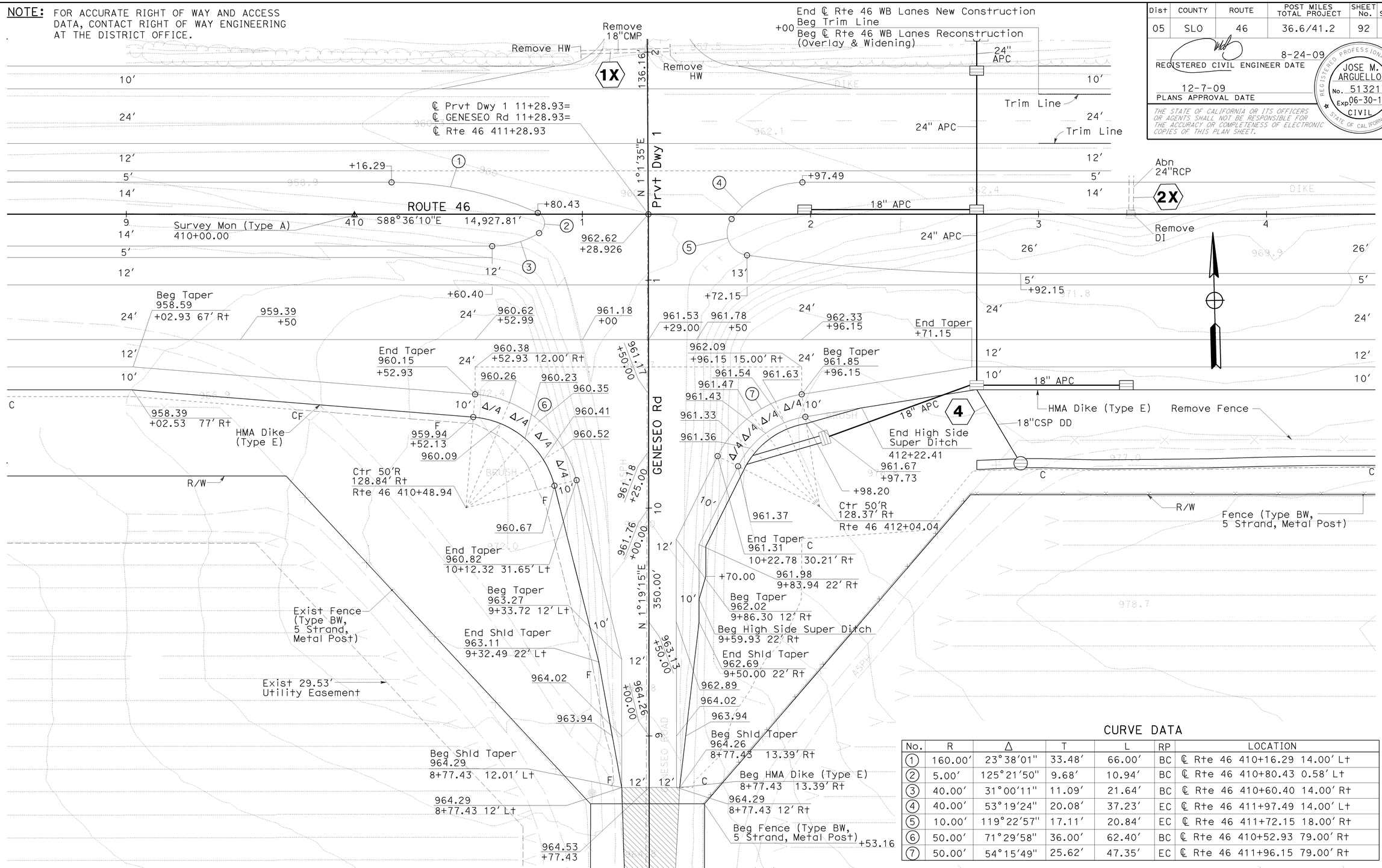

CURVE DATA

No.	R	Δ	T	L	RP	LOCATION
1	160.00'	23°38'01"	33.48'	66.00'	BC	℄ Rte 46 410+16.29 14.00' Lt
2	5.00'	125°21'50"	9.68'	10.94'	BC	℄ Rte 46 410+80.43 0.58' Lt
3	40.00'	31°00'11"	11.09'	21.64'	BC	℄ Rte 46 410+60.40 14.00' Rt
4	40.00'	53°19'24"	20.08'	37.23'	EC	℄ Rte 46 411+97.49 14.00' Lt
5	10.00'	119°22'57"	17.11'	20.84'	EC	℄ Rte 46 411+72.15 18.00' Rt
6	50.00'	71°29'58"	36.00'	62.40'	BC	℄ Rte 46 410+52.93 79.00' Rt
7	50.00'	54°15'49"	25.62'	47.35'	EC	℄ Rte 46 411+96.15 79.00' Rt

THIS PLAN ACCURATE FOR PAVEMENT INFORMATION ONLY.

SCALE: 1" = 20'

CONSTRUCTION DETAILS
(GENESEO ROAD)

C-2

STATE OF CALIFORNIA - DEPARTMENT OF TRANSPORTATION
Caltrans 06-DESIGN
FUNCTIONAL SUPERVISOR JACK WALKER
CALCULATED-DESIGNED BY JOSE ARGUELLO
CHECKED BY JOSE BAUTISTA
REVISED BY
DATE REVISED

LAST REVISION DATE PLOTTED => 08-DEC-2009
08-19-09 TIME PLOTTED => 09:56

Dist	COUNTY	ROUTE	POST MILES TOTAL PROJECT	SHEET No.	TOTAL SHEETS
05	SLO	46	36.6/41.2	93	595

REGISTERED CIVIL ENGINEER DATE 8-24-09

12-7-09
PLANS APPROVAL DATE

REGISTERED PROFESSIONAL ENGINEER JOSE M. ARGUELLO No. 51321 Exp 06-30-10 CIVIL STATE OF CALIFORNIA

THE STATE OF CALIFORNIA OR ITS OFFICERS OR AGENTS SHALL NOT BE RESPONSIBLE FOR THE ACCURACY OR COMPLETENESS OF ELECTRONIC COPIES OF THIS PLAN SHEET.

NOTE: FOR ACCURATE RIGHT OF WAY AND ACCESS DATA, CONTACT RIGHT OF WAY ENGINEERING AT THE DISTRICT OFFICE.

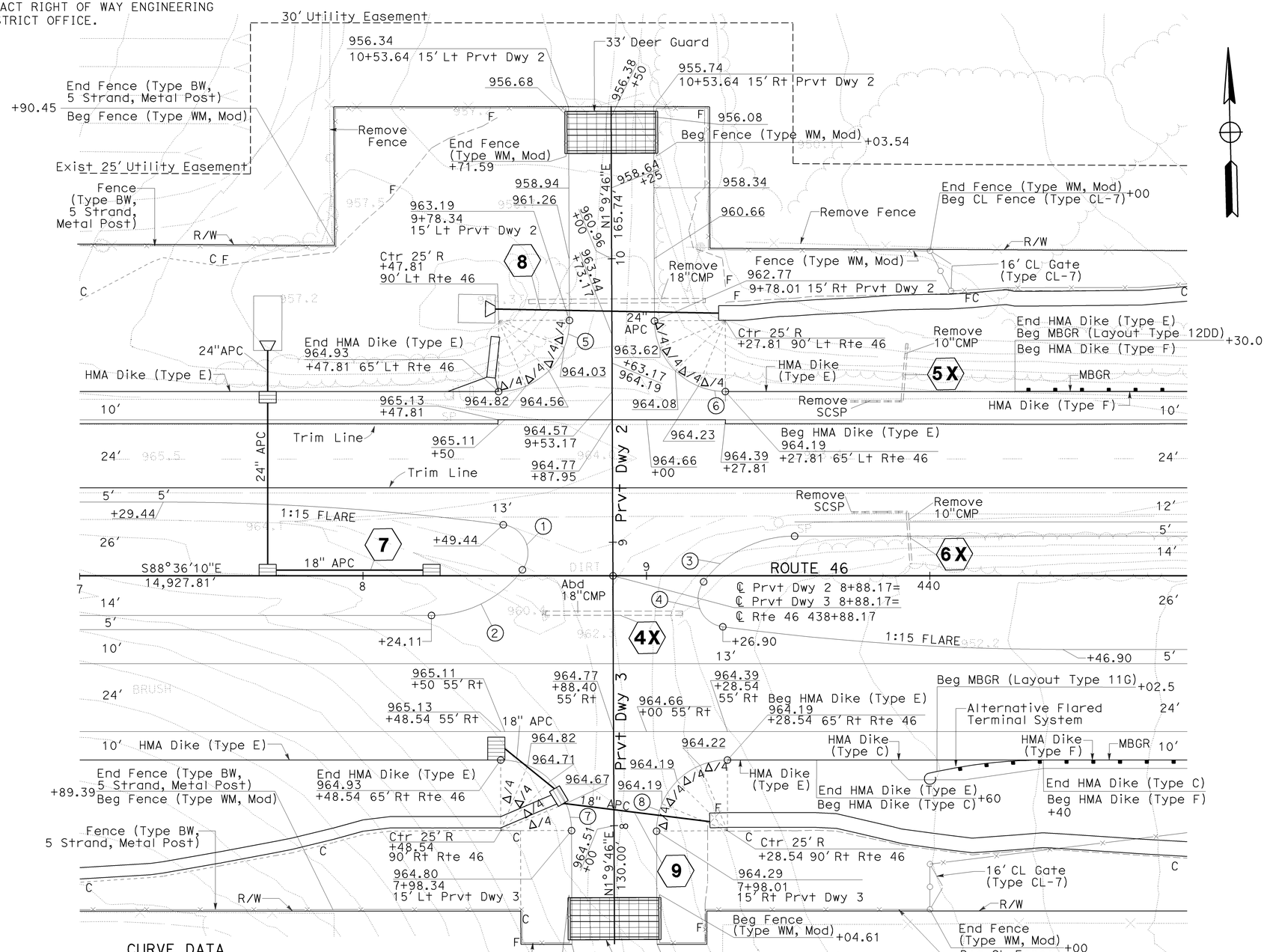

CURVE DATA

No.	R	Δ	T	L	RP	LOCATION
1	10.00'	119°22'56"	17.11'	20.84'	BC	℄ Rte 46 438+49.44 18.00' Lt
2	40.00'	53°19'23"	20.08'	37.23'	BC	℄ Rte 46 438+24.11 14.00' Rt
3	40.00'	53°19'23"	20.08'	37.23'	EC	℄ Rte 46 439+52.23 14.00' Lt
4	10.00'	119°22'57"	17.11'	20.84'	EC	℄ Rte 46 439+26.90 18.00' Rt
5	25.00'	90°14'04"	25.10'	39.37'	BC	℄ Rte 46 438+47.81 65.00' Lt
6	25.00'	89°45'56"	24.90'	39.17'	EC	℄ Rte 46 439+27.81 65.00' Lt
7	25.00'	89°45'56"	24.90'	39.17'	BC	℄ Rte 46 438+48.54 65.00' Rt
8	25.00'	90°14'04"	25.10'	39.37'	EC	℄ Rte 46 439+28.54 65.00' Rt

THIS PLAN ACCURATE FOR PAVEMENT INFORMATION ONLY.

SCALE: 1" = 20'

CONSTRUCTION DETAILS
(Prvt Dwy 2 & Prvt Dwy 3)

C-3

STATE OF CALIFORNIA - DEPARTMENT OF TRANSPORTATION
Caltrans 06-DESIGN

FUNCTIONAL SUPERVISOR: JACK WALKER
CALCULATED-DESIGNED BY: JOSE ARGUELLO
CHECKED BY: JOSE BAUTISTA
REVISED BY / DATE REVISED

LAST REVISION 08-19-09
DATE PLOTTED => 08-DEC-2009
TIME PLOTTED => 09:56

Dist	COUNTY	ROUTE	POST MILES TOTAL PROJECT	SHEET No.	TOTAL SHEETS
05	SLO	46	36.6/41.2	94	595

REGISTERED CIVIL ENGINEER DATE 8-24-09

12-7-09
PLANS APPROVAL DATE

REGISTERED PROFESSIONAL ENGINEER JOSE M. ARGUELLO No. 51321 Exp 06-30-10 CIVIL STATE OF CALIFORNIA

THE STATE OF CALIFORNIA OR ITS OFFICERS OR AGENTS SHALL NOT BE RESPONSIBLE FOR THE ACCURACY OR COMPLETENESS OF ELECTRONIC COPIES OF THIS PLAN SHEET.

NOTE: FOR ACCURATE RIGHT OF WAY AND ACCESS DATA, CONTACT RIGHT OF WAY ENGINEERING AT THE DISTRICT OFFICE.

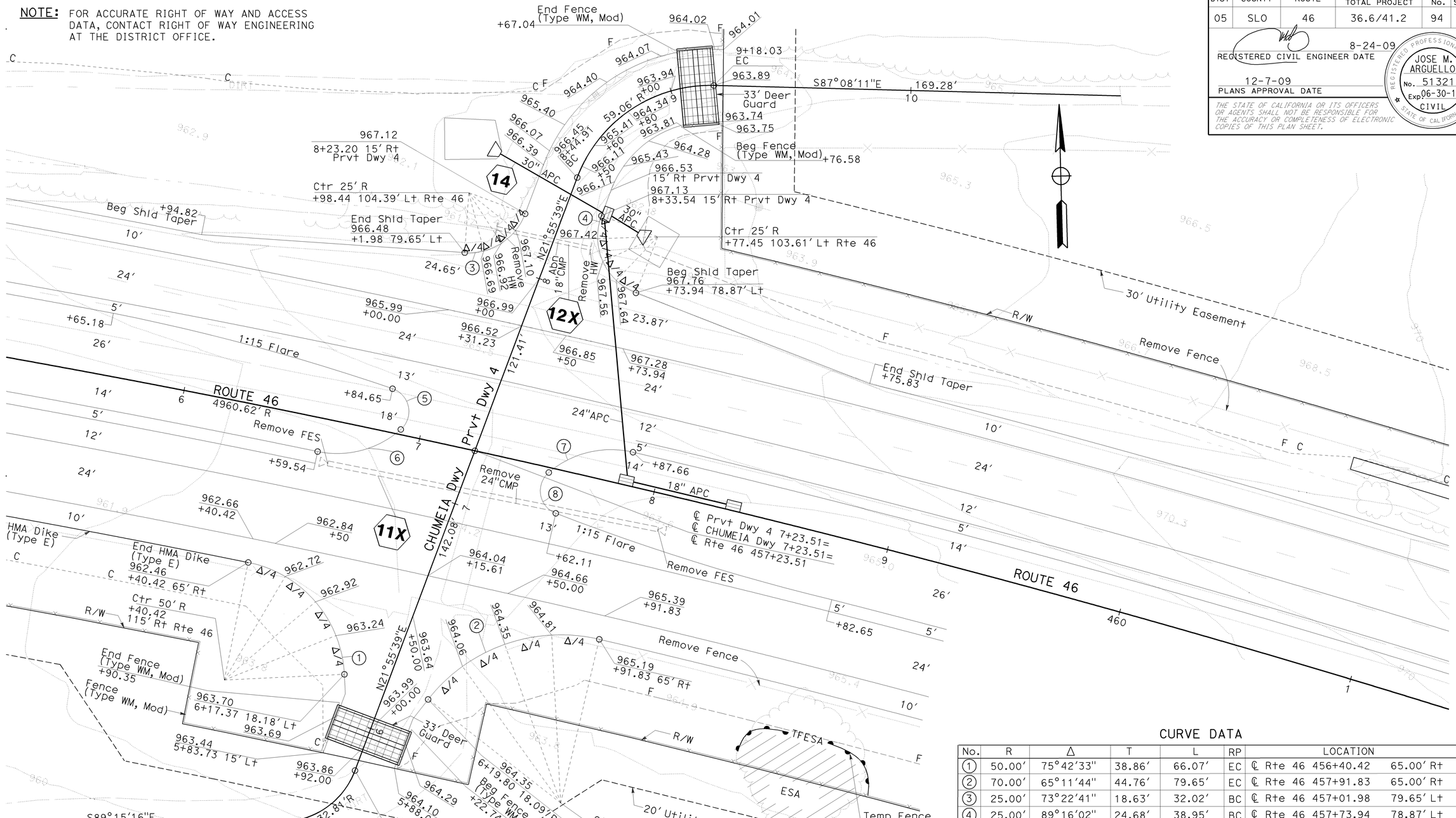

THIS PLAN ACCURATE FOR PAVEMENT INFORMATION ONLY.

CURVE DATA

No.	R	Δ	T	L	RP	LOCATION	
1	50.00'	75°42'33"	38.86'	66.07'	EC	℄ Rte 46 456+40.42	65.00' Rt
2	70.00'	65°11'44"	44.76'	79.65'	EC	℄ Rte 46 457+91.83	65.00' Rt
3	25.00'	73°22'41"	18.63'	32.02'	BC	℄ Rte 46 457+01.98	79.65' Lt
4	25.00'	89°16'02"	24.68'	38.95'	BC	℄ Rte 46 457+73.94	78.87' Lt
5	10.00'	119°57'19"	17.31'	20.94'	BC	℄ Rte 46 456+84.65	18.00' Lt
6	40.00'	53°09'01"	20.01'	37.11'	BC	℄ Rte 46 456+59.54	14.00' Rt
7	40.00'	53°30'02"	20.16'	37.35'	EC	℄ Rte 46 457+87.66	14.00' Lt
8	10.00'	118°48'15"	16.91'	20.74'	EC	℄ Rte 46 457+62.11	18.00' Rt

CONSTRUCTION DETAILS
(CHUMEIA Dwy & Prvt Dwy 4)

SCALE: 1" = 20'

C-4

STATE OF CALIFORNIA - DEPARTMENT OF TRANSPORTATION
Caltrans
06-DESIGN
FUNCTIONAL SUPERVISOR: JACK WALKER
CALCULATED-DESIGNED BY: JOSE ARGUELLO
CHECKED BY: JOSE BAUTISTA
REVISED BY / DATE REVISED

LAST REVISION: DATE PLOTTED => 08-DEC-2009 TIME PLOTTED => 09:56
08-19-09

Dist	COUNTY	ROUTE	POST MILES TOTAL PROJECT	SHEET No.	TOTAL SHEETS
05	SLO	46	36.6/41.2	95	595

REGISTERED CIVIL ENGINEER DATE 8-24-09

12-7-09
PLANS APPROVAL DATE

REGISTERED PROFESSIONAL ENGINEER JOSE M. ARGUELLO No. 51321 Exp 06-30-10 CIVIL STATE OF CALIFORNIA

THE STATE OF CALIFORNIA OR ITS OFFICERS OR AGENTS SHALL NOT BE RESPONSIBLE FOR THE ACCURACY OR COMPLETENESS OF ELECTRONIC COPIES OF THIS PLAN SHEET.

NOTE: FOR ACCURATE RIGHT OF WAY AND ACCESS DATA, CONTACT RIGHT OF WAY ENGINEERING AT THE DISTRICT OFFICE.

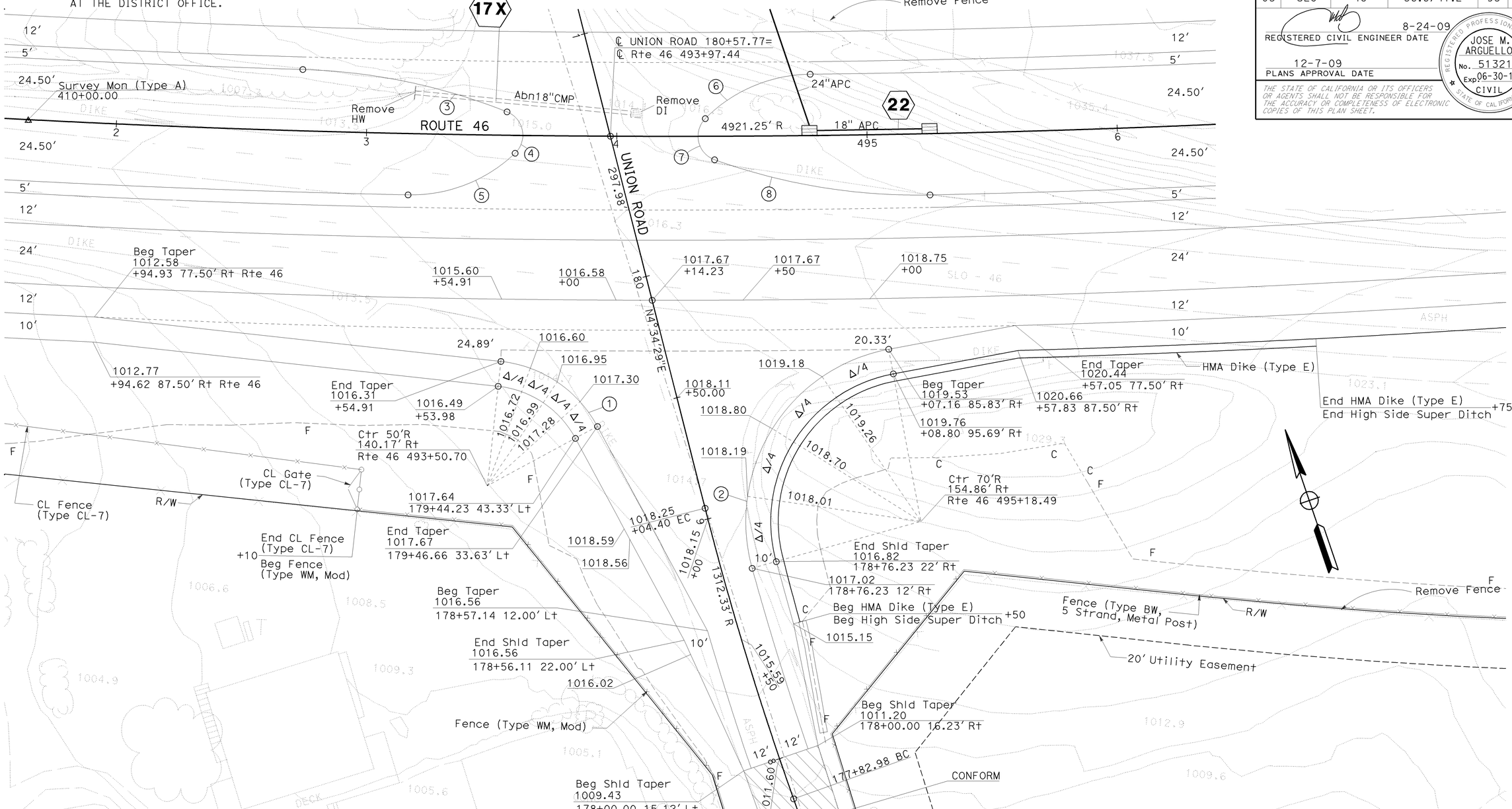

CURVE DATA

No.	R	Δ	T	L	RP	LOCATION
1	50.00'	55°26'37"	26.27'	48.38'	EC	℄ Rte 46 493+54.91 90.39' Rt
2	70.00'	94°54'11"	76.26'	115.95'	EC	℄ Rte 46 495+07.16 85.83' Rt
3	240.00'	19°59'58"	42.32'	83.77'	BC	℄ Rte 46 492+73.78 24.50' Lt
4	10.00'	114°31'37"	15.56'	19.99'	BC	℄ Rte 46 493+56.02 9.34' Lt
5	60.00'	44°58'09"	24.83'	47.09'	BC	℄ Rte 46 493+17.11 24.50' Rt
6	60.00'	44°33'33"	24.58'	46.67'	EC	℄ Rte 46 494+77.52 24.50' Lt
7	10.00'	115°3'11"	15.71'	20.08'	EC	℄ Rte 46 494+39.03 9.40' Rt
8	240.00'	20°56'11"	44.34'	87.70'	EC	℄ Rte 46 495+24.63 24.50' Rt

THIS PLAN ACCURATE FOR PAVEMENT INFORMATION ONLY.

SCALE: 1" = 20'

CONSTRUCTION DETAILS (UNION ROAD)

C-5

STATE OF CALIFORNIA - DEPARTMENT OF TRANSPORTATION
Caltrans 06-DESIGN

FUNCTIONAL SUPERVISOR: JACK WALKER
CALCULATED-DESIGNED BY: JOSE ARGUELLO
CHECKED BY: JOSE BAUTISTA
REVISED BY / DATE REVISED

LAST REVISION 08-19-09 | DATE PLOTTED => 08-DEC-2009 | TIME PLOTTED => 09:56

Dist	COUNTY	ROUTE	POST MILES TOTAL PROJECT	SHEET No.	TOTAL SHEETS
05	SLO	46	36.6/41.2	96	595

REGISTERED CIVIL ENGINEER DATE 8-24-09

PLANS APPROVAL DATE 12-7-09

REGISTERED PROFESSIONAL ENGINEER JOSE M. ARGUELLO No. 51321 Exp 06-30-10 CIVIL STATE OF CALIFORNIA

THE STATE OF CALIFORNIA OR ITS OFFICERS OR AGENTS SHALL NOT BE RESPONSIBLE FOR THE ACCURACY OR COMPLETENESS OF ELECTRONIC COPIES OF THIS PLAN SHEET.

NOTE: FOR ACCURATE RIGHT OF WAY AND ACCESS DATA, CONTACT RIGHT OF WAY ENGINEERING AT THE DISTRICT OFFICE.

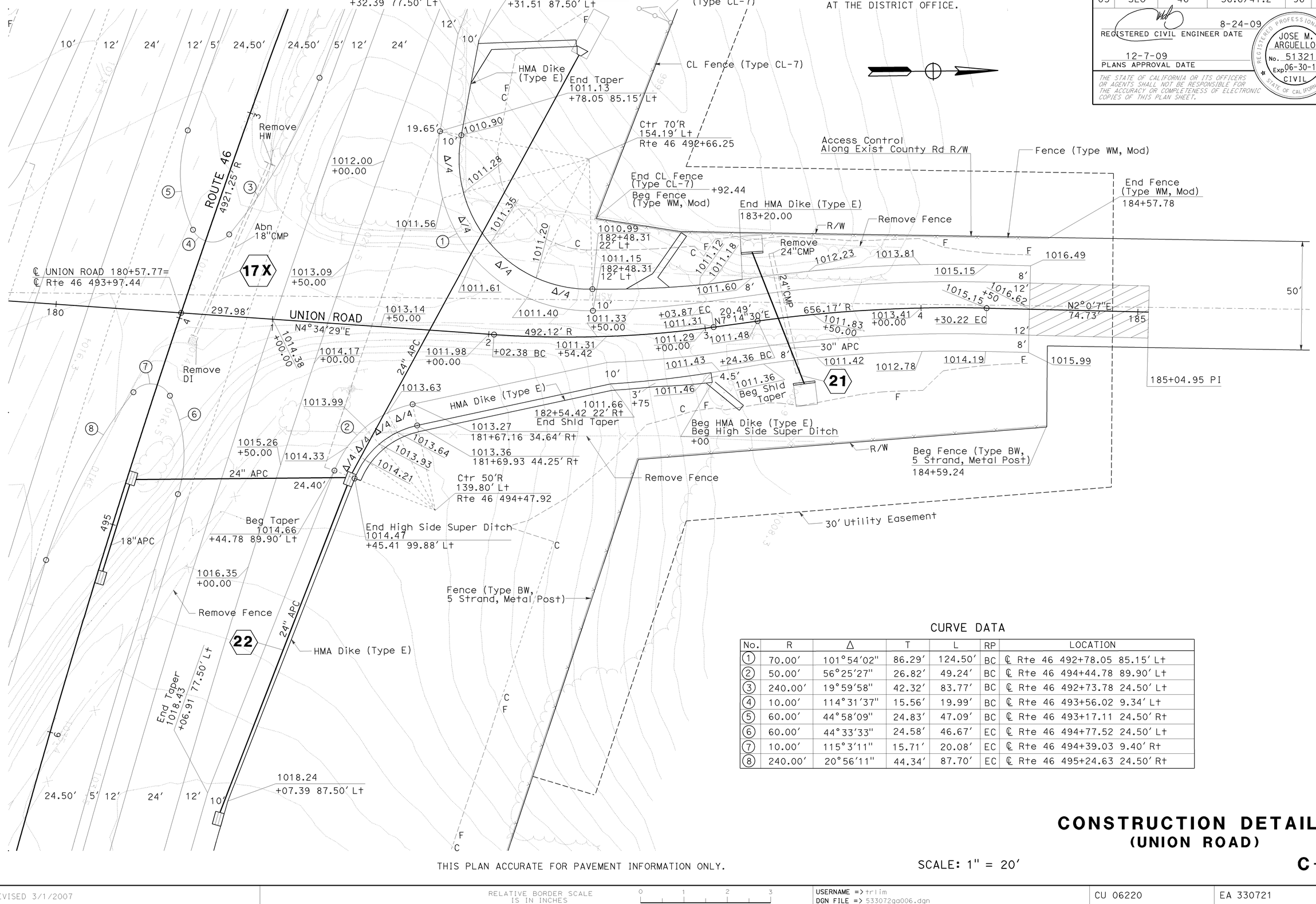

CURVE DATA

No.	R	Δ	T	L	RP	LOCATION
1	70.00'	101°54'02"	86.29'	124.50'	BC	℄ Rte 46 492+78.05 85.15' Lt
2	50.00'	56°25'27"	26.82'	49.24'	BC	℄ Rte 46 494+44.78 89.90' Lt
3	240.00'	19°59'58"	42.32'	83.77'	BC	℄ Rte 46 492+73.78 24.50' Lt
4	10.00'	114°31'37"	15.56'	19.99'	BC	℄ Rte 46 493+56.02 9.34' Lt
5	60.00'	44°58'09"	24.83'	47.09'	BC	℄ Rte 46 493+17.11 24.50' Rt
6	60.00'	44°33'33"	24.58'	46.67'	EC	℄ Rte 46 494+77.52 24.50' Lt
7	10.00'	115°3'11"	15.71'	20.08'	EC	℄ Rte 46 494+39.03 9.40' Rt
8	240.00'	20°56'11"	44.34'	87.70'	EC	℄ Rte 46 495+24.63 24.50' Rt

THIS PLAN ACCURATE FOR PAVEMENT INFORMATION ONLY.

SCALE: 1" = 20'

CONSTRUCTION DETAILS
(UNION ROAD)

C-6

STATE OF CALIFORNIA - DEPARTMENT OF TRANSPORTATION
Caltrans 06-DESIGN
FUNCTIONAL SUPERVISOR JACK WALKER
CALCULATED-DESIGNED BY JOSE ARGUELLO
CHECKED BY JOSE BAUTISTA
REVISED BY
DATE REVISED

LAST REVISION 08-19-09 DATE PLOTTED => 08-DEC-2009 TIME PLOTTED => 09:56

NOTE: FOR COMPLETE RIGHT OF WAY AND ACCURATE ACCESS DATA, SEE RIGHT OF WAY ENGINEERING AT DISTRICT OFFICE.

Dist	COUNTY	ROUTE	POST MILES TOTAL PROJECT	SHEET No.	TOTAL SHEETS
05	SLO	46	36.6/41.2	97	595

REGISTERED CIVIL ENGINEER 8-24-09 DATE

12-7-09
PLANS APPROVAL DATE

REGISTERED PROFESSIONAL ENGINEER JOSE M. ARGUELLO No. 51321 Exp 06-30-10 CIVIL STATE OF CALIFORNIA

THE STATE OF CALIFORNIA OR ITS OFFICERS OR AGENTS SHALL NOT BE RESPONSIBLE FOR THE ACCURACY OR COMPLETENESS OF ELECTRONIC COPIES OF THIS PLAN SHEET.

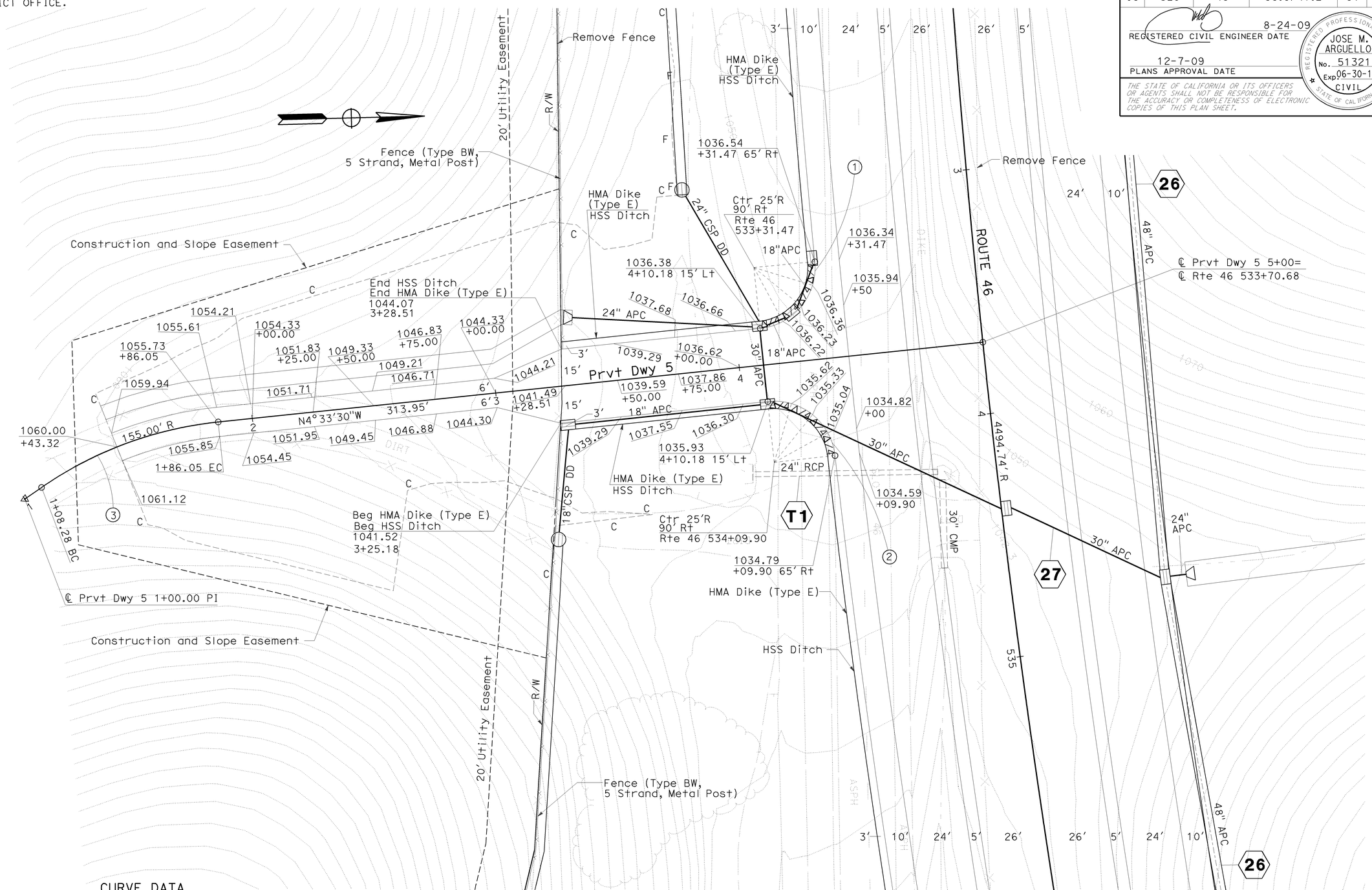

CURVE DATA

No.	R	Δ	T	L	RP	LOCATION
1	25.00'	89°30'0.40"	24.78'	39.05'	BC	℄ Rte 46 533+31.47 65.00' Rt
2	25.00'	89°30'0.40"	24.78'	39.05'	EC	℄ Rte 46 534+09.90 65.00' Rt
3	155.00'	28°44'44"	39.72'	77.77'	BC	℄ Prvt Dwy 5 1+08.28

THIS PLAN ACCURATE FOR PAVEMENT INFORMATION ONLY.

SCALE: 1" = 20'

CONSTRUCTION DETAILS (Prvt Dwy 5)

C-7

STATE OF CALIFORNIA - DEPARTMENT OF TRANSPORTATION
Caltrans 06-DESIGN

FUNCTIONAL SUPERVISOR: JACK WALKER
CALCULATED-DESIGNED BY: JOSE ARGUELLO
CHECKED BY: JOSE BAUTISTA
REVISED BY / DATE REVISED

LAST REVISION 08-19-09 DATE PLOTTED => 08-DEC-2009 TIME PLOTTED => 09:57

Dist	COUNTY	ROUTE	POST MILES TOTAL PROJECT	SHEET No.	TOTAL SHEETS
05	SLO	46	36.6/41.2	98	595

REGISTERED CIVIL ENGINEER DATE 8-24-09

12-7-09
PLANS APPROVAL DATE

REGISTERED PROFESSIONAL ENGINEER JOSE M. ARGUELLO No. 51321 Exp 06-30-10 CIVIL STATE OF CALIFORNIA

THE STATE OF CALIFORNIA OR ITS OFFICERS OR AGENTS SHALL NOT BE RESPONSIBLE FOR THE ACCURACY OR COMPLETENESS OF ELECTRONIC COPIES OF THIS PLAN SHEET.

NOTE: FOR ACCURATE RIGHT OF WAY AND ACCESS DATA, CONTACT RIGHT OF WAY ENGINEERING AT THE DISTRICT OFFICE.

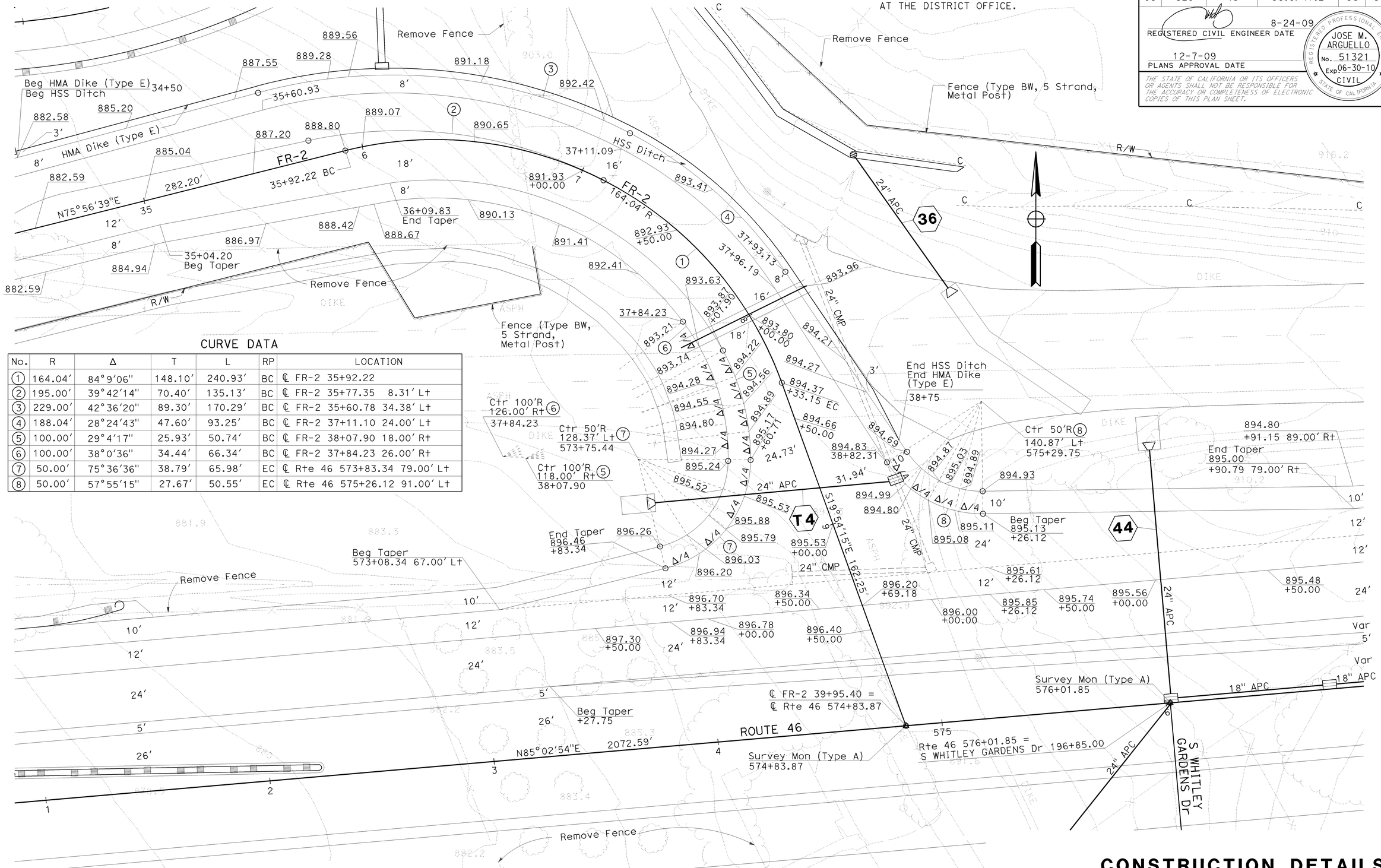

CURVE DATA

No.	R	Δ	T	L	RP	LOCATION
1	164.04′	84°9′06″	148.10′	240.93′	BC	℄ FR-2 35+92.22
2	195.00′	39°42′14″	70.40′	135.13′	BC	℄ FR-2 35+77.35 8.31′ Lt
3	229.00′	42°36′20″	89.30′	170.29′	BC	℄ FR-2 35+60.78 34.38′ Lt
4	188.04′	28°24′43″	47.60′	93.25′	BC	℄ FR-2 37+11.10 24.00′ Lt
5	100.00′	29°4′17″	25.93′	50.74′	BC	℄ FR-2 38+07.90 18.00′ Rt
6	100.00′	38°0′36″	34.44′	66.34′	BC	℄ FR-2 37+84.23 26.00′ Rt
7	50.00′	75°36′36″	38.79′	65.98′	EC	℄ Rte 46 573+83.34 79.00′ Lt
8	50.00′	57°55′15″	27.67′	50.55′	EC	℄ Rte 46 575+26.12 91.00′ Lt

THIS PLAN ACCURATE FOR PAVEMENT INFORMATION ONLY.

SCALE: 1" = 20′

CONSTRUCTION DETAILS
(FR-2)

C-8

STATE OF CALIFORNIA - DEPARTMENT OF TRANSPORTATION
Caltrans
06-DESIGN
FUNCTIONAL SUPERVISOR: JACK WALKER
CALCULATED-DESIGNED BY: JOSE ARGUELLO
CHECKED BY: JOSE BAUTISTA
REVISED BY
DATE REVISED

LAST REVISION 08-19-09
DATE PLOTTED => 08-DEC-2009
TIME PLOTTED => 09:57

NOTE: FOR ACCURATE RIGHT OF WAY AND ACCESS DATA, CONTACT RIGHT OF WAY ENGINEERING AT THE DISTRICT OFFICE.

Dist	COUNTY	ROUTE	POST MILES TOTAL PROJECT	SHEET No.	TOTAL SHEETS
05	SLO	46	36.6/41.2	99	595

REGISTERED CIVIL ENGINEER DATE 8-24-09

12-7-09
PLANS APPROVAL DATE

REGISTERED PROFESSIONAL ENGINEER JOSE M. ARGUELLO No. 51321 Exp 06-30-10 CIVIL STATE OF CALIFORNIA

THE STATE OF CALIFORNIA OR ITS OFFICERS OR AGENTS SHALL NOT BE RESPONSIBLE FOR THE ACCURACY OR COMPLETENESS OF ELECTRONIC COPIES OF THIS PLAN SHEET.

CURVE DATA

No.	R	Δ	T	L	RP	LOCATION
2	50.00'	54°27'45"	25.73'	47.53'	EC	℄ Rte 46 575+25.75 79.00' Rt
3	50.00'	54°27'45"	25.73'	47.53'	EC	℄ Rte 46 576+68.98 79.00' Rt

THIS PLAN ACCURATE FOR PAVEMENT INFORMATION ONLY.

SCALE: 1" = 20'

CONSTRUCTION DETAILS
(S WHITLEY GARDEN Dr)

C-9

STATE OF CALIFORNIA - DEPARTMENT OF TRANSPORTATION
Caltrans 06-DESIGN

FUNCTIONAL SUPERVISOR JACK WALKER
CALCULATED-DESIGNED BY JOSE ARGUELLO
CHECKED BY JOSE BAUTISTA
REVISED BY
DATE REVISED

LAST REVISION 08-19-09
DATE PLOTTED => 08-DEC-2009
TIME PLOTTED => 09:57

Dist	COUNTY	ROUTE	POST MILES TOTAL PROJECT	SHEET No.	TOTAL SHEETS
05	SLO	46	36.6/41.2	100	595

REGISTERED CIVIL ENGINEER DATE 8-24-09

12-7-09
PLANS APPROVAL DATE

REGISTERED PROFESSIONAL ENGINEER JOSE M. ARGUELLO No. 51321 Exp 06-30-10 CIVIL STATE OF CALIFORNIA

THE STATE OF CALIFORNIA OR ITS OFFICERS OR AGENTS SHALL NOT BE RESPONSIBLE FOR THE ACCURACY OR COMPLETENESS OF ELECTRONIC COPIES OF THIS PLAN SHEET.

NOTE: FOR ACCURATE RIGHT OF WAY AND ACCESS DATA, CONTACT RIGHT OF WAY ENGINEERING AT THE DISTRICT OFFICE.

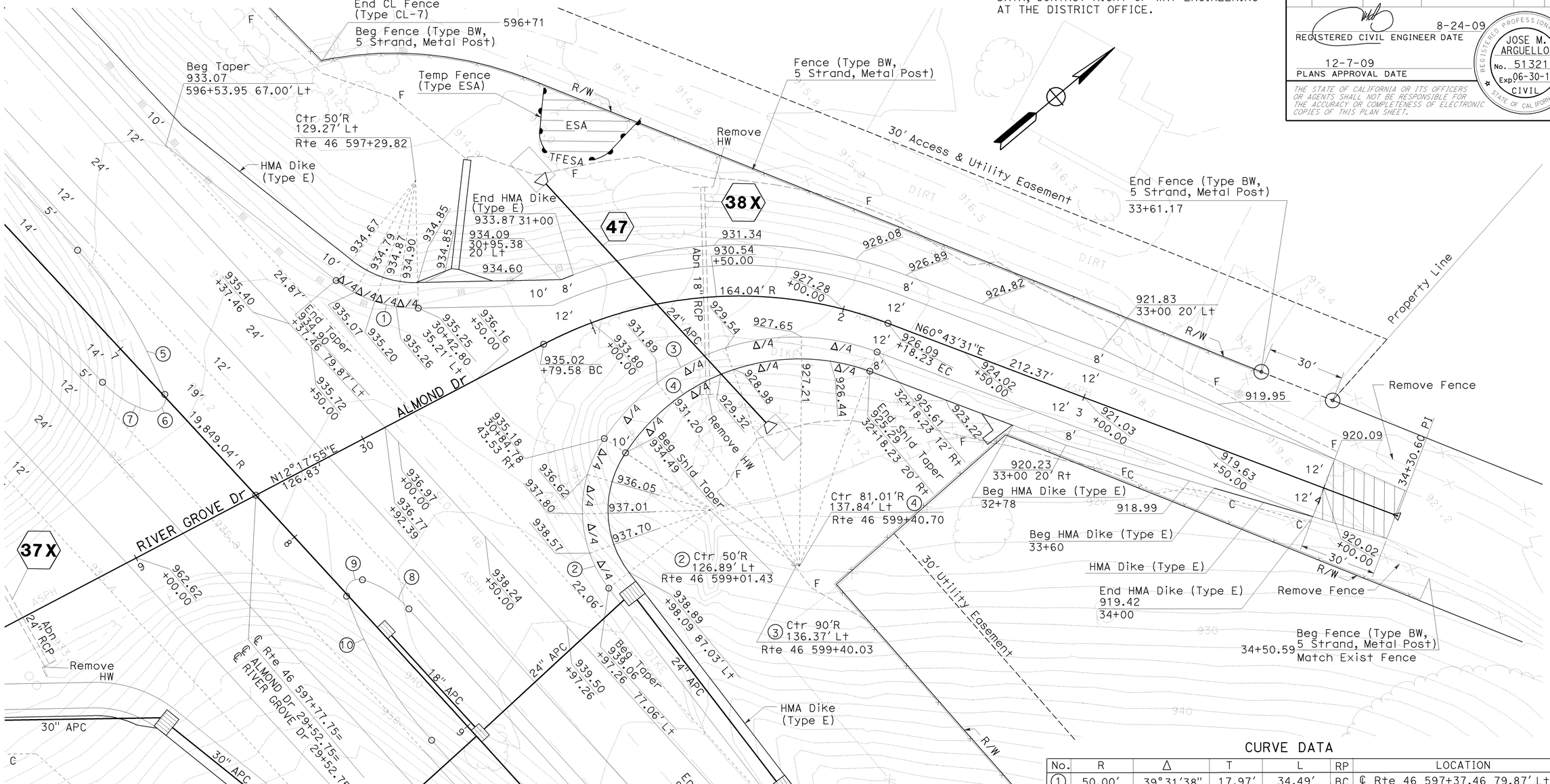

CURVE DATA

No.	R	Δ	T	L	RP	LOCATION
1	50.00'	39°31'38"	17.97'	34.49'	BC	℄ Rte 46 597+37.46 79.87' Lt
2	50.00'	71°32'06"	36.02'	62.43'	BC	℄ Rte 46 598+97.26 77.06' Lt
3	90.00'	76°40'24"	71.17'	120.44'	BC	℄ Rte 46 598+53.12 115.14' Lt
4	90.00'	76°40'24"	71.17'	120.44'	BC	℄ Rte 46 598+62.79 117.48' Lt
5	160.00'	23°43'25"	33.61'	66.25'	BC	℄ Rte 46 596+60.38 14.00' Lt
6	5.00'	125°25'40"	9.70'	10.95'	BC	℄ Rte 46 597+24.75 0.58' Lt
7	40.00'	30°58'36"	11.08'	21.63'	BC	℄ Rte 46 597+4.74 14.00' Rt
8	40.00'	31°01'43"	11.10'	21.67'	EC	℄ Rte 46 598+50.79 14.00' Lt
9	5.00'	125°18'01"	9.67'	10.94'	EC	℄ Rte 46 598+30.74 0.58' Rt
10	160.00'	23°32'39"	33.35'	65.75'	EC	℄ Rte 46 598+94.66 14.00' Rt

CONSTRUCTION DETAILS
(ALMOND Dr)

THIS PLAN ACCURATE FOR PAVEMENT INFORMATION ONLY.

SCALE: 1" = 20'

C-10

STATE OF CALIFORNIA - DEPARTMENT OF TRANSPORTATION
Caltrans
06-DESIGN
FUNCTIONAL SUPERVISOR: JACK WALKER
CALCULATED-DESIGNED BY: JOSE ARGUELLO
CHECKED BY: JOSE BAUTISTA
REVISED BY
DATE REVISED

LAST REVISION 05-26-09
DATE PLOTTED => 08-DEC-2009
TIME PLOTTED => 09:57