INFORMATION HANDOUT

For Contract No. 05-1F9404 At
SLO-227-7.1/R10.3

Identified by
Project ID 0514000078

MATERIALS INFORMATION

Water Source Information

Manufacturer Drawings for Alternative In-Line Terminal Systems

Manufacturer Drawings for Alternative Flared Terminal Systems

City of San Luis Obispo
879 Morro Street • San Luis Obispo, CA 93401

December 4, 2014

Lien Gubbins, Project Engineer
CalTrans D5 Maintenance Design
50 Higuera
San Luis Obispo, CA 93401

Re: City of San Luis Obispo
Construction Water Permit for Use of Recycled Water

Dear Ms. Gubbins:

The City of San Luis Obispo agrees to make non-potable water available to your prospective *San Luis Obispo, Route 227, RHMA Overlay* project Contractor, dependent upon the Contractor obtaining and maintaining a permit through the City's Construction Water Permit program. At this time the permit fee is $1,260 annually (July 1 through June 30). The permit application and associated requirements can be found at the following internet site:

http://www.slocity.org/utilities/reusehome.asp

If you have any questions please contact me via email at jmetz@slocity.org or by phone at 805-781-7239. Thank you.

Sincerely,

Jennifer Metz, Utilities Project Manager
City of San Luis Obispo

The City of San Luis Obispo is committed to include the disabled in all of its services, programs and activities.
Telecommunications Device for the Deaf (805) 781-7410

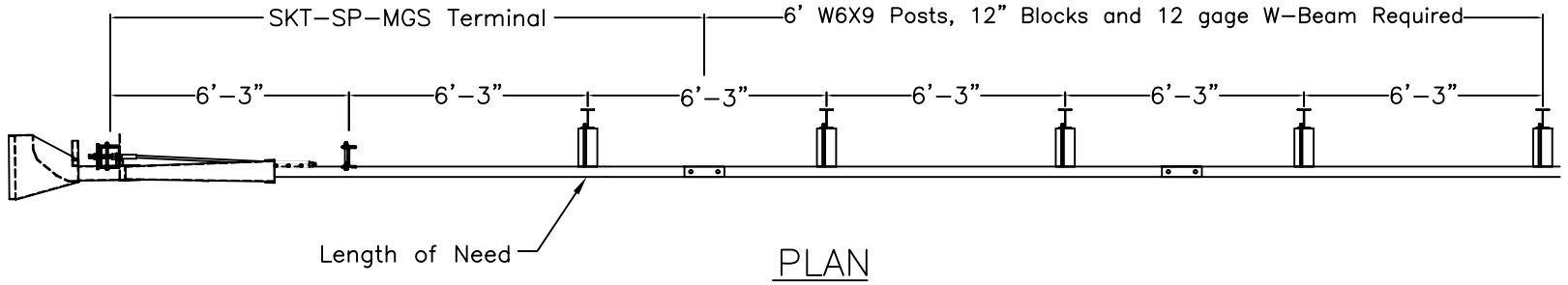

PLAN

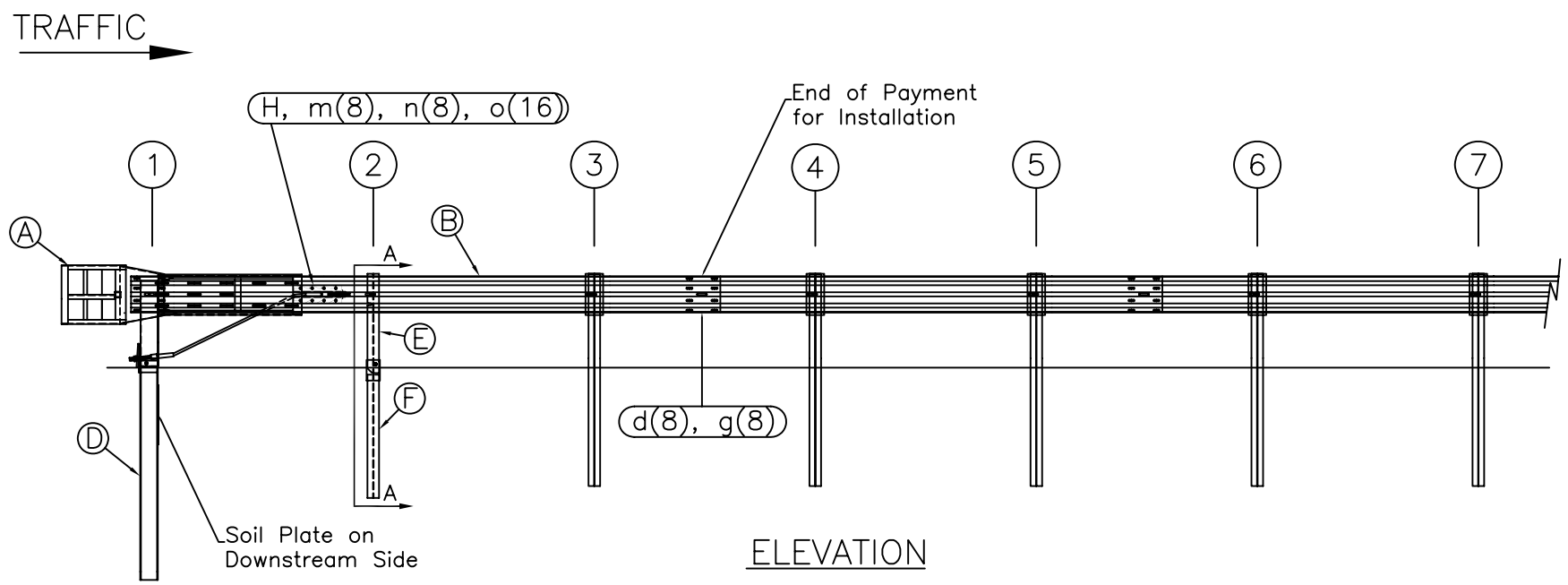

ELEVATION

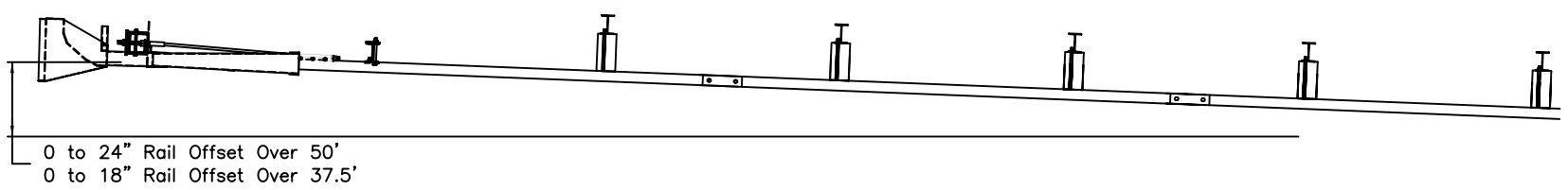

OPTIONAL FLARED INSTALLATION

25:1 maximum flare rate

ITEM	QTY	BILL OF MATERIALS	ITEM NO.
A	1	IMPACT HEAD	S3000
B	1	W-BEAM GUARDRAIL END SECTION, 12 Ga.	MGS-SF1303
C	1	FIRST POST TOP (6X6X$\frac{1}{8}$" Tube)	TPHP1A
D	1	FIRST POST BOTTOM (6' W6X15)	TPHP1B
E	1	SECOND POST ASSEMBLY TOP	UHP2A
F	1	SECOND POST ASSEMBLY BOTTOM	HP3B
G	1	BEARING PLATE	E750
H	1	CABLE ANCHOR BOX	S760
J	1	BCT CABLE ANCHOR ASSEMBLY	E770
HARDWARE (ALL DIMENSIONS IN INCHES)			
a	2	5/16 x 1 HEX BOLT GRD 5	B5160104A
b	4	5/16 WASHER	W0516
c	2	5/16 HEX NUT	N0516
d	9	5/8 Dia. x 1 1/4 SPLICE BOLT (POST #2)	B580122
e	1	5/8 Dia. x 9 HEX BOLT GRD 5	B580904A
f	3	5/8 WASHER	W050
g	10	5/8 Dia. H.G.R NUT	N050
h	1	3/4 Dia. x 8 1/2 HEX BOLT GRD A449	B340854A
j	1	3/4 Dia. HEX NUT	N030
k	2	1 ANCHOR CABLE HEX NUT	N100
l	2	1 ANCHOR CABLE WASHER	W100
m	8	CABLE ANCHOR BOX SHOULDER BOLT	SB58A
n	8	1/2 A325 STRUCTURAL NUT	N055A
o	16	1 1/16 OD x 9/16 ID A325 STR. WASHER	W050A

GENERAL NOTES:

1. All bolts, nuts, cable assemblies, cable anchors and bearing plates shall be galvanized.
2. The lower sections of the Posts 1&2 shall not protrude more than 4 in above the ground (measured along a 5' cord). Site grading may be necessary to meet this requirement.
3. The lower sections of the hinged posts should not be driven with the upper post attached. If the post is placed in a drilled hole, the backfill material must be satisfactorily compacted to prevent settlement.
4. When competent rock is encountered, a 12" Ø post hole, 20 in. deep cored into the rock surface may be used if approved by the engineer for post 1. Granular material will be placed in the bottom of the hole, approximately 2.5" deep to provide drainage. The first post can be field cut to length, placed in the hole and backfilled with suitable backfill. The soil plate may be trimmed if required.
5. A site evaluation should be considered if there is less than 25' between the outlet side of the terminal and any adjacent driving lane.
6. The breakaway cable assembly must be taut. A locking device (vice grips or channel lock pliers) should be used to prevent the cable from twisting when tightening nuts.

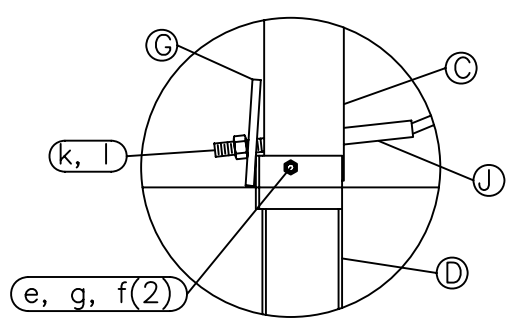

Post #1 Connection Detail

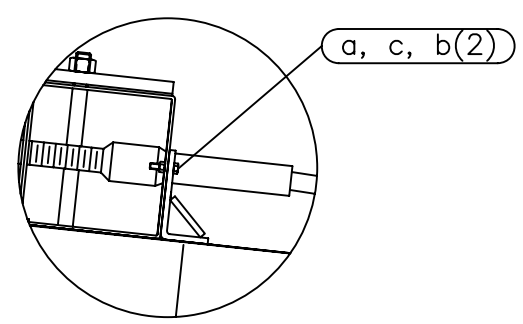

Impact Head Connection Detail

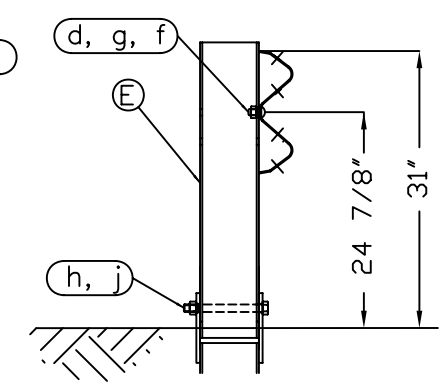

SECTION A-A

Post #2

RSI
Road Systems, Inc.
Big Spring, TX
Phone: 432-263-2435
or Phone: 330-346-0721

SKT-SP-MGS Terminal
Midwest Guardrail System
31" Top of Rail

Sheet: 1
Date: 02/24/10
By: JRR
Drawing Name: SKT-SP-S-MGS
Scale: None
Rev: 0

Appendix A - System Configuration, 37’ 6” MGS

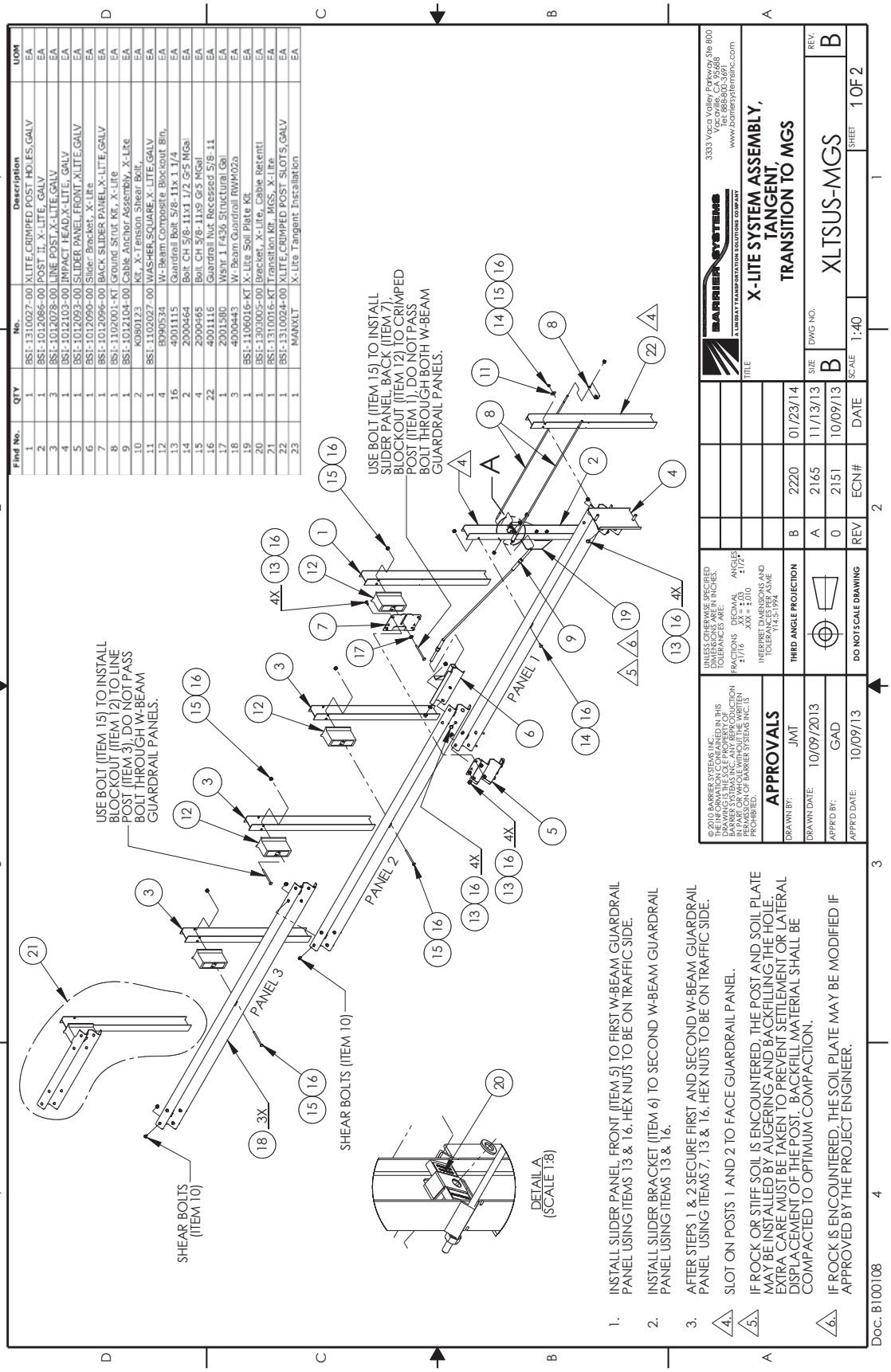

Find No.	QTY	No.	Description	UOM
1	1	BSI-1310027-00	XLITE,CRIMPED POST HOLES,GALV	EA
2	1	BSI-1012086-00	POST II, X-LITE, GALV	EA
3	3	BSI-1012078-00	LINE POST,X-LITE,GALV	EA
4	1	BSI-1012103-00	IMPACT HEAD,X-LITE, GALV	EA
5	1	BSI-1012093-00	SLIDER PANEL FRONT XLITE,GALV	EA
6	1	BSI-1012090-00	Slider Bracket, X-Lite	EA
7	1	BSI-1012096-00	BACK SLIDER PANEL X-LITE,GALV	EA
8	1	BSI-1102001-KT	Ground Strut Kit, X-Lite	EA
9	1	BSI-1012104-00	Cable Anchor Assembly, X-Lite	EA
10	2	K080123	Kit, X-Tension Shear Bolt.	EA
11	1	BSI-1102027-00	WASHER,SQUARE,X-LITE,GALV	EA
12	4	B090534	W-Beam Composite Blockout 8in,	EA
13	16	4001115	Guardrail Bolt 5/8-11x 1 1/4	EA
14	2	2000464	Bolt CH 5/8-11x1 1/2 G-5 MGal	EA
15	4	2000465	Bolt CH 5/8-11x9 G-5 MGal	EA
16	22	4001116	Guardrail Nut Recessed 5/8-11	EA
17	1	2001580	Washr 1 F436 Structural Gal	EA
18	3	4000443	W- Beam Guardrail RWM02a	EA
19	1	BSI-1106016-KT	X-Lite Soil Plate Kit.	EA
20	1	BSI-1303005-00	Bracket, X-Lite, Cable Retenti	EA
21	1	BSI-1310016-KT	Transition Kit, MGS, X-Lite	EA
22	1	BSI-1310024-00	XLITE,CRIMPED POST SLOTS,GALV	EA
23	1	MANXLT	X-Lite Tangent Installation	EA

Appendix A - System Configuration, 37’ 6” MGS

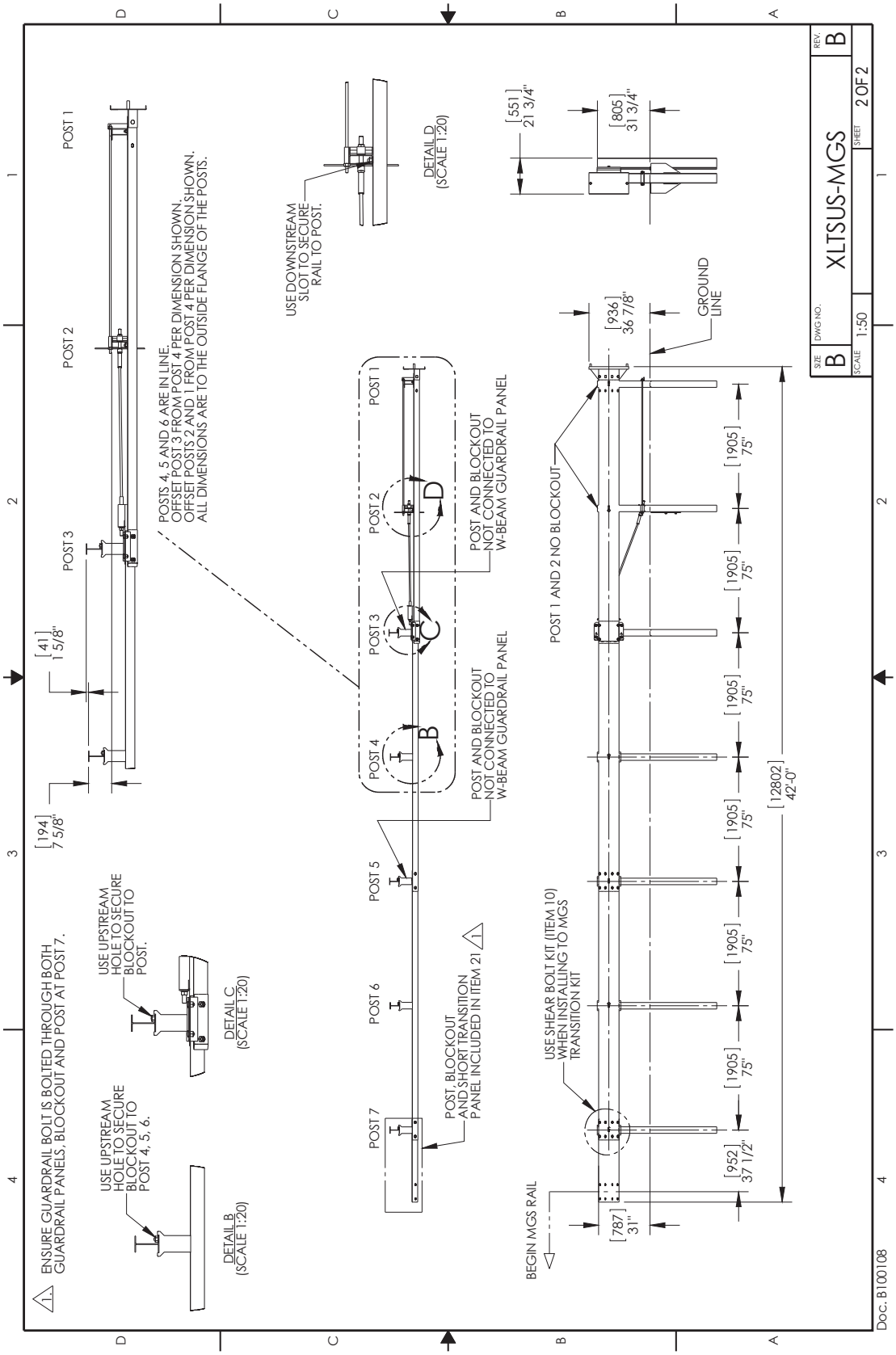

Appendix A -Bill of Materials - X-Lite Tangent, MGS 37’ 6”

Item	Description	Full System	Kit Only
BSI-1310024-00	XLITE,CRIMPED POST SLOTS,GALV	1.00	1.00
BSI-1310027-00	XLITE,CRIMPED POST HOLES,GALV	1.00	1.00
BSI-1012086-00	POST II, X-LITE, GALV	1.00	1.00
BSI-1012078-00	LINE POST,X-LITE,GALV	3.00	-
BSI-1012103-00	IMPACT HEAD,X-LITE, GALV	1.00	1.00
BSI-1012093-00	SLIDER PANEL,FRONT,XLITE,GALV	1.00	1.00
BSI-1012090-00	Slider Bracket, X-Lite	1.00	1.00
BSI-1012096-00	BACK SLIDER PANEL,X-LITE,GALV	1.00	1.00
BSI-1012097-00	Ground Strut, X-Lite	2.00	2.00
BSI-1012098-00	Ground Strut Angle	1.00	1.00
BSI-1012104-00	Cable Anchor Assembly, X-Lite	1.00	1.00
K080123	Kit, X-Tension Shear Bolt,	2.00	2.00
BSI-1102027-00	WASHER,SQUARE,X-LITE,GALV	1.00	1.00
B090534	W-Beam Composite Blockout 8in,	4.00	-
4001115	Guardrail Bolt 5/8-11x 1 1/4	16.00	-
2000464	Bolt CH 5/8-11x1 1/2 Gr5 MGal	2.00	-
2000465	Bolt CH 5/8-11x9 Gr5 MGal	4.00	-
4001116	Guardrail Nut Recessed 5/8-11	26.00	-
2001580	Wshr 1" F436 Structural	1.00	-
4000443	W-Beam Guardrail RWM02a	3.00	-
BSI-1312100-00	Soil Plate	1.00	1.00
2000220	C-Scr HH 5/8-11x3 1/2 Gr5 MGal	2.00	2.00
2001636	Wshr 5/8 F436 Struct MGal	4.00	4.00
2000312	Nut HX 5/8-11 Gr5 Mgal	2.00	1.00
BSI-1303005-00	Bracket, X-Lite, Cable Retenti	1.00	1.00
BSI-1310016-KT	Transition Kit, MGS, X-Lite	1.00	1.00

ITEM NO.	PART NUMBER	DESCRIPTION	QTY	UOM
1	BSI-1301252-KT	X-Tension Terminal Comp, 31 in	1	EACH
2	K070202	X-Tension Hardware Kit, GT,	1	EACH
3	K070206	X-Tension System Hardware Kit,	1	EACH
4	K070210	X-Tension GT Guardrail	1	EACH
5	B061100	BSI, I-Beam Post, Middle, X350	1	EACH
6	MANXT1	X-TENSION Installation Manual	1	EACH

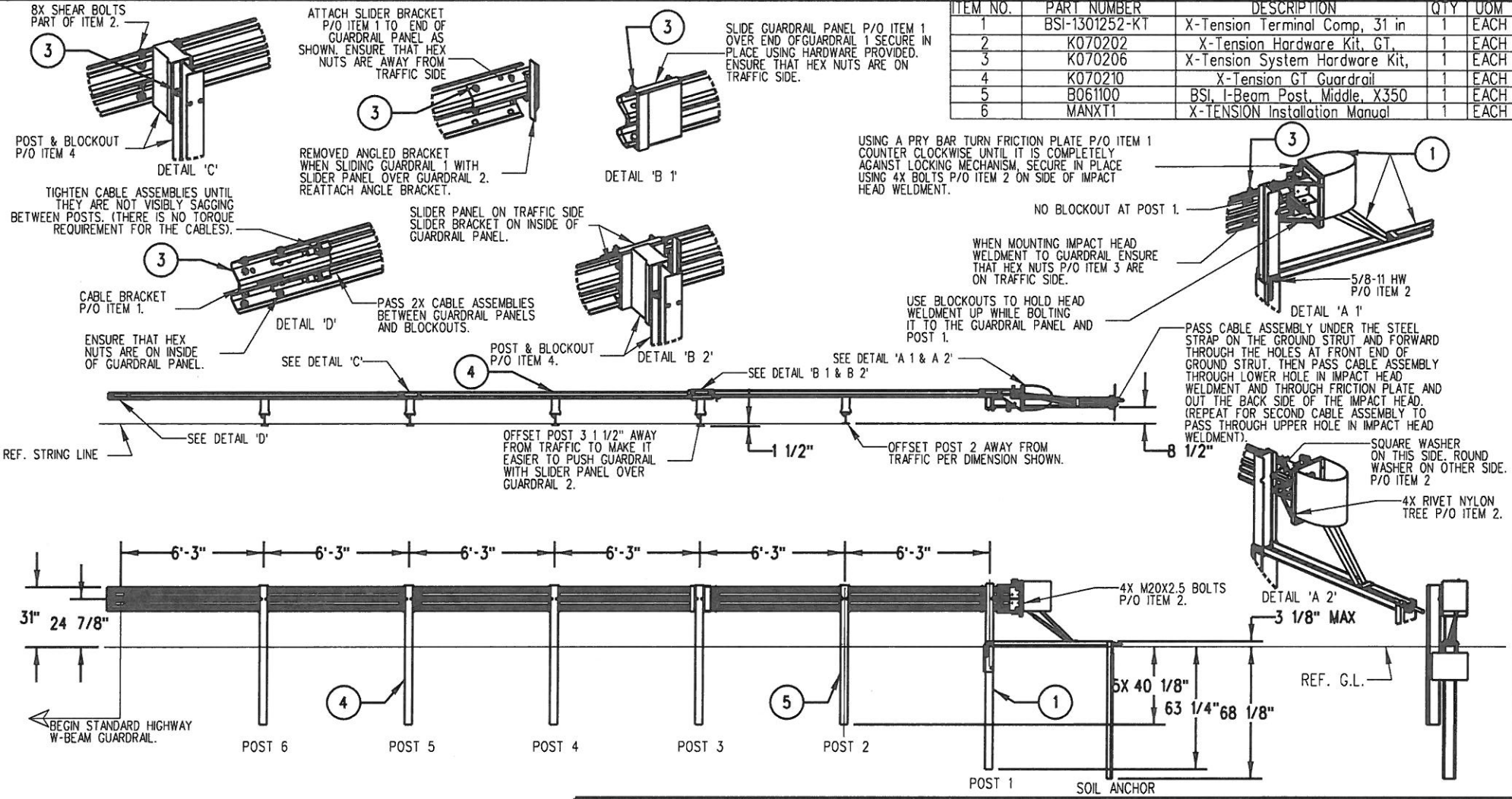

NOTES: UNLESS OTHERWISE SPECIFIED.

1. SYSTEM TO BE INSTALLED PER MANUFACTURER SPECIFICATIONS.
2. ONLY TIGHTEN THE CABLE ASSEMBLIES USING THE NUTS AT THE CABLE BRACKET (SEE DETAIL 'D'). DO NOT TIGHTEN THE CABLES AT THE FRONT OF THE GROUND ANCHOR.
3. WHEN DRIVING STEEL POST, ENSURE THAT A DRIVING CAP WITH TIMBER OR PLASTIC INSERT IS USED TO PREVENT DAMAGE TO THE GALVANIZING TO THE TOP OF THE POST.

© 2012 BARRIER SYSTEMS INC. THE INFORMATION CONTAINED IN THIS DRAWING IS THE SOLE PROPERTY OF BARRIER SYSTEMS INC. ANY REPRODUCTION IN PART OR WHOLE WITHOUT THE WRITTEN PERMISSION OF BARRIER SYSTEMS INC. IS PROHIBITED.

APPROVALS

DRAWN BY:	NMV
DRAWN DATE:	2/08/13
APPR'D BY:	JMT
APPR'D DATE:	2/08/13

UNLESS OTHERWISE SPECIFIED DIMENSIONS ARE IN INCHES. TOLERANCES ARE:
FRACTIONS ±1/16 DECIMAL .XX - ±.03 .XXX - ±.010 ANGLES ±1/2°
INTERPRET DIMENSIONS AND TOLERANCES PER ASME Y14.5-1994
THIRD ANGLE PROJECTION
DO NOT SCALE DRAWING

REV	ECN#	DATE
B	2067	03/02/15
A	2022	2/08/13

LINDSAY TRANSPORTATION SOLUTIONS™

BARRIER SYSTEMS INC.
3333 Vaca Valley Parkway Ste 800
Vacaville, CA 95688
Tel: 888-800-3691
www.barriersystemsinc.com

TITLE
X-TENSION GUARDRAIL TERMINAL SYSTEM STEEL POST WITH COMPOSITE BLOCKOUT 31" RAIL HEIGHT

SIZE	DWG NO.	REV.
B	XTGTSS5	B

SCALE 1:50 SHEET 1 OF 1

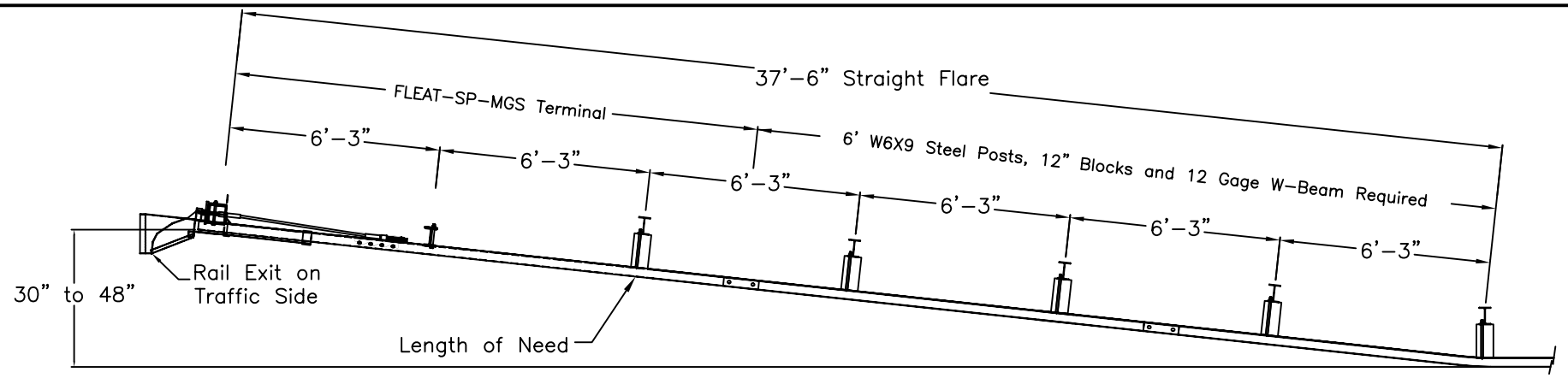

PLAN

TRAFFIC

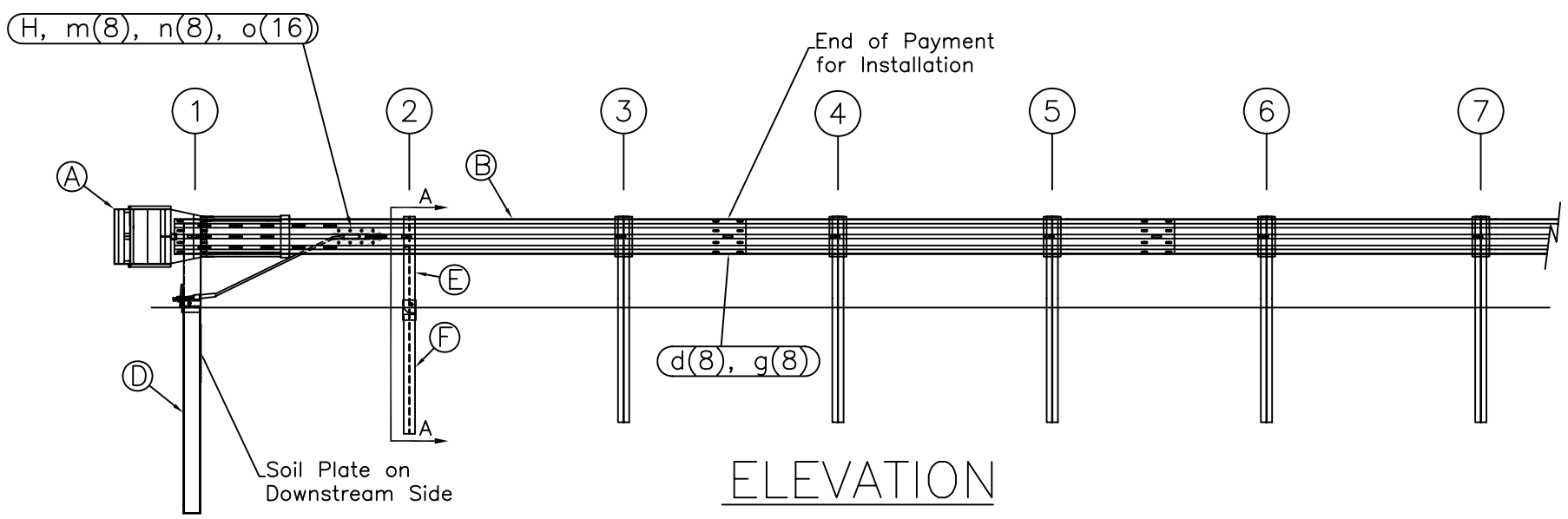

ELEVATION

ITEM	QTY	BILL OF MATERIALS	ITEM NO.
A	1	IMPACT HEAD	F3000
B	1	W-BEAM GUARDRAIL END SECTION, 12 Ga.	MGS-SF1303
C	1	FIRST POST TOP (6X6X$\frac{1}{8}$" Tube)	TPHP1A
D	1	FIRST POST BOTTOM (6' W6X15)	TPHP1B
E	1	SECOND POST ASSEMBLY TOP	UHP2A
F	1	SECOND POST ASSEMBLY BOTTOM	HP3B
G	1	BEARING PLATE	E750
H	1	CABLE ANCHOR BOX	S760
J	1	BCT CABLE ANCHOR ASSEMBLY	E770
		HARDWARE (ALL DIMENSIONS IN INCHES)	
a	2	5/16 x 1 HEX BOLT GRD 5	B5160104A
b	4	5/16 WASHER	W0516
c	2	5/16 HEX NUT	N0516
d	9	5/8 Dia. x 1 1/4 SPLICE BOLT (POST #2)	B580122
e	1	5/8 Dia. x 9 HEX BOLT GRD 5	B580904A
f	3	5/8 WASHER	W050
g	10	5/8 Dia. H.G.R NUT	N050
h	1	3/4 Dia. x 8 1/2 HEX BOLT GRD A449	B340854A
j	1	3/4 Dia. HEX NUT	N030
k	2	1 ANCHOR CABLE HEX NUT	N100
l	2	1 ANCHOR CABLE WASHER	W100
m	8	CABLE ANCHOR BOX SHOULDER BOLT	SB58A
n	8	1/2 A325 STRUCTURAL NUT	N055A
o	16	1 1/16 OD x 9/16 ID A325 STR. WASHER	W050A

GENERAL NOTES:
1. All bolts, nuts, cable assemblies, cable anchors and bearing plates shall be galvanized.
2. The lower sections of the Posts 1&2 shall not protrude more than 4 in above the ground (measured along a 5' cord). Site grading may be necessary to meet this requirement.
3. The lower sections of the hinged posts should not be driven with the upper post attached. If the post is placed in a drilled hole, the backfill material must be satisfactorily compacted to prevent settlement.
4. When competent rock is encountered, a 12" Ø post hole, 20 in. deep cored into the rock surface may be used if approved by the engineer for post 1. Granular material will be placed in the bottom of the hole, approximately 2.5" deep to provide drainage. The first post can be field cut to length, placed in the hole and backfilled with suitable backfill. The soil plate may be trimmed if required.
5. The breakaway cable assembly must be taut. A locking device (vice grips or channel lock pliers) should be used to prevent the cable from twisting when tightening nuts.

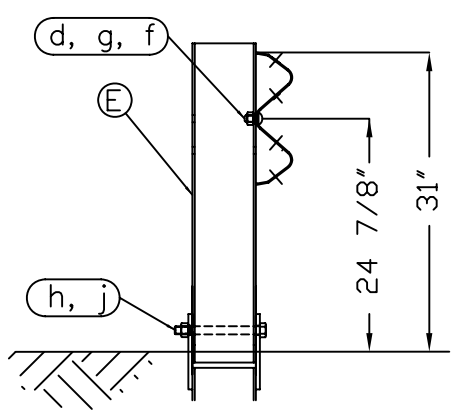

SECTION A-A
Post #2

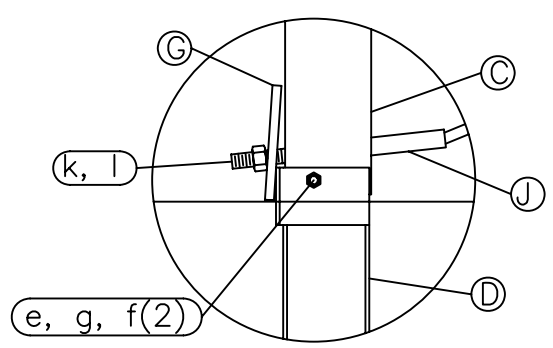

Post #1 Connection Detail

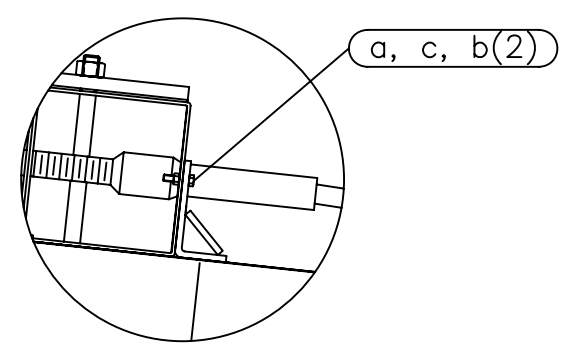

Impact Head Connection Detail

Road Systems, Inc.
Big Spring, TX
Phone: 432-263-2435
or Phone: 330-346-0721

FLEAT-SP-MGS Terminal
Midwest Guardrail System
31" Top of Rail

Sheet: 1
Date: 02/24/10
By: JRR
Drawing Name: FLT-SP-S-MGS
Scale: None
Rev: 0

SRT™-31 SYSTEM
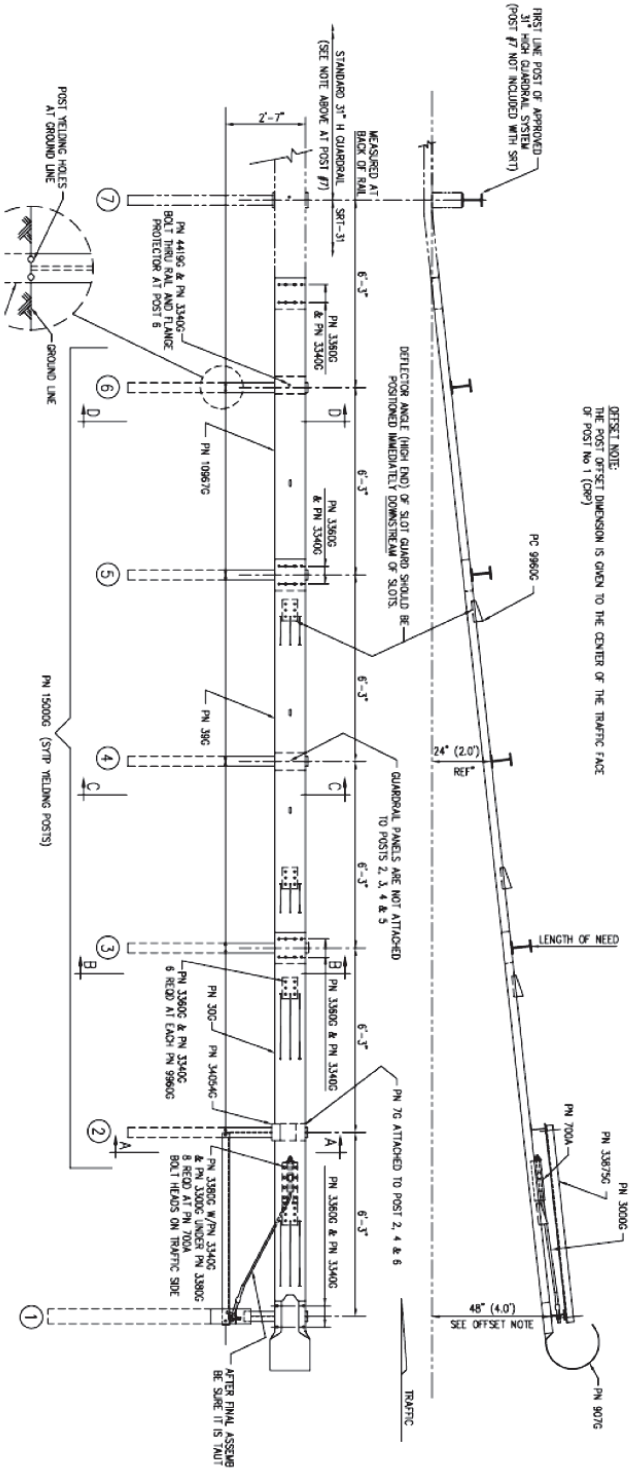
FOR SPECIFIC INSTALLATION, MAINTENANCE, OR REPAIR DETAILS, REFER TO THE STATE/SPECIFYING AGENCY'S STANDARD DRAWING(S) AND/OR TRINITY STANDARD LAYOUT DRAWINGS