Dist	COUNTY	ROUTE	POST MILES TOTAL PROJECT	SHEET No.	TOTAL SHEETS
05	Mon	1	28.0/28.4	1	104

STATE OF CALIFORNIA

DEPARTMENT OF TRANSPORTATION

ACSTP-P001(591)E

PROJECT PLANS FOR CONSTRUCTION ON

STATE HIGHWAY

IN MONTEREY COUNTY
NEAR LUCIA
FROM 0.1 MILE SOUTH OF BIG CREEK BRIDGE
TO 2.8 MILES SOUTH OF DOLAN CREEK BRIDGE

TO BE SUPPLEMENTED BY STANDARD PLANS DATED JULY 2010

INDEX OF PLANS

SHEET No.	DESCRIPTION
1	TITLE AND LOCATION MAP
2	TYPICAL CROSS SECTIONS
3	LAYOUT
4	PROFILE AND SUPERELEVATION DIAGRAMS
5-7	DRAINAGE PLANS, PROFILES, AND QUANTITIES
8	UTILITY PLAN
9	CONSTRUCTION AREA SIGNS
10	MOTORIST INFORMATION PLAN
11-15	STAGE CONSTRUCTION AND TRAFFIC HANDLING PLANS AND QUANTITIES
16	PAVEMENT DELINEATION PLAN
17	SUMMARY OF QUANTITIES
18-19	LANDSCAPE LAYOUT, DETAILS, AND QUANTITIES
20-25	ELECTRICAL PLANS, DETAILS AND QUANTITIES
26-35	TEMPORARY WOOD POLE DETAILS
36-69	REVISED STANDARD PLANS

STRUCTURE PLANS

70-104	COW CLIFFS VIADUCT, Br No. 44-0296

THE STANDARD PLANS LIST APPLICABLE TO THIS CONTRACT IS INCLUDED IN THE NOTICE TO BIDDERS AND SPECIAL PROVISIONS BOOK.

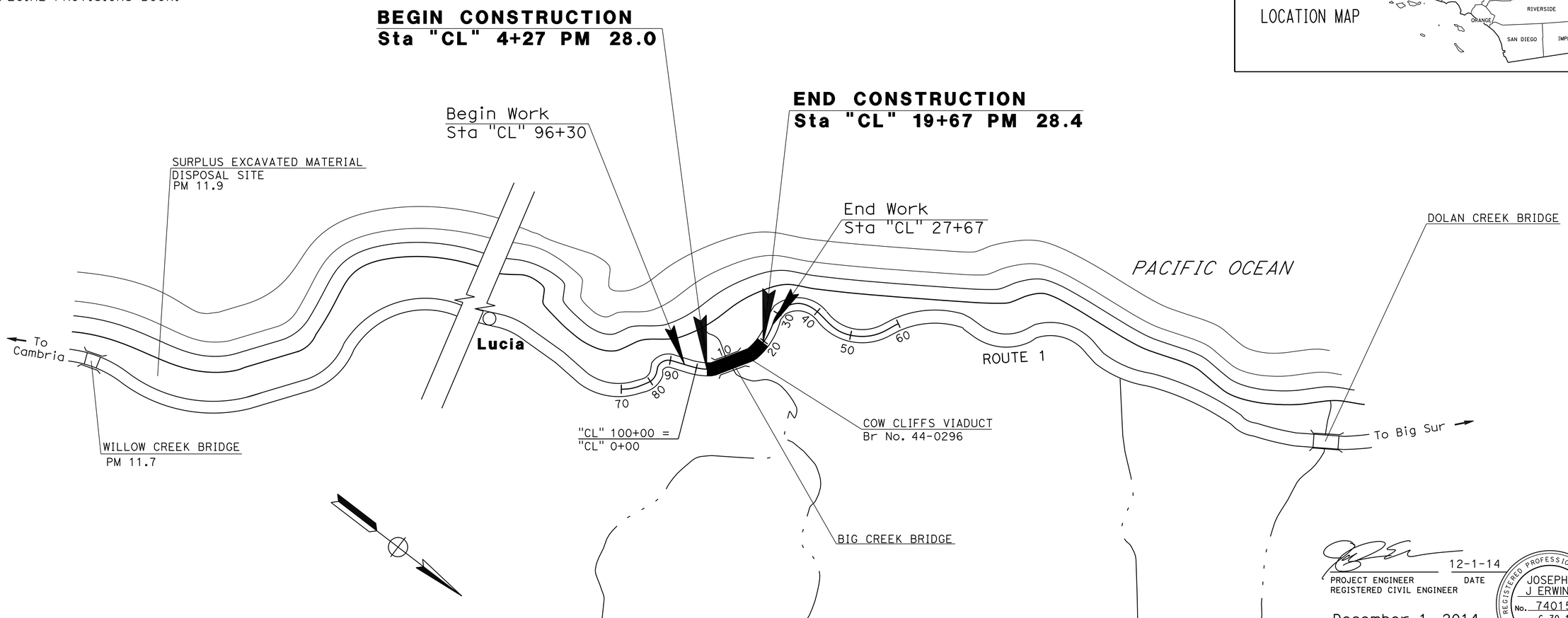

NO SCALE

PROJECT ENGINEER
REGISTERED CIVIL ENGINEER

12-1-14
DATE

REGISTERED PROFESSIONAL ENGINEER
JOSEPH J ERWIN
No. 74015
Exp. 6-30-15
CIVIL
STATE OF CALIFORNIA

December 1, 2014
PLANS APPROVAL DATE

THE STATE OF CALIFORNIA OR ITS OFFICERS OR AGENTS SHALL NOT BE RESPONSIBLE FOR THE ACCURACY OR COMPLETENESS OF SCANNED COPIES OF THIS PLAN SHEET.

PROJECT MANAGER: KEN DOSTALEK

DESIGN ENGINEER: STEVE WYATT

THE CONTRACTOR SHALL POSSESS THE CLASS (OR CLASSES) OF LICENSE AS SPECIFIED IN THE "NOTICE TO BIDDERS."

CONTRACT No.	05-1F8904
PROJECT ID	0514000072

LAST REVISION 12-01-14
DATE PLOTTED => 03-FEB-2015
TIME PLOTTED => 09:10

Dist	COUNTY	ROUTE	POST MILES TOTAL PROJECT	SHEET No.	TOTAL SHEETS
05	Mon	1	28.0/28.4	2	104

REGISTERED CIVIL ENGINEER 12-1-14 DATE

12-1-14
PLANS APPROVAL DATE

REGISTERED PROFESSIONAL ENGINEER JOSEPH J ERWIN No. 74015 Exp. 6-30-15 CIVIL STATE OF CALIFORNIA

THE STATE OF CALIFORNIA OR ITS OFFICERS OR AGENTS SHALL NOT BE RESPONSIBLE FOR THE ACCURACY OR COMPLETENESS OF SCANNED COPIES OF THIS PLAN SHEET.

NOTES:

1. DIMENSIONS OF THE PAVEMENT STRUCTURES (STRUCTURAL SECTIONS) ARE SUBJECT TO TOLERANCES SPECIFIED IN THE STANDARD SPECIFICATIONS.
2. SUPERELEVATIONS ARE SHOWN ON THE SUPERELEVATION DIAGRAM.
3. SEE LAYOUT AND SUMMARY OF QUANTITIES SHEET FOR EXACT LOCATIONS OF HMA DIKE AND MIDWEST GUARDRAIL SYSTEM.
4. FOR STRUCTURAL CONCRETE APPROACH SLAB DIMENSIONS, SEE STRCTURES PLANS

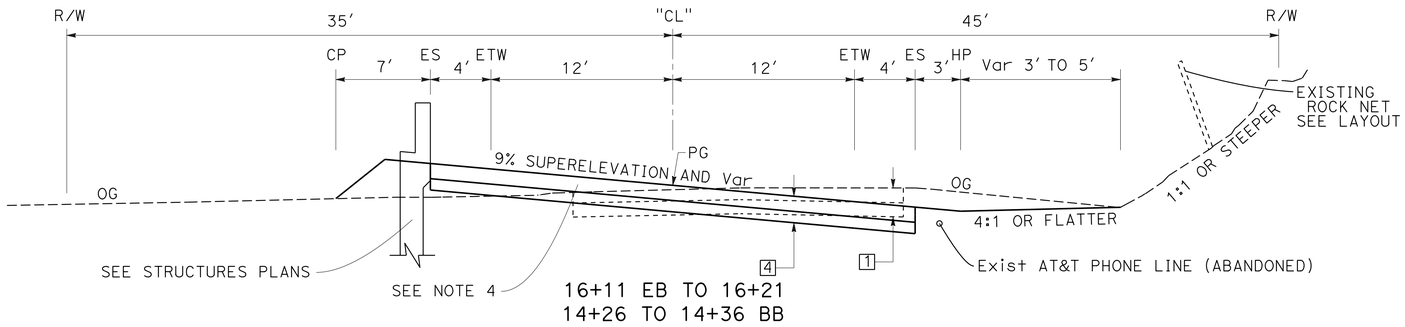

16+11 EB TO 16+21
14+26 TO 14+36 BB

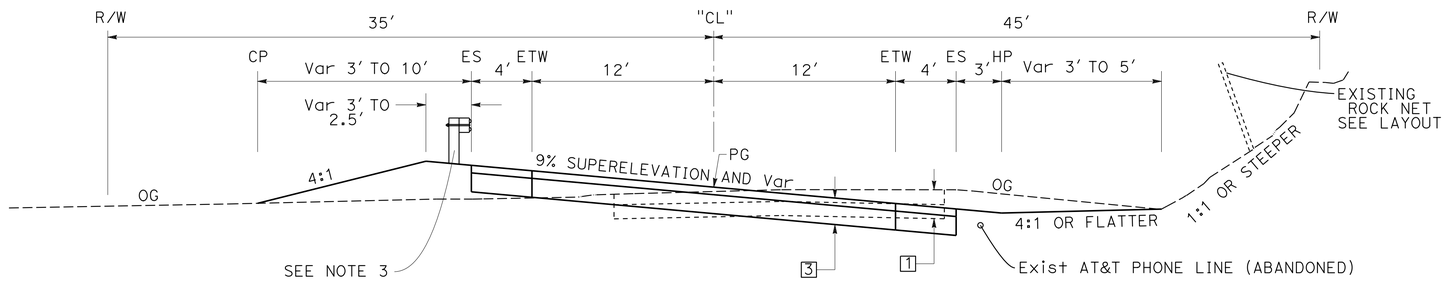

16+21 TO 17+50
13+24 TO 14+26

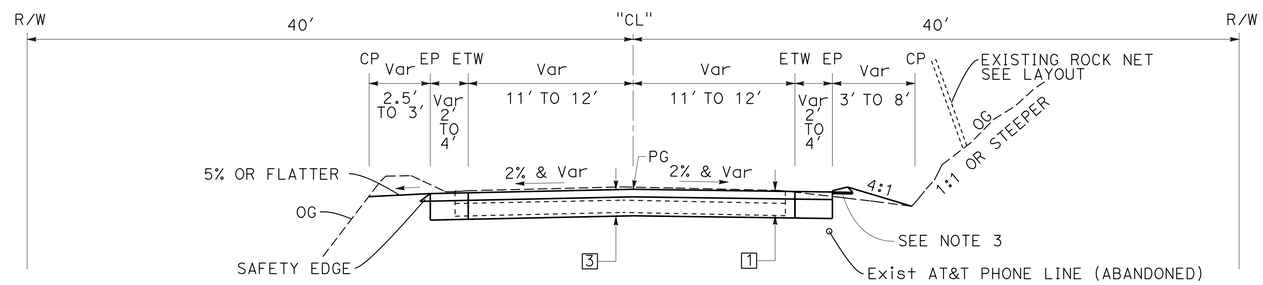

17+50 TO 19+67
12+83 TO 13+24

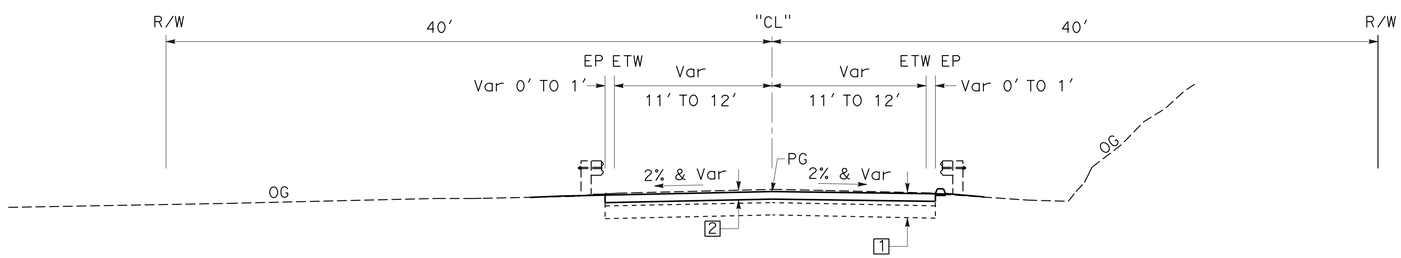

12+17 TO 12+83

DESIGN DESIGNATION

AADT	(2014)	2,397	D	59.2%
AADT	(2034)	3,368	T	0.6%
DHV	(2014)	417	V	45 MPH
DHV	(2034)	588	TI_{20}	6

PAVEMENT CLIMATE REGION

CENTRAL COAST

EXISTING

1 — 0.90′ & Var AC
0.50′ CL2 AB

2 — COLD PLANE AC PAVEMENT (Max 0.65′)
0.50′ HMA (TYPE A)

3 — 0.40′ HMA (TYPE A)
1.00′ CL 2 AB

4 — 0.75′ STRUCTURAL CONCRETE APPROACH SLAB
0.65′ CL 2 AB

ROUTE 1

NO SCALE

TYPICAL CROSS SECTIONS

X-1

STATE OF CALIFORNIA - DEPARTMENT OF TRANSPORTATION
Caltrans
DESIGN

FUNCTIONAL SUPERVISOR: STEVE WYATT
CALCULATED-DESIGNED BY: JOE ERWIN
CHECKED BY: BRIAN FULLER
REVISED BY
DATE REVISED

LAST REVISION 12-1-14
DATE PLOTTED => 04-DEC-2014
TIME PLOTTED => 11:22

Dist	COUNTY	ROUTE	POST MILES TOTAL PROJECT	SHEET No.	TOTAL SHEETS
05	Mon	1	28.0/28.4	3	104

REGISTERED CIVIL ENGINEER 12-1-14 DATE

12-1-14
PLANS APPROVAL DATE

REGISTERED PROFESSIONAL ENGINEER JOSEPH J ERWIN No. 74015 Exp. 6-30-15 CIVIL STATE OF CALIFORNIA

THE STATE OF CALIFORNIA OR ITS OFFICERS OR AGENTS SHALL NOT BE RESPONSIBLE FOR THE ACCURACY OR COMPLETENESS OF SCANNED COPIES OF THIS PLAN SHEET.

NOTE:

FOR ACCURATE RIGHT OF WAY DATA, CONTACT RIGHT OF WAY ENGINEERING AT THE DISTRICT OFFICE

LEGEND:

COLD PLANE AC PAVEMENT

— ESA —· ENVIRONMENTALLY SENSITIVE AREA

CRASH CUSHION SYSTEM

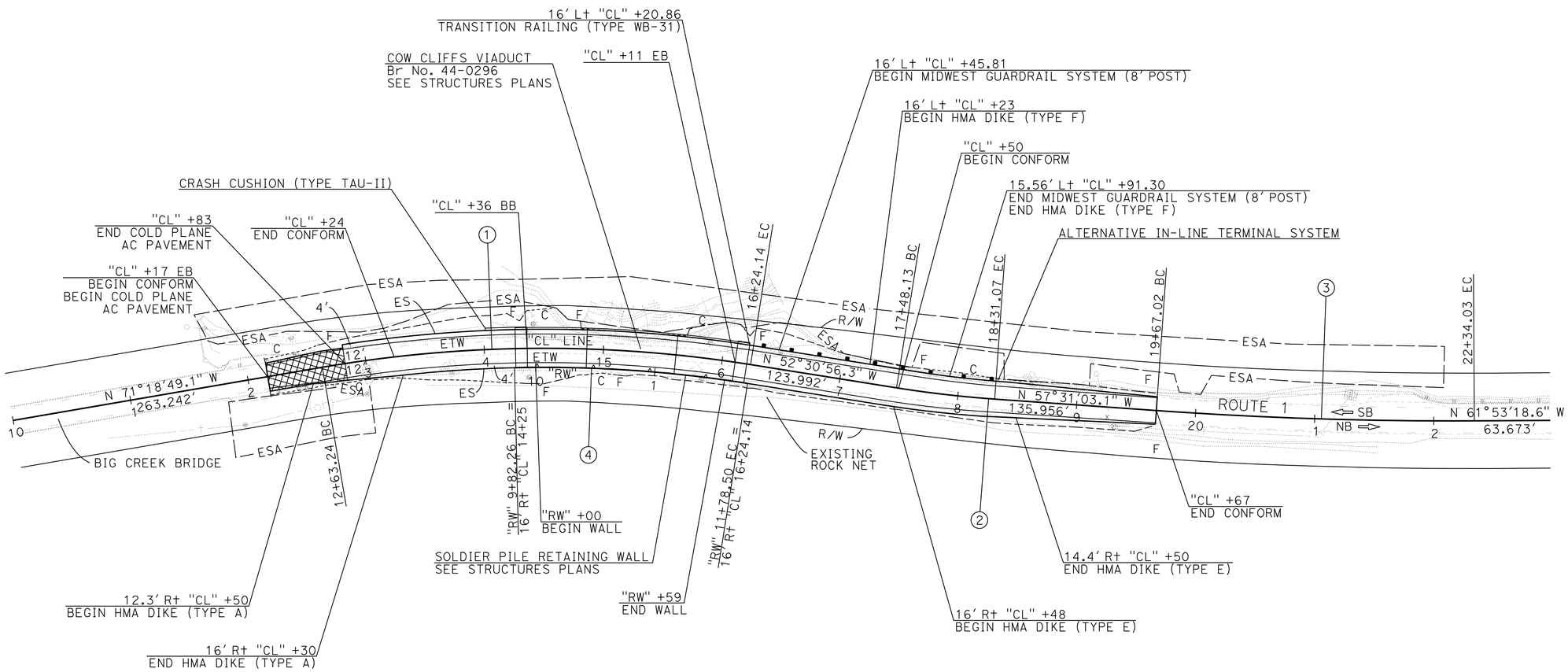

CURVE DATA

No. ⊕	R	Δ	T	L
1	1100′	18°47′53″	182.08′	360.90′
2	950′	05°00′07″	41.49′	82.93′
3	3500′	04°22′16″	133.57′	267.01′
4	1084′	10°22′21″	98.39′	196.24′

SCALE: 1″=50′

LAYOUT
L-1

STATE OF CALIFORNIA - DEPARTMENT OF TRANSPORTATION
Caltrans
DESIGN

FUNCTIONAL SUPERVISOR: STEVE WYATT
CALCULATED-DESIGNED BY: JOE ERWIN
CHECKED BY: BRIAN FULLER
REVISED BY
DATE REVISED

LAST REVISION 12-01-14
DATE PLOTTED => 04-DEC-2014
TIME PLOTTED => 11:22

Dist	COUNTY	ROUTE	POST MILES TOTAL PROJECT	SHEET No.	TOTAL SHEETS
05	Mon	1	28.0/28.4	4	104

REGISTERED CIVIL ENGINEER 12-1-14 DATE

12-1-14
PLANS APPROVAL DATE

REGISTERED PROFESSIONAL ENGINEER JOSEPH J ERWIN No. 74015 Exp. 6-30-15 CIVIL STATE OF CALIFORNIA

THE STATE OF CALIFORNIA OR ITS OFFICERS OR AGENTS SHALL NOT BE RESPONSIBLE FOR THE ACCURACY OR COMPLETENESS OF SCANNED COPIES OF THIS PLAN SHEET.

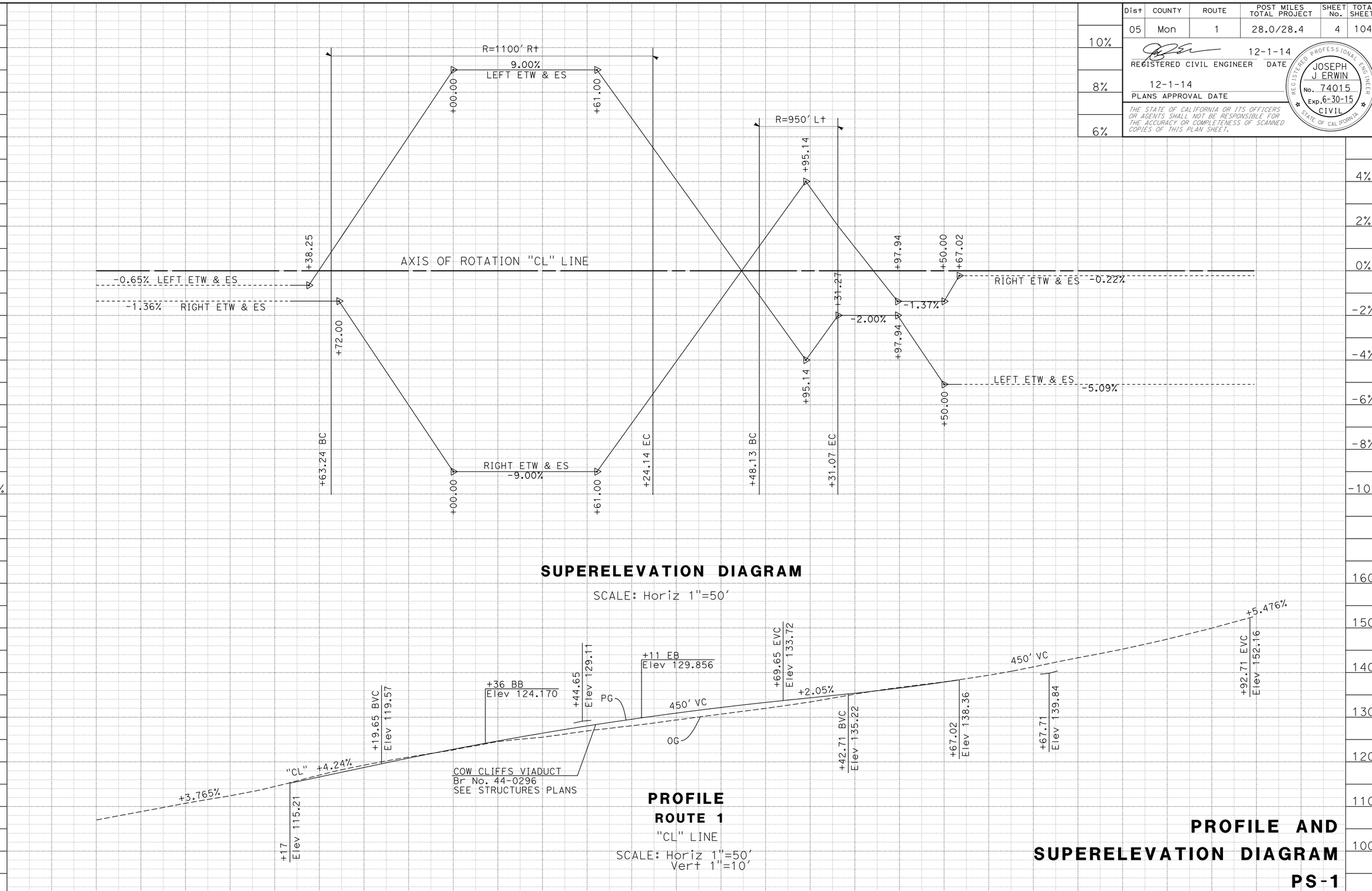

PROFILE AND SUPERELEVATION DIAGRAM

PS-1

REVISED BY | DATE REVISED

JOE ERWIN | BRIAN FULLER

CALCULATED-DESIGNED BY | CHECKED BY

FUNCTIONAL SUPERVISOR: STEVE WYATT

STATE OF CALIFORNIA - DEPARTMENT OF TRANSPORTATION

Caltrans® DESIGN

LAST REVISION 12-01-14 | DATE PLOTTED => 04-DEC-2014 | TIME PLOTTED => 11:23

Dist	COUNTY	ROUTE	POST MILES TOTAL PROJECT	SHEET No.	TOTAL SHEETS
05	Mon	1	28.0/28.4	5	104

REGISTERED CIVIL ENGINEER 12-1-14 DATE

12-1-14
PLANS APPROVAL DATE

REGISTERED PROFESSIONAL ENGINEER JOSEPH J ERWIN No. 74015 Exp. 6-30-15 CIVIL STATE OF CALIFORNIA

THE STATE OF CALIFORNIA OR ITS OFFICERS OR AGENTS SHALL NOT BE RESPONSIBLE FOR THE ACCURACY OR COMPLETENESS OF SCANNED COPIES OF THIS PLAN SHEET.

NOTE:

FOR ACCURATE RIGHT OF WAY DATA, CONTACT
RIGHT OF WAY ENGINEERING AT THE DISTRICT OFFICE

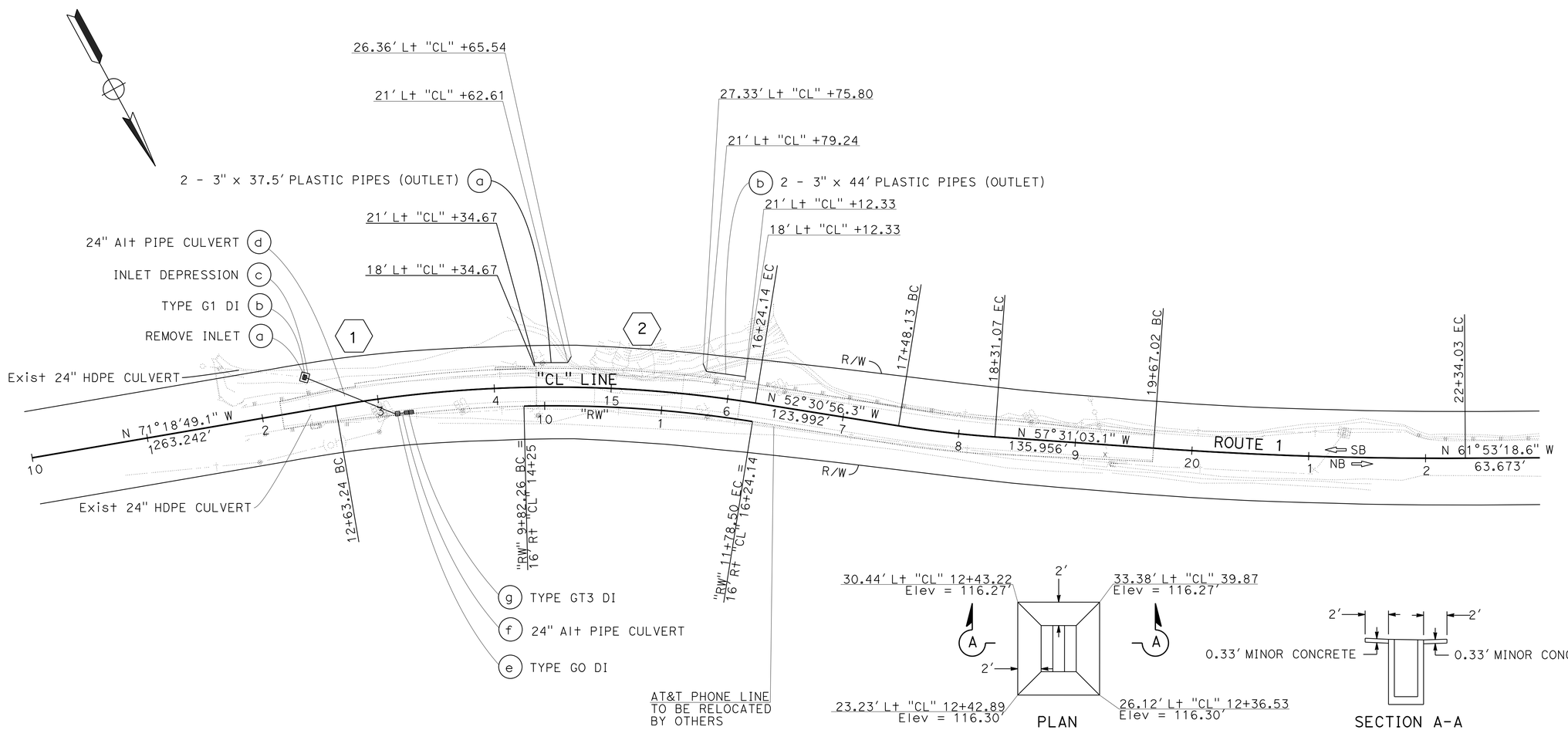

INLET DEPRESSION, CONCRETE

APPROVED FOR DRAINAGE WORK ONLY

DRAINAGE PLAN

SCALE: 1" = 50'

D-1

STATE OF CALIFORNIA - DEPARTMENT OF TRANSPORTATION
Caltrans
DESIGN

FUNCTIONAL SUPERVISOR: STEVE WYATT
CALCULATED-DESIGNED BY: JOE ERWIN
CHECKED BY: BRIAN FULLER
REVISED BY
DATE REVISED

LAST REVISION 12-01-14
DATE PLOTTED => 04-DEC-2014
TIME PLOTTED => 11:23

Dist	COUNTY	ROUTE	POST MILES TOTAL PROJECT	SHEET No.	TOTAL SHEETS
05	Mon	1	28.0/28.4	6	104

REGISTERED CIVIL ENGINEER 12-1-14 DATE

12-1-14
PLANS APPROVAL DATE

REGISTERED PROFESSIONAL ENGINEER JOSEPH J ERWIN No. 74015 Exp. 6-30-15 CIVIL STATE OF CALIFORNIA

THE STATE OF CALIFORNIA OR ITS OFFICERS OR AGENTS SHALL NOT BE RESPONSIBLE FOR THE ACCURACY OR COMPLETENESS OF SCANNED COPIES OF THIS PLAN SHEET.

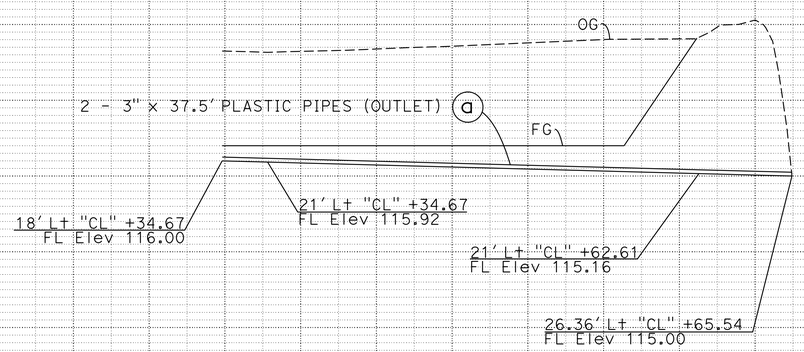

2 DRAINAGE SYSTEM No.

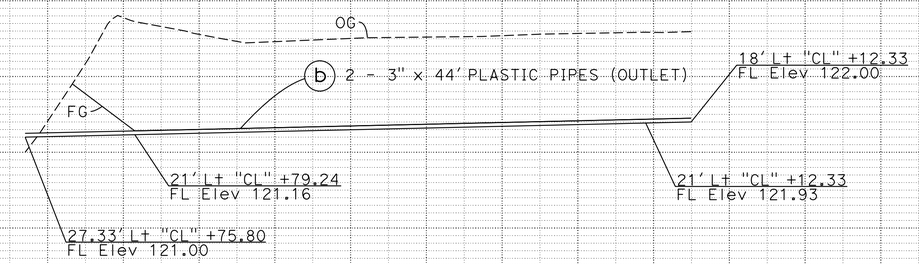

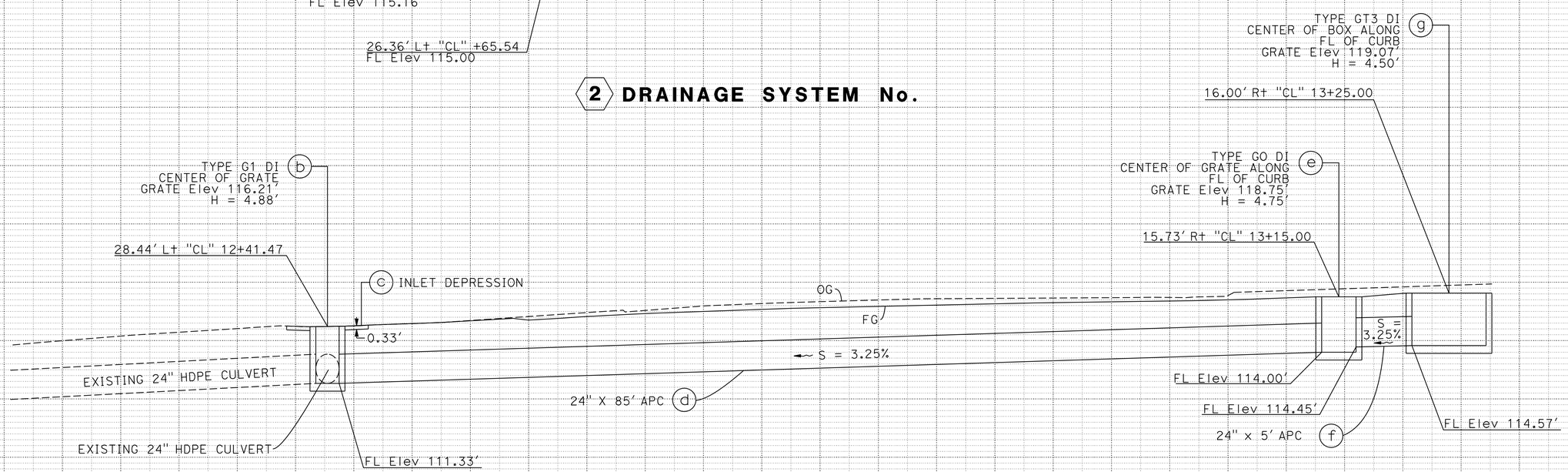

1 DRAINAGE SYSTEM No.

APPROVED FOR DRAINAGE WORK ONLY

SCALE: Horiz 1"=5'
Vert 1"=5'

DRAINAGE PROFILE

DP-1

REVISED BY | DATE REVISED
JOE ERWIN | BRIAN FULLER
CALCULATED-DESIGNED BY | CHECKED BY
FUNCTIONAL SUPERVISOR | STEVE WYATT
STATE OF CALIFORNIA - DEPARTMENT OF TRANSPORTATION
Caltrans
DESIGN

LAST REVISION 12-01-14 | DATE PLOTTED => 04-DEC-2014 | TIME PLOTTED => 11:23

Dist	COUNTY	ROUTE	POST MILES TOTAL PROJECT	SHEET No.	TOTAL SHEETS
05	Mon	1	28.0/28.4	7	104

REGISTERED CIVIL ENGINEER 12-1-14 DATE

12-1-14
PLANS APPROVAL DATE

REGISTERED PROFESSIONAL ENGINEER JOSEPH J ERWIN No. 74015 Exp. 6-30-15 CIVIL STATE OF CALIFORNIA

THE STATE OF CALIFORNIA OR ITS OFFICERS OR AGENTS SHALL NOT BE RESPONSIBLE FOR THE ACCURACY OR COMPLETENESS OF SCANNED COPIES OF THIS PLAN SHEET.

ALLOWABLE MATERIALS FOR ALTERNATIVE PIPE CULVERT

TYPE	Min THICKNESS/ CLASS
CSP	0.109 INCHES
PLASTIC	TYPE S
RCP	SEE STANDARD Specs

DRAINAGE QUANTITIES

DRAINAGE SHEET No.	DRAINAGE SYSTEM No. ⬡	DRAINAGE UNIT ○	REMOVE INLET EA	MINOR CONCRETE MINOR STRUCTURE) CY	24" ALTERNATIVE PIPE CULVERT LF	3" PLASTIC PIPE (OUTLET) LF	INLET DEPRESSION EA	Misc IRON AND STEEL LB	(N) FRAME AND GRATE (TYPE 24-9) EA	(N) FRAME AND GRATE (TYPE 24-12X) EA	(N) INLET HEIGHT "H" LF	DESCRIPTION	STATION	DRAINAGE SYSTEM No. ⬡	DRAINAGE UNIT ○
D-1	1	a	1										"CL" 12+41.47	1	a
		b		1.36				263	1		4.88	TYPE G1 DRAINAGE INLET	"CL" 12+41.47		b
		c					1					CONCRETE	"CL" 12+41.47		c
		d			85							POSITIVE PIPE JOINT CLASSIFICATION			d
		e		1.67				239		1	4.75	TYPE GO DRAINAGE INLET	"CL" 13+15.00		e
		f			5							POSITIVE PIPE JOINT CLASSIFICATION			f
		g		2.25				478		2	4.50	TYPE GT3 DRAINAGE INLET	"CL" 13+25.00		g
D-1	2	a				76						2 PIPES, PLACED PARALLEL		2	a
		b				88						2 PIPES, PLACED PARALLEL			b
TOTAL			1	5.28	90	164	1	980							

(N) - NOT A SEPARATE PAY ITEM, FOR INFORMATION ONLY

DRAINAGE QUANTITIES
DQ-1

REVISED BY | DATE REVISED

CALCULATED-DESIGNED BY: JOE ERWIN | CHECKED BY: BRIAN FULLER

FUNCTIONAL SUPERVISOR: STEVE WYATT

STATE OF CALIFORNIA - DEPARTMENT OF TRANSPORTATION
Caltrans DESIGN

LAST REVISION 12-01-14 | DATE PLOTTED => 04-DEC-2014 | TIME PLOTTED => 11:23

Dist	COUNTY	ROUTE	POST MILES TOTAL PROJECT	SHEET No.	TOTAL SHEETS
05	Mon	1	28.0/28.4	8	104

REGISTERED CIVIL ENGINEER 12-1-14 DATE

12-1-14
PLANS APPROVAL DATE

REGISTERED PROFESSIONAL ENGINEER JOSEPH J ERWIN No. 74015 Exp. 6-30-15 CIVIL STATE OF CALIFORNIA

THE STATE OF CALIFORNIA OR ITS OFFICERS OR AGENTS SHALL NOT BE RESPONSIBLE FOR THE ACCURACY OR COMPLETENESS OF SCANNED COPIES OF THIS PLAN SHEET.

NOTES:

1. FOR ACCURATE RIGHT OF WAY DATA, CONTACT RIGHT OF WAY ENGINEERING AT THE DISTRICT OFFICE
2. UTILITY OWNERSHIP:

   TELEPHONE - AT&T

POSITIVE LOCATION INFORMATION

No. ⬠	LOCATION	ELEVATION	METHOD
1	18.8′ Rt "CL" 14+04.1	120.04	POTHOLING
2	19.1′ Rt "CL" 14+54.9	120.78	POTHOLING
3	19.2′ Rt "CL" 15+26.7	123.36	POTHOLING
4	17.9′ Rt "CL" 16+26.4	124.76	POTHOLING

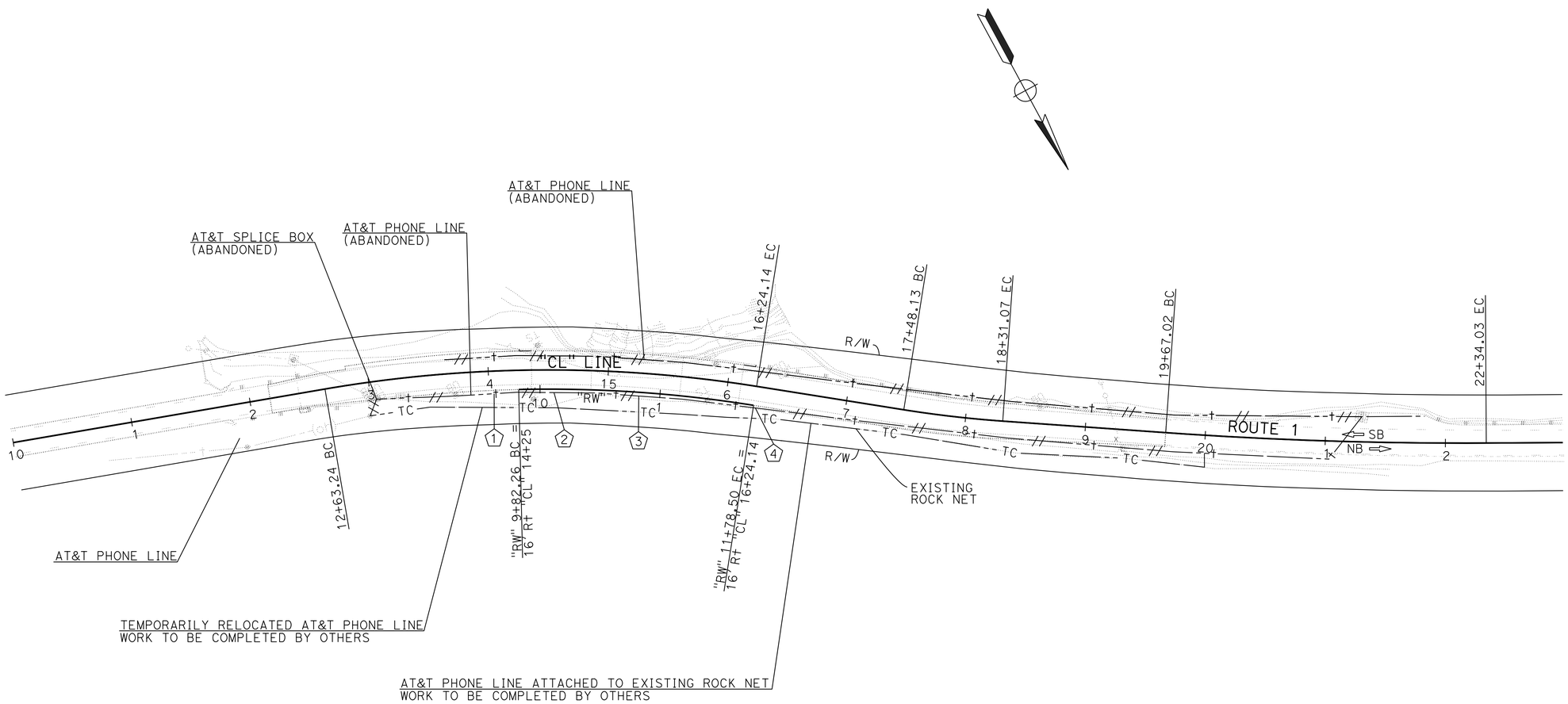

APPROVED FOR UTILITY WORK ONLY

SCALE: 1"=50′

UTILITY PLAN
U-1

STATE OF CALIFORNIA - DEPARTMENT OF TRANSPORTATION
Caltrans
DESIGN

FUNCTIONAL SUPERVISOR: STEVE WYATT
CALCULATED-DESIGNED BY: JOE ERWIN
CHECKED BY: BRIAN FULLER
REVISED BY
DATE REVISED

LAST REVISION 12-01-14
DATE PLOTTED => 04-DEC-2014
TIME PLOTTED => 11:23

Dist	COUNTY	ROUTE	POST MILES TOTAL PROJECT	SHEET No.	TOTAL SHEETS
05	Mon	1	28.0/28.4	9	104

REGISTERED CIVIL ENGINEER 12-1-14 DATE

12-1-14
PLANS APPROVAL DATE

REGISTERED PROFESSIONAL ENGINEER JOSEPH J ERWIN No. 74015 Exp. 6-30-15 CIVIL STATE OF CALIFORNIA

THE STATE OF CALIFORNIA OR ITS OFFICERS OR AGENTS SHALL NOT BE RESPONSIBLE FOR THE ACCURACY OR COMPLETENESS OF SCANNED COPIES OF THIS PLAN SHEET.

NOTE:

EXACT LOCATIONS TO BE DETERMINED BY THE ENGINEER

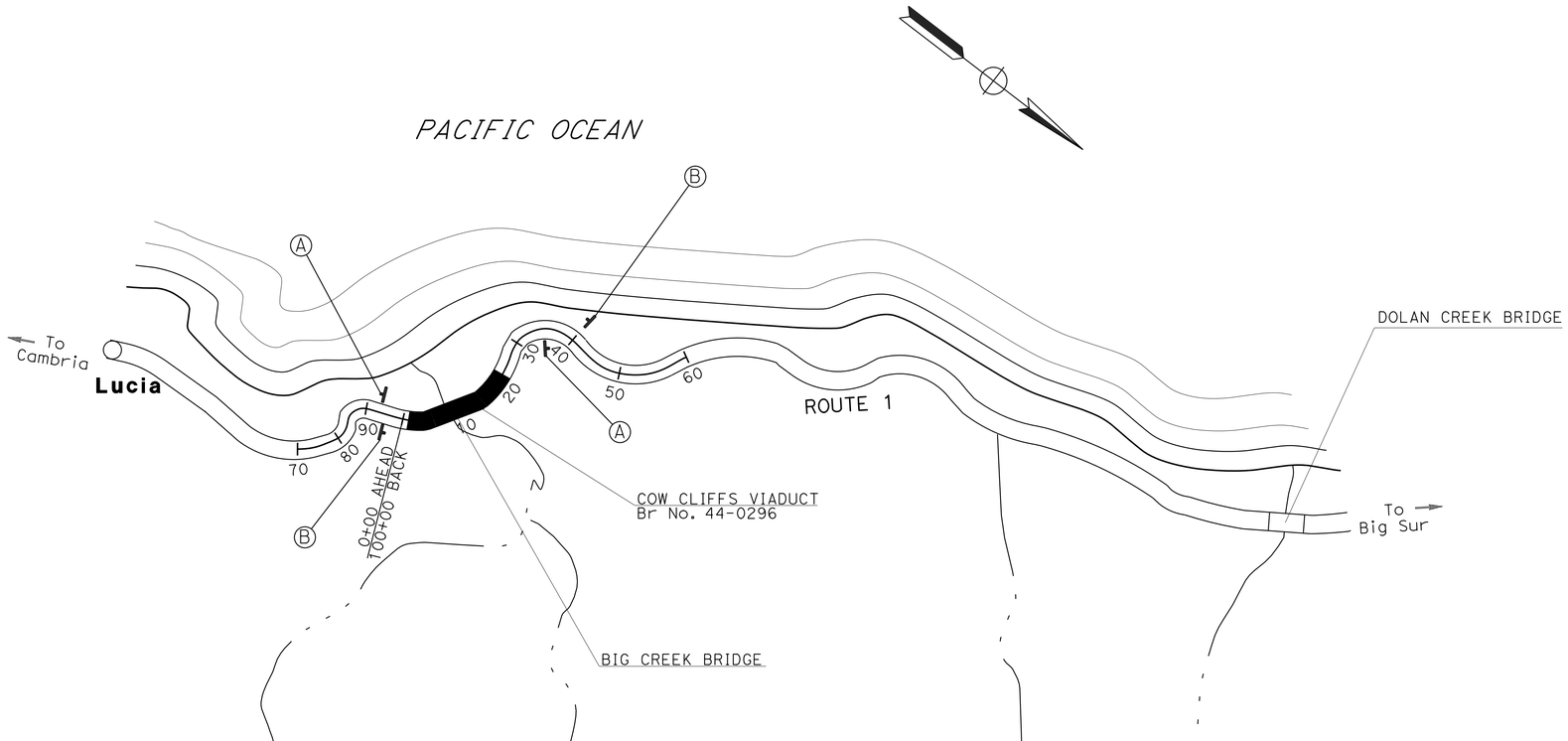

STATIONARY MOUNTED CONSTRUCTION AREA SIGNS

SIGN No. (X)	SIGN CODE		PANEL SIZE	SIGN MESSAGE	NUMBER OF POSTS AND SIZE	NUMBER OF SIGNS
	FEDERAL	CALIFORNIA				
A	G20-2	C14	36" x 18"	END ROAD WORK	1 - 4" x 6"	2
B	W20-1	C23	30" x 30"	ROAD WORK AHEAD	1 - 4" x 4"	2

FOR ADDITIONAL CONSTRUCTION AREA SIGNS, SEE SCQ SHEET.

APPROVED FOR CONSTRUCTION AREA SIGN WORK ONLY

CONSTRUCTION AREA SIGNS

NO SCALE

CS-1

STATE OF CALIFORNIA - DEPARTMENT OF TRANSPORTATION
Caltrans
DESIGN

FUNCTIONAL SUPERVISOR: STEVE WYATT
CALCULATED-DESIGNED BY: JOE ERWIN
CHECKED BY: BRIAN FULLER
REVISED BY
DATE REVISED

LAST REVISION 12-01-14 | DATE PLOTTED => 04-DEC-2014 | TIME PLOTTED => 11:23

Dist	COUNTY	ROUTE	POST MILES TOTAL PROJECT	SHEET No.	TOTAL SHEETS
05	Mon	1	28.0/28.4	10	104

REGISTERED CIVIL ENGINEER 12-1-14 DATE

12-1-14
PLANS APPROVAL DATE

REGISTERED PROFESSIONAL ENGINEER JOSEPH J ERWIN No. 74015 Exp. 6-30-15 CIVIL STATE OF CALIFORNIA

THE STATE OF CALIFORNIA OR ITS OFFICERS OR AGENTS SHALL NOT BE RESPONSIBLE FOR THE ACCURACY OR COMPLETENESS OF SCANNED COPIES OF THIS PLAN SHEET.

NOTES:

1. EXISTING CALTRANS OWNED CMS, MESSAGE PROVIDED BY D5 TRAFFIC MANAGEMENT CENTER WITH REMOTE PROGRAMMING.
2. PCMS TO BE FURNISHED AND MAINTAINED BY THE CONTRACTOR.

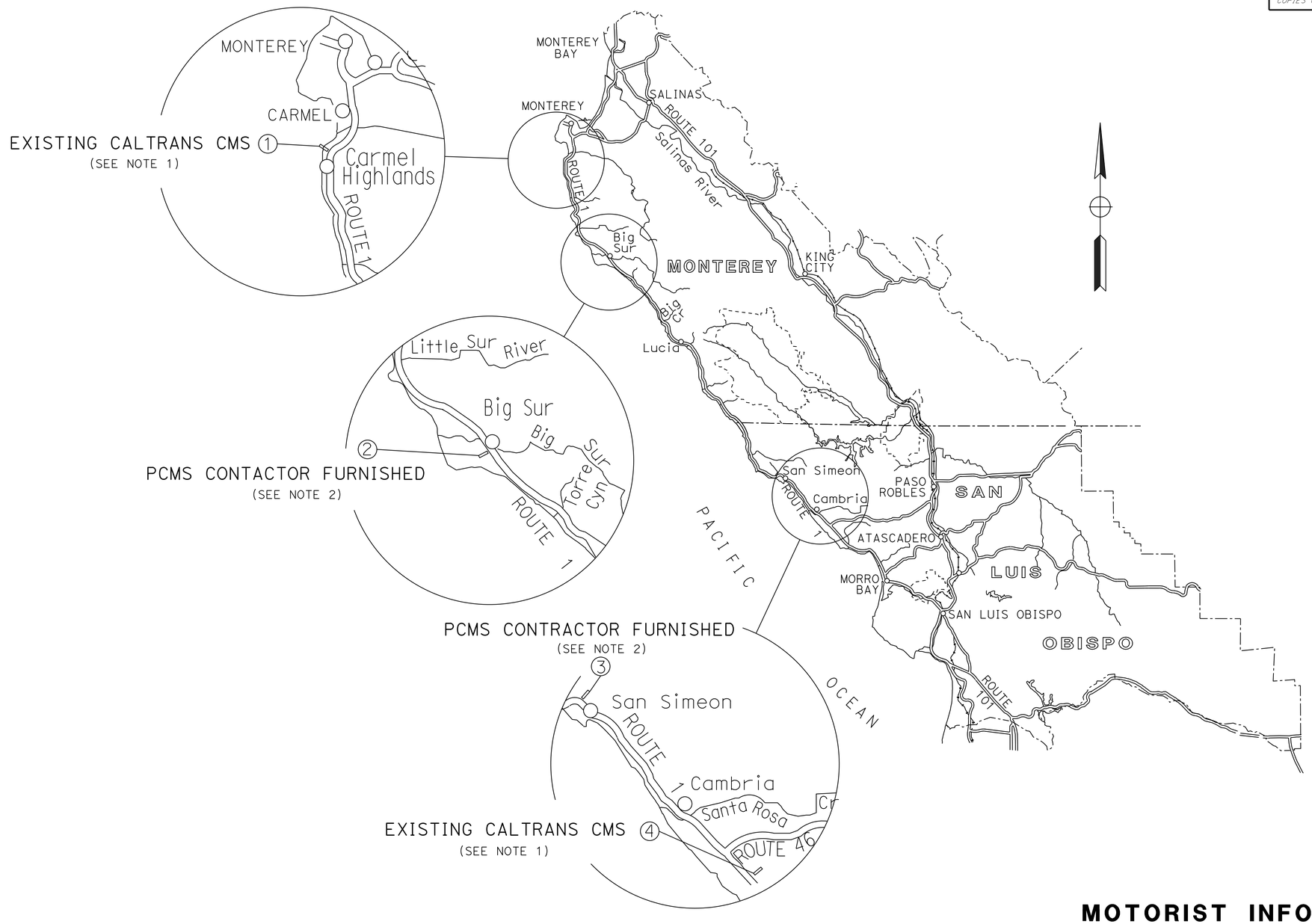

APPROVED FOR MOTORIST INFORMATION WORK ONLY

MOTORIST INFORMATION PLAN (CMS PLAN FOR CLOSURES)

NO SCALE

MI-1

STATE OF CALIFORNIA - DEPARTMENT OF TRANSPORTATION
Caltrans
DESIGN

FUNCTIONAL SUPERVISOR: STEVE WYATT
CALCULATED-DESIGNED BY: JOE ERWIN
CHECKED BY: BRIAN FULLER
REVISED BY
DATE REVISED

LAST REVISION 12-01-14
DATE PLOTTED => 04-DEC-2014
TIME PLOTTED => 11:23

Dist	COUNTY	ROUTE	POST MILES TOTAL PROJECT	SHEET No.	TOTAL SHEETS
05	Mon	1	28.0/28.4	11	104

REGISTERED CIVIL ENGINEER 12-1-14 DATE

12-1-14
PLANS APPROVAL DATE

REGISTERED PROFESSIONAL ENGINEER JOSEPH J ERWIN No. 74015 Exp. 6-30-15 CIVIL STATE OF CALIFORNIA

THE STATE OF CALIFORNIA OR ITS OFFICERS OR AGENTS SHALL NOT BE RESPONSIBLE FOR THE ACCURACY OR COMPLETENESS OF SCANNED COPIES OF THIS PLAN SHEET.

NOTES:

1. FOR ACCURATE RIGHT OF WAY DATA, CONTACT RIGHT OF WAY ENGINEERING AT THE DISTRICT OFFICE.
2. SEE ELECTRICAL PLANS FOR TEMPORARY SIGNAL SYSTEM.
3. SIGN LOCATIONS ARE APPROXIMATE. EXACT LOCATIONS WILL BE DETERMINED BY THE ENGINEER.
4. STAGE 1 TRAFFIC HANDLING SIGNS TO REMAIN IN PLACE FOR STAGE 2.
5. FOR CONSTRUCTION AREA SIGNS, SEE SCQ-1.

STAGE 1, PHASE 1 CONSTRUCTION

1. SALVAGE EXISTING TEMPORARY SIGNAL SYSTEM
2. WIDEN NB LANE AND SHOULDER
3. REMOVE EXISTING DELINEATION, PLACE TEMPORARY SIGNAL SYSTEM AND TEMPORARY DELINEATION

LEGEND:

- CONSTRUCT THIS STAGE
- REMOVE TRAFFIC STRIPE
- TEMPORARY TRAFFIC STRIPE
- TEMPORARY ALTERNATIVE CRASH CUSHION
- P — OBJECT MARKER (TYPE P)
- • — FLEXIBLE POST DELINEATOR

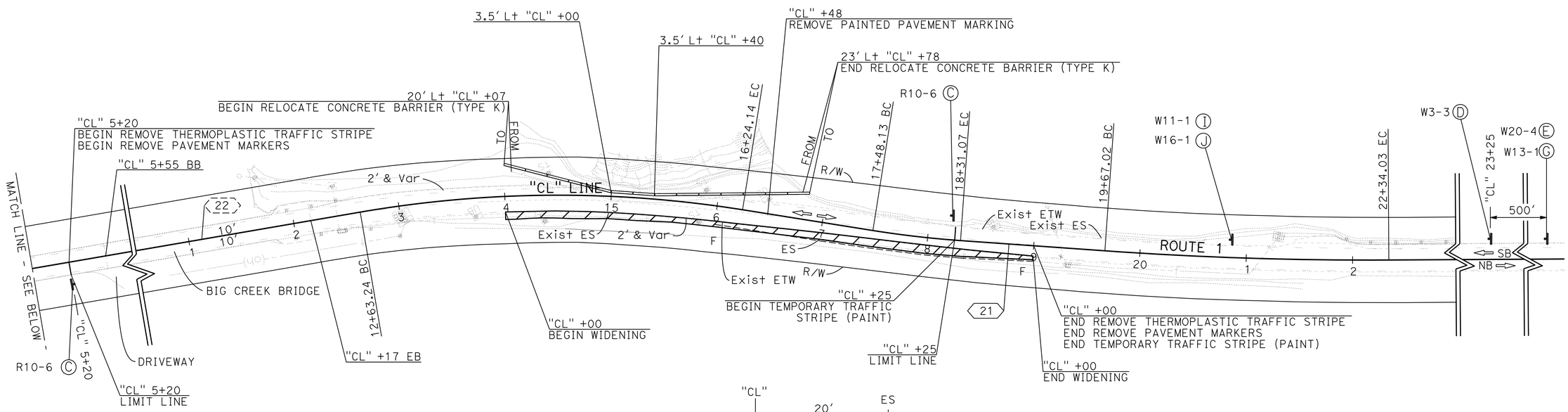

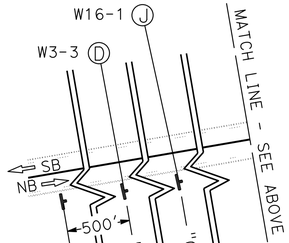

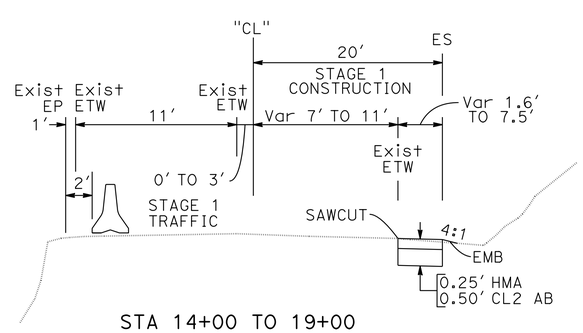

STA 14+00 TO 19+00

APPROVED FOR STAGE CONSTRUCTION AND TRAFFIC HANDLING WORK ONLY

STAGE CONSTRUCTION AND TRAFFIC HANDLING PLANS (STAGE 1 PHASE 1) SC-1

SCALE: 1" = 50'

STATE OF CALIFORNIA - DEPARTMENT OF TRANSPORTATION
Caltrans® DESIGN

FUNCTIONAL SUPERVISOR: STEVE WYATT
CALCULATED-DESIGNED BY: JOE ERWIN
CHECKED BY: BRIAN FULLER
REVISED BY
DATE REVISED

LAST REVISION 12-01-14 DATE PLOTTED => 04-DEC-2014 TIME PLOTTED => 11:23

Dist	COUNTY	ROUTE	POST MILES TOTAL PROJECT	SHEET No.	TOTAL SHEETS
05	Mon	1	28.0/28.4	12	104

REGISTERED CIVIL ENGINEER 12-1-14 DATE

12-1-14
PLANS APPROVAL DATE

REGISTERED PROFESSIONAL ENGINEER JOSEPH J ERWIN No. 74015 Exp. 6-30-15 CIVIL STATE OF CALIFORNIA

THE STATE OF CALIFORNIA OR ITS OFFICERS OR AGENTS SHALL NOT BE RESPONSIBLE FOR THE ACCURACY OR COMPLETENESS OF SCANNED COPIES OF THIS PLAN SHEET.

NOTES:

1. FOR ACCURATE RIGHT OF WAY DATA, CONTACT RIGHT OF WAY ENGINEERING AT THE DISTRICT OFFICE.
2. FOR CONSTRUCTION AREA SIGNS, SEE SCQ-1.

STAGE 1, PHASE 2 CONSTRUCTION

1. PLACE TEMPORARY RAILING (TYPE K) AND TEMPORARY DELINEATION
2. CONSTRUCT SB PORTION OF VIADUCT
3. CONSTRUCT SB LANE FROM STA 12+83 TO 14+26
4. CONSTRUCT DRAINAGE SYSTEM 1 UNITS a, b, c, AND A PORTION OF UNIT d
5. CONSTRUCT TAPER AND WIDEN SB LANE FROM APPROACH SLAB OF VIADUCT AT STA 16+21 TO EXISTING PAVEMENT AT 17+00

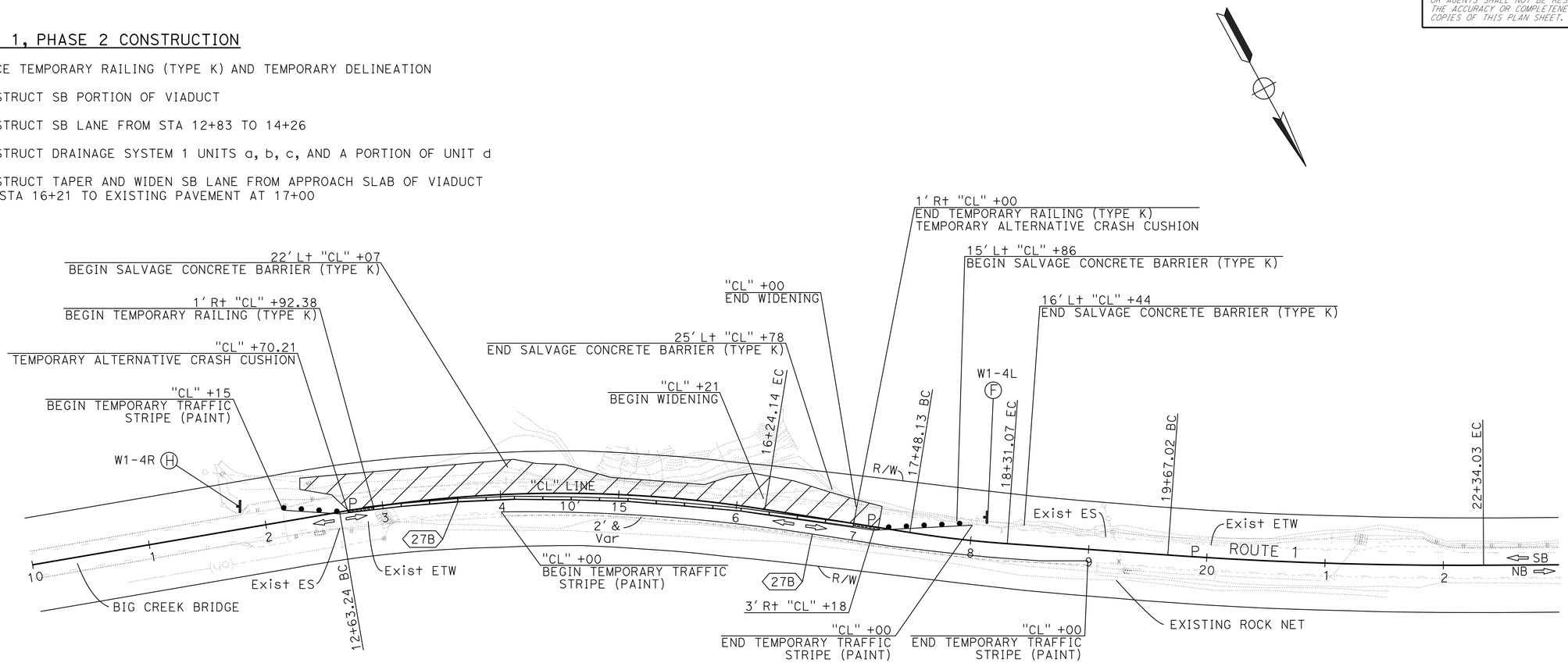

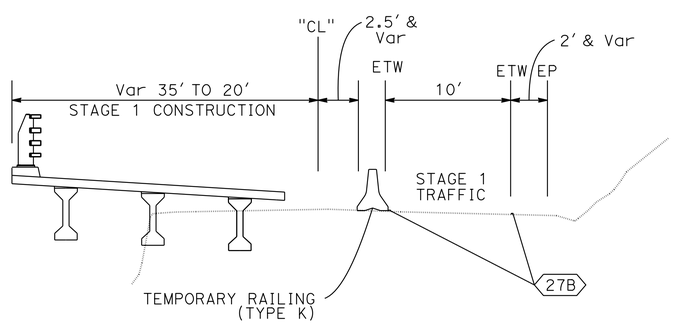

STA 14+26 TO 16+21

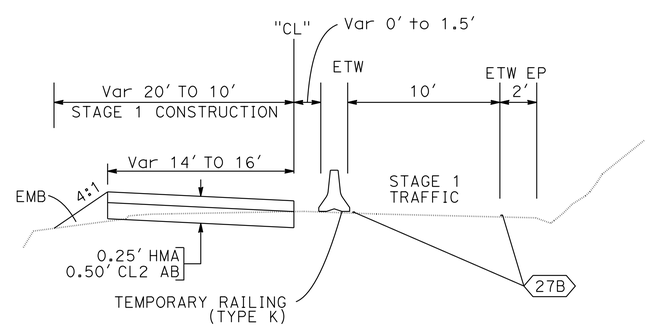

STA 16+21 TO 17+00

APPROVED FOR STAGE CONSTRUCTION AND TRAFFIC HANDLING WORK ONLY

SCALE: 1"=50'

STAGE CONSTRUCTION AND TRAFFIC HANDLING PLANS (STAGE 1 PHASE 2)

SC-2

STATE OF CALIFORNIA - DEPARTMENT OF TRANSPORTATION
Caltrans DESIGN

FUNCTIONAL SUPERVISOR: STEVE WYATT
CALCULATED-DESIGNED BY: JOE ERWIN
CHECKED BY: BRIAN FULLER
REVISED BY
DATE REVISED

LAST REVISION 12-01-14
DATE PLOTTED => 04-DEC-2014
TIME PLOTTED => 11:23

Dist	COUNTY	ROUTE	POST MILES TOTAL PROJECT	SHEET No.	TOTAL SHEETS
05	Mon	1	28.0/28.4	13	104

REGISTERED CIVIL ENGINEER 12-1-14 DATE

12-1-14
PLANS APPROVAL DATE

REGISTERED PROFESSIONAL ENGINEER JOSEPH J ERWIN No. 74015 Exp. 6-30-15 CIVIL STATE OF CALIFORNIA

THE STATE OF CALIFORNIA OR ITS OFFICERS OR AGENTS SHALL NOT BE RESPONSIBLE FOR THE ACCURACY OR COMPLETENESS OF SCANNED COPIES OF THIS PLAN SHEET.

NOTES:

1. FOR ACCURATE RIGHT OF WAY DATA, CONTACT RIGHT OF WAY ENGINEERING AT THE DISTRICT OFFICE.
2. RELOCATE SIGNS F AND H FROM STAGE 1, PHASE 2 TO THE LOCATIONS SHOWN IN STAGE 2

STAGE 2 CONSTRUCTION

1. CONSTRUCT SOLDIER PILE RETAINING WALL ALONG "RW"
2. CONSTRUCT NB PORTION OF VIADUCT
3. CONSTRUCT NB LANE FROM STA 12+83 TO 14+26
4. CONSTRUCT DRAINAGE SYSTEM 1 UNITS g, f, e, AND THE REMAINING PORTION OF UNIT d
5. . CONSTRUCT TAPER AND WIDEN NB LANE FROM APPROACH SLAB OF VIADUCT AT STA 16+21 TO EXISTING PAVEMENT AT 17+00

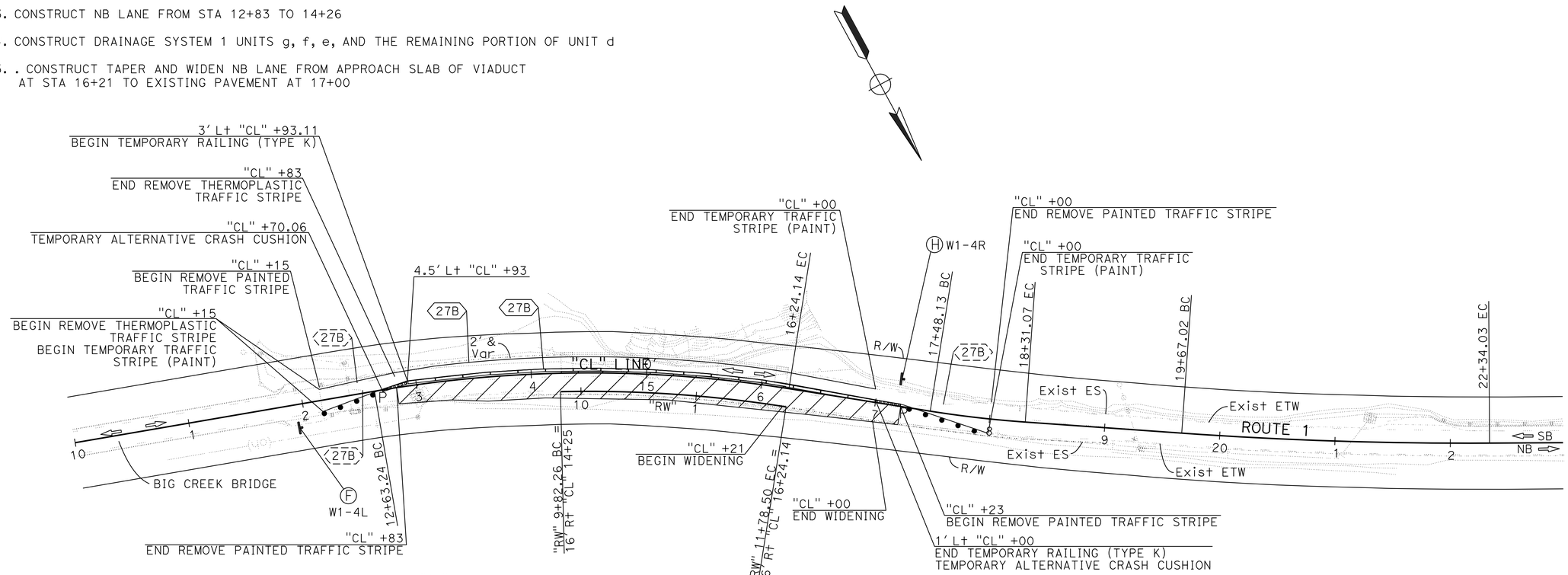

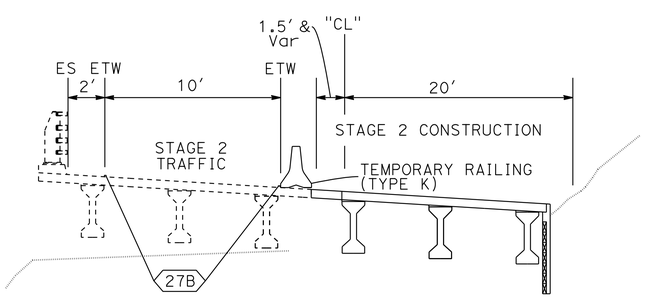

STA 14+26 TO 16+21

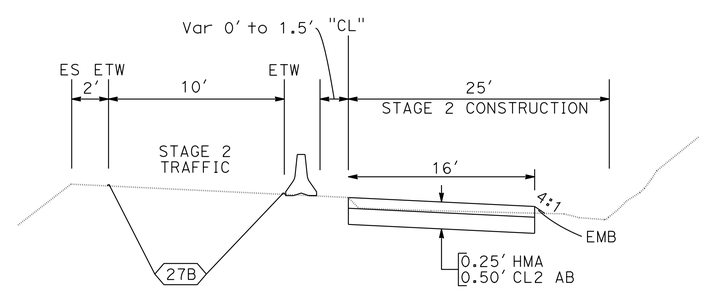

STA 16+21 TO 17+00

APPROVED FOR STAGE CONSTRUCTION AND TRAFFIC HANDLING WORK ONLY

SCALE: 1"=50'

STAGE CONSTRUCTION AND TRAFFIC HANDLING PLANS (STAGE 2)

SC-3

STATE OF CALIFORNIA - DEPARTMENT OF TRANSPORTATION
Caltrans DESIGN

FUNCTIONAL SUPERVISOR: STEVE WYATT
CALCULATED-DESIGNED BY: JOE ERWIN
CHECKED BY: BRIAN FULLER
REVISED BY
DATE REVISED

LAST REVISION 12-01-14
DATE PLOTTED => 04-DEC-2014
TIME PLOTTED => 11:23

Dist	COUNTY	ROUTE	POST MILES TOTAL PROJECT	SHEET No.	TOTAL SHEETS
05	Mon	1	28.0/28.4	14	104

REGISTERED CIVIL ENGINEER 12-1-14 DATE

12-1-14
PLANS APPROVAL DATE

REGISTERED PROFESSIONAL ENGINEER JOSEPH J ERWIN No. 74015 Exp. 6-30-15 CIVIL STATE OF CALIFORNIA

THE STATE OF CALIFORNIA OR ITS OFFICERS OR AGENTS SHALL NOT BE RESPONSIBLE FOR THE ACCURACY OR COMPLETENESS OF SCANNED COPIES OF THIS PLAN SHEET.

NOTES:

1. FOR ACCURATE RIGHT OF WAY DATA, CONTACT RIGHT OF WAY ENGINEERING AT THE DISTRICT OFFICE.

STAGE 3 CONSTRUCTION

1. REMOVE TEMPORARY SIGNAL SYSTEM
2. COLD PLANE AND PAVE NB AND SB LANES FROM STA 12+17 TO 12+83
3. CONSTRUCT NB AND SB LANES FROM STA 16+21 TO 19+67
4. CONSTRUCT MGS AND END TREATMENTS
5. PLACE FINAL PAVEMENT DELINEATION

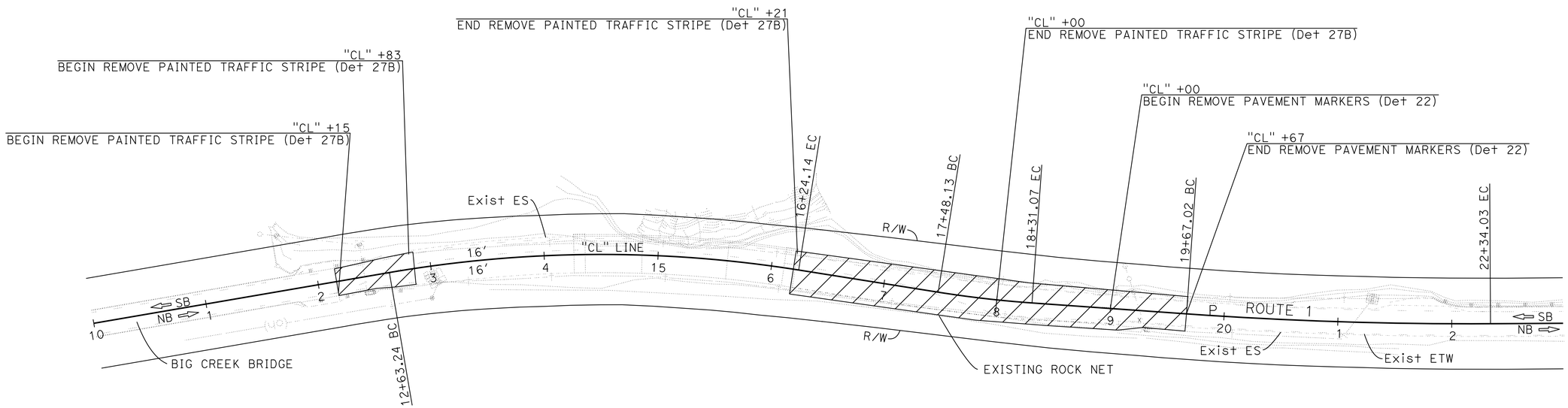

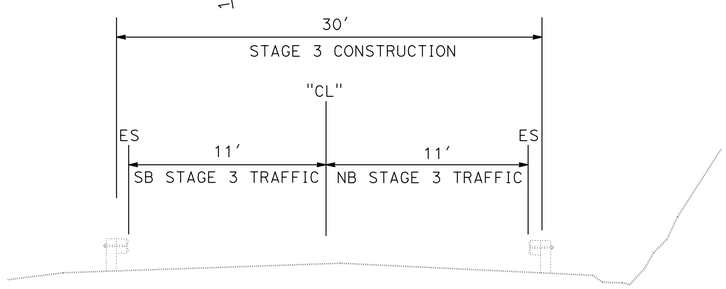

STA 12+17 TO 12+83

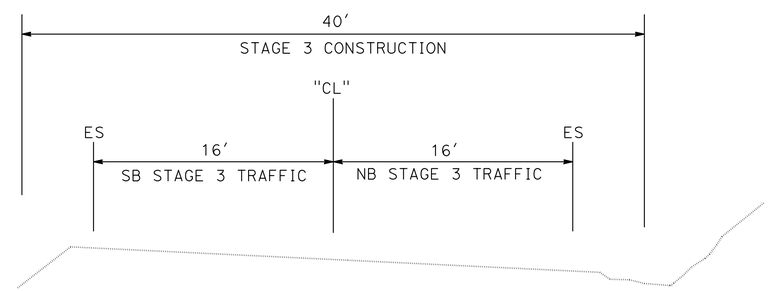

STA 16+21 TO 17+00

APPROVED FOR STAGE CONSTRUCTION AND TRAFFIC HANDLING WORK ONLY

STAGE CONSTRUCTION AND TRAFFIC HANDLING PLANS (STAGE 3)

SCALE: 1"=50'

SC-4

STATE OF CALIFORNIA - DEPARTMENT OF TRANSPORTATION
Caltrans DESIGN

FUNCTIONAL SUPERVISOR: STEVE WYATT
CALCULATED-DESIGNED BY: JOE ERWIN
CHECKED BY: BRIAN FULLER
REVISED BY
DATE REVISED

LAST REVISION 12-01-14 | DATE PLOTTED => 04-DEC-2014 | TIME PLOTTED => 11:23

Dist	COUNTY	ROUTE	POST MILES TOTAL PROJECT	SHEET No.	TOTAL SHEETS
05	Mon	1	28.0/28.4	15	104

REGISTERED CIVIL ENGINEER 12-1-14 DATE

12-1-14
PLANS APPROVAL DATE

REGISTERED PROFESSIONAL ENGINEER JOSEPH J ERWIN No. 74015 Exp. 6-30-15 CIVIL STATE OF CALIFORNIA

THE STATE OF CALIFORNIA OR ITS OFFICERS OR AGENTS SHALL NOT BE RESPONSIBLE FOR THE ACCURACY OR COMPLETENESS OF SCANNED COPIES OF THIS PLAN SHEET.

TEMPORARY PAVEMENT DELINEATION QUANTITIES

STAGE	SHEET No.	DETAIL No./ SYMBOL	REMOVE YELLOW THERMOPLASTIC TRAFFIC STRIPE (HAZARDOUS WASTE)	REMOVE THERMOPLASTIC TRAFFIC STRIPE	REMOVE PAINTED TRAFFIC STRIPE	REMOVE PAINTED PAVEMENT MARKING	REMOVE PAVEMENT MARKERS	TEMPORARY PAVEMENT MARKING (PAINT)	TEMPORARY TRAFFIC STRIPE (PAINT)	
			4" YELLOW	4" WHITE	4" WHITE				4" WHITE	4" YELLOW
			LF	LF	LF	SQFT	EA	SQFT	LF	LF
STAGE 1 - PHASE 1	SC-1	22	2760				116			
	SC-1	LIMIT LINE				12		12		
	SC-1	21								75
	SC-1	LIMIT LINE				12		12		
STAGE 1 - PHASE 2	SC-2	27B							590	
	SC-2	27B							500	
STAGE 2	SC-3	27B		68						
	SC-3	27B			67					
	SC-3	27B			79					
	SC-3	27B							490	
	SC-3	27B							590	
	SC-3	LIMIT LINE				12				
	SC-3	LIMIT LINE				12				
STAGE 3	SC-4	27B			590					
	SC-4	27B			345					
	SC-4	22					6			
TOTAL			2760	68	1081	48	122	24	2245	

DELINEATOR (CLASS 1)

STAGE	SHEET No.	FLEXIBLE POST
		EA
STAGE 1 - PHASE 2	SC-2	9
STAGE 2	SC-3	9
	TOTAL	18

TEMPORARY ALTERNATIVE CRASH CUSHION SYSTEM

STAGE	SHEET No.	Temp Alt CRASH CUSHION SYSTEM
		EA
STAGE 1 - PHASE 2	SC-2	2
STAGE 2	SC-3	2
	TOTAL	4

TEMPORARY RAILING (TYPE K) QUANTITIES

STAGE	SHEET No.	TEMPORARY RAILING (TYPE K)	RELOCATE CONCRETE BARRIER (TYPE K)	SALVAGE CONCRETE BARRIER (TYPE K)
		LF	LF	LF
STAGE 1 - PHASE 1	SC-1		280	
STAGE 1 - PHASE 2	SC-2	400		340
STAGE 2	SC-3	400		
	TOTAL	800	280	340

STATIONARY MOUNTED CONSTRUCTION AREA SIGNS

SIGN No. (X)	SIGN CODE		PANEL SIZE	SIGN MESSAGE	NUMBER OF POSTS AND SIZE	NUMBER OF SIGNS
	FEDERAL	CALIFORNIA				
C	R10-6		24" x 36"	STOP HERE ON RED	1 - 4" x 4"	2
D	W3-3		36" x 36"	SIGNAL AHEAD SYMBOL	1 - 4" x 6"	2
E	W20-4		36" x 36"	ONE LANE ROAD AHEAD	1 - 4" x 6"	2
F	W1-4L		30" x 30"	MERGE LEFT SYMBOL	1 - 4" x 4"	1
G	W13-1		24" x 24"	20 MPH	MOUNT ON W20-4 POST	2
H	W1-4R		30" x 30"	MERGE RIGHT SYMBOL	1 - 4" x 4"	1
I	W11-1		30" x 30"	"BICYCLE"	1 - 4" x 6"	2
J	W16-1		24" x 30"	SHARE THE ROAD		2

PAVEMENT STRUCTURE

STAGE	LOCATION	HMA (TYPE A)	CLASS 2 AGGREGATE BASE	(N) EMBANKMENT	ROADWAY EXCAVATION
		TON	CY	CY	CY
STAGE 1, PHASE 1	Sta 14+00 TO 19+00	45	46	6	53
STAGE 1, PHASE 2	Sta 16+21 TO 17+00	22	23	30	10
STAGE 2	Sta 16+21 TO 17+00	23	23	12	12
	TOTAL	90*	92*	48*	75*

(N) - NOT A SEPARATE PAY ITEM, FOR INFORMATION ONLY

* QUANTITY INCLUDED IN PAVEMENT STRUCTURES QUANTITIES ON SHEET Q-1

STAGE CONSTRUCTION AND TRAFFIC HANDLING QUANTITIES

SCQ-1

REVISED BY | DATE REVISED
JOE ERWIN | BRIAN FULLER
CALCULATED-DESIGNED BY | CHECKED BY
FUNCTIONAL SUPERVISOR: STEVE WYATT
STATE OF CALIFORNIA - DEPARTMENT OF TRANSPORTATION
Caltrans® DESIGN

LAST REVISION 12-01-14 | DATE PLOTTED => 04-DEC-2014 | TIME PLOTTED => 11:23

Dist	COUNTY	ROUTE	POST MILES TOTAL PROJECT	SHEET No.	TOTAL SHEETS
05	Mon	1	28.0/28.4	16	104

REGISTERED CIVIL ENGINEER 12-1-14 DATE

12-1-14
PLANS APPROVAL DATE

REGISTERED PROFESSIONAL ENGINEER JOSEPH J ERWIN No. 74015 Exp. 6-30-15 CIVIL STATE OF CALIFORNIA

THE STATE OF CALIFORNIA OR ITS OFFICERS OR AGENTS SHALL NOT BE RESPONSIBLE FOR THE ACCURACY OR COMPLETENESS OF SCANNED COPIES OF THIS PLAN SHEET.

NOTE:

FOR ACCURATE RIGHT OF WAY DATA, CONTACT RIGHT OF WAY ENGINEERING AT THE DISTRICT OFFICE

LEGEND

- XX — DETAIL No.
- DIRECTION OF TRAFFIC
- L-1 — OBJECT MARKER (TYPE L-1(CA))
- G — GUARD RAILING DELINEATOR

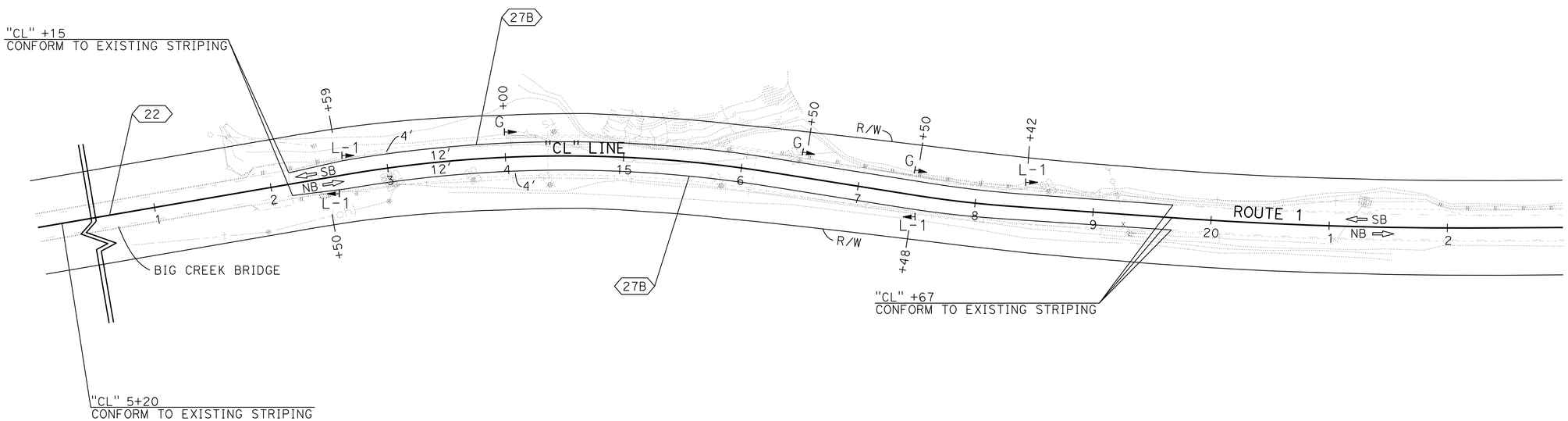

APPROVED FOR PAVEMENT DELINEATION WORK ONLY

PAVEMENT DELINEATION PLAN

SCALE: 1"=50'

PD-1

STATE OF CALIFORNIA - DEPARTMENT OF TRANSPORTATION
Caltrans
DESIGN

FUNCTIONAL SUPERVISOR: STEVE WYATT
CALCULATED-DESIGNED BY: JOE ERWIN
CHECKED BY: BRIAN FULLER
REVISED BY
DATE REVISED

LAST REVISION 12-01-14
DATE PLOTTED => 04-DEC-2014
TIME PLOTTED => 11:23

Dist	COUNTY	ROUTE	POST MILES TOTAL PROJECT	SHEET No.	TOTAL SHEETS
05	Mon	1	28.0/28.4	17	104

REGISTERED CIVIL ENGINEER 12-1-14 DATE

12-1-14
PLANS APPROVAL DATE

REGISTERED PROFESSIONAL ENGINEER JOSEPH J ERWIN No. 74015 Exp. 6-30-15 CIVIL STATE OF CALIFORNIA

THE STATE OF CALIFORNIA OR ITS OFFICERS OR AGENTS SHALL NOT BE RESPONSIBLE FOR THE ACCURACY OR COMPLETENESS OF SCANNED COPIES OF THIS PLAN SHEET.

PAVEMENT STRUCTURE

LOCATION	HOT MIX ASPHALT (TYPE A)	CLASS 2 AGGREGATE BASE (CY)	(N) EMBANKMENT	ROADWAY EXCAVATION	COLD PLANE AC PAVEMENT	TACK COAT
	TON	CY	CY	CY	SQYD	TON
Sta 12+17 TO 12+83	49		3		187	0.1
Sta 12+83 TO 14+36	132	169	57	331		0.1
Sta 14+36 TO 16+11		24	7	149		
Sta 16+11 TO 19+67	298	380	186	243		0.3
FROM SCQ-1	90	92	48	75		
HOT MIX ASPHALT DIKE	6					
SAFETY EDGE	2					
TOTAL	577	665	301	798	187	0.5

(N) - NOT A SEPARATE PAY ITEM, FOR INFORMATION ONLY

SAFETY EDGE

LOCATION		(N) TOTAL THICKNESS OF SAFETY EDGE	(N) LENGTH SAFETY EDGE	* HOT MIX ASPHALT (TYPE A)
STATION	L+	FT	LF	TON
"CL" 12+83 TO 14+00	X	0.40	117	2
SUBTOTAL				2

(N) - NOT A SEPARATE PAY ITEM, FOR INFORMATION ONLY
* - QUANTITY INCLUDED IN PAVEMENT STRUCTURE TABLE

MIDWEST GUARDRAIL AND END TREATMENTS

LOCATION				TRANSITION RAILING (TYPE WB-31)	MIDWEST GUARDRAIL SYSTEM (8' POST)	CRASH CUSHION (TYPE TAU-II)	ALTERNATIVE IN-LINE TERMINAL SYSTEM
SHEET	STATION	L+	R+	EA	LF	EA	EA
L-1	14+01.50	X				1	
L-1	16+20.86	X		1			
L-1	16+45.81 TO 17+91.30	X			146		1
TOTAL				1	146	1	1

PLACE HOT MIX ASPHALT DIKE

LOCATION				(TYPE A)	(TYPE E)	(TYPE F)	HOT MIX ASPHALT (TYPE A)
SHEET	STATION	L+	R+	LF	LF	LF	TON
L-1	12+50 TO 13+30		X	80			2
L-1	12+50 TO 13+30	X				68	1
L-1	17+48 TO 18+50		X		102		3
TOTAL				75	102	68	6*

* QUANTITY INCLUDED IN PAVEMENT STRUCTURE QUANTITIES SUMMARY

PAVEMENT DELINEATION

SHEET	LOCATION	DIRECTION	DETAIL NUMBER	THERMOPLASTIC TRAFFIC STRIPE (SPRAYABLE)		PAVEMENT MARKER (RETROREFLECTIVE)	OBJECT MARKER	GUARD RAILING DELINEATOR
							TYPE L-1	
				4" WHITE	4" YELLOW	TYPE D	OM2-2V	
				LF		EA	EA	EA
PD-1	5+20 TO 19+67		22		1447	124		
PD-1	12+17 TO 19+67, L+		27B	752				
PD-1	12+17 TO 19+67, R+		27B	752				
PD-1	13+50, L+	FSBT						
PD-1	14+50 TO 17+50, L+	FSBT						3
PD-1	12+50, R+	FNBT					1	
PD-1	12+59, L+	FSBT					1	
PD-1	17+48, R+	FNBT					1	
PD-1	18+42, L+	FSBT					1	
SUBTOTAL				1504	1447	124	4	3
SUBTOTAL FROM SHEET SCQ-1								
TOTAL				2951		124	4	3

TEMPORARY WATER POLLUTION CONTROL

LOCATION	TEMPORARY DRAINAGE INLET PROTECTION	TEMPORARY CHECK DAM
	EA	LF
Sta 12+17 TO 19+67		300
Sta 12+41, L+	1	
Sta 12+41, R+	1	
Sta 13+05	1	
Sta 13+25	1	
Sta 19+30	1	
TOTAL	5	300

SUMMARY OF QUANTITIES

Q-1

STATE OF CALIFORNIA - DEPARTMENT OF TRANSPORTATION
Caltrans DESIGN

FUNCTIONAL SUPERVISOR: STEVE WYATT
CALCULATED-DESIGNED BY: JOE ERWIN
CHECKED BY: BRIAN FULLER
REVISED BY
DATE REVISED

LAST REVISION 12-01-14
DATE PLOTTED => 04-DEC-2014
TIME PLOTTED => 11:23

Dist	COUNTY	ROUTE	POST MILES TOTAL PROJECT	SHEET No.	TOTAL SHEETS
05	Mon	1	28.0/28.4	18	104

LICENSED LANDSCAPE ARCHITECT

12-1-14

PLANS APPROVAL DATE

LICENSED LANDSCAPE ARCHITECT
Peter New
Signature
3-31-15
Renewal Date
12-1-14
Date
Peter New No. 1068 CALIFORNIA

THE STATE OF CALIFORNIA OR ITS OFFICERS OR AGENTS SHALL NOT BE RESPONSIBLE FOR THE ACCURACY OR COMPLETENESS OF SCANNED COPIES OF THIS PLAN SHEET.

NOTES:

1. FOR ACCURATE RIGHT OF WAY DATA, CONTACT RIGHT OF WAY ENGINEERING AT THE DISTRICT OFFICE

LEGEND:

- ESA — ENVIRONMENTALLY SENSITIVE AREA
- WOOD BENCH
- BOULDER

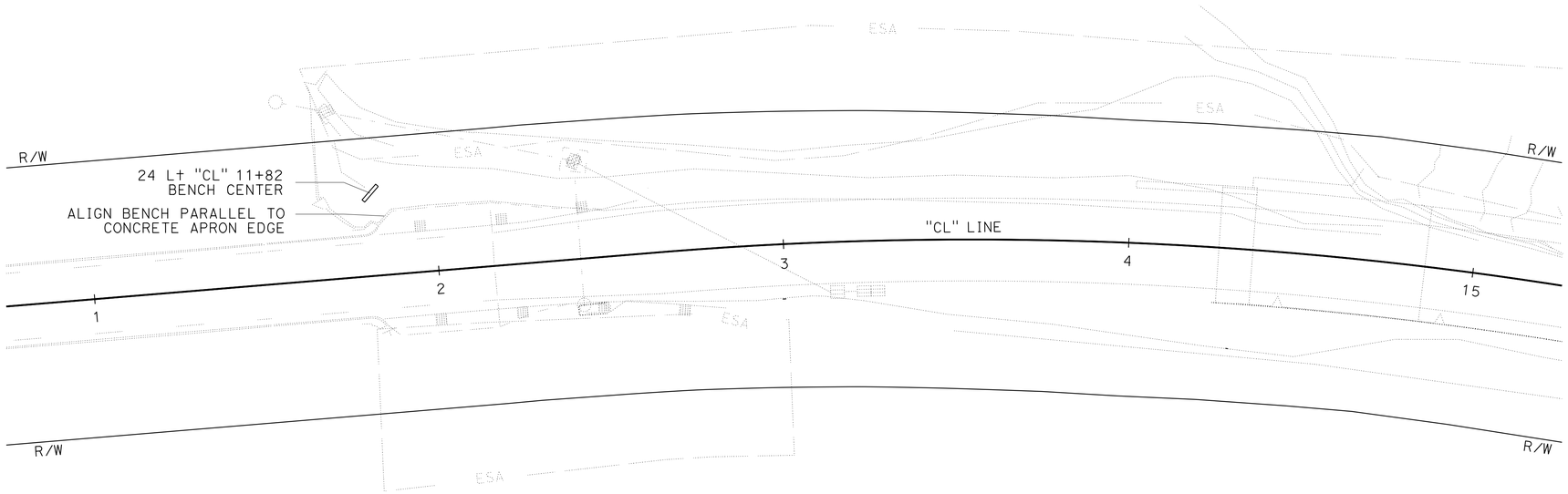

BENCH LAYOUT

Sta 11+82

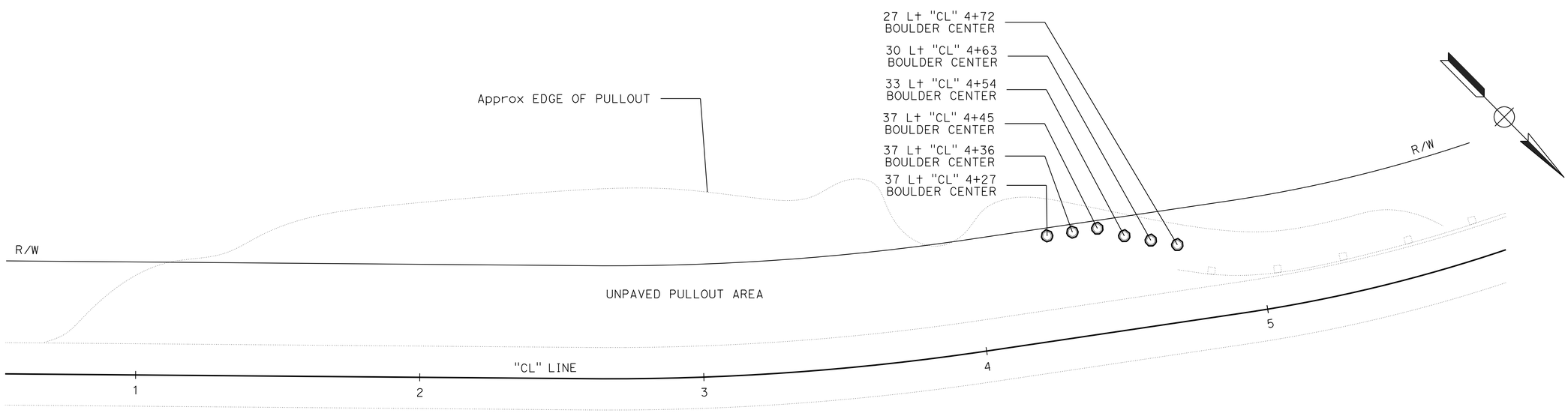

BOULDER LAYOUT

Sta 4+27 TO 4+72

SCALE: 1"=20'

LANDSCAPE LAYOUT
LL-1

STATE OF CALIFORNIA - DEPARTMENT OF TRANSPORTATION
Caltrans® LANDSCAPE ARCHITECTURE

SENIOR LANDSCAPE ARCHITECT: DENNIS REEVES
CALCULATED-DESIGNED BY: PETER NEW
CHECKED BY: JO JACKSON
REVISED BY
DATE REVISED

LAST REVISION 12-01-14
DATE PLOTTED => 04-DEC-2014
TIME PLOTTED => 11:23

Dist	COUNTY	ROUTE	POST MILES TOTAL PROJECT	SHEET No.	TOTAL SHEETS
05	Mon	1	28.0/28.4	19	104

LICENSED LANDSCAPE ARCHITECT

12-1-14

PLANS APPROVAL DATE

LICENSED LANDSCAPE ARCHITECT — Peter New — Reg. No. 3062 — Signature — 3-31-15 Renewal Date — 12-1-14 Date — STATE OF CALIFORNIA

THE STATE OF CALIFORNIA OR ITS OFFICERS OR AGENTS SHALL NOT BE RESPONSIBLE FOR THE ACCURACY OR COMPLETENESS OF SCANNED COPIES OF THIS PLAN SHEET.

NOTES:

1. REDWOOD LUMBER IS DEPARTMENT FURNISHED.
2. BOULDERS ARE DEPARTMENT FURNISHED.

LEGEND

EQ - EQUAL

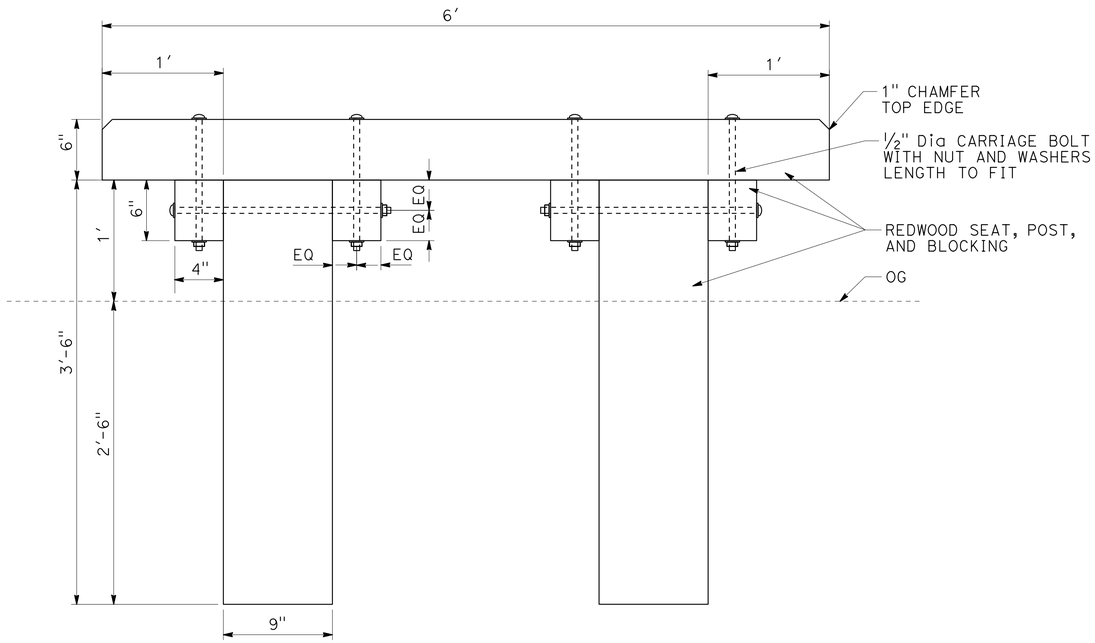

FRONT

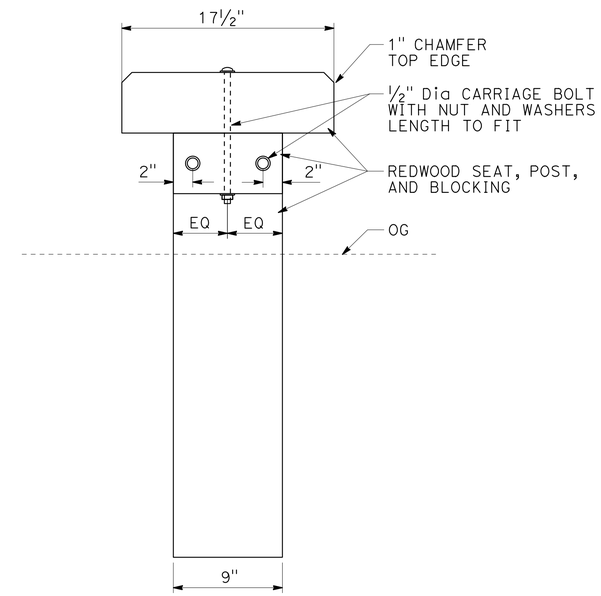

END

ELEVATION

WOOD BENCH

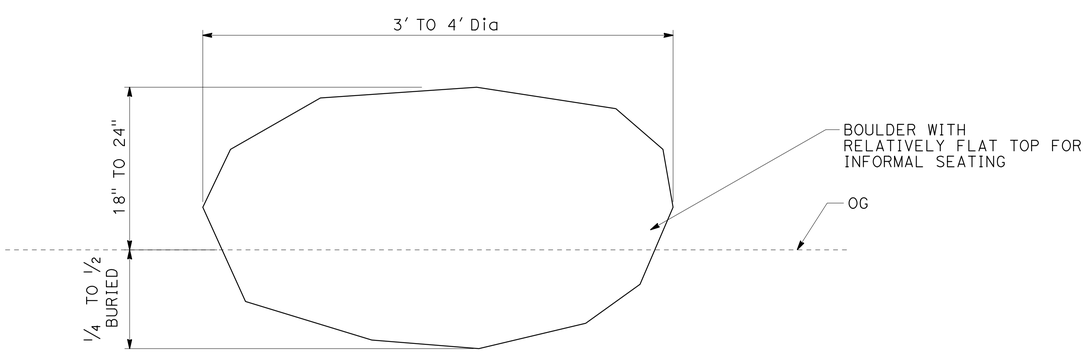

ELEVATION

BOULDER

LANDSCAPE QUANTITIES

LOCATION	WOOD BENCH	BOULDER
	EA	EA
Sta 4+27 TO 4+72, Lt		6
Sta 11+82, Lt	1	
TOTAL	1	6

NO SCALE

LANDSCAPE DETAILS AND QUANTITIES

LD-1

STATE OF CALIFORNIA - DEPARTMENT OF TRANSPORTATION

Caltrans® LANDSCAPE ARCHITECTURE

SENIOR LANDSCAPE ARCHITECT: DENNIS REEVES

CALCULATED-DESIGNED BY: PETER NEW

CHECKED BY: JO JACKSON

REVISED BY / DATE REVISED

LAST REVISION 11-24-14

DATE PLOTTED => 04-DEC-2014

TIME PLOTTED => 11:23

Dist	COUNTY	ROUTE	POST MILES TOTAL PROJECT	SHEET No.	TOTAL SHEETS
05	Mon	1	28.0/28.4	20	104

Xavier Alfaro 12-1-14
REGISTERED ELECTRICAL ENGINEER DATE

12-1-14
PLANS APPROVAL DATE

REGISTERED PROFESSIONAL ENGINEER XAVIER I. ALFARO No. E17488 Exp. 6-30-15 ELECTRICAL STATE OF CALIFORNIA

THE STATE OF CALIFORNIA OR ITS OFFICERS OR AGENTS SHALL NOT BE RESPONSIBLE FOR THE ACCURACY OR COMPLETENESS OF SCANNED COPIES OF THIS PLAN SHEET.

LEGEND: (FOR THIS SHEET ONLY)

1 RS Exist STORAGE CONTAINER AND ALL TRAFFIC SIGNAL CONTROLLER EQUIPMENT.

2 RS Exist Sig AND Ltg EQUIPMENT, RC Exist WOOD POLE.

3 RS Sig EQUIPMENT, RC Exist WOOD POLE.

4 RS FB EQUIPMENT, RC Exist WOOD POLE.

5 RS Exist SIGN Ltg FIXTURE, RC Exist WOOD POLE.

6 RR Exist WOOD POLES AND Exist PB's AS NEEDED.

7 AB Exist LOOP DETECTORS.

8 RS Exist LIQUID PROPANE TANK.

NOTES:

1. FOR ACCURATE RIGHT OF WAY AND ACCESS DATA, CONTACT RIGHT OF WAY ENGINEERING AT THE DISTRICT OFFICE.
2. THE ENGINEER MUST APRROVE THE REUSE OF ALL WOOD POLES DESIGNATED FOR REMOVAL, PRIOR TO REUSE.

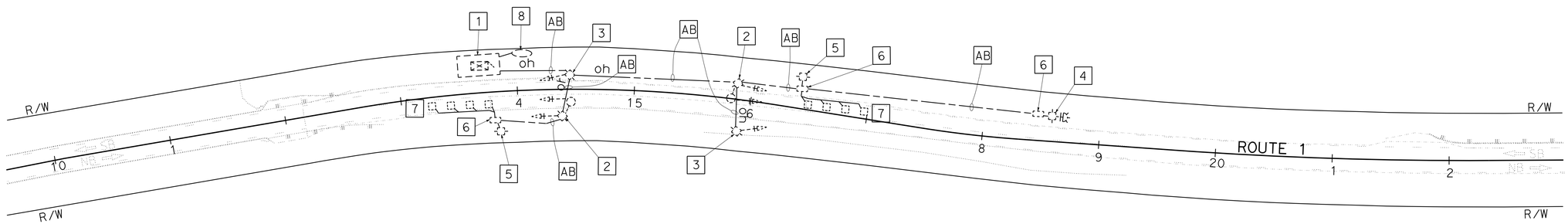

REMOVE EXISTING TEMPORARY SIGNAL SYSTEM

E-1

APPROVED FOR ELECTRICAL WORK ONLY

SCALE: 1"=50'

STATE OF CALIFORNIA - DEPARTMENT OF TRANSPORTATION
Caltrans® ELECTRICAL DESIGN

FUNCTIONAL SUPERVISOR: ALI BAKHDOUD
CALCULATED-DESIGNED BY: XAVIER ALFARO
CHECKED BY: PAUL MATOS
REVISED BY
DATE REVISED

LAST REVISION 12-01-14
DATE PLOTTED => 04-DEC-2014
TIME PLOTTED => 13:16

Dist	COUNTY	ROUTE	POST MILES TOTAL PROJECT	SHEET No.	TOTAL SHEETS
05	Mon	1	28.0/28.4	21	104

REGISTERED ELECTRICAL ENGINEER 12-1-14 DATE

12-1-14
PLANS APPROVAL DATE

REGISTERED PROFESSIONAL ENGINEER XAVIER I. ALFARO No. E17488 Exp. 6-30-15 ELECTRICAL STATE OF CALIFORNIA

THE STATE OF CALIFORNIA OR ITS OFFICERS OR AGENTS SHALL NOT BE RESPONSIBLE FOR THE ACCURACY OR COMPLETENESS OF SCANNED COPIES OF THIS PLAN SHEET.

LEGEND: (FOR THIS SHEET ONLY)

1. TEMPORARY WOOD POLE SEE FB DETAIL A ON SHEET E-3.
2. TEMPORARY WOOD POLE, SEE DETAIL D ON SHEET E-3.
3. SIZE OF FUEL TANK MUST BE DETERMINED BY THE CONTRACTOR AND APPROVED BY THE ENGINEER. LOCATION OF TANK WILL BE DETERMINED BYTHE ENGINEER.
4. FOR LOOP DETECTOR SPLICING SEE DETAIL A.
5. TEMPORARY WOOD POLE SERVICE ENCLOSURE. SEE DETAIL C ON E-3 AND WIRING DIAGRAM DETAIL I ON SHEET E-5.
6. INSTALL DEPARTMENT-FURNISHED MODEL 2070E CONTROLLER ASSEMBLY. FURNISH AND INSTALL UPS AND CONTROLLER CABINET FOUNDATION WITHOUT PCC PAD.
7. TEMPORARY WOOD POLE SIGN LIGHTING. SEE DETAIL B ON SHEET E-3.
8. TEMPORARY WOOD POLE SIGNAL ON SPAN WIRE, SEE DETAIL F ON SHEET E-4.
9. TEMPORARY WOOD POLE SIGNAL. SEE DETAIL E ON SHEET E-4.
10. SECURE SURFACE MOUNTED CONDUIT TO EMBANKMENT AT 10′ MAX INTERVALS AS DIRECTED BY THE ENGINEER.
11. STRAP TEMPORARY CONDUIT TO BRIDGE RAILING SEE DETAIL G AND DETAIL H ON SHEET E-4.

NOTES:

1. Ø4 LOOP DETECTORS MUST HAVE 5 TURNS.
2. FOR ACCURATE RIGHT OF WAY AND ACCESS DATA, CONTACT RIGHT OF WAY ENGINEERING AT THE DISTRICT OFFICE.
3. OVERHEAD CONDUCTORS MUST BE TIED TO MESSENGER WIRE AT 3′ Max INTERVALS WITH SELF-CLINCHING NYLON TIES.
4. ALL PULL BOXES MUST BE No. 3½ UNLESS OTHERWISE NOTED.

SYMBOLS:

- (G) GENERATOR SYSTEM
- (FUEL) FUEL TANK
- —×——×— TEMPORARY CL-6 FENCE WITH GATE
- ——F—— FUEL LINE
- OH — — MESSENGER WIRE WITH CONDUCTORS AS NOTED

ABBREVIATIONS:

ATS	AUTOMATIC TRANSFER SWITCH
UPS	UBITERRUPIBLE POWER SUPPLY
OH	OVERHEAD MESSENGER WIRE

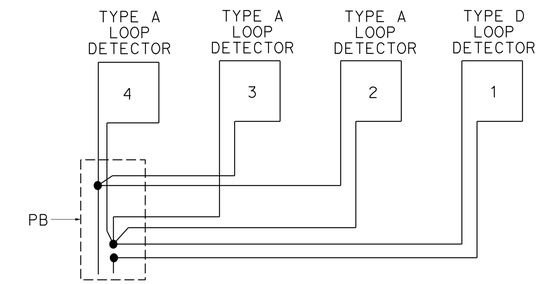

DETAIL A
TYPICAL LOOP DETECTOR SPLICING

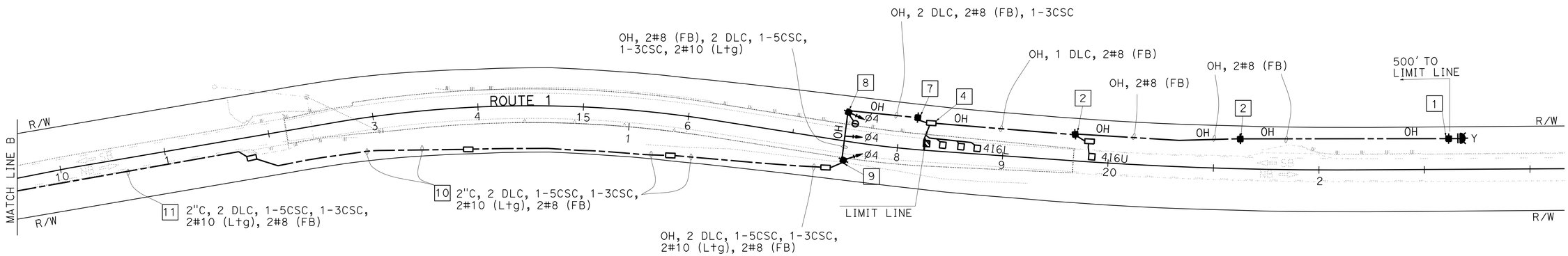

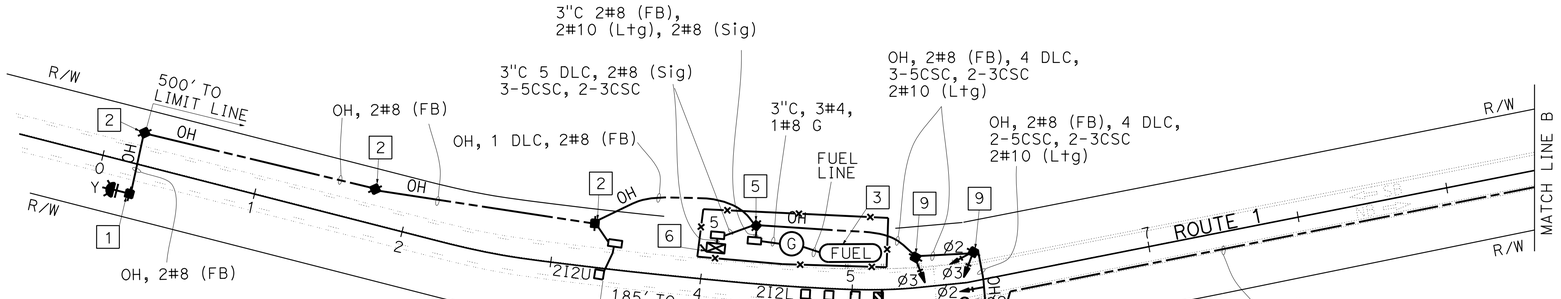

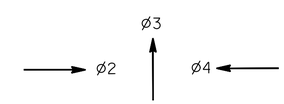

PHASE DIAGRAM
STEADY DEMAND SEQUENCE

APPROVED FOR ELECTRICAL WORK ONLY

TEMPORARY SIGNAL SYSTEM
E-2

SCALE: 1"=50′

STATE OF CALIFORNIA - DEPARTMENT OF TRANSPORTATION
Caltrans® ELECTRICAL DESIGN

FUNCTIONAL SUPERVISOR: ALI BAKHDOUD
CALCULATED-DESIGNED BY: XAVIER ALFARO
CHECKED BY: PAUL MATOS
REVISED BY
DATE REVISED

LAST REVISION 12-01-14 | DATE PLOTTED => 04-DEC-2014 | TIME PLOTTED => 13:16

Dist	COUNTY	ROUTE	POST MILES TOTAL PROJECT	SHEET No.	TOTAL SHEETS
05	Mon	1	28.0/28.4	22	104

Xavier Alfaro 12-1-14
REGISTERED ELECTRICAL ENGINEER DATE

12-1-14
PLANS APPROVAL DATE

REGISTERED PROFESSIONAL ENGINEER XAVIER I. ALFARO No. E17488 Exp. 6-30-15 ELECTRICAL STATE OF CALIFORNIA

THE STATE OF CALIFORNIA OR ITS OFFICERS OR AGENTS SHALL NOT BE RESPONSIBLE FOR THE ACCURACY OR COMPLETENESS OF SCANNED COPIES OF THIS PLAN SHEET.

NOTES:

1. SEE SES SHEETS FOR TEMPORARY WOOD POLE DETAILS NOT SHOWN.
2. SEE SIGN SHEETS FOR SIGN DETAILS.

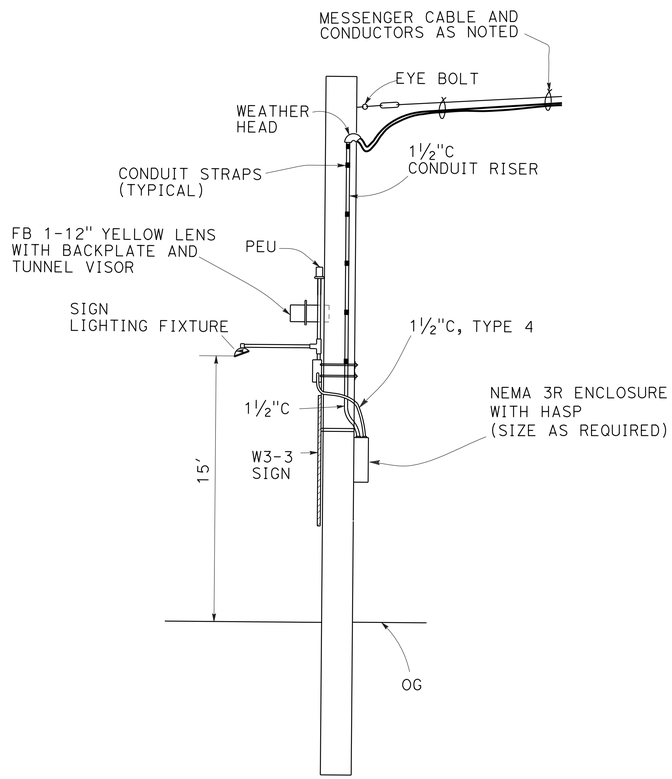

DETAIL A

TEMPORARY WOOD POLE FB

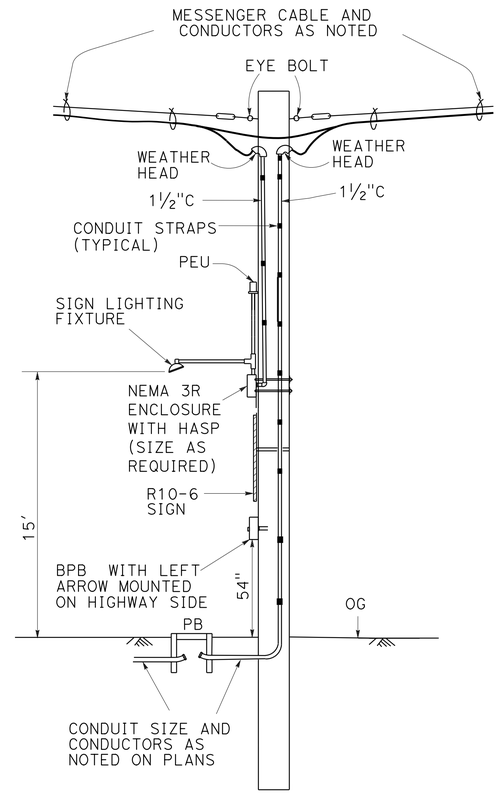

DETAIL B

TEMPORARY WOOD POLE SIGN LIGHTING

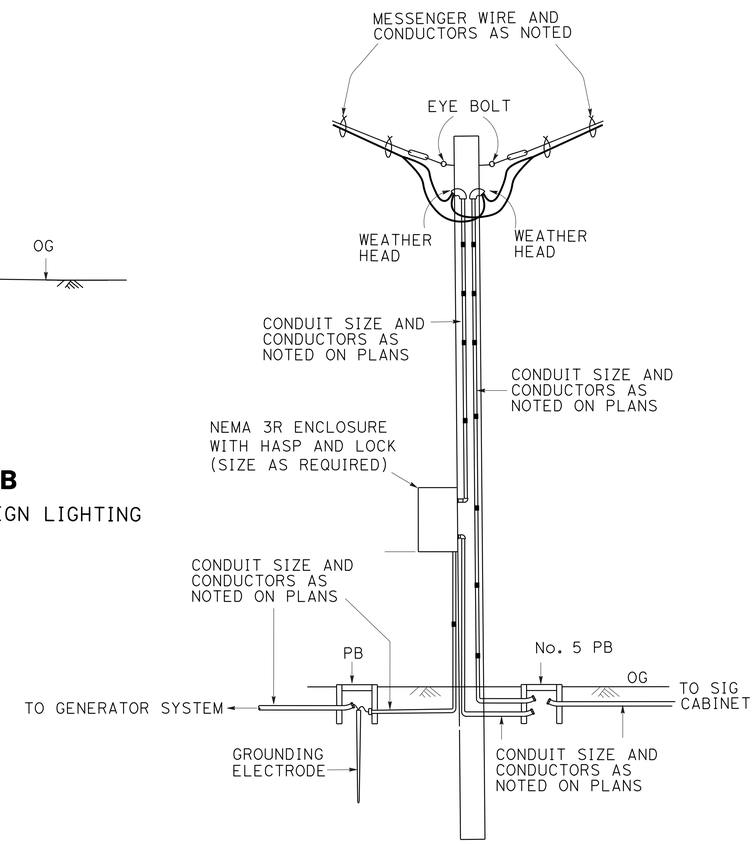

DETAIL C

TEMPORARY WOOD POLE SERVICE ENCLOSURE

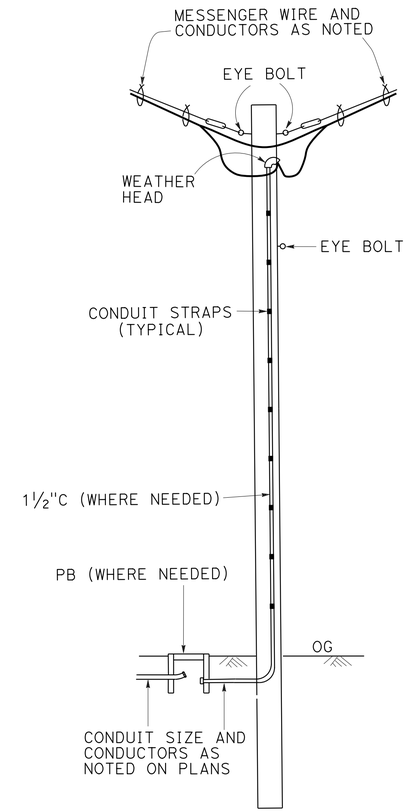

DETAIL D

TEMPORARY WOOD POLE

TEMPORARY SIGNAL SYSTEM

NO SCALE

E-3

REVISED BY	DATE REVISED

CALCULATED-DESIGNED BY	CHECKED BY
XAVIER ALFARO	PAUL MATOS

FUNCTIONAL SUPERVISOR: ALI BAKHDOUD

STATE OF CALIFORNIA - DEPARTMENT OF TRANSPORTATION

Caltrans® **ELECTRICAL DESIGN**

LAST REVISION 12-01-14 | DATE PLOTTED => 04-DEC-2014 | TIME PLOTTED => 13:16

Dist	COUNTY	ROUTE	POST MILES TOTAL PROJECT	SHEET No.	TOTAL SHEETS
05	Mon	1	28.0/28.4	23	104

REGISTERED ELECTRICAL ENGINEER 12-1-14 DATE

12-1-14
PLANS APPROVAL DATE

REGISTERED PROFESSIONAL ENGINEER XAVIER I. ALFARO No. E17488 Exp. 6-30-15 ELECTRICAL STATE OF CALIFORNIA

THE STATE OF CALIFORNIA OR ITS OFFICERS OR AGENTS SHALL NOT BE RESPONSIBLE FOR THE ACCURACY OR COMPLETENESS OF SCANNED COPIES OF THIS PLAN SHEET.

LEGEND: (THIS SHEET ONLY)

1 ULTRAVIOLET RESISTANT CABLE TIES MUST BE PLACED EVERY 16".

NOTE:

1. SEE SES SHEETS FOR TEMPORARY WOOD POLE DETAILS NOT SHOWN.

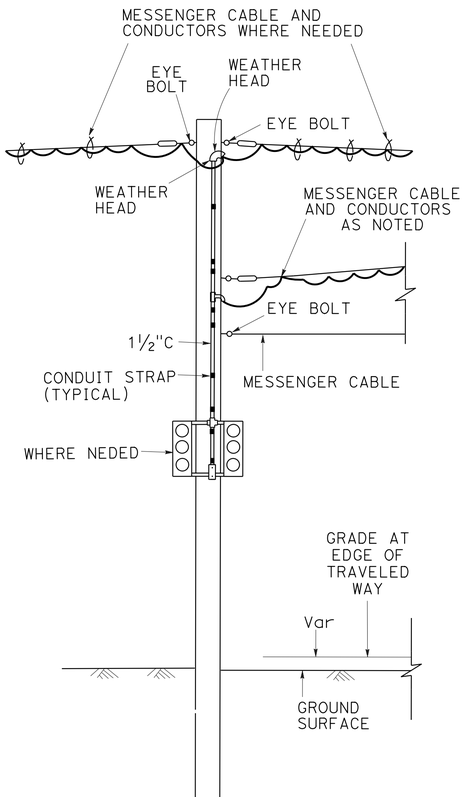

DETAIL E
TEMPORARY WOOD POLE SIGNAL

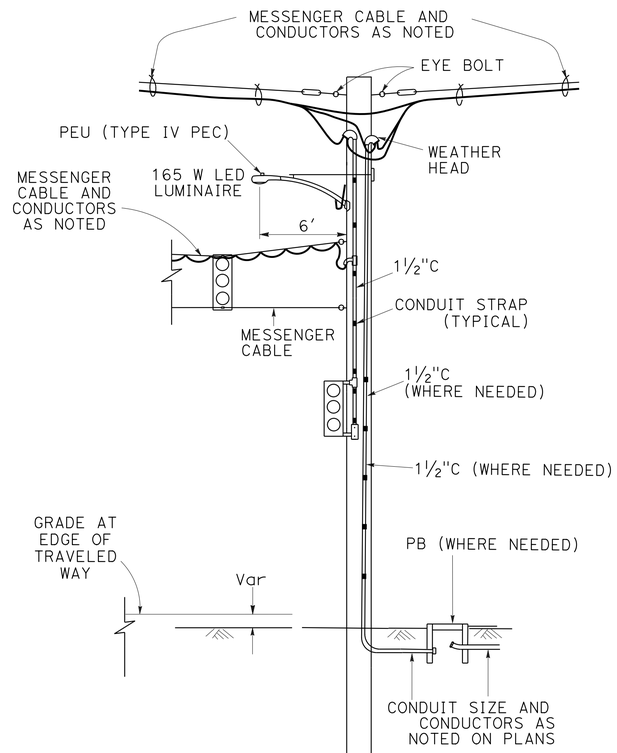

DETAIL F
TEMPORARY WOOD POLE SIGNAL ON SPAN WIRE

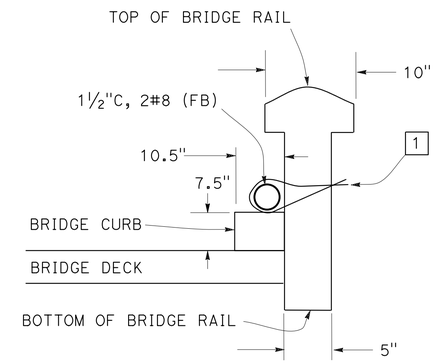

DETAIL G
BRIDGE RAIL CROSS SECTIONAL VIEW

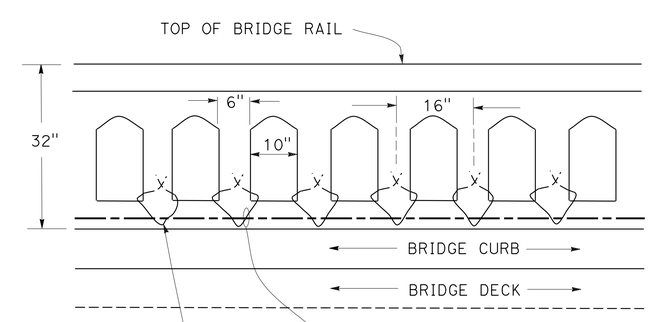

DETAIL H
BRIDGE RAIL ELEVATION VIEW

TEMPORARY SIGNAL SYSTEM
E-4

NO SCALE

STATE OF CALIFORNIA - DEPARTMENT OF TRANSPORTATION
Caltrans® ELECTRICAL DESIGN

FUNCTIONAL SUPERVISOR: ALI BAKHDOUD
CALCULATED-DESIGNED BY: XAVIER ALFARO
CHECKED BY: PAUL MATOS
REVISED BY
DATE REVISED

LAST REVISION 12-01-14 | DATE PLOTTED => 04-DEC-2014 | TIME PLOTTED => 13:17

Dist	COUNTY	ROUTE	POST MILES TOTAL PROJECT	SHEET No.	TOTAL SHEETS
05	Mon	1	28.0/28.4	24	104

REGISTERED ELECTRICAL ENGINEER 12-1-14 DATE

12-1-14
PLANS APPROVAL DATE

REGISTERED PROFESSIONAL ENGINEER XAVIER I. ALFARO No. E17488 Exp. 6-30-15 ELECTRICAL STATE OF CALIFORNIA

THE STATE OF CALIFORNIA OR ITS OFFICERS OR AGENTS SHALL NOT BE RESPONSIBLE FOR THE ACCURACY OR COMPLETENESS OF SCANNED COPIES OF THIS PLAN SHEET.

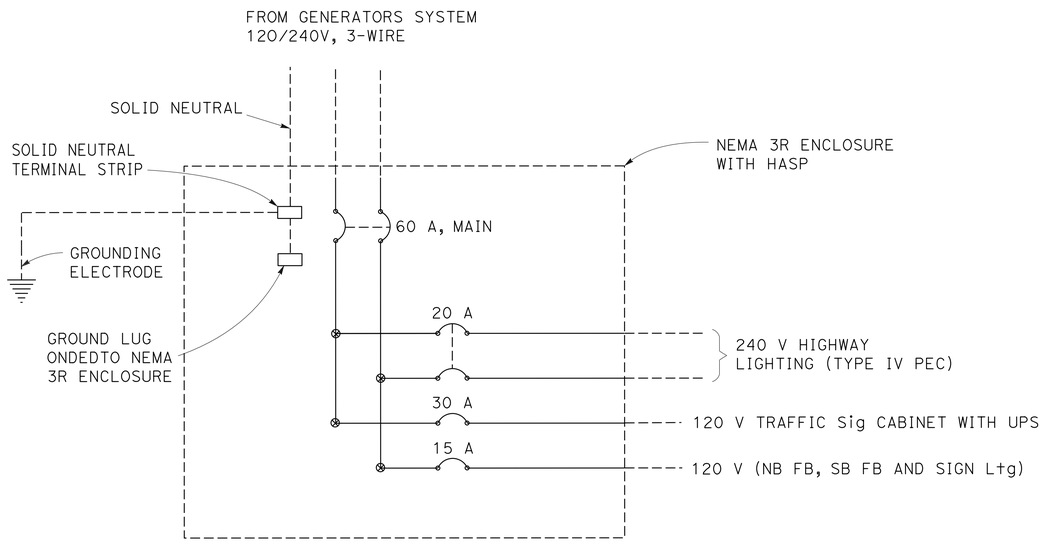

DETAIL I
WIRING DIAGRAM

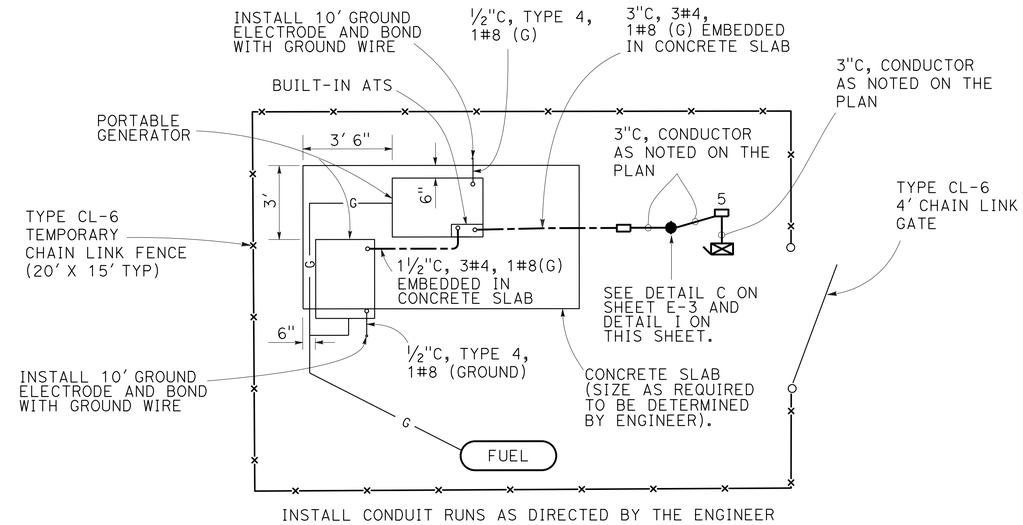

DETAIL J
GENERATOR SYSTEM

APPROVED FOR ELECTRICAL WORK ONLY

NO SCALE

ELECTRICAL DETAILS
E-5

STATE OF CALIFORNIA - DEPARTMENT OF TRANSPORTATION
Caltrans® ELECTRICAL DESIGN

FUNCTIONAL SUPERVISOR: ALI BAKHDOUD
CALCULATED-DESIGNED BY: XAVIER ALFARO
CHECKED BY: PAUL MATOS
REVISED BY
DATE REVISED

LAST REVISION 12-01-14
DATE PLOTTED => 04-DEC-2014
TIME PLOTTED => 13:17

Dist	COUNTY	ROUTE	POST MILES TOTAL PROJECT	SHEET No.	TOTAL SHEETS
05	Mon	1	28.0/28.4	25	104

REGISTERED ELECTRICAL ENGINEER DATE 12-1-14

12-1-14
PLANS APPROVAL DATE

REGISTERED PROFESSIONAL ENGINEER XAVIER I. ALFARO No. E17488 Exp. 6-30-15 ELECTRICAL STATE OF CALIFORNIA

THE STATE OF CALIFORNIA OR ITS OFFICERS OR AGENTS SHALL NOT BE RESPONSIBLE FOR THE ACCURACY OR COMPLETENESS OF SCANNED COPIES OF THIS PLAN SHEET.

NOTE:

THE QUANTITIES SHOWN IN TABLES ARE NOT SEPARATE PAY ITEMS, FOR INFORMATION ONLY.
FOR COMPLETE ELECTRICAL WORK, SEE ELECTRICAL PLAN SHEETS.

TEMPORARY SIGNAL SYSTEM

SHEET No.	2"C, TYPE 3	3"C, TYPE 3	No. 8 CONDUCTORS	No. 4 CONDUCTORS	MESSENGER WIRE	5CSC	3CSC	DLC	No. 8 (G) CONDUCTOR	CHAIN LINK FENCE TYPE CL-6)
	LF									
E-2	600	50	4500	200	1500	2000	2000	4000	3000	70

TEMPORARY SIGNAL SYSTEM

SHEET No.	TEMPORARY WOOD POLE SIGNAL ON SPAN WIRE	No. 3½ PB	No. 5 PB	TYPE A LOOP DETECTOR	TYPE D LOOP DETECTOR	GENERATOR SYSTEM	CONTROLLER CABINET FOUNDATION	UPS
	EA							
E-2	2	10	1	9	2	1	1	1

TEMPORARY SIGNAL SYSTEM

SHEET No.	TEMPORARY WOOD POLE SERVICE ENCLOSURE	TEMPORARY WOOD POLE SIGNAL	TEMPORARY WOOD POLE FB	TEMPORARY WOOD POLE SIGN LIGHTING	TEMPORARY WOOD POLE	CHAIN LINK GATE TYPE CL-6)
	EA					
E-2	1	3	2	2	5	70

ELECTRICAL QUANTITY
E-6

REVISED BY | DATE REVISED
XAVIER ALFARO | PAUL MATOS
CALCULATED-DESIGNED BY | CHECKED BY
FUNCTIONAL SUPERVISOR | ALI BAKHDOUD
STATE OF CALIFORNIA - DEPARTMENT OF TRANSPORTATION
Caltrans® ELECTRICAL DESIGN

LAST REVISION 12-01-14 | DATE PLOTTED => 04-DEC-2014 TIME PLOTTED => 13:17

Dist	COUNTY	ROUTE	POST MILES TOTAL PROJECT	SHEET No.	TOTAL SHEETS
05	Mon	1	28.0/28.4	26	104

REGISTERED CIVIL ENGINEER 12-1-14 DATE

12-1-14
PLANS APPROVAL DATE

REGISTERED PROFESSIONAL ENGINEER JOSEPH J ERWIN No. 74015 Exp. 6-30-15 CIVIL STATE OF CALIFORNIA

THE STATE OF CALIFORNIA OR ITS OFFICERS OR AGENTS SHALL NOT BE RESPONSIBLE FOR THE ACCURACY OR COMPLETENESS OF SCANNED COPIES OF THIS PLAN SHEET.

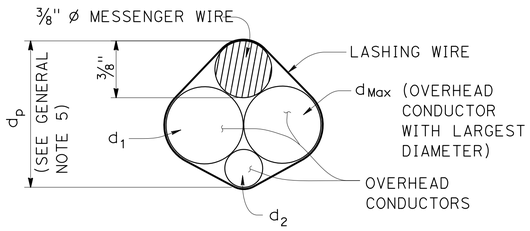

$d_p = 3/8" + d_{Max} + 0.30 * (d_1 + d_2 + ... d_n)$

PROJECTED DEPTH OF OVERHEAD BUNDLE, (d_p)

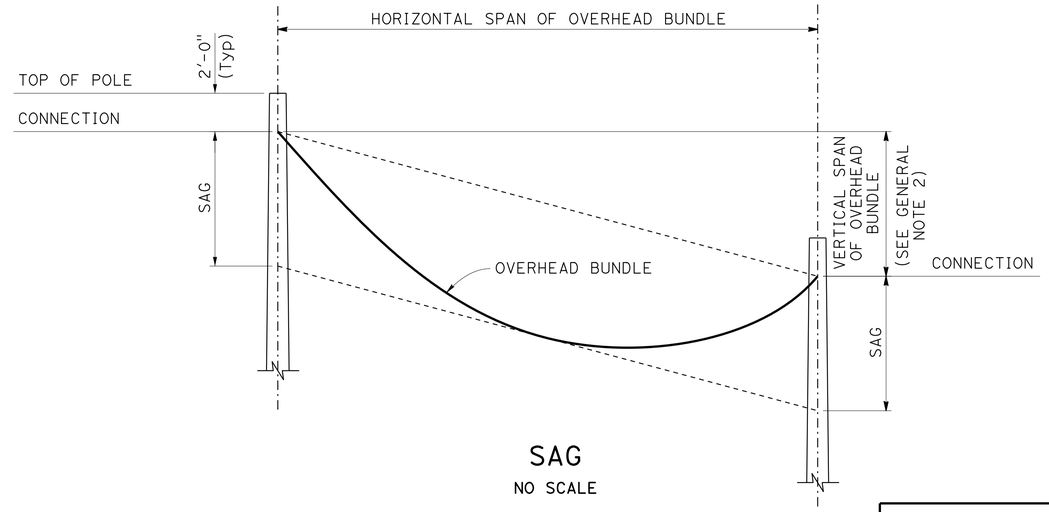

SAG

NO SCALE

Design: AASHTO Standard Specifications for Structural Supports for Highway Signs, Luminaires and Traffic Signals, Fifth Edition (LTS-5).

GROUP LOAD COMBINATIONS:

I Dead Load
II Dead Load + Wind Load
III Dead Load + 0.5 (Wind Load) + Ice Load
IV Fatigue: Not used

LOADING:

Wind Loading: 100 mph (3-second gust)
Wind Recurrence Interval: 10 years
Combined height, exposure, and elevated terrain factor = 1.05 (Exposure C, structure is not located on or over the top half of a ridge, hill, or escarpment)

Ice Loading: 3.0 psf on surfaces, 0.60 in radial thickness of ice at a unit weight of 60 pcf on overhead bundles

BASIC DESIGN VALUES:

Timber Poles: Fb = 1850 psi
Fv = 110 psi
Fcp = 230 psi
Fc = 950 psi
E = 1500 x 10^3 psi

DESIGN WIRE BREAKING STRENGTHS:

ASTM A475, Utilities Grade, 7 strand modified by termination efficiency factor of 0.8

FOUNDATION DESIGN NOTES:

1. Pole embedment depth design is based on Broms' approximate procedure as described in Article 13.6 of AASHTO LTS-5.

2. Embedment depth is calculated based on following soil parameters,
Cohesive Soil:
Shear strength of soil c = 1500 psf.
Cohesionless Soil:
Ø = 30 deg, γ = 120 pcf.
Soil assumed to be unsaturated.

3. An overload factor of 2.0 and an undercapacity factor of 0.7 were used for safety factor of 2.86.

4. Allowable vertical bearing pressure at the end bearing of poles is 3000 psf at 6 feet or more embedment.

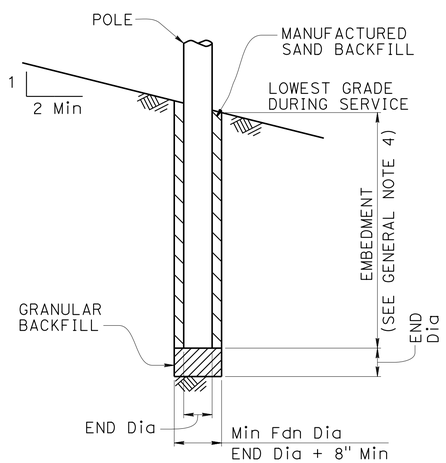

POLE FOUNDATION

NOTES:

1. The messenger wire and any combination of overhead conductors must not exceed either a self weight of 3.0 lb/ft or the maximun d_p.

2. The maximum vertical span is 10% of the horizontal span.

3. For poles with adjacent unbalanced horizontal spans, the shortest horizontal span must be at least 50% of the largest horizontal span.

4. Add 2'-0" for slopes above 1V:4H.

5. For a pole supporting multiple spans, calculate d_p for each span and use the largest value.

6. Do not exceed the attachments shown.

DIAMETERS AND SELF WEIGHT OF OVERHEAD CONDUCTORS

CONDUCTOR OR CABLE TYPE	DIAMETER d (in)	WEIGHT w (plf)
3 CONDUCTOR SIGNAL CABLE (3CSC)	0.400	0.0980
5 CONDUCTOR SIGNAL CABLE (5CSC)	0.500	0.1560
9 CONDUCTOR SIGNAL CABLE (9CSC)	0.650	0.2760
12 CONDUCTOR SIGNAL CABLE (12CSC)	0.800	0.3970
28 CONDUCTOR SIGNAL CABLE (28CSC)	0.900	0.6490
1-#14	0.166	0.0235
1-#12	0.185	0.0330
1-#10	0.210	0.0476
1-#8	0.271	0.0774
1-#6	0.310	0.1130
1-#4	0.359	0.1690
1-#3	0.388	0.2080
1-#2	0.420	0.2560
1-#1	0.498	0.3340
6-CONDUCTOR SIGNAL INTERCONNECT CABLE (SIC)	0.350	0.0860
12-CONDUCTOR SIGNAL INTERCONNECT CABLE (SIC)	0.500	0.1440
DETECTOR LEAD-IN CABLE (DLC)	0.310	0.0440
12 to 48-STRAND FIBER OPTIC CABLE (48FOC)	0.424	0.0600
72-STRAND FIBER OPTIC CABLE (72FOC)	0.484	0.0770
96-STRAND FIBER OPTIC CABLE (96FOC)	0.535	0.1050
144-STRAND FIBER OPTIC CABLE (144FOC)	0.670	0.1890
3/8" Ø MESSENGER WIRE	0.375	0.2730

NO SCALE

TEMPORARY WOOD POLES
SES-1

STATE OF CALIFORNIA - DEPARTMENT OF TRANSPORTATION
Caltrans® DESIGN

FUNCTIONAL SUPERVISOR: STEVE WYATT
CALCULATED-DESIGNED BY: JOE ERWIN
CHECKED BY: BRIAN FULLER
REVISED BY
DATE REVISED

LAST REVISION 12-01-14
DATE PLOTTED => 04-DEC-2014
TIME PLOTTED => 11:23

Dist	COUNTY	ROUTE	POST MILES TOTAL PROJECT	SHEET No.	TOTAL SHEETS
05	Mon	1	28.0/28.4	27	104

REGISTERED CIVIL ENGINEER 12-1-14 DATE

12-1-14
PLANS APPROVAL DATE

REGISTERED PROFESSIONAL ENGINEER JOSEPH J ERWIN No. 74015 Exp. 6-30-15 CIVIL STATE OF CALIFORNIA

THE STATE OF CALIFORNIA OR ITS OFFICERS OR AGENTS SHALL NOT BE RESPONSIBLE FOR THE ACCURACY OR COMPLETENESS OF SCANNED COPIES OF THIS PLAN SHEET.

LEGEND

- Wood Pole No Attachments
- A Wood Pole with Attachments
- —OH— Overhead Bundle

POLE SELECTION TABLE

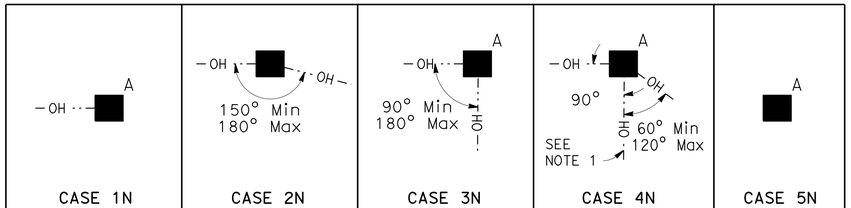

		CASE 1N				CASE 2N				CASE 3N				CASE 4N				CASE 5N
	MAXIMUM d_p	1"	1.5"	2.0"	2.5"	1"	1.5"	2.0"	2.5"	1.0"	1.5"	2.0"	2.5"	1"	1.5"	2.0"	2.5"	N/A
OVERHEAD BUNDLE HORIZONTAL SPAN (Max) 50′	MINIMUM POLE CLASS	H-1	H-2	H-2	H-2	4	3	2	1	H-2	H-2	H-3	H-3	H-4	H-4	H-4	H-5	CLASS 1 E = 10′
	POLE EMBEDMENT (E)	11′				10′				11′				12′				
100′	MINIMUM POLE CLASS	H-2	H-3	H-4	H-5	1	H-1	H-2	H-3	H-4	H-5	H-5	H-6	H-5	H-5	H-6		
	POLE EMBEDMENT (E)	12′				11′				12′				12′				
150′	MINIMUM POLE CLASS	H-4	H-5	H-6		H-1	H-2	H-3	H-5	H-6				H-6				
	POLE EMBEDMENT (E)	12′				12′				12′				12′				
200′	MINIMUM POLE CLASS	H-5	H-6			H-2	H-3	H-5										
	POLE EMBEDMENT (E)	12′				12′												

1. CCTV camera assembly or vehicle detection system
2. Overhead bundle consisting of a 3/8" Ø messenger wire and overhead conductors and lashing wire.
3. Luminaire with mast arm
4. Pedestrian pushbutton
5. Signal face with 3 indications or single sheet sign panel (10 SQFT Max)
6. Riser with weather head as required
7. Pull box as required
8. Grounding as required
9. Single section flashing beacon or single sheet sign panel (4 SQFT Max)
10. Single sheet sign panel (4′ x 4′ Max) or signal face with 3 indications
11. Flashing beacon control assembly
12. NEMA 3R enclosure, 26"(W) x 56"(H) x 12"(D) Max dimensions. Max weight including batteries, 450 lbs
13. 25′ SQFT Max total photovoltaic panels mounted as shown as required
14. 2-section 12" flashing beacon

NOTES:

1. In addition to other restrictions on maximum horizontal span, this horizontal span must not exceed 100′.
2. Cases 1N, 3N and 4N may substitute the attachments shown in Case 5N if the photovoltaic panel is not included.

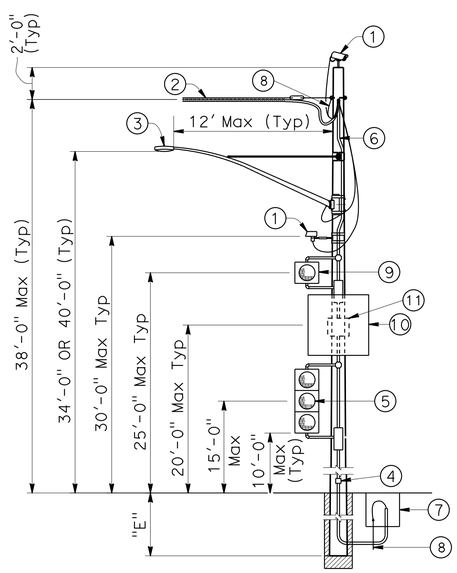

CASE 1N
POLE AT DEAD END WITH ATTACHMENTS
SEE NOTE 2

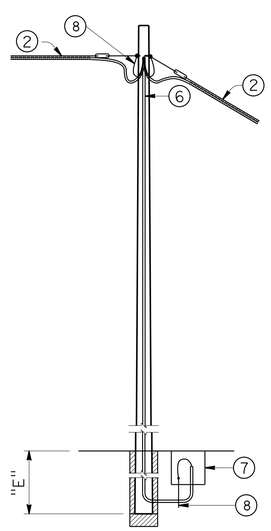

CASE 2N
POLE AT TANGENT WITHOUT ATTACHMENTS

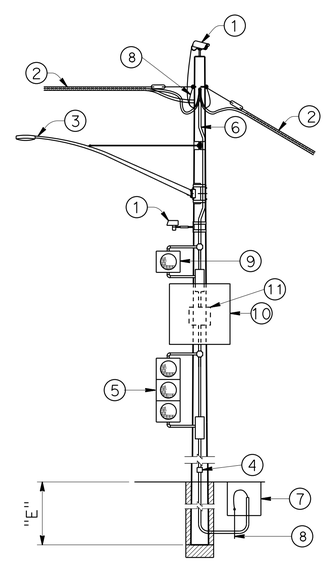

CASE 3N
POLE AT TANGENT OR CORNER WITH ATTACHMENTS
SEE NOTE 2

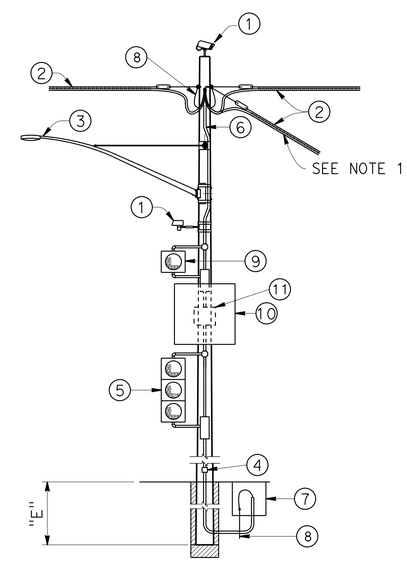

CASE 4N
POLE AT JUNCTION WITH ATTACHMENTS
SEE NOTE 2

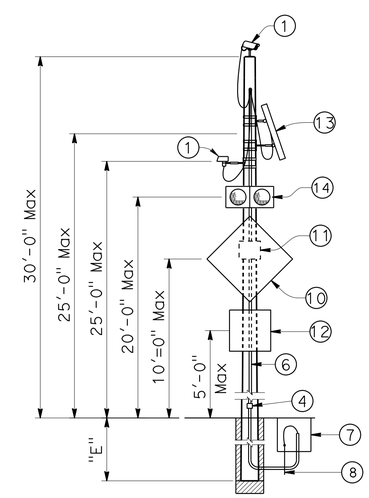

CASE 5N
POLE WITHOUT OVERHEAD BUNDLE WITH ATTACHMENTS

NO SCALE

TEMPORARY WOOD POLES
SES-2

STATE OF CALIFORNIA - DEPARTMENT OF TRANSPORTATION
Caltrans
DESIGN

FUNCTIONAL SUPERVISOR: STEVE WYATT
CALCULATED-DESIGNED BY: JOE ERWIN
CHECKED BY: BRIAN FULLER
REVISED BY
DATE REVISED

LAST REVISION 12-01-14
DATE PLOTTED => 04-DEC-2014
TIME PLOTTED => 11:23

Dist	COUNTY	ROUTE	POST MILES TOTAL PROJECT	SHEET No.	TOTAL SHEETS
05	Mon	1	28.0/28.4	28	104

REGISTERED CIVIL ENGINEER 12-1-14 DATE

12-1-14
PLANS APPROVAL DATE

REGISTERED PROFESSIONAL ENGINEER JOSEPH J ERWIN No. 74015 Exp. 6-30-15 CIVIL STATE OF CALIFORNIA

THE STATE OF CALIFORNIA OR ITS OFFICERS OR AGENTS SHALL NOT BE RESPONSIBLE FOR THE ACCURACY OR COMPLETENESS OF SCANNED COPIES OF THIS PLAN SHEET.

LEGEND

A — Wood Pole with Attachments

—OH··— Overhead Bundle

Guy Anchor

POLE SELECTION TABLE

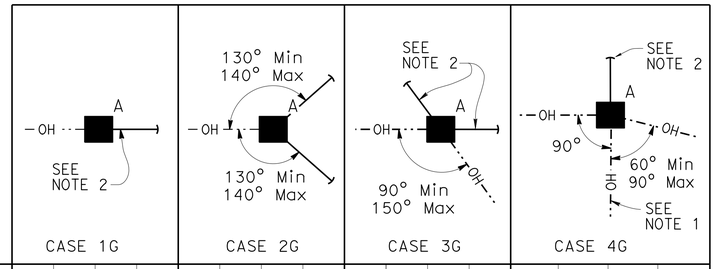

		MAXIMUM d_p	1"	1.5"	2.0"	2.5"	1"	1.5"	2.0"	2.5"	1"	1.5"	2.0"	2.5"	1"	1.5"	2.0"	2.5"
OVERHEAD BUNDLE HORIZONTAL SPAN (Max)	50′	MINIMUM POLE CLASS	H-1	H-1	H-2	H-2	1	1	1	1	1	1	1	H-1	H-2	H-2	H-3	H-3
		POLE EMBEDMENT (E)	10′				9′				9′				11′			
	100′	MINIMUM POLE CLASS	H-2	H-2	H-3	H-4	1	H-1	H-1	H-1	1	H-1	H-2	H-2	H-3	H-3	H-4	H-4
		POLE EMBEDMENT (E)	11′				9′				9′				12′			
	150′	MINIMUM POLE CLASS	H-3	H-3	H-4	H-5	H-1	H-1	H-2	H-2	H-2	H-3	H-3	H-3	H-4	H-5	H-5	H-6
		POLE EMBEDMENT (E)	11′				9′				9′				12′			
	200′	MINIMUM POLE CLASS	H-4	H-4	H-5	H-6	H-1	H-2	H-3	H-3	H-3	H-3	H-4	H-4	H-5	H-6		
		POLE EMBEDMENT (E)	11′				9′				9′				12′			

1. CCTV camera assembly or vehicle detection system
2. Overhead bundle consisting of a ⅜" ø messenger wire and overhead conductors and lashing wire.
3. Luminaire with mast arm
4. Pedestrian pushbutton
5. Signal face with 3 indications or single sheet sign panel (10 SQFT Max)
6. Riser with weather head as required
7. Pull box as required
8. Grounding as required
9. Single section flashing beacon or single sheet sign panel (4 SQFT Max)
10. Single sheet sign panel (4′ x 4′ Max) or signal face with 3 indications
11. Flashing beacon control assembly
12. ½" ø guy wire with white guy marker and strain insulator (for anchorage see "TEMPORARY WOOD POLES-DETAILS No. 2" sheet)

NOTES:

1. In addition to other restrictions on maximum horizontal span, this horizontal span must not exceed 100′.
2. Guy wire in line with opposing span ± 5°.

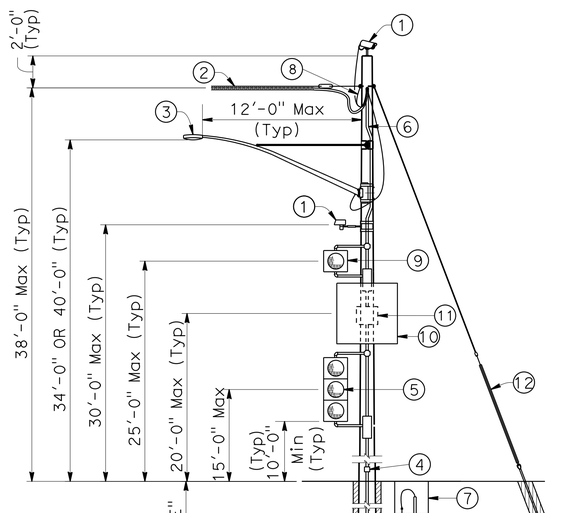

CASE 1G
POLE AT DEAD END
WITH ATTACHMENTS

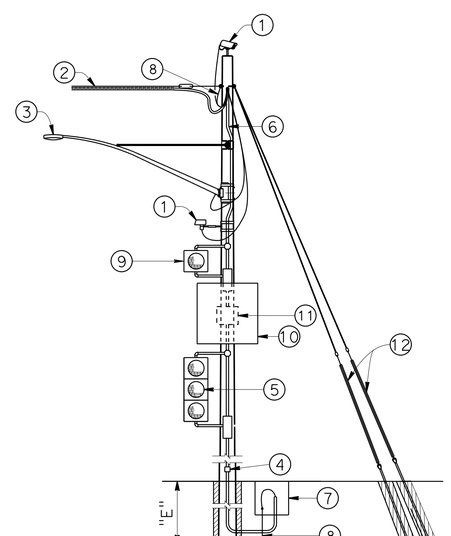

CASE 2G
POLE AT DEAD END
WITH ATTACHMENTS

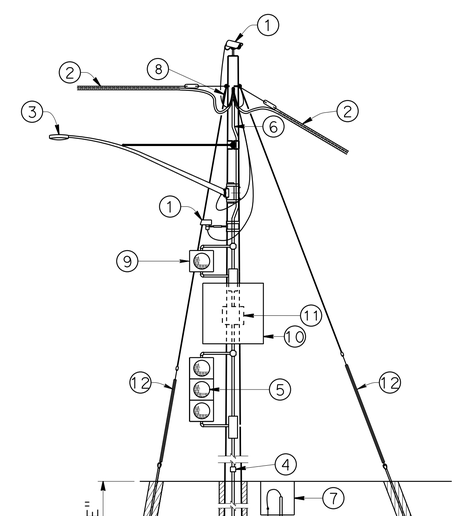

CASE 3G
POLE AT CORNER
WITH ATTACHMENTS

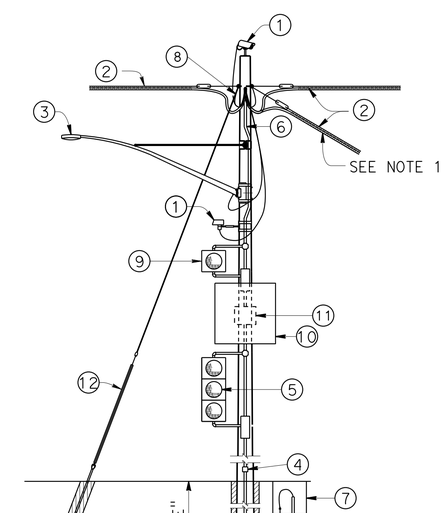

CASE 4G
POLE AT JUNCTION
WITH ATTACHMENTS

NO SCALE

TEMPORARY WOOD POLES
SES-3

STATE OF CALIFORNIA - DEPARTMENT OF TRANSPORTATION
Caltrans® DESIGN

FUNCTIONAL SUPERVISOR: STEVE WYATT
CALCULATED-DESIGNED BY: JOE ERWIN
CHECKED BY: BRIAN FULLER
REVISED BY
DATE REVISED

LAST REVISION 12-01-14
DATE PLOTTED => 04-DEC-2014
TIME PLOTTED => 11:23

Dist	COUNTY	ROUTE	POST MILES TOTAL PROJECT	SHEET No.	TOTAL SHEETS
05	Mon	1	28.0/28.4	29	104

REGISTERED CIVIL ENGINEER 12-1-14 DATE

12-1-14
PLANS APPROVAL DATE

REGISTERED PROFESSIONAL ENGINEER JOSEPH J ERWIN No. 74015 Exp. 6-30-15 CIVIL STATE OF CALIFORNIA

THE STATE OF CALIFORNIA OR ITS OFFICERS OR AGENTS SHALL NOT BE RESPONSIBLE FOR THE ACCURACY OR COMPLETENESS OF SCANNED COPIES OF THIS PLAN SHEET.

LEGEND

- A — Wood Pole with Attachments
- —TS— Overhead Bundle with Signal Faces (See Note 2)
- —OH— Overhead Bundle
- Guy Anchor

POLE SELECTION TABLE

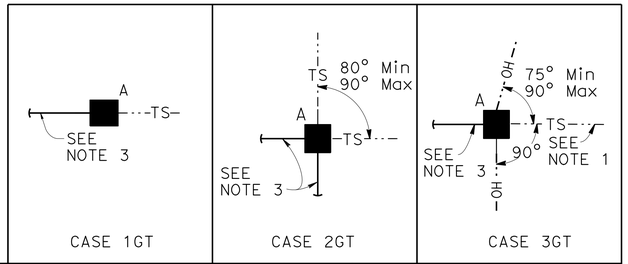

			CASE 1GT			CASE 2GT			CASE 3GT		
		MAXIMUM dp	1"	1.5"	2.0"	1"	1.5"	2.0"	1"	1.5"	2.0"
OVERHEAD BUNDLE HORIZONTAL SPAN Max	50′	MINIMUM POLE CLASS	H-2	H-3	H-3	H-2	H-2	H-2	H-3	H-4	H-4
		POLE EMBEDMENT (E)	10′			10′			11′		
	100′	MINIMUM POLE CLASS	H-3	H-3	H-4	H-2	H-3	H-3	H-4	H-4	H-5
		POLE EMBEDMENT (E)	11′			10′			11′		
	150′	MINIMUM POLE CLASS	H-3	H-4	H-4	H-2	H-3	H-4	H-4	H-5	H-5
		POLE EMBEDMENT (E)	11′			10′			11′		

NOTES:

1. In addition to other restrictions on maximum horizontal span, this horizontal span must not exceed 100′.
2. Maximum of 2 SIGNAL FACES per span within the hatched regions indicated by "LOCATION OF SIGNAL FACES".
3. Guy wire in line with opposing span ± 5°.

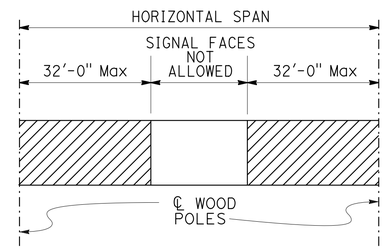

LOCATION OF SIGNAL FACES

1. CCTV camera assembly or vehicle detection system
2. Overhead bundle consisting of ⅜" ø messenger wire and overhead conductors and lashing wire
3. Luminaire with mast arm
4. Pedestrian pushbutton
5. Signal face with 3 indications or single sheet sign panel (10 SQFT Max)
6. Riser with weather head as required
7. Pull box as required
8. Grounding as required
9. ⅜" ø tether wire
10. ½" ø guy wire with white guy marker and strain insulator. For anchorage see "TEMPORARY WOOD POLES-DETAILS No. 2" sheet
11. Pedestrian signal head

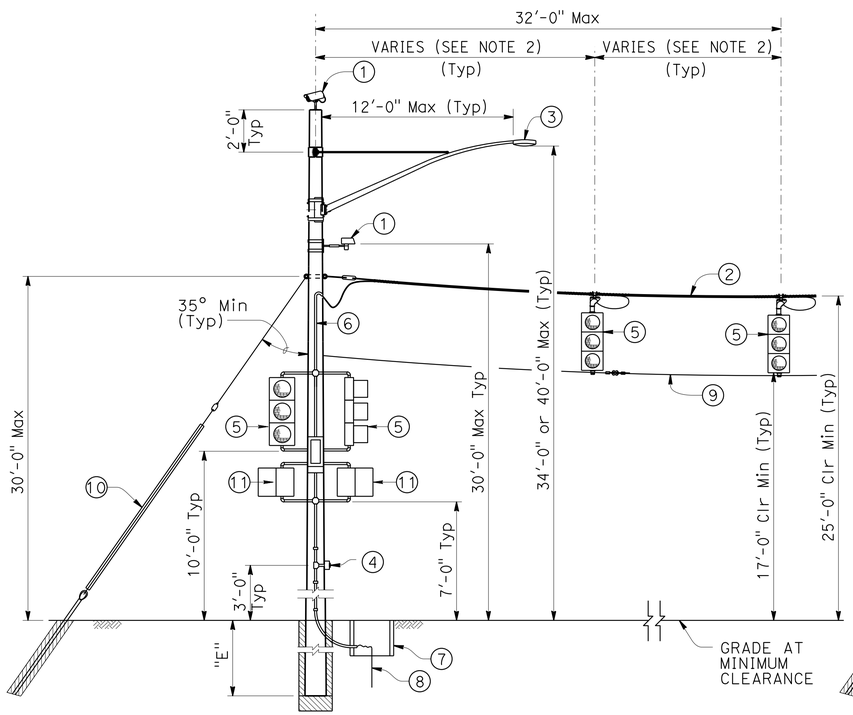

CASE 1GT
POLE AT DEAD END
WITH ATTACHMENTS

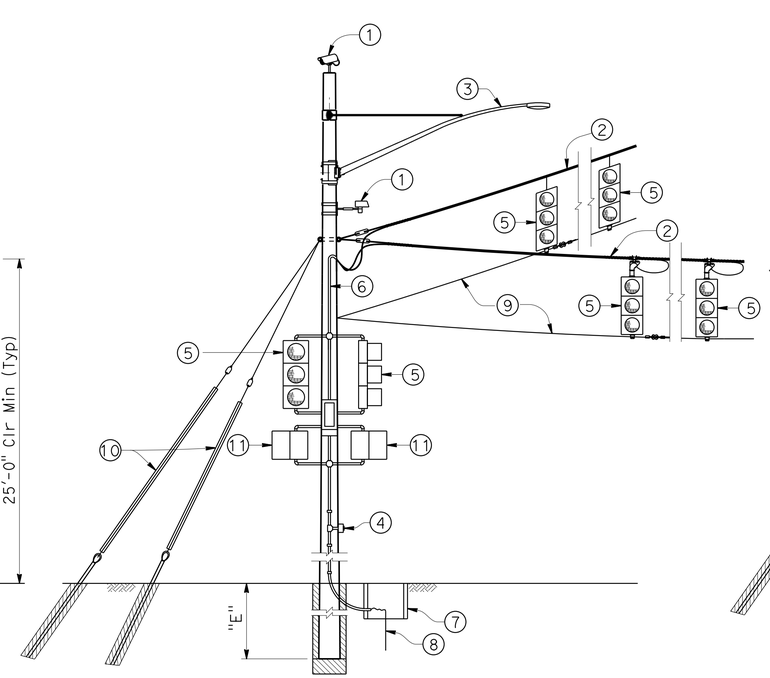

CASE 2GT
POLE AT CORNER
WITH ATTACHMENTS

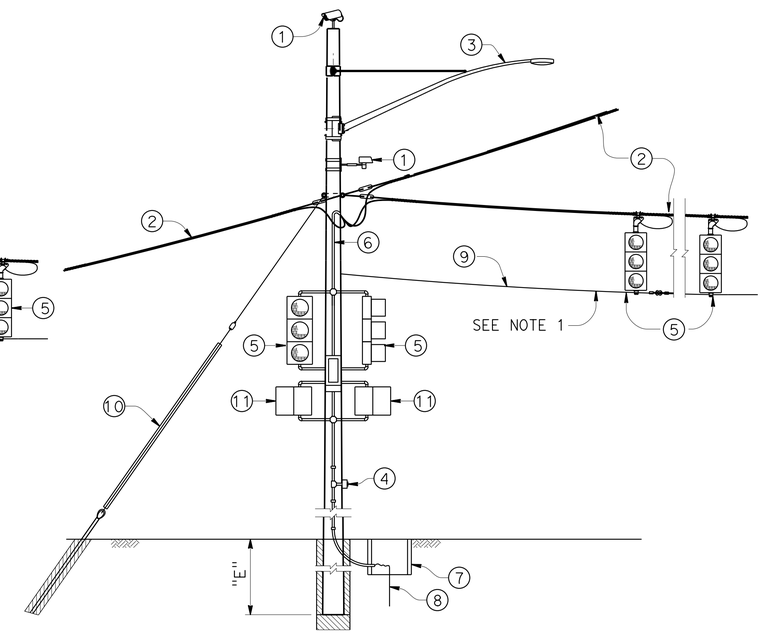

CASE 3GT
POLE AT JUNCTION
WITH ATTACHMENTS

NO SCALE

TEMPORARY WOOD POLES

SES-4

STATE OF CALIFORNIA - DEPARTMENT OF TRANSPORTATION
Caltrans® DESIGN

FUNCTIONAL SUPERVISOR: STEVE WYATT
CALCULATED-DESIGNED BY: JOE ERWIN
CHECKED BY: BRIAN FULLER
REVISED BY
DATE REVISED

LAST REVISION 12-01-14
DATE PLOTTED => 04-DEC-2014
TIME PLOTTED => 11:23

Dist	COUNTY	ROUTE	POST MILES TOTAL PROJECT	SHEET No.	TOTAL SHEETS
05	Mon	1	28.0/28.4	30	104

REGISTERED CIVIL ENGINEER 12-1-14 DATE

12-1-14
PLANS APPROVAL DATE

REGISTERED PROFESSIONAL ENGINEER JOSEPH J ERWIN No. 74015 Exp. 6-30-15 CIVIL STATE OF CALIFORNIA

THE STATE OF CALIFORNIA OR ITS OFFICERS OR AGENTS SHALL NOT BE RESPONSIBLE FOR THE ACCURACY OR COMPLETENESS OF SCANNED COPIES OF THIS PLAN SHEET.

LEGEND

A — Wood Pole with Attachments

—··TS—··· Overhead Bundle with Signal Faces (See Note 1)

POLE SELECTION TABLE

			A —··TS—··· CASE 1NT		
OVERHEAD BUNDLE HORIZONTAL SPAN (Max)	75′	MAXIMUM dp	1"	1.5"	2.0"
		MINIMUM POLE CLASS	H-5	H-6	H-6
		POLE EMBEDMENT (E)	13′		

1. CCTV camera assembly or vehicle detection system
2. Overhead bundle consisting of a ⅜" ø messenger wire and overhead conductors and lashing wire
3. Luminaire with mast arm
4. Pedestrian pushbutton
5. Signal face with 3 indications or single sheet sign panel (10 SQFT Max)
6. Riser with weather head as required
7. Pull box as required
8. Grounding as required
9. ⅜" ø tether wire
10. Pedestrian signal head

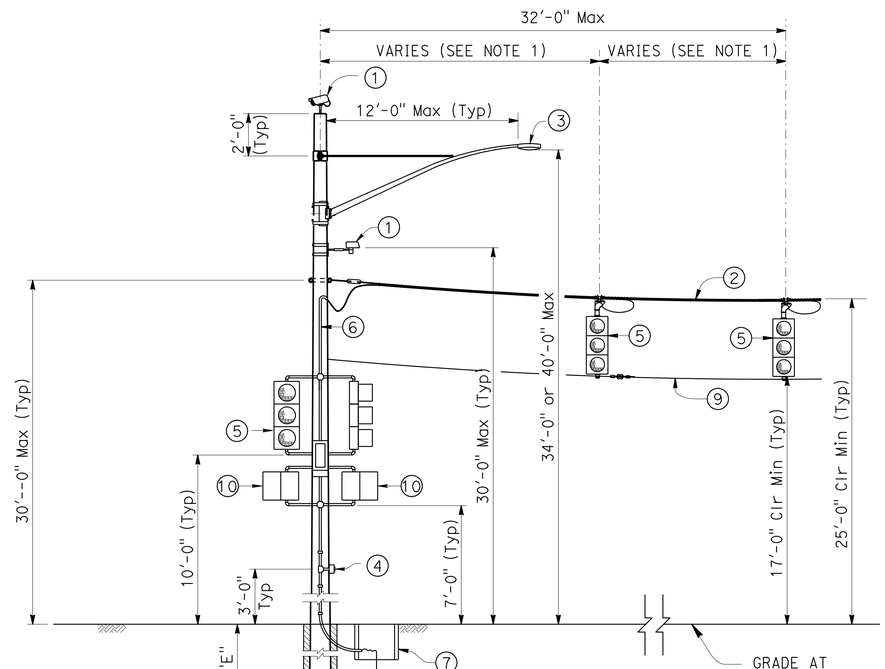

CASE 1NT
POLE AT DEAD END WITH ATTACHMENTS

NOTES:

1. Maximum of 2 SIGNAL FACES per span within the hatched regions indicated by "LOCATION OF SIGNAL FACES".

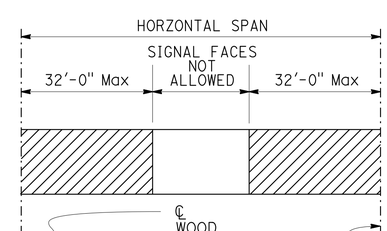

LOCATION OF SIGNAL FACES

NO SCALE

TEMPORARY WOOD POLES
SES-5

STATE OF CALIFORNIA - DEPARTMENT OF TRANSPORTATION
Caltrans DESIGN

FUNCTIONAL SUPERVISOR: STEVE WYATT
CALCULATED-DESIGNED BY: JOE ERWIN
CHECKED BY: BRIAN FULLER
REVISED BY
DATE REVISED

LAST REVISION 12-01-14 DATE PLOTTED => 04-DEC-2014 TIME PLOTTED => 11:23

Dist	COUNTY	ROUTE	POST MILES TOTAL PROJECT	SHEET No.	TOTAL SHEETS
05	Mon	1	28.0/28.4	31	104

REGISTERED CIVIL ENGINEER 12-1-14 DATE

12-1-14
PLANS APPROVAL DATE

REGISTERED PROFESSIONAL ENGINEER JOSEPH J ERWIN No. 74015 Exp. 6-30-15 CIVIL STATE OF CALIFORNIA

THE STATE OF CALIFORNIA OR ITS OFFICERS OR AGENTS SHALL NOT BE RESPONSIBLE FOR THE ACCURACY OR COMPLETENESS OF SCANNED COPIES OF THIS PLAN SHEET.

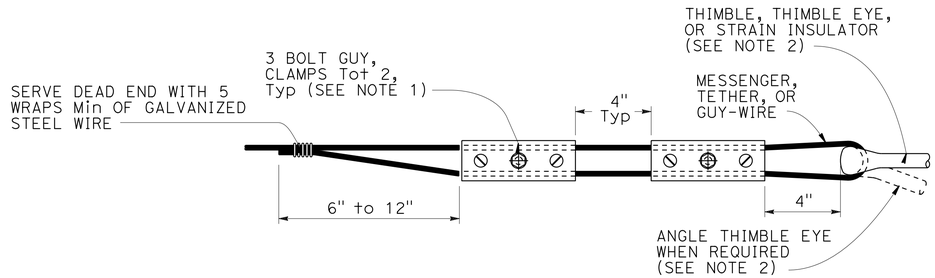

ALTERNATIVE TERMINATION OF MESSENGER WIRES USING GUY CLAMPS

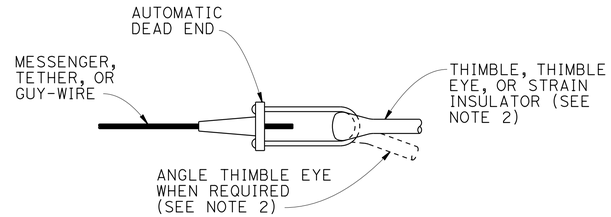

TERMINATION OF WIRES USING AUTOMATIC DEAD END

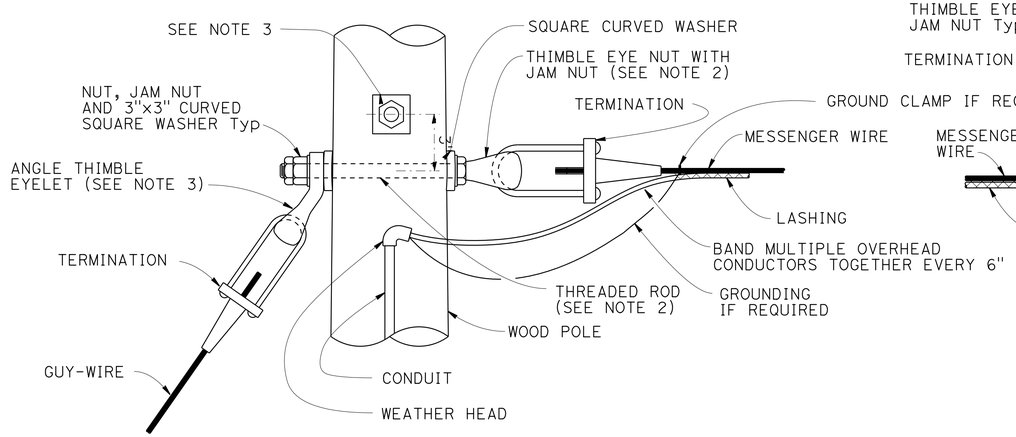

POLE AT DEAD END WITH GUY-WIRE CONNECTION

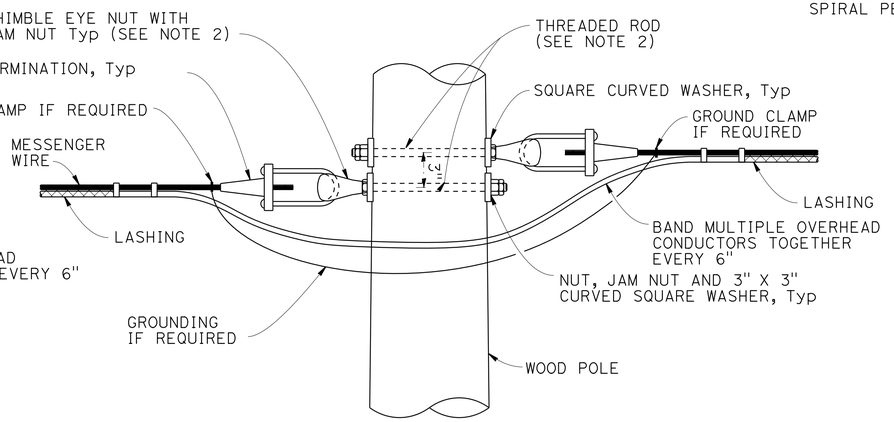

POLE AT TANGENT OR CORNER CONNECTION

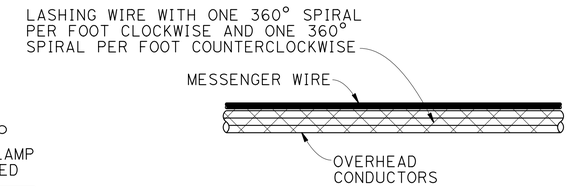

DOUBLE LASHING DETAIL

USE IF d_p IS GREATER THAN $1\frac{1}{2}$"

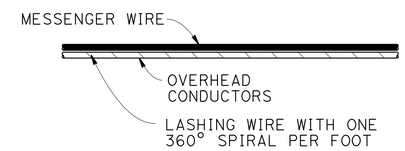

TYPICAL LASHING DETAIL

USE IF d_p IS $1\frac{1}{2}$" OR LESS

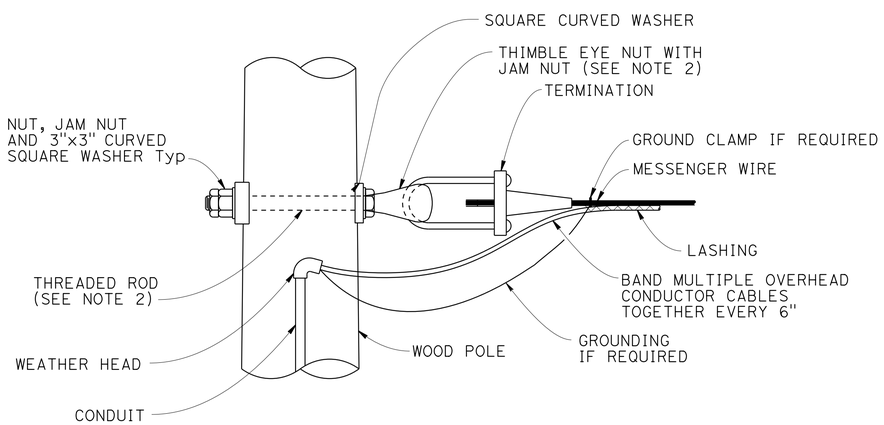

POLE AT DEAD END CONNECTION

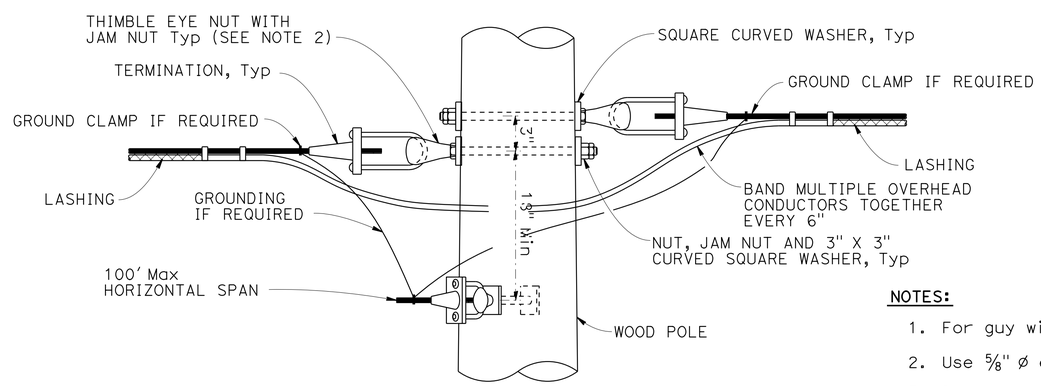

POLE AT JUNCTION CONNECTION

NOTES:

1. For guy wires use 3 clamps.
2. Use $\frac{5}{8}$" ø except $\frac{3}{4}$" ø at guyed wires
3. Install additional angle thimble eyelet at poles with two guy wires.

NO SCALE

TEMPORARY WOOD POLES

SES-6

STATE OF CALIFORNIA - DEPARTMENT OF TRANSPORTATION
Caltrans®
DESIGN

FUNCTIONAL SUPERVISOR: STEVE WYATT
CALCULATED-DESIGNED BY: JOE ERWIN
CHECKED BY: BRIAN FULLER
REVISED BY
DATE REVISED

LAST REVISION 12-01-14
DATE PLOTTED => 04-DEC-2014
TIME PLOTTED => 11:24

Dist	COUNTY	ROUTE	POST MILES TOTAL PROJECT	SHEET No.	TOTAL SHEETS
05	Mon	1	28.0/28.4	32	104

REGISTERED CIVIL ENGINEER 12-1-14 DATE

12-1-14
PLANS APPROVAL DATE

REGISTERED PROFESSIONAL ENGINEER JOSEPH J ERWIN No. 74015 Exp. 6-30-15 CIVIL STATE OF CALIFORNIA

THE STATE OF CALIFORNIA OR ITS OFFICERS OR AGENTS SHALL NOT BE RESPONSIBLE FOR THE ACCURACY OR COMPLETENESS OF SCANNED COPIES OF THIS PLAN SHEET.

NOTES:

1. Minimum allowable tension capacity "Qa" = 8,900 lbs.
2. Minimum installation torque "T" = 1780 lbs-ft.
3. Helical anchor detail may be used in place of expanded steel anchors.

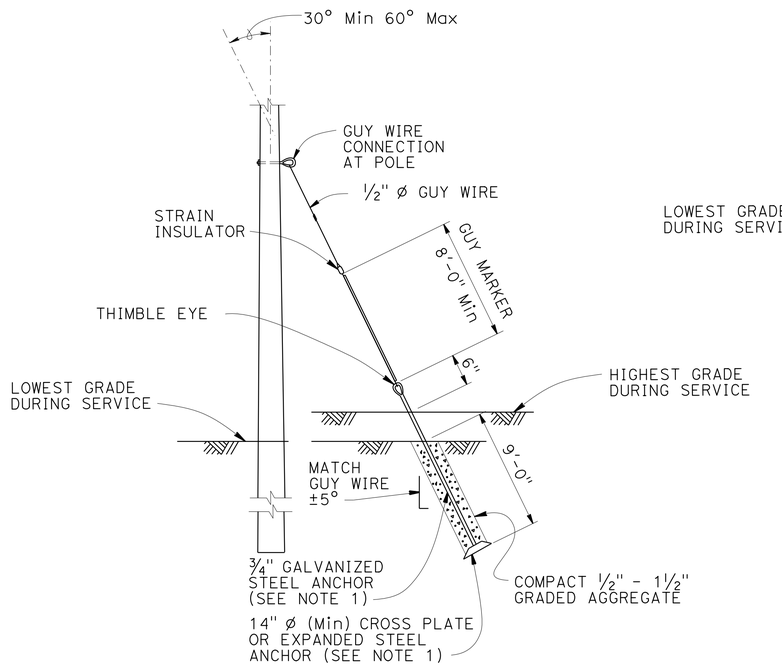

EXPANDED STEEL ANCHOR DETAIL

SEE NOTE 3

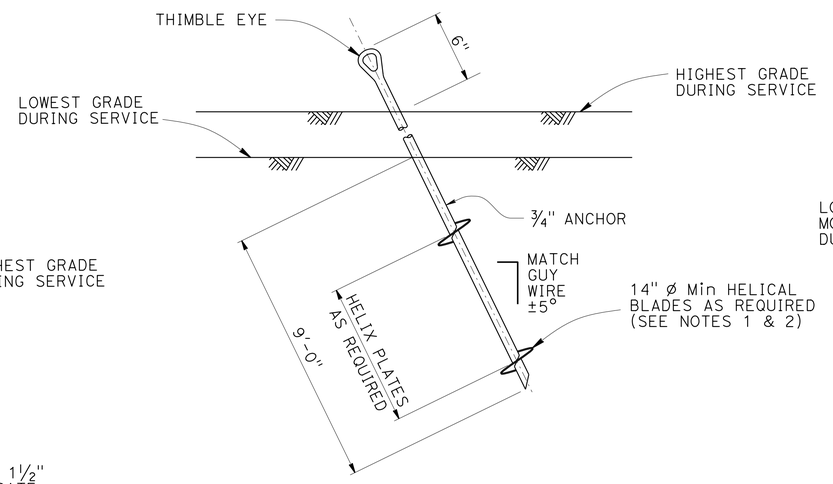

HELICAL ANCHOR DETAIL

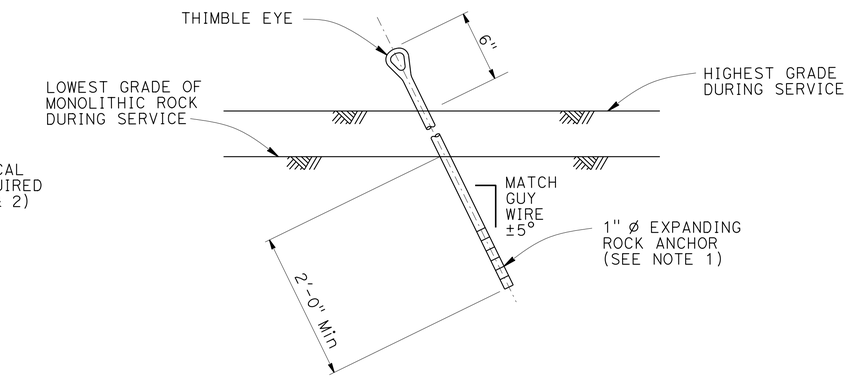

EXPANDING ROCK ANCHOR DETAIL

NO SCALE

TEMPORARY WOOD POLES

SES-7

STATE OF CALIFORNIA - DEPARTMENT OF TRANSPORTATION
Caltrans® DESIGN

FUNCTIONAL SUPERVISOR: STEVE WYATT
CALCULATED-DESIGNED BY: JOE ERWIN
CHECKED BY: BRIAN FULLER
REVISED BY
DATE REVISED

LAST REVISION 12-01-14 | DATE PLOTTED => 04-DEC-2014 | TIME PLOTTED => 11:24

Dist	COUNTY	ROUTE	POST MILES TOTAL PROJECT	SHEET No.	TOTAL SHEETS
05	Mon	1	28.0/28.4	33	104

REGISTERED CIVIL ENGINEER 12-1-14 DATE

12-1-14
PLANS APPROVAL DATE

REGISTERED PROFESSIONAL ENGINEER JOSEPH J ERWIN No. 74015 Exp. 6-30-15 CIVIL STATE OF CALIFORNIA

THE STATE OF CALIFORNIA OR ITS OFFICERS OR AGENTS SHALL NOT BE RESPONSIBLE FOR THE ACCURACY OR COMPLETENESS OF SCANNED COPIES OF THIS PLAN SHEET.

NOTES:

1. Luminaire mast arms must be in compliance with Standard Plan ES-6D with noted modifications.
2. Verify pole dimensions at tie-rod attachment height. Fabricate 8" flat bar with "L" Dimension to maintain an open gap between flanges in finished installation.
3. Not all screw heads and bolt heads are shown for clarity.
4. Mast arm not shown for clarity.

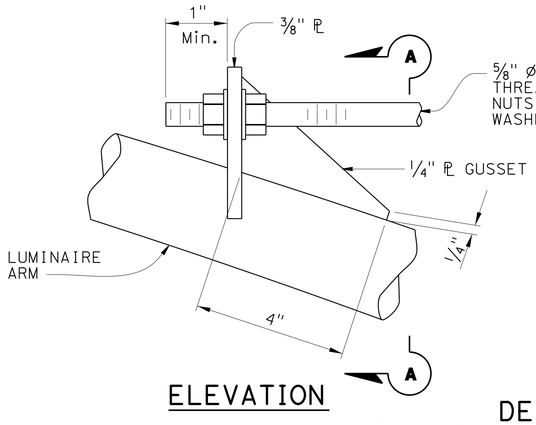

ELEVATION

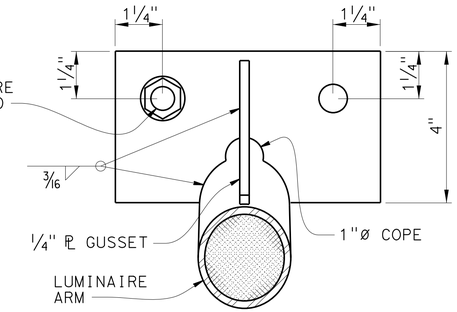

SECTION A-A

DETAIL A
TIE-ROD AT LUMINAIRE ARM
NO SCALE

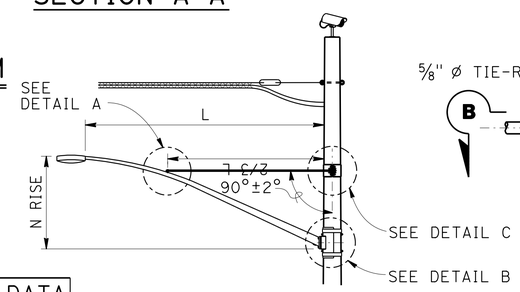

LUMINAIRE MAST ARM

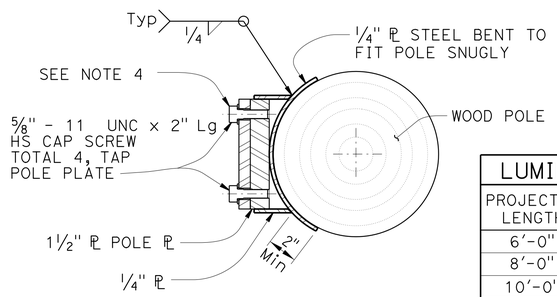

SECTION E-E

LUMINAIRE MAST ARM DATA			
PROJECTED LENGTH	N RISE	Min OD AT POLE	NOMINAL THICKNESS
6'-0"	2'-0"±	3 1/4"	0.1196"
8'-0"	2'-6"±	3 1/2"	
10'-0"	3'-3"±	3 7/8"	
12'-0"	4'-3"±		

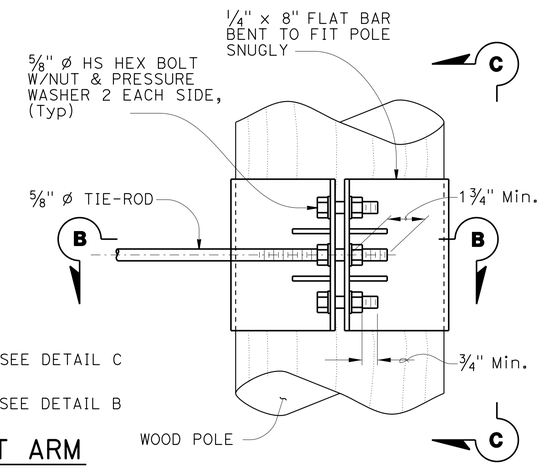

ELEVATION

NOTE:
Not all screw and bolt heads shown for clarity.

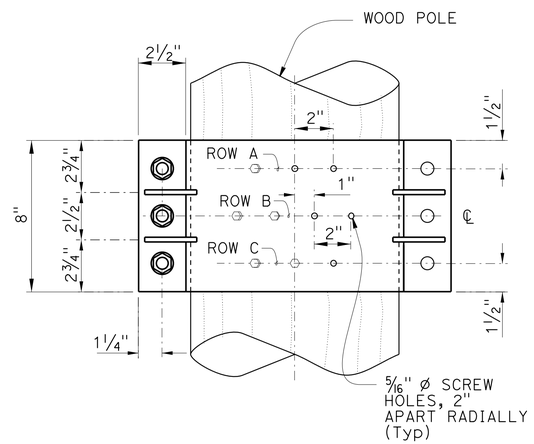

VIEW C-C

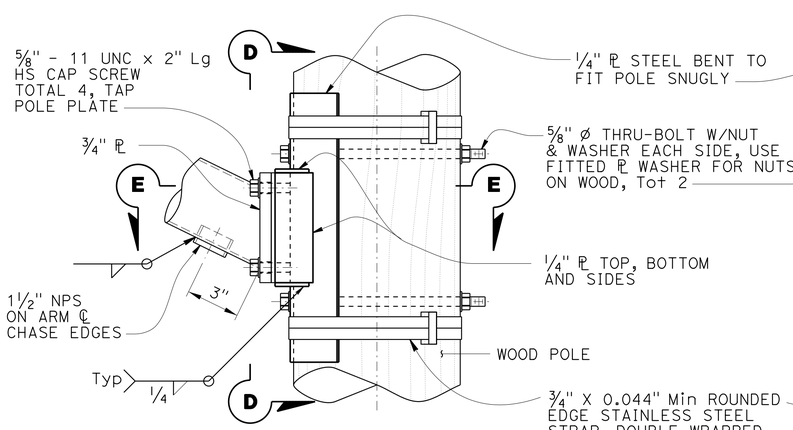

ELEVATION

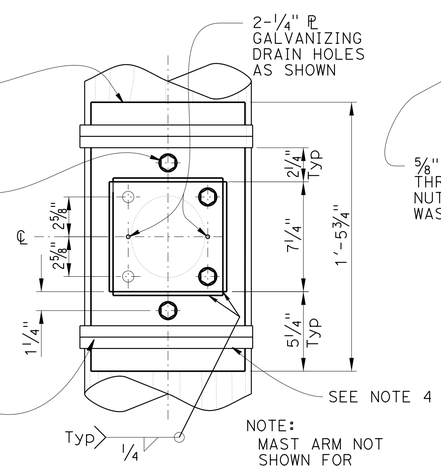

NOTE:
MAST ARM NOT SHOWN FOR CLARITY

VIEW D-D

DETAIL B
ARM CONNECTION DETAILS
NO SCALE

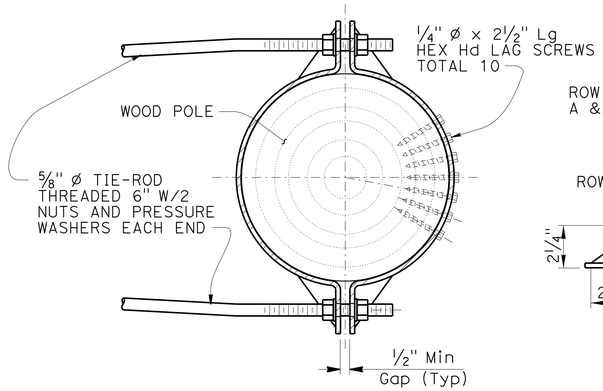

SECTION B-B

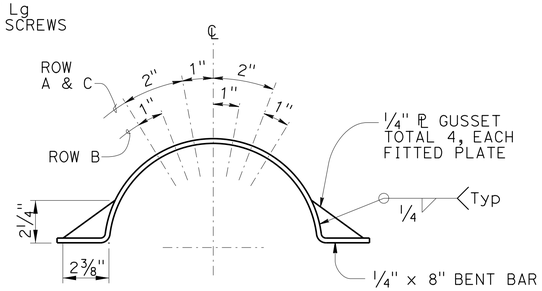

LAG SCREW AND
GUSSET PLATE LAYOUT

DETAIL C
TIE-ROD AT POLE
NO SCALE

NO SCALE

TEMPORARY WOOD POLES

SES-8

REVISED BY	DATE REVISED

CALCULATED-DESIGNED BY	CHECKED BY
JOE ERWIN	BRIAN FULLER

FUNCTIONAL SUPERVISOR: STEVE WYATT

STATE OF CALIFORNIA - DEPARTMENT OF TRANSPORTATION
Caltrans
DESIGN

LAST REVISION 12-01-14 | DATE PLOTTED => 04-DEC-2014 | TIME PLOTTED => 11:24

Dist	COUNTY	ROUTE	POST MILES TOTAL PROJECT	SHEET No.	TOTAL SHEETS
05	Mon	1	28.0/28.4	34	104

REGISTERED CIVIL ENGINEER 12-1-14 DATE

12-1-14
PLANS APPROVAL DATE

REGISTERED PROFESSIONAL ENGINEER JOSEPH J ERWIN No. 74015 Exp. 6-30-15 CIVIL STATE OF CALIFORNIA

THE STATE OF CALIFORNIA OR ITS OFFICERS OR AGENTS SHALL NOT BE RESPONSIBLE FOR THE ACCURACY OR COMPLETENESS OF SCANNED COPIES OF THIS PLAN SHEET.

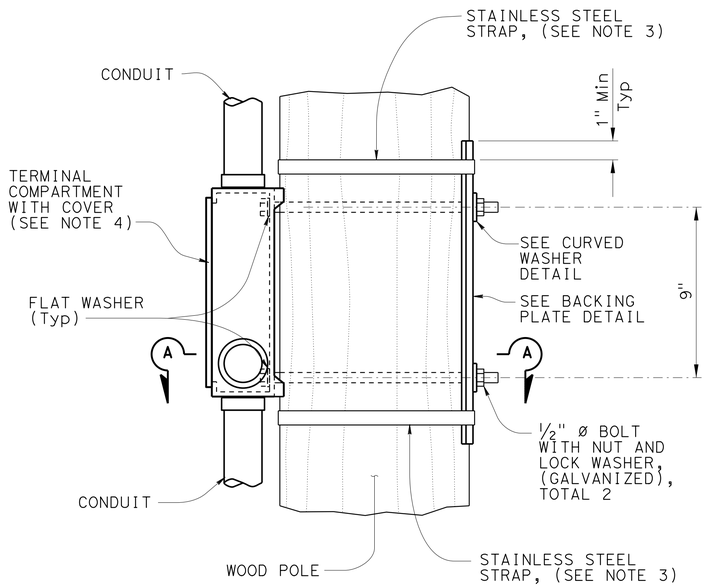

ELEVATION

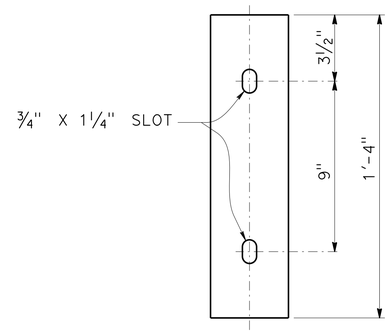

ELEVATION

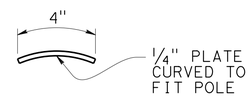

PLAN

BACKING PLATE DETAIL

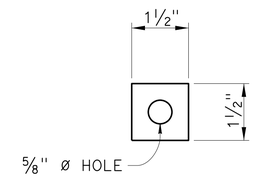

ELEVATION

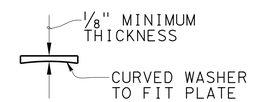

PLAN

CURVED WASHER DETAIL

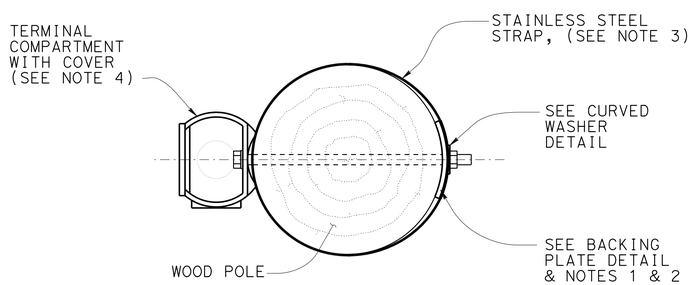

SECTION A-A

NOTES:

1. Verify pole dimensions at terminal compartment for fabrication of backing plate and curved washer.
2. Backing plate to be galvanized after fabrication.
3. ¾" x 0.044" minimum, rounded edge stainless steel straps, double wrapped with 2" long bend under stainless steel strap buckle.
4. For details not shown see Standard Plan ES-4D.

SIDE MOUNTING TERMINAL COMPARTMENT

NO SCALE

TEMPORARY WOOD POLES

SES-9

STATE OF CALIFORNIA - DEPARTMENT OF TRANSPORTATION
Caltrans® DESIGN
FUNCTIONAL SUPERVISOR: STEVE WYATT
CALCULATED-DESIGNED BY: JOE ERWIN
CHECKED BY: BRIAN FULLER
REVISED BY
DATE REVISED

LAST REVISION 12-01-14
DATE PLOTTED => 04-DEC-2014
TIME PLOTTED => 11:24

Dist	COUNTY	ROUTE	POST MILES TOTAL PROJECT	SHEET No.	TOTAL SHEETS
05	Mon	1	28.0/28.4	35	104

REGISTERED CIVIL ENGINEER 12-1-14 DATE

12-1-14
PLANS APPROVAL DATE

REGISTERED PROFESSIONAL ENGINEER JOSEPH J ERWIN No. 74015 Exp. 6-30-15 CIVIL STATE OF CALIFORNIA

THE STATE OF CALIFORNIA OR ITS OFFICERS OR AGENTS SHALL NOT BE RESPONSIBLE FOR THE ACCURACY OR COMPLETENESS OF SCANNED COPIES OF THIS PLAN SHEET.

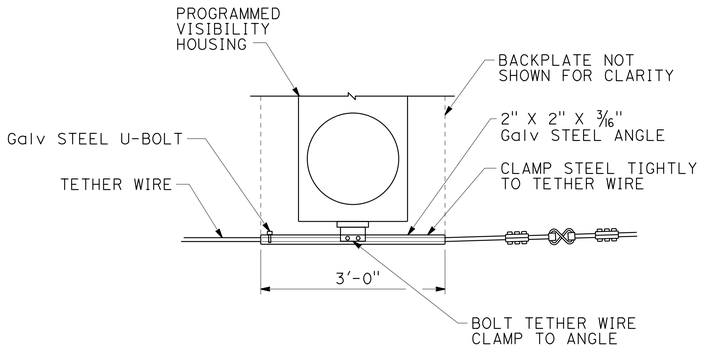

TETHER WIRE ATTACHMENT FOR PROGRAMMED VISIBILITY SIGNAL FACE

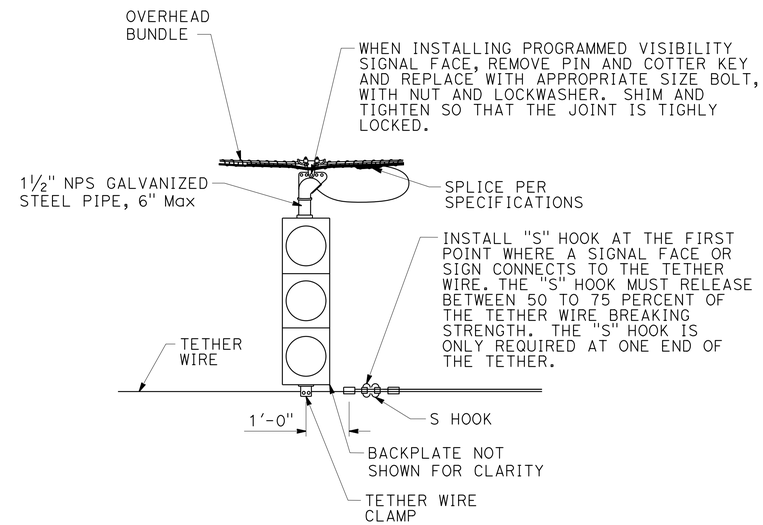

SIGNAL FACE SUPPORT

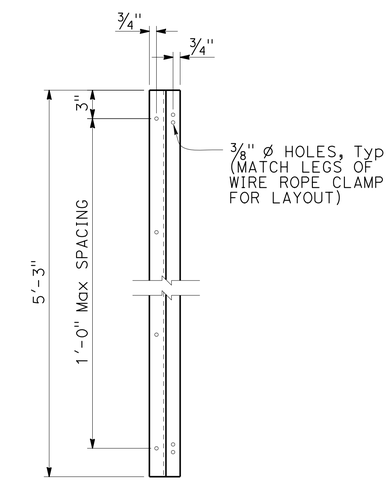

Z-BAR ELEVATION

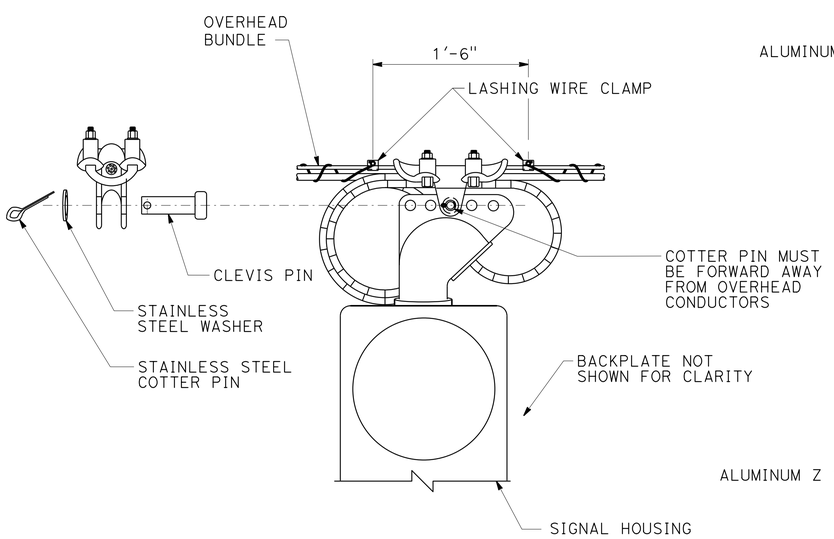

MESSENGER WIRE CLAMP COTTER PIN DETAIL

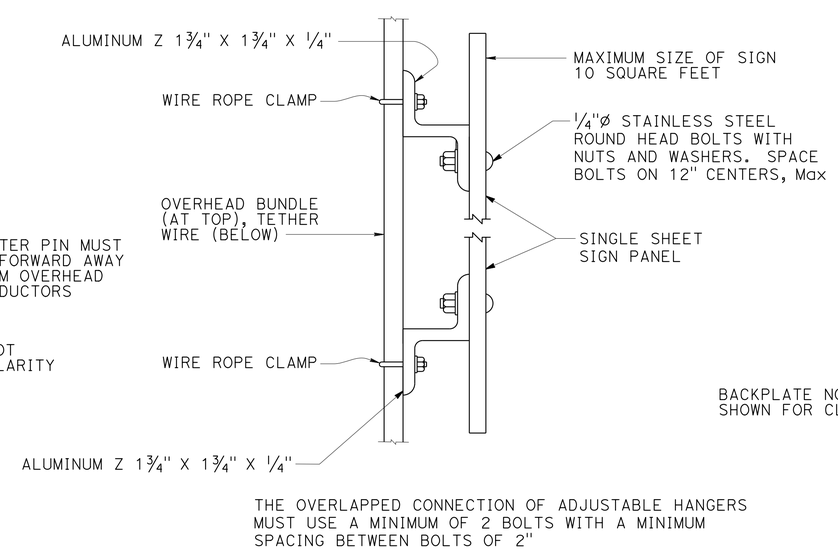

SIGN MOUNTING DETAIL

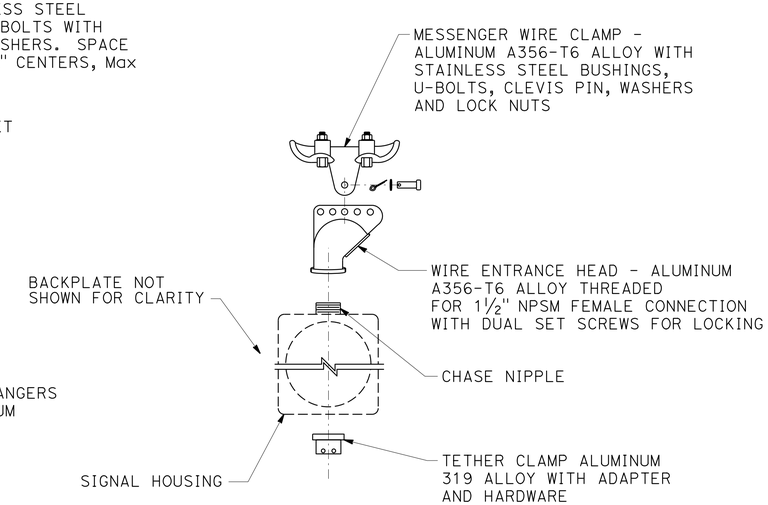

SIGNAL FACE SUPPORT EXPLODED VIEW

NO SCALE

TEMPORARY WOOD POLES
SES-10

STATE OF CALIFORNIA - DEPARTMENT OF TRANSPORTATION
Caltrans® DESIGN

FUNCTIONAL SUPERVISOR: STEVE WYATT
CALCULATED-DESIGNED BY: JOE ERWIN
CHECKED BY: BRIAN FULLER
REVISED BY
DATE REVISED

LAST REVISION 12-01-14 | DATE PLOTTED => 04-DEC-2014 | TIME PLOTTED => 11:24

M

Maint	MAINTENANCE
Max	MAXIMUM
MB	METAL BEAM
MBB	METAL BEAM BARRIER
MBGR	METAL BEAM GUARD RAILING
Med	MEDIAN
MGS	MIDWEST GUARDRAIL SYSTEM
MH	MANHOLE
Min	MINIMUM
Misc	MISCELLANEOUS
Misc I & S	MISCELLANEOUS IRON AND STEEL
Mkr	MARKER
Mod	MODIFIED,
	MODIFY
Mon	MONUMENT
MP	METAL PLATE
MPGR	METAL PLATE GUARD RAILING
MR	MOVEMENT RATING
MSE	MECHANICALLY STABILIZED EMBANKMENT
Mt	MOUNTAIN, MOUNT
Mtl	MATERIAL
MVP	MAINTENANCE VEHICLE PULLOUT

N

N	NORTH
NB	NORTHBOUND
No.	NUMBER (MUST HAVE PERIOD)
Nos.	NUMBERS (MUST HAVE PERIOD)
NPS	NOMINAL PIPE SIZE
NS	NEAR SIDE
NSP	NEW STANDARD PLAN
NTS	NOT TO SCALE

O

Oblr	OBLITERATE
OC	OVERCROSSING
OD	OUTSIDE DIAMETER
OF	OUTSIDE FACE
OG	ORIGINAL GROUND
OGAC	OPEN GRADED ASPHALT CONCRETE
OGFC	OPEN GRADED FRICTION COURSE
OH	OVERHEAD
OHWM	ORDINARY HIGH WATER MARK
O-O	OUT TO OUT
Opp	OPPOSITE
OSD	OVERSIDE DRAIN

P

P	PAGE
PAP	PERFORATED ALUMINUM PIPE
PB	PULL BOX
PC	POINT OF CURVATURE,
	PRECAST
PCC	POINT OF COMPOUND CURVE,
	PORTLAND CEMENT CONCRETE
PCMS	PORTABLE CHANGEABLE MESSAGE SIGN
PCP	PERFORATED CONCRETE PIPE,
	PRESTRESSED CONCRETE PIPE
PCVC	POINT OF COMPOUND VERTICAL CURVE
PEC	PERMIT TO ENTER AND CONSTRUCT
Ped	PEDESTRIAN
Ped OC	PEDESTRIAN OVERCROSSING
Ped UC	PEDESTRIAN UNDERCROSSING
Perm Mtl	PERMEABLE MATERIAL

P continued

PG	PROFILE GRADE
PI	POINT OF INTERSECTION
PJP	PARTIAL JOINT PENETRATION
Pkwy	PARKWAY
ℙL,PL	PLATE
P/L	PROPERTY LINE
PM	POST MILE,
	TIME FROM NOON TO MIDNIGHT
PN	PAVING NOTCH
POC	POINT OF HORIZONTAL CURVE
POT	POINT OF TANGENT
POVC	POINT OF VERTICAL CURVE
PP	PIPE PILE,
	PLASTIC PIPE,
	POWER POLE
PPL	PREFORMED PERMEABLE LINER
PPP	PERFORATED PLASTIC PIPE
PRC	POINT OF REVERSE CURVE
PRF	PAVEMENT REINFORCING FABRIC
PRVC	POINT OF REVERSE VERTICAL CURVE
PS&E	PLANS, SPECIFICATIONS AND ESTIMATES
PS, P/S	PRESTRESSED
PSP	PERFORATED STEEL PIPE
PT	POINT OF TANGENCY
PVC	POLYVINYL CHLORIDE
Pvmt	PAVEMENT

Q

Qty	QUANTITY

R

R	RADIUS
R & D	REMOVE AND DISPOSE
R & S	REMOVE AND SALVAGE
R/C	RATE OF CHANGE
RCA	REINFORCED CONCRETE ARCH
RCB	REINFORCED CONCRETE BOX
RCP	REINFORCED CONCRETE PIPE
RCPA	REINFORCED CONCRETE PIPE ARCH
Rd	ROAD
Reinf	REINFORCED,
	REINFORCEMENT,
	REINFORCING
Rel	RELOCATE
Repl	REPLACEMENT
Ret	RETAINING
Rev	REVISED, REVISION
Rdwy	ROADWAY
RHMA	RUBBERIZED HOT MIX ASPHALT
Riv	RIVER
RM	ROAD-MIXED
RP	RADIUS POINT,
	REFERENCE POINT
RR	RAILROAD
RSP	ROCK SLOPE PROTECTION,
	REVISED STANDARD PLAN
Rt	RIGHT
Rte	ROUTE
RW	REDWOOD,
	RETAINING WALL
R/W	RIGHT OF WAY
Rwy	RAILWAY

S

S	SOUTH,
	SUPPLEMENT
SAE	STRUCTURE APPROACH EMBANKMENT
Salv	SALVAGE
SAPP	STRUCTURAL ALUMINUM PLATE PIPE
SB	SOUTHBOUND
SC	SAND CUSHION
SCSP	SLOTTED CORRUGATED STEEL PIPE
SD	STORM DRAIN
Sec	SECOND,
	SECTION
Sep	SEPARATION
SG	SUBGRADE
Shld	SHOULDER
Sht	SHEET
Sim	SIMILAR
℄	STATION LINE
SM	SELECTED MATERIAL
Spec	SPECIAL,
	SPECIFICATIONS
SPP	SLOTTED PLASTIC PIPE
SS	SLOPE STAKE
SSBM	STRAP AND SADDLE BRACKET METHOD
SSD	STRUCTURAL SECTION DRAIN
SSPA	STRUCTURAL STEEL PLATE ARCH
SSPP	STRUCTURAL STEEL PLATE PIPE
SSPPA	STRUCTURAL STEEL PLATE PIPE ARCH
SSRP	STEEL SPIRAL RIB PIPE
St	STREET
Sta	STATION
STBB	SINGLE THRIE BEAM BARRIER
Std	STANDARD
Str	STRUCTURE
Surf	SURFACING
SW	SIDEWALK,
	SOUND WALL
Swr	SEWER
Sym	SYMMETRICAL
S4S	SURFACE 4 SIDES

T

T	SEMI-TANGENT
Tan	TANGENT
TBB	THRIE BEAM BARRIER
Tbr	TIMBER
TC	TOP OF CURB
TCB	TRAFFIC CONTROL BOX
TCE	TEMPORARY CONSTRUCTION EASEMENT
Tel	TELEPHONE
Temp	TEMPORARY
TG	TOP OF GRADE
Tot	TOTAL
TP	TELEPHONE POLE
TPB	TREATED PERMEABLE BASE
TPM	TREATED PERMEABLE MATERIAL
Trans	TRANSITION

T continued

TS	TRANSVERSE,
	TRAFFIC SIGNAL,
	TUBULAR STEEL
Typ	TYPICAL

U

UC	UNDERCROSSING
UD	UNDERDRAIN
UG	UNDERGROUND
UON	UNLESS OTHERWISE NOTED
UP	UNDERPASS

V

V	VALVE,
	DESIGN SPEED
Var	VARIABLE,
	VARIES
VC	VERTICAL CURVE
VCP	VITRIFIED CLAY PIPE
Vert	VERTICAL
Via	VIADUCT
Vol	VOLUME

W

W	WEST,
	WIDTH
WB	WESTBOUND
WH	WEEP HOLE
WM	WIRE MESH
WS	WATER SURFACE
WSP	WELDED STEEL PIPE
Wt	WEIGHT
WV	WATER VALVE
WW	WINGWALL
WWLOL	WINGWALL LAYOUT LINE

X

X Sec	CROSS SECTION
Xing	CROSSING

Y

Yr	YEAR
Yrs	YEARS

Dist	COUNTY	ROUTE	POST MILES TOTAL PROJECT	SHEET No.	TOTAL SHEETS
05	Mon	1	28.0/28.4	36	104

Grace M. Tsushima
REGISTERED CIVIL ENGINEER

July 19, 2013
PLANS APPROVAL DATE

REGISTERED PROFESSIONAL ENGINEER Grace M. Tsushima No. C49814 Exp. 9-30-14 CIVIL STATE OF CALIFORNIA

THE STATE OF CALIFORNIA OR ITS OFFICERS OR AGENTS SHALL NOT BE RESPONSIBLE FOR THE ACCURACY OR COMPLETENESS OF SCANNED COPIES OF THIS PLAN SHEET.

TO ACCOMPANY PLANS DATED 12-1-14

2010 REVISED STANDARD PLAN RSP A10B

UNIT OF MEASUREMENT SYMBOLS:

Some of the symbols used in the project plan quantity tables and in the Bid Item List are:

TABLE A

SYMBOL USED	DEFINITIONS
ACRE	ACRE
CF	CUBIC FOOT
CY	CUBIC YARD
EA	EACH
GAL	GALLON
LB	POUND
LF	LINEAR FOOT
SQFT	SQUARE FOOT
SQYD	SQUARE YARD
STA	100 FEET
TAB	TABLET
TON	2,000 POUNDS

Some of the symbols used in the plans other than in the project plan quantity tables are:

TABLE B

SYMBOL USED	DEFINITIONS
ksi	KIPS PER SQUARE INCH
ksf	KIPS PER SQUARE FOOT
psi	POUNDS PER SQUARE INCH
psf	POUNDS PER SQUARE FOOT
lb/ft^3, pcf	POUNDS PER CUBIC FOOT
tsf	TONS PER SQUARE FOOT
mph, MPH *	MILES PER HOUR
ø	NOMINAL DIAMETER
oz	OUNCE
lb	POUND
kip	1,000 POUNDS
cal	CALORIE
ft	FOOT OR FEET
gal	GALLON

* For use on a sign panel only

STATE OF CALIFORNIA
DEPARTMENT OF TRANSPORTATION

ABBREVIATIONS (SHEET 2 OF 2)

NO SCALE

RSP A10B DATED JULY 19, 2013 SUPERSEDES STANDARD PLAN A10B DATED MAY 20, 2011 - PAGE 2 OF THE STANDARD PLANS BOOK DATED 2010.

REVISED STANDARD PLAN RSP A10B

6-7-13

Dist	COUNTY	ROUTE	POST MILES TOTAL PROJECT	SHEET No.	TOTAL SHEETS
05	Mon	1	28.0/28.4	37	104

REGISTERED CIVIL ENGINEER

July 20, 2012
PLANS APPROVAL DATE

REGISTERED PROFESSIONAL ENGINEER
Roberta L. McLaughlin
No. C40375
Exp. 3-31-13
CIVIL
STATE OF CALIFORNIA

THE STATE OF CALIFORNIA OR ITS OFFICERS OR AGENTS SHALL NOT BE RESPONSIBLE FOR THE ACCURACY OR COMPLETENESS OF SCANNED COPIES OF THIS PLAN SHEET.

TO ACCOMPANY PLANS DATED 12-1-14

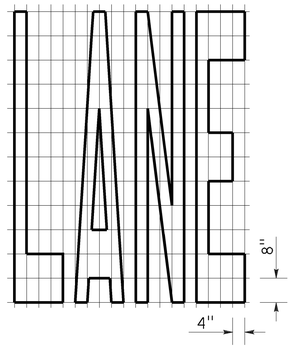

A=24 ft^2

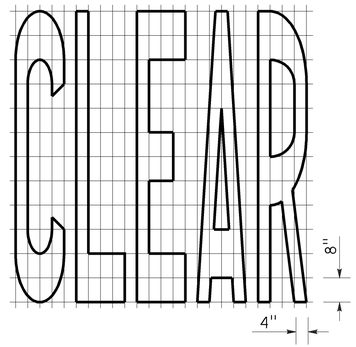

A=27 ft^2

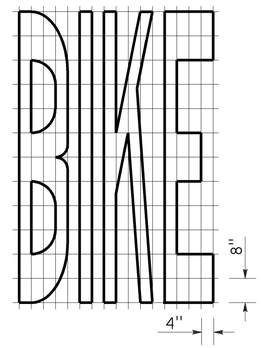

A=21 ft^2

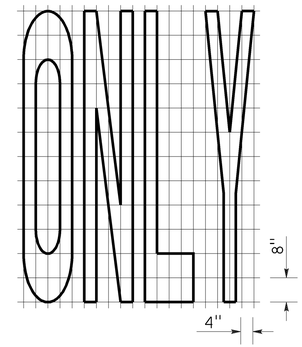

A=22 ft^2

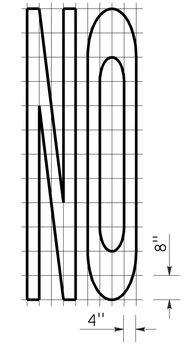

A=14 ft^2

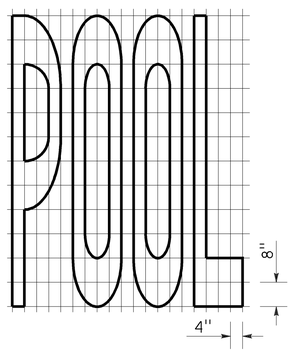

A=23 ft^2

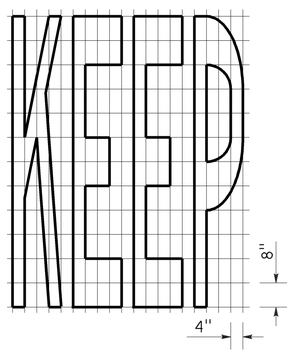

A=24 ft^2

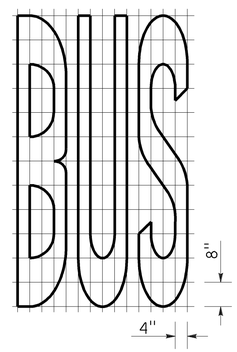

A=20 ft^2

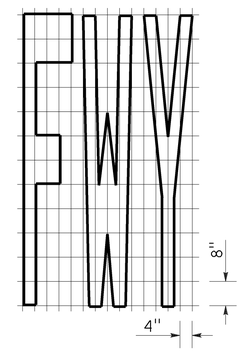

A=16 ft^2

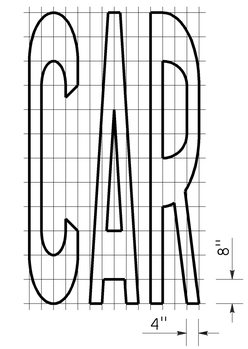

A=17 ft^2

WORD MARKINGS			
ITEM	ft^2	ITEM	ft^2
LANE	24	NO	14
POOL	23	BIKE	21
CAR	17	BUS	20
CLEAR	27	ONLY	22
KEEP	24	FWY	16

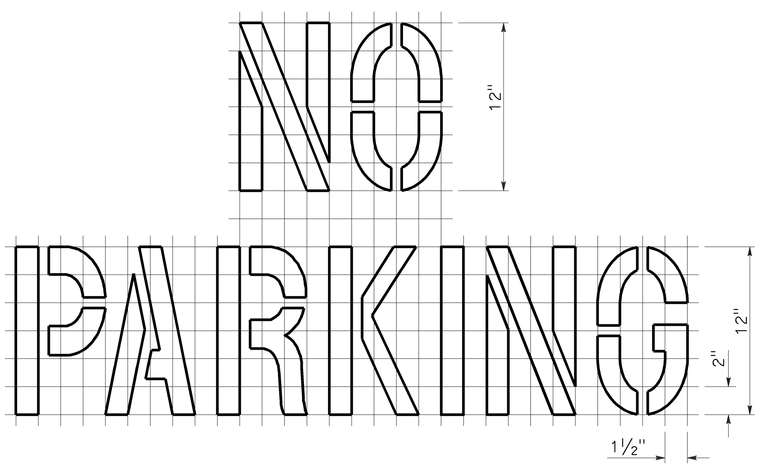

A=2 ft^2

See Notes 6 and 7

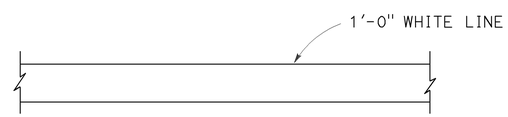

LIMIT LINE (STOP LINE)

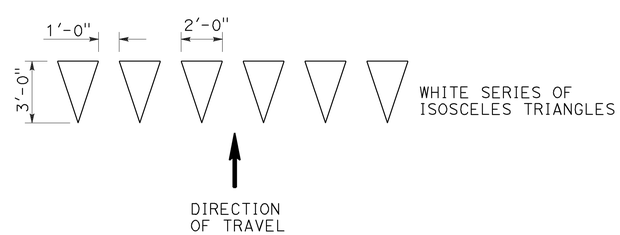

YIELD LINE

NOTES:

1. If a message consists of more than one word, it should read "UP", i.e., the first word should be nearest the driver.
2. The space between words should be at least four times the height of the characters for low speed roads, but not more than ten times the height of the characters. The space may be reduced appropriately where there is limited space because of local conditions.
3. Minor variations in dimensions may be accepted by the Engineer.
4. Portions of a letter, number or symbol may be separated by connecting segments not to exceed 2" in width.
5. The words "NO PARKING" pavement marking is to be used for parking facilities. For typical locations of markings, see Standard Plans A90A and A90B.
6. The words "NO PARKING", shall be painted in white letters no less than 1'-0" high on a contrasting background and located so that it is visible to traffic enforcement officials.

STATE OF CALIFORNIA
DEPARTMENT OF TRANSPORTATION

PAVEMENT MARKINGS WORDS, LIMIT AND YIELD LINES

NO SCALE

RSP A24E DATED JULY 20, 2012 SUPERSEDES STANDARD PLAN A24E
DATED MAY 20, 2011 - PAGE 17 OF THE STANDARD PLANS BOOK DATED 2010.

REVISED STANDARD PLAN RSP A24E

2010 REVISED STANDARD PLAN RSP A24E

6-12-12

Dist	COUNTY	ROUTE	POST MILES TOTAL PROJECT	SHEET No.	TOTAL SHEETS
05	Mon	1	28.0/28.4	38	104

Randell D. Hiatt
REGISTERED CIVIL ENGINEER

July 19, 2013
PLANS APPROVAL DATE

REGISTERED PROFESSIONAL ENGINEER
Randell D. Hiatt
No. C50200
Exp. 6-30-15
CIVIL
STATE OF CALIFORNIA

THE STATE OF CALIFORNIA OR ITS OFFICERS OR AGENTS SHALL NOT BE RESPONSIBLE FOR THE ACCURACY OR COMPLETENESS OF SCANNED COPIES OF THIS PLAN SHEET.

TO ACCOMPANY PLANS DATED 12-1-14

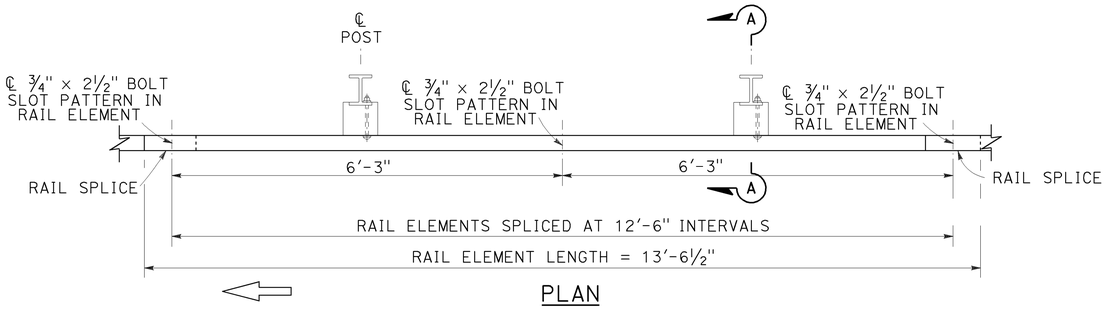

PLAN

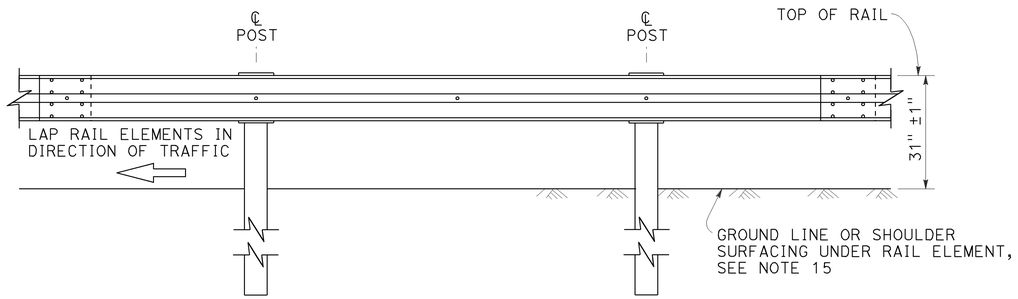

ELEVATION

MIDWEST GUARDRAIL SYSTEM WITH STEEL POSTS AND NOTCHED WOOD OR NOTCHED RECYCLED PLASTIC BLOCKS

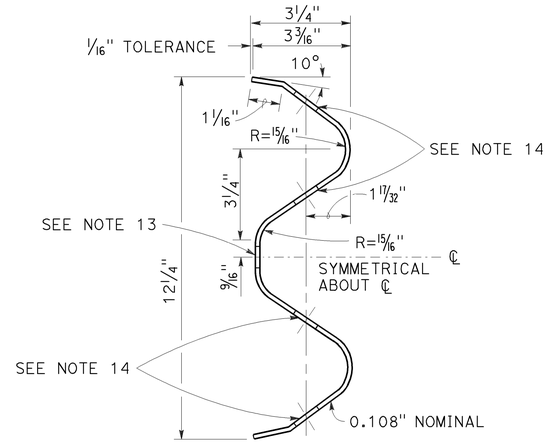

SECTION THRU RAIL ELEMENT

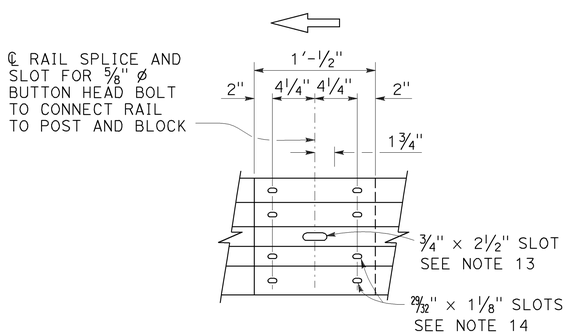

ELEVATION

RAIL ELEMENT SPLICE DETAIL

a) Connect the over lapped end of the rail elements with ⅝" ø × 1⅜" button head oval shoulder splice bolts inserted into the 29⁄32" × 1⅛" slots and bolted together with ⅝" ø recessed hex nuts. Recess of hex nut points toward rail element. A total of 8 bolts and nuts are to be used at each rail splice connection.

b) The ends of the rail elements are to be overlapped in the direction of traffic (see details).

c) Where end cap is to be attached to the end of a rail element, a total of 4 of the above described splice bolts and nuts are to be used.

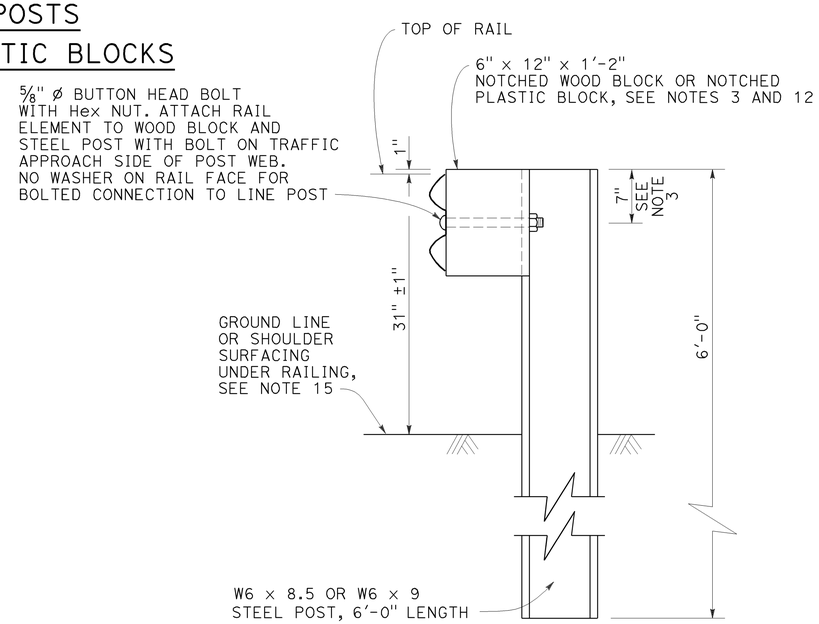

SECTION A-A

TYPICAL STEEL LINE POST INSTALLATION

See Note 4

NOTES:

1. For details of wood post installations, see Revised Standard Plan RSP A77L1.
2. For details of standard hardware used to construct MGS, see Revised Standard Plan RSP A77M1.
3. For details of steel posts and notched wood blocks used to construct MGS, see Revised Standard Plan RSP A77N2.
4. For additional installation details, see Revised Standard Plan RSP A77N3.
5. MGS post spacing to be 6'-3" center to center, except as otherwise noted.
6. For MGS typical layouts, see the A77P, A77Q and A77R Series of Standard Plans.
7. If railing is connected to terminal system end treatment, use 31" height terminal system end treatment.
8. For MGS end anchor details, see Revised Standard Plans RSP A77S1 and RSP A77T2.
9. For details of MGS transition to bridge railing, see Revised Standard Plan RSP A77U4.
10. For additional details of MGS connection to bridge railings, see Revised Standard Plans RSP A77U1, RSP A77U2 and RSP A77V1.
11. For dike positioning and MGS delineation details, see Revised Standard Plan RSP A77N4.
12. Notched face of block faces steel post.
13. Slotted hole for bolted connection of rail element to block and post. See "Section Thru Rail Element".
14. Slotted holes for splice bolts to overlap ends of rail element. See "Section Thru Rail Element".
15. Install posts in soil.

STATE OF CALIFORNIA
DEPARTMENT OF TRANSPORTATION

MIDWEST GUARDRAIL SYSTEM STANDARD RAILING SECTION (STEEL POST WITH NOTCHED WOOD OR NOTCHED RECYCLED PLASTIC BLOCK)

NO SCALE

RSP A77L2 DATED JULY 19, 2013 SUPPLEMENTS THE STANDARD PLANS BOOK DATED 2010.

REVISED STANDARD PLAN RSP A77L2

2010 REVISED STANDARD PLAN RSP A77L2

Dist	COUNTY	ROUTE	POST MILES TOTAL PROJECT	SHEET No.	TOTAL SHEETS
05	Mon	1	28.0/28.4	39	104

Randell D. Hiatt
REGISTERED CIVIL ENGINEER

July 19, 2013
PLANS APPROVAL DATE

REGISTERED PROFESSIONAL ENGINEER
Randell D. Hiatt
No. C50200
Exp. 6-30-15
CIVIL
STATE OF CALIFORNIA

THE STATE OF CALIFORNIA OR ITS OFFICERS OR AGENTS SHALL NOT BE RESPONSIBLE FOR THE ACCURACY OR COMPLETENESS OF SCANNED COPIES OF THIS PLAN SHEET.

TO ACCOMPANY PLANS DATED 12-1-14

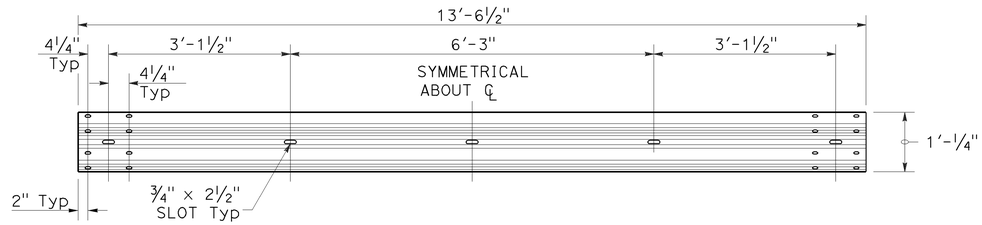

TYPICAL RAIL ELEMENT

NOTE:

1. Slotted holes for splice bolts to overlap ends of rail element.

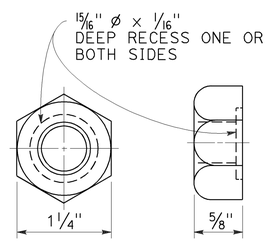

⅝" Ø RECESS NUT

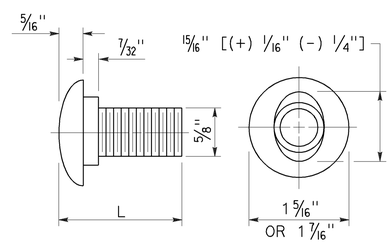

⅝" Ø BUTTON HEAD BOLT

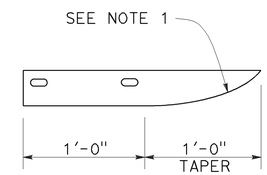

PLAN

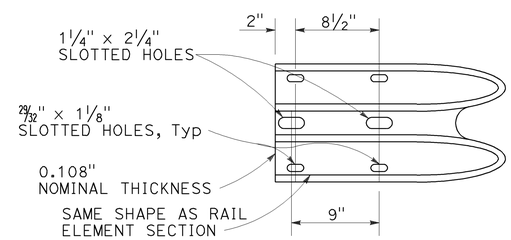

ELEVATION

END CAP
(TYPE A)

BUTTON HEAD BOLT

L	THREAD LENGTH
1⅜"	FULL THREAD LENGTH
2"	FULL THREAD LENGTH
10"	4" Min THREAD LENGTH
18"	4" Min THREAD LENGTH
20"	4" Min THREAD LENGTH
22"	4" Min THREAD LENGTH
26"	4" Min THREAD LENGTH
36"	4" Min THREAD LENGTH
** 2¾"	2" Min THREAD LENGTH
** 19"	4" Min THREAD LENGTH

** For nested rail applications.

STATE OF CALIFORNIA
DEPARTMENT OF TRANSPORTATION

MIDWEST GUARDRAIL SYSTEM STANDARD HARDWARE

NO SCALE

RSP A77M1 DATED JULY 19, 2013 SUPPLEMENTS THE STANDARD PLANS BOOK DATED 2010.

REVISED STANDARD PLAN RSP A77M1

2010 REVISED STANDARD PLAN RSP A77M1

7-3-13

Dist	COUNTY	ROUTE	POST MILES TOTAL PROJECT	SHEET No.	TOTAL SHEETS
05	Mon	1	28.0/28.4	40	104

Randell D. Hiatt
REGISTERED CIVIL ENGINEER

November 15, 2013
PLANS APPROVAL DATE

REGISTERED PROFESSIONAL ENGINEER
Randell D. Hiatt
No. C50200
Exp. 6-30-15
CIVIL
STATE OF CALIFORNIA

THE STATE OF CALIFORNIA OR ITS OFFICERS OR AGENTS SHALL NOT BE RESPONSIBLE FOR THE ACCURACY OR COMPLETENESS OF SCANNED COPIES OF THIS PLAN SHEET.

TO ACCOMPANY PLANS DATED 12-1-14

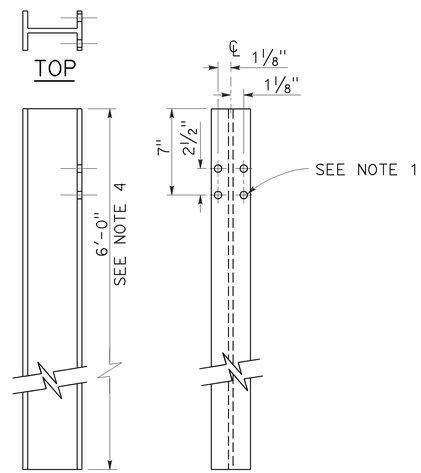

SIDE FRONT

W6 x 9 OR W6 x 8.5 STEEL POST

See Note 4

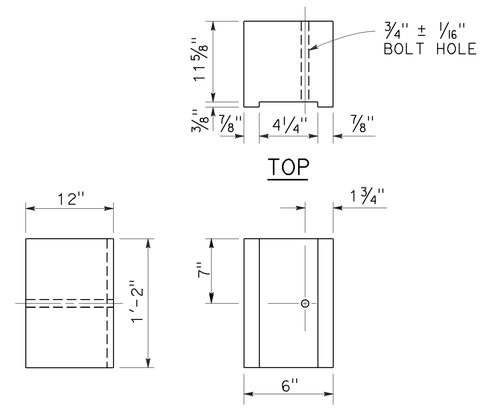

SIDE FRONT

6" x 12" NOTCHED WOOD BLOCK

See Notes 2 and 3

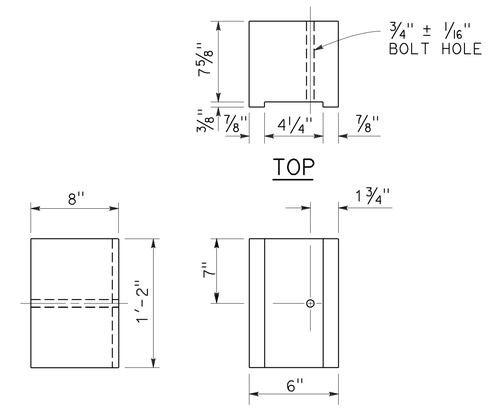

SIDE FRONT

6" x 8" NOTCHED WOOD BLOCK

Only for use with metal beam guard railing. See Note 5

NOTES:

1. All holes in steel post shall be 13/16" Dia maximum.
2. Dimensions shown for wood block are nominal.
3. Notched face of block faces steel post.
4. 6'-0" length posts to be used for typical roadway installation. See Revised Standard Plan RSP A77N3.
5. See Revised Standard Plan RSP A77L3 for use of 6" x 8" and 8" x 8" notched wood blocks.
6. This post and 8" x 12" block combination to be used for line post sections of MGS on narrow roadways and where strengthened line post sections of MGS are warranted to shield fixed objects.

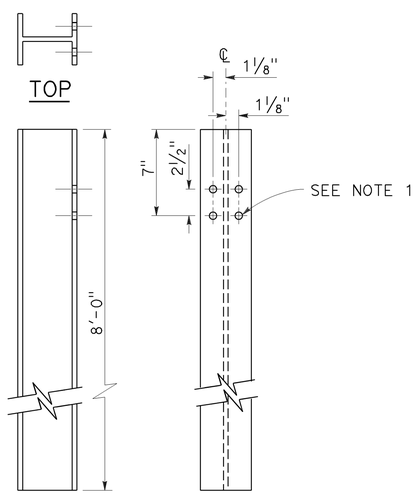

SIDE FRONT

W6 x 15 STEEL POST

See Note 6

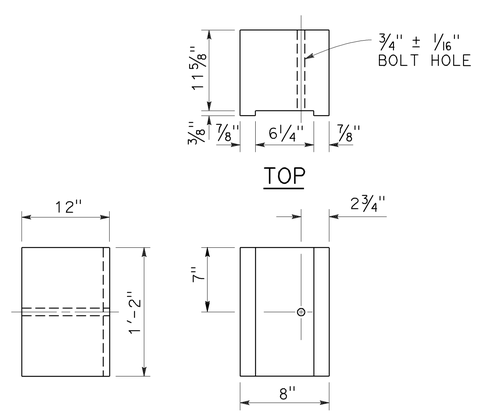

SIDE FRONT

8" x 12" NOTCHED WOOD BLOCK

See Notes 2 and 3

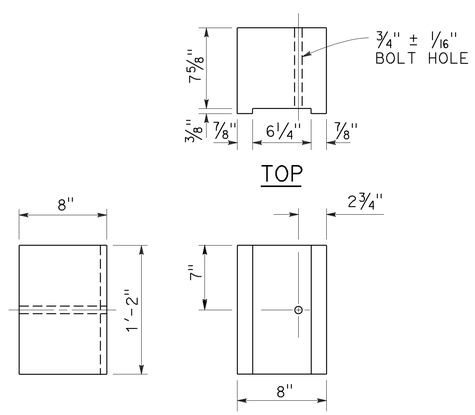

SIDE FRONT

8" x 8" NOTCHED WOOD BLOCK

Only for use with metal beam guard railing. See Note 5

STATE OF CALIFORNIA
DEPARTMENT OF TRANSPORTATION

MIDWEST GUARDRAIL SYSTEM STEEL POST AND NOTCHED WOOD BLOCK DETAILS

NO SCALE

RSP A77N2 DATED NOVEMBER 15, 2013 SUPERSEDES RSP A77N2 DATED JULY 19, 2013 THAT SUPPLEMENTS THE STANDARD PLANS BOOK DATED 2010.

REVISED STANDARD PLAN RSP A77N2

2010 REVISED STANDARD PLAN RSP A77N2

10-29-13

Dist	COUNTY	ROUTE	POST MILES TOTAL PROJECT	SHEET No.	TOTAL SHEETS
05	Mon	1	28.0/28.4	41	104

Randell D. Hiatt
REGISTERED CIVIL ENGINEER

November 15, 2013
PLANS APPROVAL DATE

REGISTERED PROFESSIONAL ENGINEER
Randell D. Hiatt
No. C50200
Exp. 6-30-15
CIVIL
STATE OF CALIFORNIA

THE STATE OF CALIFORNIA OR ITS OFFICERS OR AGENTS SHALL NOT BE RESPONSIBLE FOR THE ACCURACY OR COMPLETENESS OF SCANNED COPIES OF THIS PLAN SHEET.

TO ACCOMPANY PLANS DATED 12-1-14

2010 REVISED STANDARD PLAN RSP A77N3

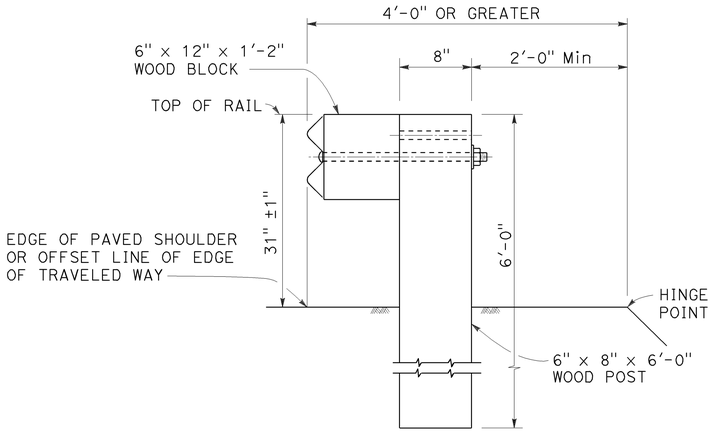

DETAIL A

TYPICAL ROADWAY INSTALLATION

See Note 1

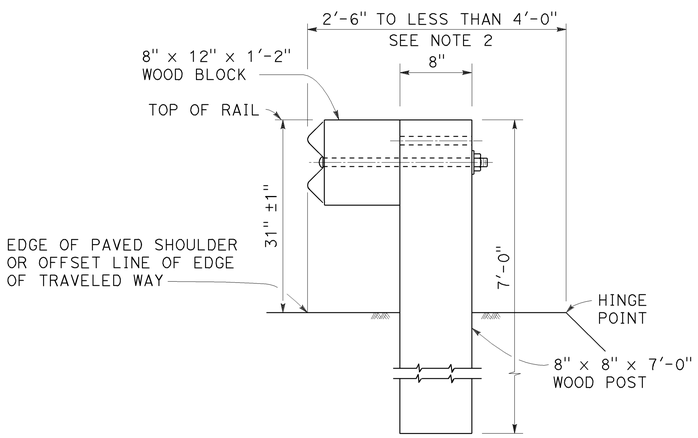

DETAIL B

NARROW ROADWAY INSTALLATION

See Note 1

POST EMBEDMENT

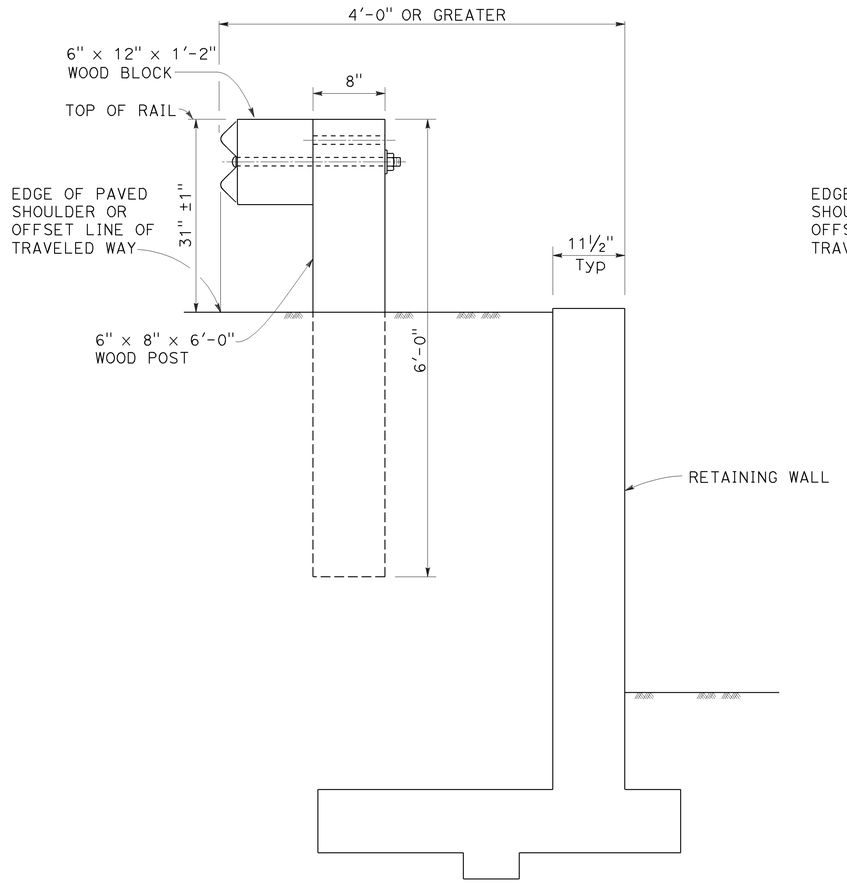

DETAIL C

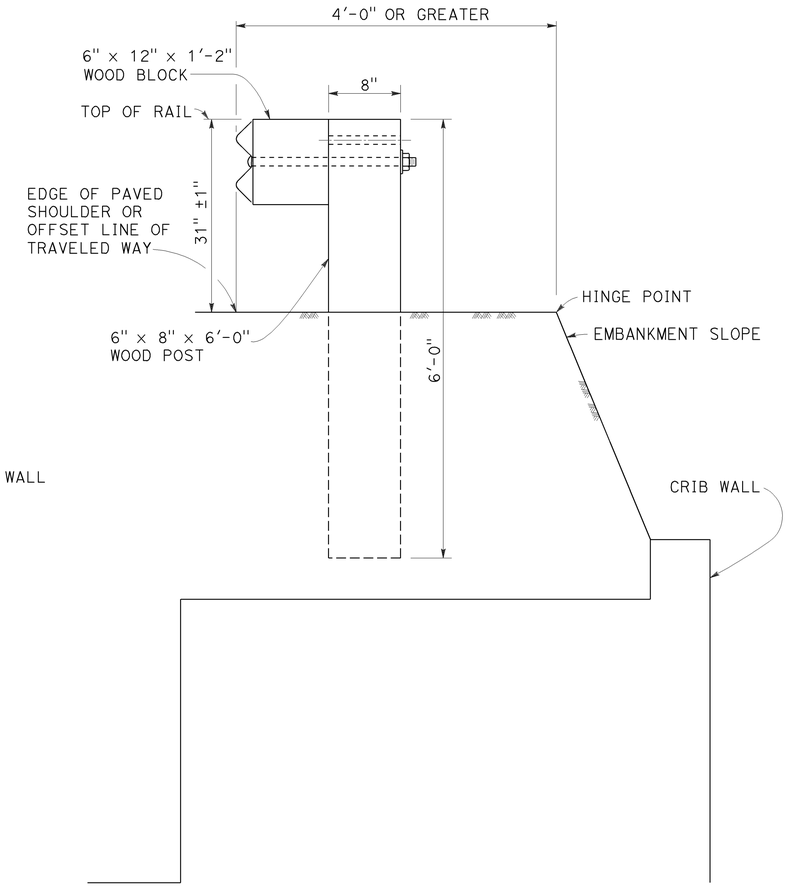

DETAIL D

INSTALLATION AT EARTH RETAINING WALLS

NOTES:

1. These installation details also applicable to steel line post installations. For Detail A, C, and D, where steel line post installations are constructed, W6 x 8.5 or W6 x 9 steel post, 6'-0" in length, with 6" x 12" x 1'-2" notched wood blocks or notched recycled plastic blocks are to be used in place of the size of wood post and wood block shown. For Detail B, where steel line post installations are constructed, W6 x 15 steel post, 8'-0" in length, with 8" x 12" x 1'-2" notched wood blocks or notched recycled plastic blocks are to be used in place of the size of wood post and wood block shown. For additional installation details, see Revised Standard Plan RSP A77L1 and RSP A77L2.
2. Where the distance between the face of the rail and the hinge point is less than 2'-6", see the Project Plans for special details.
3. For dike positioning with MGS installations, see Revised Standard Plan RSP A77N4.

STATE OF CALIFORNIA
DEPARTMENT OF TRANSPORTATION

MIDWEST GUARDRAIL SYSTEM TYPICAL LINE POST EMBEDMENT AND HINGE POINT OFFSET DETAILS

NO SCALE

RSP A77N3 DATED NOVEMBER 15, 2013 SUPERSEDES RSP A77N3
DATED JULY 19, 2013 THAT SUPPLEMENTS THE STANDARD PLANS BOOK DATED 2010.

REVISED STANDARD PLAN RSP A77N3

Dist	COUNTY	ROUTE	POST MILES TOTAL PROJECT	SHEET No.	TOTAL SHEETS
05	Mon	1	28.0/28.4	42	104

Randell D. Hiatt
REGISTERED CIVIL ENGINEER

July 19, 2013
PLANS APPROVAL DATE

REGISTERED PROFESSIONAL ENGINEER
Randell D. Hiatt
No. C50200
Exp. 6-30-15
CIVIL
STATE OF CALIFORNIA

THE STATE OF CALIFORNIA OR ITS OFFICERS OR AGENTS SHALL NOT BE RESPONSIBLE FOR THE ACCURACY OR COMPLETENESS OF SCANNED COPIES OF THIS PLAN SHEET.

TO ACCOMPANY PLANS DATED 12-1-14

NOTES:

1. When necessary to place dike more than 7" in front of face of MGS, only Type C dike may be used. For dike details, see Revised Standard Plan RSP A87B.
2. For standard railing post embedment, see Revised Standard Plan RSP A77N3.
3. MGS delineation to be used where shown on the Project Plans.
4. When dike or curb is placed under MGS, the maximum height of the dike or curb shall be 6". Mountable dike should not be used. For dike and curb details, see Revised Standard Plans RSP A87A and RSP A87B.
5. For details of typical distance between the face of rail and hinge point, see Revised Standard Plan RSP A77N3.
6. For steel line posts, use 1/4 - 20 self-tapping screws in 0.22" diameter holes or 1/4" bolts in 9/32" diameter holes.

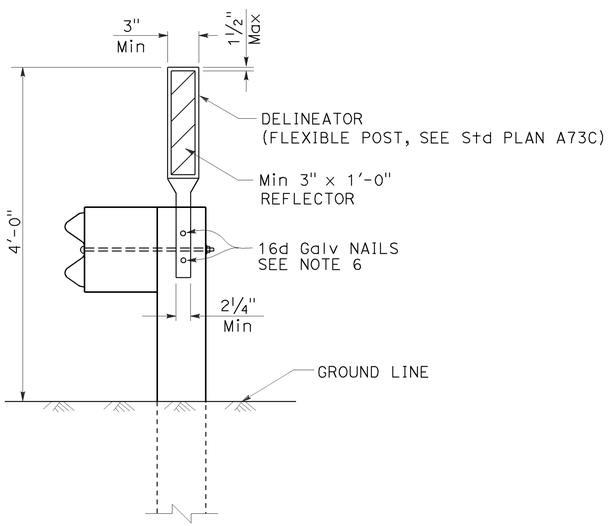

MGS DELINEATION

See Note 3

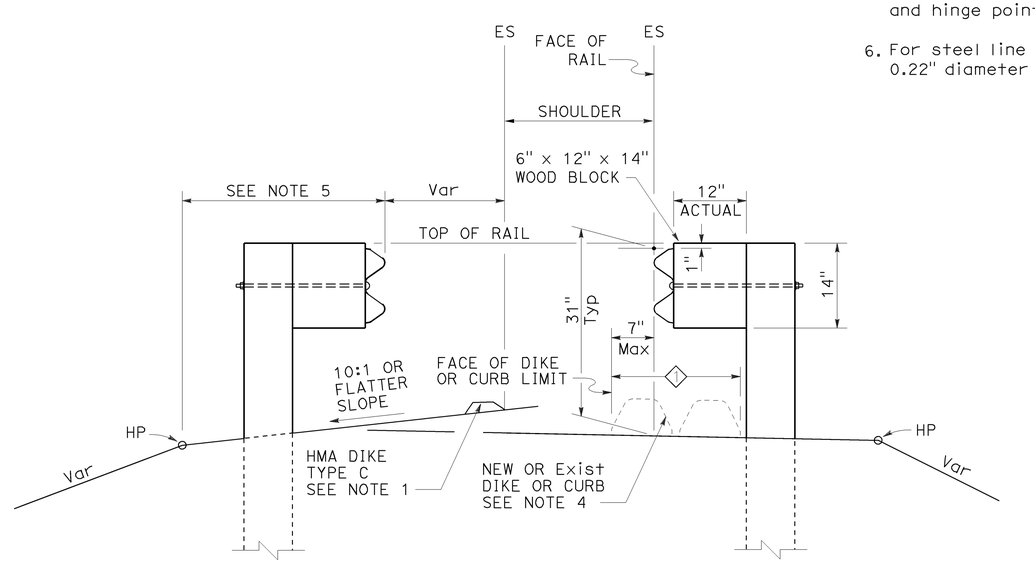

DIKE POSITIONING

See Note 1

1 PERMISSIBLE DIKE OR CURB PLACEMENT AREA

STATE OF CALIFORNIA
DEPARTMENT OF TRANSPORTATION

MIDWEST GUARDRAIL SYSTEM TYPICAL RAILING DELINEATION AND DIKE POSITIONING DETAILS

NO SCALE

RSP A77N4 DATED JULY 19, 2013 SUPPLEMENTS THE STANDARD PLANS BOOK DATED 2010.

REVISED STANDARD PLAN RSP A77N4

2010 REVISED STANDARD PLAN RSP A77N4

7-10-13

Dist	COUNTY	ROUTE	POST MILES TOTAL PROJECT	SHEET No.	TOTAL SHEETS
05	Mon	1	28.0/28.4	43	104

Randell D. Hiatt
REGISTERED CIVIL ENGINEER

November 15, 2013
PLANS APPROVAL DATE

REGISTERED PROFESSIONAL ENGINEER
Randell D. Hiatt
No. C50200
Exp. 6-30-15
CIVIL
STATE OF CALIFORNIA

THE STATE OF CALIFORNIA OR ITS OFFICERS OR AGENTS SHALL NOT BE RESPONSIBLE FOR THE ACCURACY OR COMPLETENESS OF SCANNED COPIES OF THIS PLAN SHEET.

TO ACCOMPANY PLANS DATED 12-1-14

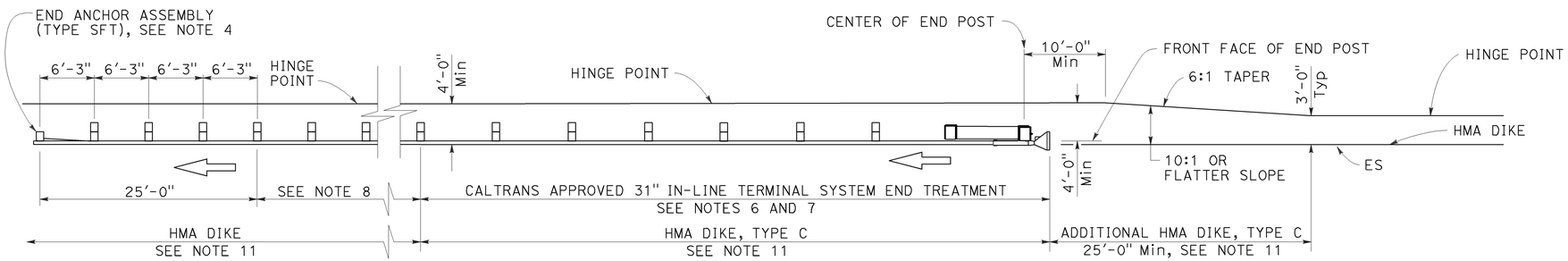

TYPE 11A LAYOUT

(Embankment MGS installation with 31" in-line end treatment at traffic approach end of railing) see Note 5

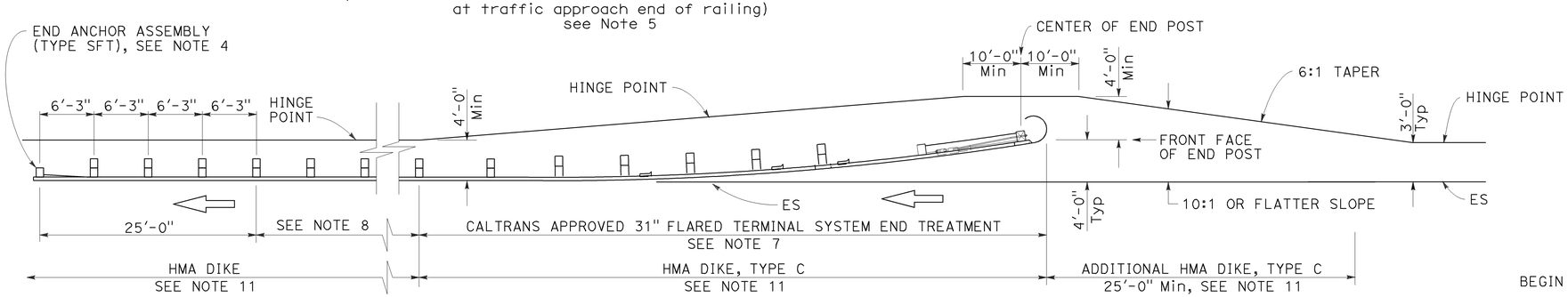

TYPE 11B LAYOUT

(Embankment MGS installation with 31" flared end treatment at traffic approach end of railing) see Note 5

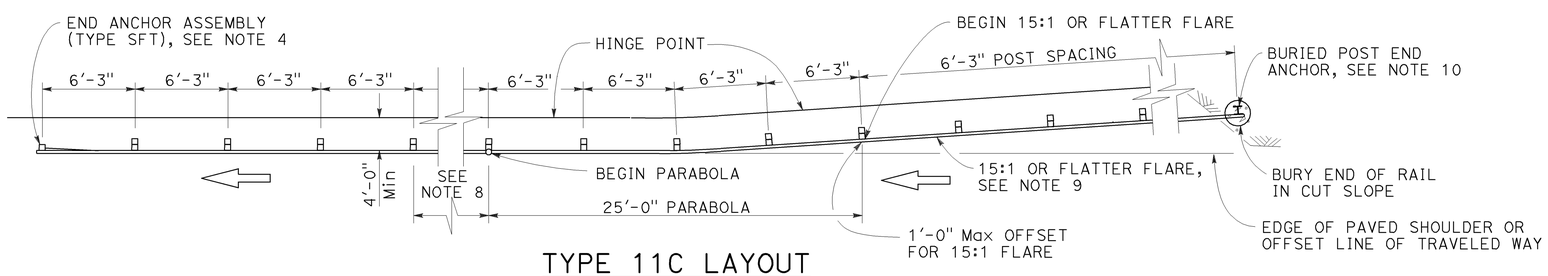

TYPE 11C LAYOUT

(Embankment MGS installation with buried end anchor treatment at traffic approach end of railing) see Notes 5 and 11

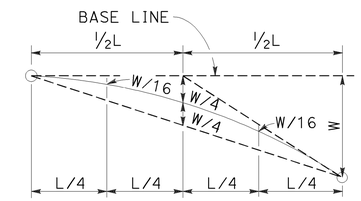

TYPICAL PARABOLIC LAYOUT

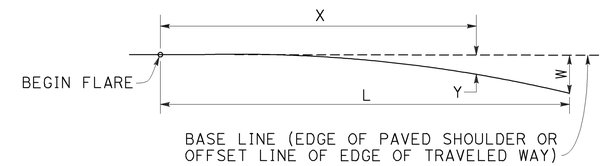

$$Y = \frac{WX^2}{L^2}$$

Y = OFFSET FROM BASE LINE
W = MAXIMUM OFFSET
X = DISTANCE ALONG BASE LINE
L = LENGTH OF FLARE

PARABOLIC FLARE OFFSETS

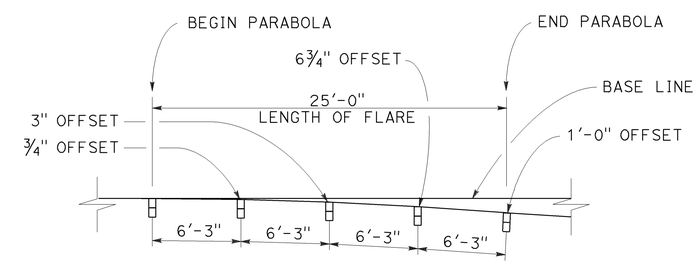

TYPICAL FLARE OFFSETS FOR 1 FOOT Max END OFFSET

NOTES:

1. Line post, blocks and hardware to be used are shown on Revised Standard Plans RSP A77L1, RSP A77L2, RSP A77M1, RSP A77N1 and RSP A77N2.
2. MGS post spacing to be 6'-3" center to center, except as otherwise noted.
3. Except as noted, line posts are 6" x 8" x 6'-0" wood with 6" x 12" x 1'-2" wood blocks. W6 x 8.5 or W6 x 9 steel posts, 6'-0" in length, with 6" x 12" x 1'-2" notched wood blocks or recycled plastic blocks may be used for 6" x 8" x 6'-0" wood post with 6" x 12" x 1'-2" wood blocks where applicable and when specified.
4. For End Anchor Assembly (Type SFT) details, see Revised Standard Plan RSP A77S1.
5. Layout Types 11A, 11B or 11C are typically used where MGS is recommended to shield embankment slopes and a crashworthy end treatment is required for only one direction of traffic.
6. 31" in-line terminal system end treatments are used where site conditions will not accommodate a flared end treatment.
7. The type of 31" terminal system end treatment to be used will be shown on the Project Plans.
8. Dependent on site conditions (embankment height and side slope), construction of additional MGS (length equal to multiples of 12'-6" with 6'-3" post spacing) may be advisable.
9. The 15:1 or flatter flare used with buried end anchors is based on the edge of the paved shoulder or offset line of edge of the traveled way. The length of MGS within the 15:1 or flatter flare is based on site conditions and should be a length equal to multiples of 12'-6".
10. For details of the buried post end anchor used with Type 11C Layout, see Revised Standard Plan RSP A77T2.
11. Where placement of dike is required with MGS installations, see Revised Standard Plan RSP A77N4 for dike positioning details.

STATE OF CALIFORNIA
DEPARTMENT OF TRANSPORTATION

MIDWEST GUARDRAIL SYSTEM TYPICAL LAYOUTS FOR EMBANKMENTS

NO SCALE

RSP A77P1 DATED NOVEMBER 15, 2013 SUPERSEDES RSP A77P1 DATED JULY 19, 2013 THAT SUPPLEMENTS THE STANDARD PLANS BOOK DATED 2010.

REVISED STANDARD PLAN RSP A77P1

2010 REVISED STANDARD PLAN RSP A77P1

10-4-13

Dist	COUNTY	ROUTE	POST MILES TOTAL PROJECT	SHEET No.	TOTAL SHEETS
05	Mon	1	28.0/28.4	44	104

Randell D. Hiatt
REGISTERED CIVIL ENGINEER

July 19, 2013
PLANS APPROVAL DATE

REGISTERED PROFESSIONAL ENGINEER
Randell D. Hiatt
No. C50200
Exp. 6-30-15
CIVIL
STATE OF CALIFORNIA

THE STATE OF CALIFORNIA OR ITS OFFICERS OR AGENTS SHALL NOT BE RESPONSIBLE FOR THE ACCURACY OR COMPLETENESS OF SCANNED COPIES OF THIS PLAN SHEET.

TO ACCOMPANY PLANS DATED 12-1-14

2010 REVISED STANDARD PLAN RSP A77Q1

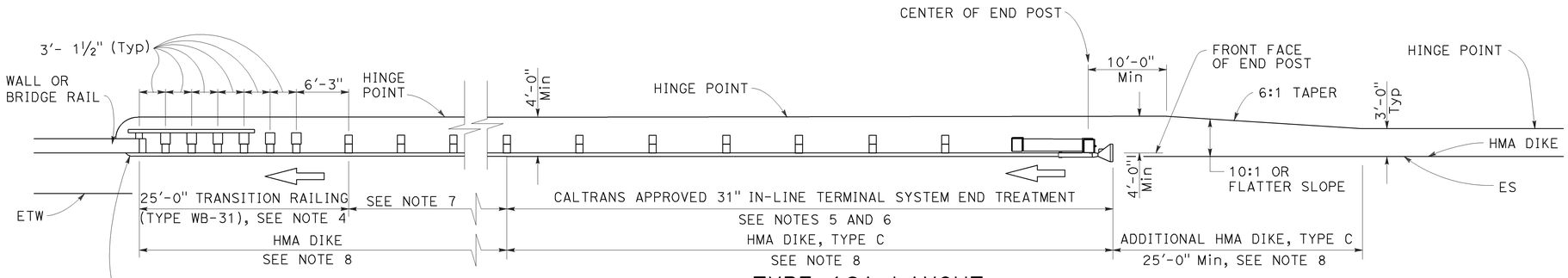

TYPE 12A LAYOUT

(MGS installation at structure approach with
31" In-line end treatment at traffic approach end of railing)
See Notes 9

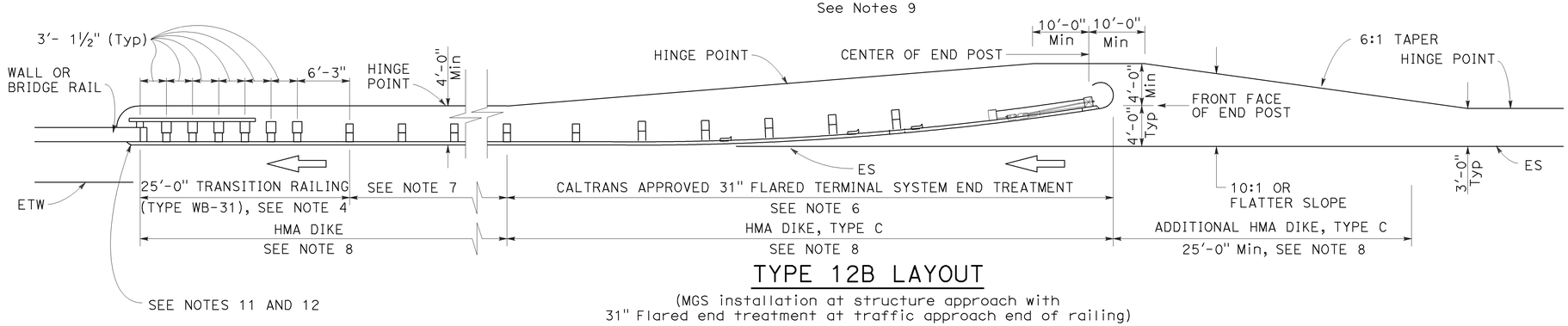

TYPE 12B LAYOUT

(MGS installation at structure approach with
31" Flared end treatment at traffic approach end of railing)
See Notes 9

NOTES:

1. Line post, blocks and hardware to be used are shown on Revised Standard Plans RSP A77L1, RSP A77L2, RSP A77M1, RSP A77N1 and RSP A77N2.
2. MGS post spacing to be 6'-3" center to center, except as otherwise noted.
3. Except as noted, line posts are 6" x 8" x 6'-0" wood with 6" x 12" x 1'-2" wood blocks. W6 x 8.5 or W6 x 9 steel posts, 6'-0" in length, with 6" x 12" x 1'-2" notched wood blocks or plastic blocks may be used for 6" x 8" x 6'-0" wood posts with 6" x 12" x 1'-2" wood blocks where applicable and when specified.
4. For Transition Railing (Type WB-31) details for Types 12A and 12B Layouts, see Revised Standard Plan RSP A77U4.
5. 31" in-line terminal system end treatments are used where site conditions will not accommodate a 31" flared end treatment.
6. The type 31" of terminal system end treatment to be used will be shown on the Project Plans.
7. Dependent on site conditions (embankment height, side slopes, or other fixed objects), it may be advisable to construct additional guard railing (a length equal to multiples of 12'-6" with 6'-3" post spacing) between the transition railing and end treatment. A 12.5 degree angle of departure can be drawn on the Project Plans from the edge of traveled way through the outer most point of the fixed object to determine the additional length of railing needed.
8. Where placement of dike is required with guard railing installations, see Revised Standard Plan RSP A77N4 for dike positioning details.
9. Type 12A or Type 12B Layouts are typically used:
   a. To the right of approaching traffic, at the end of a structure, on two-lane conventional highway where the roadbed width across the structure is less than 40 feet.
   b. To the left of approaching traffic, at the end of a structure, on two-lane conventional highway where the roadbed width across the structure is less than 40 feet.
   c. To the right of approaching traffic at the end of each structure on multilane freeways or expressways with separate adjacent or parallel bridges.
   d. To the right of approaching traffic at the end of the structure on multilane freeways or expressways with decked median on the bridge.
10. See Revised Standard Plan RSP A77Q3 for typical layout used left of approaching traffic at the ends of each structure on multilane freeways or expressways with separate adjacent or parallel bridges.
11. For additional details of typical connections to bridge rail, see Connection Detail AA on Revised Standard Plans RSP A77U1 and RSP A77U2 and Connection Detail FF on Revised Standard Plans RSP A77V1 and RSP A77V2.
12. For additional details of a typical connection to walls or abutments, see Revised Standard Plan RSP A77U3.

STATE OF CALIFORNIA
DEPARTMENT OF TRANSPORTATION

MIDWEST GUARDRAIL SYSTEM TYPICAL LAYOUTS FOR STRUCTURE APPROACH

NO SCALE

RSP A77Q1 DATED JULY 19, 2013 SUPPLEMENTS THE STANDARD PLANS BOOK DATED 2010.

REVISED STANDARD PLAN RSP A77Q1

Dist	COUNTY	ROUTE	POST MILES TOTAL PROJECT	SHEET No.	TOTAL SHEETS
05	Mon	1	28.0/28.4	45	104

Randell D. Hiatt
REGISTERED CIVIL ENGINEER

July 19, 2013
PLANS APPROVAL DATE

REGISTERED PROFESSIONAL ENGINEER
Randell D. Hiatt
No. C50200
Exp. 6-30-15
CIVIL
STATE OF CALIFORNIA

THE STATE OF CALIFORNIA OR ITS OFFICERS OR AGENTS SHALL NOT BE RESPONSIBLE FOR THE ACCURACY OR COMPLETENESS OF SCANNED COPIES OF THIS PLAN SHEET.

TO ACCOMPANY PLANS DATED 12-1-14

2010 REVISED STANDARD PLAN RSP A77Q4

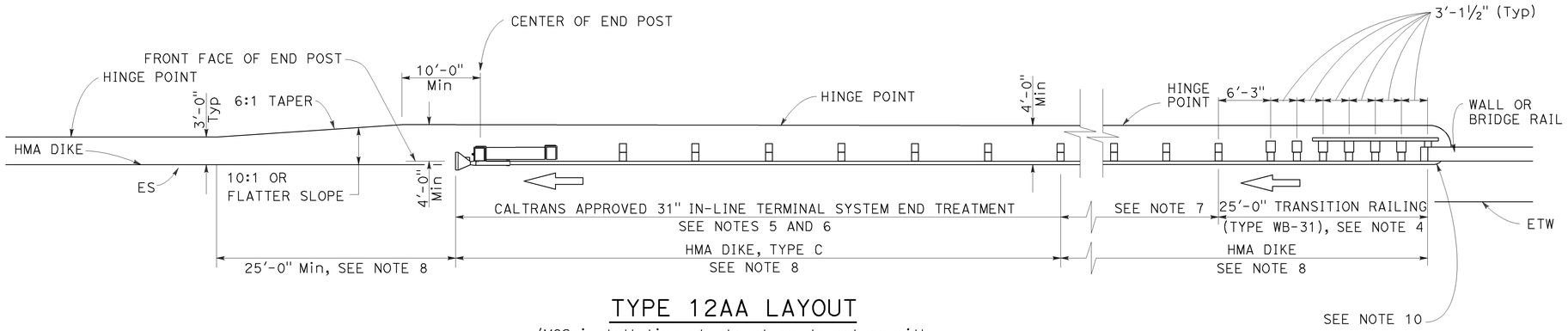

TYPE 12AA LAYOUT

(MGS installation at structure departure with
31" in-line end treatment at trailing end of railing)
See Notes 8 and 9

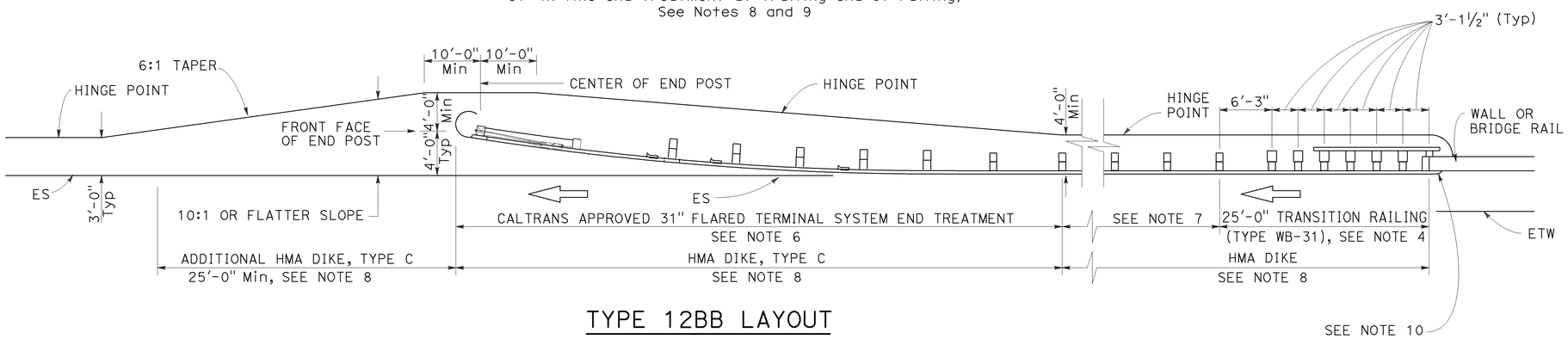

TYPE 12BB LAYOUT

(MGS installation at structure departure with
31" flared end treatment at trailing end of railing)
See Notes 8 and 9

NOTES:

1. Line post, blocks and hardware to be used are shown on Revised Standard Plans RSP A77L1, RSP A77L2, RSP A77M1, RSP A77N1 and RSP A77N2.
2. MGS post spacing to be 6'-3" center to center, except as otherwise noted.
3. Except as noted, line posts are 6" x 8" x 6'-0" wood with 6" x 12" x 1'-2" wood blocks. W6 x 8.5 or W6 x 9 steel posts, 6'-0" in length, with 6" x 12" x 1-2" notched wood blocks or notched recycled plastic blocks may be used for 6" x 8" x 6'-0" wood posts with 6" x 12" x 1'-2" wood blocks where applicable and when specified.
4. For Transition Railing (Type WB-31) details for Types 12AA and 12BB Layouts, see Revised Standard Plan RSP A77U4.
5. 31" in-line terminal system treatments are used where site conditions will not accommodate a 31" flared end treatment.
6. The type of 31" terminal system to be used will be shown on the Project Plans.
7. Dependent on site conditions (embankment height, side slopes, other fixed objects), it may be advisable to construct additional MGS (a length equal to multiples of 12'-6" with 6'-3" post spacing) between the transition railing and 31" end treatments.
8. Where placement of dike is required with MGS installations, see Revised Standard Plan RSP A77N4 for dike positioning details.
9. Type 12AA or Type 12BB Layouts are typically used to the right of traffic departing a structure on two-way conventional highways where the roadbed width across the structure is less than 40 feet.
10. For additional details of typical connections to bridge rail, see Connection Detail CC on Revised Standard Plan RSP A77U2 and Connection Detail HH on Revised Standard Plan RSP A77V2.

STATE OF CALIFORNIA
DEPARTMENT OF TRANSPORTATION

MIDWEST GUARDRAIL SYSTEM TYPICAL LAYOUTS FOR STRUCTURE DEPARTURE

NO SCALE

RSP A77Q4 DATED JULY 19, 2013 SUPPLEMENTS THE STANDARD PLANS BOOK DATED 2010.

REVISED STANDARD PLAN RSP A77Q4

6-19-13

Dist	COUNTY	ROUTE	POST MILES TOTAL PROJECT	SHEET No.	TOTAL SHEETS
05	Mon	1	28.0/28.4	46	104

Randell D. Hiatt
REGISTERED CIVIL ENGINEER

July 19, 2013
PLANS APPROVAL DATE

REGISTERED PROFESSIONAL ENGINEER
Randell D. Hiatt
No. C50200
Exp. 6-30-15
CIVIL
STATE OF CALIFORNIA

THE STATE OF CALIFORNIA OR ITS OFFICERS OR AGENTS SHALL NOT BE RESPONSIBLE FOR THE ACCURACY OR COMPLETENESS OF SCANNED COPIES OF THIS PLAN SHEET.

TO ACCOMPANY PLANS DATED 12-1-14

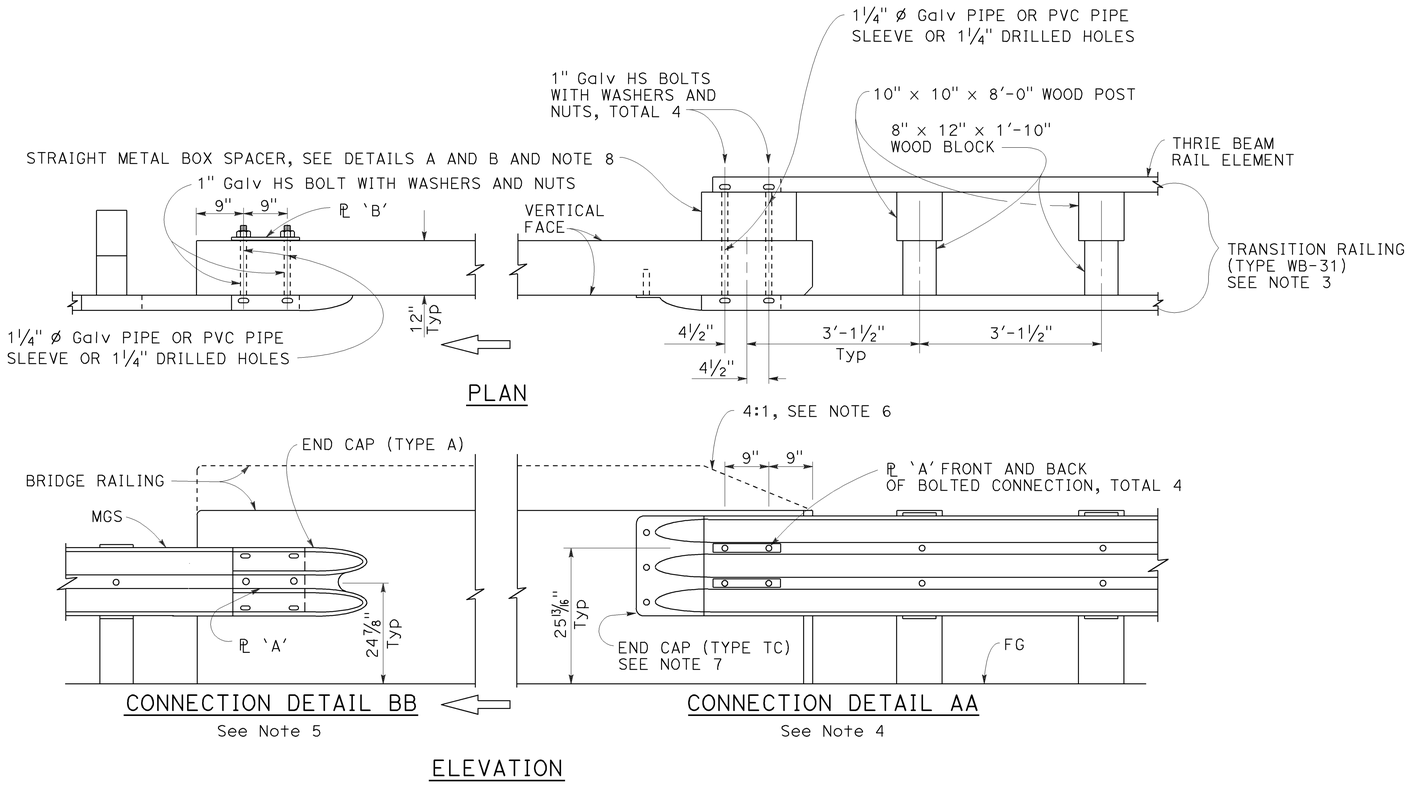

MIDWEST GUARDRAIL SYSTEM CONNECTION TO BRIDGE RAILING WITHOUT SIDEWALK

NOTES:

1. See Revised Standard Plan RSP A77U2 for additional connection details to bridges without sidewalks.
2. Additional details of posts, blocks and hardware are shown on Revised Standard Plans RSP A77M1, RSP A77N1 and RSP A77N2.
3. For additional details of Transition Railing (Type WB-31), see Revised Standard Plan RSP A77U4. Transition Railing (Type WB-31) transitions the 12 gauge MGS railing section to a heavier gage nested thrie beam railing section which is connected to the concrete bridge railing.
4. For typical use of Connection Detail AA, see Layout Types 12A and 12B on Revised Standard Plan RSP A77Q1, Layout Types 12C and 12D on Revised Standard Plan RSP A77Q2, and Layout Type 12E on Revised Standard Plan RSP A77Q3.
5. For typical use of Connection Detail BB, see Layout Type 12D (structure departure railing connection) on Revised Standard Plan RSP A77Q2 and Layout Type 12DD on Revised Standard Plan RSP A77Q5.
6. Where the height of the bridge railing exceeds the height of the thrie beam railing by more than 1" at Connection Detail AA, taper the top of the end of the bridge railing at 4:1 to match the top elevation of the thrie beam rail.
7. For details of End Cap (Type TC), see Revised Standard Plan RSP A77U4.
8. See Revised Standard Plan RSP A77U4 for additional details regarding depth dimension for straight metal box spacer.

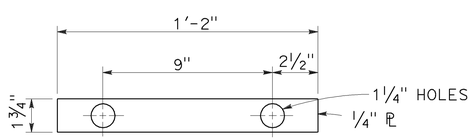

PLATE 'A'

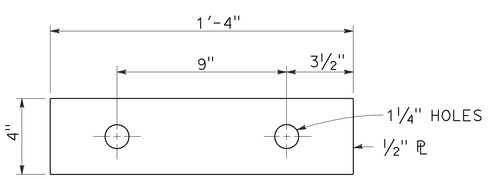

PLATE 'B'
(For backside of connection BB)

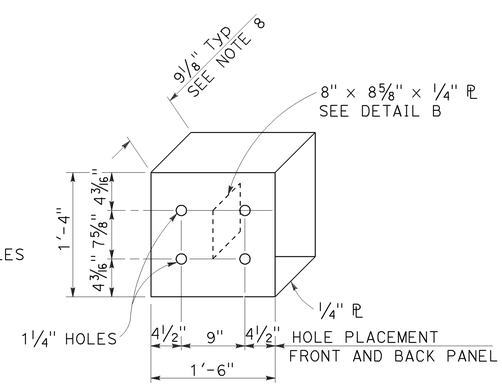

DETAIL A

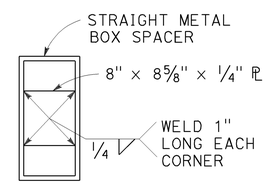

DETAIL B

STRAIGHT METAL BOX SPACER

STATE OF CALIFORNIA
DEPARTMENT OF TRANSPORTATION

MIDWEST GUARDRAIL SYSTEM CONNECTIONS TO BRIDGE RAILINGS WITHOUT SIDEWALKS DETAILS No. 1

NO SCALE

RSP A77U1 DATED JULY 19, 2013 SUPPLEMENTS THE STANDARD PLANS BOOK DATED 2010.

REVISED STANDARD PLAN RSP A77U1

2010 REVISED STANDARD PLAN RSP A77U1

7-8-13

Dist	COUNTY	ROUTE	POST MILES TOTAL PROJECT	SHEET No.	TOTAL SHEETS
05	Mon	1	28.0/28.4	47	104

Randell D. Hiatt
REGISTERED CIVIL ENGINEER

July 19, 2013
PLANS APPROVAL DATE

REGISTERED PROFESSIONAL ENGINEER
Randell D. Hiatt
No. C50200
Exp. 6-30-15
CIVIL
STATE OF CALIFORNIA

THE STATE OF CALIFORNIA OR ITS OFFICERS OR AGENTS SHALL NOT BE RESPONSIBLE FOR THE ACCURACY OR COMPLETENESS OF SCANNED COPIES OF THIS PLAN SHEET.

TO ACCOMPANY PLANS DATED 12-1-14

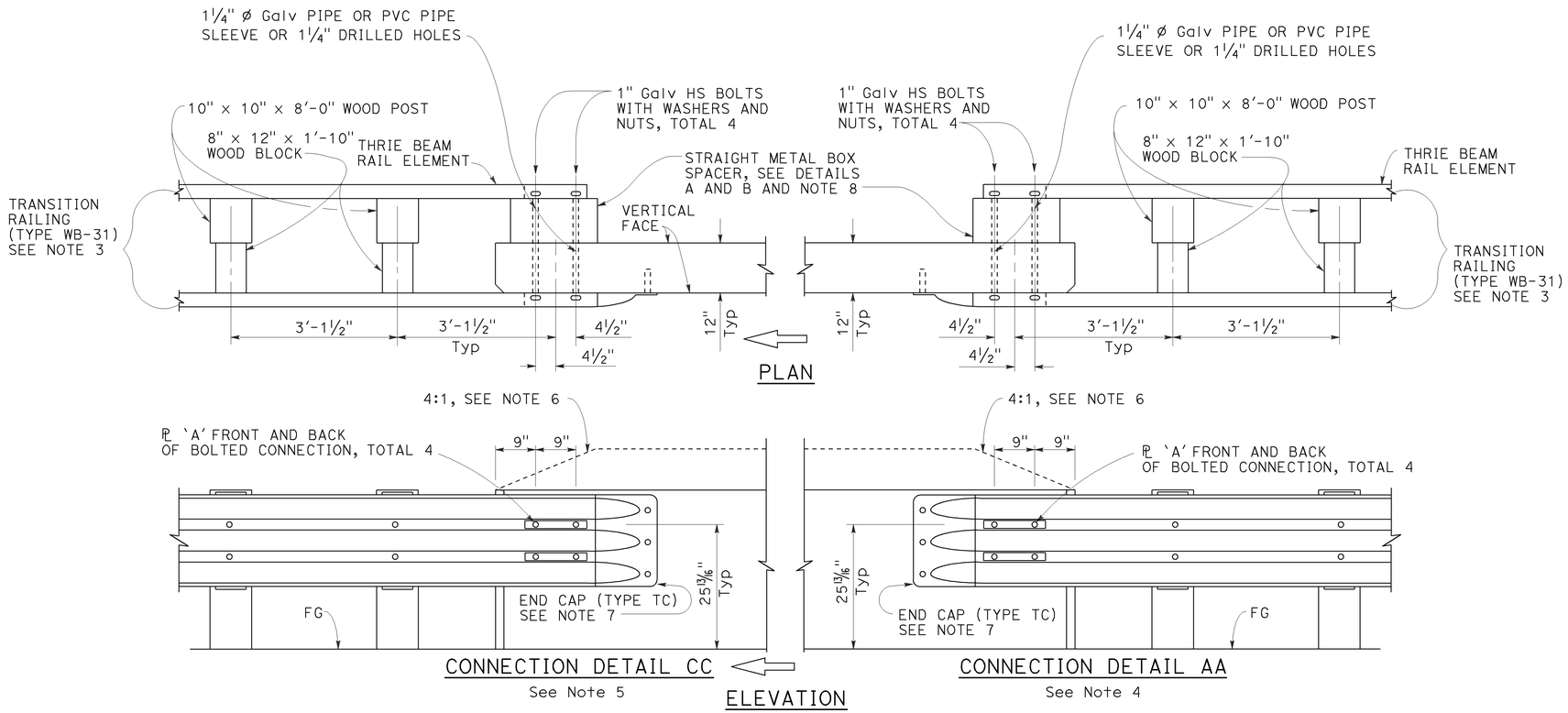

MIDWEST GUARDRAIL SYSTEM CONNECTION TO BRIDGE RAILING WITHOUT SIDEWALK

NOTES:

1. See Revised Standard Plan RSP A77U1 for additional connection details to bridges without sidewalks.
2. Additional details of posts, blocks and hardware are shown on Revised Standard Plans RSP A77M1, RSP A77N1 and RSP A77N2.
3. For additional details of Transition Railing (Type WB-31), see Revised Standard Plan RSP A77U4. Transition Railing (Type WB-31) transitions the 12 gauge MGS railing section to a heavier gage nested thrie beam railing section which is connected to the concrete bridge railing.
4. For typical use of Connection Detail AA, see Layout Types 12A and 12B on Revised Standard Plan RSP A77Q1, Layout Types 12C and 12D on Revised Standard Plan RSP A77Q2, and Layout Type 12E on Revised Standard Plan RSP A77Q3.
5. For typical use of Connection Detail CC, see Layout Types 12AA and 12BB on Revised Standard Plan RSP A77Q4 and Layout Type 12CC on Revised Standard Plan RSP A77Q5.
6. Where the height of the bridge railing exceeds the height of the thrie beam railing by more than 1" at Connection Detail AA and connection Detail CC, taper the top of the end of the bridge railing at 4:1 to match the top elevation of the thrie beam railing.
7. For details of End Cap (Type TC), see Revised Standard Plan RSP A77U4.
8. See Revised Standard Plan RSP A77U4 for additional details regarding depth dimension for straight metal box spacer.

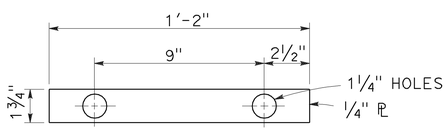

PLATE 'A'

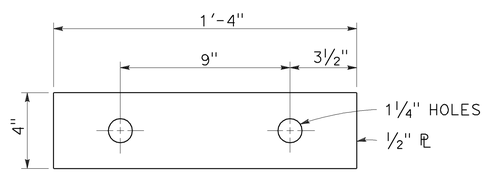

PLATE 'B'
(For backside of connection BB)

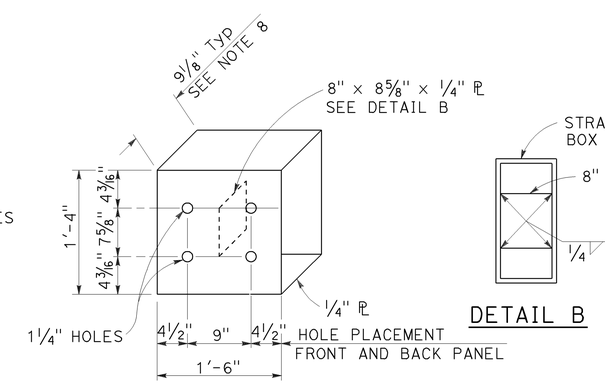

STATE OF CALIFORNIA
DEPARTMENT OF TRANSPORTATION

MIDWEST GUARDRAIL SYSTEM CONNECTIONS TO BRIDGE RAILINGS WITHOUT SIDEWALKS DETAILS No. 2

NO SCALE

RSP A77U2 DATED JULY 19, 2013 SUPPLEMENTS THE STANDARD PLANS BOOK DATED 2010.

REVISED STANDARD PLAN RSP A77U2

2010 REVISED STANDARD PLAN RSP A77U2

6-20-13

Dist	COUNTY	ROUTE	POST MILES TOTAL PROJECT	SHEET No.	TOTAL SHEETS
05	Mon	1	28.0/28.4	48	104

Randell D. Hiatt
REGISTERED CIVIL ENGINEER

January 23, 2015
PLANS APPROVAL DATE

REGISTERED PROFESSIONAL ENGINEER
Randell D. Hiatt
No. C50200
Exp. 6-30-15
CIVIL
STATE OF CALIFORNIA

THE STATE OF CALIFORNIA OR ITS OFFICERS OR AGENTS SHALL NOT BE RESPONSIBLE FOR THE ACCURACY OR COMPLETENESS OF SCANNED COPIES OF THIS PLAN SHEET.

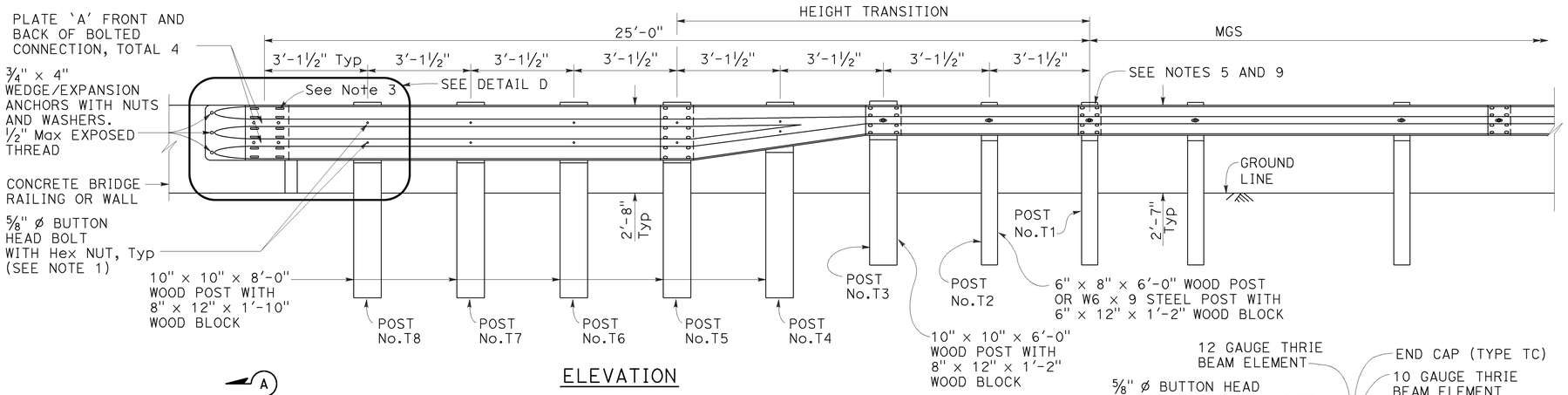

ELEVATION

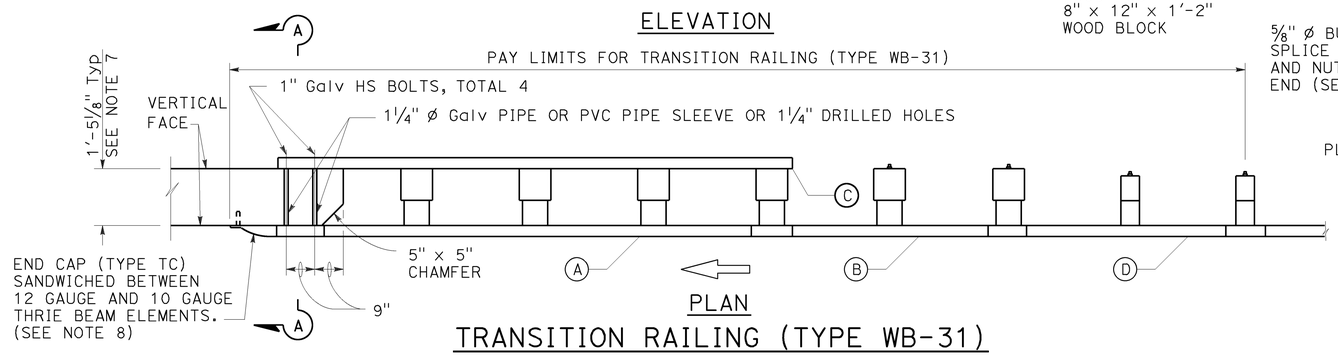

PLAN

TRANSITION RAILING (TYPE WB-31)

(No Blockout Attachment)

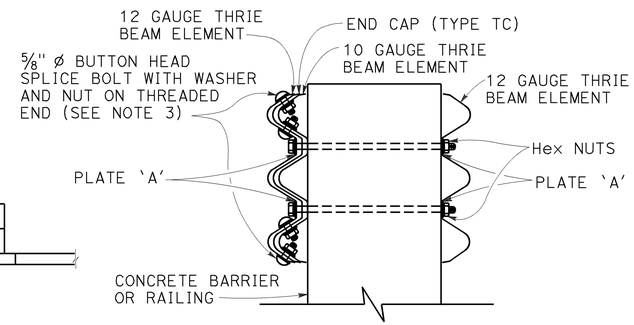

SECTION A-A

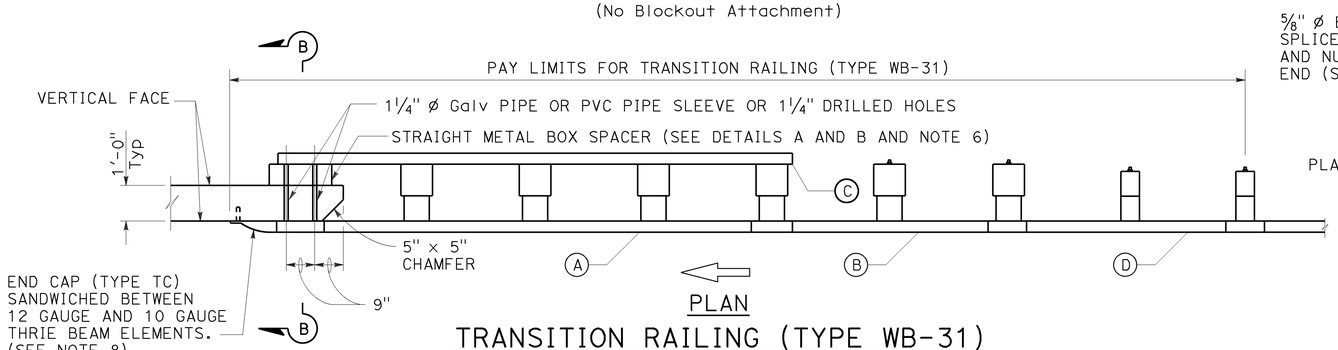

PLAN

TRANSITION RAILING (TYPE WB-31)

(Blockout Attachment)

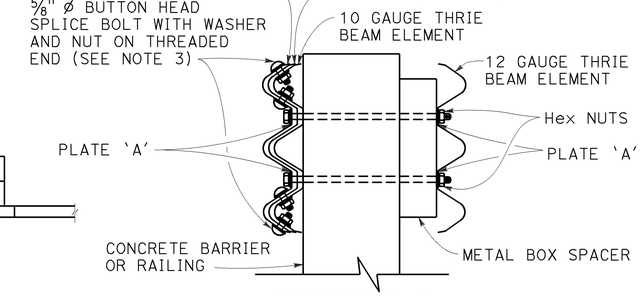

SECTION B-B

NOTES:

TO ACCOMPANY PLANS DATED 12-1-14

1. Use 5/8" ø Button head bolts and hex nuts for connections to posts. No washer on rail face for bolted connections to post.
2. The nested rail elements, end cap, and 'W' beam to thrie beam element may be spliced together prior to bolting the elements to the wood post and concrete barrier or railing.
3. Exterior splice bolt holes for rail element splices at Post No. T5 and the connection to the concrete barrier or railing shall be the standard 29/32" x 1 1/8" slot size. Interior splice bolt holes at these locations may be increased up to 1 1/4" ø. Only the top 4 and the bottom 4 splice bolts with washers and nuts are required for rail splices at Post No. T5 and the connection to the concrete barrier or railing.
4. The top elevation of Posts No. T2 through No. T7 shall not project more than 1" above the top elevation of the rail element.
5. Typically, the railing connected to Transition Railing (Type WB-31) will be either standard railing section of MGS with height transition ratio of 150:1 or a Caltrans approved 31" end treatment attached to Post No. T1.
6. The depth of the metal box spacer varies from the 9 1/8" to 1 1/2" and is dependent on the width of the concrete railing or wall. The combined dimension for the depth of the metal box spacer plus the width of railing or wall is typically 21 1/8". Where the space between the backside of the concrete railing or wall and the rear thrie beam element is less than 1 1/2", metal plates similar to Plate 'A' are to be used as spacers.
7. Where the width of the concrete railing or wall is greater than 17 1/8", wood blocks are to be used to fill the space created between the backside of Posts No. T5 through No. T8 and the rear thrie beam element. These wood blocks shall be 8" in width and 1'-2" in length. The dimension between the front thrie beam element and the rear thrie beam element is to match the width of the concrete railing or wall.
8. End cap may be installed over 12 gauge and 10 gauge thrie beam elements where transition railing is installed on the departure end of bridge railing.
9. Conform standard railing section height to 31" at Post No. T1 using height transition ratio of 150:1.

LEGEND:

(A) NESTED THRIE BEAM ELEMENTS (ONE 12 GAUGE ELEMENT NESTED OVER ONE 10 GAUGE ELEMENT).

(B) ONE ASYMMETRICAL 10 GAUGE "W" BEAM TO THRIE BEAM ELEMENT.

(C) ONE 12 GAUGE THRIE BEAM ELEMENT.

(D) ONE 10 GAUGE "W" BEAM RAIL ELEMENT (7'-3 1/2"LENGTH)

10 GAUGE = 0.138" THICK
12 GAUGE = 0.108" THICK

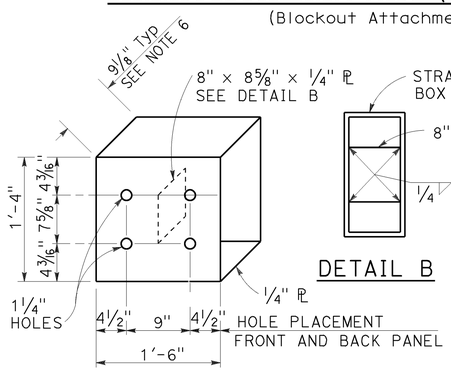

DETAIL A

STRAIGHT METAL BOX SPACER

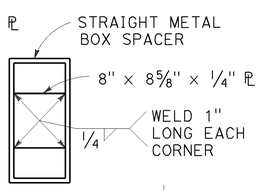

DETAIL B

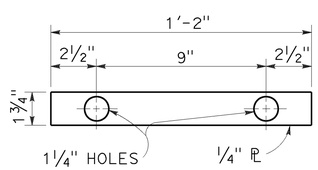

DETAIL C

PLATE 'A'

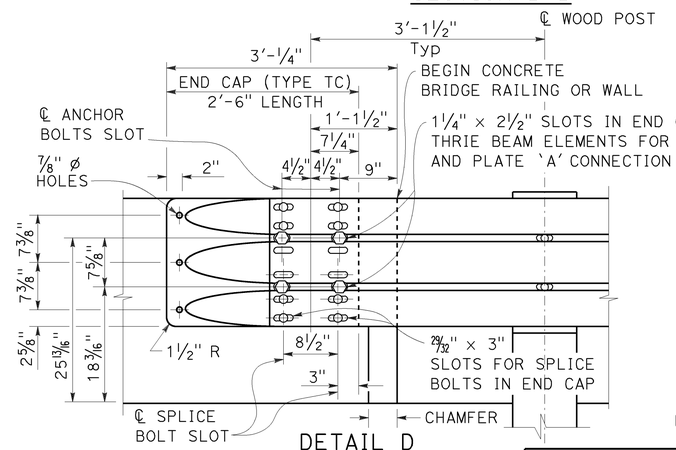

DETAIL D

STATE OF CALIFORNIA
DEPARTMENT OF TRANSPORTATION

MIDWEST GUARDRAIL SYSTEM TRANSITION RAILING (TYPE WB-31)

NO SCALE

RSP A77U4 DATED JANUARY 23, 2015 SUPERSEDES RSP A77U4 DATED NOVEMBER 15, 2013 AND RSP A77U4 DATED JULY 19, 2013 THAT SUPPLEMENTS THE STANDARD PLANS BOOK DATED 2010.

REVISED STANDARD PLAN RSP A77U4

2010 REVISED STANDARD PLAN RSP A77U4

1-8-15

Dist	COUNTY	ROUTE	POST MILES TOTAL PROJECT	SHEET No.	TOTAL SHEETS
05	Mon	1	28.0/28.4	49	104

REGISTERED CIVIL ENGINEER

July 18, 2014
PLANS APPROVAL DATE

Glenn DeCou No. C34547 Exp. 9-30-15 CIVIL — REGISTERED PROFESSIONAL ENGINEER — STATE OF CALIFORNIA

THE STATE OF CALIFORNIA OR ITS OFFICERS OR AGENTS SHALL NOT BE RESPONSIBLE FOR THE ACCURACY OR COMPLETENESS OF SCANNED COPIES OF THIS PLAN SHEET.

TO ACCOMPANY PLANS DATED 12-1-14

2010 REVISED STANDARD PLAN RSP A85

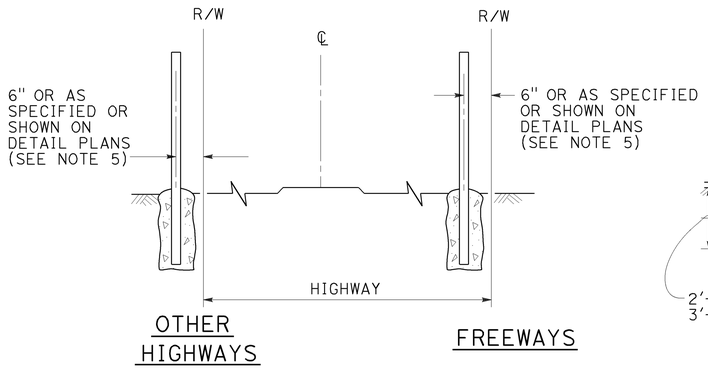

FENCE LOCATION

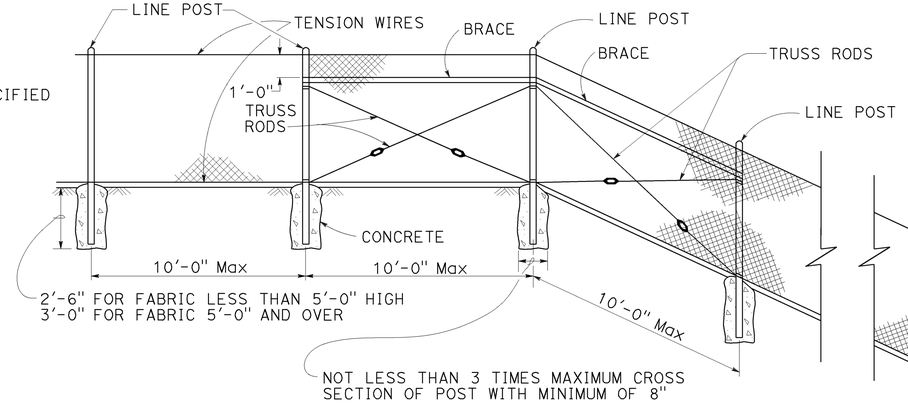

CHAIN LINK FENCE ON SHARP BREAK IN GRADE

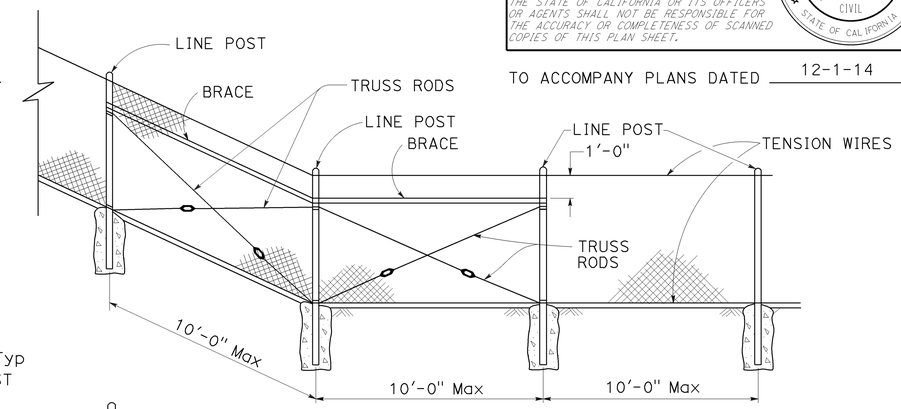

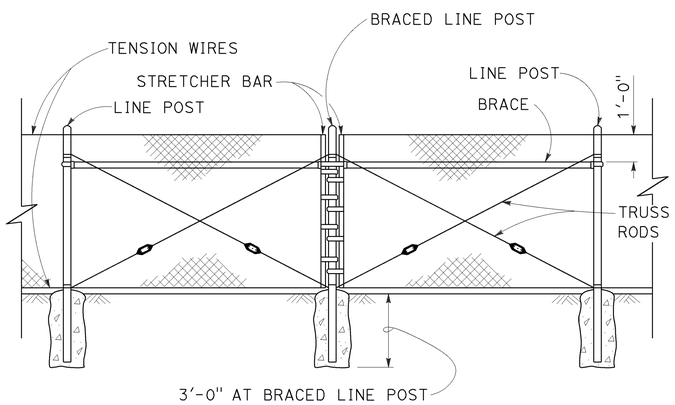

BRACED LINE POST INSTALLATION

Braced line post at intervals not exceeding 1000'

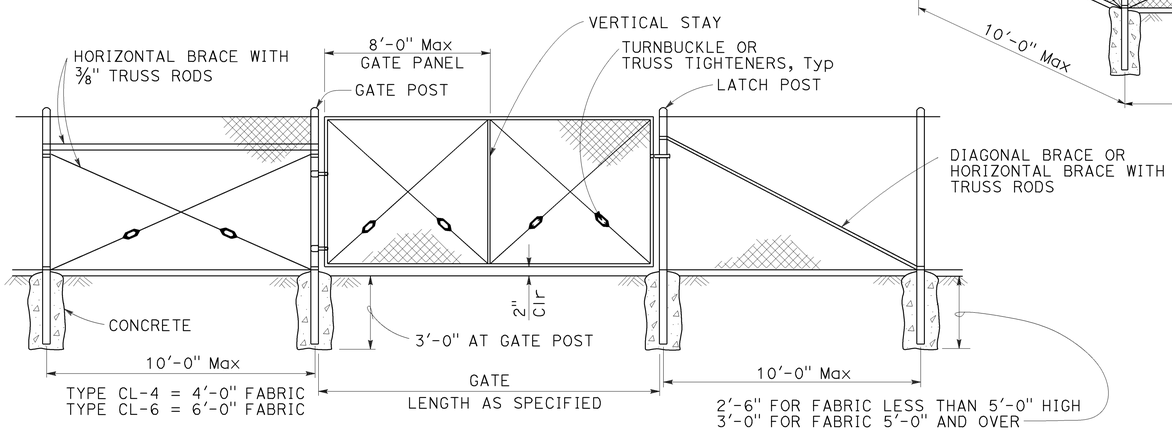

CHAIN LINK GATE INSTALLATION

GATE POST			
FENCE HEIGHT	GATE WIDTHS	ROUND OD PIPE	WEIGHT (lb/ft)
6'-0" AND LESS	UP THRU 6'-0"	2.875"	5.80
	OVER 6'-0" THRU 12'-0"	4.500"	10.80
	OVER 12'-0" THRU 18'-0"	5.563"	14.63
	OVER 18'-0" TO 24'-0" Max	6.625"	18.99
OVER 6'-0" TO 8'-0" Max	UP THRU 6'-0"	3.500"	7.58
	OVER 6'-0" THRU 12'-0"	5.563"	14.63
	OVER 12'-0" THRU 18'-0"	6.625"	18.99
	OVER 18'-0" TO 24'-0" Max	8.625"	28.58

Above post dimensions and weights are minimums. Larger sizes may be used upon approval.

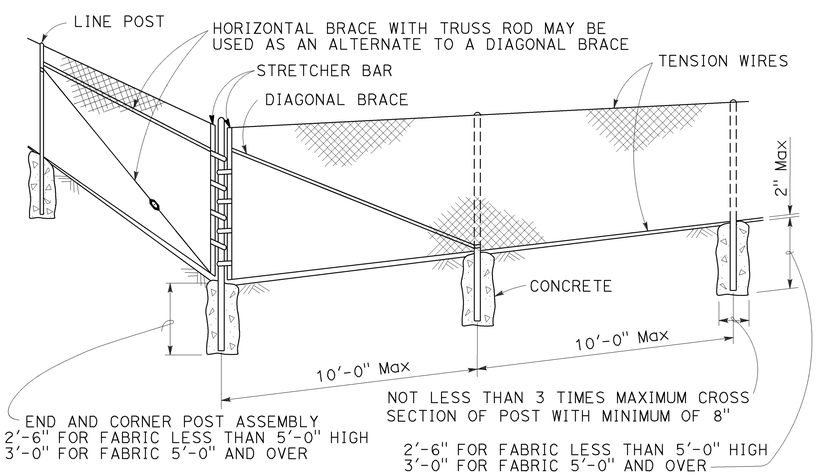

CORNER POST

NOTES:

1. The table below shows minimum sized posts and braces complying with the specifications. Larger or heavier post and brace sizes may be used upon approval.
2. Sections shown in the tables must also comply with the strength requirements and other provisions of the Specifications.
3. Other sections which comply with the strength requirements and other provisions of the Specifications may be used upon approval.
4. Options exercised shall be uniform on any one project.
5. Offset to be 2'-0" at monument locations, measured at right angles to R/W lines. Taper to achieve offset to be at least 20'-0" long.
6. See Revised Standard Plan RSP A85B for Brace, Stretcher Bar, and Truss Tightener Details.

TYPICAL MEMBER DIMENSIONS (See Notes)										
FENCE HEIGHT	LINE POSTS				END, LATCH AND CORNER POSTS		BRACES			
	ROUND OD PIPE	WEIGHT (lb/ft)	ROLL FORMED		ROUND OD PIPE	WEIGHT (lb/ft)	ROUND OD PIPE	WEIGHT (lb/ft)	ROLL FORMED	
			SECTION	WEIGHT (lb/ft)					SECTION	WEIGHT (lb/ft)
6'-0" AND LESS	1.900"	2.72	1.875" x 1.625"	1.85	2.375"	3.65	1.66"	2.27	1.625" x 1.25"	1.35
OVER 6'-0" TO 8'-0" Max	2.375"	3.65	2.25" x 1.70"	2.78	2.875"	5.80	1.66"	2.27	1.625" x 1.25"	1.35

STATE OF CALIFORNIA
DEPARTMENT OF TRANSPORTATION

CHAIN LINK FENCE

NO SCALE

RSP A85 DATED JULY 18, 2014 SUPERSEDES STANDARD PLAN A85 DATED MAY 20, 2011 - PAGE 112 OF THE STANDARD PLANS BOOK DATED 2010.

REVISED STANDARD PLAN RSP A85

7-1-14

Dist	COUNTY	ROUTE	POST MILES TOTAL PROJECT	SHEET No.	TOTAL SHEETS
05	Mon	1	28.0/28.4	50	104

Glenn DeCou
REGISTERED CIVIL ENGINEER

October 19, 2012
PLANS APPROVAL DATE

REGISTERED PROFESSIONAL ENGINEER
Glenn DeCou
No. C34547
Exp. 9-30-13
CIVIL
STATE OF CALIFORNIA

THE STATE OF CALIFORNIA OR ITS OFFICERS OR AGENTS SHALL NOT BE RESPONSIBLE FOR THE ACCURACY OR COMPLETENESS OF SCANNED COPIES OF THIS PLAN SHEET.

TO ACCOMPANY PLANS DATED 12-1-14

2010 REVISED STANDARD PLAN RSP A85B

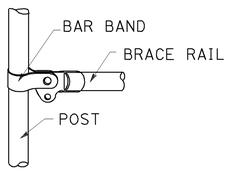

BRACE RAIL

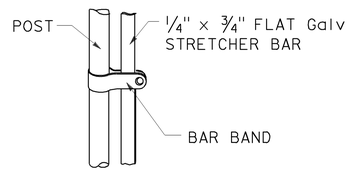

STRETCHER BAR

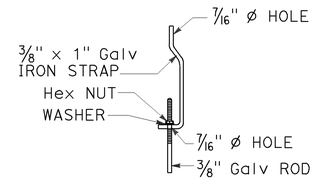

TRUSS TIGHTENER

NOTES:

1. All material for abutment connection to be galvanized.
2. The chain link fabric shall be replaced by barbed wire strands at 12" maximum centers between the double posts.
3. When the width of the culvert makes it necessary to anchor a post to the top of the culvert, a cast iron shoe or other device approved by the Engineer shall be used.
4. Fencing over stream and around headwall may also use Barbed Wire or Wire Mesh fencing with either wood post or steel post installation.
5. See Standard Plan A85 for Chain Link fence dimensions. See Standard Plan A86 for Barbed Wire and Wire Mesh fence dimensions and for wood post and steel post installation.

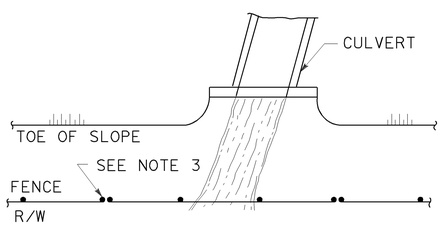

PLAN

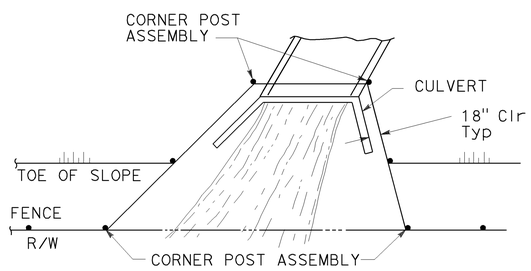

PLAN

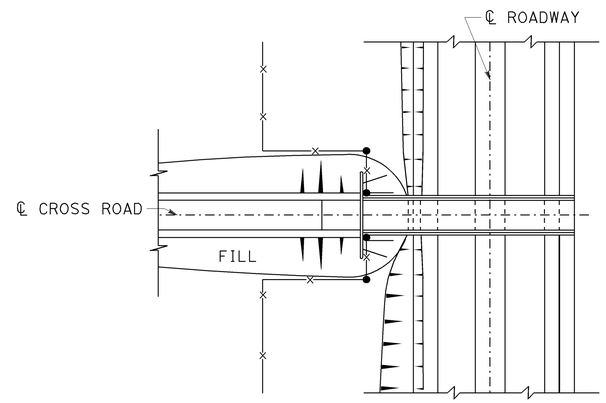

PLAN OF ROADWAY - OVERCROSSING

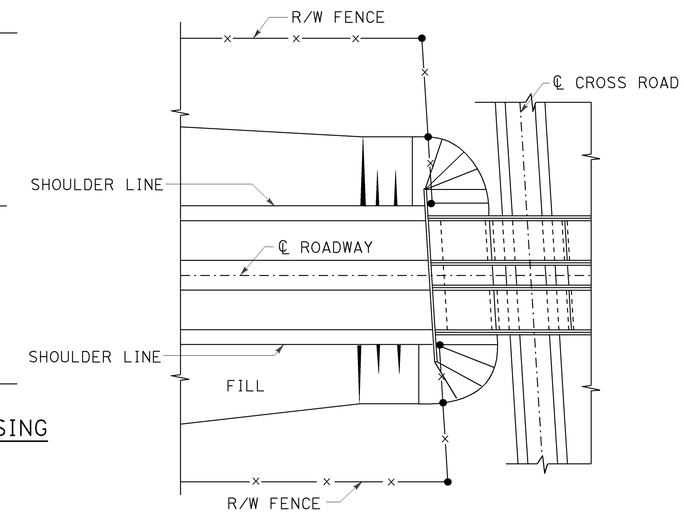

PLAN OF ROADWAY - UNDERCROSSING

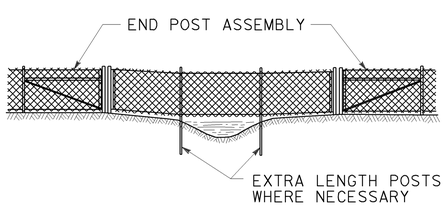

ELEVATION

INSTALLATION OVER STREAM

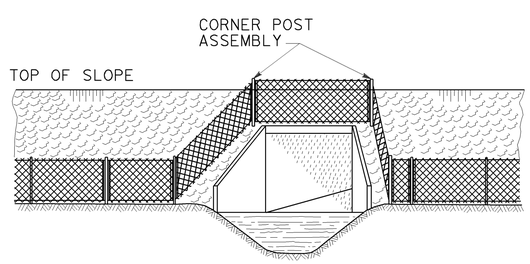

ELEVATION

INSTALLATION AROUND HEADWALL

See Note 4

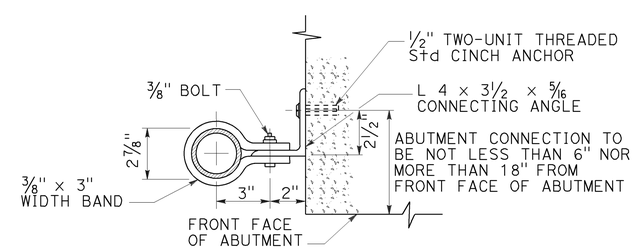

ABUTMENT CONNECTION

TYPICAL INSTALLATION AT BRIDGES

STATE OF CALIFORNIA
DEPARTMENT OF TRANSPORTATION

CHAIN LINK FENCE DETAILS

NO SCALE

RSP A85B DATED OCTOBER 19, 2012 SUPERSEDES STANDARD PLAN A85B
DATED MAY 20, 2011 - PAGE 114 OF THE STANDARD PLANS BOOK DATED 2010.

REVISED STANDARD PLAN RSP A85B

7-19-12

Dist	COUNTY	ROUTE	POST MILES TOTAL PROJECT	SHEET No.	TOTAL SHEETS
05	Mon	1	28.0/28.4	51	104

REGISTERED CIVIL ENGINEER

July 19, 2013
PLANS APPROVAL DATE

REGISTERED PROFESSIONAL ENGINEER
Michael Janzen
No. 44788
Exp. 03-31-14
CIVIL
STATE OF CALIFORNIA

THE STATE OF CALIFORNIA OR ITS OFFICERS OR AGENTS SHALL NOT BE RESPONSIBLE FOR THE ACCURACY OR COMPLETENESS OF SCANNED COPIES OF THIS PLAN SHEET.

TO ACCOMPANY PLANS DATED 12-1-14

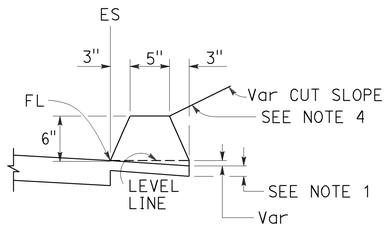

TYPE A
See Note 3

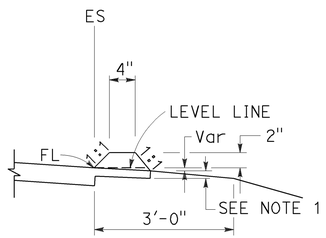

TYPE C

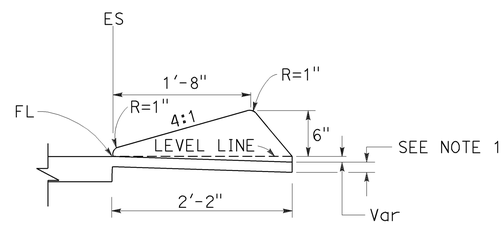

TYPE D

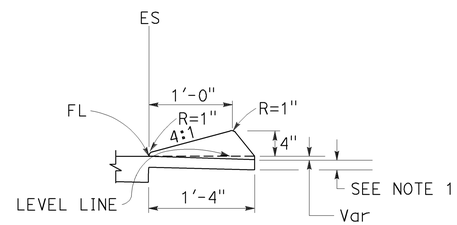

TYPE E

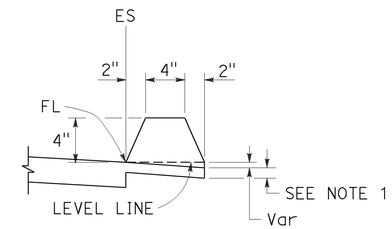

TYPE F
See Note 5

DIKES

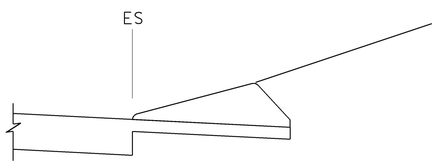

CASE C-1
Cut Slope

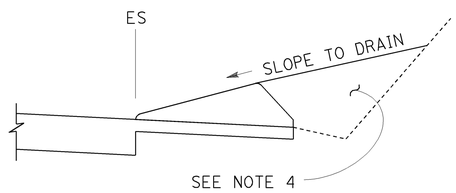

CASE C-2
Cut Slope

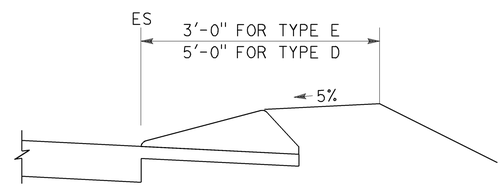

CASE F

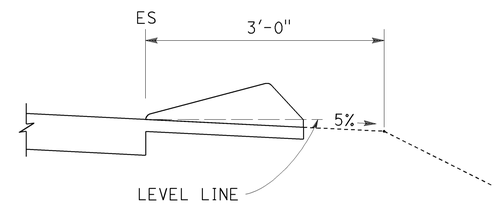

CASE R
See Note 2

TYPE D AND E BACKFILL DETAILS

NOTES:

1. For HMA shoulders only, extend top layer of HMA placed on the shoulder under dike with no joint at the ES. For projects with OGFC shoulders, do not extend OGFC under dike. See project plans for modified dike detail.
2. Case R applies to retrofit only projects where restrictive conditions do not provide enough width for Case F backfill.
3. Type A dike only to be used where restrictive slope conditions do not provide enough width to use Type D or Type E dike.
4. Fill and compact with excavated material to top of dike.
5. Use Type F dike, where dike is required with guard railing installations. See Revised Standard Plan RSP A77N4 for dike positioning details.

DIKE QUANTITIES

TYPE	CUBIC YARDS PER LINEAR FOOT
A	0.0135
C	0.0038
D	0.0293
E	0.0130
F	0.0066

Quantities based on 5% cross slope.

STATE OF CALIFORNIA
DEPARTMENT OF TRANSPORTATION

HOT MIX ASPHALT DIKES

NO SCALE

RSP A87B DATED JULY 19, 2013 SUPERSEDES STANDARD PLAN A87B DATED MAY 20, 2011 - PAGE 120 OF THE STANDARD PLANS BOOK DATED 2010.

REVISED STANDARD PLAN RSP A87B

2010 REVISED STANDARD PLAN RSP A87B

6-27-13

DIST	COUNTY	ROUTE	POST MILES TOTAL PROJECT	SHEET No.	TOTAL SHEETS
05	Mon	1	28.0/28.4	52	104

REGISTERED CIVIL ENGINEER

November 15, 2013
PLANS APPROVAL DATE

REGISTERED PROFESSIONAL ENGINEER
Cornelis M. Hakim
No. C55610
Exp. 12-31-14
CIVIL
STATE OF CALIFORNIA

THE STATE OF CALIFORNIA OR ITS OFFICERS OR AGENTS SHALL NOT BE RESPONSIBLE FOR THE ACCURACY OR COMPLETENESS OF SCANNED COPIES OF THIS PLAN SHEET.

TO ACCOMPANY PLANS DATED 12-1-14

2010 REVISED STANDARD PLAN RSP P74

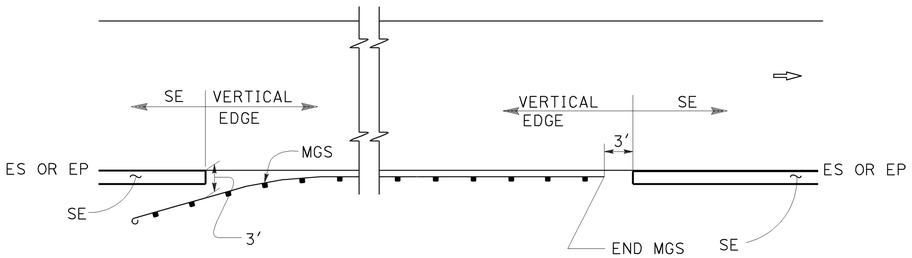

MGS

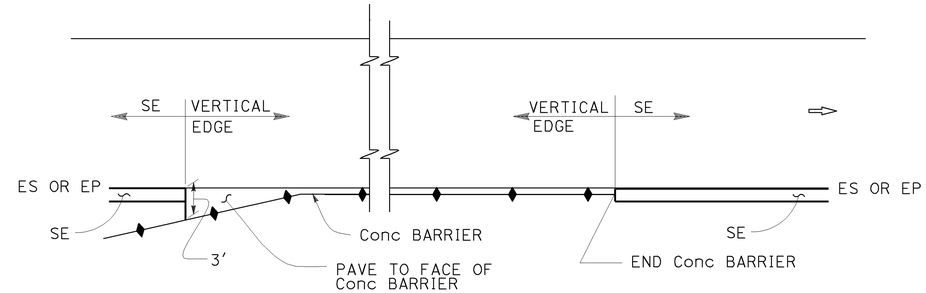

CONCRETE BARRIER

ABBREVIATIONS:

SE SAFETY EDGE

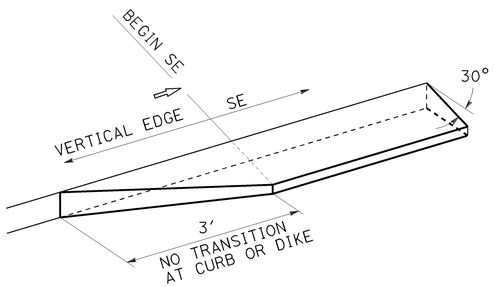

TRANSITION DETAIL FOR CONCRETE ONLY

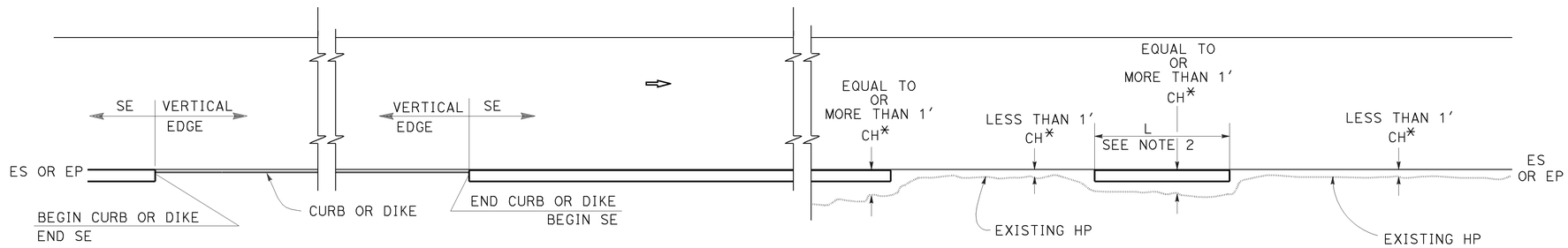

CURB OR DIKE

NARROW SIDE SLOPE

* CH = Distance from ES or EP to existing HP.

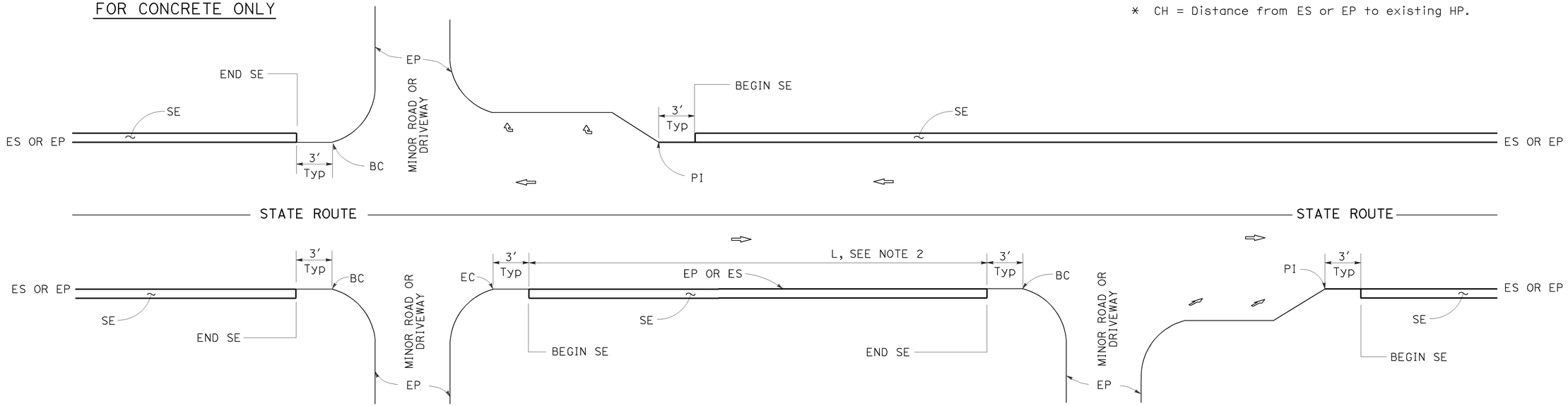

INTERSECTION

MINOR ROADWAY OR DRIVEWAY

DRIVEWAY AND INTERSECTION

NOTES:

1. For details not shown, see Revised Standard Plans RSP P75 and RSP P76.
2. Safety edge is optional when L is less than 30′.

STATE OF CALIFORNIA
DEPARTMENT OF TRANSPORTATION

PAVEMENT EDGE TREATMENTS

NO SCALE

RSP P74 DATED NOVEMBER 15, 2013 SUPERSEDES RSP P74 DATED JANUARY 20, 2012 THAT SUPPLEMENTS THE STANDARD PLANS BOOK DATED 2010.

REVISED STANDARD PLAN RSP P74

10-11-13

DIST	COUNTY	ROUTE	POST MILES TOTAL PROJECT	SHEET No.	TOTAL SHEETS
05	Mon	1	28.0/28.4	53	104

REGISTERED CIVIL ENGINEER

November 15, 2013
PLANS APPROVAL DATE

REGISTERED PROFESSIONAL ENGINEER
Cornelis M. Hakim
No. C55610
Exp. 12-31-14
CIVIL
STATE OF CALIFORNIA

THE STATE OF CALIFORNIA OR ITS OFFICERS OR AGENTS SHALL NOT BE RESPONSIBLE FOR THE ACCURACY OR COMPLETENESS OF SCANNED COPIES OF THIS PLAN SHEET.

TO ACCOMPANY PLANS DATED 12-1-14

LEGEND:

- HMA PAVEMENT
- HMA OR CONCRETE PAVEMENT
- CONCRETE PAVEMENT

ABBREVIATIONS:

SE SAFETY EDGE
TT TOTAL THICKNESS OF SE
HW HINGE WIDTH, DISTANCE FROM ES OR EP TO HP

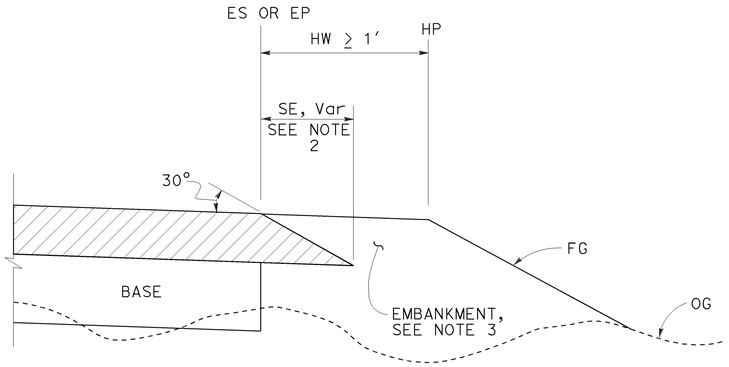

CASE K
Safety Edge - Fill Section, HW ≥ 1′

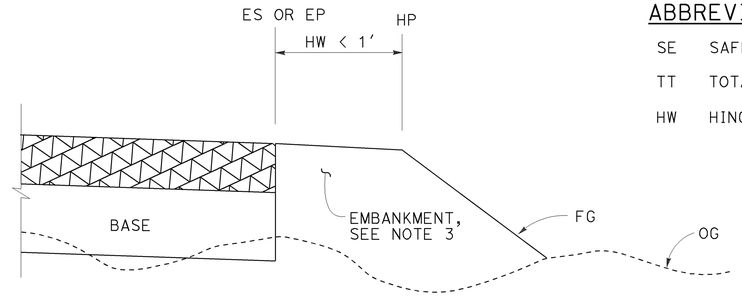

CASE L
Vertical Edge - Fill Section, HW < 1′

FILL SECTION

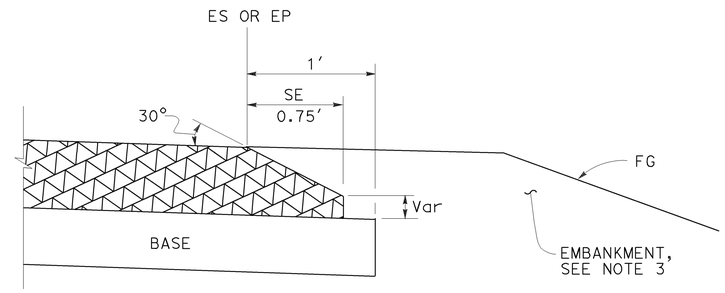

DETAIL "B"
For HMA pavement thickness more than 0.43′ or concrete pavement

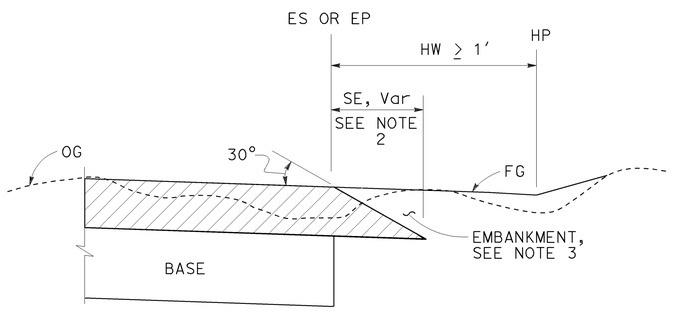

CASE M
Safety Edge - Cut Section, HW ≥ 1′

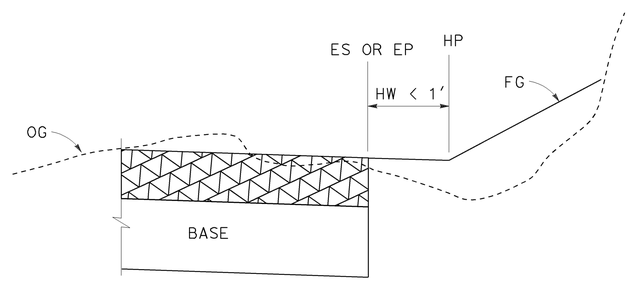

CASE N
Vertical Edge - Cut Section, HW < 1′

CUT SECTION

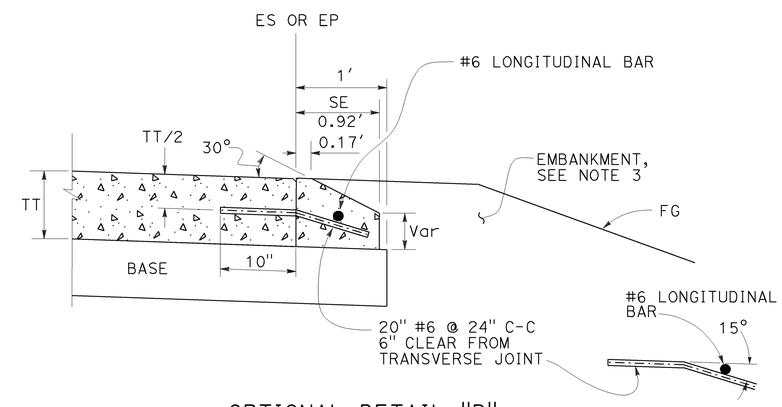

OPTIONAL DETAIL "B"
For concrete pavement
See Note 4

NOTES:

1. For limits of safety edge and vertical edge treatments, see Revised Standard Plan RSP P74
2. Details shown for HMA pavement thickness less than 0.43′. See Detail "B" for HMA pavement thickness more than 0.43′ or concrete pavement.
3. For locations and limits of embankment see project plans.
4. Safety edge transverse joint must match pavement transverse joint. End of #6 longitudinal bar must be 2" ±½" clear from transverse joint.
5. Safety edge is not needed in the area of MGS, barrier, right turn lane and acceleration lane. See Revised Standard Plan RSP P74.

STATE OF CALIFORNIA
DEPARTMENT OF TRANSPORTATION

PAVEMENT EDGE TREATMENTS-NEW CONSTRUCTION

NO SCALE

RSP P76 DATED NOVEMBER 15, 2013 SUPERSEDES RSP P76 DATED JANUARY 20, 2012 THAT SUPPLEMENTS THE STANDARD PLANS BOOK DATED 2010.

REVISED STANDARD PLAN RSP P76

2010 REVISED STANDARD PLAN RSP P76

10-4-13

TO ACCOMPANY PLANS DATED 12-1-14

Dist	COUNTY	ROUTE	POST MILES TOTAL PROJECT	SHEET No.	TOTAL SHEETS
05	Mon	1	28.0/28.4	54	104

REGISTERED CIVIL ENGINEER

October 19, 2012
PLANS APPROVAL DATE

REGISTERED PROFESSIONAL ENGINEER Glenn DeCou No. C34547 Exp. 9-30-13 CIVIL STATE OF CALIFORNIA

THE STATE OF CALIFORNIA OR ITS OFFICERS OR AGENTS SHALL NOT BE RESPONSIBLE FOR THE ACCURACY OR COMPLETENESS OF SCANNED COPIES OF THIS PLAN SHEET.

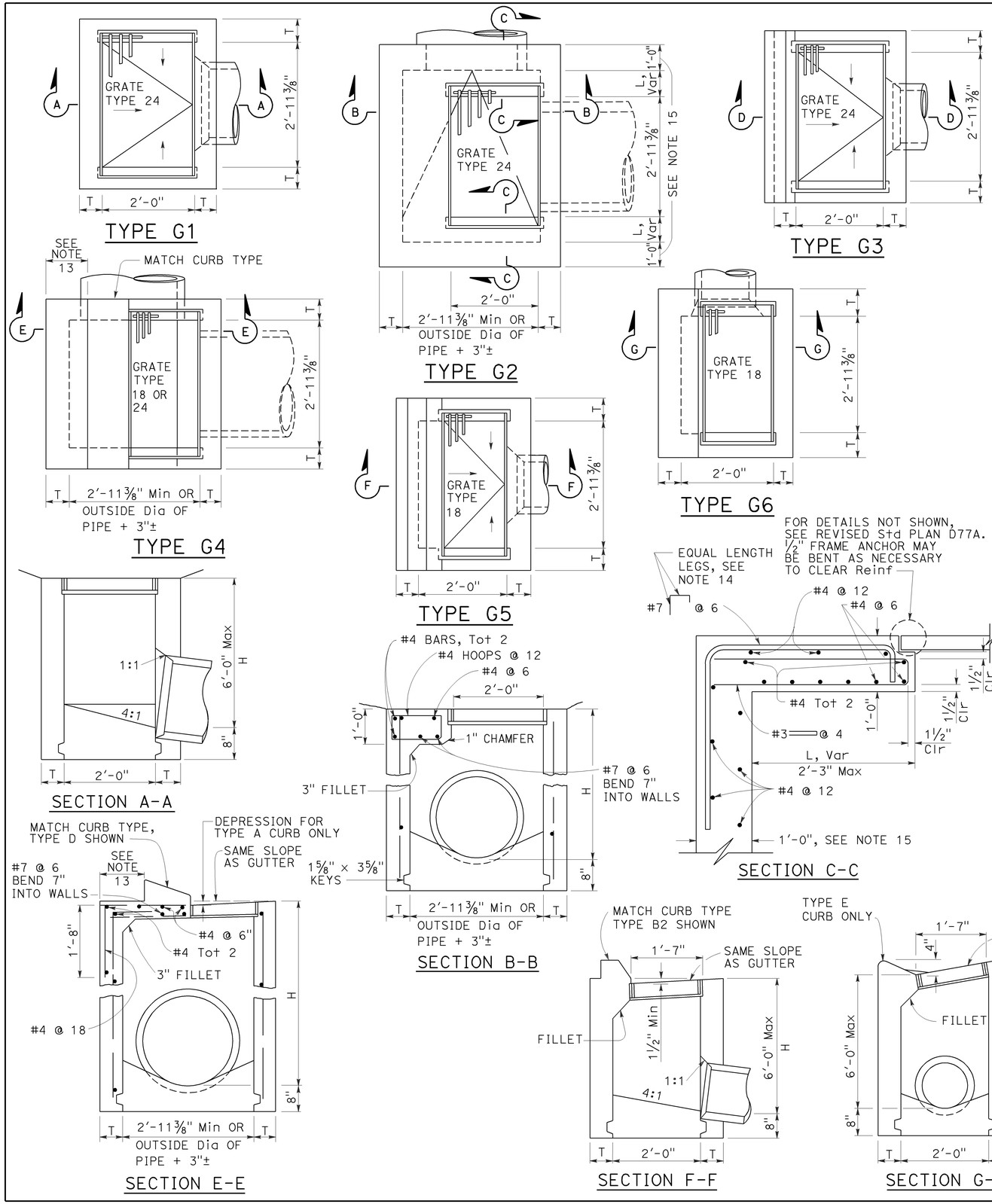

NOTES:

1. "H" is the difference in elevation between the outlet pipe flow line and the normal gutter grade line undepressed.
2. For "T" wall thickness, see Table A below.
3. Wall reinforcing not required when "H" is 8'-0" or less and the unsupported width or length is 7'-0" or less. Walls exceeding these limits shall be reinforced with #4 bars @ 1'-6" ± centers placed 1½" clear to inside of box unless otherwise shown.
4. Inlet bottom reinforcing not required. See Standard Plan D74C for alternative reinforced bottom and alternative half round bottom.
5. Steps-None required where "H" is less than 2'-6". Where "H" is 2'-6" or more, install steps with lowest rung 1'-0" above the floor and highest rung not more than 6" below top of inlet. The distance between steps shall not exceed 1'-0" and shall be uniform throughout the length of the wall. Place steps in the wall without an opening. Steps inserts may be substituted for the bar steps. Step inserts shall comply with State Industrial Safety requirements. See Standard Plan D74C for step details.
6. Details shown apply to both metal and concrete pipe.
7. Pipe(s) can be placed in any wall.
8. Curb section shall match adjacent curb.
9. Basin floors shall have wood trowel finish and a minimum slope of 12:3 from all directions toward outlet pipe.
10. Set inlet so that grate bars are parallel to direction of principal surface flow.
11. See Revised Standard Plans D77A and D77B for grate and frame details and weights of miscellaneous iron and steel.
12. See Standard Plan D78A for gutter depression details.
13. This dimenison will vary with different grates, curbs types, box width and wall thickness.
14. Bar may be rotated as necessary to clear opening. Where "L" is 6" or less, bar may be omitted.
15. Where "L" is 6" or less, wall thickness shall be as shown in Table A.
16. Cast-in-place inlets to be formed around all pipes/stubs intersecting the inlet, and concrete poured in one continuous operation. Precast inlets shall have mortared connections conforming to details for Type GCP Inlet shown on Standard Plan D75B. See Standard Specifications for mortar composition.

TABLE A

CONCRETE QUANTITIES				
TYPE	H=3'-0" TO 8'-0" (T=6")		H=8'-1" TO 20'-0" (T=8")	
	H=3'-0" (CY)	ADDITIONAL PCC PER FOOT (CY)	H=8'-1" (CY)	ADDITIONAL PCC PER FOOT (CY)
G-1	0.95	0.220	See Note A	SEE NOTE A
G-2*	1.31	0.255	3.50	0.357
G-3	1.03	0.220	See Note A	SEE NOTE A
G-4* (TYPE 24)	1.27	0.255	3.48	0.357
G-4* (TYPE 18)	1.30	0.255	3.50	0.357
G-5	1.02	0.220	SEE NOTE A	SEE NOTE A
G-6	1.04	0.220	SEE NOTE A	SEE NOTE A

TABLE BASED ON 8" FLOOR SLAB. NO DEDUCTIONS ARE TO BE MADE TO THESE QUANTITIES BECAUSE OF PIPE OPENINGS, DIFFERENT FLOOR ALTERNATIVES OR DIFFERENT CURB TYPES. * QUANTITIES FOR TYPE G-2 AND G-4 INLETS BASED ON THE MINIMUM INTERIOR DIMENSIONS.

NOTE A:

Maximum allowable height 6'-0".

STATE OF CALIFORNIA
DEPARTMENT OF TRANSPORTATION

DRAINAGE INLETS

NO SCALE

RSP D73 DATED OCTOBER 19, 2012 SUPERSEDES STANDARD PLAN D73 DATED MAY 20, 2011 - PAGE 156 OF THE STANDARD PLANS BOOK DATED 2010.

REVISED STANDARD PLAN RSP D73

2010 REVISED STANDARD PLAN RSP D73

7-19-12

Dist	COUNTY	ROUTE	POST MILES TOTAL PROJECT	SHEET No.	TOTAL SHEETS
05	Mon	1	28.0/28.4	55	104

REGISTERED CIVIL ENGINEER

April 19, 2013
PLANS APPROVAL DATE

Raymond Don Tsztoo No. C37332 Exp. 6-30-14 CIVIL STATE OF CALIFORNIA REGISTERED PROFESSIONAL ENGINEER

THE STATE OF CALIFORNIA OR ITS OFFICERS OR AGENTS SHALL NOT BE RESPONSIBLE FOR THE ACCURACY OR COMPLETENESS OF SCANNED COPIES OF THIS PLAN SHEET.

TO ACCOMPANY PLANS DATED 12-1-14

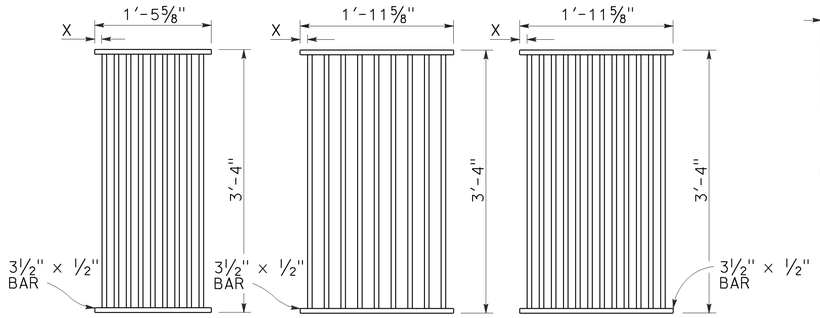

TYPE 18-9

1⅜" Clear spacing. Use within the roadbed on highways where bicycles and pedestrians are excluded.

TYPE 24-9

2" Clear spacing. Use in locations off the roadbed on all types of highways.

TYPE 24-12

1⅜" Clear spacing. Use within the roadbed on highways where bicycles and pedestrians are excluded.

RECTANGULAR GRATE DETAILS

(See table below)

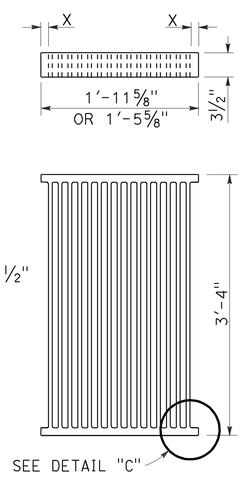

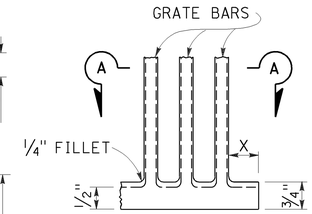

DETAIL "C"

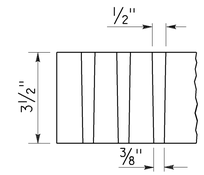

SECTION A-A

ALTERNATIVE CAST DUCTILE IRON GRATE OR CAST CARBON STEEL GRATE

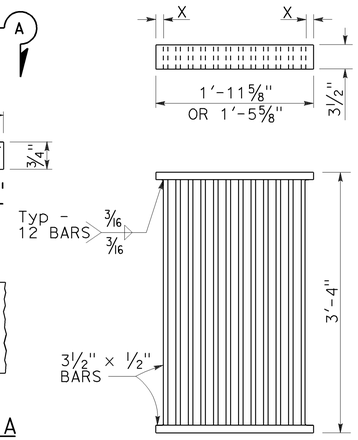

ALTERNATIVE WELDED GRATE

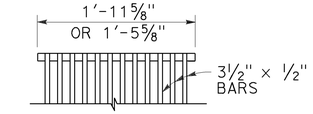

CAST END BLOCK

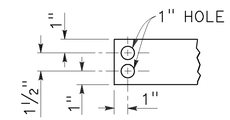

END OF BAR

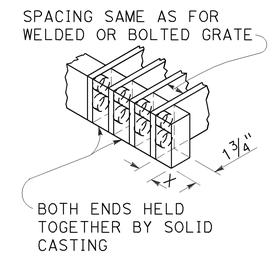

ALTERNATIVE CAST DUCTILE IRON OR CAST CARBON STEEL END BLOCK GRATE

NOTES:

1. Grate type numbers refer to approximate width of grate in inches and number of bars, respectively.
2. Contractor has the option of using cast ductile iron, cast carbon steel, welded, bolted, or cast end block grate.
3. Rounded top of bars optional on all grates.
4. Pipe inlets with a grate shall be placed so that bars parallel direction of principle surface flow.
5. Complete joint penetration butt welds may be substituted for the fillet welds on all anchors.
6. Standard square, hexagon, round or equivalent headed anchors may be substituted for the right angle hooks on the anchors shown on this plan.
7. Grate and frame weights are based on welded grates (weights of face angles, steps, protection bars, etc. are not included).
8. Connect chain to grate and frame only at locations shown on the plans. When chain is required, do not use cast ductile iron grates.

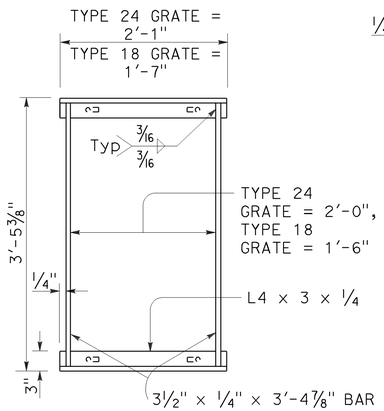

TYPICAL FRAME

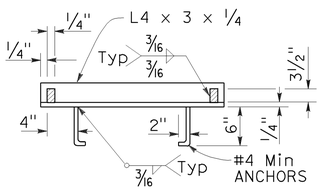

CROSS SECTION

(Thru frame)

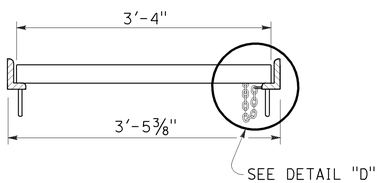

LONGITUDINAL SECTION

(Thru frame and grate)

RECTANGULAR FRAME DETAILS

(For all rectangular grates)

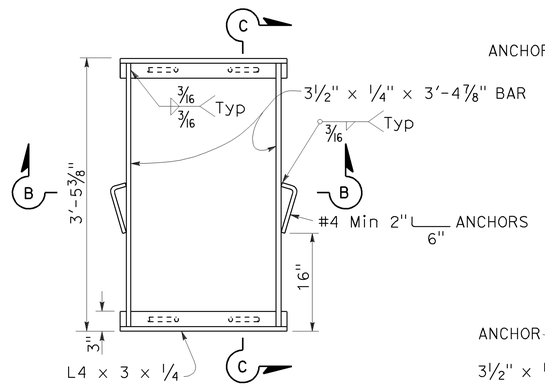

TYPICAL FRAME

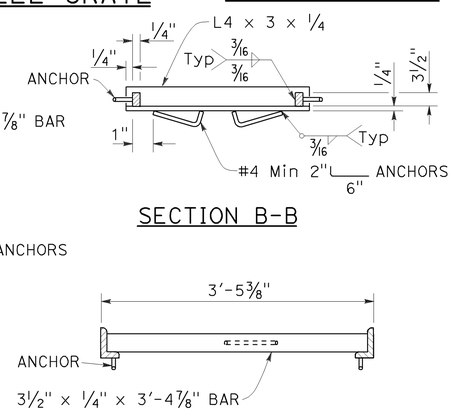

SECTION B-B

SECTION C-C

ALTERNATIVE ANCHOR FOR RECTANGULAR FRAME

(For details not shown, See Rectangular Frame Details)

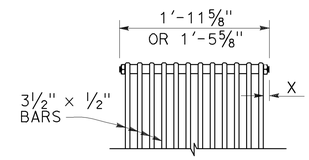

BOLTED END BLOCK

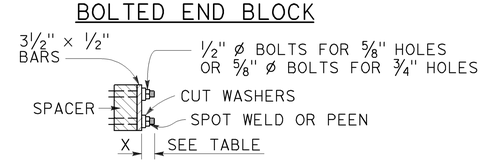

BOLTING DETAIL

ALTERNATIVE BOLTED GRATE

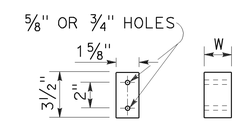

BAR SPACER

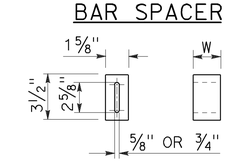

ALTERNATIVE SPACER

W = 1⅜" or 2"

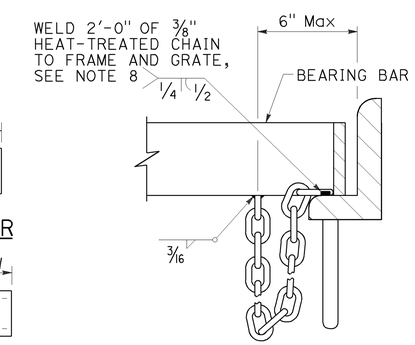

DETAIL "D"

(Steel grates only)

GRATE BAR SPACING TABLE

TYPE	No. OF BARS	CLEAR BAR SPACING	X
18-9	9	1⅜"	1 1/16"
24-9	9	2"	1 9/16"
24-12	12	1⅜"	1¼"

INLET TYPE	COVER TYPE	WEIGHT LB
OS	PLATE	174
OL-7	PLATE	170
OL-10	PLATE	170
OL-14	PLATE	170
OL-21	PLATE	170
OCP	PLATE	112
OCPI	PLATE	112
OCPI	REDWOOD	42
OMP	PLATE	177
OMPI	PLATE	177

INLET TYPE	GRATE TYPE	No. OF GRATES	WEIGHT LB
GDO	24-12	2	634
GOL-7	24-12	1	326
GOL-10	24-12	1	326
GO,G1,G2,G3,G4 (TYPE 24)	24-9	1	263
	24-12	1	326
G4 (TYPE 18),G5,G6	18-9	1	249
GT1	18-9	2	498
GT2	18-9	2	498
GT3	24-12	2	652
GT4	24-12	2	652
TRASH RACK			22
GRATE CHAIN			3

BASIS FOR Misc IRON & STEEL FINAL PAY WEIGHTS FOR DRAINAGE INLETS

(See Note 7)

STATE OF CALIFORNIA
DEPARTMENT OF TRANSPORTATION

GRATE DETAILS No. 1

NO SCALE

RSP D77A DATED APRIL 19, 2013 SUPERSEDES RSP D77A DATED JULY 20, 2012 AND STANDARD PLAN D77A DATED MAY 20, 2011 - PAGE 164 OF THE STANDARD PLANS BOOK DATED 2010.

REVISED STANDARD PLAN RSP D77A

2010 REVISED STANDARD PLAN RSP D77A

4-4-13

Dist	COUNTY	ROUTE	POST MILES TOTAL PROJECT	SHEET No.	TOTAL SHEETS
05	Mon	1	28.0/28.4	56	104

Raymond Don Tszto
REGISTERED CIVIL ENGINEER

April 19, 2013
PLANS APPROVAL DATE

REGISTERED PROFESSIONAL ENGINEER Raymond Don Tsztoo No. C37332 Exp. 6-30-14 CIVIL STATE OF CALIFORNIA

THE STATE OF CALIFORNIA OR ITS OFFICERS OR AGENTS SHALL NOT BE RESPONSIBLE FOR THE ACCURACY OR COMPLETENESS OF SCANNED COPIES OF THIS PLAN SHEET.

TO ACCOMPANY PLANS DATED 12-1-14

2010 REVISED STANDARD PLAN RSP D77B

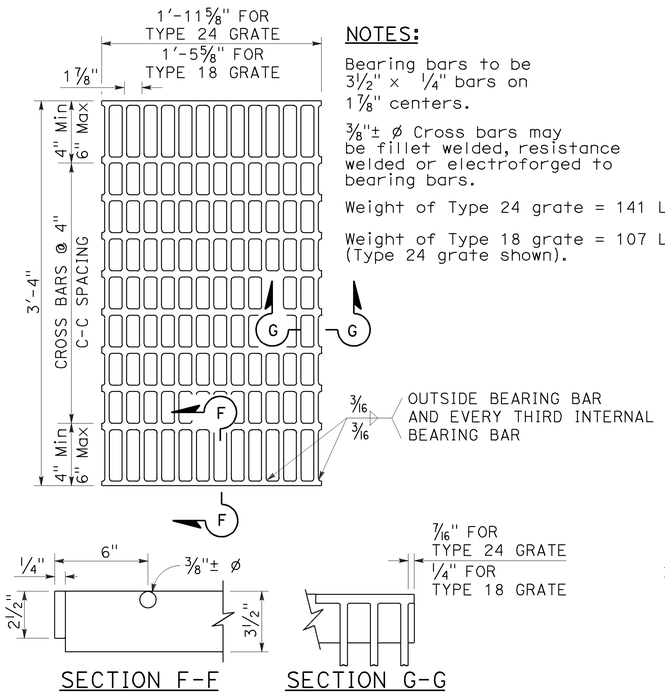

SECTION F-F SECTION G-G

TYPE 18-10 AND 24-13 GRATE

(Welded Steel)

NOTES:

Bearing bars to be 3½" × ¼" bars on 1⅞" centers.

⅜"± ø Cross bars may be fillet welded, resistance welded or electroforged to bearing bars.

Weight of Type 24 grate = 141 LBS.

Weight of Type 18 grate = 107 LBS. (Type 24 grate shown).

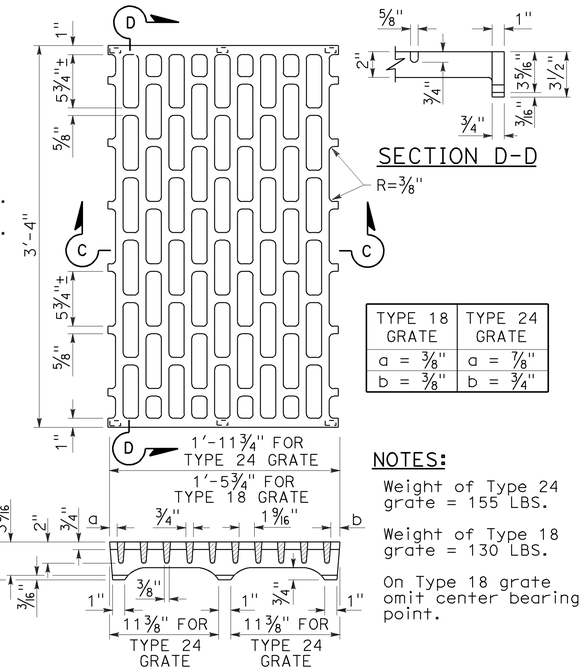

SECTION D-D

TYPE 18 GRATE	TYPE 24 GRATE
a = ⅜"	a = ⅞"
b = ⅜"	b = ¾"

NOTES:

Weight of Type 24 grate = 155 LBS.

Weight of Type 18 grate = 130 LBS.

On Type 18 grate omit center bearing point.

SECTION C-C

TYPE 18-8C AND 24-10C GRATE

(Cast ductile iron)

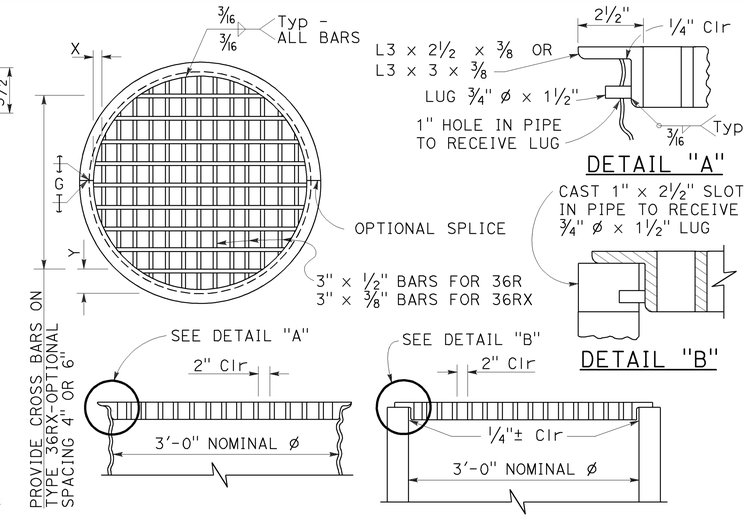

DETAIL "A"

DETAIL "B"

TYPE 36R AND 36RX GRATE DETAILS

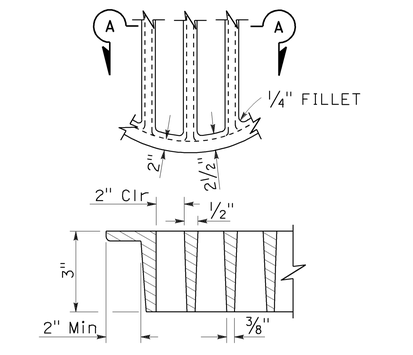

SECTION A-A

ALTERNATIVE CAST DUCTILE IRON GRATE OR CAST CARBON STEEL GRATE TYPE 36R AND 36RX

BASIS FOR Misc IRON AND STEEL FINAL PAY WEIGHTS FOR DRAINAGE INLETS

INLET TYPE	GRATE TYPE	No. OF GRATES	WEIGHT LB
GDO (SEE NOTE 4)	24-10C	2	391
	24-10S	2	456
	24-12X	2	473
	24-13	2	374
GO,GOL,G1,G2, G3,G4 (TYPE 24)	24-10C	1	202
	24-10S	1	229
	24-12X	1	239
	24-13	1	188
G4 (TYPE 18) G5,G6	18-8S	1	187
	18-9X	1	187
	18-10	1	149
GT1,GT2	18-8S	2	374
	18-9X	2	374
	18-10	2	298
GT3,GT4	24-10C	2	404
	24-10S	2	458
	24-12X	2	478
	24-13	2	376
ODI	36RX (Mod)	1	196
GMP,GCP,GCPI	36RX	1	215
ODI	36R (Mod)	1	220
GMP,GCP,GCPI	36R	1	236
TRASH RACK			22
GRATE CHAIN			3

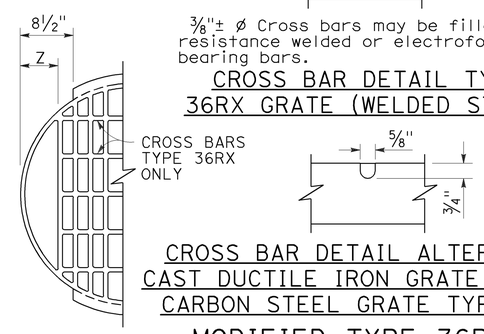

CROSS BAR DETAIL TYPE 36RX GRATE (WELDED STEEL)

CROSS BAR DETAIL ALTERNATIVE CAST DUCTILE IRON GRATE OR CAST CARBON STEEL GRATE TYPE 36RX

MODIFIED TYPE 36R AND 36RX GRATE FOR ODI INLET

NOTES:

1. When alternative grates are allowed - Final pay based on alternative with the lesser weight.
2. Use frame shown on Standard Plan D74A, D74B or RSP D77A as appropriate.
3. When Type 24-10S, 24-12X or 24-13 grates are used with GDO Inlets, a ¼" × 3½" × 3'-4⅞" steel bar shall be welded across the center of inlet frame to separate the individual grates.
4. See Revised Standard Plan RSP D77A for connecting chain to welded grate and frame. When chain is required, do not use cast ductile iron grate.

GRATE BAR SPACING TABLE

TYPE	No. OF BARS	CLEAR BAR SPACING	X	Y 4" SPACING	Y 6" SPACING	Z
36R	13	2"	2⅛"	-	-	-
36RX (STEEL)	15	2"	9/16"	3¾"	5¾"	-
36RX (CAST)	13	2"	2⅛"	3¾"	5¾"	-
36R Mod	12	2"	2⅛"	-	-	5"
36RX Mod (STEEL)	13	2"	9/16"	3¾"	5¾"	5 11/16"
36RX Mod (CAST)	12	2"	2⅛"	3¾"	5¾"	5"

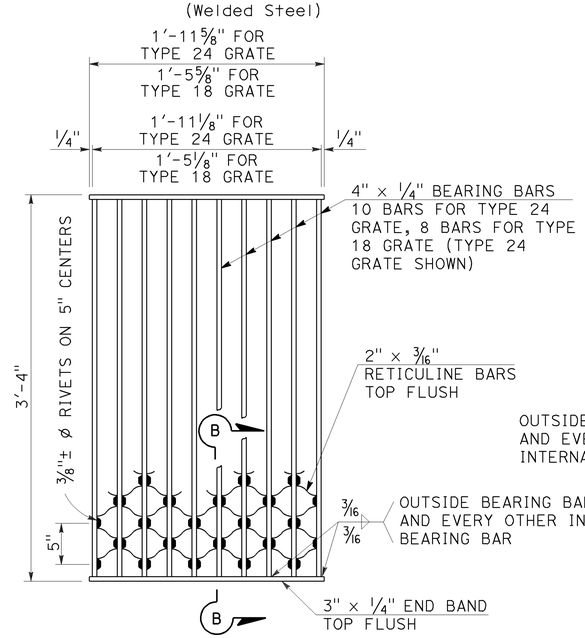

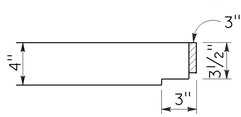

SECTION B-B

NOTES:

Weight of Type 24 grate = 182 LBS.
Weight of Type 18 grate = 145 LBS.

TYPE 18-8S AND 24-10S GRATE

(Welded Steel) Reticuline type

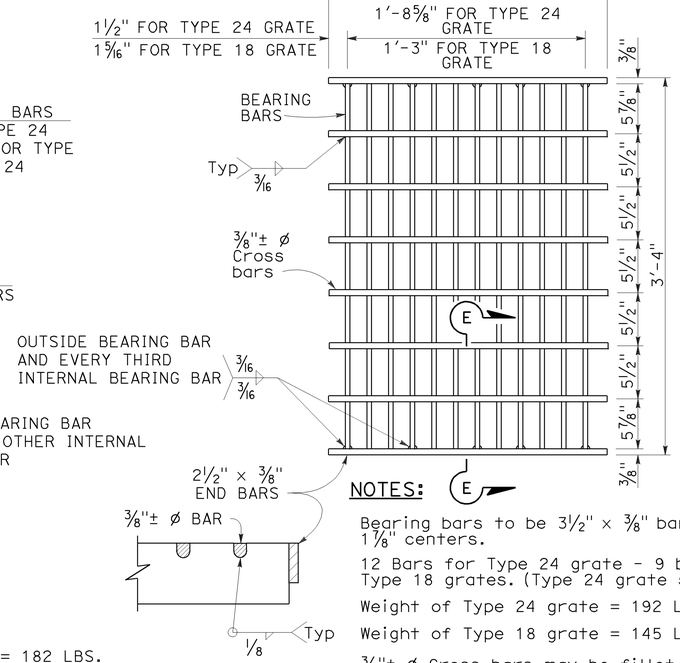

SECTION E-E

NOTES:

Bearing bars to be 3½" × ⅜" bars on 1⅞" centers.

12 Bars for Type 24 grate - 9 bars for Type 18 grates. (Type 24 grate shown).

Weight of Type 24 grate = 192 LBS.

Weight of Type 18 grate = 145 LBS.

⅜"± ø Cross bars may be fillet welded, resistance welded or electroforged to bearing bars.

TYPE 18-9X AND 24-12X GRATE

(Welded Steel)

STATE OF CALIFORNIA
DEPARTMENT OF TRANSPORTATION

GRATE DETAILS No. 2

NO SCALE

RSP D77B DATED APRIL 19, 2013 SUPERSEDES RSP D77B DATED JULY 20, 2012 AND STANDARD PLAN D77B DATED MAY 20, 2011 - PAGE 165 OF THE STANDARD PLANS BOOK DATED 2010.

REVISED STANDARD PLAN RSP D77B

4-4-13

Dist	COUNTY	ROUTE	POST MILES TOTAL PROJECT	SHEET No.	TOTAL SHEETS
05	Mon	1	28.0/28.4	57	104

REGISTERED CIVIL ENGINEER

July 19, 2013
PLANS APPROVAL DATE

REGISTERED PROFESSIONAL ENGINEER
Gurinderpal Bhullar
No. C48815
Exp. 9-30-14
CIVIL
STATE OF CALIFORNIA

THE STATE OF CALIFORNIA OR ITS OFFICERS OR AGENTS SHALL NOT BE RESPONSIBLE FOR THE ACCURACY OR COMPLETENESS OF SCANNED COPIES OF THIS PLAN SHEET.

TO ACCOMPANY PLANS DATED 12-1-14

2010 REVISED STANDARD PLAN RSP T9

TABLE 1

TAPER LENGTH CRITERIA AND CHANNELIZING DEVICE SPACING

SPEED (S)	MINIMUM TAPER LENGTH * FOR WIDTH OF OFFSET 12 FEET (W)				MAXIMUM CHANNELIZING DEVICE SPACING		
					X	Y	Z **
	TANGENT 2L	MERGING L	SHIFTING L/2	SHOULDER L/3	TAPER	TANGENT	CONFLICT
mph	ft	ft	ft	ft	ft	ft	ft
20	160	80	40	27	20	40	10
25	250	125	63	42	25	50	12
30	360	180	90	60	30	60	15
35	490	245	123	82	35	70	17
40	640	320	160	107	40	80	20
45	1080	540	270	180	45	90	22
50	1200	600	300	200	50	100	25
55	1320	660	330	220	55	110	27
60	1440	720	360	240	60	120	30
65	1560	780	390	260	65	130	32
70	1680	840	420	280	70	140	35

* - For other offsets, use the following merging taper length formula for L:
For speed of 40 mph or less, $L = WS^2/60$
For speed of 45 mph or more, $L = WS$

Where: L = Taper length in feet
W = Width of offset in feet
S = Posted speed limit, off-peak 85th-percentile speed prior to work starting, or the anticipated operating speed in mph

** - Use for taper and tangent sections where there are no pavement markings or where there is a conflict between existing pavement markings and channelizers (CA).

TABLE 2

LONGITUDINAL BUFFER SPACE AND FLAGGER STATION SPACING

SPEED *	Min D **	DOWNGRADE Min D ***		
		-3%	-6%	-9%
mph	ft	ft	ft	ft
20	115	116	120	126
25	155	158	165	173
30	200	205	215	227
35	250	257	271	287
40	305	315	333	354
45	360	378	400	427
50	425	446	474	507
55	495	520	553	593
60	570	598	638	686
65	645	682	728	785
70	730	771	825	891

* - Speed is posted speed limit, off-peak 85th-percentile speed prior to work starting, or the anticipated operating speed in mph

** - Longitudinal buffer space or flagger station spacing

*** - Use on sustained downgrade steeper than -3 percent and longer than 1 mile.

TABLE 3

ADVANCE WARNING SIGN SPACING

ROAD TYPE	DISTANCE BETWEEN SIGNS *		
	A	B	C
	ft	ft	ft
URBAN - 25 mph OR LESS	100	100	100
URBAN - MORE THAN 25 mph TO 40 mph	250	250	250
URBAN - MORE THAN 40 mph	350	350	350
RURAL	500	500	500
EXPRESSWAY / FREEWAY	1000	1500	2640

* - The distances are approximate, are intended for guidance purposes only, and should be applied with engineering judgment. These distances should be adjusted by the Engineer for field conditions, if necessary, by increasing or decreasing the recommmended distances.

STATE OF CALIFORNIA
DEPARTMENT OF TRANSPORTATION

TRAFFIC CONTROL SYSTEM TABLES FOR LANE AND RAMP CLOSURES

NO SCALE

RSP T9 DATED JULY 19, 2013 SUPERSEDES RSP T9 DATED APRIL 19, 2013 THAT SUPPLEMENTS THE STANDARD PLANS BOOK DATED 2010.

REVISED STANDARD PLAN RSP T9

Dist	COUNTY	ROUTE	POST MILES TOTAL PROJECT	SHEET No.	TOTAL SHEETS
05	Mon	1	28.0/28.4	58	104

Devinder Singh
REGISTERED CIVIL ENGINEER

October 17, 2014
PLANS APPROVAL DATE

REGISTERED PROFESSIONAL ENGINEER
Devinder Singh
No. C50470
Exp. 6-30-15
CIVIL
STATE OF CALIFORNIA

THE STATE OF CALIFORNIA OR ITS OFFICERS OR AGENTS SHALL NOT BE RESPONSIBLE FOR THE ACCURACY OR COMPLETENESS OF SCANNED COPIES OF THIS PLAN SHEET.

TO ACCOMPANY PLANS DATED 12-1-14

NOTES:

See Revised Standard Plan RSP T9 for tables.

Use cone spacing X for taper segment, Y for tangent segment or Z for conflict situations, as approriate, per Table 1, unless X, Y, or Z cone spacing is shown on this sheet.

Unless otherwise specified in the special provisions, all temporary warning signs shall have black legend on fluorescent orange background.

California codes are designated by (CA). Otherwise, Federal (MUTCD) codes are shown.

TYPICAL LANE CLOSURE WITH REVERSIBLE CONTROL

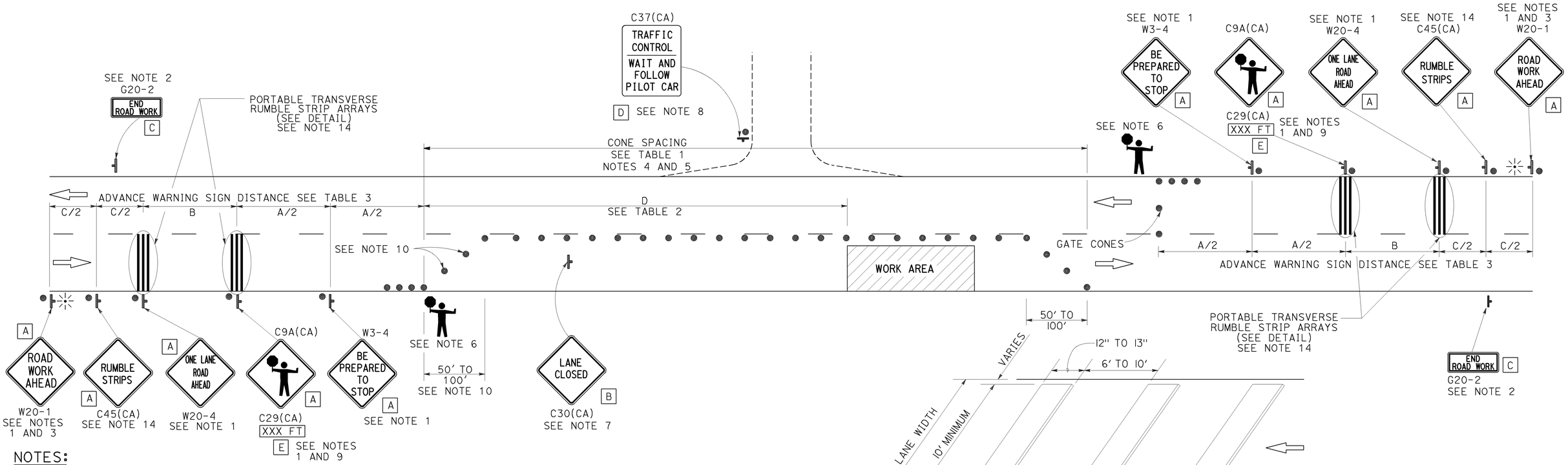

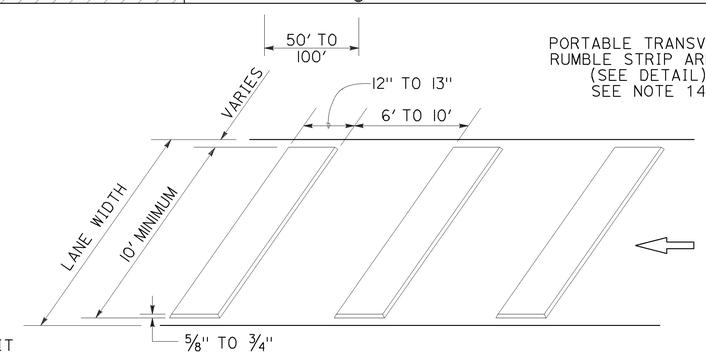

PORTABLE TRANSVERSE RUMBLE STRIP ARRAY DETAIL

NOTES:

1. Each advance warning sign in each direction of travel shall be equipped with at least two flags for daytime closure. Each flag shall be at least 16" x 16" in size and shall be orange or fluorescent red-orange in color. Flashing beacons shall be placed at the locations indicated for lane closure during hours of darkness.
2. A G20-2 "END ROAD WORK" sign, as appropriate, shall be placed at the end of the lane control unless the end of work area is obvious, or ends within a larger project's limits.
3. If the W20-1 sign would follow within 2000' of a stationary W20-1 or G20-1 "ROAD WORK NEXT _____ MILES", use a W20-4 sign for the first advance warning sign.
4. All cones used for lane closures during the hours of darkness shall be fitted with retroreflective bands (or sleeves) as specified in the specifications.
5. Portable delineators, placed at one-half the spacing indicated for traffic cones, may be used instead of cones for daytime closures only.
6. Additional advance flaggers may be required. Flagger should stand in a conspicuous place, be visible to approaching traffic as well as approaching vehicles after the first vehicle has stopped. During the hours of darkness, the flagging-station and flagger shall be illuminated and clearly visible to approaching traffic. The illumination footprint of the lighting on the ground shall be at least 20' in diameter. Place a minimum of four cones at 50' intervals in advance of flagger station as shown.
7. Place C30(CA) "LANE CLOSED" sign at 500' to 1000' intervals throughout extended work areas. They are optional if the work area is visible from the flagger station.
8. When a pilot car is used, place a C37(CA) "TRAFFIC CONTROL-WAIT AND FOLLOW PILOT CAR" sign with black legend on white background at all intersections, driveways and alleys without a flagger within traffic control area. Signs shall be clean and visible at all times. Where traffic can not be effectively self-regulated, at least one flagger shall be used at each intersection within traffic control area.
9. An optional C29(CA) sign may be placed below the C9A(CA) sign.
10. Either traffic cones or barricades shall be placed on the taper. Barricades shall be Type I, II, or III.
11. The color of the portable transverse rumble strips shall be black or orange. Use 2 arrays, each array shall consist of 3 rumble strips.
12. Portable transverse rumble strips shall not be placed on sharp horizontal or vertical curves nor shall they be placed through pedestrian crossings.
13. If the portable transverse rumble strips become out of alignment (skewed) by more than 6 inches, measured from one end to the other, they shall be readjusted to bring the placement back to the original location.
14. Portable transverse rumble strips are not required if any one of the following conditions is satisfied:
    A. Work duration occupies a location for four hours or less
    B. Posted speed limit is below 45 MPH
    C. Work is of emergency nature
    D. Work zone is in snow or icy weather conditions

SIGN PANEL SIZE (Min)

A	48" x 48"
B	30" x 30"
C	36" x 18"
D	36" x 42"
E	20" x 7"

LEGEND

- TRAFFIC CONE
- TEMPORARY TRAFFIC CONTROL SIGN
- PORTABLE FLASHING BEACON
- FLAGGER

STATE OF CALIFORNIA
DEPARTMENT OF TRANSPORTATION

TRAFFIC CONTROL SYSTEM FOR LANE CLOSURE ON TWO LANE CONVENTIONAL HIGHWAYS

NO SCALE

RSP T13 DATED OCTOBER 17, 2014 SUPERSEDES RSP T13 DATED JULY 18, 2014 AND RSP T13 DATED APRIL 19, 2013 AND STANDARD PLAN T13 DATED MAY 20, 2011 - PAGE 241 OF THE STANDARD PLANS BOOK DATED 2010.

REVISED STANDARD PLAN RSP T13

2010 REVISED STANDARD PLAN RSP T13

9-26-14

Dist	COUNTY	ROUTE	POST MILES TOTAL PROJECT	SHEET No.	TOTAL SHEETS
05	Mon	1	28.0/28.4	59	104

REGISTERED CIVIL ENGINEER

April 19, 2013
PLANS APPROVAL DATE

REGISTERED PROFESSIONAL ENGINEER
Gurinderpal Bhullar
No. C48815
Exp. 9-30-14
CIVIL
STATE OF CALIFORNIA

THE STATE OF CALIFORNIA OR ITS OFFICERS OR AGENTS SHALL NOT BE RESPONSIBLE FOR THE ACCURACY OR COMPLETENESS OF SCANNED COPIES OF THIS PLAN SHEET.

TO ACCOMPANY PLANS DATED 12-1-14

2010 REVISED STANDARD PLAN RSP T17

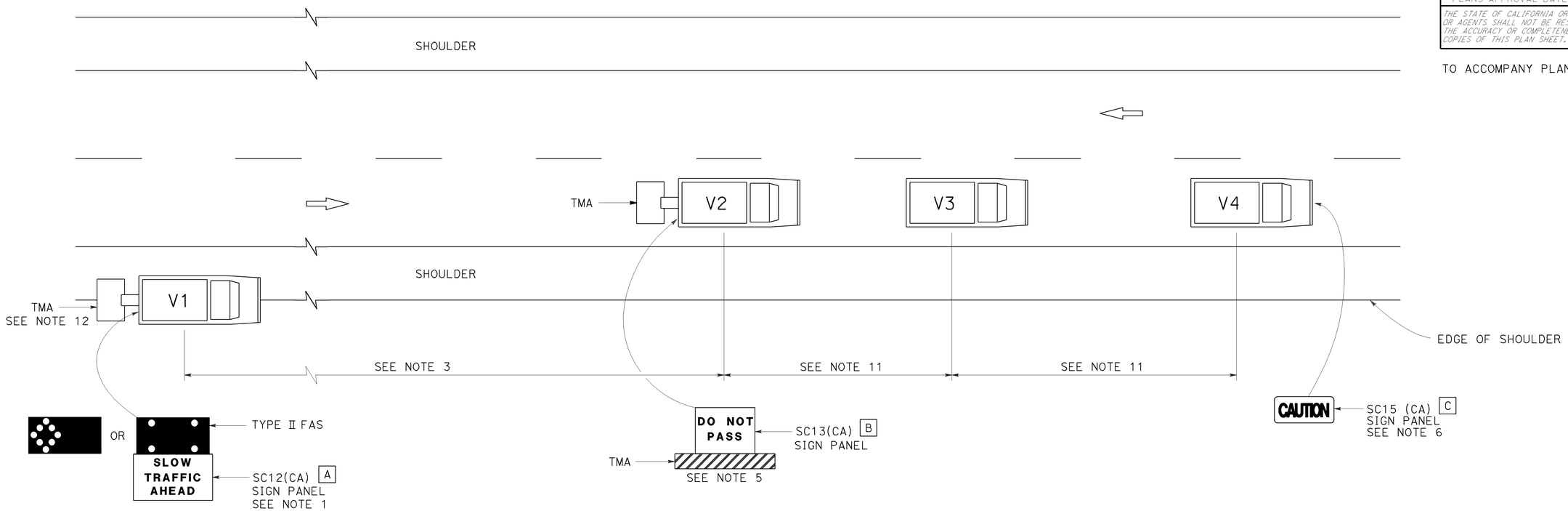

LEGEND

V1	SIGN VEHICLE
V2	SHADOW VEHICLE
V3	WORK/APPLICATION VEHICLE
V4	SIGN VEHICLE
TMA	TRUCK-MOUNTED ATTENUATOR
	FLASHING ARROW SIGN (FAS) IN FLASHING CAUTION MODE
	FLASHING ARROW SIGN (FAS) IN ALTERNATING DIAMOND CAUTION

SIGN PANEL SIZE (Min)

A	72" x 42"
B	54" x 42"
C	54" x 24"

NOTES:

1. Either a changeable message sign or a SC12(CA) "SLOW TRAFFIC AHEAD" sign shall be mounted on the rear of sign vehicle V1. The changeable message sign shall be sequenced to show the "CAUTION" message first, follow by the "SLOW TRAFFIC AHEAD" message. A Type II flashing arrow sign may be used with the SC12(CA) sign panel.
2. Sign vehicle V1 should be positioned where highly visible when shoulders are not available.
3. If traffic queues develop, sign vehicle V1 should be positioned upstream from the end of queue.
4. Vehicle-mounted sign panels shall have Type III or above retroreflective sheeting, black on white, or black on fluorescent orange, with 6" minimum series D letters per Caltrans sign specifications.
5. Shadow vehicle shall be equipped with a truck-mounted attenuator. The sign panel shown shall be mounted on the rear of shadow vehicle V2. The message "LANE CLOSED" may be used in place of the "DO NOT PASS" message.
6. The sign panel shown shall be mounted on the front of sign vehicle V4, facing opposing traffic.
7. All vehicles shall be equipped with flashing or rotating amber lights.
8. Sign vehicle V4 will not be required when the work and vehicles V2 and V3 are 2′ or more from the centerline of the highway during the work or application operations.
9. All vehicles used for lane closures shall be equipped with two-way radios and the vehicle operators shall maintain communication during the work or application operation.
10. This plan shall not be used where workers would be on foot in the work area. Use a stationary type lane closure (Revised Standard Plan T13) for this condition.
11. Minimize spacing between vehicles V2 and V3 and vehicles V3 and V4 to deter road users from driving in between them.
12. If sign vehicle V1 encroaches into the traffic lane due to insufficient shoulder width, sign vehicle V1 shall be equipped with a truck-mounted attenuator. Sign vehicle V1 shall stay as close to the edge of shoulder as practicable.

STATE OF CALIFORNIA
DEPARTMENT OF TRANSPORTATION

TRAFFIC CONTROL SYSTEM FOR MOVING LANE CLOSURE ON TWO LANE HIGHWAYS

NO SCALE

RSP T17 DATED APRIL 19, 2013 SUPERSEDES STANDARD PLAN T17
DATED MAY 20, 2011 - PAGE 245 OF THE STANDARD PLANS BOOK DATED 2010.

REVISED STANDARD PLAN RSP T17

12-18-12

Dist	COUNTY	ROUTE	POST MILES TOTAL PROJECT	SHEET No.	TOTAL SHEETS
05	Mon	1	28.0/28.4	60	104

Theresa Gabriel
REGISTERED ELECTRICAL ENGINEER

July 19, 2013
PLANS APPROVAL DATE

REGISTERED PROFESSIONAL ENGINEER Theresa Aziz Gabriel No. E15129 Exp. 6-30-14 ELECTRICAL STATE OF CALIFORNIA

THE STATE OF CALIFORNIA OR ITS OFFICERS OR AGENTS SHALL NOT BE RESPONSIBLE FOR THE ACCURACY OR COMPLETENESS OF SCANNED COPIES OF THIS PLAN SHEET.

TO ACCOMPANY PLANS DATED 12-1-14

2010 REVISED STANDARD PLAN RSP ES-1A

LEGEND:

AB	ABANDON. IF APPLIED TO CONDUIT, REMOVE CONDUCTORS
BC	INSTALL PULL BOX IN EXISTING CONDUIT RUN
BP	PEDESTRIAN BARRICADE, TYPE AS INDICATED ON PLAN
CB	INSTALL CONDUIT INTO EXISTING PULL BOX
CC	CONNECT NEW AND EXISTING CONDUIT. REMOVE EXISTING CONDUCTORS AND INSTALL CONDUCTORS AS INDICATED
CF	CONDUIT TO REMAIN FOR FUTURE USE. REMOVE CONDUCTORS. INSTALL PULL TAPE
DH	DETECTOR HANDHOLE
FA	FOUNDATION TO BE ABANDONED
IS	INSTALL SIGN ON SIGNAL MAST ARM
NS	NO SLIP BASE ON STANDARD
PEC	PHOTOELECTRIC CONTROL
PEU	PHOTOELECTRIC UNIT
RC	EQUIPMENT OR MATERIAL TO BE REMOVED AND BECOME THE PROPERTY OF THE CONTRACTOR
RE	REMOVE ELECTROLIER, FUSES AND BALLAST. TAPE ENDS OF CONDUCTORS
RL	RELOCATE EQUIPMENT
RR	REMOVE AND REUSE EQUIPMENT
RS	REMOVE AND SALVAGE EQUIPMENT
SC	SPLICE NEW TO EXISTING CONDUCTORS
SD	SERVICE DISCONNECT
TSP	TELEPHONE SERVICE POINT

ABBREVIATIONS

APS	ACCESSIBLE PEDESTRIAN SIGNAL
BBS	BATTERY BACKUP SYSTEM
BC	BOLT CIRCLE
BPB	BICYCLE PUSH BUTTON
C	CONDUIT
CB	CIRCUIT BREAKER
CCTV	CLOSED CIRCUIT TELEVISION
Ckt	CIRCUIT
CMS	CHANGEABLE MESSAGE SIGN
Ctid	CALTRANS IDENTIFICATION
Comm	COMMUNICATION
DLC	LOOP DETECTOR LEAD-IN CABLE
EMS	EXTINGUISHABLE MESSAGE SIGN
EVUC	EMERGENCY VEHICLE UNIT CABLE
EVUD	EMERGENCY VEHICLE UNIT DETECTOR
FB	FLASHING BEACON
FBCA	FLASHING BEACON CONTROL ASSEMBLY
FBS	FLASHING BEACON WITH SLIP BASE
FO	FIBER OPTIC
G	EQUIPMENT GROUNDING CONDUCTOR
GB	GROUND BUS
GFCI	GROUND FAULT CIRCUIT INTERRUPTER
HAR	HIGHWAY ADVISORY RADIO
Hex	HEXAGONAL
HPS	HIGH PRESSURE SODIUM
IISNS	INTERNALLY ILLUMINATED STREET NAME SIGN
ISL	INDUCTION SIGN LIGHTING
LED	LIGHT EMITTING DIODE
LMA	LUMINAIRE MAST ARM
LPS	LOW PRESSURE SODIUM
Ltg	LIGHTING
Lum	LUMINAIRE
M	METERED
MAT	MAST ARM MOUNTING TOP ATTACHMENT
MAS	MAST ARM MOUNTING SIDE ATTACHMENT
M/M	MULTIPLE TO MULTIPLE TRANSFORMER
Mtg	MOUNTING
MV	MERCURY VAPOR LIGHTING FIXTURE
MVDS	MICROWAVE VEHICLE DETECTION SYSTEM
N	NEUTRAL (GROUNDED CONDUCTOR)
NB	NEUTRAL BUS
NC	NORMALLY CLOSE
NO	NORMALLY OPEN
P	CIRCUIT BREAKER'S POLE
PB	PULL BOX
PBA	PUSH BUTTON ASSEMBLY
PEC	PHOTOELECTRIC CONTROL
Ped	PEDESTRIAN
PEU	PHOTOELECTRIC UNIT
PT	CONDUIT WITH PULL TAPE
RE	RELOCATED EQUIPMENT
RM	RAMP METERING
RWIS	ROADSIDE WEATHER INFORMATION SYSTEM
SB	SLIP BASE
SIC	SIGNAL INTERCONNECT CABLE
Sig	SIGNAL
SMA	SIGNAL MAST ARM
SNS	STREET NAME SIGN
SP	SERVICE POINT
TDC	TELEPHONE DEMARCATION CABINET
TMS	TRAFFIC MONITORING STATION
TOS	TRAFFIC OPERATIONS SYSTEM
Veh	VEHICLE
VIVDS	VIDEO IMAGE VEHICLE DETECTION SYSTEM
WIM	WEIGH-IN-MOTION
Xfmr	TRANSFORMER

SOFFIT AND WALL MOUNTED LUMINAIRES

PENDANT, 70 W HPS UNLESS OTHERWISE SPECIFIED

FLUSH, 70 W HPS UNLESS OTHERWISE SPECIFIED

WALL SURFACE, 70 W HPS UNLESS OTHERWISE SPECIFIED

EXISTING SOFFIT OR WALL LUMINAIRE TO REMAIN UNMODIFIED

EXISTING SOFFIT OR WALL LUMINAIRE TO BE MODIFIED AS SPECIFIED

NOTE:

Arrow indicates "street side" of luminaire.

COMMONLY USED SYMBOLS FOR UNITED STATES CUSTOMARY UNITS OF MEASUREMENT:

SYMBOL USED	DEFINITIONS
Ω	OHMS
min	MINUTE
s	SECOND
bps	BITS PER SECOND
Bps	BYTES PER SECOND
A	AMPERE
V	VOLT
V(dc)	VOLT (DIRECT CURRENT)
V(ac)	VOLT (ALTERNATING CURRENT)
FC	FOOT - CANDLE
W	WATTS
VA	VOLT-AMPERE
M	MEGA
k	KILO
m	MILLI
μ	MICRO
P	PICO
Hz	HERTZ

MISCELLANEOUS ELECTROLIERS

NEW	EXISTING	
		LUMINAIRE ON WOOD POLE
		NON-STANDARD ELECTROLIER (SEE PROJECT NOTES OR PROJECT PLANS)
		CITY ELECTROLIER
		ELECTROLIER FOUNDATION (FUTURE INSTALLATION)

NOTES:

1. HPS luminaires shall be 310 W HPS when installed on Type 21, 21D, 30, 31 and 32 Standards, unless otherwise specified. HPS luminaires shall be 200 W when installed on other type standards or poles, unless otherwise specified.
2. LED luminaires shall be 235 W when installed on Type 21, 21D, 30, 31 and 32 Standards, unless otherwise specified. LED luminaires shall be 165 W when installed on other type standards or poles, unless otherwise specified.
3. Luminaires shall be the cutoff type, ANSI Type III medium cutoff lighting distribution, unless otherwise specified.

STANDARD ELECTROLIER

NEW	EXISTING	STANDARD TYPE
		15
		15D
		15 STRUCTURE
		15D STRUCTURE
		21
		21D
		21 STRUCTURE
		21D STRUCTURE
		30
		31
		32

STATE OF CALIFORNIA
DEPARTMENT OF TRANSPORTATION

ELECTRICAL SYSTEMS (LEGEND AND ABBREVIATIONS)

NO SCALE

RSP ES-1A DATED JULY 19, 2013 SUPERSEDES STANDARD PLAN ES-1A DATED MAY 20, 2011 - PAGE 425 OF THE STANDARD PLANS BOOK DATED 2010.

REVISED STANDARD PLAN RSP ES-1A

Dist	COUNTY	ROUTE	POST MILES TOTAL PROJECT	SHEET No.	TOTAL SHEETS
05	Mon	1	28.0/28.4	61	104

Theresa Gabriel
REGISTERED ELECTRICAL ENGINEER

July 19, 2013
PLANS APPROVAL DATE

REGISTERED PROFESSIONAL ENGINEER Theresa Aziz Gabriel No. E15129 Exp. 6-30-14 ELECTRICAL STATE OF CALIFORNIA

THE STATE OF CALIFORNIA OR ITS OFFICERS OR AGENTS SHALL NOT BE RESPONSIBLE FOR THE ACCURACY OR COMPLETENESS OF SCANNED COPIES OF THIS PLAN SHEET.

TO ACCOMPANY PLANS DATED 12-1-14

CONDUIT

NEW	EXISTING	
		LIGHTING CONDUIT, UNLESS OTHERWISE INDICATED OR NOTED
		TRAFFIC SIGNAL CONDUIT
C	c	COMMUNICATION CONDUIT
T	t	TELEPHONE CONDUIT
F	f	FIRE ALARM CONDUIT
FO	fo	FIBER OPTIC CONDUIT
		CONDUIT TERMINATION
R	r	CONDUIT RISER ATTACHED TO THE STRUCTURE OR SERVICE POLE

SERVICE EQUIPMENT

NEW	EXISTING	
OH	oh	OVERHEAD LINES
U	U	WOOD POLE, "U" INDICATES UTILITY OWNED
		POLE GUY WITH ANCHOR
		UTILITY TRANSFORMER - GROUND MOUNTED
III	III	SERVICE EQUIPMENT ENCLOSURE TYPE. DOOR INDICATES FRONT OF ENCLOSURE
T	t	TELEPHONE DEMARCATION CABINET

POLE-MOUNTED SERVICE DESIGNATION

TYPE H SERVICE, 28'-10" — TYPE OF INSTALLATION AND POLE HEIGHT ABOVE GRADE

FLASHING BEACON

NEW	EXISTING	
R	R	FLASHING BEACON (ONE VEHICLE SIGNAL HEAD WITH BACKPLATE AND VISOR) "R" INDICATES RED INDICATION, "Y" INDICATES YELLOW INDICATION
Y Y	Y Y	FLASHING BEACON WITH TYPE 15-FBS STANDARD AND A SIGN.
R R	R R	FLASHING BEACON WITH TYPES 9, 9A OR 9B SIGN UNLESS OTHERWISE SPECIFIED OR INDICATED

SIGNAL EQUIPMENT

NEW	EXISTING	
C	C	PEDESTRIAN SIGNAL HEAD "C" INDICATES COUNTDOWN PEDESTRIAN HEAD
		PUSH BUTTON ASSEMBLY POST
		PEDESTRIAN BARRICADE
		VEHICLE SIGNAL HEAD (WITH BACKPLATE AND 3-SECTIONS: RED, YELLOW AND GREEN)
		VEHICLE SIGNAL HEAD WITH ANGLE VISOR
PV	PV	MODIFICATIONS OF BASIC SYMBOL: "L" INDICATES ALL NON-ARROW SECTIONS LOUVERED "LG" INDICATES LOUVERED GREEN SECTION ONLY "PV" INDICATES ALL 12" SECTIONS PROGRAMMED VISIBILITY "8" INDICATES ALL 8" SECTIONS (ONLY WHEN SPECIFIED)
		VEHICLE SIGNAL HEAD CONSISTING OF RED, YELLOW AND GREEN LEFT ARROW SECTIONS
		VEHICLE SIGNAL HEAD CONSISTING OF RED AND YELLOW SECTIONS WITH AN UP GREEN ARROW SECTION
		VEHICLE SIGNAL HEAD (5 SECTION) CONSISTING OF RED, YELLOW AND GREEN SECTIONS WITH YELLOW AND GREEN RIGHT ARROW SECTIONS
		TYPE 15TS STANDARD WITH VEHICLE SIGNAL HEAD AND LUMINAIRE
		TYPE 21TS STANDARD WITH VEHICLE SIGNAL HEAD AND LUMINAIRE
		STANDARD WITH LUMINAIRE AND SIGNAL MAST ARMS AND ATTACHED VEHICLE SIGNAL HEADS
		TYPE 1 STANDARD WITH ATTACHED VEHICLE SIGNAL HEADS
		STANDARD WITH A SIGNAL MAST ARM, ATTACHED VEHICLE SIGNAL HEADS AND INTERNALLY ILLUMINATED STREET NAME SIGN
		CONTROLLER ASSEMBLY. DOOR INDICATES FRONT OF CABINET

SIGNAL EQUIPMENT Cont

NEW	EXISTING	
		GUARD POST
		TYPE 1 STANDARD WITH RAMP METERING SIGN
		OPTICAL DETECTOR FOR THE EMERGENCY VEHICLE DETECTION SYSTEM

NOTES:

1. All signal sections shall be 12" unless shown otherwise.
2. Signal heads shall be provided with backplates unless shown otherwise.

ILLUMINATED OVERHEAD SIGN

NEW	EXISTING	
		SINGLE POST, SINGLE ILLUMINATED SIGN, BALANCED BUTTERFLY
		SINGLE POST, DOUBLE ILLUMINATED SIGN, BALANCED BUTTERFLY
		SINGLE POST, SINGLE ILLUMINATED SIGN, FULL CANTILEVER
		DOUBLE POST, SINGLE ILLUMINATED SIGN
		SINGLE ILLUMINATED SIGN MOUNTED ON STRUCTURE
		DOUBLE POST, SINGLE ILLUMINATED SIGN WITH ELECTROLIER

STATE OF CALIFORNIA
DEPARTMENT OF TRANSPORTATION

ELECTRICAL SYSTEMS (LEGEND AND ABBREVIATIONS)

NO SCALE

RSP ES-1B DATED JULY 19, 2013 SUPERSEDES STANDARD PLAN ES-1B DATED MAY 20, 2011 - PAGE 426 OF THE STANDARD PLANS BOOK DATED 2010.

REVISED STANDARD PLAN RSP ES-1B

2010 REVISED STANDARD PLAN RSP ES-1B

7-15-13

Dist	COUNTY	ROUTE	POST MILES TOTAL PROJECT	SHEET No.	TOTAL SHEETS
05	Mon	1	28.0/28.4	62	104

Theresa Gabriel
REGISTERED ELECTRICAL ENGINEER

July 19, 2013
PLANS APPROVAL DATE

REGISTERED PROFESSIONAL ENGINEER
Theresa Aziz Gabriel
No. E15129
Exp. 6-30-14
ELECTRICAL
STATE OF CALIFORNIA

THE STATE OF CALIFORNIA OR ITS OFFICERS OR AGENTS SHALL NOT BE RESPONSIBLE FOR THE ACCURACY OR COMPLETENESS OF SCANNED COPIES OF THIS PLAN SHEET.

TO ACCOMPANY PLANS DATED 12-1-14

EQUIPMENT IDENTIFICATION

ILLUMINATED SIGN IDENTIFICATION NUMBER:

SIGN No. 12345
10 ISL SCI 1.0

- SIGN NUMBER - PLACE ON POST OR STRUCTURE
- TRANSFORMER RATING (kVA)
- LIGHTING CONTROL TYPE
- NUMBER AND TYPE OF FIXTURES

DO NOT PLACE ON STANDARD OR STRUCTURE

ELECTROLIER OR EQUIPMENT IDENTIFICATION NUMBER:

12345 - 15'-0"

- MAST ARM LENGTH, IF SHOWN. DO NOT PLACE ON STANDARD OR STRUCTURE
- EQUIPMENT NUMBER - PLACE ON STANDARD OR STRUCTURE. EXISTING EQUIPMENT NUMBERS ARE SHOWN IN PARENTHESIS

CONDUIT AND CONDUCTOR IDENTIFICATION:

1½"C, 2#10, 15#14, 2 DLC, 12P#18

- PAIR
- NUMBER AND SIZE OF CONDUCTORS AND CABLES
- SIZE OF CONDUIT IN INCHES

ø1, ø2, ø2P, etc.	TRAFFIC PHASE IDENTIFICATION FOR SIGNAL FACES, DETECTORS AND PHASE DIAGRAMS
1 2 3	LEGEND NUMBERS
A B C	EQUIPMENT, SIGNAL POLES, INSTALLATION OR ITEMS
1 2 3	CONDUIT RUN NUMBERS

SIGNAL AND LIGHTING STANDARD (TYPICAL DESIGNATION):

19A - 3 - 100

- WIND VELOCITY = 100 mph
- CASE 3 ARM LOADING
- STANDARD TYPE
- STANDARD PLAN SHEET NUMBER
- DETAIL, NUMBER, SECTION, TYPE OR ELEVATION

MISCELLANEOUS EQUIPMENT

NEW	EXISTING	
CMS	cms	CHANGEABLE MESSAGE SIGN
		CLOSED CIRCUIT TELEVISION CAMERA
		HIGHWAY ADVISORY RADIO POLE AND ANTENNA
EMS	ems	EXTINGUISHABLE MESSAGE SIGN
M V	m v	DETECTION DEVICE M = MICROWAVE SENSOR V = VIDEO IMAGE SENSOR

WIRING DIAGRAM LEGEND

----	EXTERNAL CONDUCTOR
	CONDUCTOR OR BUS
	TIE POINT
	CONTACTOR COIL
	CONTACTOR, NO CONTACT
	TERMINAL BLOCKS
	CONTACTOR, NC CONTACT
	ENCLOSURE BOND
	GROUNDING ELECTRODE
	CIRCUIT BREAKER
	RECEPTACLE

PULL BOXES

NEW	EXISTING	
		PULL BOX, No. 5 UNLESS OTHERWISE INDICATED OR NOTED
3	9A(21)	PULL BOX, ADDITIONAL DESIGNATIONS OR DESCRIPTIONS

3 No. 3½ PULL BOX
5 No. 5 PULL BOX
6 No. 6 PULL BOX
7 No. 7 (CEILING PULL BOX)
8 No. 8 (PENDANT SOFFIT PULL BOX)
9 No. 9 PULL BOX
9A No. 9A PULL BOX

(C) COMMUNICATIONS PULL BOX
(E) PULL BOX WITH EXTENSION
(S) SPRINKLER CONTROL PULL BOX
(21) ANCHOR BOLTS AND CONDUIT FOR FUTURE INSTALLATION OF TYPE 21 STANDARD
(T) TRAFFIC PULL BOX

VEHICLE DETECTORS

5 J 9 U

- VEHICLE DETECTOR DESIGNATION
- U = UPPER
  L = LOWER
- SLOT NUMBER IN INPUT FILE
- INPUT FILE (I OR J)
- PHASE

NEW	EXISTING	
		TYPE A DETECTOR LOOP. OUTLINE OF SAWCUT SHOWN
		TYPE B DETECTOR LOOP. OUTLINE OF SAWCUT SHOWN
		TYPE C DETECTOR LOOP. OUTLINE OF SAWCUT SHOWN
		TYPE D DETECTOR LOOP. OUTLINE OF SAWCUT SHOWN
		TYPE E DETECTOR LOOP. OUTLINE OF SAWCUT SHOWN
		TYPE Q DETECTOR LOOP. OUTLINE OF SAWCUT SHOWN
		MAGNETIC DETECTOR
DH	dh	DETECTOR HANDHOLE
		MICROWAVE OR VIDEO DETECTION ZONE

STATE OF CALIFORNIA
DEPARTMENT OF TRANSPORTATION

ELECTRICAL SYSTEMS (LEGEND AND ABBREVIATIONS)

NO SCALE

RSP ES-1C DATED JULY 19, 2013 SUPERSEDES STANDARD PLAN ES-1C DATED MAY 20, 2011 - PAGE 427 OF THE STANDARD PLANS BOOK DATED 2010.

REVISED STANDARD PLAN RSP ES-1C

2010 REVISED STANDARD PLAN RSP ES-1C

7-11-13

Dist	COUNTY	ROUTE	POST MILES TOTAL PROJECT	SHEET No.	TOTAL SHEETS
05	Mon	1	28.0/28.4	63	104

Theresa Gabriel
REGISTERED ELECTRICAL ENGINEER

July 19, 2013
PLANS APPROVAL DATE

REGISTERED PROFESSIONAL ENGINEER
Theresa Aziz Gabriel
No. E15129
Exp. 6-30-14
ELECTRICAL
STATE OF CALIFORNIA

THE STATE OF CALIFORNIA OR ITS OFFICERS OR AGENTS SHALL NOT BE RESPONSIBLE FOR THE ACCURACY OR COMPLETENESS OF SCANNED COPIES OF THIS PLAN SHEET.

TO ACCOMPANY PLANS DATED 12-1-14

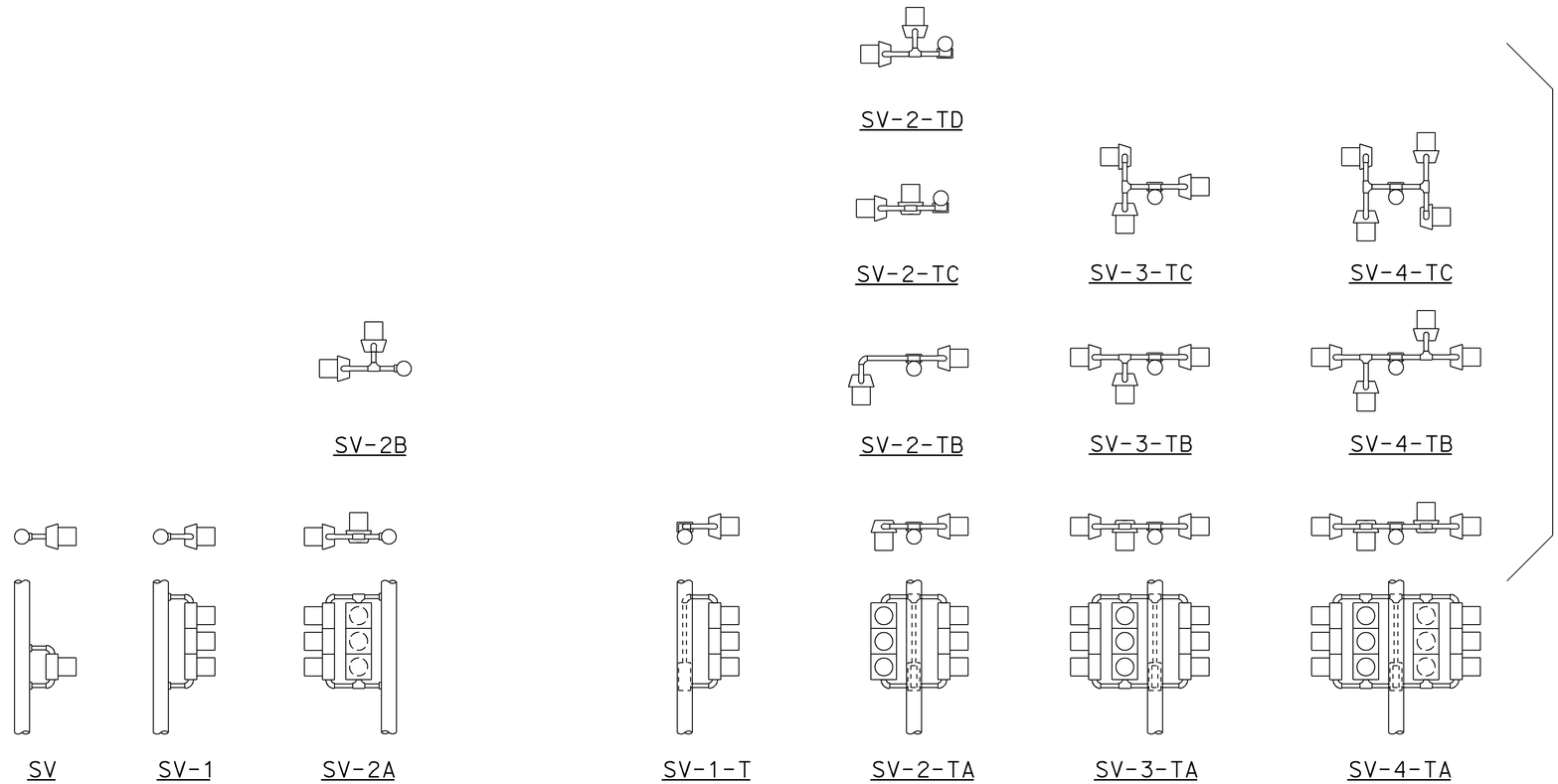

SIDE MOUNTINGS

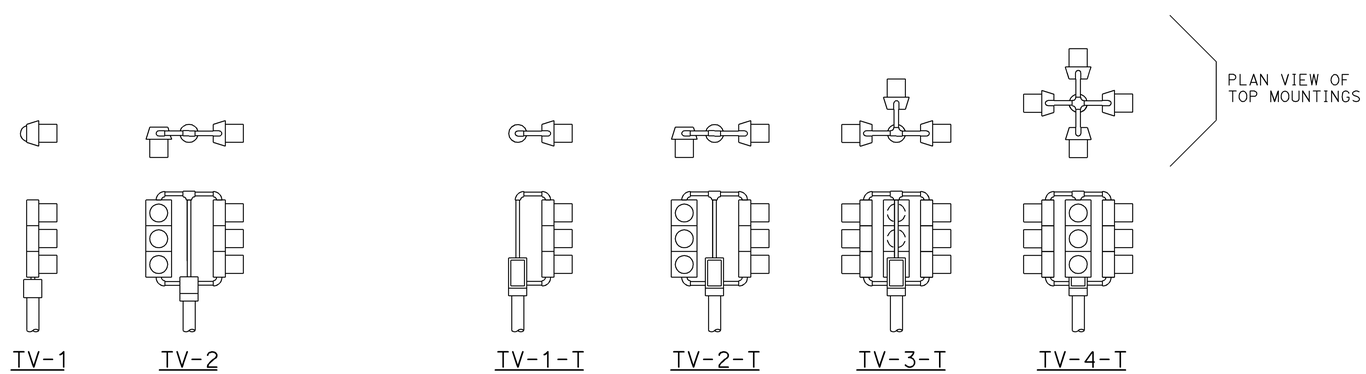

TOP MOUNTINGS

ABBREVIATIONS:

SV	SIDE MOUNTED VEHICLE SIGNALS
T	TERMINAL COMPARTMENT
TV	TOP MOUNTED VEHICLE SIGNALS
1, 2, 3, 4	NUMBER OF SIGNAL FACES (3 - SECTION, UNLESS OTHERWISE INDICATED)
A, B, C, D	CONFIGURATION OF SIGNALS

NOTES:

1. Mountings shall be oriented to provide maximum horizontal clearance to adjacent roadway.
2. Bracket arms shall be long enough to permit proper alignment of signals and backplate installation.
3. See Standard Plans ES-4D and ES-4E for attachment fitting details.

STATE OF CALIFORNIA
DEPARTMENT OF TRANSPORTATION

ELECTRICAL SYSTEMS (VEHICULAR SIGNAL HEADS AND MOUNTINGS)

NO SCALE

RSP ES-4A DATED JULY 19, 2013 SUPERSEDES STANDARD PLAN ES-4A DATED MAY 20, 2011 - PAGE 443 OF THE STANDARD PLANS BOOK DATED 2010.

REVISED STANDARD PLAN RSP ES-4A

2010 REVISED STANDARD PLAN RSP ES-4A

7-9-13

Dist	COUNTY	ROUTE	POST MILES TOTAL PROJECT	SHEET No.	TOTAL SHEETS
05	Mon	1	28.0/28.4	64	104

Theresa Gabriel
REGISTERED ELECTRICAL ENGINEER

July 19, 2013
PLANS APPROVAL DATE

REGISTERED PROFESSIONAL ENGINEER Theresa Aziz Gabriel No. E15129 Exp. 6-30-14 ELECTRICAL STATE OF CALIFORNIA

THE STATE OF CALIFORNIA OR ITS OFFICERS OR AGENTS SHALL NOT BE RESPONSIBLE FOR THE ACCURACY OR COMPLETENESS OF SCANNED COPIES OF THIS PLAN SHEET.

TO ACCOMPANY PLANS DATED 12-1-14

2010 REVISED STANDARD PLAN RSP ES-4C

VISORS

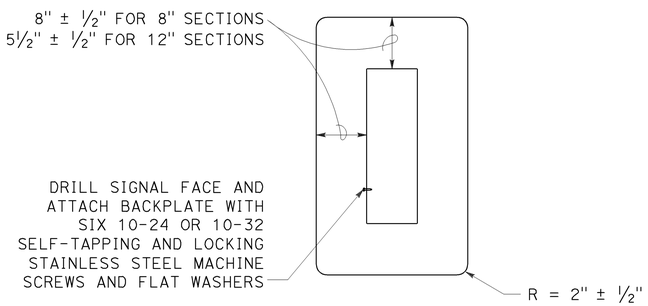

8" AND 12" SECTIONS

BACKPLATE

1/16" minimum thickness
3001-14 aluminum or plastic
when specified

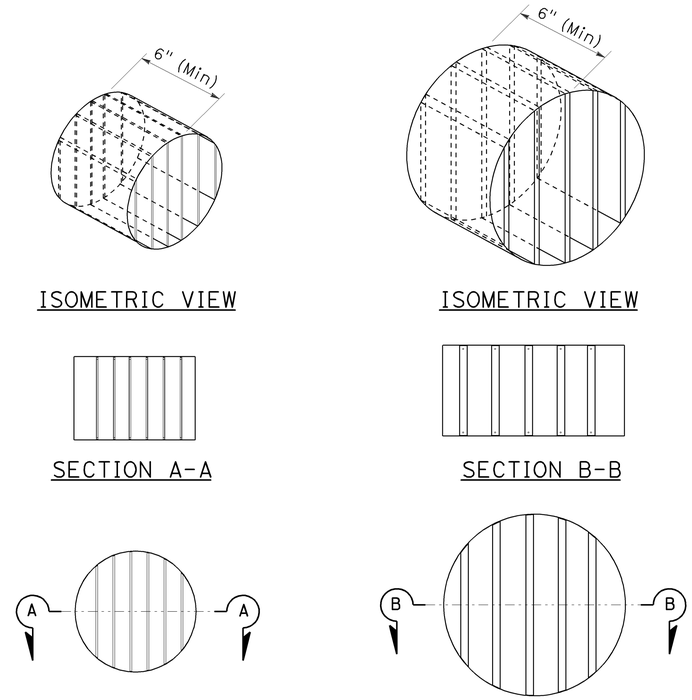

ISOMETRIC VIEW — ISOMETRIC VIEW

SECTION A-A — SECTION B-B

8" DIAMETER FRONT VIEW — 12" DIAMETER FRONT VIEW

DIRECTIONAL LOUVER

Directional louvers shall be oriented as directed by the Engineer and secured in place with one plated brass machine screw and nut.

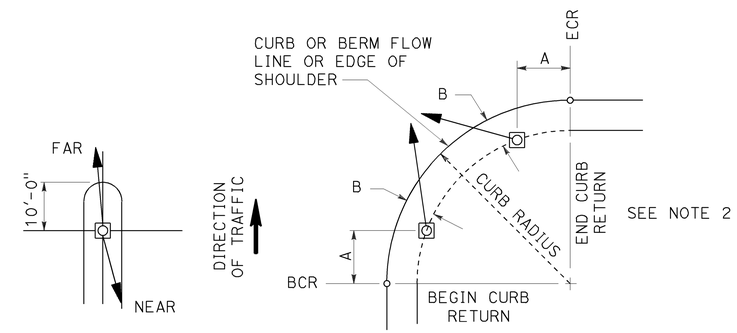

NOTES:

1. Typical signal pole placement unless dimensioned on plans.
2. For A and B dimensions, see Pole Schedule, or as directed by the Engineer.

SIGNAL STANDARD PLACEMENT DIMENSIONS AND EQUIPMENT LOCATIONS

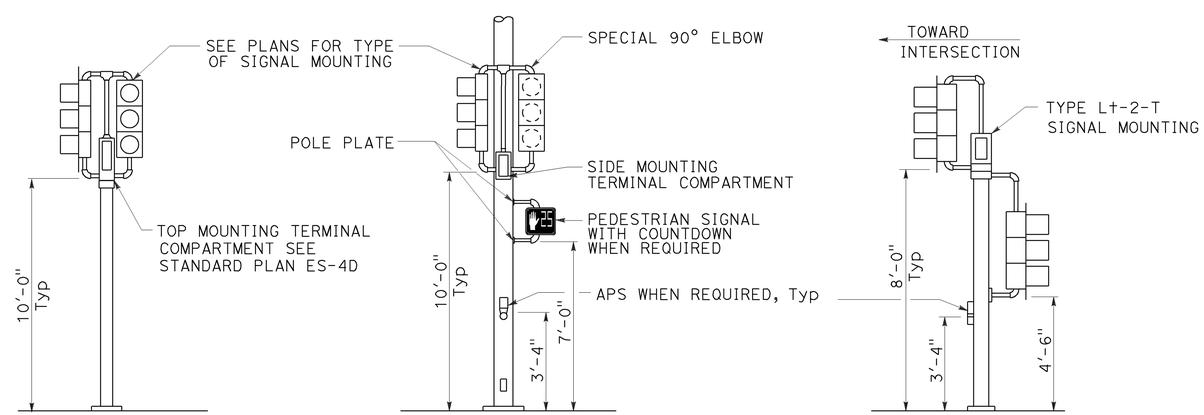

TOP MOUNTED SIGNALS (TV)
Type 1-A, 1-B, 1-C and 1-D standard as indicated on the plans

SIDE MOUNTED SIGNALS (SV AND SP)
Normally used on standards with luminaire or signal mast arm

LEFT TURN LANE SIGNAL
Type 1-A, 1-B, 1-C and 1-D standard as indicated on plans

TYPICAL SIGNAL INSTALLATIONS

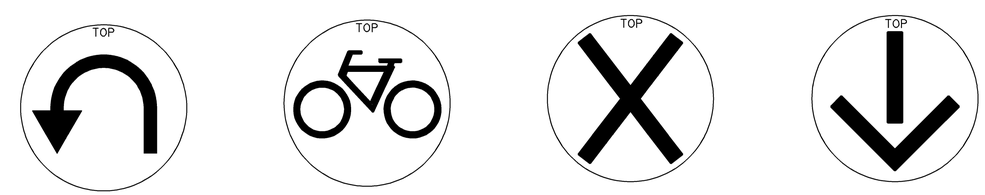

U-TURN — BICYCLE — LANE CONTROL — LANE CONTROL

SIGNAL FACES

STATE OF CALIFORNIA
DEPARTMENT OF TRANSPORTATION

ELECTRICAL SYSTEMS (VEHICULAR SIGNAL HEADS AND MOUNTINGS)

NO SCALE

RSP ES-4C DATED JULY 19, 2013 SUPERSEDES STANDARD PLAN ES-04C DATED MAY 20, 2011 - PAGE 445 OF THE STANDARD PLANS BOOK DATED 2010.

REVISED STANDARD PLAN RSP ES-4C

7-10-13

Dist	COUNTY	ROUTE	POST MILES TOTAL PROJECT	SHEET No.	TOTAL SHEETS
05	Mon	1	28.0/28.4	65	104

Theresa Gabriel
REGISTERED ELECTRICAL ENGINEER

July 19, 2013
PLANS APPROVAL DATE

REGISTERED PROFESSIONAL ENGINEER
Theresa Aziz Gabriel
No. E15129
Exp. 6-30-14
ELECTRICAL
STATE OF CALIFORNIA

THE STATE OF CALIFORNIA OR ITS OFFICERS OR AGENTS SHALL NOT BE RESPONSIBLE FOR THE ACCURACY OR COMPLETENESS OF SCANNED COPIES OF THIS PLAN SHEET.

TO ACCOMPANY PLANS DATED 12-1-14

2010 REVISED STANDARD PLAN RSP ES-4E

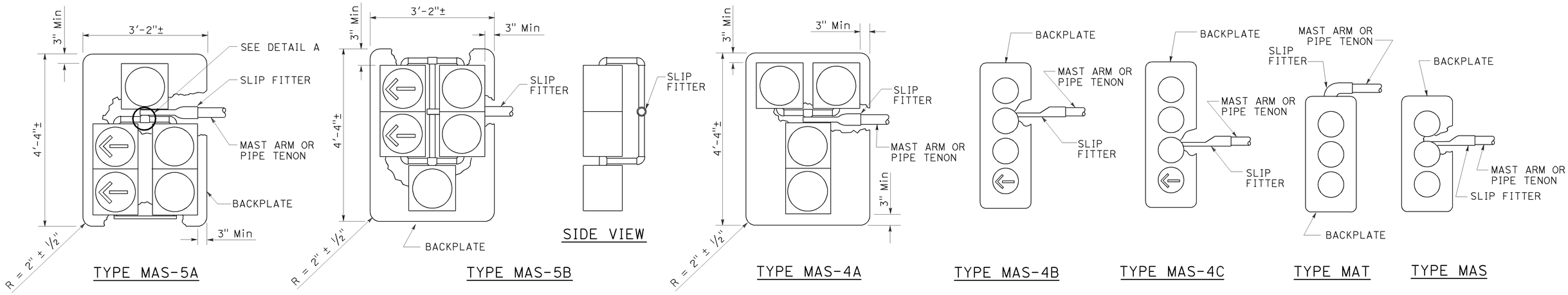

MAST ARM MOUNTINGS

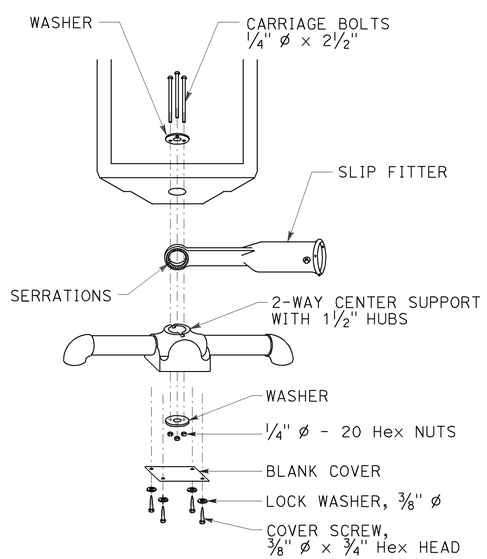

DETAIL A

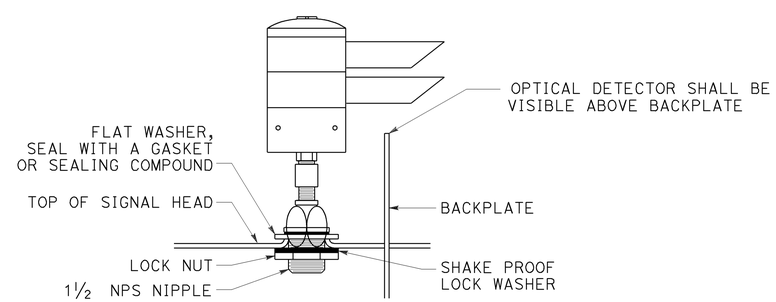

OPTICAL DETECTOR MOUNTING FOR EMERGENCY VEHICLE DETECTION SYSTEM

DETAIL B

STATE OF CALIFORNIA
DEPARTMENT OF TRANSPORTATION

ELECTRICAL SYSTEMS (VEHICULAR SIGNAL HEADS AND OPTICAL DETECTOR MOUNTING)

NO SCALE

RSP ES-4E DATED JULY 19, 2013 SUPERSEDES STANDARD PLAN ES-4E DATED MAY 20, 2011 - 447 OF THE STANDARD PLANS BOOK DATED 2010.

REVISED STANDARD PLAN RSP ES-4E

Dist	COUNTY	ROUTE	POST MILES TOTAL PROJECT	SHEET No.	TOTAL SHEETS
05	Mon	1	28.0/28.4	66	104

Theresa Gabriel
REGISTERED ELECTRICAL ENGINEER

July 19, 2013
PLANS APPROVAL DATE

REGISTERED PROFESSIONAL ENGINEER
Theresa Aziz Gabriel
No. E15129
Exp. 6-30-14
ELECTRICAL
STATE OF CALIFORNIA

THE STATE OF CALIFORNIA OR ITS OFFICERS OR AGENTS SHALL NOT BE RESPONSIBLE FOR THE ACCURACY OR COMPLETENESS OF SCANNED COPIES OF THIS PLAN SHEET.

TO ACCOMPANY PLANS DATED 12-1-14

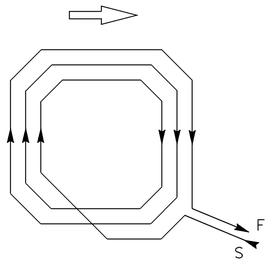

WINDING DETAIL

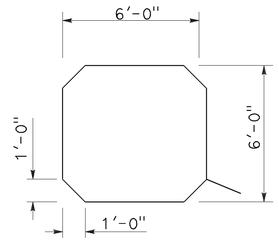

SAWCUT DETAIL

TYPE A LOOP DETECTOR CONFIGURATION

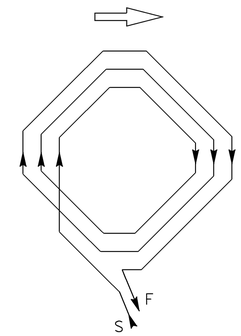

WINDING DETAIL

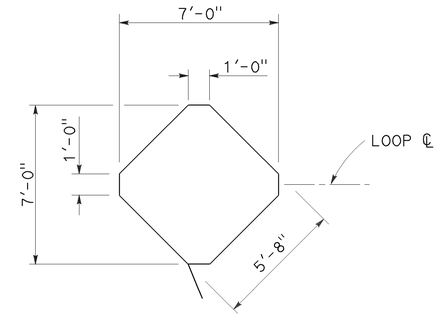

SAWCUT DETAIL

TYPE B LOOP DETECTOR CONFIGURATION

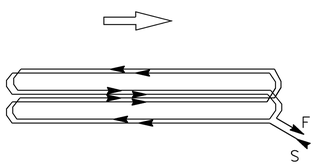

WINDING DETAIL

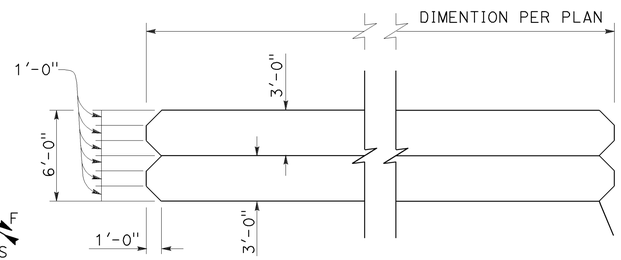

SAWCUT DETAIL

TYPE C LOOP DETECTOR CONFIGURATION

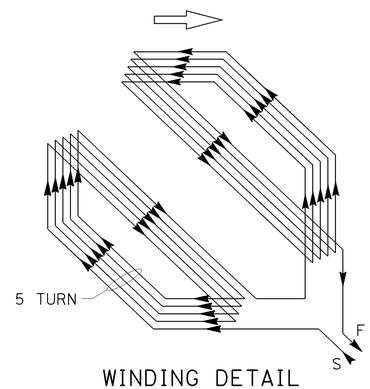

WINDING DETAIL

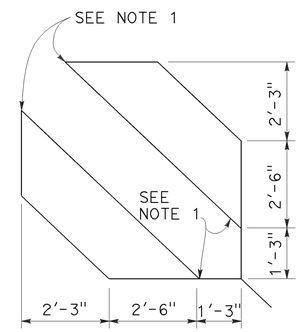

SAWCUT DETAIL

TYPE D LOOP DETECTOR CONFIGURATION

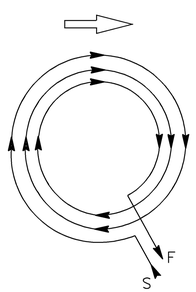

WINDING DETAIL

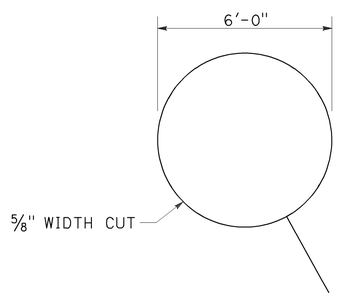

SAWCUT DETAIL

TYPE E LOOP DETECTOR CONFIGURATION

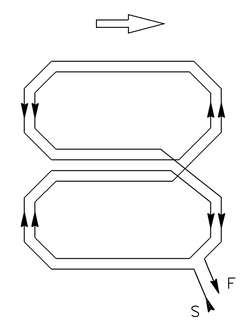

WINDING DETAIL

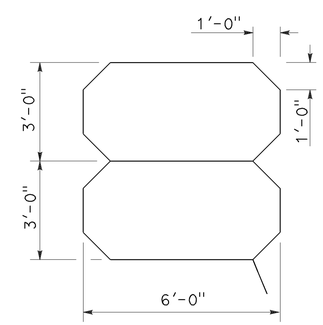

SAWCUT DETAIL

TYPE Q LOOP DETECTOR CONFIGURATION

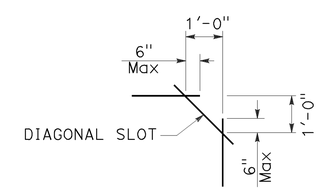

PLAN VIEW OF DIAGONAL SLOT AT CORNERS

NOTES:

1. Round corners of acute angle sawcuts to prevent damage to conductors.
2. Typical distance separating loops from edge to edge is 10' for Type A, B, D and E installation in single lane.

STATE OF CALIFORNIA
DEPARTMENT OF TRANSPORTATION

ELECTRICAL SYSTEMS (DETECTORS)

NO SCALE

RSP ES-5B DATED JULY 19, 2013 SUPERSEDES STANDARD PLAN ES-5B DATED MAY 20, 2011 - PAGE 449 OF THE STANDARD PLANS BOOK DATED 2010.

REVISED STANDARD PLAN RSP ES-5B

2010 REVISED STANDARD PLAN RSP ES-5B

7-9-13

Dist	COUNTY	ROUTE	POST MILES TOTAL PROJECT	SHEET No.	TOTAL SHEETS
05	Mon	1	28.0/28.4	67	104

Theresa Gabriel
REGISTERED ELECTRICAL ENGINEER

July 19, 2013
PLANS APPROVAL DATE

REGISTERED PROFESSIONAL ENGINEER
Theresa Aziz Gabriel
No. E15129
Exp. 6-30-14
ELECTRICAL
STATE OF CALIFORNIA

THE STATE OF CALIFORNIA OR ITS OFFICERS OR AGENTS SHALL NOT BE RESPONSIBLE FOR THE ACCURACY OR COMPLETENESS OF SCANNED COPIES OF THIS PLAN SHEET.

TO ACCOMPANY PLANS DATED 12-1-14

2010 REVISED STANDARD PLAN RSP ES-5C

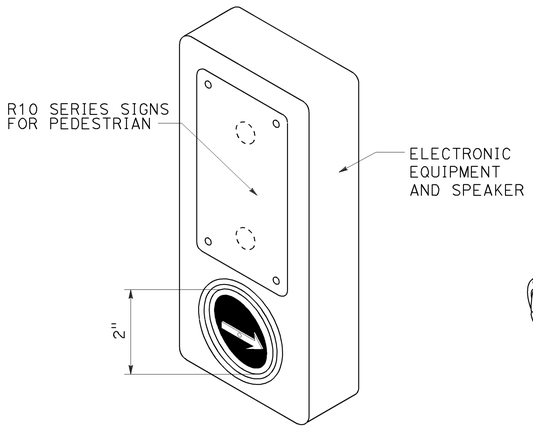

ACCESSIBLE PEDESTRIAN SIGNAL

DETAIL A
(See note 1 to 4)

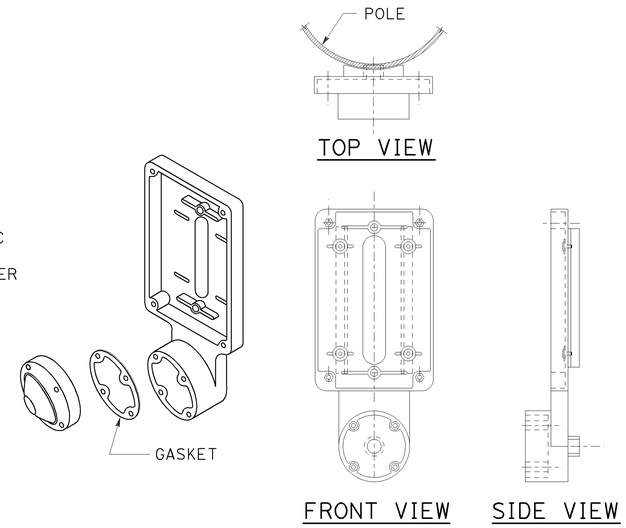

TYPE B PUSH BUTTON ASSEMBLY

DETAIL B
(See note 1 to 4)

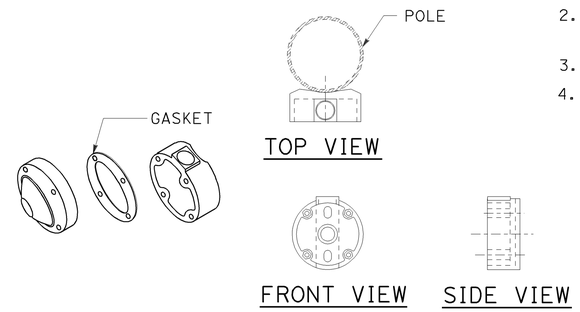

TYPE C PUSH BUTTON ASSEMBLY

DETAIL C
(See note 1 to 4)

NOTES:

1. Back casting shape to fit curvature of pole.
2. Provide cover fitting for top of post, when PBA is mounted on push button assembly post.
3. Install push button on crosswalk side of standard.
4. Use R10 series regulatory signs and plaques for pedestrian and bicycle facilities.

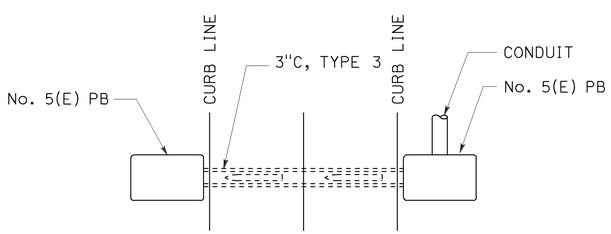

PLAN

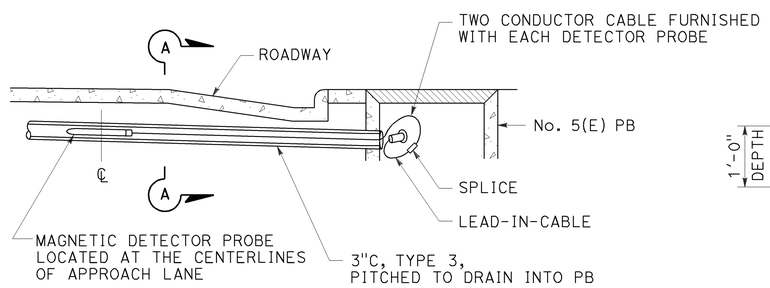

ELEVATION

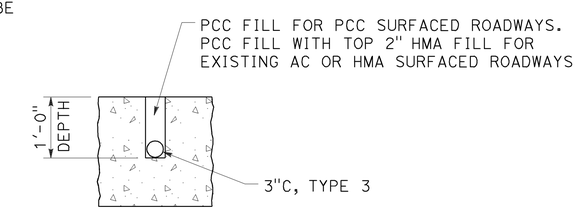

SECTION A-A

MAGNETIC VEHICLE DETECTOR

INSTALLATION DETAILS

DETAIL D

STATE OF CALIFORNIA
DEPARTMENT OF TRANSPORTATION

ELECTRICAL SYSTEMS (ACCESSIBLE PEDESTRIAN SIGNAL, PUSH BUTTON ASSEMBLIES AND MAGNETIC VEHICLE DETECTOR)

NO SCALE

RSP ES-5C DATED JULY 19, 2013 SUPERSEDES STANDARD PLAN ES-5C
DATED MAY 20, 2011 - PAGE 450 OF THE STANDARD PLANS BOOK DATED 2010.

REVISED STANDARD PLAN RSP ES-5C

Dist	COUNTY	ROUTE	POST MILES TOTAL PROJECT	SHEET No.	TOTAL SHEETS
05	Mon		28.0/28.4	68	104

Theresa Gabriel
REGISTERED ELECTRICAL ENGINEER

July 19, 2013
PLANS APPROVAL DATE

REGISTERED PROFESSIONAL ENGINEER Theresa Aziz Gabriel No. E15129 Exp. 6-30-14 ELECTRICAL STATE OF CALIFORNIA

THE STATE OF CALIFORNIA OR ITS OFFICERS OR AGENTS SHALL NOT BE RESPONSIBLE FOR THE ACCURACY OR COMPLETENESS OF SCANNED COPIES OF THIS PLAN SHEET.

TO ACCOMPANY PLANS DATED 12-1-14

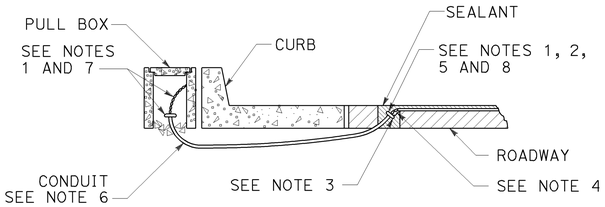

TYPE A
CURB TERMINATION DETAIL

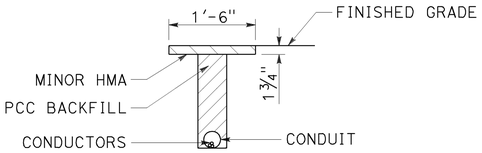

"T" TRENCH
DETAIL T

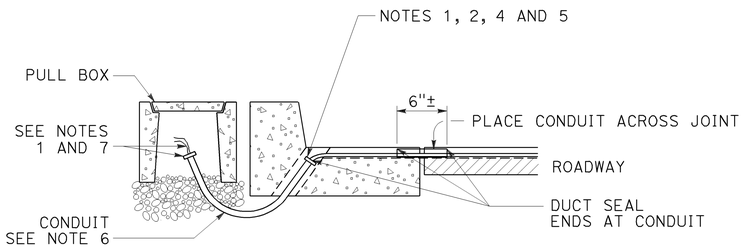

CROSS SECTION

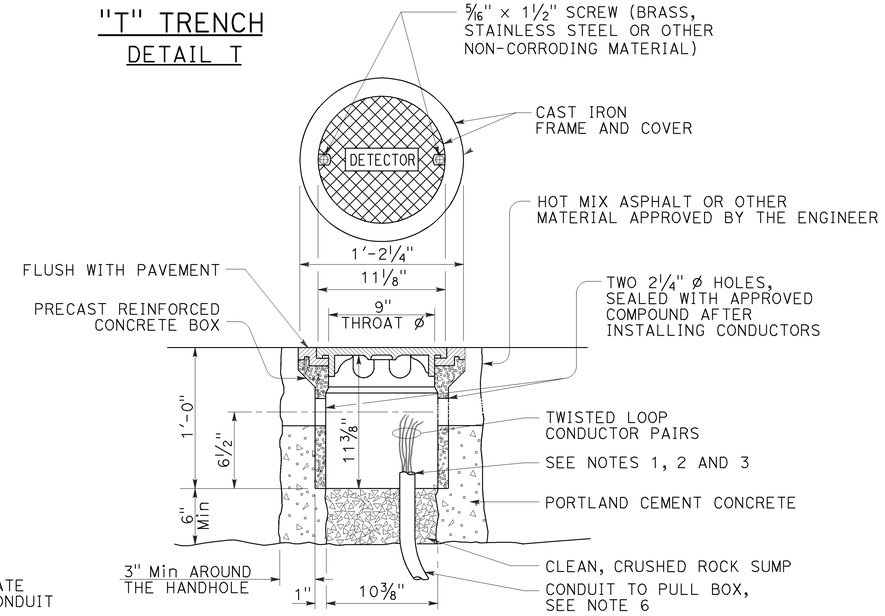

DETECTOR HANDHOLE DETAIL

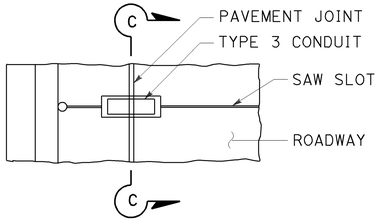

PLAN VIEW

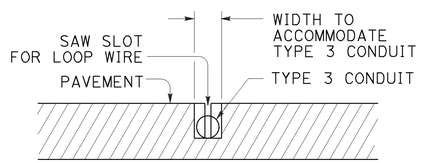

SECTION C-C

TYPE B
CURB TERMINATION DETAIL

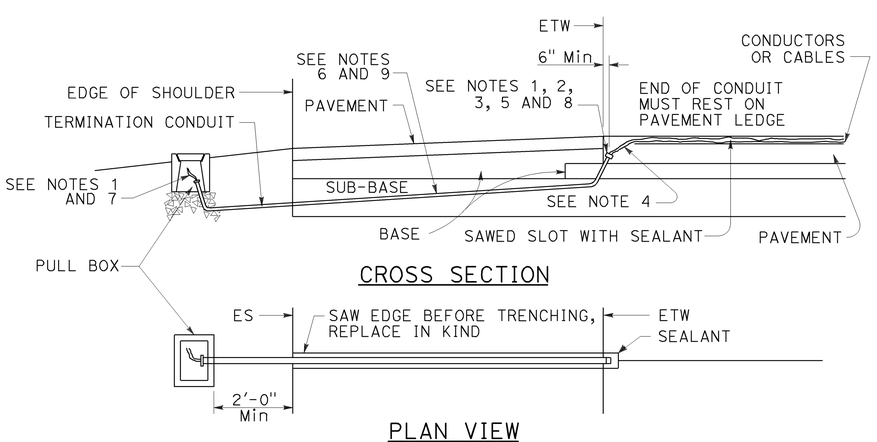

CROSS SECTION

PLAN VIEW

SHOULDER TERMINATION DETAILS

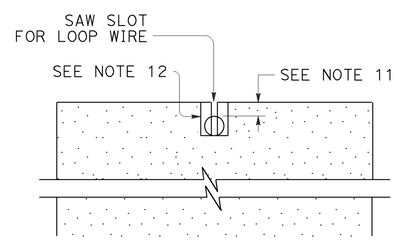

SECTION A-A

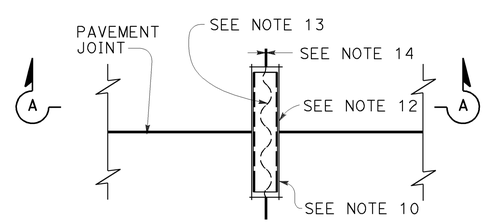

PLAN VIEW

TYPICAL LOOP LEAD-IN DETAIL
AT PAVEMENT JOINT

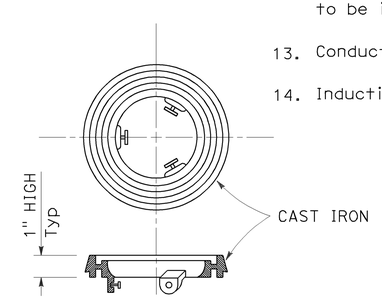

LOCKING GRADE RING

NOTES:

1. Bushing shall be used at end of conduit.
2. Tape detector conductors or cables 3" each side of bushings.
3. Install duct seal compound to each end of termination conduit before installing sealant.
4. Round all sharp edges where detector conductors or cables have to pass.
5. End of conduit shall be 3⅛" below roadway surface.
6. Conduit size / Loop conductors
   - 1"C minimum — 1 to 2 pairs
   - 1½"C minimum — 3 to 4 pairs
   - 2"C minimum — 5 or more pairs
7. Splice detector conductors or cables to detector lead-in-cable.
8. Location of detector handhole when shown on plans.
9. When the shoulder and traveled way are paved with the same material and there is no joint between them, the conduit shall extend only 2'-0" into the shoulder pavement.
10. ¾"C, Type 3 conduit 6" long minimum, plug both ends with duct compound to keep out sealant.
11. ½" Minimum between top of conduit and pavement surface.
12. Sawcut shall not exceed 1" in width and ⅛" longer than conduit to be installed.
13. Conductors with ½" minimum slack inside conduit.
14. Inductive loop detector saw slot.

STATE OF CALIFORNIA
DEPARTMENT OF TRANSPORTATION

ELECTRICAL SYSTEMS (CURB TERMINATION AND HANDHOLE)

NO SCALE

RSP ES-5D DATED JULY 19, 2013 SUPERSEDES STANDARD PLAN ES-5D DATED MAY 20, 2011 - PAGE 451 OF THE STANDARD PLANS BOOK DATED 2010.

REVISED STANDARD PLAN RSP ES-5D

2010 REVISED STANDARD PLAN RSP ES-5D

7-9-13

Dist	COUNTY	ROUTE	POST MILES TOTAL PROJECT	SHEET No.	TOTAL SHEETS
05	Mon	1	28.0/28.4	69	104

Theresa Gabriel
REGISTERED ELECTRICAL ENGINEER

July 19, 2013
PLANS APPROVAL DATE

REGISTERED PROFESSIONAL ENGINEER
Theresa Aziz Gabriel
No. E15129
Exp. 6-30-14
ELECTRICAL
STATE OF CALIFORNIA

THE STATE OF CALIFORNIA OR ITS OFFICERS OR AGENTS SHALL NOT BE RESPONSIBLE FOR THE ACCURACY OR COMPLETENESS OF SCANNED COPIES OF THIS PLAN SHEET.

TO ACCOMPANY PLANS DATED 12-1-14

ISOFOOTCANDLE CURVE - MINIMUM

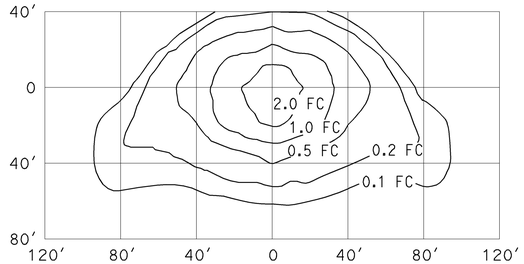

TYPE III MEDIUM CUTOFF

Cutoff Luminaire
34′ Mounting Height
Lamp operated at 22,000 lm
200-W high pressure sodium lamp
ANSI Designation S66

ISOFOOTCANDLE CURVE - MINIMUM

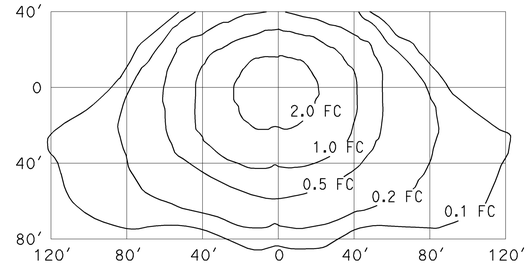

TYPE III MEDIUM CUTOFF

Cutoff Luminaire
40′ Mounting Height
Lamp operated at 37,000 lm
310-W high pressure sodium lamp
ANSI Designation S67

ISOFOOTCANDLE CURVE - MINIMUM

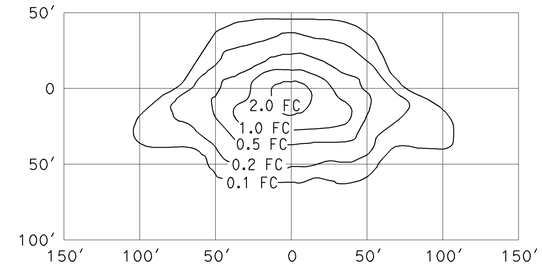

TYPE III MEDIUM CUTOFF

Cutoff Luminaire
30′ Mounting Height
Lamp operated at 16,000 lm
150-W high pressure sodium lamp
ANSI Designation S55

ISOFOOTCANDLE CURVE - MINIMUM

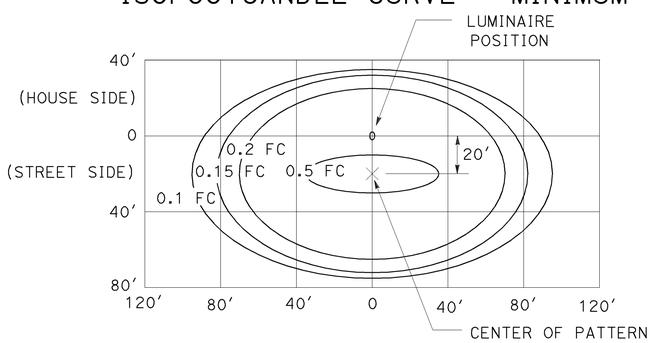

LED LUMINAIRE ROADWAY 1

165-W at 34′ Mounting Height

ISOFOOTCANDLE CURVE - MINIMUM

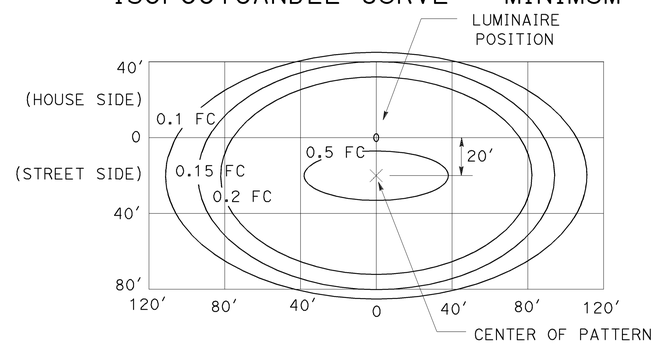

LED LUMINAIRE ROADWAY 2

235-W at 40′ Mounting Height

ISOFOOTCANDLE CURVE - MINIMUM

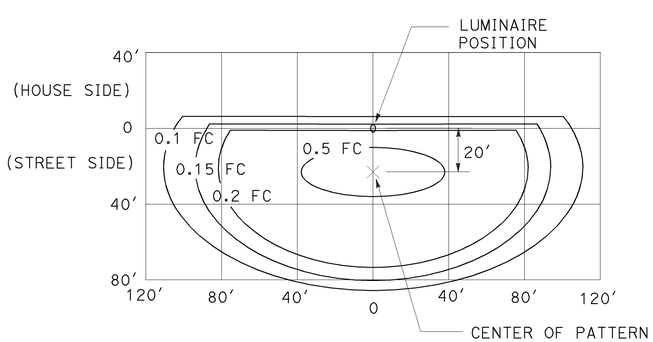

LED LUMINAIRE ROADWAY 3

235-W at 40′ Mounting Height
with back side control

ISOFOOTCANDLE CURVE - MINIMUM

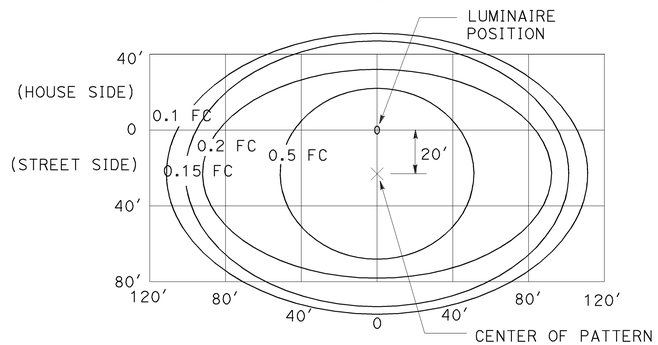

LED LUMINAIRE ROADWAY 4

300-W at 40′ Mounting Height

ISOFOOTCANDLE CURVE - MINIMUM

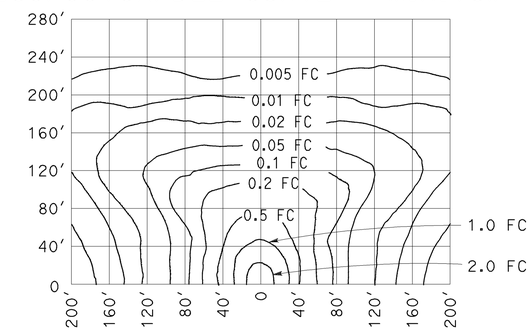

LOW PRESSURE SODIUM LUMINAIRE

40′ Mounting Height
Lamp operated at 33,000 lm
180-W low pressure sodium lamp

STATE OF CALIFORNIA
DEPARTMENT OF TRANSPORTATION

ELECTRICAL SYSTEMS (ISOFOOTCANDLE DIAGRAMS)

NO SCALE

RSP ES-10A DATED JULY 19, 2013 SUPERSEDES RSP ES-10A DATED JULY 20, 2012 THAT SUPPLEMENTS THE STANDARD PLANS BOOK DATED 2010.

REVISED STANDARD PLAN RSP ES-10A

2010 REVISED STANDARD PLAN RSP ES-10A

7-9-13

DIST	COUNTY	ROUTE	POST MILES TOTAL PROJECT	SHEET No.	TOTAL SHEETS
05	Mon	1	28.0/28.4	70	104

REGISTERED CIVIL ENGINEER 11-4-14 DATE

12-1-14
PLANS APPROVAL DATE

REGISTERED PROFESSIONAL ENGINEER HERNAN PEREZ No. C 60993 Exp. 12-31-16 CIVIL STATE OF CALIFORNIA

The State of California or its officers or agents shall not be responsible for the accuracy or completeness of scanned copies of this plan sheet.

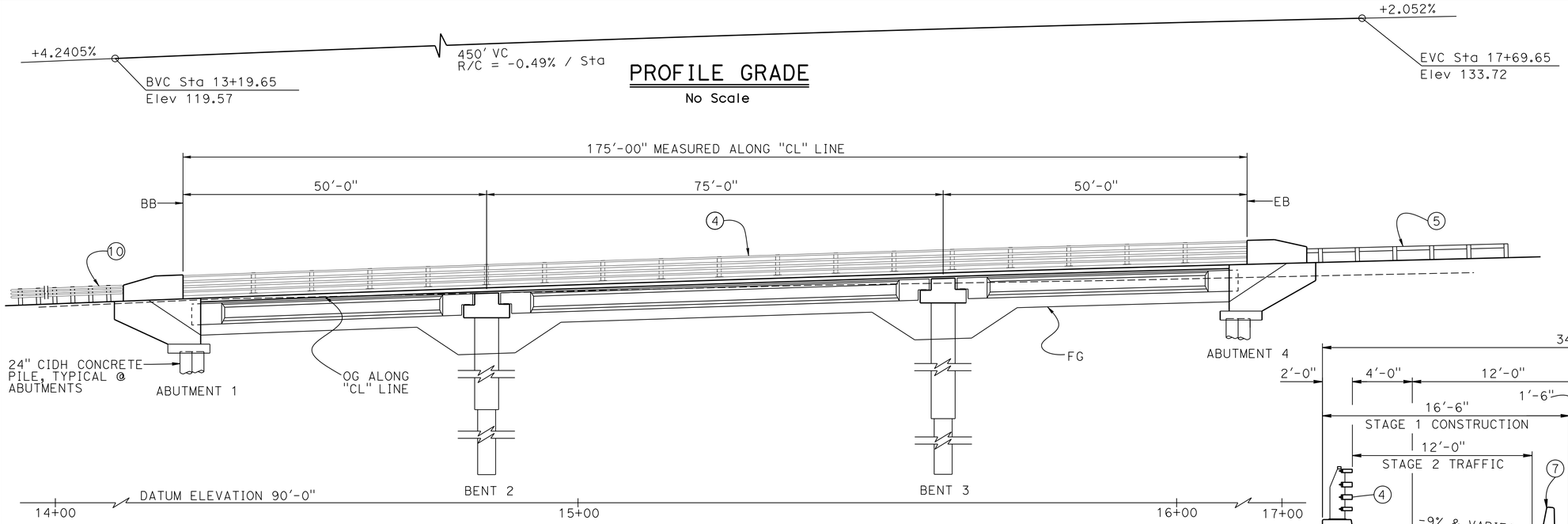

PROFILE GRADE

No Scale

MIRRORED ELEVATION

1" = 10'-0"

NOTES:

1. Paint "COW CLIFFS VIADUCT"
2. Paint "Br No. 44-0296"
3. Structure Approach Type EQ(10)
4. California ST-70 Bridge Rail (Mod)
5. Midwest Guardrail System, see Roadway Plans
6. Temporary Railing (Type K) during Stage 1 Traffic, see Roadway Plans
7. Temporary Railing (Type K) during Stage 2 Traffic, see Roadway Plans
8. Closure Pour
9. For Grade and Profile, see Roadway Plans
10. Crash Cushion, see Roadway Plans.

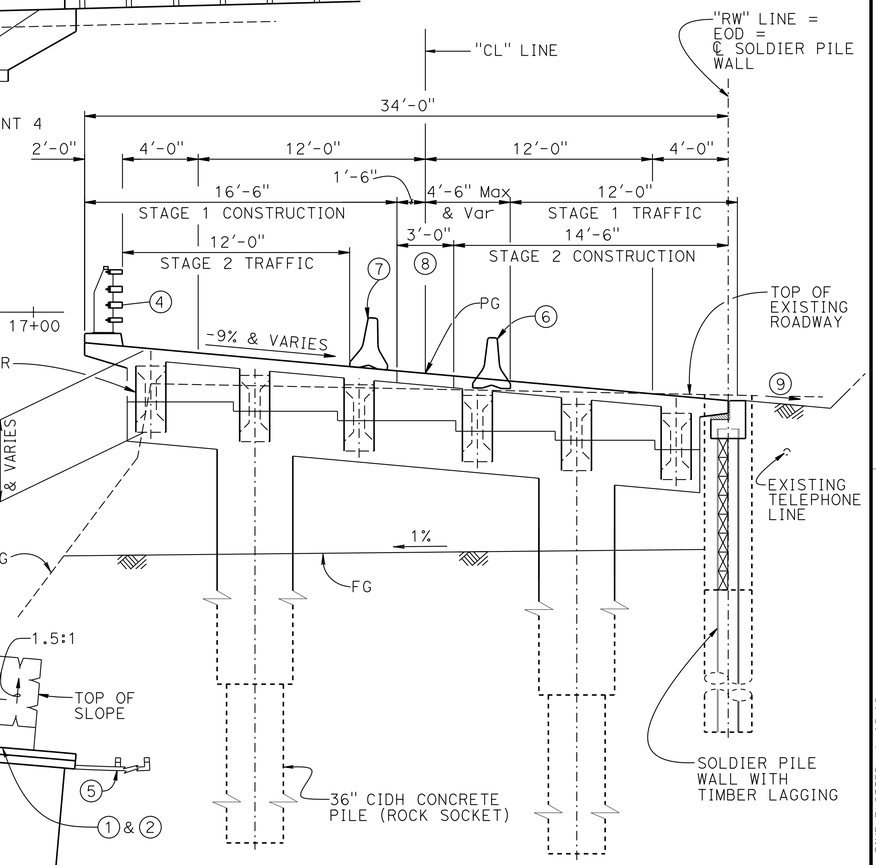

TYPICAL SECTION

¼"=1'-0"

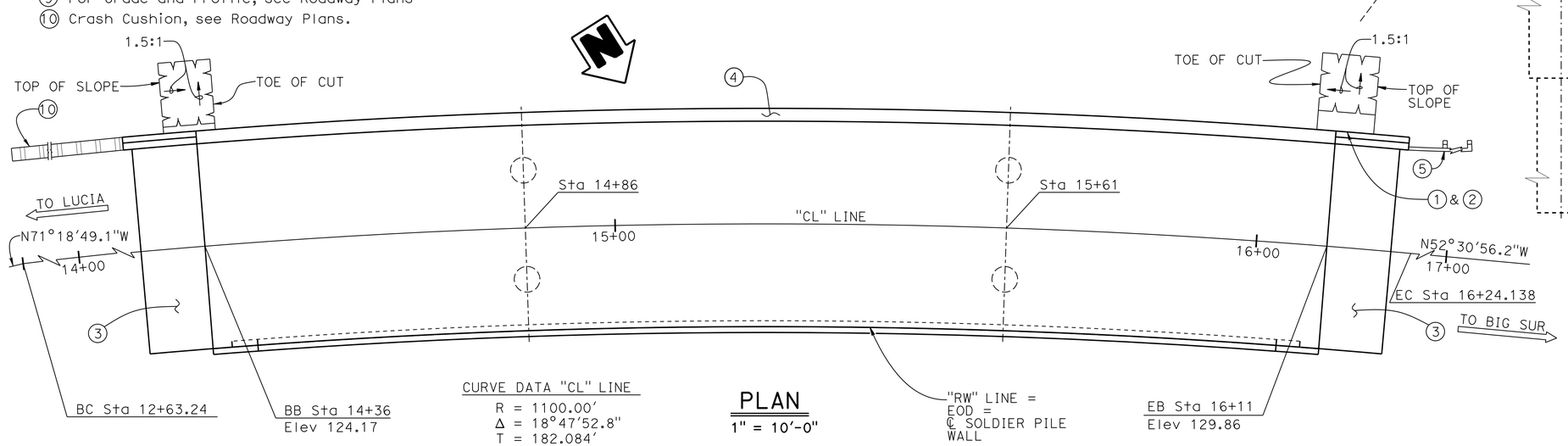

CURVE DATA "CL" LINE

R = 1100.00'
Δ = 18°47'52.8"
T = 182.084'
L = 360.896'

PLAN

1" = 10'-0"

LEGEND:

New Construction
Direction of Traffic

GARY BLAKESLEY DESIGN ENGINEER	DESIGN	BY H. PEREZ	CHECKED M. CULLEN	LOAD & RESISTANCE FACTOR DESIGN	LIVE LOADING: HL93 W/"LOW-BOY" and PERMIT DESIGN VEHICLE
	DETAILS	BY K. CHONKRIA	CHECKED M. CULLEN	LAYOUT: BY K. CHONKRIA	CHECKED H. PEREZ
	QUANTITIES	BY R. WASHINGTON	CHECKED S. MORIMOTO	SPECIFICATIONS: BY M. KOPSA	PLANS AND SPECS COMPARED M. KOPSA / H. PEREZ

ORIGINAL SCALE IN INCHES FOR REDUCED PLANS 0 1 2 3

STATE OF CALIFORNIA
DEPARTMENT OF TRANSPORTATION

DIVISION OF ENGINEERING SERVICES
STRUCTURE DESIGN
DESIGN BRANCH 6

BRIDGE NO. 44-0296
POST MILE 28.28

COW CLIFFS VIADUCT
GENERAL PLAN

UNIT: 3591
PROJECT NUMBER & PHASE: 0514000072-1 CONTRACT NO.: 05-1F8904

DISREGARD PRINTS BEARING EARLIER REVISION DATES

REVISION DATES 6-26-14 11-4-14 9-18-14

SHEET 1 OF 35

USERNAME => s115755 DATE PLOTTED => 03-DEC-2014 TIME PLOTTED => 15:16

FILE => 44-0296-a-gp01.dgn

STRUCTURES DESIGN GENERAL PLAN SHEET (ENGLISH) (REV.09-01-10)

DIST	COUNTY	ROUTE	POST MILES TOTAL PROJECT	SHEET No.	TOTAL SHEETS
05	Mon	1	28.0/28.4	71	104

REGISTERED CIVIL ENGINEER 11-4-14 DATE

12-1-14
PLANS APPROVAL DATE

REGISTERED PROFESSIONAL ENGINEER HERNAN PEREZ No. C 60993 Exp. 12-31-16 CIVIL STATE OF CALIFORNIA

The State of California or its officers or agents shall not be responsible for the accuracy or completeness of scanned copies of this plan sheet.

INDEX TO PLANS

SHEET NO.	SHEET TITLE
1	GENERAL PLAN
2	INDEX TO PLANS
3	CONSTRUCTION STAGING
4	DECK CONTOURS
5	FOUNDATION DATA
6	FOUNDATION PLAN
7	ABUTMENT 1 LAYOUT
8	ABUTMENT 4 LAYOUT
9	ABUTMENT DETAILS NO. 1
10	ABUTMENT DETAILS NO. 2
11	ABUTMENT DETAILS NO. 3
12	SOLDIER PILE WALL LAYOUT
13	SOLDIER PILE WALL DATA TABLE
14	SOLDIER PILE WALL DETAILS NO. 1
15	SOLDIER PILE WALL DETAILS NO. 2
16	BENT LAYOUT
17	BENT DETAILS NO. 1
18	BENT DETAILS NO. 2
19	TYPICAL SECTION
20	GIRDER LAYOUT
21	PRECAST PRESTRESSED I GIRDER
22	GIRDER REINFORCEMENT
23	STRUCTURE APPROACH TYPE EQ MOD (10)
24	STRUCTURE APPROACH DRAINAGE DETAILS
25	CALIFORNIA ST-70 BRIDGE RAIL DETAILS NO. 1
26	CALIFORNIA ST-70 BRIDGE RAIL DETAILS NO. 2
27	CALIFORNIA ST-70 BRIDGE RAIL DETAILS NO. 3
28	CALIFORNIA ST-70 BRIDGE RAIL DETAILS NO. 4
29	STRUCTURE EXCAVATION AND BACKFILL No. 1
30	STRUCTURE EXCAVATION AND BACKFILL No. 2
31	LOG OF TEST BORINGS 1 OF 5
32	LOG OF TEST BORINGS 2 OF 5
33	LOG OF TEST BORINGS 3 OF 5
34	LOG OF TEST BORINGS 4 OF 5
35	LOG OF TEST BORINGS 5 OF 5

STANDARD PLANS DATED 2010

PLAN NO.	PLAN TITLE
A10A	ACRONYMS AND ABBREVIATIONS (SHEET 1 OF 2)
RSP A10B	ACRONYMS AND ABBREVIATIONS (SHEET 2 OF 2)
A10C	LINES AND SYMBOLS (SHEET 1 OF 3)
A10D	LINES AND SYMBOLS (SHEET 2 OF 3)
A10E	LINES AND SYMBOLS (SHEET 3 OF 3)
A10F	LEGEND - SOIL (SHEET 1 OF 2)
A10G	LEGEND - SOIL (SHEET 2 OF 2)
A10H	LEGEND - ROCK
A62C	LIMITS OF PAYMENT FOR EXCAVATION AND BACKFILL BRIDGE
B0-1	BRIDGE DETAILS
B0-5	BRIDGE DETAILS
B0-13	BRIDGE DETAILS
B2-3	16" AND 24" CAST-IN-DRILLED-HOLE CONCRETE PILE
B6-21	JOINT SEALS (MAXIMUM MOVEMENT RATING = 2")
T3A	TEMPORARY RAILING (TYPE K)
T3B	TEMPORARY RAILING (TYPE K)

STANDARD PLAN NO.

DETAIL NO.

GENERAL NOTES

LOAD AND RESISTANCE FACTOR DESIGN

DESIGN : AASHTO LRFD BRIDGE DESIGN SPECIFICATIONS, 6th Edition and the Caltrans Amendments, dated January 2014.

SEISMIC DESIGN : CALTRANS SEISMIC DESIGN CRITERIA (SDC) Version 1.7 dated April 2013.

DEAD LOAD : Includes 35 psf for future wearing surface.

LIVE LOADING : HL93 and permit design load.

SEISMIC LOADING : See Site Specific ARS Curve

CONCRETE : fy = 60 ksi
f'c = 3.6 ksi (unless indicated otherwise)
n = 8
See Prestressing Notes

STRUCTURAL STEEL : fy = ASTM A709, Grade 50

PERMANENT STEEL CASINGS : ASTM A252, Grade 3

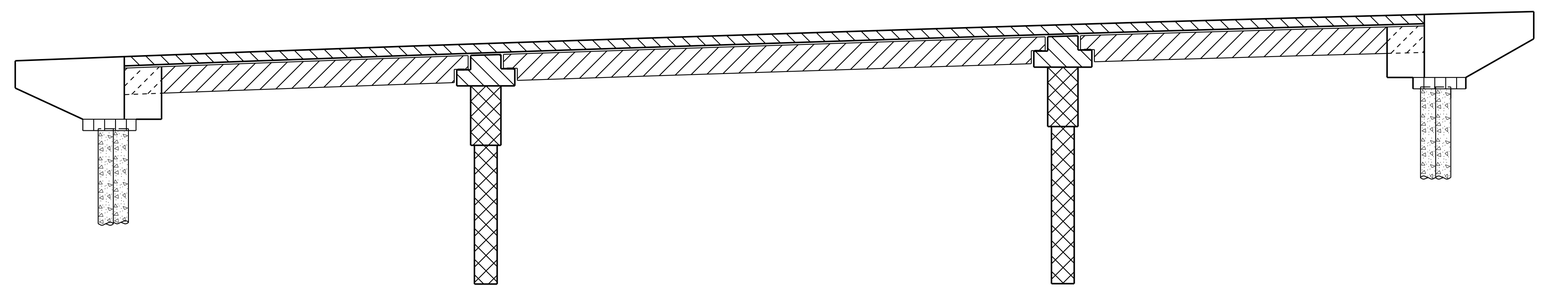

CONCRETE STRENGTH AND TYPE LIMITS

No Scale

- CIDH Concrete piling
- CIDH Concrete piling (4000 psi at 28 days)
- Structural Concrete, Bridge Footing
- Structural Concrete, Bridge (Including Closure Walls)
- PC/PS "I" Girder, see "PRECAST PRESTRESSED I GIRDER" sheet
- Structural Concrete, Bridge (Including end & intermediate diaphragms and deck closure) (5,000 psi at 28 days)

Note: For Structural Concrete, Cap Beam,see "SOLDIER PILE WALL DETAILS NO. 1" sheet

	BY	CHECKED
DESIGN	H. PEREZ	M. CULLEN
DETAILS	K. CHONKRIA	M. CULLEN
QUANTITIES	R. WASHINGTON	S. MORIMOTO

STATE OF CALIFORNIA
DEPARTMENT OF TRANSPORTATION

DIVISION OF ENGINEERING SERVICES
STRUCTURE DESIGN
DESIGN BRANCH 6

BRIDGE NO. 44-0296
POST MILE 28.28

COW CLIFFS VIADUCT
INDEX TO PLANS

STRUCTURES DESIGN DETAIL SHEET (ENGLISH) (REV. 09-01-10)

ORIGINAL SCALE IN INCHES FOR REDUCED PLANS 0 1 2 3

UNIT: 3591
PROJECT NUMBER & PHASE: 0514000072-1
CONTRACT NO.: 05-1F8904

DISREGARD PRINTS BEARING EARLIER REVISION DATES

REVISION DATES: 7-16-14 8-28-14 9-16-14

SHEET 2 OF 35

NOTES:

1. Temporary Railing (Type K) during Stage 1 Construction, see Roadway Plans
2. Temporary Railing (Type K) during Stage 2 Construction, see Roadway Plans.
3. Closure pour. For details see "TYPICAL SECTION" sheet.
4. For grade and profile, see Roadway Plans.

DIST	COUNTY	ROUTE	POST MILES TOTAL PROJECT	SHEET No.	TOTAL SHEETS
05	Mon	1	28.0/28.4	72	104

REGISTERED CIVIL ENGINEER 11-4-14 DATE

12-1-14
PLANS APPROVAL DATE

REGISTERED PROFESSIONAL ENGINEER HERNAN PEREZ No. C 60993 Exp. 12-31-16 CIVIL STATE OF CALIFORNIA

The State of California or its officers or agents shall not be responsible for the accuracy or completeness of scanned copies of this plan sheet.

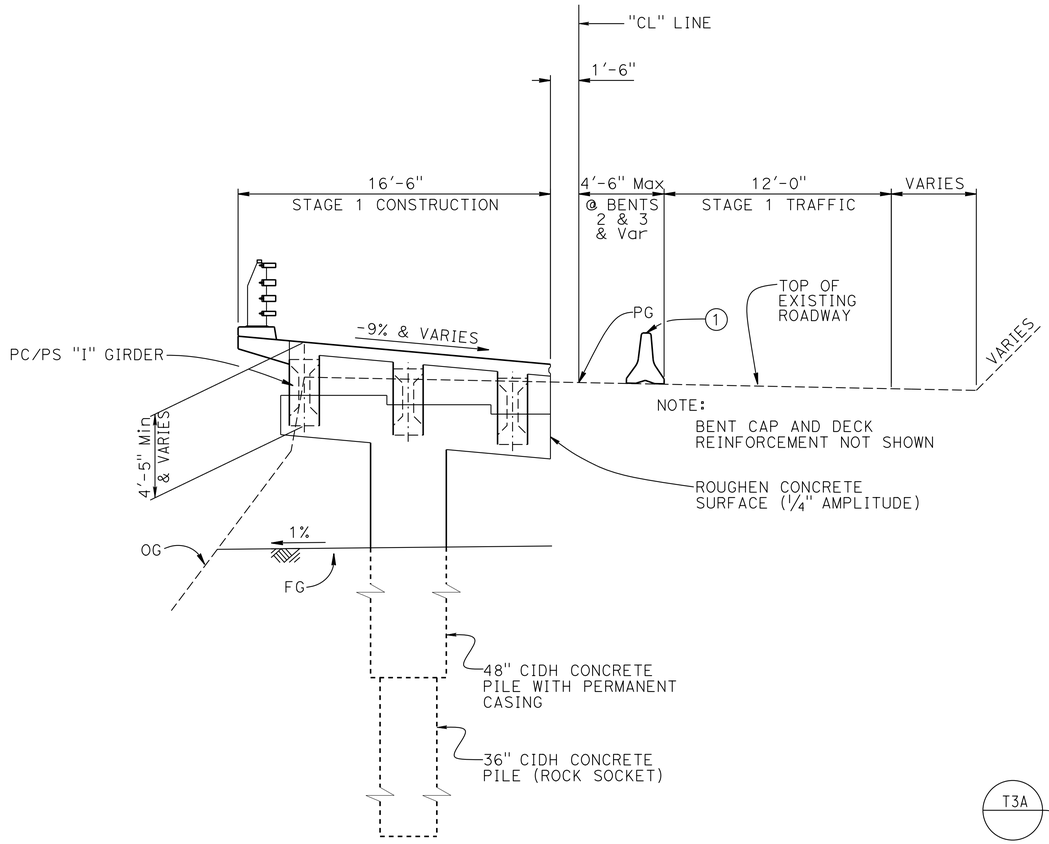

TYPICAL SECTION

1/4"=1'-0"

STAGE 1

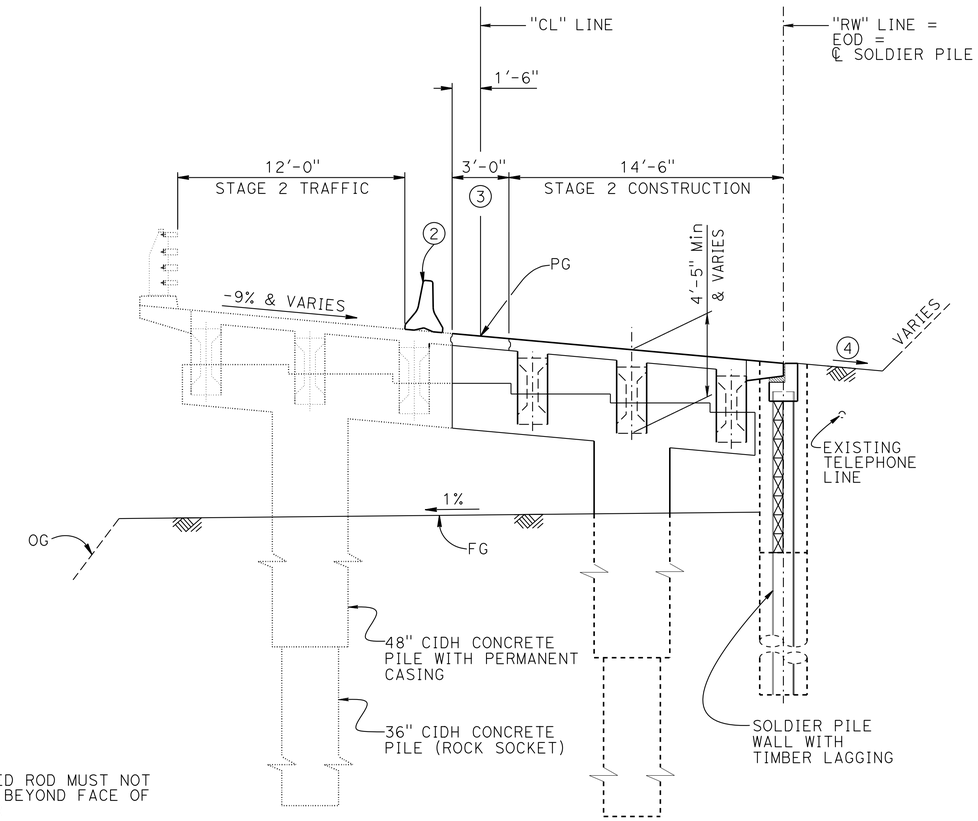

TYPICAL SECTION

1/4"=1'-0"

STAGE 2

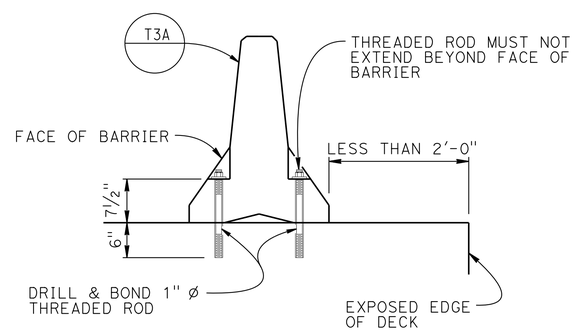

TYPE K RAILING ATTACHMENT DETAILS

1"=1'-0"

	BY	CHECKED
DESIGN	H. PEREZ	M. CULLEN
DETAILS	K. CHONKRIA	M. CULLEN
QUANTITIES	R. WASHINGTON	S. MORIMOTO

STATE OF CALIFORNIA
DEPARTMENT OF TRANSPORTATION

DIVISION OF ENGINEERING SERVICES
STRUCTURE DESIGN
DESIGN BRANCH 6

BRIDGE NO. 44-0296
POST MILE 28.28

COW CLIFFS VIADUCT
CONSTRUCTION STAGING

STRUCTURES DESIGN DETAIL SHEET (ENGLISH) (REV. 09-01-10)

ORIGINAL SCALE IN INCHES FOR REDUCED PLANS 0 1 2 3

UNIT: 3591
PROJECT NUMBER & PHASE: 0514000072-1
CONTRACT NO.: 05-1F8904

DISREGARD PRINTS BEARING EARLIER REVISION DATES

REVISION DATES: 6-13-14 10-3-14 9-30-14

SHEET 3 OF 35

FILE => 44-0296-c-cstage.dgn

USERNAME => s115755 DATE PLOTTED => 03-DEC-2014 TIME PLOTTED => 15:16

DIST	COUNTY	ROUTE	POST MILES TOTAL PROJECT	SHEET No.	TOTAL SHEETS
05	Mon	1	28.0/28.4	73	104

REGISTERED CIVIL ENGINEER 11-4-14 DATE

12-1-14
PLANS APPROVAL DATE

REGISTERED PROFESSIONAL ENGINEER HERNAN PEREZ No. C 60993 Exp. 12-31-16 CIVIL STATE OF CALIFORNIA

The State of California or its officers or agents shall not be responsible for the accuracy or completeness of scanned copies of this plan sheet.

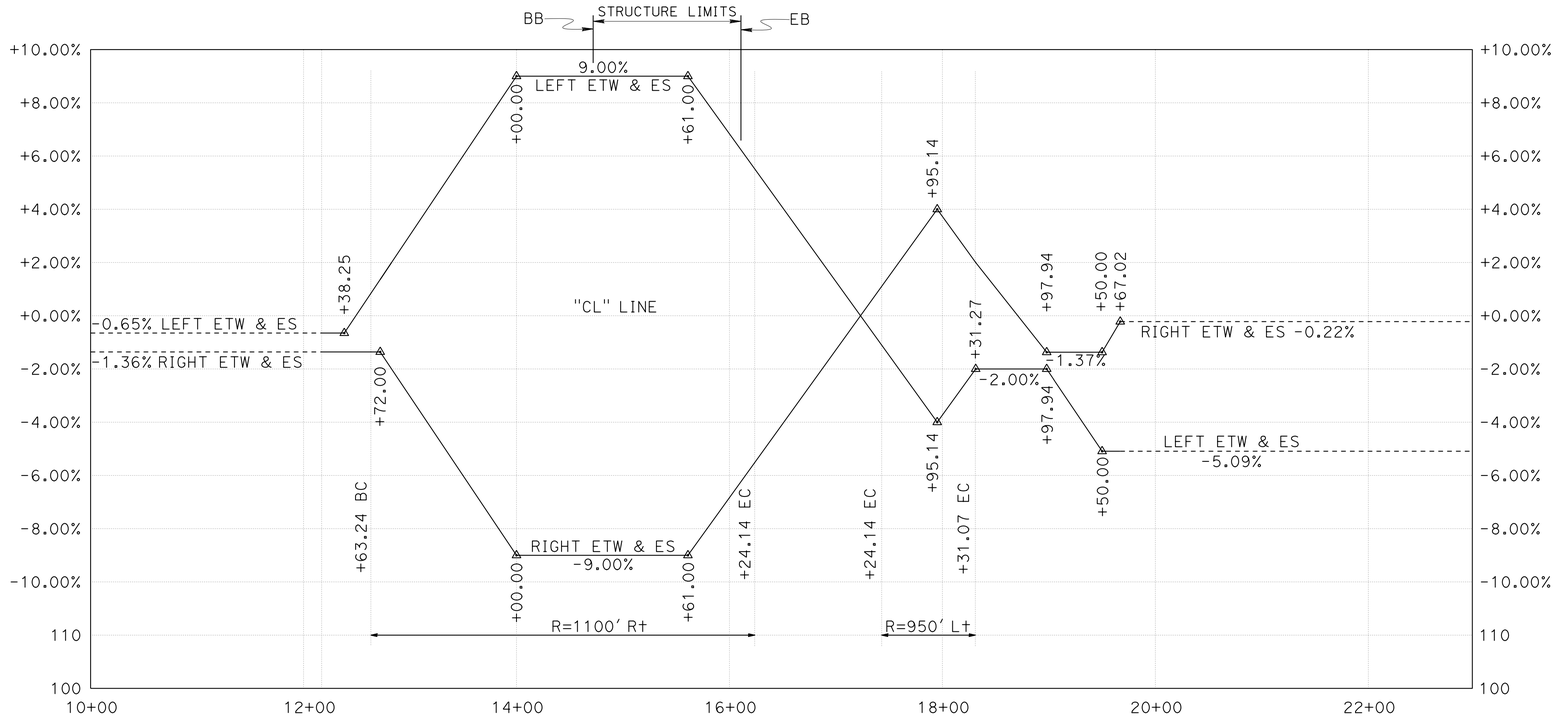

SUPERELEVATION DIAGRAM

NO SCALE

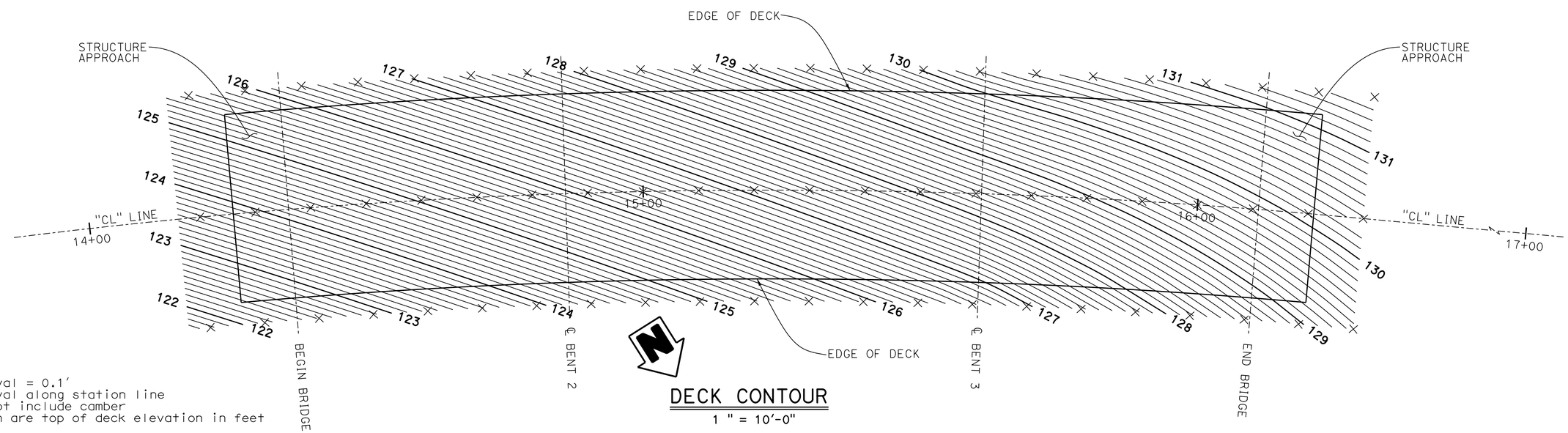

DECK CONTOUR

1 " = 10'-0"

NOTES:

1. Contour Interval = 0.1'
2. X - 10' interval along station line
3. Contours do not include camber
4. Contours shown are top of deck elevation in feet

	BY	CHECKED
DESIGN	H. PEREZ	M. CULLEN
DETAILS	K. CHONKRIA	M. CULLEN
QUANTITIES	R. WASHINGTON	S. MORIMOTO

STATE OF CALIFORNIA
DEPARTMENT OF TRANSPORTATION

DIVISION OF ENGINEERING SERVICES
STRUCTURE DESIGN
DESIGN BRANCH 6

BRIDGE NO. 44-0296
POST MILE 28.28

COW CLIFFS VIADUCT
DECK CONTOURS

STRUCTURES DESIGN DETAIL SHEET (ENGLISH) (REV. 09-01-10)

ORIGINAL SCALE IN INCHES FOR REDUCED PLANS 0 1 2 3

UNIT: 3591
PROJECT NUMBER & PHASE: 0514000072-1
CONTRACT NO.: 05-1F8904

DISREGARD PRINTS BEARING EARLIER REVISION DATES

REVISION DATES: 6-10-14 8-25-14

SHEET 4 OF 35

FILE => 44-0296-d-dc01.dgn

USERNAME => s115755 DATE PLOTTED => 03-DEC-2014 TIME PLOTTED => 15:16

DIST	COUNTY	ROUTE	POST MILES TOTAL PROJECT	SHEET No.	TOTAL SHEETS
05	Mon	1	28.0/28.4	74	104

REGISTERED CIVIL ENGINEER 11-4-14 DATE

12-1-14
PLANS APPROVAL DATE

REGISTERED PROFESSIONAL ENGINEER HERNAN PEREZ No. C 60993 Exp. 12-31-16 CIVIL STATE OF CALIFORNIA

The State of California or its officers or agents shall not be responsible for the accuracy or completeness of scanned copies of this plan sheet.

PILE DATA TABLE

Support Location	Pile Type	Nominal Resistance (kips)		Design Tip Elevation (ft)	Specified Tip Elevation (ft)	Steel Casing Specified Tip Elevation (ft)	Required Nominal Driving Resistance (kips)
		Compression	Tension				
Abut 1	24" CIDH	370	0	94 (a-1), 94 (c)	94.00	N/A	N/A
Bent 2 Lt	48" CIDH w/36" Rock Socket	1910	0	61 (a-I) 80 (a-II) 61 (c) 72 (d)	61.00	104.00	N/A
Bent 2 Rt	48" CIDH w/36" Rock Socket	1910	0	62 (a-I) 81 (a-II) 62 (c) 72 (d)	62.00	105.00	N/A
Bent 3 Lt	48" CIDH w/36" Rock Socket	1910	0	64 (a-I) 83 (a-II) 64 (c) 73 (d)	64.00	106.44	N/A
Bent 3 Rt	48" CIDH w/36" Rock Socket	1910	0	65 (a-I) 84 (a-II) 65 (c) 73 (d)	65.00	107.44	N/A
Abut 4	24" CIDH	370	0	92 (a-1), 92 (c)	92.00	N/A	N/A

NOTES:

1. Design tip elevations for Abutments are controlled by: (a-I) Compression (Strength Limit) and (c) Settlement.
2. Design tip elevations for Bents are controlled by: (a-I) Compression (Strength Limit), (a-II) Compression (Extreme Event), (c) Settlement, and (d) Lateral.
3. The specified tip elevation must not be raised.

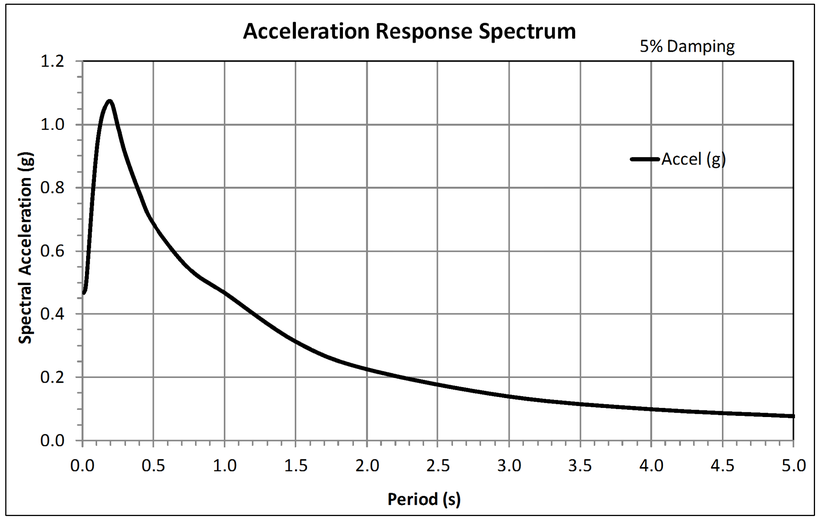

ACCELERATION RESPONSE SPECTRUM

QUANTITIES

STRUCTURE EXCAVATION (BRIDGE)	1,591	CY
STRUCTURE EXCAVATION (SOLDIER PILE WALL)	57	CY
STRUCTURE BACKFILL (BRIDGE)	95	CY
STRUCTURE BACKFILL (SOLDIER PILE WALL)	36	CY
CONCRETE BACKFILL (SOLDIER PILE WALL)	56	CY
LEAN CONCRETE BACKFILL	26	CY
STEEL SOLDIER PILE (HP 14X89)	456	LF
30" DRILLED HOLE	460	LF
48" PERMANENT STEEL CASING	64	LF
24" CAST-IN-DRILLED-HOLE CONCRETE PILING	340	LF
48" CAST-IN-DRILLED-HOLE CONCRETE PILING	64	LF
36" CAST-IN-DRILLED-HOLE CONCRETE PILING (ROCK SOCKET)	172	LF
STRUCTURAL CONCRETE, BRIDGE FOOTING	38	CY
STRUCTURAL CONCRETE, BRIDGE	320	CY
STRUCTURAL CONCRETE, CAP BEAM	16	CY
STRUCTURAL CONCRETE, APPROACH SLAB (TYPE EQ MODIFIED)	19	CY
FURNISH PRECAST PRESTRESSED CONCRETE GIRDER (40'-50')	12	EA
FURNISH PRECAST PRESTRESSED CONCRETE GIRDER (60'-70')	2	EA
FURNISH PRECAST PRESTRESSED CONCRETE GIRDER (70'-80')	4	EA
ERECT PRECAST PRESTRESSED CONCRETE GIRDER	18	EA
JOINT SEAL (MR 2")	68	LF
JOINT SEAL (TYPE AL)	175	LF
BAR REINFORCING STEEL (BRIDGE)	84,418	LB
BAR REINFORCING STEEL (RETAINING WALL)	1,938	LB
BAR REINFORCING STEEL (EPOXY COATED) (BRIDGE)	77,454	LB
HEADED BAR REINFORCEMENT	24	EA
TIMBER LAGGING	6	MFBM
CLEAN AND PAINT STEEL SOLDIER PILING	LUMP	SUM
CLEAN AND PAINT PERMANENT STEEL CASINGS	LUMP	SUM
CALIFORNIA ST-70 BRIDGE RAIL (MODIFIED)	195	LF

	BY	CHECKED
DESIGN	H. PEREZ	M. CULLEN
DETAILS	K. CHONKRIA	M. CULLEN
QUANTITIES	R. WASHINGTON	S. MORIMOTO

STATE OF CALIFORNIA
DEPARTMENT OF TRANSPORTATION

DIVISION OF ENGINEERING SERVICES
STRUCTURE DESIGN
DESIGN BRANCH 6

BRIDGE NO. 44-0296
POST MILE 28.28

COW CLIFFS VIADUCT
FOUNDATION DATA

STRUCTURES DESIGN DETAIL SHEET (ENGLISH) (REV. 09-01-10)

ORIGINAL SCALE IN INCHES FOR REDUCED PLANS 0 1 2 3

UNIT: 3591
PROJECT NUMBER & PHASE: 0514000072-1
CONTRACT NO.: 05-1F8904

DISREGARD PRINTS BEARING EARLIER REVISION DATES

REVISION DATES: 6-6-14 11-03-14 8-28-14 9-18-14

SHEET 5 OF 35

FILE => 44-0296-e-afdata01.dgn

USERNAME => s115755 DATE PLOTTED => 03-DEC-2014 TIME PLOTTED => 15:16

DIST	COUNTY	ROUTE	POST MILES TOTAL PROJECT	SHEET No.	TOTAL SHEETS
05	Mon	1	28.0/28.4	75	104

REGISTERED CIVIL ENGINEER 11-4-14 DATE

12-1-14
PLANS APPROVAL DATE

REGISTERED PROFESSIONAL ENGINEER HERNAN PEREZ No. C 60993 Exp. 12-31-16 CIVIL STATE OF CALIFORNIA

The State of California or its officers or agents shall not be responsible for the accuracy or completeness of electronic copies of this plan sheet.

CURVE DATA

No. ⊛	R	Δ	T	L
1	1100.00	18°47′53″	182.08	360.90
2	950.00	05°00′07″	41.49	82.93
3	1084.00	10°22′21″	98.39	196.24

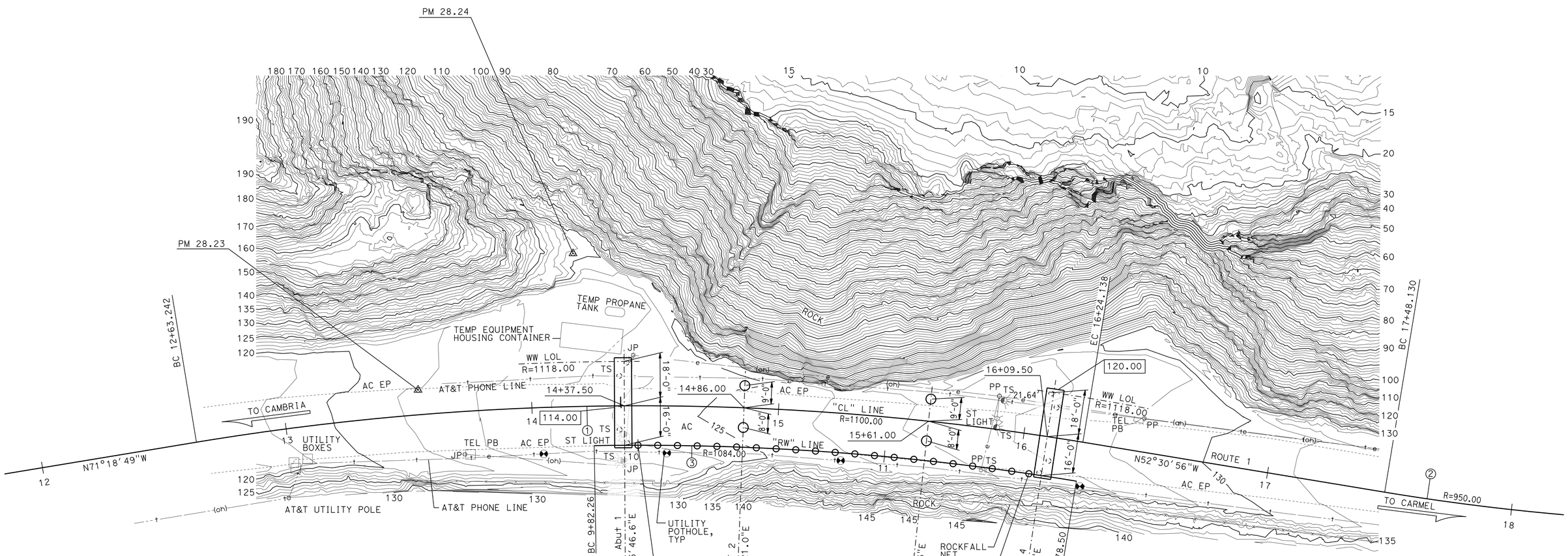

SURVEY CONTROL

PM-28.23
Fnd 1" IP w/ Caltrans control PP
10.05′ Lt. "CL" LINE Rte 1
Sta. 13+54.58
N 1,919,148.84
E 5,792,889.17
Elev. = 121.17

PM-28.24
Fnd 1" IP w/ Caltrans control PP
62.03′ Lt. "CL" LINE Rte 1
Sta. 14+18.12
N 1,919,129.61
E 5,792,807.72
Elev. = 125.59

BEGIN RW, "RW" LINE
Sta 10+00.00
16′-0" Rt "CL" LINE
Sta 14+43.00

END RW, "RW" LINE
Sta 11+59.00
16′-0" Rt "CL" LINE
Sta 16+04.35

NOTES:
1. ⊛ - POT HOLES PER UTILITY PLAN
- INDICATES BOTTOM OF FOOTING ELEVATION

PRELIMINARY INVESTIGATION SECTION

SCALE 1"=20′	VERT.DATUM NGVD88	PHOTOGRAMMETRY AS OF: X			
	HORZ.DATUM NAD83	SURVEYED	BY DISTRICT	CHECKED	BY J. BORDEN 5/2014
	ALIGNMENT TIES Dist TRAVERSE SHEET	DRAFTED	BY L. YOUNG 5/2014	CHECKED	BY S. SOU 5/2014

	BY	CHECKED
DESIGN	H. PEREZ	M. CULLEN
DETAILS	D. PATO	M. CULLEN
QUANTITIES	R. WASHINGTON	S. MORIMOTO

STATE OF CALIFORNIA
DEPARTMENT OF TRANSPORTATION

DIVISION OF ENGINEERING SERVICES
STRUCTURE DESIGN
DESIGN BRANCH 6

BRIDGE NO. 44-TBD
POST MILE 28.28

COW CLIFFS VIADUCT
FOUNDATION PLAN

STRUCTURES FOUNDATION PLAN SHEET (ENGLISH) (REV. 09-01-10)

ORIGINAL SCALE IN INCHES FOR REDUCED PLANS 0 1 2 3

UNIT: 3646
PROJECT NUMBER & PHASE: 0514000072-1
CONTRACT NO.: 05-1F8904

DISREGARD PRINTS BEARING EARLIER REVISION DATES

REVISION DATES 5-22-14 8-28-14 10-6-14

SHEET 6 OF 35

FILE => 44-TBD-e-fpl01.dgn

USERNAME => s115755 DATE PLOTTED => 03-DEC-2014 TIME PLOTTED => 15:16

DIST	COUNTY	ROUTE	POST MILES TOTAL PROJECT	SHEET No.	TOTAL SHEETS
05	Mon	1	28.0/28.4	76	104

REGISTERED CIVIL ENGINEER 11-4-14 DATE

12-1-14
PLANS APPROVAL DATE

REGISTERED PROFESSIONAL ENGINEER HERNAN PEREZ No. C 60993 Exp. 12-31-16 CIVIL STATE OF CALIFORNIA

The State of California or its officers or agents shall not be responsible for the accuracy or completeness of scanned copies of this plan sheet.

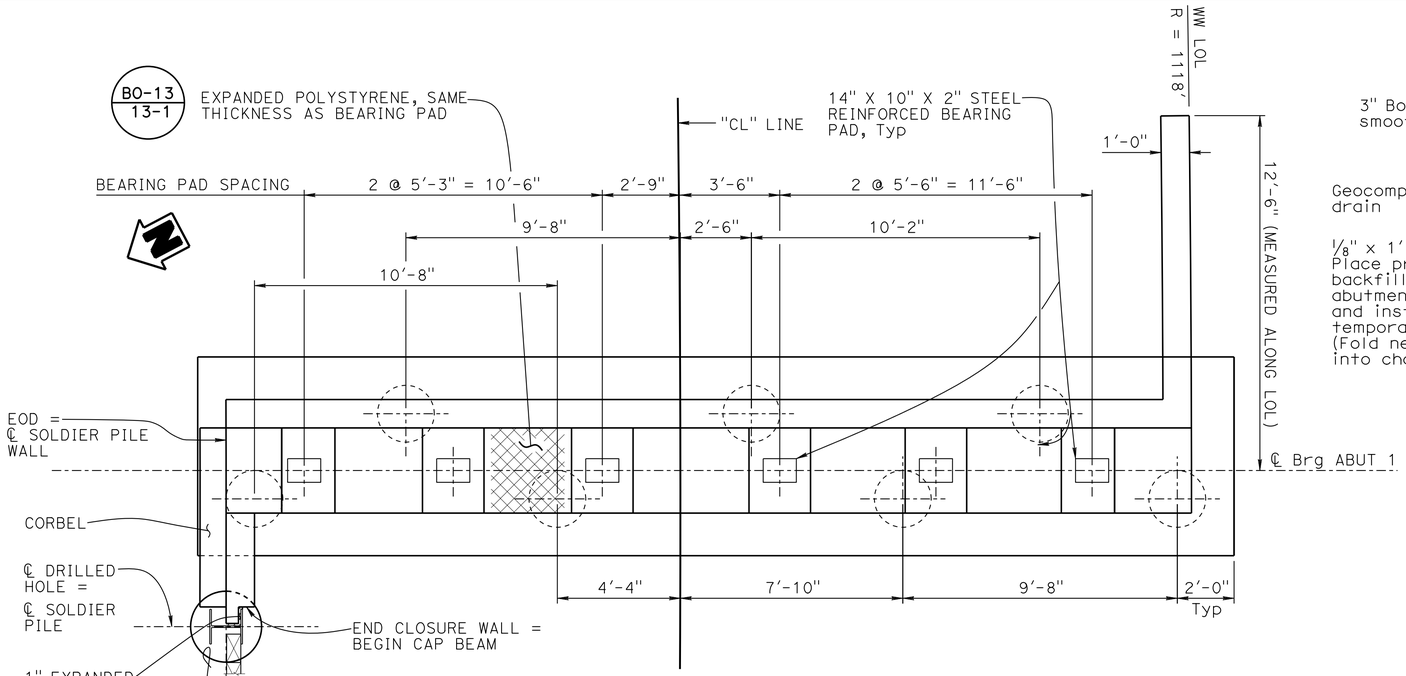

PLAN

3/8" = 1'-0"

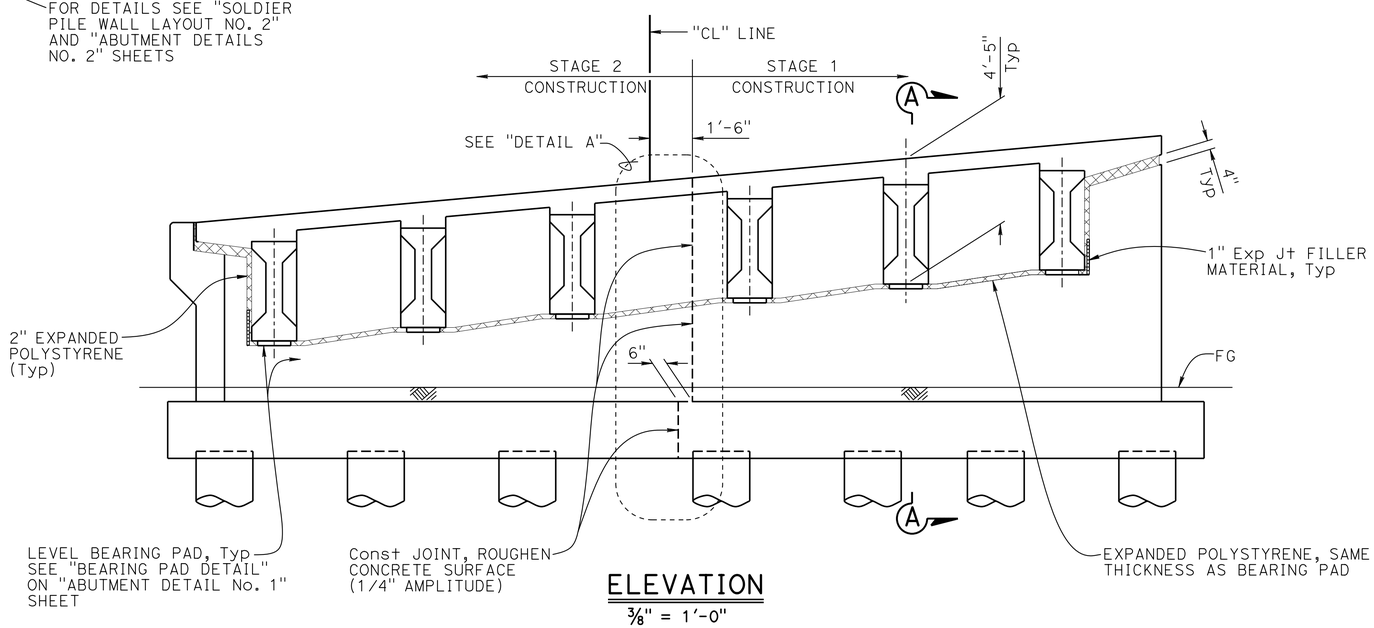

ELEVATION

3/8" = 1'-0"

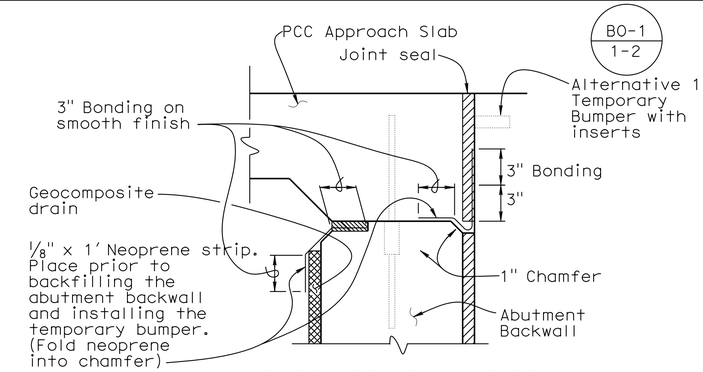

JOINT PROTECTION DETAIL

No Scale

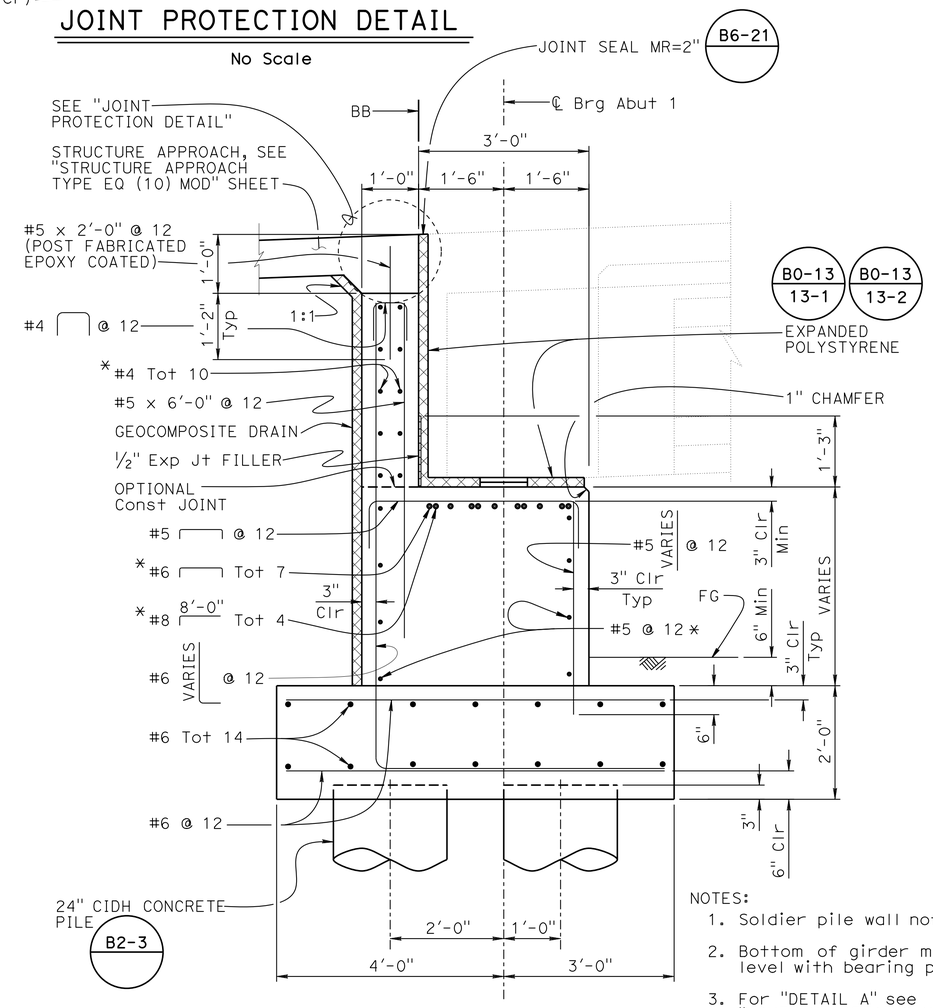

NOTES:

1. Soldier pile wall not shown.
2. Bottom of girder must be level with bearing pad.
3. For "DETAIL A" see "ABUTMENT DETAILS No. 2" sheet.

SECTION A-A

3/4" = 1'-0"

* Place parallel to top of deck

DESIGN	BY H. PEREZ	CHECKED M. CULLEN	
DETAILS	BY K. CHONKRIA	CHECKED M. CULLEN	
QUANTITIES	BY G. REYES-GUTIERREZ	CHECKED K. CHONKRIA	

STATE OF CALIFORNIA
DEPARTMENT OF TRANSPORTATION

DIVISION OF ENGINEERING SERVICES
STRUCTURE DESIGN
DESIGN BRANCH 6

BRIDGE NO. 44-0296
POST MILE 28.28

COW CLIFFS VIADUCT
ABUTMENT 1 LAYOUT

STRUCTURES DESIGN DETAIL SHEET (ENGLISH) (REV. 09-01-10)

ORIGINAL SCALE IN INCHES FOR REDUCED PLANS 0 1 2 3

UNIT: 3591
PROJECT NUMBER & PHASE: 0514000072-1
CONTRACT NO.: 05-1F8904

DISREGARD PRINTS BEARING EARLIER REVISION DATES

REVISION DATES: 6-20-14 10-31-14 8-29-16

SHEET 7 OF 35

FILE => 44-0296-f-a01_lot.dgn

USERNAME => s115755 DATE PLOTTED => 03-DEC-2014 TIME PLOTTED => 15:16

DIST	COUNTY	ROUTE	POST MILES TOTAL PROJECT	SHEET No.	TOTAL SHEETS
05	Mon	1	28.0/28.4	77	104

REGISTERED CIVIL ENGINEER 11-4-14 DATE

12-1-14
PLANS APPROVAL DATE

REGISTERED PROFESSIONAL ENGINEER HERNAN PEREZ No. C 60993 Exp. 12-31-16 CIVIL STATE OF CALIFORNIA

The State of California or its officers or agents shall not be responsible for the accuracy or completeness of scanned copies of this plan sheet.

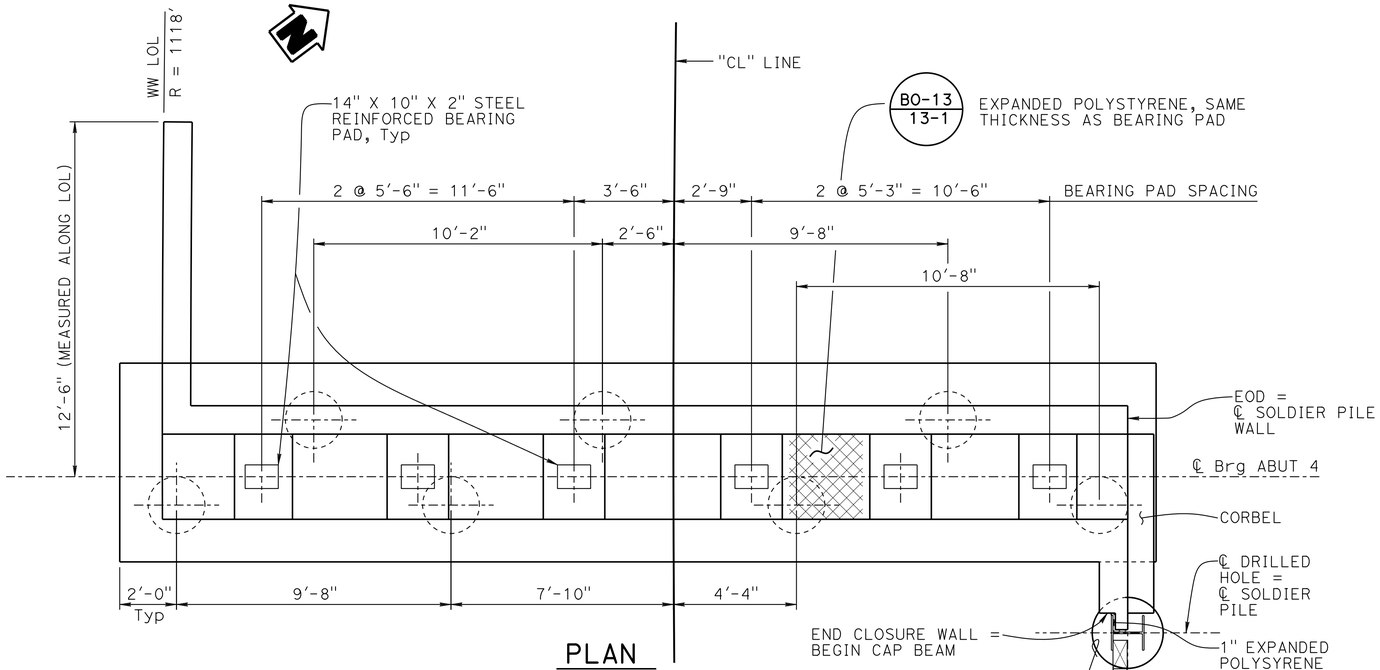

PLAN
3/8" = 1'-0"

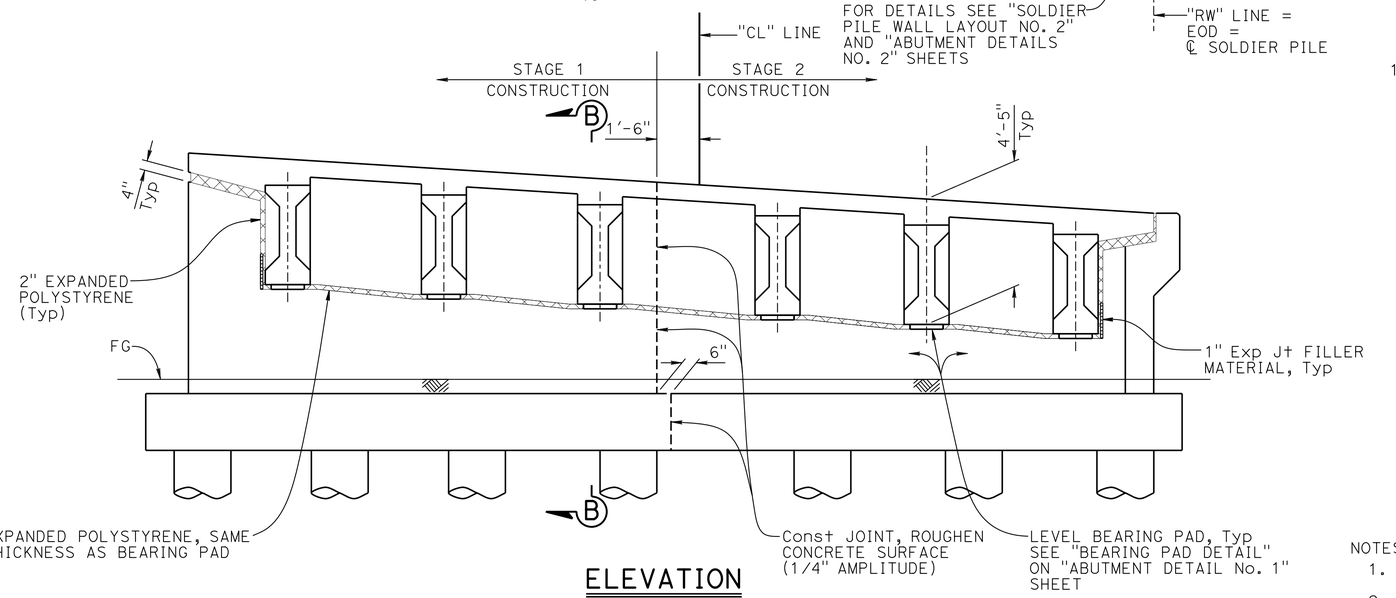

ELEVATION
3/8" = 1'-0"

NOTES:

1. Soldier pile wall not shown.
2. Bottom of girder must be level with bearing pad.
3. For "DETAIL A" see "ABUTMENT DETAILS No. 2" sheet.

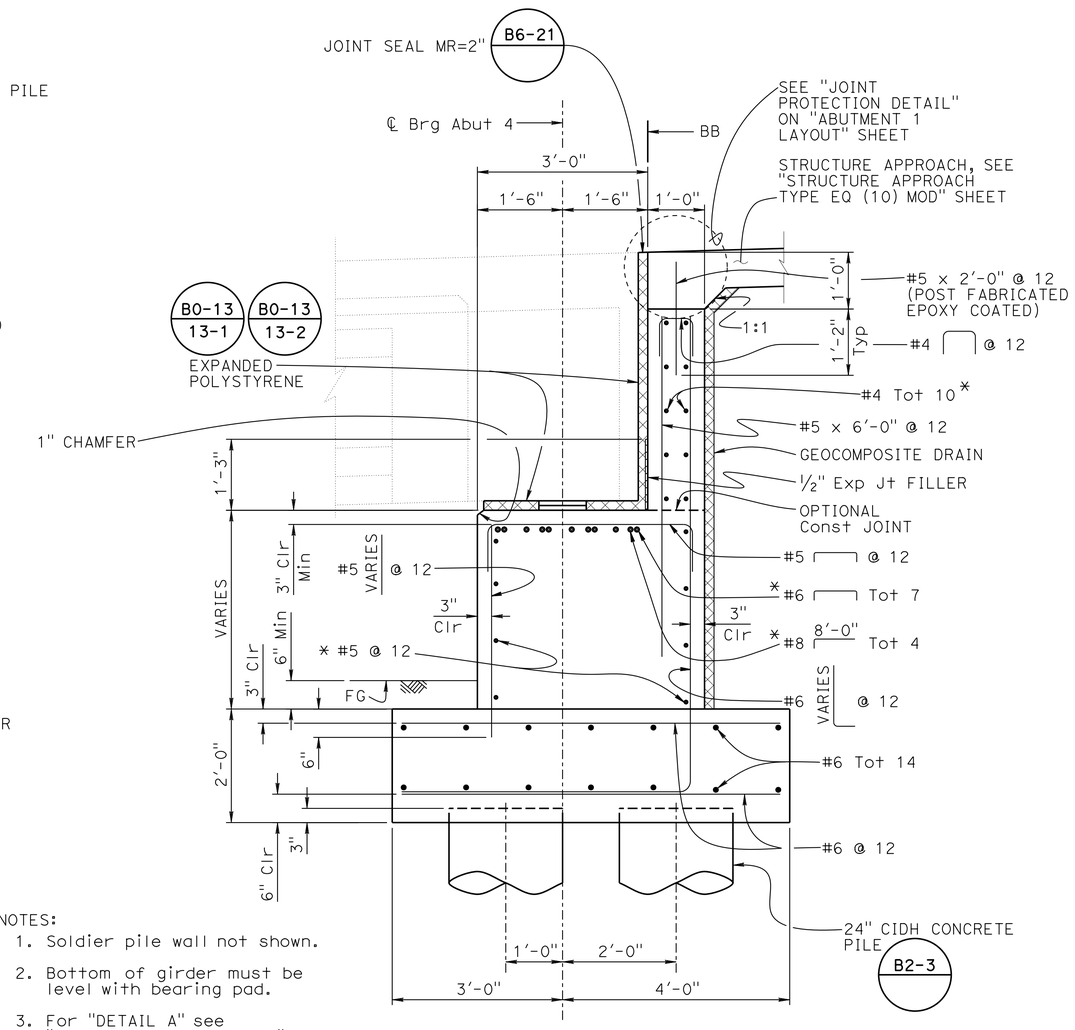

SECTION B-B
3/4" = 1'-0"

* Place parallel to top of deck

	BY	CHECKED
DESIGN	H. PEREZ	M. CULLEN
DETAILS	K. CHONKRIA	M. CULLEN
QUANTITIES	G. REYES-GUTIERREZ	K. CHONKRIA

STATE OF CALIFORNIA
DEPARTMENT OF TRANSPORTATION

DIVISION OF ENGINEERING SERVICES
STRUCTURE DESIGN
DESIGN BRANCH 6

BRIDGE NO. 44-0296
POST MILE 28.28

COW CLIFFS VIADUCT
ABUTMENT 4 LAYOUT

STRUCTURES DESIGN DETAIL SHEET (ENGLISH) (REV. 09-01-10)

ORIGINAL SCALE IN INCHES FOR REDUCED PLANS 0 1 2 3

UNIT: 3591
PROJECT NUMBER & PHASE: 0514000072-1
CONTRACT NO.: 05-1F8904

DISREGARD PRINTS BEARING EARLIER REVISION DATES

REVISION DATES: 6-20-14 10-31-14 8-29-14

SHEET 8 OF 35

FILE => 44-0296-f-a02_lo2.dgn

USERNAME => s115755 DATE PLOTTED => 03-DEC-2014 TIME PLOTTED => 15:16

DIST	COUNTY	ROUTE	POST MILES TOTAL PROJECT	SHEET No.	TOTAL SHEETS
05	Mon	1	28.0/28.4	78	104

REGISTERED CIVIL ENGINEER 11-4-14 DATE

12-1-14
PLANS APPROVAL DATE

REGISTERED PROFESSIONAL ENGINEER HERNAN PEREZ No. C 60993 Exp. 12-31-16 CIVIL STATE OF CALIFORNIA

The State of California or its officers or agents shall not be responsible for the accuracy or completeness of scanned copies of this plan sheet.

NOTE:

1. Abutment 1 shown, Abutment 4 similar except as noted.
2. For girder details not shown, see "PRECAST PRESTRESSED I GIRDER" sheet.

✳ Post-fabricated Epoxy-coated reinforcement.

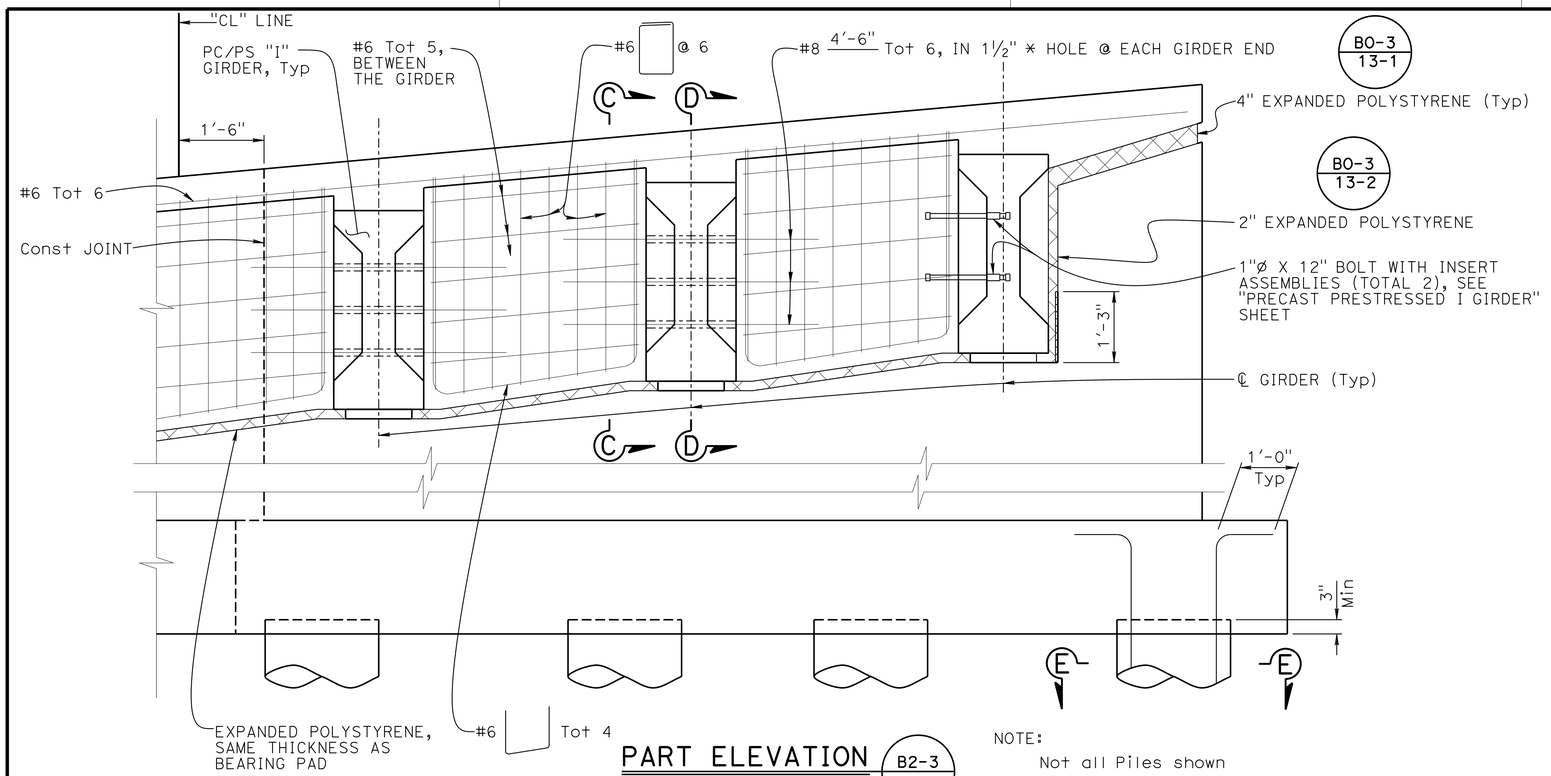

PART ELEVATION (B2-3)

¾" = 1'-0"

NOTE:
Not all Piles shown

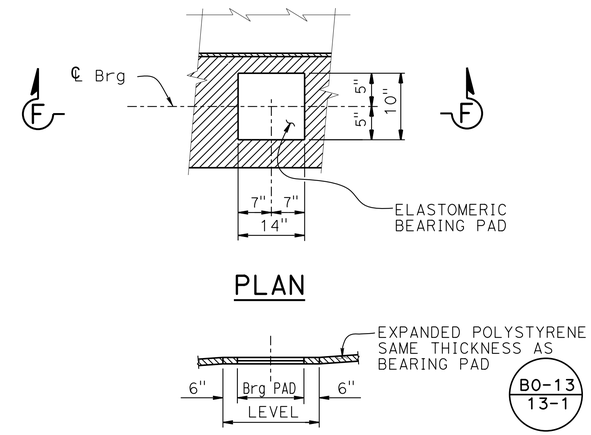

PLAN

SECTION F-F
BEARING PAD DETAIL

No Scale
Details typical at all Abutment bearing pads

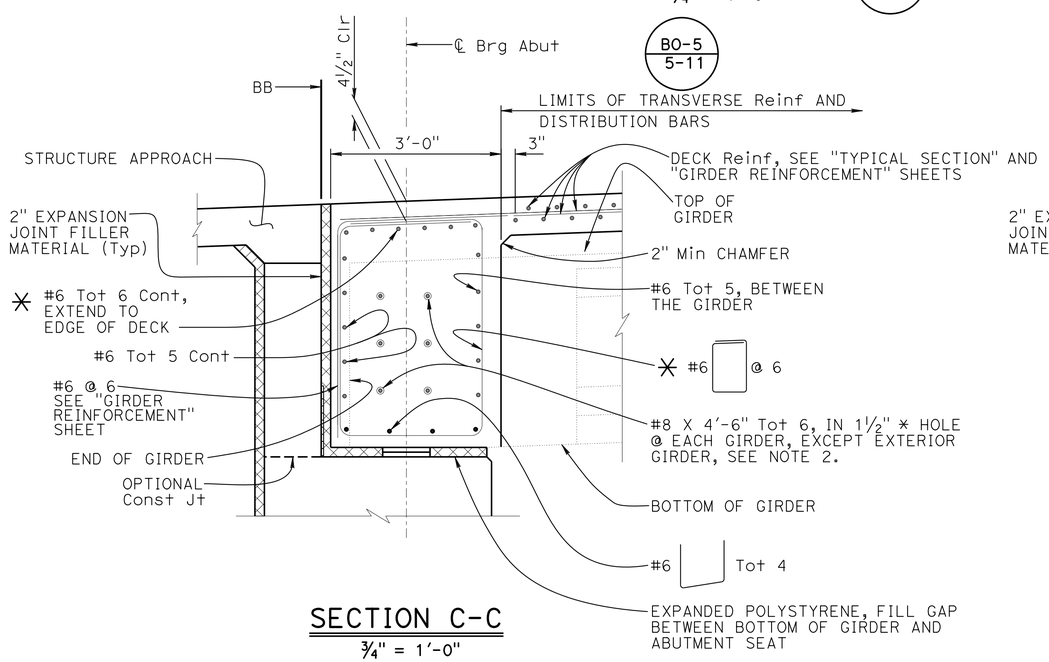

SECTION C-C

¾" = 1'-0"

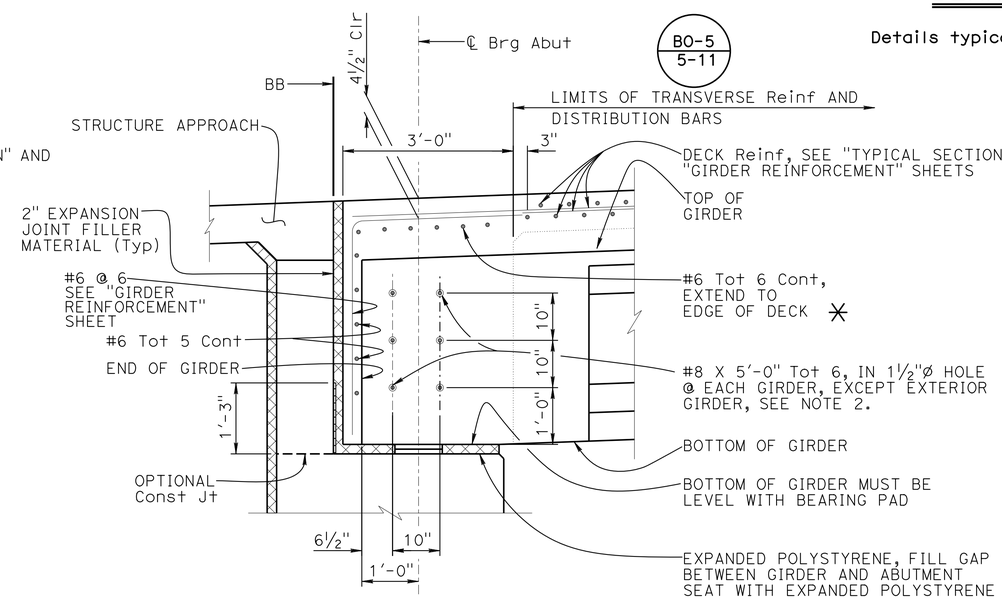

SECTION D-D

¾" = 1'-0"

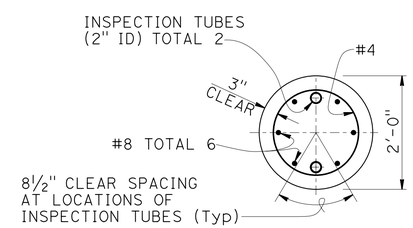

SECTION E-E (B2-3)

¾" = 1'-0"

	BY	CHECKED
DESIGN	H. PEREZ	M. CULLEN
DETAILS	K. CHONKRIA	M. CULLEN
QUANTITIES	G. REYES-GUTIERREZ	K. CHONKRIA

STATE OF CALIFORNIA
DEPARTMENT OF TRANSPORTATION

DIVISION OF ENGINEERING SERVICES
STRUCTURE DESIGN
DESIGN BRANCH 6

BRIDGE NO. 44-0296
POST MILE 28.28

COW CLIFFS VIADUCT
ABUTMENT DETAILS No. 1

STRUCTURES DESIGN DETAIL SHEET (ENGLISH) (REV. 09-01-10)

ORIGINAL SCALE IN INCHES FOR REDUCED PLANS 0 1 2 3

UNIT: 3591
PROJECT NUMBER & PHASE: 0514000072-1
CONTRACT NO.: 05-1F8904

DISREGARD PRINTS BEARING EARLIER REVISION DATES

REVISION DATES: 6-24-14 9-04-14 9-26-14 9-1-14

SHEET 9 OF 35

FILE => 44-0296-f-a03dt01.dgn

USERNAME => s115755 DATE PLOTTED => 03-DEC-2014 TIME PLOTTED => 15:16

DIST	COUNTY	ROUTE	POST MILES TOTAL PROJECT	SHEET No.	TOTAL SHEETS
05	Mon	1	28.0/28.4	79	104

REGISTERED CIVIL ENGINEER 11-4-14 DATE

12-1-14
PLANS APPROVAL DATE

REGISTERED PROFESSIONAL ENGINEER HERNAN PEREZ No. C 60993 Exp. 12-31-16 CIVIL STATE OF CALIFORNIA

The State of California or its officers or agents shall not be responsible for the accuracy or completeness of scanned copies of this plan sheet.

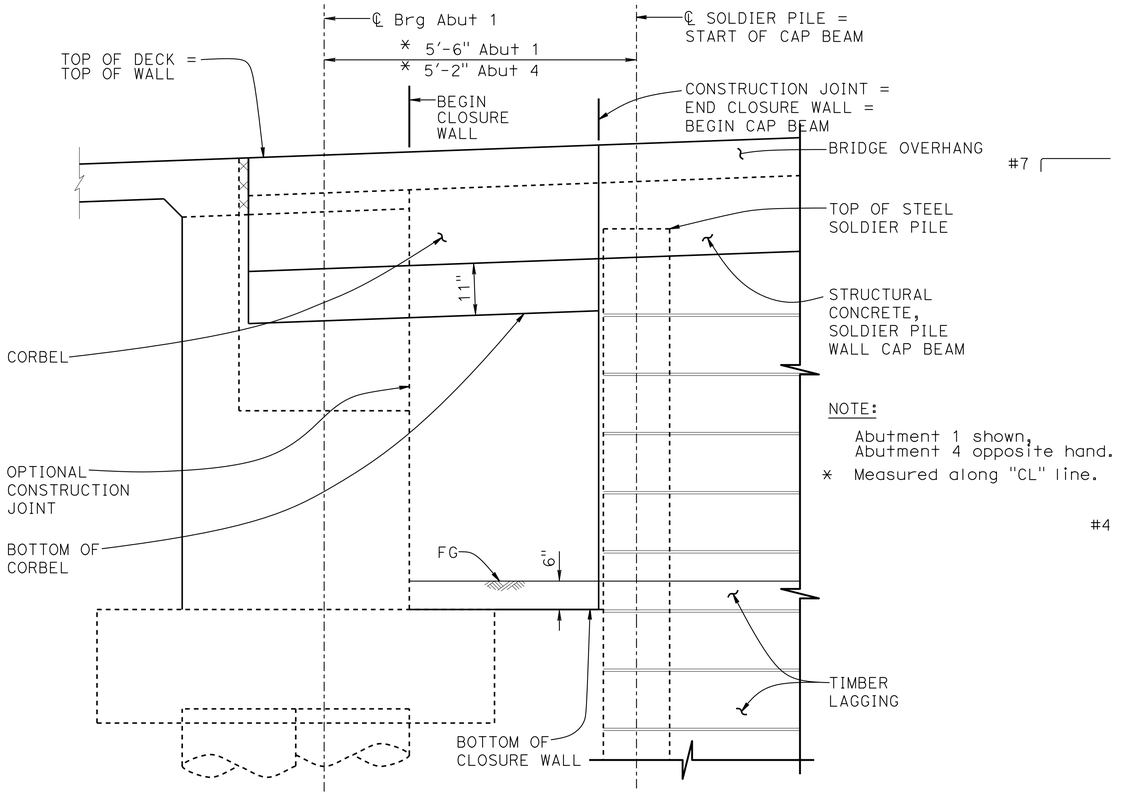

NOTE:

Abutment 1 shown, Abutment 4 opposite hand.

* Measured along "CL" line.

CLOSURE WALL ELEVATION

¾" = 1'-0"

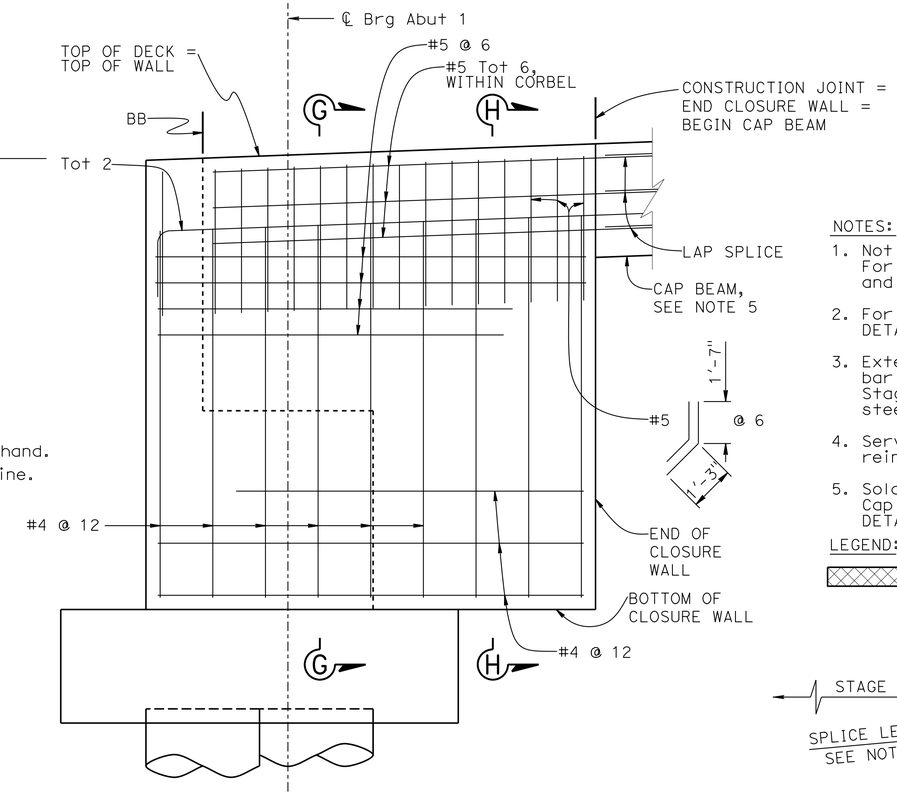

CLOSURE WALL REINFORCEMENT

¾" = 1'-0"

NOTES:

1. Not all reinforcement shown. For details, see "ABUTMENT 1 LAYOUT" and "ABUTMENT 4 LAYOUT" sheets.
2. For "DETAIL A" see "ABUTMENT DETAILS NO. 1" sheet.
3. Extend all Stage 1 longitudinal Reinf 45 bar diameters beyond construction joint. Stagger splices in adjacent reinforcing steel not required.
4. Service splice required on all No. 6 footing reinforcement.
5. Soldier Pile Wall not shown for clarity. For Cap Beam details, see "SOLDIER PILE WALL DETAILS No. 1" sheet.

LEGEND:

Expanded Polystyrene

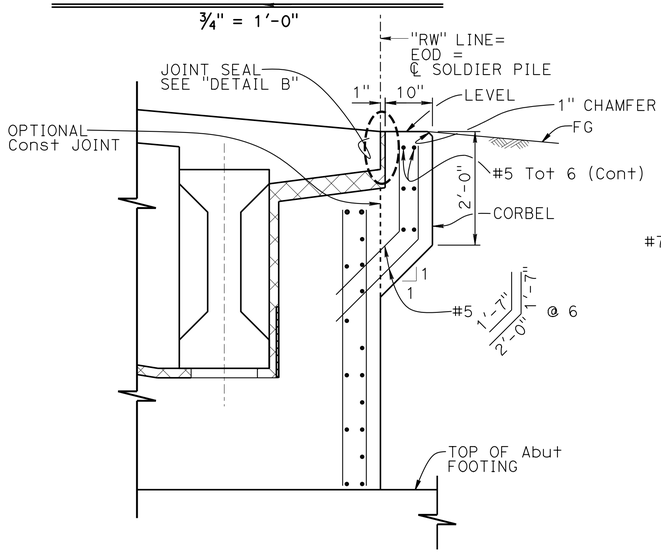

SECTION G-G

¾" = 1'-0"

Note:

Shear key reinf not shown.

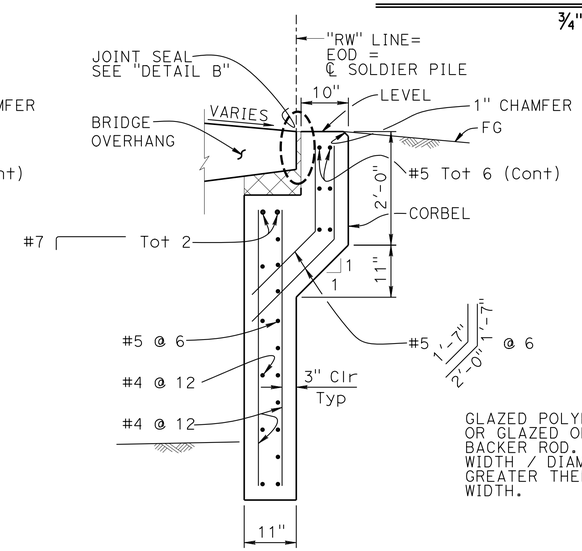

SECTION H-H

¾" = 1'-0"

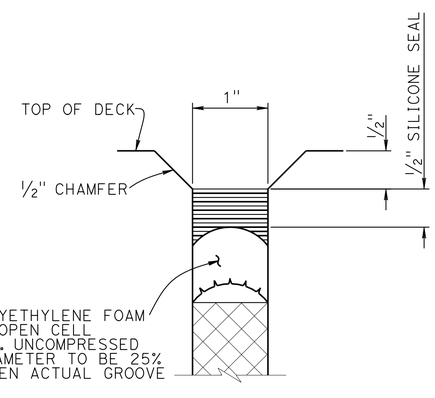

TYPE AL SEAL

DETAIL B

1'-0" = 1'-0"

B6-21

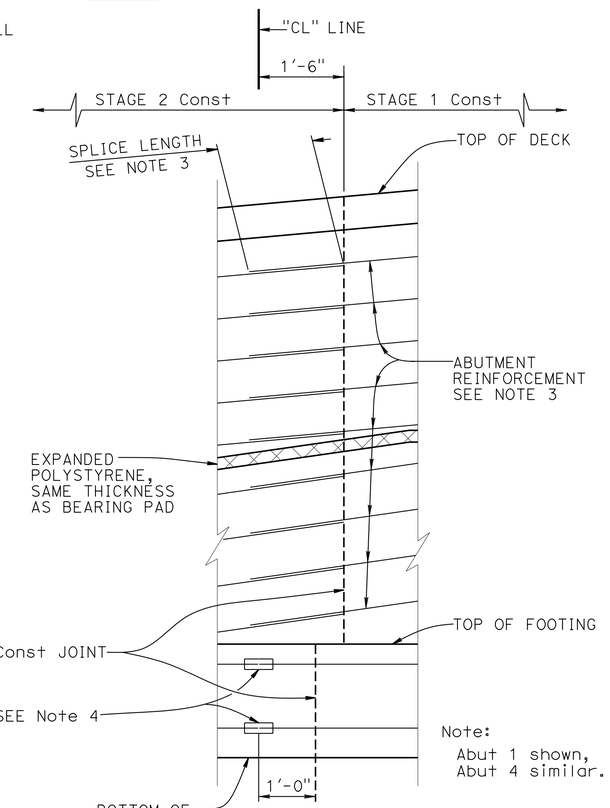

Note:

Abut 1 shown, Abut 4 similar.

DETAIL A

¾" = 1'-0"

	BY	CHECKED
DESIGN	H. PEREZ	M. CULLEN
DETAILS	K. CHONKRIA	M. CULLEN
QUANTITIES	G. REYES-GUTIERREZ	K. CHONKRIA

STATE OF CALIFORNIA
DEPARTMENT OF TRANSPORTATION

DIVISION OF ENGINEERING SERVICES
STRUCTURE DESIGN
DESIGN BRANCH 6

BRIDGE NO. 44-0296
POST MILE 28.28

COW CLIFFS VIADUCT
ABUTMENT DETAILS No. 2

STRUCTURES DESIGN DETAIL SHEET (ENGLISH) (REV. 09-01-10)

ORIGINAL SCALE IN INCHES FOR REDUCED PLANS 0 1 2 3

UNIT: 3591
PROJECT NUMBER & PHASE: 0514000072-1
CONTRACT NO.: 05-1F8904

DISREGARD PRINTS BEARING EARLIER REVISION DATES

REVISION DATES: 6-26-14 9-30-14 9-3-14

SHEET 10 OF 35

FILE => 44-0296-f-a04dt02.dgn

USERNAME => s115755 DATE PLOTTED => 03-DEC-2014 TIME PLOTTED => 15:16

DIST	COUNTY	ROUTE	POST MILES TOTAL PROJECT	SHEET No.	TOTAL SHEETS
05	Mon	1	28.0/28.4	80	104

REGISTERED CIVIL ENGINEER 11-4-14 DATE

12-1-14
PLANS APPROVAL DATE

REGISTERED PROFESSIONAL ENGINEER HERNAN PEREZ No. C 60993 Exp. 12-31-16 CIVIL STATE OF CALIFORNIA

The State of California or its officers or agents shall not be responsible for the accuracy or completeness of scanned copies of this plan sheet.

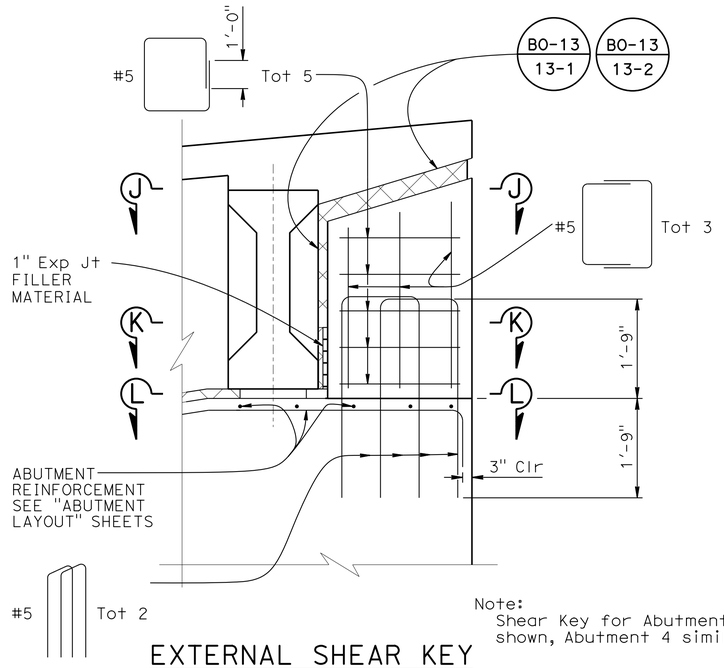

Note:
Shear Key for Abutment 1 shown, Abutment 4 similar.

EXTERNAL SHEAR KEY

3/4" = 1'-0"

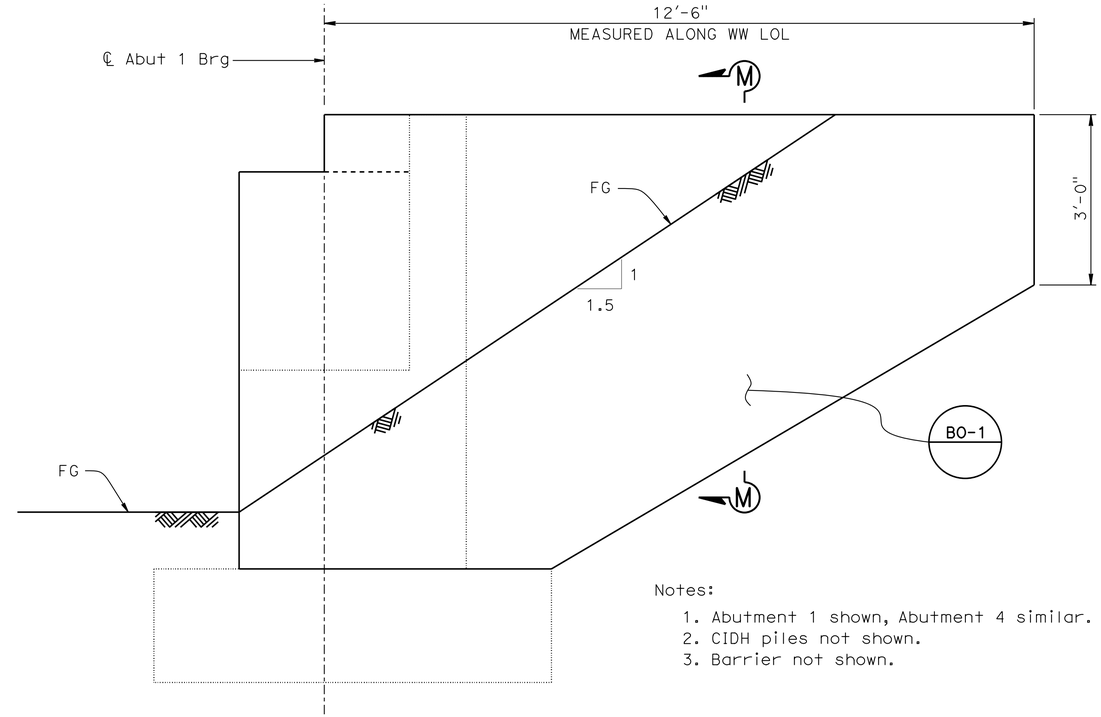

Notes:
1. Abutment 1 shown, Abutment 4 similar.
2. CIDH piles not shown.
3. Barrier not shown.

WING WALL ELEVATION

3/4" = 1'-0"

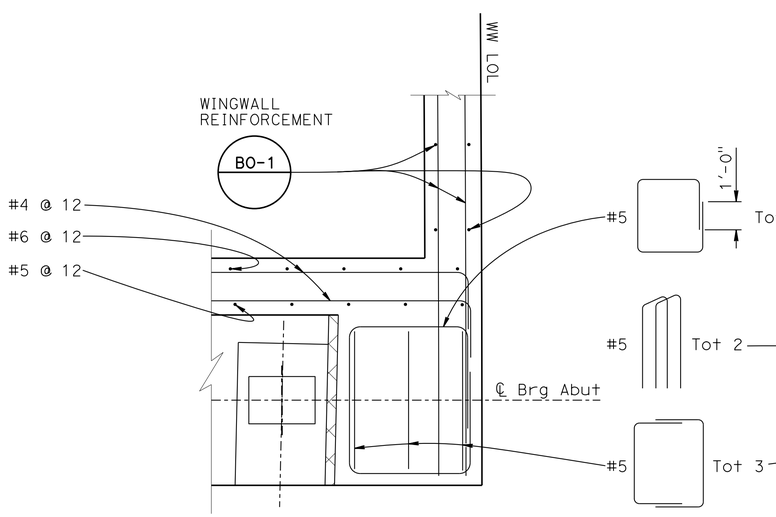

SECTION J-J

3/4" = 1'-0"

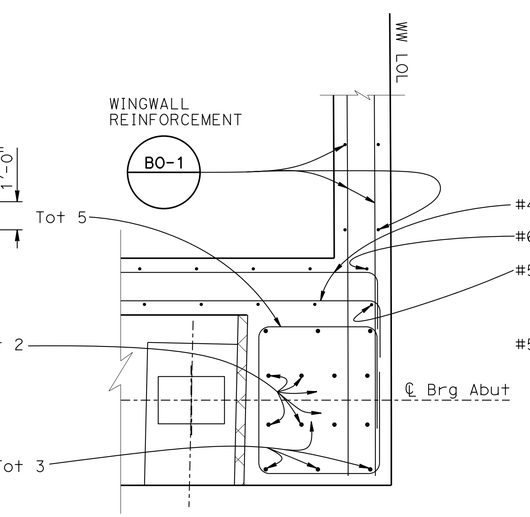

SECTION K-K

3/4" = 1'-0"

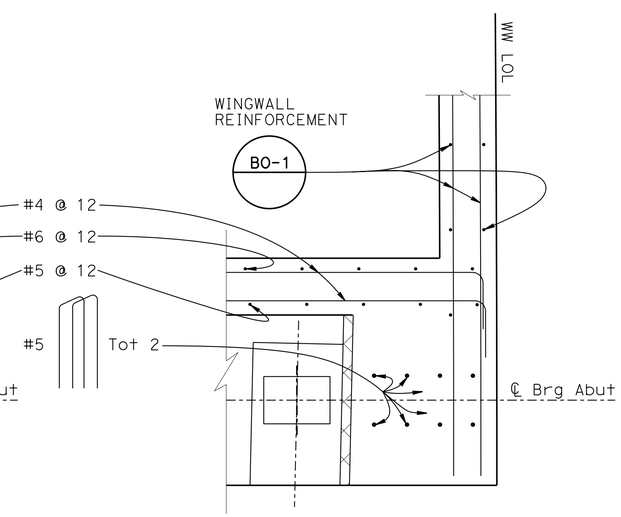

SECTION L-L

3/4" = 1'-0"

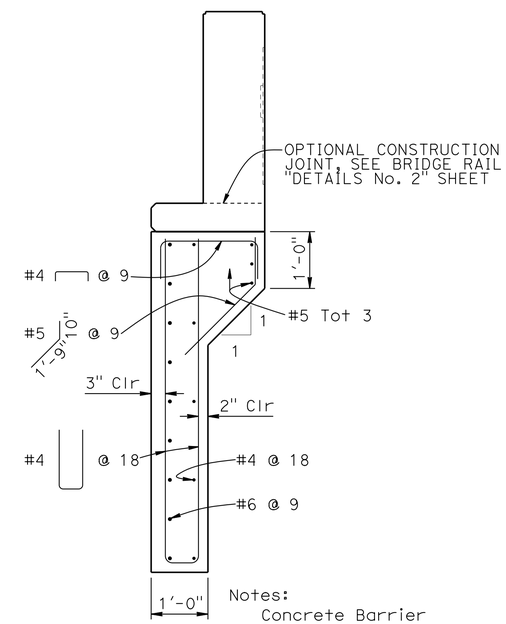

Notes:
Concrete Barrier
Reinf not shown.

SECTION M-M

3/4" = 1'-0"

DESIGN	BY H. PEREZ	CHECKED M. CULLEN	
DETAILS	BY K. CHONKRIA	CHECKED M. CULLEN	
QUANTITIES	BY G. REYES-GUTIERREZ	CHECKED K. CHONKRIA	

STATE OF CALIFORNIA
DEPARTMENT OF TRANSPORTATION

DIVISION OF ENGINEERING SERVICES
STRUCTURE DESIGN
DESIGN BRANCH 6

BRIDGE NO. 44-0296
POST MILE 28.28

COW CLIFFS VIADUCT
ABUTMENT DETAILS No. 3

STRUCTURES DESIGN DETAIL SHEET (ENGLISH) (REV. 09-01-10)

ORIGINAL SCALE IN INCHES FOR REDUCED PLANS 0 1 2 3

UNIT: 3591
PROJECT NUMBER & PHASE: 0514000072-1
CONTRACT NO.: 05-1F8904

DISREGARD PRINTS BEARING EARLIER REVISION DATES

REVISION DATES: 7-28-14 9-3-14 9-3-14

SHEET 11 OF 35

FILE => 44-0296-f-a04dt03.dgn

USERNAME => s115755 DATE PLOTTED => 03-DEC-2014 TIME PLOTTED => 15:16

DIST	COUNTY	ROUTE	POST MILES TOTAL PROJECT	SHEET No.	TOTAL SHEETS
05	Mon	1	28.0/28.4	81	104

REGISTERED CIVIL ENGINEER 11-4-14 DATE

12-1-14
PLANS APPROVAL DATE

REGISTERED PROFESSIONAL ENGINEER HERNAN PEREZ No. C 60993 Exp. 12-31-16 CIVIL STATE OF CALIFORNIA

The State of California or its officers or agents must not be responsible for the accuracy or completeness of scanned copies of this plan sheet.

NOTES:

1. For wall elevations, see "SOLDIER PILE WALL DATA TABLE" sheet.
2. For clarity, Cow Cliffs Viaduct not shown.

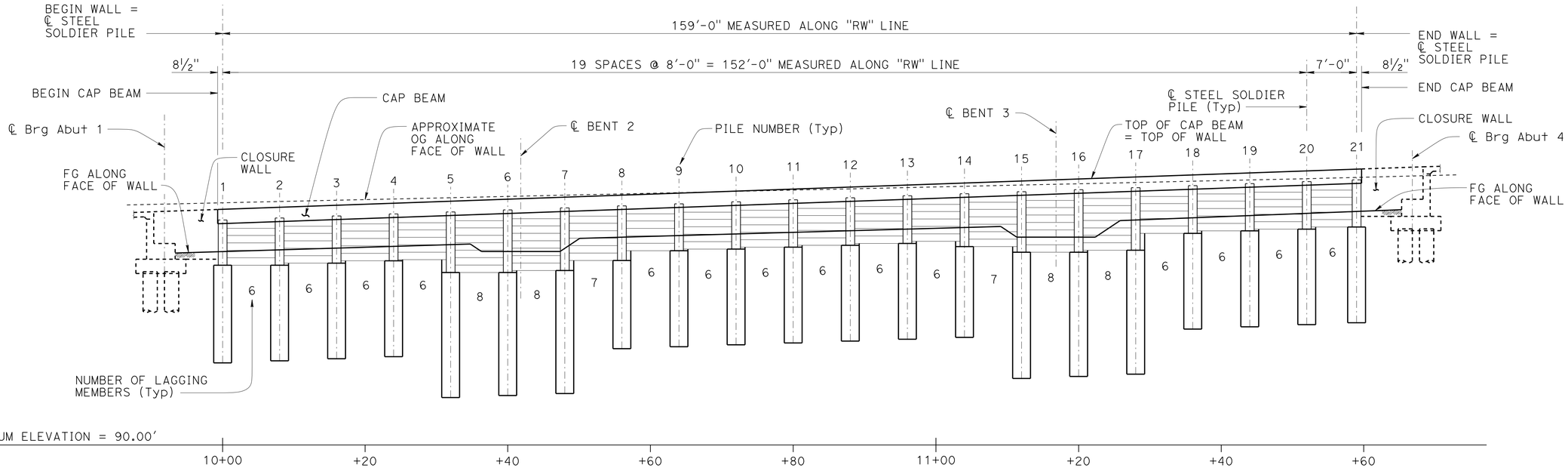

MIRRORED ELEVATION

⅛" = 1'-0"

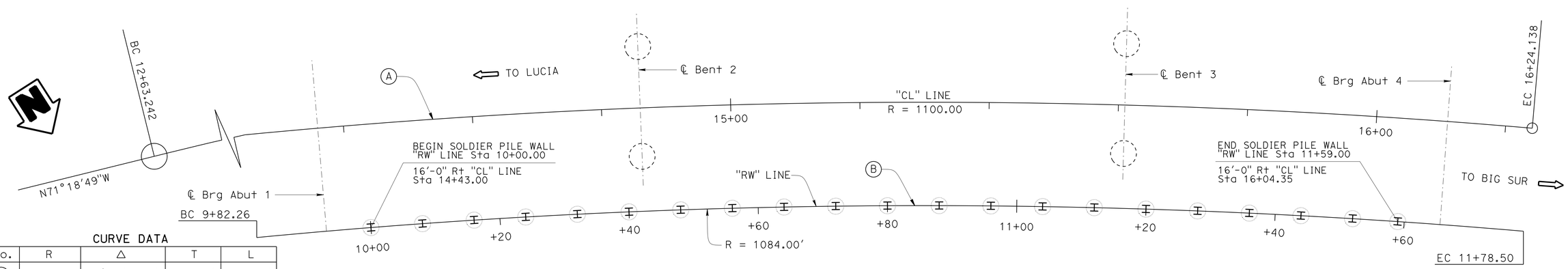

CURVE DATA

No.	R	Δ	T	L
A	1100.00'	18°47'52.8"	182.08'	360.90'
B	1084.00'	10°22'21"	98.39'	196.24'

PLAN

⅛" = 1'-0"

	BY	CHECKED
DESIGN	H. PEREZ	S. MORIMOTO
DETAILS	S. NG	S. MORIMOTO
QUANTITIES	H. PEREZ	S. NG

STATE OF CALIFORNIA
DEPARTMENT OF TRANSPORTATION

DIVISION OF ENGINEERING SERVICES
STRUCTURE DESIGN
DESIGN BRANCH 6

BRIDGE NO. 44-0296
POST MILE 28.28

COW CLIFFS VIADUCT
SOLDIER PILE WALL LAYOUT

STRUCTURES DESIGN DETAIL SHEET (ENGLISH) (REV. 09-01-10)

ORIGINAL SCALE IN INCHES FOR REDUCED PLANS 0 1 2 3

UNIT: 3591
PROJECT NUMBER & PHASE: 0514000072-1
CONTRACT NO.: 05-1F8904

DISREGARD PRINTS BEARING EARLIER REVISION DATES

REVISION DATES 07-21-14 07-30-14 08/26/14

SHEET 12 OF 35

FILE => 44-0296-g-lo-rw-1.dgn

USERNAME => s115755 DATE PLOTTED => 03-DEC-2014 TIME PLOTTED => 15:16

DIST	COUNTY	ROUTE	POST MILES TOTAL PROJECT	SHEET No.	TOTAL SHEETS
05	Mon	1	28.0/28.4	82	104

REGISTERED CIVIL ENGINEER 11-4-14 DATE

12-1-14
PLANS APPROVAL DATE

REGISTERED PROFESSIONAL ENGINEER HERNAN PEREZ No. C 60993 Exp. 12-31-16 CIVIL STATE OF CALIFORNIA

The State of California or its officers or agents shall not be responsible for the accuracy or completeness of scanned copies of this plan sheet.

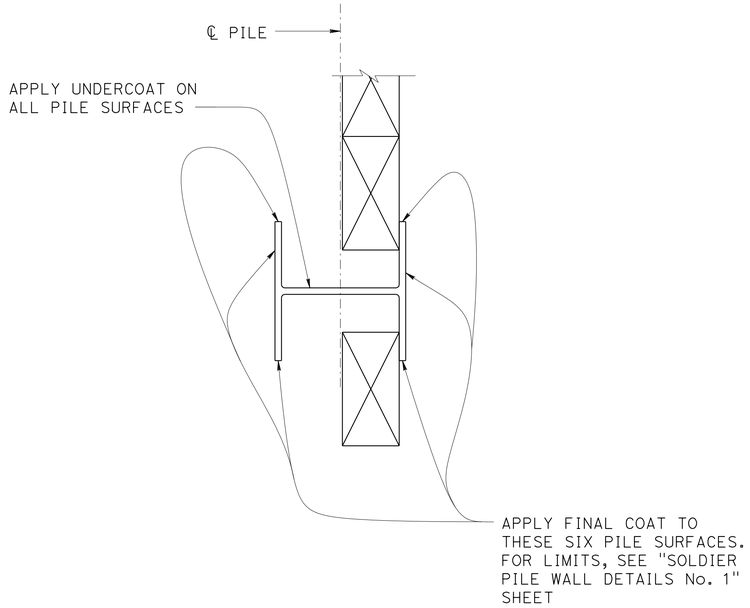

LIMITS OF CLEAN AND PAINT STEEL SOLDIER PILING

1½" = 1'-0"

SOLDIER PILE WALL GENERAL NOTES

DESIGN: AASHTO LRFD Bridge Design Specifications, 6th Edition with California Amendments, dated January 2014

LIVE LOAD: 240 psf equivalent to 2 feet soil weight

SOIL PARAMETERS: (For determination of Design Lateral Earth Pressures)

Backfill soil weight = 120 lb/ft^3
Friction Angle = 34°
Cohesion = 0 psf
Active Pressure coefficent, Ka = 0.28
Passive Pressure coefficent, Kp = 3.54

STEEL SOLDIER PILES: ASTM A572 Grade 50 Min

REINFORCED CONCRETE CAP BEAM: f'c = 3.6 ksi
fy = 60 ksi

STRUCTURAL TIMBER: Treated Douglas Fir, Grade No. 1 or better
Timber to be full sawn

SOLDIER PILE WALL DATA TABLE

PILE NUMBER	STATION ALONG "RW" LINE	TOP OF WALL ELEVATION (ft)	PILE CUT-OFF ELEVATION (ft)	SPECIFIED PILE TIP ELEVATION (ft)	BOTTOM OF LAGGING ELEVATION (ft)	Approx OG ELEVATION (ft)	FINISHED GRADE ELEVATION (ft)
1	10+00.00	122.99	121.49	101.49	115.16	123.90	117.07
2	10+08.00	123.28	121.78	101.78	115.45	124.08	117.31
3	10+16.00	123.57	122.07	102.07	115.78	124.26	117.56
4	10+24.00	123.86	122.36	102.36	115.94	124.43	117.80
5	10+32.00	124.14	122.64	96.64	114.14	124.61	118.04
6	10+40.00	124.42	122.92	96.92	114.42	124.79	117.08
7	10+48.00	124.70	123.20	97.20	115.82	124.97	117.53
8	10+56.00	124.98	123.48	103.48	117.19	125.14	119.09
9	10+64.00	125.25	123.75	103.75	117.42	125.32	119.31
10	10+72.00	125.52	124.02	104.02	117.69	125.50	119.54
11	10+80.00	125.78	124.28	104.28	117.95	125.68	119.76
12	10+88.00	126.04	124.54	104.54	118.21	125.85	119.99
13	10+96.00	126.30	124.80	104.80	118.51	126.03	120.21
14	11+04.00	126.56	125.06	105.06	117.77	126.21	120.46
15	11+12.00	126.81	125.31	99.31	116.98	126.39	119.09
16	11+20.00	127.09	125.59	99.59	117.26	126.56	119.09
17	11+28.00	127.41	125.91	99.91	119.62	126.74	121.49
18	11+36.00	127.72	126.22	106.22	119.97	126.92	121.80
19	11+44.00	128.04	126.54	106.54	120.21	127.10	122.12
20	11+52.00	128.34	126.84	106.84	120.51	127.27	122.42
21	11+59.00	128.61	127.11	107.11	---	127.45	122.69

NOTES:

1. The bottom of lagging elevation denoted refers to the lagging bay between adjacent piles.
2. The Finished Grade (FG) and Original Ground (OG) elevations are along the face of soldier pile wall.

	BY	CHECKED
DESIGN	H. PEREZ	S. MORIMOTO
DETAILS	S. NG	S. MORIMOTO
QUANTITIES	H. PEREZ	S. NG

STATE OF CALIFORNIA
DEPARTMENT OF TRANSPORTATION

DIVISION OF ENGINEERING SERVICES
STRUCTURE DESIGN
DESIGN BRANCH 6

BRIDGE NO. 44-0296
POST MILE 28.28

COW CLIFFS VIADUCT
SOLDIER PILE WALL DATA TABLE

STRUCTURES DESIGN DETAIL SHEET (ENGLISH) (REV. 09-01-10)

ORIGINAL SCALE IN INCHES FOR REDUCED PLANS 0 1 2 3

UNIT: 3591
PROJECT NUMBER & PHASE: 0514000072-1
CONTRACT NO.: 05-1F8904

DISREGARD PRINTS BEARING EARLIER REVISION DATES

REVISION DATES: 01-29-14 10-31-14 10-22-14

SHEET 13 OF 35

FILE => 44-0296-g-io-rw-2.dgn

USERNAME => s115755 DATE PLOTTED => 03-DEC-2014 TIME PLOTTED => 15:16

DIST	COUNTY	ROUTE	POST MILES TOTAL PROJECT	SHEET No.	TOTAL SHEETS
05	Mon	1	28.0/28.4	83	104

REGISTERED CIVIL ENGINEER — DATE 11-4-14

12-1-14
PLANS APPROVAL DATE

REGISTERED PROFESSIONAL ENGINEER — HERNAN PEREZ — No. C 60993 — Exp. 12-31-16 — CIVIL — STATE OF CALIFORNIA

The State of California or its officers or agents shall not be responsible for the accuracy or completeness of scanned copies of this plan sheet.

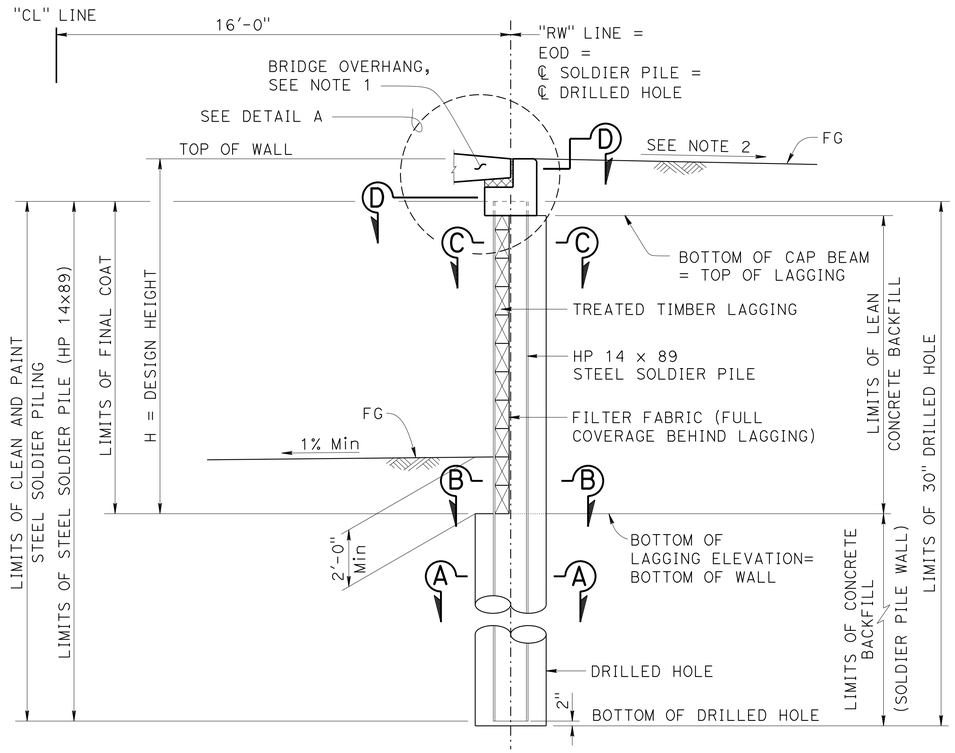

TYPICAL SECTION
3/8" = 1'-0"

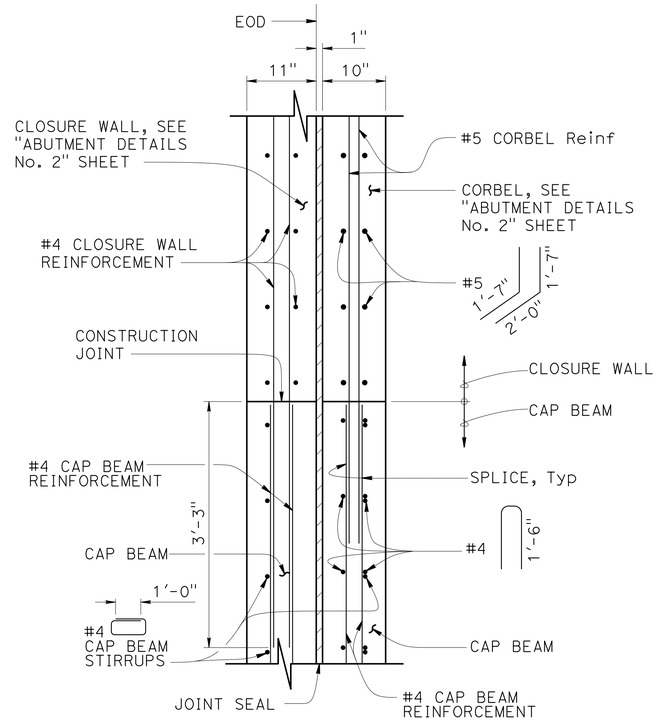

SECTION D-D
1" = 1'-0"

NOTES:

1. For clarity, Cow Cliffs Viaduct not shown.
2. For grade and profile, see Roadway Plans.

LEGEND:

- DENOTES JOINT SEAL
- DENOTES AREA OF LEAN CONCRETE BACKFILL REMOVAL
- DENOTES EXPANDED POLYSTYRENE
- DENOTES AREA OF LEAN CONCRETE BACKFILL
- DENOTES AREA OF CONCRETE BACKFILL

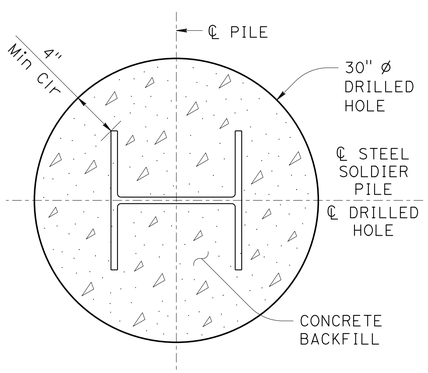

SECTION A-A
1 1/2" = 1'-0"

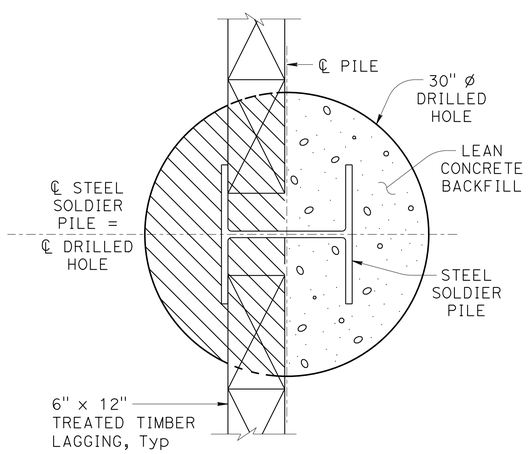

SECTION B-B
1 1/2" = 1'-0"

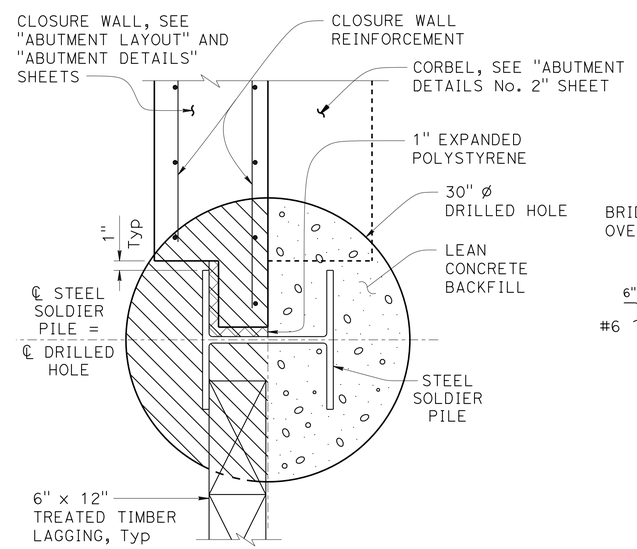

SECTION C-C (AT BEGIN OR END OF WALL)
1 1/2" = 1'-0"

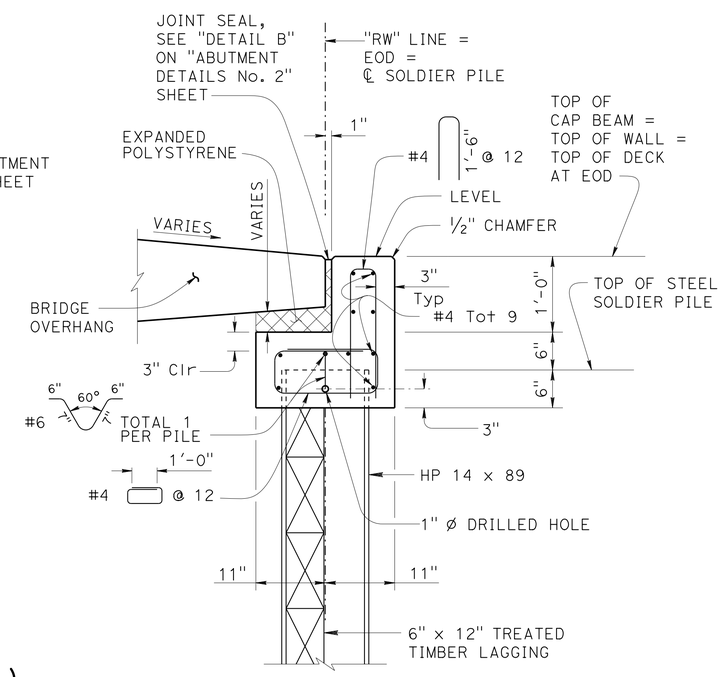

DETAIL A
1" = 1'-0"

DESIGN	BY H. PEREZ	CHECKED S. MORIMOTO	
DETAILS	BY K. CHONKRIA / S. NG	CHECKED S. MORIMOTO	
QUANTITIES	BY H. PEREZ	CHECKED S. NG	

STATE OF CALIFORNIA
DEPARTMENT OF TRANSPORTATION

DIVISION OF ENGINEERING SERVICES
STRUCTURE DESIGN
DESIGN BRANCH 6

BRIDGE NO. 44-0296
POST MILE 28.28

COW CLIFFS VIADUCT
SOLDIER PILE WALL DETAILS No. 1

STRUCTURES DESIGN DETAIL SHEET (ENGLISH) (REV. 09-01-10)

ORIGINAL SCALE IN INCHES FOR REDUCED PLANS 0 1 2 3

UNIT: 3591
PROJECT NUMBER & PHASE: 0514000072-1
CONTRACT NO.: 05-1F8904

DISREGARD PRINTS BEARING EARLIER REVISION DATES

REVISION DATES: 6-12-14 01-29-14 08-26-14 10-31-14

SHEET 14 OF 35

FILE => 44-0296-g-rwdt01.dgn

USERNAME => s115755 DATE PLOTTED => 03-DEC-2014 TIME PLOTTED => 15:16

DIST	COUNTY	ROUTE	POST MILES TOTAL PROJECT	SHEET No.	TOTAL SHEETS
05	Mon	1	28.0/28.4	84	104

REGISTERED CIVIL ENGINEER 11-4-14 DATE

12-1-14
PLANS APPROVAL DATE

REGISTERED PROFESSIONAL ENGINEER HERNAN PEREZ No. C 60993 Exp. 12-31-16 CIVIL STATE OF CALIFORNIA

The State of California or its officers or agents shall not be responsible for the accuracy or completeness of scanned copies of this plan sheet.

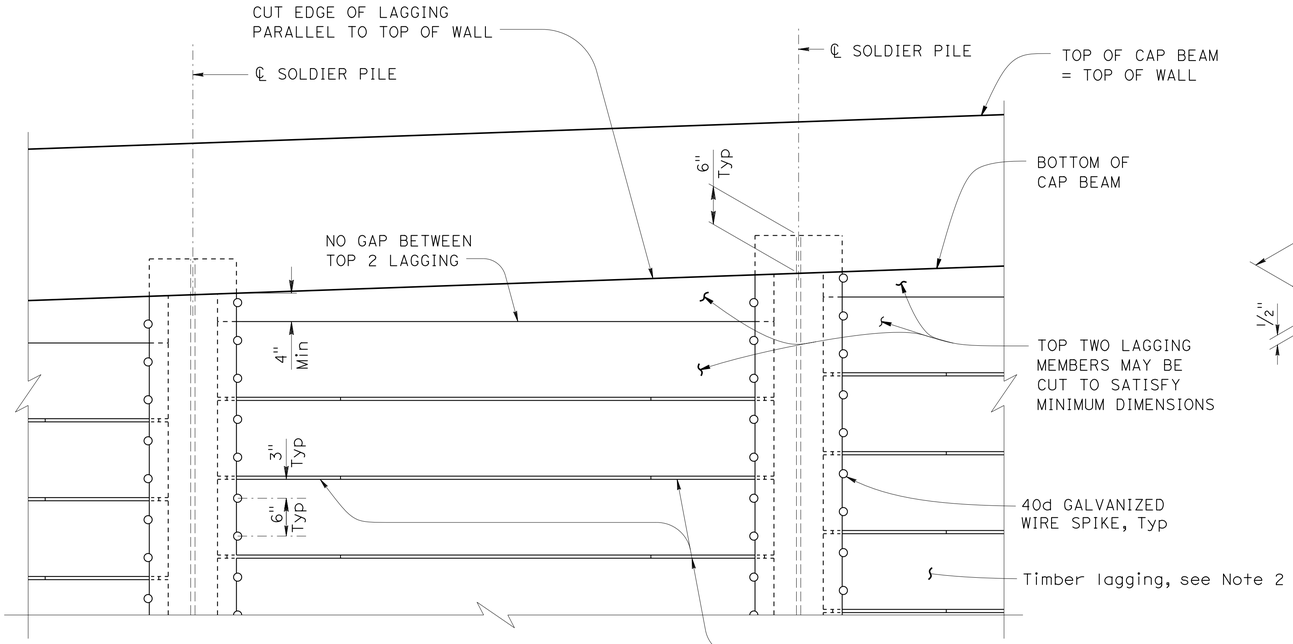

PART ELEVATION
LAGGING DETAILS
1" = 1'-0"

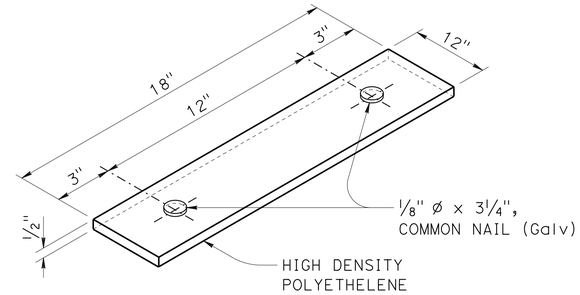

SHIM DETAIL
3" = 1'-0"

NOTES:

1. No clipping of timber lagging corners allowed.
2. Place lagging members level.
3. Spikes must not be bent.

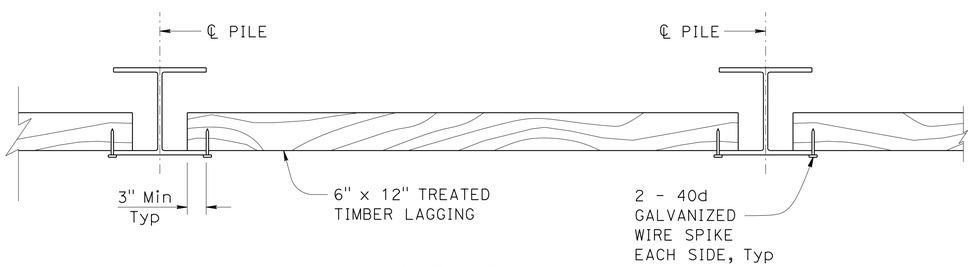

PART PLAN
1" = 1'-0"

DESIGN	BY H. PEREZ	CHECKED S. MORIMOTO	
DETAILS	BY K. CHONKRIA / S. NG	CHECKED S. MORIMOTO	
QUANTITIES	BY H. PEREZ	CHECKED S. NG	

STATE OF CALIFORNIA
DEPARTMENT OF TRANSPORTATION

DIVISION OF ENGINEERING SERVICES
STRUCTURE DESIGN
DESIGN BRANCH 6

BRIDGE NO. 44-0296
POST MILE 28.28

COW CLIFFS VIADUCT
SOLDIER PILE WALL DETAILS No. 2

STRUCTURES DESIGN DETAIL SHEET (ENGLISH) (REV. 09-01-10)

ORIGINAL SCALE IN INCHES FOR REDUCED PLANS 0 1 2 3

UNIT: 3591
PROJECT NUMBER & PHASE: 0514000072-1
CONTRACT NO.: 05-1F8904

DISREGARD PRINTS BEARING EARLIER REVISION DATES

REVISION DATES: 6-12-14 07-31-14 08/26/14

SHEET 15 OF 35

USERNAME => s115755 DATE PLOTTED => 03-DEC-2014 TIME PLOTTED => 15:16

FILE => 44-0296-g-rwdt02.dgn

DIST	COUNTY	ROUTE	POST MILES TOTAL PROJECT	SHEET No.	TOTAL SHEETS
05	Mon	1	28.0/28.4	85	104

REGISTERED CIVIL ENGINEER 11-4-14 DATE

12-1-14
PLANS APPROVAL DATE

REGISTERED PROFESSIONAL ENGINEER HERNAN PEREZ No. C 60993 Exp. 12-31-16 CIVIL STATE OF CALIFORNIA

The State of California or its officers or agents shall not be responsible for the accuracy or completeness of scanned copies of this plan sheet.

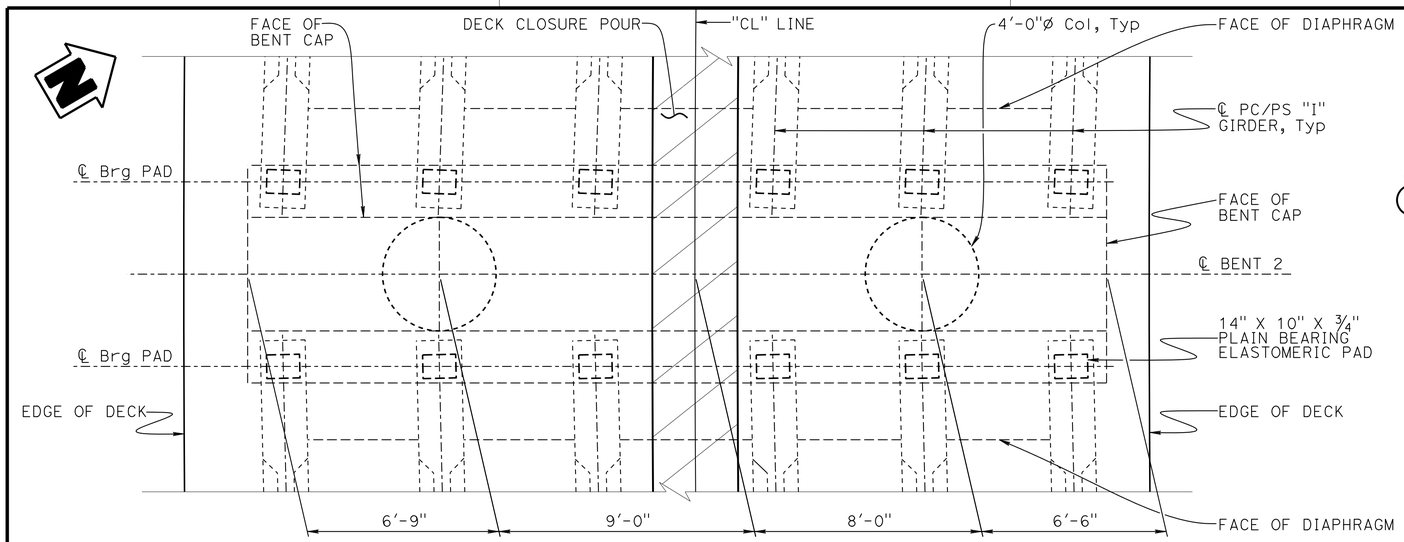

BENT PLAN

3/8" = 1'-0"

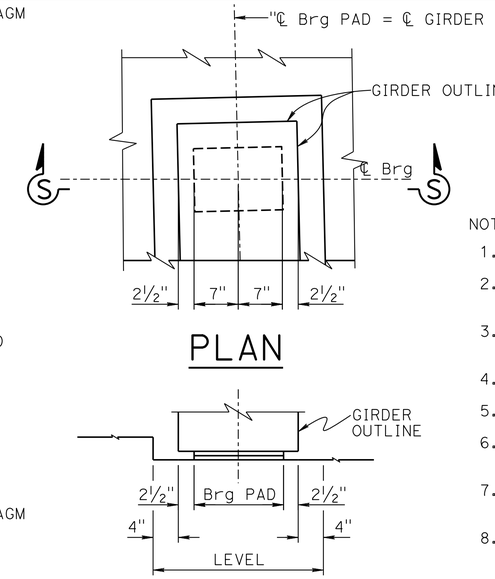

PLAN

SECTION S-S

BENT BEARING PAD DETAIL

1" = 1'-0"

Details typical at all bent bearing pads

NOTES:

1. Bent 2 shown, Bent 3 similar.
2. For all bent cap reinforcement details not shown, see "BENT DETAILS" sheets.
3. Inner hoop reinforcement must be placed at the same level as outer hoop reinfoicement.
4. All hoops are "ultimate" butt spliced, continuous.
5. For pile data, see "FOUNDATION DATA" sheet.
6. For "SECTION M-M", "SECTION N-N", and "SECTION O-O", see "BENT DETAILS NO. 1" sheet.
7. For "SECTION P-P", "SECTION Q-Q" and "SECTION R-R" see "BENT DETAILS NO. 2" sheet.
8. Service splice required on all No. 7, 8 and No. 9 bent cap/diaphragm reinforcement. For all other continuous longitudinal bent cap/diaphragm reinforcement, splice as required.
9. Only staggered "ultimate" butt splices are allowed in the Rock Socket reinforcement in this zone.
10. Inner cage: in each bundle, terminate one No. 10 bar at 5'-0" above the steel casing specificed tip elevation.
11. For limits of stage construction, see "CONSTRUCTION STAGING" sheet. Stage 2 bent cap concrete must be placed directly against Stage 1 bent cap. No Closure pour in bent cap and bent diaphragm.

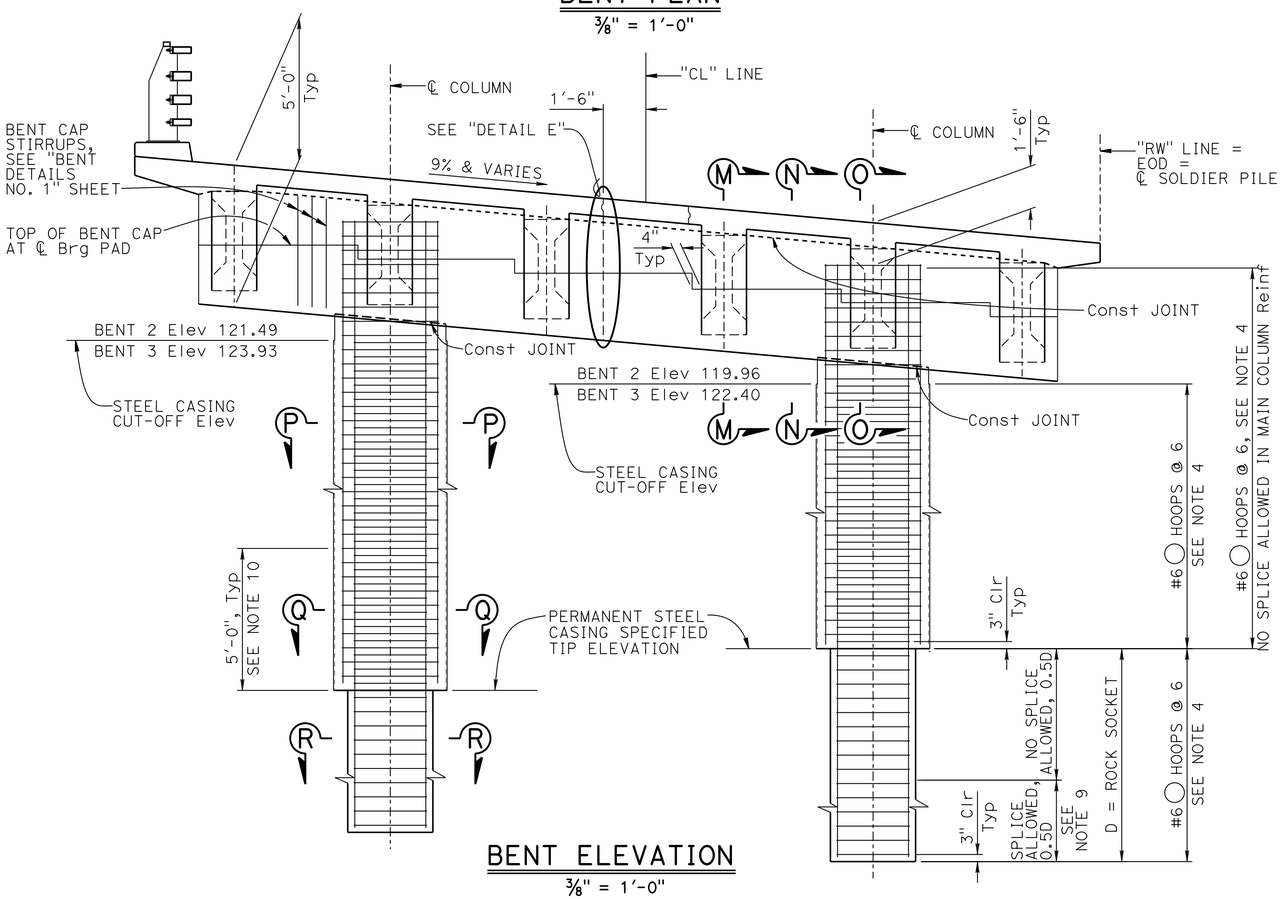

BENT ELEVATION

3/8" = 1'-0"

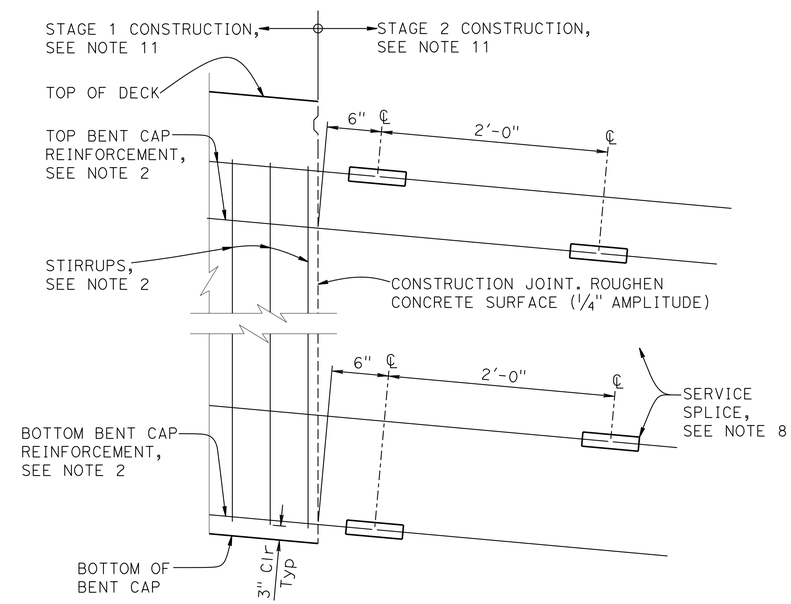

DETAIL E

1 1/2"=1'-0"

DESIGN	BY H. PEREZ	CHECKED M. CULLEN	
DETAILS	BY K. CHONKRIA	CHECKED M. CULLEN	
QUANTITIES	BY RW/GRG	CHECKED SM/KC	

STATE OF CALIFORNIA
DEPARTMENT OF TRANSPORTATION

DIVISION OF ENGINEERING SERVICES
STRUCTURE DESIGN
DESIGN BRANCH 6

BRIDGE NO. 44-0296
POST MILE 28.28

COW CLIFFS VIADUCT
BENT LAYOUT

STRUCTURES DESIGN DETAIL SHEET (ENGLISH) (REV. 09-01-10)

ORIGINAL SCALE IN INCHES FOR REDUCED PLANS 0 1 2 3

UNIT: 3591
PROJECT NUMBER & PHASE: 0514000072-1
CONTRACT NO.: 05-1F8904

DISREGARD PRINTS BEARING EARLIER REVISION DATES

REVISION DATES: 7-18-14 10-31-14 9-3-14

SHEET 16 OF 35

FILE => 44-0296-n-b01_lot01.dgn

USERNAME => s115755 DATE PLOTTED => 03-DEC-2014 TIME PLOTTED => 15:16

DIST	COUNTY	ROUTE	POST MILES TOTAL PROJECT	SHEET No.	TOTAL SHEETS
05	Mon	1	28.0/28.4	86	104

REGISTERED CIVIL ENGINEER 11-4-14 DATE

12-1-14
PLANS APPROVAL DATE

REGISTERED PROFESSIONAL ENGINEER HERNAN PEREZ No. C 60993 Exp. 12-31-16 CIVIL STATE OF CALIFORNIA

The State of California or its officers or agents shall not be responsible for the accuracy or completeness of scanned copies of this plan sheet.

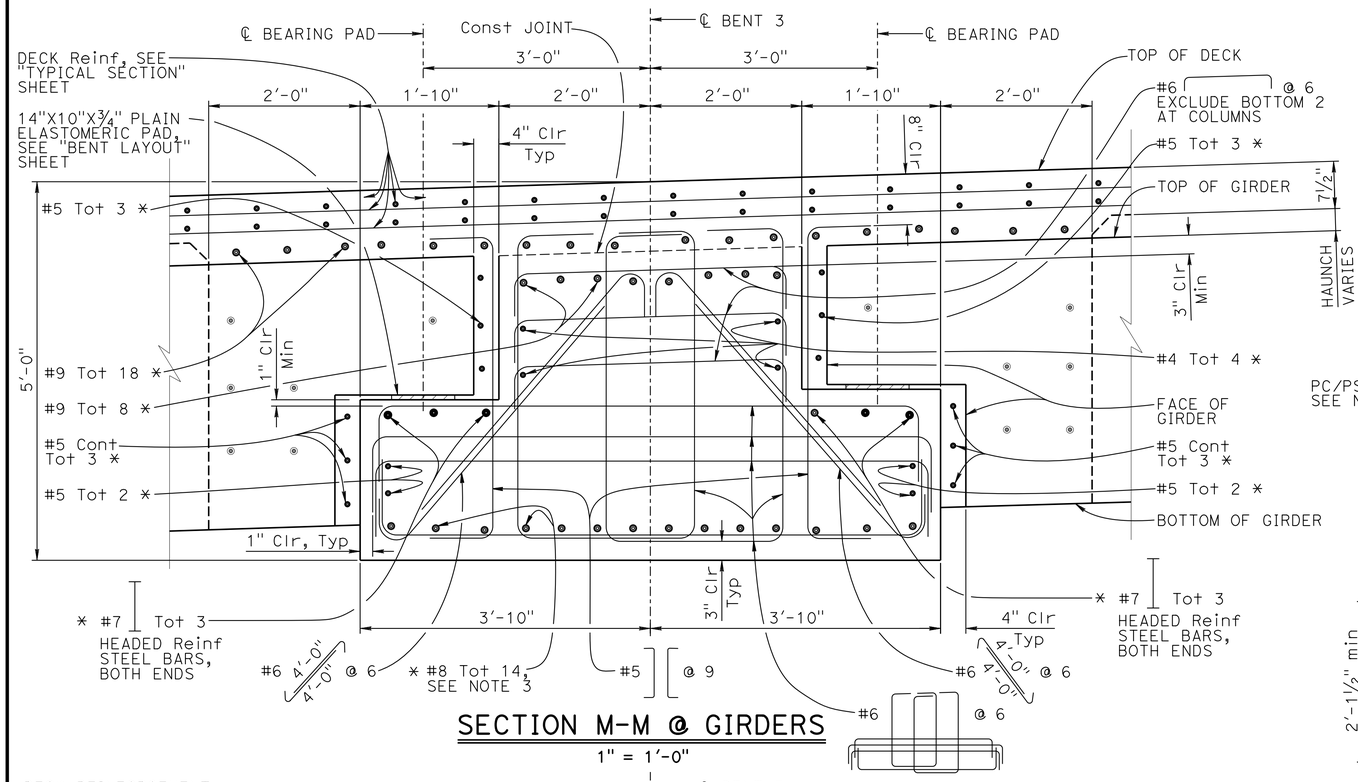

SECTION M-M @ GIRDERS

1" = 1'-0"

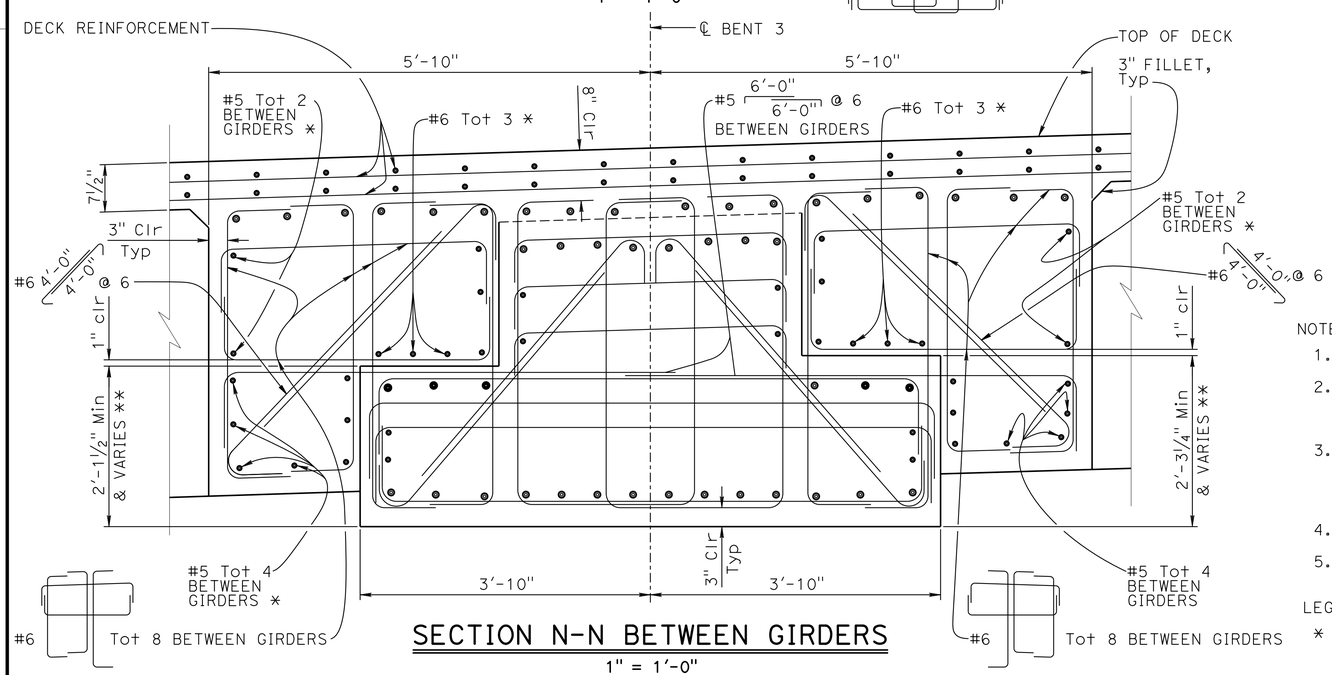

SECTION N-N BETWEEN GIRDERS

1" = 1'-0"

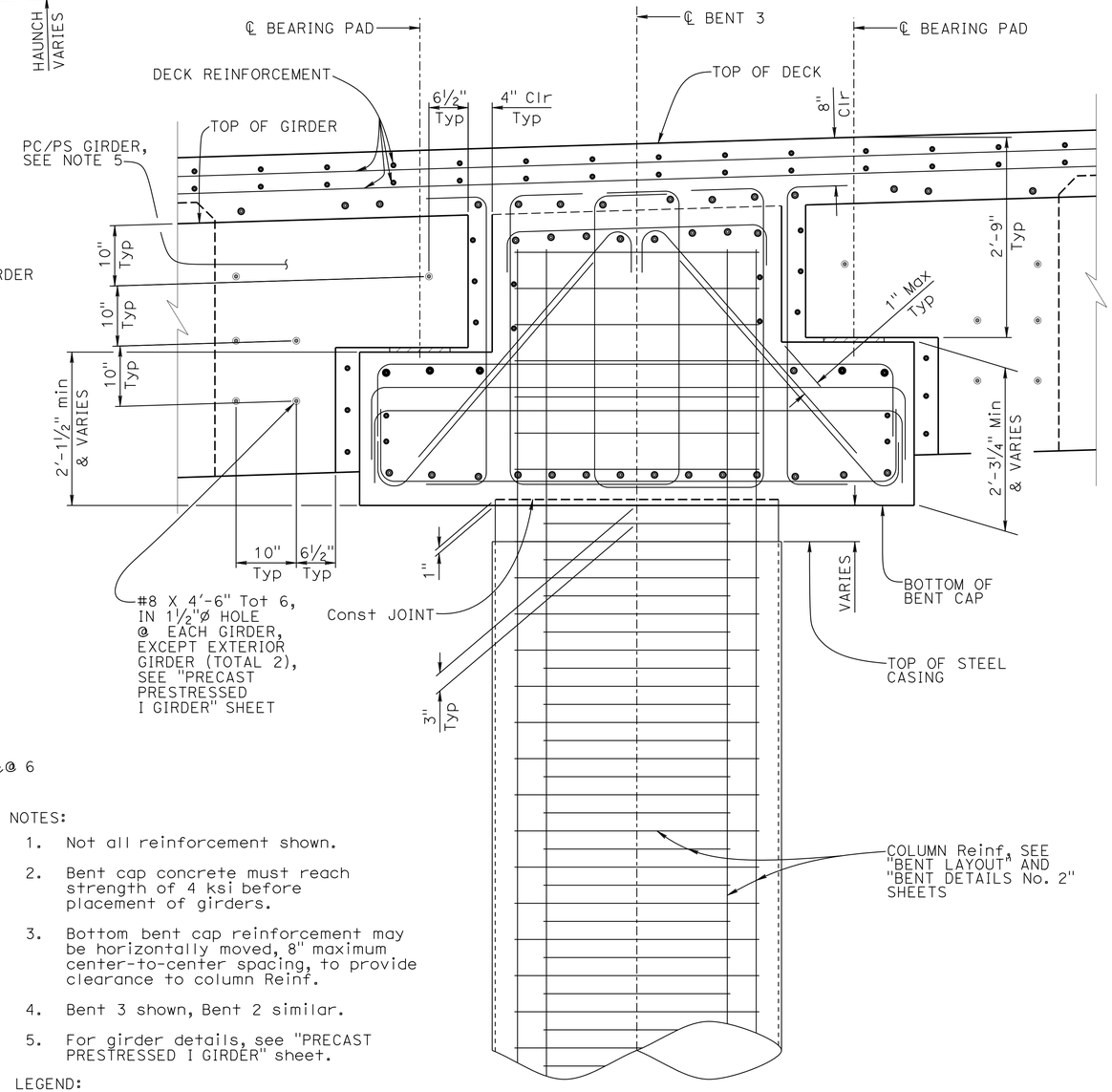

SECTION O-O @ COLUMN

1" = 1'-0"

NOTES:

1. Not all reinforcement shown.
2. Bent cap concrete must reach strength of 4 ksi before placement of girders.
3. Bottom bent cap reinforcement may be horizontally moved, 8" maximum center-to-center spacing, to provide clearance to column Reinf.
4. Bent 3 shown, Bent 2 similar.
5. For girder details, see "PRECAST PRESTRESSED I GIRDER" sheet.

LEGEND:

* Denotes main cap reinforcement extending beyond Stage 1 Construction.

** Measured along ℄ Brg pad at ℄ girder.

	BY	CHECKED
DESIGN	H. PEREZ	M. CULLEN
DETAILS	K. CHONKRIA	M. CULLEN
QUANTITIES	RW/GRG	SM/KC

STATE OF CALIFORNIA
DEPARTMENT OF TRANSPORTATION

DIVISION OF ENGINEERING SERVICES
STRUCTURE DESIGN
DESIGN BRANCH 6

BRIDGE NO. 44-0296
POST MILE 28.28

COW CLIFFS VIADUCT
BENT DETAILS No. 1

STRUCTURES DESIGN DETAIL SHEET (ENGLISH) (REV. 09-01-10)

ORIGINAL SCALE IN INCHES FOR REDUCED PLANS 0 1 2 3

UNIT: 3591
PROJECT NUMBER & PHASE: 0514000072-1
CONTRACT NO.: 05-1F8904

DISREGARD PRINTS BEARING EARLIER REVISION DATES

REVISION DATES: 7-18-14 10-31-14 9-30-14

SHEET 17 OF 35

FILE => 44-0296-h-b01dt01.dgn

USERNAME => s115755 DATE PLOTTED => 03-DEC-2014 TIME PLOTTED => 15:16

DIST	COUNTY	ROUTE	POST MILES TOTAL PROJECT	SHEET No.	TOTAL SHEETS
05	Mon	1	28.0/28.4	87	104

Hernan Perez 11-4-14
REGISTERED CIVIL ENGINEER DATE

12-1-14
PLANS APPROVAL DATE

REGISTERED PROFESSIONAL ENGINEER
HERNAN PEREZ
No. C 60993
Exp. 12-31-16
CIVIL
STATE OF CALIFORNIA

The State of California or its officers or agents shall not be responsible for the accuracy or completeness of scanned copies of this plan sheet.

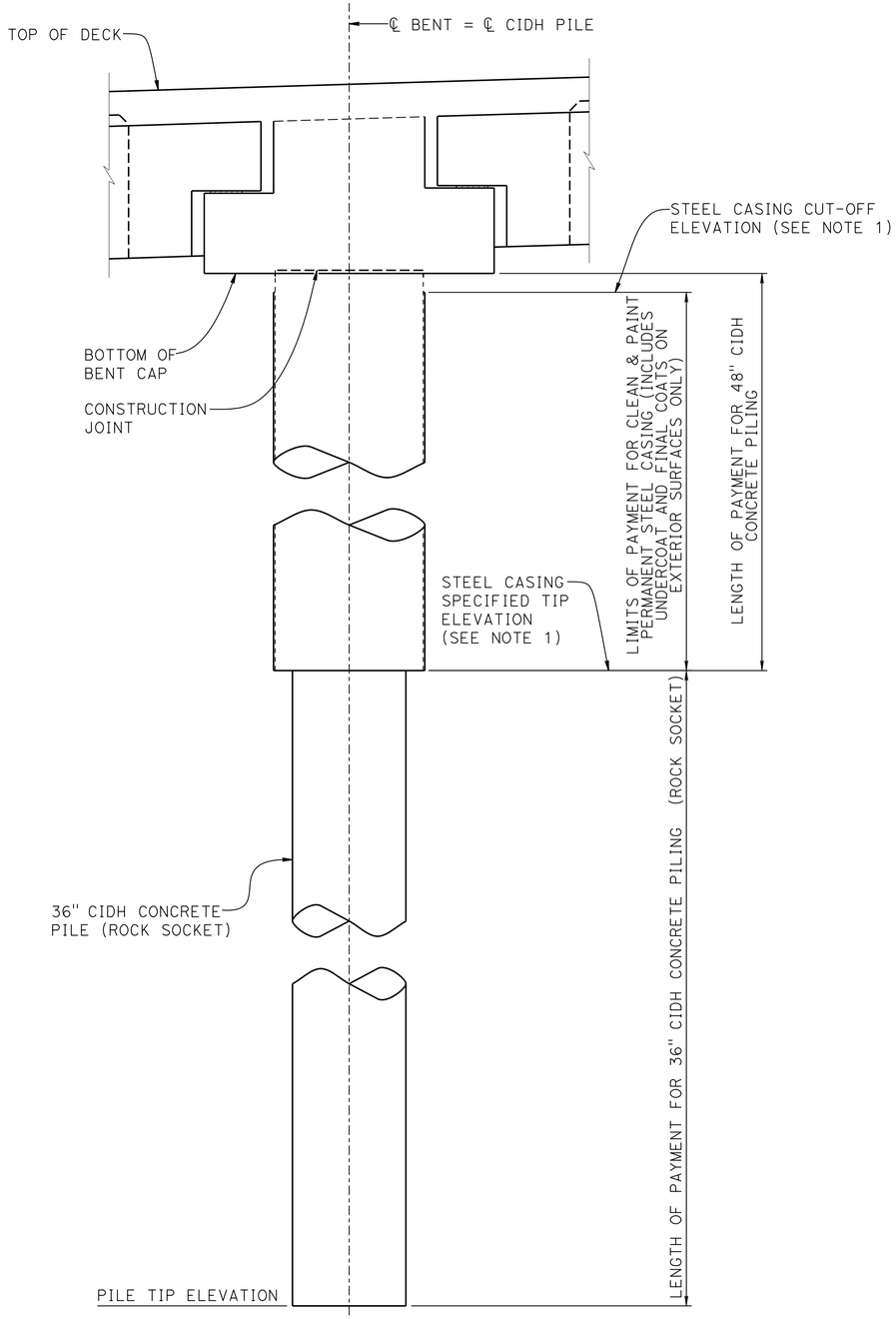

ELEVATION

½"=1'-0"

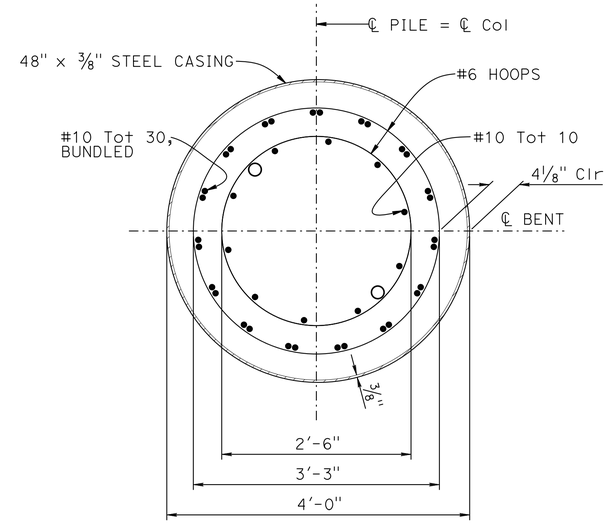

SECTION P-P

1 "=1'-0"

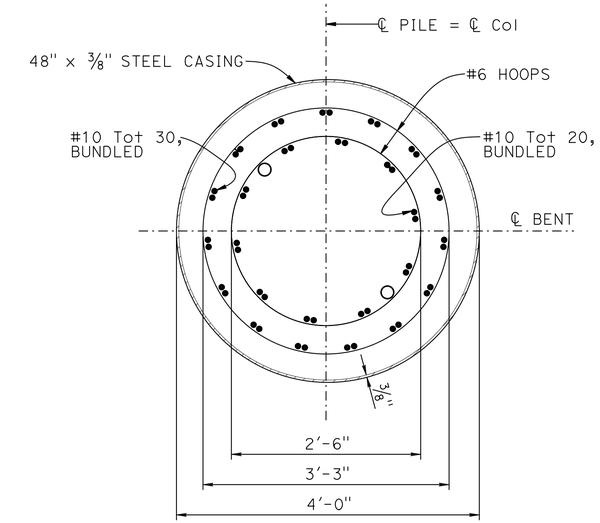

SECTION Q-Q

1 "=1'-0"

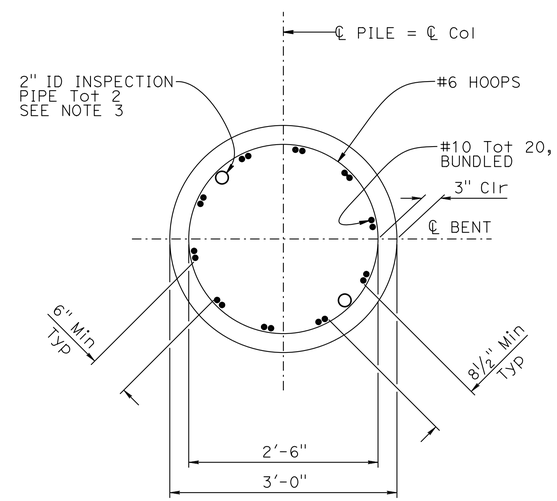

SECTION R-R

1"=1'-0"

NOTES:

1. For permanent steel casing elevations, see "FOUNDATION DATA"and "BENT LAYOUT" sheets.
2. For details not shown, see "BENT LAYOUT" and "BENT DETAILS NO. 1" sheets.
3. Inspection pipes must be at least 3" clear of main reinforcement.

DESIGN	BY H. PEREZ	CHECKED M. CULLEN
DETAILS	BY K. CHONKRIA	CHECKED M. CULLEN
QUANTITIES	BY RW/GRG	CHECKED SM/KC

STATE OF CALIFORNIA
DEPARTMENT OF TRANSPORTATION

DIVISION OF ENGINEERING SERVICES
STRUCTURE DESIGN
DESIGN BRANCH 6

BRIDGE NO. 44-0296
POST MILE 28.28

COW CLIFFS VIADUCT
BENT DETAILS NO. 2

STRUCTURES DESIGN DETAIL SHEET (ENGLISH) (REV. 09-01-10)

ORIGINAL SCALE IN INCHES FOR REDUCED PLANS 0 1 2 3

UNIT: 3591
PROJECT NUMBER & PHASE: 0514000072-1
CONTRACT NO.: 05-1F8904

DISREGARD PRINTS BEARING EARLIER REVISION DATES

REVISION DATES: 7-24-14 | 9-30-14 | 9-2-14

SHEET 18 OF 35

FILE => 44-0296-h-b01dt02.dgn

USERNAME => s115755 DATE PLOTTED => 03-DEC-2014 TIME PLOTTED => 15:16

DIST	COUNTY	ROUTE	POST MILES TOTAL PROJECT	SHEET No.	TOTAL SHEETS
05	Mon	1	28.0/28.4	88	104

REGISTERED CIVIL ENGINEER 11-4-14 DATE

12-1-14
PLANS APPROVAL DATE

REGISTERED PROFESSIONAL ENGINEER HERNAN PEREZ No. C 60993 Exp. 12-31-16 CIVIL STATE OF CALIFORNIA

The State of California or its officers or agents shall not be responsible for the accuracy or completeness of scanned copies of this plan sheet.

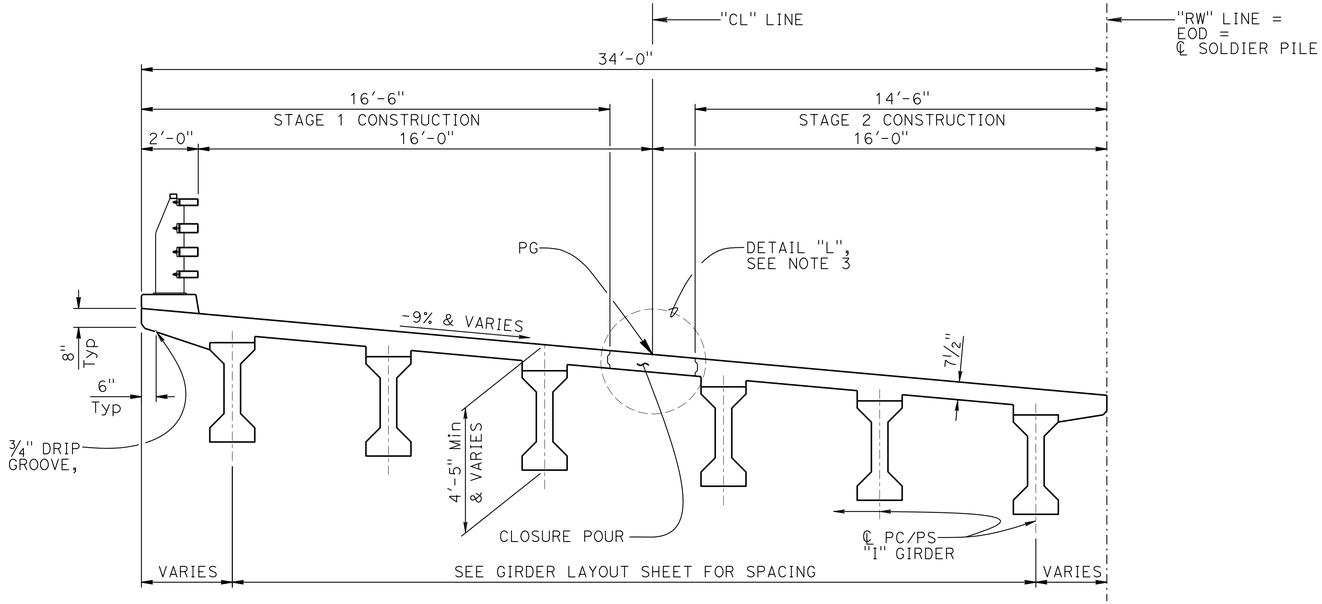

TYPICAL SECTION

⅜" = 1'-0"

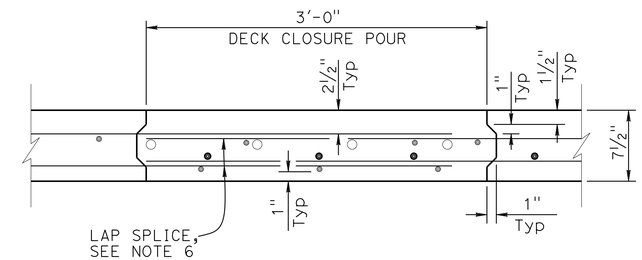

DETAIL "L"

1½" = 1'-0"

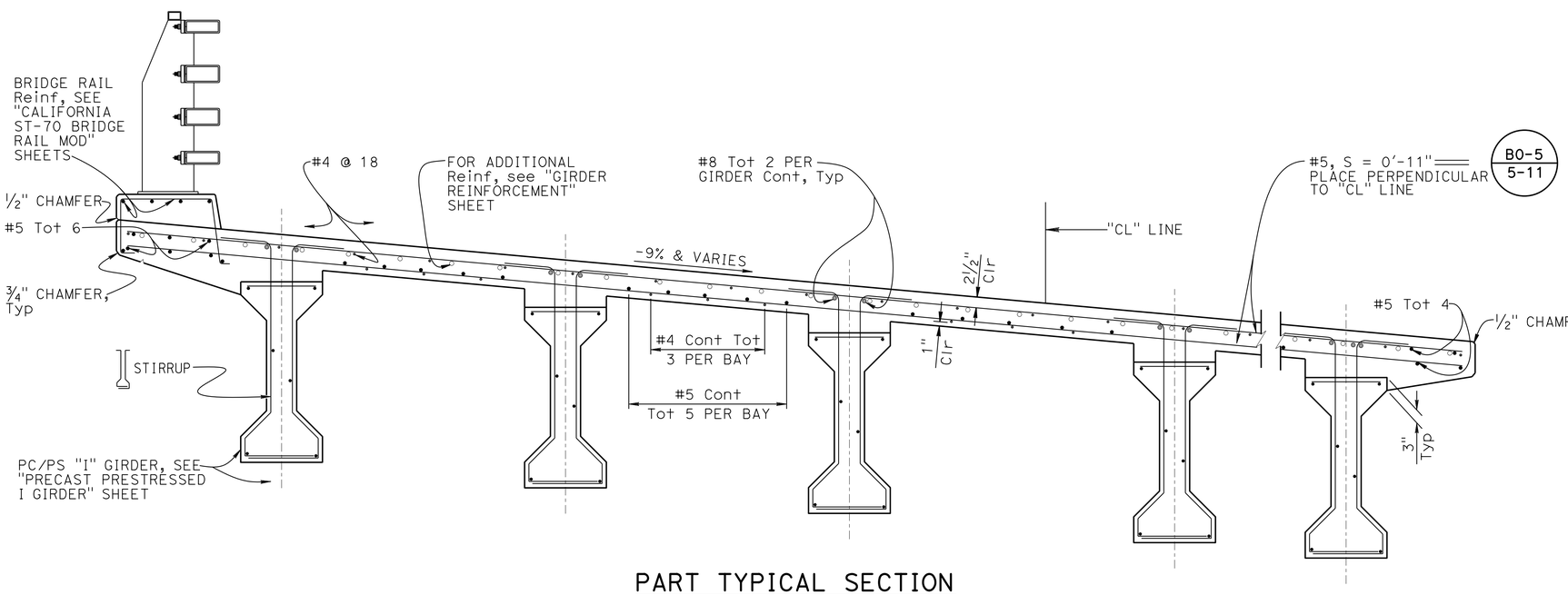

PART TYPICAL SECTION

¾" = 1'-0"

NOTES:

1. Intermediate and end diaphragms must be placed at least five days before the deck closure pour.
2. Closure pour concrete (including the intermediate diaphragm in the vicinity of the closure pour) must not be placed until 15 days after adjacent deck pours are completed.
3. For Girder spacing and deck closure pour location, see "GIRDER LAYOUT" sheet.
4. Soldier Pile Wall not shown. For wall details see "SOLDIER PILE WALL LAYOUT" sheet.
5. All deck reinforcement, including intermediate diaphragm, must be post-fabricated epoxy coated.
6. Stagger splices in adjacent reinforcing steel is not required. Lap splice length must be at least 2'-9".

	BY	CHECKED
DESIGN	H. PEREZ	M. CULLEN
DETAILS	K. CHONKRIA	M. CULLEN
QUANTITIES	RW/GRG	SM/KC

STATE OF CALIFORNIA
DEPARTMENT OF TRANSPORTATION

DIVISION OF ENGINEERING SERVICES
STRUCTURE DESIGN
DESIGN BRANCH 6

BRIDGE NO. 44-0296
POST MILE 28.28

COW CLIFFS VIADUCT
TYPICAL SECTION

STRUCTURES DESIGN DETAIL SHEET (ENGLISH) (REV. 09-01-10)

ORIGINAL SCALE IN INCHES FOR REDUCED PLANS 0 1 2 3

UNIT: 3591
PROJECT NUMBER & PHASE: 0514000072-1
CONTRACT NO.: 05-1F8904

DISREGARD PRINTS BEARING EARLIER REVISION DATES

REVISION DATES: 7-1-14 7-29-14 8-6-14 8-27-14

SHEET 19 OF 35

FILE => 44-0296-k-tsd01.dgn

USERNAME => s115755 DATE PLOTTED => 03-DEC-2014 TIME PLOTTED => 15:17

DIST	COUNTY	ROUTE	POST MILES TOTAL PROJECT	SHEET No.	TOTAL SHEETS
05	Mon	1	28.0/28.4	89	104

REGISTERED CIVIL ENGINEER 11-4-14 DATE

12-1-14
PLANS APPROVAL DATE

REGISTERED PROFESSIONAL ENGINEER HERNAN PEREZ No. C 60993 Exp. 12-31-16 CIVIL STATE OF CALIFORNIA

The State of California or its officers or agents shall not be responsible for the accuracy or completeness of scanned copies of this plan sheet.

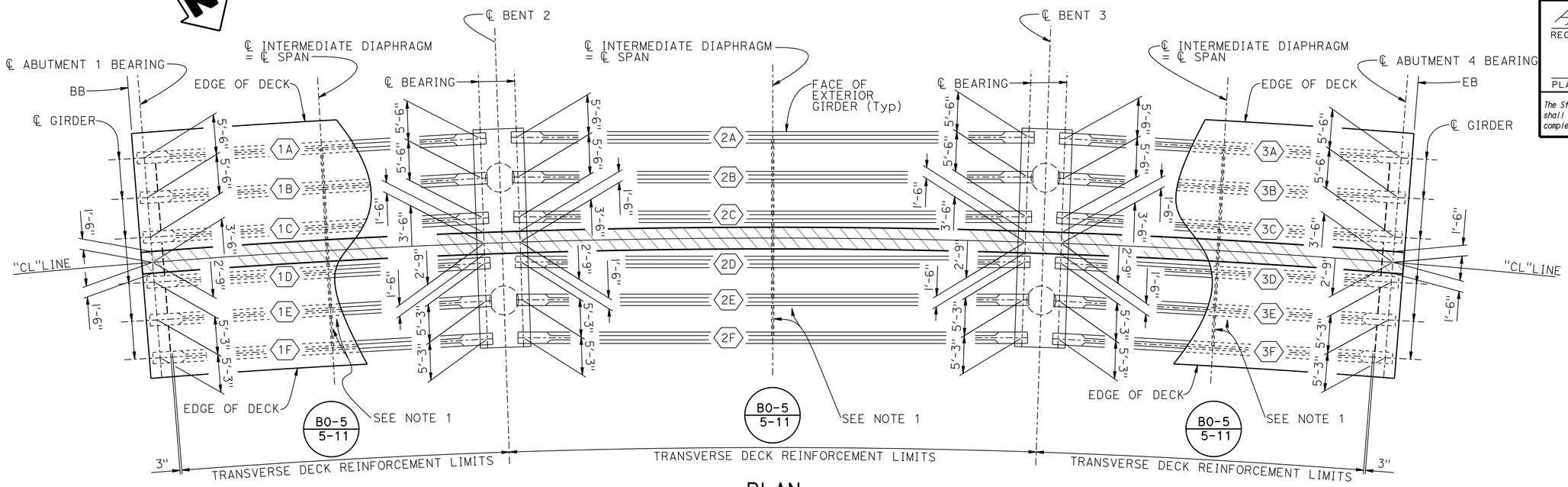

PLAN

1/8" = 1'-0"

NOTE:

1. For "Intermediate Diaphragm" details, see "PRECAST PRESTRESSED I GIRDER" sheet.

LEGEND:

Closure Pour. Place parallel to edge of deck.

GIRDER LENGTH DATA (SPAN 1)	
GIRDER DESIGNATION	GIRDER LENGTH (FT)
1A	47'-10"
1B	47'-7"
1C	47'-4"
1D	47'-1"
1E	46'-10"
1F	46'-7"

GIRDER LENGTH DATA (SPAN 2)	
GIRDER DESIGNATION	GIRDER LENGTH (FT)
2A	71'-4"
2B	71'-0"
2C	70'-7"
2D	70'-2"
2E	69'-10"
2F	69'-5"

GIRDER LENGTH DATA (SPAN 3)	
GIRDER DESIGNATION	GIRDER LENGTH (FT)
3A	47'-10"
3B	47'-7"
3C	47'-4"
3D	47'-1"
3E	46'-10"
3F	46'-7"

	BY	CHECKED
DESIGN	H. PEREZ	M. CULLEN
DETAILS	K. CHONKRIA	M. CULLEN
QUANTITIES	R. WASHINGTON	S. MORIMOTO

STATE OF CALIFORNIA
DEPARTMENT OF TRANSPORTATION

DIVISION OF ENGINEERING SERVICES
STRUCTURE DESIGN
DESIGN BRANCH 6

BRIDGE NO. 44-0296
POST MILE 28.28

COW CLIFFS VIADUCT
GIRDER LAYOUT

STRUCTURES DESIGN DETAIL SHEET (ENGLISH) (REV. 09-01-10)

ORIGINAL SCALE IN INCHES FOR REDUCED PLANS 0 1 2 3

UNIT: 3591
PROJECT NUMBER & PHASE: 0514000072-1
CONTRACT NO.: 05-1F8904

DISREGARD PRINTS BEARING EARLIER REVISION DATES

REVISION DATES 7-7-14 7-28-14 8-8-14 8-29-14

SHEET 20 OF 35

FILE => 44-0296-1-g_1001.dgn

USERNAME => s115755 DATE PLOTTED => 03-DEC-2014 TIME PLOTTED => 15:17

DIST	COUNTY	ROUTE	POST MILES TOTAL PROJECT	SHEET No.	TOTAL SHEETS
05	Mon	1	28.0/28.4	90	104

REGISTERED CIVIL ENGINEER 11-4-14 DATE

12-1-14
PLANS APPROVAL DATE

The State of California or its officers or agents shall not be responsible for the accuracy or completeness of electronic copies of this plan sheet.

REGISTERED PROFESSIONAL ENGINEER HERNAN PEREZ No. C 60993 Exp. 12-31-16 CIVIL STATE OF CALIFORNIA

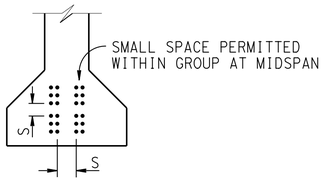

CLEARANCES FOR PRETENSIONED STRANDS

1. Strands may be bundled in groups consisting of 3 vertically, 2 horizontally and separated at the ends
2. The Min distance "S" between groups or individual strands is 1½" for ⅜" Ø strands, 1¾" for ½" Ø strands, 2" for 0.6" Ø strands
3. "S" is measured between centers of adjacent strands
4. Approval by the Engineer is required for deviation

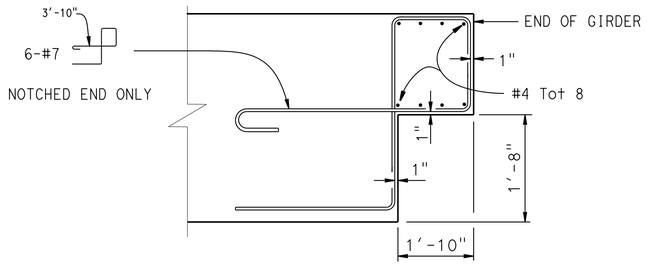

DETAIL B

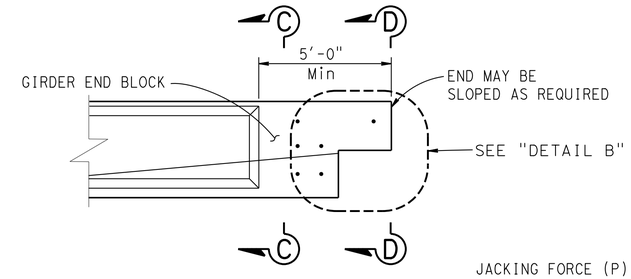

NOTCHED END DETAIL

GENERAL NOTES

JACKING FORCE (P): The jacking force required at the point of control along the span. The jacking force does not include any fabrication specific losses.

The maximum tensile stress in the prestressing steel upon release must not exceed 75% of the specified minimum ultimate tensile strength of the prestressing steel.

The maximum temporary tensile stress (jacking stress) in the prestressing steel must not exceed 80% of the specified minimum ultimate tensile strength of the prestressing steel.

CONCRETE STRENGTH: f'ci is at time of initial stressing
f'c is at 28 days

DEFLECTION COMPONENTS: Informational - to be used in setting screed line elevations

Screed line elevations for deck concrete will be determined by the Engineer.

Contractor may interpolate "P" and "X" values between limits shown, as approved by the Engineer.

All girder reinforcement must be pre-fabricated epoxy coated, except for No. 5 stirrups must be post-fabricated epoxy coated.

Girder location or designation and length	Jacking Force (P) (Kips) "X"		"Y" (in)	Concrete Strength (ksi) f'ci	f'c	Midspan Dead Load Deflection (inches) Deck	Rail
Spans 1 & 3	4"	300	17	4.0	5.0	0.25	0.01
	6"	325					
Span 2	4"	500	17	4.0	5.0	1.00	0.03
	6"	550					

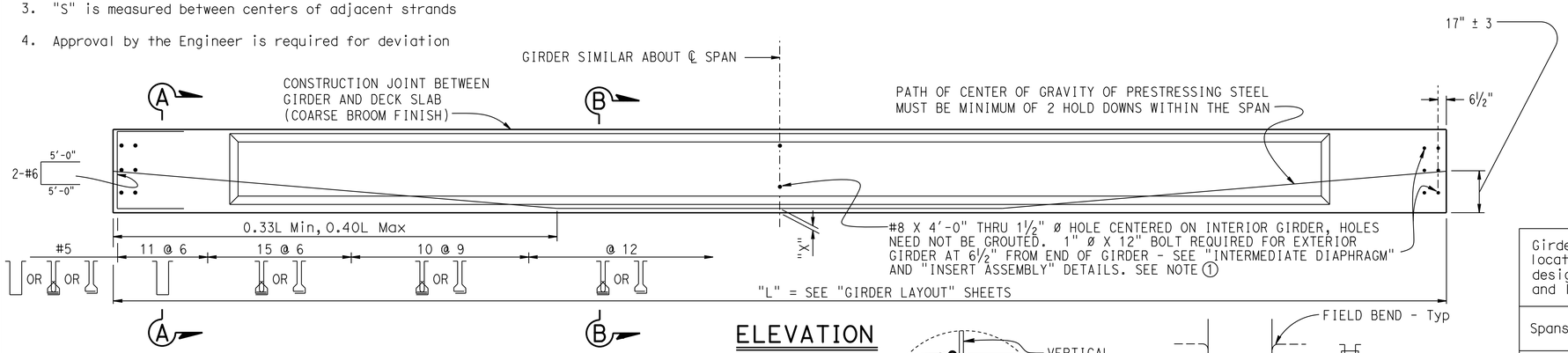

ELEVATION

NOTE:

1. For location of 1½" Ø holes at end of girder, see "ABUTMENT DETAILS NO. 1" and "BENT DETAILS NO. 1" sheets.

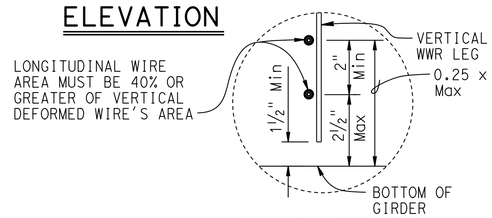

DETAIL A

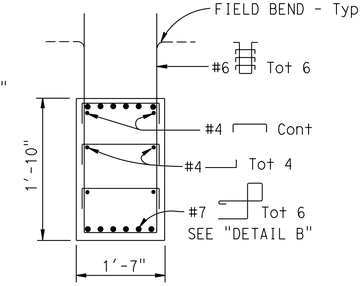

SECTION D-D
(At Bents)

#8 X 4'-0" DOWELS PLACED THROUGH 1½" Ø HOLES FORMED IN GIRDER, WHEN DIAPHRAGM IS CONTINUOUS HOLES NEED NOT BE GROUTED

1" Ø x 12" BOLTS WITH INSERT ASSEMBLIES WHEN DIAPHRAGMS ARE DISCONTINUOUS. BOLTS REQUIRED FOR EXTERIOR GIRDERS

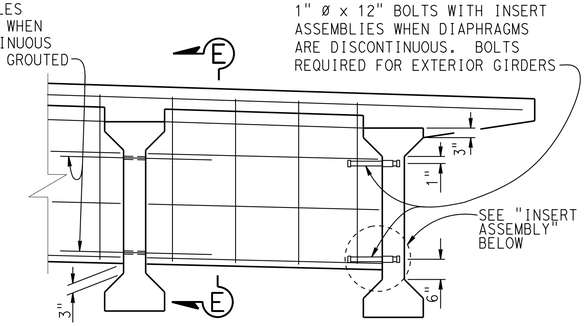

INTERMEDIATE DIAPHRAGM

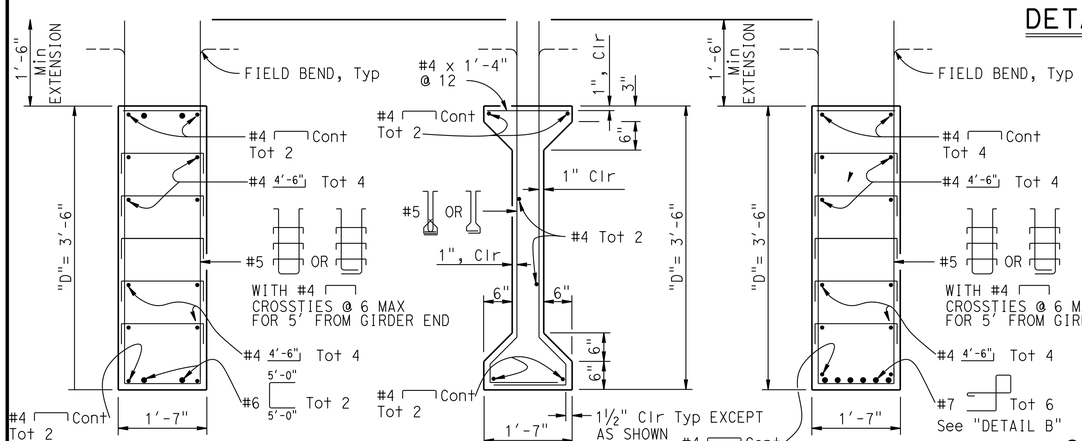

SECTION A-A
(At Abutments)

SECTION B-B
(At Midspan)

SECTION C-C
(At Bents)

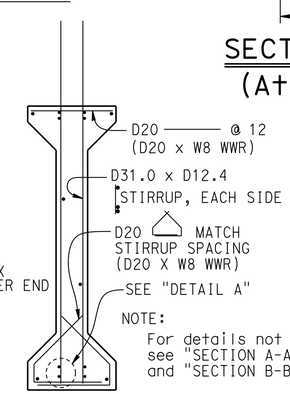

NOTE:
For details not shown, see "SECTION A-A" and "SECTION B-B"

OPTIONAL WELDED WIRE REINFORCEMENT (WWR) DETAIL

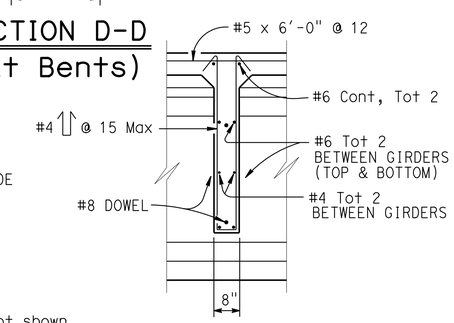

SECTION E-E

WWR NOTE: MANUFACTURER'S SHOP DRAWING MUST CONFORM TO THE REINFORCEMENT SHOWN ON THIS SHEET AS NOTED AND THE SPECIAL PROVISIONS

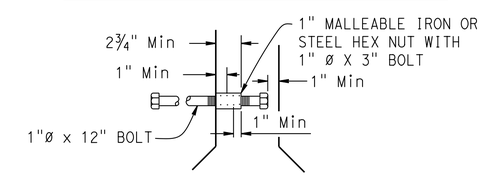

INSERT ASSEMBLY
NO SCALE

DESIGN	BY H. PEREZ	CHECKED M. CULLEN	
DETAILS	BY K. CHONKRIA	CHECKED M. CULLEN	
QUANTITIES	BY R. WASHINGTON	CHECKED S. MORIMOTO	

STATE OF CALIFORNIA
DEPARTMENT OF TRANSPORTATION

DIVISION OF ENGINEERING SERVICES
STRUCTURE DESIGN
DESIGN BRANCH 6

BRIDGE NO. 44-0296
POST MILE 28.28

COW CLIFFS VIADUCT
PRECAST PRESTRESSED I GIRDER

STRUCTURES DESIGN DETAIL SHEET (ENGLISH) (REV. 09-01-10)

ORIGINAL SCALE IN INCHES FOR REDUCED PLANS 0 1 2 3

UNIT: 3591
PROJECT NUMBER & PHASE: 0514000072-1
CONTRACT NO.: 05-1F8904

DISREGARD PRINTS BEARING EARLIER REVISION DATES

REVISION DATES 7-14-14 10-8-14 10-31-14

SHEET 21 OF 35

FILE => 44-0296-1-ppig.dgn

USERNAME => s115755 DATE PLOTTED => 03-DEC-2014 TIME PLOTTED => 15:17

DIST	COUNTY	ROUTE	POST MILES TOTAL PROJECT	SHEET No.	TOTAL SHEETS
05	Mon	1	28.0/28.4	91	104

Hernan Perez 11-4-14
REGISTERED CIVIL ENGINEER DATE

12-1-14
PLANS APPROVAL DATE

REGISTERED PROFESSIONAL ENGINEER
HERNAN PEREZ
No. C 60993
Exp. 12-31-16
CIVIL
STATE OF CALIFORNIA

The State of California or its officers or agents shall not be responsible for the accuracy or completeness of scanned copies of this plan sheet.

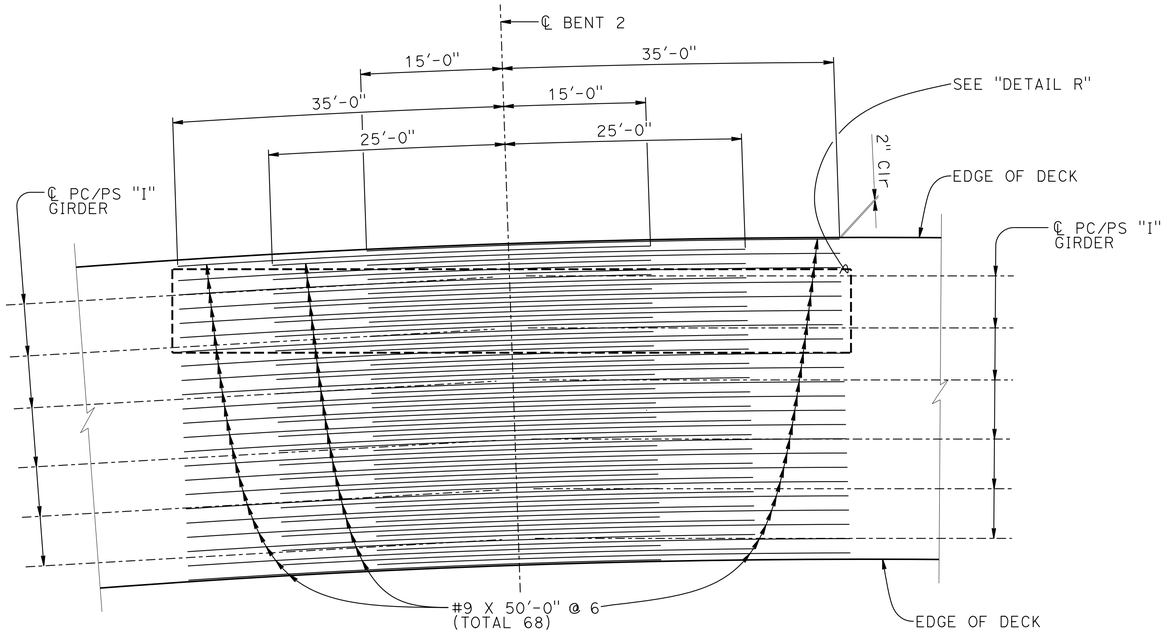

ADDITIONAL TOP OF DECK REINFORCEMENT

1/8" = 1'-0"

Notes:

1. Bent 2 shown, Bent 3 similar.
2. Additional mild steel may be moved to avoid continuous reinforcement.
3. For continuous reinforcement details, see "TYPICAL SECTION" sheet.
4. No lap splices allowed.

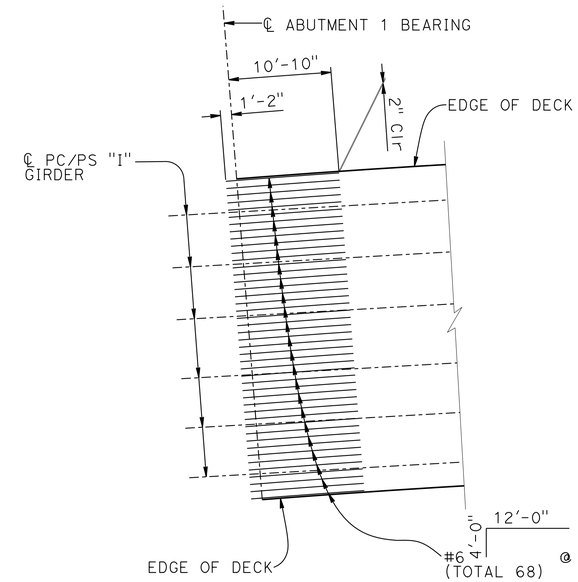

Note:

Abutment 1 shown, Abutment 4 similar.

ADDITIONAL TOP OF DECK REINFORCEMENT

1/8" = 1'-0"

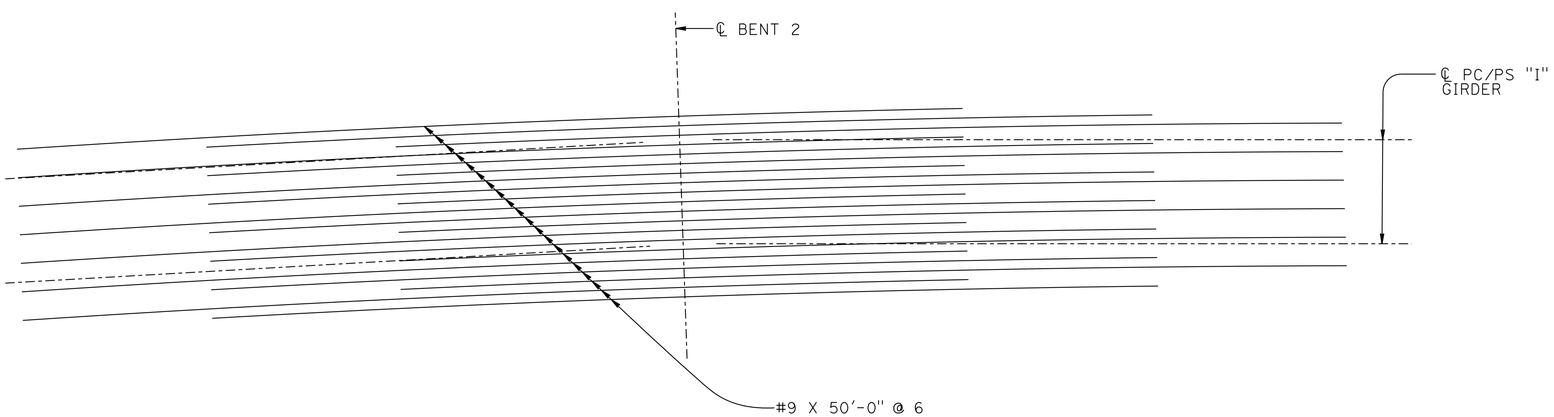

DETAIL R

1/4" = 1'-0"

DESIGN	BY H. PEREZ	CHECKED M. CULLEN	
DETAILS	BY K. CHONKRIA	CHECKED M. CULLEN	
QUANTITIES	BY G. REYES-GUTIERREZ	CHECKED K. CHONKRIA	

STATE OF CALIFORNIA
DEPARTMENT OF TRANSPORTATION

DIVISION OF ENGINEERING SERVICES
STRUCTURE DESIGN
DESIGN BRANCH 6

BRIDGE NO. 44-0296
POST MILE 28.28

COW CLIFFS VIADUCT
GIRDER REINFORCEMENT

STRUCTURES DESIGN DETAIL SHEET (ENGLISH) (REV. 09-01-10)

ORIGINAL SCALE IN INCHES FOR REDUCED PLANS 0 1 2 3

UNIT: 3591
PROJECT NUMBER & PHASE: 0514000072-1
CONTRACT NO.: 05-1F8904

DISREGARD PRINTS BEARING EARLIER REVISION DATES

REVISION DATES: 7-8-14 8-8-14 8-28-14 9-3-14

SHEET 22 OF 35

FILE => 44-0296-o-gir_rf01.dgn

USERNAME => s115755 DATE PLOTTED => 03-DEC-2014 TIME PLOTTED => 15:17

DIST	COUNTY	ROUTE	POST MILES TOTAL PROJECT	SHEET No.	TOTAL SHEETS
05	Mon	1	28.0/28.4	92	104

REGISTERED CIVIL ENGINEER 11-4-14 DATE

12-1-14
PLANS APPROVAL DATE

REGISTERED PROFESSIONAL ENGINEER HERNAN PEREZ No. C 60993 Exp. 12-31-16 CIVIL STATE OF CALIFORNIA

The State of California or its officers or agents shall not be responsible for the accuracy or completeness of scanned copies of this plan sheet.

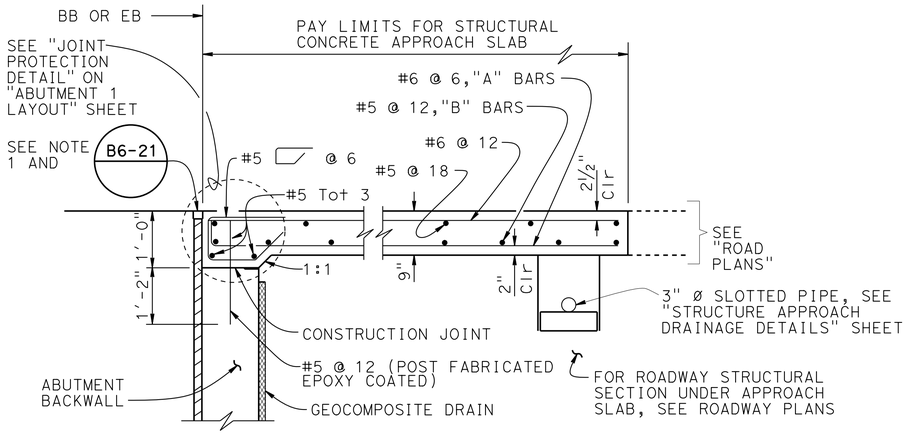

MR ≤ 2"

SEAT TYPE ABUTMENT
SECTION A-A
¾" = 1'-0"

NOTE:
1. All structure approach slab reinforcement must be epoxy coated

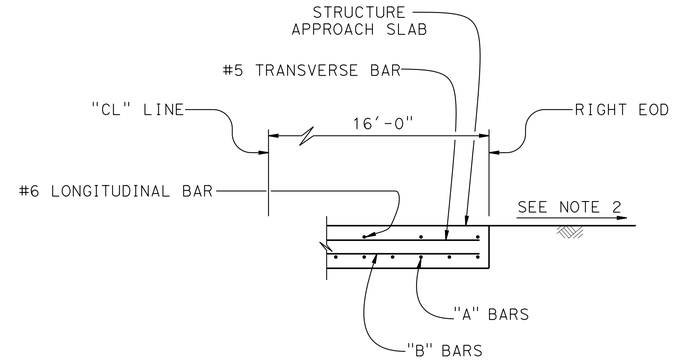

SECTION C-C
¾" = 1'-0"

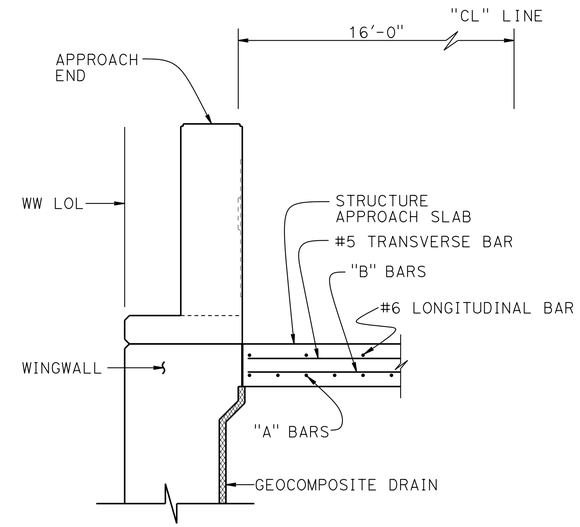

SECTION B-B
¾" = 1'-0"

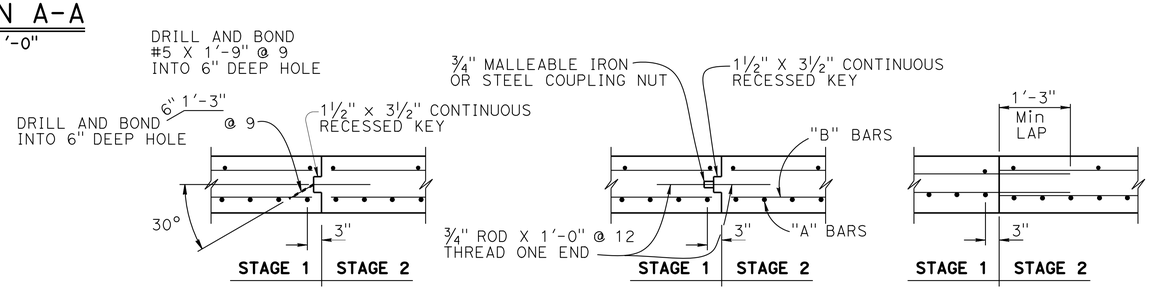

LONGITUDINAL CONSTRUCTION JOINT ALTERNATIVES
¾" = 1'-0"

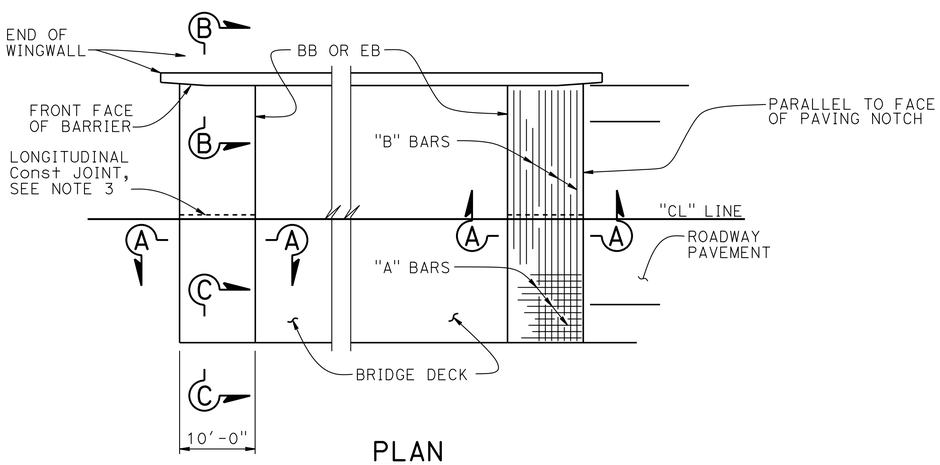

PLAN
NO SCALE

NOTES:
1. Adjust bar reinforcement to clear a sawcut for sealed joint.
2. For grade and profile, see Roadway Plans.
3. Longitudinal construction joints, when permitted by the Engineer, must be located on lane lines.
4. At the Contractor's option, approach slab transverse reinforcement may be placed parallel to paving notch. Spacing of transverse reinforcement is measured along ℄ roadway.
5. For drainage details, see "STRUCTURE APPROACH DRAINAGE DETAILS" sheet.

	BY	CHECKED
DESIGN	H. PEREZ	M. CULLEN
DETAILS	K. CHONKRIA	M. CULLEN
QUANTITIES	G. REYES-GUTIERREZ	K. CHONKRIA

STATE OF CALIFORNIA
DEPARTMENT OF TRANSPORTATION

DIVISION OF ENGINEERING SERVICES
STRUCTURE DESIGN
DESIGN BRANCH 6

BRIDGE NO. 44-0296
POST MILE 28.28

COW CLIFFS VIADUCT
STRUCTURE APPROACH TYPE EQ (10) MOD

STRUCTURES DESIGN DETAIL SHEET (ENGLISH) (REV. 09-01-10)

ORIGINAL SCALE IN INCHES FOR REDUCED PLANS 0 1 2 3

UNIT: 3591
PROJECT NUMBER & PHASE: 0514000072-1
CONTRACT NO.: 05-1F8904

DISREGARD PRINTS BEARING EARLIER REVISION DATES

REVISION DATES: 6-6-14 | 10-31-14 | 8-29-14

SHEET 23 OF 35

FILE => 44-0296-s-sadd01.dgn

USERNAME => s115255 DATE PLOTTED => 03-DEC-2014 TIME PLOTTED => 15:17

DIST	COUNTY	ROUTE	POST MILES TOTAL PROJECT	SHEET No.	TOTAL SHEETS
05	Mon	1	28.0/28.4	93	104

REGISTERED CIVIL ENGINEER 11-4-14 DATE

12-1-14
PLANS APPROVAL DATE

REGISTERED PROFESSIONAL ENGINEER HERNAN PEREZ No. C 60993 Exp. 12-31-16 CIVIL STATE OF CALIFORNIA

The State of California or its officers or agents shall not be responsible for the accuracy or completeness of electronic copies of this plan sheet.

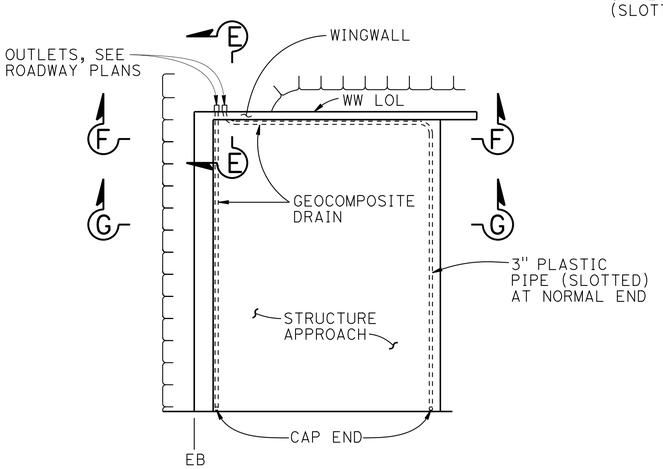

NOTE: Abutment 4 shown, Abutment 1 similar

TYPICAL PLAN

No Scale

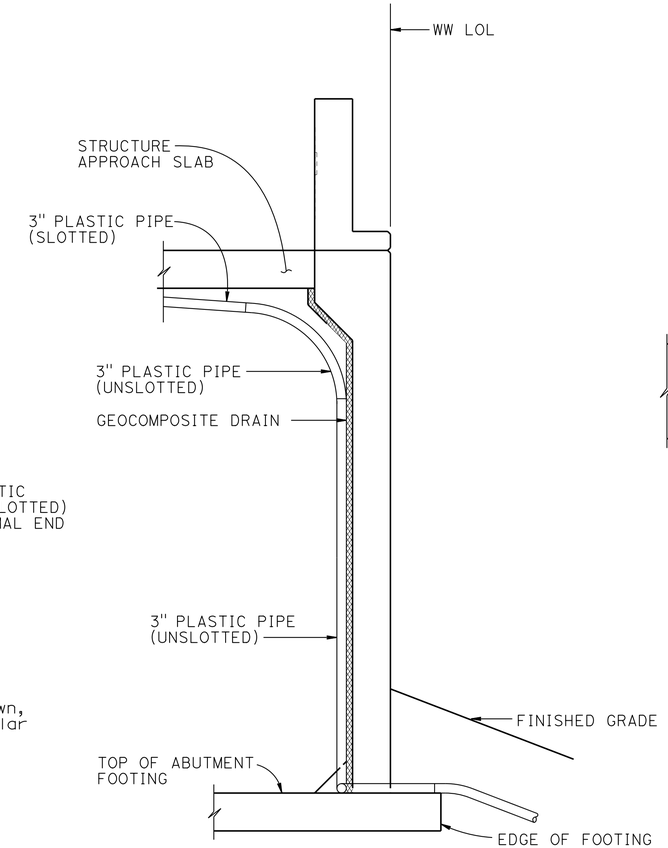

SECTION E-E

No Scale

NOTE: Bends and junctions in 3" plastic pipe are 30" radius Min

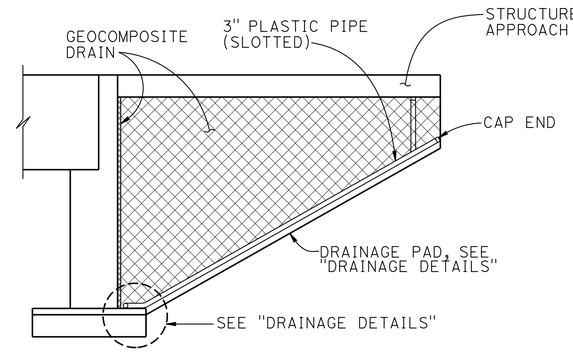

CANTILEVER WINGWALL

SECTION F-F

No Scale

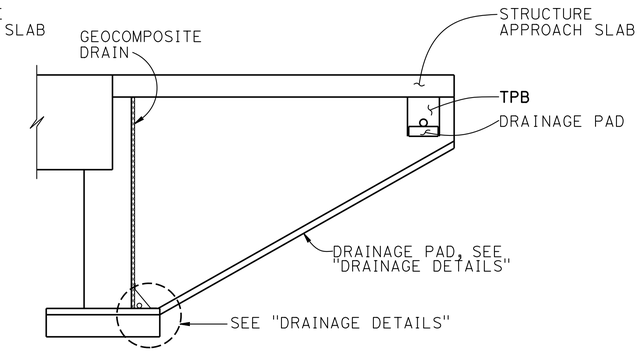

CANTILEVER WINGWALL

SECTION G-G

No Scale

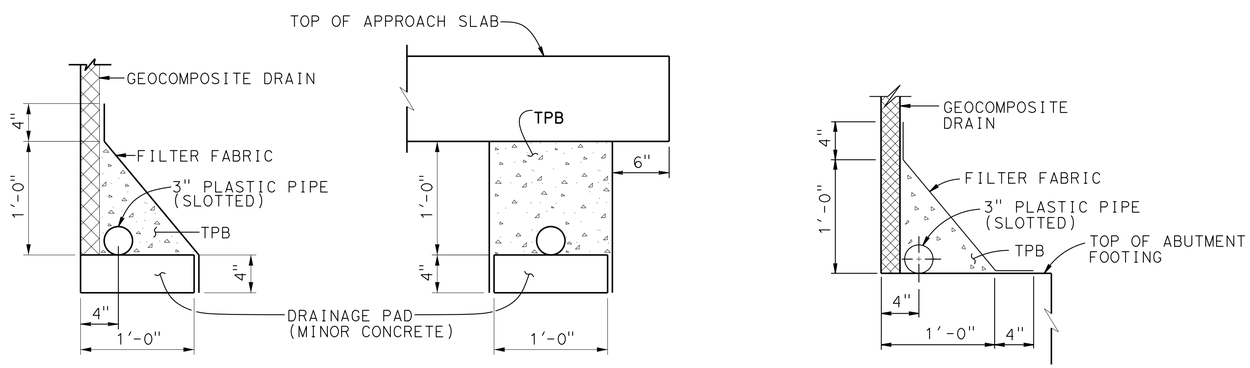

DRAINAGE DETAILS

1½" = 1'-0"

	BY	CHECKED
DESIGN	H. PEREZ	M. CULLEN
DETAILS	K. CHONKRIA	M. CULLEN
QUANTITIES	R. WASHINGTON	S. MORIMOTO

STATE OF CALIFORNIA
DEPARTMENT OF TRANSPORTATION

DIVISION OF ENGINEERING SERVICES
STRUCTURE DESIGN
DESIGN BRANCH 6

BRIDGE NO. 44-0296
POST MILE 28.28

COW CLIFFS VIADUCT

STRUCTURE APPROACH DRAINAGE DETAILS

STRUCTURES DESIGN DETAIL SHEET (ENGLISH) (REV. 09-01-10)

ORIGINAL SCALE IN INCHES FOR REDUCED PLANS 0 1 2 3

UNIT: 3591
PROJECT NUMBER & PHASE: 0514000072-1
CONTRACT NO.: 05-1F8904

DISREGARD PRINTS BEARING EARLIER REVISION DATES

REVISION DATES: 6-6-14 10-23-14 8-29-14

SHEET 24 OF 35

FILE => 44-0296-s-sadd02.dgn

USERNAME => s115755 DATE PLOTTED => 03-DEC-2014 TIME PLOTTED => 15:17

DIST	COUNTY	ROUTE	POST MILES TOTAL PROJECT	SHEET No.	TOTAL SHEETS
05	Mon	1	28.0/28.4	94	104

REGISTERED CIVIL ENGINEER — DATE 11-4-14

12-1-14
PLANS APPROVAL DATE

REGISTERED PROFESSIONAL ENGINEER — HERNAN PEREZ — No. C 60993 — Exp. 12-31-16 — CIVIL — STATE OF CALIFORNIA

The State of California or its officers or agents shall not be responsible for the accuracy or completeness of electronic copies of this plan sheet.

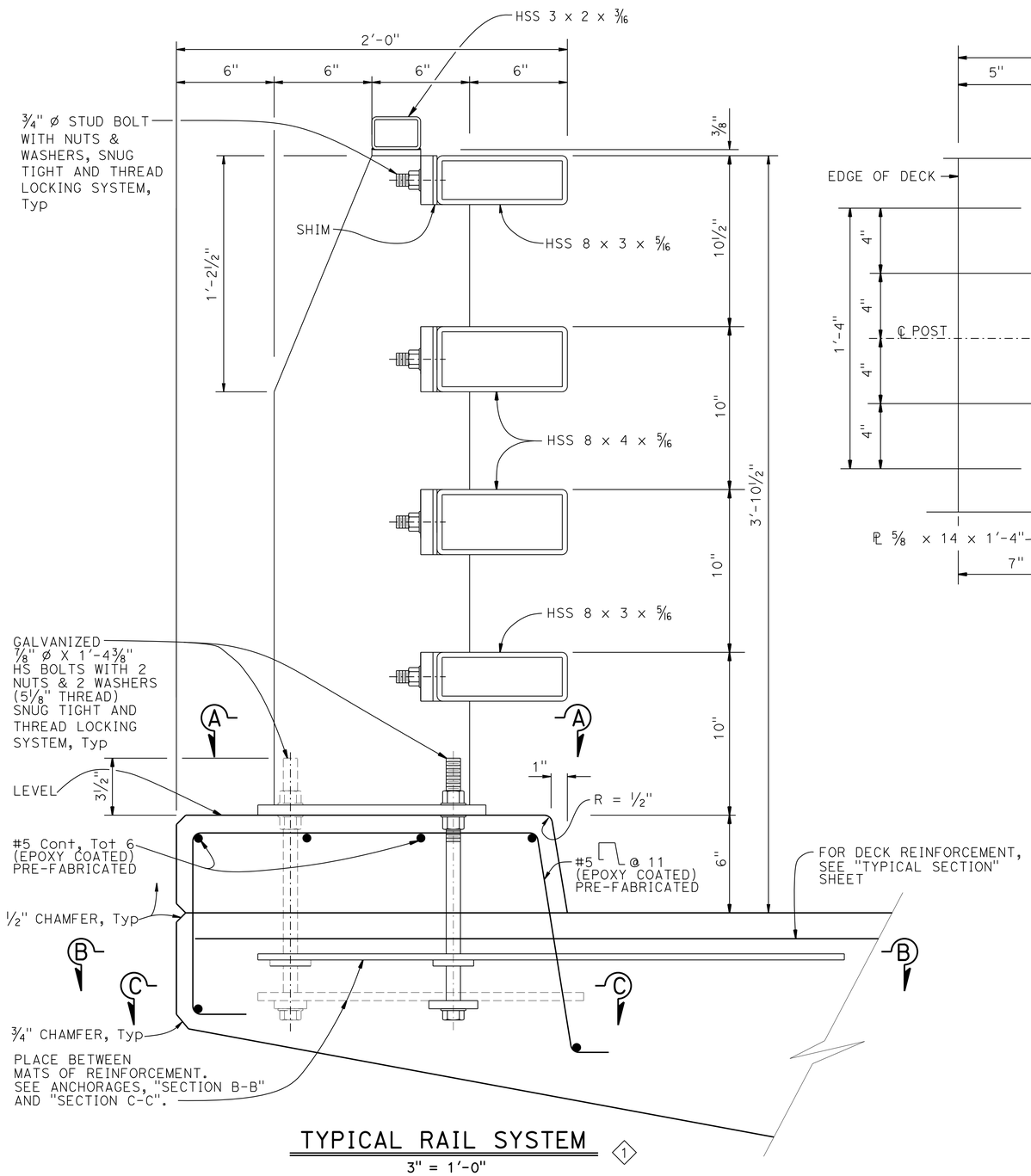

TYPICAL RAIL SYSTEM ⟨1⟩

3" = 1'-0"

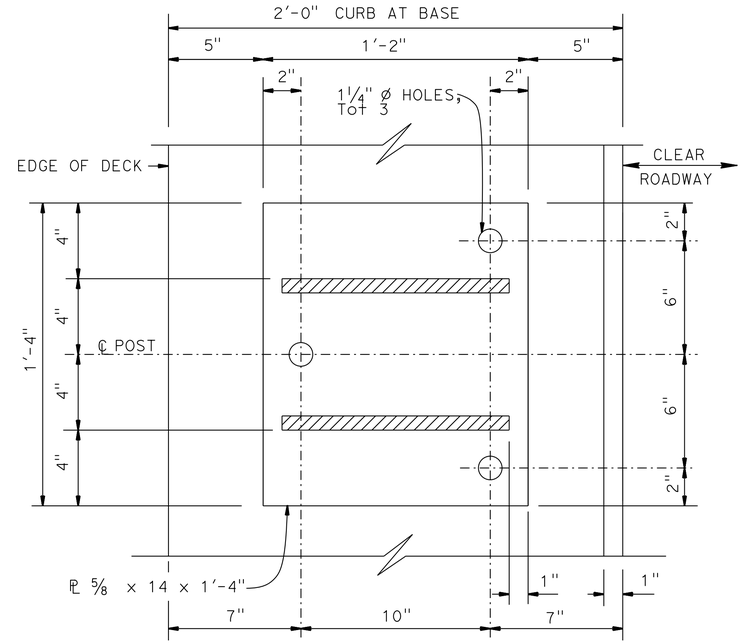

SECTION A-A

3" = 1'-0"

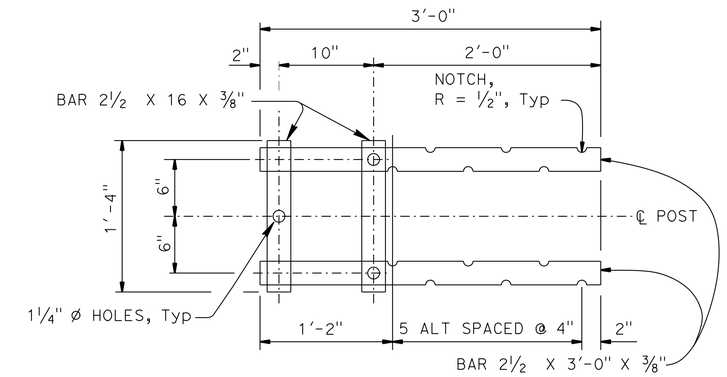

TOP ANCHORAGE

SECTION B-B

1 1/2" = 1'-0"

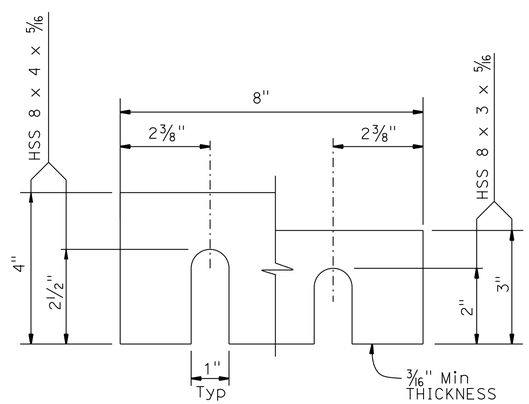

SHIMS REQUIRED FOR ALL RAILS

6" = 1'-0"

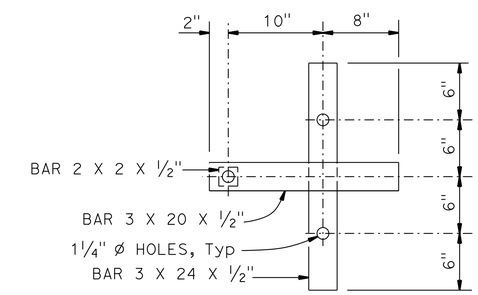

LOWER ANCHORAGE

SECTION C-C

1 1/2" = 1'-0"

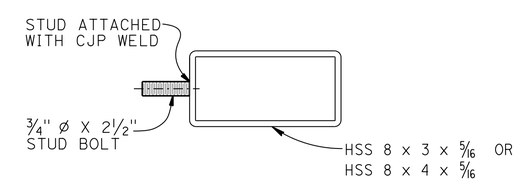

SECTION AT POST

3" = 1'-0"

REVISED STANDARD DRAWING

FILE NO. **xs16-130-1**

APPROVAL DATE July 2014

⟨1⟩ Revised Detail

STATE OF **CALIFORNIA** DEPARTMENT OF TRANSPORTATION

DIVISION OF ENGINEERING SERVICES

BRIDGE NO. 44-0296

POST MILE 28.28

COW CLIFFS VIADUCT

CALIFORNIA ST-70 BRIDGE RAIL (MOD)

DETAILS NO. 1

DS OSD 2147A (ENGLISH STANDARD DRAWING "XS" BORDER REV. (02-02-11)

ORIGINAL SCALE IN INCHES FOR REDUCED PLANS 0 1 2 3

UNIT: 3591
PROJECT NUMBER & PHASE: 0514000072-1
CONTRACT NO.: 05-1F8904

DISREGARD PRINTS BEARING EARLIER REVISION DATES

REVISION DATES: 5-23-14 | 9-16-14 | 9-1-14

SHEET 25 OF 35

FILE => 44-0296-w-csdt-01.dgn

USERNAME => s115755 DATE PLOTTED => 03-DEC-2014 TIME PLOTTED => 15:17

DIST	COUNTY	ROUTE	POST MILES TOTAL PROJECT	SHEET No.	TOTAL SHEETS
05	Mon	1	28.0/28.4	95	104

REGISTERED CIVIL ENGINEER 11-4-14 DATE

12-1-14
PLANS APPROVAL DATE

REGISTERED PROFESSIONAL ENGINEER HERNAN PEREZ No. C 60993 Exp. 12-31-16 CIVIL STATE OF CALIFORNIA

The State of California or its officers or agents shall not be responsible for the accuracy or completeness of electronic copies of this plan sheet.

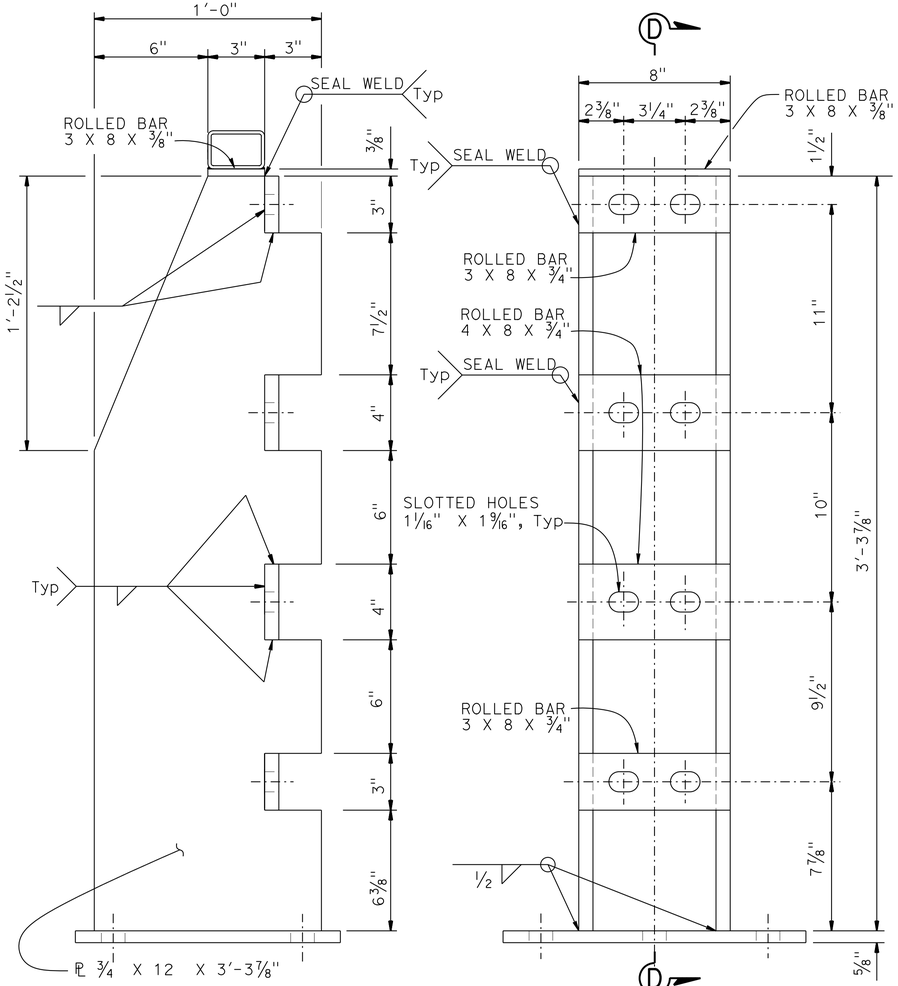

SECTION D-D ◇1
3" = 1'-0"

ELEVATION
3" = 1'-0"

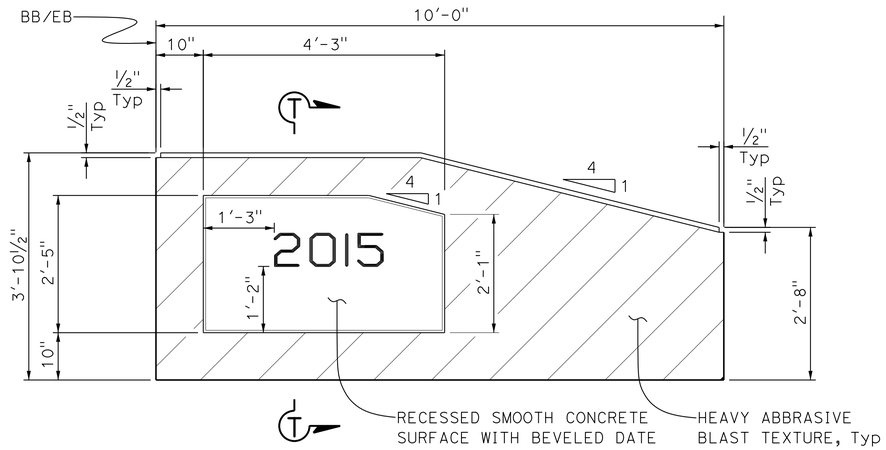

ELEVATION ◇2
NO SCALE

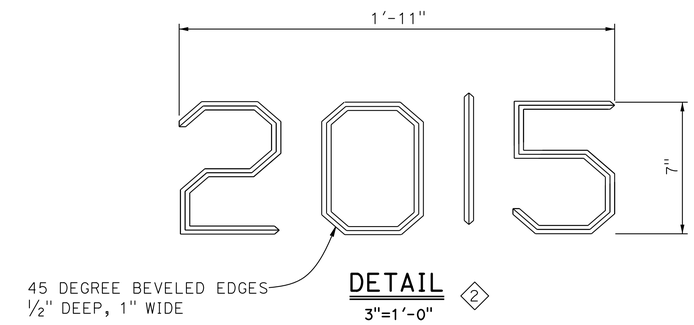

DETAIL ◇2
3"=1'-0"

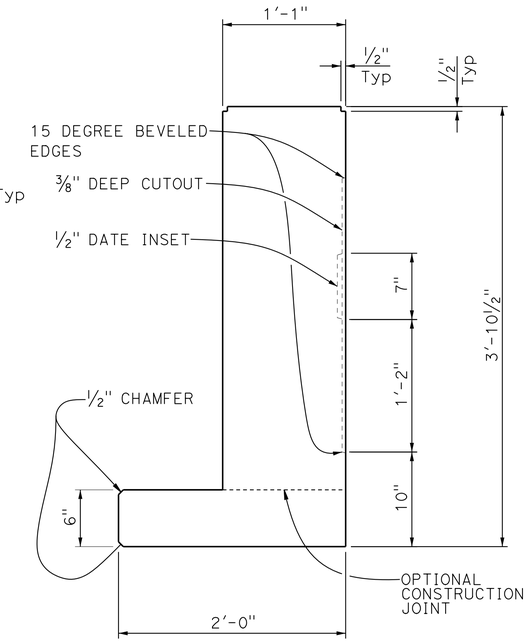

SECTION T-T ◇2
1 1/2" = 1'-0"

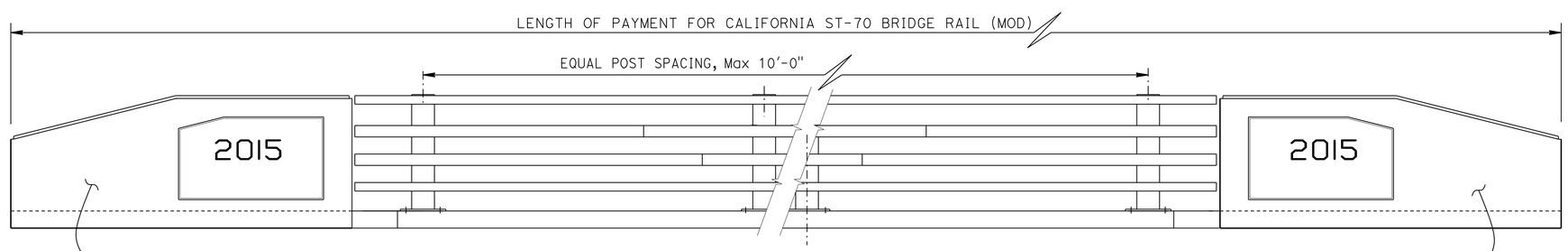

RAIL POST LAYOUT W/O MEDIA
RAIL TWO WAY TRAFFIC ON BRIDGE ◇1
1/2" = 1'-0"

REVISED STANDARD DRAWING

FILE NO. xs16-130-2

APPROVAL DATE July 2014

◇1 Revised Detail
◇2 Added Detail

STATE OF CALIFORNIA
DEPARTMENT OF TRANSPORTATION

DIVISION OF ENGINEERING SERVICES

BRIDGE NO. 44-0296
POST MILE 28.28

COW CLIFFS VIADUCT
CALIFORNIA ST-70 BRIDGE RAIL (MOD)
DETAILS NO. 2

DS OSD 2147A (ENGLISH STANDARD DRAWING "XS" BORDER REV. (02-02-11)

ORIGINAL SCALE IN INCHES FOR REDUCED PLANS 0 1 2 3

UNIT: 3591
PROJECT NUMBER & PHASE: 0514000072-1
CONTRACT NO.: 05-1F8904

DISREGARD PRINTS BEARING EARLIER REVISION DATES

REVISION DATES: 5-28-14 9-12-14 10-31-14

SHEET 26 OF 35

FILE => 44-0296-w-csdt-02.dgn

USERNAME => s115755 DATE PLOTTED => 03-DEC-2014 TIME PLOTTED => 15:17

DIST	COUNTY	ROUTE	POST MILES TOTAL PROJECT	SHEET No.	TOTAL SHEETS
05	Mon	1	28.0/28.4	96	104

REGISTERED CIVIL ENGINEER 11-4-14 DATE

12-1-14
PLANS APPROVAL DATE

REGISTERED PROFESSIONAL ENGINEER HERNAN PEREZ No. C 60993 Exp. 12-31-16 CIVIL STATE OF CALIFORNIA

The State of California or its officers or agents shall not be responsible for the accuracy or completeness of electronic copies of this plan sheet.

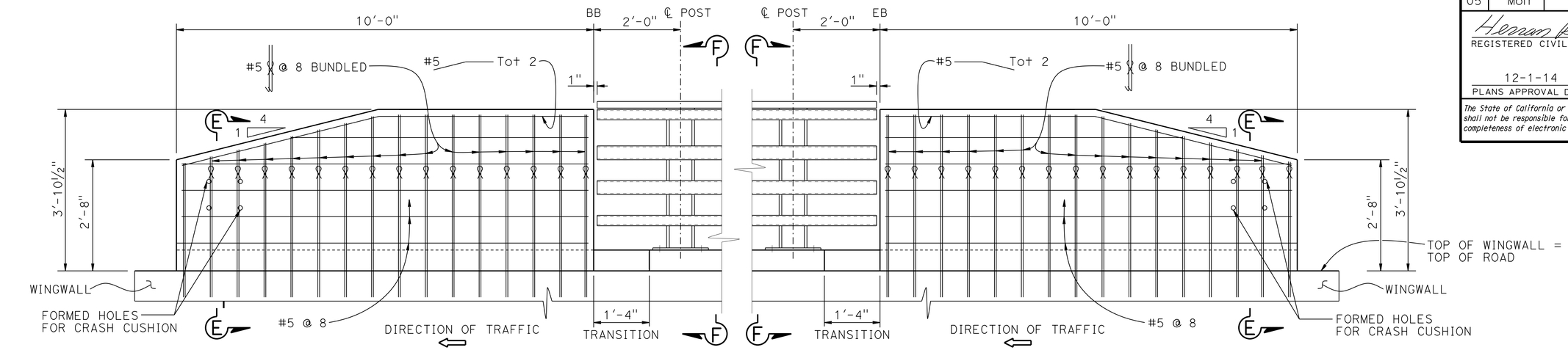

ELEVATION 1

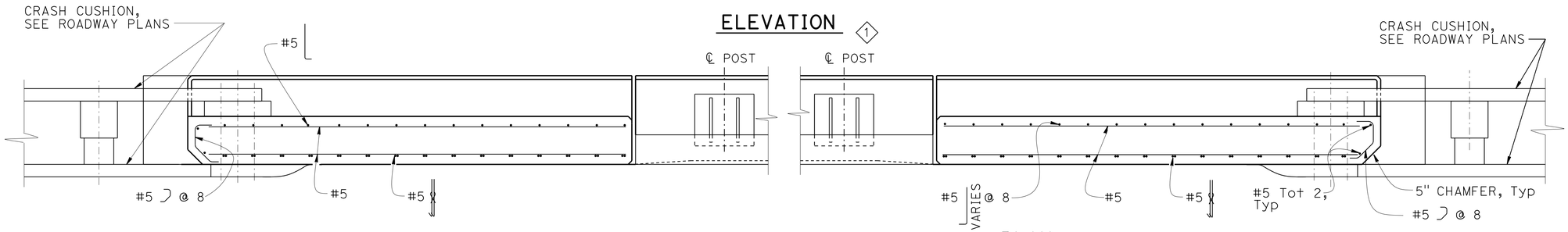

PLAN

END BLOCK DETAIL 1
NO SCALE

PLAN

END BLOCK DETAIL 1
NO SCALE

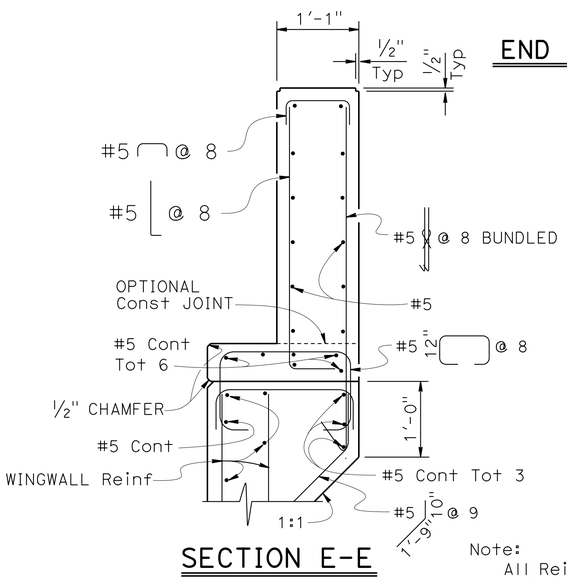

SECTION E-E
NO SCALE

Note:
All Reinf in the approach and departure end blocks must be pre-fabricated epoxy-coated reinforcement.

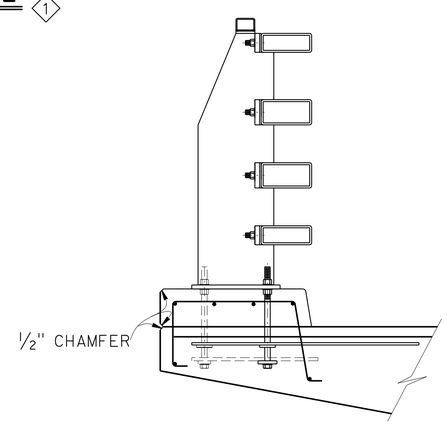

NOTE:
For details not shown, see "DETAILS No. 1" sheet

SECTION F-F 1
1" = 1'-0"

NOTES:

1. Anchor bolts may be tack welded (shop or field) to anchorage.
2. Each rail length must be continuous over a minimum of two posts.
3. The contractor must check that the tubular sleeves splices conform to the dimensions indicated to assure proper clearance.
4. Except for expansion splices, not more than one splice is permitted per same side of post.
5. All rough edges on posts and rails must be ground smooth.

REVISED STANDARD DRAWING

FILE NO. xs16-130-3

APPROVAL DATE July 2014

1 Revised Detail

STATE OF CALIFORNIA DEPARTMENT OF TRANSPORTATION

DIVISION OF ENGINEERING SERVICES

BRIDGE NO. 44-0296
POST MILE 28.28

COW CLIFFS VIADUCT

CALIFORNIA ST-70 BRIDGE RAIL (MOD)

DETAILS NO. 3

DS OSD 2147A (ENGLISH STANDARD DRAWING "XS" BORDER REV. (02-02-11)

ORIGINAL SCALE IN INCHES FOR REDUCED PLANS 0 1 2 3

UNIT: 3591
PROJECT NUMBER & PHASE: 0514000072-1
CONTRACT NO.: 05-1F8904

DISREGARD PRINTS BEARING EARLIER REVISION DATES

REVISION DATES: 5-28-14 11-4-14 10-31-14

SHEET 27 OF 35

FILE => 44-0296-w-csdt-03.dgn

USERNAME => s115755 DATE PLOTTED => 03-DEC-2014 TIME PLOTTED => 15:17

DIST	COUNTY	ROUTE	POST MILES TOTAL PROJECT	SHEET No.	TOTAL SHEETS
05	Mon	1	28.0/28.4	97	104

REGISTERED CIVIL ENGINEER 11-4-14 DATE

12-1-14
PLANS APPROVAL DATE

REGISTERED PROFESSIONAL ENGINEER HERNAN PEREZ No. C 60993 Exp. 12-31-16 CIVIL STATE OF CALIFORNIA

The State of California or its officers or agents shall not be responsible for the accuracy or completeness of electronic copies of this plan sheet.

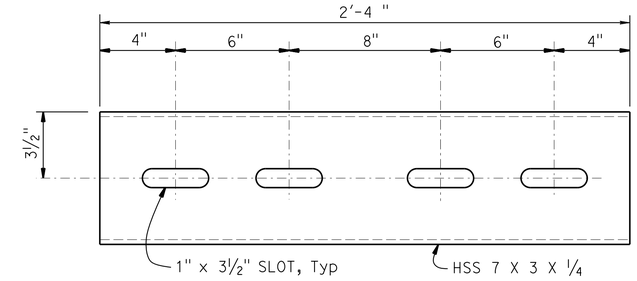

STANDARD SLEEVE DETAIL

3" = 1'-0"
(FOR HSS 8 X 4 X 5/16 RAIL)

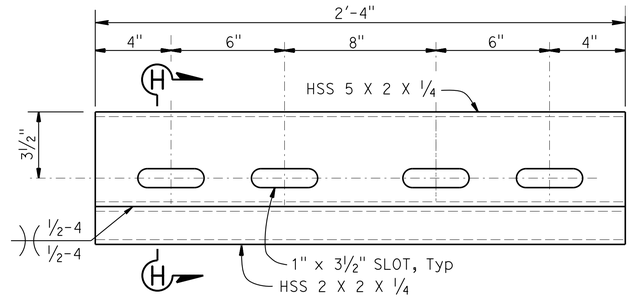

STANDARD SLEEVE DETAIL

3" = 1'-0"
(FOR HSS 8 X 3 X 5/16 RAIL)

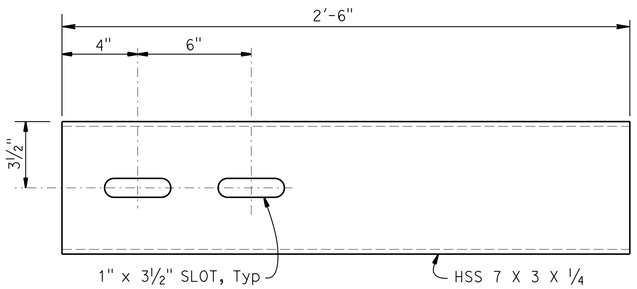

EXPANSION SLEEVE DETAIL

3" = 1'-0"
(FOR HSS 8 X 4 X 5/16 RAIL)

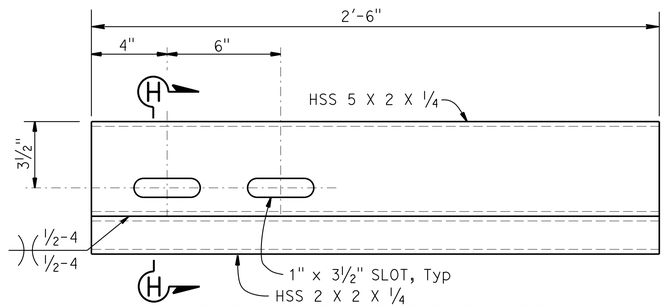

EXPANSION SLEEVE DETAIL

3" = 1'-0"
(FOR HSS 8 X 3 X 5/16 RAIL)

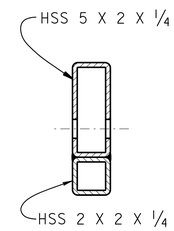

SECTION H-H

3" = 1'-0"

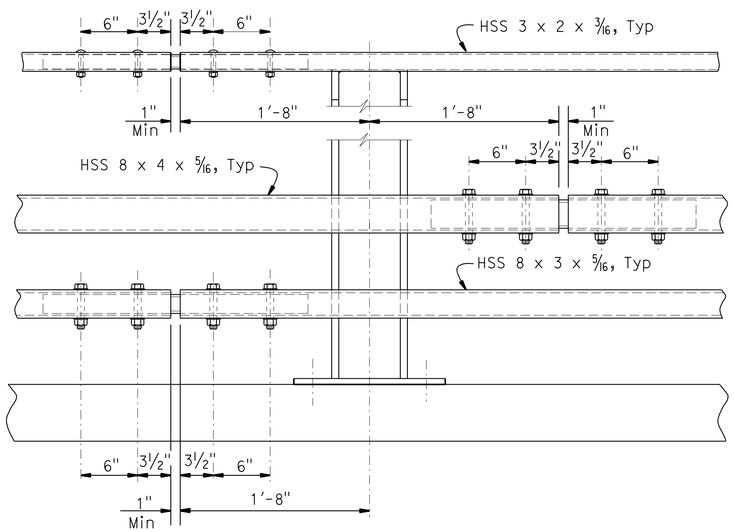

STANDARD SPLICE ◇1

1½" = 1'-0"

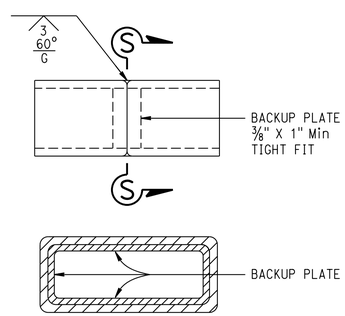

SECTION S-S

ALTERNATE TUBE WELDED SPLICE

3" = 1'-0"

NOTES:
HS bolts with washers, snug tightened and use locking system.
Use ¾" * X 5¼ (HSS 8 X 4 X 5/16)
Use ¾" * X 4¼ (HSS 8 X 3 X 5/16)

Not all rails shown for clarity

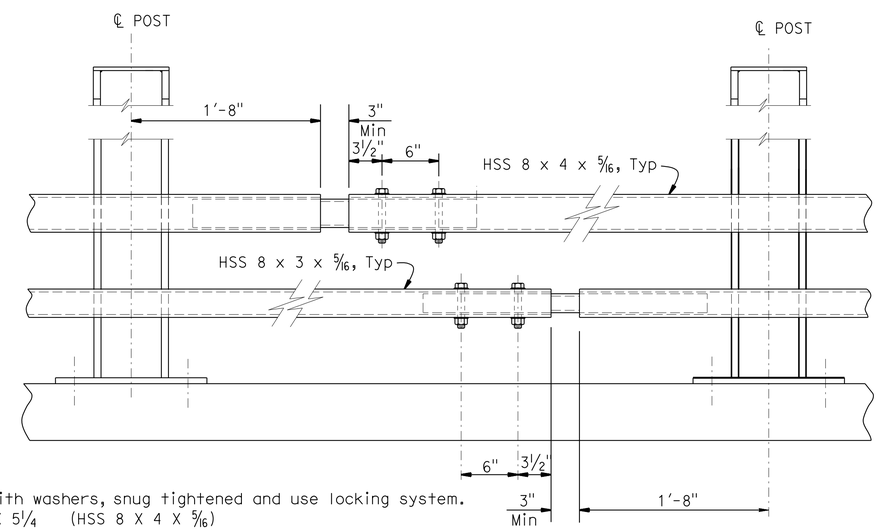

EXPANSION SPLICE ◇2

1½" = 1'-0"

REVISED STANDARD DRAWING		
FILE NO. xs16-130-4	APPROVAL DATE July 2014	◇1 Revised Detail ◇2 Revised Note

STATE OF CALIFORNIA
DEPARTMENT OF TRANSPORTATION

DIVISION OF ENGINEERING SERVICES

BRIDGE NO. 44-0296
POST MILE 28.28

COW CLIFFS VIADUCT
CALIFORNIA ST-70 BRIDGE RAIL (MOD)
DETAILS NO. 4

DS OSD 2147A (ENGLISH STANDARD DRAWING "XS" BORDER REV. (02-02-11)

ORIGINAL SCALE IN INCHES FOR REDUCED PLANS 0 1 2 3

UNIT: 3591
PROJECT NUMBER & PHASE: 0514000072-1
CONTRACT NO.: 05-1F8904

DISREGARD PRINTS BEARING EARLIER REVISION DATES

REVISION DATES: 5-28-14 6-3-14 7-25-14 9-3-14

SHEET 28 OF 35

FILE => 44-0296-w-csdt-04.dgn

USERNAME => s115755 DATE PLOTTED => 03-DEC-2014 TIME PLOTTED => 15:17

DIST	COUNTY	ROUTE	POST MILES TOTAL PROJECT	SHEET No.	TOTAL SHEETS
05	Mon	1	28.0/28.4	98	104

REGISTERED CIVIL ENGINEER 11-4-14 DATE

12-1-14
PLANS APPROVAL DATE

REGISTERED PROFESSIONAL ENGINEER HERNAN PEREZ No. C 60993 Exp. 12-31-16 CIVIL STATE OF CALIFORNIA

The State of California or its officers or agents shall not be responsible for the accuracy or completeness of scanned copies of this plan sheet.

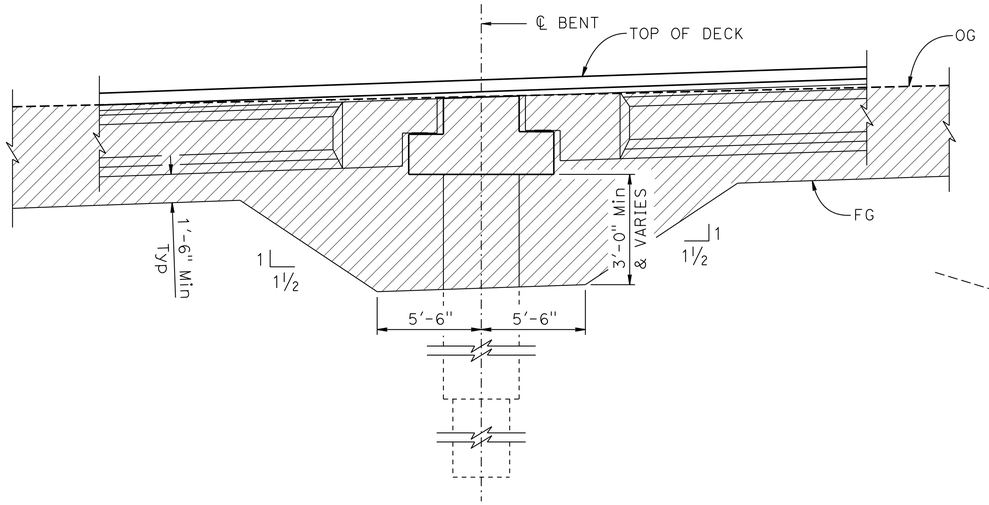

MIRRORED ELEVATION
¼"=1'-0"

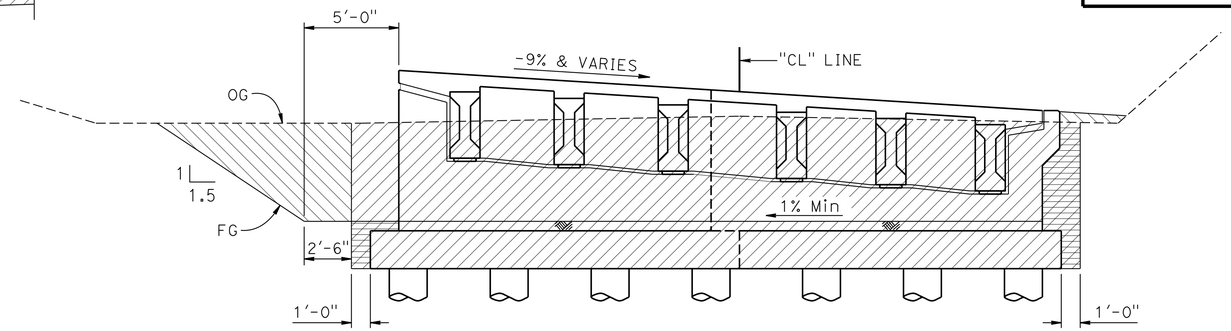

ABUTMENTS 1 & 4
¼" = 1'-0"

NOTE:
Abutment 4 shown, Abutment 1 similar.

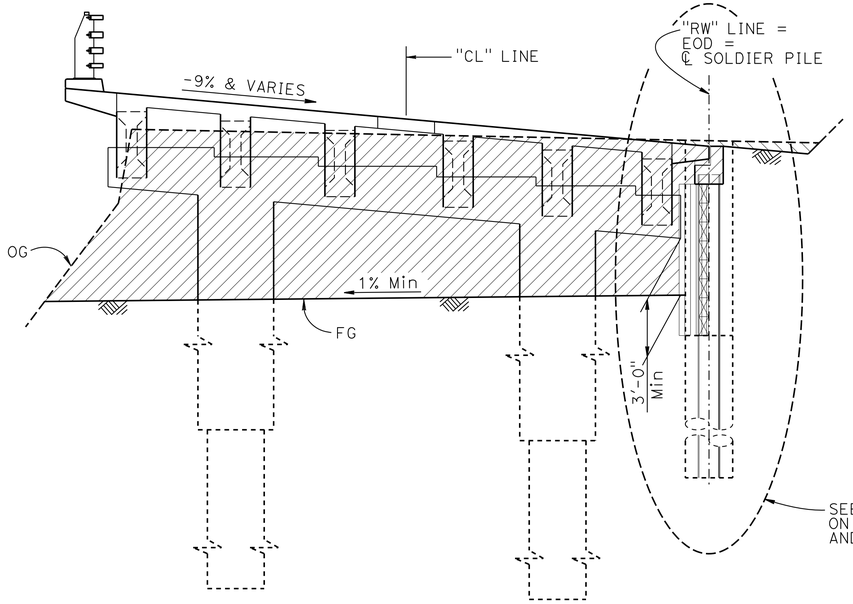

BENTS 2 & 3
¼"=1'-0"

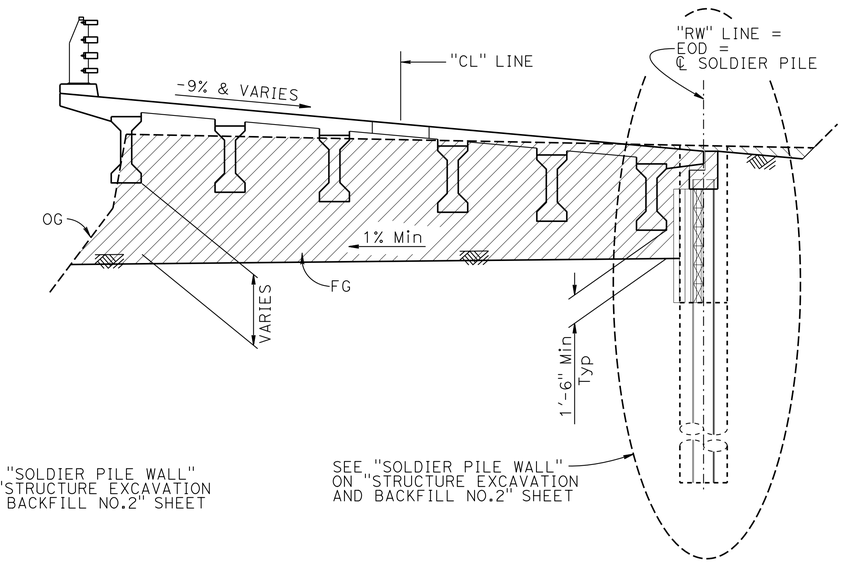

SPANS 1, 2 & 3
¼"=1'-0"

NOTES:
1. For Structure Excavation and Backfill limits at abutments, see Standard Plan. A62C
2. For FG and OG elevations at face of soldier pile wall, see "SOLDIER PILE WALL DATA TABLE" sheet.
3. For "Roadway Excavation" details, see Roadway Plans.

LEGEND:

- Structure Excavation (Bridge)
- Structure Backfill (Bridge)
- Structure Excavation (Soldier Pile Wall)
- Structure Backfill (Soldier Pile Wall)
- Roadway Excavation, See Roadway Plans

LIMITS OF PAYMENT FOR EXCAVATION AND BACKFILL

	BY	CHECKED
DESIGN	H. PEREZ	M. CULLEN
DETAILS	D. PATO	M. CULLEN
QUANTITIES	H. PEREZ	S. MORIMOTO

STATE OF CALIFORNIA
DEPARTMENT OF TRANSPORTATION

DIVISION OF ENGINEERING SERVICES
STRUCTURE DESIGN
DESIGN BRANCH 6

BRIDGE NO. 44-0296
POST MILE 28.28

COW CLIFFS VIADUCT
STRUCTURE EXCAVATION AND BACKFILL NO. 1

STRUCTURES DESIGN DETAIL SHEET (ENGLISH) (REV. 09-01-10)

ORIGINAL SCALE IN INCHES FOR REDUCED PLANS 0 1 2 3

UNIT: 3591
PROJECT NUMBER & PHASE: 0514000072-1
CONTRACT NO.: 05-1F8904

DISREGARD PRINTS BEARING EARLIER REVISION DATES

REVISION DATES: 7-22-14 10-31-14 8-22-14

SHEET 29 OF 35

FILE => 44-0296-y-strexc-bckfill-01.dgn

USERNAME => s115755 DATE PLOTTED => 03-DEC-2014 TIME PLOTTED => 15:17

DIST	COUNTY	ROUTE	POST MILES TOTAL PROJECT	SHEET No.	TOTAL SHEETS
05	Mon	1	28.0/28.4	99	104

REGISTERED CIVIL ENGINEER 11-4-14 DATE

12-1-14
PLANS APPROVAL DATE

REGISTERED PROFESSIONAL ENGINEER HERNAN PEREZ No. C 60993 Exp. 12-31-16 CIVIL STATE OF CALIFORNIA

The State of California or its officers or agents shall not be responsible for the accuracy or completeness of scanned copies of this plan sheet.

LEGEND:

- Structure Excavation (Bridge)
- Structure Backfill (Bridge)
- Structure Excavation (Soldier Pile Wall)
- Structure Backfill (Soldier Pile Wall)
- Roadway Excavation, See Roadway Plans

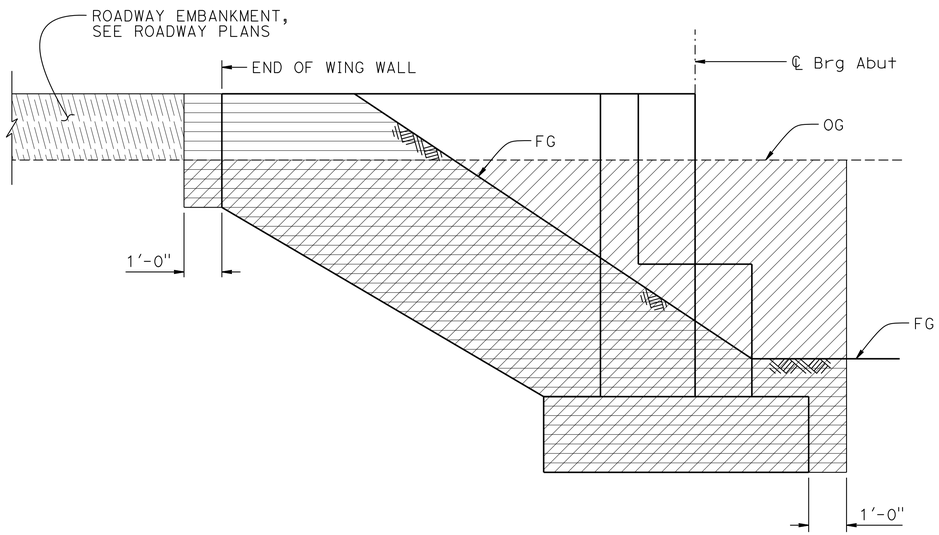

WING WALL
½" = 1'-0"

NOTE:
Abutment 4 shown, Abutment 1 similar.

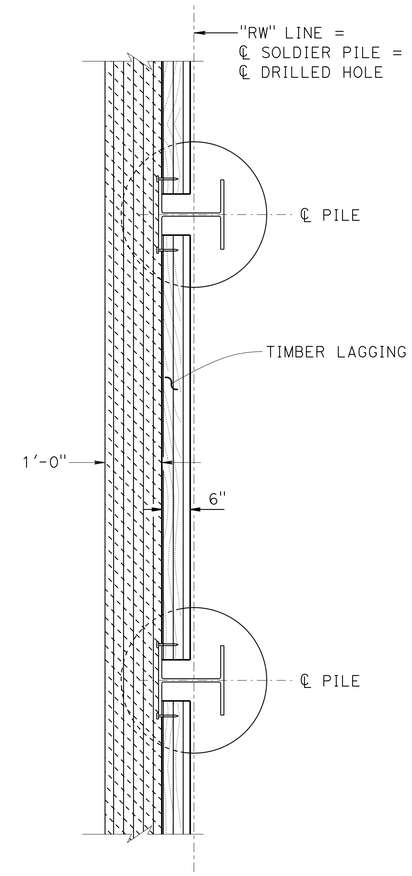

SECTION A-A
¾" = 1'-0"

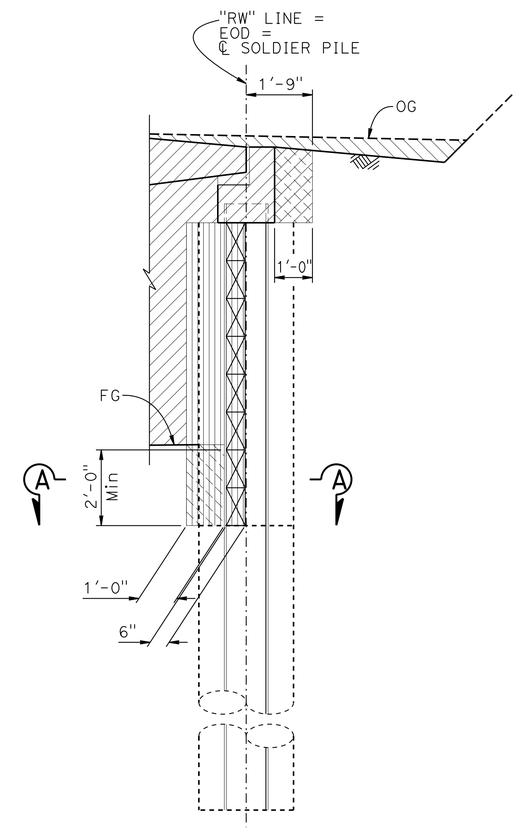

SOLDIER PILE WALL
½"=1'-0"

LIMITS OF PAYMENT FOR EXCAVATION AND BACKFILL

	BY	CHECKED
DESIGN	H. PEREZ	M. CULLEN
DETAILS	D. PATO	M. CULLEN
QUANTITIES	H. PEREZ	S. MORIMOTO

STATE OF CALIFORNIA
DEPARTMENT OF TRANSPORTATION

DIVISION OF ENGINEERING SERVICES
STRUCTURE DESIGN
DESIGN BRANCH 6

BRIDGE NO. 44-0296
POST MILE 28.28

COW CLIFFS VIADUCT
STRUCTURE EXCAVATION AND BACKFILL No. 2

STRUCTURES DESIGN DETAIL SHEET (ENGLISH) (REV. 09-01-10)

ORIGINAL SCALE IN INCHES FOR REDUCED PLANS 0 1 2 3

UNIT: 3591
PROJECT NUMBER & PHASE: 0514000072-1
CONTRACT NO.: 05-1F8904

DISREGARD PRINTS BEARING EARLIER REVISION DATES

REVISION DATES: 7-23-14 7-31-14 8-15-14 8-27-14

SHEET 30 OF 35

FILE => 44-0296-y-strexc-bckfill-02.dgn

USERNAME => s115755 DATE PLOTTED => 03-DEC-2014 TIME PLOTTED => 15:17

DIST	COUNTY	ROUTE	POST MILES TOTAL PROJECT	SHEET No	TOTAL SHEETS
05	Mon	1	28.0/28.4	100	104

CERTIFIED ENGINEERING GEOLOGIST 8-5-14

12-1-14
PLANS APPROVAL DATE

PROFESSIONAL GEOLOGIST Mike Jurasius No. 8618 Exp. 3-31-15 CERTIFIED ENGINEERING GEOLOGIST STATE OF CALIFORNIA

The State of California or its officers or agents shall not be responsible for the accuracy or completeness of electronic copies of this plan sheet.

This LOTB sheet was prepared in accordance with the Caltrans Soil & Rock Logging, Classification, & Presentation Manual (2010 Edition).

See 2010 Standard Plans A10F and A10G for Soil Legend, and A10H for Rock Legend.

BENCH MARK

MON 1 PM 28.24

Fnd 1" ip w/Caltrans control pp
62.03′ Lt "CL" Line
Sta 14+18.12
N 1,919,129.614
E 5,792,807.716
Elev = 125.587′
NAVD88

MON 1 PM 28.30

Fnd 1" ip w/Caltrans control pp
14.14′ Lt "CL" Line
Sta 16+98.06
N 1,919,328.140
E 5,792,594.144
Elev = 130.344′
NAVD88

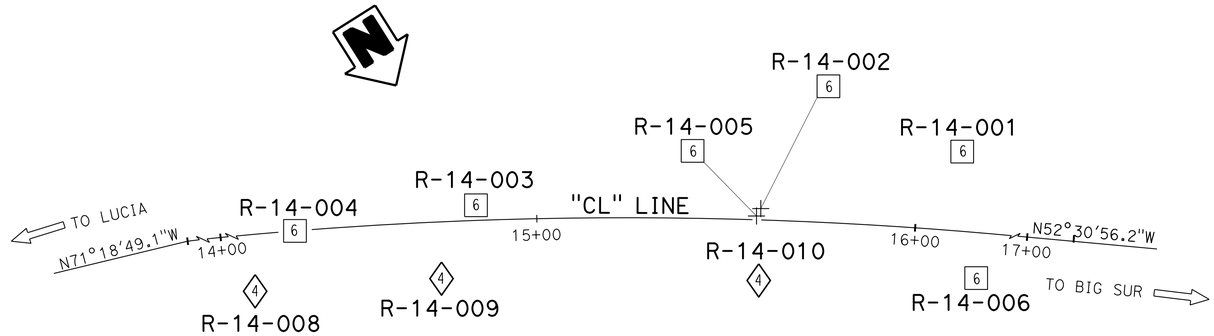

PLAN
1" = 20′

Note: Groundwater not measured during field investigation.

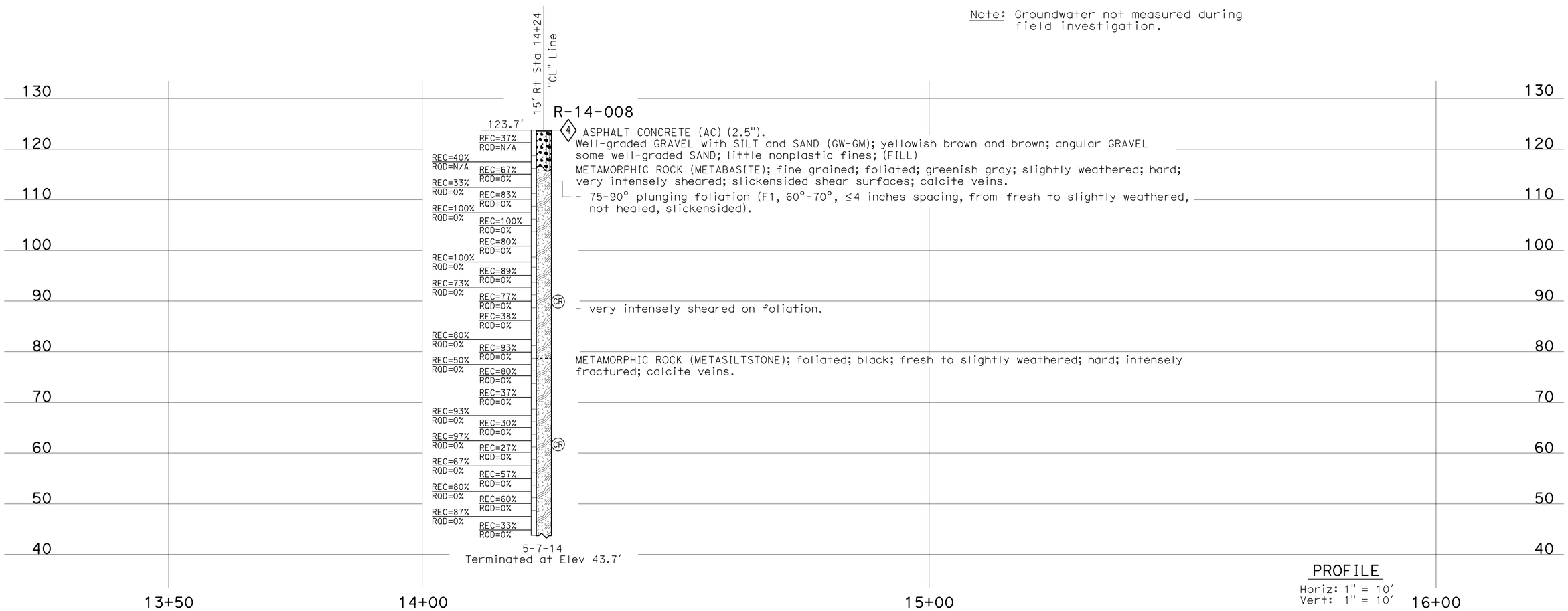

PROFILE
Horiz: 1" = 10′
Vert: 1" = 10′

ENGINEERING SERVICES	MATERIALS AND GEOTECHNICAL SERVICES	STATE OF CALIFORNIA DEPARTMENT OF TRANSPORTATION	DIVISION OF ENGINEERING SERVICES STRUCTURE DESIGN DESIGN BRANCH 6	BRIDGE NO. 44-0296 POST MILE 28.3	COW CLIFFS VIADUCT
FUNCTIONAL SUPERVISOR NAME: M. Finegan	DRAWN BY: F. Nguyen CHECKED BY: D. Appelbaum	FIELD INVESTIGATION BY: M. Jurasius			LOG OF TEST BORINGS 1 OF 5

OGS CIVIL LOG OF TEST BORINGS SHEET

ORIGINAL SCALE IN INCHES FOR REDUCED PLANS 0 1 2 3

UNIT: 3643
PROJECT NUMBER & PHASE: 0514000072-1 CONTRACT NO.: 05-1F8904

DISREGARD PRINTS BEARING EARLIER REVISION DATES

REVISION DATES: 04-24-14 08-05-14 07-22-14

SHEET 31 OF 35

FILE => 44-0296-z-1of5.dgn

USERNAME => s115755 DATE PLOTTED => 03-DEC-2014 TIME PLOTTED => 15:17

DIST	COUNTY	ROUTE	POST MILES TOTAL PROJECT	SHEET No	TOTAL SHEETS
05	Mon	1	28.0/28.4	101	104

CERTIFIED ENGINEERING GEOLOGIST 8-5-14

12-1-14
PLANS APPROVAL DATE

PROFESSIONAL GEOLOGIST Mike Jurasius No. 8618 Exp. 3-31-15 CERTIFIED ENGINEERING GEOLOGIST STATE OF CALIFORNIA

The State of California or its officers or agents shall not be responsible for the accuracy or completeness of electronic copies of this plan sheet.

This LOTB sheet was prepared in accordance with the Caltrans Soil & Rock Logging, Classification, & Presentation Manual (2010 Edition).

See 2010 Standard Plans A10F and A10G for Soil Legend, and A10H for Rock Legend.

FOR PLAN VIEW, SEE
"LOG OF TEST BORINGS 1 OF 5"

Note: Groundwater not measured during field investigation.

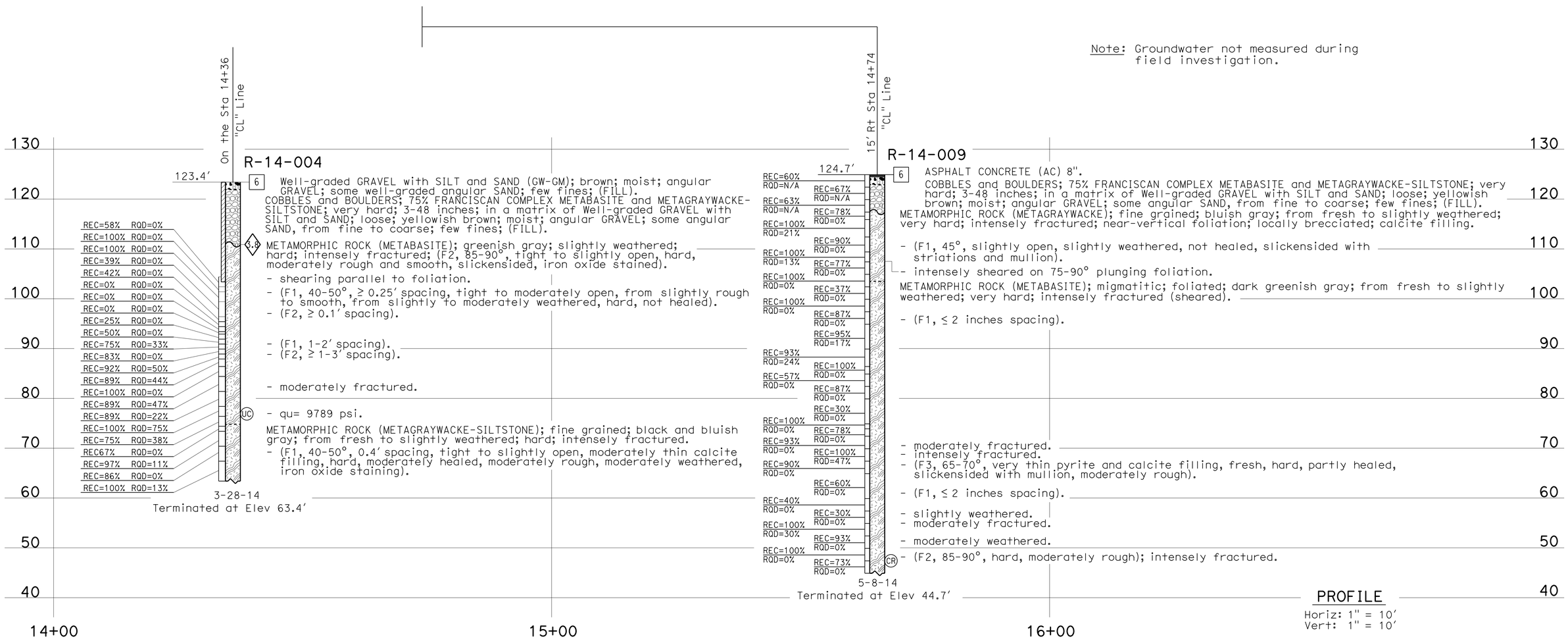

ENGINEERING SERVICES	MATERIALS AND GEOTECHNICAL SERVICES	STATE OF CALIFORNIA DEPARTMENT OF TRANSPORTATION	DIVISION OF ENGINEERING SERVICES STRUCTURE DESIGN DESIGN BRANCH 6	BRIDGE NO. 44-0296 POST MILE 28.3	COW CLIFFS VIADUCT LOG OF TEST BORINGS 2 OF 5
FUNCTIONAL SUPERVISOR NAME: M. Finegan	DRAWN BY: F. Nguyen CHECKED BY: D. Appelbaum	FIELD INVESTIGATION BY: M. Jurasius			

OGS CIVIL LOG OF TEST BORINGS SHEET

ORIGINAL SCALE IN INCHES FOR REDUCED PLANS 0 1 2 3

UNIT: 3643
PROJECT NUMBER & PHASE: 0514000072-1 CONTRACT NO.: 05-1F8904

DISREGARD PRINTS BEARING EARLIER REVISION DATES → 04-25-14 08-05-14 07-25-14

SHEET 32 OF 35

FILE => 44-0296-z-2of5.dgn

USERNAME => s115755 DATE PLOTTED => 03-DEC-2014 TIME PLOTTED => 15:17

DIST	COUNTY	ROUTE	POST MILES TOTAL PROJECT	SHEET No	TOTAL SHEETS
05	Mon	1	28.0/28.4	102	104

CERTIFIED ENGINEERING GEOLOGIST 8-5-14

PROFESSIONAL GEOLOGIST Mike Jurasius No. 8618 Exp. 3-31-15 CERTIFIED ENGINEERING GEOLOGIST STATE OF CALIFORNIA

12-1-14
PLANS APPROVAL DATE

The State of California or its officers or agents shall not be responsible for the accuracy or completeness of electronic copies of this plan sheet.

This LOTB sheet was prepared in accordance with the Caltrans Soil & Rock Logging, Classification, & Presentation Manual (2010 Edition).

See 2010 Standard Plans A10F and A10G for Soil Legend, and A10H for Rock Legend.

FOR PLAN VIEW, SEE
"LOG OF TEST BORINGS 1 OF 5"

Note: Groundwater not measured during field investigation.

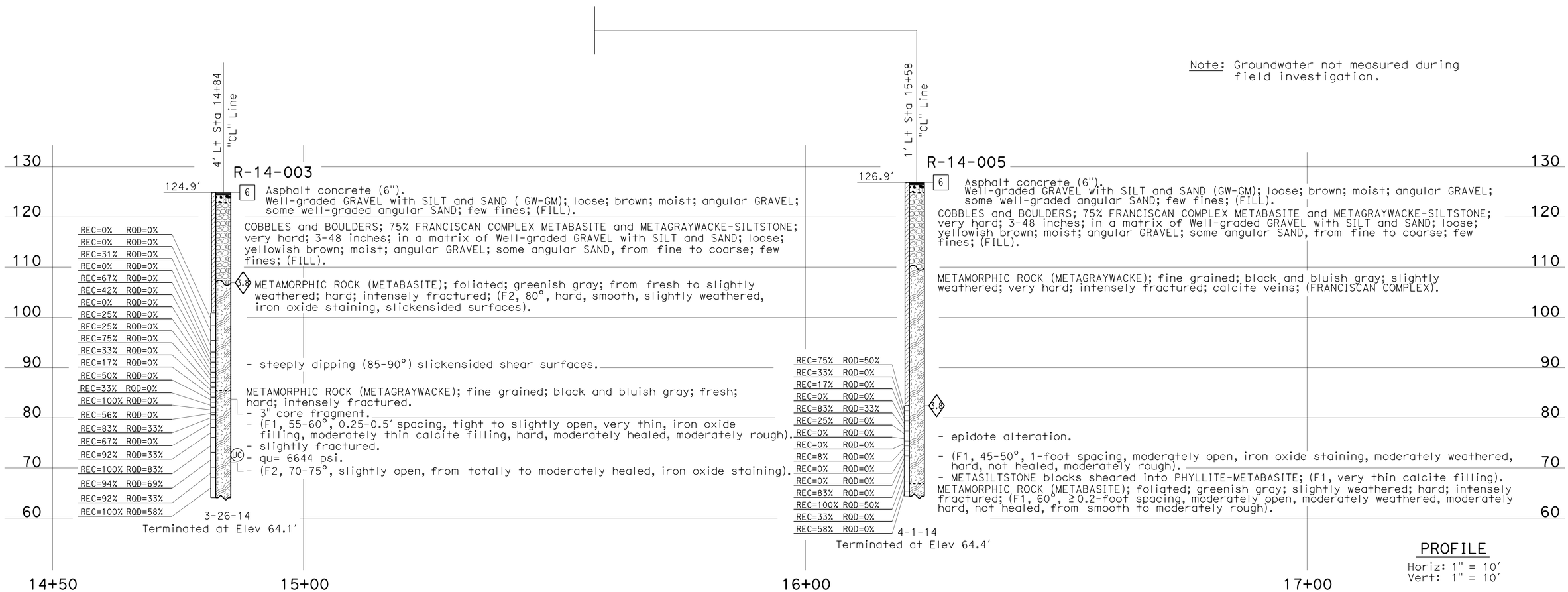

PROFILE
Horiz: 1" = 10'
Vert: 1" = 10'

ENGINEERING SERVICES	MATERIALS AND GEOTECHNICAL SERVICES	STATE OF CALIFORNIA DEPARTMENT OF TRANSPORTATION	DIVISION OF ENGINEERING SERVICES STRUCTURE DESIGN DESIGN BRANCH 6	BRIDGE NO. 44-0296 POST MILE 28.3	COW CLIFFS VIADUCT
FUNCTIONAL SUPERVISOR NAME: M. Finegan	DRAWN BY: F. Nguyen CHECKED BY: D. Appelbaum	FIELD INVESTIGATION BY: M. Jurasius			LOG OF TEST BORINGS 3 OF 5

OGS CIVIL LOG OF TEST BORINGS SHEET

ORIGINAL SCALE IN INCHES FOR REDUCED PLANS 0 1 2 3

UNIT: 3643
PROJECT NUMBER & PHASE: 0514000072-1 CONTRACT NO.: 05-1F8904

DISREGARD PRINTS BEARING EARLIER REVISION DATES → 04-25-14 08-05-14 07-25-14

SHEET 33 OF 35

FILE => 44-0296-z-3of5.dgn

USERNAME => s115755 DATE PLOTTED => 03-DEC-2014 TIME PLOTTED => 15:17

DIST	COUNTY	ROUTE	POST MILES TOTAL PROJECT	SHEET No	TOTAL SHEETS
05	Mon	1	28.0/28.4	103	104

CERTIFIED ENGINEERING GEOLOGIST 8-5-14

12-1-14
PLANS APPROVAL DATE

PROFESSIONAL GEOLOGIST Mike Jurasius No. 8618 Exp. 3-31-15 CERTIFIED ENGINEERING GEOLOGIST STATE OF CALIFORNIA

The State of California or its officers or agents shall not be responsible for the accuracy or completeness of electronic copies of this plan sheet.

This LOTB sheet was prepared in accordance with the Caltrans Soil & Rock Logging, Classification, & Presentation Manual (2010 Edition).

See 2010 Standard Plans A10F and A10G for Soil Legend, and A10H for Rock Legend.

FOR PLAN VIEW, SEE
"LOG OF TEST BORINGS 1 OF 5"

Note: Groundwater not measured during field investigation.

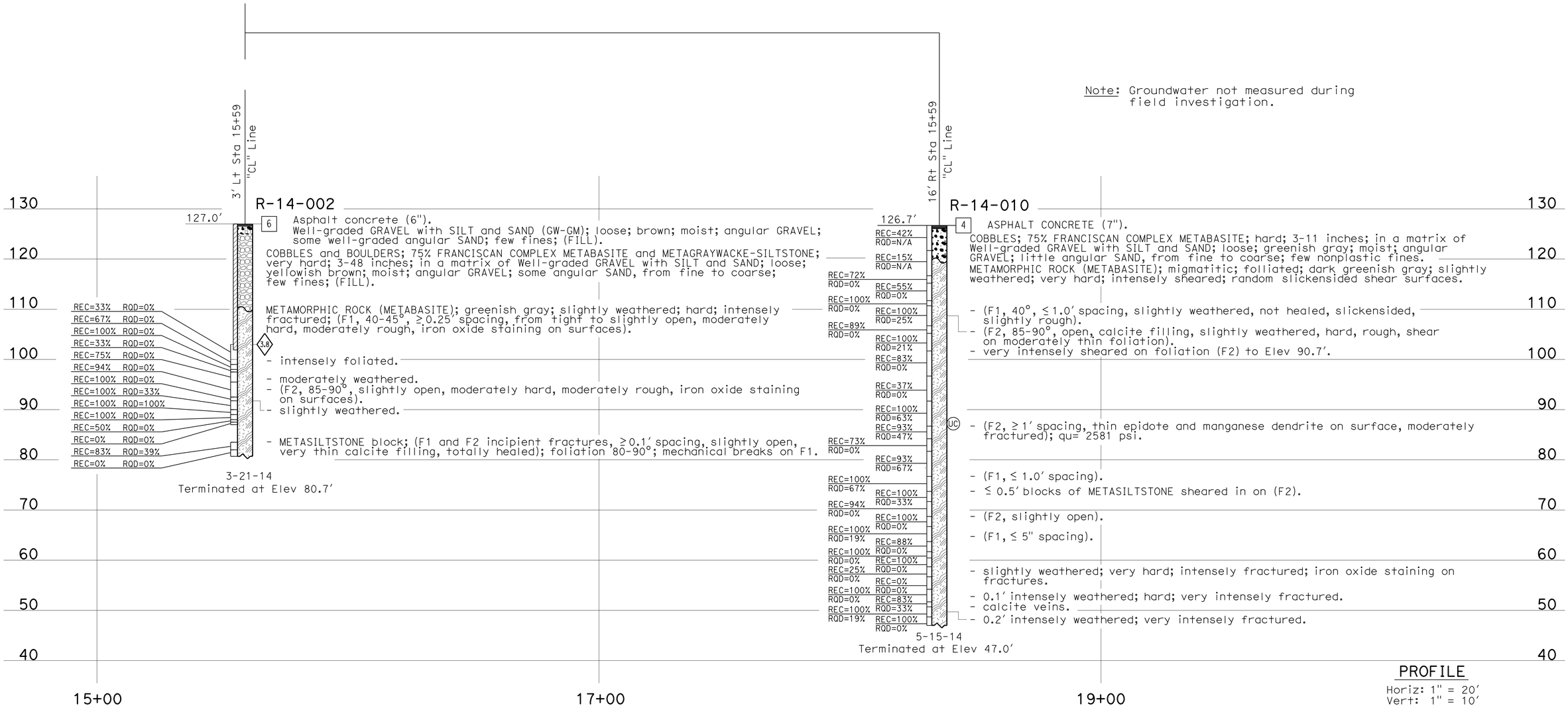

PROFILE
Horiz: 1" = 20'
Vert: 1" = 10'

ENGINEERING SERVICES	MATERIALS AND GEOTECHNICAL SERVICES	STATE OF CALIFORNIA DEPARTMENT OF TRANSPORTATION	DIVISION OF ENGINEERING SERVICES STRUCTURE DESIGN DESIGN BRANCH 6	BRIDGE NO. 44-0296 POST MILE 28.3	COW CLIFFS VIADUCT
FUNCTIONAL SUPERVISOR NAME: M. Finegan	DRAWN BY: F. Nguyen CHECKED BY: D. Appelbaum	FIELD INVESTIGATION BY: M. Jurasius			LOG OF TEST BORINGS 4 OF 5

OGS CIVIL LOG OF TEST BORINGS SHEET

ORIGINAL SCALE IN INCHES FOR REDUCED PLANS 0 1 2 3

UNIT: 3643
PROJECT NUMBER & PHASE: 0514000072-1 CONTRACT NO.: 05-1F8904

DISREGARD PRINTS BEARING EARLIER REVISION DATES → REVISION DATES 04-24-14 08-05-14 07-22-14 SHEET 34 OF 35

FILE => 44-0296-z-4of5.dgn

USERNAME => s115755 DATE PLOTTED => 03-DEC-2014 TIME PLOTTED => 15:17

DIST	COUNTY	ROUTE	POST MILES TOTAL PROJECT	SHEET No	TOTAL SHEETS
05	Mon	1	28.0/28.4	104	104

CERTIFIED ENGINEERING GEOLOGIST 8-5-14

PROFESSIONAL GEOLOGIST Mike Jurasius No. 8618 Exp. 3-31-15 CERTIFIED ENGINEERING GEOLOGIST STATE OF CALIFORNIA

12-1-14
PLANS APPROVAL DATE

The State of California or its officers or agents shall not be responsible for the accuracy or completeness of electronic copies of this plan sheet.

This LOTB sheet was prepared in accordance with the Caltrans Soil & Rock Logging, Classification, & Presentation Manual (2010 Edition).

See 2010 Standard Plans A10F and A10G for Soil Legend, and A10H for Rock Legend.

FOR PLAN VIEW, SEE
"LOG OF TEST BORINGS 1 OF 5"

Note: Groundwater not measured during field investigation.

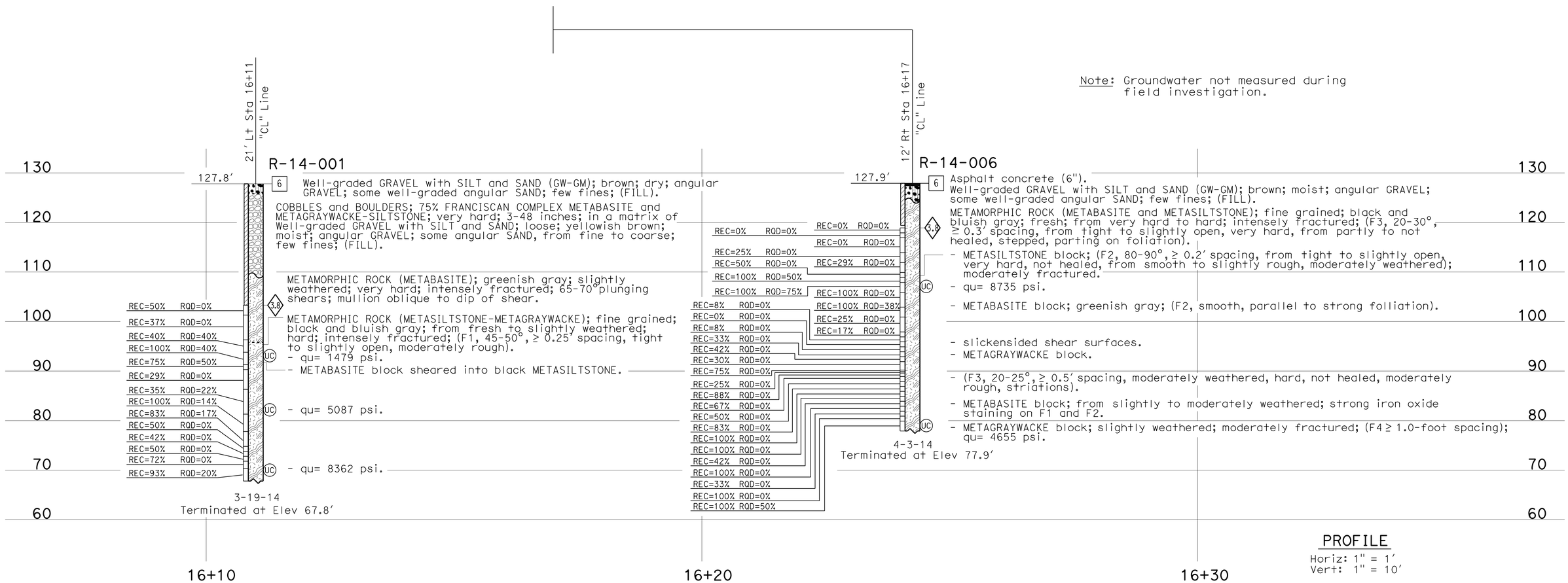

PROFILE
Horiz: 1" = 1'
Vert: 1" = 10'

ENGINEERING SERVICES	MATERIALS AND GEOTECHNICAL SERVICES	STATE OF CALIFORNIA DEPARTMENT OF TRANSPORTATION	DIVISION OF ENGINEERING SERVICES STRUCTURE DESIGN DESIGN BRANCH 6	BRIDGE NO. 44-0296 POST MILE 28.3	COW CLIFFS VIADUCT LOG OF TEST BORINGS 5 OF 5
FUNCTIONAL SUPERVISOR NAME: M. Finegan	DRAWN BY: F. Nguyen CHECKED BY: D. Appelbaum	FIELD INVESTIGATION BY: M. Jurasius			

OGS CIVIL LOG OF TEST BORINGS SHEET

ORIGINAL SCALE IN INCHES FOR REDUCED PLANS 0 1 2 3

UNIT: 3643
PROJECT NUMBER & PHASE: 0514000072-1 CONTRACT NO.: 05-1F8904

DISREGARD PRINTS BEARING EARLIER REVISION DATES

REVISION DATES: 04-24-14 08-05-14 07-22-14 SHEET 35 OF 35

FILE => 44-0296-z-5of5.dgn

USERNAME => s115755 DATE PLOTTED => 03-DEC-2014 TIME PLOTTED => 15:17