Dist	COUNTY	ROUTE	POST MILES TOTAL PROJECT	SHEET No.	TOTAL SHEETS
05	SB	101	10.0/10.6	2	13

REGISTERED CIVIL ENGINEER 11-13-14 DATE

11-17-14
PLANS APPROVAL DATE

REGISTERED PROFESSIONAL ENGINEER ARMAN ASEFVAZIRI No. 52047 Exp. 12-31-14 CIVIL STATE OF CALIFORNIA

THE STATE OF CALIFORNIA OR ITS OFFICERS OR AGENTS SHALL NOT BE RESPONSIBLE FOR THE ACCURACY OR COMPLETENESS OF SCANNED COPIES OF THIS PLAN SHEET.

NOTES:

1. DIMENSIONS OF THE PAVEMENT STRUCTURES (STRUCTURAL SECTIONS) ARE SUBJECT TO TOLERANCES SPECIFIED IN THE STANDARD SPECIFICATIONS.
2. SUPERELEVATION AS SHOWN OR AS DIRECTED BY THE ENGINEER.
3. EXACT PISR LOCATIONS WILL BE DETERMINED BY THE ENGINEER.
4. NOMINAL WIDTH FOR PREFORMED COMPRESSION SEALS SHALL BE SELECTED BASED ON THE ACTUAL JOINT WIDTH SO THE SEALS ARE COMPRESSED 40 TO 50 PERCENT FOR THE JOINT WIDTH AND DEPTH.
5. *WHEN THE THICKNESS OF EXISTING CONCRETE SLAB (TO BE REMOVED) IS MORE THAN 0.75', LCB WILL BE USED TO FILL IN TJE GAP BETWEEN EXISTING CTB AND PISR.*

LEGEND:

PRECAST INDIVIDUAL SLAB REPLACEMENT (PISR)

DIRECTION OF TRAFFIC

1

1

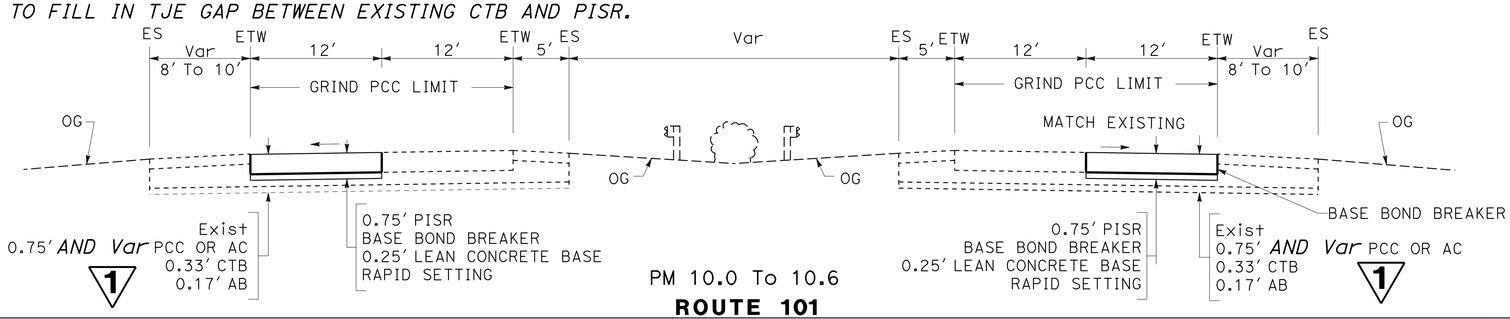

PM 10.0 To 10.6

ROUTE 101

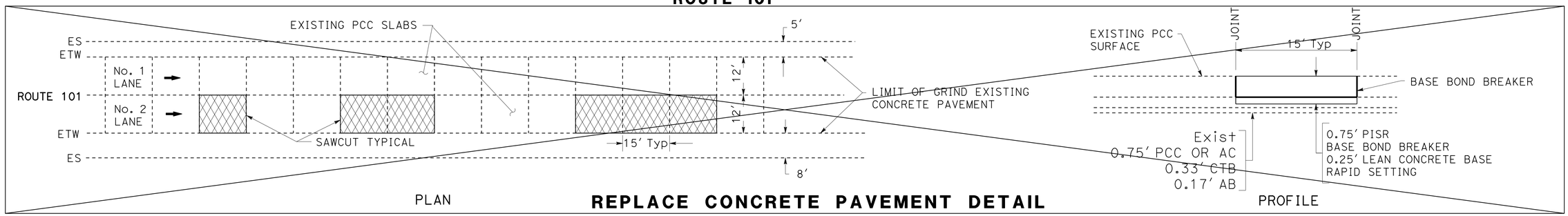

PLAN

REPLACE CONCRETE PAVEMENT DETAIL

PROFILE

PRECAST INDIVIDUAL SLAB REPLACEMENT

LOCATION	DIRECTION	PRECAST INDIVIDUAL SLAB REPLACEMENT		DOWEL BAR SLOT	BASE BOND BREAKER	GRIND EXISTING CONCRETE PAVEMENT	LEAN CONCRETE BASE RAPID SETTING
PM		EA (N)	CY	EA	SQYD	SQYD	CY
10.0 TO 10.6	SOUTHBOUND	71	355	71	1,420	9,900	118
10.0 TO 10.6	NORTHBOUND	64	320	64	1,280	9,900	107
	TOTAL		675	135	2,700	19,800	225

(N) - NOT A SEPARATE PAY ITEM, FOR INFORMATION ONLY

1

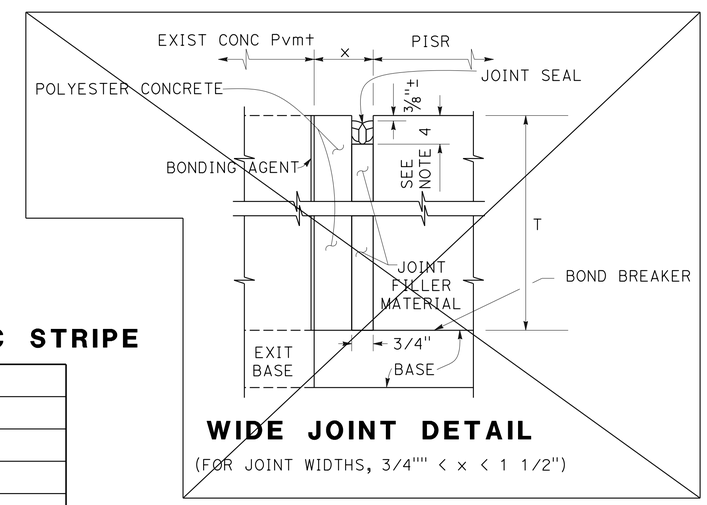

WIDE JOINT DETAIL

(FOR JOINT WIDTHS, 3/4"" < x < 1 1/2")

TRAFFIC STRIPE AND PAVEMENT MARKERS

LOCATION	4" THERMOPLASTIC TRAFFIC STRIPE	4" THERMOPLASTIC TRAFFIC STRIPE (BROKEN 36-12)	PAVEMENT MARKER (RETROREFLECTIVE)	PAVEMENT MARKER (NON-REFLECTIVE)
	DETAIL		TYPE	TYPE
	27B	12	G	A
PM	LF		EA	EA
10.0 TO 10.6	5,600	7,900	170	660
TOTAL	5,600	7,900	170	660

REMOVE THERMOPLASTIC TRAFFIC STRIPE

LOCATION	DETAIL	
	27B	12
PM	LF	
10.0 TO 10.6	5,600	2,000
TOTAL	7,600	

1 REVISED PER ADDENDUM No. 1 DATED JANUARY 8, 2015

1 **TYPICAL CROSS SECTIONS, ~~CONSTRUCTION DETAILS~~ AND SUMMARY OF QUANTITIES**

NO SCALE **X-1**

STATE OF CALIFORNIA - DEPARTMENT OF TRANSPORTATION
Caltrans® MAINTENANCE DESIGN

FUNCTIONAL SUPERVISOR: KELLY McCLAIN
CALCULATED-DESIGNED BY: ARMAN ASEFVAZIRI
CHECKED BY: KELLY McCLAIN
REVISED BY: AA
DATE REVISED: 08-11-14

LAST REVISION DATE PLOTTED => 07-JAN-2015
01-06-15 TIME PLOTTED => 14:18

Dist	COUNTY	ROUTE	POST MILES TOTAL PROJECT	SHEET No.	TOTAL SHEETS
05	SB	101	10.0/10.6	2A	13

REGISTERED CIVIL ENGINEER 11-13-14 DATE

11-17-14
PLANS APPROVAL DATE

REGISTERED PROFESSIONAL ENGINEER ARMAN ASEFVAZIRI No. 52047 Exp. 12-31-16 CIVIL STATE OF CALIFORNIA

THE STATE OF CALIFORNIA OR ITS OFFICERS OR AGENTS SHALL NOT BE RESPONSIBLE FOR THE ACCURACY OR COMPLETENESS OF SCANNED COPIES OF THIS PLAN SHEET.

NOTES:

1. FOR PRECAST PANEL DETAILS, SEE "PANEL DETAILS" SHEET.
2. FOR DOWEL BAR AND JOINT DETAILS, SEE SHEET C-3.
3. 6′ Min LENGTH OF EXISTING SLAB MUST REMAIN, OR, CONSTRUCT A STANDARD PCP.

PAVEMENT CLIMATE REGION

SOUTH COAST

LEGEND:

NEW CONCRETE PAVEMENT

POLYESTER CONCRETE

DIRECTION OF TRAFFIC

ABBREVIATIONS:

PCP = PRECAST PANEL
LCBRS = LEAN CONCRETE BASE RAPID SETTING
PCC = PORTLAND CEMENT CONCRETE
JPCP = JOINTED PLANE CONCRETE PAVEMENT
PISR = PRECAST INDIVIDUAL SLAB REPLACEMENT

1

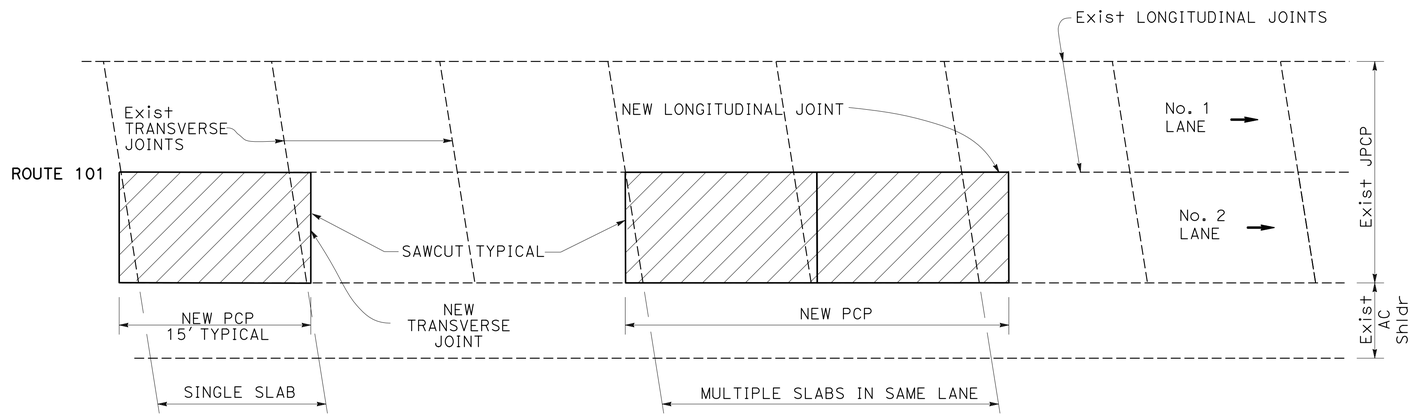

PLAN

PANEL TYPES DETAIL

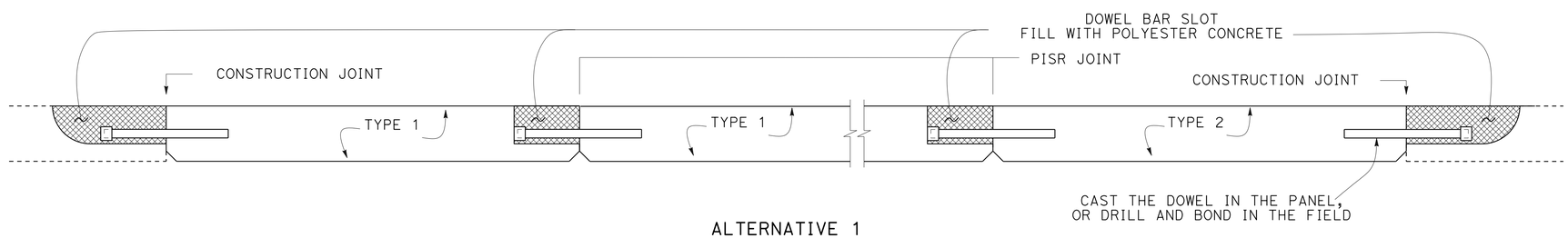

ALTERNATIVE 1

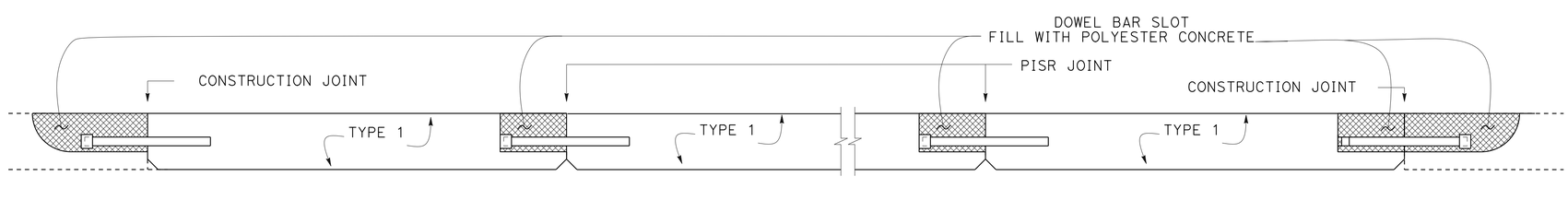

ALTERNATIVE 2

PANEL CONNECTION ALTERNATIVES DETAILS

1 ADDED PER ADDENDUM No. 1 DATED JANUARY 8, 2015

CONSTRUCTION DETAILS

PRECAST INDIVIDUAL SLAB REPLACEMENT

NO SCALE

C-1

STATE OF CALIFORNIA - DEPARTMENT OF TRANSPORTATION
Caltrans MAINTENANCE DESIGN

FUNCTIONAL SUPERVISOR: KELLY MCCLAIN
CALCULATED-DESIGNED BY: ARMAN ASEFVAZIRI
CHECKED BY: KELLY MCCLAIN
REVISED BY: AA
DATE REVISED: 12-18-14

LAST REVISION 01-06-15
DATE PLOTTED => 07-JAN-2015
TIME PLOTTED => 14:18

Dist	COUNTY	ROUTE	POST MILES TOTAL PROJECT	SHEET No.	TOTAL SHEETS
05	SB	101	10.0/10.6	2B	13

REGISTERED CIVIL ENGINEER 11-13-14 DATE

11-17-14
PLANS APPROVAL DATE

ARMAN ASEFVAZIRI No. 52047 Exp. 12-31-16 CIVIL — REGISTERED PROFESSIONAL ENGINEER — STATE OF CALIFORNIA

THE STATE OF CALIFORNIA OR ITS OFFICERS OR AGENTS SHALL NOT BE RESPONSIBLE FOR THE ACCURACY OR COMPLETENESS OF SCANNED COPIES OF THIS PLAN SHEET.

1

NOTES:

1. FOR CURVED ALIGNMENTS, ADJUST THE WIDTH OF PANELS AT ONE OR BOTH ENDS TO FIT THE CURVED SECTION
2. USE 1½" DIAMETER DOWEL BARS FOR "T" >= 0.70′. AND 1¼" DIAMETER DOWEL BAR FOR "T" < 0.70′. DOWELS ARE 1′-6" IN LONG.
3. FOR DOWEL BAR SLOT DIMENSIONS, BACKFILLING, AND GROUT INLET/VENT DETAILS, SEE "MISCELLANEOUS DETAILS".
4. FOR JOINT DETAILS, SEE "MISCELLANEOUS DETAILS".
5. REINFORCEMENT AND PRETENSIONING STRAND DIMENSIONS SHALL BE VERIFIED BY THE MANUFACTURER BEFORE PANEL FABRICATION.
6. ADJUST LOCATION OF "A" BAR TO ACCOMMODATE DOWEL BARS AND DOWEL BAR SLOTS.
7. DOWEL BAR SLOT OFFSET AND SPACING SHALL MATCH OFFSET AND SPACING OF DOWELS IN ADJACENT PCP.
8. THREADED AND RECESSED LIFTING ANCHORS SHALL BE DESIGNED BY THE CONTRACTOR.
9. PCP THICKNESS, T, SHALL MATCH EXISTING CONCRETE SLAB THICKNESS BUT NOT LESS THAN 0.70′.
10. PRETENSIONING STRANDS ARE ½" GRADE 270.
11. GROUT INLETS/VENTS ARE 1" DIAMETER AND ARE PLACED NOT MORE THAN 2.5′ FROM THE EDGE OF THE PANEL AND NOT MORE THAN 5′ DISTANCE FROM EACH OTHER.

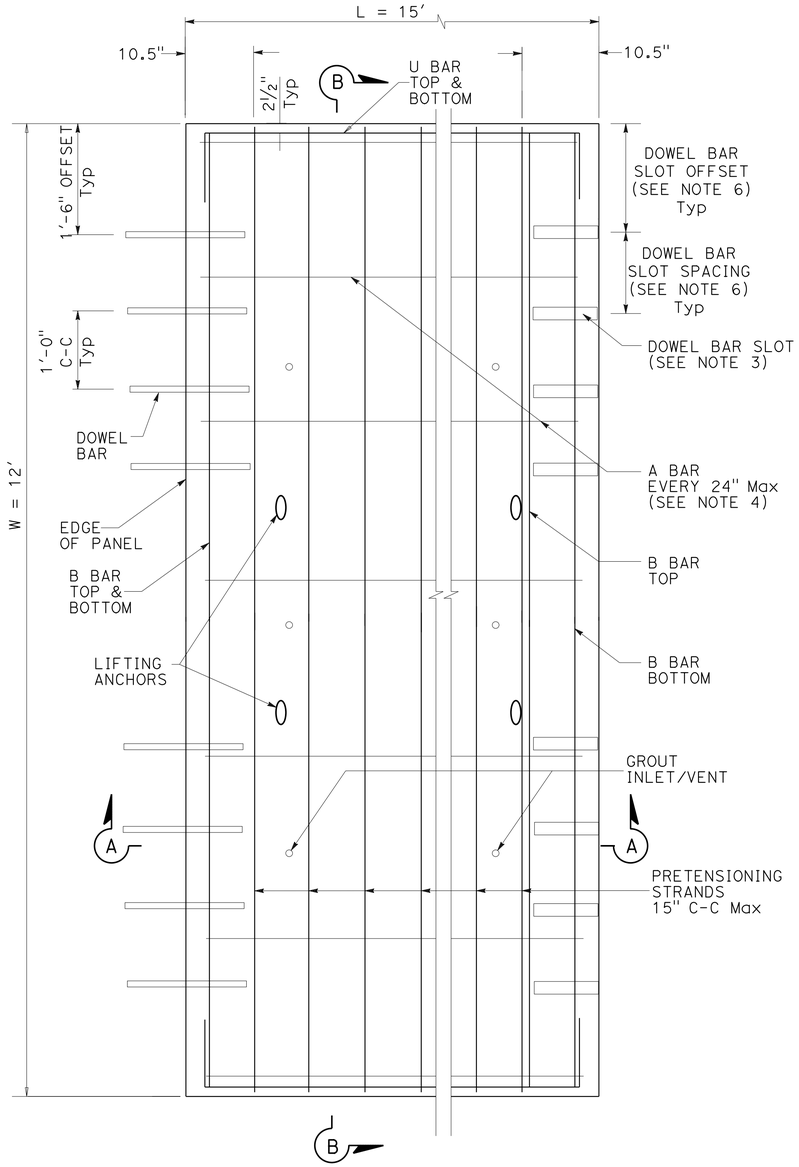

PLAN (TYPE 1 IS SHOWN)

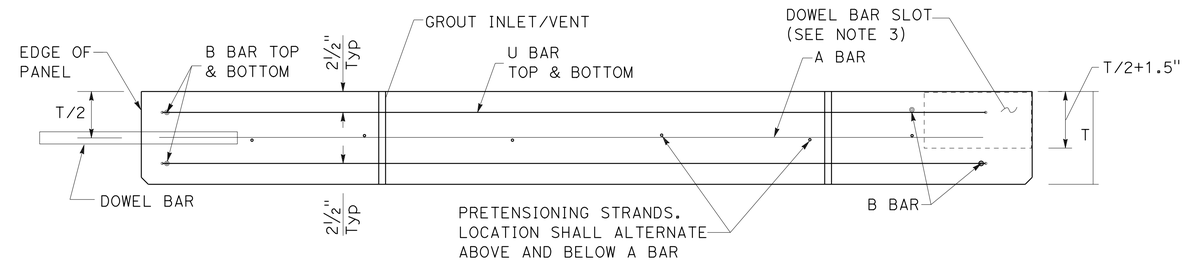

TYPE 1 SECTION A-A

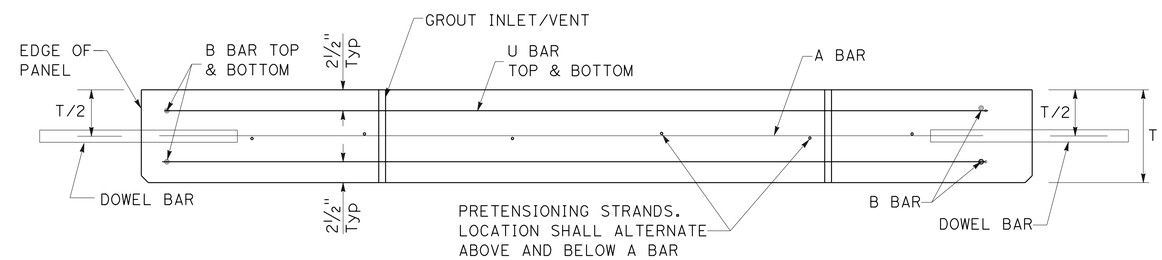

TYPE 2 SECTION A-A

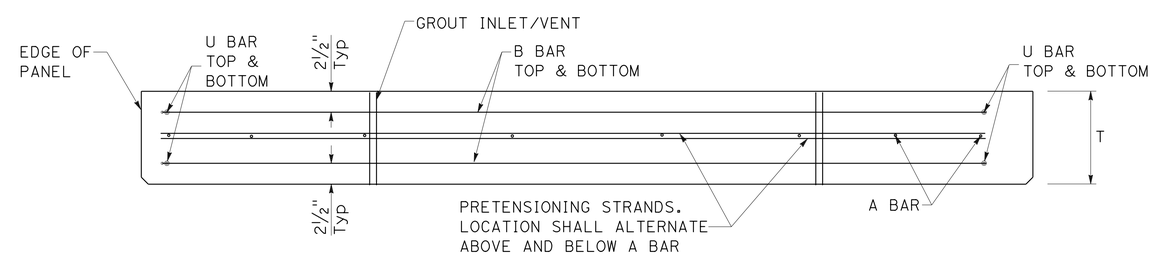

SECTION B-B

A BAR 5 # 4 PER PANEL — B BAR 4 # 4 PER PANEL — U BAR 4 # 4 PER PANEL

PANEL DETAILS

1 ADDED PER ADDENDUM No. 1 DATED JANUARY 8, 2015

CONSTRUCTION DETAILS

PRECAST INDIVIDUAL SLAB REPLACEMENT

NO SCALE

C-2

STATE OF CALIFORNIA - DEPARTMENT OF TRANSPORTATION — Caltrans® MAINTENANCE DESIGN

FUNCTIONAL SUPERVISOR: KELLY MCCLAIN

CALCULATED-DESIGNED BY: ARMAN ASEFVAZIRI — CHECKED BY: KELLY MCCLAIN

REVISED BY: AA — DATE REVISED: 12-18-14

LAST REVISION 01-06-15 — DATE PLOTTED => 07-JAN-2015 — TIME PLOTTED => 14:18

Dist	COUNTY	ROUTE	POST MILES TOTAL PROJECT	SHEET No.	TOTAL SHEETS
05	SB	101	10.0/10.6	2C	13

REGISTERED CIVIL ENGINEER 11-13-14 DATE

11-17-14
PLANS APPROVAL DATE

REGISTERED PROFESSIONAL ENGINEER ARMAN ASEFVAZIRI No. 52047 Exp. 12-31-16 CIVIL STATE OF CALIFORNIA

THE STATE OF CALIFORNIA OR ITS OFFICERS OR AGENTS SHALL NOT BE RESPONSIBLE FOR THE ACCURACY OR COMPLETENESS OF SCANNED COPIES OF THIS PLAN SHEET.

1

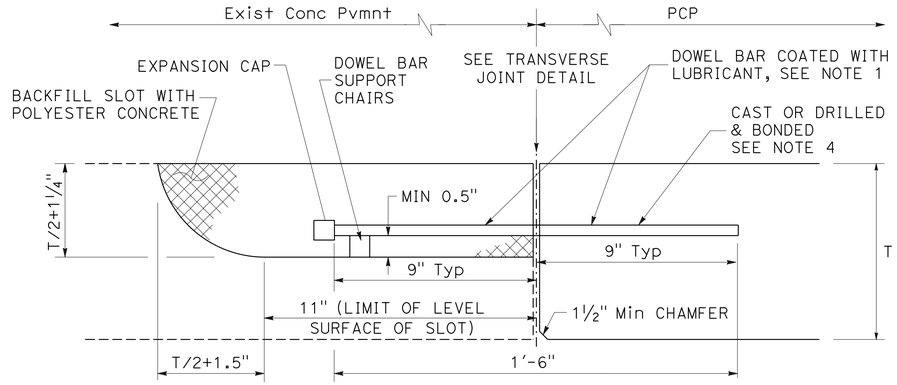

SECTION N-N

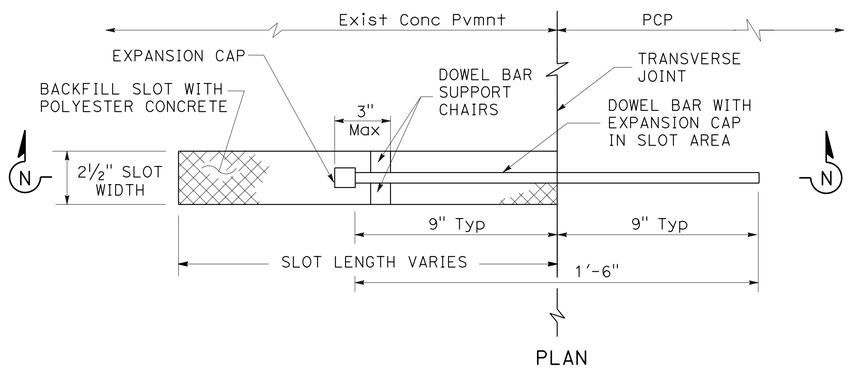

PLAN

TRANSVERSE JOINT BETWEEN PRECAST CONCRETE PANEL AND EXISTING CONCRETE PAVEMENT

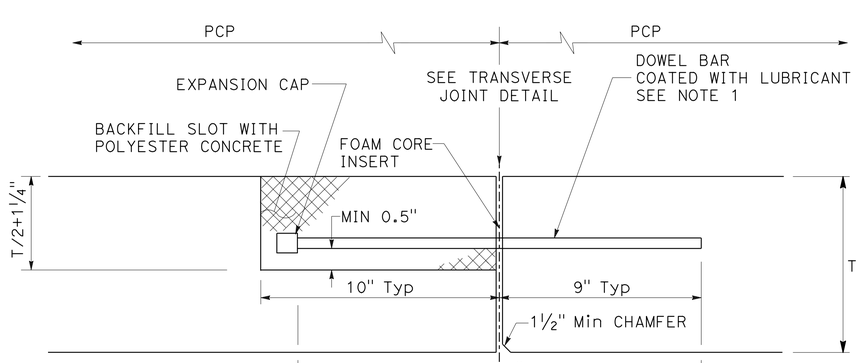

ELEVATION

TRANSVERSE JOINT BETWEEN PRECAST CONCRETE PANELS

NOTES:

1. 1½" DIAMETER DOWEL BARS 1'-6" +/-¼" LENGTH SHALL BE USED WHEN THE EXISTING PAVEMENT THICKNESS, D, IS EQUAL TO OR GREATER THAN 0.70'. FOR A PAVEMENT THICKNESS, D, LESS THAN 0.70', USE 1¼" DIAMETER DOWEL BAR 1'-6" +/-¼" IN LENGTH.
2. USE1½" DIAMETER DOWEL BARS FOR "T" >= 0.70'. AND 1¼" DIAMETER DOWEL BAR FOR "T" < 0.70'. DOWELS ARE 1'-6" IN LONG.
3. SEE STANDARD PLAN RSP P7 FOR FOAM CORE INSERT DETAIL.
4. CAST DOWEL BARS EVERY 1' C-C DURING PANEL FABRICATION OR DRILL AND BOND EVERY 1' C-C. DRILLED HOLES ARE ⅛" LARGER THAN THE DOWEL DIAMETER.
5. NOMINAL WIDTH FOR PREFORMED COMPRESSION SEALS SHALL BE SELECTED BASED ON THE ACTUAL JOINT WIDTH SO THE SEALS ARE COMPRESSED 40 TO 50 PERCENT FOR THE JOINT WIDTH AND DEPTH.

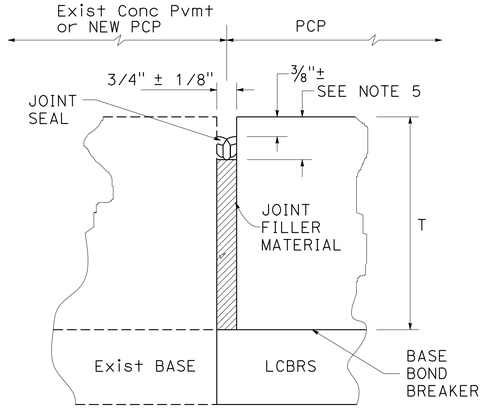

ISOLATION JOINT DETAIL

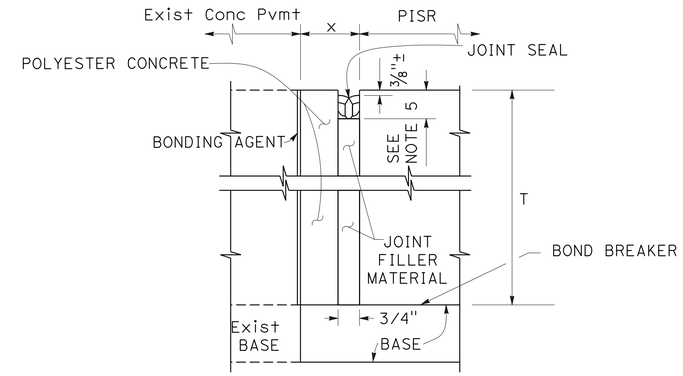

WIDE JOINT DETAIL

(FOR JOINT WIDTHS, 3/4"" < x < 1 1/2")

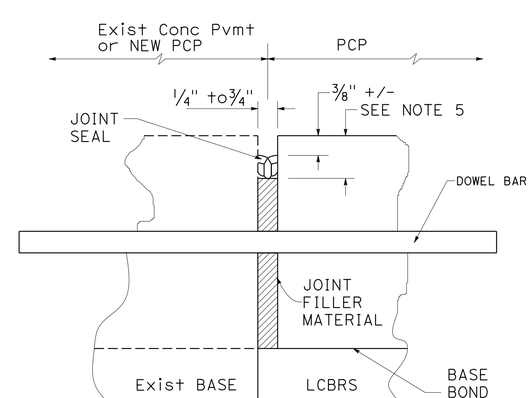

CONSTRUCTION AND TRANSVERSE JOINT DETAIL

DOWEL SLOT AND DOWEL BAR PLACEMENT DETAILS

1 ADDED PER ADDENDUM No. 1 DATED JANUARY 8, 2015

CONSTRUCTION DETAILS

PRECAST INDIVIDUAL SLAB REPLACEMENT

NO SCALE

C-3

REVISED BY	DATE REVISED
AA	12-18-14

ARMAN ASEFVAZIRI — KELLY MCCLAIN — CALCULATED-DESIGNED BY — CHECKED BY

FUNCTIONAL SUPERVISOR: KELLY MCCLAIN

STATE OF CALIFORNIA - DEPARTMENT OF TRANSPORTATION — Caltrans® MAINTENANCE DESIGN

LAST REVISION 01-06-15 — DATE PLOTTED => 07-JAN-2015 — TIME PLOTTED => 14:18